RIDER'S
VOLUME - XX

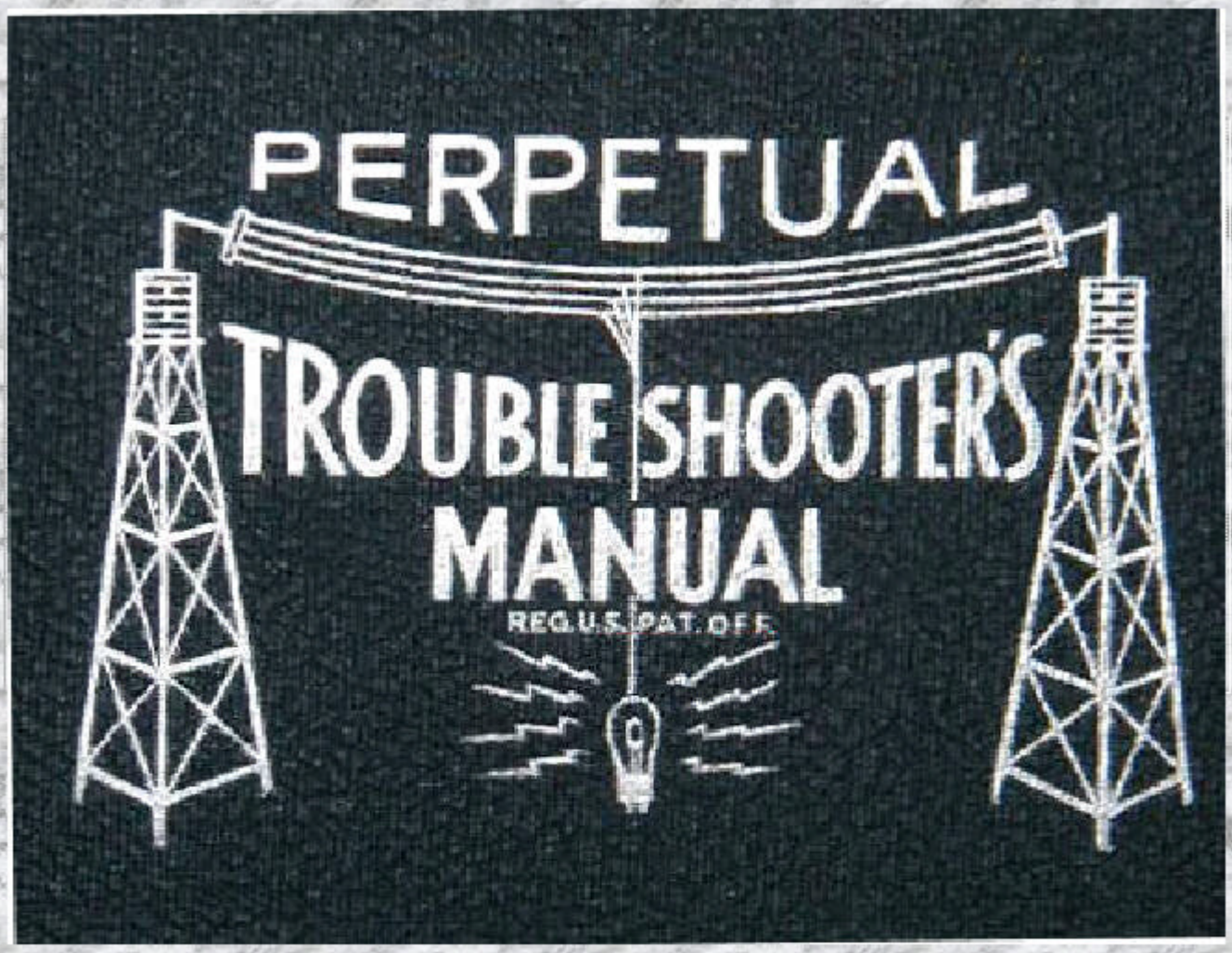

COVERING 1950
PART 1

MODELS 5X11, 5X12, 5X13, 5X14; Ch. 5X1

If external antenna and ground is required, connect to wire leads on loop antenna. Caution: Do not connect ground wire directly to chassis.

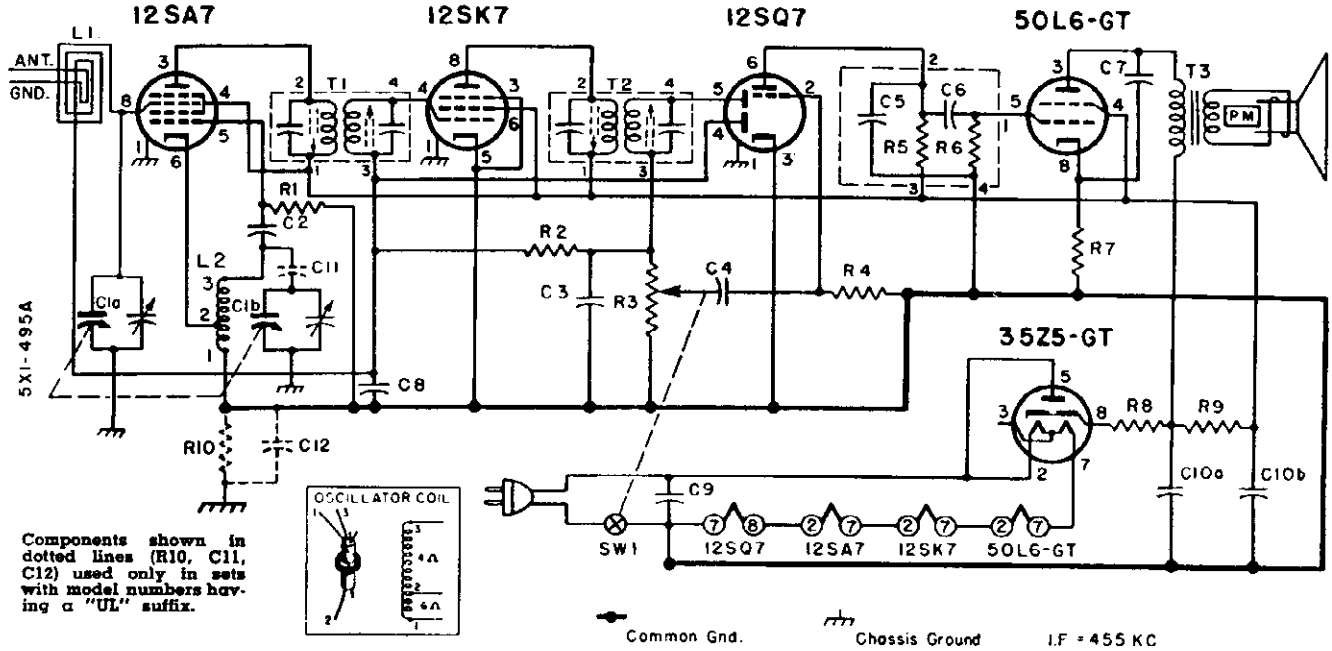

Components shown in dotted lines (R10, C11, C12) used only in sets with model numbers having a "UL" suffix.

Common Gnd. Chassis Ground I.F. = 455 KC

NOTE: Common Gnd. becomes chassis ground in sets with model numbers ending in "N".

VOLTAGE DATA

- All readings made between tube socket terminals and B minus (terminal of On-Off switch).
- Dial turned to low frequency end; volume control at minimum.
- Measured on 117 Volts AC line. When measured from DC line, voltages may be slightly lower.
- Voltages measured with Vacuum Tube Voltmeter. Readings taken with a 1,000 ohm per volt meter will be approximately the same except for those marked with an asterisk * in the voltage chart; these readings will either be lower or practically zero.

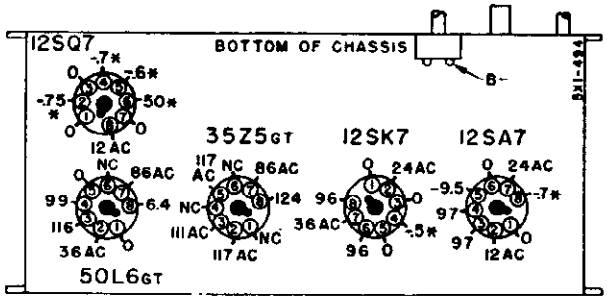

* If taken with a 1000 ohm-per-volt meter, readings will be either lower or practically zero.

RESISTORS

Symbol	Description	Part No.
R1	22,000 Ohms, ½ Watt	60B 8-223
R2	1 Megohm, ½ Watt	60B 8-105
R3	1 Megohm Volume Control and On-Off switch SW1	75B 1-25
R4	4.7 Megohms, ½ Watt	60B 8-475
*R5	470,000 Ohms, ½ Watt	
*R6	470,000 Ohms, ½ Watt	
R7	150 Ohms, ½ Watt	60B 8-151
R8	33 Ohms, 1 Watt	60B 28-3
R9	1,000 Ohms, 1 Watt	60B 28-2
R10	150,000 Ohms, ½ Watt	60B 8-154

R10 used only in sets with model numbers ending in "UL".

CONDENSERS

Symbol	Description	Part No.
C1a	Ant., 0 to 420 mmfd. } Gang	68B 28
C1b	Osc., 0 to 108 mmfd. } Gang	68B 28
	(Dial drum spot welded to gang)	
C2	50 mmfd., Ceramic	65B 6-4
C3	250 mmfd., Ceramic	65B 6-5
C4	.01 mfd., 400 Volts, Paper	64B 1-25
*C5	250 mmfd., 500 Volts	
*C6	.01 mfd., 400 Volts	
C7	.02 mfd., 400 Volts, Paper	64B 1-24
C8	.1 mfd., 200 Volts, Paper	64B 1-30
C9	.05 mfd., 400 Volts, Paper	64B 1-22
C10a	50 mfd., 150 Volts } Elect.	67A 10
C10b	30 mfd., 150 volts } Elect.	67A 10
C11	.05 mfd., 400 Volts, Paper	64B 1-22
C12	.18 mfd., 200 Volts, Paper	64A 2-2

(C11, C12 used only in sets with model numbers ending in "UL".)

COILS, TRANSFORMERS, Etc.

Symbol	Description	Part No.
L1	Antenna, Loop (mounted on cardboard back)	69C 108
L2	Coil, Oscillator	69A 20-2
T1	Transformer, 1st I.F.	72B 50
T2	Transformer, 2nd I.F.	72B 51
T3	Transformer, Output	98A 4
	Speaker (5" PM) and Output Transformer	78B 26-1
SW1	Switch, On-Off	Part of R3
	*Couplate (Includes R5, R6, C5, C6)	63A 5-1

* C5, C6, R5, and R6 are contained in a multiple-unit component called a couplate (part number 63A5-1). Although a defective section of the couplate can sometimes be replaced by individual components, we strongly recommend replacing the entire couplate.

Note that numerals 1, 2, 3, 4, shown at schematic connections correspond to couplate lead numbers printed on face of couplate.

MISCELLANEOUS

Description	Part No.
Cabinet	
Ebony (5X11)	34D 26-5
Mahogany (5X12)	34D 26-6
Ivory (5X13)	34D 26-7
Mahogany and Gold (5X14)	34D 26-8
Cartons and fillers	44B 134
Clip, Elect. Mtg.	18A 10-6
Dial Cord	50A 1-3
Escutcheon, Dial Scale	23B 47
Knob, Tuning	
Ebony (5X11)	33A 39-7
Ivory (5X13)	33A 39-9
Mahogany (5X12, 5X14)	33A 39-8
Pointer, Dial (Disc)	25B 34
Shaft, Tuning	28A 26-1
Snap Button, Escutcheon Mtg.	13A 1-2-58
Spacer, Tuning Shaft	29A 2-7-71
Spring, Dial Cord Tension	19B1-2
Speed Nut (for tuning shaft spacer)	2B10-19
Socket, Tube	87A10-2
Washer, "C" (tuning shaft)	4A4-6-0
Washer, Felt (Knob)	5A 4-3
Washer, Spring (tuning shaft)	4A6-3-0

© John F. Rider

MODELS 5X11, 5X12, 5X13, 5X14; Ch. 5X1

ALIGNMENT PROCEDURE

- Connect output meter across voice coil.
- Turn receiver volume control full on.
- Use an isolation transformer if available, otherwise connect a .1 mfd. condenser in series with low side of signal generator and attach to B minus (terminal of On-Off switch).

  Caution: Do not connect a ground wire directly to chassis.
- Use lowest output setting of signal generator capable of producing adequate output meter indication and then proceed as outlined in chart below.
- Repeat adjustments to insure good results.

NOTE

- Use a non-metallic alignment tool for IF transformers.

Step	Dummy Antenna in Series with Signal Generator	Connection of Signal Generator (High Side)	Signal Generator Frequency	Receiver Gang Setting	Trimmer Description	Trimmer Designation	Type of Adjustment
1	250 mmfd. condenser	Tuning condenser Antenna stator	455 KC	Gang fully open	2nd IF 1st IF	A, B C, D	Maximum Output
2	250 mmfd. condenser	Tuning condenser Antenna stator	1620 KC	Gang fully open	Oscillator (on gang)	E	Maximum Output
3	Loop of several turns of wire (or place generator lead close to receiver loop for adequate signal)	No physical connection (signal by radiation)	1400 KC	Tune in generator signal	Antenna (on gang)	F	Maximum Output
4	Mount and set dial pointer as shown in Pointer Setting and Dial Cord Stringing Diagram.						

NOTE: Adjustments B and D are made from underside of chassis.

TUBE AND TRIMMER LOCATION

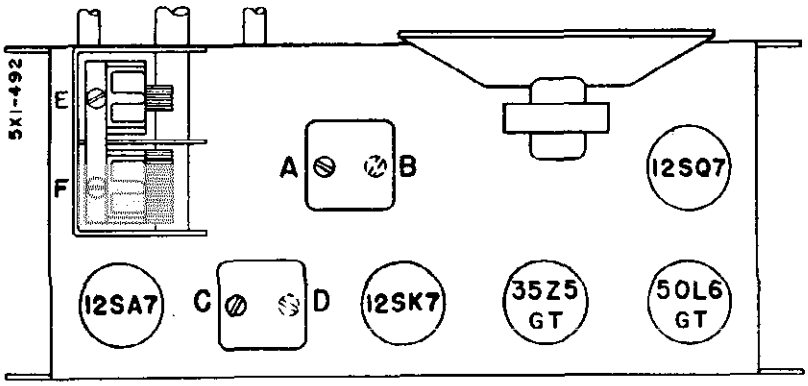

Adjustments B and D are made from underside of chassis.

POINTER SETTING AND DIAL CORD STRINGING

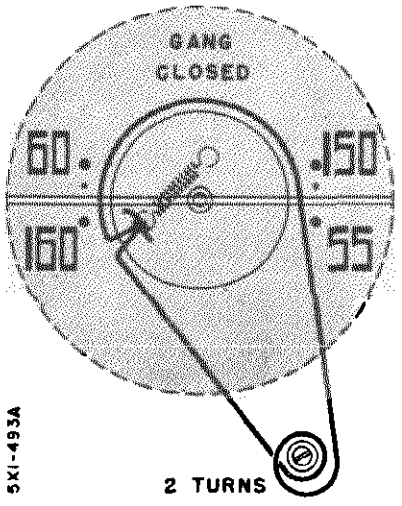

With gang fully closed, set pointer in horizontal position.

MODELS 5W11, 5W12; Ch. 5W1

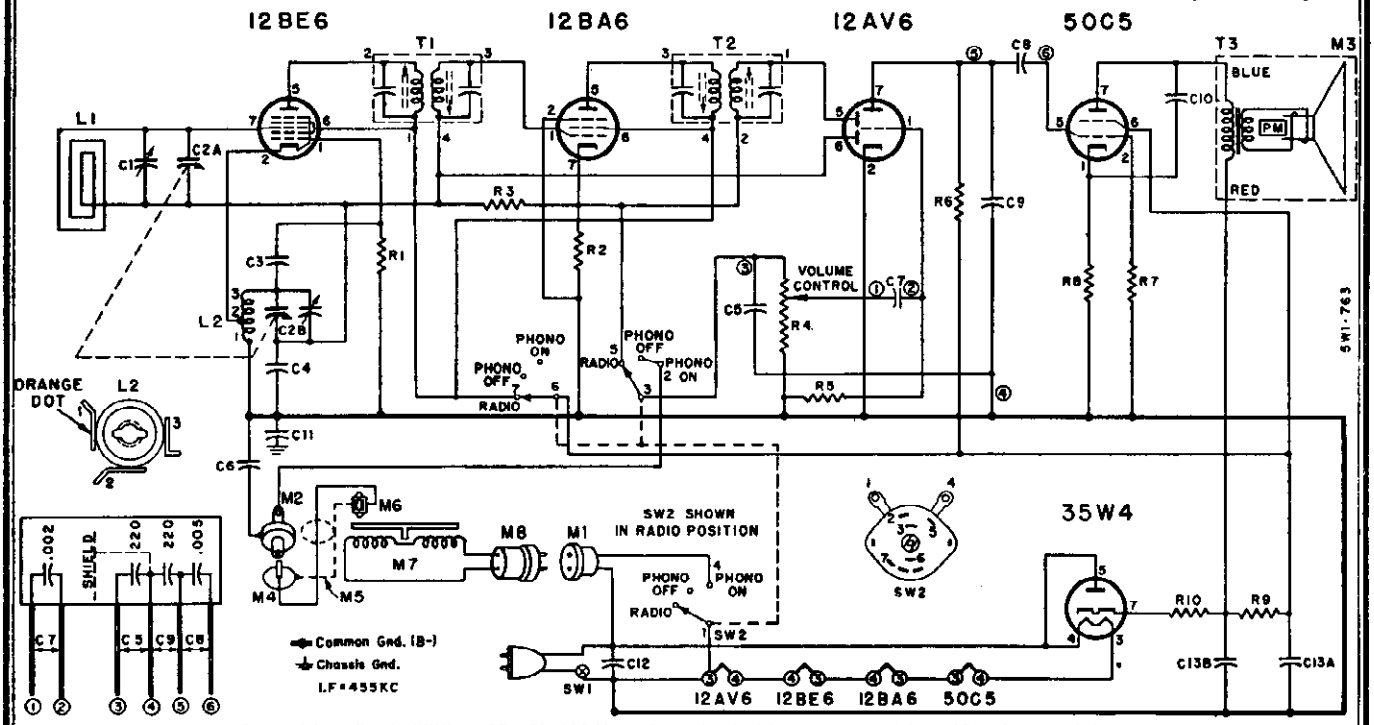

For models ending in "UL", a .05 mfd, 400 V, condenser is wired between terminal 3 of L2 and stator of C2B.

VOLTAGE DATA

- All readings made between tube socket terminals and B minus (terminal of On-Off switch).
- Switch in "Radio" position.
- Measured on 117 Volt AC line.
- Volume control minimum; dial turned to low frequency end.
- Voltages measured with Vacuum Tube Voltmeter. Readings taken with a 1000 ohm-per-volt meter will be approximately the same except for those marked with an asterisk * in the voltage chart; these readings will either be lower or practically zero.

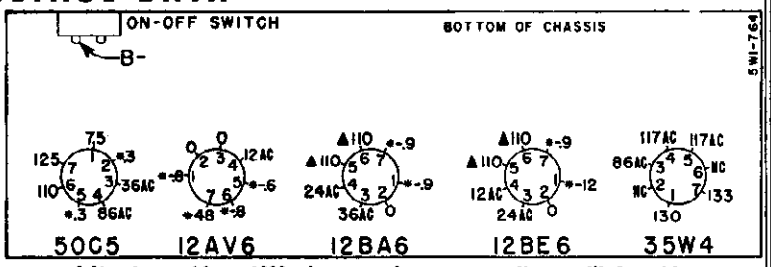

* If taken with a 1000 ohm-per-volt meter, readings will be either lower or practically zero.

▲ On "Phono" these voltages will be zero. All other DC readings may be slightly higher.

RESISTORS

Symbol	Description	Part No.
R1	22,000 ohms, ½ watt	60B 8-223
R2	100 ohms, ½ watt	60B 8-101
R3	1 megohm, ½ watt	60B 8-105
R4	Volume Control, 1 megohm (includes SW1)	75B 1-34
R5	4.7 megohms, ½ watt	60B 8-475
R6	470,000 ohms, ½ watt	60B 8-474
R7	470,000 ohms, ½ watt	60B 8-474
R8	150 ohms, ½ watt	60B 8-151
R9	1,000 ohms, 1 watt	60B 28-2
R10	33 ohms, 1 watt	60B 28-3

CONDENSERS

Symbol	Description	Part No.
C1	3 to 30 mmfd, Trimmer	Part of L1
C2a	0 to 420 mmfd, Ant. } Gang	68A 30
C2b	0 to 108 mmfd, Osc. } Gang	
	(drum spot welded to gang)	
C3	50 mmfd, Ceramic	65B 6-4
C4	.1 mfd, 200 volts, Paper	64B 1-30
*C5	220 mmfd. min, Ceramic	
C6	.1 mfd, 200 volts, Paper	64B 1-30
*C7	.002 mfd. min, Ceramic	
*C8	.005 mfd. min, Ceramic	
*C9	220 mmfd. min, Ceramic	
C10	.03 mfd, 400 volts, Paper	64B 1-23
C11	.18 mfd, 200 volts, Paper	64A 2-2
C12	.05 mfd, 400 volts, Paper	64B 1-22
C13a	30 mfd, 150 volts } Elect.	67A 17
C13b	70 mfd, 150 volts }	

* Part of condenser plate, part number 63A8. Replace with exact duplicate or individual components.

COILS, TRANSFORMERS, ETC.

Symbol	Description	Part No.
L1	Antenna and Trimmer, Loop	69B 98
L2	Coil, Oscillator	69A 52-1
T1	Transformer, 1st IF	72B 28-17
T2	Transformer, 2nd IF	72B 28-17
T3	Transformer, Speaker Output	98A 4
M1	Socket and Leads, Phono Motor	89A 6-1
M2	Socket, Phono Input	88A 1
M3	Speaker and Output Transformer (5" PM)	78B 48-2
SW1	Switch, On-Off	Part of R4
SW2	Switch, Radio-Phono	77A 28
	Condenser, Plate (Consists of C5, C7, C8 and C9)	63A 8

CABINET PARTS

Description	Part No.
Cabinet, Plastic	
Bottom, less lid (Ebony 5W11)	34D 27-10
Bottom, less lid (Mahogany 5W12)	34D 27-11
Lid only (Ebony 5W11)	34D 27-12
Lid only (Mahogany 5W12)	34D 27-13
Escutcheon, Dial	23C 51
Hinge	37A 20-1
Hinge Stud	27A 122-1
Hinge Screw (4-40x5/16 O.H.M.S.)	343-312-C2-58
Knobs, Radio	
"Tuning" (Ebony 5W11)	33C 48-3
"Radio-Phono" (Ebony 5W11)	33C 48-11
"Off-On Volume" (Ebony 5W11)	33C 48-10
"Tuning" (Mahogany 5W12)	33C 48-6
"Radio-Phono" (Mahogany 5W12)	33C 48-14
"Off-On Volume" (Mah. 5W12)	33C 48-13
Rubber Bumber (for cabinet bottom)	12A 3-7
Spring, Escutcheon Mtg. (2 req.)	19A 60
Washer, Felt (for tuning knobs)	5A 4-9

MISCELLANEOUS

Description	Part No.
Bracket, Tuning Shaft	15A 496
Carton and Fillers	44B 139
Clip, Electrolytic Mounting	18A 10-6
Clip, IF Transformer Mounting	72B 28-10
Dial Cord	50A 1-3
Drum, Pointer	17A 27
Gasket, Sponge Rubber (mounts on Speaker)	12A 5-16
Grommet, Rubber (Gang mtg.)	12A 1-2
Insulator, Chassis Mtg. Plate	32B 112
Insulator, Phono Receptacle	32A 46
Manual	
Customer Instruction	41A 17-40
Service, for 5W1 Chassis	S274
Service, for RC400 Changer	S275
Plate, Pointer Support	15A 498
Pointer, Dial	25A 35-1
Shaft, Pointer	28A 42
Sleeve, Tuning (Brass)	27A 123
Spacer, "T" (Gang condenser mtg.)	29A 2-1-71
Spring, Dial Cord Tension	19B 1-5
Socket, Miniature Tube	
plain type	87A 24-2
with ground strap	87A 24-3
Washer, "C" (for pointer drum)	4A 4-6
Washer, Spring	4A 6-10-0

PHONOGRAPH PARTS

Check model label on underside of record changer for model number. Complete service information and parts list for the RC400 record changer is contained in the RC400 Record Changer Manual (form number S275).

M4	Plug, Pickup Shielded Cable	88A 2-3
M5	Shielded Cable & Plug	413A 11-1
M6	Cartridge, Pickup (includes needle)	See reverse side
	Needle, Pickup	See reverse side
M7	Motor, 33, 45 RPM; 60 cycle	407C 300
	Centerpost (for 33 RPM records)	G400B409
	Centerpost (for 45 RPM records)	G400B410
	Service Manual for RC400 Changer	S275

• John F. Rider

MODELS 5W11, 5W12; Ch. 5W1

ALIGNMENT PROCEDURE

- Turn receiver volume control full on (fully clockwise).
- Loop antenna must be connected and placed in the same relative position to the chassis as when in cabinet.
- Use an isolation transformer if available, otherwise connect a .1 mfd. condenser in series with low side of signal generator and attach to B minus of chassis (terminal of On-Off Switch).

Caution: Do not connect a ground wire directly to chassis.

- Connect output meter across speaker voice coil.
- Use lowest output setting of signal generator capable of producing adequate output meter indication and proceed in the following sequence.
- Repeat adjustments to insure good results.

NOTE

- Use a non-metallic alignment tool for IF transformers.

Step	Dummy Antenna in Series with Signal Generator	Connection of Signal Generator (High Side)	Signal Generator Frequency	Receiver Gang Setting	Trimmer Description	Trimmer Designation	Type of Adjustment
1	250 mmfd. condenser	Tuning condenser, antenna stator	455 KC	Gang fully open	2nd IF 1st IF	*A, B *C, D	Maximum output
2	250 mmfd. condenser	Tuning condenser, antenna stator	1620 KC	Gang fully open	Oscillator	E	Maximum output

†Mount dial pointer. Set pointer to horizontal position with tuning condenser tuned to 1400 KC generator signal (see illustration below). Rotate the tuning condenser until the pointer is in a vertical position (900 KC), then slip chassis in cabinet, carefully guiding the pointer so that it locates between the dial escutcheon and the cabinet. Install loop antenna and chassis mounting bolts.

3	Loop of several turns of wire, or place generator lead close to receiver loop for adequate signal.	No actual connection (signal by radiation)	1400 KC	Tune in generator signal	Antenna	F (see note below)	Maximum output

* Trimmer adjustments A and C made from the underside of the chassis.

†In later sets (with two piece escutcheon spring #19A60), the pointer and escutcheon can be mounted after installing the chassis in cabinet. Proceed as follows: Set pointer to horizontal position with gang tuned to 1400 KC signal (see illustration below). Place escutcheon on cabinet. With long nose pliers slip the hairpin ends of the escutcheon mounting springs in holes of escutcheon tabs.

NOTE: Antenna Trimmer "F" must be aligned after chassis and loop are mounted in cabinet.

TUBE AND TRIMMER LOCATION

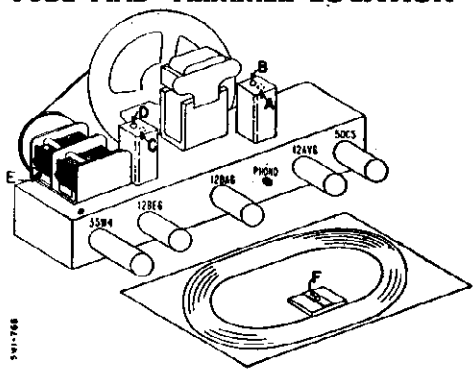

Adjustments A and C made from underside of chassis.

DIAL STRINGING AND POINTER SETTING

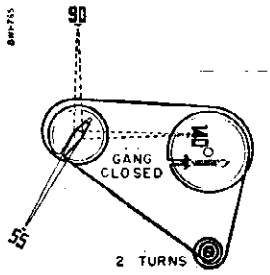

Dial stringing and pointer with solid lines shown with gang closed. Dashed line pointer positions (1400 KC and 900 KC) shown when tuning condenser is tuned to generator signal.

RECORD CHANGER SERVICE DATA

Check model label on underside of record changer for model number. Complete service information and parts list for the RC400 record changer is contained in the RC400 Record Changer Service Manual (form number S275).

Cartridge and Needle

As shown in the illustrations, alternate cartridges may be used. Cartridges are interchangeable when complete with needle.

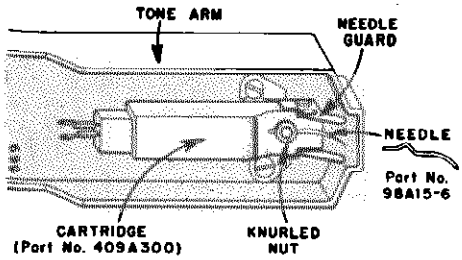

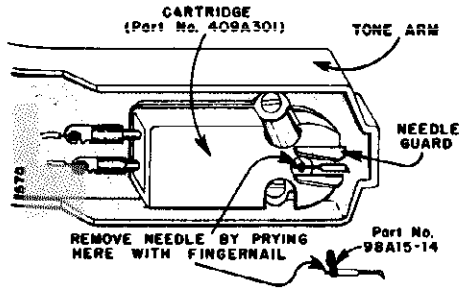

MODELS 6Q11, 6Q12, 6Q13, 6Q14; Ch. 6Q1

Antenna

This set has a built-in "Line Cord FM Antenna" with lead wire brought out through back of chassis to left side antenna terminal (facing back of set).

Instructions for connecting external FM antenna (300 ohm) or external AM antenna are on cabinet back. **Caution:** Do not use a ground.

Hum on FM Only in Sets with Early Ratio Detector

If hum is experienced on FM position in sets having the early ratio detector circuit (see schematic), replace the 12AL5 ratio detector tube. If hum still remains, disconnect the ground tie point from junction of resistors R18 and R19 (point "Y"), then connect the ground tie point to the junction of resistor R19 and negative of condenser C25. Complete schematic shows the modified (late) circuit.

FM Service

Much of FM service is similar to the usual service necessary for AM receivers such as voltage analysis, parts replacement, etc. The chief differences arise because of the considerably higher frequencies used in FM operation, and because of the different type of second detector needed in FM. For a complete discussion of the FM Ratio Detector circuit used in this chassis, see the 9A1 Service Manual, or any text book.

The higher frequencies involved means that more care must be exercised in location and length of leads. Leads tend to act as small inductances or capacities at high frequency and hence may appreciably alter the electrical characteristics of a circuit. For this reason, ground connections should always be maintained as originally made in the set. Also note that in certain circuits, the type by-pass condenser used is critical at the high FM frequencies. When replacing condensers it is important that they be replaced with condensers of identical capacity values, tolerances, temperature coefficients and construction. For example: C11 is a 2 mmfd ± .25 mmfd, — .00075 temperature coefficient, ceramic capacitor. If defective it should be replaced with a 2 mmfd ± .25 mmfd, — .00075 temperature coefficient, ceramic capacitor.

FM Alignment Equipment

This chassis should be aligned only with an AM signal generator and a vacuum tube voltmeter. Any standard brand vacuum tube voltmeter with a DC scale of not over 5 volts is suitable. A 3-volt zero center scale is desirable. A signal generator with a frequency range up to 110 MC. is desirable. It is possible however, to align the receiver with a signal generator going to 20 or 30 megacycles, by using the harmonics of these lower frequencies. To do this merely set the signal generator dial as follows and align exactly as explained in the alignment instructions.

Where alignment chart specifies 109 MC, 104 MC, 90 MC or 87 MC, set signal generator to highest available frequency shown in the column under that frequency (given in megacycles).

109.	104.	90.	87.
54.50	52.	45.	43.5
36.33	34.66	30.	29.
27.25	26.	22.5	21.75
21.80	20.8	18.	17.4
18.17	17.33	15.	14.5

Signal generators which do not tune to 110 MC or whose harmonics are not strong enough, cannot be used for FM alignment.

RESISTORS

Symbol	Description	Part No.
R1	1 megohm, ½ watt	60B 8-105
R2	100 ohms, ½ watt	60B 8-101
R3	1000 ohms, ½ watt	60B 8-102
R4	22,000 ohms, ½ watt	60B 8-223
R5	470 ohms, ½ watt	60B 8-471
R6	470 ohms, ½ watt	60B 8-471
R7	1000 ohms, ½ watt	60B 8-102
R8	1 megohm, ½ watt	60B 8-105
R9	1 megohm, ½ watt	60B 8-105
R10	220,000 ohms, ½ watt	60B 8-224
R11	1000 ohms, ½ watt	60B 8-102
R12	1000 ohms, ½ watt	60B 8-102
R13	1 megohm, ½ watt	60B 8-105
R14	1000 ohms, ½ watt	60B 8-102
**R15	47,000 ohms, ¼ watt	
R16	470,000 ohms, ½ watt	60B 8-474
R17	390 ohms, ½ watt	60B 8-391
R18	15,000 ohms, 5%, ½ watt	60B 7-153
R19	15,000 ohms, 5%, ½ watt	60B 7-153
R20	27,000 ohms, ½ watt	60B 8-273
R21	47 ohms, 1 watt	60B 14-470
R22	33 ohms, 1 watt	60B 14-330
R23	18,000 ohms, ½ watt	60B 8-183
R24	1 megohm Volume Control (tapped at 500,000 ohms)	75B 2-14
R25	10 megohms, ½ watt	60B 8-106
*R26	500,000 ohms, ¼ watt	
*R27	500,000 ohms, ¼ watt	
R28	150 ohms, 1 watt	60B 14-151

CONDENSERS

Symbol	Description	Part No.
C1a	485.8 mmfd, (max) AM RF	Gang 68B 27
C1b	15 mmfd, (max) FM RF	
C1c	15 mmfd, (max) FM Osc.	
C1d	142.6 mmfd, (max) AM Osc. (Dial drum welded to gang)	
C2	.01 mfd, 400 volts, Paper	64B 1-25
C3	.0015 mfd, "Hi-K" Ceramic	65B 9-63
C4	68 mmfd, Ceramic	65A 16-1
C5	.001 mfd, "Hi-K" Ceramic	65B 9-31
C6	65 mmfd, 3%, Silver Mica	65B 1-27
C7	.001 mfd, "Hi-K" Ceramic	65B 9-31
C8	3 to 12 mmfd, trimmer, Silver Ceramic	66A 19-2
C9	35 mmfd, Zero Temp. Coeff., Ceramic	65B 6-57
C10	50 mmfd, Ceramic	65B 6-4
C11	2 mmfd, ± .25 mmfd, —.00075 Temp. Coeff., Ceramic	65B 6-59
C12	.01 mfd min., Ceramic	65A 10-3
C13	.005 mfd min., Ceramic	65A 10-1
C14	.01 mfd min., Ceramic	65A 10-3
C15	.005 mfd min., Ceramic	65A 10-1
C16	.01 mfd min., Ceramic	65A 10-3
C17	.01 mfd min., Ceramic	65A 10-3
C18	.01 mfd min., Ceramic	65A 10-3
C19	.01 mfd min., Ceramic	65A 10-3
C20	.01 mfd min., Ceramic	65A 10-3
**C21	100 mmfd, Ceramic	
**C22	100 mmfd, Ceramic	
C23	100 mmfd 10% } Dual Ceramic	63A 7-1
C24	100 mmfd 10% }	
C25	4 mfd, 50 volts, Elect.	67A 4-8
C26	.002 mfd, 600 volts, Paper	64B 1-14
C27	35 mmfd. Zero Temp. Coeff., Ceramic	65B 6-57
C28	.01 mfd min., Ceramic	65A 10-3
C29	.01 mfd min., Ceramic	65A 10-3
C30	.05 mfd, 200 volts, Paper	64B 1-32
C31a	70 mfd. 150 volts)	
C31b	30 mfd, 150 volts } Elect.	67C 7-14
C31c	20 mfd, 25 volts)	
C32	.005 mfd min., Ceramic	65A 10-1
C33	.01 mfd min., Ceramic	65A 10-3
C34	.005 mfd min., Ceramic	65A 10-1
*C35	.005 mfd, Ceramic	
C36	.002 mfd, 600 volts, Paper	64B 1-14
C37	.01 mfd, 400 volts, Paper (C37 used only in sets with model numbers ending in "UL".)	64B 1-25

COILS, TRANSFORMERS, ETC.

Symbol	Description	Part No.
L1	Antenna, Loop (AM)	69C 97
L2	Coil, Antenna (FM)	69A 103
L3	Coil, Line Cord (FM antenna)	69A 102
L4	Coil, RF Choke	73A 6-2
L5	Coil, RF Choke	73A 6-2
L6	Coil, RF Choke	73A 6-2
L7	Coil, Oscillator (FM)	69A 104
L8	Coil, Oscillator (AM)	69A 105-1
L9	Choke, Filter (2.5 Henry)	74A 15-2
T1	Transformer, 1st IF (FM)	72B 89
T2	Transformer, 2nd IF (FM)	72B 90
T3	Transformer, 1st IF (AM)	72B 91
T4	Transformer, Ratio Detector	72B 39
T5	Transformer, 2nd IF (AM)	72B 74
T6	Transformer, Speaker Output	99A 4
M1	Speaker and Output Transformer (5" PM)	78B 42-2
M2	Rectifier, Selenium	93A 1-2
M3	Socket, Interlock (includes line cord)	A2006
M4	Plug, Interlock	88A 15-8
SW1	Switch, On-Off (SPST)	Part of R24
SW2	Switch, Band (AM-FM)	77B 27
*Couplate, Audio (consists of R26, R27 and C35)		63A 5-2
**Filter, Diode (consists of R15, C21 and C22)		63A 3-1

CABINET PARTS

Description	Part No.
Back Assembly, Interlocking (includes line cord and interlock socket)	A2005
Cabinet, Plastic	
Ebony (6Q11)	34D 25-1
Mahogany (6Q12)	34D 25-2
Ivory (6Q13)	34D 25-3
Red, Mahog. and Gold (6Q14)	34D 25-4
Clip, Tinnerman (for mtg. escutcheon)	2B 10-6-69
Escutcheon, Dial (Plastic)	23D 46
Knob, Plastic	
"On-Off Volume" (Ebony 6Q11)	33C 40-16
"FM-AM" (Ebony 6Q11)	33C 40-17
"Tuning" (Ebony 6Q11)	33C 40-18
"On-Off Volume" (Mahog. 6Q12 and 6Q14)	33C 40-19
"FM-AM" (Mahog. 6Q12 and 6Q14)	33C 40-20
"Tuning" (Mahog. 6Q12 and 6Q14)	33C 40-21
"On-Off Volume" (Ivory 6Q13)	33C 40-22
"FM-AM" (Ivory 6Q13)	33C 40-23
"Tuning" (Ivory 6Q13)	33C 40-24
Washer, Felt (for tuning knobs)	5A 4-9

MISCELLANEOUS

Description	Part No.
Baffle, Speaker	43B 74
Carton and Fillers	44B 150
Clip, Pointer Spring	401A 230
Dial Background	22B 20
Dial Cord	50A 1-3
Fastener (for mtg. speaker baffle)	8A 8-1
Grommet, Rubber (for mtg. gang)	12A 2-5
Grommet, Rubber Spacer (for mtg. gang)	12A 1-4
Insulator, Dial Background (fibre 4"x4")	32A 119
Lever Arm, Band Switch	15A 477
Pointer, Dial	25A 36-1
Ring, Pointer Compression	19A 31-1
Shaft, Band Switch	28A 41
Shield, Tube	87A 7-4
Sleeve, Dial Tuning (Brass)	27A 120
Socket, Line Cord and Interlock	A2006
Socket, Tube	
7 pin miniature	87A 3-4
9 pin miniature	87A 25-4
Spacer, Metal "T" (for mtg. gang)	29A 2-6-71
Spring, Dial Cord Tension	19B 1-2
Spring, Tuning Sleeve Retaining	401A 230
Washer, "C" (3/16" ID—for end of band switch shaft)	4A 4-6-0
Washer, "C" (5/32 ID—for lever on band switch shaft)	4A 4-4-0
Wrapper, Plastic (22"x33" for shipping 6Q13 and 6Q14)	45B 11-1

* Part of encased couplate unit (part number 63A5-2). Replace with exact duplicate part or individual components.
** Part of encased diode filter unit (part number 63A3-1). Replace with exact duplicate part or individual components.

MODELS 6Q11, 6Q12, 6Q13, 6Q14; Ch. 6Q1

IMPORTANT PRELIMINARY ALIGNMENT STEPS

Under normal operating conditions or use, misalignment of RF or IF circuits with age will be slight. Lack of sensitivity and poor tone quality may be due to causes other than alignment. Do not attempt to realign the receiver until all other possible causes have first been thoroughly investigated.

In FM alignment, it is essential that every step be followed. Especially important is picking the center of the IF curve (step 4 in the FM-IF alignment instructions). During this portion of the alignment it is necessary to tune the signal generator very carefully; it may necessitate having to estimate the dial readings to a tenth of a division.

If complete alignment is necessary, it is essential that proper sequence be followed as tabulated in the alignment chart. However, if only the AM band or a portion of the FM circuit are to be aligned, proceed from that point on the chart being sure to follow all remaining steps.

Adjustments made to FM-IF's at 10.7 MC, will require realignment of AM-IF slug adjustments.

Use an isolation transformer if available, otherwise connect a .1 mfd. condenser in series with low side of signal generator and connect to chassis. Caution: Do not connect a ground wire directly to chassis.

Be sure both the set and the signal generator are thoroughly warmed up before starting alignment.

FM I.F. AND RATIO DETECTOR ALIGNMENT

- Keep output indicator leads well separated from signal generator leads and chassis wiring.
- Band switch in FM position (fully to the left).
- While peaking IF's, keep reducing signal generator output so VTVM reading is approximately +1.5 volts DC with exception of Step #5.
- To avoid splitting the slotted head of iron core tuning slugs in the IF transformers, use a non-metallic alignment tool with a ⅛" wide screwdriver blade. Do not exert undue pressure as threads of slugs may strip.
- Speaker must be connected during alignment.
- Disconnect FM antenna at antenna terminal strip.

Before proceeding, be sure to follow instructions above and under "Important Preliminary Alignment Steps."

	Connect Signal Generator	Generator Frequency	Receiver Dial Setting	Output Indicator and Special Connections	Adjust as Follows (very carefully)
1	Thru .001 cond. to 2nd IF grid (pin #1 of 12BA6 2nd IF)	‡10.7 MC	Tuning gang wide open	Connect VTVM (DC probe) to point "W", common to chassis. (See Fig. 7B.)	"A" (ratio detector primary) for maximum reading on VTVM.
2	**Thru .001 cond. to 1st IF grid (pin #1 of 12BA6 1st IF)	"	"	" "	Iron cores "B" and "C" (2nd IF trans.) for maximum reading on VTVM.
3	To FM antenna terminals thru 20 ohm carbon resistor in series with each generator lead.	"	"	" "	"D" and "E" (1st IF) for maximum on VTVM. (Keep reducing generator output to keep VTVM at 1.5 volts)
4	"	a. Reduce output of signal generator until VTVM reads exactly +1.5 volts DC. b. Tune generator frequency above 10.7 MC until VTVM reads exactly +1.0 volt. Note exact generator frequency. Extreme care in reading this is essential. c. Tune generator frequency below 10.7 MC until VTVM reads exactly +1.0 volt. Note exact generator frequency. Extreme care in reading this is essential. d. Add generator frequency in step c to generator frequency in step b and divide by 2. The result is the center frequency of the IF curve to be used in step 5. See example on next page. e. Tune generator frequency above and below 10.7 MC and note voltage reading on VTVM at different frequency points until you have a good impression of the shape of the selectivity curve. If you have two peaks as in Figures 5 or 6, note readings (voltage) of both peaks. If one peak is over 20% higher than the other one, it will be necessary to realign IF's. A selectivity curve that would require realignment is illustrated by Figure 6.		
5	"	Center of IF selectivity curve per step 4d above. See "EXAMPLE" on next page.	Tuning gang wide open	Connect VTVM (DC probe) to point "X", common to point "Y" (junction of R18 and R19) (See Fig. 7B.)	Iron core "F" (ratio detector secondary) for zero voltage reading on VTVM. (The correct zero point is located between a positive and a negative maximum.)

If any adjustments were very far off, it is desirable to repeat steps 3, 4 and 5.

**Do not feed I.F. signal into converter grid as this will cause mis-alignment.
‡Signal may be unmodulated or 400 cycle AM modulated.

Note: Trimmer adjustments A, B, and D made from underside of chassis.

© John F. Rider

MODELS 6Q11, 6Q12, 6Q13, 6Q14; Ch. 6Q1

SETTING SIGNAL GENERATOR TO CENTER OF I.F. SELECTIVITY CURVE

CAUTION: Due to the difficulty of setting a signal generator to the accuracy required by this operation, extreme care must be exercised in making each setting. Otherwise, improper alignment of the ratio detector and consequent audio distortion will result.

EXAMPLE: (See Figures 1 and 2)

Voltage reading in Step 4a is + 1.5 volts.

Generator frequency on low side of 10.7 MC for a reading of + 1 volt DC = 10.640 MC.

Generator frequency on high side of 10.7 MC for a reading of + 1 volt DC = 10.800 MC.

Center frequency is obtained by adding 10.640 and 10.800, then dividing by 2. For these readings it will be 10.72 MC.

Set generator frequency to 10.72 MC as this is center of selectivity curve as shown in Figure 2.

Note: Numerical vernier dial readings may be used instead of MC.

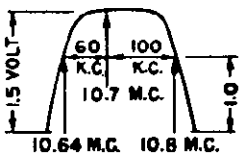

Fig. 1

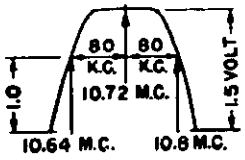

Fig. 2

TYPICAL SELECTIVITY CURVES



Fig. 3



Fig. 4



Fig. 5



Fig. 6

FM RF ALIGNMENT PROCEDURE

Step	Connections	Generator Frequency	Receiver Gang or Dial Setting	Adjust as follows (very carefully)
1	Connect Generator: To FM antenna terminals thru 20 ohm carbon resistor in series with each generator lead. Connect VTVM: DC probe to point "W"; common to chassis.	†109 MC	Gang fully open	M (oscillator) and N (antenna) for maximum. It is advisable to adjust generator output so VTVM readings do not exceed approximately + 1.5 V. DC while peaking.
2		†87 MC	Tune in Signal. (Gang should be closed or almost closed.)	If signals in steps 1 and 2 will not tune in at gang tuning extremes (±0.5 MC), it will be necessary to spread or squeeze oscillator coil turns and then repeat steps 1 and 2 until correct results are obtained.
3		†104 MC	Tune in Signal	Readjust N for maximum VTVM reading, while rocking gang. If trimmer does not peak, it will be necessary to squeeze or spread turns of FM antenna coil. Check tracking at 90 MC. Slide chassis into cabinet and check calibration. Calibration error should not exceed ±0.5 MC. If necessary, repeat steps 1, 2, 3 until correct results are obtained.

† Signal may be unmodulated or 400 cycle AM modulated. If your signal generator does not reach this frequency, use harmonics as dsecribed in "FM Alignment Equipment."

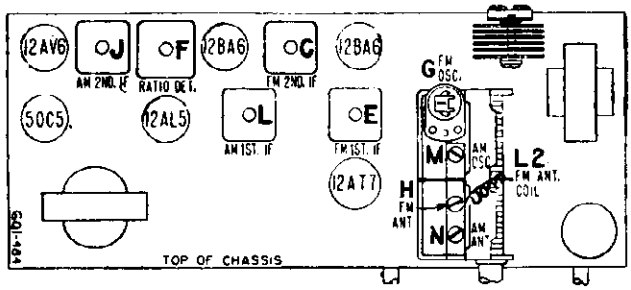

Fig. 7A. Trimmer Location, Top

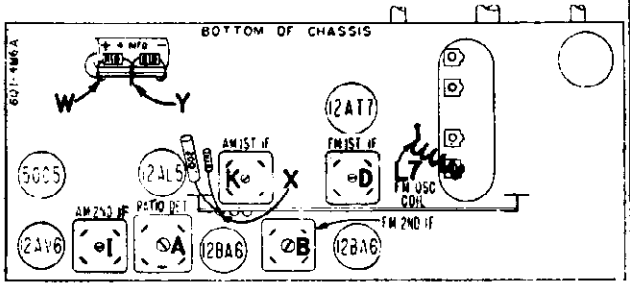

Fig. 7B. Trimmer Location, Bottom

AM ALIGNMENT PROCEDURE

- Use regular output meter connected across speaker voice coil.
- Turn receiver Volume Control fully clockwise.
- AM loop antenna must be connected, FM antenna disconnected.
- Use lowest output setting of signal generator that gives a satisfactory reading on meter.

	Connect Signal Generator	Dummy Antenna Between Radio and Signal Generator	Signal Generator Frequency	Receiver Dial Setting	Adj. Trimmers in Following Order to Max.
	Set Band Switch to Broadcast Position and be sure to follow instructions under heading "Important Preliminary Alignment Steps." Loop antenna must be connected, FM antenna disconnected.				
1	Gang condenser AM antenna stator	250 mmfd.	455 KC	Tuning gang wide open	I, J (2nd IF) K, L (1st IF)
2	"	"	1620 KC	"	M (oscillator)
3	Place generator lead close to loop of set to obtain adequate signal. No actual connection (signal by radiation).		1400 KC	Tune in signal	N (antenna)

Slide chassis in cabinet for checking dial calibration.
Note: Trimmer adjustments I and K made from underside of chassis.

MODELS 6Q11, 6Q12,
6Q13, 6Q14; Ch. 6Q1

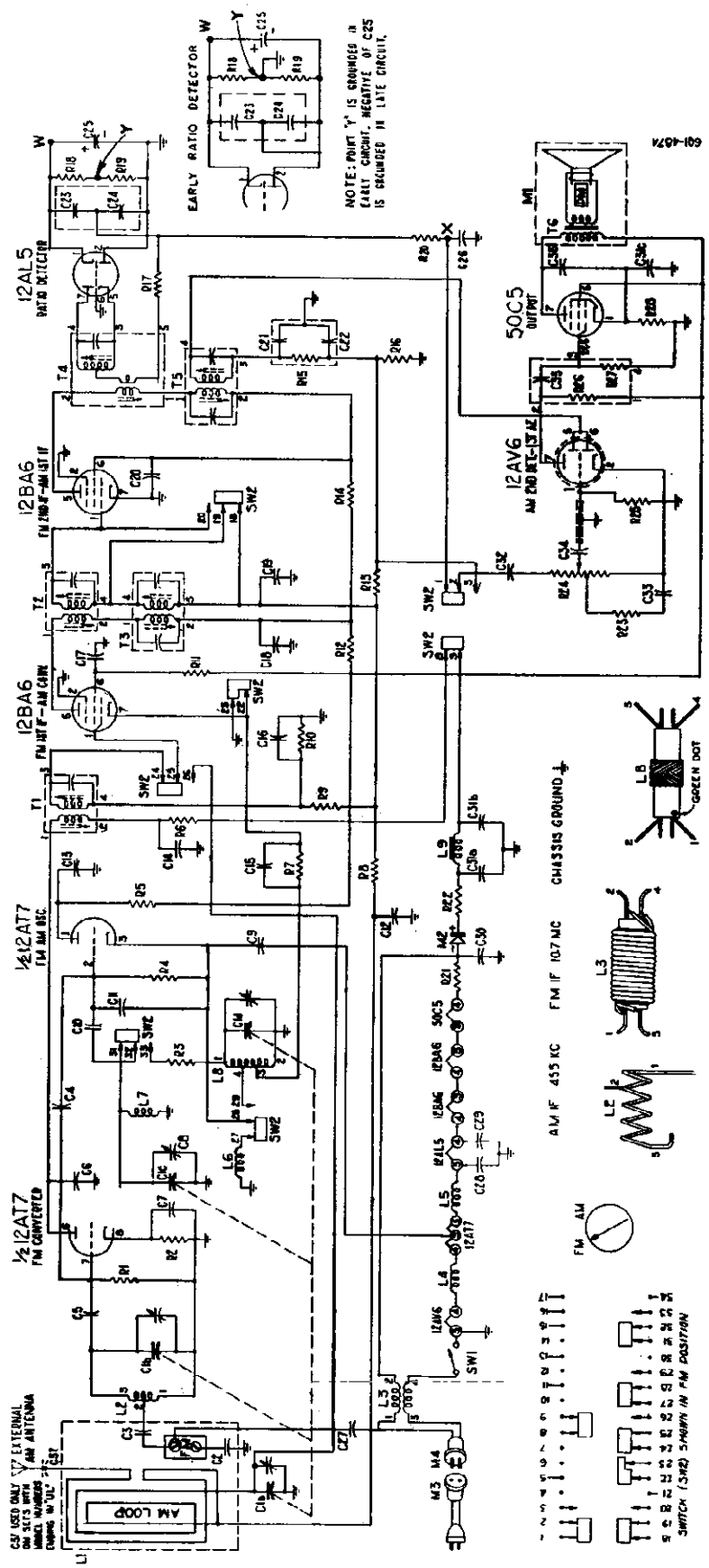

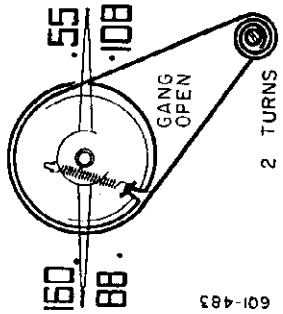

601-483

POINTER SETTING AND DIAL STRINGING

With gang open, pointer should be as shown in stringing diagram. If not, move it by hand while keeping the gang open.

VOLTAGE DATA

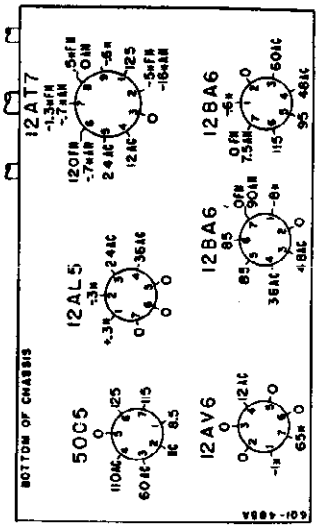

- Lower or zero if taken with 1000 ohm-per-volt meter.
- Voltages taken between terminals and chassis ground, except for 12AL5 terminals #1 and #2, which are taken to point "Y".
- Band switch in FM position unless otherwise indicated.
- Measured on 117 Volt AC line.
- Volume control minimum; dial at low frequency end.
- Voltages measured with vacuum tube voltmeter. Asterisk * indicates much lower or zero readings if measured with 1000 ohm-per-volt meter.

© John F. Rider

MODELS 6V11, 6V12; Ch. 6V1

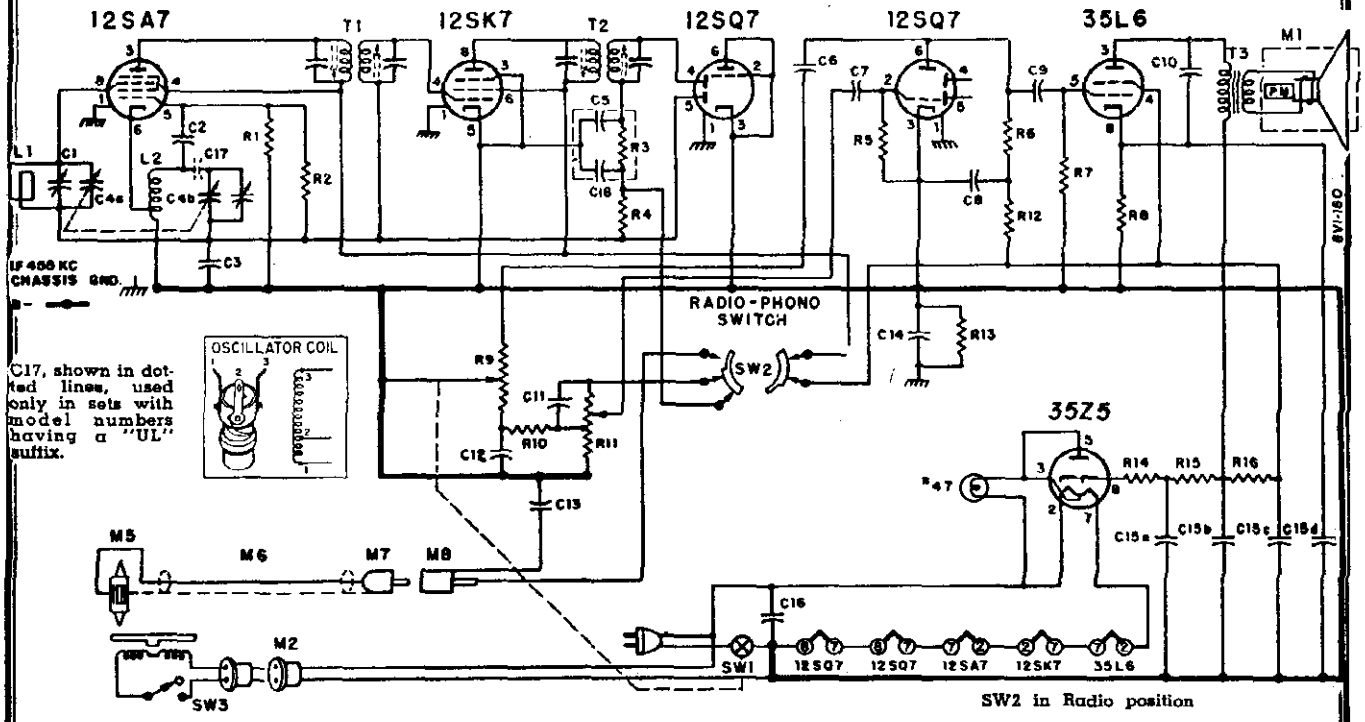

SW2 in Radio position

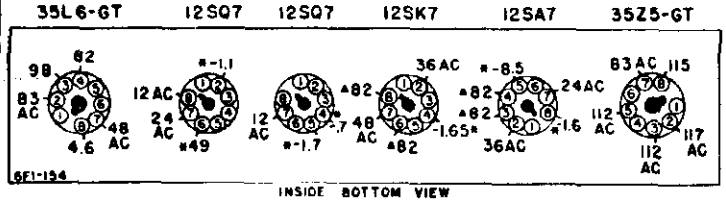

* If taken with a 1000 ohm-per-volt meter, readings will be either lower or practically zero.

▲ On "Phono" these voltages will be zero. All other DC readings may be slightly higher.

VOLTAGE DATA

- All readings made between tube socket terminals and B minus (terminal of On-Off switch).
- Switch in "Radio" position.
- *Measured on 117 Volt AC line.*
- Volume control minimum; dial turned to low frequency end.
- Voltages measured with Vacuum Tube Voltmeter. Readings taken with a 1000 ohm-per-volt meter will be approximately the same except for those marked with an asterisk * in the voltage chart; these readings *will either be lower or practically zero.*

TUBE AND TRIMMER LOCATION

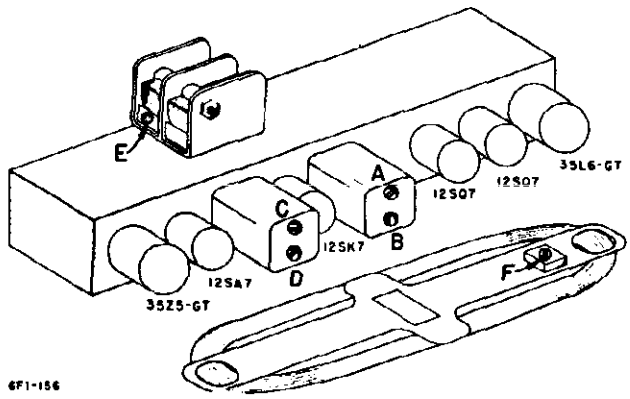

Adjustments B and D made from underside of chassis.

DIAL STRINGING AND POINTER SETTING

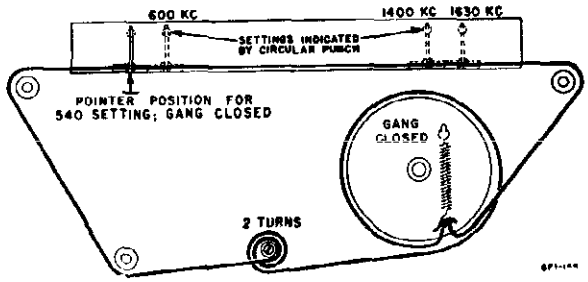

With the gang fully closed, the tip of the pointer clip should be in line with the 1/16" circular punch at the extreme left end of the dial background.

MODELS 6V11, 6V12; Ch. 6V1

ALIGNMENT PROCEDURE

- Check pointer position. With tuning gang closed, the tip of the pointer clip should be over the 1/16" circular punch at the extreme left end of the dial background (see stringing diagram).
- Connect output meter across voice coil.
- Turn receiver volume control full on; set tone control fully clockwise.
- Loop antenna must be connected and placed in the same relative position to the chassis as when in cabinet.
- Use an isolation transformer if available, otherwise connect a .1 mfd. condenser in series with low side of signal generator and attach to B minus of chassis.
- Use lowest output setting of signal generator capable of producing adequate output meter indication and proceed in the following sequence.
- Repeat adjustments to insure good results.

Step	Dummy Antenna in Series with Signal Generator	Connection of Signal Generator (High Side)	Signal Generator Frequency	Receiver Gang Setting	Trimmer Description	Trimmer Designation	Type of Adjustment
1	250 mmfd. condenser	Tuning condenser, antenna stator	455 KC	Gang fully open	2nd IF 1st IF	A, B* C, D*	Maximum output
2	250 mmfd. condenser	Tuning condenser, antenna stator	1620 KC	Gang fully open	Oscillator	E	Maximum output
3	Loop of several turns of wire, or place generator lead close to receiver loop for adequate signal.	No physical connection (signal by radiation)	1400 KC	Tune in generator signal	Antenna	F (see note below)	Maximum output

* Trimmer adjustments B and D made from the underside of the chassis.

NOTE: Antenna Trimmer "F" must be aligned after chassis and loop are mounted in cabinet. Loop trimmer adjustment is located at the rear of the cabinet.

RESISTORS

Symbol	Description	Part No.
R1	22,000 Ohms, ½ Watt	60B 8-223
R2	10 Megohms, ½ Watt	60B 8-106
†R3	47,000 Ohms, ¼ Watt	
R4	1 Megohm, ½ Watt	60B 8-105
R5	4.7 Megohms, ½ Watt	60B 8-475
R6	470,000 Ohms, ½ Watt	60B 8-474
R7	470,000 Ohms, ½ Watt	60B 8-474
R8	150 Ohms, 1 Watt	60B 14-151
R9	2 Megohms Tone Control and On-Off Switch SW1	75B 1-12
R10	27,000 Ohms, ½ Watt	60B 8-273
R11	1 Megohm Volume Control	75B 2-6
R12	47,000 Ohms, ½ Watt	60B 8-473
R13	150,000 Ohms, ½ Watt	60B 8-154
R14	33 Ohms, 1 Watt	60B 28-3
R15	220 Ohms, 1 Watt	60B 28-7
R16	1,000 Ohms, 1 Watt	60B 28-2

CONDENSERS

Symbol	Description	Part No.
C1	Trimmer, 3 to 30 mmfd.	Part of L1
C2	50 mmfd., Ceramic	65B 6-4
C3	.1 mmfd., 200 Volts, Paper	64B 1-30
C4a, C4b	Gang-0 to 420 mmfd., Gang-0 to 108 mmfd.	68B 20-1
	Note—Gang spot welded to dial drum.	
†C5	100 mmfd., Ceramic	
C6	.002 mfd., 600 Volts, Paper	64B 1-14
C7	.01 mfd., 400 Volts, Paper	64B 1-25
C8	.1 mfd., 200 Volts, Paper	64B 1-30
C9	.01 mfd., 400 Volts, Paper	64B 1-25
C10	.03 mfd., 400 Volts, Paper	64B 1-23
C11	500 mmfd., Ceramic	65B 6-6
C12	.01 mfd., 400 Volts, Paper	64B 1-25
C13	.1 mfd., 200 Volts, Paper	64B 1-30
C14	.18 mfd., 200 Volts, Paper	64A 2-2
C15a, C15b, C15c, C15d	30 mfd., 150 Volts; 30 mfd., 150 Volts; 20 mfd., 150 Volts; 20 mfd., 25 Volts	Elect. 67A 14-1
C16	.05 mfd., 400 Volts, Paper	64B 1-22
C17	.02 mfd., 400 Volts, Paper (Used only in sets with model numbers having a "UL" suffix.)	64B 1-24
†C18	100 mmfd., ceramic	

COILS, TRANSFORMERS, ETC.

Symbol	Description	Part No.
L1	Antenna and Trimmer, Loop	69B 13
L2	Coil, Oscillator	69A 52
T1	Transformer, 1st IF	72B 50
T2	Transformer, 2nd IF	72B 51
T3	Transformer, Output	79A 11-2
M1	Speaker (5") without output Trans.	78B 39-1
M2	Socket & Leads, Phono Motor	89A 6-3
M3	Socket, Phono input	88A 1
SW1	Switch, On-Off	Part of R9
SW2	Switch, Radio-Phono	77A 16-4
	Diode Filter	63A 3-1

CABINET PARTS

Description	Part No.
Bracket, Dial Scale Mtg.	15A 169
Cabinet, Plastic	
Bottom Less Lid (Mahog. 6V12)	34D 11-12
Lid only (Mahogany 6V12)	34D 11-13
Bottom Less Lid (Ebony 6V11)	34D 11-14
Lid only (Ebony 6V11)	34D 11-15
Dial Scale, Glass	21B 35-2
Escutcheon Overlay	23C 23-1
Grille Cloth and Baffle	A1688
Hinge	37A8-1
Hinge Stud	27A17-1
Knobs, Radio	
"Volume" and "Tone" (Mahog.)	33A 21-7
"Volume" and "Tone" (Ebony)	33A 21-8
"Tuning" (Mahog.)	33B 34-6
"Tuning" (Ebony)	33B 34-8
"Radio-Phono" (Mahog.)	33B 34-5
"Radio-Phono" (Ebony)	33B 34-7
Rubber Strip, Dial Scale Mtg. (8½")	12A 9-3
Rubber Bumper (for Cabinet lid)	12A3-2
Stay Arm, Lid	37A9-1

MISCELLANEOUS

Background, Dial	22B 9-1
Bracket, Tuning Sleeve	15A 289
Bracket, Dial Light	15A 156
Cartons and Fillers	44B 112
Dial Cord	50A1-3
Pilot Light No. 47	81A 1-8
Pilot Light Socket and Leads	82A 2-4
Pointer, Dial	25A 21
Sleeve, Tuning (Brass)	27A 61
Spring, Dial Drum Tension	19B 1-3
Washer, Felt ("Volume" and "Tone")	5A 4-8
Washer, Felt ("Tuning" Knob)	5A 4-9

PHONOGRAPH PARTS

NOTE: Check Record Changer model number and see proper service manual for complete parts list.

M5	Cartridge (includes needles)	409A 11
	Needle, Phonograph	
	Long Play	98A 15-6
	Standard 78 RPM	98A 15-7
M6	Shielded Cable & Plug, Pickup	413A 11-1
M7	Plug, Pickup Shielded Cable	88A 2-3
SW3	Switch, Phono Motor On-Off (See caution in changer manual	408A 1
	Centerpost, for 10" and 12" records	G400B 311
	Centerpost, for 7" records	G400B 310

† Part of encased Diode Filter Unit 63A3-1. This unit consists of R3, C5, C18 (see schematic). If a section of the unit becomes defective, it may be replaced with an individual component.

MODELS 6W11, 6W12; Ch. 6W1

SETTING SIGNAL GENERATOR TO CENTER OF I.F. SELECTIVITY CURVE

CAUTION: Due to the difficulty of setting a signal generator to the accuracy required by this operation, extreme care must be exercised in making each setting. Otherwise, improper alignment of the ratio detector and consequent audio distortion will result.

EXAMPLE: (See Figures 1 and 2)

Voltage reading in Step 4a is + 1.5 volts.

Generator frequency on low side of 10.7 MC for a reading of + 1 volt DC = 10.640 MC.

Generator frequency on high side of 10.7 MC for a reading of + 1 volt DC = 10.800 MC.

Center frequency is obtained by adding 10.640 and 10.800, then dividing by 2. For these readings it will be 10.72 MC.

Set generator frequency to 10.72 MC as this is center of selectivity curve as shown in Figure 2.

Note: Numerical vernier dial readings may be used instead of MC.

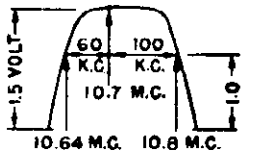

Fig. 1

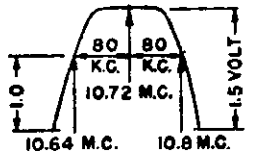

Fig. 2

TYPICAL SELECTIVITY CURVES

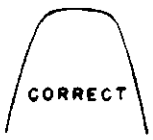

Fig. 3



Fig. 4



Fig. 5



Fig. 6

FM RF ALIGNMENT PROCEDURE

	Connect Signal Generator	Generator Frequency	Receiver Dial Setting	Output Indicator and Connections	Adjust as Follows
6	Thru 270 ohm carbon resistor to high side FM antenna terminal	109 MC† (unmodulated).	Tuning gang wide open	Connect VTVM (DC probe) from point "W" to B minus ("Y"). See Fig. 7.	*G (osc.) for maximum VTVM reading.
7		102 MC† (unmodulated).	102 MC	"	*Tune in generator signal on receiver. Adj. H (ant.) for max. VTVM reading.

* It is advisable to adjust generator output so VTVM readings do not exceed approximately + 1.5 V. DC after peaking.
† If your signal generator does not reach this frequency, use harmonics as described in "FM Alignment Equipment."

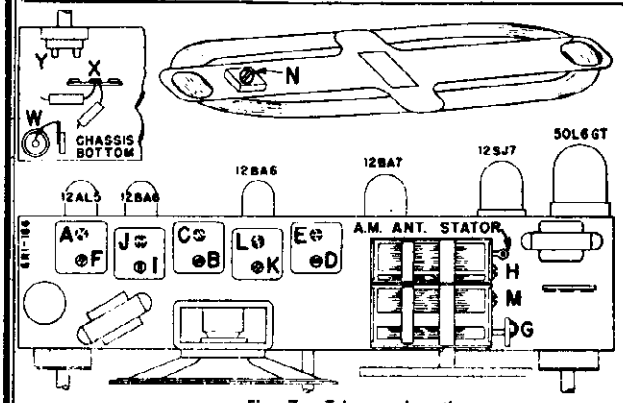

Fig. 7. Trimmer Location

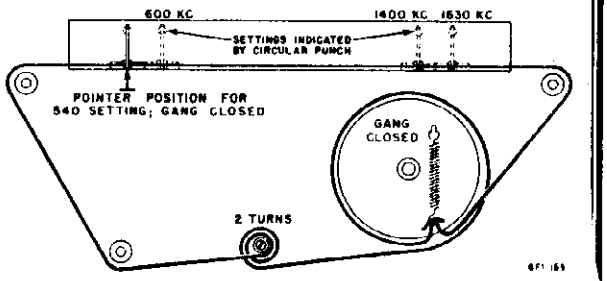

With the gang fully closed, the tip of the pointer clip should be in line with the 1/16" circular punch at the extreme left end of the dial background.

Fig. 8. Dial Stringing and Pointer Setting

AM ALIGNMENT PROCEDURE

- Use regular output meter connected across speaker voice coil.
- Turn receiver Volume Control full on; Tone Control fully clockwise.
- AM loop antenna must be connected and placed in the same relative position to the chassis as when in cabinet.
- Use lowest output setting of signal generator that gives a satisfactory reading on meter.

	Connect Signal Generator	Dummy Antenna Between Radio and Signal Generator	Signal Generator Frequency	Receiver Dial Setting	Adj. Trimmers in Following Order to Max.
	Set Band Switch to Broadcast Position (center) and be sure to follow instructions under heading "Important Preliminary Alignment Steps." Loop antenna must be connected.				
1	Gang condenser antenna stator	.1 MFD	455 KC	Tuning gang wide open	I, J (2nd IF) K, L (1st IF)
2	AM Antenna Stator	Direct connection	1620 KC	Tuning gang wide open	M (oscillator)
	Install chassis and AM loop in cabinet.				
3	Place generator lead close to loop of set to obtain adequate signal. No actual connection (signal by radiation).		1400 KC	Tune in signal	N (antenna)

Note: Trimmer adjustments J and L made from underside of chassis.

MODELS 6W11, 6W12; Ch. 6W1

IMPORTANT PRELIMINARY ALIGNMENT STEPS

Under normal operating conditions or use, misalignment of RF or IF circuits with age will be slight. Lack of sensitivity and poor tone quality may be due to causes other than alignment. Do not attempt to realign the receiver until all other possible causes have first been thoroughly investigated.

In FM alignment, it is essential that every step be followed. Especially important is picking the center of the IF curve (step 4 in the FM-IF alignment instructions). During this portion of the alignment it is necessary to tune the signal generator very carefully; it may necessitate having to estimate the dial readings to a tenth of a division.

If complete alignment is necessary, it is essential that proper sequence be followed as tabulated in the alignment chart. However, if only the AM band or a portion of the FM circuit are to be aligned, proceed from that point on the chart being sure to follow all remaining steps.

Adjustments made to FM-IF's at 10.7 MC, will require realignment of AM-IF slug adjustments.

Check pointer position. With tuning gang closed, the tip of the pointer clip should be over the 1/16" circular punch at the extreme left end of the dial background (see stringing diagram).

Use an isolation transformer if available, otherwise connect a .1 mfd. condenser in series with low side of signal generator and attach to B minus of chassis.

Be sure both the set and the signal generator are thoroughly warmed up before starting alignment.

FM I.F. AND RATIO DETECTOR ALIGNMENT

- Keep output indicator leads well separated from signal generator leads and chassis wiring.
- Band switch in FM position (fully to the left).
- While peaking IF's, keep reducing signal generator output so VTVM reading is approximately +1.5 volts DC with exception of Step #5.
- To avoid splitting the slotted head of iron core tuning slugs in the IF transformers, use a non-metallic alignment tool with a ⅛" wide screwdriver blade. Do not exert undue pressure as threads of slugs may strip.
- Speaker must be connected during alignment.
- FM antenna disconnected during alignment.

Before proceeding, be sure to follow all steps listed above, under "Important Preliminary Alignment Steps."

	Connect Signal Generator	Generator Frequency	Receiver Dial Setting	Output Indicator and Special Connections	Adjust as Follows (very carefully)
1	Thru .001 cond. to 2nd IF grid (pin #1 of 12BA6 2nd IF)	10.7 MC unmodulated.	Tuning gang wide open	Connect VTVM (DC probe) from point "W" to B minus ("Y"). (See Fig. 7.)	"A" (ratio detector primary) for maximum reading on VTVM.
2	**Thru .001 cond. to 1st IF grid (pin #1 of 12BA6 1st IF)	"	"	" "	Iron cores "B" and "C" (2nd IF trans.) for maximum reading on VTVM.
3	High side FM antenna terminal	"	"	" "	"D" and "E" (1st IF) for maximum on VTVM. Readjust A, B, C, D, E, for maximum. (Keep reducing generator output to keep VTVM at 1.5 volts)
4	"	a. Reduce output of signal generator until VTVM reads exactly +1.5 volts DC. b. Tune generator frequency above 10.7 MC until VTVM reads exactly +1.0 volt. Note exact generator frequency. Extreme care in reading this is essential. c. Tune generator frequency below 10.7 MC until VTVM reads exactly +1.0 volt. Note exact generator frequency. Extreme care in reading this is essential. d. Add generator frequency in step c to generator frequency in step b and divide by 2. The result is the center frequency of the IF curve to be used in step 5. See example on next page. e. Tune generator frequency above and below 10.7 MC and note voltage reading on VTVM at different frequency points until you have a good impression of the shape of the selectivity curve. If you have two peaks as in Figures 5 or 6, note readings (voltage) of both peaks. If one peak is over 20% higher than the other one, it will be necessary to realign IF's. A selectivity curve that would require realignment is illustrated by Figure 6.			
5	"	Center of IF selectivity curve per step 4d above. See "EXAMPLE" on next page.	Tuning gang wide open	Connect VTVM (DC probe) from point "X" to B minus ("Y"). (See Fig. 7.)	Iron core "F" (ratio detector secondary) for zero voltage reading on VTVM. (The correct zero point is located between a positive and a negative maximum.)

If any adjustments were very far off, it is desirable to repeat steps 3, 4 and 5.

**Do not feed I.F. signal into converter grid as this will cause mis-alignment.

Note: Trimmer adjustments A, C, and E made from underside of chassis.

© John F. Rider

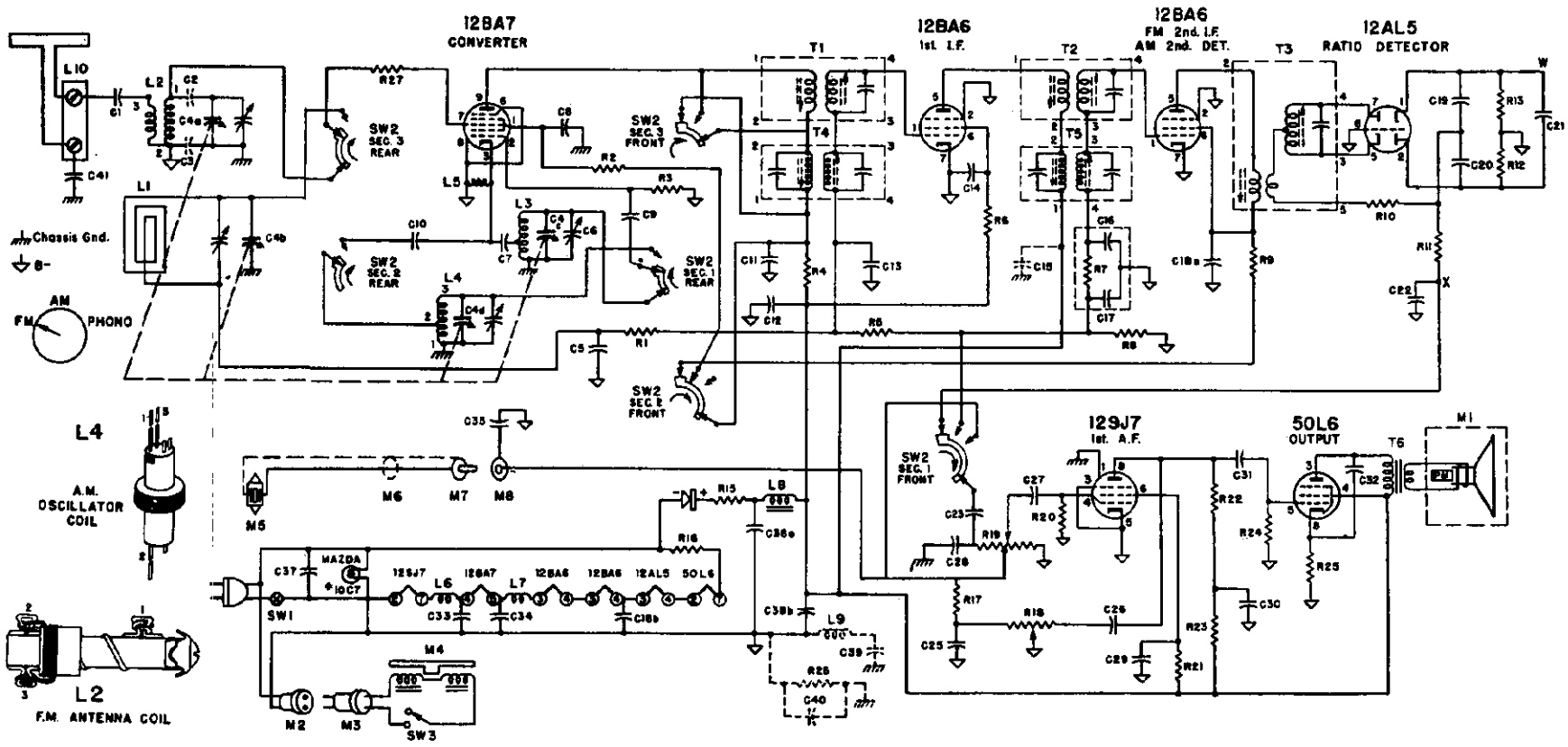

FM ALIGNMENT EQUIPMENT

This chassis should be aligned only with an AM signal generator and a vacuum tube voltmeter. Any standard brand vacuum tube voltmeter with a DC scale of not over 5 volts is suitable. A 3-volt zero center scale is desirable. A signal generator with a frequency range up to 110 MC. is desirable. It is possible however, to align the receiver with a signal generator going to 20 or 30 megacycles, by using the harmonics of these lower frequencies. To do this merely set the signal generator dial as follows and align exactly as explained in the alignment instructions.

Where alignment chart specifies 109 MC., set signal generator to highest available frequency of the following:

109. MC	27.25 MC
54.50 MC	21.80 MC
36.33 MC	18.17 MC

Where alignment chart specifies 102 MC., set signal generator to highest available frequency of the following:

102. MC	25.50 MC
51. MC	20.40 MC
34. MC	17. MC

Signal generators which do not tune to 110 MC or whose harmonics are not strong enough, cannot be used for FM alignment.

CAUTION

Do not connect a ground wire to this radio chassis.

MODELS 6Y18, 6Y19; Ch. 6Y1

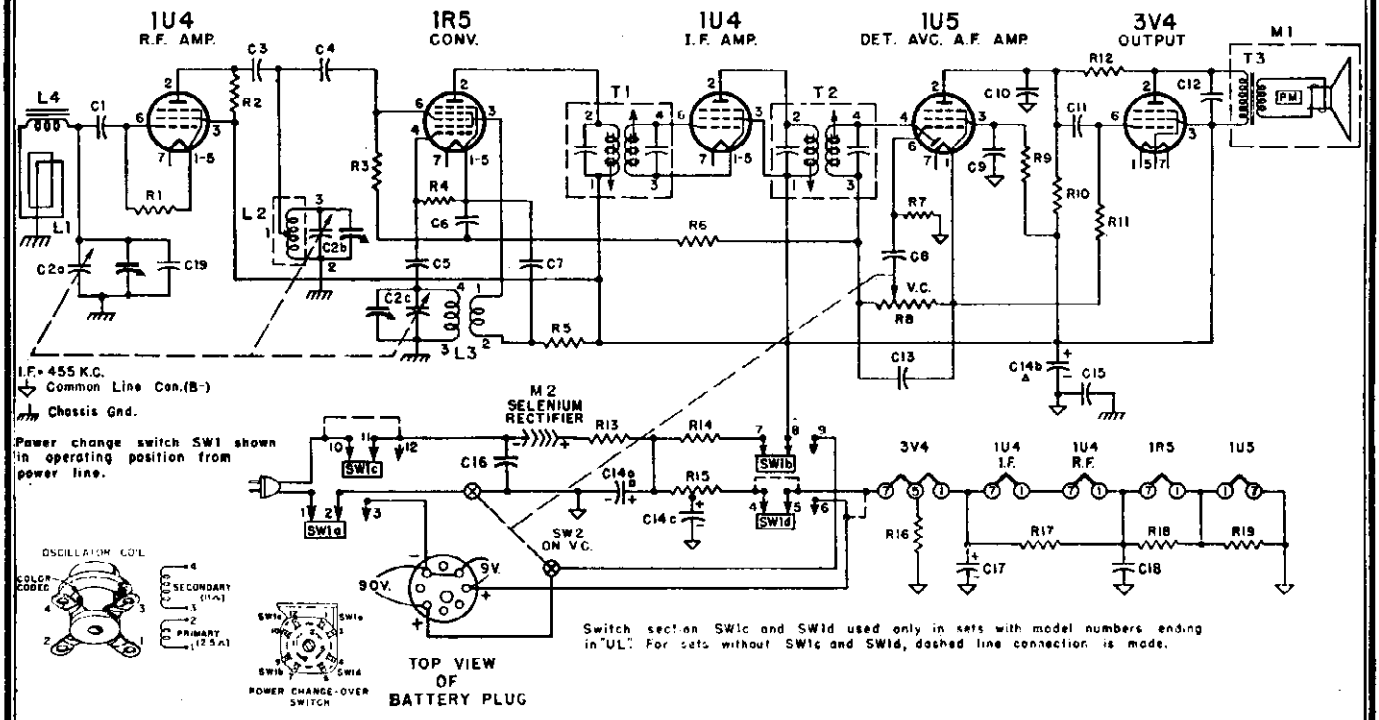

VOLTAGE DATA

- Voltage readings taken between tube socket terminals and B minus (metal shell of electrolytic condenser), unless otherwise shown.
- Dial set to low frequency, no signal, and volume control minimum.
- Measurements made from 117 volts AC line. If measured from DC line, voltages may be slightly lower.
- Voltage readings taken with a vacuum tube voltmeter. Socket terminals marked with an asterisk * indicate much lower voltage or zero voltage if measured with a 1000 ohm-per-volt meter.
- If measurements are made on battery operation, tube filament and B plus voltages will vary with the condition of the batteries. These voltages will equal the terminal voltage of the A or B battery less the voltage drop through components.

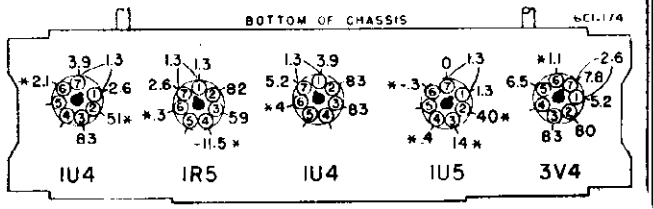

*If taken with a 1000 ohm-per-volt meter, readings will be lower or zero.

RESISTORS

Symbol	Description	Part No.
R1	2.2 Megohms, ½ Watt	60B 8-225
R2	27,000 Ohms, ½ Watt	60B 8-273
R3	1 Megohm, ½ Watt	60B 8-105
R4	100,000 Ohms, ½ Watt	60B 8-104
R5	8,200 Ohms, ½ Watt	60B 8-822
R6	3.3 Megohms, ½ Watt	60B 8-335
R7	10 Megohms, ½ Watt	60B 8-106
R8	1 Megohm, Volume Control and On-Off Switch	75B 1-26
R9	4.7 Megohms, ½ Watt	60B 8-475
R10	470,000 Ohms, ½ Watt	60B 8-474
R11	2.2 Megohms, ½ Watt	60B 8-225
R12	5.6 Megohms, ½ Watt	60B 8-565
R13	47 Ohms, 1 Watt	60B 14-470
R14	2,700 Ohms, 1 Watt	60B 14-272
R15	2,400 Ohms, 2.5 Watt Center-tapped Candohm	61A 5-3
R16	1,500 Ohms, ½ Watt	60B 8-152
R17	820 Ohms, ½ Watt	60B 8-821
R18	220 Ohms, ½ Watt	60B 8-221
R19	150 Ohms, ½ Watt	60B 8-151

CONDENSERS

Symbol	Description	Part No.
C1	250 mmfd., Ceramic	65B 6-5
C2a	Gang, 420.0 mmfd. (max.) Ant. Section	68B 10
C2b	Gang, 193.8 mmfd. (max.) RF Section	68B 10
C2c	Gang, 90.0 mmfd. (max.) Osc. Section	68B 10
C3	105 mmfd., Ceramic	65B 6-9
C4	250 mmfd., Ceramic	65B 6-5
C5	105 mmfd., Ceramic	65B 6-9
C6	.05 mfd., 200 Volts, Paper	64B 1-32
C7	.001 mfd. min., Ceramic	65B 6-41
C8	.005 mfd., 600 Volts, Paper	64B 1-12
C9	.05 mfd., 200 Volts, Paper	64B 1-32
C10	105 mmfd., Ceramic	65B 6-9
C11	.005 mfd., 600 Volts, Paper	64B 1-12
C12	.001 mfd. min., Ceramic	65B 6-41
C13	250 mmfd., Ceramic	65B 6-5
C14a	30 mfd., 150 Volts	
C14b	40 mfd. 150 Volts	Elect. 67C 7-52
C14c	20 mfd., 150 Volts	
C15	.18 mfd., 200 Volts, Paper	64A 2-2
	Note: In sets with model numbers ending in "UL", C15 is .1 mfd., 400 V.	
C16	.05 mfd. 400 Volts, Paper	64B 1-22
C17	100 mfd., 25 Volts, Elect.	67A 4-6
C18	.25 mfd., 200 Volts, Paper	64B 1-28
C19	15 mmfd., 500 Volts, Ceramic	65B 6-18

COILS, TRANSFORMERS, ETC.

Symbol	Description	Part No.
L1	Antenna, Loop	(Part of Cabinet)
L2	Coil, RF	69B 58
L3	Coil, Oscillator	69A 57
L4	Coil, Antenna Loading	69A 45-1
T1	Transformer, 1st IF	72B 55
T2	Transformer, 2nd IF	72B 56
T3	Transformer, Output	98A 21
M1	Speaker (4"x6" PM) and Output Transformer	78B 38-1
M2	Rectifier, Selenium	93A 1-4
SW1	Switch, Power Change DPDT, for "N" models	77A 19-2
	4PDT, for "UL" models	77A 19-1
SW2	Switch, On-Off (DPST)	(Part of R8)

MISCELLANEOUS

Description	Part No.
Bracket, Plastic Handle (6Y18)	98A 14-10
Bracket, Leather Handle (6Y19)	98A 14-9
Cabinet (Complete)	
Fabric Covered (6Y18)	35D 97-1
Leather Covered (6Y19)	35D 97-2
Carton and Fillers	44B 135
Caster skid (Bottom of Cabinet)	98A 14-1
Catch, Front Door (with monogram)	37B 19-2
Catch, Rear door (male)	98A 14-3
Catch, Rear door (female)	98A 14-4
Escutcheon, Dial and Grille	23D 33-3
Fibre Strip (for mounting rear door female catch)	32A 32
Grommet, Gang Mounting	12A 1-2
Grommet Spacer (for 12A1-2)	29A 2-1-71
Handle, Plastic (6Y18)	98A 14-2
Handle, Leather (6Y19)	98A 14-8
Hinge, Rear Door (2 required)	98A 14-7
Hinge, Front Door	98A 14-6
Knob	
Off-Volume	33B 35-1
Tuning	33B 35-2
Latch, Front Door	37B 19-6
Mounting Plate, Chassis (Metal)	15C 301
Mounting Plate, Electrolytic	67A 2-1
Plug, Battery	88A 3-3
Pointer, Dial	25A 32-1
Snap Button (2 required)	13A 1-1-71
Terminal Strip, Antenna	10A 25
Tube Socket	87A 3-4

© John F. Rider

MODELS 6Y18, 6Y19; Ch. 6Y1

ALIGNMENT PROCEDURE

- Use battery power for alignment if fresh batteries are available.
- When using AC power, an isolation transformer should be used if available. If not using an isolating transformer, connect a .1 mfd. condenser in series with the signal generator low side to B minus of radio chassis.
- Connect loop antenna and maintain same relative position as when in cabinet.
- Set volume control full on.
- Connect output meter across speaker voice coil.
- Use lowest output setting of signal generator capable of producing adequate output meter indication and then proceed as outlined below.
- Repeat adjustments to insure good results.

NOTE

To avoid splitting the slotted head of powdered iron core tuning slugs in I.F. transformer, use an alignment tool with a screw driver blade ⅛" wide.

Step	Dummy Antenna in Series with Signal Generator	Connection of Signal Generator (High Side)	Signal Generator Frequency	Receiver Gang Setting	Trimmer Description	Trimmer Designation	Type of Adjustment
1	.001 mfd. when using AC .1 mfd. when using Battery	Grid of 1R5 (Pin 6)	455 KC	Gang fully open	2nd IF 1st IF	A, B C, D (see note below)	Maximum output
2	.001 mfd. when using AC .1 mfd. when using Battery	Tuning condenser, antenna stator	1620 KC	Gang fully open	Oscillator (on gang)	E	Maximum output
3	.001 mfd. when using AC .1 mfd. when using Battery	Tuning condenser, antenna stator	1400 KC	Tune in generator signal	R. F. (on gang)	F	Maximum output
Install chassis in cabinet. Mount dial pointer. Set pointer at 1400 K.C. with gang condenser tuned to 1400 K.C. signal.							
4	Loop of several turns of wire, or place generator lead close to receiver loop for adequate signal.	No physical connection (signal by radiation)	1400 KC	Tune in generator signal	Antenna (on gang)	G	Maximum output

NOTE: Adjustments B and D are made from underside of chassis.

TUBE AND TRIMMER LOCATION

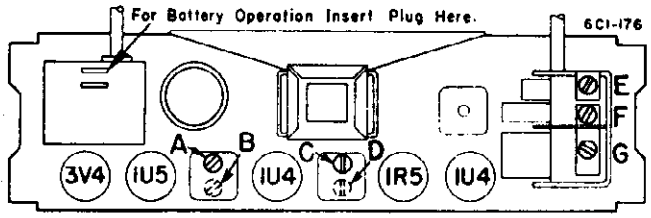

REPLACEMENT OF BATTERY PACK

Replace A-B battery pack with Ensign type AB50 pack, Ray-O-Vac AB994, General 60A-6F6-5, Burgess F6A60 or other equivalent.

Electrical characteristics of the recommended battery packs provide for equal life for both the A and B sections. The A section may give satisfactory performance as low as 6.6 volts, the B section as low as 60 volts. Replace battery pack when reception is weak and voltage has dropped below values given above.

To install a replacement battery pack, merely open the back of the cabinet, pull out the battery plug and slide out the run-down battery pack.

Slip a new battery pack into place, plug in the battery plug.

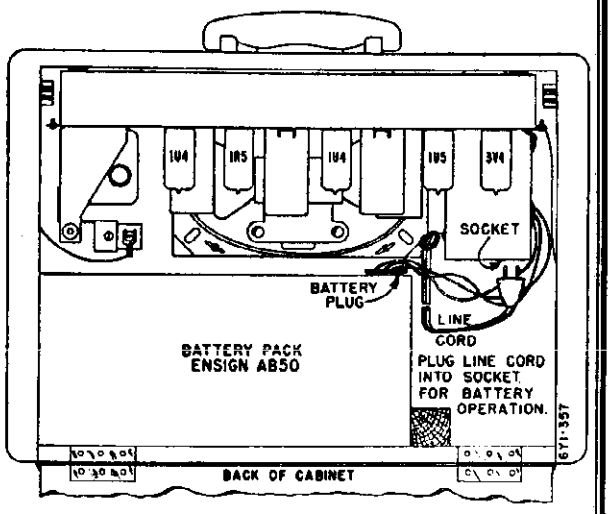

RADIO TILT-OUT DOOR ADJUSTMENT

If the door on the radio tilt-out assembly is shifted to one side, readjustment of the tilt-out arm will correct the difficulty. If the tilt-out door is too far to the right, the right-hand tilt-out arm can be sprung. If the door is too far to the left, the left-hand arm can be sprung. The tilt-out arms are sprung by holding the lower end of the arm against its bracket and prying the arm toward the chassis with a screwdriver. The screwdriver is used as a lever between the tilt-out arm and the side of the radio compartment.

In the event that the bottom edge of the radio tilt-out door rubs, it can be planed off slightly. Care must be exercised in doing this in order that the door is not marred. Hold the plane flat against the beveled bottom edge of the door while planing off a small amount.

ALIGNMENT PROCEDURE

FM ALIGNMENT EQUIPMENT

The model 8D1 chassis should be aligned only with an AM signal generator and a vacuum tube voltmeter. Any standard brand vacuum tube voltmeter with a DC scale of not over 5 volts is suitable. A 3-volt zero center scale is desirable. A signal generator with a frequency range up to 110 MC. is desirable. It is possible however, to align the receiver with a signal generator going to 20 or 30 megacycles, by using the harmonics of these lower frequencies. To do this merely set the signal generator dial as follows and align exactly as explained in the alignment instructions.

Where alignment chart specifies 109 *MC.*, set signal generator to highest available frequency of the following:

109. MC	27.25 MC
54.50 MC	21.80 MC
36.33 MC	18.17 MC

Where alignment chart specifies 102 *MC.*, set signal generator to highest available frequency of the following:

102. MC	25.50 MC
51. MC	20.40 MC
34. MC	17. MC

Signal generators which do not tune to 110 MC or whose harmonics are not strong enough, cannot be used for FM alignment.

POINTER SETTING

With the gang closed, the pointer should be at the position as shown in the stringing diagram (Fig. 4), that is, the bottom edge of the pointer should line up with the top of the "MC" lettering on the dial scale. If the pointer is in a different position, move it by hand while keeping the gang closed.

TRIMMER IDENTIFICATION CHART

Trimmer Symbol		Function
A	T3	Ratio Detector transformer
B	T2	2nd IF transformer (FM)
C	T2	2nd IF transformer (FM)
D	T1	1st IF transformer (FM)
E	T1	1st IF transformer (FM)
F	T3	Ratio Detector transformer
G	C38	FM oscillator trimmer
H	C5b	FM RF trimmer
I	T5	2nd IF transformer (AM)
J	T5	2nd IF transformer (AM)
K	T4	1st IF transformer (AM)
L	T4	1st IF transformer (AM)
M	C5d	AM oscillator trimmer
N	C5a	AM antenna trimmer

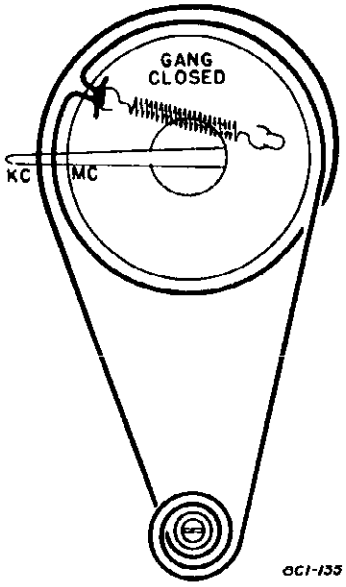

Fig. 4. Stringing Diagram

MODELS 8D15, 8D16; Ch. 8D1

SETTING SIGNAL GENERATOR TO CENTER OF I.F. SELECTIVITY CURVE

CAUTION: Due to the difficulty of setting a signal generator to the accuracy required by this operation, extreme care must be exercised in making each setting. Otherwise, improper alignment of the ratio detector and consequent audio distortion will result.

EXAMPLE: (See Figures 5 and 6)

Voltage reading in Step 4a is + 1.5 volts.

Generator frequency on low side of 10.7 MC for a reading of + 1 volt DC = 10.640 MC.

Generator frequency on high side of 10.7 MC for a reading of + 1 volt DC = 10.800 MC.

Center frequency is obtained by adding 10.640 and 10.800, then dividing by 2. For these readings it will be 10.72 MC.

Set generator frequency to 10.72 MC as this is center of selectivity curve as shown in Figure 6.

Note: Numerical vernier dial readings may be used instead of MC.

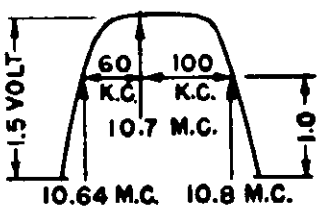

Fig. 5

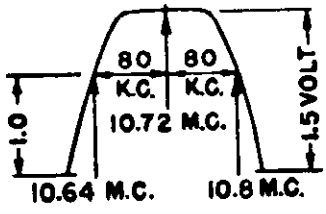

Fig. 6

TYPICAL SELECTIVITY CURVES

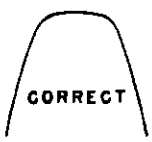

Fig. 7.



Fig. 8.



Fig. 9.



Fig. 10.

FM RF ALIGNMENT PROCEDURE

	Connect Signal Generator	Generator Frequency	Receiver Dial Setting	Output Indicator and Connections	Adjust as Follows
6	FM ant. terminal.	109 MC† (unmodulated).	Tuning gang wide open	Connect VTVM (DC probe) from point "W" to ground.	*G for maximum VTVM reading.
7	"	102 MC† (unmodulated).	102 MC	"	*Tune in generator signal on receiver. Adjust H for max. VTVM reading

* It is advisable to adjust generator output so VTVM readings do not exceed approximately + 1.5 V. DC after peaking.
† If your signal generator does not reach this frequency, use harmonics as described in "FM Alignment" on page 3.

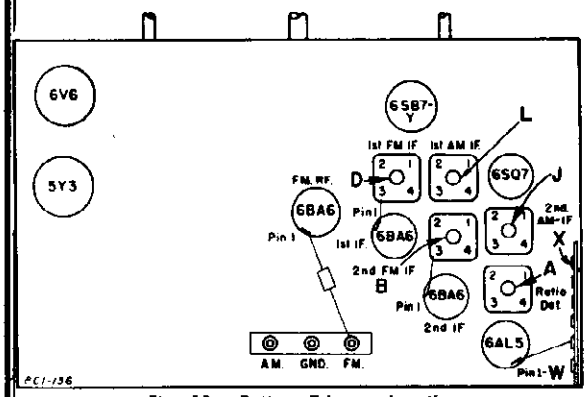

Fig. 11. Bottom Trimmer Location

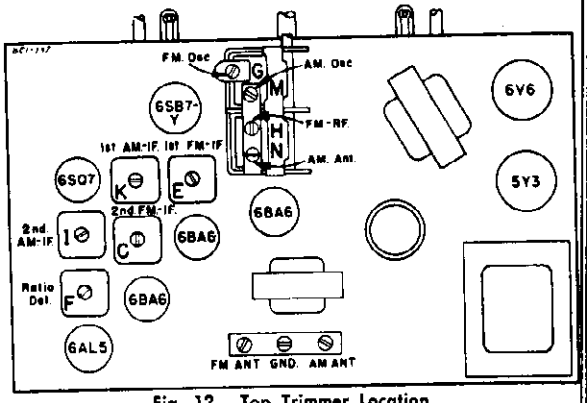

Fig. 12. Top Trimmer Location

AM ALIGNMENT PROCEDURE

- Use regular output meter connected across speaker voice coil.
- Turn receiver Volume Control full on; Tone Control full treble.
- Band Switch in center position.
- Use lowest output setting of signal generator that gives a satisfactory reading on meter.

	Connect Signal Generator	Dummy Antenna Between Radio and Signal Generator	Signal Generator Frequency	Receiver Dial Setting	Adj. Trimmers in Following Order to Max.
	Set Band Switch to Broadcast Position (center) and be sure to follow instructions under heading "Important Preliminary Alignment Steps." Loop antenna can be disconnected from chassis in Steps 1 and 2.				
1	6SB7-Y (Pin #8)	.1 MFD	455 KC	Tuning gang wide open	I, J, K, L
2	To loop ant. terminal	Direct connection	1620 KC	Tuning gang wide open	M
	Set Receiver Chassis on table next to back of cabinet. Connect Loop Antenna to Receiver.				
3	Place generator lead close to loop of set to obtain adequate signal. No actual connection (signal by radiation).		1400 KC	Tune in signal	N

MODELS 8D15, 8D16; Ch. 8D1

IMPORTANT PRELIMINARY ALIGNMENT STEPS

In FM alignment, it is essential that every step be followed. Especially important is picking the center of the I.F. curve (step 4 in the FM-I.F. alignment instructions). During this portion of the alignment it is necesary to tune the signal generator very carefully; it may necessitate having to estimate the dial readings to a tenth of a division.

- Check the set screws that hold the tuning drum to the shaft to see that they are tight and that the drum has not slipped on the shaft. The correct position of the drum can be seen in the stringing diagram.
- With the gang closed, the pointer should be at the position as shown in the stringing diagram, that is, the bottom edge of the pointer should line up with the top of the "MC" lettering on the dial scale. If the pointer is in a different position, move it by hand while keeping the gang closed.
- Be sure both the set and the signal generator are thoroughly warmed up before starting alignment.

FM I.F. AND RATIO DETECTOR ALIGNMENT

- Keep output indicator leads well separated from signal generator leads and chassis wiring.
- Band switch in FM position (fully to the left).
- While peaking IF's, keep reducing signal generator output so VTVM reading is approximately +1.5 volts DC with exception of Step #5.
- Speaker must be connected during alignment.
- FM antenna disconnected during alignment.

I.F. SLUG INFORMATION

To avoid splitting the slotted head of the powdered iron core tuning slug in the I.F. transformers, use a screw-driver with a blade ⅛" wide for I.F. alignment.

Under normal operating conditions, mis-alignment of slug-tuned circuits with age is slight. Therefore, re-alignment of the I.F. transformers should be accomplished by only a slight adjustment of the slugs.

Before proceeding, be sure to follow all steps listed above, under "Important Preliminary Alignment Steps."

	Connect Signal Generator	Generator Frequency	Receiver Dial Setting	Output Indicator and Special Connections	Adjust as Follows (very carefully)
1	Thru .001 cond. to pin # 1 of 6BA6 RF amplifier**	10.7 MC unmodulated.	Tuning gang wide open	Connect VTVM (DC probe) from point "W" to ground. (See Fig. 11.)	"A" (ratio detector primary) for maximum reading on VTVM.
2	"	"	"	" "	Iron cores "B" and "C" (2nd IF trans.) for maximum reading on VTVM.
3	"	"	"	" "	Iron cores "D" and "E" for maximum on VTVM. Readjust A, B, C, D, E, for maximum. (Keep reducing generator output to keep VTVM at 1.5 volts).
4	"	a. Reduce output of signal generator until VTVM reads exactly +1.5 volts DC. b. Tune generator frequency above 10.7 MC until VTVM reads exactly +1.0 volt. *Note exact generator frequency.* Extreme care in reading this is essential. c. Tune generator frequency below 10.7 MC until VTVM reads exactly +1.0 volt. Note exact generator frequency. Extreme care in reading this is essential. d. Add generator frequency in step c to generator frequency in step b and divide by 2. The result is the center frequency of the IF curve to be used in step 5. See example on next page. e. Tune generator frequency above and below 10.7 MC and note voltage reading on VTVM at different frequency points until you have a good impression of the shape of the selectivity curve. If you have two peaks as in Figures 9 or 10, note readings (voltage) of both peaks. If one peak is over 20% higher than the other one, it will be necessary to realign IF's. A selectivity curve that would require realignment is illustrated by Figure 10.			
5	"	Center of IF selectivity curve per step 4d above. See "EXAMPLE" on next page.	Tuning gang wide open	Connect VTVM (DC probe) from point "X" to ground. (See Fig. 11.)	Iron core "F" (ratio detector *secondary*) *for zero* voltage reading on VTVM. (The correct zero point is located between a positive and a negative maximum.)

If any adjustments were very far off, it is desirable to repeat steps 3, 4 and 5.

**Do not feed I.F. signal into converter grid as this will cause mis-alignment.

FM SERVICE

Much of FM service is similar to the usual service necessary for AM receivers such as voltage analysis, parts replacement, etc. The chief differences arise because of the considerably higher frequencies used in FM operation, and because of the different type of second detector needed in FM.

The higher frequencies involved means that more care must be exercised in location and length of leads. Leads tend to act as small inductances or capacities at high frequency and hence may appreciably alter the electrical characteristics of a circuit. For this reason, ground connections should always be maintained as originally made in the set. Also note that in certain circuits, the type by-pass condenser used is critical at the high FM frequencies. When replacing condensers it is important that they be replaced with condensers of identical capacity values, tolerances, temperature coefficients and construction.

Description	Part No.
Spring, Hairpin (Radio Tilt-Out)	19A 2 5
Spring, Tilt Out Mechanism Adjusting for Phono	19A 15 3
for Radio	19A 15 2
Spring, Clamping (for holding extra centerpost)	84A 6
Tie Bar, Tilt Out Mechanism for Phono	138 126
for Radio	138 160 2
Transmission Line, 4 wire (107" length) AM Antenna	95A 24 2
Washer, Felt (Radio) for "FM BC FM Tuning" Knobs	3A 4 8
for "Volume" & "On-Off Tone" Knobs	3A 4 2
Washer, Fibre (Antenna Mtg.)	3A 1 1

MISCELLANEOUS

Description	Part No.
Bracket, Shipping Retainer	15A 379
Plate, Cover (Chassis Mtg.)	15A 146
Socket, Miniature Tube	87A 3-4
Socket, Octal	87A 5-1
Strap, Shipping (for Changer Tilt Out)	19C 193
Strap, Shipping (for Radio Tilt Out)	15A 178
Terminal Board (Mounted on cabinet)	108 3-5
Door Knob, Record Storage Compart.	98A 52-5
Grille Cloth (2 pieces)	98A 52 6
Grommet, Rubber for mounting Chassis	12A 1-11
for Changer Tilt-Out	12A 1-1
Knobs, Radio "FM BC FM"	33B 31-1
"Tuning"	33B 31 2
"Volume" and "On-Off Tone"	33A 13-4
Rubber Channel for Radio Tilt Out Brackets (2¾" x 2" x ⅜" overall)	12A 9-1
for Dial Scale (inner edge 29½")	12A 20 3
Rubber Strip, Sponge for Chassis Mounting (5½" x 2" x ¾")	12A 11
for Chassis Mounting (5½" x 2" x ½")	12A 11 1
for Door Block (3" x ¾" x ⅜")	12A 5 4
for Door Panel (12" x ⅜" x ⅜")	12A 5 3
for Tilt Out Record Changer Bumper (1" x ¼" x ⅛")	12A 5 5
Shoulder Eye Bolt for adjusting Phono Tilt-Out Spring	1A 87-1
for adjusting Radio Tilt Out Spring	1A 87 2

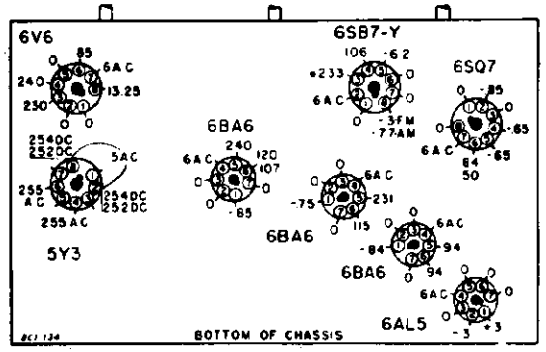

If measured with band-switch in phono position, reading will be zero

Description	Part No.
Door Catch and Strike Plate for Record Compartment Door	98A 41 9
Door Handle (Tilt Out Doors)	98A 52 7
Door Hinge, Record Compart. (pair)	98A 41-11

In some sets, built-in FM antenna L1, was omitted; loop L2 (used as FM-AM antenna) was connected across outer terminal ("AM") to "FM". When using external FM antenna, make connections as shown.

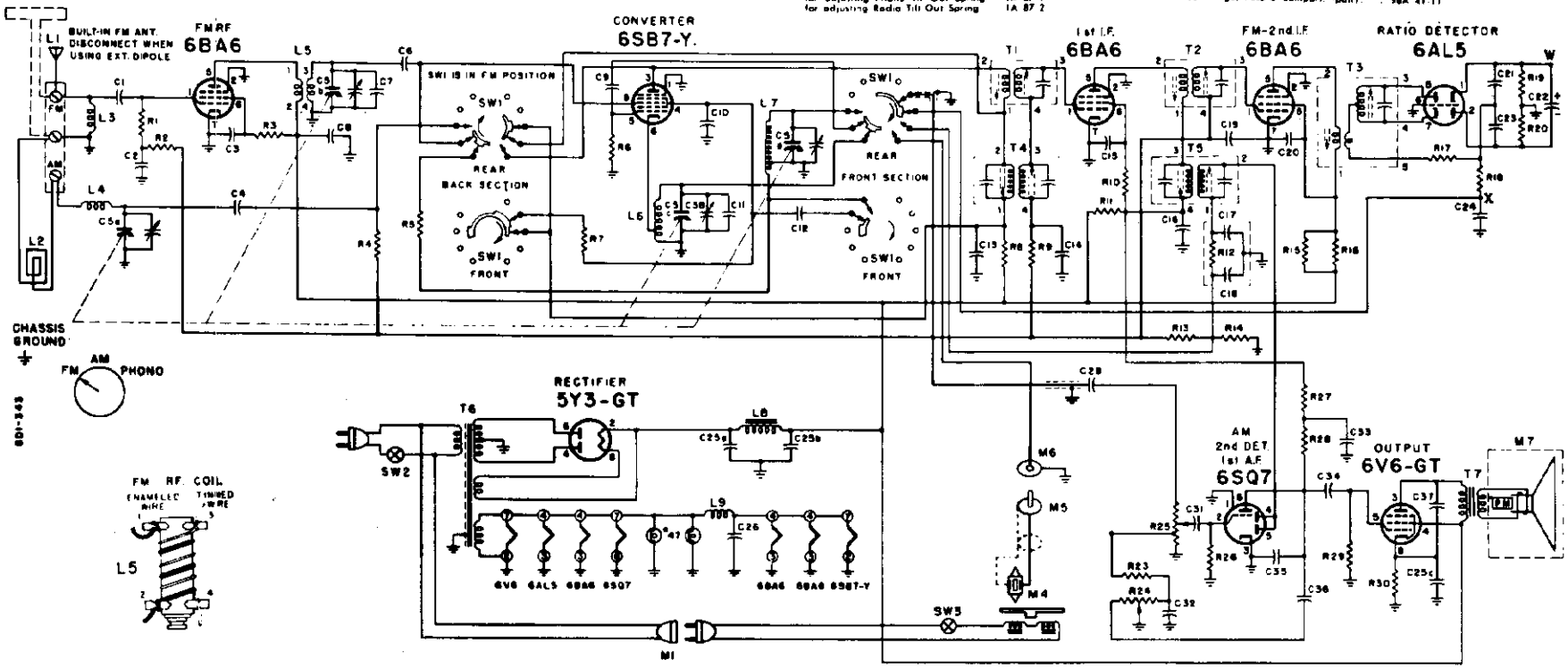

MODELS 8D15, 8D16; Ch. 8D1

RESISTORS

Symbol	Description	Part No.
R1	390 Ohms, ½ Watt	60B 8-391
R2	470,000 Ohms, ½ Watt	60B 8-474
R3	22,000 Ohms, 1 Watt	60B 14-223
R4	1 Megohm, ½ Watt	60B 9-105
R5	47,000 Ohms, ½ Watt	60B 8-473
R6	47,000 Ohms, ½ Watt	60B 8-473
R7	15,000 Ohms, 2 Watt	60B 20-153
R8	*470 Ohms, ½ Watt*	60B 8-471
R9	470,000 Ohms, ½ Watt	60B 8-474
R10	27,000 Ohms, 1 Watt	60B 14-273
R11	470 Ohms, ½ Watt	60B 8-471
*R12	47,000 Ohms, ¼ Watt	
R13	220,000 Ohms, ½ Watt	60B 8-224
R14	220,000 Ohms, ½ Watt	60B 8-224
R15	15,000 Ohms, 2 Watt	60B 20-153
R16	27,000 Ohms, ½ Watt	60B 8-273
R17	390 Ohms, ½ Watt	60B 8-391
R18	27,000 Ohms, 1 Watt	60B 14-273
R19	6,800 Ohms, ½ Watt, 5%	60B 7-682
R20	6,800 Ohms, ½ Watt, 5%	60B 7-682
R23	47,000 Ohms, ½ Watt	60B 8-473
R24	*2 Megohms Tone Control* (Includes ON-OFF Switch SW2)	75B 1-24
R25	1 Megohm Volume Control (Tapped at 500,000 Ohms)	75B 2-10
R26	10 Megohms, ½ Watt	60B 9-106
R27	22,000 Ohms, ½ Watt	60B 8-223
R28	470,000 Ohms, ½ Watt	60B 8-474
R29	470,000 Ohms, ½ Watt	60B 8-474
R30	390 Ohms, 1 Watt	60B 14-391

CONDENSERS

Symbol	Description	Part No.
C1	100 *mmfd., Ceramic*	65B 6-3
C2	.01 mfd., 400 Volts, Paper	64B 1-25
C3	.0015 mfd., "Hi-K" Ceramic	65A 14-1
C4	140 mmfd., 3%, Silver Mica	63B 1-26
C5a	486 mmfd. (max.), AM RF	Gang Cond. 68B 16
C5b	15 mmfd. (max.), FM RF	
C5c	15 mmfd. (max.), FM Osc.	
C5d	143 mmfd. (max.), AM Osc.	
C6	22 mmfd., 5%, Zero Temp. Coeff., Ceramic	65B 6-47
C7	7 mmfd., ±1 mmfd., —.00047 Temp. Coeff., Ceramic	65B 6-45
C8	.01 mfd., 400 Volts, Paper	64B 1-25
C9	35 mmfd., 5%, Zero Temp. Coeff., Ceramic	65B 6-46
C10	100 *mmfd., Mica*	65B 7-17
C11	7 mmfd., ±1 mmfd., —.00047 Temp. Coeff., Ceramic	65B 6-45
C12	.0015 mfd., "Hi-K" Ceramic	65A 14-1
C13	.01 mfd., 400 Volts, Paper	64B 1-25
C14	.01 mfd., 400 Volts, Paper	64B 1-25
C15	.005 mfd. min., Ceramic (Disc)	65A 10-1
C16	.01 mfd., 400 Volts, Paper	64B 1-25
*C17	100 mmfd., Ceramic	
*C18	100 mmfd., Ceramic	

*Part of encased Diode Filter Unit 63A3-1. This unit consists of R12, C17, C18 (see schematic). If a section of the unit becomes defective, replace with exact duplicate or individual components of proper value.

Symbol	Description	Part No.
C19	.01 mfd., 400 Volts, Paper	64B 1-25
C20	.005 mfd. min., Ceramic (Disc)	65A 10-1
C21	105 mmfd., 5%, —.00075 Temp. Coeff., Ceramic	65B 6-9
C22	4 mfd., 150 Volts, Electrolytic	67A 4-2
C23	105 mmfd., 5%, —.00075 Temp. Coeff., Ceramic	65B 6-9
C24	.002 mfd., 600 Volts, Paper	64B 1-14
C25a	30 mfd., 350 Volts	Elect. 67C 6-25
C25b	*30 mfd., 350 Volts*	
C25c	20 mfd., 25 Volts	
C26	.01 mfd., 400 Volts, Paper	64B 1-25
C29	.005 mfd., 600 Volts, Paper	64B 1-12
C31	.005 mfd., 600 Volts, Paper	64B 1-12
C32	.01 mfd., 400 Volts, Paper	64B 1-25
C33	.1 mfd., 400 Volts, Paper	64B 1-20
C34	.01 mfd., 400 Volts, Paper	64B 1-25
C35	200 mmfd., 20%, Ceramic	65B 7-21
C36	.01 mfd., 400 Volts, Paper	64B 1-25
C37	.005 mfd., 600 Volts, Paper	64B 1-12
C38	2½ to 6 mmfd., Trimmer, Silver Ceramic	66A 24-2

COILS, TRANSFORMERS, ETC.

Symbol	Description	Part No.
L1	Antenna, FM (90" of #22 wire)	
L2	Antenna, Loop (AM)	95A 24-2
L3	Choke, RF	AB103-33
L4	Coil, Loop Loading (AM)	69A 56
L5	Coil, RF (FM)	69A 55
L6	Coil, Oscillator (FM)	69A 54
L7	Coil, Oscillator (AM)	69A 20-1
L8	Choke, Filter	74A 10
L9	Choke, Filament	
	Approx. 10 turns (18") of solid #22 hook-up wire wound on C26. Solder one end to inside foil lead of C 26.	
T1	Transformer, 1st IF (FM)	72B 37
T2	Transformer, 2nd IF (FM)	72B 38
T3	Transformer, Ratio Detector	72B 39
T4	Transformer, 1st IF (AM)	72B 54
T5	Transformer, 2nd IF (AM)	72B 49
T6	Transformer, Power	80B 5
T7	Transformer, Output	79A 9
M7	Speaker 10" P.M. Dynamic	78B 28
SW1	Switch, Band (FM, AM, Phono)	77B 18
SW2	Switch, Power	Part of R24
SW3	*Switch, Phono Motor (see Record Changer Manual)*	
	Diode Filter (consists of R12, C17 and C18)	63A 3-1

DIAL PARTS

Description	Part No.
Dial Bulb, #47	81A 1-8
Dial Bulb Socket (with leads)	82A 8-3
Dial Cord (18")	50A 1-3
Dial Escutcheon and window (Radio)	23D 29-3
Dial Pointer, Plastic	A1685
Dial Scale Assembly	A1676
Drum and Hub Assembly	A1318
Rubber Channel (Inner edge of Dial Scale — 29½")	12A 20-3
Screw, Escutcheon Mtg. (#3 x ½ OH WS)	1A15-6-58
Set Screw, Dial Drum, 8-32x¼"	1A 5-59-0
Spring, Dial Cord	19B 1-3
Spring Clip, Pointer	18A 5-2
Sleeve, Dial Tuning (brass)	*27A 43*

PHONOGRAPH PARTS

Symbol	Description	Part No.
	Note: Check Record Changer model number and see proper service manual for complete parts list.	
M1	Cable and Socket, Phono Motor	89A6-5
M4	Cartridge, Dual Needle (includes needles)	409A11
	Needle, Phonograph (Long play)	98A 15-6
	Needle, Phonograph (Standard 78 RPM)	98A 15-7
M5	Plug, shielded cable	88A 2-3
M6	Socket, Phono Pickup	88A1
	Centerpost (for 7" record)	G4008 310
	Centerpost (for 10" or 12" records)	G4008 311
	Nut, Wing (for fastening Record Changer during shipment)	2A 5-9-2
	Shoulder Eye Bolt (for Tilt-Out Spring)	1A 87-1
	Spring, Clamping (for holding extra centerpost)	84A6
	Strip, Sponge Rubber (1/16x¼x1")	12A 5-5
	Stud Bolt (for fastening changer during shipment)	1A80-5
	Tilt-Out Hinge Assembly Closest to Pickup Arm	AC118-2
	Farthest from Pickup Arm	AC118-1
	Tilt-Out Spring (2¼" long)	*19 A15-1*
	Tilt-Out Tie Bar	15B 126
	Tilt-Out Tie Rod	28A 22

CABINET PARTS

Description	Part No.
Back, Cabinet	43B 44
†Cabinet	
Walnut (8D15)	35E 88-1
Mahogany (8D16)	35E 88-2
Carton complete with fillers	44B 108
†Door, Radio and Phono Tilt-Out	
pair for Walnut (8D15)	98A 52-1
pair for Mahogany (8D16)	98A 52-2
†Door, Record Compartment Complete	
for Walnut (8D15)	98A 52-3
for Mahogany (8D16)	98A 52-4
Door Arm (see Ref. #5 in Fig. 1)	
Near center of cabinet	A1440
Nearest side of cabinet	A1441
Door Bracket (see Ref. #7 in Fig. 1)	
Near center of cabinet	A1438
Nearest side of cabinet	A1439

†Supplied only if old part cannot be repaired. When ordering, describe condition of old part in detail.

VOLTAGE CHART

- Line Voltage 117.
- Voltages measured with a vacuum tube voltmeter. Second voltage readings and A.C. voltages measured with a 1000 ohm-per-volt meter.
- Voltages read between socket terminals and ground, unless otherwise indicated.
- Band switch in FM position.
- Dial turned to low frequency end.
- Volume Control—minimum.

© John F. Rider

MODELS 9E15, 9E16, 9E17; Ch. 9E1

VOLTAGE CHART

- Line Voltage 117.
- Voltage readings taken with a vacuum tube voltmeter. Socket terminals marked with an asterisk * indicate much lower voltage or zero voltage if measured with a 1000 ohm-per-volt meter.
- Voltages read between socket terminals and ground, unless otherwise indicated.
- Band switch in FM position.
- Dial turned to low frequency end.
- Volume Control—minimum.

IMPORTANT PRELIMINARY ALIGNMENT STEPS

In FM alignment, it is essential that every step be followed. Especially important is picking the center of the IF curve (step 4 in the FM-IF alignment instructions). During this portion of the alignment it is necessary to tune the signal generator very carefully; it may necessitate having to estimate the dial readings to a tenth of a division.

Under normal operating conditions or use, misalignment of RF or IF circuits with age will be slight. Lack of sensitivity and poor tone quality may be due to causes other than alignment. Do not attempt to realign the receiver until all other possible causes have first been thoroughly investigated.

When completely aligning the FM circuit, it is essential to follow the sequence of steps indicated in the chart. If only a portion of the FM circuit is being aligned, be sure to follow all the remaining steps.

Check the set screws that hold the tuning drum to the shaft to see that they are tight and that the drum has not slipped on the shaft. The correct position of the drum can be seen in the stringing diagram.

With the gang open, the pointer should be at the position as shown in the stringing diagram, that is, the end of the pointer should line up with the "AM" lettering on the dial scale. If the pointer is in a different position, move it by hand while keeping the gang open.

Be sure both the set and the signal generator are thoroughly warmed up before starting alignment.

AM ALIGNMENT PROCEDURE

- Use regular output meter connected across speaker voice coil.
- Turn receiver Volume Control full on; Tone Control full treble.
- AM loop antenna must be connected and placed in the same relative position to the chassis as when in cabinet.
- Use lowest output setting of signal generator that gives a satisfactory reading on meter.

Step	Connect Signal Generator	Dummy Antenna Between Radio and Signal Generator	Signal Generator Frequency	Receiver Dial Setting	Adj. Trimmers in Following Order to Max.
Set Band Switch to Broadcast Position (center) and be sure to follow instructions under heading "Important Preliminary Alignment Steps." Loop antenna must be connected.					
1	Gang condenser antenna stator	.1 MFD	455 KC	Tuning gang wide open	A-B (2nd IF) C-D (1st IF)
2	Lug on AM Antenna Stator	.1 MFD	1620 KC	Tuning gang wide open	E (oscillator)
3	Place generator lead close to loop of set to obtain adequate signal. No actual connection (signal by radiation).		1400 KC	Tune in signal	F (antenna)

AM antenna trimmer adjustment "F" in step 3 should be repeated after set and antenna have been installed in cabinet. Important: AM antenna trimmer may not peak properly if antenna leads are not routed properly or separated as originally made.

FM ALIGNMENT EQUIPMENT

This chassis should be aligned only with an AM signal generator and a vacuum tube voltmeter. Any standard brand vacuum tube voltmeter with a DC scale of not over 5 volts is suitable. A 3-volt zero center scale is desirable. A signal generator with a frequency range up to 110 MC. is desirable. It is possible however, to align the receiver with a signal generator going to 20 or 30 megacycles, by using the harmonics of these lower frequencies. To do this merely set the signal generator dial as follows and align exactly as explained in the alignment instructions.

Where alignment chart specifies 109 MC, 106 MC, 90 MC or 87 MC, set signal generator to highest available frequency shown in the column under that frequency.

All frequencies in megacycles

109.	106.	90.	87.
54.50	53.	45.	43.5
36.33	35.33	30.	29.
27.25	26.5	22.5	21.75
21.80	21.2	18.	17.4
18.17	17.66	15.	14.5

Signal generators which do not tune to 110 MC or whose harmonics are not strong enough, cannot be used for FM alignment.

©John F. Rider

MODELS 9E15, 9E16, 9E17; Ch. 9E1

FM I.F. AND RATIO DETECTOR ALIGNMENT

- Keep output indicator leads well separated from signal generator leads and chassis wiring.
- Band switch in FM position (fully to the right).
- While peaking IF's, keep reducing signal generator output so VTVM reading is approximately +1.5 volts DC with exception of Step #5.
- To avoid splitting the slotted head of iron core tuning slugs in the IF transformers, use an insulated alignment tool with a ⅛" wide screwdriver blade. Do not exert undue pressure as threads of slugs may strip.
- Speaker must be connected during alignment.
- FM antenna disconnected during alignment.

Before proceeding, be sure to follow all steps listed under "Important Preliminary Alignment Steps."

	Connect Signal Generator	Generator Frequency	Receiver Dial Setting	Output Indicator and Special Connections	(Adjust as Follows very carefully)
1	Thru .001 cond. to pin #1 of 6BA6 2nd IF. (Ground to chassis, close to tube.)	10.7 MC unmodulated.	Tuning gang wide open	Connect VTVM (DC probe) from point "W" to chassis. (See Fig. 10)	"G" (ratio detector primary) for maximum reading on VTVM
2	**Thru .001 cond. to pin #1 of 6BA6 1st IF. (Ground to chassis, close to tube).	"	"	" "	"H" and "I" (2nd IF trans.) for maximum reading on VTVM.
3	Across ends of FM antenna twin lead	"	"	" "	"J" and "K" (1st IF trans.) for maximum on VTVM. Readjust G, H, I, J, K, for maximum. (Keep reducing generator output to keep VTVM at 1.5 volts)
4	"	a. Reduce output of signal generator until VTVM reads EXACTLY +1.5 volts DC. b. Tune generator frequency above 10.7 MC until VTVM reads EXACTLY +1.0 volt. Note EXACT generator frequency. Extreme care in reading this is essential. c. Tune generator frequency below 10.7 MC until VTVM reads EXACTLY +1.0 volt. Note EXACT generator frequency. Extreme care in reading this is essential. d. Add generator frequency in step c to generator frequency in step b and divide by 2. The result is the center frequency of the IF curve to be used in step 5. See example under heading "Setting Signal Generator to Center of I.F. Selectivity Curve". e. Tune generator frequency above and below 10.7 MC and note voltage reading on VTVM at different frequency points until you have a good impression of the shape of the selectivity curve. If you have two peaks as in Figures 7 or 8, note readings (voltage) of both peaks. If one peak is over 20% higher than the other one, it will be necessary to realign IF's. A selectivity curve that would require realignment is illustrated by Figure 9.			
5	"	Center of IF selectivity curve per step 4d above.	Tuning gang wide open	Connect VTVM (DC probe) from point "X" to chassis. (See Fig. 10.)	"L" (ratio detector secondary) for zero voltage reading on VTVM. (The correct zero point is located between a positive and a negative maximum.)

If any adjustments were very far off, it is desirable to repeat steps 3, 4 and 5.

**Do not feed I.F. signal into converter grid as this will cause mis-alignment.

SETTING SIGNAL GENERATOR TO CENTER OF I.F. SELECTIVITY CURVE

CAUTION: Due to the difficulty of setting a signal generator to the accuracy required by this operation, extreme care must be exercised in making each setting. Otherwise, improper alignment of the ratio dectector and consequent audio distortion will result.

EXAMPLE: (See Figures 4 and 5)

Voltage reading in Step 4a is + 1.5 volts.

Generator frequency on low side of 10.7 MC for a reading of + 1 volt DC = 10.640 MC.

Generator frequency on high side of 10.7 MC for a reading of + 1 volt DC = 10.800 MC.

Center frequency is obtained by adding 10.640 and 10.800, then dividing by 2. For these readings it will be 10.72 MC.

Set generator frequency to 10.72 MC as this is center of selectivity curve as shown in Figure 5.

Note: Numerical vernier dial readings may be used instead of MC.

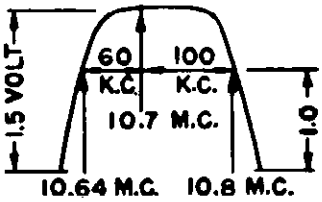

Fig. 4

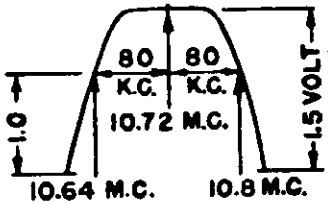

Fig. 5

TYPICAL SELECTIVITY CURVES

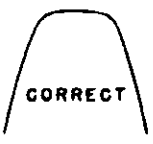

Fig. 6



Fig. 7



Fig. 8

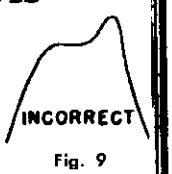

Fig. 9

© John F. Rider

MODELS 9E15, 9E16, 9E17; Ch. 9E1

FM RF ALIGNMENT PROCEDURE

Step	Connect Generator	Generator Frequency	Receiver Gang or Dial Setting	Output Connections	Adjust as follows (very carefully)
1	To ends of FM antenna twin lead thru 120 ohm carbon resistors in series with each generator lead.	†109 MC (unmodulated)	Gang fully open	Connect VTVM (DC probe) from point "W" to chassis.	*M (oscillator) and N (antenna) for maximum
2		87 MC (unmodulated)	Tune in Signal. (Gang should be closed or almost closed.)	"	If signals in steps 1 and 2 will not tune in at gang tuning extreme (±0.5 MC), it will be necessary to spread or squeeze oscillator coil turns and then repeat steps 1 and 2 until correct results are obtained.
3		106 MC (unmodulated)	Tune in Signal	"	Readjust N for maximum VTVM reading, while rocking gang. If trimmer does not peak, it will be necessary to squeeze or spread turns of FM antenna coil. Check calibration and tracking at 90 MC. Calibration error should not exceed ±0.5 MC. If necessary, repeat steps 1, 2, 3 until correct results are obtained.

* It is advisable to adjust generator output so VTVM readings do not exceed approximately +1.5 V. DC while peaking.
† If your signal generator does not reach this frequency, use harmonics as described in "FM Alignment Equipment."

IMPORTANT

AM antenna trimmer adjustment "F" in step 3 of "AM Alignment Procedure" should be repeated after receiver and antenna have been installed in cabinet. Note: AM antenna trimmer may not peak properly if antenna leads are not routed properly or separated as originally made.

POINTER SETTING

With the gang open, the pointer should be at the position as shown in the stringing diagram, that is, the end of the pointer should line up with the "AM" lettering on the dial scale. If the pointer is in a different position, move it by hand while keeping the gang open.

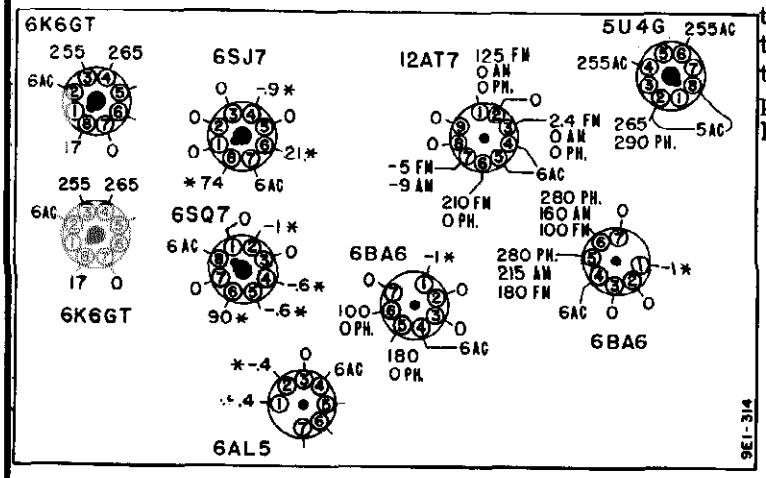

*If taken with a 1000 ohm-per-volt meter, readings will be lower or zero.

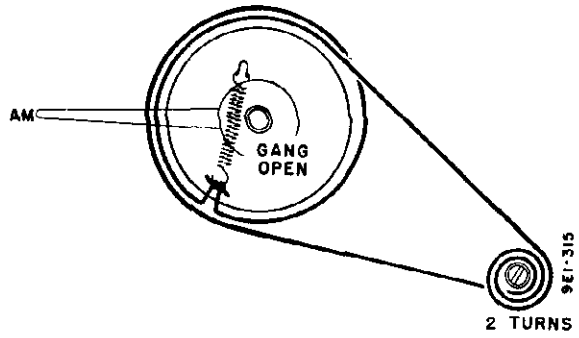

Fig. 12. Stringing Diagram

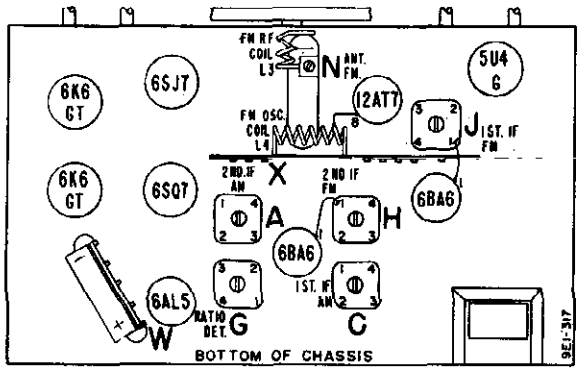

Fig. 10 Bottom Trimmer Location

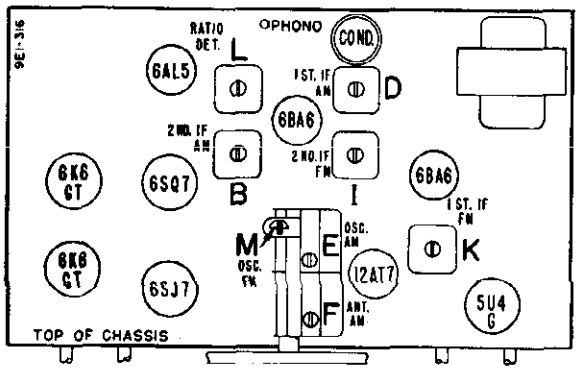

Fig. 11. Top Trimmer Location

MODELS 9E15, 9E16, 9E17; Ch. 9E1

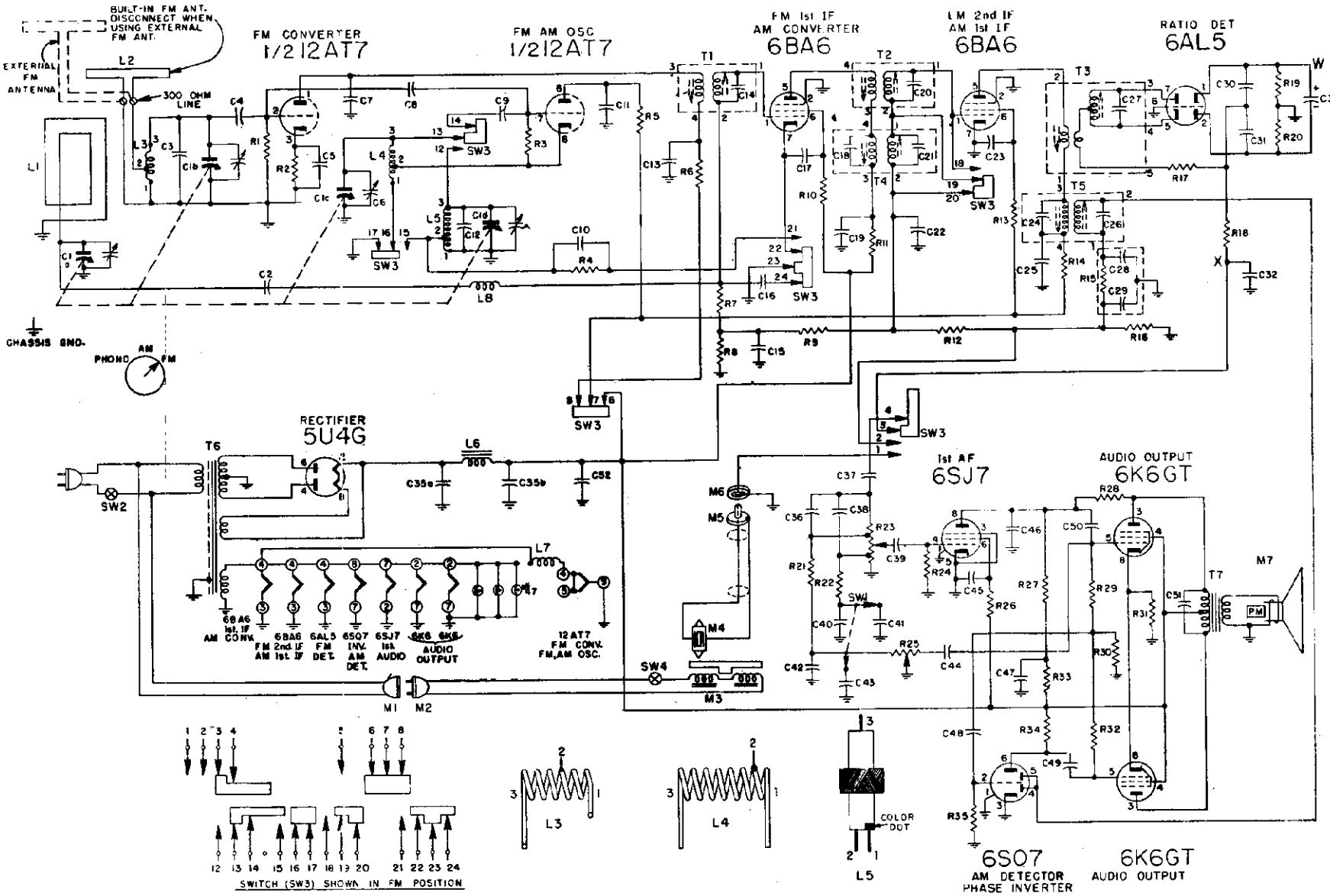

PHONOGRAPH PARTS

Note: Check Record Changer model number and see proper service manual for complete parts list.

Symbol	Description	Part No.
M4	Cartridge, Dual Needle (includes needles)	409A11
	Needle, Phonograph (Long play)	98A 15-6
	Needle, Phonograph (Standard 78 RPM)	98A 15-7
M5	Plug, shielded cable	88A 2-3
	Centerpost (for 7" record)	G400B 310
	Centerpost (for 10" or 12" records)	G400B 311
	Grommet, Rubber (for changer tilt-out)	12A 1-1
	Shoulder Eye Bolt (for adjusting phono tilt-out spring)	1A 87-1
	Spring, Coil (changer tilt-out)	19A 15-1
	Spring, Clamping (for holding extra centerpost)	84A 6
	Tilt-out Tie Bar (for changer)	15B 126
	Tilt-Out Hinge Assembly (Left side)	AC118-1
	Tilt-Out Hinge Assembly (Right side)	AC118-2

MODELS 9E15, 9E16, 9E17; Ch. 9E1

CONDENSERS

Symbol	Description	Part No.
C1a	486 mmfd. (max) AM RF	Gang 68 B25
C1b	15 mmfd. (max) FM RF	
C1c	15 mmfd. (max) FM Osc.	
C1d	143 mmfd. max) AM Osc.	
C2	35 mmfd., Zero Temp. Coeff., Ceramic	65B 6-57
C3	7 mmfd., ± 1 mmfd., —.00047 Temp. Coeff., Ceramic	65B 6-45
C4	.002 mfd., "Hi-K" Ceramic	65B 9-38
C5	.001 mfd. min., Ceramic	65B 6-41
C6	3 to 12 mmfd., Trimmer (Silver Ceramic)	66A 19-2
C7	40 mmfd., 2%, Zero Temp. Coeff., Ceramic	65B 6-22
C8	2 mmfd., ±5 mmfd., Zero Temp. Coeff., Ceramic	65B 6-58
C9	50 mmfd., Ceramic	65B 6-4
C10	.005 mmfd., "Hi-K" Ceramic	65B 9-51
C11	.005 mfd. min., Ceramic	65A 10-1
C12	10 mmfd., Zero Temp. Coeff.	65B 6-44
C13	.01 mfd. min., Ceramic	65A 10-3
C14	100 mmfd., 3%, Silver Mica	Part of T1
C15	.01 mfd. min., Ceramic	65A 10-3
C16	.01 mfd. min., Ceramic	65A 10-3
C17	.01 mfd. min., Ceramic	65A 10-3
C18	200 mmfd., 3%, Silver Mica	Part of T4
C19	.01 mfd. min., Ceramic	65A 10-3
C20	100 mmfd., 3%, Silver Mica	Part of T2
C21	200 mmfd., 3%, Silver Mica	Part of T4
C22	.01 mfd. min., Ceramic	65A 10-3
C23	.01 mfd min., Ceramic	65A 10-3
C24	200 mmfd., 3%, Silver Mica	Part of T5
C25	.01 mfd. min., Ceramic	65A 10-3
C26	200 mmfd., 3%, Silver Mica	Part of T5
C27	90 mmfd., 3%, Silver Mica	Part of T3
*C28	100 mmfd., Ceramic	
*C29	100 mmfd., Ceramic	
C30	100 mmfd., 5%, —.00075 Temp. Coeff., Ceramic	65B 6-7
C31	100 mmfd., 5%, —.00075 Temp. Coeff., Ceramic	65B 6-7
C32	.002 mfd., 600 Volts, Paper	64B 1-14
C33	4 mfd., 150 Volts, Electralytic	67A 4-2
C35a	30 mfd., 350 Volts	Electrolytic 67C 6-22
C35b	30 mfd., 350 Volts	
C36	200 mmfd., "Hi-K" Ceramic	65B 9-14
C37	.005 mfd. min., Ceramic	65A 10-1
C38	100 mmfd., Ceramic	65B 6-3
C39	.005 mfd. min., Ceramic	65A 10-1
C40	.01 mfd. min., Ceramic	65A 10-3
C41	.02 mfd., 400 Volts, Paper	64B 1-24
C42	.005 mfd. min., Ceramic	65A 10-1
C43	.005 mfd. min., Ceramic	65A 10-1
C44	.005 mfd. min., Ceramic	65A 10-1
C45	.1 mfd., 400 Volts, Paper	64B 1-20
C46	100 mmfd., Ceramic	65B 6-3
C47	.1 mfd., 400 Volts, Paper	64B 1-20
C48	.01 mfd. min., Ceramic	65A 10-3
C49	.01 mfd. min., Ceramic	65A 10-3
C50	.01 mfd. min., Ceramic	65A 10-3
C51	.002 mfd., 600 Volts, Paper	64B 1-14
C52	.01 mfd. min., Ceramic	65A 10-3

* Part of encased Diode Filter Unit 63A3-1. This unit consists of R15, C28, C29 (see schematic). If a section of the unit becomes defective, replace with exact duplicate or individual components of proper value.

RESISTORS

Symbol	Description	Part No.
R1	1 Megohm, ½ Watt	60B 8-105
R2	470 ohms, ½ Watt	60B 8-471
R3	22,000 ohms, ½ Watt	60B 8-223
R4	470 ohms, ½ Watt	60B 8-471
R5	4,700 ohms, ½ Watt	60B 8-472
R6	27,000 ohms, 1 Watt	60B 14-273
R7	1.5 Megohms, ½ Watt	60B 8-155
R8	1.5 Megohms, ½ Watt	60B 8-155
R9	1 Megohm, ½ Watt	60B 8-105
R10	27,000 ohms, 1 Watt	60B 14-273
R11	4,700 ohms, ½ Watt	60B 8-472
R12	1 Megohm, ½ Watt	60B 8-105
R13	27,000 ohms, 1 Watt	60B 14-273
R14	4,700 ohms, ½ Watt	60B 8-472
*R15	47,000 ohms, ¼ Watt	
R16	220,000 ohms, ½ Watt	60B 8-224
R17	390 ohms, ½ Watt	60B 8-391
R18	27,000 ohms, ½ Watt	60B 8-273
R19	6,800 ohms, ½ Watt, 5%	60B 7-682
R20	6,800 ohms, ½ Watt, 5%	60B 7-682
R21	47,000 ohms, ½ Watt	60B 8-473
R22	10,000 ohms, ½ Watt	60B 8-103
R23	1 Megohm Volume Control	75B 3-6
R24	4.7 Megohms, ½ Watt	60B 8-475
R25	2 Megohms Tone Control	75B 1-33
R26	1.5 Megohms, ½ Watt	60B 8-155
R27	330,000 ohms, ½ Watt	60B 8-334
R28	1.5 Megohms, ½ Watt	60B 8-155
R29	270,000 ohms, ½ Watt	60B 8-274
R30	270,000 ohms, ½ Watt	60B 8-274
R31	270 ohms, 2 Watt	60B 20-271
R32	270,000 ohms, ½ Watt	60B 8-274
R33	47,000 ohms, ½ Watt	60B 8-473
R34	470,000 ohms, ½ Watt	60B 8-474
R35	4.7 Megohms, ½ Watt	60B 8-475

* Part of encased Diode Filter Unit 63A3-1. This unit consists of R15, C28, C29 (see schematic). If a section of the unit becomes defective, replace with exact duplicate or individual components of proper value.

COILS, TRANSFORMERS, ETC.

Symbol	Description	Part No.
L1	Antenna, AM Loop	69C 90
L2	Antenna, FM Dipole	AB128
L3	Coil, Antenna (FM)	69A 83
L4	Coil, Oscillator (FM)	69A 81
L5	Coil, BC Oscillator	69A 88-1
L6	Choke, Filter	74A 13
L7	Choke, RF	73A 2-3
L8	Choke, RF	73A 2-3
T1	Transformer, 1st IF (FM)	72B 77
T2	Transformer, 2nd IF (FM)	72B 78
T3	Transformer, Ratio Detector	72B 39
T4	Transformer, 1st IF (AM)	72B 79
T5	Transformer, 2nd IF (AM)	72B 80
T6	Transformer, Power	80B 9
T7	Transformer, Output	79A 16
M6	Socket, Phono pickup	88A1
M7	Speaker 12" PM	78B 44-1
SW1	Switch, Tone (DPST)	Part of R25
SW2	Switch, Power	Part of R23
SW3	Switch, Band (FM, AM, Phono)	77B 24
	Diode Filter (consists of R15, C28, and C29)	63A 3-1
	Socket, Tube	
	Miniature (7 pin)	87A 3-4
	Miniature (9 pin)	87A 25-4
	Octal	87A 5-1

DIAL PARTS

Description	Part No.
Dial Bulb #47	81A 1-8
Dial Bulb Socket and Leads	82A 8-7
Dial Cord	50A 1-3
Dial Crystal	24B 9
Dial Drum and Hub Assembly	A1890
Dial Escutcheon (less rectangular insert)	23E 20-1
Dial Escutcheon Insert (approx. 2½ x 3¾")	23C 25-1
Dial and Indicator Plate Assembly	A1894
Dial Indicator Arm and Hub Assembly	A1508
Dial Lever Arm and Stud Assembly	A1493
Dial Pointer and Clip Assembly	A1487
Screw, Set	
for indicator hub (#6-32x¼")	1A 5-54-0
for dial drum (#8-32x¼")	1A 5-59-0
for lever arm (#8-32 cup point)	1A 5-61
Shaft, Band Switch	28B 21-4
Shaft, Tuning	28A 1-6
Snap Button (for dial scale mounting)	13A 1-4-47
Spring, Band Switch Detent	18A 14
Spring Clip, Pointer	18A 5-2
Spring, Dial Cord Tension	19B 1-3
Washer, "C" (for tuning shaft)	4A 4-6-0
Washer, Spring (for dial scale mounting)	4A 6-2-0
Washer, Spring (for tuning shaft)	4A 5-3-0

CABINET PARTS

Description	Part No.
Back, Cabinet	43B 49
Bracket, Dial Mounting	15B 274
Bracket, Dial Support	15A 398
†Cabinet	
Walnut (9E15)	35E 73-4
Mahogany (9E16)	35E 73-5
Blond (9E17)	35E 73-6
†Door, Radio or Phono Tilt-Out	
pair for Walnut (9E15)	98A 38-4
pair for Mahogany (9E16)	98A 38-5
pair for Blond (9E17)	98A 38-6
†Door, Record Compartment, Complete	
for Walnut (9E15)	98A 38-1
for Mahogany (9E16)	98A 38-2
for Blond (9E17)	98A 38-3
Door Hinge, Record Storage Compartment	
for Walnut (9E15) and Mahogany (9E16)	98A 38-9
for Blond (9E17)	98A 38-10
Door Catch and Strike Plate for Record Compartment Door	98A 38-11
Door Bracket (Near center; see Ref. #7 in fig. 1)	A1438
Door Bracket (Nearest side of cabinet; see Ref. #7 in fig. 1)	A1439
Door Arm (Near center; see Ref. #5 in fig. 1)	A1440
Door Arm (Nearest side of cabinet; see Ref. #5 in fig. 1)	A1441
Grille Cloth	
for Walnut (9E15) and Mahogany (9E16)	98A 38-7
for Blond (9E17)	98A 38-8
Grommet, Rubber	
for changer tilt-out	12A 1-1
for mounting chassis	12A 1-11
Bumper for radio chassis	12A 3-6
Jewel, Green Pilot Light	82A 10-8
Knob (Tilt-Out Doors)	
for Walnut (9E15) and Mahogany (9E16)	98A 49-2
for Blond (9E17)	98A 49-3
Knob, Radio Tuning	33A 13-4
Medallion Block	
for Walnut (9E15)	98A 49-4
for Mahogany (9E16)	98A 49-5
for Blond (9E17)	98A 49-6
Medallion Retainer Plug	20A 6-1
Plate, Cover (Chassis mounting)	15A 146
Rubber Channel	
for radio tilt-out (⅜"x11/64"x2⅜")	12A 9-1
for dial scale (¼"x7/16"x29-5/16")	12A 20-2
Rubber Strip, Sponge	
for door panel (⅛"x⅜"x14")	12A 5-3
for door block (⅛"x¾"x¾")	12A 5-4
for changer tilt-out (1/16"x¼"x1")	12A 5-5
for chassis mounting (½"x7/16"x5½")	12A 11-1
Screw, Escutcheon Mtg. (#3x½ O.H.W.S.)	1A 15-6-58
Screw, Escutcheon Mtg. (3x⅜ O.H.W.S.)	1A 15-7-58
Shoulder Eye Bolt	
for adjusting radio tilt-out spring	1A 87-2
for adjusting phono tilt-out spring	1A 87-1
Spring, Clamping (for holding extra centerpost)	84A 6
Spring, Coil (for AM loop antenna)	19A 51
Spring, Coil (Changer tilt-out)	19A 15-1
Spring, Coil (Radio tilt-out)	19A 15-2
Spring, Hairpin (for radio tilt-out)	19A 2-5
Strap, Sash Weight Support	15A 343
Tilt-Out Tie Bar (Radio)	15B 160-1
Tilt-Out Tie Bar (Record Changer)	15B 126
Tilt-Out Hinge Assembly (Left side)	AC118-1
Tilt-Out Hinge Assembly (Right side)	AC118-2
Tilt-Out Tie Rod (Radio)	28A 22
Washer, Felt (for tuning knobs)	5A 4-2
Weight, Sash (Counter balance)	20A 3-2

† Supplied only if old part cannot be repaired. When ordering, describe condition of old part in detail.

© John F. Rider

MODEL A506, Ch. 475-1

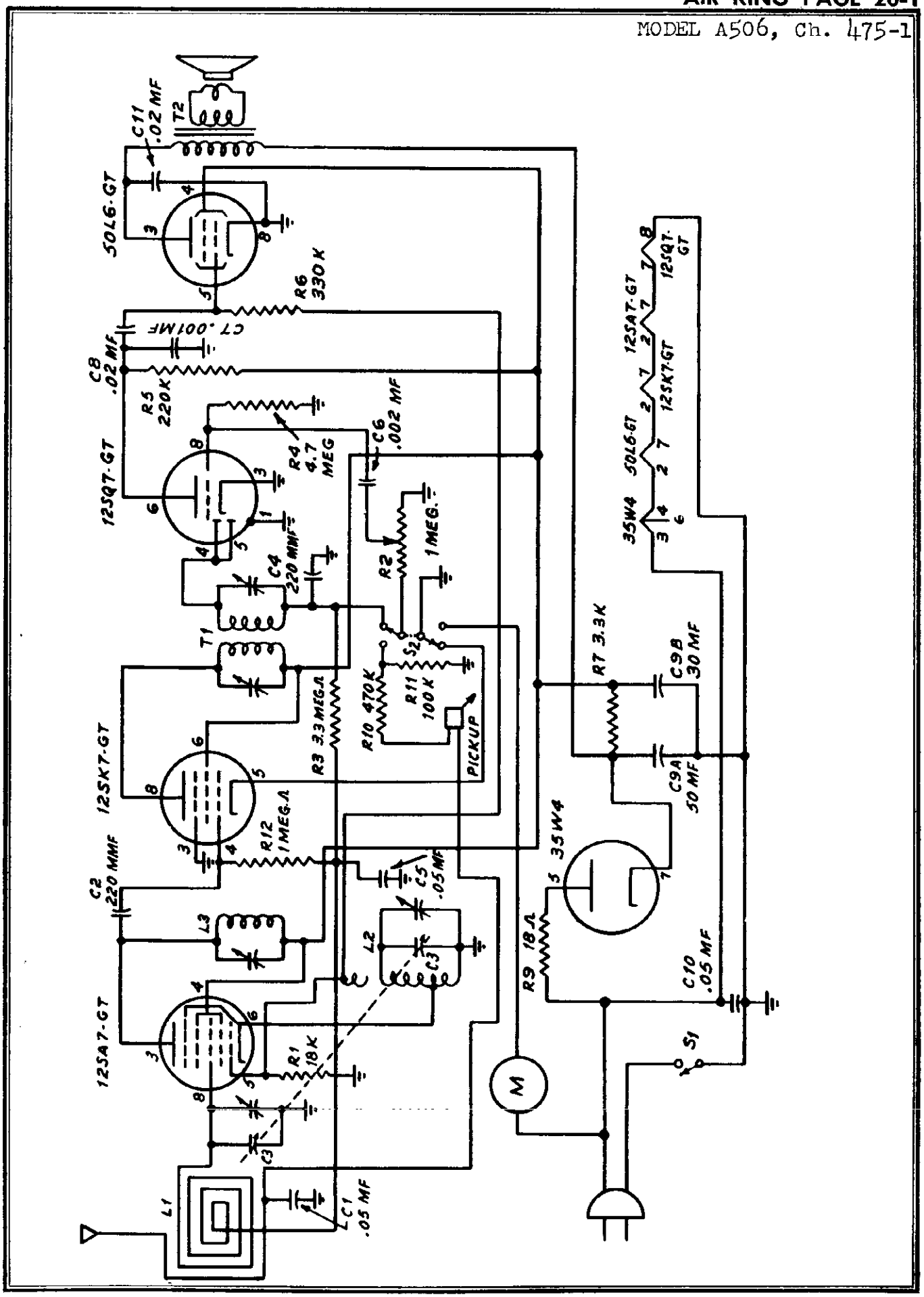

©John F. Rider

MODEL A506, Ch. 475-1

PART NO.	CHASSIS	
	CAPACITORS	
1675	Variable Condenser	C3
2073	Electrolytic 50-30 µf. 150,150V (no mtg. wafer)	C9A, C9B
	Paper .05 µf. 400VV.	C10
	Paper .002 " 200V.	C6
	Paper .02 " 400V	C8, C11
	Paper .05 " 200V	C5
	Paper .001 mmfd. 400V	C7
	Ceramic 330 mmfd	C4
	Paper .002 Mfd 400V	C1
	Ceramic 220 µµf. 500V ±20%	C2
1673	Variable Condenser	C3
	RESISTORS	
	22K ohms 1/4W. ±20%	R1
	4.7 Megohms 1/4W. ±20%	R4
	220K ohms 1/4W. ±20%	R5
	2200 " 1W. ±20%	R7
	18 " 1/2W.	R9
	330K " 1/4W.	R6
	1.5 Meg. 1/4W.	R12
2483	Volume Control 1 Meg. with Switch (small size)	R2
2484	470K ±20%	R10
	3.3 Meg. 1/4W.	R3
	100K, 1/4W.	R11
	COILS & TRANSFORMERS	
28210	Oscillator Coil	L2
1770	I.F. Coil	
3535	I.F. Transformer Output	
28186	Loop (Part of Back) (No Primary Coil)	
62192	Loop	
	CHASSIS & CHASSIS PARTS	
54144	Grommets (Mtg. Var.)	
54145	Cup Washers (Mtg. Var.)	
18110	Sockets, Octal 1-5/16 mtg. wafer	
5877	Sockets, Miniature 1-5/16 mtg. wafer	
	Speaker & Output Transformer.	L4
54317	Wood Spacer	
3828	Switch Radio Phono	
6343	Pick-up arm and rest (with 2 insulated leads 12" lg. no plug. L-26 Cartridge	
6418	Motor & turntable -8" turntable 5" x 5" leads strip & tin 1/4"	
54124	Terminal Strip	
54114	Rubber grommets (var. Con. Mtg.)	
54145	Extruded Washers (" ")	

©John F. Rider

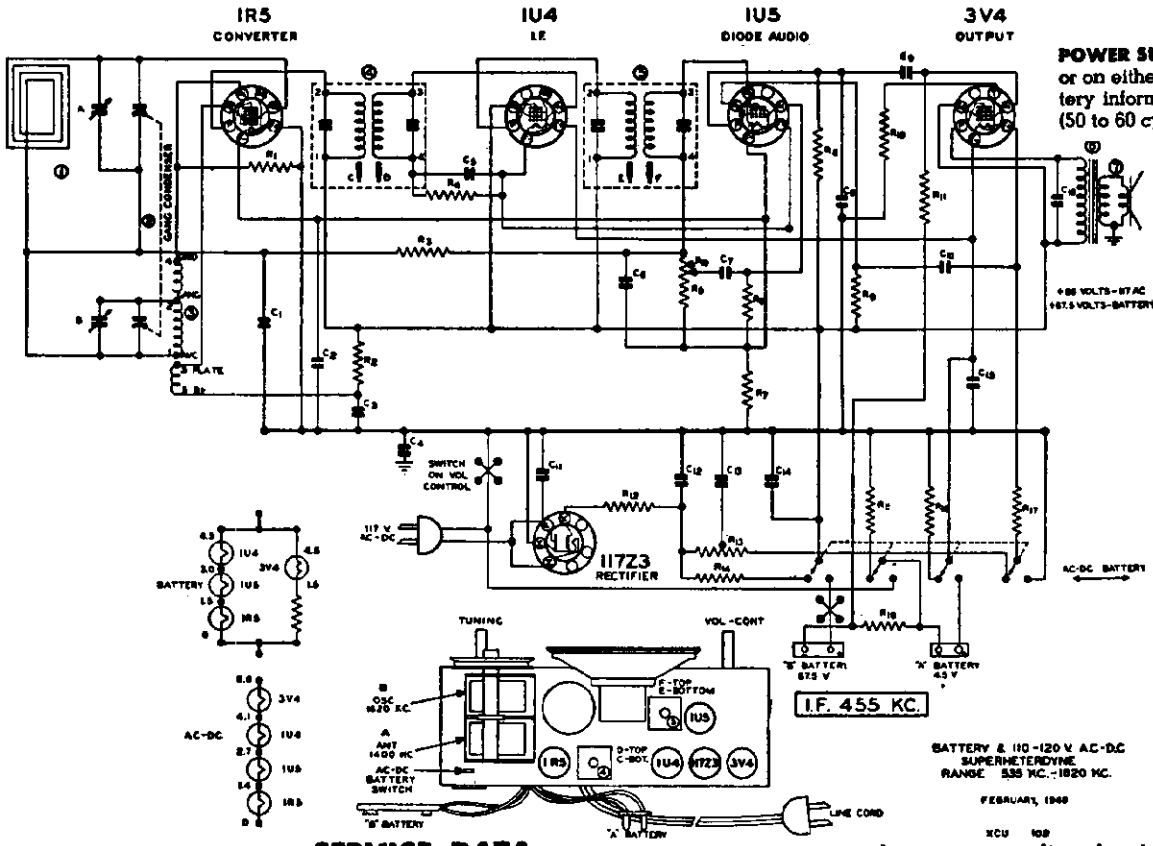

BATTERY & 110-120 V. A.C.-D.C. SUPERHETERODYNE
RANGE 535 KC.-1620 KC.

FEBRUARY, 1940

XCU 108

POWER SUPPLY. This receiver is designed to operate on self-contained batteries or on either an AC or DC power supply when such a supply is available. (For battery information, see section on batteries.) The receiver will operate on either AC (50 to 60 cycles) with a voltage of 110 to 120 or DC with a voltage from 110 to 120.

This receiver will accommodate any of the batteries listed below:

Manufacturer	Manufacturer's Type Number "A" Battery	"B" Battery
National Carbon	748	487
General Dry Battery	3H3	W45A
Ray-O-Vac	P83A	4387
Burgess Battery	G3	XX45

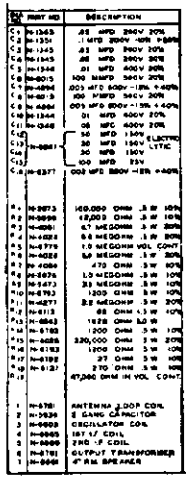

SERVICE DATA

Lack of sensitivity and poor tone quality may be due to any one or a combination of causes such as weak or defective tubes or speaker, open or grounded bias resistor, bypass condenser, etc. Never attempt to realign set until all other possible sources of trouble have been first thoroughly investigated and definitely proved not to be the cause.

NOTE: IT IS ABSOLUTELY NECESSARY THAT AN ACCURATELY CALIBRATED TEST OSCILLATOR WITH SOME TYPE OF OUTPUT MEASURING DEVICE BE USED WHEN ALIGNING THE RECEIVER AND THAT THE PROCEDURE BE CAREFULLY FOLLOWED, OTHERWISE THE RECEIVER WILL BE INSENSITIVE AND THE DIAL CALIBRATION WILL BE INCORRECT. THE TRIMMERS WILL BE REFERRED TO BY THEIR FUNCTION AS INDICATED ON THE PARTS DIAGRAM.

ALIGNMENT PROCEDURE

GENERAL DATA. The alignment of this receiver requires the use of a test oscillator that will cover the frequencies of 455, 600, 1400 and 1620 KC and an output meter to be connected across the primary or secondary of the output transformer. If possible, all alignments should be made with the volume control on maximum and the test oscillator output as low as possible to prevent the AVC from operating and giving false readings.

CORRECT ALIGNMENT PROCEDURE. The intermediate frequency (I.F.) stages should be aligned properly as the first step. After the I.F. transformers have been properly adjusted and peaked, the broadcast band should be adjusted.

I.F. ALIGNMENT: Remove the chassis and batteries from the cabinet and remove the bottom enclosure plate from the chassis. With the gang condenser set at minimum, adjust the test oscillator to 455 KC and connect the output to the grid of the first detector tube (1R5) through a .05 or .1 MFD condenser. The ground of the test oscillator should be connected to the buss. Align all four I.F. slugs to peak or maximum reading on the output meter. Each I.F. has an adjustment at the top and bottom of the can. The peaks on the slugs must be the ones farthest out of the coils.

R.F. ALIGNMENT: Place the cabinet on its face and open cabinet back to a 90° angle. Lay a board across the body of cabinet ahead of the loop. Replace the bottom chassis enclosure and set the chassis and batteries on the board so that they occupy the same relative position to the loop as they do in the cabinet. Care should be taken to have no iron or other metal near the loop.

Connect the test oscillator to a dummy loop which can be made by coiling 2 turns of hookup wire about 6" in diameter. Place this dummy loop about a foot from the loop on the receiver and in the same plane as the receiver loop. With the gang condenser set at minimum capacity, set the test oscillator at 1620 KC, and adjust the oscillator (or 1620 KC trimmer) on the gang condenser. Next set the test oscillator at 1400 KC, and tune in the signal on the gang condenser. Adjust the antenna trimmer (or 1400 KC trimmer) for maximum signal. Next set the test oscillator at 600 KC. and tune in signal on condenser to check alignment of coils

PART NO.		DESCRIPTION	PART NO.		DESCRIPTION	PART NO.		DESCRIPTION
PC-2	C-1	.05MFD. CONDENSER 200 V.	IR-1	R-8	470Ω RESISTOR 1/2W. 20 %	SW-2	S-1	TONE SWITCH
PC-8	C-2	1 MFD. CONDENSER 400 V.	IR-42	R-9	1000Ω RESISTOR 1 W. 10 %		S-2	SWITCH ON VOLUME CONTROL
MC-4	C-3	.00005MFD. MICA	IR-17	R-10	33 Ω RESISTOR 1/2 W. 20 %	SW-1	S-3	PHONO-RADIO SWITCH
PC-4	C-4	.25MFD. CONDENSER 200V.	IR-11	R-11	470Ω RESISTOR 1/2 W. 20 %		S-4	SWITCH ON RECORD CHANGER
MC-5	C-5	.0005MFD. MICA	IR-15	R-12	2200Ω RESISTOR 1/2 W. 20%	AC-M-7	M	RECORD CHANGER MOTOR
PC-5	C-6	.05 MFD. CONDENSER 400V.	GC-5	G-1	GANG CONDENSER	AC-PU-7	P	CRYSTAL PICKUP ARM CARTRIDGE SET
MC-2	C-7	.001MFD. MICA		G-2		PB-2	PB	110 V. 7½W PILOT BULB
PC-7	C-8	.01 MFD. CONDENSER 400V.		G-3	ANT. TRIMMER	CO-2	PL	LINE CORD
EC-14	C-9	20MFD.		C-6	OSC. TRIMMER			
	C-10	40MFD. 150 W.V. ELECTROLYTIC						
	C-11	40MFD.	LI-6	T-1	INPUT I.F. TRANFORMER			
IR-20	R-1	220M Ω RESISTOR 1/2W. 20 %	LI-7	T-2	OUTPUT I.F. TRANSFORMER			
IR-9	R-2	22 M Ω RESISTOR 1/2 W. 20%		T-3	OUTPUT TRANSFORMER			
IR-10	R-3	47 M Ω RESISTOR 1/2 W. 20%						
IR-23	R-4	33MEG Ω RESISTOR 1/2 W. 20%	LL-17	L-1	LOOP ANT.			
IR-12	R-5	1MEG. Ω RESISTOR 1/2 W. 20%	LO-14	L-2	OSC. COIL			
IR-13	R-6	22MEG Ω RESISTOR 1/2 W. 20%						
VC-4	R-7	1MEG. VOLUME CONTROL	SPK-12	SP	5" P.M. SPEAKER			

CAUTION: Never plug this unit into a 220 Volt or a DC power source as you will seriously damage the component parts, which have been designed for 110 to 125 volts AC current at 60 cycles only.

POWER SUPPLY: This receiver is designed to operate from a power source of 110 to 125 volts AC current at 60 cycles only.

TUBE AND TRIMMER LOCATION

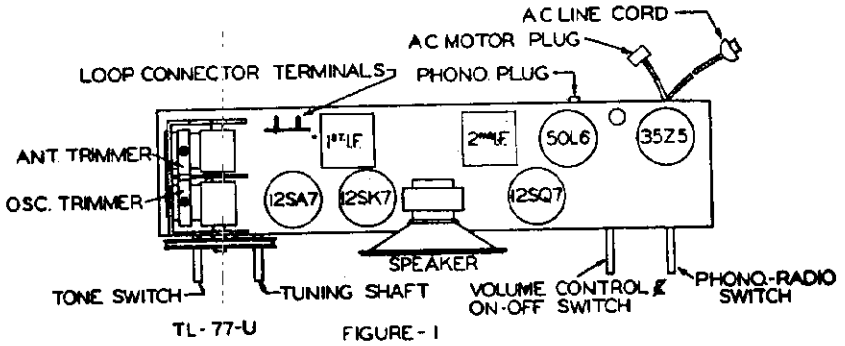

TL-77-U FIGURE-1

ALIGNMENT DATA

Remove the chassis from the cabinet. A Signal Generator with the following frequencies is required: 455 KC, 1400 KC and 1720 KC.

The receiver volume control should be turned to maximum during the I.F. and all subsequent alignments to keep the A.V.C. from working and giving false readings. Turn the tone control to complete left hand position. Keep the generator output as low as possible to prevent overloading.

Connect an output meter across the voice coil of the speaker.

Connect a 20,000 ohm resistor across the loop connector terminals to reflect proper loop impedance.

FIRST STEP: Connect the hot lead from the generator to the "ANT." section of the gang condenser through a .1 MFD. condenser. The ground lead must be connected to the floating ground buss under the chassis. Turn the gang condenser to complete minimum capacity. Adjust the generator to 455 KC and adjust the trimmers of the 1st and 2nd I.F. transformers until a maximum reading is noted on the output meter.

SECOND STEP: With the leads from the generator connected in the same manner as in I.F. alignment, adjust the signal generator to 1720 KC. The "O.S.C." trimmer is located on the front section of the gang condenser. Adjust this trimmer until the signal is tuned in. The gang condenser should be at complete minimum capacity for this setting.

THIRD STEP: Remove the generator leads from the chassis. Remove the 20,000 ohm resistor from the loop connector terminals. Reinstall the chassis in the cabinet, connect the loop leads, motor plug and phono pickup leads.

Connect the generator leads to a transmitting loop, made of a few turns of wire, and loosely couple to the receiver loop antenna which is located on the back end of the cabinet. Adjust the generator to 1400 KC. Rotate the tuning control until this signal is tuned in. The "ANT." trimmer is located on the rear section of the gang condenser. Adjust this trimmer until a maximum signal is noted on the output meter.

No further adjustment should be necessary, unless the receiver has been damaged, as the coils and tuning condenser have been specially handled at the factory to insure proper alignment at the lower frequencies.

SCHEMATIC DIAGRAM SD-77 U

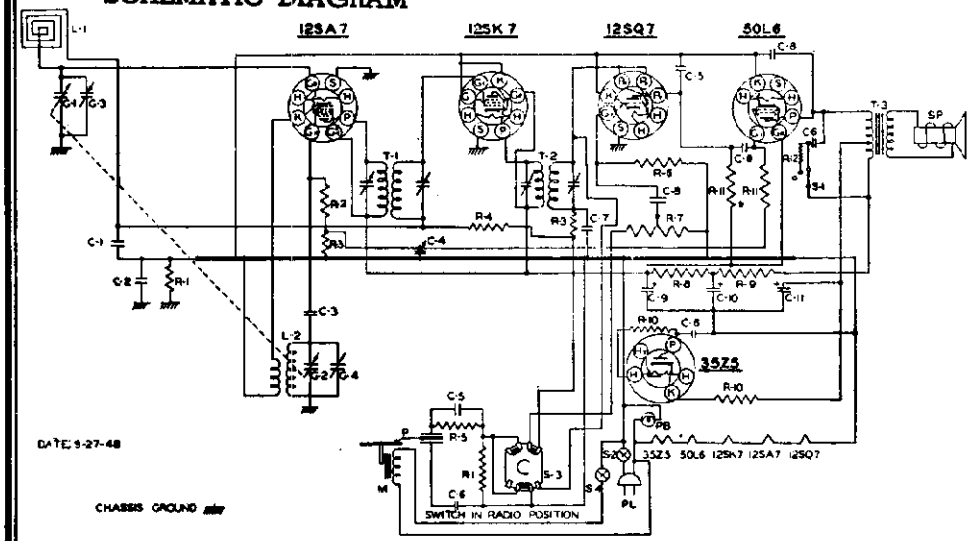

MODEL 6F-235

POWER SUPPLY. This receiver is designed to operate on any alternating current supply (AC) ranging from 110 to 120 volts, 50 to 60 cycles; or on any direct current supply (DC) ranging from 110 to 120 volts.

AERIAL SYSTEM

This receiver has a built-in "loop" aerial. Its excellent design is such as to increase pick-up from stations having wide variations in signal strength. The efficiency and selectivity of the loop provide outstanding reception without the use of an external aerial. The "loop" aerial used on this receiver is somewhat directional so reception from weak stations can be improved by turning the set in the proper direction. In or near metal buildings, iron ore deposits or steel structures or in localities remote from broadcasting stations, reception can be improved by using an outside aerial 50 feet to 100 feet in length including lead-in. Connect the outside aerial to the aerial lead. When using the outside aerial with AC power supply it may be necessary to reverse the power cord plug in wall socket to eliminate hum or distortion.

TUBES USED

Six tubes are used. Type numbers and locations are shown in the tube location diagram on the cabinet. If tubes are removed from their sockets for test or replacement purposes, make certain that each tube is placed in its proper socket when replacing the tubes in the set. Failure to replace the tubes in their proper sockets may result in damage to the tube, or to the receiver, or both.

TUNING RANGE

This receiver is designed to operate over the standard broadcast band which extends from 535 to 1620 Kilocycles (KC) (185 to 560 Meters).

DIAL CALIBRATION. The scale is calibrated from 55 to 160 (Standard Broadcast). This band covers all Standard Broadcasts frequencies of the United States, Canada, Mexico, Cuba and many Central and South American Countries. Add a zero to figures on the scale to obtain kilocycles.

One end of the indicator points to the wave length in meters. Therefore, both wave length in meters and frequency in kilocycles can be read at each setting of dial indicator.

SERVICE DATA

Lack of sensitivity and poor tone quality may be due to any one or a combination of causes such as weak or defective tubes or speaker, open or grounded bias resistor, bypass condenser, etc. Never attempt to realign set until all other possible sources of trouble have been first thoroughly investigated and definitely proved not to be the cause.

NOTE: IT IS ABSOLUTELY NECESSARY THAT AN ACCURATELY CALIBRATED TEST OSCILLATOR WITH SOME TYPE OF OUTPUT MEASURING DEVICE BE USED WHEN ALIGNING THE RECEIVER AND THAT THE PROCEDURE BE CAREFULLY FOLLOWED. OTHERWISE THE RECEIVER WILL BE INSENSITIVE AND THE DIAL CALIBRATION WILL BE INCORRECT. THE TRIMMERS WILL BE REFERRED TO BY THEIR FUNCTION AS INDICATED ON THE PARTS DIAGRAM.

ALIGNMENT PROCEDURE

GENERAL DATA. The alignment of this receiver requires the use of a test oscillator that will cover the frequencies of 455, 600, 1400 and 1620 KC and an output meter to be connected across the primary or secondary of the output transformer. If possible, all alignments should be made with the volume control on maximum and the test oscillator output as low as possible to prevent the AVC from operating and giving false readings.

CORRECT ALIGNMENT PROCEDURE. The intermediate frequency (I.F.) stages should be aligned properly as the first step. After the I.F. transformers have been properly adjusted and peaked, the broadcast band should be adjusted.

I.F. ALIGNMENT. Remove the chassis and loop antenna from the cabinet and set them up on the bench so that they occupy exactly the same respective positions on the bench as they did in the cabinet. Care should be taken to have no iron or other metal near the loop. Do not make this set-up on a metal bench. With the gang condenser set at minimum, adjust the test oscillator to 455 KC and connect the output to the grid of the first detector tube (12SA7) through a .05 or .1 mfd. condenser. The ground on the test oscillator should be connected to the ground buss, indicated on the circuit diagram. Align all four I.F. trimmers to peak or maximum reading on the output meter.

BROADCAST BAND ALIGNMENT. Connect the test oscillator to the antenna of the set through a 100 mmfd. (.0001) condenser. With the gang condenser set at minimum capacity, set the test oscillator at 1620 KC, and adjust the oscillator (or 1620 KC trimmer) on gang condenser. Next—set the test oscillator at 1400 KC, and tune in the signal on the gang condenser. Adjust the antenna trimmer (or 1400 KC trimmer) for maximum signal. Next set the test oscillator at 600 KC, and tune in signal on condenser to check alignment of coils.

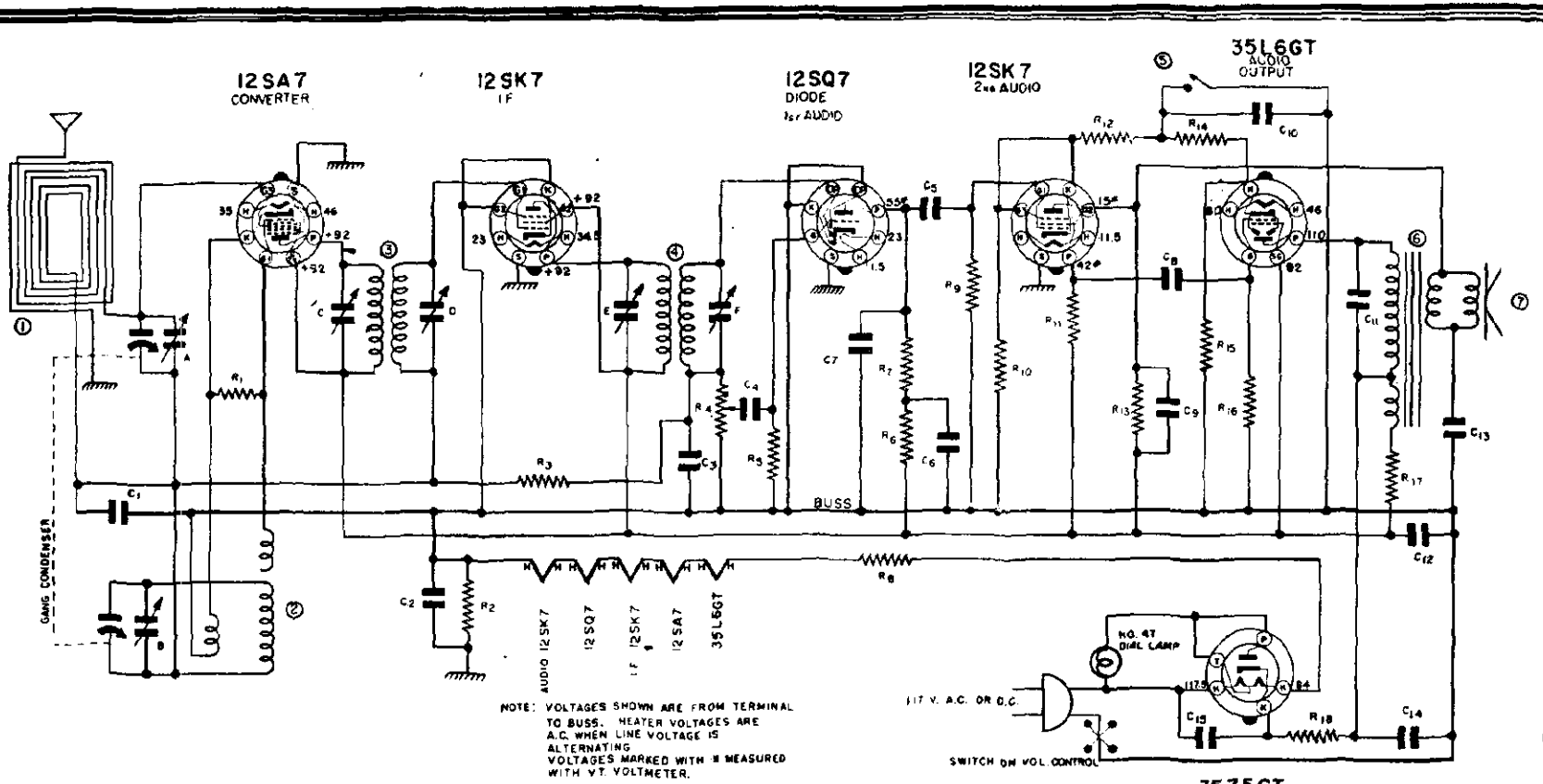

NOTE: VOLTAGES SHOWN ARE FROM TERMINAL TO BUSS. HEATER VOLTAGES ARE A.C. WHEN LINE VOLTAGE IS ALTERNATING. VOLTAGES MARKED WITH * MEASURED WITH V.T. VOLTMETER.

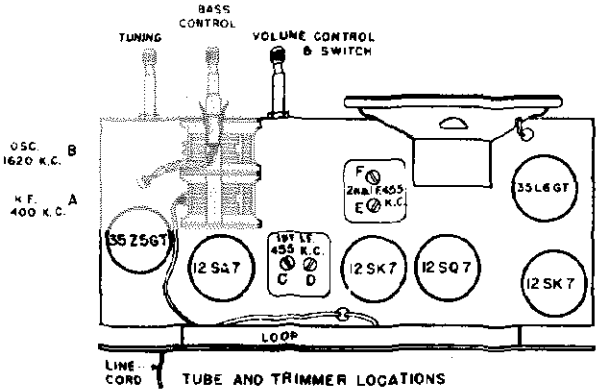

TUBE AND TRIMMER LOCATIONS

DIAG. NO.	PART NO.	DESCRIPTION	DIAG. NO.	PART NO.	DESCRIPTION
C1	N-1345	.05 MFD 200 V 20%	R8	N-4058	33 OHM 1.0 W. 20%
C2	N-4957	.09 MFD 200 V. -10%+10%	R9	N-4061	4.7 MEGOHM .5 W. 20%
C3	N-1378	100 MMFD. MICA 500 V. 20%	R10	N-4896	2200 OHM .5 W. 10%
C4	N-4894	.005 MFD. 600 V -15%+40%	R11	N-4899	220,000 OHM .5 W. 10%
C5	N-2063	.003 MFD. 600 V. -15%+40%	R12	N-5028	22,000 OHM .5 W. 5%
C6	N-1367	6 MFD. 150 W.V. ELECTROLYTIC	R13	N-4470	12 MEGOHM .5 W. 10%
C7	N-4890	.0005 MFD 600 V -25%+60%	R14	N-4897	8,200 OHM .5 W. 10%
C8	N-1903	.01 MFD. 400 V. 20%	R15	N-4067	180 OHM .5 W. 10%
C9	N-4927	.015 MFD. 400 V. 20%	R16	N-4027	470,000 OHM .5 W. 20%
C10	N-1351	.1 MFD. 200 V. -10%+20%	R17	N-4900	1200 OHM 1. W. 10%
C11	N-1376	.02 MFD 400 V. 20%	R18	N-4068	33 OHM 1 W 20%
C12	N-3658	40 MFD 150 W V ELECTROLYTIC			
C13	N-1345	.05 MFD. 200 V. 20%	1	N-4877	LOOP COIL
C14	N-3658	40 MFD. 150 W.V. ELECTROLYTIC	2	N-4810	OSCILLATOR COIL
C15	N-1346	.05 MFD. 400 V. 20%	3	N-4872	1ST. I.F. COIL
			4	N-4873	2ND I.F. COIL
R1	N-4025	22,000 OHM .5 W. 20%	5	N-4634	TONE SWITCH
R2	N-4026	220,000 OHM .5 W. 20	6	N-4875	OUTPUT TRANSFORMER
R3	N-4062	3.3 MEGOHM .5 W 20%	7	N-4869	6½ PM DYNAMIC SPEAKER
R4	N-4889	0.5 MEGOHM VOLUME CONTROL			
R5	N-4061	4.7 MEGOHM .5 W 20%		N-4876	2 GANG CONDENSER
R6	N-1778	100000 OHM .5 W 20%			
R7	N-4895	10,000 OHM .5 W. 10%			

I.F.—455 K.C.

6 TUBE A.C.—D.C.
SUPERHETERODYNE
SINGLE BAND

DATE-8-22-1945

RCU

SCHEMATIC AND PARTS LIST INCLUDING CHASSIS LAYOUT AND TUBE POSITIONS

MODEL 8G-200, 8G-201

TUNING RANGE

This receiver is designed to operate over two tuning ranges; the broadcast band which extends from 535 to 1620 Kilocycles (KC) (185 to 560 Meters), and the Frequency Modulation (FM) Band which extends from 87 to 109 Megacycles (MC).

DIAL CALIBRATION. (Standard Broadcast Band.) The upper scale is calibrated from 55 to 160 (Standard Broadcast). This band covers all Standard Broadcast frequencies of the United States, Canada, Mexico, Cuba, and many Central and South American Countries. Add a zero to figures on the scale to obtain kilocycles.

DIAL CALIBRATION. (Frequency Modulation Band.) The entire lower scale is calibrated from 88 to 108 Megacycles (201 to 300 FM channels) which covers the entire popular Frequency Modulation (FM) Band.

BROADCAST ALIGNMENT PROCEDURE

EQUIPMENT REQUIRED: Modulated Test Oscillator that will cover the frequencies of 455, 600, 1400 and 1620 KC, also an Output Meter to connect across the primary or secondary of the output transformer.

I. F. ALIGNMENT: Put switch in the broadcast position and connect the test oscillator to the converter grid through a .05 condenser. The ground lead of the test oscillator should be connected to the buss of the receiver. Adjust the four I. F. trimmers (F,G,I, and K) for maximum reading on the output meter. Always use the peak on the slug which is obtained when screw is out of the can the greatest distance.

R. F. ALIGNMENT: Connect the test oscillator to the antenna lead on the loop through a 100 mmf. condenser. Set the gang condenser to the maximum high frequency position and the test oscillator to 1620 KC. Adjust Trimmer "C" to the maximum output. Set test oscillator to 1400 KC and tune in signal with the gang condenser and adjust Trimmer "A" to maximum response. Set test oscillator to 600 KC and tune in signal with gang condenser. Check for damage to gang condenser or coils.

F. M. ALIGNMENT PROCEDURE

EQUIPMENT REQUIRED: F. M. Generator with frequencies of 90, 98, 106, and 109 megacycles, and generator without any modulation which covers 10.7 megacycles, also a zero center microammeter, and a DC Vacuum Tube Voltmeter (An oscilloscope and variable frequency audio oscillator can be used for better results. This method of alignment is described in the last paragraph).

DISCRIMINATOR ALIGNMENT: Connect DC Vacuum Tube Voltmeter between the buss and point "XX" on circuit diagram. Point "XX" is negative potential on the vacuum tube voltmeter. Isolate point "XX" and buss connections to vacuum tube voltmeter with chokes made by wrapping approximately 20 turns of hookup wire around a pencil. This is illustrated in Figure 1. Connect two 100,000 ohm resistors in series. (These resistors must match to 5%.) Connect them from point "XX" to buss. Between junction of 100,000 ohm resistors and the point "YY" connect Zero Center Meter, which is also isolated by the choke described above. These connections are illustrated in Figure 1. Connect test oscillator which is adjusted to 10.7 megacycles to grid of IF Driver through a 250 mmf condenser. Adjust slug "M" to maximum on the vacuum tube voltmeter. Reduce test oscillator to keep vacuum tube voltmeter to around 5 volts. Adjust slug "N" to bring zero center meter to zero point. Slug "N" should never be touched after this alignment.

PRELIMINARY IF ALIGNMENT: Connect test oscillator to the converter grid through a 250 mmf. mica condenser. Adjust slugs D, E, H and J to maximum output on the vacuum tube voltmeter. In making these adjustments reduce the generator input to keep the vacuum tube voltmeter at approximately 5 volts when making this adjustment. Always use the peak on the slug which is obtained when the screw is out of the can the greatest distance.

FINAL I. F. ALIGNMENT: Set the test oscillator to 109 MC without frequency moldulation and connect it to converter grid. Adjust trimmer "B" for approximate maximum output on the vacuum tube voltmeter and zero center for exact centering. Adjust test oscillator to approximately 25 KC deviation, carefully adjust trimmers D, E, H, J and M for maximum on vacuum tube voltmeter. It may be necessary to shift the frequency of the oscillator slightly to hold the zero center meter on center. In making this adjustment turn up volume control slightly to obtain an audio signal out of the speaker. If this signal is free of distortion, increase the deviation to approximately 75 KC and repeat the above alignment. If this is done carefully there will be no distortion in the speaker with this deviation. If distortion is obtained in the speaker with this deviation, it will be necessary to carefully repeat the I.F. alignment.

R. F. ALIGNMENT: Move the signal generator to the FM antenna terminals, using 150 ohm resistors between the generator terminals and each of the FM antenna terminals. Set the test oscillator to 106 megacycles and tune in signal with gang condenser to obtain approximate maximum on the vacuum tube voltmeter and zero center on the meter. Slightly bend the RF section in the gang condenser for maximum output with vacuum tube voltmeter. Set the signal generator to 98 megacycles, tune in signal with the gang condenser. Repeat the above procedure at this frequency and also at 90 megacycles. Recheck alignment at 106 megacycles.

POWER SUPPLY. This receiver is designed to operate on any alternating current supply (AC) ranging from 110 to 120 volts, 50 to 60 cycles; or on any direct current supply (DC) ranging from 110 to 120 volts.

FINAL ALIGNMENT OF FM IF WITH OSCILLOSCOPE AND VARIABLE AUDIO OSCILLATOR: The oscilloscope and variable audio oscillator should be connected as shown in Figure 2. Adjust the deviation to approximately 25 KC and align trimmers D, E, H, J and M to maximum on the vacuum tube voltmeter while watching the oscilloscope for a straight line. It may be necessary to vary the frequency of the variable audio oscillator in order to make the line straight on the scope. Next increase deviation to approximately 75 KC and repeat procedure, adjusting for maximum or as close to maximum as it is possible to obtain without losing the straight line on the oscilloscope. After all the trimmers have been properly adjusted to a maximum and a straight line on the scope, increase the deviation from approximately 125 to 150 KC. The curves illustrated in Figure 3 should be obtained. In making the above adjustments it may be necessary to make slight variations in the RF frequency in order to hold the zero center meter at the zero point.

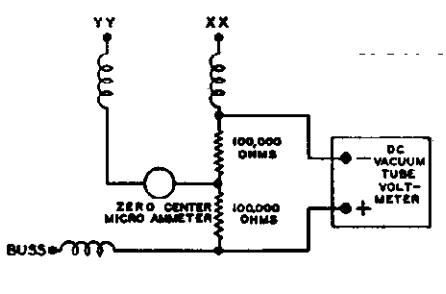

FIG. 1

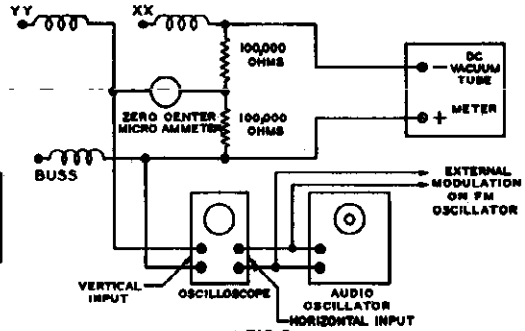

FIG. 2

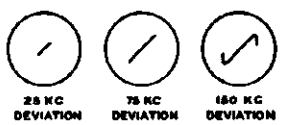

OSCILLOSCOPE PATTERNS

FIG. 3

MODEL 8G-200,
8G-201

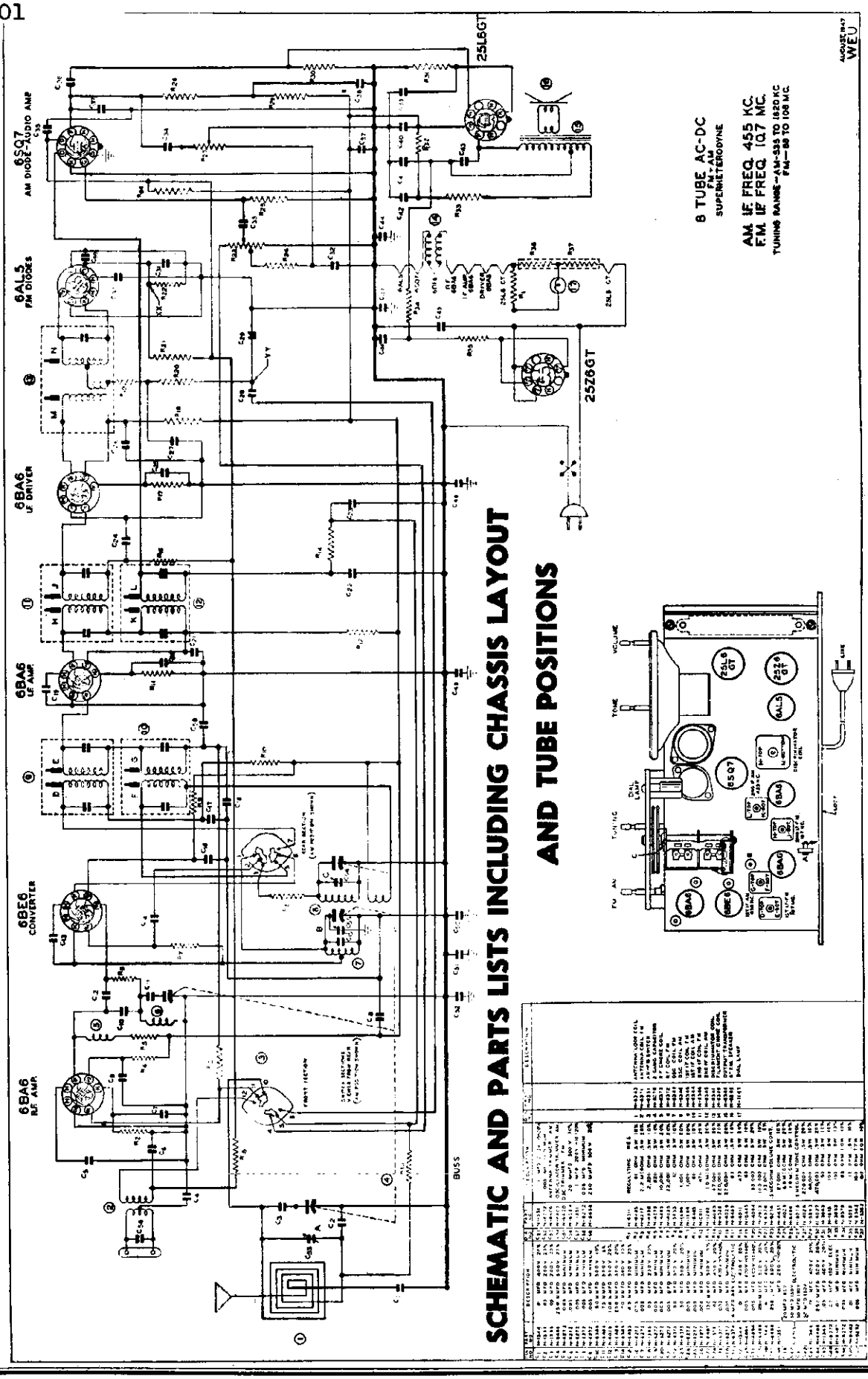

©John F. Rider

©John F. Rider

OPERATING INSTRUCTIONS

Miniature Superheterodyne Broadcast Tuner — Model A-600

Introduction:

The circuit of this tuner is a standard superheterodyne of high efficiency, using miniature tubes throughout. A.C.-D.C. circuitry is used and therefore CARE SHOULD BE EXERCISED WHEN THIS TUNER IS CONNECTED TO OTHER EXISTING EQUIPMENT. Inasmuch as the audio output cable is connected to the power line (for low hum consideration) it would be unreasonable to float the chassis. While it is possible to do so and insert a fairly large paper capacitor in return with the output cable shield, the existing above ground voltage between the cable shield and power line ground would result in unbearable hum conditions. In order to avoid fuse blowouts or shock, it is ABSOLUTELY NECESSARY THAT THE POLARITY OF THE TUNER POWER LINE CORD IS SUCH THAT THE TUNER CHASSIS AND ASSOCIATED EQUIPMENT ASSUMES THE SAME POLARITY IN RESPECT TO THE POWER LINE GROUND. This can be easily checked with an A.C. voltmeter. The output cable is attached within the tuner to the low output tap. If higher output is desired connect the output cable to the medium or high output as shown in the diagram below.

Specifications:
With a strong signal tuned in -

A.V.C.: - - - - - - - - 3-7 volts.
Oscillator Grid - - - 8-11 "
IF Frequency- - - - - 455 Kc.
Selectivity - - - - - 10/down 7Kc.
Gain- - - - Ant.- - - 5
Gain- - - - Converter 30
Gain- - - - IF - - - 60
Output impedance- - - High

Audio output - - - - - 10 - 5 - 1 volt
Adjustable in 3 steps.
Power consumption- - - 25 Watts
D.C. Voltage - - - - - 110-120 volts
Total current- - - - - 25 mils.
Tubes: 1 - 35W4 Rectifier
1 - 12AT6 Diode Audio
1 - 12BA6 IF Amplifier
1 - 12BE6 Converter

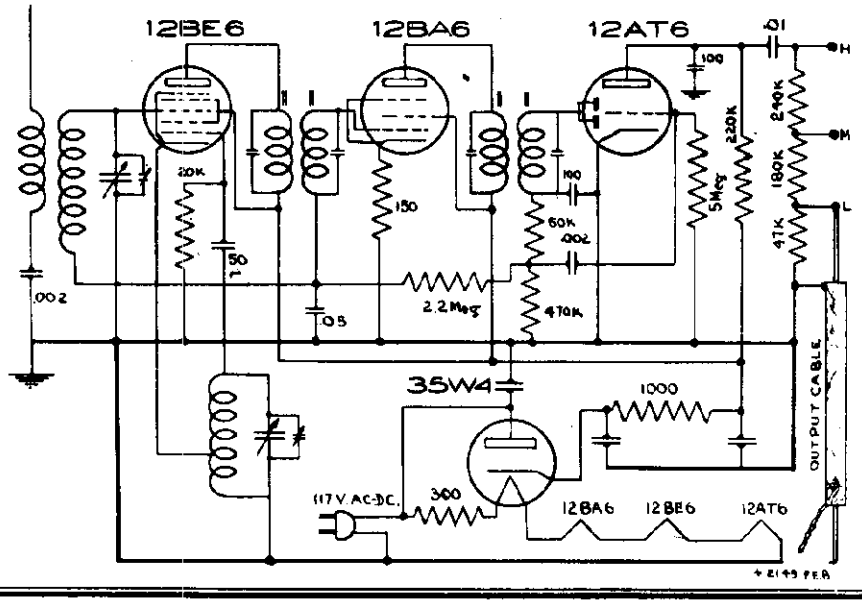

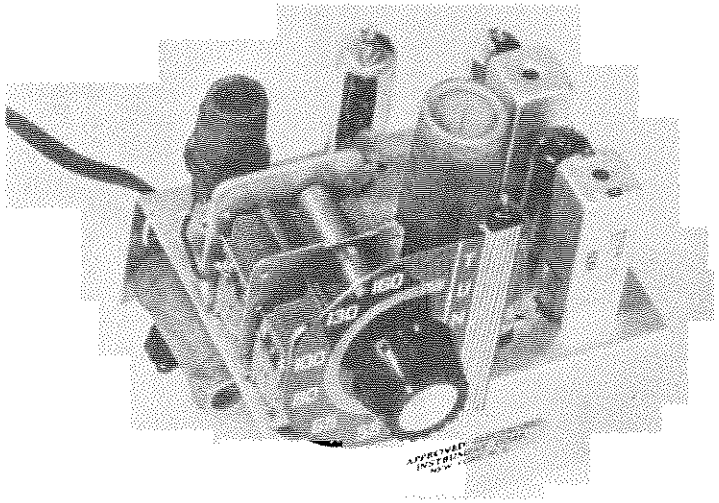

MODEL A-600 AC

OPERATING INSTRUCTIONS

Miniature Superheterodyne Broadcast Tuner — Model A-600 AC

Introduction:

The circuit of this tuner is a standard superheterodyne of high efficiency, using miniature tubes. The power supply is a standard 117V. 60 cycle, fullwave rectifier. A power transformer isolates the line from the chassis. No shock hazards. Ideally suited for installations where space is at a premium. The output cable is attached within the tuner to the low output tap. If higher output is desired connect the output cable to the medium or high output as shown in the diagram below.

Specifications:
With a strong signal tuned in –

A.V.C.: – – – – – – – – – – 3-7 volts.
Oscillator Grid – – – – – – 8-11 "
If frequency – – – – – – – 455 Kc.
Selectivity – – – – – – – – 10/down 7Kc.
Gain – – – – Ant. – – – – 5
Gain – – – – Converter – 30
Gain – – – – IF – – – – – 60
Output impedance – – – – – – High

Audio output – – – – – 10 – 5 – 1 volt
Adjustable in 3 steps

Power consumption – – – 25 Watts
D.C. Voltage – – – – – 110-120 volts
Total current – – – – – 25 mils.
Tubes: 1-7Y 4 Rectifier
1-6AT6 Diode Audio
1-6BA6 IF Amplifier
1-6BE6 Converter

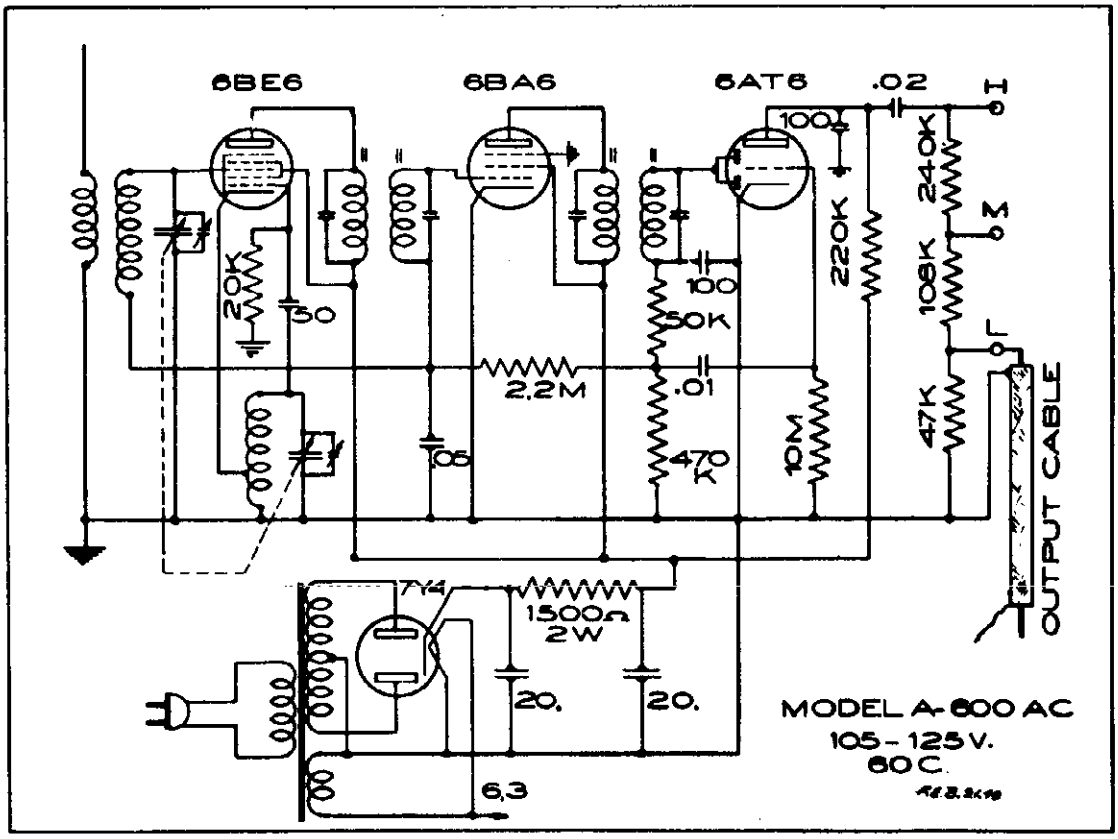

©John F. Rider

GENERAL

Model 710 tuner chassis described herein, is a high quality AM-FM tuner, designed for connection to any good amplifier, radio or television receiver.

Its small and compact size lends itself to custom installations, remote and numerous other applications.

Because of the fact that in some cabinets the tuner must be mounted in an inverted or upright position, a special dial scale is made available, with dial calibrations from top to bottom. An attractive bronze finished escutcheon is supplied with each tuner.

The tuner does not carry its own power supply and an external source is required. A 3-foot power cable emerging from the rear of the chassis is color coded for easy identification.

-SPECIFICATIONS-

POWER SUPPLY REQUIRED: AC or DC
6.3V-4A. 170V D.C.-20Mil. 140V D.C.-37Mil.

Total A.M.	F.M.
F.M. Intermediate Freq.	10.7 Mc
Tuning Range	88 - 108 Mc
Tubes:	
RF Amplifier	6AG5
Mixer	6C4
Oscillator	6J6
First IF Amplifier	6AU6
Second IF Amplifier	6AU6
First Limiter	6AU6
Second Limiter	6AU6
Detector	6AL5
AM Intermediate Freq.	456 Kc
Tuning Range	530 - 1800 Kc
Tubes:	
RF Amplifier	6BA6
Converter	6BE6
First IF Amplifier	6BA6
Detector - Amplifier	6AT6

Triode Section of 6AT6
Common to AM & FM

DATA ON THE APPROVED FM-AM TUNER

The ever-increasing number of FM stations on the air, and the spiraling demand for high-quality FM reception are a challenge to the ingenuity of circuit engineers who must steer a course between very cheap designs of such poor performance that dealers are coming to recognize them as spurious models, and FM receivers which are too high in price for the mass market at this time.

It was with the middle course in mind that our engineers at Approved Electronic Instrument Corporation designed the unit shown in the circuit diagram.

First of all, it employs a tuned RF stage with two limiters and a discriminator, giving high sensitivity and effective static reduction. These assure reception that does full justice to FM broadcasting. Then, a simplified electrical design was developed which assures high stability and freedom from drift.

This tuner contains all the controls required for operation, and one stage of audio amplification common to both FM and AM section. Thus it can be connected to a special amplifier and speaker, or to the audio system of an existing television set capable of supplying the necessary filament and B+ power requirements of the tuner.

FM - I.F. Section

Following the mixer are two I.F. stages operating at a center frequency of 10.7 mc. into two limiter stages which in turn feed a standard discriminator. All I.F. transformers are constructed for high frequency operations throughout. Special iron cores are used that reach their peak "Q" value at 10.7 mc. The fixed capacitors are of the compensatory type. Wave shape tests have shown these transformers to possess excellent symmetry and stability. The discriminator transformer has been designed to provide extreme uniformity of wave shape with equal positive and negative peaks resulting in high voltage output with very good discrimination. A band width of 200 kc. is the nominal value of all I.F. Discriminator transformers. Fig. 3 and Fig. 4.

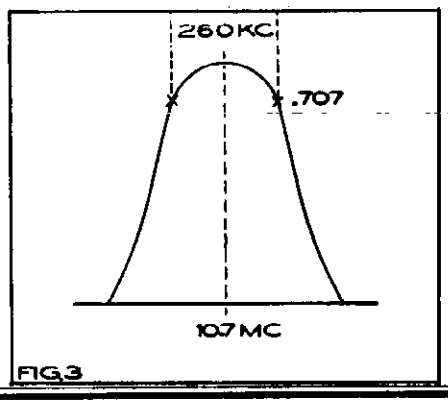

FIG.3

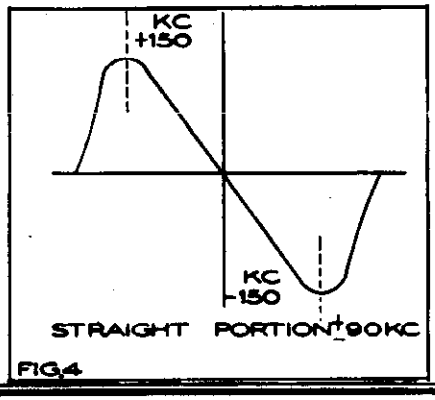

FIG.4

MODEL A-710

FM - I.F. Alignment

The center frequency of the IF amplifier is 10.7 mc. Due to overcoupling of the IF transformers a bandwidth of about 150 kc. can be expected and is of the double humped variety. While it is possible to align the IF amplifier with an ordinary AM signal generator and meter, for maximum response, it does not follow that this method produces the correct alignment for proper bandpass characteristic. A much more efficient and time saving procedure of the I.F. amplifier alignment is the visual method requiring a frequency modulated signal generator, an oscilloscope and for double check purposes a deviation meter to be connected across the discriminator output. The meter is a D.C. V.T.V.M. zero center and calibrated -3.-0 +3 volts. The frequency modulated signal generator must be capable of sweeping through a range of about 10.5 to 10.9 mc. in sawtooth fashion with a possible adjustment for contraction or expansion of the total sweep width and a simultaneously generated sweep voltage is necessary for horizontal deflection of the oscilloscope. A good AM signal generator with a wide spread around 10.7 mc. completes the total test instruments necessary for proper IF amplifier alignment. Using the visual method of IF alignment, the sweep voltage output of the frequency modulated signal generator must be connected to the horizontal deflection input of the oscilloscope. The controls of the scope should be adjusted that the trace covers almost the full width of the screen. Connect the vertical deflection input of the oscilloscope across the grid return resistor of the limiter stage and with the output of the frequency modulated signal generator applied to the grid of the second IF stage, adjust the generator to sweep from about 10.5 to 10.9 mc. Due to grid rectification action of the limiter stage, a signal corresponding to the amplitude response of the preceding circuits is then available, and by careful adjustment of the oscilloscope controls a picture of the response curve will be visible on the screen. Never apply more generator voltage than required to produce a good image on the screen.

In order to insure correct center frequency setting, it is now necessary to apply a marker frequency, conveniently obtained from the standard AM signal generator, unmodulated and applied in parallel with the sweep frequency generator. The output of the AM generator should be isolated by means of a small mica condenser and have sufficient R.F. voltage output to produce a small marker pip superimposed upon the response curve trace. With the AM generator set to exactly 10.7 mc. observe the position of the marker pip and if the pip falls in the center of the response curve, the alignment to follow consist of equalizing the peaks on either side of the marker pip by means of the iron core adjustment screws from the top and bottom of the IF transformers. If the AM generator possesses a good frequency spread around 10.7 mc., the marker pip can be used to measure actual band width by slowly moving the AM generators frequency to either side of center frequency, noting where the pip begins to slide off the center of either hump, and adding both frequency differences from center frequency. This equals the total bandwidth. A correct alignment pattern is shown in Fig. 7A. Greater amplitude of patterns indicate higher gain and therefor all adjustments made must be based not only upon symmetry but gain as well.

The generators, both AM and FM are now shifted to the grid of the preceding stage and the whole procedure as outlined repeated. It will be necessary to reduce the output of the generators due to the gain of the added stage. When this stage has been properly aligned, the signal generators are then shifted to the grid of the mixer tube (6C4), where the oscillator voltage is injected. During the alignment of the first IF transformer, the oscillator should be inoperative by removing the 6J6 tube. The next step is to align the first IF transformers prim. and sec. The pattern appearing on the screen is then a picture of the overall response of the complete IF amplifier and should be symmetrical with the highest possible amplitude for maximum gain.

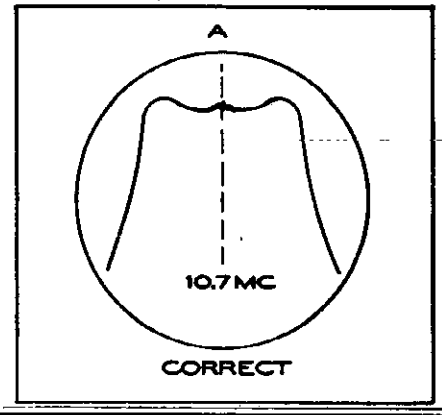

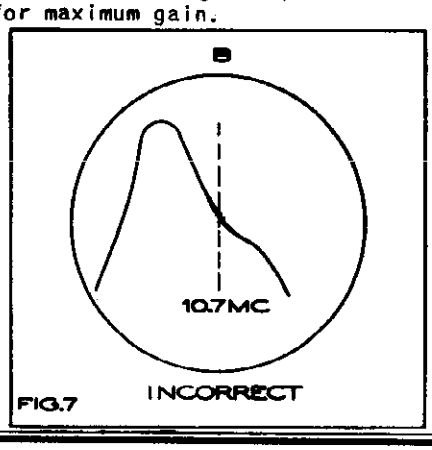

FIG.7

© John F. Rider

Discrimator Alignment

The alignment of the discriminator is comparatively easy. The output of the frequency modulated signal generator is applied to the grid of the 1st limiter tube and the output of the AM generator is fed to the same point at 10.7 mc. The vertical input of the oscilloscope must be connected across the discriminator output with the ground side of the scope to the grounded side of the discriminator. The controls of the scope should be adjusted for the best image possible with a minimum of signal generator voltage applied to the grid of the limiter. Symmetry must be obtained around the 10.7 mc. marker pip with linearity above and below the marker pip point. A correct discriminator pattern is shown in Fig. 8.

The adjustment of the primary of the discriminator transformer controls the linearity of the discriminator curve. If meter alignment is preferred, or no oscilloscope available, a simple D.C. vacuum tube voltmeter preferably one having a zero center scale and reading plus and minus 3 volts is connected across the discriminator output. A frequency of 10.7 mc. from an AM signal generator is fed to the grid of the limiter stage. The meter will probably read off center. The secondary of the discriminator must now be adjusted until the meter reads zero volts. Now change the generators frequency in equal steps above and below 10.7 mc. and note the voltage read on the meter. Readings should increase linearly on either side of the 10.7 mc. center frequency. Checks and rechecks with simultaneous adjustment of the discriminators primary may be necessary before a curve is obtained that resembles the pattern in Fig. 8.

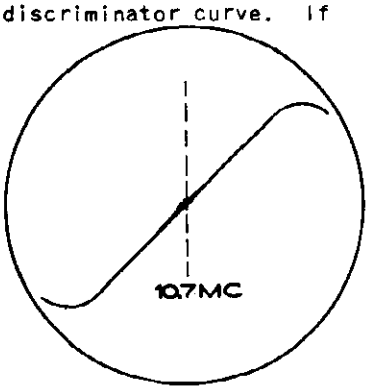

CORRECT DISCRIMINATOR ALIGNMENT PATTERN WITH 10.7 MC MARKER PIP

FIG.8

R. F. Frontend Alignment

To align the RF section of the Approved Tuner the following equipment is required. A signal generator with a frequency coverage of 88-108 mc. and preferably on fundamentals, a D.C. vacuum tube voltmeter with a low scale reading of about 3 volts or a D.C. meter having at least 20,000 ohms per volt impedance. The meter should be connected across the grid return resistor of the limiter stage. The output of the generator is then applied to the input of the tuner with the frequency set to 106 mc. and the tuner dial indicator set to read likewise 106 mc. The next step is to adjust the oscillator trimmer until the meter indicates maximum voltage. If the meter tends to read off scale, reduce the R.F. input voltage and hold the meter reading to about 2 volts average. The oscillator has been designed to operate at 10.7 mc. lower than signal frequency and proper setting of the oscillator frequency can be readily checked with a small absorption type wavemeter. At resonance, a large dip or increase in voltage reading will be noticed. The text adjustment consists of tuning the antenna and mixer stages for maximum response. Like the oscillator, both stages are tuned by means of silver ceramic capacitors.

The generator should now be set to 90 mc. and the dial indicator to the same frequency, and the oscillator, RF and antenna inductance slugs adjusted until the meter again reads maximum voltage. A small adjustment of the oscillator inductance at 90 mc. may show up as a large frequency deviation at 106 mc. due to the inter-relationship of L to C. It may be necessary to repeat the alignment procedure several times before good tracking is finally obtained. With a perfectly aligned tuner, tracking error should never be more than 3 db.

Audio Amplifier

For full enjoyment of high quality reception possible, an amplifier having a flat response of 50-15,000 c.p.s. within 2 db. should be used with a correspondingly good speaker.

Power connection external or from the amplifier to the tuner must be made and a shielded lead from the tuner output must be used to the amplifier inout in order to avoid hum pickup.

Antenna

The input of the Approved Tuner has been designed to accommodate an FM antenna with a 300 ohm downlead impedance. It must be remembered that the higher the antenna above ground the greater its effectiveness. A simple folded di-pole antenna may be constructed from the new type 300 ohm line. For construction information see Fig. 5.

MODEL A-710

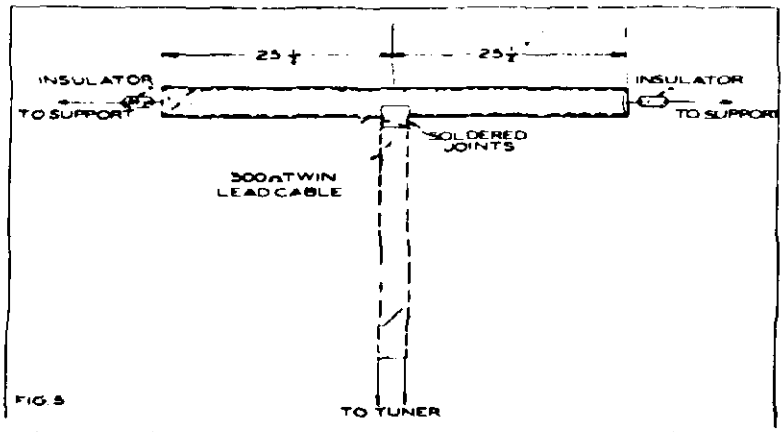

FIG 5

AM - I. F. Section

Following the converter are two IF transformers operating at 456 Kc. Special ironcore tuned IF transformers of high quality, high "Q" construction contribute to the excellent stability.

AM -I. F. Alignment

The following instruments are required for the complete alignment of the AM receiver section.

1. A signal generator with Audio Modulation covering the 456 Kc. and 540 -1800 Kc. band.
2. Voltmeter (AC) preferably vacuum tube (Voltmeter).

The alignment of the AM section should be as follows:

Connect the AC output meter to the audio terminal from the 6AT6 tube, set meter to a suitable scale, volume control half on, selector switch in AM position.

Connect the signal generator to the converter signal grid and ground and feed in a 456 Kc. signal. Align all IF transformers for maximum meter reading. Use as little generator input as possible. If an amplifier is connected to the tuner use the output meter across the voice coil, modulate signal generator and align for maximum sound output.

AM - R. F. Alignment

Connect the output meter as above and feed a 1450 Kc. signal into the antenna terminals. Check dial pointer to coincide with dial calibrations. Adjust all AM trimmer condensers for maximum output. Use as little generator input as possible.

Set dial pointer to 600 Kc. (generator likewise to 600 Kc.) and adjust ironcore slug of the AM oscillator coil for maximum output. Rock variable condenser slightly back and forth, note output and adjust tuning slug until maximum output is obtained near 600 Kc. Return dial setting to 1450 Kc., generator setting likewise and repeat trimmer adjustment. This procedure may be repeated until no further increase in output is obtained at 1450 Kc. and 600 Kc. Due to the great sensitivity of this tuner, only a small antenna is required for average reception.

To the left of the tuning capacitor is the FM section with the antenna coil located directly between the 6AG5 tube and variable capacitor. Directly behind the antenna coil follows the mixer coil and tube and this is followed by the oscillator tube and coil. All three coils are slug tuned and these slugs are used for inductance adjustment around 90 Mc. only. Temperature compensated silver ceramic trimmer condensers are shunted across the main tuning sections and are used for high frequency adjustment around 106 Mc. only. All FM alignments are critical and must be made with great care in order to obtain the maximum performance of which the tuner is capable. Model 710 has been aligned at the factory by the sweep generator and scope method for maximum efficiency and no adjustments should be disturbed unless the service man has the necessary tools to perform alignment service. Approved Electronic Instrument Corp. sweep generator Model A-400 is a Sweep generator ideally suited for FM and television alignments.

Page 7 shows a tube layout. The top view of the tuner shows clearly all important parts and are identified as to their function. To the right of the tuning condenser and located near the dial scale is the AM antenna coil. Directly in line, but under the chassis is the AM-RF coil. These coils are fixed and have *no other adjustment but the trimmers on* the variable capacitor. Again in line and under chassis is the AM oscillator coil. This coil has an ironcore slug and its adjustment is rather critical and should only be used and adjusted around 600 Kc. To the right of the chassis are located the IF tubes and 456 Kc. IF transformers.

In good signal areas where fairly strong FM signals are available, an indoor antenna as described on page 5 will work satisfactorily; however, for maximum per*formance an outdoor dipole with 300 ohm* line is strongly recommended. For those who intend to use the tuner in conjunction with a television receiver, we recommend a simple 2 pole knife switch arrangement to transfer the television antenna to the tuner, using the same antenna for either television or FM reception.

© John F. Rider

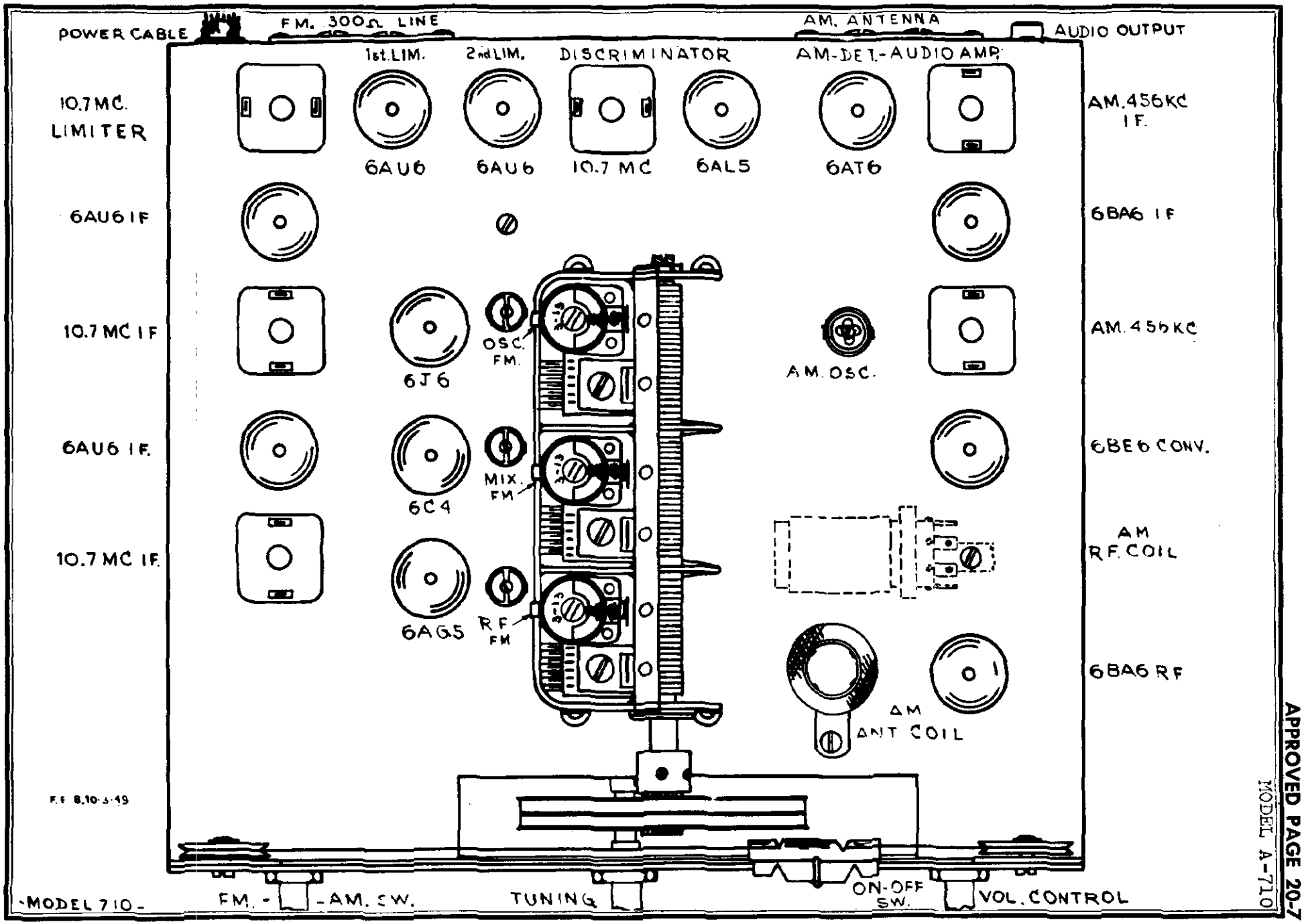
POWER CABLE
FM. 300Ω LINE
AM. ANTENNA
AUDIO OUTPUT
1st. LIM.
2nd LIM.
DISCRIMINATOR
AM-DET.-AUDIO AMP.
10.7 MC. LIMITER
6AU6
6AU6
10.7 MC
6AL5
6AT6
AM. 456 KC I.F.
6AU6 I.F.
6BA6 I.F.
10.7 MC I.F.
OSC. FM.
6J6
AM. OSC.
AM. 456 KC
6AU6 I.F.
MIX. FM
6C4
6BE6 CONV.
10.7 MC I.F.
AM R.F. COIL
6AG5
RF FM
6BA6 R.F.
AM ANT COIL
F.E. 8-10-5-49
-MODEL 710-
FM. - -AM. SW.
TUNING
ON-OFF SW.
VOL. CONTROL

MODEL A-710

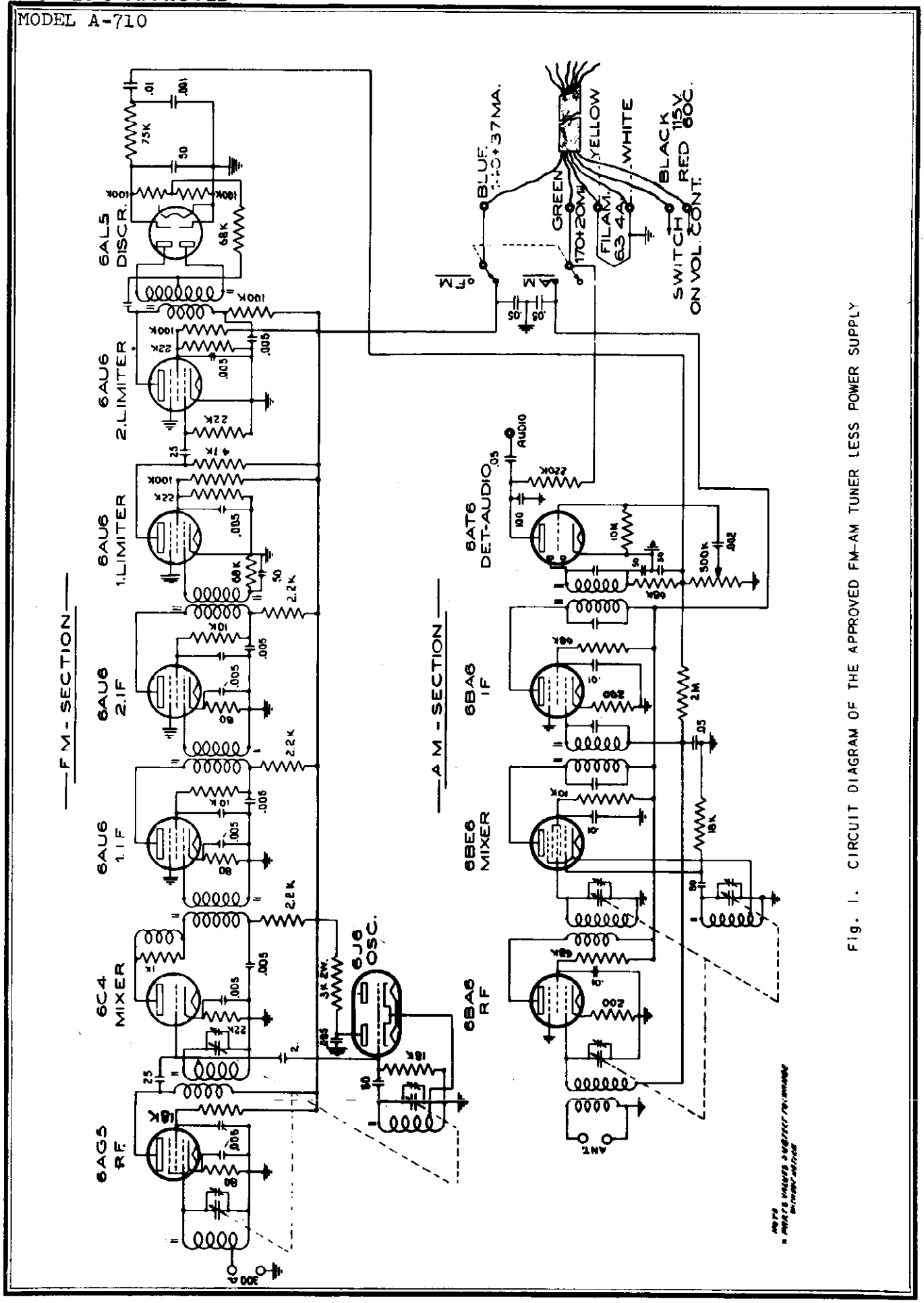

Fig. 1. CIRCUIT DIAGRAM OF THE APPROVED FM-AM TUNER LESS POWER SUPPLY

TECHNICAL AND ALIGNMENT DATA FOR FMF-3 TUNER

The tuning slugs used in our tuners have a nominal operating range from 87.5 to 108.5 megacycles. They are held within 1% tolerance in permeability. The oscillator operates 10.7 megacycles higher in frequency than the signal. This means that the effective permeability of the tuning slug is greater in the oscillator coil than in the signal coils. Some method, therefore, is required to reduce the actual frequency coverage of the oscillator. This is done by means of a coil in shunt with the oscillator coil which reduces the latters frequency coverage to agree with the signal coils. The inductance of this coil is made adjustable by meansof an iron core. Frequency stability of the oscillator through careful design and the use of capacitors of the proper temperature co-efficient is equalled only by the use of crystal controlled circuits.

The mixer circuit is of purely conventional design. Oscillator voltage is injected directly into the grid of the mixer by a .68 mmf. capacitor from the oscillator plate.

The RF stage consists of a cathode follower-grounded grid amplifier. At VHF this type of circuit offers a considerable advantage over the more conventional pentode stage. The loading effect of the tube on the coil is many times less than a pentode at these high frequencies. Consequently the "Q" of the circuit is improved which increases both the sensitivity and the image ratio.

ALIGNMENT INSTRUCTIONS

It is necessary that an accurately calibrated signal generator be employed that covers the range of 86 to 109 mc. It should be frequency modulated but not necessarily so. It will be assumed that the alignment work is being done in a completed FM radio with some kind of tuning indicator on it. The following table lists the operations to be performed:

1. Set oscillator tuning slug to 1/32" from end of winding with tuning slugs all the way out .
2. Connect the signal generator through a .1mfd. condenser to the grid of the mixer tube. Remove RF tube.
3. Set the signal generator to 87.5 mc. and run the tuning slugs all the way in the coils.
4. With an insulated screwdriver adjust the oscillator trimmer until a signal is heard. Make sure that the oscillator is on the high side of the signal by swinging thesignal generator to 108.9 mc. T he image should be heard practically as loud as the signal was. If the image is not heard the oscillator trimmer should be re-adjusted by reducing the capacity ofthe trimmer until another signal isheard. The proper setting will be with the screwdriver slot at approximate right angles with the front of the tuner.
5. Run the tuning slugs all of the way out of the coils and check the frequency. If the coverage is too great unscrew the shunt coil core two or three turns and repeat steps three and four. If too narrow screw the shunt core in two or three turns and repeat steps three and four. This may have to be repeated several times until proper coverage is obtained. The oscillator trimmer will have to be adjusted each time this is done. The tuning range now should be 88.5 to 108.5 megacycles.
6. Remove signal generator lead from mixer grid and connect it to the antenna. Insert RF tube.
7. Set mixer tuning core to 1/32" from end of winding with the tuning slugs all the way out. Adjust mixer trimmer for maximum output.
8. Set RF tuning core flush with end of winding with slugs all the way out. Adjust RF trimmer for maximum output.
9. Set signal generator to 106 megacycles, tune in the signal, and re-adjust the RF and mixer trimmers for maximum output.
10. Set signal generator to 90 megacycles, tune in the signal, and check alignment by adjusting the RF and mixer trimmers to see if they are at optimum alignment. If circuits do not track do the following:

a. If the RF trimmer has to be screwed in at 90 megacycles to obtain tracking, screw the RF tuning slug in about 1 turn, and repeat steps 9 & 10 until tracking is obtained.

b. If the RF trimmer has to be screwed out at 90 megacycles to obtain tracking, screw the RF tuning slug out about 1 turn & repeat steps 9 & 10 until tracking is obtained.

©John F. Rider

MODEL FMF-3 Tuner

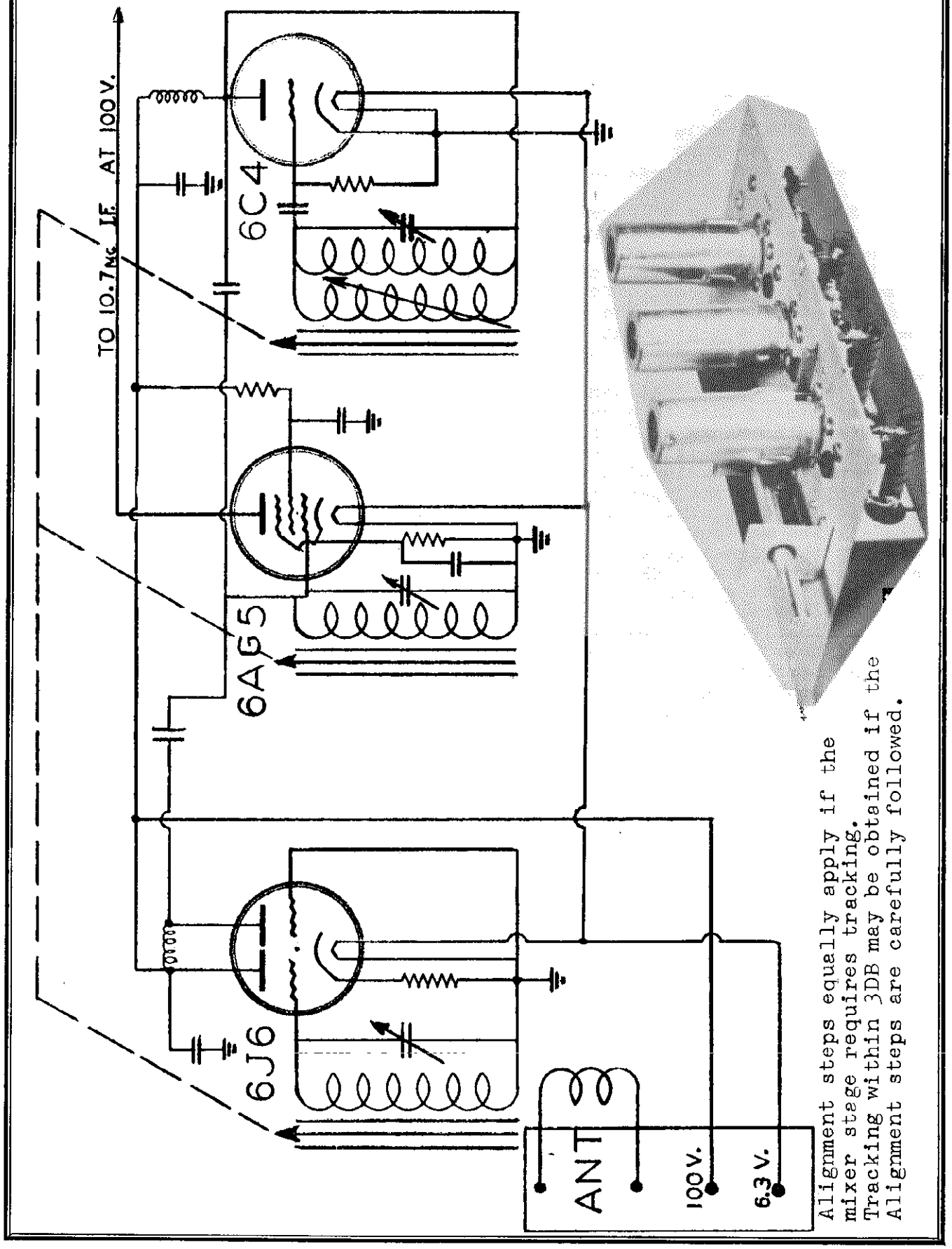

Alignment steps equally apply if the mixer stage requires tracking. Tracking within 3DB may be obtained if the Alignment steps are carefully followed.

©John F. Rider

MODEL M-90 AUTO RADIO INSTALLATION

Due to the compact size of this receiver, many mounting positions are possible. However, the most convenient is directly below the instrument panel as illustrated in figure 1. The following step by step procedure will facilitate the installation of the receiver.

1. With the receiver itself as a model, select the desired position.

2. Using the front mounting bracket as a template, locate the two front mounting holes and drill a ¼" hole at each point.

3. Attach front mounting bracket to the receiver by two No. 6 self-tapping screws.

4. Locate the position for the rear mounting stud in the bulkhead and drill a ½" hole.

5. With the stud mounted on the receiver and the inside nut and washer in place, insert the stud through the bulkhead hole and attach the front end of the receiver to the instrument panel with the small screws provided for that purpose.

6. Open the engine compartment and remove the paint on the bulkhead around the stud. Assemble the washer and nut on this side and adjust both this nut and the inside nut for perfect alignment of the receiver and for good contact with the brightened surface of the bulkhead.

Caution: Do not screw stud in case beyond point necessary to insure support, otherwise, it may penetrate rear wall of case and cause damage to the instrument.

7. Attach the terminal of the "A" battery cable to one of the posts on the ammeter, preferably on the battery side. This may be ascertained by switching the receiver on. If no deflection of the ammeter occurs, the receiver is properly connected.

8. Insert plug on the end of the antenna lead into socket connector located on the left side of the radio.

Motor Noise Elimination

1. Disconnect the center lead in the distributor head of the motor and insert a "distributor suppressor" in the cavity and then place the lead in the top receptacle of the suppressor.

2. Clamp a "generator condenser" under the screw which mounts the cut-out on the generator. Connect the flexible terminal of the condenser to the lead on the cut-out.

Operation

Volume Control Knob — This knob is located on the right side of the radio. Turning this knob slightly to the right until a slight click is heard will put the radio into operation. Turning this knob further to the right will increase the volume and turning it to the left will decrease the volume. After a station has been selected, the volume control should be adjusted to the required loudness. The volume should never be reduced by detuning the station selector knob.

Station Selector Knob — This knob is located on the left side of the radio. This knob should be turned until a desired station has been selected. Adjust this knob very carefully until the station comes in with the most natural tone.

©John F. Rider

MODEL M-90

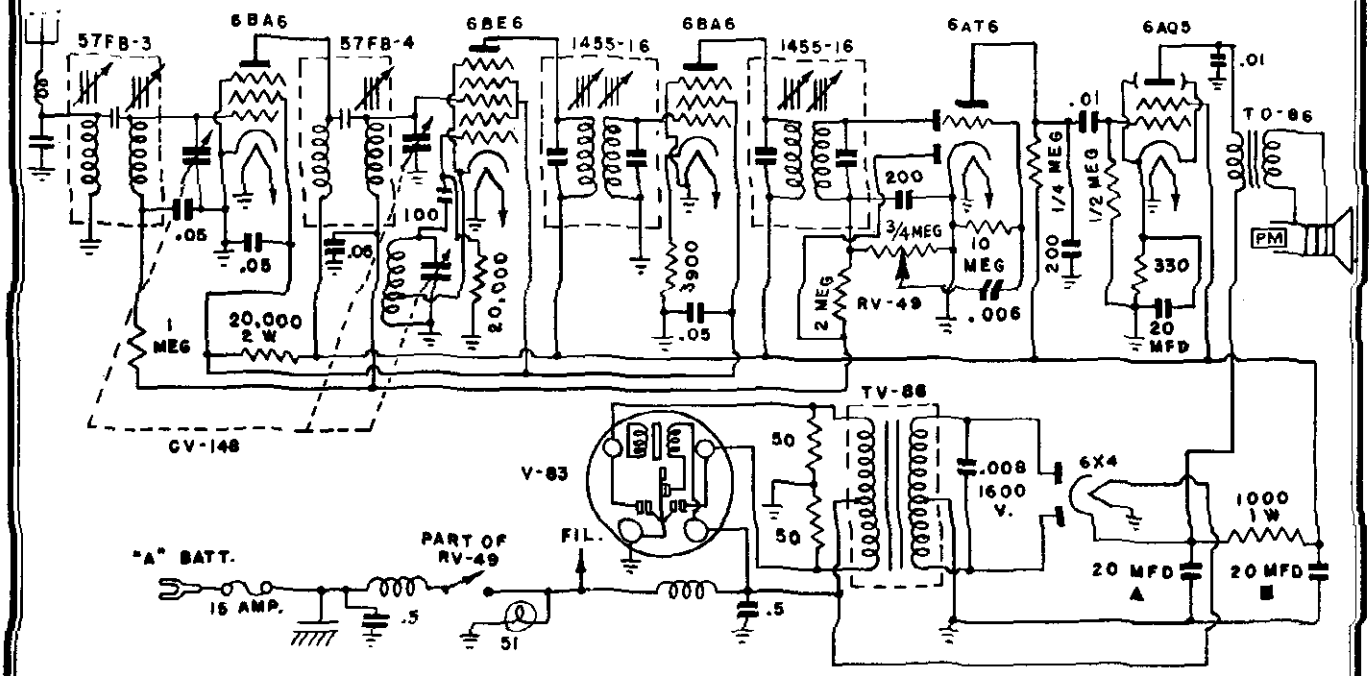

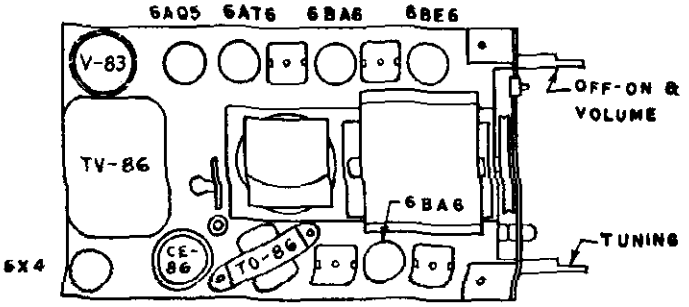

ELECTROLYTIC CONDENSER CE-86	ISSUE 1247
■ 20 MFD 350 VDC	
▲ 20 MFD 350 VDC	
20 MFD 25 VDC	
I.F. 455 KC	
RANGE 540 TO 1560 KC	

FIGURE 1

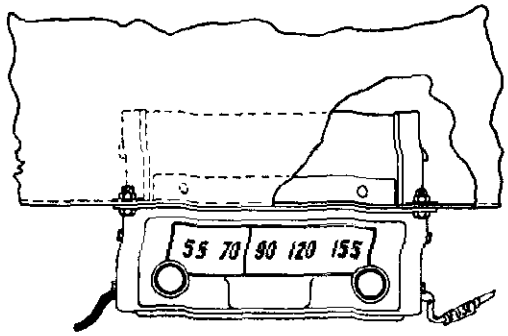

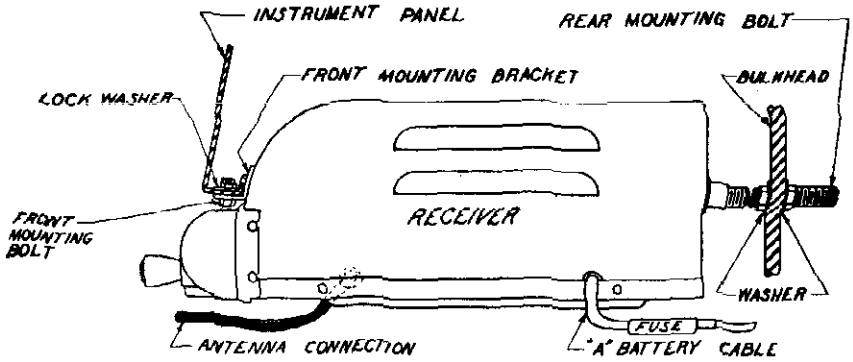

MODEL M-92C AUTO RADIO
with built-in
BATTERY CHARGER
and
ELECTRIC SHAVER POWERIZER

INSTALLATION AND OPERATING INSTRUCTIONS

This radio is equipped with a patented built-in storage battery charger. A "run-down" storage battery can be recharged **without removing the battery from the car** or making any direct connection to the battery. One end of a power line cord is plugged into a connector on the radio and the other end is inserted into any convenient 117 Volt AC receptacle.

A "Powerizer" has been built into this radio as an extra added feature for the vacationist or traveler. It is possible to operate a standard 117 volt electric razor from this "Powerizer" with the automobile storage battery as the original source of power.

IMPORTANT

READ CAREFULLY BEFORE INSTALLING RADIO IN ANY CAR

Polarity Reversing Switch

Since the polarity of the grounded battery terminal is not the same in all types of cars, this instrument is equipped with a Polarity Reversing Switch.

The position of this switch has no effect on the normal operation of the radio but it must be in the correct position for battery charging.

The switch is located on top of the radio. It should be adjusted to the correct position before installation.

Slide switch to "—GND" position for cars with the negative battery terminal grounded.

Slide switch to "+GND" position for cars with the positive battery terminal grounded.

Refer to the chart below to determine the polarity of the grounded battery terminal in the car in which the radio is to be installed.

Automobile Battery Ground Chart

YEAR	1936	1937	1938	1939	1940	1941	1942	1946	1947	1948	1949
Auburn	Pos.	Pos.									
Buick	Neg.	Neg.	Neg.	Neg.	Neg.	Neg.	Neg.	Neg.	Neg.	Neg.	
Cadillac	Pos.	Neg.	Pos.	Pos.	Pos.	Pos.	Pos.	Neg.	Neg.	Neg.	Neg.
Chevrolet	Neg.	Neg.	Neg.	Neg.	Neg.	Neg.	Neg.	Neg.	Neg.	Neg.	
Chrysler	Pos.	Pos.	Pos.	Pos.	Pos.	Pos.	Pos.	Pos.	Pos.	Pos.	
Crosley									Pos.	Pos.	
DeSoto	Pos.	Pos.	Pos.	Pos.	Pos.	Pos.	Pos.	Pos.	Pos.	Pos.	
Dodge	Pos.	Pos.	Pos.	Pos.	Pos.	Pos.	Pos.	Pos.	Pos.	Pos.	
Duesenberg	Neg.										
Ford	Pos.	Pos.	Pos.	Pos.	Pos.	Pos.	Pos.	Pos.	Pos.	Pos.	Pos.
Frazer								Pos.	Pos.	Pos.	
Graham	Pos.	Pos.	Pos.	Pos.							
Hudson	Pos.	Pos.	Pos.	Pos.	Pos.	Pos.	Pos.	Pos.	Pos.	Pos.	
Hupmobile	Pos.		Pos.	Pos.							
Kaiser								Pos.	Pos.	Pos.	
Lafayette	Pos.	Pos.	Pos.	Pos.	Pos.	Pos.					
LaSalle	Pos.	Neg.	Pos.	Pos.	Pos.						
Lincoln	Neg.	Neg.	Neg.	Neg.	Neg.						
Lincoln Continental						Pos.	Pos.	Pos.	Pos.	Pos.	
Lincoln Zephyr		Pos.	Pos.	Pos.	Pos.	Pos.	Pos.	Pos.	Pos.	Pos.	
Mercury				Pos.	Pos.	Pos.	Pos.	Pos.	Pos.	Pos.	Pos.
Nash*	Pos.	Pos.	Pos.	Pos.	Pos.	Pos.	Pos.	Pos.	Pos.	Pos.	
Oldsmobile	Neg.	Neg.	Neg.	Neg.	Neg.	Neg.	Neg.	Neg.	Neg.	Neg.	
Packard	Pos.	Pos.	Pos.	Pos.	Pos.	Pos.	Pos.	Pos.	Pos.	Pos.	
Pierce-Arrow	Pos.	Pos.	Pos.	Pos.							
Plymouth	Pos.	Pos.	Pos.	Pos.	Pos.	Pos.	Pos.	Pos.	Pos.	Pos.	
Pontiac	Neg.	Neg.	Neg.	Neg.	Neg.	Neg.	Neg.	Neg.	Neg.	Neg.	
Studebaker	Pos.	Pos.	Pos.	Pos.	Pos.	Pos.	Pos.	Pos.	Pos.	Pos.	
Terraplane	Pos.	Pos.	Pos.	Pos.	Pos.	Pos.					
Willys	Neg.	Neg.	Neg.	Neg.	Neg.	Neg.	Neg.	Neg.	Neg.	Neg.	

*Some special custom-built models have negative grounded.

© John F. Rider

MODEL M-92C

INSTALLATION

Due to the compact size of this receiver, many mounting positions are possible. However, the most convenient is directly below the instrument panel as illustrated in figure 1. The following step by step procedure will facilitate the installation of the receiver.

1. With the receiver itself as a model, select the desired position.

2. Using the front mounting bracket as a template, locate the two front mounting holes and drill a ¼" hole at each point.

3. Attach front mounting bracket to the receiver by two No. 6 self-tapping screws.

4. Locate the position for the rear mounting stud in the bulk head and drill a ½" hole.

5. With the stud mounted on the receiver and the inside nut and washer in place, insert the stud through the bulkhead hole and attach the front end of the receiver to the instrument panel with the small screws provided for that purpose.

6. Open the engine compartment and remove the paint on the bulkhead around the stud. Assemble the washer and nut on this side and adjust both this nut and the inside nut for perfect alignment of the receiver and for good contact with the brightened surface of the bulkhead.

Caution: Do not screw stud in case beyond point necessary to insure support, otherwise, it may penetrate rear wall of case and cause damage to the instrument.

7. Attach the terminal of the "A" battery cable to one of the posts on the ammeter, preferably on the battery side. This may be ascertained by switching the receiver on. If no deflection of the ammeter occurs, the receiver is properly connected.

8. Insert plug on the end of the antenna lead into socket connector located on the left side of the radio.

Motor Noise Elimination

1. Disconnect the center lead in the distributor head of the motor and insert a "distributor suppressor" in the cavity and then place the lead in the top receptacle of the suppressor.

2. Clamp a "generator condenser" under the screw which mounts the cut-out on the generator. Connect the flexible terminal of the condenser to the lead on the cut-out.

OPERATION

"Charge-Radio" Switch

This switch is centrally located just below the tuning dial. Slide this switch to the right for normal radio operation and to the left for battery charging.

Volume Control Knob — This knob is located on the right side of the radio. Turning this knob slightly to the right until a slight click is heard will put the radio into operation. Turning this knob further to the right will increase the volume and turning it to the left will decrease the volume. After a station has been selected, the volume control should be adjusted to the required loudness. The volume should never be reduced by detuning the station selector knob.

Station Selector Knob — This knob is located on the left side of the radio. This knob should be turned until a desired station has been selected. Adjust this knob very carefully until the station comes in with the most natural tone.

©John F. Rider

Battery Charging

A "run-down" storage battery can be charged in the following manner:

1. Slide switch, located on the front of the radio, to the "CHARGE" position.
2. Insert female connector of "Radio Cord" into socket located below speaker grill.
3. Insert other end of cord into any convenient 117 Volt AC power receptacle.

The length of time required for a charge is dependent entirely on the condition of the battery being charged. An overnight charge will usually be sufficient if the battery is only slightly run down.

ELECTRIC SHAVER POWERIZER

The "Electric Shaver Powerizer" can be operated by connecting an adaptor to the same cord as used for battery charging.

Electric Shaver Operation

1. Insert one end of "Radio Cord" into socket under speaker grill. (Same socket as used in battery charging.)
2. Plug other end of "Radio Cord" and Electric Shaver into "Powerizer Adaptor."
3. Keep front switch in "Radio" position.
4. Turn set on.
5. Start shaver immediately.

A disturbance similar to static will normally be heard through the loud speaker while the razor is being used. The volume control should be turned back until the disturbance is no longer heard.

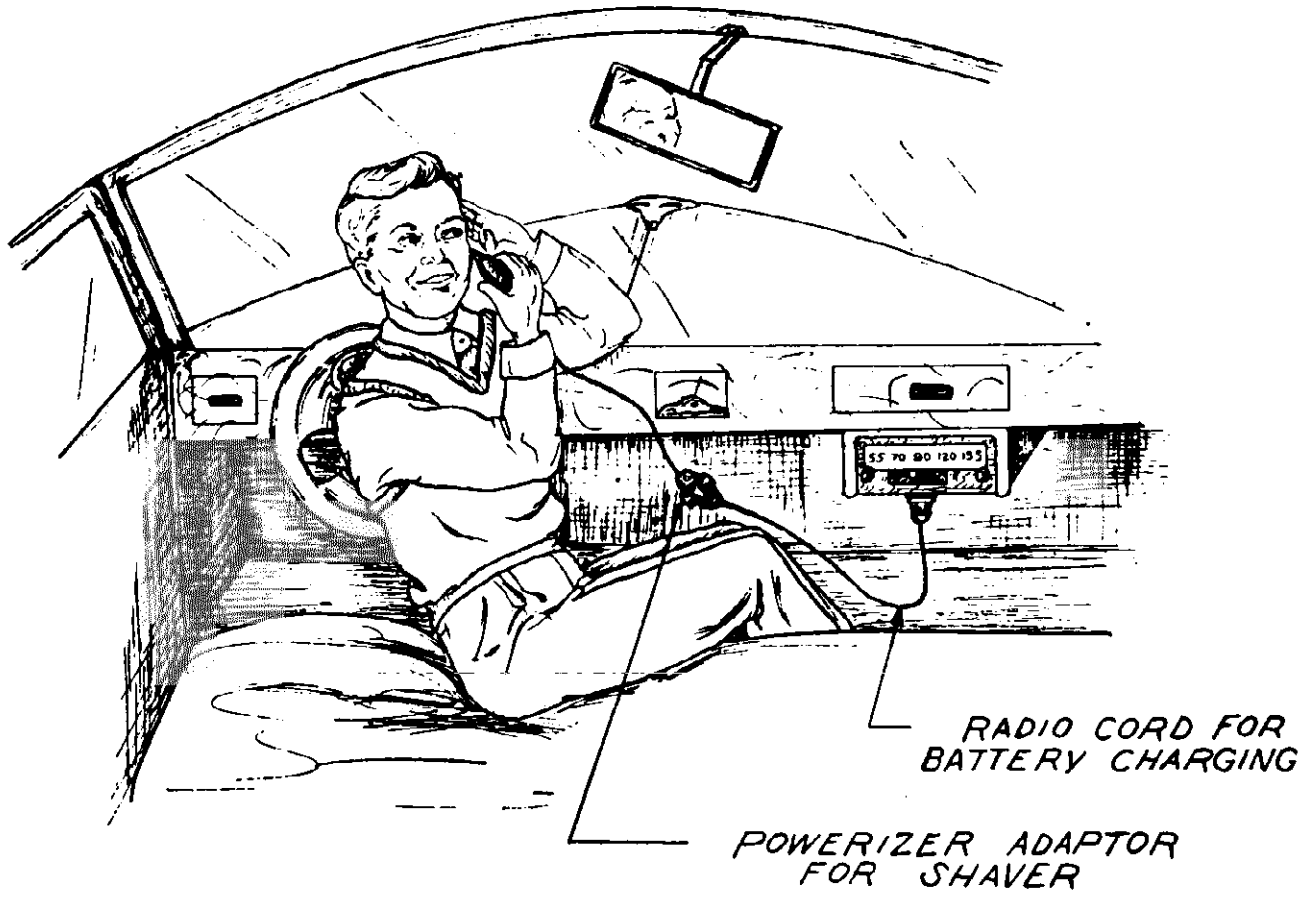

©John F. Rider

MODEL M-92C

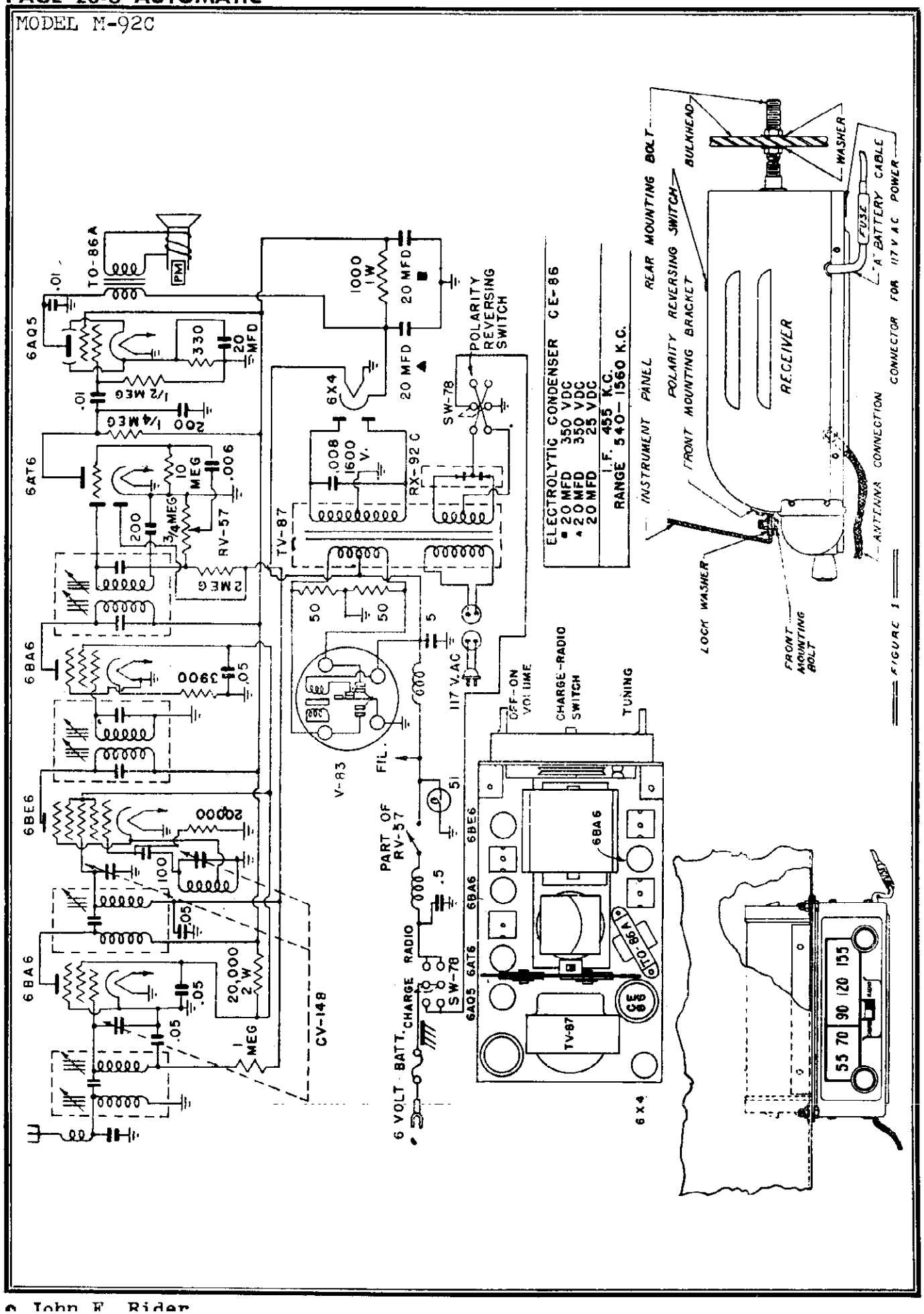

FIGURE 1

MODEL X-50 AUTO RADIO

Due to the compact size of this receiver, many mounting positions are possible. However, the most convenient is directly below the instrument panel as illustrated in figure 1. The following step by step procedure will facilitate the installation of the receiver.

1. With the receiver itself as a model, select the desired position.

2. Using the template on the bottom of this page, locate the two front mounting holes and drill a ¼" hole at each point.

3. Locate the position for the rear mounting stud in the bulkhead and drill a ½" hole.

4. With the stud mounted on the receiver and the inside nut and washer in place, insert the stud through the bulkhead hole and attach the front end of the receiver to the instrument panel with the small screws provided for that purpose.

5. Open the engine compartment and remove the paint on the bulkhead around the stud. Assemble the washer and nut on this side and adjust both this nut and the inside nut for perfect alignment of the receiver and for good contact with the brightened surface of the bulkhead.

Caution: Do not screw stud in case beyond point necessary to insure support, otherwise, it may penetrate rear wall of case and cause damage to the instrument.

6. Attach the terminal of the "A" battery cable to one of the posts on the ammeter, preferably on the battery side. This may be ascertained by switching the receiver on. If no deflection of the ammeter occurs, the receiver is properly connected.

7. Insert plug on the end of the antenna lead into socket connector located on the left side of the radio.

Motor Noise Elimination

1. Disconnect the center lead in the distributor head of the motor and insert a "distributor suppressor" in the cavity and then place the lead in the top receptacle of the suppressor.

2. Clamp a "generator condenser" under the screw which mounts the cut-out on the generator. Connect the flexible terminal of the condenser to the lead on the cut-out.

Operation

Volume Control Knob — This knob is located on the right side of the radio. Turning this knob slightly to the right until a slight click is heard will put the radio into operation. Turning this knob further to the right will increase the volume and turning it to the left will decrease the volume. After a station has been selected, the volume control should be adjusted to the required loudness. The volume should never be reduced by detuning the station selector knob.

Station Selector Knob — This knob is located on the left side of the radio. This knob should be turned until a desired station has been selected. Adjust this knob very carefully until the station comes in with the most natural tone.

MODEL X-50

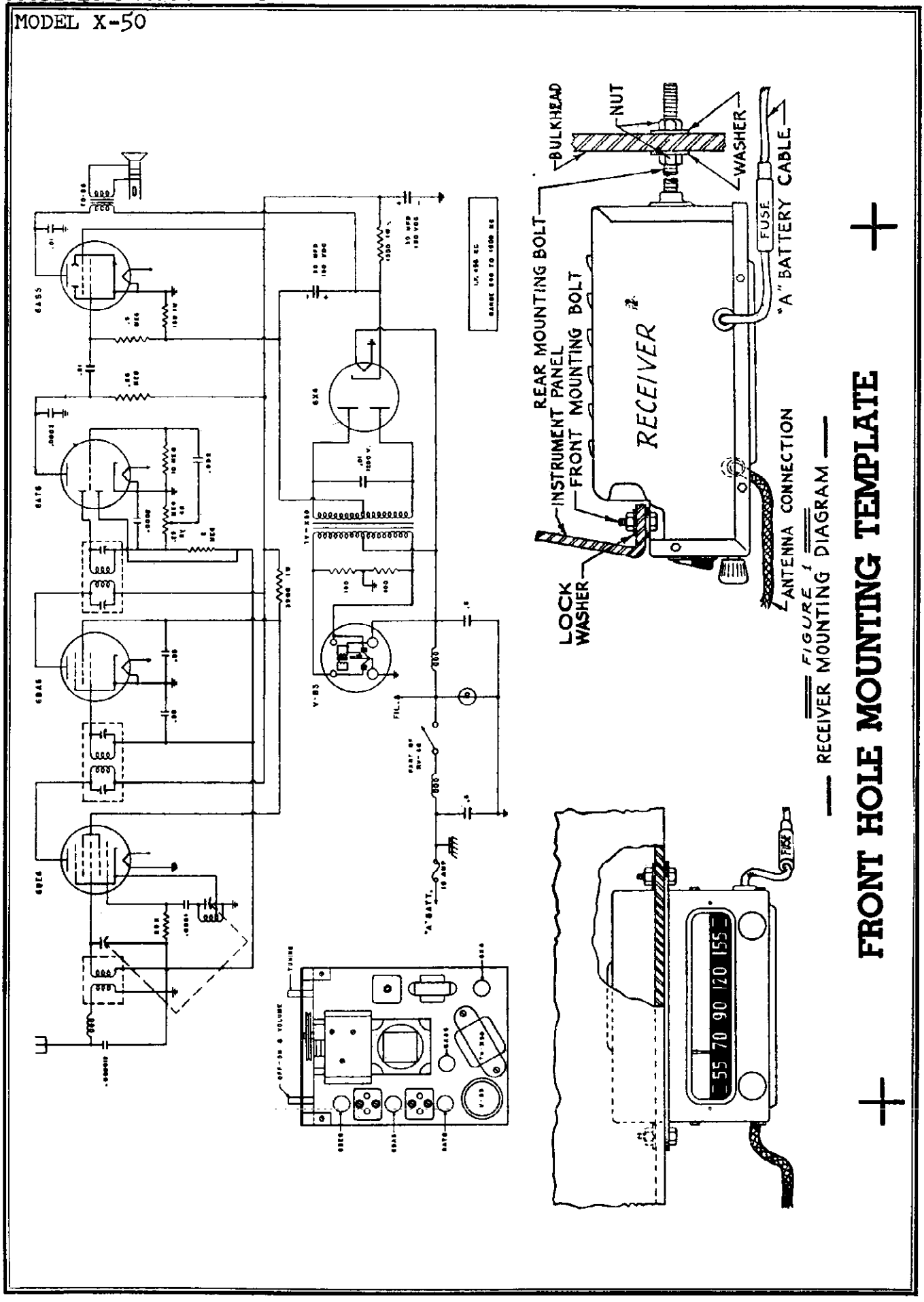

©John F. Rider

© John F. Rider

ALIGNMENT PROCEDURE

Broadcast Band Section I. F. and R. F.

The alignment procedure below includes the sensitivities at the inputs of various stages. All signal input values are based on an output of .50 watts. This may be measured by disconnecting the speaker voice coil and substituting a 3.2-ohm resistor across the secondary winding of the output transformer. A reading of 1.25 volts AC across this resistor will be approximately equivalent to .50 watt output with the speaker connected. The volume control must be set at maximum. The tone control must be set for maximum treble.

The signal source must be an accurately calibrated signal generator capable of supplying the frequencies designated, modulated 30% with a 400-cycle audio signal. A 400 cycle audio signal is required for the audio measurement. Variations in sensitivities of plus or minus 25% are usually permissable.

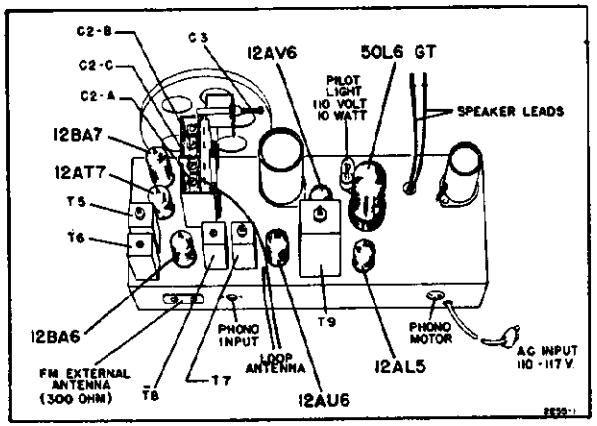

Chassis View

AM—I. F. ALIGNMENT

Band Switch in AM Position, Gang Open, Dummy Antenna .1 Mfd.

SIGNAL GENERATOR FREQUENCY	CONNECTION TO RADIO	ADJUSTMENTS TO BE MADE	ADJUST FOR
455 Kc. Use 2500 microvolts	Pin 1 of 12BA6 I.F. Amp. and B minus	Primary and Secondary of T8. See chassis view.	Maximum output should be .5 watts
455 Kc. Use 75 microvolts	Pin 7 of 12BA7 Converter and B minus	Primary and Secondary of T6. See chassis view.	Maximum output should be .5 watts
400 cycles. Use 45 millivolts	High side of Volume Control and B minus	None	Maximum output should be .5 watts

BROADCAST BAND—R. F. ALIGNMENT

Check pointer so that the right hand edge of the pointer skirt coincides with the right hand edge of dial marker at the extreme right when gang is closed.

For Adjustment, see dial mechanism illustration.

SIGNAL GENERATOR FREQUENCY	SET POINTER AT	CONNECT TO RADIO	ADJUST
1620 Kc.	Extreme Right Calibration Marker	AM Antenna Clip and B minus	Oscillator trimmer C2-B for maximum
1400 Kc.	Second Calibration from Left	AM Antenna Clip and B minus	Antenna trimmer C2-A for maximum

Check tracking at 1000 Kc, 600 Kc, and 535 Kc to be sure oscillator is set correctly.

ELECTRICAL SPECIFICATIONS

Power Supply.....105 to 125 volts, AC, 60-cycles; Chassis only 75 watts. With phono operation 100 watts.

Frequency Ranges....Broadcast Band—535 to 1620 kc. FM Band—88 to 108 mc.

Intermediate Freq....AM-455 kc.; FM-10.7 mc.

Selectivity.....AM-43 kc. broad at 1000 times signal, measured at 1000 kc. I.F. FM-250 kc. broad at 2 times down. I.F. FM-650 kc. broad at 10 times down.

AM Sensitivity.....(For .5 watt output with external antenna)—18 microvolts average.

FM Sensitivity.....(For .5 watt output)—16 microvolts average.

Power Output.....2 watts, 10% distortion. 4 watts maximum.

Loud Speaker.....10" PM. Voice coil impedance 3.2 ohms, 400 cycles.

Tube Complement.....
12AT7, FM-RF amp. mixer; 12BA7, AM converter, FM oscillator; 12BA6, IF amplifier; 12AU6, FM driver; 12AL5, FM detector; 12AV6, AM detector, AVC, 1st audio; 50L6GT, output.

Automatic Changer See Manual 5078A.

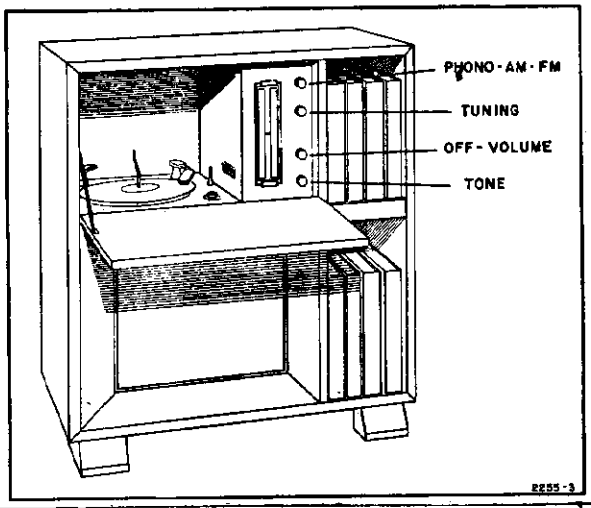

MODEL A-7AF21,
Series A

ALIGNMENT PROCEDURE

FM Band Section I. F. and R. F.

A non-metallic alignment tool must be used.

IMPORTANT

No alignment of the FM section of this radio should be attempted unless you are positive that the circuits are in need of adjustment and you have the necessary equipment.

All components used in this radio are extremely stable and the tuned circuits should require no adjustment over a long period of time.

NOTE

The following alignment is based on the use of the new Simpson vacuum tube voltmeter which has a "floating ground". In other words, the meter, when used as a vacuum tube voltmeter, can have both the positive and negative sides connected to points above ground and still give true readings.

A standard AM signal generator is required.

FM — I. F. ALIGNMENT

Band Switch in FM Position. Dummy Antenna .1 Mfd.

SIGNAL GENERATOR FREQUENCY	CONNECTION TO RADIO	VACUUM TUBE VOLT METER CONNECTION TO RADIO	ADJUSTMENTS TO BE MADE	ADJUST FOR
10.7 Mc. Use about .1 volt	Pin No. 1 of 12AU6	Pin No. 7 of 12AL5 and B minus	Bottom Core Primary of T9 Ratio Detector	Resonance should be about 3 volts
10.7 Mc. Use about .1 volt	Pin No. 1 of 12AU6	See nofe "A"	Top Core Secondary of T9 Ratio Detector	Zero. Use zero center scale See note "B"
10.7 Mc. Use about 330 microvolts	Pin No. 1 of 12BA6	Pin No. 7 of 12AL5 and B minus	Primary and Secondary of T7. FM Driver IF See chassis view.	Resonance should be about 3 volts
10.7 Mc. Use about 600 microvolts	Top end of C2-C	Pin No. 7 of 12AL5 and B minus	Primary and Secondary of T5. Input IF See chassis view.	Resonance should be about 3 volts

NOTES ON FM — I. F. ALIGNMENT

NOTE "A"—Connect two resistors in series, 100K OHMS each, from Pin No. 7 of 12AL5 to B minus (pin no. 5). These resistors must be matched within 5%. Connect vacuum tube voltmeter between the midpoint of the resistors and point zz.

NOTE "B"—If T9 has been tampered with, it is possible that no crossover point will be found at first. Careful adjustment of both primary and secondary is necessary.

NOTE "C"—To use a VTVM which does not have the "floating ground" feature, in step 2 above, connect "ground" side of VTVM to midpoint of resistors (Note "A") and "high" side to point zz.

GENERAL—Input signals should be adjusted to give approximately 3 volts. The ratio detector is operating at a reasonable level at this point and will give the truest indication of correct alignment with the procedure specified.

FM — R. F. ALIGNMENT

Check pointer so that the right hand edge of the pointer skirt coincides with the right hand edge of dial marker at the extreme right when gang is closed.

For Adjustment, see dial mechanism illustration.

SIGNAL GENERATOR FREQUENCY	POINTER	CONNECTION TO RADIO	ADJUST	V T V M CONNECTIONS
108 MC.	108 MC. Marker	FM antenna terminals	FM Osc C3 for maximum	Pin No. 7 of 12AL5 to B minus
98 MC.	Tune in Gen. Signal	See Note "B" below	FM Mixer C2-C for maximum	

NOTE "A"—If a signal generator with the above fundamental frequency is not available, it is sometimes possible to use harmonics. Use extreme care in picking harmonics. An alternate procedure is to use a local station carrier of known frequency to align the FM Band and to use the vacuum tube volt-meter as above for resonance indication. A weak carrier, however, will not produce 3 volts.

NOTE "B"—Connect 300 ohms in series with "hot" side of generator and connect to left hand screw of external FM Antenna Terminals. Connect cold side of generator to right hand screw.

© John F. Rider

MODEL A-7AF21,
Series A

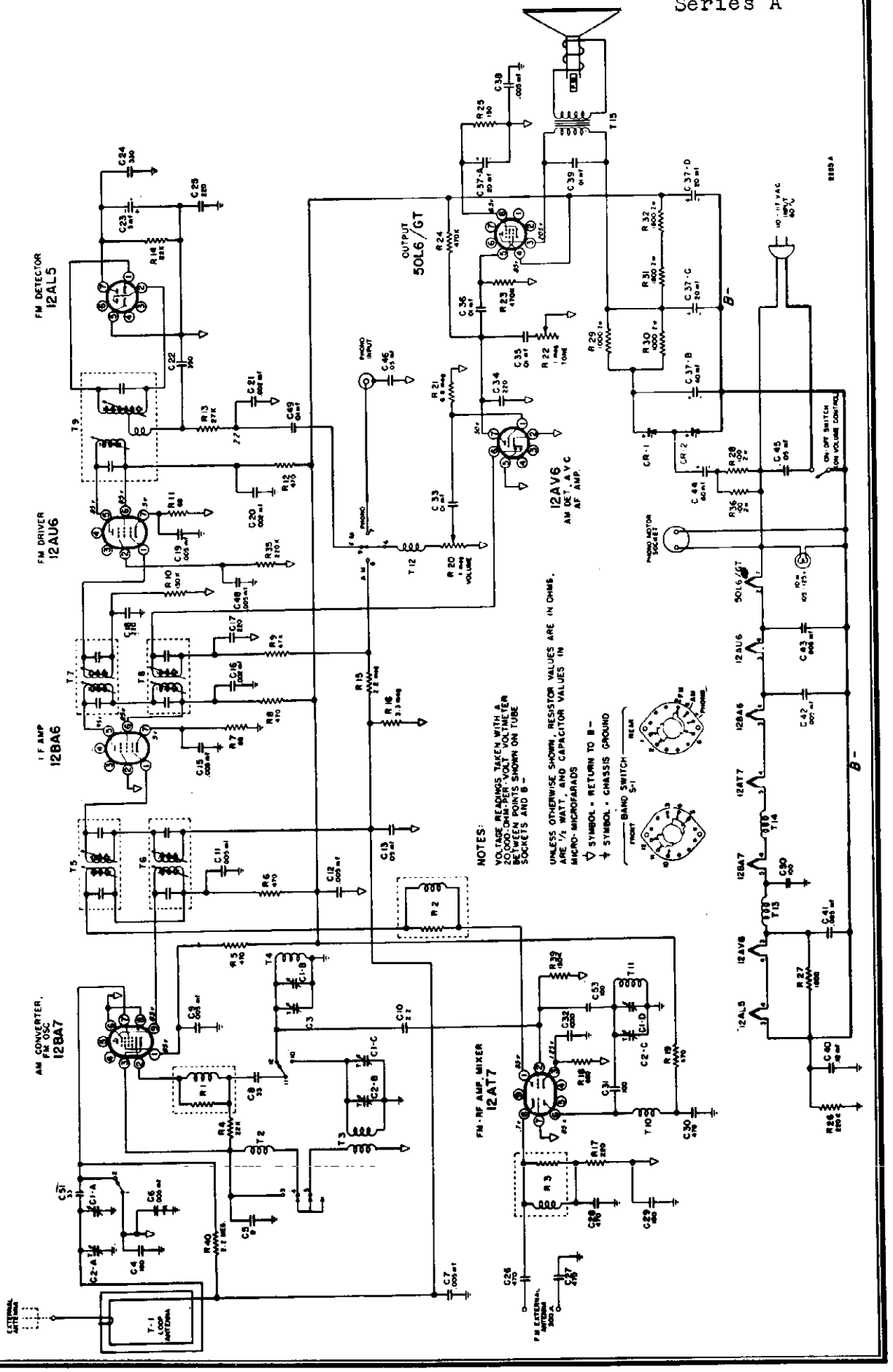

© John F. Rider

MODEL A-7AF21, Series A

REPLACEMENT OF DIAL CORDS

GENERAL—A dual track drum pulley and two individual cords are used on this model.

The rear track carries the Drive String (see Fig. 1 and 2) while the front track carries the Pointer String (see Fig. 3 and 4).

DRIVE STRING: Using approximately 20 inches of dial cord, fasten one end to the tension spring and pass around drum and drive shaft (Fig. 1). Continue cord around drum and pass through hole in rear track (see Fig. 2). Tie end of cord to spring so that spring is extended ¼ inch.

POINTER STRING: Use approximately 40 inches of dial cord, fasten one end to tension spring and pass around drum pulley (see Fig. 3). Continue cord (Fig. 4) from point B around idler pulleys, around drum, then pass through hole in front track, and tie cord to tension spring so that the spring is extended ¼ inch.

POINTER CALIBRATION: Adjust pointer as shown in Fig. 4, then loop Pointer string once around upright ear on Pointer carriage.

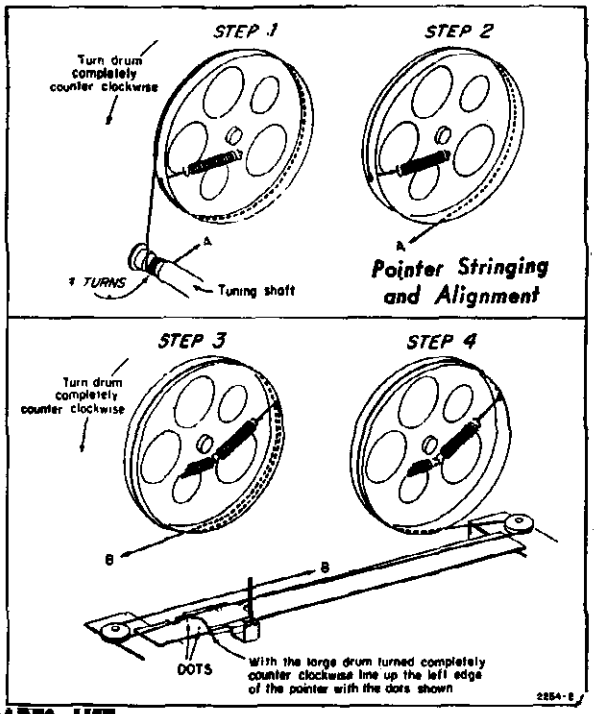

Pointer Stringing and Alignment

REPLACEMENT PARTS LIST

Ref. No.	Part No.	Description	Qty. Used In set
		CONDENSERS	
C1, ABCD	B-8A-16592	4 section gang condenser	1
C2, ABC		Trimmer on gang	
C3	A-201-15142	FM Osc. trimmer	1
C4,29,31,50,53,	C-8G-11734	100 mmf, ceramic	5
C5	C-8G-12166	5 mmf, ceramic	1
C6,7,9,11,12, 15,19,38,41,42, 43,48	A-8G-13962	.005 mf, disk ceramic	12
C8,51	C-8G-14172	33 mmf, ceramic	2
C10	A-8G-12495-4	2.2 mmf, ceramic	1
C14,46	C-8D-10770	.05 mf, 200 volts, paper	2
C16,20,21	C-8G-16049	.002 mmf, ceramic	3
C17,18,25,34	C-8G-11733	220 mmf, ceramic	4
C22	C-8F3-120	390 mmf, mica	1
C23	C-8C-16013	5 mf x 100 volts, electrolytic	1
C24	C-8F3-11	330 mmf, mica	1
C26,27,28,30	C-8G-11732	470 mmf, ceramic	1
C32	C-8G-13201	1000 mmf, ceramic	1
C33,35,36,39, 49	C-8D-10761	.01 mf, 400 volts, paper	5
C37, ABCD	A-8G-16432-1	40-20-20 mf x 300 volts, electrolytic, 20 mf x 25 volts	1
C40	C-8D-16791	.12 mf, 200 volts, paper	1
C44	A-8C-16370	60 mf x 120 volts, electrolytic	1
C45	C-8D-10813	.05 mf, 400 volts, paper	1
		RESISTORS	
R1	A-16B-16615	Suppressor	1
R2	A-16B-16614	Suppressor	1
R3	A-16B-16616	Suppressor	1
R4,14	C-9B1-78	22K ohms, ½ watt	2
R5,6,8,12,19	C-9B1-58	470 ohms, ½ watt	5
R7,11	C-9B1-48	68 ohms, ½watt	2
R9	C-9B1-82	47K ohms, ½ watt,	1
R10,39	C-9B1-26	150K ohms, ½ watt	2
R13	C-9B1-79	27K ohms, ½ watt	1
R15,40	C-9B1-33	2.2 megohms, ½ watt	2
R16	C-9B1-34	3.3 megohms ½ watt	1
R17	C-9B1-54	220 megohms, ½ watt	1
R18	C-9B1-60	680 megohms, ½ watt	1
R20	A-10A-16503	1 megohm, volume control and switch	1
R21	C-9B1-36	6.8 megohm, ½ watt	1
R22	A-11B-16502	1 megohm, tone control	1
R23,24	C-9B1-94	470K ohms, ½ watt	2
R25	C-9B1-52	150 ohms, ½ watt	1
R26,35	C-9B1-27	220K ohms ½ watt	2
R28,36	C-9C4-50	100 ohms, 2 watts	2
R29,30	C-9B4-62	1000 ohms, 2 watts	2
R31,32	C-9B4-65	1800 ohms, 2 watts	2

Ref. No.	Part No.	Description	Qty. Used In Set
		COILS AND TRANSFORMERS	
T1	C-13E-16496	Loop antenna	1
T2,13,14	A-16B-16023	RF choke	3
T3	B-13D-16611	AM Osc. coil	1
T4	A-13D-16617	FM Osc. coil	1
T5	B-13A-16612	FM input IF	1
T6	B-13A-16662	AM input IF	1
T7	B-13B-16000	FM driver IF	1
T8	B-13B-16302	AM output IF	1
T9	B-13M-16001	FM ratio detector	1
T10	A-16B-16613	RF choke	1
T11	A-13E-16618	FM mixer coil	1
T12	A-16A-16637	RF choke	1
T15	B-12C-16489	Output transformer	1
	B-18A-16528	10" PM speaker	1
		DIAL PARTS	
	B-30A-16480	Dial scale	1
	A-3A-16504	Tuning shaft	1
	B-29C-15876	"C"washer for above	1
	B-2M-16656	Pointer bar	1
	A-3H-10299	Idler pulley	2
	B-2G-16719	Dial Pointer	1
	A-53A-10989	Dial string 60" req.	yd
	A-49A-10078	Tension spring	2
	B-4M-15913-1	Dial scale bracket	2
		RECORD CHANGER	
	B-201-16988	Type 802 Record Changer, (three speed)	1
	P77	Crystal cartridge	1
		33 and 45 RPM needle (red)	1
		78 RPM needle	1
		MISCELLANEOUS	
	B-20A-16663	Band switch	1
	A-46A-16545	Pilot lite bulb	1
	A-15B-13430	Min. 9 pin tube socket	2
	A-15C-16297	Min. 7 pin tube socket	4
	A-15B-10440	Octal tube socket	1
	A-3B-16758	Tuning shaft bushing	1
	A-7B-13050	FM dipole Terminal strip	1
	A-47A-16720	Pilot lite assembly	1
	A-19B-12468	Phono motor socket	1
	A-19B-12170	Phono pickup socket	1
	B-14MA-11066-6-16	FM dipole ribbon	1
CR-1,2	A-21J-12775	Selenium rectifier	2
	B-15B-13785	Large lytic mtg. plate	1
	B-15B-10076	Small lytic mtg. plate	1
	B-5B-16633-41	Knob	3
	B-5B-16642-41	Knob with dot	1
	A-23A-10344	Line cord lock	1
	B-14M-11479-2	Line cord	1

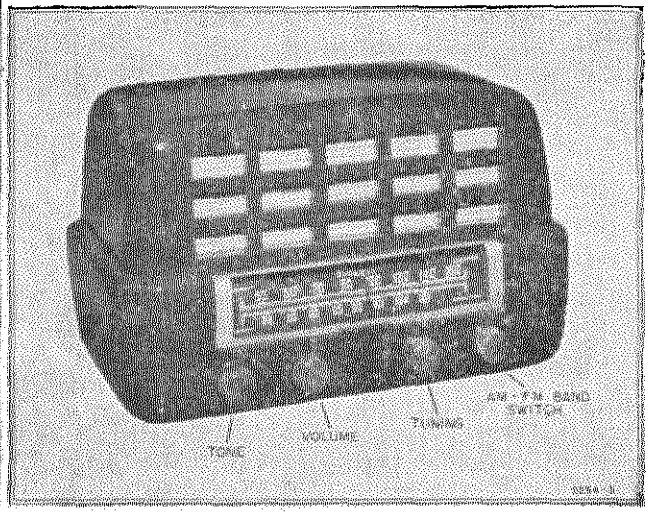

APPLYING POWER TO RADIO

This receiver, unless otherwise marked must be operated on an AC voltage of 105 to 125 volts, 50 to 60 cycles, or on a DC voltage of 105 to 125 volts. If you are in doubt as to the voltage of your power supply, consult your local power company. Receivers of this same model which are for use on voltages other than those specified above are so marked.

BROADCAST BAND

This is the tuning band in which the standard broadcast stations operate. The upper scale on the dial covers the broadcast range of 535-1620 Kc., and is calibrated in channel numbers. To obtain the kilocycle reading, multiply the number on the dial by 10; thus 80 on the dial corresponds to 800 kilocycles.

FM ANTENNAS

The noise-reducing capabilities of FM are noticeably greater when strong FM signals are obtained. Therefore, we recommend, whenever expedient, the use of an outside "folded dipole" aerial with a 300-ohm line lead-in. The aerial must be carefully installed according to the directions furnished with it. The radio is shipped from the factory with the built-in FM aerial connected by means of the long jumper wire to the left-hand FM Antenna Terminal. (See Chassis view).

IMPORTANT: The built-in Antenna is part of the line cord and, therefore, should be fully extended. Changing the angle of drop of the line cord will IMPROVE RECEPTION. If HUM is objectionable reverse the line cord plug in the power receptacle. Select the position giving least amount of hum.

To connect the lead-in from the outside FM aerial, remove the wire from the built-in FM antenna and connect the twin lead-in wire to the two screws. Either wire of the twin lead-in may be connected to either screw. A ground connection is not required for FM reception.

It should be remembered in conjunction with the erection of an FM folded dipole aerial that the signal strength from an FM transmitting station is less and less at greater distances from the transmitter and that FM reception is hardly ever possible beyond "line of sight" distances between transmitting and receiving aerials. This maximum limit is usually about 45 miles but consistently satisfactory reception is frequently limited to 30 miles or less depending on the height of transmitting and receiving aerials and the intervening terrain.

REPLACEMENT OF DIAL CORDS

REPLACEMENT OF DIAL CORDS

GENERAL—A dual track drum pulley and two individual cords are used on this model.

The rear track carries the Drive String (see Fig. 1 and 2) while the front track carries the Pointer string (see Fig. 3 and 4).

DRIVE STRING: Using approximately 20 inches of dial cord, fasten one end to the tension spring and pass around drum and drive shaft (Fig. 1). Continue cord around drum and pass through hole in rear track (see Fig. 2). Tie end of cord to spring so that spring is extended ¼ inch.

POINTER STRING: Use approximately 40 inches of dial cord, fasten one end to tension spring and pass around drum pulley (see Fig. 3). Continue cord (Fig. 4) from point B around idler pulleys, around drum, then pass through hole in front track, and tie cord to tension spring so that the spring is extended ¼ inch.

POINTER CALIBRATION: Adjust pointer as shown in Fig. 4, then loop Pointer string once around upright ear on Pointer carriage.

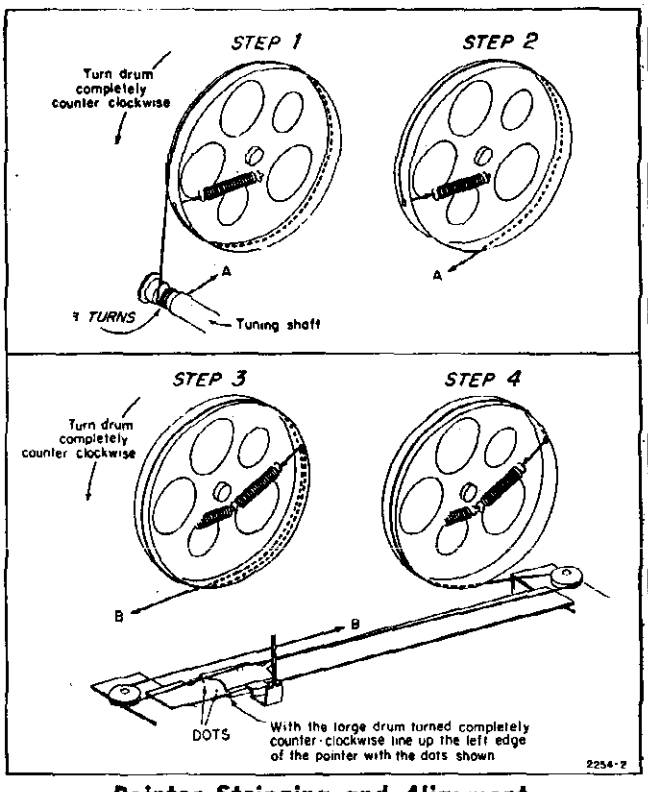

Pointer Stringing and Alignment

© John F. Rider

MODEL A-7DF21,
Series A

ALIGNMENT PROCEDURE

Broadcast Band Section I. F. and R. F.

The alignment procedure below includes the sensitivities at the inputs of various stages. All signal input values are based on an output of 50 milliwatts. This may be measured by disconnecting the speaker voice coil and substituting a 3.2-ohm resistor across the secondary winding of the output transformer. A reading of .40 volts AC across this resistor will be approximately equivalent to 50 milliwatt output with the speaker connected. The volume control must be set at maximum. The tone control must be set for maximum treble.

The signal source must be an accurately calibrated signal generator capable of supplying the frequencies designated, modulated 30% with a 400-cycle audio signal. A 400 cycle audio signal is required for the audio measurement. Variations in sensitivities of plus or minus 25% are usually permissable.

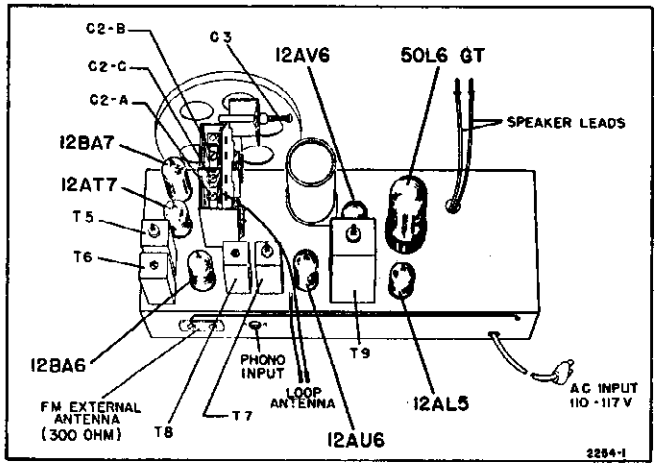

Chassis View

AM-I. F. ALIGNMENT

Band Switch in AM Position, Gang Open, Dummy Antenna .1 Mfd.

SIGNAL GENERATOR FREQENCY	*CONNECTION TO RADIO*	*ADJUSTMENTS TO BE MADE*	*ADUST FOR*
455 Kc. Use 1000 microvolts	Pin 1 of 12BA6 I.F. Amp. and B minus	Primary and Secondary of T8. See chassis view.	Maximum output Should be 50 Milliwatts
455 Kc. Use 30 microvolts	Pin 7 of 12BA7 Converter and B minus	Primary and Secondary of T6. See chassis view.	Maximum output Should be 50 Milliwatts
400 cycles. Use 17 millivolts	High Side of Volume Control and B minus	None	Maximum output Should be 50 Milliwatts

BROADCAST BAND-R. F. ALIGNMENT

Check pointer so that the right hand edge of the pointer skirt coincides with the right hand edge of dial marker at the extreme left when gang is closed. For Adjustment, see dial mechanism illustration.

SIGNAL GENERATOR FREQUENCY	*SET POINTER AT*	*CONNECT TO RADIO*	*ADJUST*
1620 Kc.	Extreme Right Calibration Marker	AM Antenna Clip and B minus	Oscillator trimmer C2-B for maximum
1400 Kc.	Second Calibration from Left	AM Antenna Clip and B minus	Antenna trimmer C2-A for maximum

Check tracking at 1000 Kc, 600 Kc, and 535 Kc to be sure oscillator is set correctly.

© John F. Rider

MODEL A-7DF21,
Series A

ALIGNMENT PROCEDURE

FM Band Section I. F. and R. F.

A non-metallic alignment tool must be used.

IMPORTANT

No alignment of the FM section of this radio should be attempted unless you are positive that the circuits are in need of adjustment and you have the necessary equipment.

All components used in this radio are extremely stable and the tuned circuits should require no adjustment over a long period of time.

NOTE

The following alignment is based on the use of the new Simpson vacuum tube voltmeter which has a "floating ground". In other words, the meter, when used as a vacuum tube voltmeter, can have both the positive and negative sides connected to points above ground and still give true readings.

A standard AM signal generator is required.

FM-I. F. ALIGNMENT

Band Switch in FM Position. Dummy Antenna .1 Mfd.

SIGNAL GENERATOR FREQUENCY	*CONNECTION TO RADIO*	*VACUUM TUBE VOLT METER CONNECTION TO RADIO*	*ADJUSTMENTS TO BE MADE*	*ADJUST FOR*
10.7 Mc. Use about .1 volt	Pin No. 1 of 12AU6	Pin No. 7 of 12AL5 and B minus	Bottom Core Primary of T9 Ratio Detector	Resonance should be about 3 volts
10.7 Mc. Use about .1 volt	Pin No. 1 of 12AU6	See note "A"	Top Core Secondary of T9 Ratio Detector	Zero. Use zero center scale See note "B"
10.7 Mc. Use about 330 microvolts	Pin No. 1 of 12BA6	Pin No. 7 of 12AL5 and B minus	Primary and Secondary of T7. FM Driver IF See chassis view.	Resonance should be about 3 volts
10.7 Mc. Use about 600 microvolts	Top end of C2-C	Pin No. 7 of 12AL5 and B minus	Primary and Secondary of T5. FM Input IF See chassis view.	Resonance should be about 3 volts

NOTES ON FM — I. F. ALIGNMENT

NOTE "A"—Connect two resistors in series, 100K OHMS each, from Pin No.7 of 12AL5 to B minus (pin no.5). These resistors must be matched within 5%. Connect vacuum tube voltmeter between the midpoint of the resistors and point zz.

NOTE "B"—If T9 has been tampered with, it is possible that no crossover point will be found at first. Careful adjustment of both primary and secondary is necessary.

NOTE "C"—To use a VTVM which does not have the "floating ground" feature, in step 2 above connect "ground" side of VTVM to midpoint of resistors (Note "A") and "high" side to point zz.

GENERAL—Input signals should be adjusted to give approximately 3 volts. The ratio detector is operating at a resonable level at this point and will give the truest indication of correct alignment with the procedure specified.

FM-R.F. ALIGNMENT

Check pointer so that the right hand edge of the pointer skirt coincides with the right hand edge of dial marker at the extreme left when gang is closed. For Adjustment, see dial mechanism illustration.

SIGNAL GENERATOR FREQUENCY	*POINTER*	*CONNECTION TO RADIO*	*ADJUST*	*V T V M CONNECTIONS*
108 MC.	108 MC. Marker	FM antenna terminals See Note "B" below	FM Osc C3 for maximum	Pin No. 7 of 12AL5 to B minus
98 MC.	Tune in Gen. Signal		FM Mixer C2-C for maximum	

NOTE "A"—If a signal generator with the above fundamental frequency is not available, it is sometimes possible to use harmonics. Use extreme care in picking harmonics. An alternate procedure is to use a local station carrier of known frequency to align the FM Band and to use the vacuum tube volt-meter as above for resonance indication. A weak carrier, however, will not produce 3 volts.

NOTE "B"—Connect 300 ohms in series with "hot" side of generator and connect to left hand screw of external FM Antenna Terminals. Connect cold side of generator to right hand screw.

© John F. Rider

MODEL A-7DF21,
Series A

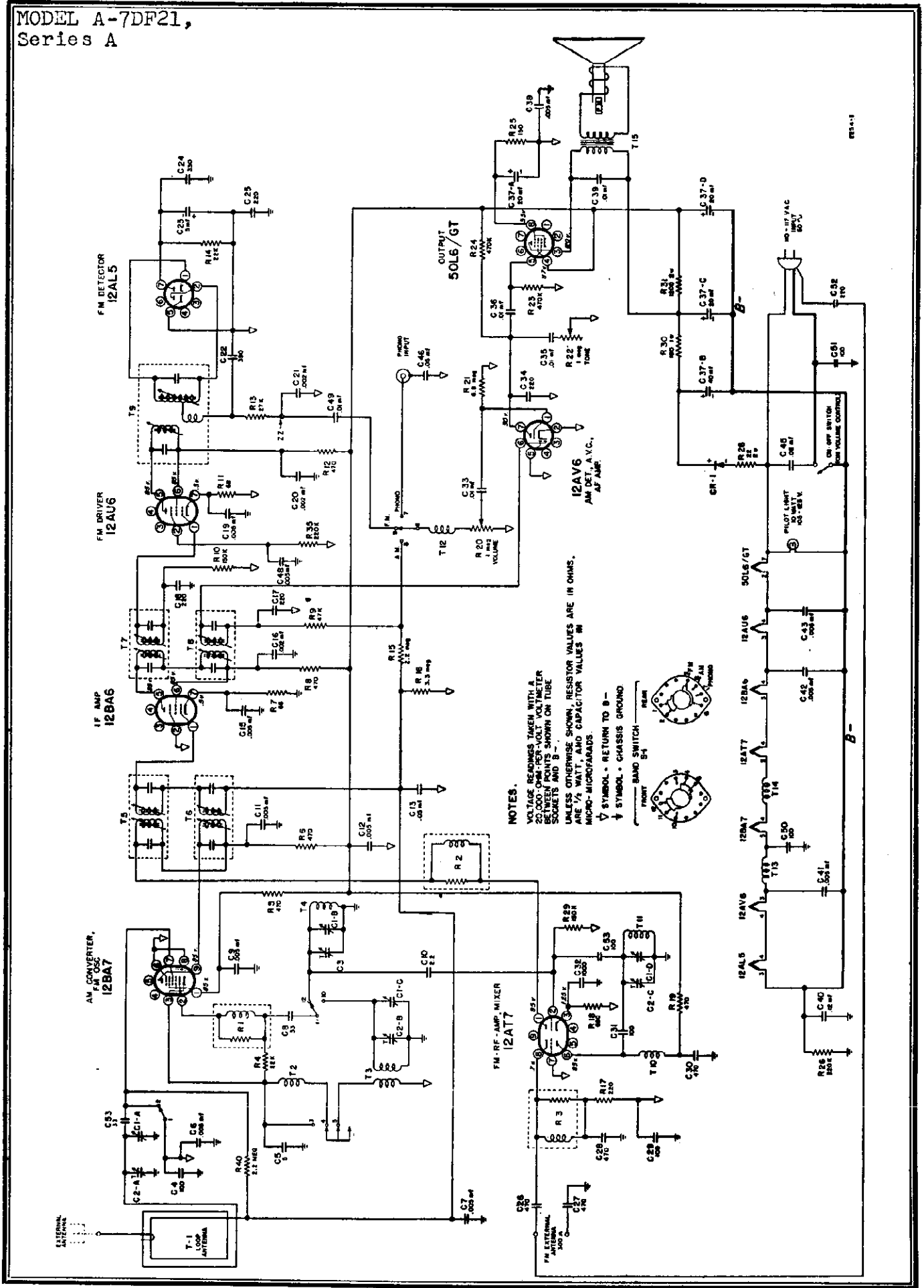

© John F. Rider

©John F. Rider

REPLACEMENT PARTS LIST

Ref. No.	Part No.	Description	Qty. Used
		Condensers	
C1 ABCD	B-8A-16592	4 section gang cond.	1
C2 ABC		Trimmers on gang	
C3	A-201-15142	Variable Trimmer	1
C4,29,31, 50,51,53	C-8G-11734	100 mmf, ceramic	6
C5	C-8G-12166	5 mmf, ceramic	1
C6,7,9,11,12, 15,19,38,41, 42,43,48	C-8G-13962	.005 mmf, ceramic	12
C8	C-8G-14172	33 mmf, ceramic	1
C10	A-8G-12495-4	2.2 mmf, ceramic	1
C13,14,46	C-8D-10770	.05 mf, 200 volts, paper	3
C45	C-8D-10813	.05 mf, 400 volts, paper	1
C16,20,21	C-8G-16049	.002 mf, ceramic	3
C17,18,25, 34,52	C-8G-11733	220 mmf, ceramic	5
C22	C-8F3-120	390 mmf, mica	1
C23	B-8C-16013	5 mf x 100 volts, electrolytic	1
C24	C-8F3-11	330 mmf, mica	1
C26,27,28,30	C-8G-11732	470 mmf, ceramic	4
C32	C-8G-13201	1000 mmf, ceramic	1
C33,35,36, 39,49	C-8D-10761	.01 mf, 400 volts, paper	5
C37 ABCD	B-8C-15880	40-20-20 mf x 300 volts, 20 mf x 25 volts	1
C40	C-8D-16791	.12 mf, 200 volts, paper	1
		Resistors	
R1	A-16B-16615	Suppressor	1
R2	A-16B-16614	Suppressor	1
R3	A-16B-16616	Suppressor	1
R4,14	C-9B1-78	22K ohms, ½ watt	2
R5,6,8,12,19	C-9B1-58	470 ohms, ½ watt	5
R7,11	C-9B1-48	68 ohms, ½ watt	2
R9	C-9B1-82	47K ohms, ½ watt	1
R10,29	C-9B1-26	150 ohms, ½ watt	2
R13	C-9B1-79	27K ohms, ½ watt	1
R15	C-9B1-33	2.2 megohms, ½ watt	1
R16	C-9B1-34	3.3 megohms, ½ watt	1
R17	C-9B1-54	220 ohms, ½ watt	1
R18	C-9B1-60	680 ohms, ½ watt	1
R20	A-10A-15853	1 meg., vol. cont. & switch	1
R21	C-9B1-36	6.8 megohms, ½ watt	1
R22	A-11B-15852	1 megohm tone control	1
R23,24	C-9B1-94	470K ohms, ½ watt	2
R25	C-9B1-52	150 ohms, ½ watt	1
R26,35	C-9B1-27	220K ohms, ½ watt	2
R28	C-9B4-42	22 ohms, 2 watts	1
R30	C-9B2-53	180 ohms, 1 watt	1
R31	C-9B4-63	1200 ohms, 2 watts	1

Ref. No.	Part No.	Description	Qty. Used
		Coils and Transformers	
T1	C-13E-16026-1	Loop antenna	
T2,13,14	A-16B-16023	RF choke	
T3	B-13D-16611	AM osc. coil	
T4	A-13D-16617	FM osc. coil	
T5	B-13A-16612	FM input IF	
T6	B-13A-16662	AM input IF	
T7	B-13B-16000	FM driver IF	1
T8	B-13B-16302	AM output IF	1
T9	B-13M-16001	FM ratio detector	1
T10	A-16B-16613	RF choke	
T11	A-13E-16618	EM Mixer coil	
T12	A-16A-16637	RF choke	
T15	B-12C-16014	Audio output	1
		Dial Parts	
	B-2C-16682	Dial scale	1
	B-6A-16664	Dial crystal	1
	A-2M-16034	Clip for crystal	2
	A-3A-16004	Tuning shaft	1
	B-29C-15876	"C" washer	1
	B-2M-16656	Pointer bar	1
	A-2D-15991	Dial bracket	2
	A-53A-10989	Dial string, 60" req.	
	B-2G-16005	Dial Pointer	1
	A-49A-10078	Tension spring	2
	A-3H-10299	Idler pulley	2
	A-47A-17141	Pilot lite assembly	1
	A-46A-16545	Pilot lite bulb	1
	B-6B-17139	Diffuser	1
		Miscellaneous	
	B-18A-16024	PM speaker, 4"x6", oval	1
	A-15B-13430	Socket, miniature, 9 pin	1
	A-15B-16297	Socket, miniature, 7 pin	4
	A-15B-10440	Socket, octal	1
	B-15B-13785	Lytic mounting plate	1
	B-14M-16251	Line cord and plug, 3-wire	1
	5C-12875-36	Cabinet	1
	A-2M-10096	Snap pins for back	2
	B-5B-11131-41	Knob, plain	3
	B-5B-16057-41	Knob, with dot	1
	A-21J-12775	Selenium rectifier	1
	A-3B-16758	Bushing for tuning shaft	1
	A-7B-13050	FM dipole terminal strip	1
	B-2D-15432	Loop mounting bracket	1
	B-29J-13364	Rubber washer	3
	42A-10874	¾" chassis mtg. screws	3
	B-29A-2104	Steel washers for above	3
	B-23K-13138	Grill screen	1
	A-19A-15257	Pin for speaker leads	2
	B-20A-16598	Band change switch	1

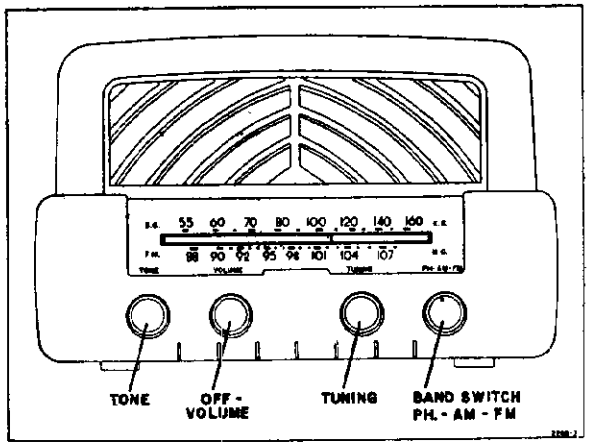

APPLYING POWER TO RADIO—This receiver, unless otherwise marked must be operated on an AC voltage of 105 to 125 volts, 50 to 60-cycles.

BROADCAST BAND—This is the tuning band in which the standard broadcast stations operate. The upper scale on the dial covers the broadcast range of 535-1620 Kc., and is calibrated in channel numbers. To obtain the kilocycle reading, multiply the number on the dial by 10; thus 80 on the dial corresponds to 800 kilocycles.

FM BAND—The FM tuning range covers the newly allocated frequency-modulation band of 88 to 108 megacycles into which all FM stations are required to move. Check with your local newspaper to determine the frequency of your local FM stations.

ON-OFF SWITCH AND VOLUME CONTROL—The knob second from the left is both the on-off switch and the volume control. When this control is turned all the way to the left the set is off. A slight rotation to the right will click the switch and turn the set on. The knob may then be used to regulate the volume. Be sure your set is turned completely off when not in use; otherwise the tubes will wear out unnecessarily.

TONE CONTROL—Rotating the extreme left hand knob gives a full variation of the tonal response from a deep bass to a brilliant treble.

REPLACEMENT OF DIAL CORDS

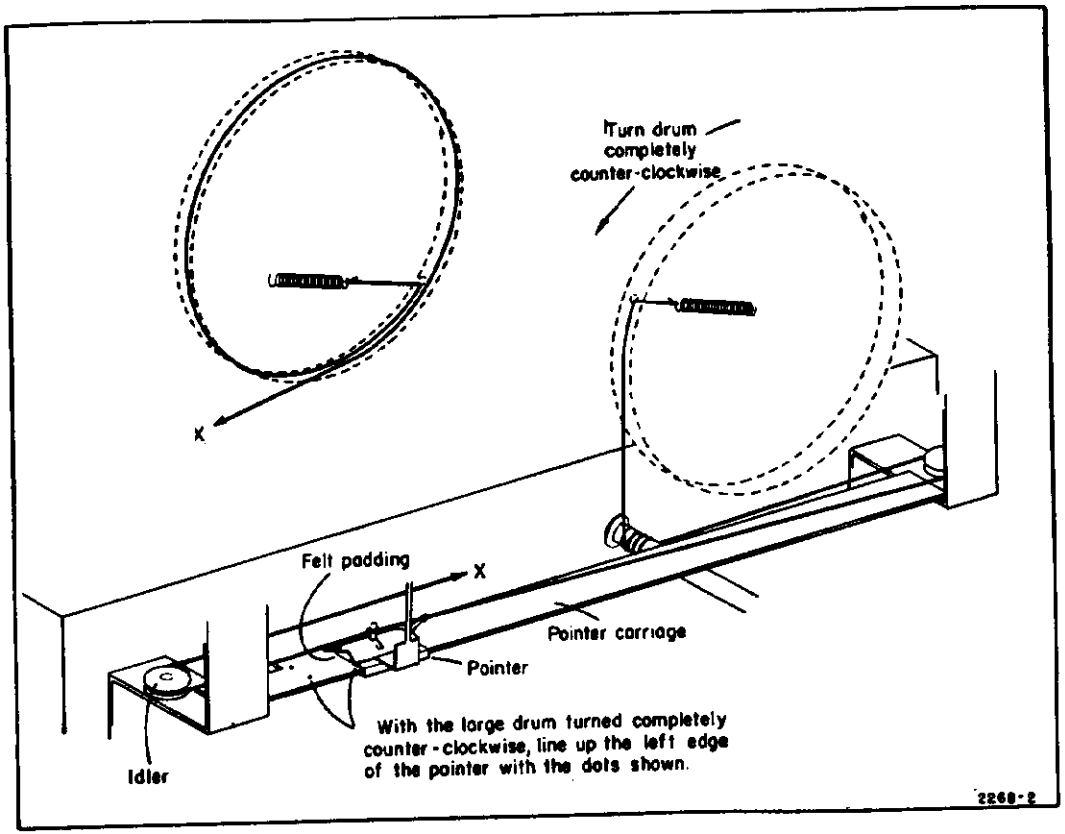

Pointer Stringing and Alignment

TUNING KNOB—The knob second from the right is the tuning knob; rotation of this knob moves the indicator along the dial scales. When selecting a station turn the knob back and forth until the tone is clearest and loudest. Do not use the tuning knob to regulate volume; the volume control should be used for that purpose after the station has been tuned in properly. It is particularly important in FM reception to tune the station accurately; otherwise the tone is distorted and the background noise not eliminated.

BAND SWITCH—The knob on the extreme right is used to select FM BAND, BROADCAST BAND, or PHONO. When this knob is turned fully clockwise FM programs can be tuned in. In the center position STANDARD BROADCASTS can be heard.

PHONOGRAPH—To PLAY RECORDS through this radio, connect the "pickup lead" wire from record player to the "PHONO INPUT" on the cabinet back. Turn Bandswitch to PHONO and adjust volume as required.

©John F. Rider

ALIGNMENT PROCEDURE

Broadcast Band Section I. F. and R. F.

The alignment procedure below includes the sensitivities at the inputs of various stages. All signal input values are based on an output of 500 milliwatts. This may be measured by disconnecting the speaker voice coil and substituting a 3.2-ohm resistor across the secondary winding of the output transformer. A reading of 1.27 volts AC across this resistor will be approximately equivalent to 500 milliwatt output with the speaker connected. The volume control must be set at maximum. The tone control must be set for maximum treble.

The signal source must be an accurately calibrated signal generator capable of supplying the frequencies designated, modulated 30% with a 400-cycle audio signal. A 400 cycle audio signal is required for the audio measurement. Variations in sensitivities of plus or minus 25% are usually permissable.

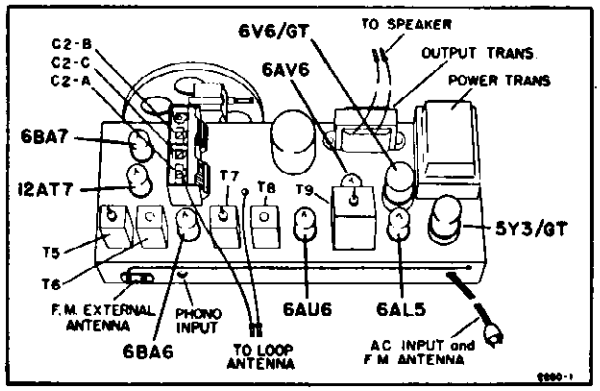

Chassis View

AM—I. F. ALIGNMENT

Band Switch in AM Position, Gang Open, Dummy Antenna .1 Mfd.

SIGNAL GENERATOR FREQUENCY	CONNECTION TO RADIO	ADJUSTMENTS TO BE MADE	ADJUST FOR
400 cycles. Use 65 millivolts	High Side of Volume Control and chassis	None	Maximum output Should be 500 Milliwatts
455 Kc. Use 3300 microvolts	Pin 1 of 6BA6 I.F. Amp. and chassis	Primary and Secondary of T8. See chassis view.	Maximum output Should be 500 Milliwatts
455 Kc. Use 55 microvolts	Pin 7 of 6BA7 Converter and chassis	Primary and Secondary of T6. See chassis view.	Maximum output Should be 500 Milliwatts

BROADCAST BAND—R. F. ALIGNMENT

Check pointer so that the right hand edge of the pointer skirt coincides with the right hand edge of dial marker at the extreme left when gang is closed.
For adjustment, see dial mechanism illustration.

SIGNAL GENERATOR FREQUENCY	SET POINTER AT	CONNECT TO RADIO	ADJUST
1620 Kc.	Extreme Right Calibration Marker	RADIATION COUPLING Use six turn loop across generator output. Place close to cabinet back.	Oscillator trimmer C2-B for maximum
1400 Kc.	Third Calibration from Right		Antenna Trimmer C2-A for maximum

Check tracking at 1000 Kc, 600 Kc, and 535 Kc to be sure oscillator is set correctly.

ELECTRICAL SPECIFICATIONS

Power Supply ..... 105 to 125 volts, AC, 60-cycles; Chassis only 75 watts.
Frequency Ranges ..... Broadcast Band—535 to 1620 kc. FM Band—88 to 108 mc.
Intermediate Freq. ..... AM-455 kc.; FM-10.7 mc.
Selectivity ..... AM-47 kc. broad at 1000 times signal, measured at 1000 kc. I.F. FM-230 kc. broad at 2 times down. I.F. FM-470 kc. broad at 10 times down.
AM Sensitivity ..... (For .5 watt output)—200 microvolts per meter average.
FM Sensitivity ..... (For .5 watt output)—30 microvolts average.
Power Output ..... 1.5 watts. 10% distortion. 3.0 watts maximum.
Loud Speaker ..... 5"x 7" PM. Voice coil impedance 3.2 ohms, 400 cycles.
Tube Complement .....
12AT7, FM-RF amp. mixer; 6BA7, AM converter, FM oscillator; 6BA7, IF amplifier; 6AU6, FM driver; 6AL5, FM detector; 6AV6, AM detector; 6V6 output; 5Y3, rectifier.

©John F. Rider

MODEL 8AF25

ALIGNMENT PROCEDURE

FM Band Section I. F. and R. F.

A non-metallic alignment tool must be used.

IMPORTANT

No alignment of the FM section of this radio should be attempted unless you are positive that the circuits are in need of adjustment and you have the necessary equipment.

All components used in this radio are extremely stable and the tuned circuits should require no adjustment over a long period of time.

NOTE

The following alignment is based on the use of the new Simpson vacuum tube voltmeter which has a "floating ground". In other words, the meter, when used as a vacuum tube voltmeter, can have both the positive and negative sides connected to points above ground and still give true readings. (See note "C" below.)

A standard AM signal generator is required.

FM —I. F. ALIGNMENT

Band Switch in FM Position. Dummy Antenna .1 Mfd

SIGNAL GENERATOR FREQUENCY	CONNECTION TO RADIO	VACUUM TUBE VOLT METER CONNECTION TO RADIO	ADJUSTMENTS TO BE MADE	ADJUST FOR
10.7 Mc. Use about .05 volt	Pin No. 1 of 6AU6	Pin No. 7 of 6AL5 and chassis	Bottom Core Primary of T9 Ratio Detector	Resonance should be about 3 volts
10.7 Mc. Use about .05 volt	Pin No. 1 of 6AU6	See note "A"	Top Core Secondary of T9 Ratio Detector	Zero. Use zero center scale See note "B"
10.7 Mc. Use about 1800 microvolts	Pin No. 1 of 6BA6	Pin No. 7 of 6AL5 and chassis	Primary and Secondary of T7. FM Driver IF See chassis view	Resonance should be about 3 volts
10.7 Mc. Use about 400 microvolts	Top end of C2-C	Pin No. 7 of 6AL5 and chassis	Primary and Secondary of T5. FM Input IF See chassis view	Resonance should be about 3 volts

NOTES ON FM — I. F. ALIGNMENT

NOTE "A"—Connect two resistors in series, 100K OHMS each, from Pin No. 7 of 6AL5 to chassis (Pin No. 5). These resitors must be matched within 5%. Connect vacuum tube voltmeter between the midpoint of the resistors and point zz.

NOTE "B"—If T9 has been tampered with, it is possible that no crossover point will be found at first. Careful adjustment of both primary and secondary is necesary.

NOTE "C"—To use a VTVM which does not have the "floating ground" feature, in step 2 above, connect "ground" side of VTVM to midpoint of resistors (Note "A") and "high" side to point zz.

GENERAL—Input signals should be adjusted to give approximately 3 volts. The ratio detector is operating at a reasonable level at this point and will give the truest indication of correct alignment with the procedure specified.

FM—R. F. ALIGNMENT

Check pointer so that the right hand edge of the pointer skirt coincides with the right hand edge of dial marker at the extreme left when gang is closed.

For adjustment, see dial mechanism illustration.

SIGNAL GENERATOR FREQUENCY	POINTER	CONNECTION TO RADIO	ADJUST	V T V M CONNECTIONS
108 mc.	108 mc. Marker	FM antenna terminals	FM Osc. C3 for maximum	Pin No. 7 of 6AL5 to chassis.
98 mc.	Tune in Gen. Signal	See Note "B" below.	FM Mixer C2-C for maximum	

NOTE "A"—If a signal generator with the above fundamental frequency is not available, it is sometimes possible to use harmonics. An alternate procedure is to use a local station carrier of known frequency to align the FM Band and to use the vacuum tube voltmeter as above for resonance indication. A weak carrier, however, will not produce 3 volts.

NOTE "B"—Connect 300 ohms in series with "hot" side of generator and connect to left hand screw of external FM Antenna Terminals. Connect cold side of generator to right hand screw.

© John F. Rider

MODEL 8AF25

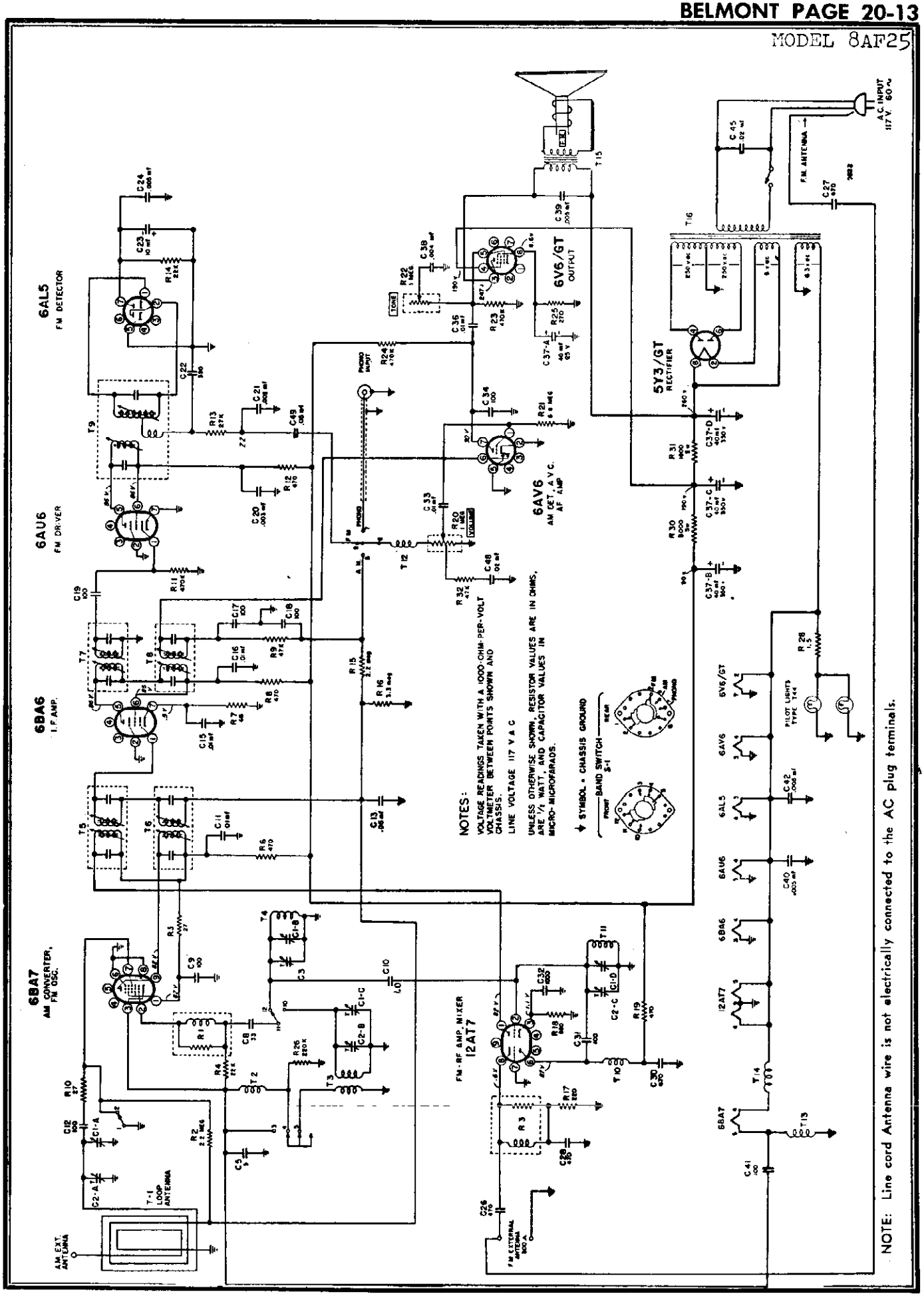

© John F. Rider

MODEL 8AF25

REPLACEMENT PARTS INFORMATION

Please specify *PART* number and chassis model number when ordering replacements.

REPLACEMENT PARTS LIST

Use Only Genuine Factory Replacement Parts

Ref. No.	Part No.	Description	Qty.
		CAPACITORS	
C1A,B,C,D	B-8A-17673	Gang tuning condenser	1
C2A,B,C,		Trimmers on gang	3
C3	A-201-15142	Trimmer condenser	1
C5	C-8G-12166	5 mmf, ceramic, 10%	1
C8	C-8G-14172	33 mmf, ceramic, 10%	1
C9-31-41	C-8G-12759	100 mmf, ceramic, 10%	3
C10		1.8 mmf, ceramic, 20%	1
C11-16-36	C-8D-10761	.01 mfd, 400 volts, 20%	3
C12	C-8G-13131	100 mmf, ceramic, 10%	1
C13-49	C-8D-10770	.05 mfd, 200 volts, 20%	2
C15-33	C-8D-11738	.01 mfd, 200 volts, 20%	2
C17-18	A-8F-13127	.0001 mfd-dual mica, +30% —20%	1
C19-34	C-8G-11734	100 mmf, ceramic, 10%	2
C20	C-8D-11013	.003 mfd, 600 volts, 10%	1
C21	C-8G-16049	2000 mmf, ceramic, 10%	1
C22	C-8F3-120	390 mmf, mica, 10%	1
C23	A-8C-18128	10 mfd, 50 volts	1
C24-40-42	A-8G-13962	.005 mfd, ceramic	3
C26-27-28-30	C-8G-11732	470 mmf, ceramic, 20%	4
C32	C-8G-13201	1000 mmf, ceramic	1
C37-A-B-C-D	A-8C-18125	40-40-40 mfd x 350 volts, 40 mfd x 25 volts	1
C38	C-8D-10788	.004 mfd, 600 volts, 20%	1
C39	C-8D-10935	.005 mfd, 600 volts, +40% —15%	1
C45	C-8J-11321	.02 mfd, 600 volts, 20%	1
C48	C-8D-11304	.02 mfd, 200 volts, 20%	1
		RESISTORS	
R1	A-16B-16615	Suppressor	1
R2-15	C-9B1-33	2.2 megohms, ½ watt, 20%	2
R3	A-16B-16616	Suppressor	1
R4-14	C-9B1-78	22K ohms, ½ watt, 10%	2
R5-10	C-9B1-43	27 ohms, ½ watt, 10%	1
R6-8-12-19	C-9B1-58	470 ohms, ½ watt, 10%	4
R7	C-9B1-48	68 ohms, ½ watt, 10%	1
R9-32	C-9B1-82	47K ohms, ½ watt, 10%	2
R11-23-24	C-9B1-94	470K ohms, ½ watt, 10%	3
R13	C-9B1-79	27K ohms, ½ watt, 10%	1
R16	C-9B1-34	3.3 megohms, ½ watt, 20%	1
R17	C-9B1-54	220 ohms, ½ watt, 10%	1
R18	C-9B1-60	680 ohms, ½ watt, 10%	1
R20	A-10A-18117	1 megohm, (volume control and switch)	1
R21	C-9B1-36	6.8 megohms, ½ watt, 20%	1
R22	A-11B-15852	1 megohm, (tone control)	1
R25	C-9B1-55	270 ohms, ½ watt, 10%	1
R26	C-9B1-27	220K ohms, ½ watt, 20%	1
R28	C-9C2-1065	1.5 ohms, 1 watt, 10%	1
R30	C-9C12-2059	3000 ohms, 5 watts, 5%	1
R31	C-9C12-1102	1800 ohms, 5 watts, 10%	1

Ref. No.	Part No.	Description	Qty.
		COILS, TRANSFORMERS, CHOKES	
T1	C-13E-18179	Loop antenna assembly	1
T2-T13-T14	A-16B-16023	RF choke coil assembly	3
T3	B-13D-16611	Oscillator coil (AM)	1
T4	A-13D-16617	Oscillator coil (FM)	1
T5	B-13A-16612	Input IF transformer (FM)	1
T6	B-13A-16662	Input IF transformer (AM)	1
T7	B-13B-16000	Output IF transformer (FM)	1
T8	B-13A-16662	Output IF transformer (AM)	1
T9	B-13M-16001	Ratio detector transformer	1
T10	A-16B-16613	RF choke coil	1
T11	A-13E-16618	RF coil (FM)	1
T12	A-16A-16637	RF choke coil	1
T15	B-12C-18143	Output transformer	1
T16	B-12A-18137	Power transformer	1
		MISCELLANEOUS	
	A-15B-13430	9-prong, miniature tube socket	2
	A-15B-10440	8-prong, octal socket	2
	A-15C-16007	7-prong, miniature tube socket	4
	B-20A-18118	Band change switch	1
	B-14M-18147	AC line cord and plug	1
	A-23A-16328	Line cord lock	1
	A-19B-12170	Phono pick-up socket	1
	A-7B-13050	Dipole socket	1
	A-3A-18116	Tuning shaft	1
	A-2D-10033	Tuning shaft bracket	1
	B-47A-18150	Pilot light assembly	1
	A-46A-11739	Pilot light bulb, T-44	2
	B-18A-17637	5"x7" PM speaker	1
		DIAL PARTS	
	C-6D-17737	Dial scale	1
	A-2M-16034	Dial mounting bracket	2
	B-6M-17622	Background diffuser	1
	B-2M-16656	Pointer bar	1
	A-2D-17627	Pointer bar bracket	1
	A-3M-10299	Pulley	2
	B-27A-10102	Shoulder rivet	2
	A-53A-10989	Dial strings	60" yd.
	B-2G-18119	Dial pointer	1
	A-50A-16434	Felt strip for pointer	1
	A-49A-11324	Tension spring	2
		CABINET PARTS	
	R-5C-18159-36	Bakelite cabinet	1
	B-24M-17623	Baffle board	1
	A-23C-15453	M/W Crest	1
	B-5B-1131-41	Knob	3
	B-5B-16057-41	Knob (with dot)	1

MODELS 0526, 526A, 526B, 526C, 526E

AC-DC SUPERHETERODYNE RADIO RECEIVER

GENERAL

The Bendix Radio Models O526 and 526 incorporate two similar chassis designated as O-1 and R-1. They are both AC-DC operated, 5 tube, superheterodyne receivers providing reception of the Standard Broadcast Band. A high impedance loop antenna is installed on the back of the chassis. An outside antenna may be connected to the terminal, marked EXTERNAL ANTENNA, on the bottom of Models 526A and 526B and on the rear of Models 526C and 526E. The tuning gang is isolated from the chassis and carries AVC. Care must be exercised so that it is not grounded at any time. The Models shown in Fig. 1 and Fig. 2 use both the O-1 and R-1 chassis, but only the O-1 chassis is employed in Model 526E (see Fig. 3).

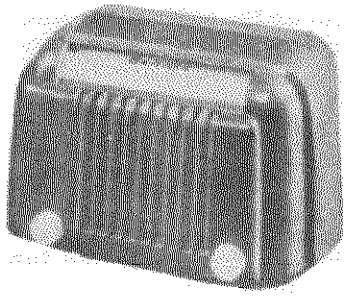

Fig. 1
Model 526A Brown Plastic
Model 526B Ivory Plastic

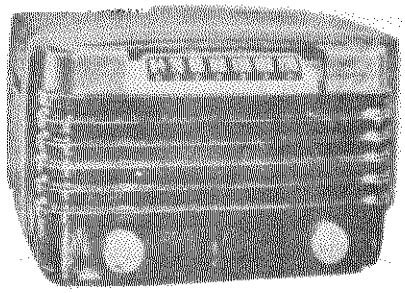

Fig. 2
Model 526C Black & Green Catalin

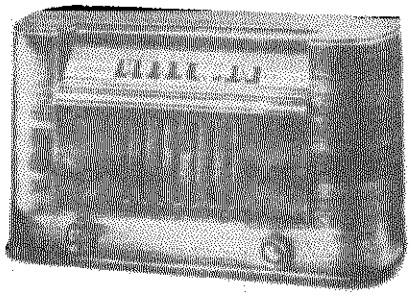

Fig. 3
Model 526E Walnut

SPECIFICATIONS

Power Requirements
105 - 125 Volts, 60 cycles AC
105 - 125 Volts DC
Power Consumption
30 Watts
Tuning Frequency Range
O526 - 540-1700KC
526 - 550-1600KC
Intermediate Frequency - 455KC
Power Output
Maximum - 1.88 Watts
Tube Complement - 5 Tubes
1-12SA7, 1-12SK7, 1-12SQ7, 1-50L6, 1-35Z5
Tuning Drive Ratio - 14:1
Pointer Travel - 4 Inches
Loudspeaker
4" Diameter PM
Voice Coil Impedance - 3.2 ohms @ 400 CPS

Stock No.	Description	0526C	526C
	CABINET COMPONENTS FOR 0526C & 526C		
BZ0B04	BACK—Tekwood, Cabinet	X	X
BZ0R03	BUMPER—Rubber, Cabinet	X	X
DS0A00	DIAL—Plastic (540-1700)	X	
DS0A13	DIAL—Plastic (550-1600)		X
GC0D00	GASKET—Cork, Dial	X	X
GF0S00	GASKET—Felt, Speaker	X	X
GR0D00	GASKET—Rubber, Dial	X	X
HC0S08	CLIP—Knob Retainer Spring	X	X
HZ0S01	STUD—Trimount, Cabinet	X	X
ID0M01	INDICATOR—Metal Dial Pointer	X	X
KC0G00	KNOB—Control, Green	X	X
XS0C00	STRIP—Dial Cord Protector	X	X
ZC0B01	RETAINER—Dial, R.H.	X	X
ZC0B02	RETAINER—Dial, L.H.	X	X
ZC0T00	CABINET—Complete	X	X

Stock No.	Description
	CABINET COMPONENTS FOR 0526E
BZ0B07	BACK—Tekwood, Cabinet
BZ0R02	BUMPER—Rubber, Cabinet
DS0A07	DIAL—Glass (540-1700)
GC0D00	GASKET—Cork, Dial
GZ0C01	GRILLE—Cloth & Cardboard Baffle
HC0D02	CLAMP—Dial Retainer
HK0R00	RING—Retainer Spring
ID0M03	INDICATOR—Metal Dial Pointer
KC0B00	KNOB—Control, Mottled Brown
PI0B01	PLATE—Asbestos Base
XS0C00	STRIP—Dial Cord Protector
ZW5A00	CABINET—Walnut

©John F. Rider

MODELS 0526, 526A,
526B, 526C, 526E

PRELIMINARY ALIGNMENT PROCEDURE

Connect line cord plug to 117 volt AC power source and allow receiver and test equipment to warm up for at least five minutes. Set Volume control at maximum and connect output meter across voice coil. (If a DC VTVM is available it may be more convenient to connect from tuning gang stator to chassis ground, thus using AVC voltage to indicate circuit resonance. Volume can then be kept low, no modulated signal is needed, and a steadier indication on the meter is obtained.) Make all adjustments in order given in table and tune for maximum output. Keep input as low as possible at all times.

For the O-1 chassis, pre-set dial pointer with gang condenser fully counterclockwise by sliding pointer on dial cord until it is exactly 2 inches from left end of dial back plate. Refer to alignment chart and to diagram of Dial Reference Points, Fig. 4, for proper input signals and their corresponding reference points.

On the R-1 chassis dial settings and frequency check points are indicated on the dial back plate.

PRECAUTIONS

An isolating transformer should be used between the power supply and the receiver if any of the test equipment is AC operated. The use of isolating capacitors is not recommended as AC through the capacitor may introduce hum modulation, and if the capacitors should break down, the test instruments are likely to be damaged.

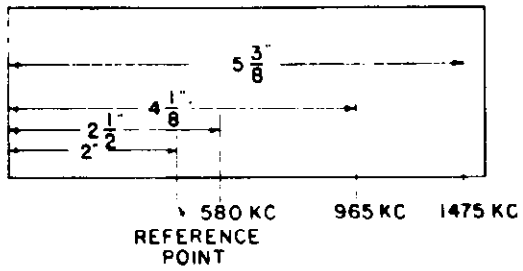

Fig. 4 Dial Reference Points O-1 Chassis

ALIGNMENT CHART

Generator Frequency	Generator Coupling	Circuit Aligned	Dial Setting	Adjust	Remarks
1) 455KC	Through .05 mfd to antenna	2nd IF	Maximum to right	C6a, C6b	Adjust for Maximum output
2) 1475KC	"	1st IF	5⅜" (See Fig. 4)	C3a, C3b	Adjust for Maximum output
3) 1475KC	"	RF	5⅜" (See Fig. 4)	C1b, C10	Adjust for Maximum output
4) REPEAT STEP 3 SEVERAL TIMES TO INSURE MAXIMUM OUTPUT					
5) 965KC	Through .05 mfd to antenna		4⅛" (See Fig. 4)		*Check Calibration
6) 580KC	"		2½" (See Fig. 4)		*Check Calibration

* If calibration is off more than 10KC bend plates of gang condenser. This is a very delicate operation and should be attempted only by experienced technicians.

© John F. Rider

MODELS 0526, 526A, 526B, 526C, 526E

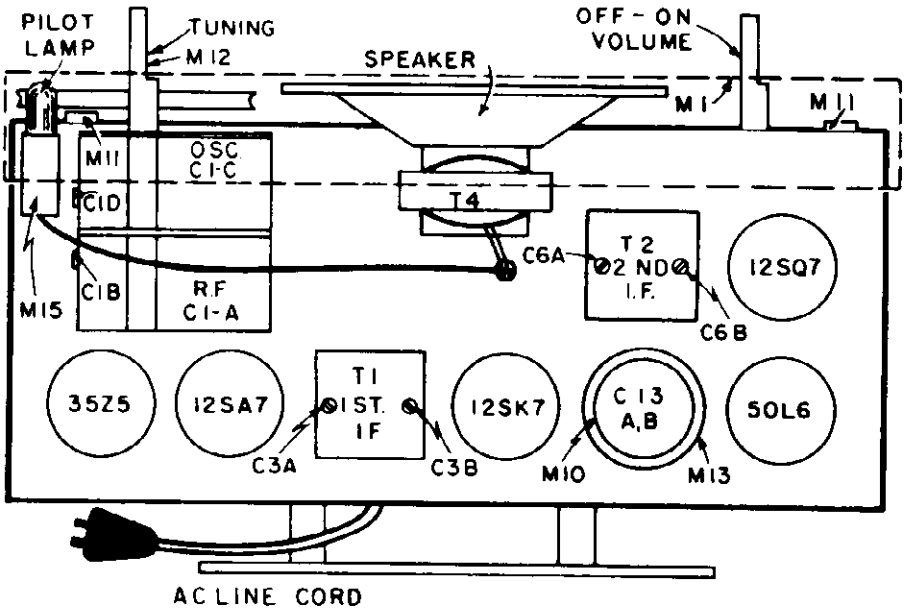

NOTE: In the O-1 chassis the positions of the electrolytic capacitor (C13a, b) and 2nd IF transformer (T2) are reversed.

Where trimmers have been removed from gang, the RF trimmer will be found on the antenna, the oscillator trimmer on the side of the chassis.

Fig. 5 Trimmer Location Diagram

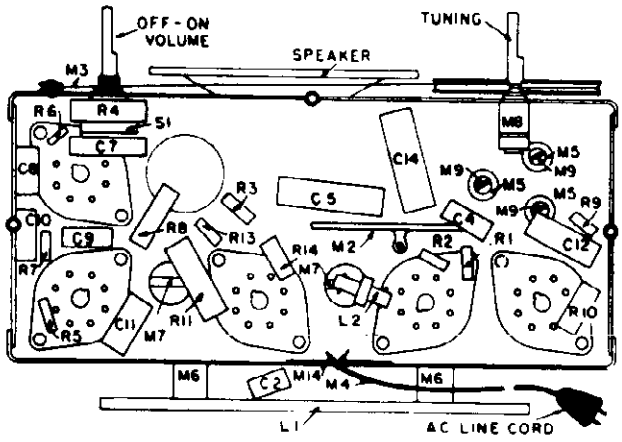

Fig. 6 Component Diagram Bottom View

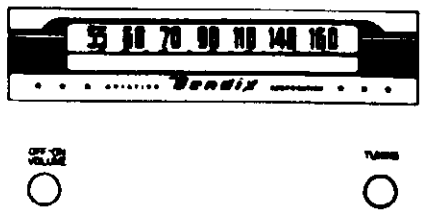

Fig. 7 Front Panel Controls

Figure 7 shows Front Panel Controls for 526A & B Models. On all 0526 Models the Frequency Range is 540-1700KC, but otherwise the Controls are similar.

MODELS 0526, 526A,
526B, 526C, 526E

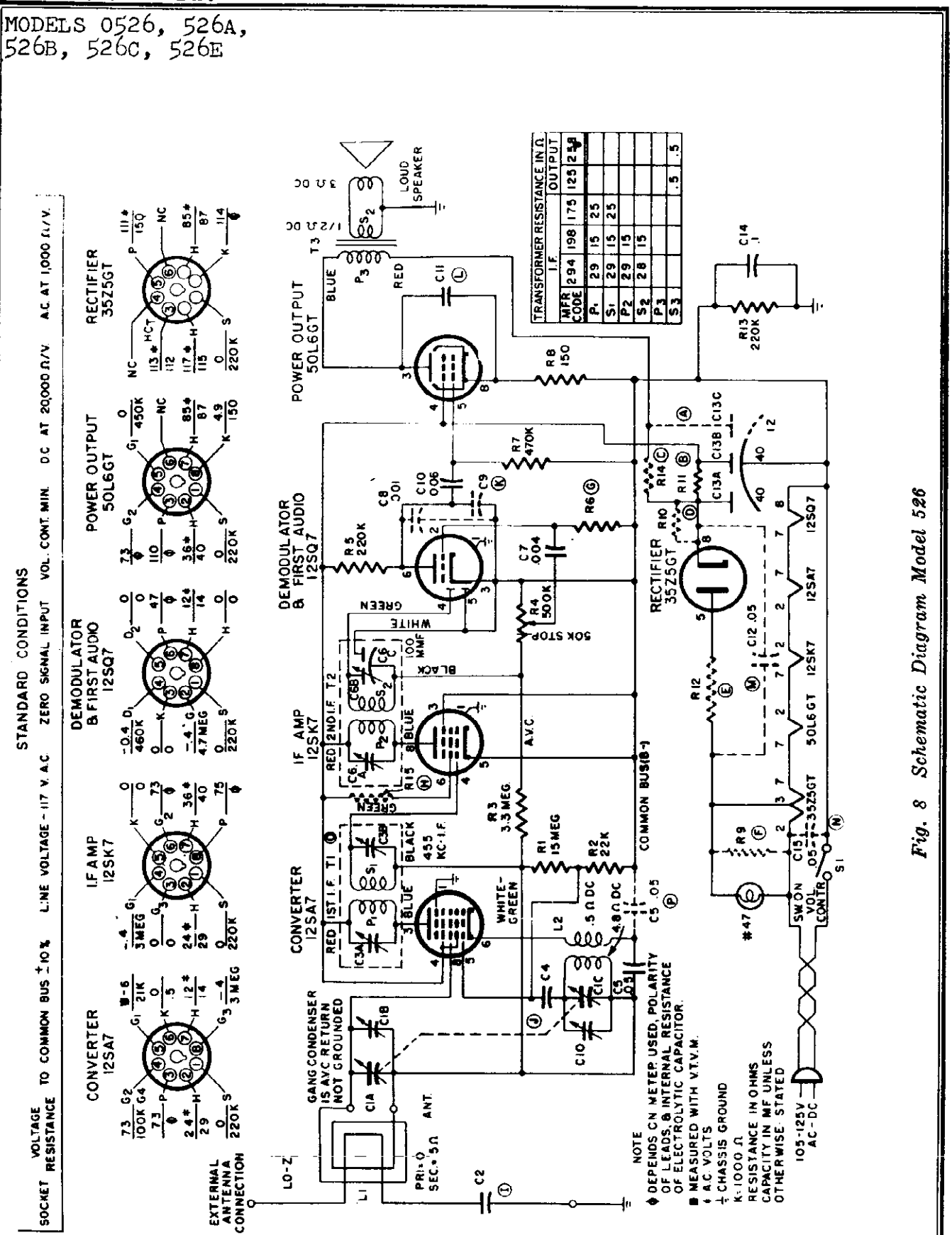

Fig. 8 Schematic Diagram Model 526

©John F Ryder

CIRCUIT FOOTNOTES

The Schematic Diagram, Fig. 8, combines the two similar chassis O-1 and R-1. Where differences occur, changes are noted on the diagram by dotted lines, and a letter beside each circuit element involved indicates the corresponding footnote.

A. Capacitor C13a, b (40-40 mfd) is found in O-1 chassis. Capacitor C13a, b, c (40-40-12 mfd) is found in R-1 chassis.

B. R11 is 2200 ohms in O-1 chassis and 1500 ohms in R-1 chassis.

C. R14 (230 ohms) is used in R-1 chassis, not in O-1 chassis.

D. R10 (33 ohms) is not used in R-1 chassis.

E. R12 (33 ohms) is not used in R-1 chassis.

F. R9 (100 ohms) is not used in R-1 chassis.

G. R6 is 4.7 meg in O-1 chassis, but may be either 4.7 or 10 meg in R-1 chassis.

H. R15 (33 ohms) is not used in O-1 chassis.

I. C2 is .004 mfd in R-1 chassis, but may be .004 mfd or 470 mmf in O-1 chassis.

J. C4 (47 mmf) is 50 mmf in some receivers.

K. C9 may be either 300 mmf or 330 mmf in O-1 chassis. It is not used in R-1 chassis.

L. C11 is .01 mfd in O-1 chassis and .03 mfd in R-1 chassis.

M. C12 (.05 mfd) is used in O-1 chassis, not in R-1 chassis.

N. C15 (.05 mfd) is used in R-1 chassis, not in O-1 chassis.

O. In R-1 chassis only, T1 may be a "K" transformer in some units.

P. In some units of R-1 chassis only, C5 (.05 mfd) may be connected between the untuned winding of L2 and the lower end of R2.

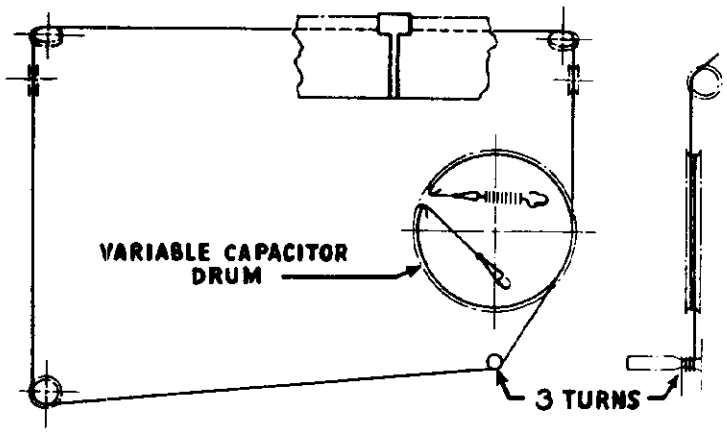

Dial Stringing Diagram
Model O526

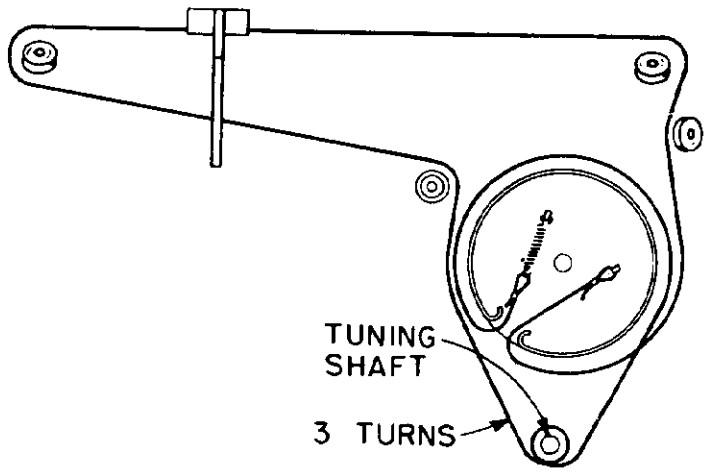

Dial Stringing Diagram
Model 526

MODELS 0526, 526A, 526B, 526C, 526E

REPLACEMENT PARTS LIST

Stock No.	Description	Chassis 0-1	Chassis B-1
	ELECTRICAL COMPONENTS		
CV0B00	CAPACITOR—Variable 2 Gang (Trimmer on Loop)	C1	
CV0B01	CAPACITOR—Variable 2 Gang	C1	
CV0B03	CAPACITOR—Variable 2 Gang		C1
CM5A38	CAPACITOR—Mica 470 mmf 500V	C2	
CP6T16	CAPACITOR—Paper .004 mfd 600V	C2, C7	C2, C7
CM5A14	CAPACITOR—Mica 47 mmf 500V	C4	
CC6A30	CAPACITOR—Ceramic 47 mmf 500V		C4
CP4T40	CAPACITOR—Paper .05 mfd 400V	C5	C5
CM5A46	CAPACITOR—Mica .001 mfd 500V	C8	C8
CM5A34	CAPACITOR—Mica 330 mmf 500V	C9	
CP4T20	CAPACITOR—Paper .006 mfd 400V	C10	C10
CP4T31	CAPACITOR—Paper .01 mfd 400V	C11	
CP4T36	CAPACITOR—Paper .03 mfd 400V		C11
CP6T16	CAPACITOR—Paper .05 mfd 600V	C12	C15
CE2A00	CAPACITOR—Electrolytic 40-40 mfd 150V	C13a, b	
CE3E01	CAPACITOR—Electrolytic 40-40-12 mfd 150V		C13a, b, c
CP4T51	CAPACITOR—Paper .1 mfd 400V	C14	C14
RC22A156M	RESISTOR—Comp. 15 meg ¼W	R1	R1
RC22A223M	RESISTOR—Comp. 22K ¼W	R2	R2
RC22A335M	RESISTOR—Comp. 3.3 meg ¼W	R3	R3
RV0S00	POTENTIOMETER—500K with switch	R4, S1	R4, S1
RC22A224M	RESISTOR—Comp. 220K ¼W	R5, R13	R5, R13
RC22A475M	RESISTOR—Comp. 4.7 meg ¼W	R6	R6
RC22A106M	RESISTOR—Comp. 10 meg ¼W		R6
RC22A474M	RESISTOR—Comp. 470K ¼W	R7	R7
RC24A151K	RESISTOR—Comp. 150 ohms 1W ±10%	R8	R8
RC24A102M	RESISTOR—Comp. 100 ohms 1W	R9	
RC24A330M	RESISTOR—Comp. 33 ohms 1W	R10, R12	R15
RC25A222K	RESISTOR—Comp. 2200 ohms 2W ±10%	R11	
RC25A152K	RESISTOR—Comp. 1500 ohms 2W ±10%		R11
RC25A221K	RESISTOR—Comp. 220 ohms 2W ±10%		R14
AL0C00	ANTENNA—Loop Assembly	L1	
AL0C02	ANTENNA—Loop with RF Trimmer	L1	
AL0C04	ANTENNA—Loop Assembly		L1
LOSB00	COIL—Oscillator	L2	
LOSH00	COIL—Oscillator (used with CV0B00)	L2	
LOSB01	COIL—Oscillator		L2
TI0C00	TRANSFORMER—Converter IF (1st)	T1	T1
TI0C11	TRANSFORMER—"K" Converter IF		T1
TI0D00	TRANSFORMER—Diode IF (2nd)	T2	
TI0D07	TRANSFORMER—Diode IF (2nd)		T2
TA0D00	TRANSFORMER—Output	T3	T3
SP4R00	SPEAKER—4" PM (Less output transformer)	x	x
	LAMP—Dial	I	I

MECHANICAL COMPONENTS

Stock No.	Description	Chassis 0-1	Chassis B-1
AD0B00	ASSY—Dial Back	M1	
AD0B01	ASSY—Dial Back		M1
BT1S00	BOARD—Terminal, 1 Lug 1 Mtg.		x

Stock No.	Description	Chassis 0-1	Chassis B-1
	MECHANICAL COMPONENTS—(Continued)		
BT4S00	BOARD—Terminal, 4 Lug 1 Mtg.	M2	
BT5S00	BOARD—Terminal, 5 Lug 1 Mtg.		x
CD0C01	CABLE—Dial (39 5/16")	M3	M3
CL2A00	CORD—AC Line, Brown (except 526B)	M4	
CL2A03	CORD—AC Line, White (526B only)	M4	
CL2A06	CORD—AC Line, Ivory (526B only)		M4
CL2A07	CORD—AC Line, Brown (except 526B)		M4
GR0S00	GROMMET—Capacitor Shockmtg.	M5	M5
HB0A00	BRACKET—Antenna Mtg.	M6	
HB0M50	BRACKET—Antenna Mtg.		M6
HC0C00	CLIP—Oscillator Coil Mtg.	x	
HC0C12	CLIP—IF Transformer	M7	M7
HC0S00	CLIP—Tuning Shaft Spring	M8	M8
HR0S01	CLIP—Electrolytic Spring Mtg.		x
HC0S31	RIVET—Shoulder (.171 dia.)	x	
HR0S02	RIVET—Shoulder (.218 dia.)	x	x
HS0C00	SPRING—Coil, Dial Cable	x	x
HS6F00	SLEEVE—Spacer, Tuning Cap. Mtg.	M9	M9
IT0C00	INSULATOR—Tube, Electrolytic	M10	
MB0B00	BEARING—Brass, Tuning Shaft	x	x
MP0100	PULLEY—Idler	M11	M11
MS0T00	SHAFT—Tuning	M12	M12
PI0C00	PLATE—Insulator, Cap. Mtg.	M13	
PI0P00	PLATE—Insulator, Line Cord	M14	
PI0P02	PLATE—Insulator, Line Cord		M14
SO0D00	SOCKET—Dial Lamp	M15	M15
SO0S00	SOCKET—Octal Tube	x	
SO0S03	SOCKET—Octal Tube		x

CABINET COMPONENTS FOR 0526 & 526A & B

Stock No.	Description	0526A	0526B	526A	526B
BT1T00	BOARD—Antenna Terminal	x	x	x	x
BZ0D00	BAFFLE—Board, Speaker	x	x	x	x
BZ0R00	BUMPER—Rubber, Cabinet	x	x	x	x
DS0A03	DIAL—Plastic (540-1700)	x	x		
DS0A11	DIAL—Plastic (550-1600)			x	
DS0A12	DIAL—Plastic (550-1600)				x
HC0S01	CLIP—Spring Retainer	x	x	x	x
HK0R00	RING—Knob Retainer Spring	x	x	x	x
HP0B00	PLATE—Metal Base	x	x	x	x
HZ0S00	STUD—Trimount, Cabinet	x	x	x	x
KC0B01	KNOB—Mottled Brown	x		x	
KC0B03	KNOB—Metallic Brown		x		x
KC0B00	KNOB—Red				x
ID0M00	INDICATOR—Metal Dial Pointer	x	x	x	x
PI0B01	PLATE—Asbestos Base	x	x	x	x
XS0C00	STRIP—Dial Cord Protector	x	x	x	x
ZP0B01	CABINET—Brown Plastic	x		x	
ZP0I01	CABINET—Ivory Plastic		x		x

© John F. Rider

MODELS 55L2, 55P2, 55L3, 55P3

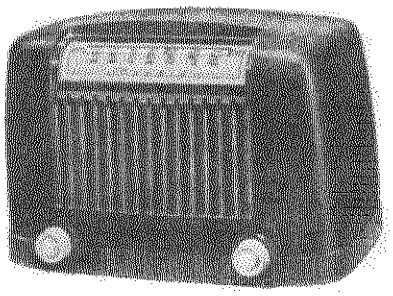

55P2

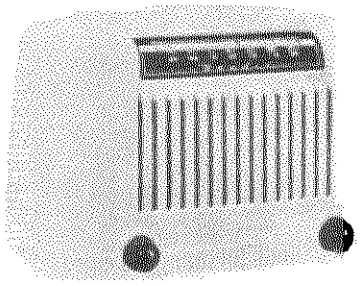

55L2

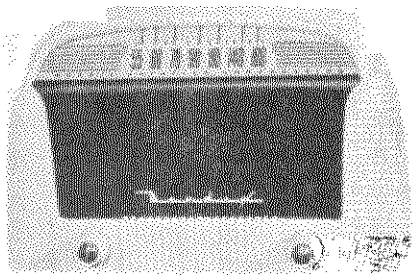

55L3

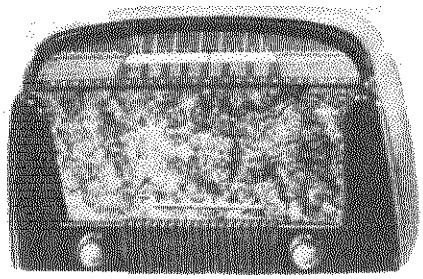

55P3

MODELS 55P2, 55L2, 55L3 AND 55P3

GENERAL

Connect line cord plug to correct power source (see SPECIFICATIONS) and turn on receiver and any power operated test equipment. Allow a five minute warm up period before beginning alignment. Turn tuning gang fully closed (low end of band) and set dial pointer directly over point marked REFERENCE.

After warm up period, rotate tuning condenser fully open and turn volume control to maximum ON position. Place a low range output meter across voice coil and refer to ALIGNMENT CHART for detailed alignment procedure.

Connect signal generator to external antenna through isolating capacitor designated in ALIGNMENT CHART. Be sure to adjust slugs at both top and bottom of IF cans beginning with T2. Keep input signal as low as practicable at all times and make all adjustments for maximum output meter reading.

PRECAUTIONS

Various interchangeable IF transformer cans are used in these receivers. The chassis is punched to accommodate either the small, slug tuned type or the larger, capacitor tuned IF cans. Before aligning one of these radio receivers, determine the type of IF can used and align set accordingly.

An isolating transformer should be used between the AC power line and the receiver for protection of any test equipment that must be operated from the same power line.

SPECIFICATIONS

Power Requirements	
Voltage	105-120V AC or DC
Frequency	50-60 CPS
Power Consumption	30 Watts
IF Frequency	455 KC
Tuning Range	540-1620 KC
Max. Power Output	1.8 Watts
Loudspeaker	PM
Cone Diameter	4 Inches
Voice Coil Impedance	3.2 Ohms @ 400 CPS

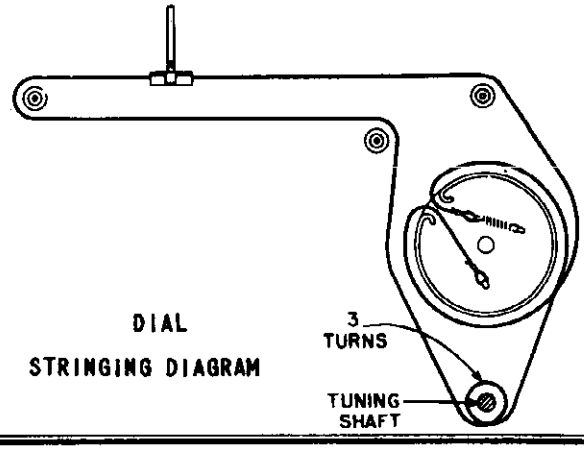

©John F. Rider

CONDITIONS OF MEASUREMENTS

LINE VOLTAGE 117 A-C. ZERO SIGNAL INPUT VOL CONT. MIN. SOCKET VOLTAGE / RESISTANCE TO COMMON B MINUS D. C. AT 20,000 Ω / V A-C. AT 1,000 Ω / V

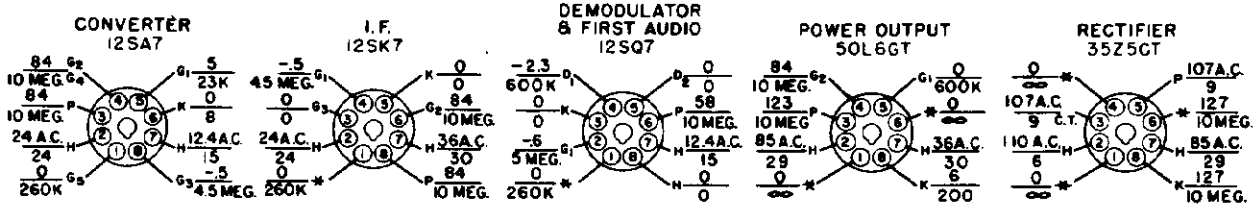

* NO INTERNAL TUBE CONNECTION LUG CONNECTION ONLY

I.F. FREQUENCY 455 KC.

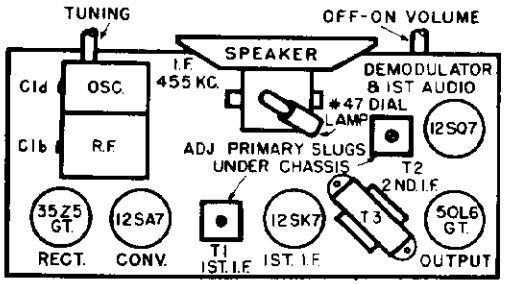

TRIMMER LOCATION

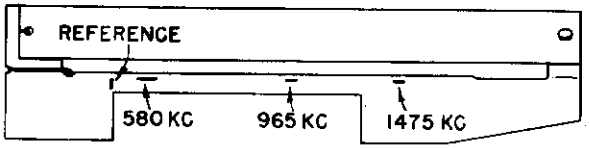

DIAL REFERENCE POINTS

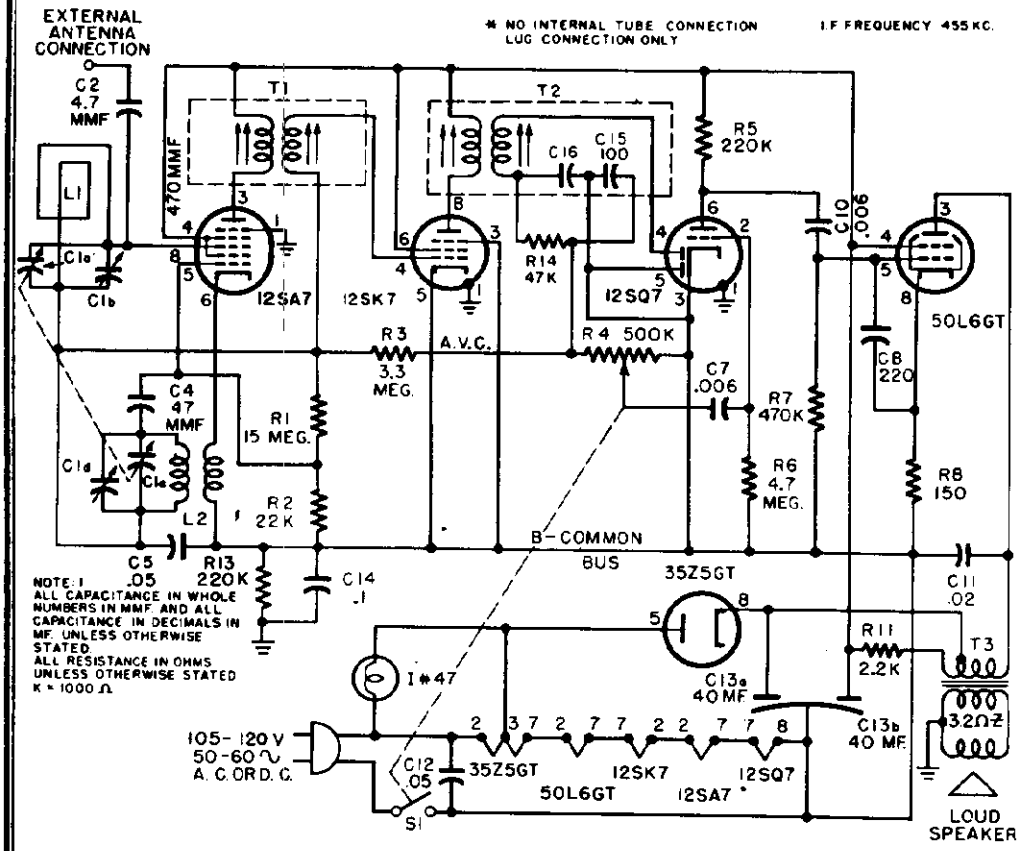

SCHEMATIC DIAGRAM MODELS 55L2, 55P2, 55L3, 55P3

ALIGNMENT CHART

CIRCUITS ALIGNED	DIAL POINTER	INPUT FREQUENCY	APPLY THROUGH	ADJUST
IF	Max. to Right	455 KC +	.01 mfd	Slugs-Top & Bottom of T2 Slugs-Top & Bottom of T1
OSC. & ANT.	1475 Ref. Mark	1475 KC	50 mmf	C1d C1b
	965 Ref. Mark	965 KC	50 mmf	* Check Calibration
	580 Ref. Mark	580 KC	50 mmf	* Check Calibration

* If Calibration does not check within the frequency mark, both oscillator and antenna sections of the gang condenser must be bent to correct tracking.

\+ Signal Generator connected to external antenna connection for complete alignment.

MODELS 55L2, 55P2, 55L3, 55P3

REPLACEMENT PARTS LIST

Stock Number	Symbol Pos.	Description
		ELECTRICAL COMPONENTS
CV0B05 +	(C1)	CAPACITOR-Variable, 2 Section
CC6A18 +	(C2)	CAPACITOR-Ceramic (Insulated)
CC6A30 +	(C4)	CAPACITOR-Ceramic 47 mmf 500V
CP4T40 +	(C5,C12)	CAPACITOR-Paper .05 mfd 400V
CP4T20 +	(C7,C10)	CAPACITOR-Paper .006 mfd 400V
CC6A38 +	(C8)	CAPACITOR-Ceramic 220 mmf 500V
CP4T34 +	(C11)	CAPACITOR-Paper .02 mfd 400V
CE2E01 +	(C13a,b)	CAPACITOR-Electrolytic (dry) 2 Sections (40-40 mfd)
CP4T51 +	(C14)	CAPACITOR-Paper .1 mfd 400V
RRC22A156M +	(R1)	RESISTOR-Comp. 15 meg 1/4w
RRC22A223M +	(R2)	RESISTOR-Comp. 22K 1/4w
RRC22A335M +	(R3)	RESISTOR-Comp. 3.3 meg 1/4w
RV0S02 +	(R4)	RESISTOR-Pot. with Switch 500K
RRC22A475M +	(R6)	RESISTOR-Comp. 4.7 meg 1/4w
RRC22A474M +	(R7)	RESISTOR-Comp. 470K 1/4w
RRC24A151K +	(R8)	RESISTOR-Comp. 150 ohms ±10% 1w
RRC26A222M +	(R11)	RESISTOR-Comp. 2.2K 2w
RRC22A473M +	(R14)	RESISTOR-Comp. 47K 1/4w
L06B03 +	(L2)	COIL-Oscillator
TI0C11	(T1)	TRANSFORMER-IF Input
TI0D21	(T2)	TRANSFORMER-IF Output
TA0010 +	(T3)	TRANSFORMER-Audio Output
AL0C08	(L1)	ANTENNA-Loop
SP4R01 +		SPEAKER-PM 4"
#47 +		LAMP-Bayonet Base
		MECHANICAL COMPONENTS
AD0B04		PLATE-Dial Back (Used On 55P2, 55L2)
AD0B06		PLATE-Dial Back (Used on 55P3, 55L3)
BT1S03 +		BOARD-Terminal (1 Lug, 1 Mtg.)
BT4S04 +		BOARD-Terminal (4 Lug, 1 Mtg.)
CD0C23		CABLE-Dial Tuning
GR0S08 +		GROMMET-Shockmount Rubber
HB0M58 +		BRACKET-Loop Ant. Mounting
HB0M61		BRACKET-Light
HC0C03 +		CLAMP-Dial Cord
HC0S00 +		CLIP-Spring (Tuning Shaft)
HC0S60 +		CLIP-Mounting
HC0S61 +		CLIP-Dial Back Plate Window, Spring
HS6P01 +		SPACER-Tuning Cond. Mounting
HZ0S08 +		STUD-Trimount
ID0M17 +		INDICATOR-Dial
MB0B00 +		BEARING-Brass (Tuning Shaft)
MS0T15		SHAFT-Tuning
PI0P03 +		PLATE-Line Cord
SO0D00 +		SOCKET-Dial Light
SO0D14		SOCKET-Dial Light
SO8S01 +		SOCKET-Tube Octal
SO8S03		SOCKET-Tube Octal (#1 Lug Gnd.)
WP0D03 +		WINDOW-Dial Back Plate
IS0C00 +		STRIP-Dial Cord Protector
		CABINET COMPONENTS - 55L2
BZ0D18 +		BAFFLE-Cloth and Cardboard
CL2A06 +		CORD-A.C. Line (Ivory)
DS0A32		DIAL-Scale (1 band) (550-1600 KC)
HC0S63 +		CLIP-Spring Baffle Retainer
HK0R00 +		CLIP-Knob Retainer
HP0B02 +		PLATE-Base
HZ0S00 +		STUD-Trimount Cabinet
KC0B14		KNOB-Control Dark Tan
ZP0I02 +		CABINET-Plastic (Bingman #2 Ivory)
		CABINET COMPONENTS - 55P2
BZ0D18 +		BAFFLE-Cloth and Cardboard
CL2A07 +		CORD-A.C. (Brown)
DS0A31		DIAL-Scale (1 band) (550-1600 KC)
HC0S63 +		CLIP-Spring Baffle Retainer
HK0R00 +		CLIP-Knob Retainer
HP0B02 +		BASE-Plate
HZ0S00 +		STUD-Trimount Cabinet
KC0B00		KNOB-Control
ZP0B03 +		CABINET-Plastic (Bingman #2 Brown)
		CABINET COMPONENTS - 55L3
BZ0D29		BAFFLE-Speaker
CL2A06 +		CORD-A.C. (Ivory)
DS0A34		DIAL-Scale
HK0R00 +		CLIP-Knob Retainer
HN3S00		NUT-Speed 3/16
HN9S01		NUT-Speed (Special)
HP0B06		PLATE-Base
HS0F17		SPRING-Dial Retainer Flat
KC0I01		KNOB-Control (Ivory)
NK0B00		NAMEPLATE-Bendix
ZP0I03		CABINET-Plastic Bingman 21 (Ivory)
		CABINET COMPONENTS - 55P3
BZ0D30		BAFFLE-Speaker (Cushion & Bracket Assy.)
CL2A07 +		CORD-A.C. (Brown)
DS0A33		DIAL-Scale
HK0R00 +		SPRING-Ring Retainer .015 Blued Finish
HN3S00		NUT-Speed 3/16
HN9S01		NUT-Special
HP0B06		PLATE-Base
HS0F17		SPRING-Dial Retainer Flat
KC0B15		KNOB-Control Brown Plain
NK0B00		NAMEPLATE-Bendix
ZP0B05		CABINET-Plastic Bingman 21 (Brown)

+ Used on previous models

MODEL 55X4

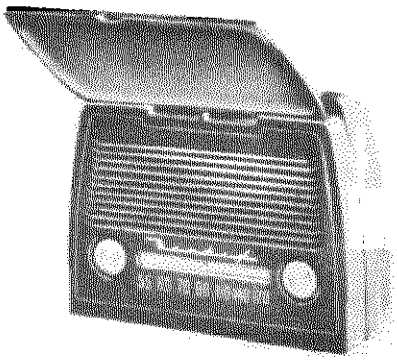

Fig. 1 - Model 55X4

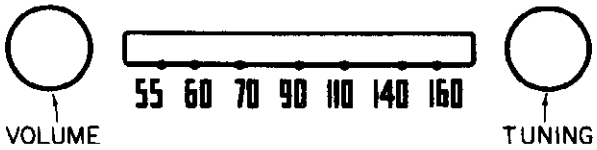

NOTE: OFF-ON SWITCH IS CONTROLLED BY POSITION OF FRONT DOOR.

BATTERY POWER MAY BE USED ONLY WHEN LINE CORD PLUG IS INSERTED INTO CHASSIS RECEPTACLE.

Fig. 2 - Control Layout

GENERAL

Connect line cord plug to correct power source (see Specifications) and allow receiver and any power operated test equipment to warm up for at least five minutes before attempting alignment. This portable chassis has a door switch and when set is out of the cabinet, the receiver can be turned on by merely plugging in the line cord. Depressing the door switch turns the receiver off.

Turn tuning gang fully closed (low end of band) and set dial pointer directly over point marked Reference (Fig. 4).

After warm up period, rotate tuning condenser fully open and adjust volume control to maximum. Place a low range output meter across voice coil and then follow instructions presented in the Alignment Chart.

SPECIFICATIONS

Power Requirements
Voltage . . . . . 105-120 AC or DC
. . . . 6 and 67V Batteries
Frequency. . . . . 60 Cps
Power Consumption . . . . . 15 Watts
Tuning Range. 540-1620KC
Intermediate Frequency. 455KC
Maximum Power Output
AC or DC 180MW
Battery. 110MW
Loudspeaker . . . . . PM 4"
Tube Complement
1R5, 1T4, 1U5, 1LB4, and Rectifier 117Z3.
Total 5 Tubes.
Overall Dimensions

Width	*Depth*	*Height*
9 3/4"	4 1/2"	8"

Connect signal generator to external antenna through the isolating capacitor designated in Alignment Chart. Be sure to adjust slugs at both top and bottom of IF cans beginning with T2. Keep input signal as low as practicable at all times and make all adjustments for maximum output meter reading.

PRECAUTIONS

Various interchangeable IF transformer cans are used in this receiver. The chassis is punched to accomodate either the small, slug tuned type or the larger, capacitor tuned IF cans. Before aligning this radio receiver, determine the type of IF can used and align set accordingly.

An isolating transformer should be used between the AC power line and the receiver for protection of any test equipment that must be operated from the same power line.

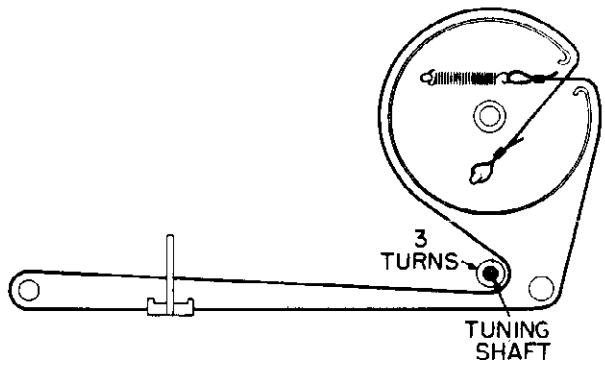

Fig. 6 - Dial Stringing Diagram

©John F. Rider

MODEL 55X4

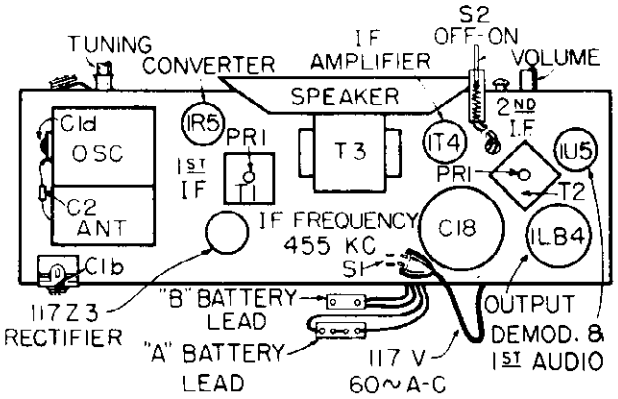

Fig. 3 - Trimmer Location Diagram

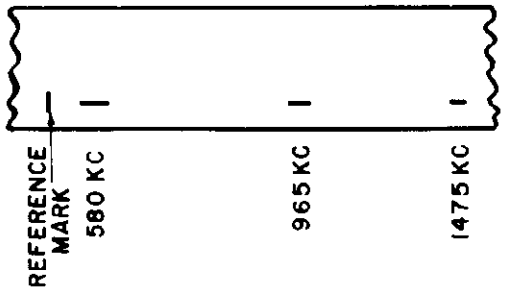

Fig. 4 - Dial Reference Points

ALIGNMENT CHART

CIRCUIT ALIGNED	DIAL POINTER	INPUT FREQ.	APPLY THROUGH	ADJUST
IF	Max. To Right	†455KC	.01 mfd	SLUGS-Top & Bottom of T2 SLUGS-Top & Bottom of T1 (Fig. 3)
OSC. & ANT.	1475 Ref. Mark (Fig. 4)	1475KC	50 mmf	C1d;C1b (Fig. 3)
	965 Ref. Mark (Fig. 4)	965KC	50 mmf	* Check Calibration
	580 Ref. Mark (Fig. 4)	580KC	50 mmf	* Check Calibration

† If calibration does not check within the frequency mark, both oscillator and antenna sections of the gang condenser must be bent to correct tracking.

* Signal Generator connected to external antenna connection for complete alignment.

CONDITIONS OF MEASUREMENTS

LINE VOLTAGE 117 A.C. ZERO SIGNAL INPUT. VOL. CONT. MIN. SOCKET VOLTAGE / RESISTANCE TO CHASSIS GROUND. D.C. AT 20,000Ω/V. A.C. AT 1,000Ω/V. SWITCH S1 CLOSED.

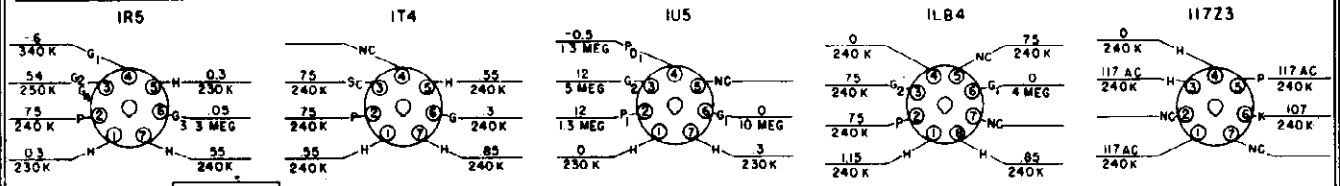

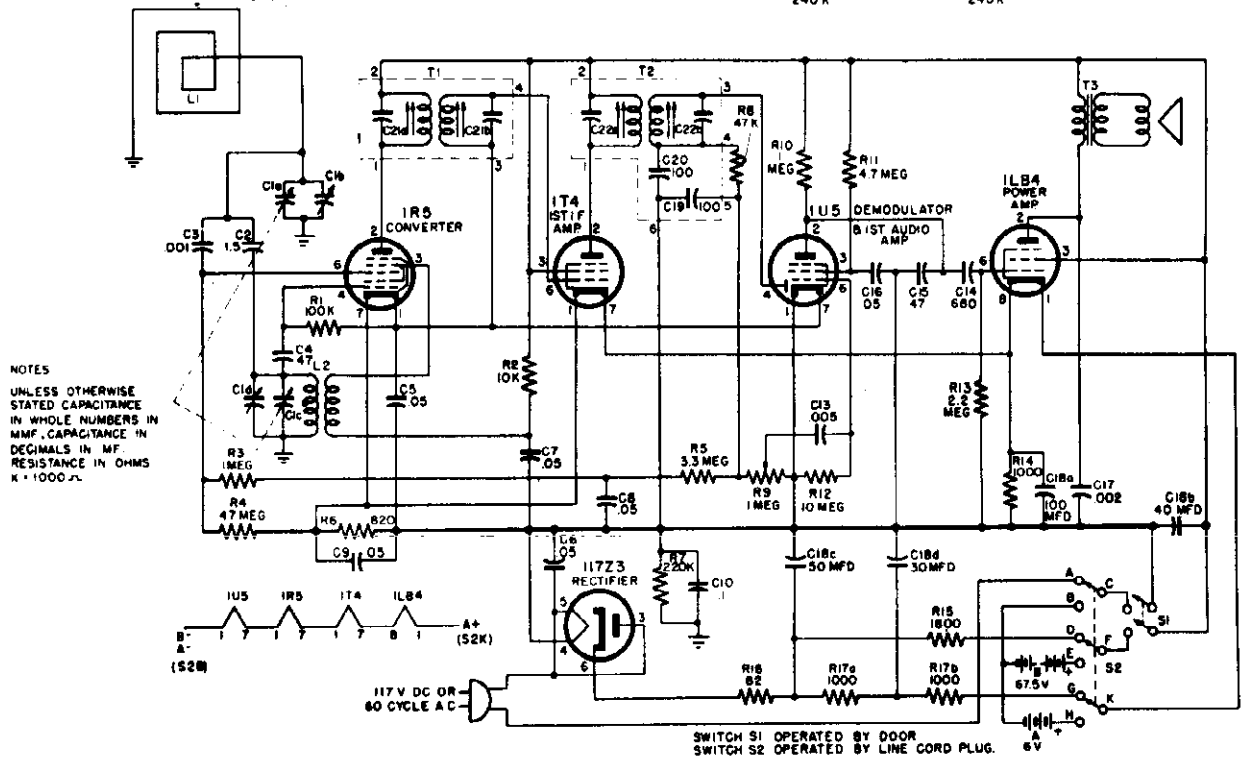

Fig. 5 - Schematic Diagram Model 55X4

MODEL 55X4

REPLACEMENT PARTS LIST

Stock No.	Symbol Nos.	Description
	ELECTRICAL COMPONENTS	
CV0B06	C1a,c	CAPACITOR-Variable
CT1A19	C1b	CAPACITOR-Trimmer 1.6 - 18 mmf
CC9A12	C2	CAPACITOR-Ceramic 1.5 mmf 500V
CC9K50	C3	CAPACITOR-Ceramic .001 mfd 300V
CC6A30	C4, 15	CAPACITOR-Ceramic 47 mmf 500V
CP2T40	C5, 7, 8, 9, 16	CAPACITOR-Paper .05 mfd 200V
CP3S40	C6	CAPACITOR-Paper .05 mfd 400V
CP4T51	C10	CAPACITOR-Paper .1 mfd 400V
CC0M00	C13	CAPACITOR-Ceramic .005 mfd 450V
CC9K44	C14	CAPACITOR-Ceramic 680 mmf 300V
CP6T12	C17	CAPACITOR-Paper .002 mfd 600V
CE4A00	C18	CAPACITOR-Electrolytic 50-40-30 mfd 150V 100 mfd 25V
RC22A104M	R1	RESISTOR-Comp. 100K 1/4W
RC22A103K	R2	RESISTOR-Comp. 10K ±10% 1/4W
RC22A105M	R3, 10	RESISTOR-Comp. 1 meg 1/4W
RC22A475M	R4, 11	RESISTOR-Comp. 4.7 meg 1/4W
RC22A335M	R5	RESISTOR-Comp. 3.3 meg 1/4W
RC22AB21K	R6	RESISTOR-Comp. 820 ohms ±10% 1/4W
RC22A224M	R7	RESISTOR-Comp. 220K 1/4W
RC22A473M	R8	RESISTOR-Comp. 47K 1/4W
RV4C06	R9	RESISTOR-Pot. 1 meg
RC22A106M	R12	RESISTOR-Comp. 10 meg 1/4W
RC22A225M	R13	RESISTOR-Comp. 2.2 meg 1/4W
RC22A102K	R14	RESISTOR-Comp. 1000 ohms ±10% 1/4W
RC23A182K	R15	RESISTOR-Comp. 1.8K ±10% 1/2W
RW2F08	R16	RESISTOR-Wirewound 82 ohms ±10% 2W
RW2M00	R17	RESISTOR-Wirewound (2 Sections) 1000-1000 ohms ±5% 3W
AL0Z19	L1	ANTENNA-AM Loop
L06B05	L2	COIL-Broadcast Oscillator
T10C13	T1	TRANSFORMER-1st IF
T10D19	T2	TRANSFORMER-2nd IF
TA0013	T3	TRANSFORMER-Output
SS1S00	S1	SWITCH-DPDT Plunger Spring
SS1C01	S2	SWITCH-Slide
SP4R02		SPEAKER-PM 4"

Stock No.	Symbol Nos.	Description
	MECHANICAL COMPONENTS	
BT0C01		BOARD-Terminal (A Battery)
BT2S05		BOARD-Terminal 1 Lug 1 Mtg.
BT4S05		BOARD-Terminal 3 Lug 1 Mtg.
BT4S06		BOARD-Terminal 3 Lug 1 Mtg.
BT5S03		BOARD-Terminal 4 Lug 1 Mtg.
CD0C26		CABLE-Dial Tuning
CL0B00		CABLE-Battery (Chassis to B Battery)
GR0S09		GROMMET-Shockmount
NB0M78		BRACKET-Switch Mtg.
HC0S00		CLIP-Tuning Shaft Spring
HC0S60		CLIP-IF Can Mtg.
MP0D03		PLATE-Dial Back
HR0S01		RIVET-Shoulder .171 x .118 (Dial Cable Pulley)
HR0S08		RIVET-Shoulder
MS0C75		SPRING-Dial Cable
MS6F01		SPACER-Tuning Cable Mtg.
ID0M24		INDICATOR-Dial
MB0B00		BEARING-Brass Tuning Shaft
MP0100		PULLEY-Idler Fiber
MS0T17		SHAFT-Tuning
P10P04		PLATE-Line Cord Insulator
SM0C04		SHIELD-Switch
S08L03		SOCKET-Tube Molded Locktal
S07M06		SOCKET-Tube Molded Miniature
XS0C12		INSULATOR-Switch Shield
	CABINET COMPONENTS	
BT0C00		BOARD-Terminal
CS0P02		COVER-Front Panel Plastic Loop
HC0S10		CLIP-Knob Retainer Spring
HC0S65		CLIP-Knob Retainer Spring
HC0S66		CLIP-Spring Trim
HN9S01		NUT-Speed
HP0B11		COVER-Bottom
HP0M06		PLATE-Handle Reinforcing
HS0C76		SPRING-Antenna Lead
HS0X10		SPRING-Door Latch
HZ0H10		HINGE-Spring Type Door
HZ0P02		HANDLE-Brown Plastic
KC0L02		KNOB-Control Beige
NE0B00		NAMEPLATE-Bendix
ZC5P00		CASE-Cabinet
ZD5P00		DOOR-Cabinet
ZL5P00		LID-Cabinet
ZP0P00		CABINET-Plastic Portable

©John F. Rider

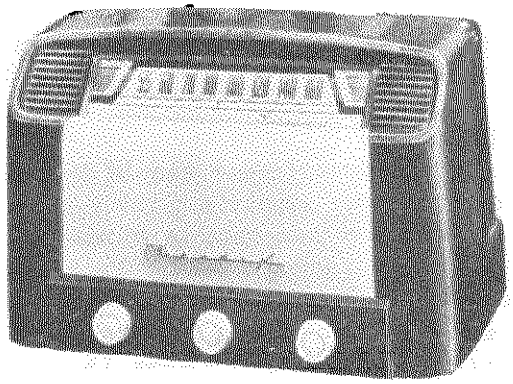

FIG. 1 - MODEL 65P4

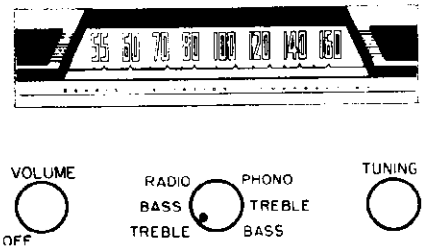

FIG. 2 - CONTROL LAYOUT

SPECIFICATIONS

POWER
- Voltage Rating, AC or DC....105-120
- Frequency-Cycles per second....50-60
- Power Consumption-Watts.....30

TUNING RANGE-FREQUENCY IN KC. 540-1620
INTERMEDIATE FREQUENCY (KC).....455
MAXIMUM POWER OUTPUT IN WATTS.....1.2
LOUD SPEAKER-PM OVAL
- Cone diameter-inches.....4 x 6
- Voice Coil Impedance (ohms at 400 cycles).....3.2

TUBE COMPLEMENT
2-14A7, 1-14Q7, 1-14B6, 1-35A5, 1-35Y4
Two #47 dial lamps

OVERALL DIMENSIONS
12-3/4" x 8-1/16" x 8-3/16"

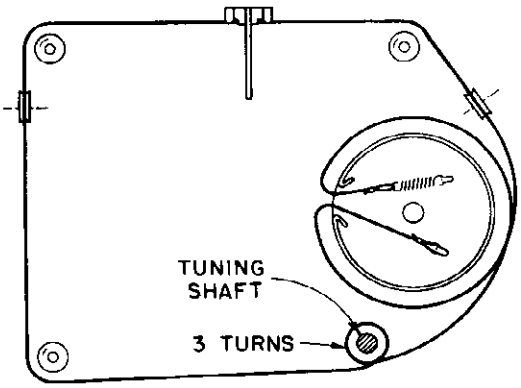

FIG. 3 - DIAL CORD STRINGING DIAGRAM

ALIGNMENT CHART

Circuit Aligned	Input Freq.	Dial Pointer Position	Adjustments
IF	*455 KC	Max. to right	C9b, C9a, C7b, C7a
OSC.	**1475 KC	1475 Ref. Mark	C1c
RF	**1475 KC **965 KC **580 KC	1475 965 580	C1e, C2 +Check Calibration

* Applied to Antenna Input through .1 mfd or less.

** Applied to Antenna Input through 50 mmf. or less.

\+ If dial pointer calibration is not within plus or minus 10 KC the gang rotor plates must be bent to cause correct tracking.

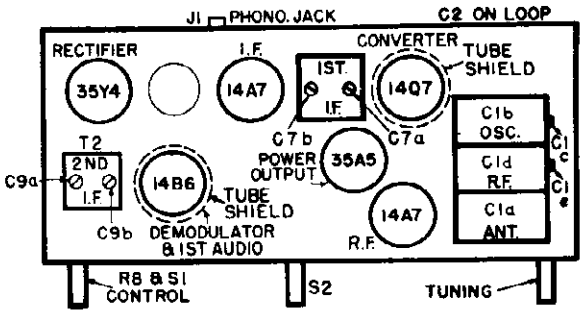

FIG. 5 - TRIMMER LOCATION DIAGRAM

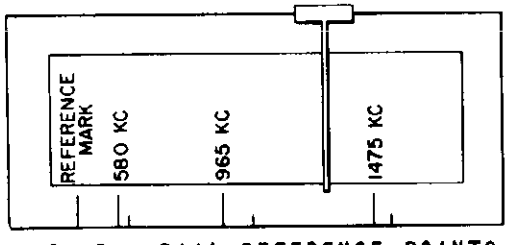

FIG. 6 - DIAL REFERENCE POINTS

©John F. Rider

MODEL 65P4

ALIGNMENT PROCEDURE

Connect line cord plug to 117 volt, 60 cycles AC power source. Set volume control at maximum clockwise position and tone control (S2) in counterclockwise position. Connect output meter across voice coil. Adjust dial pointer by turning tuning control fully counterclockwise and sliding dial pointer on dial cord to Reference Mark on dial back plate, (See Fig. 6). Make all adjustments in order given in ALIGNMENT CHART on opposite page and for maximum output. Keep input as low as possible at all times.

PRECAUTIONS

An isolating transformer should be used between the power supply and the receiver if any of the test equipment is AC operated. The use of isolating capacitors is not recommended as AC though the capacitor may introduce hum modulation, and if the capacitors should break down the test instruments will likely be damaged.

CONDITIONS OF MEASUREMENTS

LINE VOLTAGE 117 A.C. ZERO SIGNAL VOL. CONT. MIN. SOCKET VOLTAGE / RESISTANCE TO COMMON B MINUS D. C. AT 20,000Ω A. C. AT 1,000Ω / V.

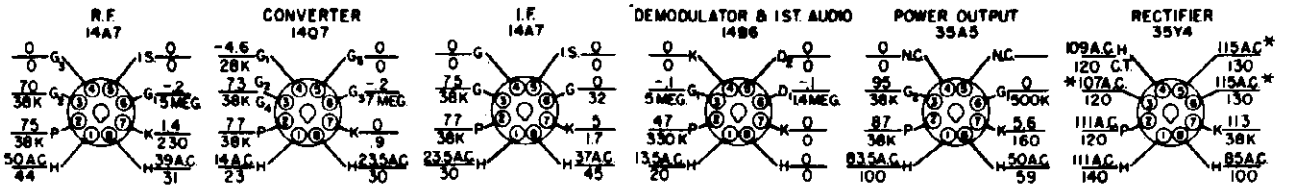

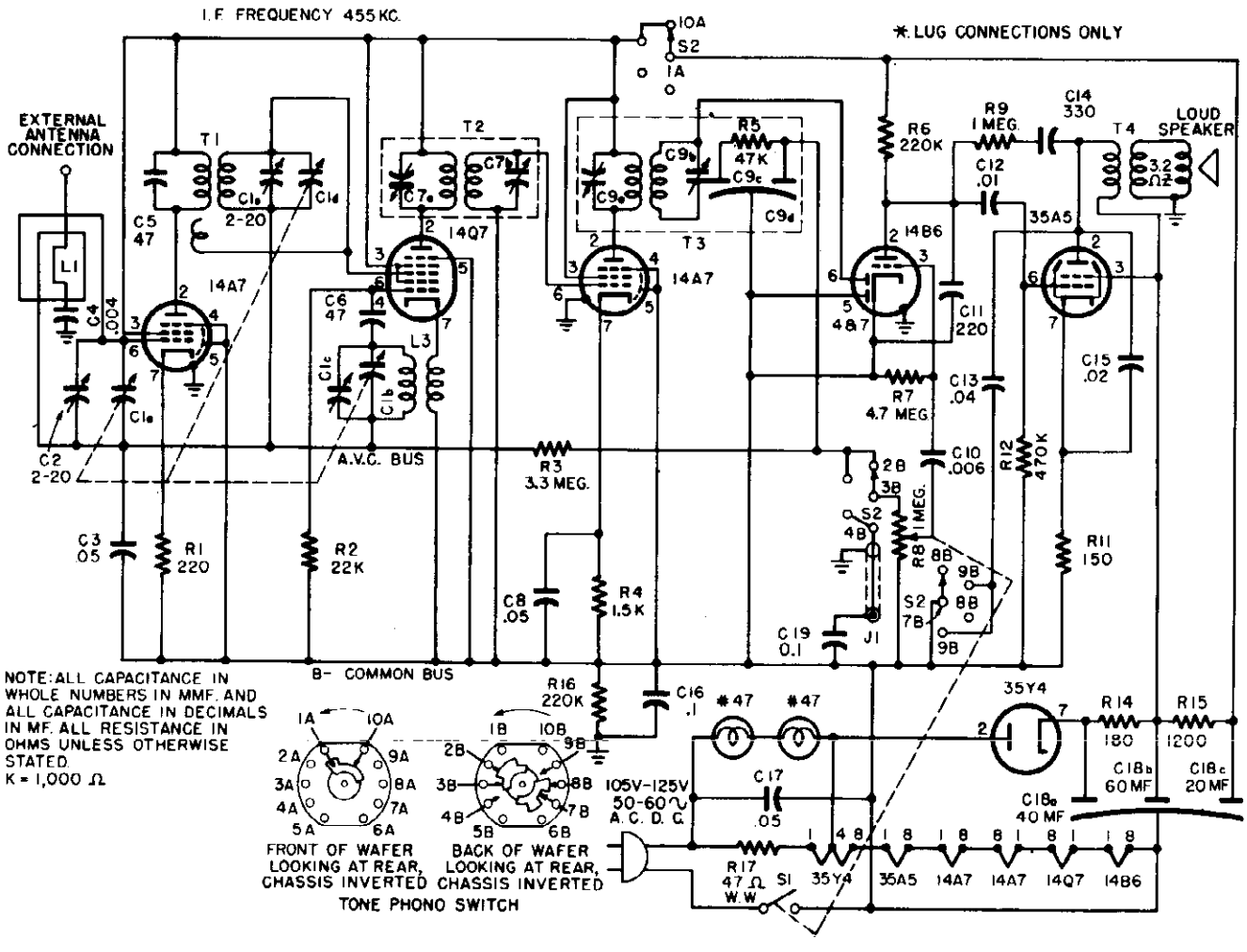

FIG. 4 - SCHEMATIC DIAGRAM - MODEL 65P4

© John F. Rider

REPLACEMENT PARTS LIST

Stock Number	Symbol Number	Description
		ELECTRICAL COMPONENTS
CV0C04 +	(C1)	CAPACITOR-Variable 3 Sections
CP4T40 +	(C3,C8, C17)	CAPACITOR-Paper .05 mfd 400V
CP6T16 +	(C4)	CAPACITOR-Paper .004 mfd 600V
CM5A14 +	(C5,C6)	CAPACITOR-Mica 47 mmf
CT2A06 +	(C7a,b)	CAPACITOR-Trimmer
CT3A00	(C9a,b)	CAPACITOR-Trimmer
CP4T20 +	(C10)	CAPACITOR-Paper .006 mfd 400V
CM5A30 +	(C11)	CAPACITOR-Mica 220 mmf
CP4T31 +	(C12)	CAPACITOR-Paper .01 mfd 400V
CP4T36 +	(C13)	CAPACITOR-Paper .04 mfd 400V
CC8F40 +	(C14)	CAPACITOR-Ceramic 330 mmf
CP4T34 +	(C15)	CAPACITOR-Paper .02 mfd 400V
CP4T51 +	(C19, C16)	CAPACITOR-Paper .1 mfd 400V
CE3A00 +	(C18a, b,c)	CAPACITOR-Electrolytic 40-60-20 mfd
RC22A221M +	(R1)	RESISTOR-Comp. 220 ohms 1/4w
RC22A223M +	(R2)	RESISTOR-Comp. 22K 1/4w
RC22A335M +	(R3)	RESISTOR-Comp. 3.3 meg 1/4w
RC22A152M +	(R4)	RESISTOR-Comp. 1.5K 1/4w
RC22A473M +	(R5)	RESISTOR-Comp. 47K 1/4w
RC22A224M +	(R6,R16)	RESISTOR-Comp. 220K 1/4w
RC22A475M +	(R7)	RESISTOR-Comp. 4.7 meg 1/4w
RV4S03	(R8-S1)	RESISTOR-Pot. 1 meg (with switch)
RC22A105M +	(R9)	RESISTOR-Comp. 1 meg 1/4w
RC24A151K +	(R11)	RESISTOR-Comp. 150 ohms 1w
RC22A474M +	(R12)	RESISTOR-Comp. 470K 1/4w
RC25A181K	(R14)	RESISTOR-Comp. 180 ohms ±10% 2w
RC24A122K	(R15)	RESISTOR-Comp. 1.2K 1w
RW2S07	(R17)	RESISTOR-Wirewound 150 ohms 1w
TR6L00 +	(T1)	TRANSFORMER-RF Interstage
TI0C01 +	(T2)	TRANSFORMER-IF Input
TI0D03 +	(T3)	TRANSFORMER-IF Output
TA0C01	(T4)	TRANSFORMER-Audio Output
LO6B01 +	(L3)	COIL-Oscillator
AL0C06 +*	(L1)	ANTENNA-Loop
SP4C00		SPEAKER-PM 4" x 6"
SR4C00	(S2)	SWITCH-3 Pole 4 Position
# 47 +*		LAMP-Bayonet Base
		MECHANICAL COMPONENTS
AD0C07		ASSEMBLY-Dial Back Plate
BT1S00 +		BOARD-Terminal (1 Lug, 1 Mtg.)
BT2S00 +		BOARD-Terminal (2 Lug, 1 Mtg.)
BT4S01 +		BOARD-Terminal (4 Lug, 1 Mtg.)
CD0N02		CABLE-Dial
GR0S00 +		GROMMET-Capacitor Shockmount
HB0M00 +		BRACKET-Variable Capacitor
HC0C00 +		CLIP-Coil Mounting
HC0C03 +		CLAMP-Cable
HC0S00 +		CLIP-Spring
HC0S62		CLIP-Window Spring
HC0T00 +		CLIP-Tube Shield Ring
HR0S01 +		RIVET-Shoulder
HS0C75		SPRING-Dial Cord
HS6F01 +		SLEEVE-Spacer
HZ0S08		STUD-Trimount (Dial Back Window Mtg.)
ID0M16		INDICATOR-Dial
JR1S00 +	(J1)	RECEPTACLE-Phono
MB0B00 +		BEARING-Tuning Shaft
MP0I00 +		PULLEY-Dial Cord Idler
MS0T02 +		SHAFT-Tuning
		MECHANICAL COMPONENTS (CONT.)
PI0C00 +		PLATE-Electrolytic Mounting
PI0P02 +		PLATE-Line Cord Insulating
RD0A00		REFLECTOR-Dial Fishpaper
SM0T00 +		SHIELD-Tube
SO0D11		SOCKET-Dial Light
SO8L03		SOCKET-Locktal Tube (Bakelite)
SO8L08		SOCKET-Locktal Tube (Phenolic)
WP0D02		WINDOW-Dial Back Plate
		CABINET COMPONENTS
BZ0D17		BAFFLE-Speaker
BZ0R00		BUMPER-Cabinet Rubber
CL2A07		CORD-Brown AC
DA0A35		DIAL-Scale
GZ0M21		GRILLE-Metal Front
HC0D00		CLIP-Dial Metal Retainer (R.H.)
HC0D01		CLIP-Dial Metal Retainer (L.H.)
HC0S01		CLIP-Spring (Baffle Retainer)
HK0R00		RING-Retainer Spring (.016)
HN9S00		NUT-Speed
HN9S01		NUT-Speed (Special)
HP0B01		PLATE-Metal Base
HS0F18		SPRING-Retainer (Front Panel Mtg.
KB0B04		KNOB-Control (Indexed)
KC0B00		KNOB-Control
NE0B00		NAMEPLATE-Bendix
ZP0B07		CABINET-(Biag. #3 Brown)

‡Complete assembly—see separate manual for proper code. †Used on previous models

MODELS 75B5, 75M5,
75M8, 75P6, 75W5

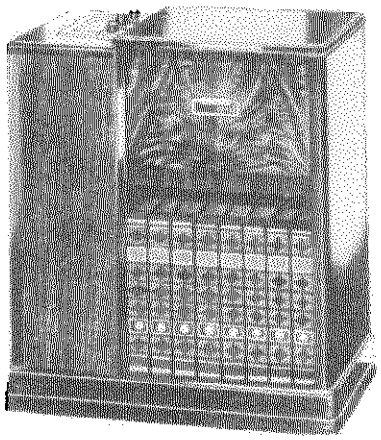

75B5-Blond; 75W5-Walnut; 75M5-Mahogany

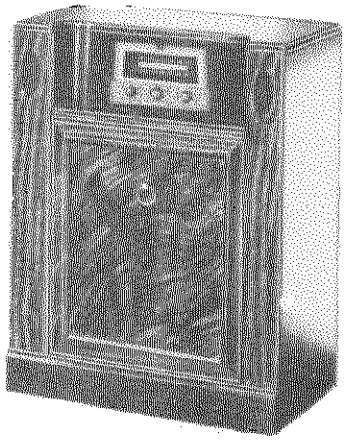

75M8

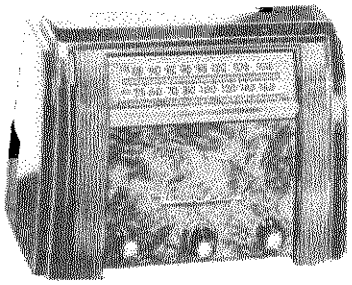

75P6

Fig. 1 - Models 75B5, 75W5, 75M5, 75P6, 75M8

GENERAL

The Bendix Radio Models 75P6, 75B5, 75W5, 75M5, and 75M8 employ six tubes and a selenium rectifier to provide reception of the FM band and AM standard broadcast band. The FM section of this receiver contains a tuned RF stage. This RF stage has its plate voltage removed when the range switch is in any but the FM position. The console models have B+ removed from the plates of the RF amplifier and mixer-oscillator tubes when the band switch is in the PH position. These models also have built-in AM and FM antennas; but while the Model 75P6 (table model) makes use of the AM built-in loop antenna, it uses a line coupler type of FM antenna. When using the line coupler antenna the link indicated in Fig. 6 should be connected as shown. However, should an external antenna be desired, disconnect the link by pivoting it on terminal (#1), and connect the external antenna to terminals #2 and #3 indicated in Fig. 6.

The Model 75M8 is similar to Models 75B5, 75W5, and 75M5, differing mainly in the speakers and associated parts. Model 75M8 has two six inch speakers connected in parallel. To match the impedance of both speakers, the output transformer has an impedance of 1.6 ohms. Each of the Models 75B5, 75W5, and 75M5 uses one eight inch speaker and the output transformer has, therefore, an impedance of 3.2 ohms.

The console models operate strictly on AC since a phono motor is used. The table model does not contain a record changer, and operates on either DC or 60 cycles AC power.

The multi-purpose 19T8 tube combines the functions of an AM demodulator, FM detector, and first audio amplifier, in one envelope. The 12AT7, a double triode, is used as a mixer-oscillator tube.

©John F. Rider

MODELS 75B5, 75M5, 75M8, 75P6, 75W5

SPECIFICATIONS

Power Requirements
Model 75P6--105-120 V DC or 60 cycles AC
Models 75B5, 75W5, 75M5, 75M8--105-120 V 60 cycle AC
Power Consumption
Radio 50W Phono Turntable 25W
Tuning Frequency Range
AM 540-1620 KC
FM 88-108 MC
Intermediate Frequency
AM 455 KC -- FM 10.7 MC
Power Output
Maximum -- 2.5W
Tube Complement
3--12BA6, 12AT7, 19T8, 50L6---Total 6 Tubes Plus Selenium Rectifier
Loudspeaker
Model 75P6 - 4 x 6" PM
Loudspeaker
Models 75B5, 75W5, 75M5 - 8" PM
Model 75M8 - 2 - 6" PM
Record Changer (Models 75B5, 75W5, 75M5, 75M8)
Automatic, for Twelve 10-inch or Ten 12-inch Standard Lateral Cut Records
Overall Dimensions

	Height	*Width*	*Depth*
Model 75P6	8-5/8"	13"	8-5/8"
Models 75B5, 75W5 & 75M5	30"	27"	16-1/4"
Model 75M8	36"	28"	16-1/8"

Shipping Weight
Model 75P6 15 lbs.
Model 75B5 66 lbs.
Model 75W5 66 lbs.
Model 75M5 66 lbs.
Model 75M8 83 lbs.

ALIGNMENT PROCEDURE

The AM circuits should be aligned before the FM section because of possible interaction between the IF coils. Before attempting to align set allow receiver and test equipment to warm up for at least five minutes. Whenever possible, have a speaker connected to the output and use a 30% amplitude modulated signal in order to identify weak signals in a poorly tuned set. The antenna trimmer for AM in Models 75B5, 75W5, 75M5, and 75M8 must be adjusted when the chassis is replaced in the cabinet, since the antenna loop is installed on the back cover and cannot be removed with the chassis. It may be necessary to adjust the FM antenna slightly when the chassis is replaced in the cabinet.

TEST EQUIPMENT REQUIRED

Signal Generator
AM 455 KC to 106 MC
FM 10.7 MC & 88-108 MC
Vacuum Tube Voltmeter
(ground or minus must be isolated from power line)
Capacitors, .01 mfd and 100 mmf
Alignment Screwdrivers
Standard Output Meter

AM ALIGNMENT

PRELIMINARY PROCEDURE: With gang condenser closed, set dial pointer to coincide with reference mark etched into dial back plate. See Fig. 3. Place band switch in AM position and use a 30% modulated signal throughout. Connect an output meter across voice coil. Adjust Antenna Trimmer C3a after chassis is installed in the cabinet. Keep input as low as possible while obtaining a stable output meter reading.

GENERATOR FREQUENCY	GENERATOR COUPLING	DUMMY ANTENNA	SPECIAL CONDITIONS	DIAL SETTING	ADJUSTMENTS	REMARKS
1.) 455 KC AM	High Side--Term. #5 gang cond. Low side--common ground	.01 mfd capacitor	Short AM Osc. Term. #1 to common ground	Gang condenser fully open	Top Slug of T1, T2, T4 and bottom slug of T4	Adjust for maximum output. Repeat several times to insure maximum output
2.) 1475 KC AM	High side--Term. #3 gang cond. Low side--common ground	100 mmf capacitor	Remove short from Osc. Term #1	1475 KC Ref. mark	C79	Rock Tuning control while adjusting for maximum output
3.) 965 KC AM	"	"		965 KC Ref. mark		* Check Calibration
4.) 580 KC	"	"		580 KC Ref. mark		* Check Calibration

* If calibration does not check within tolerances denoted by etched lines on dial backplate, oscillator gang rotor plates must be bent to obtain proper calibration. This operation is very delicate and should be attempted only by properly trained personnel.

© John F. Rider

MODELS 75B5, 75M5, 75M8, 75P6, 75W5

FM ALIGNMENT -- CW METER METHOD

Preliminary Alignment Procedure: With gang condenser fully closed, adjust dial pointer to coincide with the reference mark etched into dial back plate. See Fig. 3. Place band switch in FM position. Use 30% amplitude modulated signals when possible.

GENERATOR FREQUENCY	DUMMY ANTENNA	GENERATOR COUPLING	SPECIAL CONDITIONS	DIAL SETTING	VTVM CONNECTIONS	ADJUSTMENTS	REMARKS
1.)10.7 MC AM or CW	.01 mfd capacitor	High side-term. #4 Gang Condenser. Low side-common ground	Short FM Osc. Term. #2 of Gang Condenser to common ground.	Gang Condenser fully open	+Lead to B- -Lead to Pin #2 of tube 19T8	Bottom Slug of T1,T2, Top slug of T3	Adjust for maximum AVC reading on VTVM. Repeat adjustment several times to insure maximum reading
2.)Remove Signal Generator		Remove Signal Generator	Short FM Osc. term. #2 of gang condenser to common ground. Two 100K matched resistors in series connected between Pin #2 of tube 19T8 & B-	"	Center Tap of 100K resistors and term. #6 of switch S1C	Adjust VTVM for Zero	While connected to chassis, the VTVM is adjusted to zero by its zero centering control
3.)10.7 MC AM or CW	.01 mfd capacitor	High side-term. #3 of Gang condenser, Low side-Common Ground	"	"	"	Bottom slug of T3	Adjust bottom slug to produce zero reading on VTVM
4.) Repeat Steps 1, 2, and 3 until Step 1 produces no change in Step 3 adjustment and top of T3 produces no deflection in Step 3.							
5.)106 MC	FM Dummy Antenna (See Fig. 2)	FM Dummy Antenna (See Fig. 2)	Remove short from Term. #2 of gang condenser. Remove 100K Resistors	106 MC Ref. mark	+Lead to B- -Lead to Pin #2 of tube 19T8	Osc. trimmer C9, then RF, C3c & Ant., C36	Rock tuning control when adjusting C9 for maximum AVC reading, then adjust C3c and C3b respectively for maximum †
6.)97 MC AM or CW	"	"		97 MC Ref. mark	"		* Check Calibration
7.)90 MC AM or CW	"	"		90 MC Ref. mark	"		* Check Calibration

† Oscillator operates on high frequency side of incoming signal but it is possible to adjust to the low side. Set Signal Generator to 84.6 MC and if signal is heard readjust oscillator trimmer at signal generator frequency of 106 MC and check again at 84.6 MC. Signal should not be heard.

* If calibration is not within reasonable tolerance at these points, the inductance of the FM oscillator coil must be adjusted. If dial pointer reading is on low frequency side, inductance of oscillator coil is too low and turns of coil must be compressed slightly. If pointer reading is on high frequency side, the coil inductance is too high and coil turns must be spread slightly. Repeat steps 5, 6, and 7 until correct calibration is obtained.

To adjust RF coil, tune receiver to 90 MC and observe AVC reading. Insert into RF coil, the iron core of tuning wand (rod of insulating material one end of which contains an iron core slug and the other end contains a non-ferrous metallic slug). If reading increases, the inductance of coil is too low and, turns must be spread *slightly*. If reading decreases, insert opposite end (non-ferrous) of tuning wand into RF coil. Inductance of coil is too low if reading increases and, turns must be compressed *slightly*. Correct adjustment is obtained when insertion of either end of tuning wand causes the reading to decrease.

The antenna coil inductance is adjusted in the same manner as the RF coil.

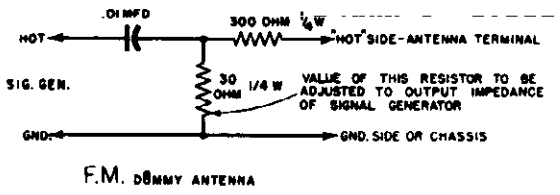

Fig. 2 - FM Dummy Antenna

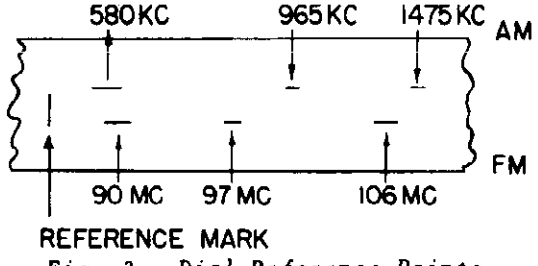

Fig. 3 - Dial Reference Points

© John F. Rider

MODELS 75B5, 75M5, 75M8, 75P6, 75W5

VISUAL ALIGNMENT OF RATIO DETECTOR

The ratio detector in the FM section of this radio receiver can be aligned by the so-called Visual Alignment method. This method can be used in conjunction with the CW method by following the procedure outlined below:

1. Perform Step 1 indicated in CW Meter Method Chart.
2. Set Signal Generator to 10.7 MC, FM, with sweep width at maximum possible (should be a minimum of 200 KC). Connect output of generator to terminal #4 of gang condenser and B-.
3. Connect vertical input of cathode ray oscilloscope to terminal #6 of switch S1C and B-, and place a 60 cycle sine wave signal to horizontal input if oscilloscope does not have an internal 60 cycle sweep.

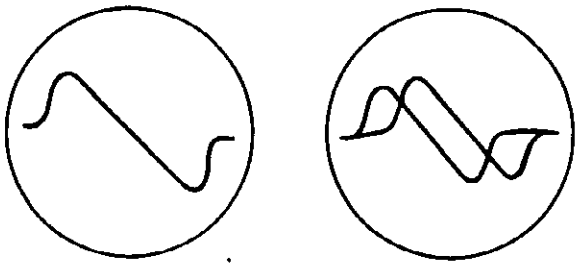

Fig. 4 - S Curves

4. Adjust signal generator frequency until 'S' curve (Fig. 4) is centered on the horizontal sweep. Curve may be reversed because of internal circuit of oscilloscope.
5. Adjust primary of T3 (top slug) and secondary (bottom slug) for maximum desired 'S' curve. A VTVM can be very useful at this point if connected to pin #2 of tube 19T8 and B-. The oscilloscope will then indicate the most linear curve and the VTVM will indicate the maximum AVC voltage.
6. Adjust bottom of slugs of T1 and T2 and then repeat step 5 to insure correct alignment.
7. Continue at this point with the alignment procedure starting with step 5 as outlined in the FM-CW Meter Method.

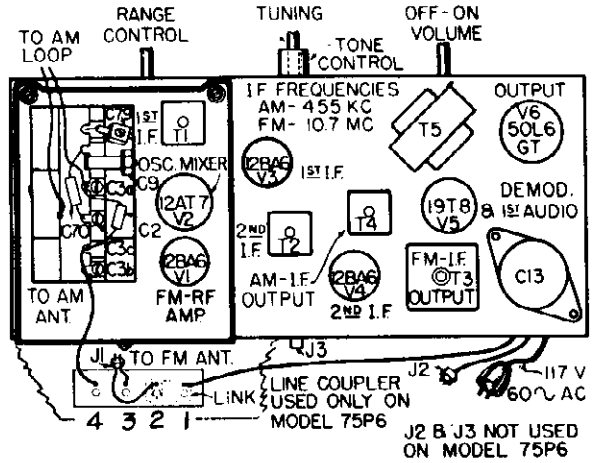

Fig. 6 - Trimmer Location

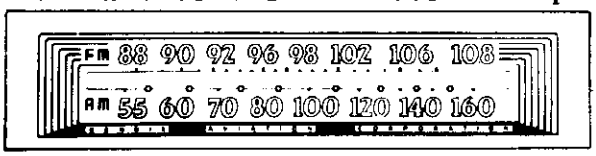

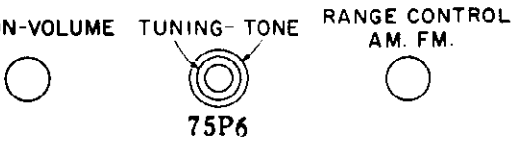

75P6

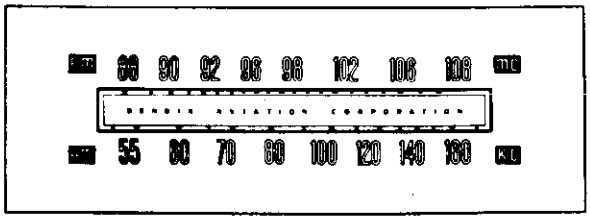

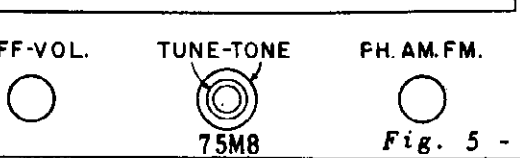

75M8

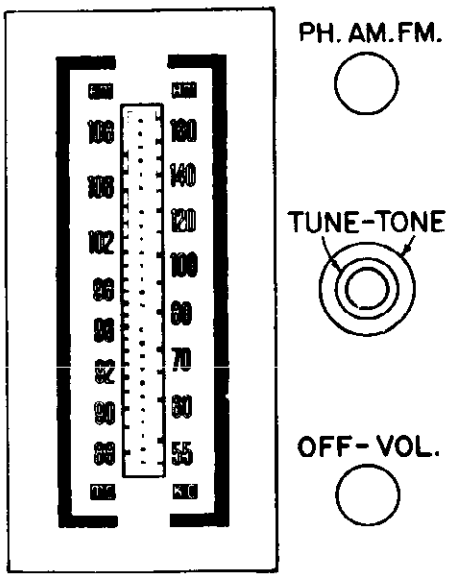

Fig. 5 - Control Layouts 75B5, 75M5, 75W5

© John F. Rider

MODELS 75B5, 75M5,
75M8, 75P6, 75W5

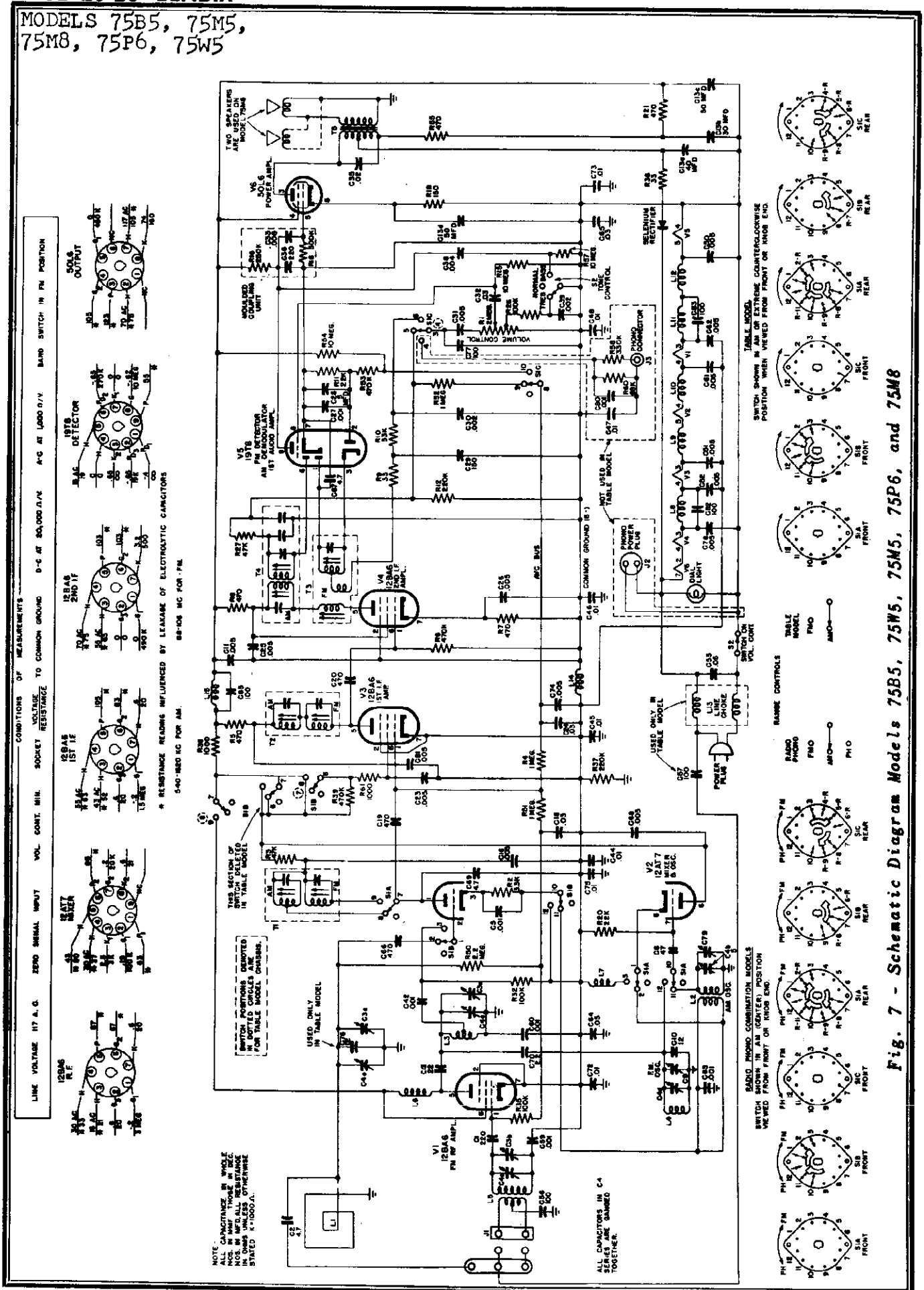

Fig. 7 - Schematic Diagram Models 75B5, 75W5, 75M5, 75P6, and 75M8

MODELS 75B5, 75M5, 75M8, 75P6, 75W5

FM ANTENNA

The FM antenna used in Models 75B5, 75W5, 75M5, and 75M8 will not be found in the Replacement Parts List since the service man, by following the specifications in the drawing below, can very easily and inexpensively make the antenna himself.

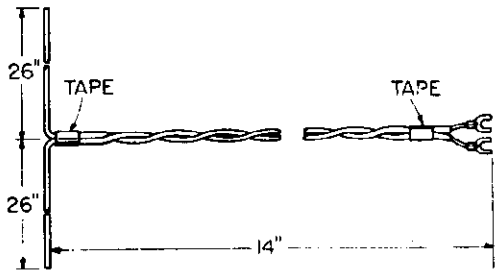

Fig. 8 - FM Antenna

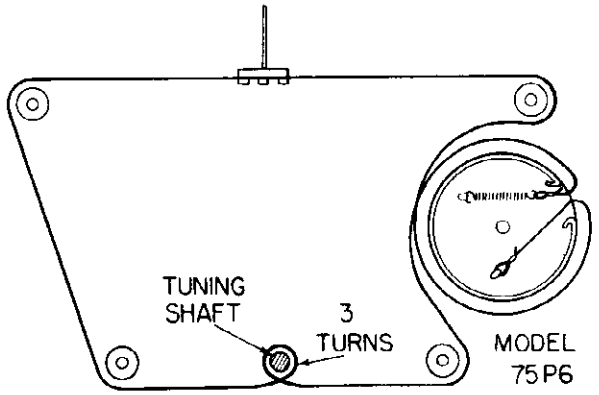

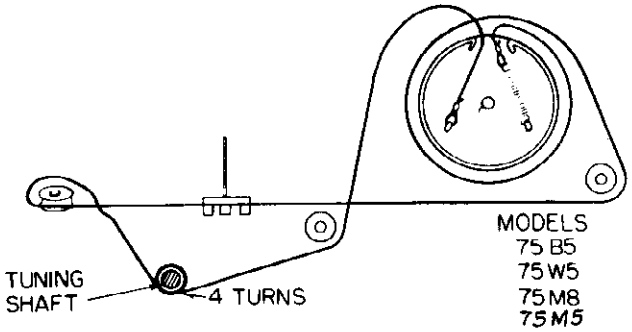

Fig. 9 - Dial Stringing Diagrams

REPLACEMENT PARTS LIST

Stock No.	*Symbol*	*Description*
ELECTRICAL COMPONENTS COMMON TO ALL MODELS		
ACOC01	C33,36; R16,18	ASSEMBLY-Capacitor, Resistor Coupling
CC9A38	C1	CAPACITOR-Ceramic 220 mmf 500V
CC0A18	C2,67,69	CAPACITOR-Ceramic 4.7 mmf 500V
CV0D01	C3a,b,c; C4a,b,c,d,e	CAPACITOR-Variable Air
CM5A46	C5	CAPACITOR-Mica .001 mfd 300V
CC8B30	C6	CAPACITOR-Ceramic 47 mmf ±10% 500V
CT1B05	C9	CAPACITOR-Trimmer 0.2-3.0 mmf
CC8B23	C10	CAPACITOR-Ceramic 12 mmf ±10% 500V
CC0M00	C11,16,23,25,26,31,50,51,52,61,62,68,74,78,81	CAPACITOR-Ceramic .005 mfd Min. Value 500V
CC0A26	C12	CAPACITOR-Ceramic 22 mmf 500V
ELECTRICAL COMPONENTS COMMON TO ALL MODELS (CONT'D)		
CE4A03	C13	CAPACITOR-Electrolytic 50-40-30 mfd 150V 50 mfd 25V
CP4T36	C18,24,32,65	CAPACITOR-Paper .05 mfd 400V
CC9M42	C19,20,66	CAPACITOR-Ceramic 470 mmf Min. Value 500V
CC9M50	C27,42,58,59,60,63	CAPACITOR-Ceramic .001 mfd Min. Value 500V
CE1T06	C28	CAPACITOR-Electrolytic 5 mfd 50V
CC9A36	C29	CAPACITOR-Ceramic 150 mmf 500V
CP6T12	C30,39	CAPACITOR-Paper .002 mfd 600V
CP4T34	C35	CAPACITOR-Paper .02 mfd 400V
CP6T16	C38	CAPACITOR-Paper .004 mfd 600V
CC9R80	C44,45,46,48,72,73,75	CAPACITOR-Ceramic .01 mfd 500V
CP4T40	C55,64	CAPACITOR-Paper .05 mfd 400V

©John F. Rider

MODELS 75B5, 75M5, 75M8, 75P6, 75W5

Stock No.	Symbol	Description
ELECTRICAL COMPONENTS COMMON TO ALL MODELS (CONT'D)		
CC9A34	C56,77	CAPACITOR-Ceramic 100 mmf 500V
CC0A14	C70	CAPACITOR-Ceramic 2.2 mmf 500V
CT1A20	C79	CAPACITOR-Trimmer 4-40 mmf
RV4S13	R1 & S2	RESISTOR-Pot. with Switch 2 meg
RC23A332M	R2	RESISTOR-Comp. 3.3K 1/2W
RC22A473M	R3,27	RESISTOR-Comp. 47K 1/4W
RC22A105M	R4,51,52	RESISTOR-Comp. 1 meg 1/4W
RC23A471M	R5,7,8	RESISTOR-Comp. 470 ohms 1/2W
RC22A474M	R6,39,53	RESISTOR-Comp. 470K 1/4W
RC22A330M	R9	RESISTOR-Comp. 33 ohms 1/4W
RC22A333M	R10	RESISTOR-Comp. 33K 1/4W
RC22A223M	R11,20	RESISTOR-Comp. 22K 1/4W
RC22A224M	R12,37	RESISTOR-Comp. 220K 1/4W
RC22A106M	R15,54,57	RESISTOR-Comp. 10 meg 1/4W
RC23A151M	R19	RESISTOR-Comp. 150 ohms 1/2W
RC24A471M	R21,55	RESISTOR-Comp. 470 ohms 1W
RC22A104M	R26,32,35	RESISTOR-Comp. 100K 1/4W
RC23A102M	R36,61	RESISTOR-Comp. 1000 ohms 1/2W
RW1F06	R38	RESISTOR-Wirewound 33 ohms 1W
RM2F66	R50	RESISTOR-Metalized 2.2 meg 1/3W
L07B01	L2	COIL-Oscillator BC
L10F01	L3	COIL-RF FM
L07F00	L4	COIL-Oscillator FM
LA0F01	L5	COIL-Antenna FM
LF0A01	L6,7	COIL-RF Choke
LF0C00	L8,11,15	COIL-RF Choke
LF0A00	L9,10,12	COIL-RF Choke
LF0A07	L14	COIL-RF Choke
T10C12	T1	TRANSFORMER-1st IF
T10D20	T2	TRANSFORMER-2nd IF
T10D17	T3	TRANSFORMER-Ratio Detector
T10D18	T4	TRANSFORMER-AM 3rd IF
QR0S01		RECTIFIER-Selenium
SS1C02	S2	SWITCH-Tone Slide 2 Pole, 3 Position
C7		DIAL LIGHT
ELECTRICAL COMPONENTS USED ONLY ON MODEL 75P6		
CC9A34	C57	CAPACITOR-Ceramic 100 mmf 500V
CC8B23	C76	CAPACITOR-Ceramic 12 mmf ±10% 500V
AL0C09	L1	ANTENNA-AM Loop
LF0A04	L13	COIL-Line Choke
TA0016	T5	TRANSFORMER-Output
SR2F00	S1	SWITCH-Rotary 3 Section, 2 Position
SP4002		SPEAKER-PM 4" x 6"
ELECTRICAL COMPONENTS COMMON ONLY TO MODELS 75B5, 75W5, 75M5 & 75M8		
CP4T51	C47	CAPACITOR-Paper .1 mfd .400V
CC9M50	C80	CAPACITOR-Ceramic .001 mfd Min. Value 500V
RC22A334M	R58	RESISTOR-Comp. 330K 1/4W

Stock No.	Symbol	Description
ELECTRICAL COMPONENTS COMMON ONLY TO MODELS 75B5, 75W5, 75M5 & 75M8 (CONT'D)		
RC22A683M	R60	RESISTOR-Comp. 68K 1/4W
AL0Z15		ANTENNA-AM Loop
TA0016	T5	TRANSFORMER-Output (Models 75B5, 75W5, 75M5 Only)
TA0019	T5	TRANSFORMER-Output (Model 75M8 Only)
SP6R02		SPEAKER-PM 6" (Model 75M8 Only)
SP8R01		SPEAKER-PM 8" (Models 75B5, 75W5, 75M5 Only)
MECHANICAL COMPONENTS COMMON TO ALL MODELS		
BT1S03		BOARD-Terminal 1 Lug 1 Mtg.
BT3S06		BOARD-Terminal 3 Lugs 1 Mtg.
BT4S06		BOARD-Terminal 4 Lugs 1 Mtg.
BT6S04		BOARD-Terminal 6 Lugs 2 Mtg.
BT8S00		BOARD-Terminal 8 Lugs 2 Mtg.
GR0S09		GROMMET-Sub-chassis Mtg.
GR0S15		GROMMET-Sub-chassis Shock-mount
HB0M86		BRACKET-Sub-chassis Mtg.
HC0M08		SHIELD-Tube Base
HC0S00		CLIP-Tuning Shaft Spring
HC0S60		CLIP-IF Can
HC0S67		CLIP-Flange Skirted
HS0C75		SPRING-Dial Cord
HS0F19		SLEEVE-Spacer Sub-chassis Mtg.
HS0S13		STUD-Chassis Shockmount
JR2012	J2	RECEPTACLE-2 Contact
MB0B00		BEARING-Brass (Tuning Shaft)
ML0C04		LEVER-Tone Switch Actuating Control
MP0100		PULLEY-Fiber Idler
P10C01		PLATE-Electrolytic Mtg.
P10P01		PLATE-Line Cord Insulating
SM0T06		SHIELD-Miniature Tube
S00D12		SOCKET-Dial Light
S09M00		SOCKET-9 Prong
S07M09		SOCKET-Miniature 7 Prong
S07M10		SOCKET-Miniature Molded 7 Prong
S08S03		SOCKET-Octal Tube
XS0C11		STRIP-Insulating
XS0C13		STRIP-Ground Flat (Sub-chassis)
XS0C14		STRIP-Ground Flat (Main chassis)
MECHANICAL COMPONENTS USED ONLY ON MODEL 75P6		
AD0B03		ASSY-Dial Back Plate
CD0N00		CORD-Dial Nylon
CL2A07		CORD-AC Line
HB0M85		BRACKET-Loop & Dial Light Mtg.
HC0S62		CLIP-Spring Retainer Back Plate Window
ID0M25		INDICATOR-Metal Dial
MP0102		PULLEY-Metal Idler
MS0T19		SHAFT-Tuning
WP0D07		WINDOW-Back Plate

© John F. Rider

MODELS 75B5, 75M5, 75M8, 75P6, 75W5

Stock No.	Symbol	Description
		MECHANICAL COMPONENTS COMMON ONLY TO MODELS 75B5, 75W5, 75M5 & 75M8
CD0N01		CORD-Dial Nylon
CL2A08		CORD-AC Line
HB0M74		BRACKET-Indicator Slide Rail
HB0M84		BRACKET-Dial Back Plate Mtg.
HB0M87		BRACKET-Dial Light Mtg.
ID0M21		INDICATOR-Metal Pointer & Carriage
JR1S00	J3	RECEPTACLE-Single Contact Phono
MS0T19		SHAFT-Tuning (Models 75B5, 75W5, 75M5 Only)
MS0T18		SHAFT-Tuning (Model 75M8)
PB0D06		PLATE-Dial Back
WF0100		WASHER-Insulating (Fish-paper 23/64 x 15/16 x .015)
XS0C15		STRIP-Ground (Main Chassis)
		CABINET COMPONENTS
		MODEL 75P6
BT4T01		BOARD-Terminal 4 Screw Lugs
BZ0D34		BAFFLE-Corrugated Paper
DS0C11		DIAL-Scale AM-FM
GZ0M18		GRILLE-Metal
HB0M80		BRACKET-Grille Mounting
HC0C14		CLIP-Spring Speed
HC0C15		CLIP-Grille Retainer Mounting
HC0D09		CLIP-Spring Dial Retainer
HC0S10		CLIP-Control Knob Retainer Ring
HC0S63		CLIP-Baffle Retainer Spring
HC0S68		CLIP-Concentric Knob Retainer Ring
HP0B09		PLATE-Base
HZ0G08		GLIDE-Furniture
KC0B16		KNOB-Control (Dark Brown)
WF0F17		WASHER-Brown Felt (5/8 x 13/16 x 1/16)
WF0F18		WASHER-Brown Felt (13/32 x 13/16 x 1/16)
XS0M01		STRIP-Bronze Trim
ZP0B06		CABINET-Plastic Table (Brown)
		MODELS 75B5, 75W5 & 75M5
BT3S06		BOARD-Terminal 3 Lugs 1 Mtg.
BT3T00		BOARD-Terminal 3 Screw Lugs
BZ0B14		BACK-Upper Cabinet Cover (Model 75W5 & 75M5)
BZ0B15		BACK-Lower Cabinet Cover (Model 75W5 & 75M5)
BZ0B16		BACK-Upper Cabinet Cover (Model 75B5)
BZ0B17		BACK-Lower Cabinet Cover (Model 75B5)
BZ0D31		BOARD-Wood Baffle
DS0C14		DIAL-Scale AM-FM
ED0M05		ESCUTCHEON-Dial Metal
GZ0M12		GRILLE-Walnut, Perforated (Model 75W5)
GZ0M13		GRILLE-Bleach, Perforated (Model 75B5)
		MODELS 75B5, 75W5 & 75M5 (CONT'D)
GZ0M30		GRILLE-Mahogany, Perforated (Model 75M5)
HC0S10		CLIP-Control Knob Retainer Ring
HC0S68		CLIP-Concentric Knob Retainer Ring
HC0S69		CLIP-Dial Retainer
HK0R11		KNOB-Drawer Pull (Models 75B5 & 75W5)
HK0R16		KNOB-Drawer Pull (Model 75M5)
HP0B07		PLATE-Bottom Mtg.
HZ0G00		GLIDE-Furniture (Drawer Side Rail)
HZ0G01		GLIDE-Cabinet
HZ0G05		GLIDE-Drawer Center Rail
JP2007	J1	PLUG-2 Contact
KC0B16		KNOB-Control (Models 75W5 & 75M5)
KC0L03		KNOB-Control (Model 75B5)
KY0B02		KNOB-Concentric (Models 75W5 & 75M5)
KY0L00		KNOB-Concentric (Model 75B5)
WF0F17		WASHER-Concentric Knob (Felt)
ZW7G01		CABINET-Walnut (Model 75W5)
ZW7G06		CABINET-Bleached (Model 75B5)
ZW7G07		CABINET-Mahogany (Model 75M5)
		MODEL 75M8
BT3S06		BOARD-Terminal 3 Lugs 1 Mtg.
BT3T00		BOARD-Terminal 3 Screw Lugs
BZ0B12		BACK-Upper Cabinet Cover
BZ0B13		BACK-Lower Cabinet Cover
BZ0D38		BOARD-Plywood Baffle
BZ0D39		BOARD-Cardboard Baffle
DS0C13		DIAL-Scale AM-FM
ED0P00		ESCUTCHEON-Plastic Dial & Control
GZ0M26		GRILLE-Perforated Metal
HB0M92		BRACKET-Am Antenna Loop
HB0M94		BRACKET-Chassis Shelf
HC0S10		CLIP-Control Knob Retainer Ring
HC0S68		CLIP-Concentric Knob Retainer Ring
HC0S69		CLIP-Dial Retainer
HC0S72		CLIP-Drawer Retainer
HK0R12		KNOB-Door Pull
HS0S14		STUD-Escutcheon Retainer
HW8C02		WASHER-#8 Cup-Type (Back Cover)
HZ0C07		CATCH-Bullet
HZ0G01		GLIDE-Cabinet
HZ0G06		GLIDE-Drawer Slide
HZ0H04		HINGE-Door
JP2007	J1	PLUG-2 Contact
KC0B16		KNOB-Control
KY0B02		KNOB-Concentric
WF0F17		WASHER-Concentric Knob (Felt)
ZW7G03		CABINET-Mahogany

©John F. Rider

MODEL 79M7



Fig. 1 – Model 79M7

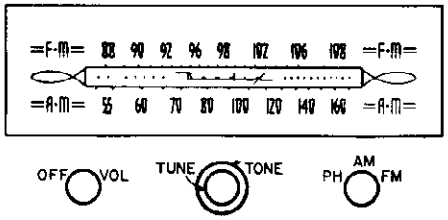

Fig. 2 – Control Diagram

SPECIFICATIONS

Power Requirements
105–120 Volts 60 cycle AC
Power Consumption
Radio–85 Watts; Phono-turntable–25 Watts
Tuning Frequency Range
AM 540–1620 KC – FM 88–108 MC
Intermediate Frequency
AM 455 KC – FM 10.7 MC
Power Output
Maximum – 4 Watts
Tube Complement
3–6AB6, 12AT7, 6T8, 6V6GT and
Rectifier 5Y3 –– Total 7 Tubes
Loudspeaker
10" PM
Record Changer
Automatic for Twelve 10-inch or Ten 12-inch Standard Lateral Cut or Long Play Microgroove Records

GENERAL

Bendix Radio Model 79M7 employs seven tubes including a rectifier to provide reception of the FM and AM standard broadcast bands. Two individual chassis are used in this receiver. The power supply is found in the smaller chassis. The FM section of this receiver contains a tuned RF stage of amplification which has the plate voltage removed from its tube when the band switch is in any but the FM position. Built-in AM and FM antennas are attached to the cabinet. An external AM antenna may be connected to the terminal board provided on the rear of the cabinet. When an external FM antenna is used, the built-in FM antenna must be disconnected from the binding screws located on the back of the cabinet and labelled "FM Dipole", and the external antenna connected to these two terminals. The power supply required for this model is 105–120 volts 60 cycle AC since a phono motor is included. The radio chassis itself is operative on AC or DC, but the phono motor would be damaged beyond repair if operated on DC. The multi-purpose 6T8 combines the functions of AM demodulator, FM detector, and first audio amplifier in one envelope. The 12AT7, a double triode, is used as a mixer-oscillator tube. The ten inch permanent magnet type speaker is driven by a 6V6GT audio output tube.

©John F. Rider

PRELIMINARY ALIGNMENT PROCEDURE

The AM circuits should be aligned before the FM section because of possible interaction between the IF coils. Before attempting to align set allow receiver and test equipment to warm up for at least five minutes. Whenever possible, have a speaker connected to the output and use a 30% amplitude modulated signal in order to identify weak signals in a poorly tuned set. The antenna trimmer for AM which is attached to the loop antenna must be adjusted when the chassis is replaced in the cabinet, since the antenna loop is installed in the cabinet and cannot be removed with the chassis. It may be necessary to adjust the FM antenna trimmer slightly when the chassis is replaced in the cabinet.

TEST EQUIPMENT REQUIRED

Signal Generator
AM 455 KC to 106 MC
FM 10.7 MC & 88–108 MC
Vacuum Tube Voltmeter
(ground or minus must be isolated from power line)
Capacitors, .01 mfd and 100 mmf
Alignment Screwdrivers
Standard Output Meter

AM ALIGNMENT

PRELIMINARY PROCEDURE: With gang condenser closed, set dial pointer to coincide with reference mark etched into dial back plate. See Fig. 5. Place band switch in AM position and use a 30% modulated signal throughout. Connect an output meter across voice coil. Adjust Antenna Trimmer C67 after chassis is installed in the cabinet. Keep input as low as possible while obtaining a stable output meter reading.

GENERATOR FREQUENCY	GENERATOR COUPLING	DUMMY ANTENNA	SPECIAL CONDITIONS	DIAL SETTING	ADJUSTMENTS	REMARKS
1.) 455 KC AM	High Side—Term. #5 gang cond. Low side—common ground	.01 mfd capacitor	Short AM Osc. Term. #1 to common ground	Gang condenser fully open	Top slug of T1, T2, T4 and bottom slug of T4	Adjust for maximum output. Repeat several times to insure maximum output
2.) 1475 KC AM	High side—Term. #3 gang cond. Low side—common ground	100 mmf capacitor	Remove short from Osc. Term. #1	1475 KC Ref. mark	C17	Rock tuning control while adjusting for maximum output
3.) 965 KC AM	"	"		965 KC Ref. mark		* Check Calibration
4.) 580 KC	"	"		580 KC Ref. mark		* Check Calibration

*** If calibration does not check within tolerances denoted by etched lines on dial backplate, oscillator gang rotor plates must be bent to obtain proper calibration. This operation is very delicate and should be attempted only by properly trained personnel.**

FM ANTENNA

The FM antenna used with Model 79M7 will not be found in the Replacement Parts List since the service man, by following the specifications in the drawing, Fig. 3, can very easily and inexpensively make the antenna himself.

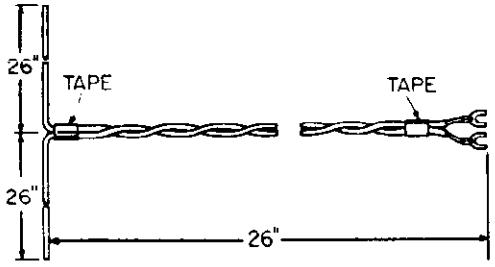

Fig. 3 – FM Antenna

© John F. Rider

MODEL 79M7

FM ALIGNMENT

CW METER METHOD

PRELIMINARY ALIGNMENT PROCEDURE: With gang condenser fully closed, adjust dial pointer to coincide with the reference mark etched into dial back plate. See Fig. 5. Place band switch in FM position. Use 30% amplitude modulated signals when possible.

GENERATOR FREQUENCY	DUMMY ANTENNA	GENERATOR COUPLING	SPECIAL CONDITIONS	DIAL SETTING	VTVM CONNECTIONS	ADJUSTMENTS	REMARKS
1.) 10.7 MC AM or CW	.01 mfd capacitor	High side—term. #4 Gang Condenser. Low side—chassis ground	Short FM Osc. Term. #2 of Gang Condenser to chassis ground	Gang Condenser fully open	+Lead to chassis ground —Lead to Pin 2 of tube 6T8	Bottom slug of T1, T2, Top slug of T3	Adjust for maximum AVC reading on VTVM. Repeat adjustment several times to insure maximum reading
2.) Remove Signal Generator		Remove Signal Generator	Short FM Osc. term. #2 of gang condenser to common ground. Two 100K matched resistors in series connected between Pin #2 of tube 6T8 & chassis ground	"	Center Tap of 100K resistors and term. #6 of switch S1C	Adjust VTVM for Zero	While connected to chassis, the VTVM is adjusted by its zero centering control
3.) 10.7 MC AM or CW	.01 mfd capacitor	High side—term. #4 of Gang condenser. Low Side—chassis Ground	"	"	"	Bottom slug of T3	Adjust bottom slug to produce zero reading on VTVM
4.) Repeat Steps 1, 2, and 3 until adjustment in Step 1 does not require a readjustment to produce a zero reading on the VTVM in Step 3.							
5.) 106 MC	FM Dummy Antenna (See Fig. 4)	FM Dummy Antenna Terminals (See Fig. 4)	Remove short from Term. #2 of gang condenser. Remove 100K Resistors	106 MC Ref. mark	+Lead to chassis ground —Lead to Pin 2 of tube 6T8	Osc. trimmer C3, then RF, C2c & Ant., C2a	Rock tuning control when adjusting C3 for maximun AC reading, then adjust C2c and C2a respectively for max.†
6.) 97 MC AM or CW	"	"		97 MC Ref. mark	"		* Check Calibration
7.) 90 MC AM or CW	"	"		90 MC Ref. mark	"		* Check Calibration

† Oscillator operates on high frequency side of incoming signal but it is possible to adjust to the low side. Set Signal Generator to 84.6 MC (with receiver set to 106 MC); if signal is heard, readjust oscillator trimmer at signal generator frequency of 106 MC and check again at 84.6 MC. Signal should not be heard.

* If calibration is not within reference mark at these points, the inductance of the FM oscillator coil must be adjusted. If dial pointer reading is on low frequency side, inductance of oscillator coil is too low and turns of coil must be compressed slightly. If pointer reading is on high frequency side, the coil inductance is too high and coil turns must be spread slightly. Repeat steps 5, 6, and 7 until correct calibration is obtained.

To adjust RF coil, tune receiver to 90 MC and observe AVC reading. Insert into RF coil, the iron core of tuning wand (rod of insulating material one end of which contains an iron core slug and the other end contains a non-ferrous metalic. slug). If reading increases, the inductance of coil is too low and turns must be spread *slightly*. If reading decreases, insert opposite end (non-ferrous) of tuning wand into RF coil. Inductance of coil is too low if reading increases and turns must be compressed *slightly*. Correct adjustment is obtained when insertion of either end of tuning wand causes the reading to decrease.

The antenna coil inductance is adjusted in the same manner as the RF coil.

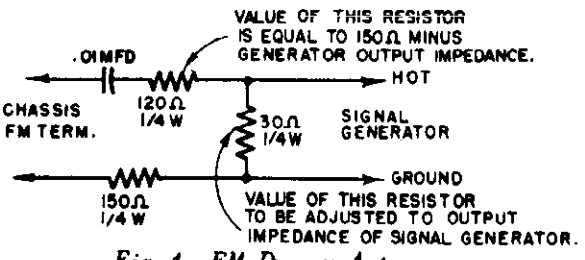

Fig. 4—FM Dummy Antenna

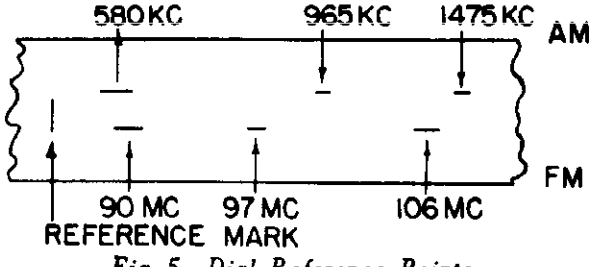

Fig. 5—Dial Reference Points

© John F. Rider

VISUAL ALIGNMENT

The ratio detector in the FM section of this radio receiver can be aligned by the so-called Visual Alignment method. This method can be used in conjunction with the CW method by following the procedure outlined below:

1. Perform Step 1 indicated in CW Meter Method Chart.

2. Set Signal Generator to 10.7 MC, FM, with sweep width at maximum possible (should be a minimum of 200 KC). Connect output of generator to terminal #4 of gang condenser and B–.

3. Connect vertical input of cathode ray oscilloscope to terminal #6 of switch S1C and B–, and place a 60 cycle sine wave signal to horizontal input if oscilloscope does not have an internal 60 cycle sweep.

4. Adjust signal generator frequency until "S" curve (Fig. 6) is centered on the horizontal sweep. Curve may be reversed because of internal circuit of oscilloscope.

5. Adjust primary of T3 (top slug) and secondary (bottom slug) for maximum desired "S" curve. A VTVM can be very useful at this point if connected to pin #2 of tube 6T8 and B–. The oscilloscope will then indicate the most linear curve and the VTVM will indicate the maximum AVC voltage.

6. Adjust bottom of slugs of T1 and T2 and then repeat step 5 to insure correct alignment.

7. Continue at this point with the alignment procedure starting with step 5 as outlined in the FM-CW Meter Method.

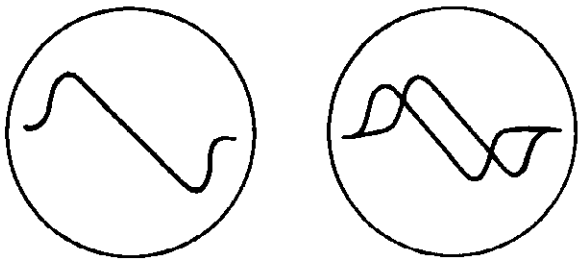

Fig. 6 – S Curves

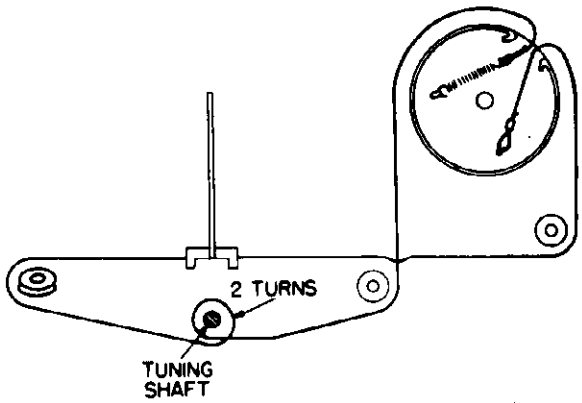

Fig. 7 – Dial Stringing Diagram

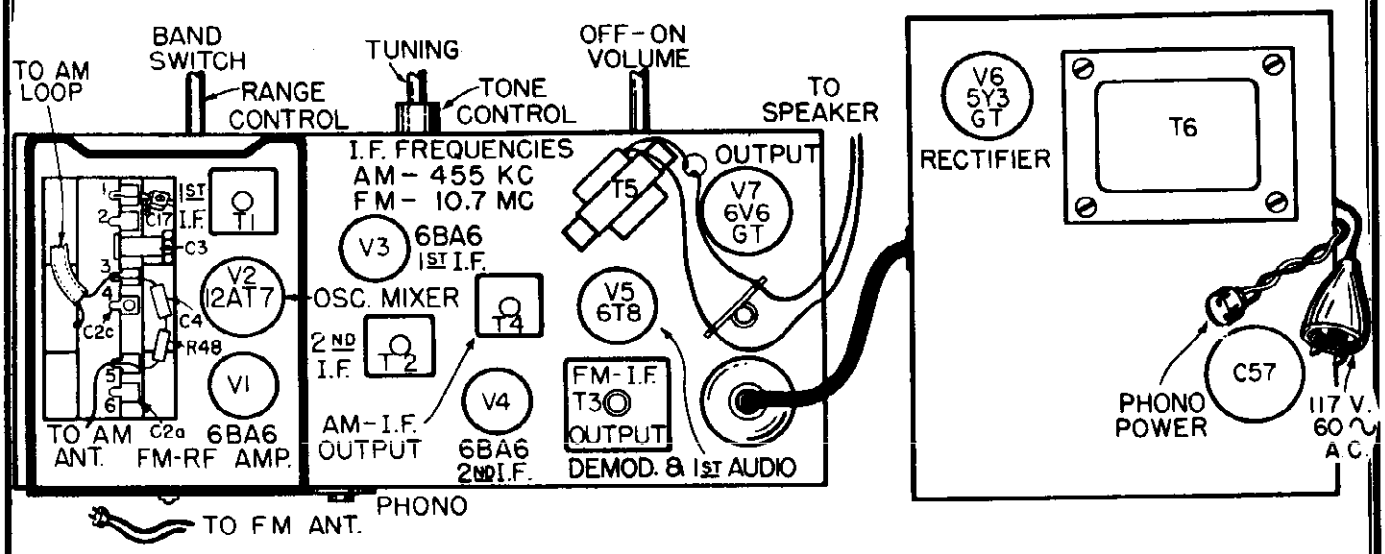

Gang Condenser Top Terminals:

#1 – AM Osc; #2 – FM Osc; #3 – AM Ant; #4 – FM RF; #5 – NC; #6 – FM Ant

Fig. 8 – Trimmer Location Diagram

© John F. Rider

MODEL 79M7

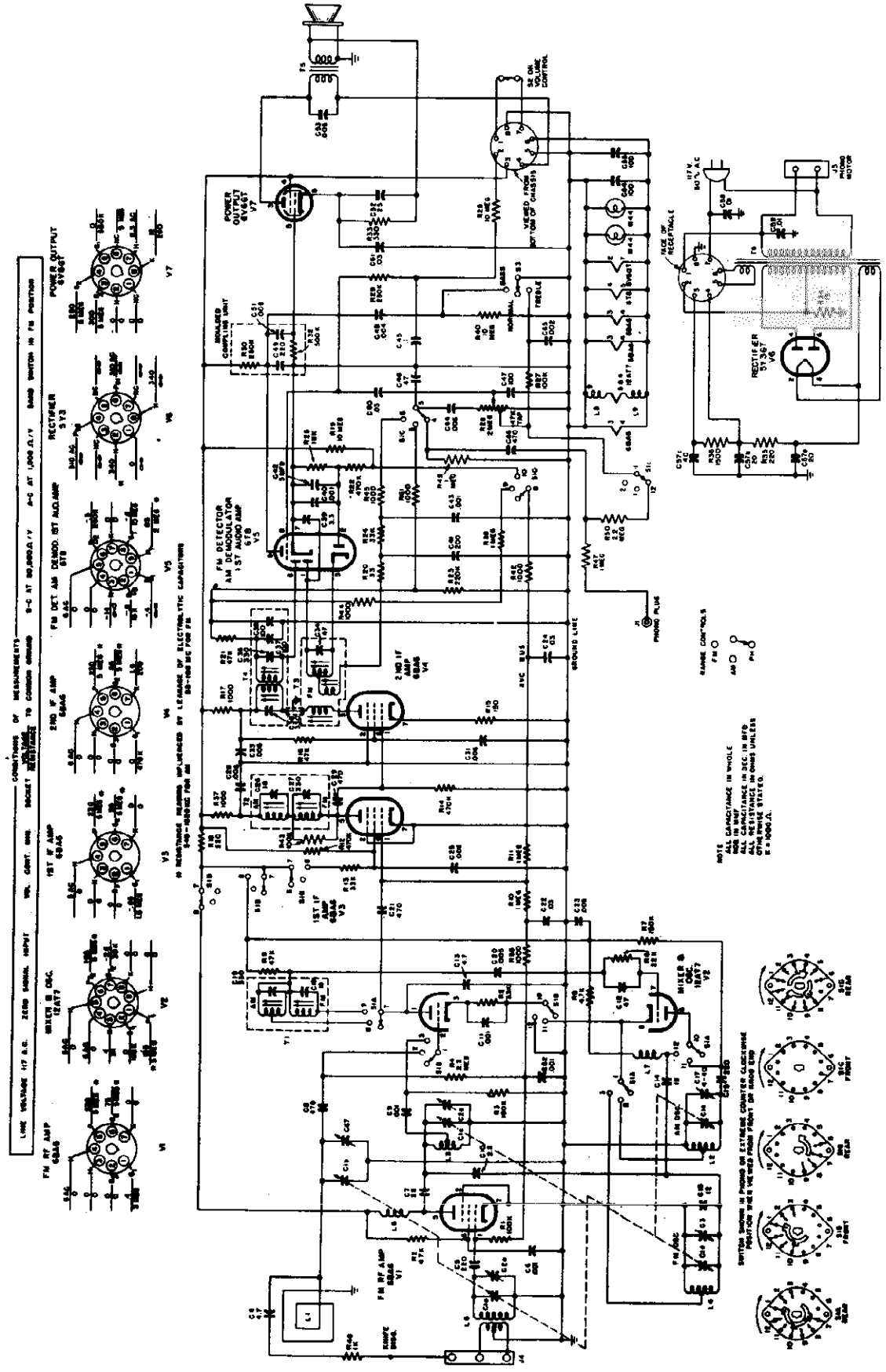

Fig. 9 – Schematic Diagram Model 79M7

©John F. Rider

REPLACEMENT PARTS LIST

Used On Chassis Codes	Stock No.	Symbol No.	Description
	ELECTRICAL COMPONENTS		
ALL	AC0C01	R30,R32; C49, C51	ASSY—Capacitor Resistor Coupling Plate
ALL	CV0D01	C1,a,b,c,d, e, C2a,c	CAPACITOR—Variable
ALL	CT1B05	C3	CAPACITOR—Midget Trimmer 1-8 mmf
ALL	CC0A18	C4, C13	CAPACITOR—Ceramic 4.7 mmf ±20%
ALL	CC9A38	C5, C15	CAPACITOR—Ceramic 220 mmf ±20%
ALL	CC9M50	C6,9,40, 43,62	CAPACITOR—Ceramic 1000 mmf Min.
ALL	CC0A26	C7	CAPACITOR—Ceramic 22 mmf
ALL	CC9M42	C8,21,29	CAPACITOR—Ceramic 470 mmf Min.
ALL	CC0A14	C10	CAPACITOR—Ceramic 2.2 mmf ±20%
ALL	CM5A46	C11	CAPACITOR—Mica 1000 mmf ±20%
ALL	CC8B30	C12	CAPACITOR—Ceramic 47 mmf ±10%
ALL	CC0A24	C14	CAPACITOR—Ceramic 15 mmf ±20%
ALL	CC8B23	C16	CAPACITOR—Ceramic 12 mmf ±10% 500V
ALL	CT1A20	C17	CAPACITOR—Trimmer 4-40 mmf
ALL	CC0M00	C20,23,30, 33,53	CAPACITOR—Ceramic .005 mfd Ins. Disc
ALL	CP4T36	C22,24, 60,61	CAPACITOR—Paper .03 mfd 400V +30%-10%
ALL	CP6T20	C25,28, 31,44	CAPACITOR—Paper .006 mfd 600V +40%—20%
ALL	CC9B64	C41	CAPACITOR—Ceramic 200 mmf ±10%
ALL	CE1T06	C42	CAPACITOR—Electro-lytic 5 mfd 50V
ALL	CP2T51	C45	CAPACITOR—Paper .1 mfd 200V
ALL	CM5A14	C46	CAPACITOR—Mica 47 mmf 500V
ALL	CC9A34	C47,55,64	CAPACITOR—Ceramic 100 mmf
ALL	CP3S16	C48	CAPACITOR—Paper .004 mfd 400V +30%—10%
ALL	AC0C01	C49,C51; R30,R32	ASSY—Capacitor Resistor Coupling Plate
ALL	CE1T02	C52	CAPACITOR—Electro-lytic 20 mfd 25V
ALL	CE3A03	C57a,b,c	CAPACITOR—Electro-lytic 20-20-40 mfd 450V
ALL	CP9S31	C58,C59	CAPACITOR—Paper .01 mfd 600V
ALL	CP6T12	C65	CAPACITOR—Paper .002 mfd 600V +40%—20%
B	CM5A38	C66	CAPACITOR—Mica 470 mmf 500V
ALL	RC22A104M	R1,3,27,43	RESISTOR—Comp. 100K 1/4W
ALL	RC22A473M	R2,9,16	RESISTOR—Comp. 47K 1/2W

Used On Chassis Codes	Stock No.	Symbol No.	Description
	ELECTRICAL COMPONENTS—(Continued)		
ALL	RM2F66	R4	RESISTOR—Metallized 2.2 meg. 1/3W
ALL	RC23A332M	R5	RESISTOR—Comp. 3300 ohms 1/2W
ALL	RC22A223M	R6	RESISTOR—Comp. 22K 1/4W
ALL	RC22A154M	R7	RESISTOR—Comp. 150K 1/4W
ALL	RC24A472M	R8	RESISTOR—Comp. 4700 ohms 1W
ALL	RC22A105M	R10,11,38, 47	RESISTOR—Comp. 1 meg. 1/4W
ALL	RC22A474M	R12,14,22	RESISTOR—Comp. 470K 1/4W
ALL	RC24A333M	R13	RESISTOR—Comp. 33K 1W
ALL	RC22A151M	R15	RESISTOR—Comp. 150 ohms 1/4W
ALL	RC22A102M	R17,37,41, 42,44, 45,48	RESISTOR—Comp. 1000 ohms 1/4W
ALL	RC22A106M	R19,28,29, 40	RESISTOR—Comp. 10 meg. 1/4W
ALL	RC22A330M	R20	RESISTOR—Comp. 33 ohms 1/4W
ALL	RC22A473M	R21	RESISTOR—Comp. 47K 1/4W
ALL	RC22A224M	R23	RESISTOR—Comp. 220K 1/4W
ALL	RC22A333M	R24	RESISTOR—Comp. 33K 1/4W
ALL	RC22A153M	R25	RESISTOR—Comp. 15K 1/4W
ALL	RV4S13	R26; S2	POTENTIOMETER—2 meg with AC Switch Tapped at 1 meg.
ALL	AC0C01	R30,32; C49,51	ASSY—Capacitor Resistor Coupling Plate
ALL	RC24A331M	R33	RESISTOR—Comp. 330 ohms 1W
ALL	RC23A150M	R34	RESISTOR—Comp. 15 ohms 1/2W
ALL	RC22A221M	R46	RESISTOR—Comp. 220 ohms 1/4W
B	RC22A105M	R49	RESISTOR—Comp. 1 meg. 1/4W
B	RC22A225M	R50	RESISTOR—Comp. 2.2 meg. 1/4W
ALL	AL0Z15	L1;C67	ANTENNA—Loop AM
ALL	LO7B00	L2	COIL—BC Oscillator
ALL	LI0F01	L3	COIL—RF FM
ALL	LO7F00	L4	COIL—FM Oscillator
ALL	LA0F01	L5	COIL—FM Antenna
ALL	LF0A01	L6	COIL—RF Choke
ALL	LF0A08	L7	COIL—RF Plate Choke
ALL	LF0A00	L8, L9	COIL—RF Filament Choke 100 MC
ALL	TI0C12	T1	TRANSFORMER—1st IF Input
ALL	TI0D20	T2	TRANSFORMER—2nd IF
ALL	TR0R00	T3	TRANSFORMER—Ratio Detector
ALL	TI0D23	T4	TRANSFORMER—3rd IF Output

© John F. Rider

MODEL 79M7

REPLACEMENT PARTS LIST—Continued

Used On Chassis Codes	Stock No.	Symbol No.	Description
	ELECTRICAL COMPONENTS—(Continued)		
ALL	TA0O21	T5	TRANSFORMER—Output
ALL	TP0H02	T6	TRANSFORMER—Power
A	SR3F00	S1	SWITCH—Rotary 3 Sec. 3 Pos.
B	SR3F01	S1	SWITCH—Rotary 3 Sec. 3 Pos.
ALL	SS1C02	S3	SWITCH—Slide 2 Pole 3 Pos.
ALL	SP0R01		SPEAKER—10" PM Round
ALL	#44		LAMP—Dial 6-8V
	MECHANICAL COMPONENTS		
	BT2S05		BOARD—Terminal 2 Lug 1 Mtg.
	BT3S06		BOARD—Terminal 3 Lug 1 Mtg.
	BT4S06		BOARD—Terminal 4 Lug 1 Mtg.
	BT5S03		BOARD—Terminal 5 Lug 1 Mtg.
	BT8S00		BOARD—Terminal 8 Lug 2 Mtg.
	CD0N01		CORD—Dial 35 3/8"
	CL2A08		CORD—AC Line (Brown)
	GR0S09		GROMMET—Rubber Shockmount
	GR0S15		GROMMET—Rubber Shockmount
	HB0M74		BRACKET—Indicator Slide Rail
	HB0M83		BRACKET—Dial Light
	HB0M84		BRACKET—Dial Back Plate
	HB0M86		BRACKET—Sub-chassis Mtg.
	HC0M08		CLAMP—Tube Shield Base
	HC0S00		CLIP—Spring, Tuning Shaft
	HC0S60		CLIP—Spring Retainer Mtg.
	HC0S67		CLIP—Spring, Flange Skirt
	HP0P11		PIN—Shockmount (Main)
	HS0C75		SPRING—Coil, Dial Cord
	HS0C88		SPRING—Coil, Tension
	HS0F19		SLEEVE—Spacer, Sub-chassis Mtg.
	HS0S13		PIN—Shockmount (Sub-chassis)
	ID0M21		INDICATOR—Dial, with Carriage
	JR1S00	J1	JACK—Receptacle 1 Contact Phono
	JP8S00	J2	JACK—Plug 8 Prong
	JR2O15	J3	JACK—Receptacle 2 Contact Power
	JR2O12	J4	JACK—Receptacle 2 Contact FM Antenna

Used On Chassis Codes	Stock No.	Symbol No.	Description
	MECHANICAL COMPONENTS—(Continued)		
	MB0B00		BEARING—Tuning Shaft
	ML0C04		LEVER—Tone Control
	MP0I00		PULLEY—Idler
	MS0T19		SHAFT—Tuning
	PB0D06		PLATE—Dial Back
	SM0T10		SHIELD—Metal, Min. Tube
	SO7M09		SOCKET—Miniature Tube
	SO7M10		SOCKET—Miniature Tube
	SO9M00		SOCKET—Min. Tube 9 Prong
	SO0D13		SOCKET—Dial Light
	SO8S01		SOCKET—Octal
	XS0C17		STRIP—Copper .002 x 1 3/8 x 1/16
	XS0C19		STRIP—Copper .002 x 1 3/16 x 5/16
	CABINET COMPONENTS		
	BT3S09		BOARD—Terminal 3 Lug 2 Mtg.
	BZ0B29		BACK—Cabinet Cover
	BZ0D47		BAFFLE—Cardboard & Cloth
	DS0C16		DIAL—Glass Scale 550-1600 KC, 88-108 MC
	ED0M06		ESCUTCHEON—Dial, Metal
	GR0S18		GROMMET—Chassis Shockmount
	HB0M89		BRACKET—Chassis Shockmount
	HB0M93		BRACKET—Chassis Shockmount
	HC0S10		CLIP—Knob Spring Retainer
	HC0S69		CLIP—Dial Retainer
	HK0R18		KNOB—Door Pull
	HK0T00		KNOB—Tray Pull
	HZ0C12		CATCH—Bullet
	HZ0G01		GLIDE—Metal
	HZ0H04		HINGE—Door
	KC0B16		KNOB—Control (Brown)
	KY0B02		KNOB—Concentric (Brown)
	RD0F01		REFLECTOR—Dial Light
	SM0P03		SHIELD—Metal Plate, Heat Insulator
	WF0F17		WASHER—Felt, Concentric Knob
	XS0Z08		STRIP—Fishpaper 1 x 3 3/4 x .015
	XS0Z14		STRIP—Loop Support with Terminal Board
	ZW7G11		CABINET—Console Comb. Mahogany

©John F. Rider

MODELS 95B3, 95B3 Rev., 95B4, 95M3, 95M3 Rev., 95M4, 95M9, 95M9 Rev.



95M3 - Mahogany; 95B3 - Blonde

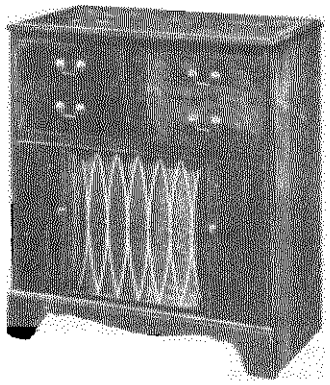

95M9 - Mahogany

Fig. 1 - Models 95M3, 95B3 and 95M9

SPECIFICATIONS

Power Requirements
105-120 Volts 60 cycle AC
Power Consumption
Radio-90 Watts; Phono-turntable-25 Watts
Tuning Frequency Range
AM 540-1620 KC -- FM 88-108 MC
Intermediate Frequency
AM 455 KC -- FM 10.7 MC
Power Output
Maximum -- 8 Watts
Tube Complement
3--6AB6, 12AT7, 6T8, 6SN7GT, 2--6K6GT, and Rectifier 5Y3--Total 9 Tubes
Loudspeaker -- 12" PM
Record Changer
Automatic, for twelve 10-inch or ten 12-inch standard lateral cut records. Plug-in receptacle on rear cover for use of Long Playing record player.
Overall Dimensions

Model	*Height*	*Width*	*Depth*
95M3	34"	31-3/4"	16-1/4"
95B3	34"	31-3/4"	16-1/4"
95M9	34"	31-1/4"	15-5/8"

Shipping Weight
Model 95M3 88 lbs.
Model 95B3 88 lbs.
Model 95M9 85 lbs.

GENERAL

Bendix Radio Models 95M3, 95B3, and 95M9 employ nine tubes including a rectifier to provide reception of the FM and AM standard broadcast bands. Two individual chassis are used in each of these radio receivers. The power supply and the push-pull audio output circuit are found on the smaller chassis. The FM section of this receiver contains a tuned RF stage of amplification which has the plate voltage removed from its tube when the band switch is in any but the FM position. Built-in AM and FM antennas are attached to the cabinet. A power supply of 105-120 volts 60 cycle AC is required for the operation of these radio receivers. The multi-purpose 6T8 tube combines the functions of AM demodulator, FM detector, and first audio amplifier in one envelope. The 12AT7, a double triode, is used as a mixer-oscillator tube; and push-pull audio output is provided by two 6K6GT tubes. A plug on the cabinet back cover provides for the use of Long Playing record players. The switch associated with this plug on the back cover is used to connect to the radio chassis either the standard record player installed in the cabinet or a separate Long Playing record player.

©John F. Rider

MODELS 95B3, 95B3 Rev., 95B4, 95M3, 95M3 Rev., 95M4, 95M9, 95M9 Rev.

PRECAUTION NOTES

Hum may be introduced if the leads connected to switch, S2, on the volume control are dressed toward the base of 12AT7 tube. The leads should be pushed directly against the side of the chassis to a point approximately half an inch from the bottom edge of the chassis and adjacent to the volume control and then led along the sides of the chassis to plug J2.

The capacitor, C28, should be dressed under R18 with the capacitor leads as short as possible. In addition, the filament lead of V2, 12AT7, should be as short as possible and connected directly between pin 9 of V2 and the terminal board.

Oscillation may occur if the AM oscillator coil (L2) is not positioned correctly. The recommended spacing is:

9/16" between osc. coil and front of sub-chassis
3/4" between osc. coil and bottom of sub-chassis
1/2" between osc. coil and end of main chassis.

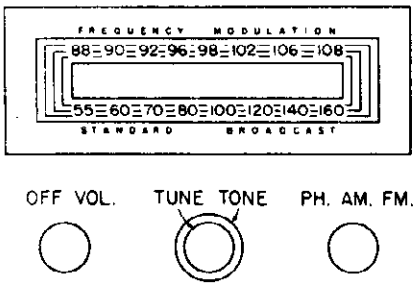

Fig. 2 - Control Diagram

ALIGNMENT PROCEDURE

The AM section should be aligned before the FM section because of possible interaction between the coils in the IF cans. Before attempting to align set allow receiver and test equipment to warm up for at least five minutes. Whenever possible, have a speaker connected to the output and use a 30% amplitude modulated signal in order to identify weak signals in a poorly tuned set. It may be necessary to adjust the FM antenna trimmer slightly when the chassis is replaced in the cabinet.

TEST EQUIPMENT REQUIRED

Signal Generator
- AM 455 KC to 106 MC
- FM 10.7 MC & 88-108 MC

Vacuum Tube Voltmeter
- (ground or minus must be isolated from power line)

Capacitors, .01 mfd and 100 mmf
Alignment Screwdrivers made from a high dielectric, non-metallic material
Standard Output Meter

AM ALIGNMENT

PRELIMINARY PROCEDURE: With gang condenser closed, set dial pointer to coincide with reference point etched into dial back plate. See Fig. 4. Place band switch in AM position and use a 30% modulated signal throughout. Connect an output meter across voice coil. Adjust Antenna Trimmer C2b again after chassis is installed in the cabinet.

GENERATOR FREQUENCY	GENERATOR COUPLING	DUMMY ANTENNA	SPECIAL CONDITIONS	DIAL SETTING	ADJUSTMENTS	REMARKS
1. 455 KC AM	High Side--Term. #5 gang cond. Low side--chassis ground	.01 mfd capacitor	Short AM Osc. Term. #1 to chassis ground	Gang condenser fully open	Top Slug of T1, T2, T4 and bottom slug of T4	Adjust for maximum output. Repeat several times to insure maximum output
2. 1475 KC AM	High side--Term. #3 gang cond. Low side--chassis ground	100 mmf capacitor	Remove short from Osc. Term #1	1475 KC Ref. mark	C17	Rock Tuning Control while adjusting for maximum output
3. 965 KC AM	"	"		965 KC Ref. mark		* Check calibration
4. 580 KC AM	"	"		580 KC Ref. mark		* Check calibration

* If calibration does not check within tolerances denoted by etched lines on dial backplate, oscillator gang rotor plates must be bent to obtain proper calibration. This operation is very delicate and should be attempted only by properly trained personnel.

© John F. Rider

MODELS 95B3 Rev., 95B4, 95M3 Rev., 95M4, 95M9 Rev.

FM ALIGNMENT
CW METER METHOD

Preliminary Alignment Procedure: With gang condenser fully closed, adjust dial pointer to coincide with the reference mark etched into dial back plate. See Fig. 4. Place band switch in FM position. Use 30% amplitude modulated signals when possible.

GENERATOR FREQUENCY	DUMMY ANTENNA	GENERATOR COUPLING	SPECIAL CONDITIONS	DIAL SETTING	VTVM CONNECTIONS	ADJUSTMENTS	REMARKS
1. 10.7 MC AM or CW	.01 Mfd Capacitor	High side--Term. #4 Gang Cond. Low side—chassis ground	Short FM Osc. Term. #2 of Gang Cond. to chassis ground	Gang condenser fully open	+Lead to chassis ground -Lead to Pin 2 of tube 6T8	Bottom slug of T1, T2, Top slug of T3	Adjust for maximum AVC reading on VTVM. Repeat adjustment several times to insure maximum reading
2. Remove Signal Generator		Remove Signal Generator	Short FM Osc. Term. #2 of gang cond. to common ground Two 100K matched resistors in series connected between Pin 2 of tube 6T8 & chassis ground	"	Center tap of 100K resistor and Term. #6 of switch S1C	Adjust VTVM for Zero	While connected to chassis, the VTVM is adjusted by its zero centering control
3. 10.7 MC AM or CW	.01 Mfd capacitor	High side--term #3 of Gang cond. Low side--chassis ground	"	"	"	Bottom slug of T3	Adjust bottom slug to produce zero reading on VTVM
4. Repeat Steps 1, 2, and 3 until adjustment in Step 1 does not require a readjustment to produce a zero reading on the VTVM in Step 3.							
5. 106 MC	FM Dummy Antenna (See Fig. 3)	FM Dummy Antenna Terminals (See Fig. 3)	Remove short from Term. #2 of gang cond. Remove 100K Resistors	106 MC Ref. mark	+Lead to chassis ground -Lead to Pin 2 of tube 6T8	Osc. trimmer C3 then RF, C2c & Ant., C2a	Rock tuning control when adjusting C3 for maximum AC reading, then adjust C2c and C2a respectively for maximum †
6. 97 MC AM or CW	"	"		97 MC Ref. mark	"		* Check calibration
7. 90 MC AM or CW	"	"		90 MC Ref. mark	"		* Check calibration

† Oscillator operates on high frequency side of incoming signal but it is possible to adjust to the low side. Set Signal Generator to 84.6 MC (with receiver set to 106 MC); if signal is heard, readjust oscillator trimmer at signal generator frequency of 106 MC and check again at 84.6 MC. Signal should not be heard.

* If calibration is not within reference mark at these points, the inductance of the FM oscillator coil must be adjusted. If dial pointer reading is on low frequency side, inductance of oscillator coil is too low and turns of coil must be compressed slightly. If pointer reading is on high frequency side, the coil inductance is too high and coil turns must be spread slightly. Repeat steps 5, 6, and 7 until correct calibration is obtained.

To adjust RF coil, tune receiver to 90 MC and observe AVC reading. Insert into RF coil, the iron core of tuning wand (rod of insulating material one end of which contains an iron core slug and the other end contains a non-ferrous metallic slug). If reading increases, the inductance of coil is too low and turns must be spread *slightly*. If reading decreases, insert opposite end (non-ferrous) of tuning wand into RF coil. Inductance of coil is too low if reading increases and turns must be compressed *slightly*. Correct adjustment is obtained when insertion of either end of tuning causes the reading to decrease.

The antenna coil inductance is adjusted in the same manner as the RF coil.

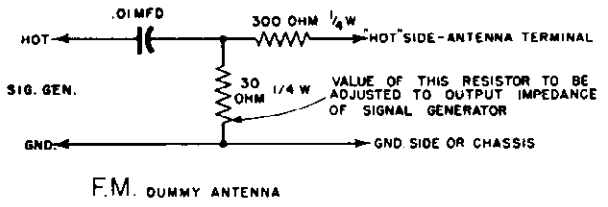

Fig. 3 - FM Dummy Antenna

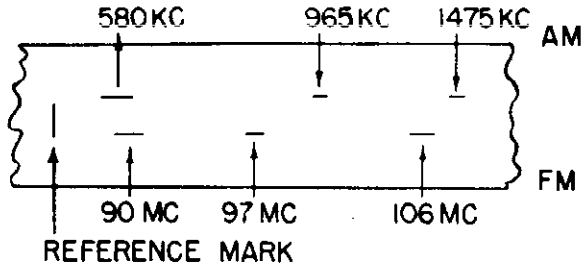

Fig. 4 - Dial Reference Points

© John F. Rider

MODELS 95B3, 95B3 Rev., 95B4, 95M3,
95M3 Rev., 95M4, 95M9, 95M9 Rev.

VISUAL ALIGNMENT OF RATIO DETECTOR

The ratio detector in the FM section of this radio receiver can be aligned very accurately by Visual Alignment. This method can be used in conjunction with the CW method by following the procedure outlined below.

1. Perform Step 1 indicated in CW Meter Method Chart.

2. Set Signal Generator to 10.7 MC, FM, with sweep width at maximum possible (should be a minimum of 200 KC). Connect output of generator to terminal #4 of gang condenser and ground.

3. Connect vertical input of cathode ray oscilloscope to terminal #6 of switch S1C and 'ground'; place a 60 cycle sine wave signal to horizontal input if oscilloscope does not have an internal 60 cycle sweep.

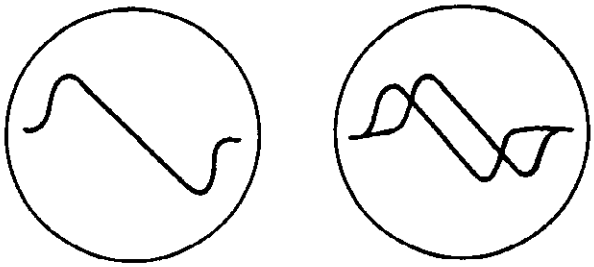

Fig. 5 - S Curves

4. Adjust signal generator frequency until 'S' curve (Fig. 5) is centered on the horizontal sweep. Curve may be reversed because of internal circuit of oscilloscope. Fig. 5b indicates when 'Phase Control' of oscilloscope is incorrectly adjusted.

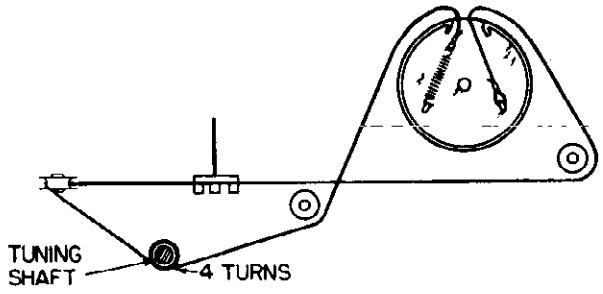

Fig. 6 - Dial Stringing Diagram

5. Adjust primary of T3 (top slug) and secondary (bottom slug) for maximum desired 'S' curve. A VTVM can be very useful at this point if connected to pin 2 of tube 6T8 and ground. The oscilloscope will then indicate the most linear curve and the VTVM will indicate the maximum AVC voltage.

6. Adjust bottom slugs of T1 and T2 and then repeat step 5 to insure correct alignment.

7. Continue at this point, with the alignment procedure starting with step 5 as outlined in the FM CW Meter Method.

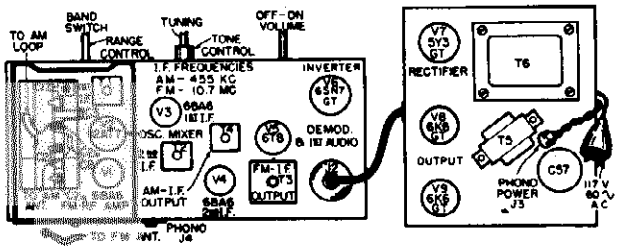

Fig. 7 - Trimmer Location

FM ANTENNA

The FM antenna used in Models 95M3, 95B3, and 95M9 will not be found in the Replacement Parts List since the serviceman, by following the specifications in the drawing below, can very easily and inexpensively make the antenna himself.

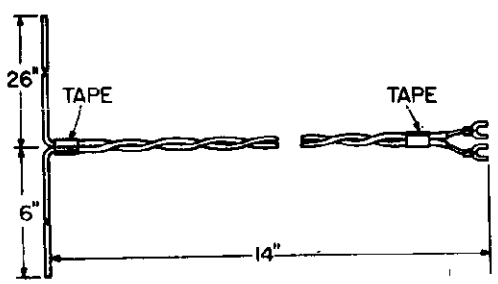

Fig. 8 - FM Antenna

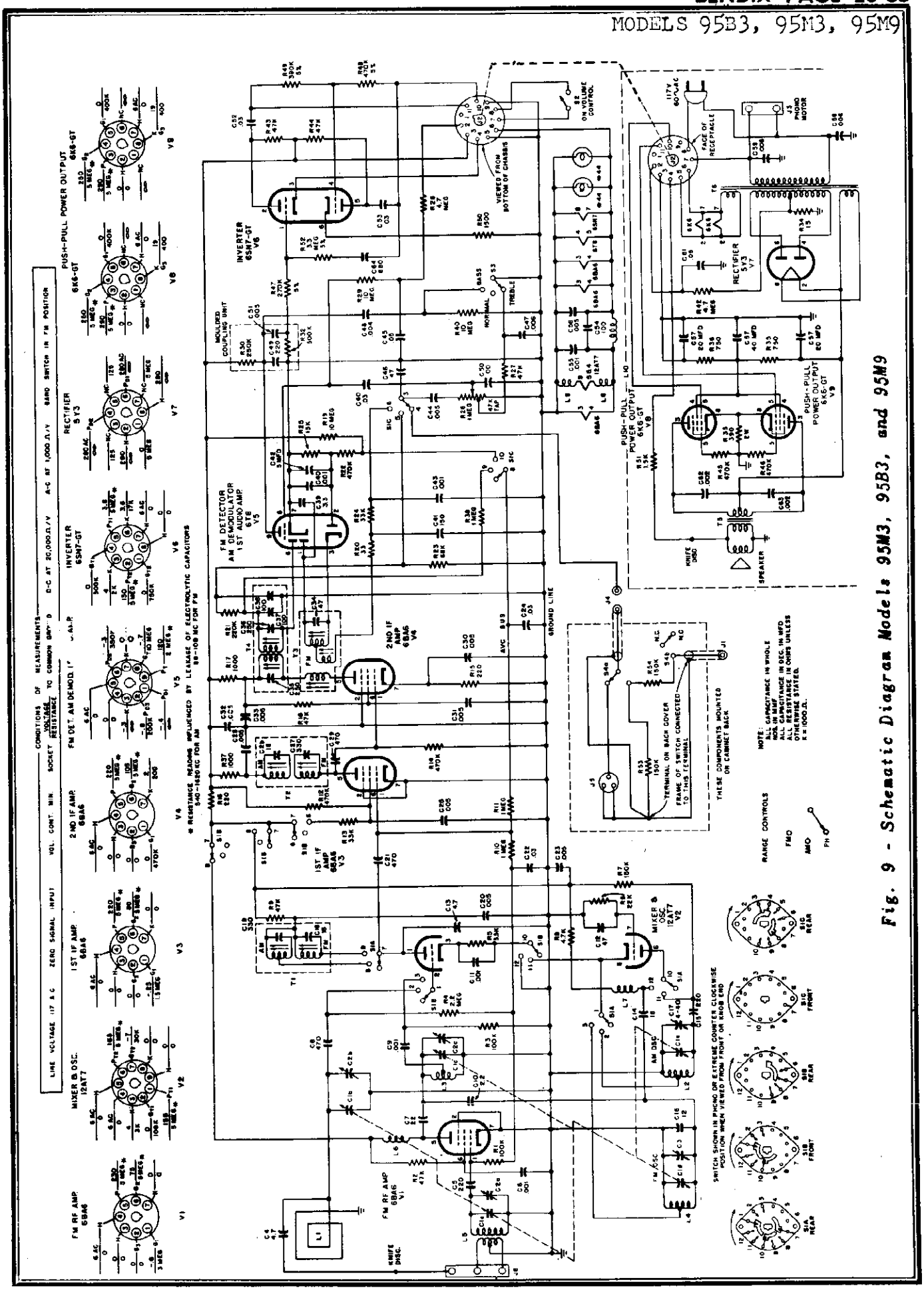

Fig. 9 - Schematic Diagram Models 95M3, 95B3, and 95M9

© John F. Rider

MODELS 95B3, 95B3 Rev., 95B4, 95M3, 95M3 Rev., 95M4, 95M9, 95M9 Rev.

REPLACEMENT PARTS LIST

Stock No.	Symbol No.	Description
	ELECTRICAL COMPONENTS	
ACOC01	C49,51; R30,32	ASSEMBLY-Capacitor, Resistor Coupling
CV0D01	C1a,b,c, d,e;C2a, b,c	CAPACITOR-Variable Air
CT1B05	C3	CAPACITOR-Trimmer 0.2-3.0 mmf
CC0A18	C4,13	CAPACITOR-Ceramic 4.7 mmf 500V
CC9A38	C5,15	CAPACITOR-Ceramic 220 mmf 500V
CC9M50	C6,9,40, 43,55	CAPACITOR-Ceramic .001 mfd Min. Value 500V
CC0A26	C7	CAPACITOR-Ceramic 22 mmf 500V
CC9M42	C8,21,29	CAPACITOR-Ceramic 470 mmf Min. Value 500V
CC0A14	C10	CAPACITOR-Ceramic 2.2 mmf 500V
CM5A46	C11	CAPACITOR-Mica .001 mfd 300V
CC8B30	C12,46	CAPACITOR-Ceramic 47 mmf ±10% 500V
CC0A24	C14	CAPACITOR-Ceramic 15 mmf 500V
CC8B23	C16	CAPACITOR-Ceramic 12 mmf ±10% 500V
CT1A20	C17	CAPACITOR-Trimmer 4-40 mmf
CC0M00	C20,23,25, 28,30,31, 32,33,44, 56	CAPACITOR-Ceramic .005 mfd 450V
CP4T36	C22,24,52, 53,60	CAPACITOR-Paper .03 mfd 400V
CC0A16	C39	CAPACITOR-Ceramic 3.3 mmf 500V
CC9B36	C41	CAPACITOR-Ceramic 150 mmf ±10% 500V
CE1T06	C42	CAPACITOR-Electrolytic 5 mfd 50V
CP4T40	C45,61	CAPACITOR-Paper .05 mfd 400V
CP6T20	C47,58,59	CAPACITOR-Paper .006 mfd 600V
CP3S16	C48	CAPACITOR-Paper .004 mfd -20% +40% 400V
CM5A22	C50	CAPACITOR-Mica 100 mmf 300V
LF0C00	C54	CAPACITOR-See Coil L10
CE3A03	C57a,b,c	CAPACITOR-Electrolytic 20-20-40 mfd 450V
CP6T12	C62,63	CAPACITOR-Paper .002 mfd 600V
CM3A42	C64	CAPACITOR-Mica 680 mmf 300V
RC22A104M	R1,3	RESISTOR-Comp. 100K 1/4W
RC23A473M	R2,9,16	RESISTOR-Comp. 47K 1/2W
RM2F66	R4	RESISTOR-Metalized 2.2 meg 1/3W

Stock No.	Symbol No.	Description
	ELECTRICAL COMPONENTS (CONT'D)	
RC23A332M	R5	RESISTOR-Comp. 3.3K 1/2W
RC22A223M	R6	RESISTOR-Comp. 22K 1/4W
RC22A154M	R7,53,54	RESISTOR-Comp. 150K 1/4W
RC24A472M	R8	RESISTOR-Comp. 4.7K 1W
RC22A105M	R10,11,38	RESISTOR-Comp. 1 meg 1/4W
RC22A474M	R12,14,22, 45,46	RESISTOR-Comp. 470K 1/4W
RC24A333M	R13	RESISTOR-Comp. 33K 1W
RC22A221M	R15	RESISTOR-Comp. 220 ohms 1/4W
RC22A102M	R17,37	RESISTOR-Comp. 1000 ohms 1/4W
RC23A221M	R18	RESISTOR-Comp. 220 ohms 1/2W
RC22A106M	R19,29,40	RESISTOR-Comp. 10 meg 1/4W
RC22A330M	R20	RESISTOR-Comp. 33 ohms 1/4W
RC22A224M	R21	RESISTOR-Comp. 220K 1/4W
RC22A683K	R23	RESISTOR-Comp. 68K ±10% 1/4W
RC23A333M	R24	RESISTOR-Comp. 33K 1/2W
RC22A153K	R25	RESISTOR-Comp. 15K ±10% 1/4W
RV4S14	R26 & S2	RESISTOR-Pot. With Switch
RC22A473M	R27,43,44	RESISTOR-Comp. 47K 1/4W
RC22A475M	R28,42	RESISTOR-Comp. 4.7 meg 1/4W
RC25A391K	R33	RESISTOR-Comp. 390 ohms ±10% 2W
RC23A150M	R34	RESISTOR-Comp. 15 ohms 1/2W
RW2M03	R35,36	RESISTOR-Wirewound 750-750 ohms 3W
RC22A274J	R47	RESISTOR-Comp. 270K ±5% 1/4W
RC22A474J	R48	RESISTOR-Comp. 470K ±5% 1/4W
RC22A394J	R49	RESISTOR-Comp. 390K ±5% 1/4W
RC22A152K	R50,51	RESISTOR-Comp. 1.5K ±10% 1/4W
RC22A245J	R52	RESISTOR-Comp. 2.4 meg ±5% 1/4W
AL0Z15	L1	ANTENNA-AM Loop
L07B00	L2	COIL-BC Osc.
L10F01	L3	COIL-RF FM
L07F00	L4	COIL-FM Osc.
LA0F01	L5	COIL-FM Antenna
LF0A01	L6,7	COIL-RF Choke (Plate)
LF0A00	L8,9	COIL-RF Choke (Filament)
LF0C00	L10 & C54	COIL-RF Choke
T10C12	T1	TRANSFORMER-1st IF
T10D20	T2	TRANSFORMER-2nd IF
T10D17	T3	TRANSFORMER-Ratio Detector
T10D18	T4	TRANSFORMER-AM 3rd IF
TA0014	T5	TRANSFORMER-Output
TP0H01	T6	TRANSFORMER-Power
SR3F00	S1	SWITCH-Rotary 3 Section, 3 Position

©John F. Rider

MODELS 95B3, 95B3 Rev., 95B4, 95M3, 95M3 Rev., 95M4, 95M9, 95M9 Rev.

REPLACEMENT PARTS LIST (Cont'd)

Stock No.	Symbol No.	Description
		ELECTRICAL COMPONENTS (CONT'D)
RV4S14	S2	SWITCH-Volume Control See R26
SSIC02	S3	SWITCH-Tone Slide 2 Pole, 3 Position
SPIR02		SPEAKER-PM 12"
#44		DIAL LIGHT
		MECHANICAL COMPONENTS
BT1S03		BOARD-Terminal 1 Lug 1 Mtg.
BT2S05		BOARD-Terminal 2 Lug 1 Mtg.
BT3S06		BOARD-Terminal 3 Lug 1 Mtg.
BT4S06		BOARD-Terminal 4 Lug 1 Mtg.
BT6S02		BOARD-Terminal 6 Lug 2 Mtg.
BT8S00		BOARD-Terminal 8 Lug 2 Mtg.
CD0N01		CABLE-Dial Tuning
CL0A00	J2	CABLE-Power, With Receptacle
CL2A08		CORD-AC Brown
GR0S09		GROMMET-Top RF Sub-chassis Rubber Shockmount
GR0S15		GROMMET-Rear RF Sub-chassis Rubber Shockmount
HB0M74		BRACKET-Indicator Slide Rail
HB0M83		BRACKET-Dial Light
HB0M84		BRACKET-Dial Back Plate
HC0C09		CLIP-Power Supply Cable
HC0M08		CLAMP-Tube Shield Base (1-1/8" Mtg. Dim.)
HC0S00		CLIP-Spring Tuning Shaft
HC0S60		CLIP-IF Can Mtg.
HC0S67		CLIP-Trimmer Spring
HC0T01		CLAMP-Tube
HP0P11		PIN-Chassis Shockmount
HR0S02		RIVET-Shoulder .218 x .083
HS0C75		SPRING-Dial Cord
HS0C88		SPRING-Tension
HS0F19		SLEEVE-RF Sub-chassis Shockmount Mtg.
HS0S13		STUD-RF Sub-chassis Shockmount
ID0M21		INDICATOR-Metal Pointer & Carriage
JP0S00	J2	PLUG-11 Contact
JR2001	J3	RECEPTACLE-2 Contact Phono Power
JR2012	J6	RECEPTACLE-2 Contact FM Ant.
JR1S00	J4	RECEPTACLE-1 Contact Phono
MB0B00		BEARING-Tuning Shaft Brass
ML0C04		LEVER & BUSHING-Tone Control
MP0100		PULLEY-Idler Fiber
MS0T18		SHAFT-Tuning
PB0D06		PLATE-Dial Back
P10P01		PLATE-Line Cord Insulator
SM0T06		SHIELD-Miniature Tube
S00D13		SOCKET-Dial Light
S07M09		SOCKET-7 Prong Miniature Laminated Plate
S07M10		SOCKET-7 Prong Miniature Molded Base
S09M00		SOCKET-9 Prong Miniature
S08S01		SOCKET-Octal (Bottom Mtg.)
		CABINET COMPONENTS
AM0L09		ASSEMBLY-Drop Front Lever
BT3S06		BOARD-Terminal 3 Lug 1 Mtg.
BT3T00		BOARD-Terminal 3 Screw Lugs
BZ0B18		BACK-Upper Cabinet Cover Model 95M3
BZ0B19		BACK-Lower Cabinet Cover Model 95M3
BZ0B20		BACK-Upper Cabinet Cover Model 95B3
BZ0B22		BACK-Lower Cabinet Cover Model 95B3
BZ0B23		BACK-Upper Cabinet Cover Model 95M9
BZ0B24		BACK-Lower Cabinet Cover Model 95M9
BZ0D40		BOARD-Baffle Model 95M9
BZ0D41		BOARD-Baffle Models 95M3 & 95B3
BZ0D42		BOARD-Baffle (Cardboard & Cloth) Model 95M9
CL1D01	J4	CABLE-Phono Connector & Plug (Switch to Chassis)
CL1D02	J1	CABLE-Phono Connector & Receptacle (Switch to Phono Lead)
DS0C09		DIAL-Scale AM-FM
ED0P00		ESCUTCHEON-Plastic Dial & Control
GR0S18		GROMMET-Shockmount for Chassis
GZ0B00		BAR-Vertical, End (Grille) Models 95M3 & 95B3
GZ0B01		BAR-Vertical, Center (Grille) Models 95M3 & 95B3
GZ0B02		BAR-Horizontal, End (Grille) Models 95M3 & 95B3
GZ0B03		BAR-Horizontal, Center (Grille) Models 95M3 & 95B3
GZ0C08		GRILLE-Cloth Model 95B3
GZ0C09		GRILLE-Cloth Model 95M3
GZ0M28		GRILLE-Metal Model 95M9
HB0M88		BRACKET-Rear Chassis Shockmount
HB0M89		BRACKET-Front Chassis Shockmount
HB0M90		BRACKET-Cabinet Mtg.
HC0S10		CLIP-Control Knob Retainer Spring
HC0S68		CLIP-Concentric Knob Retainer Spring
HC0S69		CLIP-Dial Retainer
HC0S76		CLIP-Lever Assy Spring

©John F. Rider

MODELS 95B3, 95B3 Rev., 95B4, 95M3, 95M3 Rev., 95M4, 95M9, 95M9 Rev.

Stock No.	Symbol No.	Description
		CABINET COMPONENTS (CONT'D)
HKOK00		KNOB-Key Pull Model 95M9
HKOR09		KNOB-Door Pull (1 Machine Screw Mtg.) Model 95B3
HKOR15		KNOB-Door Pull (2 Machine Screws Mtg.) Model 95M3
HOOM00		ORNAMENT-Metal Grille Models 95M3 & 95B3
HPOE00		PLATE-L.H. End (Rear View)
HPOE01		PLATE-R.H. End (Rear View)
HPOS00		PIN-Steel, Cabinet Mtg.
HSOC78		SPRING-Lever Arm
HSOS14		STUD-Escutcheon Retainer
HSOS16		STUD-Lever Arm
HSOT00		STUD-Speaker Mtg.
HT0000		TACK-Ornamental (Metal) Models 95M3 & 95B3
HTOT01		TRACK-Record Changer Model 95M9
HTOT02		TRACK-Center Record Changer Model 95M9
HW8C02		WASHER-#8 Cuptype (Back Cover)
HZOC08		CATCH-Bullet Models 95M3 & 95B3
HZOC09		CATCH-Bullet Model 95M9
HZOG00		GLIDE-Metal, Cabinet Tray Model 95M9
HZOG01		GLIDE-Cabinet
HZOG06		GLIDE-Changer Models 95M3 & 95B3
HZOH08		HINGE-Door Model 95B3
HZOH09		HINGE-Door Models 95M3 & 95M9
HZOH11		HANDLE-Door Model 95M9
HZOP01		PAD-Felt Lid Bumper
JP2007	J6	PLUG-2 Contact, FM Ant.
JR3002	J5	RECEPTACLE-3 Contact Long Playing
KC0B16		KNOB-Control Models 95M3 & 95M9
KC0L03		KNOB-Control Model 95B3
KS0B02		KNOB-Phono Switch
KY0B02		KNOB-Concentric Models 95M3 & 95M9
KY0L00		KNOB-Concentric Model 95B3
RD0F01		REFLECTOR-Dial Light
SC0T01		SHIELD-Record Changer Tray Models 95M3 & 95B3
SC0T02		SHIELD-Record Changer Tray Model 95M9
SR2B04		SWITCH-Standard Changer-Long Playing Phono
ZW7G07		CABINET-Model 95M9
ZW7G08		CABINET-Model 95M3
ZW7G09		CABINET-Model 95B3

This supplement provides a revised schematic for 95 Series Models, and incorporates revisions made for 95M4 and 95B4 Models, and record of production changes effected to date.

Stock No.	*Symbol No.*	*Description*
CM5A38	C65	CAPACITOR-Mica 470 mmf 500V
CM5A05	C66	CAPACITOR-Mica 22 mmf 500V
CC9M50	C67	CAPACITOR-Ceramic .001 mfd Min. Value 500V
CC9A34	C68	CAPACITOR-Ceramic 100 mmf 500V
RC22A151M	R15	RESISTOR-Comp. 150 ohms 1/4 W
RC22A245J	R52	RESISTOR-Comp. 2.4 meg ±5% 1/4 W
RC22A225M	R55	RESISTOR-Comp. 2.2 meg 1/4 W
RC22A102M	R56,58,59,60,61	RESISTOR-Comp. 1000 ohms 1/4 W
RW0L00	R57	RESISTOR-Wirewound 0.47 ohms 1/2 W
RC22A104M	R62	RESISTOR-Comp. 100K 1/4 W

© John F. Rider

BROWNING UNIVERSAL FM-AM TUNERS — MODEL RJ-20 AND MODEL RJ-22

These tuners are designed to please the most discriminating listener. Truly high fidelity reception of FM and AM broadcasting has been engineered into these tuners which are specifically intended for custom receiving installations. The AM section features variable I.F. bandwidth with a broad high fidelity position and a narrow, interference reducing position. The FM section uses Major Armstrong's circuit and features dual limiters for best noise elimination. Bass and treble controls provide 20 db of boost at either end of the audio band and the associated audio amplifiers assure output commensurate with phonograph pickups. The power supply is self-contained and the chassis is styled for ease of mounting in bookshelves, cupboards, drawers and other confined locations.

INSTALLATION:

In mounting the unit, due consideration must be given to ventilation. Approximately 100 watts of heat must be dissipated. Position of mounting is not important.

If the speaker is to be located in or very near the cabinet in which the tuner is located, it may be necessary to shock mount the tuner on rubber or felt pads to entirely eliminate mechanical feedback.

The output of the tuner may be fed directly into the input of any high quality amplifier and speaker system. The gain of the amplifier should be such that 0.5 volt RMS will provide the desired output.

Antenna connections must be made as shown in the drawing "RJ-20 Antenna Connections". As may be seen, all ordinary possibilities have been foreseen and any good commercial FM antenna may be used. For those who wish to make their own antenna, the drawing "RJ-20 antenna constructed of 300 ohm twin lead" is supplied. Careful adherence to this drawing will provide a very satisfactory antenna.

Shielded leads from the tuner to the amplifier and also from the phonograph pickup to the connectors at the rear of the chassis are essential. The two male connectors will be found plugged into the female chassis connectors in the RJ-20 and several feet of shielded wire is packed with each tuner. It is advisable to make these leads as short as possible in order not to impair the high frequency response. Since individual installations vary, this wire is supplied uncut.

When making up the cables, the center conductor should be stripped and tinned, inserted in the center sleeve of the connector and heated until the solder flows making a good joint. Bring the braid up on the outside shell of the plug and solder all the way around.

There are some cases where the shield braid on the lead between the audio output of the RJ-20 and the amplifier employed may not be sufficient ground bond between the two. In cases where there is any hum (not present in the amplifier itself), try bonding the RJ-20 chassis to the audio amplifier with heavy copper braid or number 16 or larger wire.

A panel layout of the RJ-20 appears on the next page to facilitate cutting the panel to fit the unit. The shaft lengths are such that panel thickness up to 1/4" may be used.

OPERATION:

After proper installation, the tuner may be put into operation by turning the ON-OFF switch clockwise; the dial should be immediately illuminated. Within a minute, the tuning eye should emit a bright green glow. The tuner is ready to operate on AM. Allow two minutes warmup for FM

CONTROLS:

1. ON-OFF switch - Power switch independent of controls so they may be left in any desired position.
2. VOLUME - Controls audio output from FM, AM, or PHONO source.
3. AM-FM-PHONO - Bandswitch which selects type of reception desired.
4. NARROW-BROAD - Controls bandwidth of the AM I.F. amplifier. BROAD position is for high fidelity reception of strong, clear stations. NARROW position for best reception of weak stations or in crowded portions of the band. When tuning AM stations always tune in NARROW position switching to BROAD after tuning is complete.
5. TUNING - Selects stations on either FM or AM bands. Tune slowly and exactly using the tuning indicator as shown in drawing "RJ-20 Tuning Eye".
   Note: When tuning AM stations have NARROW-BROAD switch in NARROW position. After correct tuning is achieved, turn switch to BROAD if desired.
6. TREBLE - Provides 20 db of treble boost in full clockwise position.
7. BASS - Provides 20 db of bass boost in full clockwise position.

For flat response, both BASS and TREBLE should be fully counterclockwise.

For those who wish to incorporate phonograph connection to the tuner, a phono input connector is provided at the rear of the chassis. By turning the selector switch to PHONO, the phonograph input is connected to the amplifier through the tone and volume controls of the tuner. Bass and treble content as well as volume can be controlled directly with the tuner knobs.

It should be noted that while tuning between stations, both on FM and AM, the rushing noise is normal for the tuner. The extremely high sensitivity is responsible for picking up random atmospherics, but this will be eliminated when a station is tuned in provided the signal exceeds the noise voltage at the antenna.

ADJUSTMENT:

No adjustment should be made on the tuner aside from the panel controls. Adjustments and alignment on the FM portion should only be made by experienced personnel with the proper visual alignment equipment. Ordinary meters or aural methods are in general unsatisfactory for alignment. Replacement of tubes can usually be made without realignment.

MODELS RJ-20,
RJ-22, Tuners

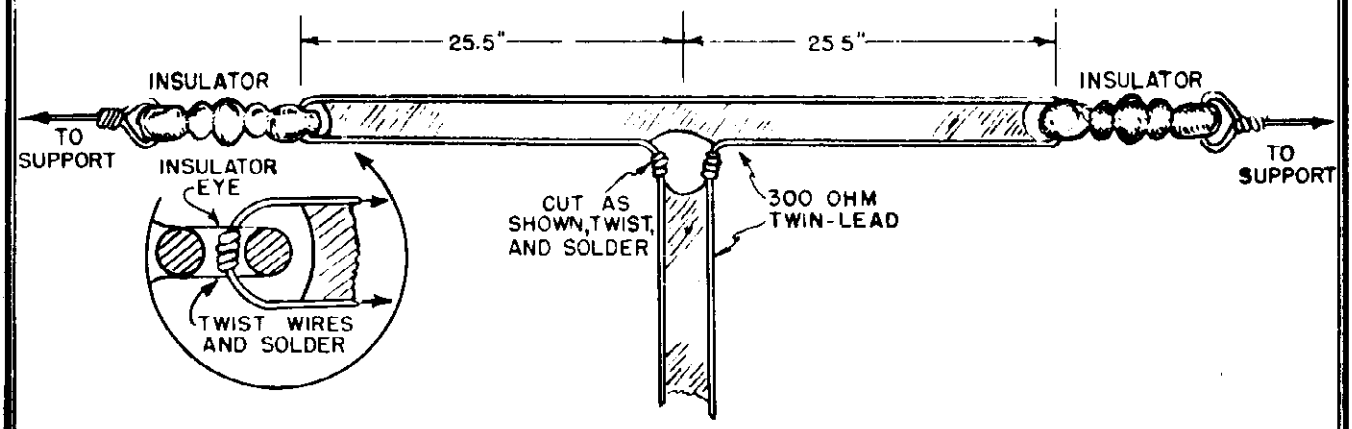

RJ-20 FM ANTENNA CONSTRUCTED
OF 300 OHM TWIN LEAD

CONNECTIONS WHERE 300 OHM FM ANTENNA AND SEPARATE AM ANTENNA IS TO BE USED

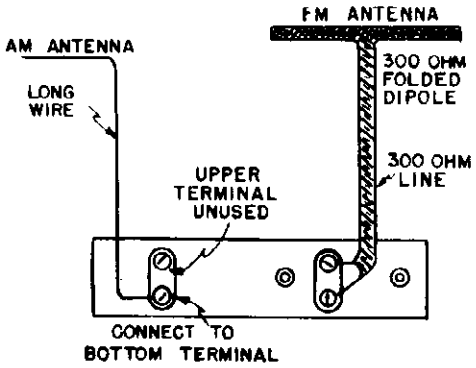

CONNECTIONS FOR SEPARATE ANTENNAS WHERE 50 OR 72 OHM FM ANTENNA IS USED

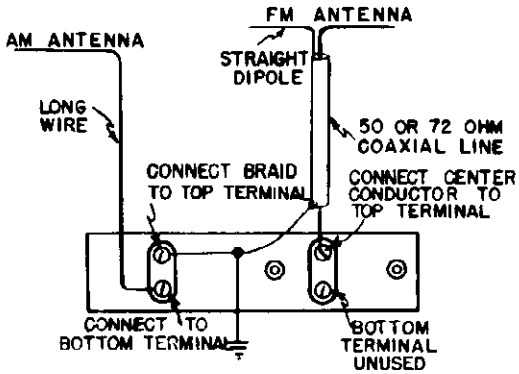

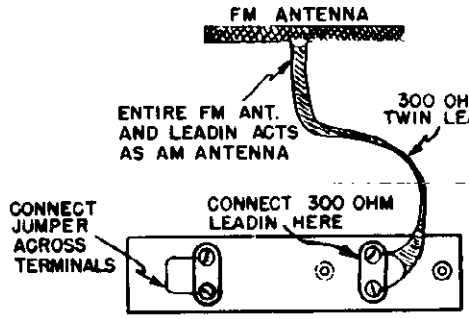

CONNECTIONS WHERE 300 OHM FM ANTENNA IS TO BE USED FOR BOTH FM & AM RECEPTION

RJ-20 ANTENNA CONNECTIONS

NOTE: "IN CASES WHERE 300 OHM FM ANTENNA IS TO BE USED FOR BOTH FM AND AM RECEPTION."

If 300 ohm twin lead from FM antenna to tuner is longer than about 25 ft., use condenser supplied as jumper. (This condenser is externally connected to the terminals when the tuner is received.)

©John F. Rider

INSTRUCTIONS FOR ALIGNMENT OF BROWNING MODELS RJ-20 AND RJ-22 FM-AM TUNER

Visual alignment of both FM and AM sections is to be preferred, but in case apparatus is not available, the following point-to-point method may be used. Visual alignment data are given in "DATA ON BROWNING MODEL RV-10 FM TUNER", which can be applied to the RJ-20 and the RJ-12A

EQUIPMENT EMPLOYED: FM SECTION

a. Signal generator covering 8,200 to 8,300 KC. with a sufficiently large dial so that 25 KC. can be accurately read.
b. Signal Generator from 88 to 108 MC.
c. A DC vacuum tube voltmeter which has an input resistance of more than three megohms.

IF-FM ALIGNMENT - Band Switch to FM Position.

1. Connect output of signal generator to ground and to pin #8 of the 7F8 mixer oscillator tube. (This point is most conveniently reached by connection to the stator plates of the mid-section of the three gang variable FM condenser - see instructions on RJ-20 for location of parts.) Set signal generator at 8,250 KC.
2. Connect vacuum tube voltmeter between ground and the lower end of the 1. meg. resistor, R53.
3. Tune primary and secondary of first, second and third FM IF transformers for substantially maximum limiter voltage as indicated by VTVM. Increase or decrease the output of the signal generator as required so that VTVM maximum reading is about 5 volts.
4. Set signal generator at 8,200 KC. The limiter voltage should be about the same as above (at 8,250 KC.)
5. Set signal generator at 8,300 KC. The limiter voltage should be about the same as at 8,250 KC.
6. If the FM IF response is not symmetrical, make adjustments on the FM IF transformers until a curve is obtained similar to that shown in Fig. 4 in "DATA ON BROWNING MODEL RV-10 FM TUNER".

FM DISCRIMINATOR ALIGNMENT

7. Connect DC VTVM between ground and the terminal of the 1 meg. resistor (R50) which is connected to the condenser C45. Set VTVM on 5 volt scale.
8. Connect signal generator as in No. 1. Set signal generator to 8,250 KC. and the output for about 5 volts on the limiter.
9. Adjust secondary of discriminator to zero voltage on VTVM. Use insulated screwdriver. Changing the tuning of the discriminator secondary should give positive and negative voltages either side of zero. Adjustment is critical.
10. Change signal generator from 8,200 to 8,300 KC., keeping signal voltage constant. Adjust primary of discriminator (see instructions of RJ-20 for location) so that equal and opposite voltages are developed.
11. Set signal generator at 8,250 KC. and check to see if VTVM reads zero as the primary adjustment may have changed the secondary. Readjust for zero.

ALTERNATE METHOD OF ADJUSTING THE PRIMARY OF THE DISCRIMINATOR

10A. Connect VTVM between ground and the junction of R47 and R48. Set signal generator at 8,250 KC. Adjust primary of discriminator for maximum DC voltage as read by VTVM.
11A. With signal generator set at 8,250 KC. and VTVM connected between ground and junction of R50 and C45, check to see that secondary of the discriminator transformer is tuned so that VTVM reads zero.

© John F. Rider

MODELS RJ-20,
RJ-22, Tuners

ADJUSTMENTS OF FM OSCILLATOR, RF, AND MIXER CIRCUITS

12. Feed a signal of about 105 MC. from a signal generator to the antenna of the receiver. With the VTVM connected between ground and the lower end of the 1. meg. resistor (R53), see if the oscillator frequency is so set that the dial reading is in accordance with the received frequency; that is, maximum VTVM reading should be obtained when receiver dial is set at the same frequency as the signal generator. If not, adjust padder (see RJ-20 instructions for position) slightly so that frequencies marked on dial correspond to that of the signal generator (it is assumed that the signal generator is on frequency - this can be checked with FM stations.)
13. Adjust RF and mixer (for location see RJ-20 Tube Layout) trimmers for maximum reading. The RF stage will be found to be much broader than the mixer which is relatively sharp.

AM SECTION

EQUIPMENT EMPLOYED:

a. Signal generator covering 465 KC. and frequencies from 500 to 1600 KC.
b. A DC vacuum tube voltmeter which has an input resistance of more than three megohms.

IF-AM ALIGNMENT - Band Switch to AM Position.

14. Set "Broad" - "Narrow" Switch to "Narrow" (position counter-clockwise).
15. Connect signal generator between ground and pin 8 of 6SA7 (this point is most conveniently reached by connecting to the stator plates of the middle section of the three gang AM tuning condenser). Set signal generator to 465 KC.
16. Connect VTVM between ground and the lower end of R16 (2.2 meg. resistor for AVC).
17. Adjust AM-IF transformers for maximum response. It will be found that the adjustment of T2 is quite sharp. T3 is much broader.
18. Switch "Broad" -"Narrow" switch to "Broad" position. Change signal generator 3. KC. either side of 465. KC., i.e. from 462. to 468 KC. Observe VTVM reading as signal is changed. The IF response should be nearly symmetrical with two peaks and a small valley between them. If not, slight adjustments may be made on T3.
19. Switch to "Narrow" position and set signal at 465 KC. and see if sharp resonance curve has been altered. If necessary, peak again by adjustments on T2. Successive adjustments of 18 and 19 may be required. If visual method is used, observation makes adjustments relatively easy.

ADJUSTMENTS OF AM OSCILLATOR, RF, AND MIXER CIRCUITS

20. Feed a signal from signal generator into the AM antenna. Set signal generator at 1300 KC. With VTVM connected on AVC circuit as per 16, set oscillator trimmer, if necessary, so that dial reads 1,300 KC. when maximum response is obtained.
21. Set signal generator at 1400 KC. and adjust RF and mixer trimmers for maximum response. Keep signal low enough so AVC voltage will not exceed 3 or 4 volts.
22. Set signal generator to about 600 KC. Adjust AM padder for maximum response by changing the frequency from signal generator a few KC. either way and observing VTVM.

©John F. Rider

MODELS RJ-20, RJ-22, Tuners

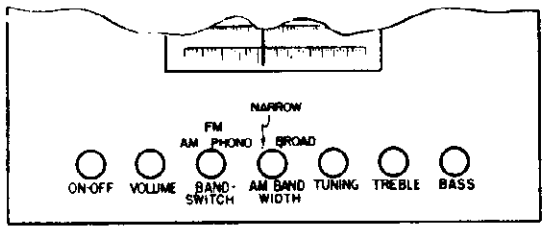

RJ-20 CONTROL LAYOUT

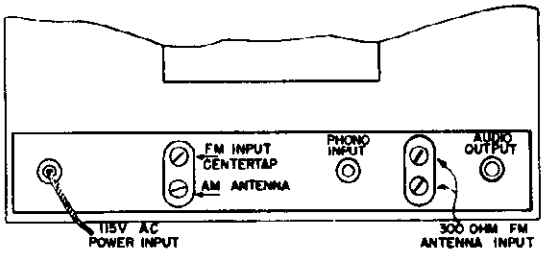

RJ-20 REAR VIEW

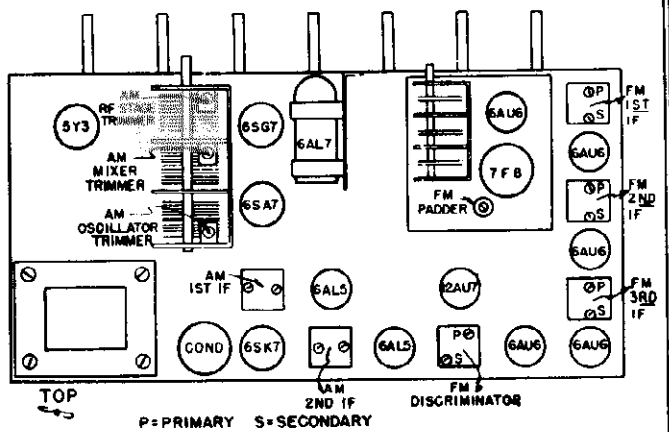

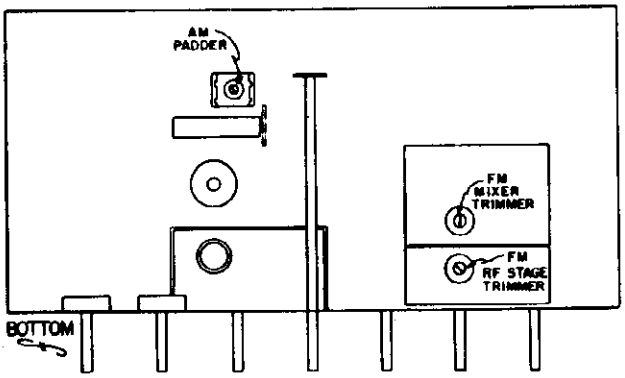

USE 6.3 VOLT BAYONET BASE #47 PILOT LAMPS

RJ-20 TUBE LAYOUT

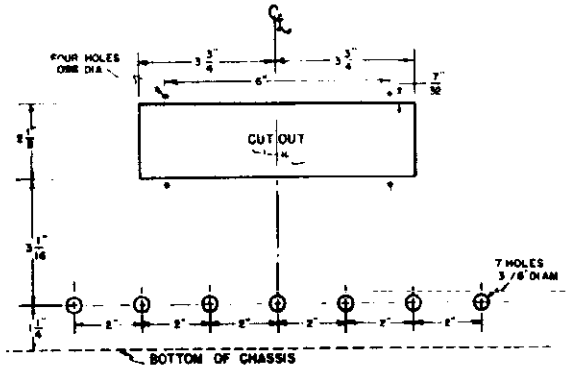

RJ-20 PANEL LAYOUT

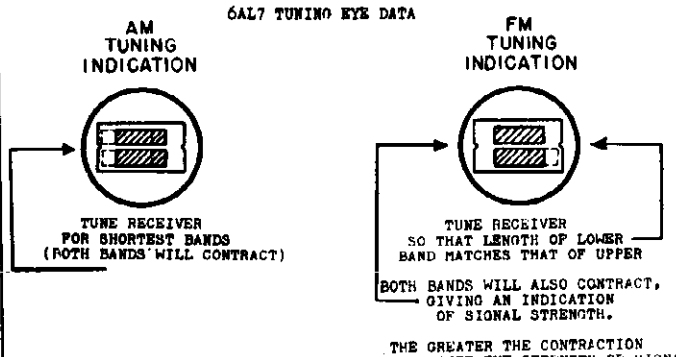

RJ-20 TUNING EYE

©John F. Rider

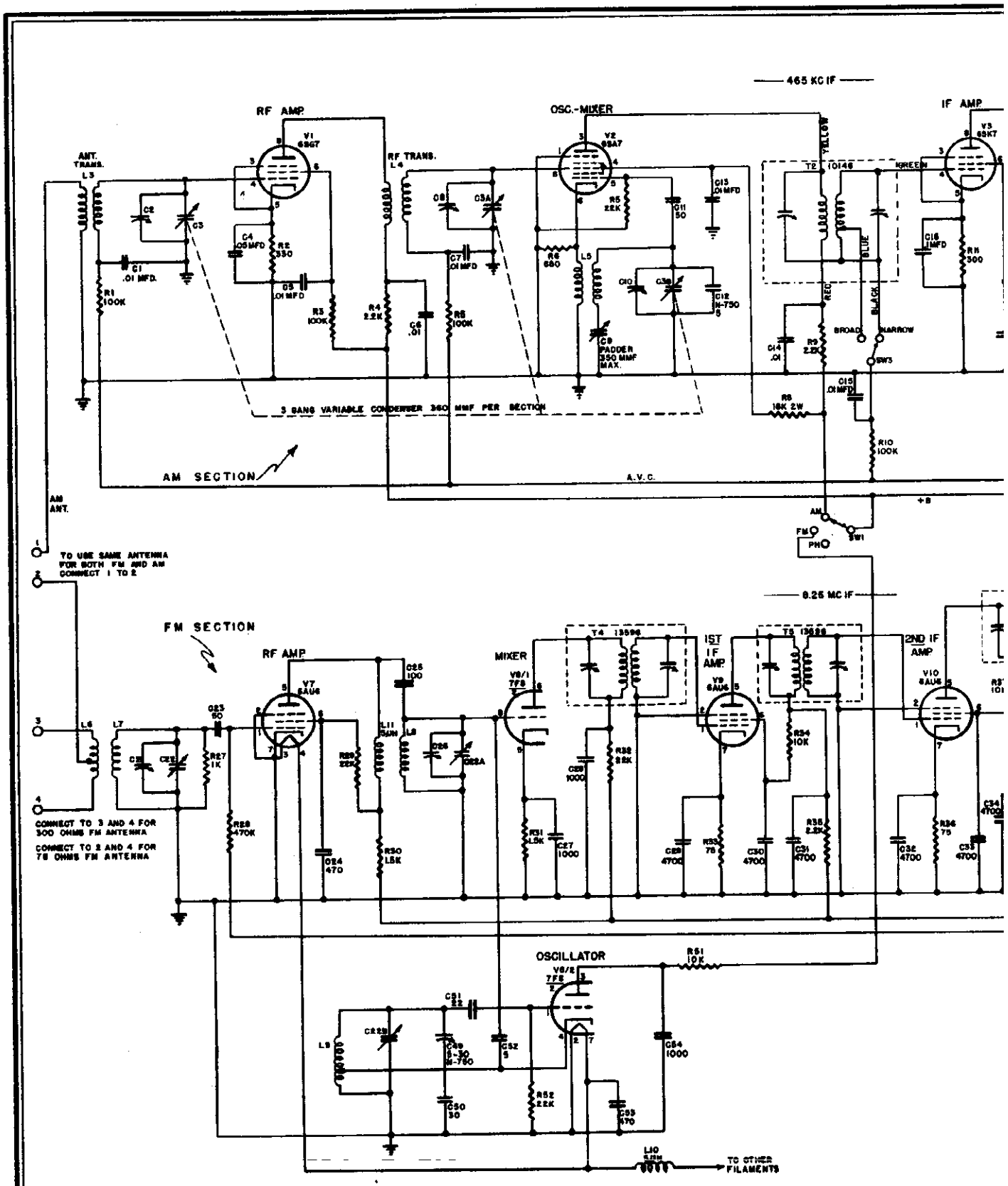

RJ-20 FM-AM TUNE

MODELS RJ-20,
RJ-22, Tuners

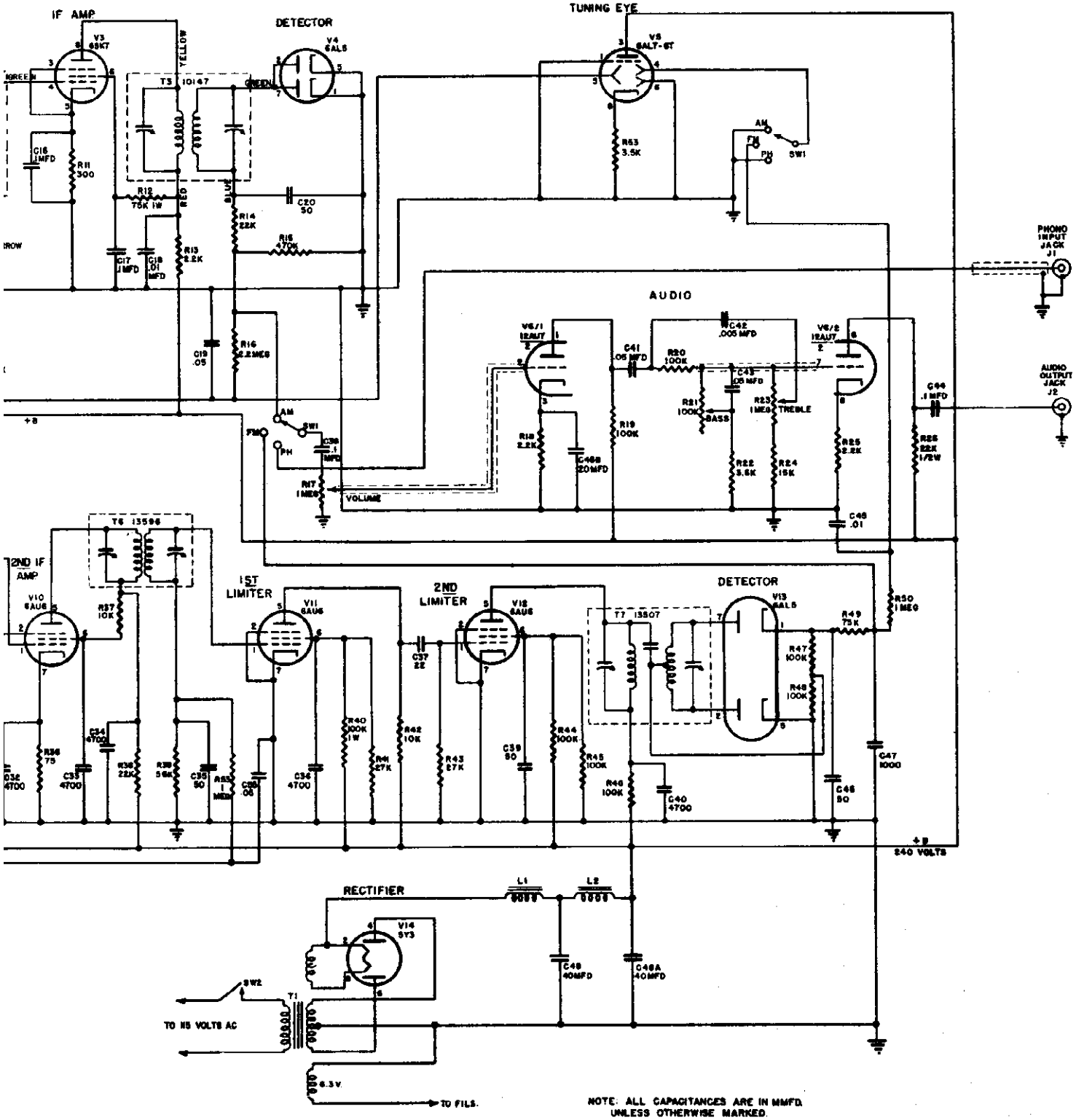

I-AM TUNER

MODELS M-2FM, M-3FM Series:
M-2 220, M-2 260, M-3 175,
M-3 220

ELECTRICAL SPECIFICATIONS

WATTS AT 117 VOLTS A.C. - 100 SERIES M-2 260, M-3 220 - PANAMUSE M-2 220, M-3 175

VOLTAGE A.C. 105 - 125

M-2 20 TUBE, M-3 17 TUBE A.C. FOUR BAND SUPERHETERODYNES

BROADCAST BAND	540 - 1600 K.C.
SHORT WAVE BAND	5.4 - 18 MC
BAND SPREAD	9.48 - 12 MC
F.M. BAND	41.9 - 51 MC

TUBE COMPLEMENT

6SK7 R.F.	6SJ7 LIMITER	M-3 AMP. A-9	M-2 AMP. A-10
6SA7 CONVERTER	6H6 DISCRIMINATOR	6R7 VOLTAGE AMP.	6R7 VOLTAGE AMP.
6J5 OSCILLATOR	6Q7 DET. & 1ST AUDIO	6SC7 DUO DRIVER	6C8G DUO DRIVER
6SG7 1ST I.F. AM, FM	2 6J5 TUNING EYE AMP.	2 - 6V6G OUTPUT	4 - 6V6 OUTPUT
6SG7 2ND I.F. FM	6AF6G TUNING EYE	2 - 5Y3G RECTIFIER	3 - 5Y3G RECTIFIER

PUSH BUTTON SET UP

1. If the station you select for one of the buttons falls between 1600 to 1000 kilocycles be sure that the pin jack is in the upper strip.
2. Adjust the brass screw at the side of the lower trimmer unitl the wanted station is heard most clearly.
3. Adjust the lower trimmer screw for maximum volume.
4. Press Manual button making certain the station is still tuned in; check this reception against the reception on the button just set up. If it is the same proceed with the next station on the list.
5. If the station you desire to pick up falls between 1000 and 550 kilocycles, you must remove the pin jack and place in the hole provided at the bottom edge of the upper trimmer (see figure 1).
6. Turn the upper trimmer screw back until the screw is off the trimmer plates.
7. Adjust the brass screw until the wanted station is heard most clearly.
8. Then adjust the lower trimmer until maximum volume is secured; if maximum volume cannot be had and the lower trimmer screw is down tight you must finish tuning with the upper trimmer screw.

BUTTON LAYOUT

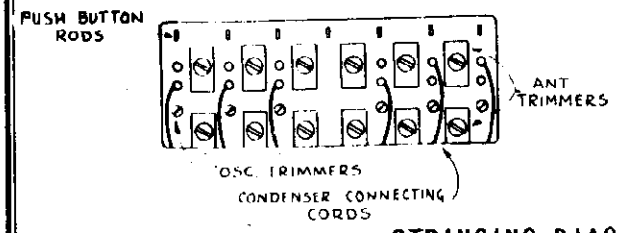

STRINGING DIAGRAM

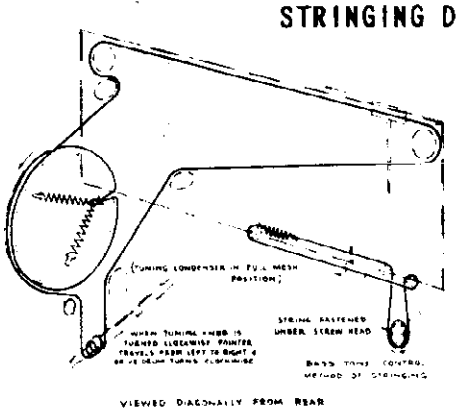

CHASSIS LAYOUT

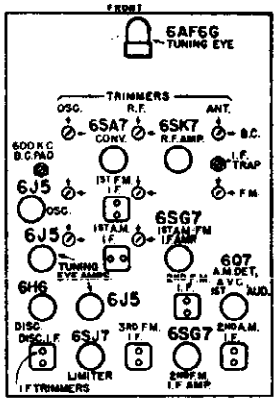

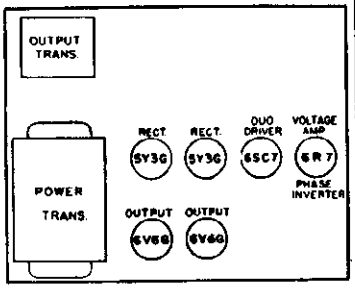

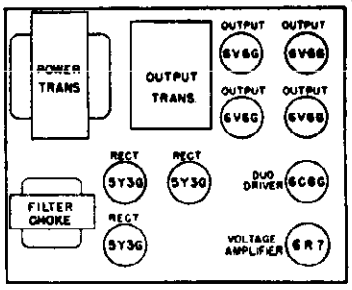

MODELS M-2FM,
M-3FM Series

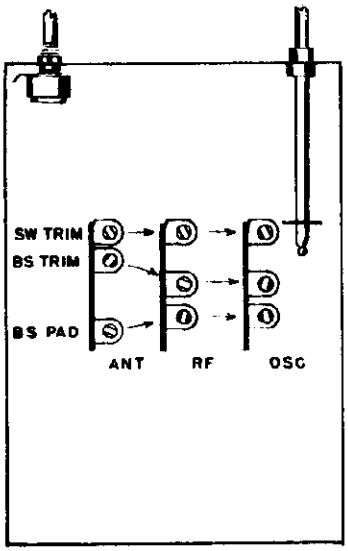

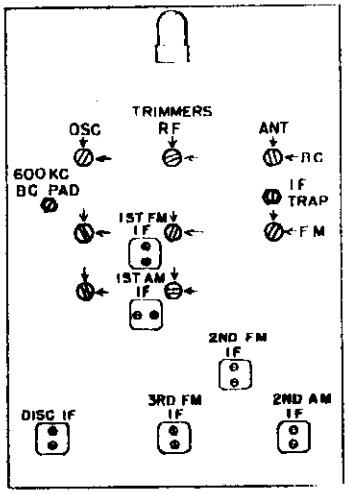

ALIGNMENT INSTRUCTIONS

An output meter and a signal generator are required for proper alignment of these sets. The oscillator should be calibrated at the following points, 455 Kc, 600 Kc, 900 Kc, 1400 Kc, 1600 Kc, 2.0 Mc, 5 Mc, 5.5 Mc, 6 Mc, 9.5 Mc, 12 Mc, 16 Mc, and 18.0 Mc. Always keep the output of the signal generator as low as possible to prevent A.V.C. action and false settings. Connect the high side of the generator to the antenna terminal and the low side of it to the ground terminal.

TABULATION FOR ALIGNMENT

STEPS	IN SERIES WITH ANTENNA	SET GENERATOR AT	SET GANG AT	ADJUST	LOCATED	TO OBTAIN
1	250 M.M.F.	455 Kc.	Note A	2nd I.F. Trimmers	Top of I.F. Trans.	Max. Output
2				1st I.F. Trimmers		
3			Push Station Button	Wave Trap Trimmer	See Fig.	Min. Output
4		1600 Kc.	1600 Kc.	B.C. Osc. Trimmer	SEE FIG.	MAXIMUM OUTPUT
5		1400 Kc.	1400 Kc.	B.C. Mixer Trimmer		
6				B.C. Ant. Trimmer		
7		600 Kc.	Note B	600 Kc. Pad		
8	RECHECK	1400 Kc.				
9	400 Ohms	18 Mc.	18 Mc.	S.W. Osc. Trimmer *		
10		16 Mc.	16 Mc.	S.W. Mixer Trimmer **		
11				S.W. Ant. Trimmer **		
12	CHECK	6 Mc.				
13	400 Ohms	12 Mc.	12 Mc.	B.S. Osc. Trimmer *		
14				B.S. Mixer Trimmer **		
15				B.S. Ant. Trimmer **		
16		9.5 Mc.	9.5 Mc.	B.S. Osc. Padder		
17				B.S. Mixer Padder		
18				B.S. Ant. Padder		
19	RECHECK	12 Mc.				

*Tighten oscillator trimmer screw for maximum capacity, then unscrew until second peak is secured.
**Tighten R.F. trimmer screw for maximum capacity, then unscrew until first peak is secured.

NOTE A. Set gang at minimum.
NOTE B. Strongest signal and rock gang.

©John F. Rider

ALIGNMENT OF M-2, M-3 FM BAND

Following are described two (2) methods for the Alignment of the F.M. Band.

Method 1 will require the use of a Cathode Ray Oscilloscope, a sweep frequency generator providing a fundamental frequency at 4.3 Mc and a deviation of at least 150 Kc and also a signal generator with a fundamental high frequency range of 42-50 Mc.

As an indicating device, a meter with at least 10 Meg. ohm internal resistance can be used or as a second choice - a low range micro-ammetor with a 1 Meg. ohm resistor in series.

Method 2 will require the same equipment with the exception of the Oscilloscope and the 4.3 Mc sweep generator.

ALIGNMENT BY METHOD 1

Connect the vertical deflection input of the oscilloscope with a 1 Meg. ohm resistor in series to the grid of the limiter tube. Care must be exercised to maintain the connection of the resistor to the grid of the limiter tube as short as possible to avoid regeneration. The ground terminal of the oscilloscope must be connected to the chassis.

Limiter Alignment - Connect the ground terminal of the 4.3 Mc I.F. sweep generator to the chassis. Connect the output of the signal generator to the grid of the second I.F. tube with a .1 Mfd. paper condenser in series, adjust the deviation control of the generator for a usable picture on the oscilloscope screen, with the input control of the oscilloscope set at maximum gain. Detune the secondary trimmer of the limiter transformer, adjust the primary trimmer until you obtain a pattern as shown in Figure 1 of the oscilloscope photos. Then adjust the secondary trimmer until you obtain a pattern as shown in Figure 2. The pattern should be kept centered in the oscilloscope screen.

Align 2nd I.F. - Move the signal generator to the grid of the 1st I.F. tube and repeat the same procedure as just described for the limiter stage.

Align 1st I.F. - Move the signal generator to the grid of the Mixer tube and repeat the same procedure as just described for the limiter stage.

Align Discriminator - Connect the oscilloscope to the Cathode of the 6H6 F.M. detector which is not grounded. Connect the signal generator to the secondary of the limiter transformer as indicated by A in Figure 6. Adjust the secondary trimmer of the discriminator transformer with an insulated screw driver, for pattern as in Figure 2, then adjust the primary trimmer to obtain symetrical and linear trace and centering the picture on the oscilloscope screen. It will be necessary to go over the primary and secondary trimmer several times to adjust the stage accurately.

R.F. Alignment F.M. Band - Connect the high frequency generator to the regular terminal with a 400 ohm carbon resistor in series. Make certain the F.M. antenna Selector Switch is in regular position.

Set the signal generator at 50 Mc and adjust the Oscillator trimmer for correct dial calibration at this frequency. Connect high resistance Voltmeter to point A, Figure 4 and then adjust the signal generator to 49.5 Mc adjust the mixer and the R.F. Trimmers for maximum deflection of the meter.

Another indicating device for the R.F. alignment - connect a 0-1 millameter between point A and ground or a low range micro-ammeter with a 1 Meg. ohm resistor as series between C and ground. Tune for maximum deflection of the meter.

Lacking the above meters, the R.F. and Mixer alignment may be trimmed for minimum noise on signal. To avoid false peak when aligning the Mixer and the R.F. Trimmers the gang condenser must be rocked through the signal.

©John F. Rider

MODELS M-2FM,
M-3FM Series

ALIGNMENT OF M-2, M-3 FM BAND (Continued)

ALIGNMENT BY METHOD 2

Limiter Alignment - Connect one of the indication meters as shown in Figure 4 or Figure 5.

Feed a 4.3 Mc signal through .1 Mfd. paper condenser to the grid of the second I.F. tube. Place a 1000 ohm carbon resistor across the secondary of the limiter transformer then tune the primary for maximum meter deflection. Remove the 1000 ohm carbon resistor from the secondary and place it across the primary and tune the secondary maximum meter deflection.

To check how accurate this stage has been aligned tune the signal generator 75 Kc each side of 4.3 Mc. Only a slight loss in maximum meter deflection should be noted.

Align 2nd I.F.F.M. - Move the signal generator to the grid of the 1st I.F. tube and repeat the same procedure described above for the limiter stage.

Align 1st I.F.F.M. - Move the signal generator to the grid of the mixer tube and repeat the same procedure as described above for the limiter stage.

Discriminator Alignment - Connect a meter to Point A as shown in Figure 6 to the ungrounded Cathode.

Feed a 4.3 Mc signal to the grid of the second I.F. tube.

With an insulated screw driver turn the the secondary trimmer screw for maximum and minimum capacity. You will note that there are two points where you have maximum meter deflection. Tune to the point between the the maximum meter deflections where the meter will read as near zero as possible.

Tune the signal about 150 Kc each side of 4.3 Mc. You will note that the meter deflection rises about equal distance each side of 4.3. Mc. Tune the primary trimmer until you have maximum meter deflection and equal distance each side of 4.3 Mc.

Note: The meter will have to be reversed when reading the other side of the signal.

It will be necessary to go over the primary and secondary trimmers several times to accurately align this stage.

R.F. Alignment FM Band - Connect the high frequency generator to the regular terminal with a 400 ohm carbon resistor in series. Make certain the FM antenna Selector Switch is in regular position.

Set the signal generator at 50 Mc and adjust the Oscillator trimmer for correct dial calibration at this frequency. Connect high resistance Voltmeter to point A, Figure 4 and then adjust the signal generator to 49.5 Mc adjust the mieer and the RF Trimmer for maximum deflection of the meter.

Another indicating device for the RF alignment - connect a 0-1 millameter between point A and ground or a low range micro-ammeter with a 1 Meg. ohm resistor as series between C and ground. Tune for maximum deflection of the meter.

Lacking the above meters, the RF and Mixer alignment may be trimmed for minimum noise on signal. To avoid false peak when aligning the Mixer and the RF Trimmers the gang condenser must be rocked through the signal.

Note: If a high frequency signal generator is not available a standard signal generator which will give good harmonic output between 42 - 50 Mc can be used.

Several methods of using a micro-ammeter or a V.T. voltmeter may be used for the alignment of the discriminator are shown in figure 7.

©John F. Rider

I.F. BEFORE ALIGNMENT FM

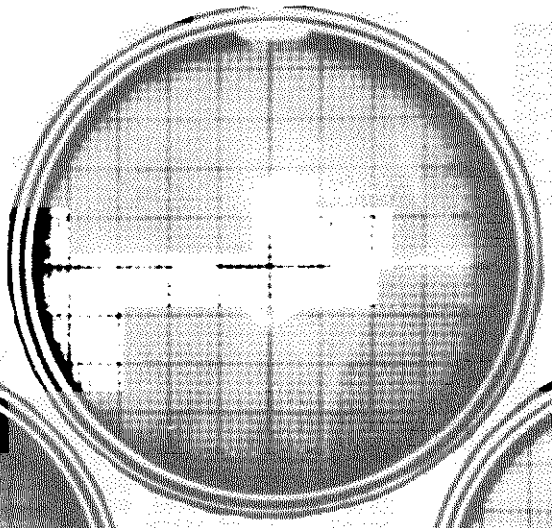

Fig. 1

I.F AFTER ALIGNMENT FM

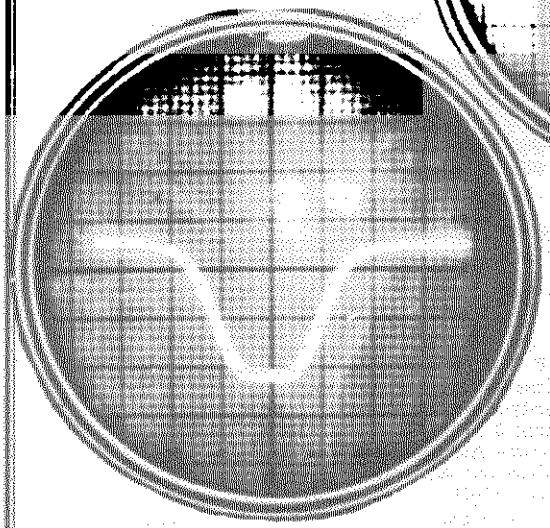

Fig. 2

ALIGNMENT OF THE DISCRIMINATOR

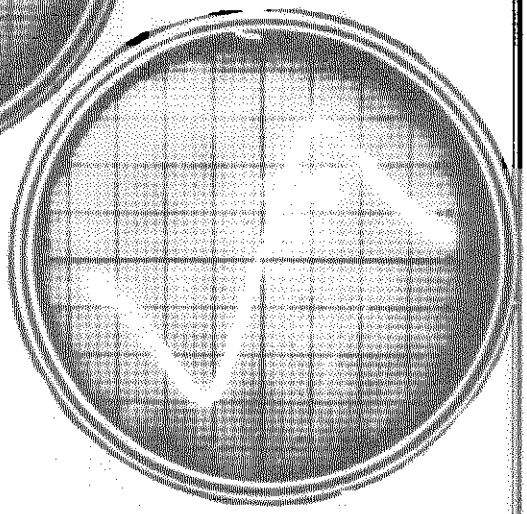

Fig. 3

METHODS OF MEASURING LIMITER GRID VOLTAGE.

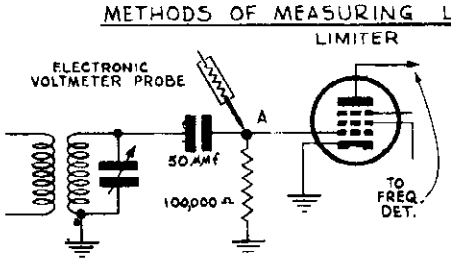

Fig. 4

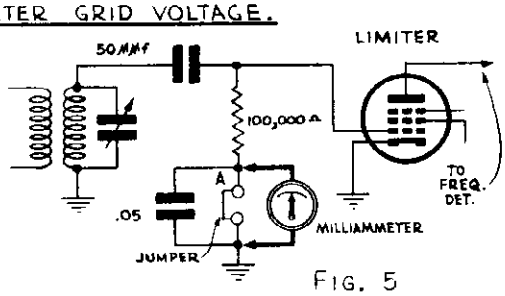

Fig. 5

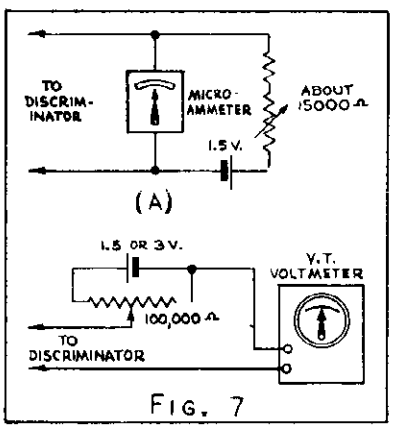

Fig. 7

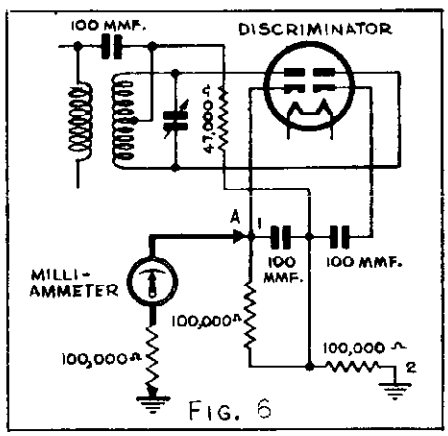

Fig. 6

©John F. Rider

MODELS M-2FM,
M-3FM Series

PARTS LIST — M-2FM and M-3FM

Refer. No.	Old Part No.	New Part No.	DESCRIPTION
1	773-49	77214	100M Ohm
2	773-35	77270	2.2 Meg.
3	773-43	77211	4700 Ohm
4	77-40	77263	1500 Ohm
5	773-54	77218	1 Meg.
6	77-69	77266	22 M Ohms
7	773-36	77209	220 Ohm ½ W. Early Production
8	773-4	77258	100 Ohms
9	773-80	77215	150 M Ohms
10	773-40	77213	47 M Ohms
11	773-56	77271	3.3 Meg.
12	77-98	77305	6800 Ohms
13	773-39	77262	1000 Ohms
14	773-42	77210	3300 Ohms
15	773-11	77264	2200 Ohms
16	773-53	77217	470 M ½ W. Early Production Phono Input
17	773-52	77268	330M Ohms
18	773-51	77216	220M Ohms
19	25-134	25196	.05 Mfd. 600 V.
20	25-80	25196	.05 Mfd. 600 V.
21	25-81	25215	.1 Mfd. 600 V.
22	254-2	25194	.01 Mfd. 600 V.
23	25-97	25194	.01 Mfd. 600 V.
24	253-4	25192	25 MMF
25	253-5	25193	50 MMF
26	25-136	25136	80 MMF Silver Mica
27	253-1	25188	100 MMF Mica
28	25-52	25052	200 MMF Silver Mica
29	253-2	25187	250 MMF Mica
30	253-3	25189	500 MMF Mica
31	258-2	25210	350 MMF Silver Mica
32	25-133	25133	5000 MMF Mica
33	78-15	78015	Volume Control 3 Meg.
34	78-20	78020	Treble Control 4 Meg.
35	78-21	78021	Bass Control 3 Meg.
36	38-371	38371	Loop Antenna Assembly M-2 & M-3
36	13-208	13208	Antenna Control Assembly 100 M-2 & 100 M-3
37	38-327	38327	FM Antenna Coil
38	38-318	38318	S.W. Antenna Coil
39	38-132	38132	B.C. Mixer Coil
40	38-328	38328	40 FM Mixer Coil
41	38-319	38319	S.W. Mixer Coil
42	38-246	38246	B.C. Oscillator Coil
43	38-329	39329	FM Oscillator Coil
44	38-320	38320	S.W. Oscillator Coil
45	38-82	38082	I.F. Trap Coil
46	38-127	38127	1st. I.F. Transformer AM
47	38-128	38128	2nd. I.F. Transformer AM
48	38-237	38237	1st. I.F. Transformer FM
49	38-238	38238	2nd. I.F. Transformer FM
50	38-239	38239	Limiter Transformer FM
51	38-240	38240	Discriminator Transformer FM
52	26-151	26151	BC & FM Antenna & Mixer Trimmer
52	26-147	26147	BC & FM Oscillator Trimmer
53	26-140	26140	S.W. Trimmer Ceramic
54	26-141	26141	Band Spread Padder Ceramic
55	26-142	26142	Band Spread Trimmer Ceramic
56	263-1	26196	B.C. Oscillator Padder
57	26-50	26050	I.F. Trap Trimmer
58	11-145	11145	Phono Motor Socket & Cable Assembly
59	25-50	25050	Electrolytic Condenser
60	11-75	11075	A.C. Plug to Amp.
61	11-74	11074	Amp. Input Plug & Cord
62	805-1	80267	Phono Jack
63	80-169	80169	A & G Terminal Strip
64	80-104	80104	D & D Terminal Strip
65	22-101	22101	Tuner Power Supply Cable & Plug Assembly
66	90-96	90096	Antenna Change Over Switch
67	90-83	90083	Band Switch
68	90-81	90081	Push Button Switch
69	38-316	38316	Push Button Oscillator Coil Strip
70	36-149	36149	Push Button Trimmer Strip—Lower
70	26-148	26148	Push Button Trimmer Strip—Upper
71	26-137	26137	Three Gang Condenser
72	31-178	31178	Dial Scale
	11-63	11063	Treble Pointer
	11-62	11062	Bass Pointer
	07-85	07085	Tone Control Drive Cord Assembly
	11-71	11071	Dial Pointer
	07-146	07146	Dial Drive Cord Assembly

MODELS M-2FM, M-3FM, M-2AM, M-3AM, Series

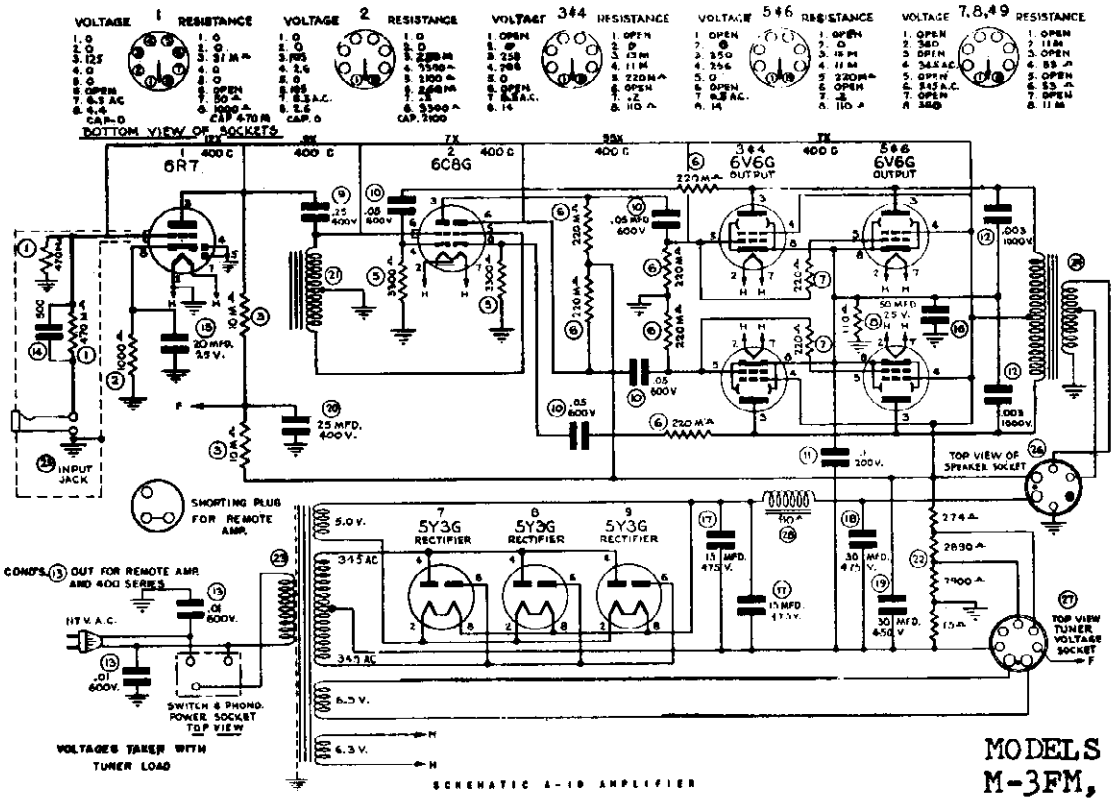

MODELS M-2FM, M-3FM, Series

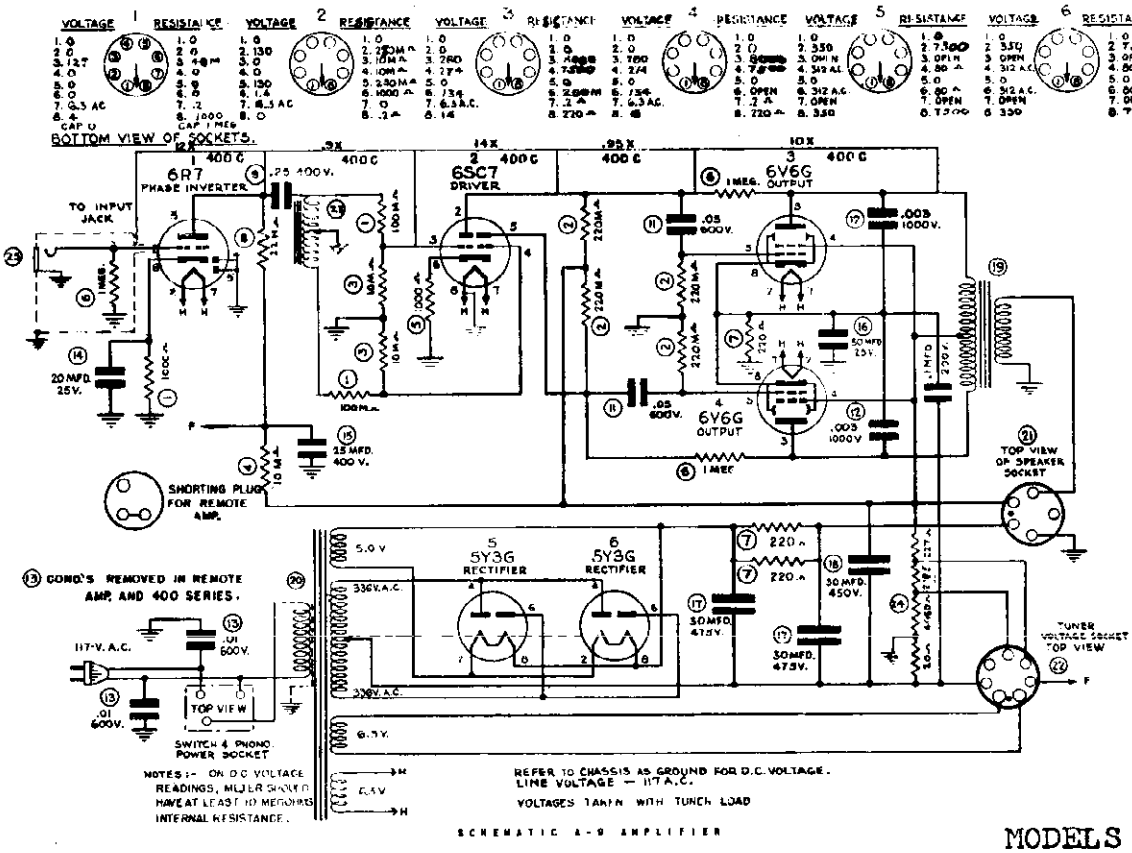

MODELS M-2AM, M-3AM, Series

©John F. Rider

MODELS M-2FM, M-3FM,
M-2AM, M-3AM, Series

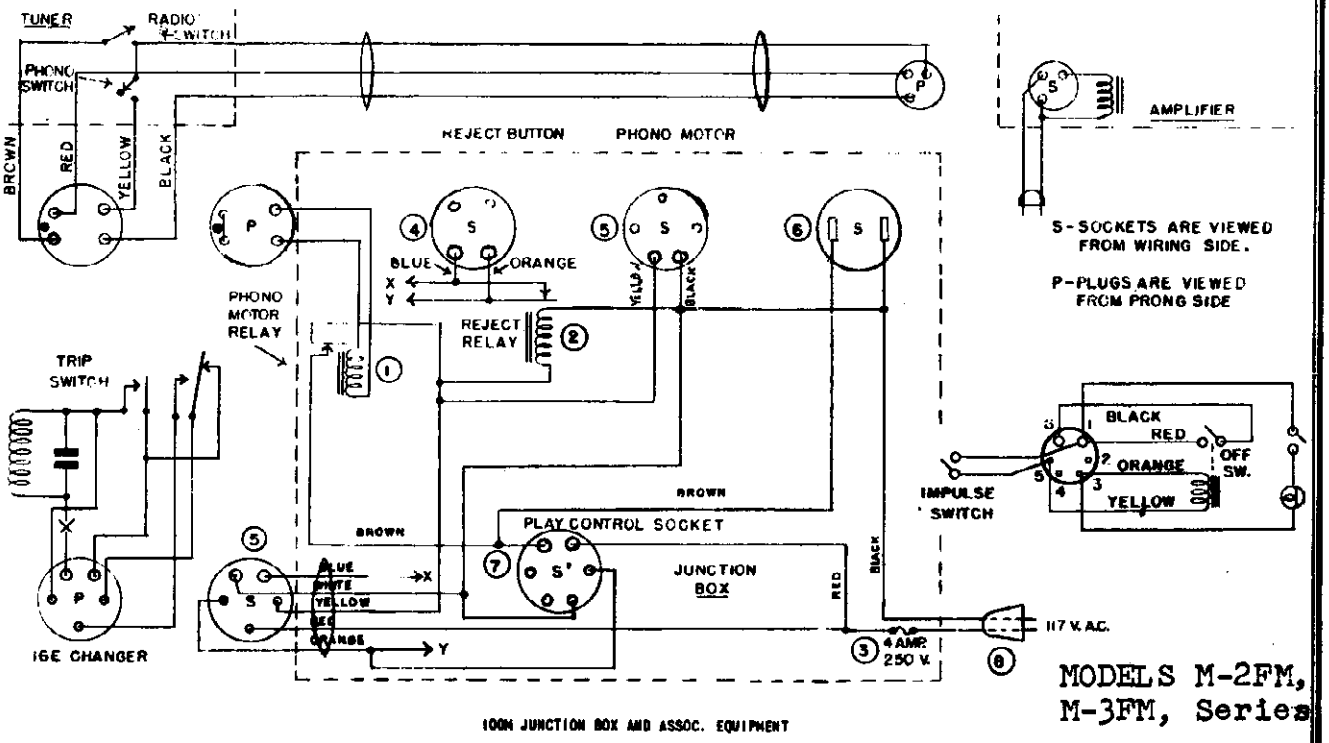

100N JUNCTION BOX AND ASSOC. EQUIPMENT

MODELS M-2FM,
M-3FM, Series

PARTS LIST

MODELS M-2AM,
M-3AM, Series

JUNCTION BOX 100 M-2, 100 M-3

Refer. No.	Old Part No.	New Part No.	DESCRIPTION
1	90-63	90063	Phono Motor Relay
2	90-109	90109	Reject Relay
3	48-5	48005	4 Amp. 250 V. Fuse
4	80-77	80077	4 Prong Socket
5	80-57	80057	5 Prong Socket
6	80-69	80069	2 Prong Socket
7	80-61	80061	6 Prong Socket
8	27-134	27134	A.C. Line Cord

CABINET

Refer. No.	Old Part No.	New Part No.	DESCRIPTION
	59-106	59106	Dial Escutcheon
	59-115	59115	Dial Escutcheon, Blonde
	59-105	59105	Push Button Knobs
	59-129	59129	Push Button Knobs, Blonde
	6060	67391	Tone Control Knobs
	67-81	67081	Tone Control Knobs, Blonde
	6058	67389	Tuning Knob
	67-80	67080	Tuning Knob, Blonde
	67-209	67209	Range Knob
	67-210	67210	Range Knob, Blonde
	31-158	31158	Wave Band Decal
	31-62	31062	Tuning & Treble Decal
	31-63	31063	Volume & Bass Decal
	41-78	41078	Station Call Letter Kit
	73-518	73518	Operating Instructions M-2 & M-3
	73-520	73520	Operating Instructions 100 M-2 & M-3
	2769	90194	Reject Button
	66399	66399	Gear Box 100 M Series
	21156	21156	Drive Motor 100 M Series
	81-57	81057	Speaker for M-3
	81-64	81064	Speaker for M-2
	81-78	81078	Cone & Voice Ass'y for 81-57 Speaker
	81-77	81077	Cone & Voice Coil Ass'y for 81-64 Speaker

©John F. Rider

MODELS M-2FM,
M-3FM, Series
MODELS M-2AM, M-3AM

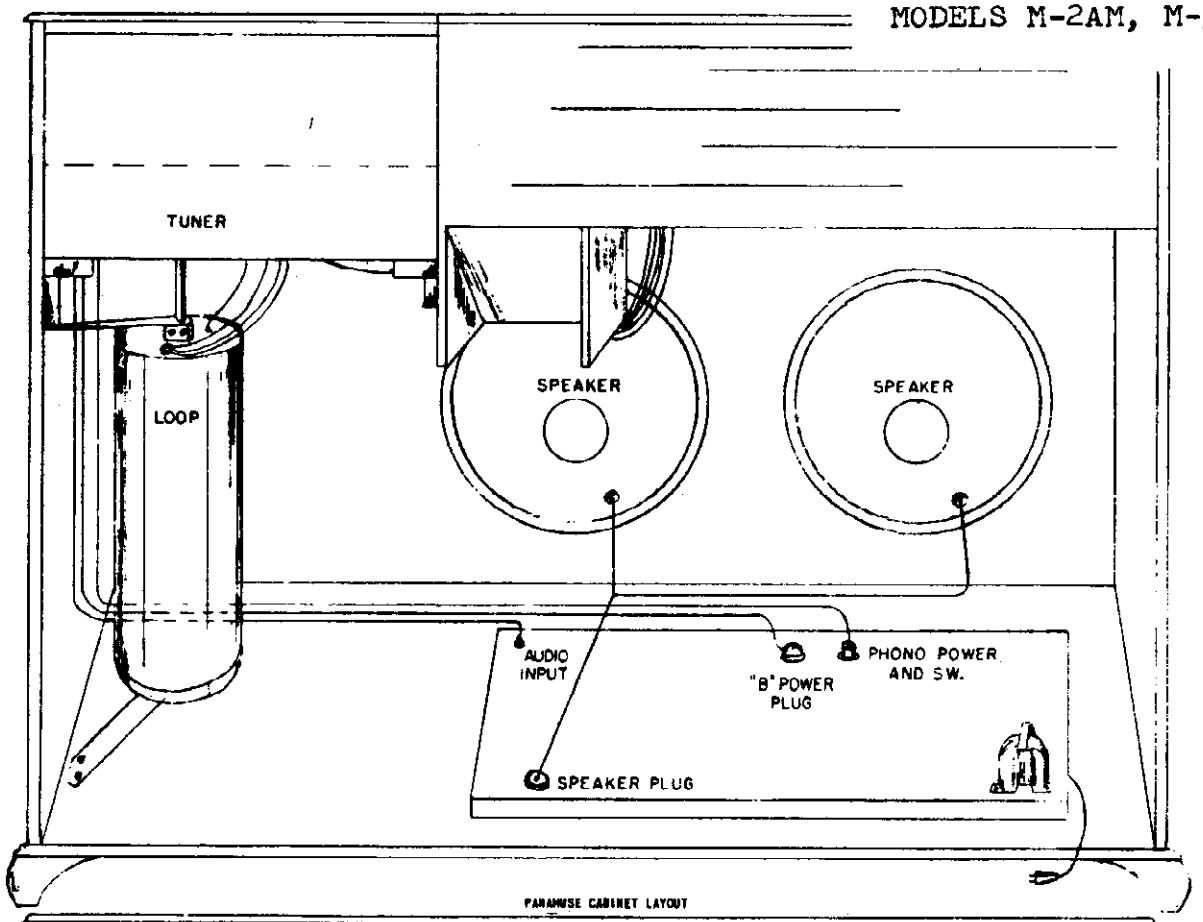

PANAMUSE CABINET LAYOUT

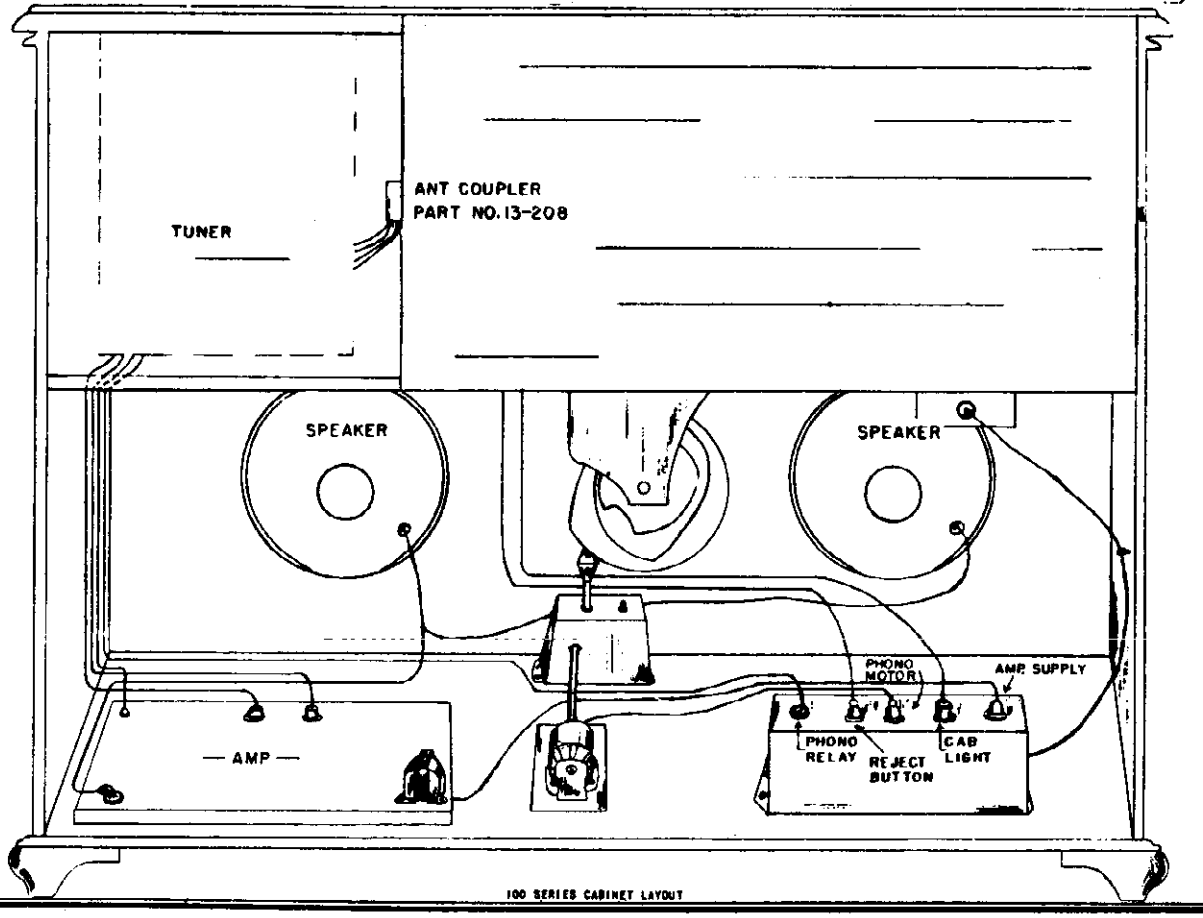

100 SERIES CABINET LAYOUT

©John F. Rider

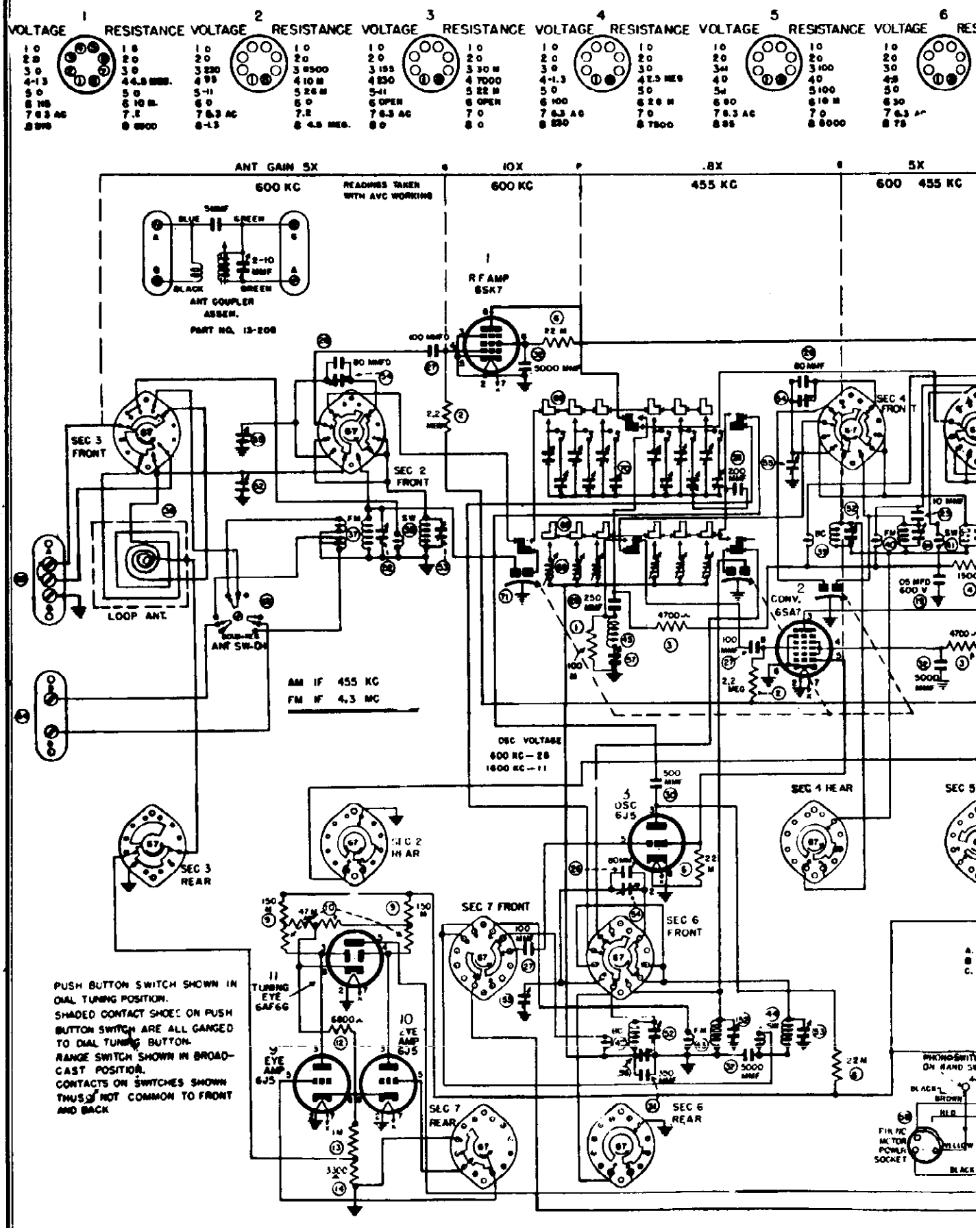
1
VOLTAGE
RESISTANCE
2
VOLTAGE
RESISTANCE
3
VOLTAGE
RESISTANCE
4
VOLTAGE
RESISTANCE
5
VOLTAGE
RESISTANCE
6
VOLTAGE
ANT GAIN 5X
600 KC
READINGS TAKEN WITH AVC WORKING
10X
600 KC
.8X
455 KC
5X
600 455 KC
ANT COUPLER ASSEM.
PART NO. 13-208
1 RF AMP 6SK7
SEC 3 FRONT
SEC 2 FRONT
SEC 4 FRONT
LOOP ANT.
ANT SW-DX
2 CONV. 6SA7
AM IF 455 KC
FM IF 4.3 MC
OSC VOLTAGE
600 KC — 28
1600 KC — 11
3 OSC 6J5
SEC 2 REAR
SEC 3 REAR
SEC 4 REAR
SEC 5
SEC 7 FRONT
SEC 6 FRONT
11 TUNING EYE 6AF6G
10 EYE AMP 6J5
9 EYE AMP 6J5
SEC 7 REAR
SEC 6 REAR
PUSH BUTTON SWITCH SHOWN IN DIAL TUNING POSITION.
SHADED CONTACT SHOES ON PUSH BUTTON SWITCH ARE ALL GANGED TO DIAL TUNING BUTTON.
RANGE SWITCH SHOWN IN BROADCAST POSITION.
CONTACTS ON SWITCHES SHOWN THUS ⊘ NOT COMMON TO FRONT AND BACK

MODELS M-2FM, M-3FM,
M-2AM, M-3AM, Series

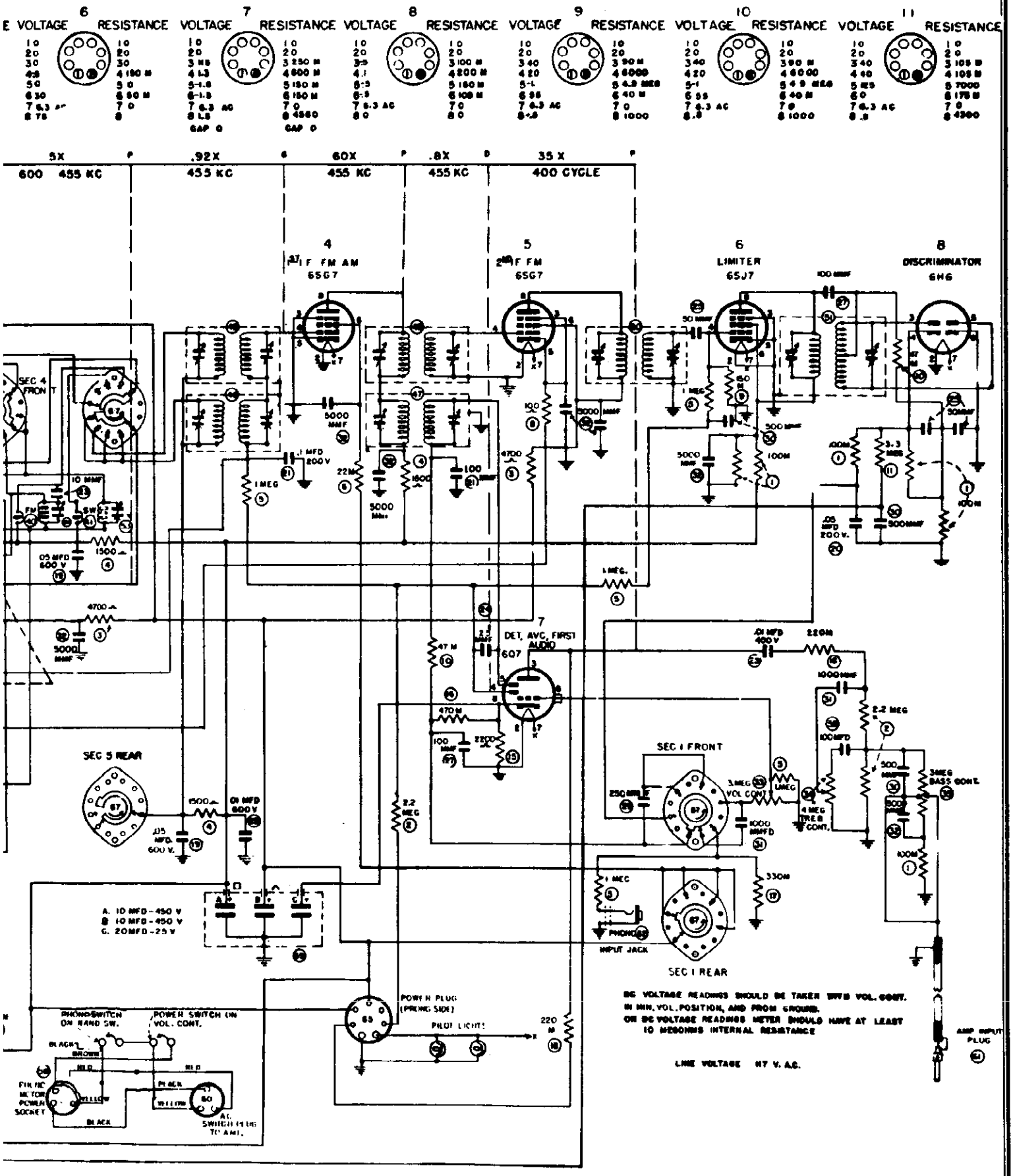

MODELS M-2FM,
M-3FM, Series

PARTS LIST

AMPLIFIER A-9 M-3

Refer. No.	Old Part No.	New Part No.	DESCRIPTION
1	773-83	77214	100 M Ohms ½ Watt
2	773-79	77216	220 M Ohms ½ Watt
3	773-74	77212	10 M Ohms ½ Watt
4	77-22	77022	10 M Ohms 1 Watt
5	773-39	77262	1000 Ohms ½ Watt
6	773-84	77218	1 Meg ½ Watt
7	77-104	77104	220 Ohms 4 Watt
8	77-69	77069	22 M Ohms 1 Watt
9	25-133	25054	.25 Mfd. 400 V.
10	254-6	25195	.02 Mfd. 600 V.
11	254-8	25196	.05 Mfd. 600 V.
12	25-46	25046	.003 Mfd. 1000 V.
13	257-2	25209	.01 Mfd. 600 V. Line Buffer
14 & 15	25-42	25042	25 Mfd. 400 V. 20 Mfd. 25 V.
16	25-38	25038	50 Mfd. 25 V.
17	25-139	25139	30 Mfd. 475 V.
18	25-146	25146	30 Mfd. 450 V.
19	94-34	94034	Output Transformer
20	94-62	94062	Power Transformer
21	80-57	80057	Speaker Socket
22	80-50	80050	Tuner Voltage Socket
23	94-85	94085	Phase Connector Reactor
24	77-103	77103	Voltage Divider
25	8054	80030	Phono Input Jack

AMPLIFIER A-10 M-2

Refer. No.	Old Part No.	New Part No.	DESCRIPTION
1	773-53	77217	470 M Ohms ½ Watt
2	773-39	77262	1000 Ohms ½ Watt
3	77-32	77212	10 M Ohms ½ Watt
4	773-41	77264	2200 Ohms ½ Watt
5	773-72	77210	3300 Ohms ½ Watt
6	773-81	77216	220 M Ohms ½ Watt
7	773-51	77209	220 Ohms ½ Watt
8	77-71	77071	110 Ohms 10 Watt
9	25-54	25054	.25 Mfd. 400 V.
10	254-8	25196	.05 Mfd. 600 V.
11	256-2	25210	.1 Mfd. 600 V.
12	25-46	25046	.003 Mfd. 1000 V.
13	257-2	25209	.001 Mfd. 600 Line Buffer
14	253-3	25189	500 MMF Mica
16	25-38	25038	50 Mfd. 25 V.
17	25-138	25138	15 Mfd. 475 V.
18	25-139	25139	30 Mfd. 475 V.
19	25-146	25146	30 Mfd. 450 V.
15 & 20	25-42	25042	25 Mfd. 400 V. 20 Mfd. 25 V.
21	94-85	94085	Phase Connector Reactor
22	77-102	77102	Voltage Divider
23	94-61	94061	Power Transformer
24	94-32	94032	Output Transformer
25	805-1	80267	Input Jack
26	80-57	80057	Speaker Socket
27	80-50	80050	Tuner Voltage Socket
28	94-65	94065	Choke
	27-118	27118	A.C. Line Cord

ELECTRICAL SPECIFICATIONS

WATTS AT 117 VOLTS A.C. - 100 SERIES M-2 240, M-3 200 - PANAMUSE M-2 200, M-3 155
VOLTAGE A.C. 105 - 125
M-2 15 TUBE, M-3 12 TUBE A.C. FOUR BAND SUPERHETERODYNES

BROADCAST BAND	540 - 1600 K.C.
SHORT WAVE BAND	5.4 - 18 MC
SPECIAL SERVICE	1.6 - 5.4 MC
BAND SPREAD	9.48 - 12 MC

TUBE COMPLEMENT

		M-3 AMP. A-9	M-2 AMP. A-10
6SK7 R.F. AMPLIFIER	6U5 TUNING EYE	M-3 AMP. A-9	M-2 AMP. A-10
6SA7 CONVERTER		6R7 VOLTAGE AMP.	6R7 VOLTAGE AMP.
6J5 OSCILLATOR		6SC7 DUO DRIVER	6C8G DUO DRIVER
6SK7 I.F. AMPLIFIER		2 - 6V6G OUTPUT	4 - 6V6 OUTPUT
6Q7 DET A.V.C. 1ST AUDIO		2 - 5Y3G RECTIFIER	3 - 5Y3G RECTIFIER

PUSH BUTTON SET UP

1. If the station you select for one of the buttons falls between 1600 to 1000 kilocycles be sure that the pin jack is in the upper strip.
2. Adjust the brass screw at the side of the lower trimmer unitl the wanted station is heard most clearly.
3. Adjust the lower trimmer screw for maximum volume.
4. Press Manual button making certain the station is still tuned in; check this reception against the reception on the button just set up. If it is the same proceed with the next station on the list.
5. If the station you desire to pick up falls between 1000 and 550 kilocycles, you must remove the pin jack and place in the hole provided at the bottom edge of the upper trimmer (see figure 1).
6. Turn the upper trimmer screw back until the screw is off the trimmer plates.
7. Adjust the brass screw until the wanted station is heard most clearly.
8. Then adjust the lower trimmer until maximum volume is secured; if maximum volume cannot be had and the lower trimmer screw is down tight you must finish tuning with the upper trimmer screw.

BUTTON LAYOUT

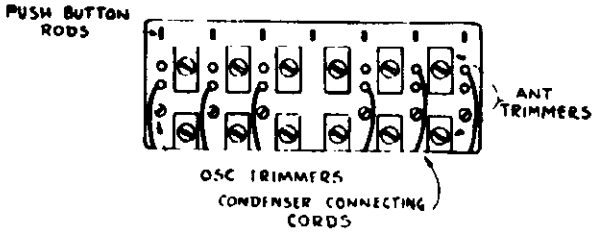

CHASSIS LAYOUT

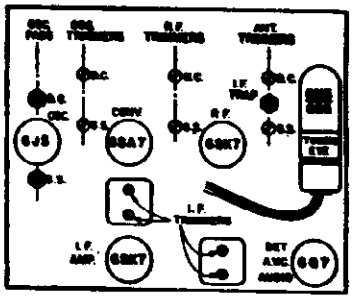

STRINGING DIAGRAM

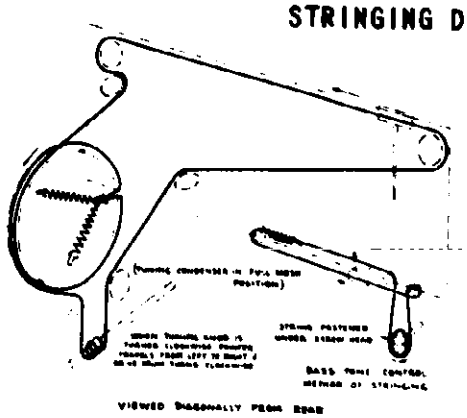

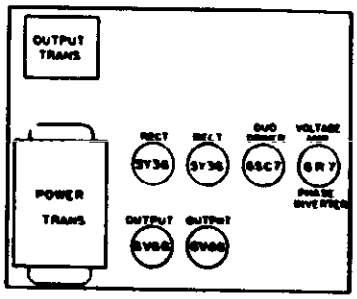

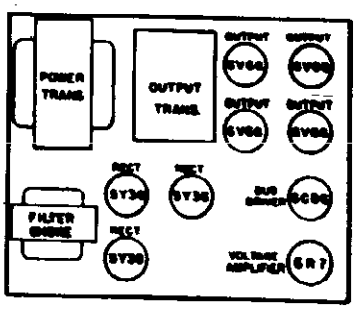

©John F. Rider

MODELS M-2AM, M-3AM

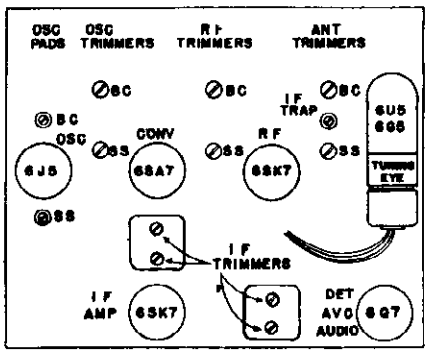

TOP VIEW

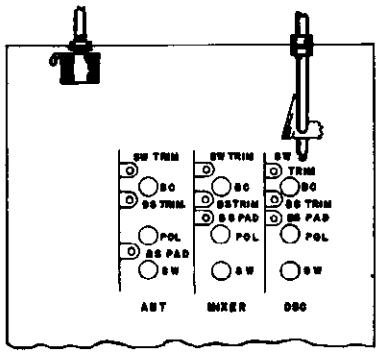

BOTTOM VIEW

ALIGNMENT INSTRUCTIONS

An output meter and a signal generator are required for proper alignment of these sets. The oscillator should be calibrated at the following points, 455 KC, 600 KC, 900 KC, 1400 KC, 1600 KC, 2.0 MC, 5 MC, 5.5 MC, 6 MC, 9.5 MC, 12 MC, 16 MC, and 18.0 MC. Always keep the output of the signal generator as low as possible to prevent A.V.C. action and false settings. Connect the high side of the generator to the antenna terminal and the low side of it to the ground terminal.

TABULATION FOR ALIGNMENT

STEPS	IN SERIES WITH ANTENNA	SET GENERATOR AT	SET GANG AT	ADJUST	LOCATED	TO OBTAIN
1.	250 M.M.F.	455 Kc.	Note A	2nd I.F. Trimmers	Top of I.F. Trans.	Max. Output
2.				1st I.F. Trimmers		
3.			Push Station Button	Wave Trap Trimmer	See Fig.	Min. Output
4.		1600 Kc.	1600 Kc.	B.C. Osc. Trimmer	SEE FIG.	MAXIMUM OUTPUT
5.		1400 Kc.	1400 Kc.	B.C. Mixer Trimmer		
6.				B.C. Ant. Trimmer		
7.		600 Kc.	Note B	600 Kc. Pad		
8.	RECHECK	1400 Kc.				
9.	400 Ohms	5.5 MC.	5.5 MC.	Police Osc. Trimmer *		
10.		5 MC.	5 MC.	Police Mixer Trimmer **		
11.				Police Ant. Trimmer **		
12.		2 MC.	Note B	2 MC. Pad.		
13.	RECHECK	5 MC.				
14.	400 Ohms	18 MC.	18 MC.	S.W. Osc. Trimmer *		
15.		16 MC.	16 MC.	S.W. Mixer Trimmer **		
16.				S.W. Ant. Trimmer **		
17.	CHECK	6 MC.				
18.	400 Ohms	12 MC.	12 MC.	B.S. Osc. Trimmer *		
19.				B.S. Mixer Trimmer **		
20.				B.S. Ant. Trimmer **		
21.		9.5 MC.	9.5 MC.	B.S. Osc. Padder		
22.				B.S Mixer Padder		
23.				B.S. Ant. Padder		
24.	RECHECK	12 MC.				

*Tighten oscillator trimmer screw for maximum capacity, then unscrew until second peak is secured.
**Tighten R.F. trimmer screw for maximum capacity, then unscrew until first peak is secured.
NOTE A. Set gang at minimum.
NOTE B. Strongest signal and rock gang.

© John F. Rider

MODELS M-2AM, M-3AM

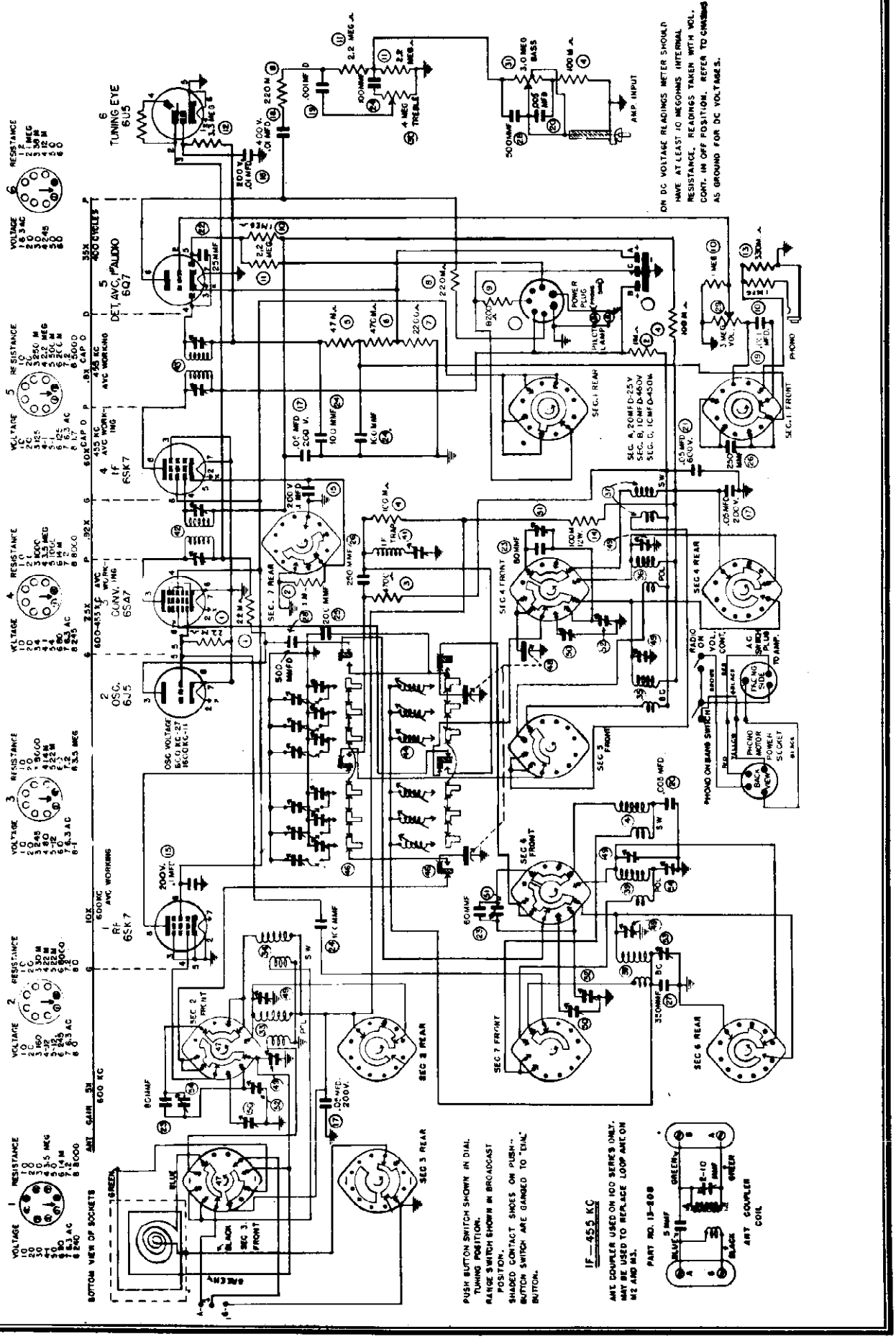

© John F. Rider

MODELS M-2AM, M-3AM

TUNER PARTS LIST

Reference Number	Part Number	Description
1	77-69	22 M Ohm ½ watt
2	773-39	1000 Ohm ½ watt
3	773-43	4700 Ohm ½ watt
4	773-49	100 M Ohm ½ watt
5	773-40	47 M Ohm ½ watt
6	773-53	470 M Ohm ½ watt
7	773-11	2200 Ohm ½ watt
8	773-51	220 M Ohm ½ watt
9	77-146	8200 Ohm 1 watt
10	773-54	1 Meg. Ohm ½ watt
11	773-55	2.2 Meg. Ohm ½ watt
12	773-56	3.3 Meg. Ohm ½ watt
13	773-52	330 M Ohm ½ watt
14	773-49	100 M Ohm ½ watt
15	25-81	.1 Mfd. 200 V.
16	25-97	.01 Mfd. 400 V.
17	25-80	.05 Mfd. 200 V.
18	25-97	.01 Mfd. 400 V.
19	25-53	1000 M.M.F. Mica
20	2513-3	5000 M.M.F. Mica
21	25-134	.05 Mfd. 600 V.
22	253-4	25 M.M.F. Mica
23	25-136	80 M.M.F. S.M.
24	253-1	100 M.M.F. Mica
25	25-52	200 M.M.F. S.M.
26	253-2	250 M.M.F. Mica
27	258-2	350 M.M.F. S.M.
28	253-3	500 M.M.F. Mica
29	78-15	Volume Control 3 Meg.
30	78-20	Treble Control 4 Meg.
31	78-21	Bass Control 3 Meg.
32	38-371	Loop Antenna Ass'y M-2 & M-3
32	13-208	Antenna Coil Ass'y 100 M-2 & 100 M-3
33	38-129	Police Antenna Coil
34	38-318	S.W. Antenna Coil
35	38-132	B.C. Mixer Coil
36	38-133	Police Mixer Coil
37	38-319	S.W. Mixer Coil
38	38-246	B.C. Osc. Coil
39	38-317	Police Osc. Coil
40	38-320	S.W. Osc. Coil
41	38-82	I.F. Trap Coil
42	38-127	1st I.F. Trans.
43	38-128	2nd I.F. Trans.
44	38-316	Push Button Osc. Coil Strip
45	26-148	Push Button Trimmer Strip, Upper
45	26-149	Push Button Trimmer Strip, Lower
46	90-81	Push Button Switch
47	90-83	Band Switch
48	26-42	Three Gang Tuning Condenser
49	26-151	B.C. & Police Antenna & Mixer Trimmer
49	26-147	B.C. & Police Osc. Trimmer
50	26-140	S.W. Trimmer Ceramic
51	26-141	Band Spread Padder Ceramic
52	26-142	Band Spread Trimmer Ceramic
53	263-1	B.C. Padder
54	26-52	Police Padder
55	26-50	I.F. Trap Trimmer
56	25-50	Elect. Condenser
	11-71	Dial Pointer
	07-146	Drive Cord Ass'y
	31-173	Dial Scale

©John F. Rider

MODEL M-4

ELECTRICAL SPECIFICATIONS

WATTS	AT 117 VOLTS A.C.	112
VOLTAGE	A.C.	105–125

ELEVEN TUBE A.C. THREE BAND SUPERHETERODYNE

BROADCAST BAND	540 - 1720 K.C.
SPREAD BAND	9.4 - 12.1 MC.
SHORT WAVE BAND	5.4 - 18.1

TUBE COMPLEMENT

6SK7 R.F. AMPLIFIER
6SA7 MIXER
6J5GT OSCILLATOR
6SK7 I.F. AMPLIFIER
6J5GT DETECTOR
6J5GT A.V.C.
6SQ7 1ST AUDIO
6SQ7 INVERTER
6V6G OUTPUT
6V6G OUTPUT
5Y3G RECTIFIER

PUSH BUTTON SET UP

TO PREVENT THE BUTTONS FROM BEING SET UP ON THE WRONG STATIONS A SIGNAL GENERATOR SHOULD BE USED.

THE BUTTON TO THE EXTREME RIGHT IS THE MANUAL TUNING BUTTON.

ADJUST THE LOWER SCREW (SEE FIG.) FIRST AS THIS IS THE OSCILLATOR; THEN ADJUST THE UPPER SCREW FOR MAXIMUM OUTPUT.

BUTTON LAYOUT

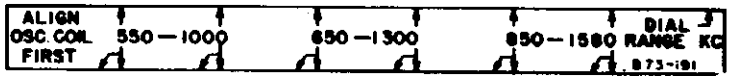

STRINGING DIAGRAM

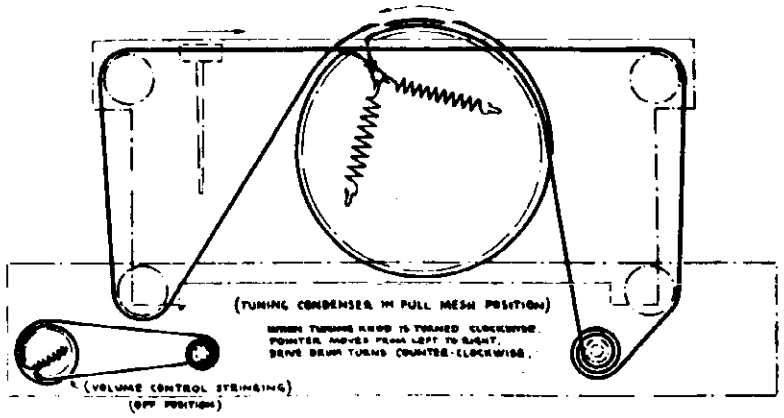

CHASSIS LAYOUT

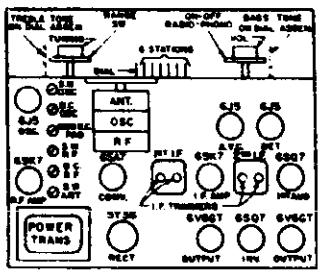

©John F. Rider

MODEL M-4

ALIGNMENT INSTRUCTIONS

AN OUTPUT METER AND A SIGNAL GENERATOR ARE REQUIRED FOR PROPER ALIGNMENT OF THESE SETS. THE OSCILLATOR SHOULD BE CALIBRATED AT THE FOLLOWING POINTS, 455 Kc, 600 Kc, 900 Kc, 1500 Kc, 1720 Kc, 9.5 Mc, 12 Mc, 16 Mc AND 18.1 Mc. ALWAYS KEEP THE OUTPUT OF THE SIGNAL GENERATOR AS LOW AS POSSIBLE TO PREVENT A.V.C. ACTION AND FALSE SETTINGS. CONNECT THE HIGH SIDE OF THE GENERATOR TO THE ANTENNA TERMINAL AND THE LOW SIDE OF IT TO THE GROUND TERMINAL MAKING CERTAIN JUMBER ON TERMINAL STRIP IS DISCONNECTED. BEFORE ALIGNING TIGHTEN WAVE TRAP TRIMMER SCREW.

TABULATION FOR ALIGNMENT

STEPS	IN SERIES WITH ANTENNA	SET GENERATOR AT	SET GANG AT	ADJUST	LOCATED	TO OBTAIN
1	250 M.M.F.	455 Kc.	Note A	2nd I.F. Trimmers	Top of I.F. Trans.	Max. Output
2				1st I.F. Trimmers		
3			Push Station Button	Wave Trap Trimmer	See Fig.	Min. Output
4		1720 Kc.	1720 Kc.	B.C. Osc. Trimmer	SEE FIG.	MAXIMUM OUTPUT
5		1500 Kc.	1500 Kc.	B.C. Mixer Trimmer		
6				B.C. Ant. Trimmer		
7		600 Kc.	Note B	600 Kc. Pad		
8	RECHECK	1400 Kc.				
9	400 Ohms	18 Mc.	18 Mc.	S.W. Osc. Trimmer *		
10		16 Mc.	16 Mc.	S.W. Mixer Trimmer **		
11				S.W. Ant. Trimmer **		
12	CHECK	6 Mc.				
13	400 Ohms	12 Mc.	12 Mc.	B.S. Osc. Trimmer *		
14				B.S. Mixer Trimmer **		
15				B.S. Ant. Trimmer **		
16		9.5 Mc.	9.5 Mc.	B.S. Osc. Padder		
17				B.S. Mixer Padder		
18				B.S. Ant. Padder		
19	RECHECK	12 Mc.				

AFTER POINTER HAS BEEN SET ON BC AND CALIBRATION CHECKED: WITH RANGE SWITCH ON BAND SPREAD (FULL CCW) SET CONDENSER SO POINTER IS ON 12 Mc ON "FOREIGN SPREAD BAND." SET "SPREAD BAND" OSC. TRIMMER FOR MAXIMUM OUTPUT. CHECK FOR IMAGE ON 11.1 Mc (A WEAK SIGNAL SHOULD BE HEARD). ALIGN RF AND ANTENNA BAND SPREAD TRIMMERS FOR MAXIMUM SIGNAL. TURN CONDENSER SO POINTER IS ON 9.5 Mc, ADJUST SPREAD BAND OSC. PADDER FOR MAXIMUM SIGNAL. CHECK FOR IMAGE. (NO SIGNAL SHOULD BE HEARD ON 10.4 Mc). ALIGN RF AND ANTENNA BAND SPREAD PADDER FOR MAXIMUM SIGNAL. GO BACK TO 12 Mc AND REPEAT ABOVE. IF SUCH READJUSTMENT HAS TO BE MADE ON TRIMMERS, THE PADDERS MUST BE CHECKED AGAIN. GREAT CARE MUST BE TAKEN IN ADJUSTING BAND SPREAD TRIMMERS. IMAGES MUST BE CHECKED. A FIBRE SCREWDRIVER MUST BE USED TO ADJUST BAND SPREAD.

*TIGHTEN OSCILLATOR TRIMMER SCREW FOR MAXIMUM CAPACITY, THEN UNSCREW UNTIL SECOND PEAK IS SECURED.

**TIGHTEN RF TRIMMER SCREW FOR MAXIMUM CAPACITY, THEN UNSCREW UNTIL FIRST PEAK IS SECURED.

NOTE A. SET GANG AT MINIMUM.

NOTE B. STRONGEST SIGNAL AND ROCK GANG.

©John F. Rider

MODEL M-4

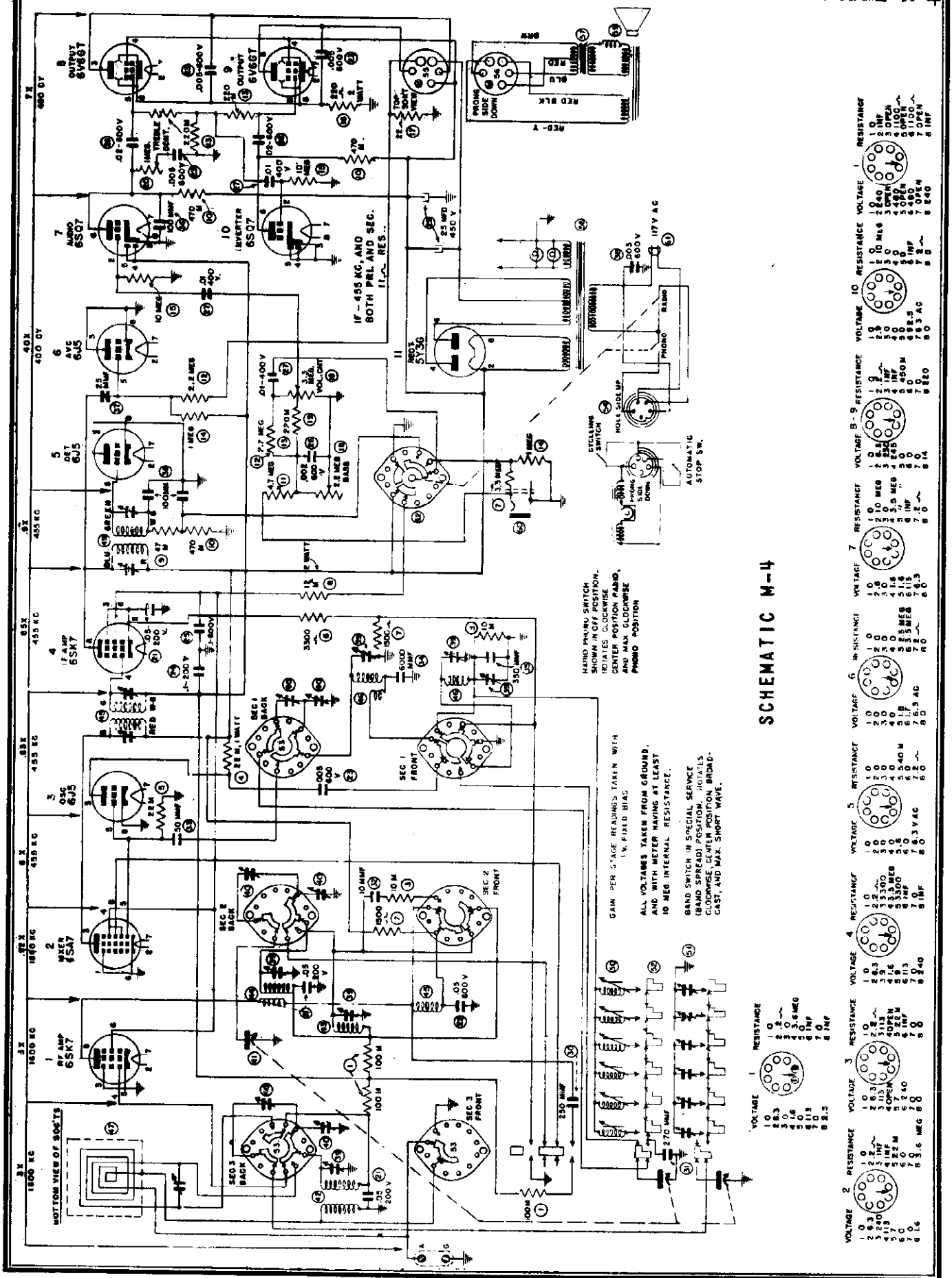

© John F. Rider

MODEL M-4

PARTS LIST

Reference Number	Part Number	Description
1	77-39	100 M Ohms
2	77-50	1500 Ohms
3	77-49	10 M Ohms
4	77-52	22 M Ohms 1 watt
5	77-30	22 M Ohms
6	77-55	3300 Ohms
7	773-26	3.3 Meg.
8	77-53	12 M 2 watt
9	77-38	47 M Ohms
10	77-31	470 M Ohms
11	773-57	4.7 Meg.
12	77-32	2.2 Meg.
13	77-48	220 M Ohms
14	77-40	1 Meg.
15	77-33	10 Meg.
16	77-61	220 Ohms 2 watt
17	774-3	22 Ohms
18	78-11	2.2 Meg. Bass Cont.
19	78-12	3.3 Meg. Vol. Cont.
20	78-10	1 Meg. Treble Cont.
21	256-1	.05 Mfd., 200 V.
22	254-8	.05 Mfd., 600 V.
23	254-1	.005 Mfd., 600 V.
24	256-2	.1 Mfd., 200 V.
25	254-7	.1 Mfd., 600 V.
26	255-4	.002 Mfd., 400 V.
27	255-1	.01 Mfd., 400 V.
28	254-6	.02 Mfd., 600 V.
29	2511	2 - 25 Mfd. 450 V. Electrolytic Cond.
30	253-2	250 Mmf. (Silver Mica)
31	258-1	270 Mmf.
32	25-49	10 Mmf.
33	253-5	50 Mmf.
34	2514-1	6000 Mmf.
35	258-2	350 Mmf. Silver Mica
36	253-1	100 Mmf.
37	253-4	25 Mmf.
38	25-31	.005 Mfd., 600 V. (Moulded Line Buffer)
39	26-161	6 Gang Trimmer
40	26-162	2 Gang Trimmer
41	26-159	3 Gang Condenser
42	38-364	S.W. Ant. Coil
43	38-367	Amp. Filter
44	38-363	S.W. Mixer Coil
45	38-362	B.C. Mixer Coil
46	38-365	S.W. and B.C. Oscillator Coils
47	38-398	15M4 Loop Antenna
47	38-399	16M4 Loop Antenna
48	38-86	1st I.F. Transformer
49	38-87	2nd I.F. Transformer
50	38-63	Push Button Coil
51	26-30	Push Button Trimmers
52	90-116	Push Button Switch
53	90-113	Band Switch
54	11-227	5 Prong Female Plug and Lead
55	804-2	6 Prong Socket
56	80-79	6 Prong Plug
57	948-1	Output Transformer
58	944-1	Power Transformer
59	81-58	Speaker
	81-80	Voice Coil and Cone Assembly
60	805-1	Phono Jack
61	27-118	Line Cord
62	90-19	Radio Phono Switch
	07-268	Drive Cord Assembly
	07-269	Volume Control Line Cord Assembly
	11-47	Dial Pointer
	31-194	Dial Scale
	41-78	Station Call Letter Kit
	59-106	Escutcheon
	60-60	Tone Control Knob
	59-60	Band Switch Knob
	59-61	Tuning Knob
	59-105	Push Button Knob
		15M4 Walnut
		15M4 Mahogany
		16M4 Walnut

©John F. Rider

MODEL 400-K Series

WATTS	AT 117 VOLTS A.C.	400
VOLTAGE	A.C. 60 CYCLES	105–125

30 TUBE A.C. THREE BAND SUPERHETERODYNE

BROADCAST BAND	540 – 1600 Kc
SHORT WAVE BAND	5.4 – 18 Mc
F.M. BAND	41.9 – 51 Mc

TUBE COMPLEMENT

TUNER

6AB7 R.F. AMPLIFIER
6SA7 CONVERTER
6SJ7 OSCILLATOR
6SK7 1ST I.F. AMPLIFIER
6B8 2ND I.F. AMPLIFIER
6SJ7 LIMITER
6N7 EYE AMPLIFIER
6SJ7 A.V.C. AMPLIFIER
6H6 DISCRIMINATOR FM
6SQ7 SILENCER FM
6SQ7 2ND DET. & 1ST AUDIO
6AF6G TUNING EYE
2 – A-7 AMPLIFIER
6J5 VOLTAGE AMPLIFIER
6SC7 DUO DRIVER
4 – 6V6G OUTPUT
3 – 5Y3G RECTIFIERS

TO SET PUSH BUTTONS

ALLOW SET TO WARM UP BEFORE SETTING UP THE BUTTON TUNING. EACH BUTTON COVERS THE ENTIRE BROADCAST BAND. TO SET ANY STATION BUTTON PRESS THE STATION BUTTON ON THE CONTROL PANEL. ADJUST THE LOWER ONE OF THE TWO SCREWS BEARING THE SAME NUMBER AS THE STATION BUTTON, UNTIL THE DESIRED STATION IS HEARD MOST CLEARLY. ADJUST UPPER SCREW UNTIL MAXIMUM VOLUME IS OBTAINED.

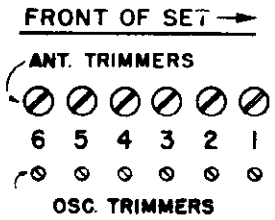

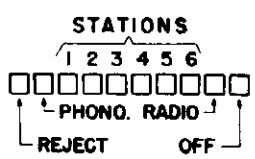

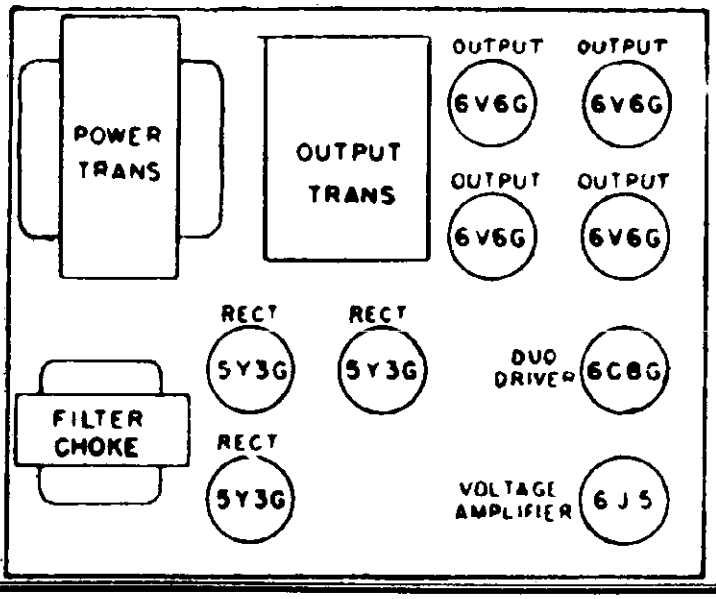

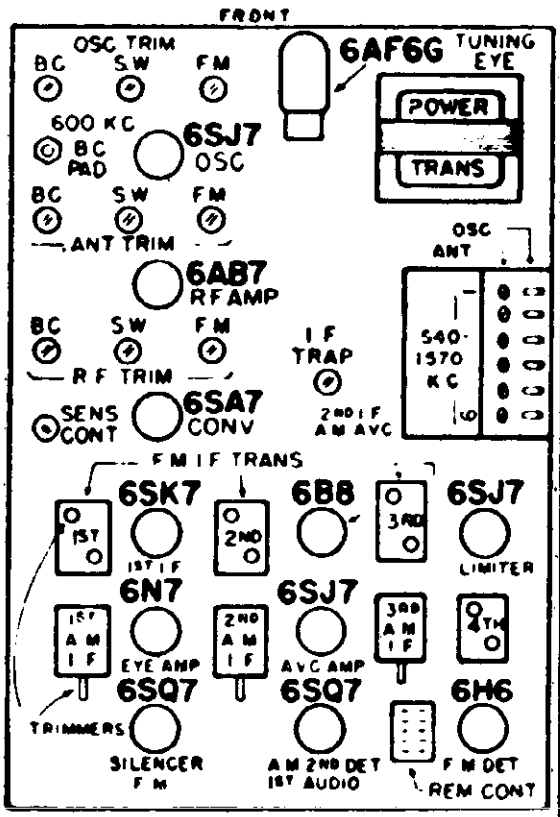

©John F. Rider

MODEL 400-K Series

ALIGNMENT INSTRUCTIONS A M BANDS

AN OUTPUT METER AND A SIGNAL GENERATOR ARE REQUIRED FOR PROPER ALIGNMENT OF THESE SETS. THE OSCILLATOR SHOULD BE CALIBRATED AT THE FOLLOWING POINTS, 455 Kc, 600 Kc, 900 Kc, 1400 Kc, 1600 Kc, 6 Mc, 10 Mc, 16 Mc, AND 18.0 Mc. ALWAYS KEEP THE OUTPUT OF THE SIGNAL GENERATOR AS LOW AS POSSIBLE TO PREVENT A.V.C. ACTION AND FALSE SETTINGS. CONNECT THE HIGH SIDE OF THE GENERATOR TO THE ANTENNA TERMINAL AND THE LOW SIDE OF IT TO THE GROUND TERMINAL.

A SIGNAL GENERATOR AND OUTPUT INDICATOR ARE ALL THE EQUIPMENT WHICH IS NECESSARY FOR THE ALIGNMENT OF THIS TUNER ON THE TWO AMPLITUDE MODULATED BAND.

TABULATION FOR ALIGNMENT

<table>
<tr><th>STEPS</th><th>IN SERIES WITH ANTENNA</th><th>SET GENERATOR AT</th><th>SET GANG AT</th><th>ADJUST AND SEE FIGURE</th><th>TO OBTAIN</th></tr>
<tr><td>1</td><td rowspan="8">250 MMFD</td><td rowspan="3">455 Kc.</td><td rowspan="3">QUIET POINT</td><td>3RD I. F. TRIMMER</td><td rowspan="7">MAXIMUM OUTPUT</td></tr>
<tr><td>2</td><td>2ND I. F. TRIMMER</td></tr>
<tr><td>3</td><td>1ST I. F. TRIMMER</td></tr>
<tr><td>4</td><td rowspan="3">1500 Kc.</td><td rowspan="3">1500 Kc.</td><td>B. C. OSC. TRIMMER</td></tr>
<tr><td>5</td><td>B. C. ANT. TRIMMER</td></tr>
<tr><td>6</td><td>B. C. RF. TRIMMER</td></tr>
<tr><td>7</td><td>600 Kc.</td><td>600 Kc.</td><td>600 Kc. PAD</td></tr>
<tr><td>8</td><td>455 Kc.</td><td>PRESS ANY STATION BUTTON</td><td>I. F. TRAP</td><td>MINIMUM OUTPUT</td></tr>
<tr><td>9</td><td rowspan="3">400 OHMS</td><td rowspan="3">15 Mc.</td><td rowspan="3">15 Mc.</td><td>S. W. OSC. TRIMMER</td><td rowspan="4">MAXIMUM OUTPUT</td></tr>
<tr><td>10</td><td>S. W. ANT. TRIMMER</td></tr>
<tr><td>11</td><td>S. W. RF. TRIMMER</td></tr>
<tr><td>12</td><td colspan="2">CHECK AT</td><td>6 Mc.</td><td></td></tr>
</table>

©John F. Rider

MODEL 400-K Series

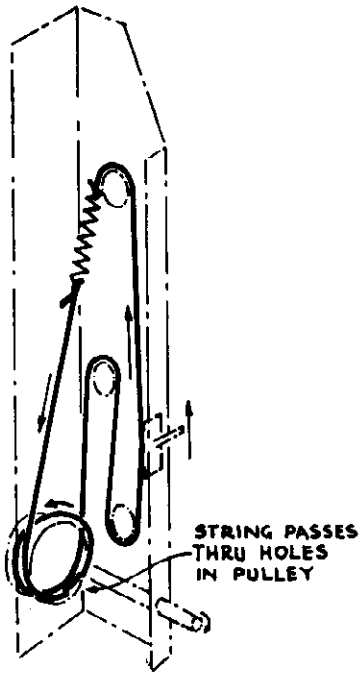

BASS TONE CONTROL

SHAFT GEARED TO TONE CONTROL. TURNING KNOB IN CLOCKWISE DIRECTION CAUSES POINTER TO MOVE UPWARD.

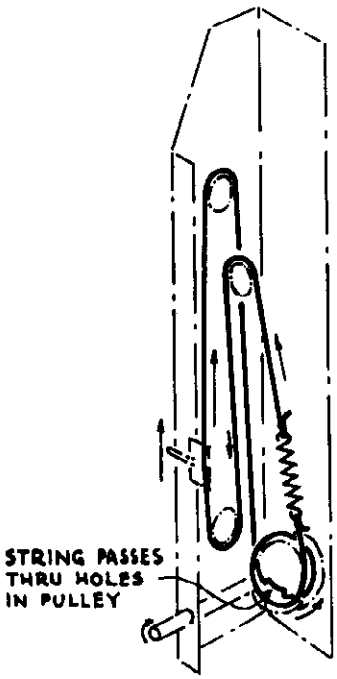

TREBLE TONE CONTROL

SHAFT GEARED TO TONE CONTROL. TURNING KNOB IN CLOCKWISE DIRECTION CAUSES POINTER TO MOVE UPWARD.

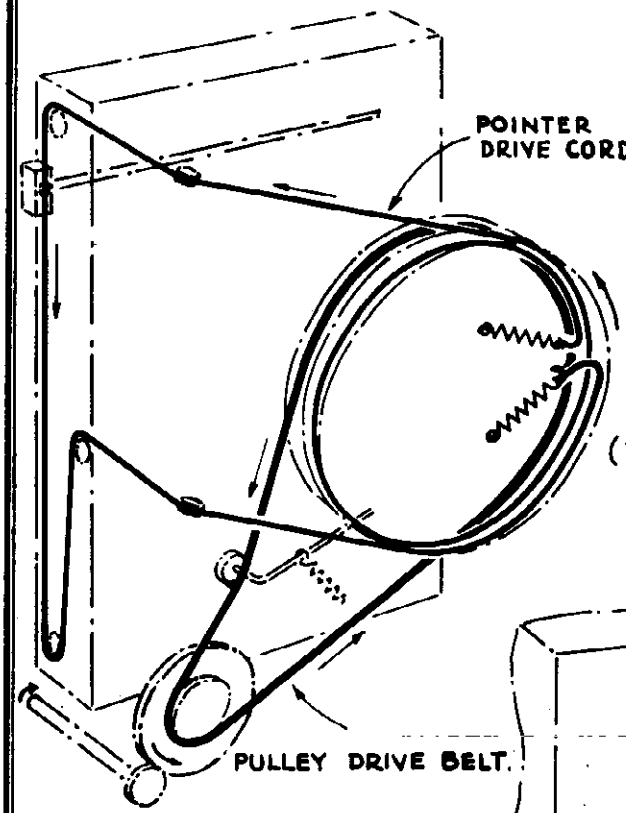

METHOD OF DIAL STRINGING.

TURNING TUNING KNOB COUNTER-CLOCKWISE MOVES POINTER FROM TOP TO BOTTOM, DRIVE DRUM TURNS CLOCKWISE, VIEWED FROM SHAFT END.

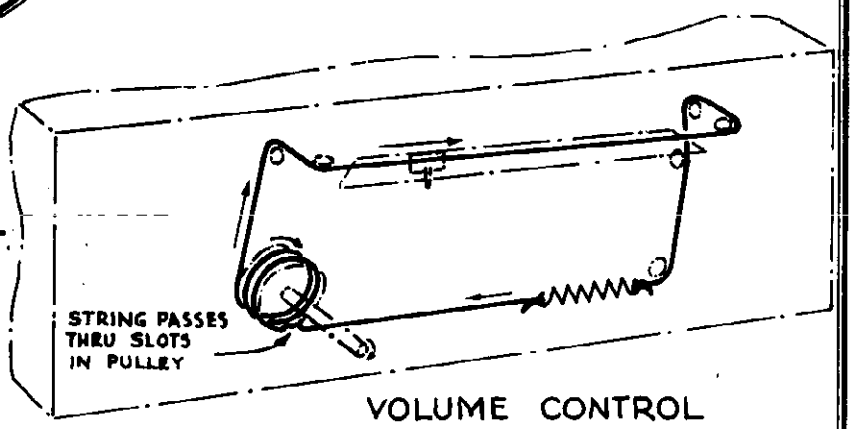

VOLUME CONTROL

TURNING KNOB IN CLOCKWISE DIRECTION CAUSES POINTER TO MOVE TO RIGHT.

©John F. Rider

MODEL 400-K Series

ALIGNMENT OF FM BAND 400-K

An oscilloscope and a frequency modulated signal generator, which includes the range of 42 to 50 MC on fundamentals and has provisions for sweeping the signal 150 KC (75 KC each side) of the fundamental are necessary for proper alignment.

Connect the oscilloscope to the output cathode of the 6H6 discriminator tube (See A & B). Feed a 4.3 MC signal to the grid of the limiter tube through a .1 Mfd. paper condenser; adjust the input signal until some indication is apparent on the oscilloscope; then adjust the secondary trimmer of the discriminator transformer until the scope pattern crosses in the center of the cross section area. Adjust the primary trimmer until both halves of the pattern are equal in amplitude and as symmetrical as possible, show expected curve. Re-adjust the secondary so the pattern crosses in the center of the cross section area.

Connect the oscilloscope to the grid terminal of the limiter tube through a 1 Meg. resistor. Feed a 4.3 MC signal to the grid of the second I.F. tube through a .1 Mfd. condenser. Detune the secondary of the limiter transformer by loosening the trimmer screw, then adjust the primary for resonance hump, center on the vertical center line of the scope. Adjust the secondary trimmer until the pattern on the scope becomes flat topped and centered, show expected curve.

Advance the signal generator to the grid of the first I.F. tube, detune the secondary of the second I.F. transformer. Adjust the primary for maximum scope output still maintaining symmetrical pattern. Adjust the secondary for maximum output maintaining the flat topped pattern on the scope screen.

Advance the signal generator to the grid of the converter tube and repeat the above operations for the first I.F. F.M. transformer.

Care must be taken and not adjust the A.M. I.F. transformers after they have been aligned for A.M.

Apply a 50 MC signal to the antenna terminal through a 100 ohm carbon resistor and tune the receiver to this frequency. Adjust the oscillator mixer and the antenna trimmers for maximum output on the scope.

Check for calibration at 42 MC and 50 MC.

If the above equipment is not available, the following equipment may be used:

A standard signal generator.
A D.C. type vacuum tube voltmeter.
A 0-1 milliammeter or micro-ameter may be used for an output indicator.

When aligning the discriminator the output indicator must be placed in the circuit as shown in the diagram. The secondary of the discriminator must be detuned by placing a small mica (100 MMF) condenser across the secondary of the discriminator transformer. The primary of the discriminator may be adjusted for maximum output. Then remove the condenser across the secondary and tune for minimum output.

The balance of the alignment may be carried out in the same manner as before described, aligning for maximum leaving the output indicator in the limiter grid circuit.

When using a standard signal generator, the signal should be unmodulated.

Drawings below indicate the method of connecting the meters for alignment of the limiter and discriminator stages.

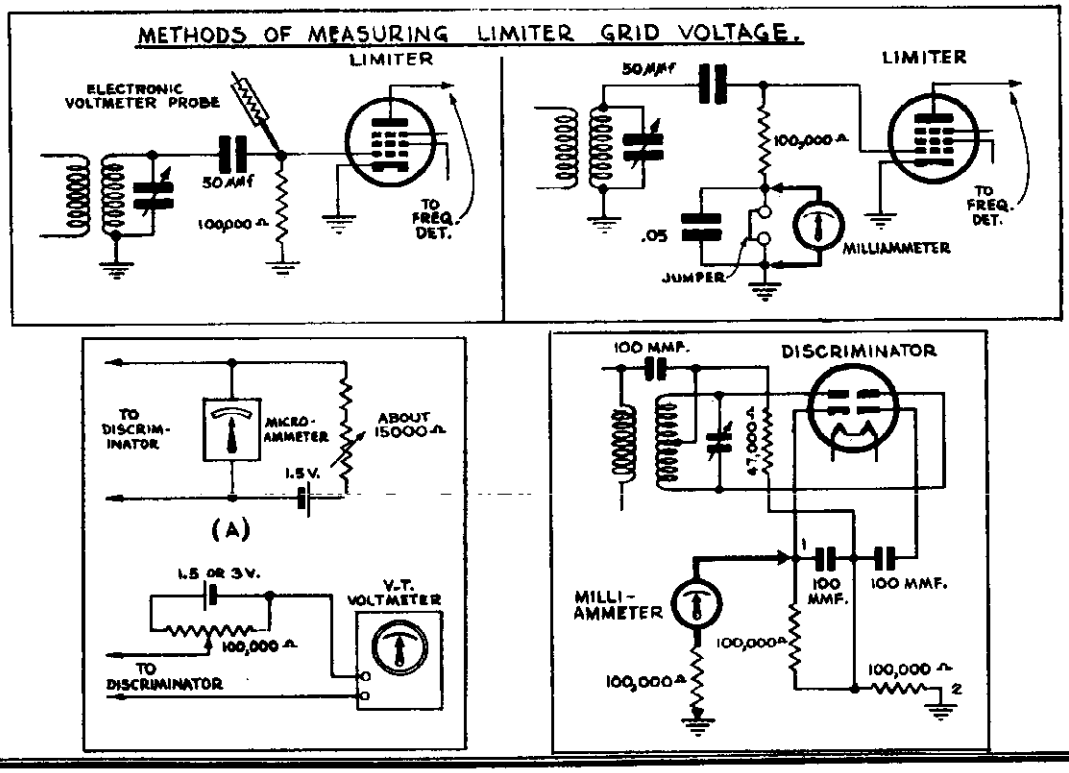

©John F. Rider

MODEL 400-K Series

Refer. No.	Old Part No.	New Part No.	DESCRIPTION
1	773-24	77218	1 Meg. ½ Watt
2	773-49	77214	100 M. Ohms ½ Watt
3	773-11	77264	2200 Ohms ½ Watt
4	773-47	77267	33 M. Ohms ½ Watt
5	773-48	77213	47 M. Ohms ½ Watt
6	773-32	77208	47 Ohms ½ Watt
7	77-10	77010	68 M. Ohms 1 Watt
8	773-38	77261	470 Ohms ½ Watt
9	773-44	77212	10 M. Ohms ½ Watt
10	773-46	77266	22 M. Ohms ½ Watt
11	773-21	77216	220 M. Ohms ½ Watt
12	773-55	77270	2.2 Megs. ½ Watt
13	773-26	77271	3.3 Megs. ½ Watt
14	773-39	77262	1000 Ohms ½ Watt
15	773-65	77259	150 Ohms ½ Watt
16	77-97	77097	180 Ohms ½ Watt
17	773-66	77209	220 Ohms ½ Watt
18	77-95	77095	6.8 Ohms ½ Watt
19	77-96	77096	55 Ohms 10 Watt
20	25-64	25064	10 M.M.F. Mica
21	25-92	25092	15 M.M.F. Mica
22	25-67	25067	20 Mfd. Elec. 20 Mfd. 450 V.
23	25-60	25060	40 M.M.F. Mica
24	253-5	25193	50 M.M.F. Mica
25	253-1	25188	100 M.M.F. Mica
26	258-2	25210	350 M.M.F. Mica S. M.
27	25-27	25027	250 M.M.F. S.M.
28	25-68	25068	300 M.M.F. S.M.
29	253-5	25193	500 M.M.F. Mica
30	25-25	25025	4000 M.M.F. Mica
31	256-1	25196	.05 Mfd. 600 V.
32	254-2	25194	.01 Mfd. 600 V.
33	256-2	25215	.1 Mfd. 600 V.
34	254-9	25197	.001 Mfd. 600 V.
35	254-1	25183	.005 Mfd. 600 V.
36	773-43	77211	4700 Ohms ½ Watt
37	773-42	77210	3300 Ohms ½ Watt
38	25-66	25066	125 Mfd. Elec. Cap. 125-75 V.
39	25-90	25090	500 Mfd. 500 Mfd. 3 V.
40	78-32	78032	3 Meg. Volume Control
41	78-36	78036	4 Meg. Treble Control
42	78-35	78035	4 Meg. Bass Control
43	26-67	26067	Gang Tuning Condenser
44	90-53	90053	Band Switch Wafer #1
44	90-54	90054	Band Switch Wafer #2
44	90-55	90055	Band Switch Wafer #3
44	90-56	90056	Band Switch Wafer #4
44	90-57	90057	Band Switch Wafer #5
44	90-58	90058	Band Switch Wafer #6
44	90-59	90059	Band Switch Wafer #7
45	90-47	90047	Selector Switch Wafer #1
45	90-48	90048	Selector Switch Wafer #2
45	90-49	90049	Selector Switch Wafer #3
45	90-50	90050	Selector Switch Wafer #4
45	90-51	90051	Selector Switch Wafer #5
45	90-52	90052	Selector Switch Wafer #6
46	90-46	90046	Push Button Switch
47	13-170	13170	Push Button Osc. Coil Assy. & Cap
48	26-66	26066	Push Button Trimmer Condenser Assy.
49	44-20	44020	Volume Control Motor
50	44-21	44021	Selector Switch Motor
51	90-69	90069	Off Relay
52	90-60	90060	Motor Control Relay
53	90-69	90069	Set Power Relay
54	38-226	38226	Antenna Coil B.C.
55	38-130	38130	Antenna Coil S.W.
56	38-228	38228	Antenna Coil F.M.
58	38-132	38132	Mixer Coil B.C.
59	38-134	38134	Mixer Coil S.W.
60	38-231	38231	Mixer Coil F.M.
61	38-223	38223	Oscillator Coil B.C.
62	38-224	38224	Oscillator Coil S.W.
63	38-225	38225	Oscillator Coil F.M.
64	38-214	38214	First I.F. Transformer AM
65	38-215	38215	Second I.F. Transformer AM
66	38-216	38216	Third I.F. Transformer AM
67	38-217	38217	First I.F. Transformer FM
68	38-218	38218	Second I.F. Transformer FM
69	38-219	38219	Limiter Transformer FM
70	38-220	38220	Discriminator Transformer FM
71	94-54	94054	16 V.A.A.C. & 6.3 Volt AC Trans.

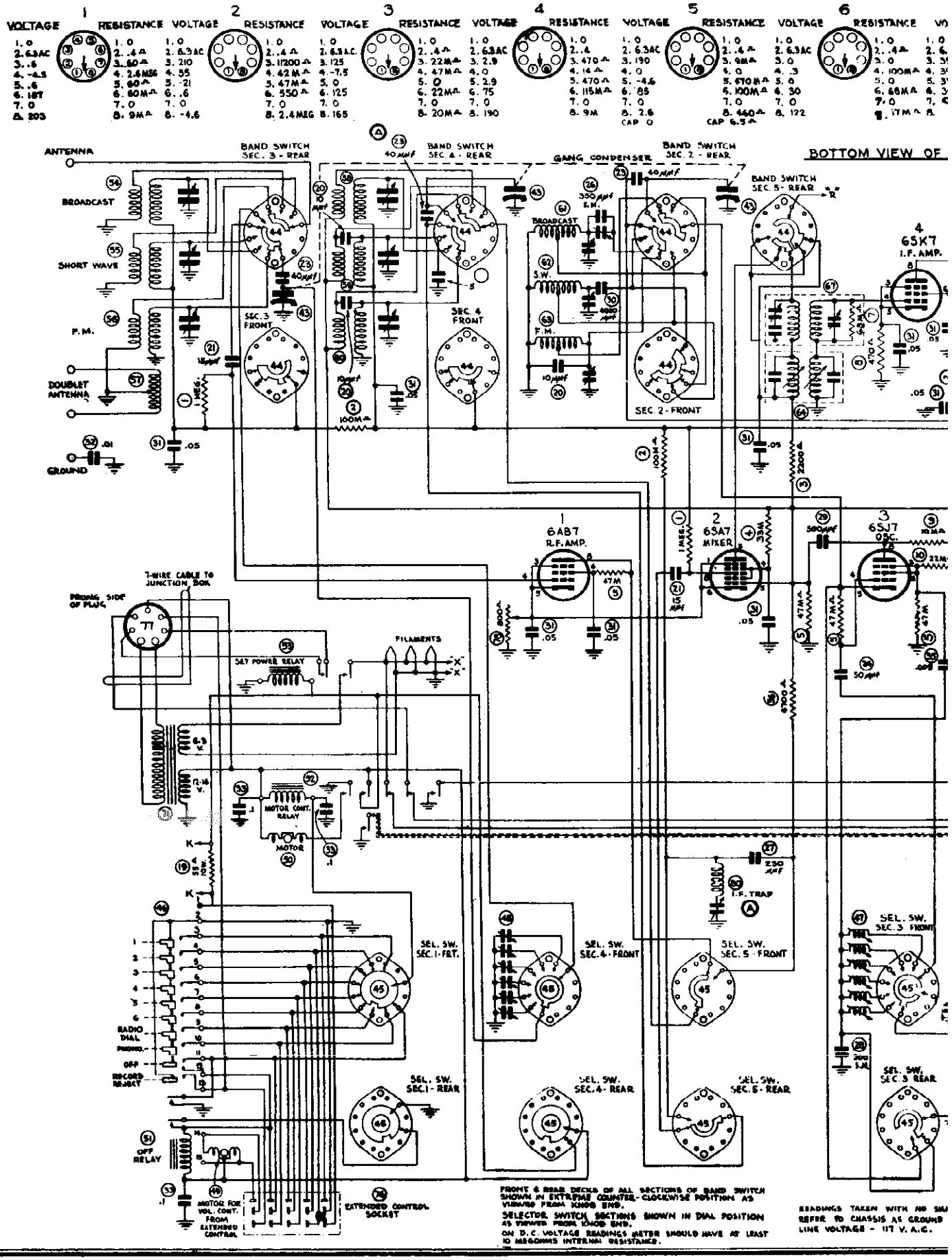
1
VOLTAGE
RESISTANCE
1. 0
2. 6.3AC
3. .6
4. -4.5
5. .6
6. 187
7. 0
8. 293
1. 0
2. .4Ω
3. 60Ω
4. 2.6MEG
5. 60Ω
6. 60MΩ
7. 0
8. 9MΩ
2
VOLTAGE
RESISTANCE
1. 0
2. 6.3AC
3. 210
4. 55
5. -21
6. .6
7. 0
8. -4.6
1. 0
2. .4Ω
3. 11200Ω
4. 42MΩ
5. 47MΩ
6. 550Ω
7. 0
8. 2.4MEG
3
VOLTAGE
RESISTANCE
1. 0
2. 6.3A.C.
3. 125
4. -7.5
5. 0
6. 125
7. 0
8. 165
1. 0
2. .4Ω
3. 22MΩ
4. 47MΩ
5. 0
6. 22MΩ
7. 0
8. 20MΩ
4
VOLTAGE
RESISTANCE
1. 0
2. 6.3AC
3. 2.9
4. 0
5. 2.9
6. 75
7. 0
8. 190
1. 0
2. .4
3. 470Ω
4. 14Ω
5. 470Ω
6. 115MΩ
7. 0
8. 9M
5
VOLTAGE
RESISTANCE
1. 0
2. 6.3AC
3. 190
4. 0
5. -4.6
6. 85
7. 0
8. 2.6
CAP 0
1. 0
2. .4Ω
3. 9MΩ
4. 0
5. 670MΩ
6. 100MΩ
7. 0
8. 460Ω
CAP 6.5Ω
6
VOLTAGE
RESISTANCE
1. 0
2. 6.3AC
3. 0
4. .3
5. 6
6. 30
7. 0
8. 122
1. 0
2. .4Ω
3. 0
4. 100MΩ
5. 0
6. 68MΩ
7. 0
8. 17MΩ
ANTENNA
BROADCAST
SHORT WAVE
F. M.
DOUBLET ANTENNA
GROUND
BAND SWITCH SEC. 3 - REAR
BAND SWITCH SEC. 4 - REAR
GANG CONDENSER
BAND SWITCH SEC. 2 - REAR
BAND SWITCH SEC. 5 - REAR
SEC. 3 FRONT
SEC. 4 FRONT
SEC. 2 - FRONT
S.W.
BOTTOM VIEW OF
4
6SK7
I.F. AMP.
1
6AB7
R.F. AMP.
2
6SA7
MIXER
3
6SJ7
OSC.
7-WIRE CABLE TO JUNCTION BOX
MOTOR CONT. RELAY
MOTOR
SET POWER RELAY
FILAMENTS
I.F. TRAP
SEL. SW. SEC. 1- FRT.
SEL. SW. SEC. 4- FRONT
SEL. SW. SEC. 5 - FRONT
SEL. SW. SEC. 3 FRONT
SEL. SW. SEC. 1- REAR
SEL. SW. SEC. 4- REAR
SEL. SW. SEC. 5- REAR
SEL. SW. SEC. 3 REAR
RADIO DIAL
OFF
RECORD REJECT
OFF RELAY
MOTOR FOR VOL. CONT. FROM EXTENDED CONTROL
EXTENDED CONTROL SOCKET
FRONT & REAR DECKS OF ALL SECTIONS OF BAND SWITCH SHOWN IN EXTREME COUNTER-CLOCKWISE POSITION AS VIEWED FROM KNOB END.
SELECTOR SWITCH SECTIONS SHOWN IN DIAL POSITION AS VIEWED FROM KNOB END.
ON D.C. VOLTAGE READINGS METER SHOULD HAVE AT LEAST 10 MEGOHMS INTERNAL RESISTANCE.
READINGS TAKEN WITH NO SIG
REFER TO CHASSIS AS GROUND
LINE VOLTAGE - 117 V. A.C.

MODEL 400-K Series

6			7			8			9			10			11			12		
	RESISTANCE	VOLTAGE		RESISTANCE	VOLTAGE		RESISTANCE	VOLTAGE		RESISTANCE	VOLTAGE		RESISTANCE	VOLTAGE		RESISTANCE	VOLTAGE		RESISTANCE
1	1.0	1.0	1	1. INF.	1.0	1	1.0	1. OPEN	1	1. INF.	1.0	1	1.0	1.0	1	1.0	1.0	1	1.0
2	.4 Ω	2. 6.3AC	2	.4	2. 6.3AC	2	.4 Ω	2. 6.3AC	2	.4 Ω	2. 6.3AC	2	.4 Ω	2. 32	2	2.2MEG	2. .5	2	1MEG
3	0	3. 39	3	120MΩ	3. 15	3	3300 Ω	3. 110	3	220 Ω	3. 110	3	220 Ω	3. 39	3	8500 Ω	3. .8	3	170 Ω
4	100MΩ	4. 39	4	70MΩ	4. 0	4	1MEG	4. 125	4	210MΩ	4. 31+	4	3.6MEG.	4. 38	4	280MΩ	4. 0	4	0
5	0	5. 39	5	120MΩ	5. 15	5	3300 Ω	5. 205	5	7M Ω	5. 38+	5	3.6 MEG.	5. 0	5	0	5. 0	5	0
6	68MΩ	6. 39	6	70MΩ	6. 105	6	13MΩ	6. OPEN	6	INF.	6. 125	6	210MΩ	6. 140	6	180MΩ	6. 95	6	8500Ω
7	0	7. 0	7	0	7. 0	7	0	7. 0	7	0	7. 0	7	0	7. 6.3AC	7	.4 Ω	7. 6.3AC	7	.4 Ω
8	.17MΩ	8.	8	8500 Ω	8. 190	8	9MΩ	8. 88	8	60MΩ	8. 40	9	9200 Ω	8. 0	8	0	8. 0	8	0

SHIELD OF 6H6 (TUBE #7) GROUNDED THRU .01 COND.

TOM VIEW OF SOCKETS

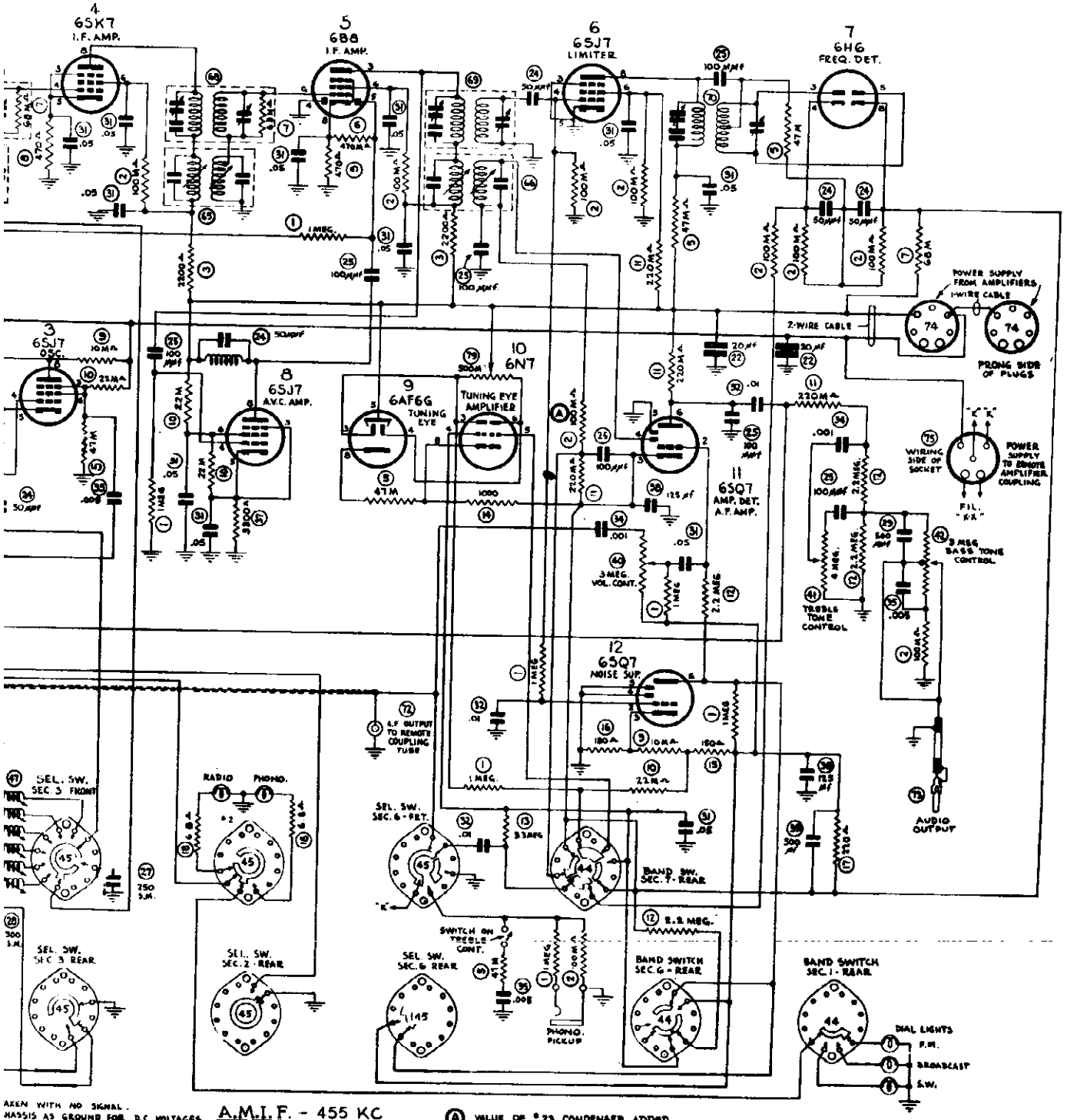

TAKEN WITH NO SIGNAL. CHASSIS AS GROUND FOR D.C. VOLTAGES. 115 - 117 V. A.C.

A.M.I.F. - 455 KC

F.M.I.F. - 4.3 MC

Ⓐ VALUE OF #23 CONDENSER ADDED. #80 I.F. TRAP & #27 COND. ADDED. 100 MΩ RESISTOR WAS 22 MΩ.

RECORD CHANGER: Farnsworth Model 16 F...

MODEL 400-K Series

Refer. No.	Old Part No.	New Part No.	DESCRIPTION
72	11-74	11074	Audio Output Cable #1
73	22-16	22016	Audio Output Cable #2
74	22-14	22014	Cable and Plug Assembly
75	80-132	80132	Special 5 Socket
76	61250	61250	15 Prong Socket
77	22-17	22017	Phono Pickup Cable
78	78-31	78031	800 Ohms Sensitivity Control
79	78-34	78034	Eye Adj. Control ½ Meg.
80	38-82	38082	I.F. Trap
	80-82	80082	Octal Ceramic Socket
	80-81	80081	Octal Socket
	26-68	26068	Trimmer Condenser
	38-212	38212	Plate Choke
	31-100	31100	Dial Scale
	31-97	31097	Dial Glass Window
	56-462	56462	Dial Pointer
	07-136	07136	Bass Control Drive Cord Assembly
	07-137	07137	Treble Control Drive Cord Assembly
	07-134	07134	Volume Control Drive Cord Assembly
	07-135	07135	Tuning Drive Cord Assembly
	56-453	56453	Tone Control Pointer
	56-598	56598	Volume Control Pointer
	92-82	92082	Endless Belt
	80-84	80084	Antenna Terminal Strip
	59-77	59077	Pulley For Tone and Volume Cont., Sm.
	59-78	59078	Pulley For Tuning Pointer, Large
	13-175	13175	Split Gear Assembly

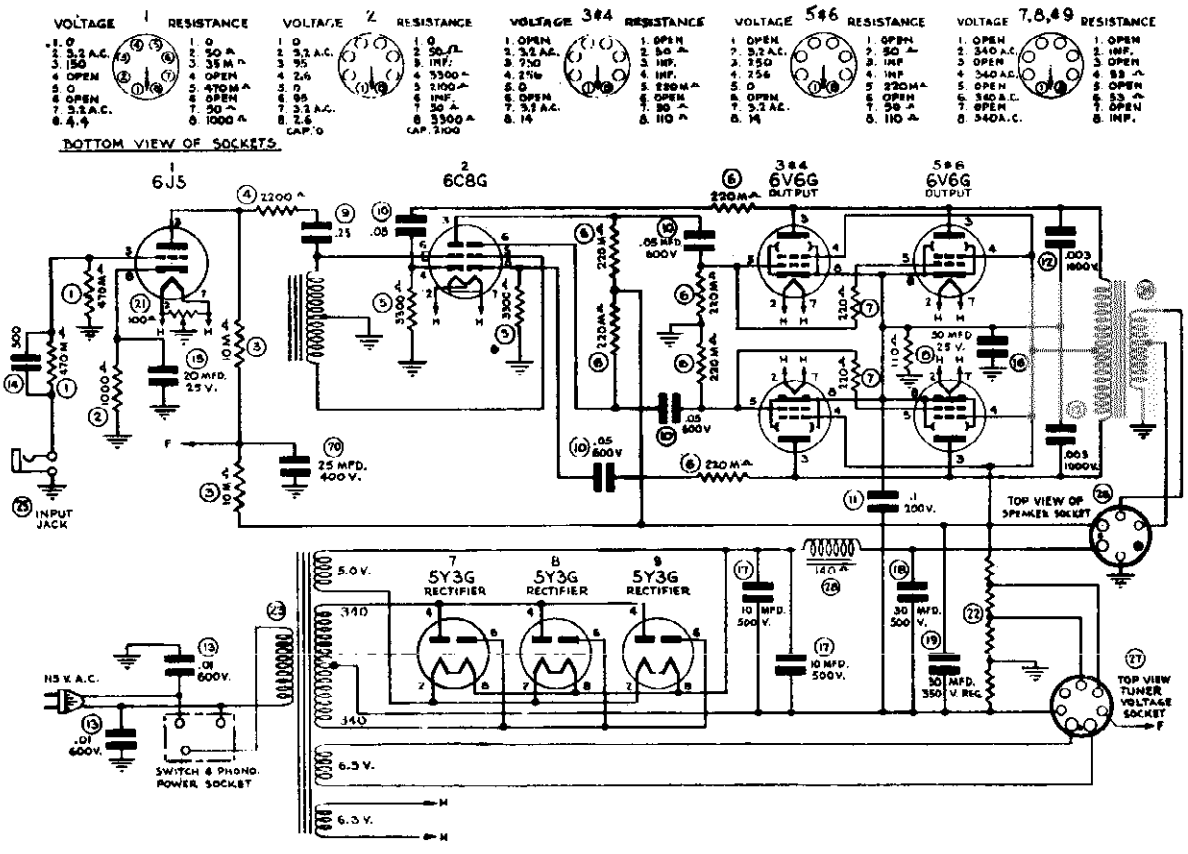

MODEL 400-K Series,
Amplifier A-7

PARTS LIST AMPLIFIER A-7 LARGE

Refer. No.	Old Part No.	New Part No.	DESCRIPTION
1	773-53	77217	470 M Ohms ½ Watt
2	773-39	77262	1000 Ohms ½ Watt
3	77-32	77212	10 M Ohms ½ Watt
4	774-41	77264	2200 Ohms ½ Watt
5	773-72	77210	3300 Ohms ½ Watt
6	773-81	77216	220 M Ohms ½ Watt
7	773-36	77209	220 Ohms ½ Watt
8	77-71	77071	110 Ohms 10 Watt
9	25-54	25054	.25 Mfd. 400 V.
10	254-8	25196	.05 Mfd. 600 V.
11	256-2	25215	.1 Mfd. 600 V.
12	25-46	25046	.003 Mfd. 1000 V.
13	257-2	25209	.01 Mfd. 600 Line Buffer
14	253-3	25187	500 M.M.F. Mica
15	25-42	25042	20 Mfd. 25 V.
16	25-38	25038	50 Mfd. 25 V.
17	25-56	25056	10 Mfd. 500 V.
18	25-57	25057	30 Mfd. 500 V.
19	25-45	25045	30 Mfd. 350 V.
20	25-42	25042	25 Mfd. 400 V.
21	78-33	78033	100 Ohm Hum Control
22	77-102	77102	Voltage Divider
23	94-61	94061	Power Transformer
24	94-32	94032	Output Transformer
25	805-1	80267	Input Jack
26	80-57	80057	Speaker Socket
27	80-50	80050	Tuner Voltage Socket
28	94-65	94065	Choke
	27-118	27118	H.C. Line Cord
	94-51	94051	Phase Corrector Reactor

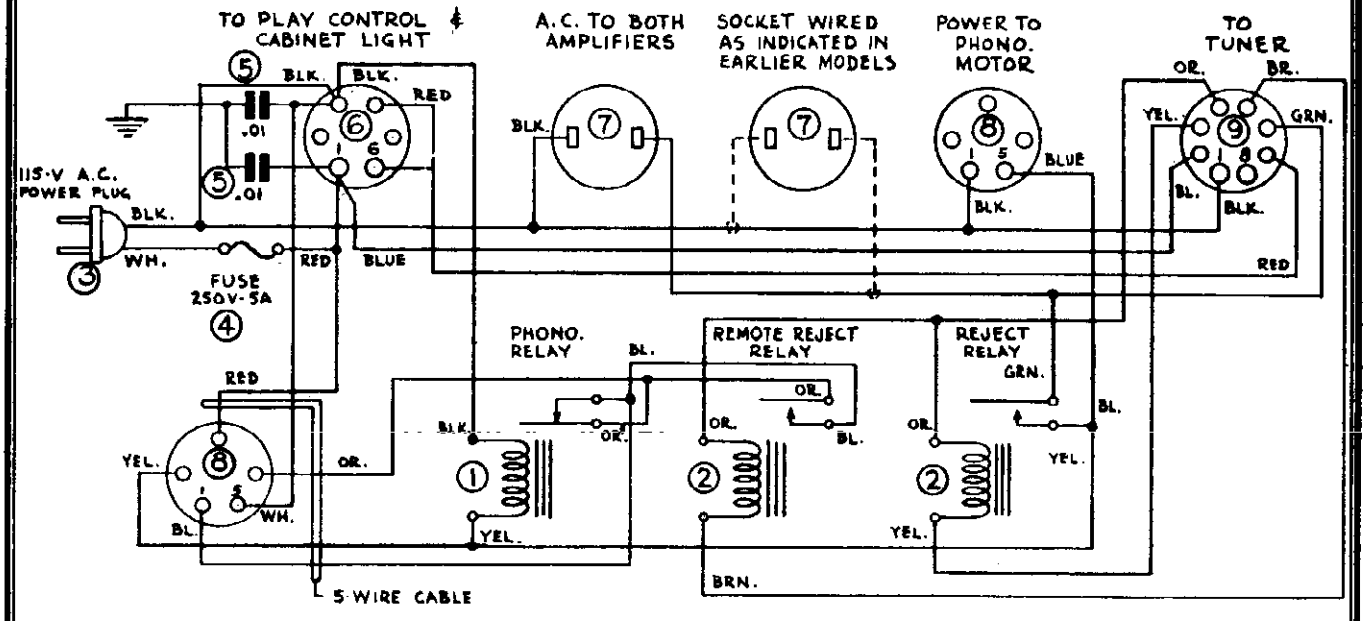

JUNCTION BOX CIRCUIT

©John F. Rider

MODEL 400-K Series

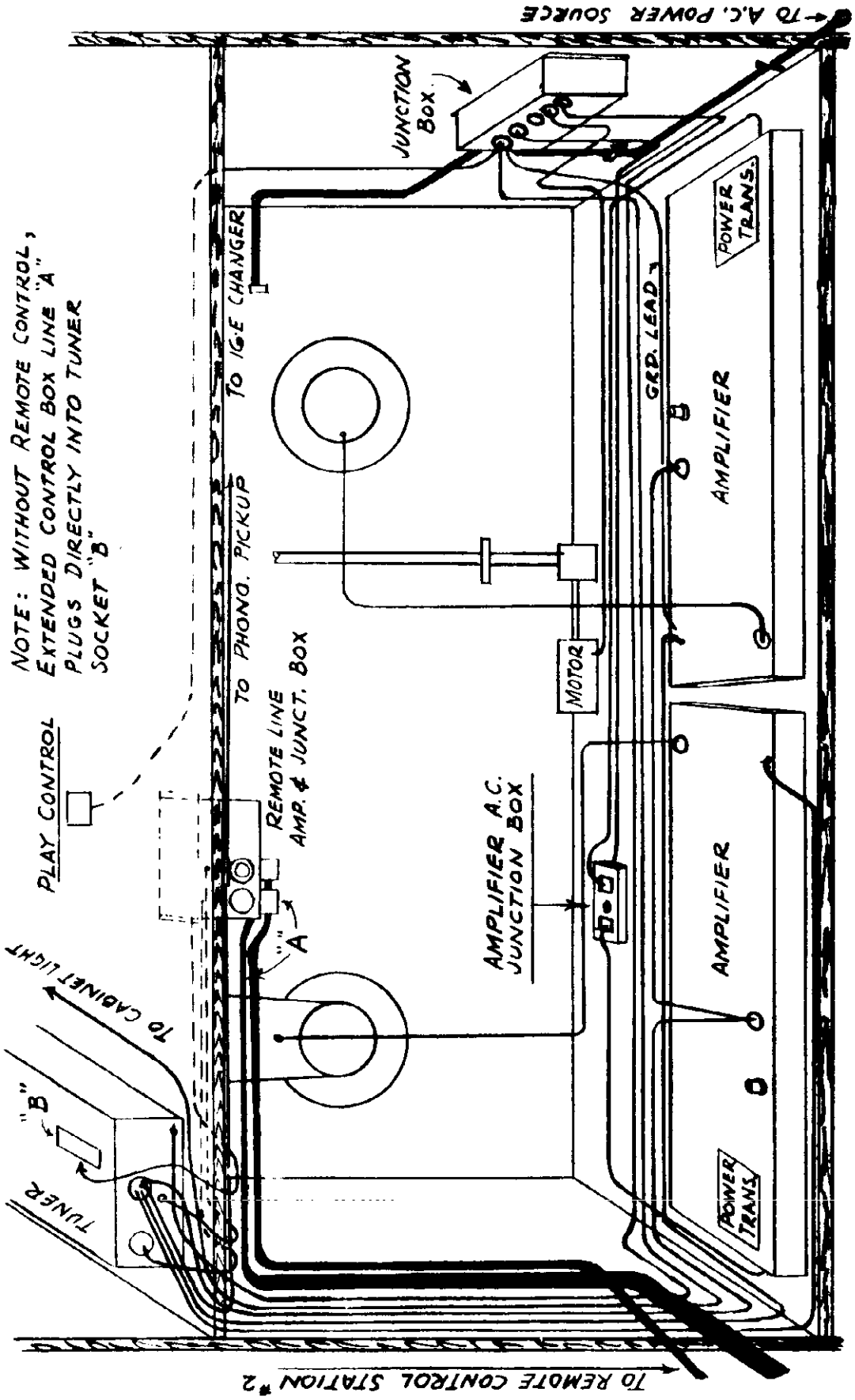

© John F. Rider

PARTS LIST

CABINET ASSEMBLY 400K

Old Part No.	New Part No.	DESCRIPTION
31-95	31095	Capehart Decal
31-96	31096	Deluxe Decal
59-58	59058	Dial Escutcheon
59-71	59071	Dial Escutcheon (Blonde)
59-62	59062	Push Button Knob
59-74	59074	Push Button Knob (Blonde)
6058	67389	Tuning Knob
67-176	67176	Tuning Knob (Blonde)
6060	67391	Bass & Treble Knob
67-177	67177	Bass & Treble Knob (Blonde)
67-178	67178	Band Switch Knob
67-179	67179	Band Switch Knob (Blonde)
61238	61238	Compartment Light Socket
2722	90186	Switch
5421	57214	Light Shade Bracket
61163	61163	Compartment Lamp
6172	58270	Reflector
31-93	31093	Push Button Trimmer Cover
61262	61262	3 Prong Cable Connector (Female)
61263	61263	3 Prong Cable Connector (Male)
80-79	80079	6 Prong Plug
66397	66397	Play Control
66399	66399	Gear Box 60 Cycle
66435	66435	Gear Box (25-50) Cycle
21156	21156	Motor 60 Cycle
21157	21157	Motor 50 Cycle
21158	21158	Motor 25 Cycle
13-150	13150	Friction Drive Assembly
66105	66105	Flex. Coupling Assembly
81-72	81072	Speaker 12"
81-73	81073	Speaker 14"

JUNCTION BOX PARTS LIST 400K

Refer No.	Old Part No.	New Part No.	DESCRIPTION
1	61228	61228	Reject Relay 60 Cycle
1	61229	61229	Reject Relay 25 Cycle
2	61224	61224	2 Motor Relay 60 Cycle
2	61226	61226	2 Motor Relay 25 Cycle
3	27-134	27134	A.C. Line Cord
4	48-6	48006	Fuse 250V 5A
5	257-2	25209	.01 Mfd. 600 V. Condenser
6	80-61	80061	6 Prong Socket
7	80-69	80069	7 A.C. Socket
8	80-57	80057	5 Prong Socket
9	80-71	80071	9 Octal Socket
	22-9	22009	Cable & Socket Assembly
	80-68	80068	Fuse Socket

©John F. Rider

MODEL 400M, Extended
and Remote Control

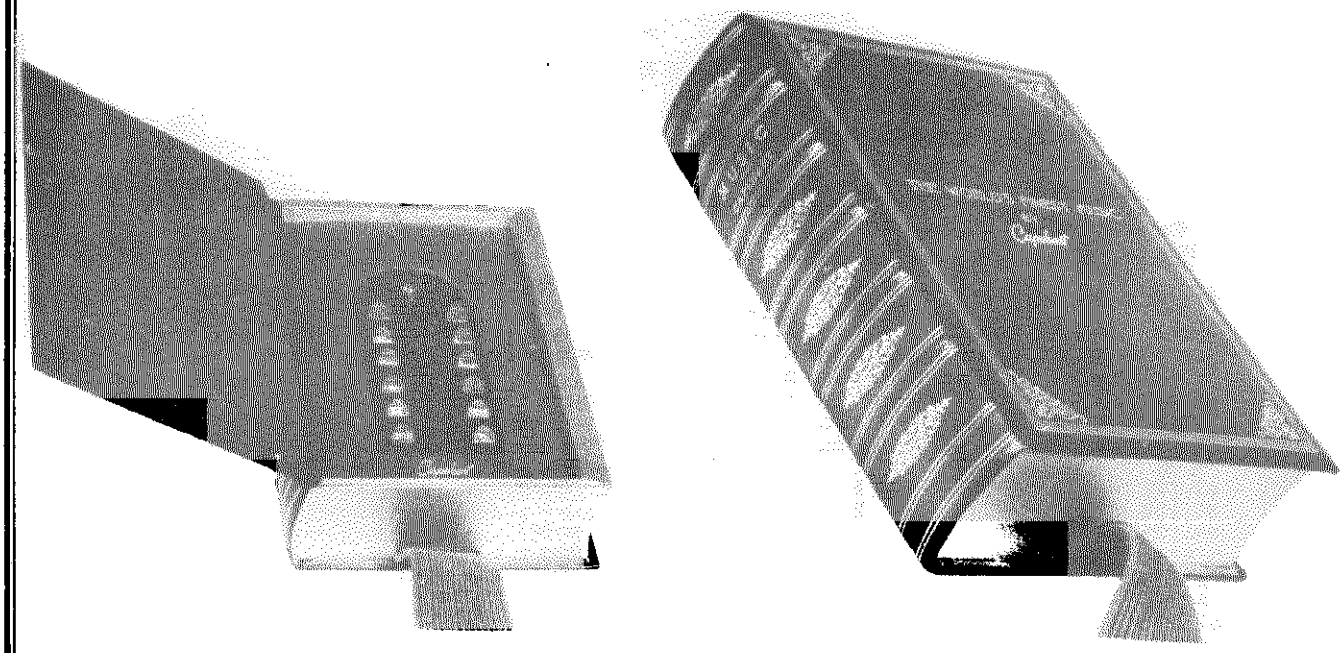

These illustrations show the leather bound Book Cover available to conceal the Control Station Unit. This is covered with genuine red snuffed cowhide with gold leaf decorations and letters. The construction is rigid and the binding servicable. Its styling is such that it is a fitting accessory for the most luxurious livingroom or library, music room or bedside.

EQUIPMENT TABULATION

PART NO.	DESCRIPTION	WHERE USED	ASSOCIATED EQUIPMENT	QUANTITY PER INSTALLATION
MR-1	Line Amplifier Junction Box	In Instrument Cabinet	1 ESM up to 3 RSM	1
MR-2	Auxiliary Junction Box	In Instrument Cabinet	With MR-1 Up to 6RSM	1
MR-2A	Auxiliary Junction Box	In Instrument Cabinet	With MR-2 Up to 10 RSM	1
61251	15 Prong Plug	RSM Patch Cords	Patch Cords	2 Per Patch Cord
80-171	Pol. "A" 15 Prong Plug	ESM Patch Cords	Patch Cords	2
66344	15 Prong Female Box Cover	In wall at Inst.	ESM Patch Cord	1 Per Patch Cord
80-194	Pol. "A" 15 Pr. Female Box Cover	In wall at Inst.	RSM Patch Cord	1
80-85 *	18 Pr. Plug	At MR-3	RSM	1 Per Room
80-140*	18 Pr. Female Box	In wall	RSM	1 Per Room

*These last two items are only required when it is desirable to locate the RSM away from the MR-3 Control Unit and employ concealed wiring, instead of the flat cable.

© John F. Rider For additional service information: See Model 400M,

MODEL 400M, Extended and Remote Control

CAPEHART CONTROL SYSTEMS

For many years it has been possible to adapt Capehart DeLuxe instruments for either Extended or Remote Control, i.e., facilities for operating the instrument from another location in the room or the use of extension speakers in other parts of the home with associated controls for tuning, regulating volume and changing from radio to phonograph, etc. In all instruments prior to the "K" Series the output transformer of the Bass and Treble amplifiers were designed to permit the use of additional speakers and by means of relays the program was distributed to the various extension speakers. The main disadvantage to this system was that the volume at a remote position could never exceed the volume at the instrument and no control of tone was possible except at the instrument.

All previous design limitations were corrected in the development of the "K" Series Instruments. In the "K" and the "M" Series the tuner supplies a signal to a line amplifier, the output of this amplifier (low voltage and low current) is fed to the various remote amplifiers each of which is equipped with Volume, Bass and Treble Controls so at any Remote Position the program may be reproduced at any volume and tone blending the listener desires.

CAPEHART EXTENDED CONTROL

The Extended Control Station is available in a molded plastic case or this unit may be concealed in a genuine leather "Book Cover." The Extended Control Station is regularly equipped with a 20' length of flat cable for ease of installation under rugs or carpet. This unit may be quickly plugged into a receptacle provided on all the 400M Series tuners if no remote control stations are desired or into the Line Amplifier and Junction Box if remote control equipment is used. This Junction Box is mounted in the cabinet.

Each Extended Control Station is equipped with the following control buttons:

1 for Turning Instrument On
6 for Preselected Radio Stations
1 for Phonograph
1 for Record Reject
1 for Increasing Volume
1 for Decreasing Volume
1 for Turning the Entire System Off

The Extended Control Station affords complete control of the instrument from any position in the room with the exception of Bass Volume and Treble Volume. Special lengths of cable for the Extended Control Station up to 200' will be supplied on special order. We advise against the practice of installing an outlet box and cover for the Extended Control Station connected to the junction box by a 16 wire conductor round cable run through the walls as this circuit is not fused and, therefore, does not meet Underwriters requirements.

The leather Book Covers for either the Extended or Remote Control Station units are finished in a dark red genuine snuffed cowhide binding decorated with gold leaf banding and lettering. These Book Covers are done in excellent taste and will satisfy the most discriminating buyer. We recommend they be supplied with all extended and remote control stations.

CAPEHART REMOTE CONTROL

The Remote Control Station employs the same push button control as the Extended Control unit. This is also regularly furnished with a 20' length of flat cable. The difference being that it incorporates a different connecting plug and circuit. The buttons on the Remote Control station affords the following controls:

1 to turn Remote Control On (and instrument if it is off)
6 Buttons for Preselected Stations
1 Button for Phonograph
1 Button for Record Reject
*1 Button for Increasing Volume
*1 Button for Decreasing Volume
1 Button for Turning Entire System Off

NOTE: The two buttons so marked * do not affect the main instrument or any other remote position which may be operating at the same time.

When the main instrument is on, pressing the "On" button at a remote station, lights the pilot light in the Remote Control Station and only then are the other eleven buttons active. When the system is turned off, either from the instrument or a remote control station, all remote positions are disconnected from the line, to restore the same program at any station it is only necessary to press the "On" button at that Remote Station.

© John F. Rider

MODEL 400M, Extended
and Remote Control

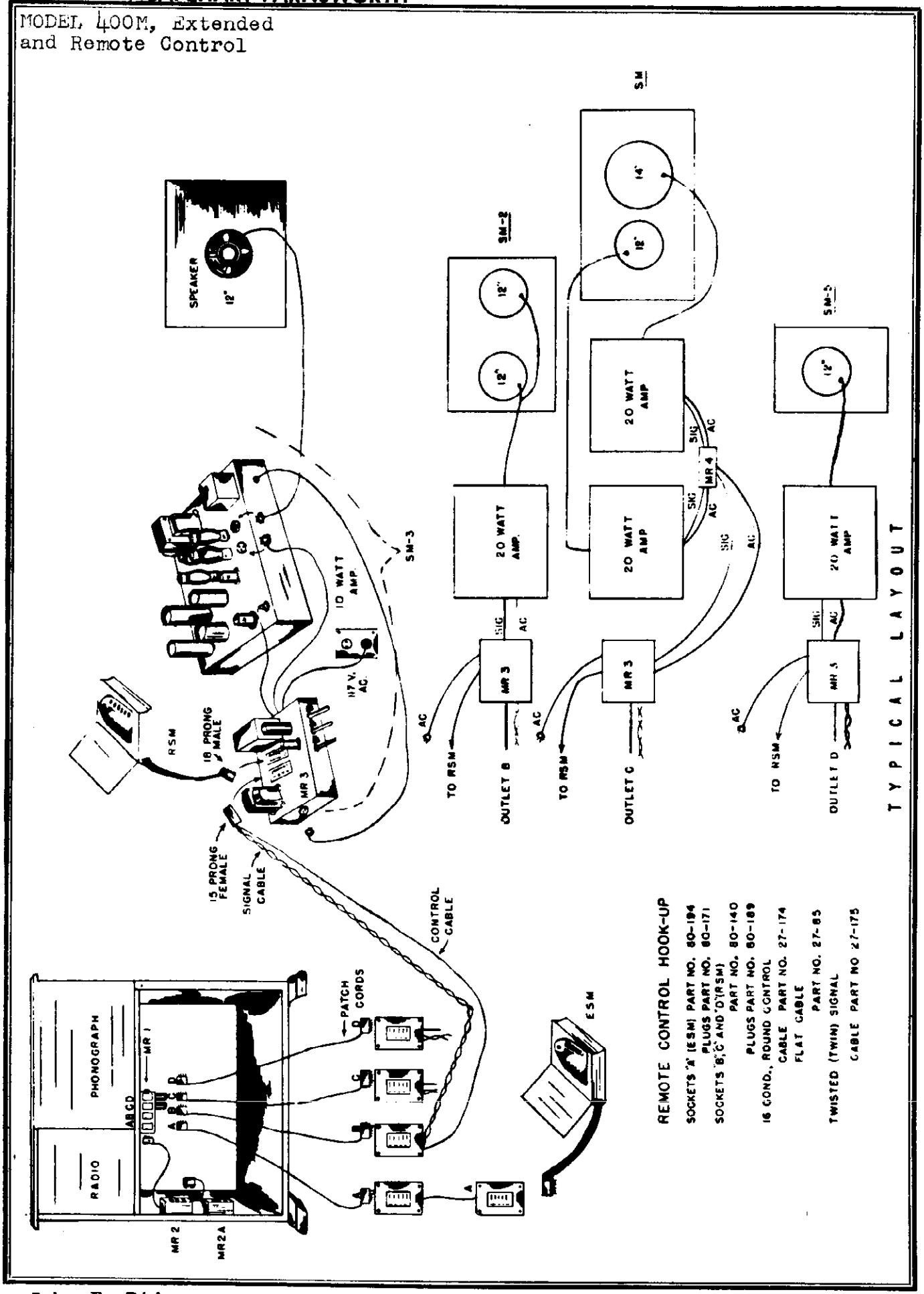

© John F. Rider

MODEL 400M, Extended and Remote Control

EXPLANATION OF LAYOUT

A rear view of the 400 instrument is given to show the location of the MR-1, Junction Box and Line Amplifier. The letters A, B, C, and D designate the type sockets and their uses (A - Extended Control, B, C and D Remote Controls). Thus the MR-1 allows the operation of an Extended Control Station (ESM) and up to three Remote Control Stations. If more than three Remote Stations are desired it is necessary to add a MR-2 for the next group of three Remote Controls and for an additional group of four a MR-2A. Ten Remote Stations being the maximum possible from one instrument.

From each socket in the MR-1 or MR-2's a patch cord of 16 wire round cable terminated in the proper plugs runs to a wall socket from each position. From the wall sockets a 16 wire round cable runs to each Remote Control Station. In addition a two wire twisted pair (for the signal) is used from each of the wall sockets to the Remote Control Stations. At Remote Control Station the 16 wire cable and the signal pair terminate in a 15 wire female plug, which is furnished with the MR-3. The MR-3 is an intergal part of the SM-3, SM-2, SM or SM-5 equipment. An 18 wire female socket is incorporated in the MR-3 for the Remote Control Station. The Remote Control Station may be used in another part of the room (away from the Speaker and Amplifier), in this event a length of 16 wire cable and an 18 prong plug and an 18 prong wall outlet will be required.

REMOTE STATION EQUIPMENT

Each Remote Control Station consists of a MR-3; an amplifier, SM-3 is 10 watts, SM-2 is 20 watts, SM is 40 watts, SM-5 is 20 watts, and a speaker unit with the baffle, SM-3 uses the 12" speaker as used in the Panamuse M-3, the SM-2 uses the two 12" speakers as in the M-2, the SM uses the 12" and 14" speakers from the 400-M and the SM-5 uses the 12" speaker from the 400-M, in each case a 24" x 24" baffle is furnished cut to fit the speaker or speakers supplied.

In other words the SM equipment consists of the two amplifiers and the two speakers as used in the 400-M. With the SM equipment an MR-4 junction box is supplied, this plugs into the MR-3 and has two A.C. outlets and two signal cables (one for each of the two amplifiers) this is necessary as the MR-3 has but one AC outlet for an amplifier and one signal cable.

The Extended Control Station may be plugged into the instrument, if no remote equipment is used. It is terminated in a 15 prong polarized male plug, this is to prevent plugging it into a Remote Socket by accident or plugging a Remote plug into the Extended Socket. The Extended Control Stations, and Remote Control Stations are equipped with a 20' flat cable and may if desired be enclosed in a book cover. See Illustration. Extra length cable will be supplied, on special order although excessive lengths are impractical; 200 feet is the maximum recommended for Extended Controls, Remote Controls should be planned for shorter lengths. This limitation is imposed by the voltage drop which prevents positive operation of the relays under low line voltage conditions.

INSTALLATION SUGGESTIONS

The question of installation of the units in walls is often raised; where space is a factor it is often possible to mount the speaker (or speakers) behind a grill let into the wall and the amplifiers on shelves in either the basement, attic or adjacent closet running leads from the speakers back to the amplifiers.

Unless a Service Department has available the services of a skilled electrician who is accustomed to installing wiring in the better homes, it is best to avail yourselves of the services of a good electrical contractor to install the concealed wiring. This results in a fixed price which can be secured before the installation is started, and which can be included in the quotation to the customer. The contractor will of course be responsible for any damage and will insure a neat

©John F. Rider

MODEL 400M, Extended and Remote Control

INSTALLATION SUGGESTIONS

and workmanlike job which will pass the local wiring code requirements.

In the event you have a prospect for a Remote Control Installation, and you are not sure of the specifications you have prepared if a floor plan of the home, with the proposal, is sent the Service Department, Marion, Indiana, we will gladly review the installation, making such recommendations as are indicated by our national experience.

It is also possible to arrange for the services of a Field Engineer to supervise the actual installation or the final acceptance tests. Inquiries should of course be made to the Service Department.

CIRCUIT DISCUSSION

A jack is provided in the tuner to supply a signal (radio or phonograph) to the Line Amplifier and Junction Box. This unit has a power supply cable which plugs into a 5 prong socket at the rear of the tuner and also a 16 conductor cable with a polarized 15 prong plug which goes into a socket on the top of the tuner, this carries the control circuits. The signal, in the tuner is taken off ahead of the volume and tone control circuits.

In the Line Amplifier and Junction Box, MR-1, is a 6J5 amplifier tube with a plate to line transformer. The line is 33 ohms, to eliminate hum pickup and to keep the voltage low. The plate to line transformer is connected to the three remote control sockets and the socket for the Auxiliary Junction Box MR-2 which is used when more than three Remote Control Stations are used. The MR-2 does not have an amplifier as it uses the output from the MR-1, it does have, however, three sockets for Remote Control Stations and a socket for a MR-2A auxiliary junction box, which has sockets for four Remote Control Stations. Thus a total of ten Remote Stations which is the maximum that can be operated from one instrument is had by using 1 MR-1, 1 MR-2 and 1 MR-2A.

We recommend the use of a patch cord for each line from the junction box and auxiliary junction boxes to the cable outlets in the wall.

At the instrument end of each remote station cable a 15 prong outlet box cover should be installed.

Two cables are run from each outlet box to each remote position, a two wire twisted pair for the signal (this is the 33 ohm line) and the 16 wire round cable. Only 13 conductors of the 16 are used so there are three spares in case of breakage when pulling the cable in.

These two cables terminate at the Remote Amplifier and Control Unit, MR-3, in a 15 prong female plug which is furnished with the MR-3.

The MR-3 is a line to grid amplifier to drive the power amplifier. It has a line to grid transformer working into a triode thru a volume control, the bass and treble volume controls are in the plate circuit of this tube. Power for the tube is supplied by the power amplifier. In the MR-3 there is a three circuit relay, one circuit holds the relay closed after it is energized by the "On" button of the Remote Control Station. The second circuit closes the 117 Volts to the power amplifier while the third circuit interrupts all the button circuits except the "On" button, so unless the Remote position is turned on the other buttons are not effective. The volume control is motor driven so that it may be controlled either manually at the control unit or electrically from the Remote Control Station. The MR-3 is plugged into the 117 Volt and thru its relay supplies the power amplifier, which plugs into the MR-3.

TYPES OF EQUIPMENT

There are four types of power amplifier and speaker combinations.

SM is 2 - 20 watt amplifiers and a 12" speaker and a 14" speaker a 24" x 24" baffle and a MR-3. The speakers and amplifiers are identical with those used in a 400-M.

SM-5 is a 1 - 20 watt amplifier and a 12" speaker with a 24" x 24" baffle and a MR-3. The speaker is the same as the 12" used in the 400-M.

SM-3 is a 10 watt amplifier, 12" speaker and 24" x 24" baffle and a MR-3. The Amplifier and speaker are the same as those used in the M-3 Panamuse.

SM-2 is a 20 watt amplifier, twin 12" speakers with a 24" x 24" baffle and a MR-3. This equipment is identical with that used in the M-2 Panamuse.

With the SM equipment (40 watts) a MR-4 Junction Box is used, this plugs into the MR-3 and has two signal cables and two 117 Volt outlets. These are to permit the use of two amplifiers as the MR-3 has only single outlets for 117 Volts and the signal.

©John F. Rider

MODEL 400M, Extended and Remote Control

MR-1 LINE AMPLIFIER AND JUNCTION BOX

The MR-1 is called the Line Amplifier and Junction Box. It is equipped with three cables and plugs for connection to the tuner. This furnishes the heater and plate voltages for the amplifier tube through one cable which plugs into the five prong socket in the rear of the 400 tuner. The shielded cable plugs into a jack, also in the rear of the tuner, this furnishes a signal taken off before the volume or tone control circuits, thus the signal, furnished the remote speakers is unmodified by the volume or tone controls of the tuner. The 15 prong plug goes into the top of the tuner and supplies the voltages to the various control circuits, these are distributed by the five sockets in the MR-1. On one side of the unit are four 15 prong sockets, three standard and one polarized. The polarized socket is for an Extended Control Station, the other three are for Remote Positions, these three sockets are fused by a 2.5 Amp. Fusestat. On one end is another polarized socket, this is for the use of a MR-2 Auxiliary Junction Box. The supply voltage for this socket is taken off ahead of the Fusestat as the additional drain of more than three Remote Positions would blow the Fusestat.

The MR-2 Auxiliary Junction Box is similar to the MR-1 except it has no Extended Control Socket or amplifier. It does have a cable and plug to connect it into the MR-1, three sockets for Remote Positions protected by a 2.5A Fusestat and a polarized socket for use with a MR-2A in the event more than six Remote Positions are required. (3 in MR-1 and 3 in MR-2). The MR-2A has four sockets for Remote Positions and is properly fused.

One MR-1 is required for each 400M instrument used with Remote Control Equipment. If the installation has more than three positions but less than seven a MR-2 is required in addition, if more than six positions are required a MR-2A is also needed. In no case should the number of speaker positions exceed ten.

MR-1 LINE AMPLIFIER and JUNCTION BOX

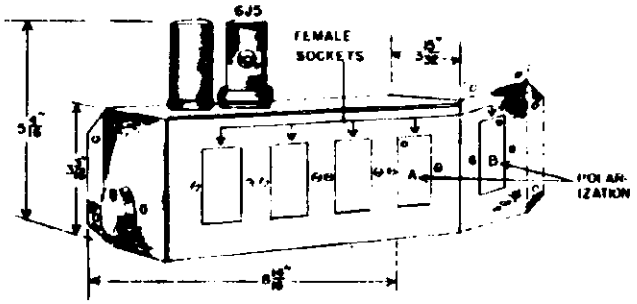

MR-2 JUNCTION BOX

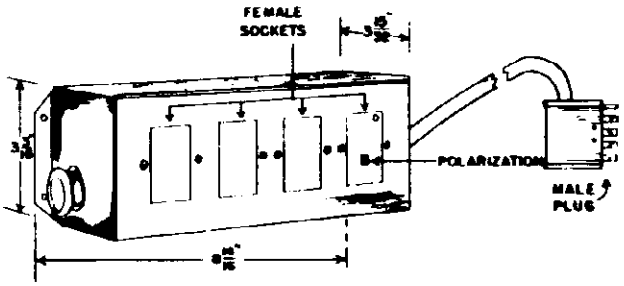

MR-3 REMOTE AMPLIFIER AND CONTROL UNIT

The MR-3 is called the Remote Amplifier and Control Unit. It is mounted at the remote speaker position and permits control of volume, bass and treble manually at the MR-3 or the volume automatically at the Remote Control Station. This is equipped with a 15 prong male plug to terminate the signal (two wire) and control (16 wire) cables, an 18 prong socket for the Remote Control Station. A line to grid transformer feeds the grid of the triode through the motor driven volume control. Power for the triode is supplied by the power amplifier through a cord and plug. A shielded cord supplies the amplified signal to the power amplifier, which plugs into the AC receptacle in the MR-3. The MR-3 has an AC supply cord which is connected through a three pole relay to the AC receptacle and the 16 Volt transformer which operates the volume control motor, the remote station pilot lamp and holds the relay closed until the Off button is pushed which opens the relay holding circuit thus opening the AC supply to the power amplifier and the 16 Volt transformer. Thus when the system is in use pressing any button at a Remote Position, with the exception of the On button, has no effect on the system unless the position is On, this condition is indicated by the pilot light being lighted. Another feature is that when the system is turned Off all remote positions are disconnected from the line and when the instrument is restarted only the positions where the On button has been pushed again are reconnected.

Due to the fact that the MR-3 has only one signal output cable the SM Concealed Speaker Unit includes a MR-4 junction box.

This unit has a 117 Volt supply cord which plugs into the AC socket in the MR-3 and terminals in two AC outlets, a signal jack to receive the output of the signal cable from the MR-3 and terminates in two signal cables.

Thus Signal and AC Supply is furnished for each of the two power amplifiers. A power cable in the MR-4 connected to a bleeder is plugged into the amplifier not supplying the power for the MR-3 thus the voltages are equalized in the two amplifiers.

© John F. Rider

MODEL 400M, Extended
and Remote Control

MR-3 AMPLIFIER

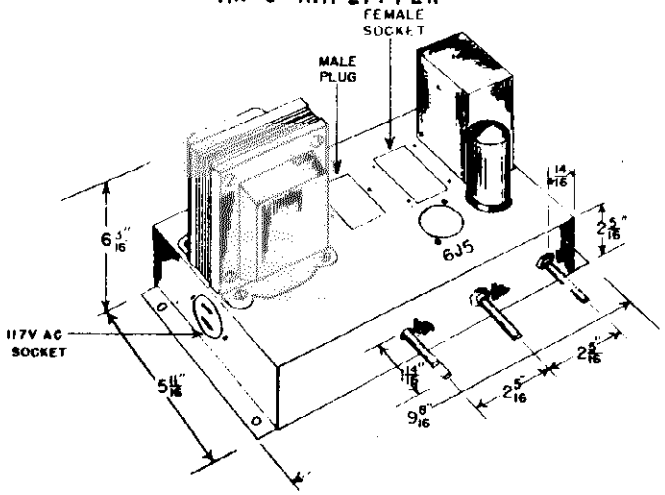

M-2 AMPLIFIER

This nine tube, 20 watt amplifier has a 6R7 input feeding a center tapped choke for phase inverting to drive a 6C8 dual triode in push pull. This tube is resistance coupled to the push pull parallel output stage. Degeneration is carried out over two stages, from the output plates to the unbypassed cathodes of the 6C8. This degeneration minimizes the changes in impedance reflected by the output transformer from the speaker to the output tube plates, or, in other words, results in a flatter overall response from the amplifier and loudspeaker.

Three 5Y3 rectifiers are used in parallel to maintain good regulation and longer tube life as the current requirements are quite high.

A two section filter employing a 30 mfd. condenser (2 - 15 mfd., 475 Volts) a choke, another 30 mfd. condenser, speaker field (or fields) terminated in a 30 mfd. condenser, this results in a direct current supply with an exceedingly small a.c. component and no tendency to motor boat on sustained bass passages.

The M-2 amplifier is supplied in the SM-2 and SM-5 units, while two are furnished with the SM.

M-3 AMPLIFIER

This six tube, 10 watt amplifier has a 6R7 triode feeding a center tapped choke for phase inverting to drive a 6SC7 dual triode used in push pull which is resistance coupled to the push pull 6V6 output stage. Degeneration is carried over one stage, from the plate circuit of each the 6V6's to it's grid circuit.

Two 5Y3 rectifiers are used to insure good regulation and as in the case of the M-2 an adequate filter is supplied.

The M-3 is only supplied with the SM-3 unit.

M-2 AMPLIFIER

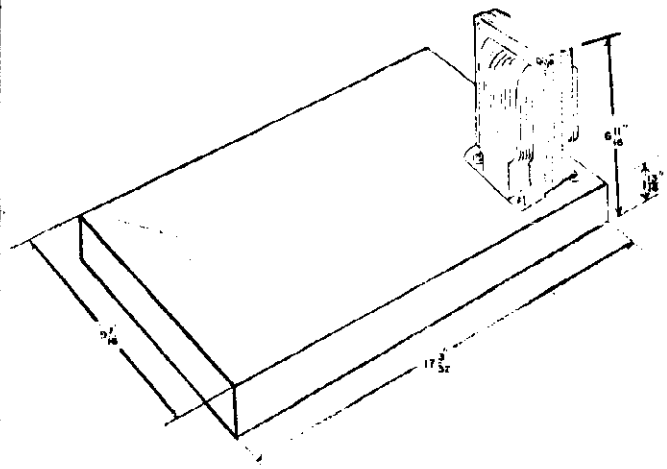

M-3 AMPLIFIER

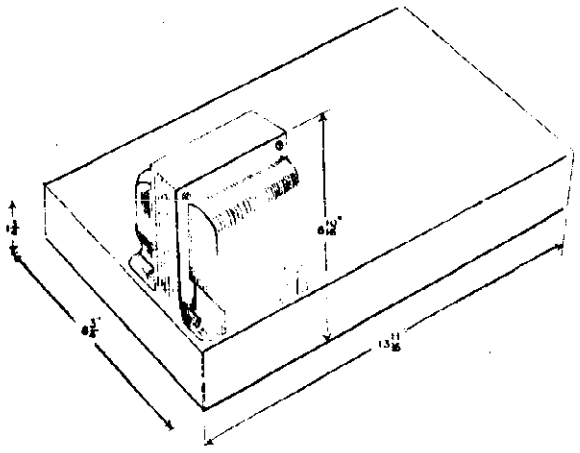

©John F. Rider

MODEL 400M, Extended and Remote Control

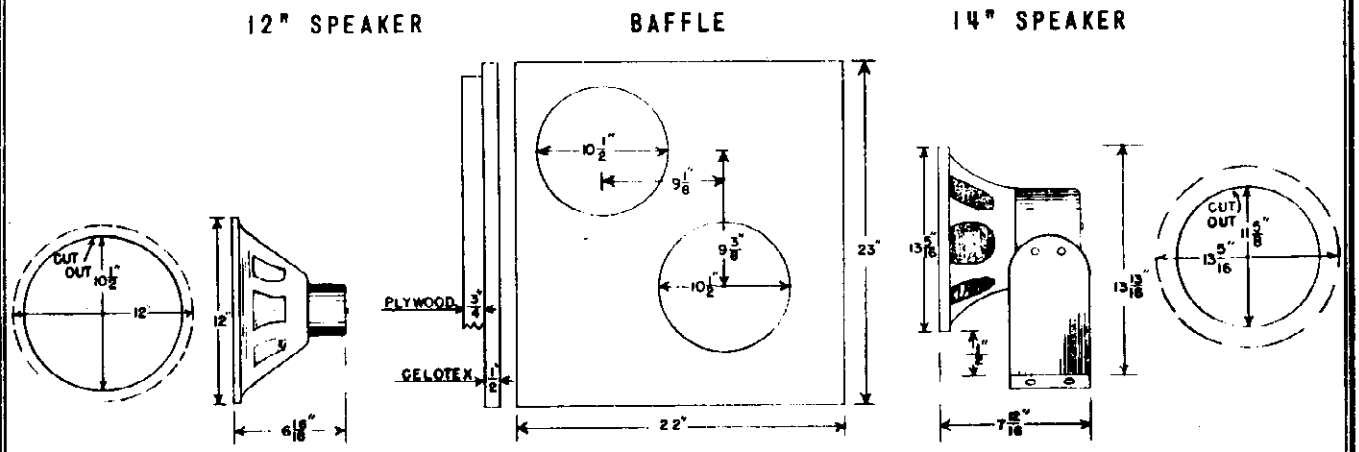

CODE	MODEL	DESCRIPTION
RAPID	ESM	Extended Control Station 20' Flat Cable & 15 Prong Plug.....
RATIO	RSM	Remote Control Station 20' Flat Cable & 15 Prong Plug.....
RABID	MR-1	Junction Box & Line Amplifier for 1 Extended Control Station and up to 3 Remote Control Stations.....
RACES	MR-2	*Auxiliary Junction Box for more than 3 and less than 7 Remotes.
	MR-2A	**Auxiliary Junction Box for more than 6 and less than 11 Remotes
		*A MR-1 must be employed with a MR-2
		**A MR-1 and MR-2 must be employed with the MR-2A
RAISE	SM-2	Concealed Speaker Unit.....
		1 20 Watt - 9 Tube Amplifier
		2 12" Electrodynamic Speakers & Baffle
		1 MR-3 Remote Amplifier
RAJAH	SM-3	Concealed Speaker Unit.....
		1 10 Watt 6 Tube Amplifier
		1 12" Electrodynamic Speaker & Baffle
		1 MR-3 Remote Amplifier
RALLY	SM-5	Concealed Speaker Unit.....
		1 20 Watt - 9 Tube Amplifier
		1 12" Heavy Duty, wide range Speaker & Baffle
		1 MR-3 Remote Amplifier
RANCH	SM	Concealed Speaker Unit.....
		2 20 Watt - 9 Tube Amplifiers
		1 12" Heavy Duty, wide range speaker
		1 14" Extra Heavy Duty bass speaker
		1 Baffle for above speakers
		1 MR-3 Remote Amplifier
		1 MR-4 Junction Box from MR-3 to two amplifiers
PLUGF	27-174	16 Conductor Round Cable.....
PLUGG	27-85	16 Conductor Flat Cable.....
PLUGH	27-175	Twisted Twin Conductor.....
PLUGA	61251	15 Prong Plug & Cap.....
PLUGB	80-85	18 Prong Plug & Cap.....
PLUGC	66344	15 Prong Socket & Cover.....
PLUGD	80-140	18 Prong Socket & Cover.....
PLUGE	80-130	15 Prong Female & Cap.....
PLUGJ	80-171	15 Pr. Plug & Cap Pol. A.....
PLUGK	80-194	15 Pr. Socket & Cover Pd. A.....
REBEL	80-378	Book Cover Only.....
REBAR	13-379	ESM in Book.....
REBES	13-380	RSM in Book.....
ROSES	41-79	DeLuxe Antennas.....
ROTOR	41-80	Inverted "L" Antennas.....
		Form 112-C Direct Mailing Piece.....

©John F. Rider

MODEL 400M, Extended
and Remote Control

EXTENDED CONTROL

The "M" Series Extended Control is similar in all respects to previous Extended Controls except an "On" Button is used to turn the set on. No "Dial" button provided, however the other eleven buttons correspond with those on the set: 6 Radio Stations, Off, Phono, Record Reject, Volume Increase and Volume Decrease and "On."

REMOTE CONTROL

The Series "M" Remote Control is similar to that previously used in the "K" series. In the tuner the signal either from the detector (AM or FM) or the crystal pickup is fed to a 33 ohm line thru a 6J5 tube and a plate to line transformer before it is affected by the bass, treble or master volume control. The low impedance line runs to one or more control units which have a line to grid transformer feeding the volume control for a 6J5. In the plate circuit of this tube are the bass and treble controls. This tube drives either an SM3 unit 10 watt amplifiers and a 12" and a 14" speaker, or an SM5 unit having a 20 watt amplifier and one 12" heavy duty speaker. Physically the Remote Control Station is identical with the Extended Control Station, the difference is in wiring the plug termination. The remote station uses an 18 prong plug while the Extended Station uses a 15 prong polarized plug.

We have recommended the use of a 16 wire round cable for the cable runs between the instrument and each remote amplifier, although only 13 conductors are used, this is to allow spares in case of insulation breaks or wire breaks when the cable is pulled in. A careful examination of the male and female plugs furnished with our equipment discloses the facts that the terminals are numbered so #1 of a male socket connects to #1 of a female socket, etc. Thus in making up a system, if a short piece of cable 6" or 8" long is connected to a plug it can be carried about and used for a sample at each position needing a connection.

Occasionally a tuneable hum is present in some Remote Control installations when certain positions are plugged into the Junction Box, often removing the ground connected to the blue lead on prong 14 in the 15 prong male socket will remove this condition (of course a good ground should be provided for each Remote Position). The use of a twisted pair as the signal line is recommended to prevent hum pick up which might happen if the signal lines were run in the same cable as the operating lines.

With the SK unit a Special Junction Box for use with two amplifiers is furnished.

MR-1 AMPLIFIER & JUNCTION BOX

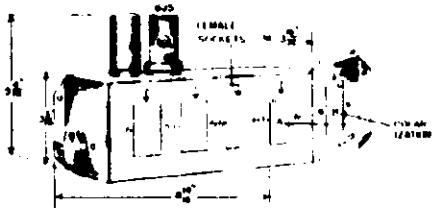

MR-3 AMPLIFIER

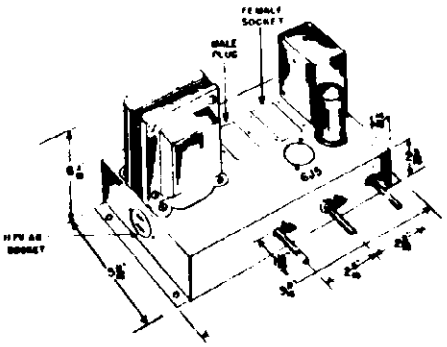

M-2 AMPLIFIER

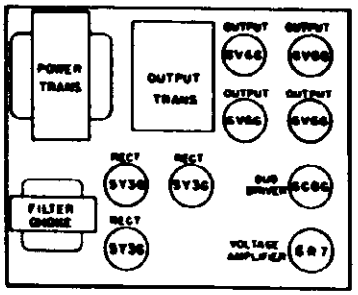

MR-2 JUNCTION BOX

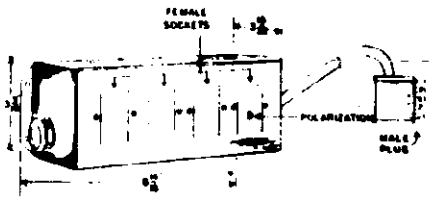

M-3 AMPLIFIER

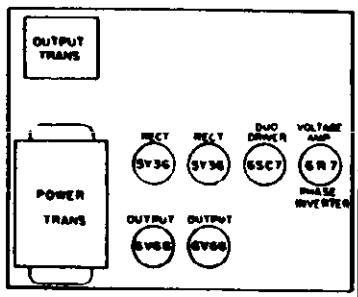

©John F. Rider

MODEL 400M, Extended and Remote Control

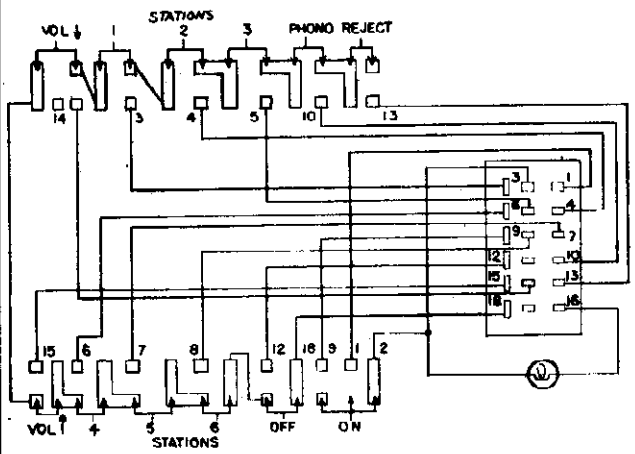

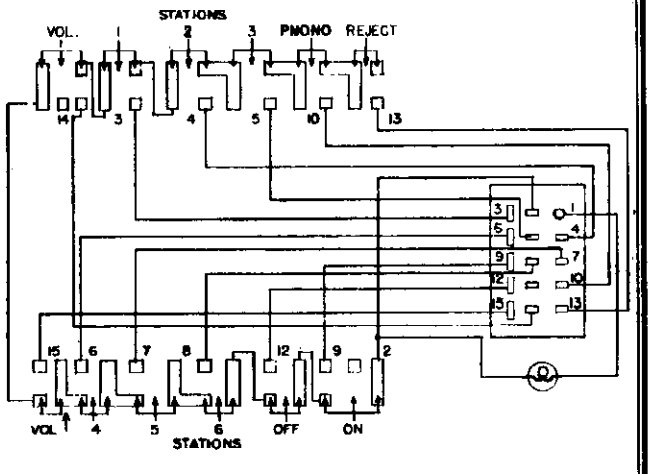

REMOTE CONTROL BOX RSM

EXTENDED CONTROL BOX ESM

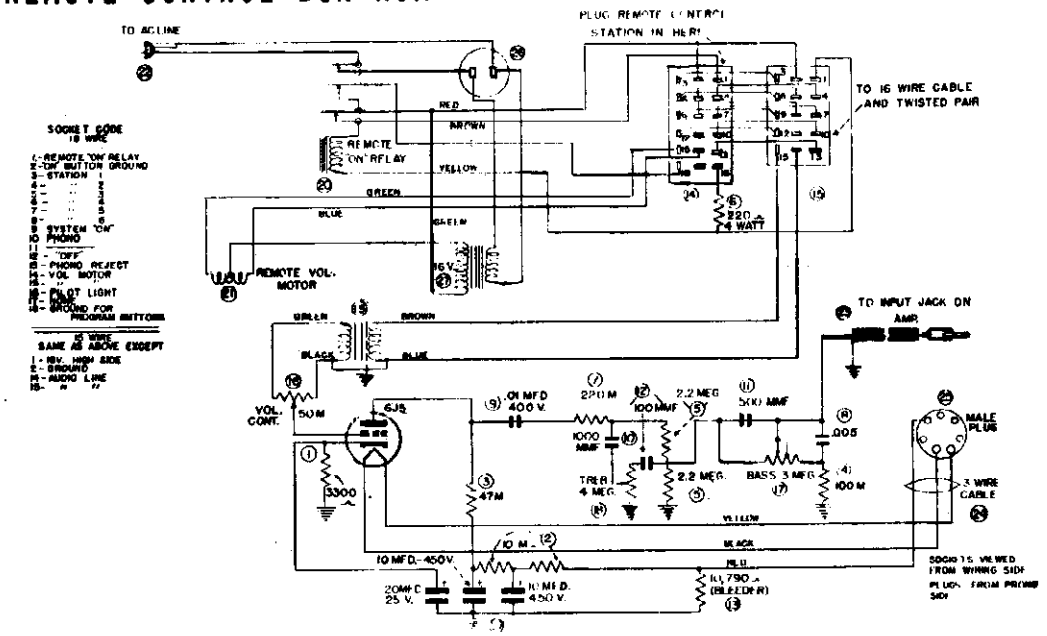

REMOTE AMPLIFIER AND CONTROL UNIT MR-3

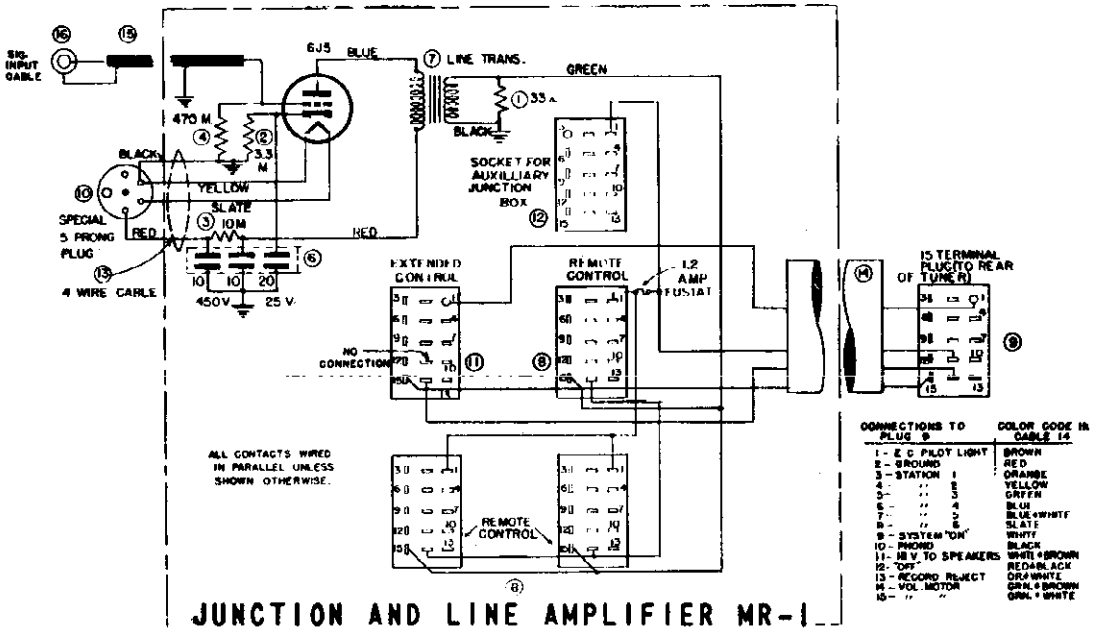

JUNCTION AND LINE AMPLIFIER MR-1

©John F. Rider

MODEL 400M, Extended
and Remote Control

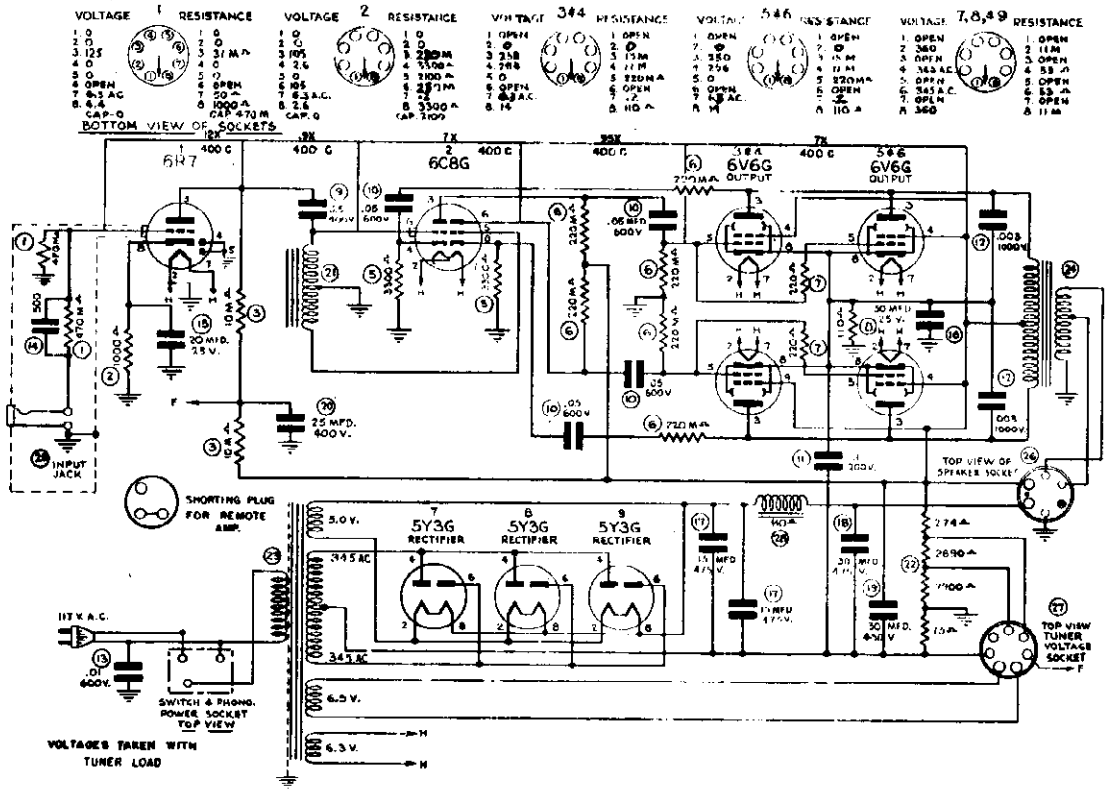

M-2

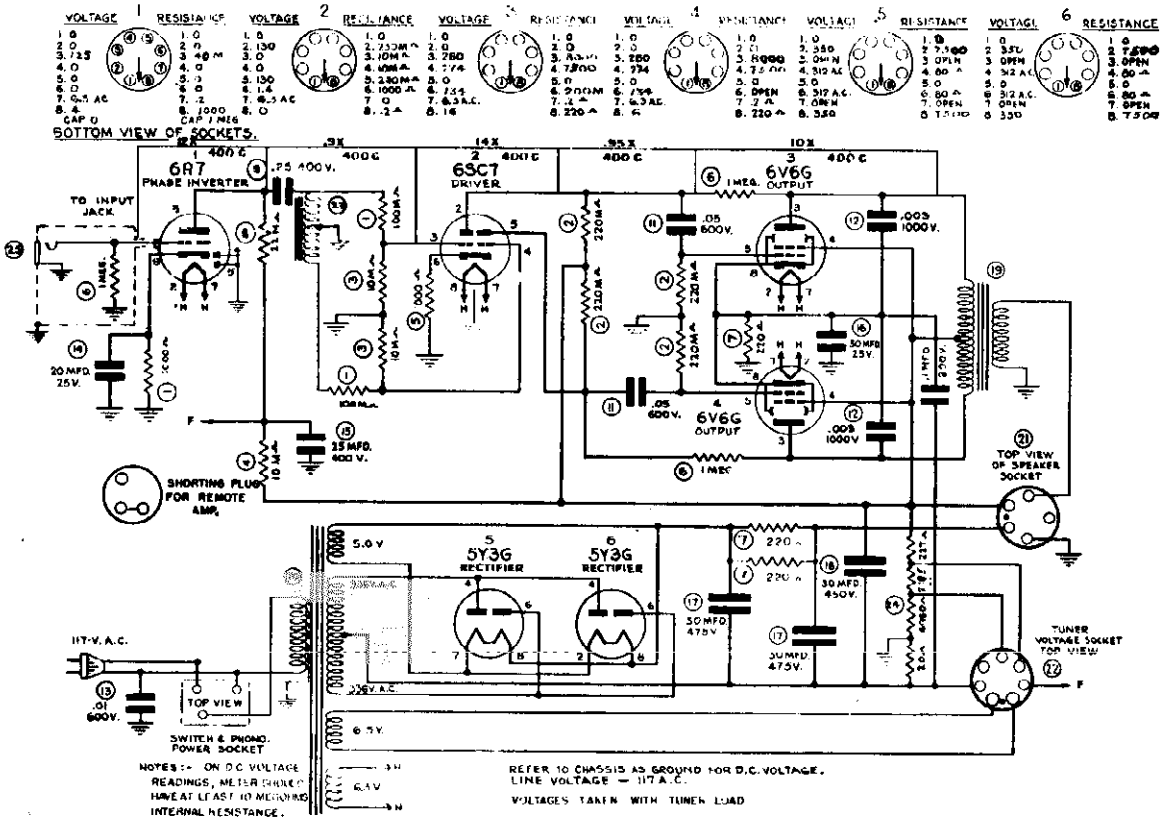

M-3

©John F. Rider

MODEL 400M, Extended and Remote Control

Reference Number	Part Number	PARTS LIST Description
		RSM AND ESM PARTS LIST
	53-69	RSM and ESM Control Box Only
	90-94	Push Button Switch
	27-85	16 Wire Cable Per Ft.
	80-85	18 Wire Plug and Cap
	80-171	15 Wire Plug Pol A
	59-68	Push Buttons
	73-512	"ON" Tab
	73-398	"PHONO" Tab
	73-395	"LOW" Tab
	73-396	"HIGH" Tab
	73-389	"REJECT" Tab
	73-387	"OFF" Tab
	41-17	Station Call Letter Kit
		JUNCTION BOX AND LINE AMPLIFIER MR-1
1	773-91	33 Ohm 1/2 watt
2	773-72	3300 Ohm 1/2 Watt
3	773-84	10 M Ohm 1/2 Watt
4	773-53	470 M 1/2 Watt
6	25-50	Elec. Cond.
7	94-66	Line Trans.
8	61250	15 Wire Plain Socket
9	80-171	15 Wire Plug and Cap Pol A
10	80-122	5 Prong Plug
11	90-170	15 Prong Socket Pol A
13	27-161	4 Wire Cable Power Cable
14	27-160	15 Wire Cont. Cable
15	27-48	Single Shield Sig. Cable
16	61269	1 Prong Plug
		MR-3 STATION AMPLIFIER CONTROL UNIT
1	773-42	3300 Ohms 1/2 Watt
2	773-84	10 M Ohms
3	773-48	47 M Ohms
4	773-89	100 M Ohms
5	773-55	2.2-Megs.
6	77-104	220 Ohms 4 Watt
7	773-51	220 M Ohms 10 Watt
8	254-1	.005 Mfd. 600 V.
9	255-1	.01 Mfd. 400 V.
10	25-53	1000 MMF Mica
11	253-3	500 MMF Mica
12	253-1	100 MMF Mica
13	77-102	10790 Ohms
14	80-86	18 Wire Socket
15	80-128	15 Wire Socket
16	78-41	Volume Control
17	78-21	Bass Control
18	78-20	Treble Control
19	94-70	Line Transformer
20	90-69	Relay
21	44-20	Volume Control Motor
22	27-118	AC Line Cord
23	11-158	Amp. Input Cable Ass'y.
24	11-155	Line Amp. Lower Cord Ass'y.
25	80-129	Prong Plug and Cap
27	94-69	16 V. Transformer
		AMPLIFIER A-10 M-2
1	773-53	470 M Ohms 1/2 Watt
2	773-39	1000 Ohms 1/2 Watt
3	77-32	10 M Ohms 1/2 Watt
4	773-41	2200 Ohms 1/2 Watt
5	773-72	3300 Ohms 1/2 Watt
6	773-81	220 M Ohms 1/2 Watt
6	773-51	220 Ohms 1/2 Watt
8	77-71	110 Ohms 10 Watt
9	25-54	.25 Mfd. 600 V.
10	254-8	.05 Mfd. 600 V.
11	254-2	.1 Mfd. 200 V.
12	25-86	.003 Mfd. 1000 V.
13	257-2	.01 Mfd. 600 Line Buffer
14	253-3	500 M.M.F. Mica
15	25-42	20 Mfd. 25 V.
16	25-38	50 Mfd. 25 V.
17	25-138	15 Mfd. 475 V.
18	25-139	30 Mfd. 475 V.
19	25-146	30 Mfd. 450 V.
20	25-82	25 Mfd. 400 V.
21	94-85	Phase Connector Reactor
22	77-102	Voltage Divider
23	94-61	Power Transformer
24	94-32	Output Transformer
25	805-1	Input Jack
26	80-57	Speaker Socket
27	80-50	Tuner Voltage Socket
28	94-65	Choke
	27-118	A.C. Line Cord
		AMPLIFIER A-9 M-3
1	773-83	100 M Ohms 1/2 Watt
2	773-79	220 M Ohms 1/2 Watt
3	773-74	10 M Ohms 1/2 Watt
4	77-22	10 M Ohms 1 Watt
5	773-39	1000 Ohms 1/2 Watt
6	773-88	1 Meg. 1/2 Watt
7	77-104	220 Ohms 4 Watt
8	77-69	22 M Ohms 1 Watt
9	25-133	.25 Mfd. 600 V.
10	254-6	.02 Mfd. 600 V.
11	254-8	.05 Mfd. 600 V.
12	25-86	.003 Mfd. 1000 V.
13	257-2	.01 Mfd. 500 V. Line Buffer
14	25-42	20 Mfd. 25 V.
15	25-42	25 Mfd. 400 V. 20 Mfd. 25 V.
16	25-38	50 Mfd. 25 V.
17	25-139	30 Mfd. 475 V.
18	25-146	30 Mfd. 450 V.
19	94-34	Output Transformer
20	94-62	Power Transformer
21	80-57	Speaker Socket
22	80-50	Tuner Voltage Socket
23	94-85	Phase Connector Reactor
24	77-103	Voltage Divider
25	8054	Phono Input Jack

©John F. Rider

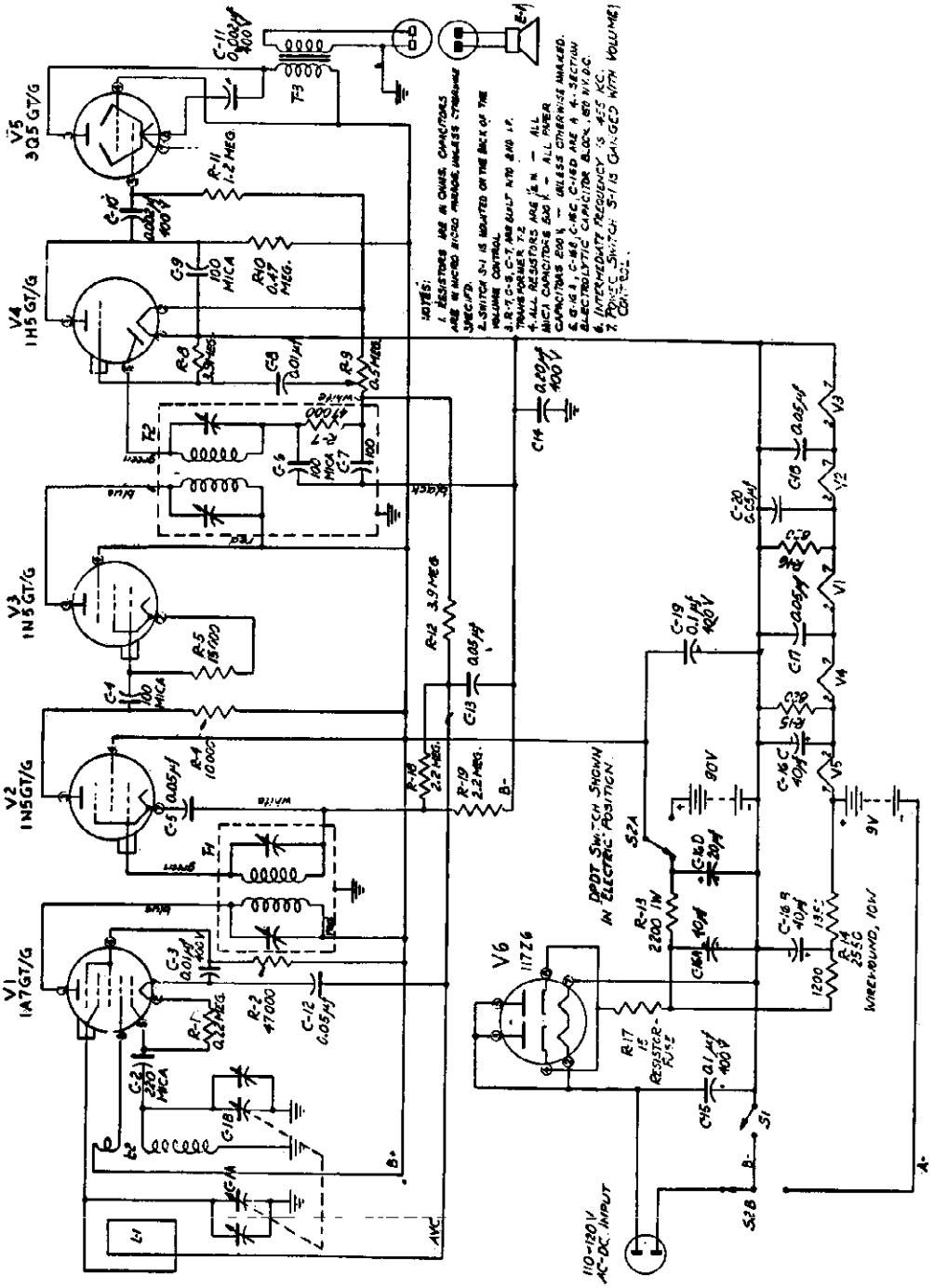
V1 1A7GT/G
V2 1N5GT/G
V3 1N5GT/G
V4 1H5GT/G
V5 3Q5GT/G
V6 117Z6
T1
T2
T3
L1
S1
S2A
S2B
DPDT SWITCH SHOWN IN ELECTRIC POSITION
110-120 V AC-DC INPUT
WIREWOUND, 10W
NOTES:
1. RESISTORS ARE AS OHMS; CAPACITORS ARE MARKED WHERE MARKS ARE LESS THAN 1.
2. SWITCH S-1 IS MOUNTED ON THE BACK OF THE VOLUME CONTROL.
3. R-11, C-9, C-7 ARE BUILT INTO AND I.F. TRANSFORMER T-2.
4. ALL RESISTORS ARE 1/2 W. — ALL MICA CAPACITORS 500 V. — ALL OTHER CAPACITORS 200 V. — UNLESS OTHERWISE MARKED.
5. C-14, C-15, C-16, C-16D ARE A 4-SECTION ELECTROLYTIC CAPACITOR BLOCK, 8Y MFG. CO.
6. INTERMEDIATE FREQUENCY IS 455 KC.
7. POWER SWITCH S-1 IS GANGED WITH VOLUME CONTROL.

©John F. Rider

MODEL ME8

Model ME8 Portable Radio is a 6-tube, 3-way portable superheterodyne receiver using the latest octal type of low-drain electronic tubes.

OPERATION: The set operates from 105 to 120 volts, A.C. or D.C. power supply or from self-contained batteries. Power drain is approximately 25 watts on electric operation.

When operated on direct current (D.C.), if no reception is obtained after approximately one minute of warm-up time, reverse the line plug in the power outlet.

RANGE: Model ME8 covers the broadcast band from 532 to 1700 kilocycles. Since the scale is calibrated 54 to 160, the actual frequency of the station received is obtained by adding zero to the dial calibration.

CONTROLS: Three controls are provided. The left hand control puts the set into operation and increases the volume with clockwise rotation. The right-hand control tunes the dial to the desired station. The center slide switch selects electric operation in the left position, and battery operation in the right position.

ANTENNA: No outside aerial is required as more than adequate pickup is obtained by the self-contained loop antenna. In areas of poor reception or for weak or distant stations the loop antenna has a directional effect. The set may be turned to the direction of maximum reception.

BATTERIES: The batteries comprise: two 4½ volt "A" units, Eveready type 746 or equivalent, and two 45 volt "B" units, Eveready type 482 or equivalent.

They should be mounted in the compartment provided in the bottom of the cabinet, as shown in sketch. Batteries should be removed when they are dead or if the set is not to be used on battery operation for several months.

ALIGNMENT: No attempt should be made to realign this receiver until it has been determined that a poor tube, or some local condition is not responsible for faulty reception.

The Signal Generator may be connected through a 0.01 mf capacitor (used as dummy antenna) to the lug on RF section A of tuning capacitor. Connect ground clip of generator to a convenient B-minus point (such as the case of the electrolytic capacitor, or one of the switch terminals on the back of the volume control). An output meter may be clipped directly across the voice control lugs. Align the I.F. trimmers to 455 kc, using least possible input from Signal Generator to avoid developing A.V.C. voltage which would make the tuning adjustments very broad.

To align RF trimmers, remove the 0.01 mf capacitor and connect the Signal Generator leads to two or three turns of heavy wire, forming a self-supporting loop of about 7 or 8 inches diameter, placed about a foot away from the receiver's loop antenna. Again, use the least possible input from the Signal Generator. With the tuning capacitor plates completely out of mesh, and pointer at extreme right end of travel, adjust the oscillator trimmer (B) (on front section of tuning capacitor) to 1700 kc. Readjust both Signal Generator and tuning capacitor to 1550 kc and adjust the RF trimmer (A) (on rear section) for maximum response.

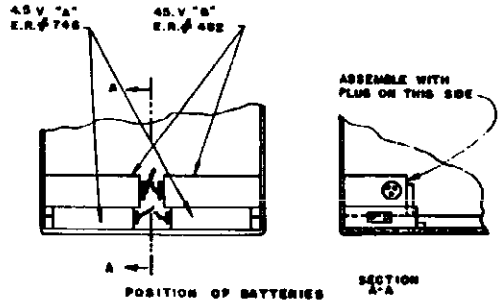

NOTE:
BE SURE TO REMOVE BOLT FROM BOTTOM OF CABINET BEFORE ATTEMPTING TO INSERT BATTERIES.

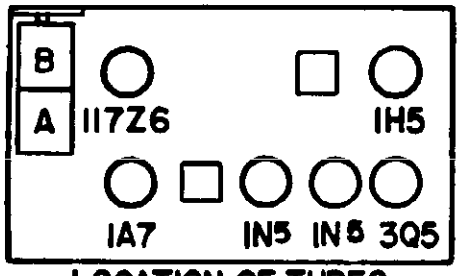

LOCATION OF TUBES

©John F. Rider

MODEL 6B1

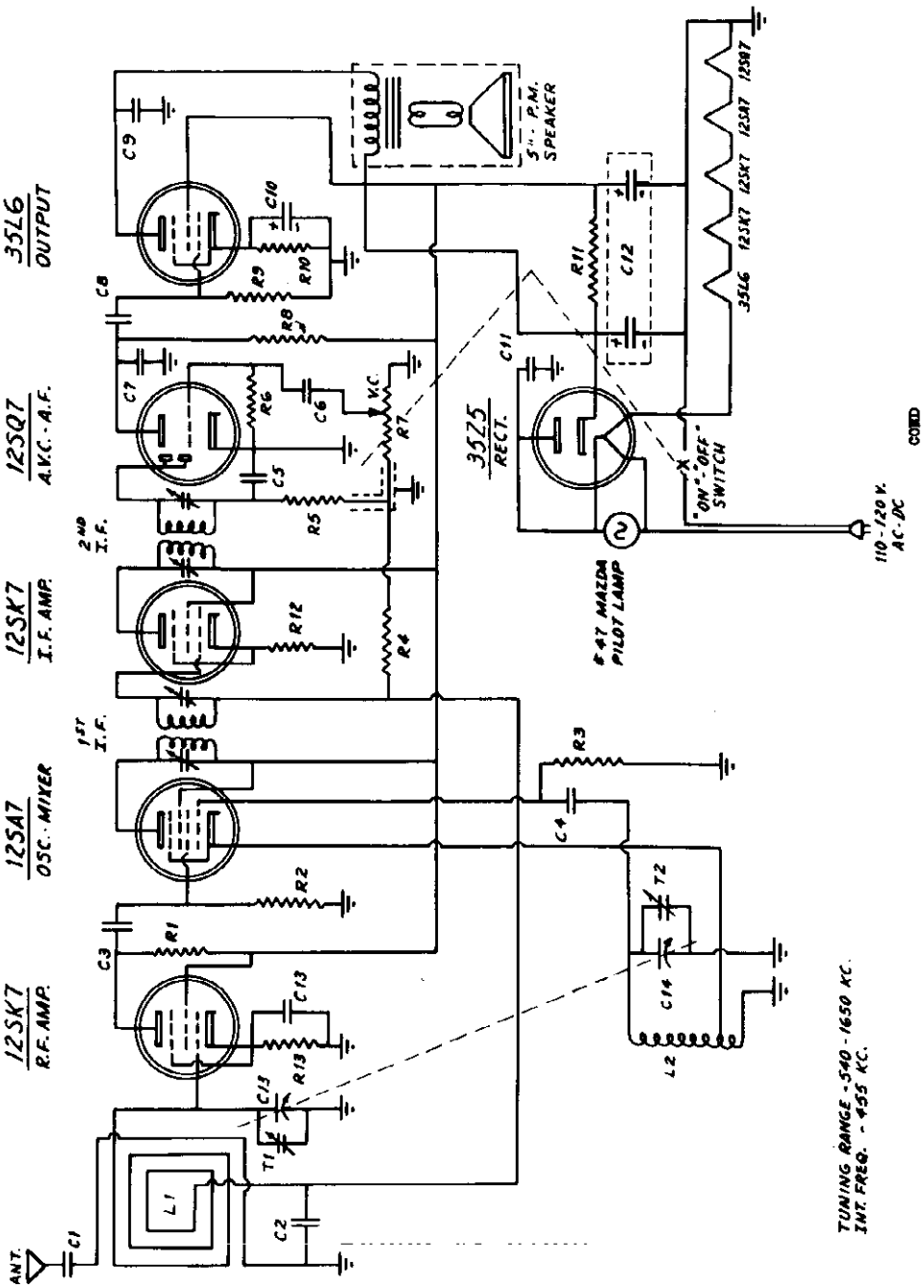

ITEM	RATING	VALUE
R1	1/3 to 1/2 W.	4700-5100Ω
R2,R8	" "	220K-250K
R3	" "	22K-24K
R4,R6	" "	1.5 MEG-2 MEG.
R5	" "	47K-51K
R7	VOL.CONT.	500K
R9	1/3 W.	470K - 510K
R10,12,13		1500 - 1800
R11	2W.	10000

COMD		
C1	200V	.002 - .005MFD.
C2,11,13	"	.05 "
C3,7	"	.00018 "
C4	"	.000082 "
C5	"	.0002-.0003 "
C6,8	"	.005 "
C9	"	.01 "
C10	25V	49 (CAM)
C12	150V	40 - 40
MISC.		
L1		ANT. LOOP
L2		OSC. COIL
T1,2		MOUNTED ON C13 - C14 VAR.COMD. 3-15 MFD. 420 " 162 "
C13		
C14		GANG

©John F. Rider

MODEL 6B2

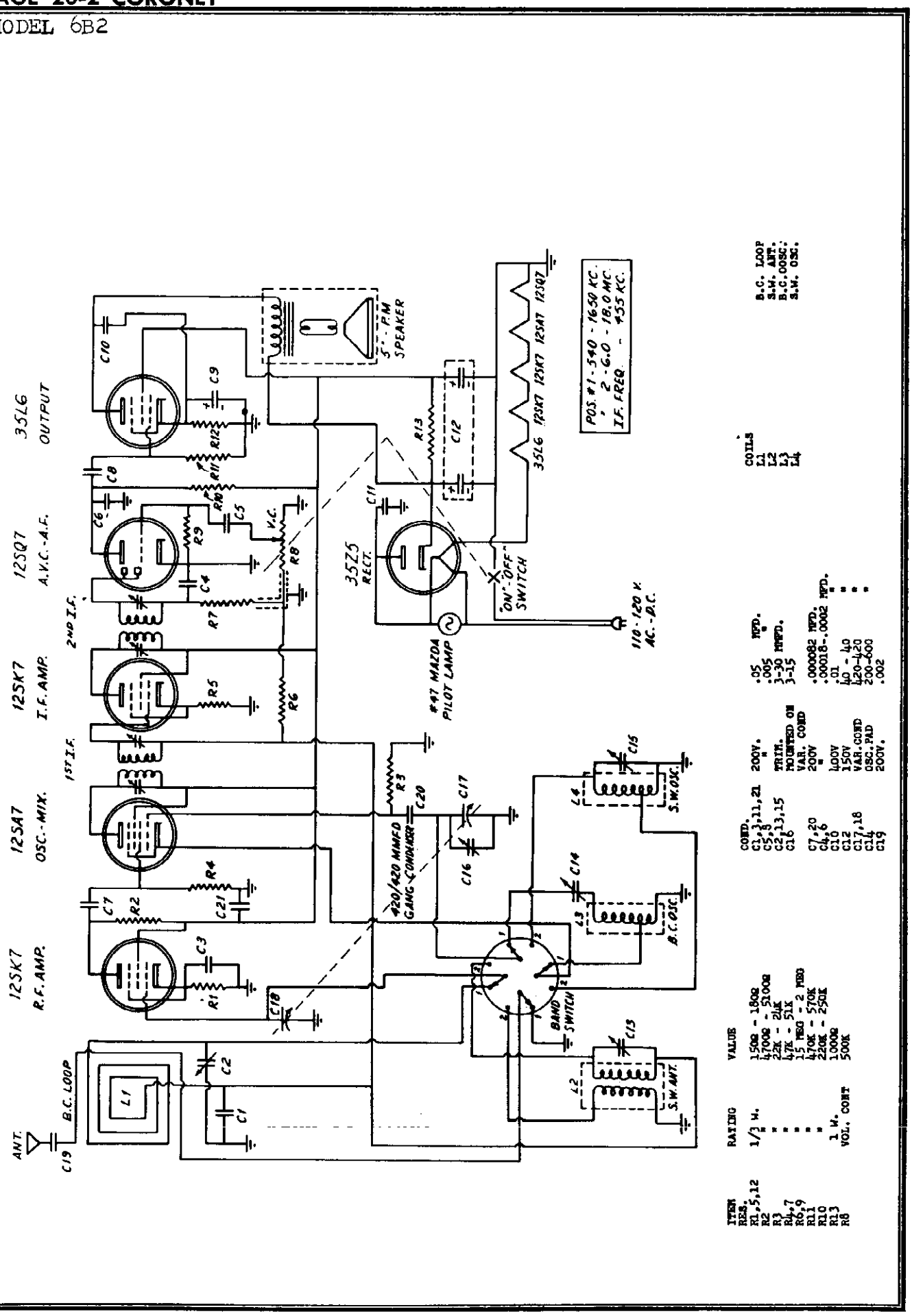

ITEM	RATING	VALUE	COND.		
RES.					
R1,5,12	1/2 W.	150Ω - 1MΩ	C1,3,11,21	200V.	.05 MFD.
R2	"	47000 - 510Ω	C5,8	"	.005 "
R3	"	22K - 2MΩ	C2,13,15	TRIM.	3-30 MMFD.
R4,7	"	47K - 51K	C16	MOUNTED ON VAR. COND	3-15 "
R6,9	"	15 MEG - 2 MEG	C7,20	200V	.000082 MFD.
R11	"	470K - 570K	C4,6	"	.00018-.0002 MFD.
R10	"	220K - 250K	C10	400V	.01 "
R13	1 W.	10000Ω	C12	150V	40 - 40 "
R8	VOL. CONT	500K	C17,18	VAR. COND	420-420 "
			C14	OSC. PAD	200-600 "
			C19	200V.	.002 "

©John F. Rider

MODEL 6 Tube
3 Band AC

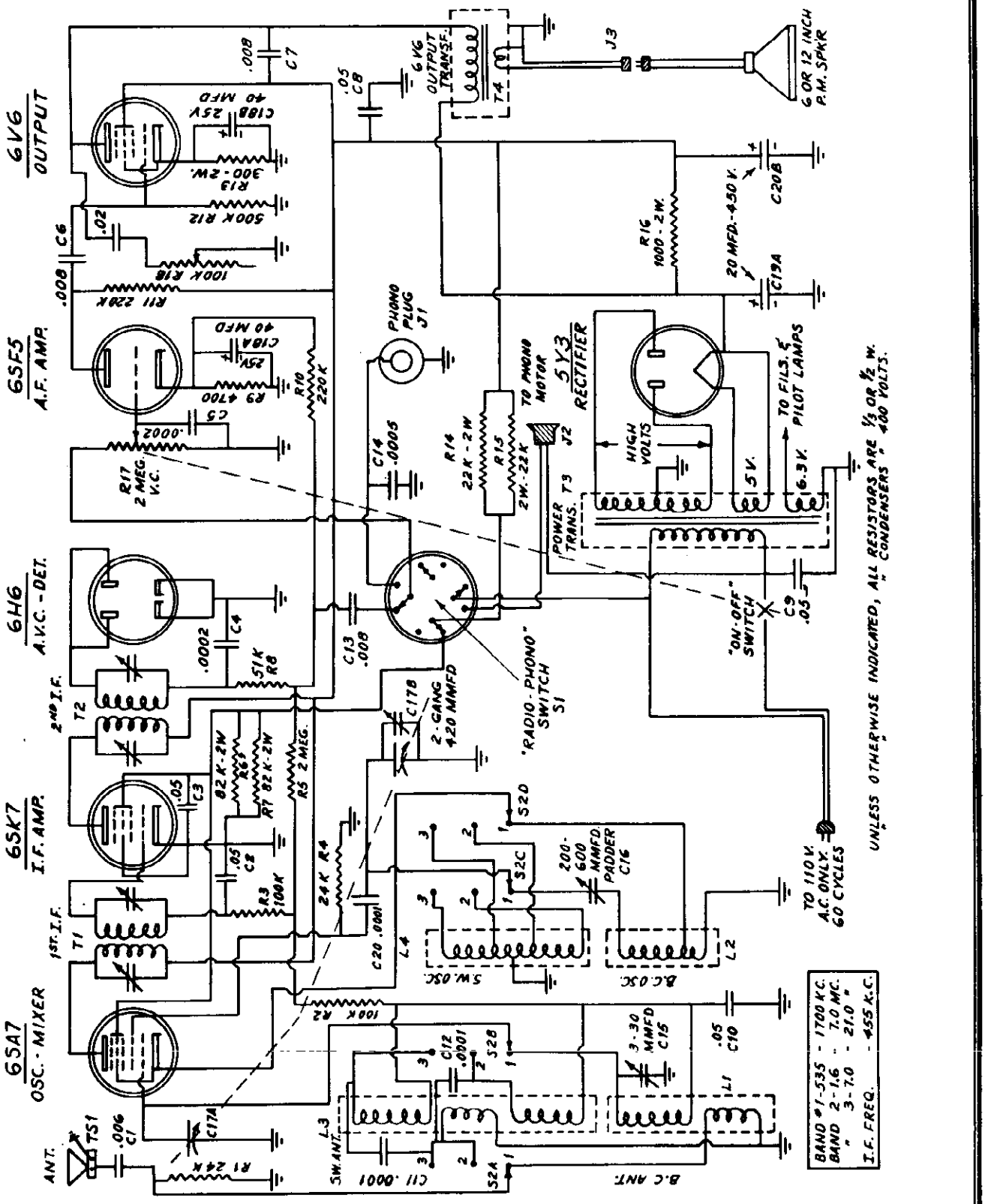

©John F. Rider

MODEL 1405

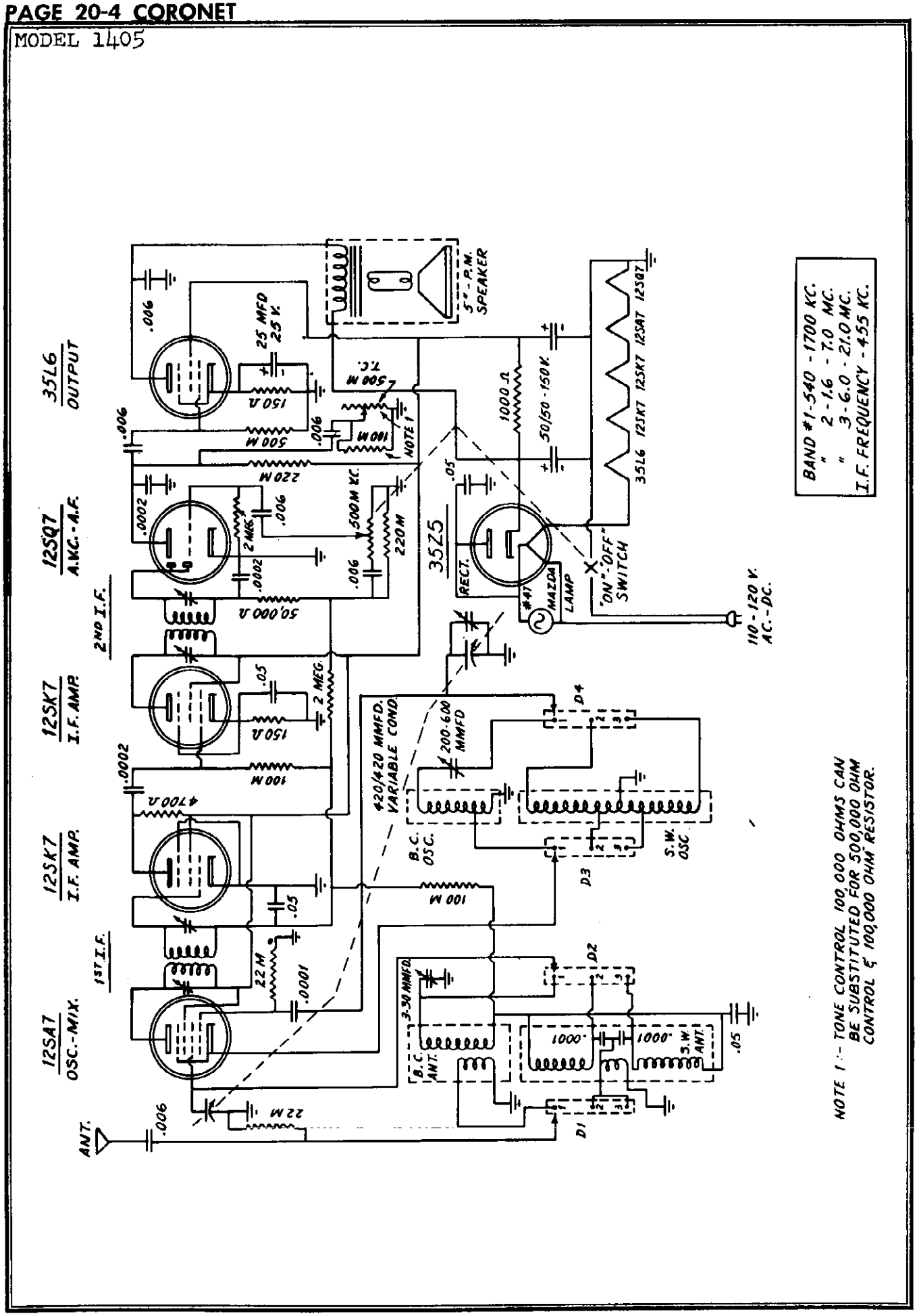

©John F. Rider

MODEL 1481

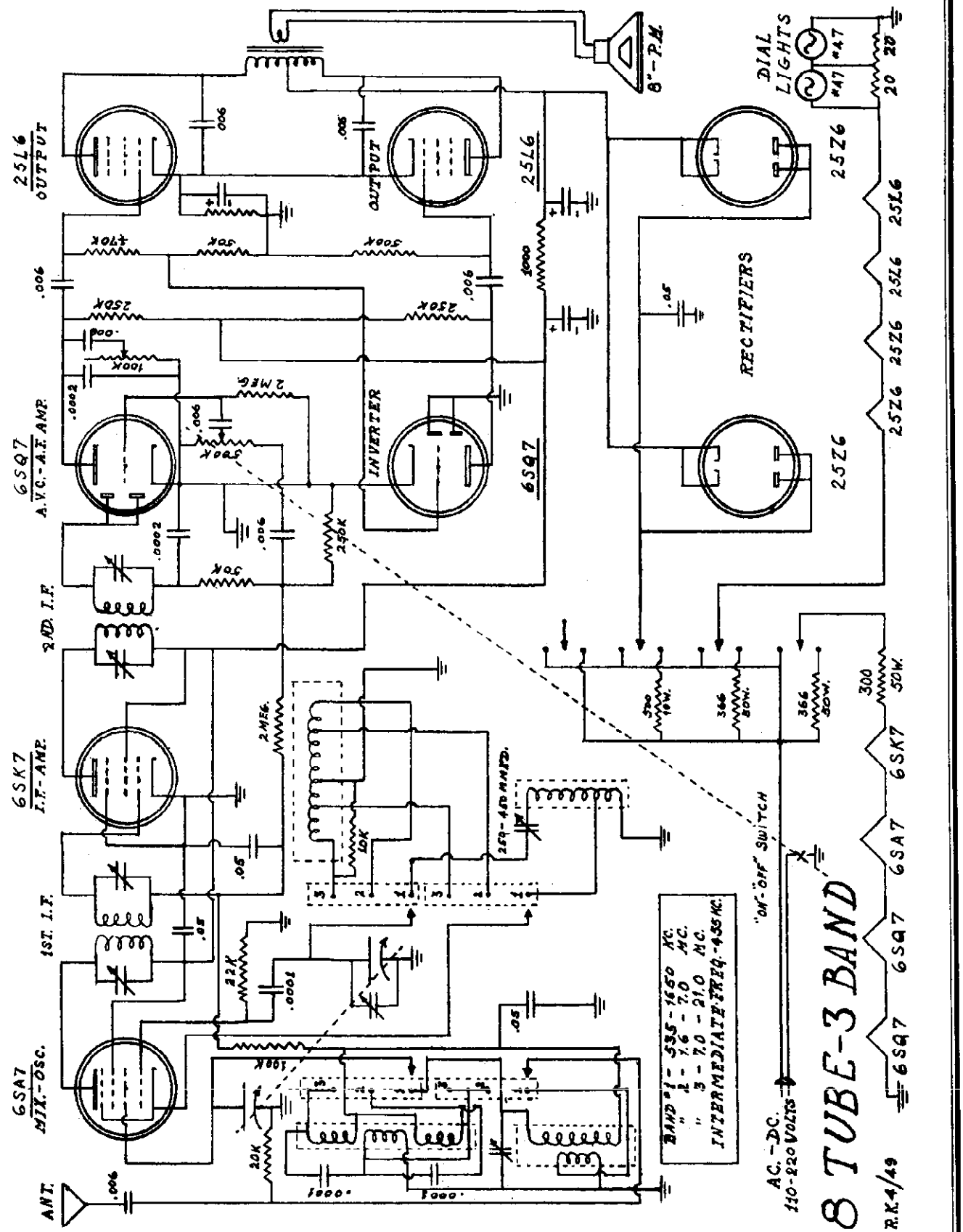

© John F. Rider

MODEL 1491

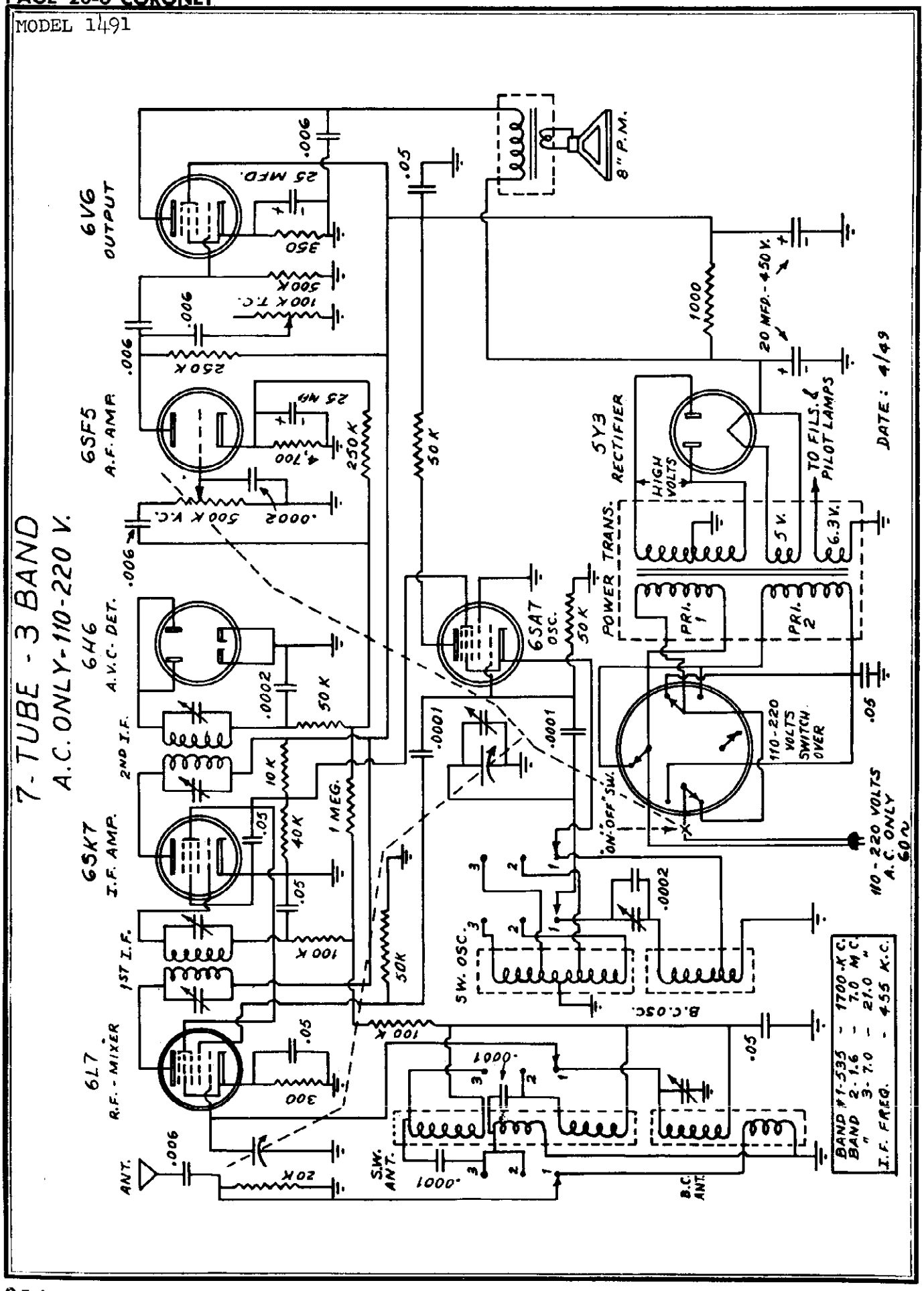

©John F. Rider

SOCKET VOLTAGE NOTES

1. Bottom view of Sockets.
2. Voltage measured from Socket Lug to Chassis with an Electronic Voltmeter.
3. Voltage measured with Switch in BC position except where marked with delta(▲)
4. ▲=Selector Switch in F.M. position.
5. W.J.=Wiring Junction.
   N.C.=No Connection.
   *=A.C. Voltage.
6. All Voltages taken at Nominal Operating Voltage 117 V., 60 cycles.
7. Socket Voltage Tolerance ± 10%.

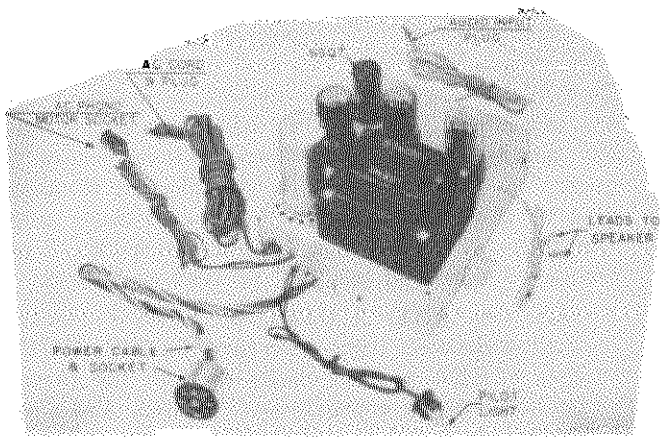

POWER SUPPLY & POWER AMPLIFIER CHASSIS.

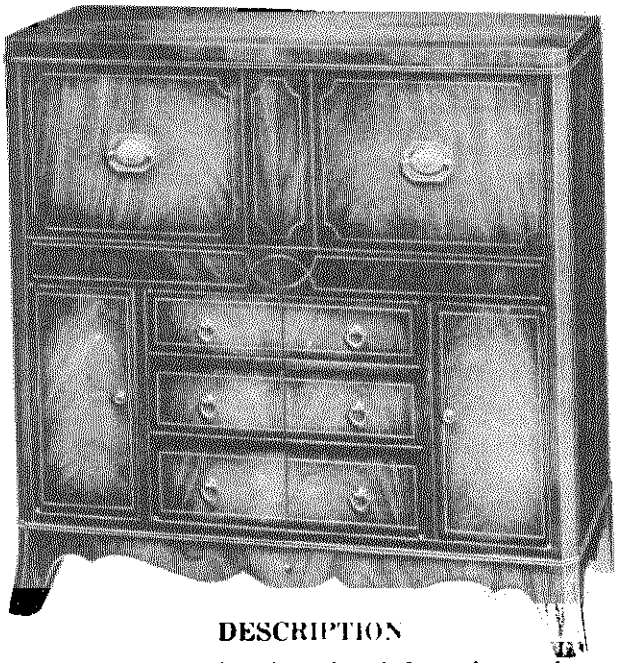

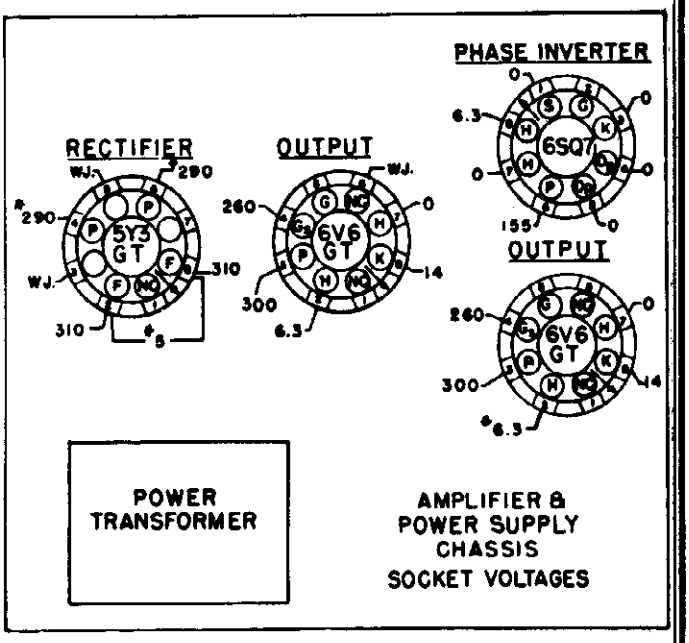

DESCRIPTION

TYPE: Eleven-tube, three-band, Superheterodyne.

FREQUENCY RANGE: Standard Broadcast Band; 540 to 1600 kc. (Selector Switch at AM position).

Short-wave Band; 9.45 to 11.9 mc. (Selector Switch at SW position).

Frequency Modulated Band: 88 to 108 mc., Channels 201 to 300 (Selector Switch at FM position).

INTERMEDIATE FREQUENCY: Standard Broadcast Band and Short-wave Band; 455 kc. Frequency Modulated Band: 10.7 mc.

POWER SUPPLY: 60 cycle a.c. only.

VOLTAGE RATING: 105-125 volts.

POWER CONSUMPTION: 100 watts maximum; 20 watts additional for record changer.

POWER OUTPUT: 10 watts maximum.

TUBE COMPLEMENT

Type	Function
6SG7	R.F. Amplifier
7F8	Oscillator
6AC7	Mixer
6SG7	I.F. Amp., A.M. & F.M.
6SG7	2nd I.F. Amp. F.M.
6AL5	Ratio Det. F.M.
6SQ7	Det.—AVC. A.M. 1st A.F. Amp., A.M. & F.M.
6SQ7	Phase Inverter
6V6GT/G (2)	Push Pull Output
5Y3GT/G	Rectifier

NOTE:

DIAL BULBS: Type 47, 6.3 v., .15 amp.

The above model uses the Model "W156" (Part No. 143833) automatic record changer.

© John F. Rider

PUSH BUTTON ADJUSTMENT PROCEDURE

Each of the six push buttons, for automatic tuning, has two adjusting screws by which it may be set to any nearby American broadcast station whose frequency in kilocycles is within the kilocycle range covered by that button. To gain access to these screws, carefully pull off the push button. To set No. 1 push button to a desired position, proceed as follows:

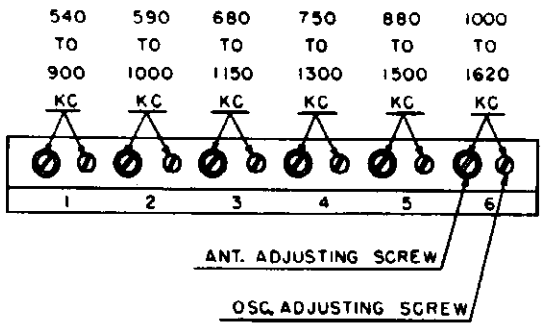

1. Turn the ANT. ADJUSTING SCREW clockwise until moderately tight, then turn the OSC. ADJUSTING SCREW counter-clockwise until the threaded portion extends approximately $^3/_4$ inch. **Use a small screw-driver and do not exert pressure.**
2. Turn the band selector switch to the "AM" position and manually tune in the station to which the push button is to be set. The frequency of the station selected must be between 540 and 900 kilocycles. Carefully adjust the tuning control to the point of clearest reception.
3. Turn the band selector switch to the "AUTO" position and slowly turn the OSC. ADJUSTING SCREW clockwise until the same station is heard. Adjust the screw for maximum volume.
4. Adjust the ANT. ADJUSTING SCREW for maximum volume.

   NOTE: In localities where the receiver is near the transmitting station, it may be necessary to detune the ant. adjusting screw (but not the osc. adjusting screw) of the push-button slightly to keep the receiver from overloading on this station.
5. Turn the band selector switch from "AUTO" to "AM" and back again to check if the adjustment has been correctly made. There should be no change in tone quality when switched from one to the other.
6. Place the tab with the call letters of the station, to which the push button has been set, in a celluloid "V" and slide it into the button from the side.
7. The remaining push buttons may be set in a similar manner.

ALIGNMENT PROCEDURE

1. This receiver has been aligned at the factory for best performance, and no attempt should be made to re-align it unless the proper test equipment is available.
2. Turn the tuning condenser to full mesh, against stop, and set the dial pointer at the edge of the clear section of the dial, left of "55."
3. Connect an output meter across the voice coil of the speaker (3.2 ohms).
4. Turn the volume control knob to maximum clockwise position and adjust the signal generator output to produce a noticeable output meter reading. Keep the signal generator output as low as possible to prevent excessive AVC action in the receiver.
5. Feed an R.F. amplitude modulated signal modulated 30% at 400 cycle to the receiver as indicated in the alignment procedure chart. Connect signal generator ground terminal to the chassis of the receiver. When F.M. generator is used, a 30% modulated signal is equal to a deviation of 22.5 kc.
6. Both bass and treble tone controls are to be set for maximum treble response.
7. When aligning the broadcast band, the build-in loop antenna or a suitable dummy antenna, consisting of a coil with 19.1 u h. inductance shunted with a 66 mmf. capacitor must be used.
8. While aligning the set, the shorting link on the antenna terminal strip should be removed. After alignment replace the link, unless an external antenna is to be used.

©John F. Rider

©John F. Rider

ALIGNMENT CHART I (SCOPE METHOD)

	Signal Generator Output		To	Range Switch	Tuning Dial or Tuning Cap	Adjust	Curve	Remarks
	Frequency	In Series With						
1	455 KC	.01 mfd.	1st IF. grid	AM	Gang open	A		Note 1
2	455 KC	.01 mfd.	Stator 21 plate sect. rear of gang	AM	Gang open	B		Note 1
3	10.7 MC	1000 mmf.	2nd IF grid	FM	Gang closed	C	Zero Volts	Note 2
4	10.7 MC	1000 mmf.	2nd IF grid	FM	Gang closed	D	Max.DC output	Note 3
5	RF sweep 10.7 marker	1000 mmf.	1st IF grid	FM	Gang closed	E & F		Align for max. output & symetry note 4
6	RF sweep 10.7 marker	1000 mmf.	Stator 3 plate sect. rear of gang	FM	Gang closed	G & H		Align for max. output & symetry note 5
7	FM-RF 98MC	FM dummy antenna	Dipole Ant. Term.	FM	98MC	I	Peak	Note 6
8	104MC	FM dummy antenna	Dipole Ant. Term.	FM	104MC	J	Peak	Note 7
9	92MC	FM dummy antenna	Dipole Ant. Term.	FM	92MC	Form RF Coil "K"	Peak	Note 8
10	Repeat steps 8 and 9 until no further improvement in sensitivity is noted.							
11	FM sweep Gen. 92-98-104 MC markers.	FM dummy antenna	Dipole Ant. Term.	FM	Gang closed	L & M	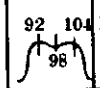	Note 9 or 9a
12	AM-RF Gen. 1400 KC	200 mmf.	BC Ant. Term. and ground	AM	1400 KC	N		Note 10
13	AM-RF Gen. 1400 KC	200 mmf.	BC Ant. Term. and ground	AM	1400 KC	P & Q		Note 1
14	AM-RF Gen. 11 MC	400 ohms	FM Ant. Term. and ground	SW	11 MC	R		Note 1
15	AM-RF Gen. 11 MC	400 ohms	FM Ant. Term. and ground	SW	11 MC	S & T		Note 1

CHASSIS TOP VIEW

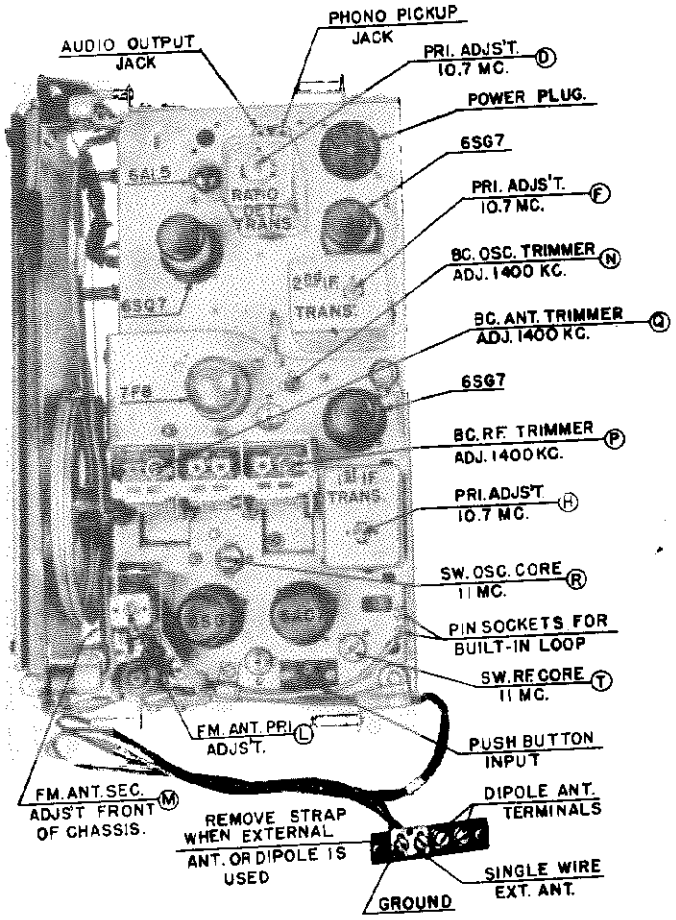

ALIGNMENT CHART I NOTES (SCOPE METHOD)

1. Align for peak on output meter.
2. Connect two 100,000 ohm resistors in series and connect these resistors from the No. 2 lug of the 6AL5 to the chassis. Connect an electronic voltmeter from the center of these resistors to the shielded lead junction of the 39,000 ohm resistor (98) and the .002 mfd. condenser, (34). Adjust the ratio detector transformer secondary (C) for zero volts on the electronic voltmeter. Remove the two 100,000 ohm resistors.
3. Connect the electronic voltmeter across the 27,000 ohm load resistor (99) and adjust primary of core (D) of the ratio detector transformer (11) for maximum DC output.
4. Connect output of marker generator across sweep generator output. Connect CRO across the 22,000 ohm resistor (104) in the grid circuit of the second I.F. amplifier.

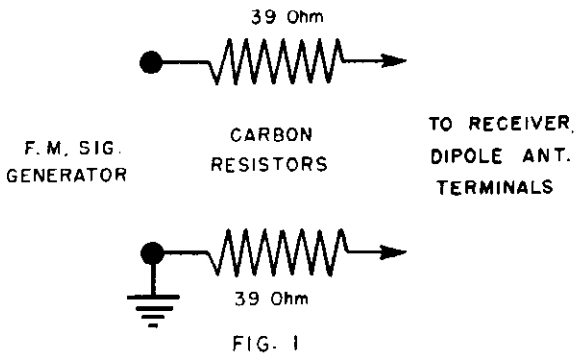

FIG. 1

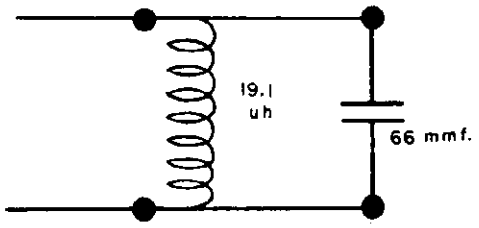

FIG. 2

5. CRO connections same as note 4.
6. For dummy antenna see figure 1.
7. Rock gang condenser if necessary while making adjustment.
8. Tune in signal and adjust for greatest sensitivity by forming FM.—R.F. coil.
9. Connect CRO in series with 100,000 ohm resistor to grid (pin 4) of R.F. amplifier and chassis. Remove 7F8 oscillator tube. Connect output of marker generator across output of sweep generator. Adjust (L-M) until pattern and markers approximate figure in alignment chart.

9a. Shunt primary of FM antenna transformer with a 10 ohm carbon resistor and adjust (M) for maximum output. Remove shunt and place it across FM antenna transformer secondary and adjust (L) for maximum output. Remove shunt.

10. Connect BC. dummy loop (Fig. 2) across loop terminals on rear of chassis.

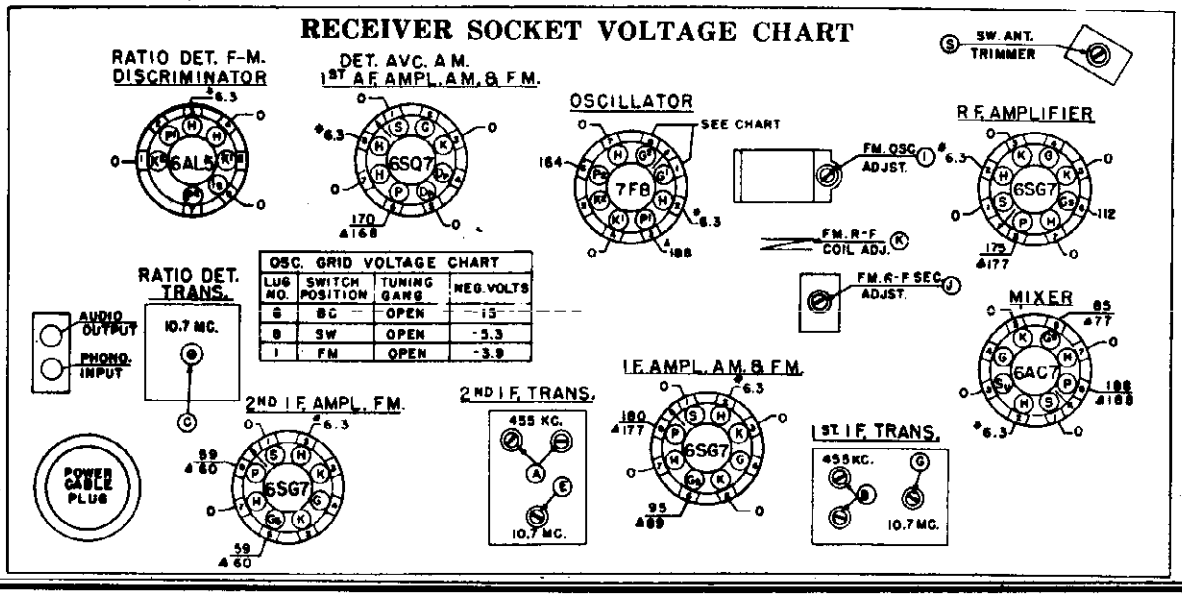

OSC. GRID VOLTAGE CHART

LUG NO.	SWITCH POSITION	TUNING GANG	NEG. VOLTS
6	BC	OPEN	-1.5
8	SW	OPEN	-5.3
1	FM	OPEN	-3.9

© John F. Rider

ALIGNMENT CHART II

(Using output meter and electronic voltmeter)

Alignment Sequence	Signal Gen. Output		To	Position of		Adjust	Remarks
	Frequency	In Series With		Range Switch	Tuning Dial or Tun. Cap.		
1	455 KC	.01 mfd.	1st IF grid	AM	Gang open	A	Align for peak on output meter
2	455 KC	.01 mfd.	Stator 21 plate sect. rear of gang	AM	Gang open	B	Align for peak on output meter
3	10.7 MC	1000 mmf	2nd IF grid	FM	Gang closed	C	Adjust for zero volts on electronic voltmeter Note 1 & 2
4	10.7 MC	1000 mmf	2nd IF grid	FM	Gang closed	D	Adjust for max. DC. output on Elect. voltmeter Note 3
5	10.7 MC	1000 mmf	1st IF grid	FM	Gang closed	E & F	Adjust for max. DC. output Note 4
6	10.7 MC	1000 mmf	Stator 3 plate sect. rear of gang	FM	Gang closed	G & H	Adjust for max. DC. output Note 4
	Repeat steps 3 and 4, 5 and 6 if necessary.						
7	98 MC	FM dummy antenna	Dipole Ant. Terminals	FM	98 MC	I	Adjust for max. reading on output meter.
8	104 MC	FM dummy antenna	Dipole Ant. Terminals	FM	104 MC	J	Adjust for max. reading on output meter, rock gang if necessary while making adjustments
9	92 MC	FM dummy antenna	Dipole Ant. Terminals	FM	92 MC	K	Adjust for max. sensitivity, the inductance of FM.RF. coil "K" by forming
	Repeat steps 8 and 9 until no further improvement in sensitivity is noted.						
10	98 MC	FM dummy antenna	Dipole Ant. Terminals	FM	98 MC	L & M	See Note 5
11	AM-RF Gen. 1400 KC	200 mmf	BC Ant. Term.	AM	1400 KC	N	See Note 6
12	AM-RF Gen. 1400 KC	200 mmf	BC Ant. Term. and ground	AM	1400 KC	P & Q	Note 6. Adj. for max. reading on output meter.
13	AM-RF Gen. 11 MC	400 ohms	FM Ant. Term. and ground	SW	11 MC	R	Note 6. Adj. for max. reading on output meter.
14	AM-RF Gen. 11 MC	400 ohms	FM Ant. Term. and ground	SW	11 MC	S & T	Note 6. Adj. for max. reading on output meter.

ALIGNMENT CHART II NOTES

1. Use an unmodulated signal generator, with approximately 100,000 mv. output.

2. Connect two 100,000 ohm resistors in series and connect these resistors from the No. 2 lug of the 6AL5 to the chassis. Connect an electronic voltmeter from the center of these resistors to the shielded lead junction of the 39,000 ohm resistor (98) and the .002 mfd. condenser, (34). Adjust the ratio detector transformer secondary (C) for zero volts on the electronic voltmeter. Remove the two 100,000 ohm resistors.

3. Connect the electronic voltmeter across the 27,000 ohm load resistor (99) and adjust the primary of the core (D) of the ratio detector transformer (11) for maximum DC output.

4. Limit output of signal generator so that the reading on the electronic voltmeter will not exceed 4 volts.

© John F. Rider

5. Shunt the FM antenna transformer primary with a 10 ohm carbon resistor, and adjust the FM antenna secondary trimmer (M) for maximum output meter reading. Transfer the 10 ohm shunt to the secondary of FM antenna transformer. Adjust FM antenna primary trimmer (L) for maximum output meter reading. Remove the 10 ohm shunt resistor.

6. Connect the BC dummy loop antenna across the loop terminals on the rear of the chassis (see Figure 2

REPLACEMENT PARTS LIST—MODEL 9-207M

Figures in first column correspond to figures in Schematic Diagram.

Item No.	Part Number	Description
1	143784	Coil, Antenna, (F.M.)
2	143076	Coil, Antenna, (S.W.)
3	143267	Coil, Antenna Loading, (B.C.)
4	143402	Transformer, R.F., (B.C.)
5	143646	Coil, R.F., (F.M.)
6	143085	Coil, R.F., (S.W.)
7	143090	Transformer, 1st I.F.
8	143095	Coil, Oscillator, (S.W.)
9	143945	Coil, Oscillator, (B.C.)
10	143105	Transformer, 2nd I.F.
11	143378	Transformer, Ratio Det.
12	143752	Choke, R.F.
13	143837	Choke, R.F., (F.M. Osc.)
14	143373	Choke, R.F.
15	143934	Choke, Filament
16	143934	Choke, Filament
17	143305	Coil Assy., Oscillator, (F.M.)
18A	142848	Condenser, Variable }
18B		Condenser, Variable } Four
18C		Condenser, Variable } Section
18D		Condenser, Variable }
19	136327-43	Condenser, Trimmer
20	136327-36	Condenser, Trimmer
21	137727-12	Condenser, 120 mmf., 300 v.,Ceramic
22	143686-2	Condenser, 33 mmf., 500 v., Ceramic
23	39001-11	Condenser, .005 mfd., 600 v., Paper
24	137727-73	Condenser, 40 mmf., 500 v., Ceramic
25	137727-20	Condenser, 91 mmf., 300 v., Ceramic
26	137727-25	Condenser, 100 mmf., 500 v., Ceramic
27	39001-11	Condenser, .005 mfd., 600 v., Paper
28	39001-11	Condenser, .005 mfd., 600 v., Paper
29	39001-11	Condenser, .005 mfd., 600 v., Paper
30	39001-13	Condenser, .01 mfd., 600 v., Paper
31	137727-8	Condenser, 1000 mmf., 300 v., Ceramic
32	39001-80	Condenser, .02 mfd., 600 v., Paper
33	39001-80	Condenser, .02 mfd., 600 v., Paper
34	39001-74	Condenser, .002 mfd., 600 v., Paper
35	137727-75	Condenser, 180 mmf., 500 v., Ceramic
36	137727-31	Condenser, 47 mmf., 300 v., Ceramic
37	137398-5	Condenser, 3.3 mmf., Ceramic
38	39001-13	Condenser, .01 mfd., 600 v., Paper
39	137727-8	Condenser, 1000 mmf., 300 v., Ceramic
41	137727-8	Condenser, 1000 mmf., 300 v., Ceramic
42	137727-45	Condenser, 56 mmf., 500 v., Ceramic
43	137499-24	Condenser, 164 mmf., 500 v., Silver Mica
44	137727-76	Condenser, 60 mmf., 500 v., Ceramic
45	39001-17	Condenser, .05 mfd., 600 v., Paper
46	137499-23	Condenser, 200 mmf., 500 v., Silver Mica
47	137499-20	Condenser, 680 mmf., 100 v., Silver Mica
48	137498-4	Condenser, 3300 mmf., 500 v., Mica
50	39001-13	Condenser, .01 mmf., 600 v., Paper
51	39001-13	Condenser, .01 mmf., 600 v., Paper
52	137727-71	Condenser, 96 mmf., 300 v., Ceramic
53	143014	Condenser, Trimmer
54	137727-8	Condenser, 1000 mmf., 500 v., Ceramic
55	143686-1	Condenser, 50 mmf., 500 v., Ceramic
56	39001-11	Condenser, .005 mfd., 600 v., Paper
57	143686-2	Condenser, 33 mmf., 500 v., Ceramic
58	39001-11	Condenser, .005 mfd., 600 v., Paper
59	39001-11	Condenser, .005 mfd., 600 v., Paper
60	143686-1	Condenser, 50 mmf., 500 v., Ceramic
61	137727-8	Condenser, 1000 mmf., 500 v., Ceramic
62	39001-13	Condenser, .01 mfd., 600 v., Paper
63	39001-11	Condenser, .005 mfd., 600 v., Paper
64	137727-53	Condenser, 33 mmf., 500 v., Ceramic
65	137727-53	Condenser, 33 mmf., 500 v., Ceramic
66	39001-11	Condenser, .005 mfd., 600 v., Paper
67	137727-31	Condenser, 47 mmf., 300 v., Ceramic
68	137727-8	Condenser, 1000 mmf., 500 v.. Ceramic
69	39001-11	Condenser, .005 mfd., 600 v., Paper
70	39001-76	Condenser, .003 mfd., 600 v., Paper
71	39001-76	Condenser, .003 mfd., 600 v., Paper
72	39001-17	Condenser, .05 mfd., 600 v., Paper
73	39001-87	Condenser, .25 mfd., 600 v., Paper
74	137727-8	Condenser, 1000 mmf., 500 v., Ceramic
75	137727-8	Condenser, 1000 mmf., 500 v., Ceramic
76	137727-38	Condenser, 5000 mmf., 500 v., Ceramic
77	137727-38	Condenser, 5000 mmf., 500 v., Ceramic
78	137727-8	Condenser, 1000 mmf., 500 v., Ceramic
79	137727-8	Condenser, 1000 mmf., 500 v., Ceramic
80	142958	Condenser, 4 mfd., 50 v., Elect.
81	143062	Condenser, 30 mfd., 450 v., Elect.
82A	143089	Condenser, 40 mfd., 450 v., } Four
82B		Condenser, 20 mfd., 450 v., } Section
82C		Condenser, 10 mfd., 450 v., } Elect.
82D		Condenser, 20 mfd., 25 v., } Filter
83	39373-92	Resistor, 1.0 Megohm, ½ w.
84	39373-71	Resistor, 68,000 ohms, ½ w.
85	39373-170	Resistor, 22,000 ohms, 1 w.
87	39373-92	Resistor, 1.0 Megohm, ½ w.
88	39373-75	Resistor, 120,000 ohms, ½ w.
89	39373-92	Resistor, 1.0 Megohm, ½ w.
90	39373-40	Resistor, 2,200 ohms, ½ w.
91	39373-65	Resistor, 39,000 ohms, ½ w.
92	39373-40	Resistor, 2,200 ohms, ½ w.
93	39373-87	Resistor, 470,000 ohms, ½ w.
94	39373-67	Resistor, 47,000 ohms, ½ w.
95	39373-21	Resistor, 270 ohms, ½ w.
96	39373-174	Resistor, 33,000 ohms, 1 w.
97	39373-65	Resistor, 39,000 ohms, ½ w.
98	39373-65	Resistor, 39,000 ohms, ½ w.
99	39373-62	Resistor, 27,000 ohms, ½ w.
100	39373-94	Resistor, 1.5 Megohm, ½ w.
101	39373-74	Resistor, 100,000 ohms, ½ w.
102	39373-33	Resistor, 1000 ohms, ½ w.
104	39373-60	Resistor, 22,000 ohms, ½ w.
105	39373-67	Resistor, 47,000 ohms, ½ w.
106	39373-71	Resistor, 68,000 ohms, ½ w.
107	39373-64	Resistor, 33,000 ohms, ½ w.
108	39373-80	Resistor, 220,000 ohms, ½ w.
109	39373-19	Resistor, 220 ohms, ½ w.
110	39373-71	Resistor, 68,000 ohms, ½ w.
111	39373-74	Resistor, 100,000 ohms, ½ w.
112	39373-161	Resistor, 6,800 ohms, 1 w.
113	39373-19	Resistor, 220 ohms, ½ w.
114	39373-107	Resistor, 10 Megohm, ½ w.
115	39373-80	Resistor, 220,000 ohms, ½ w.
116	39373-107	Resistor, 10 Megohm, ½ w.
117	39373-84	Resistor, 330,000 ohms, ½ w.
118	39373-84	Resistor, 330,000 ohms, ½ w.
119	39373-74	Resistor, 100,000 ohms, ½ w.
120	39373-239	Resistor, 220 ohms, 2 w.
121	39373-253	Resistor, 1000 ohms, 2 w.
122A	137021	Res'r (wirewound) 700 ohm, 4 w. } Two
122B		Res'r (wirewound) 400 ohm, 4 w. } Sec.
123	39373-92	Resistor, 1.0 Megohm, ½ w.
124	39373-3	Resistor, 15 ohms, ½ w.
125A	39368-12	Control, Treble Tone (500,000 ohms)
125B	39369-1	Switch, Power
126	39368-19	Cont'l, Vol. (2.5 Meg., Tap 750K ohms)
	39370-2	Shaft, Volume Control (knurled)
127	39368-22	Control, Bass Tone (3 Megohm)
	39370-2	Shaft, Bass Tone Control (knurled)
128	137001	Transformer, Output
129	135106	Transformer, Power
130	142918	Plug, Power
131	143742	Plug and Cable Assy., Power
132	139727-4	Cord, Phono Motor
133A	143097	Switch, Band Change } Three
133B		Switch, Band Change } Section
133C		Switch, Band Change }
134	143833	Record Changer with No. 143393 Crystal Cart
135A	143126	Socket, Phono } Two
135B		Socket, Audio Input } Hole
136	132300-2	Cable and Plug Assy., Power

REPLACEMENT PARTS LIST—MODEL 9-207M

Figures in first column correspond to figures in Schematic Diagram.

Item No.	Part Number	Description
137	143775	Cable Assy., Antenna
139	143685	Cable and Pin Assy., Speaker
140	143768	Shielded Lead Assy., Audio Input
141	137058	Speaker
142	143404	Terminal Strip, Loop Antenna
143	143893	Antenna Loop
144	143765	Push Button Assy. (complete)
145	47133	Socket, P.B. Assy.
146	48858	Bulb (Dial), Type 47, 6.3 v., .15 amp.
147	48858	Bulb (Dial), Type 47, 6.3 v., .15 amp.
148	48858	Bulb (Dial), Type 47, 6.3 v., .15 amp.
149	39001-80	Condenser, .02 mfd., 600 v., Paper
150	143896	Shielded Lead Assy., Phono
151	137727-43	Condenser, 15 mmf., 500 v., Ceramic
152	137398-5	Condenser, 3.3 mmf. Fixed insulated
153	137398-6	Condenser, 4.7 mmf. Fixed insulated
154	137727-79	Condenser, 5 mmf., 500 v., Ceramic
155	137398-4	Condenser, 2.2 mmf. Fixed insulated
156	137727-78	Condenser, 3 mmf., 500 v., Ceramic
159	39373-19	Resistor, 220 ohms, ½ w.
	143761	Coil, P.B. Osc. No. 1 (540-900 kc)
	143760	Coil, P.B. Osc. No. 2 (590-1000 kc)
	143759	Coil, P.B. Osc. No. 3 (680-1150 kc.)
	143758	Coil, P.B. Osc. No. 4 (750-1300 kc.)
	143757	Coil, P.B. Osc. No. 5 (880-1500 kc.)
	143756	Coil, P.B. Osc. No. 6 (1000-1620 kc.)
	136327-14	Condenser, Trimmer, P.B. No. 1
	136327-24	Condenser, Trimmer, P.B. No. 2
	136327-24	Condenser, Trimmer, P.B. No. 3
	136327-12	Condenser, Trimmer, P.B. No. 4
	136327-25	Condenser, Trimmer, P.B. No. 5
	136327-25	Condenser, Trimmer, P.B. No. 6
	143729	Background Assy., Dial
	142756	Blade Assy., F.M. Osc. Tuning
	143446	Button (P.B. Assy.)
	139477-1	Button-Loop (with shoulder)
	139477-2	Button-Loop (without shoulder)
	143897	Cabinet
	136201	Clip, Dial Glass
	134220	Cotter, External
	136853	Cushion (Rubber), Dial Mtg.
	143526	Dial
	143286	Escutcheon, Dial
	134055	Grommet, Band Switch
	39012-86	Iron Core, S.W. Osc.
	39012-85	Iron Core, S.W. R.F.
	39012-84	Iron Core, 1st I.F.
	39012-84	Iron Core, 2nd I.F.
	138576-6	Knob (Volume, Tone or Tuning)
	143778	Knob (Band Change)
	136111	Mounting, Rubber (chassis)
	45580	Mounting, Rubber (speaker)
	143769	Pointer, Dial
	136979	Pulley, Dial Drive Idler
	143453	Pulley & Hub, Variable Condenser
	51071	Ring, Retaining (Dial Drive Shaft)
	39220-38CP	Screw, Chassis Mtg.
	143455	Shaft, Dial Drive
	46065	Shock Mount, Sub-Chassis Mtg.
	139040	Shock Mount, Sub-Chassis Mtg.
	39232-10	Socket, Tube, Octal
	136470	Socket, Tube, Loctal
	143146	Socket, Tube, Min.
	136565-25	Socket, Dial Light
	137148	Spacer
	51752	Spring, Dial Drive Cord
	143552	Strip, Dial Pointer
	135038-12	Terminal Strip, Two Lug
	135038-13	Terminal Strip, Three Lug
	135038-47	Terminal Strip, Four Lug
	135038-23	Terminal Strip, Five Lug
	134916	Washer, Spring (Dial Drive Shaft)
		CABINET PARTS
	143943	Baffle, Speaker
	143654	Bracket, L.H. Radio Bin
	143653	Bracket, R.H. Radio Bin
	143846	Bumper, Rubber, Radio Bin
	143485	Bumper, Rubber, Doors
	142973	Button, Indicator
	143941	Door, Speaker
	143940	Doors, (matched pair), Record Comp.
	143935	Frame Assy. only, Rec' Changer Draw.
	143509	Grille Cloth
	143942	Hinges, Record Compartment Door
	137266-SB	Hinge, Speaker Door
	143939	Knobs, Record Compartment Door
	143944	Leg & Base Assy.
	143936	Panel (matched pair) Drawer & Radio Bin
	143856	Panel Assy., Radio Dial
	143938	Pull, Rec'd Changer Draw. & Radio Bin
	143478	Slides (one set) Rec'd Changer Drawer
	143913	Spring, Radio Bin
	139319	Strike & Catch Assy.

MEGACYCLES TO CHANNEL NUMBERS

Cross index between frequency calibrations in megacycles on the dial and channel numbers follow:

Frequency in Megacycles	Channel No.	Frequency in Megacycles	Channel No.
87.9	200	98.9	255
88.9	205	99.9	260
89.9	210	100.9	265
90.9	215	101.9	270
91.9	220	102.9	275
92.9	225	103.9	280
93.9	230	104.9	285
94.9	235	105.9	290
95.9	240	106.9	295
96.9	245	107.9	300
97.9	250		

To find the frequency in megacycles for CHANNEL NUMBERS between those given above, add .2 megacycle for every whole number added to the CHANNEL NUMBER; for example channel 204 would be 88.7 megacycles and 251 would be 98.1 megacycles.

© John F. Rider

MODEL 9-207M

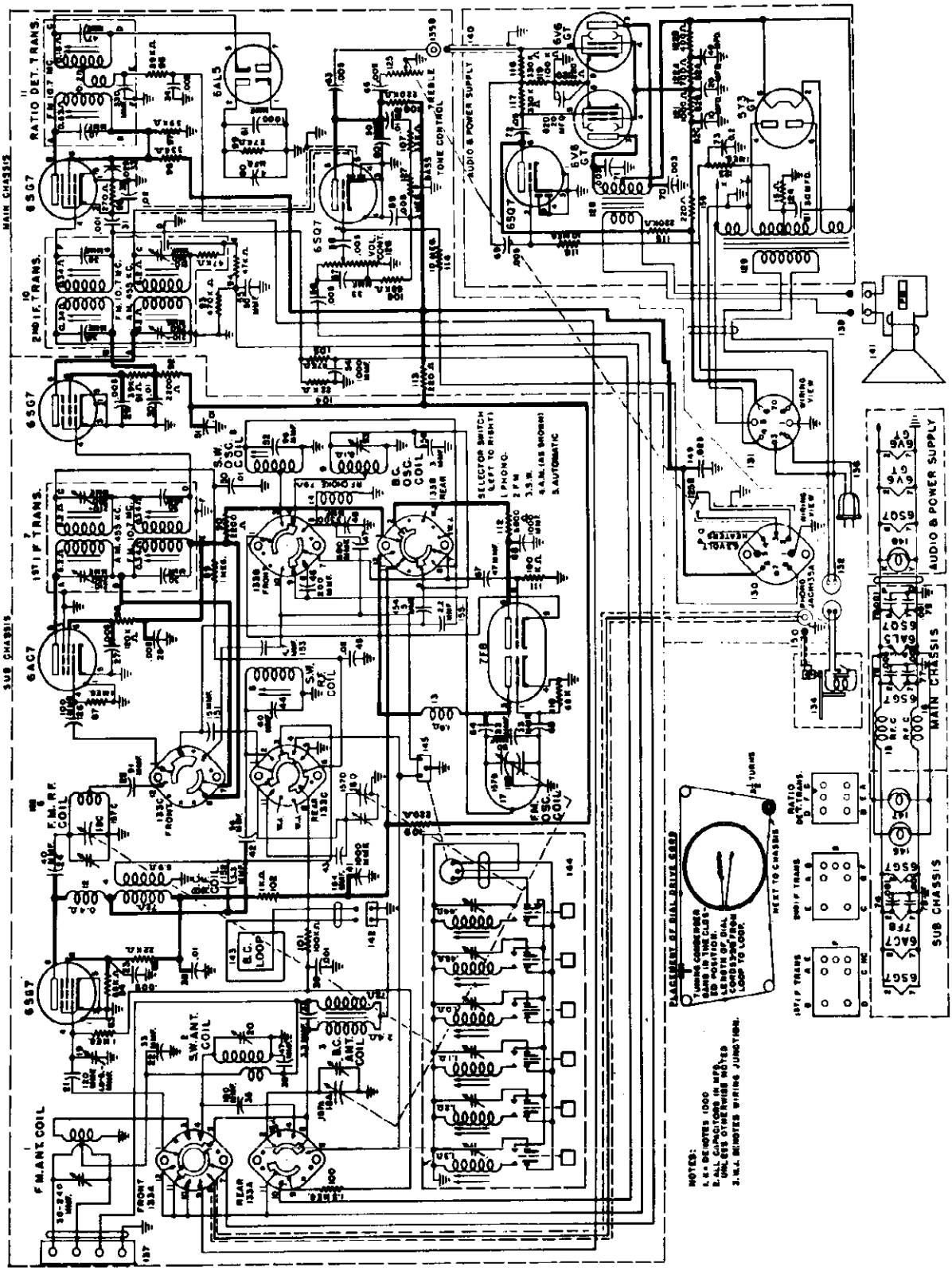

RECORD CHANGER: See Webster Model 156, Pages RCD.CH. 19-1 through RCD.CH. 19-11

©John F. Rider

MODEL 10-145M

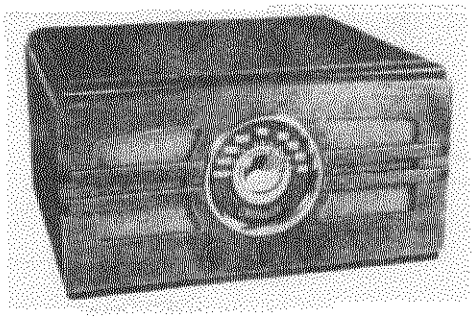

DESCRIPTION

TYPE: Five-tube superheterodyne.

FREQUENCY RANGE: 540 to 1600 kc.

INTERMEDIATE FREQUENCY: 455 kc.

POWER SUPPLY: 60 cycle a.c. only.

VOLTAGE RATING: 105-125 volts.

POWER CONSUMPTION:
Radio position—35 watts.
Phono position—55 watts.

TUBE COMPLEMENT:

Type	Function
12SA7	Converter
12SK7	I.F. Amplifier
12SQ7	Detector, AVC, 1st Audio Amplifier
50L6GT	A.F. Power Output
35Z5GT	Rectifier

DIAL BULB: Type 47, 6.3 volts, .15 amp.

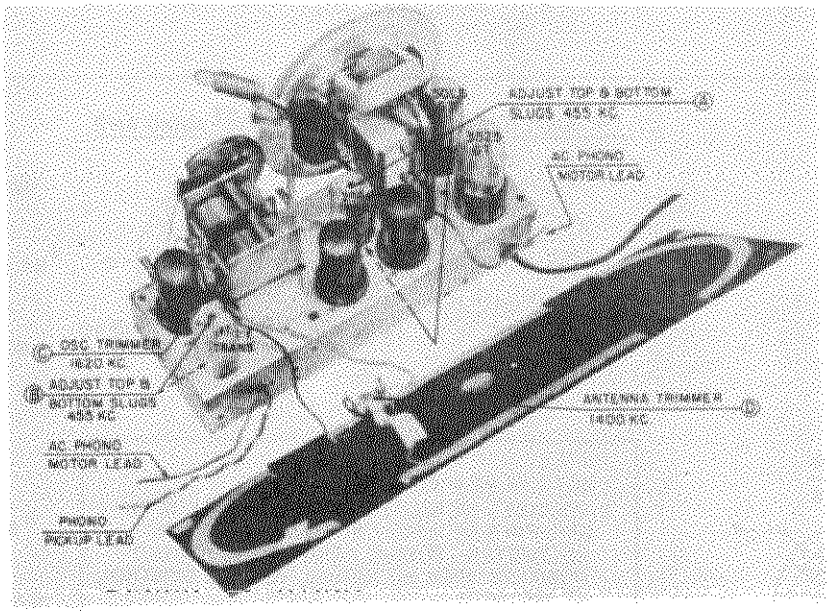

CHASSIS, TOP VIEW—MODEL 10-145M

Reversing the position of the power plug may reduce power hum.
Under no circumstances should a ground be connected to this receiver.

©John F. Rider

MODEL 10-145M

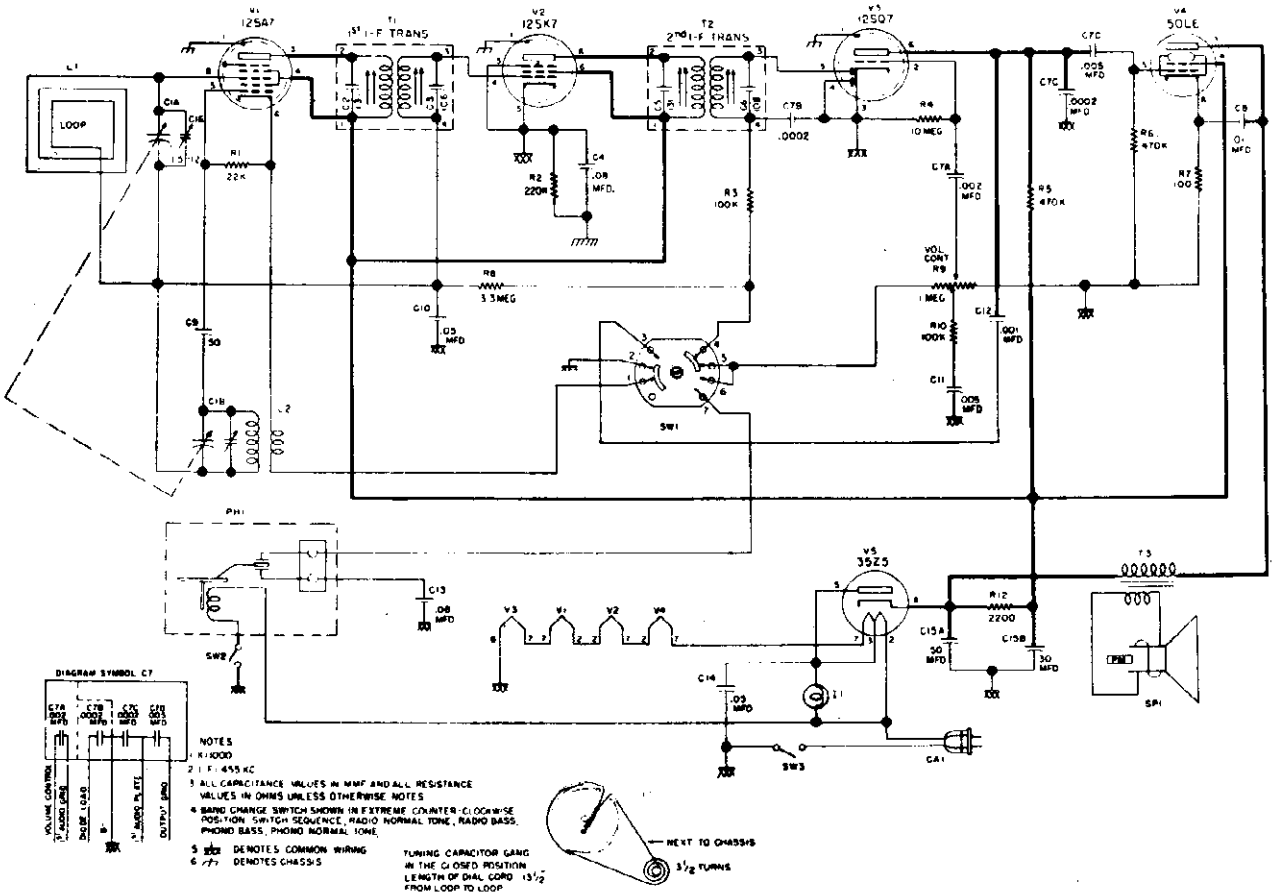

SCHEMATIC DIAGRAM—MODEL 10-145M

I-F AMPLIFIER

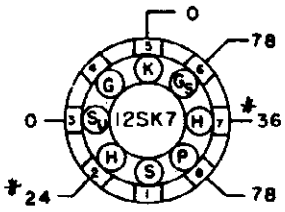

DET.-AVC.& 1ST AUDIO AMP.

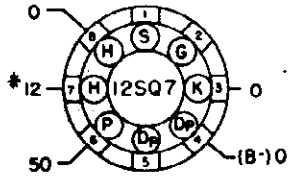

RECTIFIER

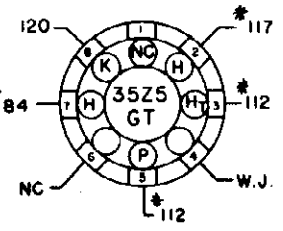

CONVERTER

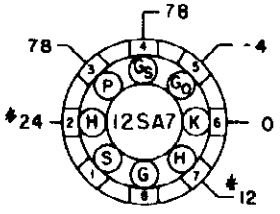

NOTES:
1. BOTTOM VIEW OF TUBE SOCKETS.
2. VOLTAGES MEASURED FROM SOCKET LUG TO (B-)(PIN 4 OF 12SQ7) WITH AN ELECTRONIC VOLTMETER; TUNING GANG IN THE CLOSED POSITION WITH NO SIGNAL, VOLUME CONTROL AT MINIMUM.
3. N.C. = NO CONNECTION
4. W.J. = WIRING JUNCTION.
5. * = AC. VOLTAGE
6. SUPPLY VOLTAGE 117 V. 60 ~
7. SOCKET VOLTAGE TOLERANCE ± 10 %

OUTPUT

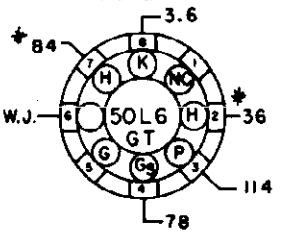

SOCKET VOLTAGE CHART

©John F. Rider

ALIGNMENT PROCEDURE

1. Turn the tuning capacitor to the completely closed position against the stop and set the dial pointer to the reference line at the end of the dial scale.
2. Turn tone control switch to normal tone position.
3. Connect the output meter across the speaker voice coil.
4. The r.f. signal input from the signal generator should be connected as indicated in the Alignment Chart. Connect the signal generator ground through a 0.1 mfd. capacitor to B— (pin 4 on 12SQ7 tube socket).
5. Turn the volume control on full and adjust the signal generator output to produce approximately mid-scale deflection of the output meter, but maintain signal generator output as low as possible to prevent AVC action in the receiver.

ALIGNMENT CHART

Alignment adjustment locations are shown on page 1, Chassis, Top View—Model 10-145M

Alignment Sequence	Signal Generator Output			Position of		Adjust for Maximum Output
	Frequency in kc.	In Series with	To	Radio-Phono Switch	Tuning Dial	
1	455	200 mmf.	Ant.	Counter-clockwise	Open	A & B (See Note 1)
2	1620	200 mmf	Ant.	Counter-clockwise	Open	C (See Note 1)
3	1400	*Radiated to Loop			Tune in Signal	D (See Note 2)

*Place signal generator output lead near the loop antenna.

Notes: 1. Disconnect loop antenna. Connect a 33,000 ohm resistor from pin 8 on 12SA7 tube socket to B-(pin 4 on 12SQ7 tube socket).
2. Remove 33,000 ohm resistor, connect loop antenna and place receiver chassis in cabinet.

REPLACEMENT PARTS LIST—MODEL 10-145M

Figures in first Column correspond to figures in schemetic diagram.

Symbol No.	Part Number	Description
C-1A	AC-137073-39	Capacitor, Variable \ Two Section
C-1B		Capacitor, Variable /
C-2	Part of T1	Capacitor, 131 mmf.
C-3	Part of T1	Capacitor, 106 mmf.
C-4	39001-19	Capacitor, .1 mfd., 600 v., paper
C-5	Part of T2	Capacitor, 131 mmf.
C-6	Part of T2	Capacitor, 106 mmf.
C-7A	C-144675-1	Capacitor, .002 mfd., 500 v. \
C-7B		Capacitor, .0002 mfd., 500 v. \ Four
C-7C		Capacitor, .0002 mfd., 500 v. / Section
C-7D		Capacitor, .005 mfd., 500 v. /
C-8	39001-13	Capacitor, .01 mfd., 600 v., paper
C-9	C-137727-21	Capacitor, 50 mmf., 500 v., ceramic
C-10	39001-17	Capacitor, .05 mfd., 600 v., paper
C-11	39001-11	Capacitor, .005 mfd., 600 v., paper
C-12	39001-7	Capacitor, .001 mfd., 600 v., paper
C-13	39001-19	Capacitor, .1 mfd., 600 v., paper
C-14	39001-17	Capacitor, .05 mfd., 600 v., paper
C-15A	B-136770	Capacitor, 50 mfd., 150 v. \ Two
C-15B		Capacitor, 30 mfd., 150 v. / Section
C-16	C-137219-2	Capacitor, Trimmer (used on L1)
R-1	39373-60	Resistor, 22,000 ohm, ½ w.
R-2	39373-80	Resistor, 220,000 ohm, ½ w.
R-3	39373-74	Resistor, 100,000 ohm, ½ w.
R-4	39373-107	Resistor, 10 megohm, ½ w.
R-5	39373-87	Resistor, 470,000 ohm, ½ w.
R-6	39373-87	Resistor, 470,000 ohm, ½ w.
R-7	39373-14	Resistor, 100 ohm, ½ w.
R-8	39373-100	Resistor, 3.3 megohm, ½ w.
R-9	39368-18	Control, Volume (1 megohm, Tap 300,000 ohm)
	39370-2	Shaft, Volume Control (Knurled)
R-10	39373-74	Resistor, 100,000 ohm, ½ w.
R-12	39374-205	Resistor, 2200 ohm, 2 w., 10%
CA-1	C-132300-1	Cable & Plug Assembly, Power
I-1	138437-1	Bulb (dial) Type 47, 6.3 v., .15 amp.
L-1	AC-145863	Loop Assembly, Antenna
L-2	AW-145860	Coil, Oscillator
PH-1	D-145821	Record Changer
SP-1	C-145878	Speaker & Transformer Assy.
SW-1	B-145904	Switch, Tone-Phono
SW-2	Part of SW1	Switch, Power (Phono Motor)
SW-3	39369-1	Switch, Power (On-Off)
T-1	AC-139919-3	Transformer, 1st I.F.
T-2	AC-139919-3	Transformer, 2nd I.F.
T-3	Part of SP1	Transformer, Output
	139418	Bumper (Rubber), Lid
	R-145867	Cabinet
	W-131154-1	Cotter, External Type
	B-145942	Dial Glass
	B-145909	Escutcheon
	146124	Foot, Rubber
	146125	Grille Cloth
	W-134055	Grommet, Var. Capacitor Mtg.
	146126	Hinge, Lid
	W-145890	Knob
	146122	Lid, Cabinet
	B-145921	Pointer, Dial
	B-135075-13	Shaft, Dial Drive
	D-136565-32	Socket, Dial Light
	39204	Socket, Tube
	W-51752	Spring, Dial Drive Cord
	146123	Support, Lid
	W-134916	Washer (Spring, Dial Drive Shaft)

MODEL 10-307M

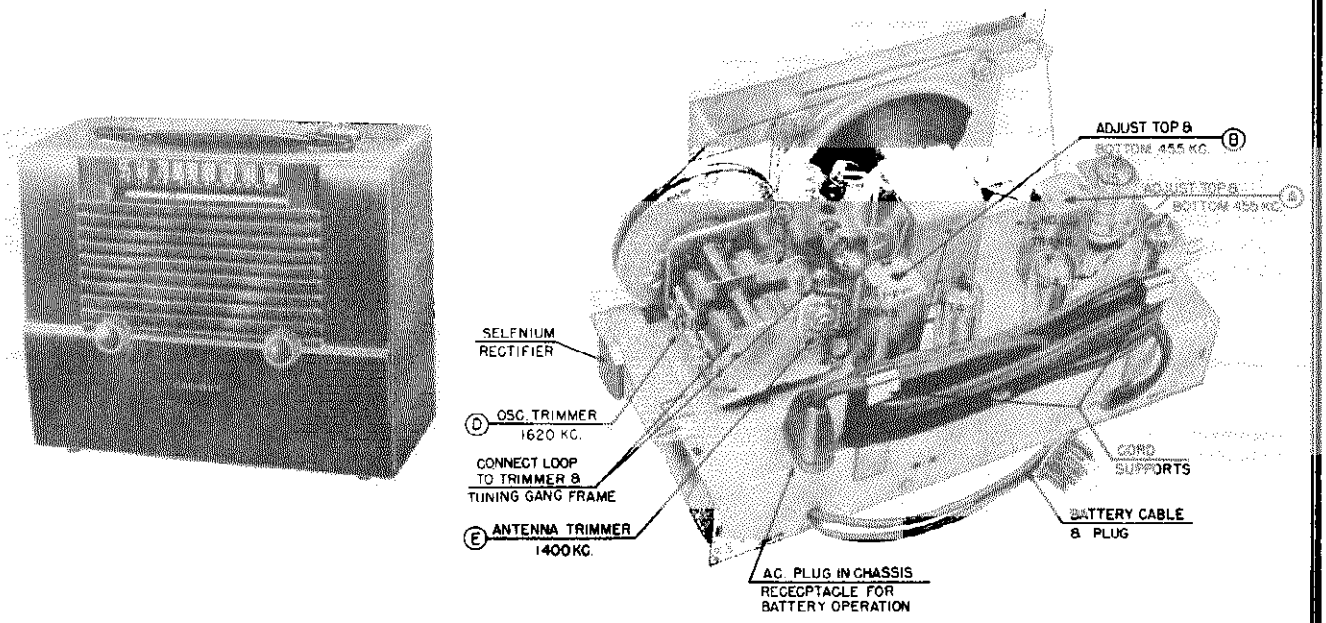

CHASSIS, TOP VIEW — MODEL 10-307M

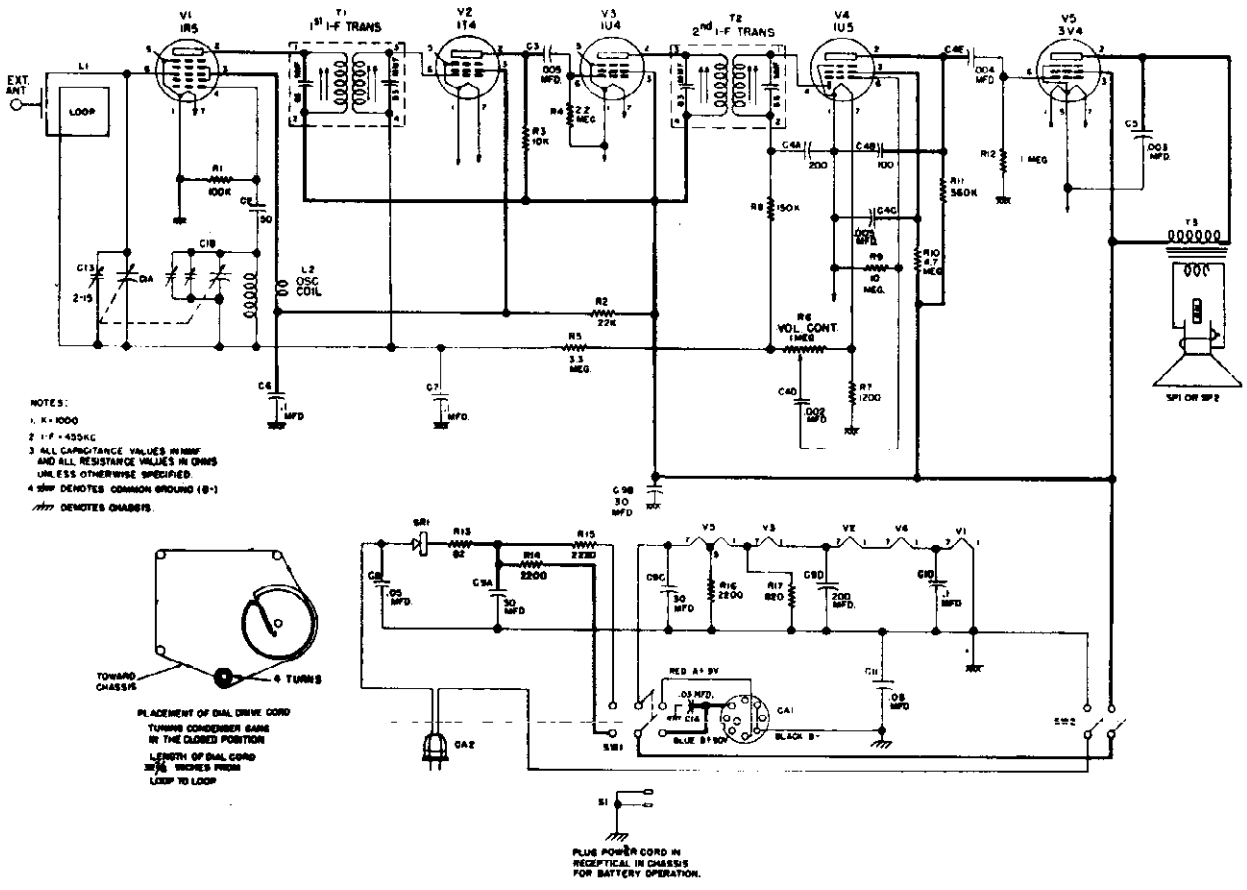

SCHEMATIC DIAGRAM — MODEL 10-307M

©John F. Rider

ALIGNMENT PROCEDURE

ALIGNMENT SHOULD ALWAYS BE MADE ON BATTERY OPERATION.

1. Unsolder the two loop antenna leads from the rear of the tuning capacitor and remove the chassis from the cabinet.
2. Remove the chassis bottom cover and connect a 33,000 ohm resistor from the grid of the 1R5 converter tube to B— (pin 6 to pin 1 of V1 tube socket).
3. Connect the battery cable plug to the receptacle on the battery. Wrap the power cord around the metal cord supports and insert the prongs of the plug into the receptacle on the chassis.
4. Connect the output meter across the speaker voice coil.
5. Connect the high side of the signal generator through a 200 mmf. capacitor to the converter grid terminal (pin 6 of V1 tube socket). Connect the signal generator ground through a .05 mfd. capacitor to B— (pin 1 of V1 tube socket).
6. Turn the volume control on full and adjust the signal generator output to produce approximately mid-scale deflection of the output meter, but maintain signal generator output as low as possible to prevent AVC action in the receiver.

ALIGNMENT CHART

Alignment adjustment locations are shown on page 1, Chassis View — Model 10-307M

Alignment Sequence	Signal Generator Output			Position of Dial pointer or Var. Cond.	Adjust for Maximum Output	Remarks
	Frequency in KC	In Series with	To			
1	455	200 mmf.	V1 Grid	Open	A & B	See steps 2 & 5 of Alignment procedure
2	1620	200 mmf.	V1 Grid	Open	D	See notes 1 & 2 of Alignment notes
3	1400	Radiated to Loop		1400 kc	E	See notes 3 & 4 of Alignment notes

ALIGNMENT NOTES

1. After adjusting A and B, replace the chassis bottom.
2. Preset C to ¼ turn from its closed position before adjusting D.
3. Before adjusting E remove the 33,000 ohm resistor from pins 6 and 1 of the V1 tube socket. Replace the chassis in the cabinet and connect the antenna loop (see chassis top view). Make certain that the battery cable and the power cord are connected for battery operation (see step 3, Alignment Procedure), and the battery pack in place in the cabinet.
4. To obtain a radiated signal for this alignment, place the signal generator output lead near the loop antenna.

© John F. Rider

MODEL 10-307M

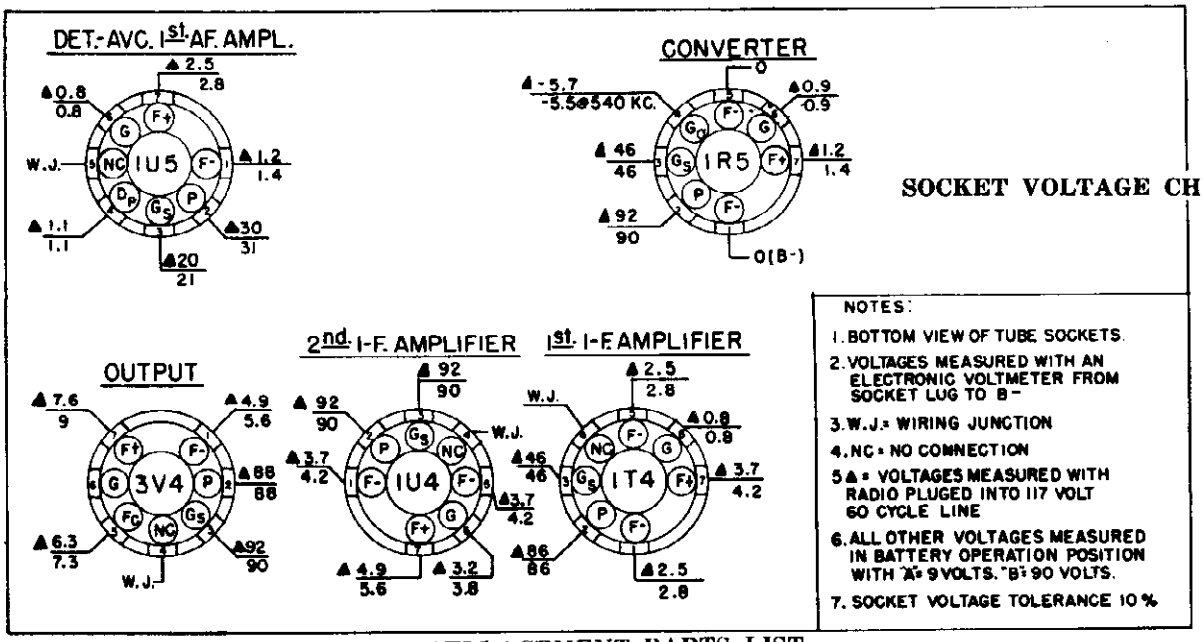

SOCKET VOLTAGE CHART

NOTES:

1. BOTTOM VIEW OF TUBE SOCKETS.
2. VOLTAGES MEASURED WITH AN ELECTRONIC VOLTMETER FROM SOCKET LUG TO B−
3. W.J. = WIRING JUNCTION
4. NC = NO CONNECTION
5. ▲ = VOLTAGES MEASURED WITH RADIO PLUGED INTO 117 VOLT 60 CYCLE LINE
6. ALL OTHER VOLTAGES MEASURED IN BATTERY OPERATION POSITION WITH "A" = 9 VOLTS, "B" = 90 VOLTS.
7. SOCKET VOLTAGE TOLERANCE 10 %

REPLACEMENT PARTS LIST

Symbol No.	Part No.	Description
C-1A	AG-137073-38	Capacitor, Variable (Two Section
C-1B		Capacitor, Variable
C-2	C-137727-21	Capacitor, 50 mmf., 500 v., ceramic
C-3	39001-11	Capacitor, .005 mfd., 600 v., paper
C-4A	B-144675-10	Capacitor, 200 mmf., 500 v.
C-4B		Capacitor, 100 mmf., 500 v. Five
C-4C		Capacitor, .005 mfd., 500 v. Section
C-4D		Capacitor, .002 mfd., 500 v.
C-4E		Capacitor, .004 mfd., 500 v.
C-5	39001-76	Capacitor, .003 mfd., 600 v., paper
C-6	39001-19	Capacitor, .1 mfd., 600 v., paper
C-7	39001-19	Capacitor, .1 mfd., 600 v., paper
C-8	39001-17	Capacitc .05 mfd., 600 v., paper
C-9A	B-145261	Capacitor, 50 mfd., 150 v. Four
C-9B		Capacitor, 30 mfd., 100 v. Section
C-9C		Capacitor, 30 mfd., 25 v. Electrolytic
C-9D		Capacitor, 200 mfd., 10 v.
C-10	39001-19	Capacitor, .1 mfd., 600 v., paper
C-11	39001-17	Capacitor, .05 mfd., 600 v., paper
C-13	C-136327-45	Capacitor, 2-15 mmf., Trimmer
C-14	39001-65	Condenser, .05 mfd., 200 v.
R-1	39373-74	Resistor, 100,000 ohm, ½ w.
R-2	39373-60	Resistor, 22,000 ohm, ½ w.
R-3	39373-54	Resistor, 10,000 ohm, ½ w.
R-4	39373-97	Resistor, 2.2 megohm, ½ w.
R-5	39373-100	Resistor, 3.3 megohm, ½ w.
R-6	39368-14	Control, Volume (1 megohm)
R-7	39374-26	Resistor, 1200 ohm, ½ w., 10%
R-8	39373-77	Resistor, 150,000 ohm, ½ w.
R-9	39373-107	Resistor, 10 megohm, ½ w.
R-10	39373-102	Resistor, 4.7 megohm, ½ w.
R-11	39374-68	Resistor, 560,000 ohm, ½ w., 10%
R-12	39373-92	Resistor, 1 megohm, ½ w.
R-13	39374-188	Resistor, 82 ohm, 2 w., 10%
R-14	39373-40	Resistor, 2200 ohm, ½ w.
R-15	B-144857-4	Resistor, 2220 ohm, 7 w.
R-16	39373-40	Resistor, 2200 ohm, ½ w.
R-17	39374-24	Resistor, 820 ohm, ½ w., 10%
CA-1	AB-139513-3	Cable Assembly, Battery
CA-2	C-132300-8	Cable & Plug Assy., A. C. Power
L-1	AC-145385	Loop Assembly, Antenna
L-2	AW-145006	Coil Assembly, Oscillator
S-1	Part of SW-1	Socket, Power Cable Plug
SR-1	W-145429	Rectifier, Selenium
SW-1	W-145233	Switch (D. P. D. T.)
SW-2	39369-2	Switch, Power
SP-1	139631	Speaker
T-1	AC-139919-2	Transformer, 1st I. F.
T-2	AC-139919-2	Transformer, 2nd I. F.
T-3	138131-3	Transformer, Output
	AB-145289	Background, Dial
	CR-94	Battery
	AW-145444	Bracket Assy., Antenna Terminal
	AC-145369	Cabinet & Antenna Assembly
	W-145420	Clip, Fuse
	W-131154-1	Cotter, External
	W-145161	Handle
	B-145121-2	Knob
	W-134126	Plug, Battery Cable
	B-145259	Pointer, Dial
	B-135075-2	Shaft, Dial Drive
	W-142732	Shield, Tube
	W-46065	Shock Mount, Var. Cond. Mtg.
	W-145379	Shock Mount
	39462-2	Socket, Tube
	W-51752	Spring, Dial Drive Cord
	W-138136	Strip, Dial Pointer
	C-135038-78	Strip, Terminal (2¼" Long; 6 Lugs)
	C-135038-18	Strip, Terminal (¾" Long; 2 Lugs)
	W-139060	Stud, Trimout (Chassis Bottom)
	W-134916	Washer, Spring (Dial Drive Shaft)

Figures in the first column correspond to figures in Schematic Diagram.

DESCRIPTION

POWER SUPPLY: a.c.—d.c. or Battery.

VOLTAGE RATING: a.c.—d.c., 110 to 120 volts. Battery "A" 9 volts, "B" 90 volts.

POWER OUTPUT: 200 M.W. maximum.

POWER CONSUMPTION: 15 watts at 125 volts, 60 cycle.

TUBE COMPLEMENT:

Type	Function
1R5	Converter
1T4	1st I.F. Amplifier
1U4	2nd I.F. Amplifier
1U5	Detector, AVC, 1st A.F. Amplifier
3V4	A.F. Power Output

Selenium Rectifier

© John F. Rider

MODELS 58XTA, 58XTW, Rev.

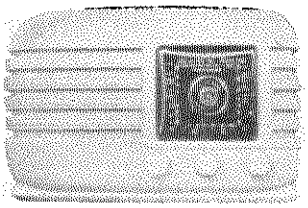

58XTW

58XTA

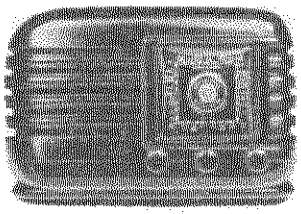

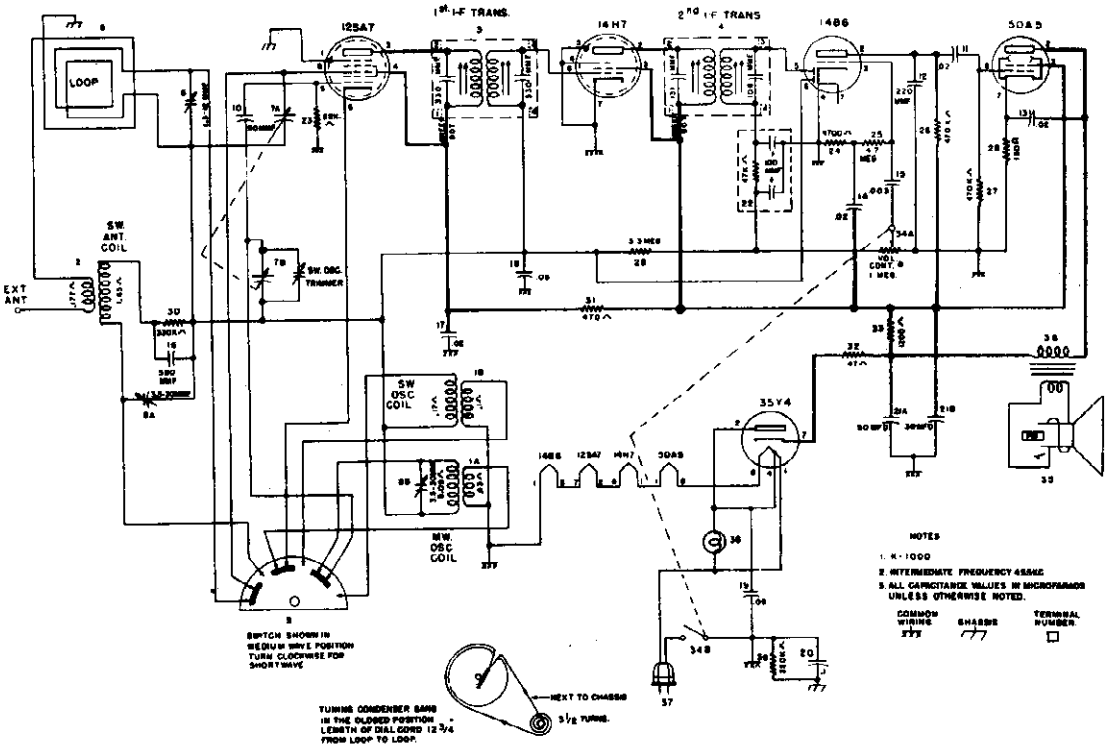

SOCKET VOLTAGE CHART

OSC. GRID VOLTAGE CHART.		
MEDIUM WAVE	GANG CLOSED	-5.8
SHORTWAVE	GANG CLOSED	-4.2

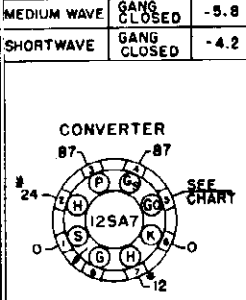

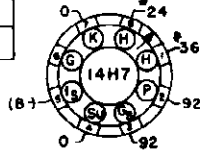

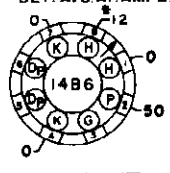

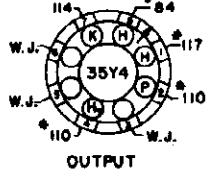

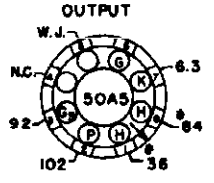

NOTES
1. BOTTOM VIEW OF TUBE SOCKETS.
2. VOLTAGE MEASURED WITH AN ELECTRONIC VOLTMETER FROM SOCKET LUG TO (B-) (PIN 5 OF 14H7)
3. LINE VOLTAGE 117 V. 60 CYCLE.
4. N.C. = NO CONNECTION.
5. W.J. = WIRING JUNCTION.
6. * = AC VOLTAGE
7. SOCKET VOLTAGE TOLERANCE ± 10%

Notas: El diagrama muestra el chasis visto por debajo. medir los voltajes de cada punto a B— (espiga 5 en el 14H7) todos los valores de voltajes medidos con voltímetro al vacio.

WJ=borne de conexiones

NC=Sin conectar

*—Voltaje C. A.

Tolerancia—10%

Voltaje de linea: 117 voltios, 60 ciclos.

Voltaje de rejilla osciladora: onda media, 540 KC:—4.9
onda corta, 5.7 mc:—3.8

©John F. Rider

MODELS 58XTA, 58XTW, Rev.

DESCRIPTION

TYPE: Five-tube, two-band, superheterodyne.

FREQUENCY RANGE: American Broadcast Band, 540 to 1600 kc. (Selector Switch, Counter-clockwise or Left.)

Overseas Short-wave Band: 5.8 to 15 mc. (Selector Switch, Clockwise or Right.)

INTERMEDIATE FREQUENCY: 455 kc.

POWER SUPPLY: a.c.—d.c.

VOLTAGE RATING: 105-125 volts.

POWER CONSUMPTION: 35 watts nominal.

POWER OUTPUT: 1.5 watts minimum.

TUBE COMPLEMENT

Type	Function
12SA7	Mixer
14H7	I. F. Amplifier
14B6	Detector, AVC, 1st A. F. Amplifier
50A5	A. F. Power Output
35Y4	Rectifier

DIAL BULB: Type 47, 6.3 volts, .15 amp.

When using direct current it may be necessary to reverse the position of the power plug in the electric outlet for correct polarity.

Reversing the position of the power plug when alternating current is used may reduce power hum.

Under no circumtsances should a ground be connected to this receiver.

ALIGNMENT PROCEDURE

1. Turn the tuning condenser to the completely closed position against the stop and set the dial pointer to the reference line separating the medium and short wave scales.
2. Connect the output meter across the speaker voice coil.
3. The r.f. signal input from the signal generator should be connected to the external antenna lead. Connect the signal generator ground through a 0.1 mfd. condenser to B — (pin 3 on 14H7 tube socket).
4. Turn the volume control on full and adjust the signal generator output to produce approximately mid-scale deflection of the output meter, but maintain signal generator output as low as possible to prevent AVC action in the receiver.

ALIGNMENT CHART

Alignment adjustment locations are shown on page 2, Chassis, Rear View—Models 56XTA, 56XTW

Alignment Sequence	Signal Generator Output			Position of		Adjust for Maximum Output
	Frequency in kc.	In Series with	To	Band Switch	Tuning Dial	
1	455	200 mmf.	Ant.	Left	1,620	A & B
2	15,300	400 ohms	Ant.	Right	15,300	C
3	15,000	400 ohms	Ant.	Right	15,000	D
4	1,400	200 mmf.	Ant.	Left	1,400	E & F

NOTE: When aligning the short-wave oscillator trimmer (C), be sure that the circuit is aligned at the correct frequency and not at the image frequency which is 910 kilocycles lower as indicated by the receiver dial. To check: Tune in the generator frequency, then increase the generator output and tune in the image frequency. The image frequency should be weaker than the fundamental and audible 910 kilocycles lower on the receiver dial. If the image cannot be tuned in, the oscillator trimmer is adjusted to the wrong peak; i. e., the oscillator trimmer may be adjusted to the image or one of the harmonics instead of the fundamental frequency. The correct peak is the second one heard as the trimmer adjustment screw is opened from the completely closed position.

© John F. Rider

MODELS 58XTA, 58XTW, Rev.

CARACTERISTICAS

TIPO: Superheterodino, cinco tubos, dos bandas.

FRECUENCIAS: Banda de onda media 540 a 1600 KC (Interruptor de bandas hacia la izquierda)

Banda de onda corta: 5.8 a 15 mc. (Interruptor de bandas hacia la derecha)

FRECUENCIA INTERMEDIA: 455 KC.

FUENTE DE ALIMENTACION: Corriente alterna y directa.

VOLTAJE: 105-125 voltios.

CONSUMO: 35 watts.

POTENCIA DE SALIDA: 1.5 watts mínima.

DESCRIPCION DE TUBOS

Tipo	Funcion
12SA7	Mezclador
14H7	Amplificador de F. I.
14B6	Detector, C. A. V. y 1 er audio
50A5	Salida
35Y4	Rectificador

FOQUITO PILOTO: Tipo 47, 6.3 voltios .15 amp.

TABLA DE AJUSTES

Orden de Ajustes	SALIDA DEL OSCILADOR			Interruptor de Bandas	Sintonia Cuadrante	Ajuste a Maximum
	Frecuencia en KC	En serie con	A			
1	455	200 mmfd	Ant.	Izquierda	1.620	A y B
2	15,300	400 ohms	Ant	Derecha	15.300	C
3	15,000	400 ohms	Ant	Derecha	15.000	D
4	1,400	200 mmfd	Ant	Izquierda	1,400	E y F

Nota: Cuando ajuste el trimer (C) de onda corta asegúrese que el circuito sea ajustado a la frecuencia correcta y nó en la imagen que es 910 kilociclos más baja en el receptor. Para chequear: Sintonice la frecuencia del oscilador, aumente la salida del oscilador y sintonice la imagen en el receptor, la imagen debe ser más débil que la fundamental y estar 910 KC más abajo. Si no se puede sintonizar la imagen, el trimer del oscilador está mal ajustado, es decir el oscilador quizás esté ajustado a la imagen o algun harmónico de la frecuencia del oscilador. El pico correcto es el segundo que se escuche cuando se abre el tornillo de ajuste después de cerrarlo por completo.

Cuando se use este receptor en corriente directa será necesario ajustar la posición del enchufe del cordon a la polaridad correcta.

Cambiando la posicion del enchufe puede reducir zumbido de la corriente alterna.

Bajo ningun concepto no conecte tierra externa a este receptor.

AJUSTE

1. Cierre por completo el condensador variable y ponga la aguja de sintonía en la línea de referencia que separa las escalas de ondas cortas y media.
2. Concecte el metro de salida a través de la bobina móvil de la bocina.
3. Conecte la señal de RF del oscilador al alambre de antena exterior. Conecte la tierra del oscilador a través de un condensador de 0.1 mfd a B—(espiga 3 del. 14H7).
4. Avance el control de volumen del receptor todo lo que dé y ajuste la salida del oscilador lo suficiente para producir una lectura en la mitad de la escala del metro de salida pero deberá mantenerla lo mas baja posible para evitar que el C. A. V. del receptor funcione.

© John F. Rider

MODELS 58XTA,
58XTW, Rev.

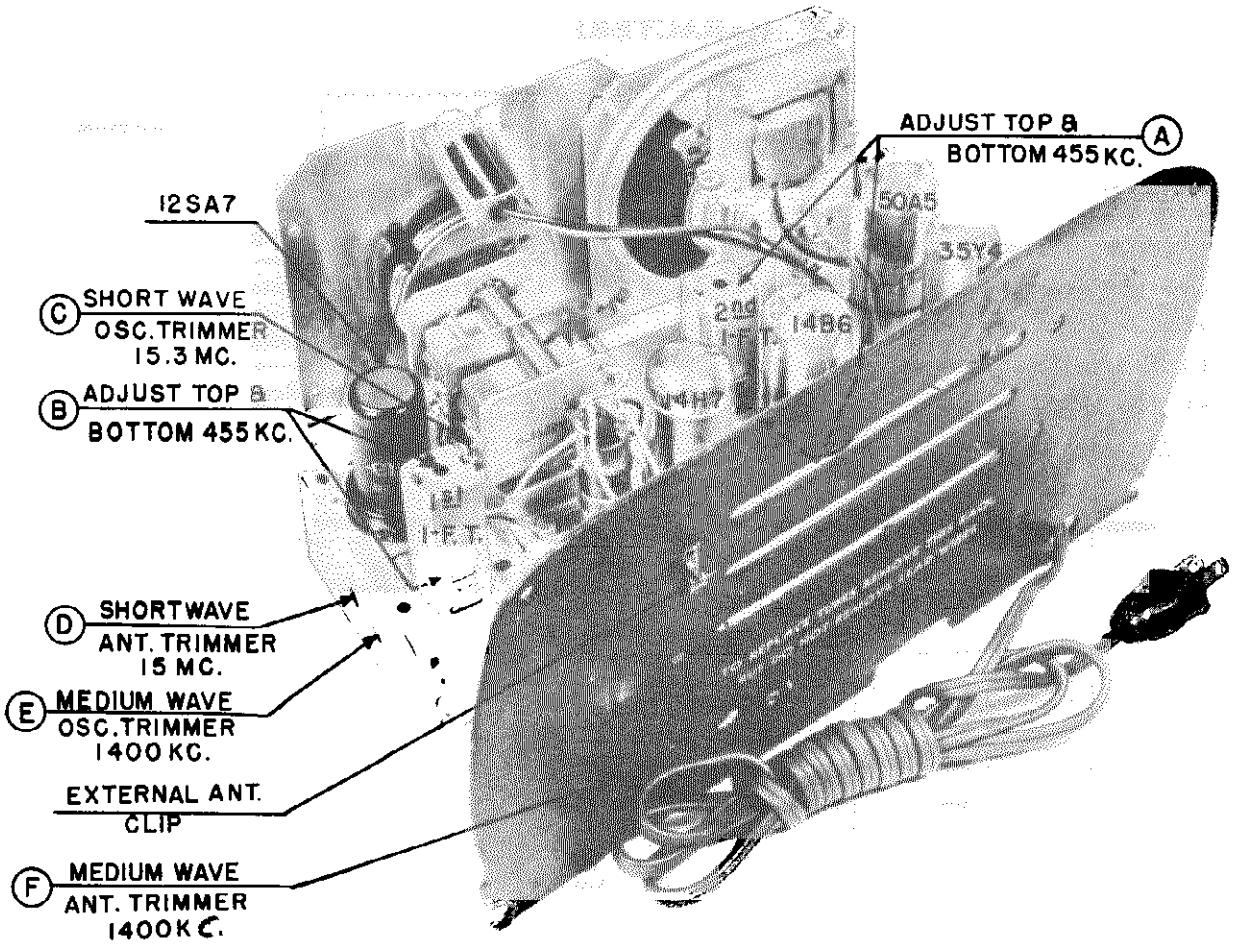

REPLACEMENT PARTS LIST—MODELS 58XTA, 58XTW

Figures in first column correspond to figures in Schematic Diagram

Item No.	Part No.	Description
1A	AW-146155	Coil, Osc. M.W. \ Two
1B		Coil, Osc. S.W. / Section
2	AW-146139	Coil, Ant. S.W.
3	C-139919-4	1st I.F. Trans.
4	C-139919-3	2nd I.F. Trans.
5	AC-135817	Loop & Back Assy.
6	C-137219-2	Condenser, Trimmer, 1.5-12 mmf. (Part of 5)
7A	AW-144666	Condenser, Tuning \ Two Section
7B		Condenser, Tuning / Variable
8A	AB-144617	Condenser, Trimmer, 3.5-30 mmf. \ Two
8B		Condenser, Trimmer, 3.5-30 mmf. / sect.
9	W-135808	Switch, Band Change
10	B-137498-11	Condenser, 50 mmf. 500 v. mica
11	39477-43	Condenser, .022 mfd., 600 v., paper
12	B-137498-22	Condenser, 220 mmf., 500 v., mica
13	39477-43	Condenser, .022 mfd., 600 v., paper
14	39477-43	Condenser, .022 mfd., 600 v., paper
15	39477-38	Condenser, .0033 mfd., 600 v., paper
16	B-137498-14	Condenser, 580 mmf., 300 v., mica
17	39477-43	Condenser, .022 mfd., 600 v., paper
18	39477-45	Condenser, .047 mfd., 600 v., paper
19	39477-45	Condenser, .047 mfd., 600 v., paper
20	39477-47	Condenser, .1 mfd., 600 v., paper
21A	B-137649	Condenser, 30 mfd. 150 v. \ Two sect.
21B		Condenser, 50 mfd. 150 v. / Elect.
22	B-142951-2	Condenser, Resistor
23	39373-60	Resistor, 22,000 ohms ½ w.
24	39373-47	Resistor, 4,700 ohms ½ w.
25	39373-102	Resistor, 4.7 megohms ½ w.
26	39373-87	Resistor, 470,000 ohms ½ w.
27	39373-87	Resistor, 470,000 ohms ½ w.
28	39373-16	Resistor, 150 ohms ½ w.
29	39373-100	Resistor, 3.3 megohm ½ w.
30	39373-84	Resistor, 330,000 ohms ½ w.
31	39373-26	Resistor, 470 ohm, ½ w.
32	39373-119	Resistor, 47 ohm 1 w.
33	39373-34	Resistor, 1,200 ohm ½ w.
34A	39368-14	Control, Volume, 1.0 megohm
34B	39369-1	Switch, Power (Part of 34A)
35	C-146133	Speaker
36	Part of Item 35	Transformer, Output
37	C-132300-1	Cable & Plug, Power
38	W-48858	Bulb (Dial), Type 47, 6.3 v., 15 amp.
39	39373-80	Resistor, 220,000 ohm, ½ w.
	39232-1	Socket, tube
	C-136721	Background, Dial
	D-132136-1	Cabinet (58XTA)
	AW-134738	Cabinet (58XTW)
	W-134667	Clip, Dial Pointer
	C-136962	Dial Face
	W-134882	Knob (58XTA)
	W-134883	Knob (58XTW)
	B-134610	Lens, Dial
	B-134570	Pointer, Dial
	W-51071	Ring, Retaining (Dial Drive Shaft)
	39220-32 CP	Screw, Chassis Mounting # 8-32 x ¾"
	W-134917	Shaft, Dial Drive
	D-136565-4	Socket Assy., Dial Light
	W-51752	Spring, Dial Drive Cord
	W-132124 SB	Stud, Trimount

© John F. Rider

©John F. Rider

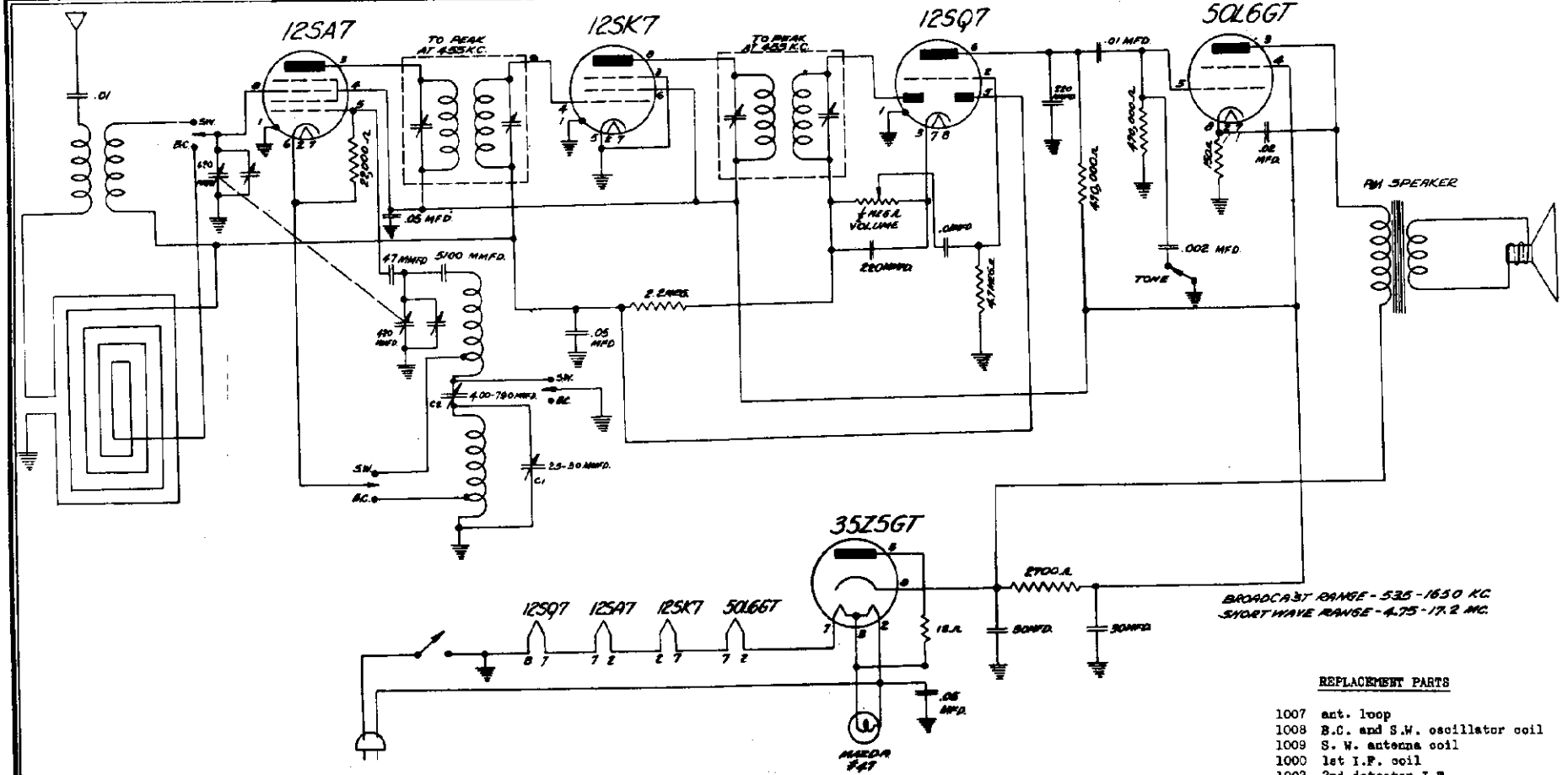

TUBES			A-504	A-506
1	35Z5GT	CABINET	4026	4012
1	50L6GT	KNOB	4017	4017
1	12SA7	BACK	4027	4023
1	12SK7			
1	12SQ7			

These receivers will function from 105-125 volts, 40-60 cycles A.C. or D.C. power supply. A range of 535-1650 kilocycles and 4.75-17.2 megacycles, (17$\frac{1}{2}$-63M) is covered by these receivers.

To calibrate receiver connect the output of signal generator in series with a 200 MMFD fixed condenser to the flexible antenna lead attached to the loop antenna. Connect the low side of signal generator through a 1/10 mfd. condenser to receiver chassis. The wave band switch should be in the broadcast position. Adjust signal generator to 465 Kilocycles and adjust both I.F. transformers for maximum signal. Open the receiver variable condenser for minimum capacity. Turn the band switch to short wave position. Set signal generator at 17.2 Megacycles. Peak oscillator section of receiver condenser for maximum signal. Next set signal generator at 16 Megacycles. Tune in this signal. Adjust R.F. section of receiver variable condenser for maximum signal strength. The low frequency end of the dial is automatically adjusted by a fixed padder condenser. Next turn band switch to broadcast position. Rotate drive shaft until variable condenser is in minimum capacity position. Adjust signal generator to 1650 Kilocycles. Adjust the broadcast oscillator trimmer screw (C-1) until maximum signal from generator is heard. To adjust the low frequency, set the signal generator and receiver to 600 Kilocycles. Peak the broadcast padder (C-2) for maximum output. The variable condenser should be rocked during the operation. Keep the signal generator output as low as possible when making all of these measurements. It is extremely necessary in making the short wave adjustments, that the fundamental oscillator signal be tuned in and not the image frequency, which will fall below the fundamental.

REPLACEMENT PARTS

1007	ant. loop
1008	B.C. and S.W. oscillator coil
1009	S. W. antenna coil
1000	1st I.F. coil
1002	2nd detector I.F.
2007	var. condenser
2002	comb. electrolytic
3002	comb. vol. control
2000	paper condenser
2001	mica condenser
3000	1/4 W. resistor
3003	1/2 W. resistor
6004	2 W. resistor
6004	dial scale
9016	dial back plate
8012	pilot lamp assembly
#47	pilot lamp
#20	dial cord
9762	drive spring
9818	bushing
9010	shaft
7001	speaker
8003	tone cont. switch
8010	wave band switch
5000	line cord
2008	padder condenser

MODEL C-615

To calibrate receiver connect the output of signal generator in series with a 200 MMFD fixed condenser to the flexible antenna lead attached to the loop antenna. Connect the low side of signal generator through a 1/10 MFD. condenser to receiver chassis. The wave band switch should be in the broadcast position. Adjust signal generator to 455 Kilocycles and adjust both I. F. transformers for maximum signal. Open the receiver variable condenser for minimum capacity. Turn the band switch to short wave #1 position. Set signal generator at 24.2 Megacycles. Peak the short wave #1 oscillator trimmer screw (C5) for maximum signal. Next set signal generator at 23 Megacycles. Tune in this signal. Adjust short wave #1 R. F. trimmer screw (C2) for maximum signal strength. The low fequency end of the dial is automatically adjusted by a fixed padder condenser. Next turn band switch to short wave #2 position. Rotate drive shaft until variable condenser is in minimum capacity position. Adjust signal generator to 8 Megacycles. Adjust the short wave #2 oscillator trimmer screw (C4) until maximum signal from generator is heard. Next set signal generator at 7 Megacycles. Tune in this signal. Adjust short wave #2 R. F. trimmer screw (C1) for maximum signal strength. The low frequency end of the dial is automatically adjusted by a fixed padder condenser. Next turn band switch to broadcast position. Adjust signal generator to 1500 Kilocycles. Tune in this signal. Adjust the broadcast oscillator trimmer screw (C3) until maximum signal from generator is heard. To adjust the low frequency, set the signal generator and receiver to 600 Kilocycles. Peak the broadcast padder (C7) for maximum output. The variable condenser should be rocked during the operation. Keep the signal generator output as low as possible when making all of these measurements. It is extremely necessary in making the short wave adjustments, that the fundamental oscillator signal be tuned in and not the image frequency, which will fall below the fundamental.

REPLACEMENT PARTS

1092 Loop Ant.
1093 B. C. Oscillator Coil
1095-1 S. W. 1 Oscillator Coil
1094-1 S. W. 1 Ant. Coil
1095-2 S. W. 2 Osc. Coil
1094-2 S. W. 2 Ant. Coil
1091-1 1st I. F. Coil
1091-1 3rd I. F. Coil
2014-4 Variable Condenser
2049-1 Comb. Electrolytic
2000 Paper Condenser
2048 Band Spread Cond.

TUBES
6BA6
6BA6
6BE6
6AT6
6AR5
6X4

2012 Ceramic Condenser
3001A-3 1 W. Resistor
3003A ½ W. Resistor
3004-13 2 W. Resistor
6022 Dial Scale
9139 Dial Back Plate.
8001-2 Pilot Lamp Assembly
#44 Pilot Lamp
9069-3 Drive Spring

9818 Bushing
9123-2 Shaft
7017 Speaker
8017B-4 Wave Band Switch
5008B-2 Line Cord
2050 Padder Condenser
8043 Tone Control Switch
3013-4 Comb. Volume Control

Cabinet Back 4095
Cabinet 4093
Knob 4055A-6
Concentric Knob 4096

The model C-615 is a three band superheterodyne receiver, having one broadcast range and two short wave ranges. This receiver features Spread-A-Matic Tuning, a loop-tenna for broadcast, and automatic volume control. It has been designed to operate at 105-125 volts, 50-60 cycles A.C. or at 210-250 volts, 50-60 cycles A.C. as specified on tag attached to line cord Instructions for tap changing are given on the reverse side.

B. C. Band	525-1680 Kilocycles	570-178 meters
S. W. 2 Band	2.5 M.C. to 8.0 M.C.	120 to 37.5 meters
S. W. 1 Band	7.5 M.C. to 24.2 M.C.	40 to 12.4 meters

INSTALLATION: Make certain that all tubes are in place and pressed down in their sockets. A label showing the location of each tube will be found underneath the cabinet. A loop-tenna is incorporated which makes the use of an antenna unnecessary, in most localities, for broadcast reception. If it is found that additional pick-up is desired on the standard band, an antenna may be connected to the red lead extending from the rear of the chassis, and the black lead connected to an external ground. On short wave reception an antenna and external ground should be used.

VOLUME CONTROL AND POWER SWITCH: The second knob from the left is the power switch and volume control. When the control is in the extreme counterclockwise position the power is "off". From this position, a slight clockwise rotation will turn the power "on", and by further rotation in this direction, volume may be increased to any degree until the full output of the receiver is obtained.

TUNING CONTROL: The knob on the right is the tuning control knob which operates the bottom pointer and tuning condenser through a reduction drive to insure ease and accuracy in the selection of stations.

SPREAD-A-MATIC TUNING CONTROL: There are two concentric knobs on the extreme left. The large knob operates the SPREAD-A-MATIC tuning. This is a special feature of this receiver, providing greater ease of tuning and better separation of stations on all three wave bands. To operate, turn the knob until the top pointer is set to "0", in the center of the SPREAD-A-MATIC scale. Tune in the desired station with the Tuning Control. By turning the SPREAD-A-MATIC control knob clockwise and counterclockwise the top pointer will move to the left and right of "0", and the station can be tuned in very accurately. When it is desired to change the station the SPREAD-A-MATIC pointer should first be set back to "0".

WAVE BAND SWITCH: The second knob from the right of the receiver is the wave band switch control. This knob has three positions. When the knob is in the extreme counterclockwise position, standard broadcast stations may be tuned in. When the knob is in the extreme clockwise position, short wave band #1 may be tuned in. The intermediate position is for tuning in short wave band #2.

TONE CONTROL SWITCH: The small concentric knob on the extreme left has two positions which allows the selection of two degrees of tone response.

PHONOGRAPH OPERATION: A terminal board marked "HIGH-LOW" is provided in the back of the chassis. For phonograph operation connect the Pick-Up to the terminals. Be sure the Tuning Control is off a station. If loud hum is heard when touching the Pick-Up arm reverse the leads to the terminals.

© John F. Rider

MODEL C-615

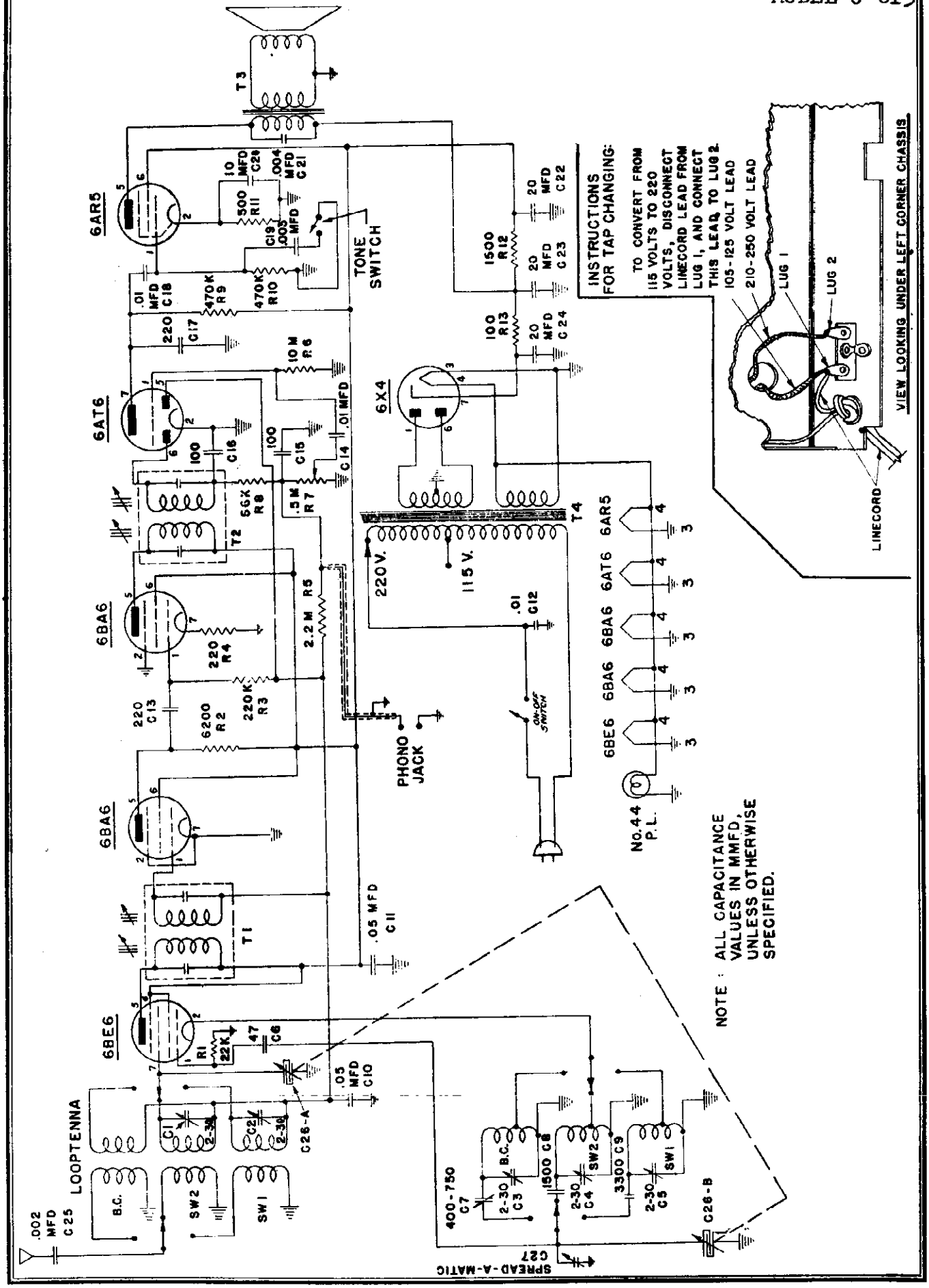

©John F. Rider

MODEL C-800

The DeWald Model C-800 is an AM-FM receiver. This receiver may be operated on either AC or DC, 105-125 volts, 50-60 cycles.

FM . . . . 88 to 108 MC.
AM . . . . 540 to 1700 KC.

Antenna Connections:

Your DeWald C-800 is a sensitive receiver. It is equipped with built-in AM and FM antennae so that in primary listening areas an outside antenna is not necessary. WHEN LISTENING TO FM BY USING THE BUILT-IN ANTENNA, KEEP THE ELECTRIC LINE CORD EXTENDED TO ITS FULL LENGTH.

For weak or distant stations there are provisions made in the rear for antenna connections. A terminal strip with two screw connections for the lead-in wires from the FM antenna, also a wire coming out the back of the receiver for an external AM antenna.

When using the built-in antenna on FM, the lug coming out between the two screw connections on the terminal strip in the rear, must be connected to the screw connection marked "ANT." When using an external FM antenna disconnect this wire and connect external antenna lead-in wires to the two screw connections.

Station Selector:

The knob on the extreme right hand side of the cabinet operates the tuning condenser on both AM and FM and simultaneously moves the indicating pointer. Ease and accuracy in tuning is made possible due to a reduction drive.

Band Switch:

The second knob from the right is the AM-FM band switch. This is a two position switch. When the switch is in the counterclockwise position, AM (Standard Broadcast) stations may be tuned in. When the switch is in the clockwise position, FM (Frequency Modulation) stations may be tuned in.

Volume Control and Power Switch:

The third knob from the right is the volume control and power switch. When the control is in the extreme counterclockwise position the power is "OFF." From this position, a slight clockwise rotation will turn the power "ON." By further rotation in this direction volume may be increased to any degree until the full output of the receiver is obtained.

Tone Switch:

The fourth knob from the right is the tone switch. For normal operation the switch should be clockwise. For increased bass response turn switch fully counterclockwise.

Notes:

Since this receiver has a loop-tenna on AM which has a directional effect, it may be necessary at times to turn the receiver for best reception. This set will operate properly only after the tubes are sufficiently heated. This may take two minutes after the power switch is turned "ON." If the receiver is being operated on DC (Direct Current) and no signals are heard after two minutes, reverse the line cord plug in the power outlet. Should noticeable hum be detected when operating on AC (Alternating Current), reverse the line cord plug in the power outlet.

Servicing of the DeWald Model C-800
(For Use of Radio Technician):

Should your DeWald Model C-800 become inoperative for any reason, we suggest you contact your local DeWald Radio and Television Dealer for servicing. The following information is for the use by the radio serviceman.

Alignment of the receiver will, in most cases, be unnecessary unless an RF or IF transformer is replaced or the adjustment has been tampered with. The IF slugs are slotted for a small size fiber screwdriver. Do not put excessive pressure on the aligning tool or the threads in the coil-form will be stripped and adjustments will be impossible.

IF Alignment:

Set bandswitch to AM position. Connect the signal generator, modulated at 400 cycles, through a 0.01 Mfd condenser to the grid of the 12AT7 converter tube. Connect the low side of the generator through a 0.1 Mfd condenser to the receiver chassis. Adjust the signal generator to 455 KC. Tune primary and secondary slugs of T3 & T5, AM-IF Transformers, for maximum output.

For FM alignment set bandswitch to FM position and leave generator connected to the grid of the 12AT7 converter tube. Adjust generator to 10.7 MC. Connect 20,000 ohm per volt or VTVM meter as in note "1" of schematic diagram. Tune primary of T1, bottom slug, and both primary and secondary of T2 & T4 for maximum indication on meter. To align secondary of Ratio Detector Transformer connect meter as in note "2" of schematic diagram. Tune top slug through positive and negative indication and then slowly return until meter reads zero. This is in the center of the "S" curve.

RF Alignment:

Set bandswitch to AM position. Connect signal generator, modulated at 400 cycles, to external antenna lead and to ground through a 0.1 Mfd condenser and adjust to 1700 KC. Set dial pointer to 1700 KC and tune signal for maximum output with oscillator trimmer. Next set generator to 1500 KC and tune in this signal on the receiver. Then adjust RF trimmer for maximum output.

Set bandswitch to FM position. Connect in series with each generator lead a carbon 150 ohm resistor and connect to rear antenna terminal board. Adjust generator and dial pointer to 108 MC. Peak oscillator trimmer for maximum signal output. Next set generator to 105 MC and tune in this signal on receiver. Then peak RF trimmer for maximum output. No adjustment is necessary at the low end because a special compensated fixed padder is used. Set the generator to 94 MC and tune the FM antenna coil for maximum.

In all the IF and RF adjustments it is important to keep the signal generator output as low as possible. It is extremely necessary in making the RF adjustments, that the fundamental oscillator signal be tuned in and not the image frequency. This can be checked by the use of a calibrated wavemeter.

©John F. Rider

MODEL C-800

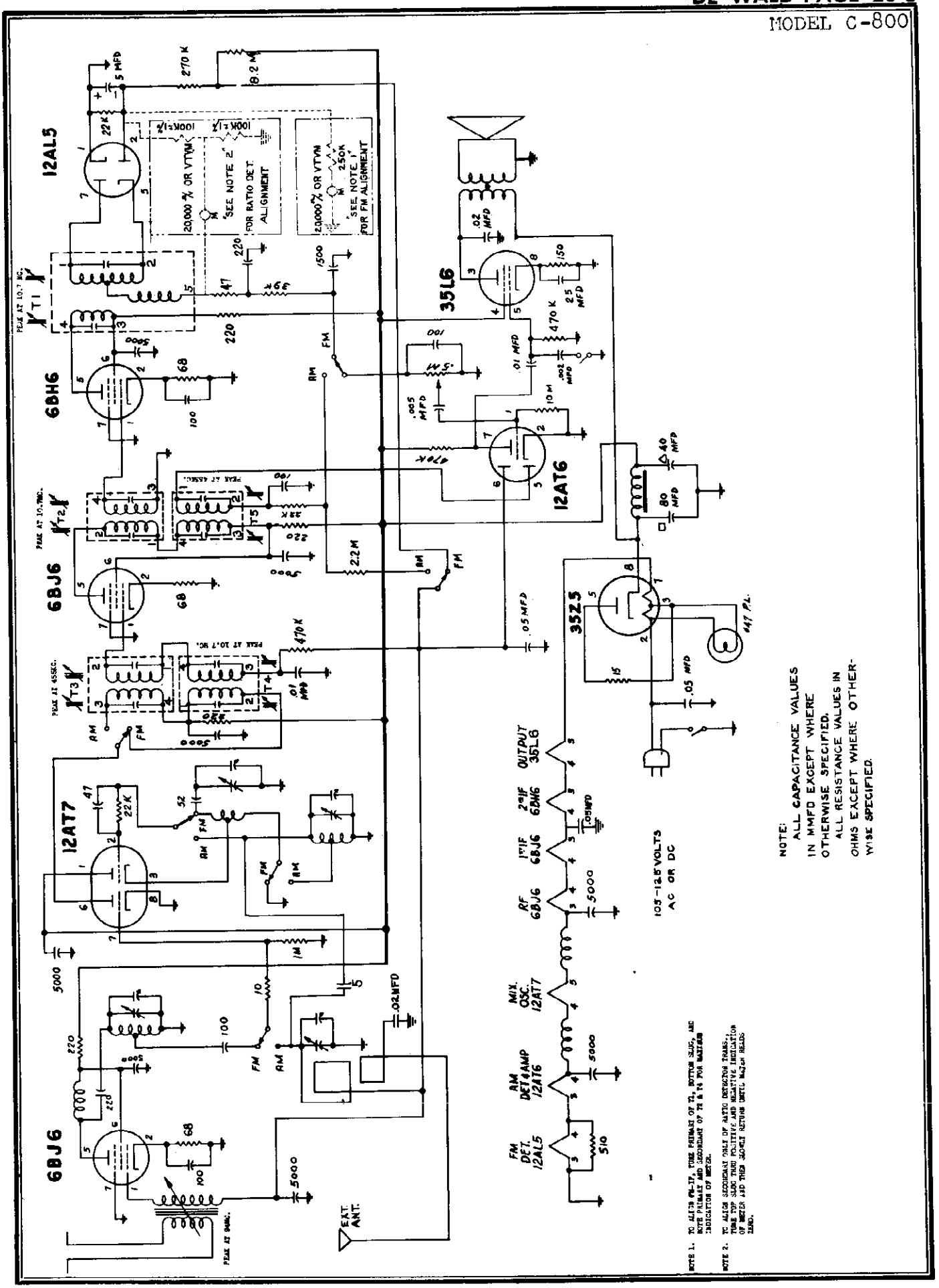

© John F. Rider

INSTALLATION AND OPERATING INSTRUCTIONS

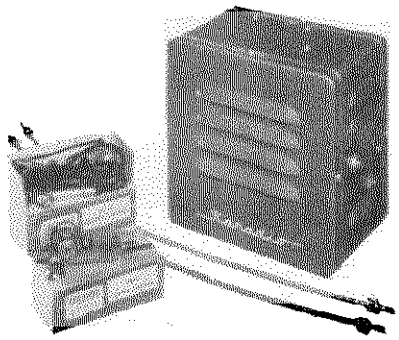

MOUNTING ●

The chassis contains the complete radio, power supply and speaker. This unit may be mounted in any convenient location on the bulkhead of the car. If possible it should be mounted on the left side or close to the center. This makes for an easier installation. This installation is made by drilling only one 5/16 inch hole in the bulkhead. Care must be taken to see that the mounting bolts on this unit as well as all others, such as the antenna and generator condenser, form a good ground connection. This can be accomplished by scraping the paint from the spot under the mounting nut and washer.

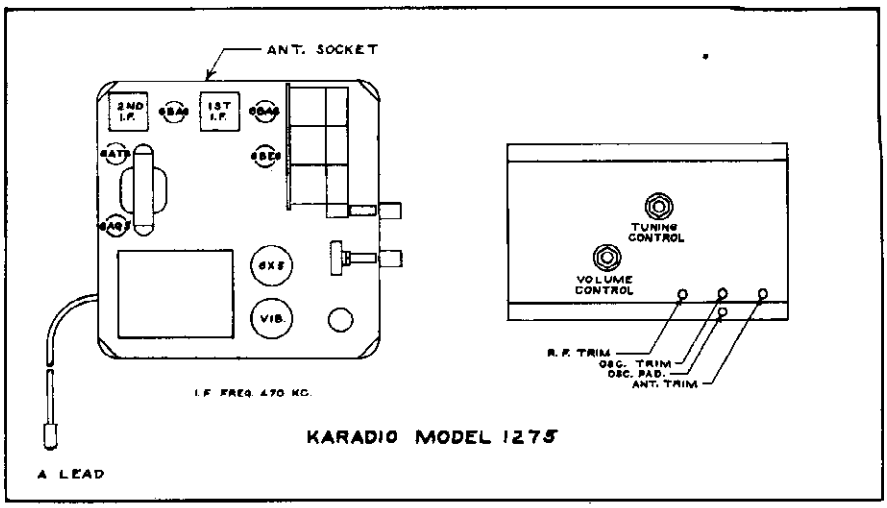

FIGURE 1

Install flexible cables in the proper place (see figure 1). The other end of cables go to the controls 716-T1 and 700-V2. These are installed in the panel kit (see instructions furnished with panel kit). The "A" lead of the radio connects to power socket on control 700-V2.

Antenna lead is plugged into the antenna socket (see figure 1).

After installation, tune in a weak station around 1400 K.C. and adjust antenna trimmer for maximum volume. DO NOT ADJUST OTHER TRIMMERS.

©John F. Rider

MODEL 1275, Karadio

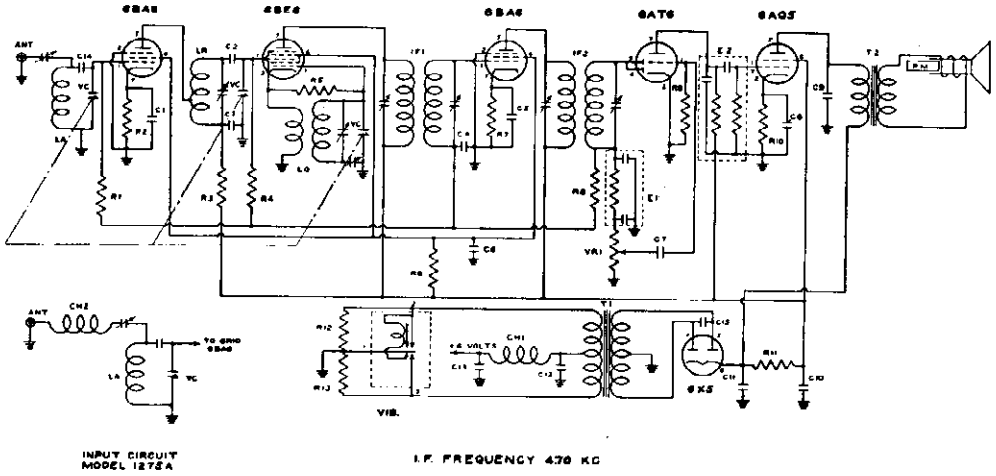

FIGURE 2

ELIMINATION OF INTERFERENCE —

Remove the coil-to-distributor high-tension lead from the distributor. Cut the lead two inches from the end, and screw the distributor resistor onto the coil lead. Then screw the short length into the resistor, and plug the cable into the distributor cap.

One noise-filter condenser is furnished. Condenser must be connected to the output terminal of the generator (never to the field terminal). The generator-condenser bracket should be fastened to the generator housing, under the screw that holds the field.
In some particularly stubborn cases of motor interference, one or more of the following procedures may be necessary:

A condenser can often be used to advantage on the electrically operated oil gauge or gas gauge. Connect the condenser lead to the terminal of the gauge, and bolt the condenser case securely to the frame or some other grounded part of the car.

Bonding the steering column to the fire wall with a short braid may also be effective. Clean the paint from the steering column at the fire wall where the column enters the motor compartment, and solder on a short piece of braid. Ground the end of the braid to the fire wall.

In some cases it may be necessary to ground the tubes and rods coming through the fire wall in order to reduce the interference. Clean them with emery cloth and spot-solder the braid, fastening the end under a convenient screw.

In some cases it may be necessary to connect an additional condenser to the ammeter or to the ignition switch.

It may be necessary to use a condenser on the voltage regulator. The condenser case should be mounted under one of the voltage-regulator mounting screws, or at some other convenient location, and the lead connected to the battery terminal of the voltage regulator.

Interference from electric clocks can be eliminated by connecting a condenser to the ammeter terminal. The case of the condenser must be securely grounded.

If tire-static interference is noted in a particular installation, static collector springs should be obtained and installed in the front wheels of the car.

©John F. Rider

MODEL 575, Ch. 120068A, 120068B

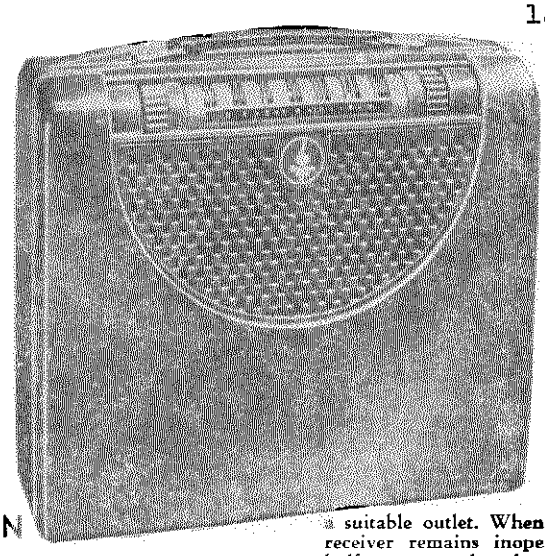

DESCRIPTION

TYPE: Three way (battery, a.c., d.c.) portable superheterodyne.

FREQUENCY RANGE: 540-1620 KC.

TYPE OF TUBES:
1—1U4 r-f amplifier
1—1R5, pentagrid converter
1—1U4, i-f amplifier
1—1U5, detector, a.v.c., a-f amplifier
1—3V4, power output
1—117Z3, rectifier

POWER SUPPLY: Battery powerpack, or a.c., or d.c.

VOLTAGE RATING:
Line operation—105-125 volts, a.c. or d.c.
Battery operation—9 volts "A" supply
90 volts "B" supply

POWER CONSUMPTION: Line operation 20 watts

CURRENT CONSUMPTION:
"A" battery—.055 amp.
"B" battery—.013 amp.
117 volts a.c.—.170 amp.

GENERAL NOTES

1. Line Operation: Open the rear cover which is held closed by the catch studs. Remove the line cord plug from its receptacle at the right side of the chassis (looking from the rear). Remove the line cord and insert the plug into a suitable outlet. When the power supply is d.c. and the receiver remains inoperative, remove the plug, turn it half-way around and reinsert in the outlet to obtain proper polarity.
2. Battery Operation: Remove the line plug from the outlet and insert in the receptacle at the right side of the chassis. The receiver will not operate from batteries if the plug is out of the chassis receptacle. Coil the loose portion of the line cord and store it carefully in the compartment formed by the insulating paper.
3. Battery Complement: Replace the power pack unit with Eveready No. 753 or Rayovac No. AB994 batteries. These units supply both "A" and "B" voltages for battery operation.
4. The color coding of the battery cable is as follows:
   Red— B+, 90 volts Yellow— A+, 9 volts
   White— B— Black— A—
5. If replacements are made in the r-f section of the circuit, carefully realign the receiver.
6. The receiver has a self contained antenna and normally does not require an additional antenna connection. For installations in a location where reception is weak, connect an outside antenna to the colored lead connected to the loop at the left side of the cabinet (looking from the rear). Do not use a ground connection.
7. The self-contained loop antenna has directional properties. After a station is tuned in, it is important that the set be rotated through a quarter turn to obtain the position which results in the greatest volume.

ALIGNMENT PROCEDURE

1. Use battery power when available. When a.c. power is used, connect the line cord through an isolation transformer if available. Otherwise connect a 0.1 mfd. condenser in series with the low side of the signal generator and B—.
2. Set the volume control at maximum. The output of the signal generator should be no higher than that necessary to obtain an output reading. Attenuate the signal input as alignment proceeds. Use an insulated alignment tool.
3. Maintain the loop in the same position relative to the chassis as when the receiver is in the cabinet.

STEP	DUMMY ANTENNA	SIGNAL GENERATOR COUPLING	SIGNAL GENERATOR FREQUENCY	RADIO DIAL SETTING	OUTPUT METER	ADJUST	REMARKS
1	0.1 mfd.	High side to grid (pin 6) of V2 (1R5). Low side to chassis.	455 KC.	Variable condenser fully open.	Across voice coil	T-2, T-1 (Chassis 120101A) T-3, T-2 (Chassis 120101B)	Adjust for maximum output. If a.c. is used, without an isolation transformer, reduce dummy antenna to 200 mmf. to reduce hum modulation.
2	0.1 mfd.	High side to grid (pin 6) of V1 (1U4). Low side to chassis.	455 KC.	"	"	C-7 (Chassis 120101A) or T-1 (Chassis 120101B)	Adjust for minimum output.
3	200 mmf.	Form loop of several turns and radiate signal into receiver.	1620 KC.	"	"	Trimmer cond. C-4. (Osc.)	Adjust for maximum output.
4	200 mmf.	"	1400 KC.	Tune for maximum output.	"	Trimmer cond. C-3. (Ant.)	Adjust for maximum output.

© John F. Rider

MODEL 575, Ch. 120068A

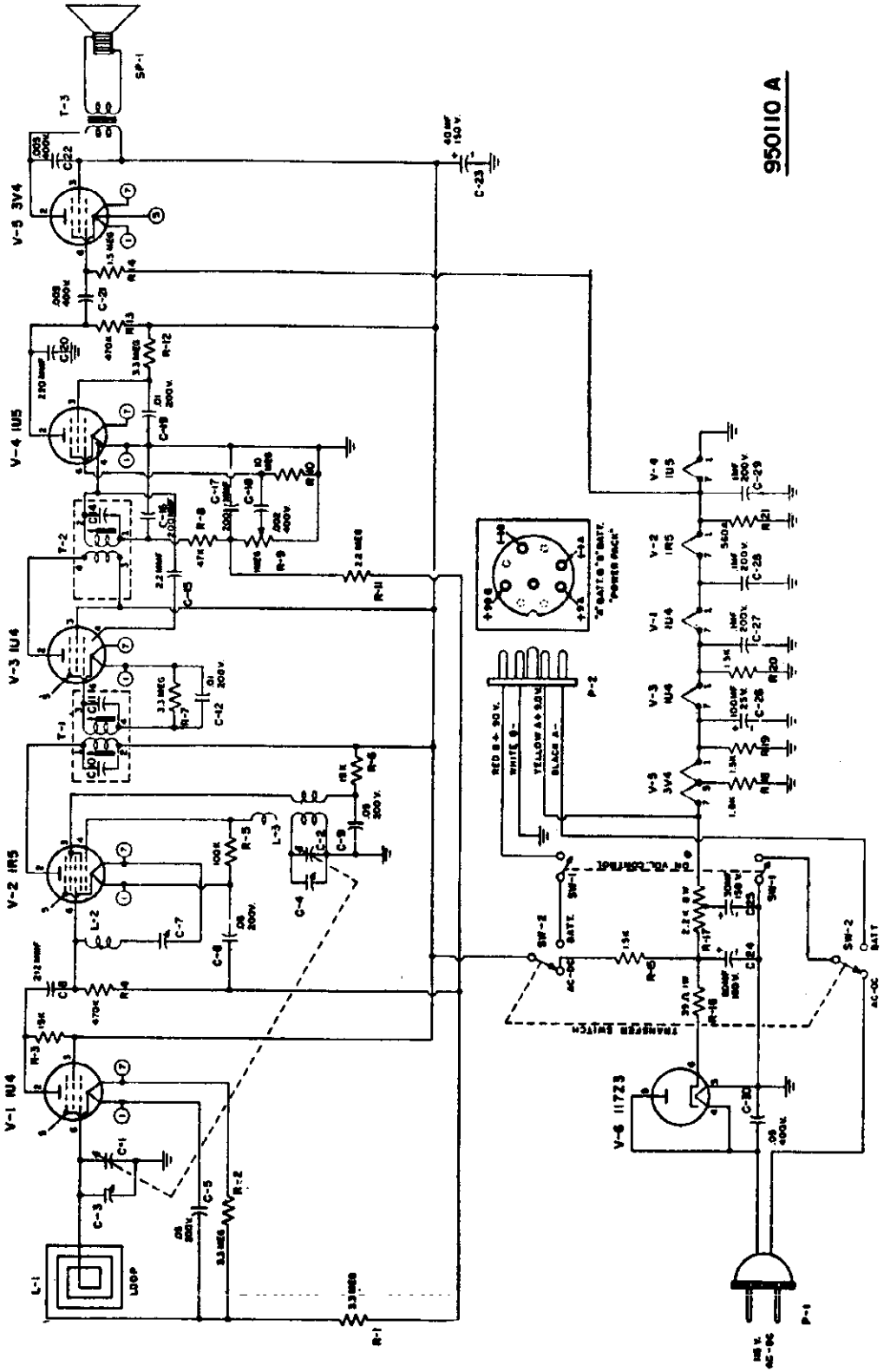

Fig. 1—Schematic Diagram, Chassis 120068A

©John F. Rider

MODEL 575, Ch. 120068B

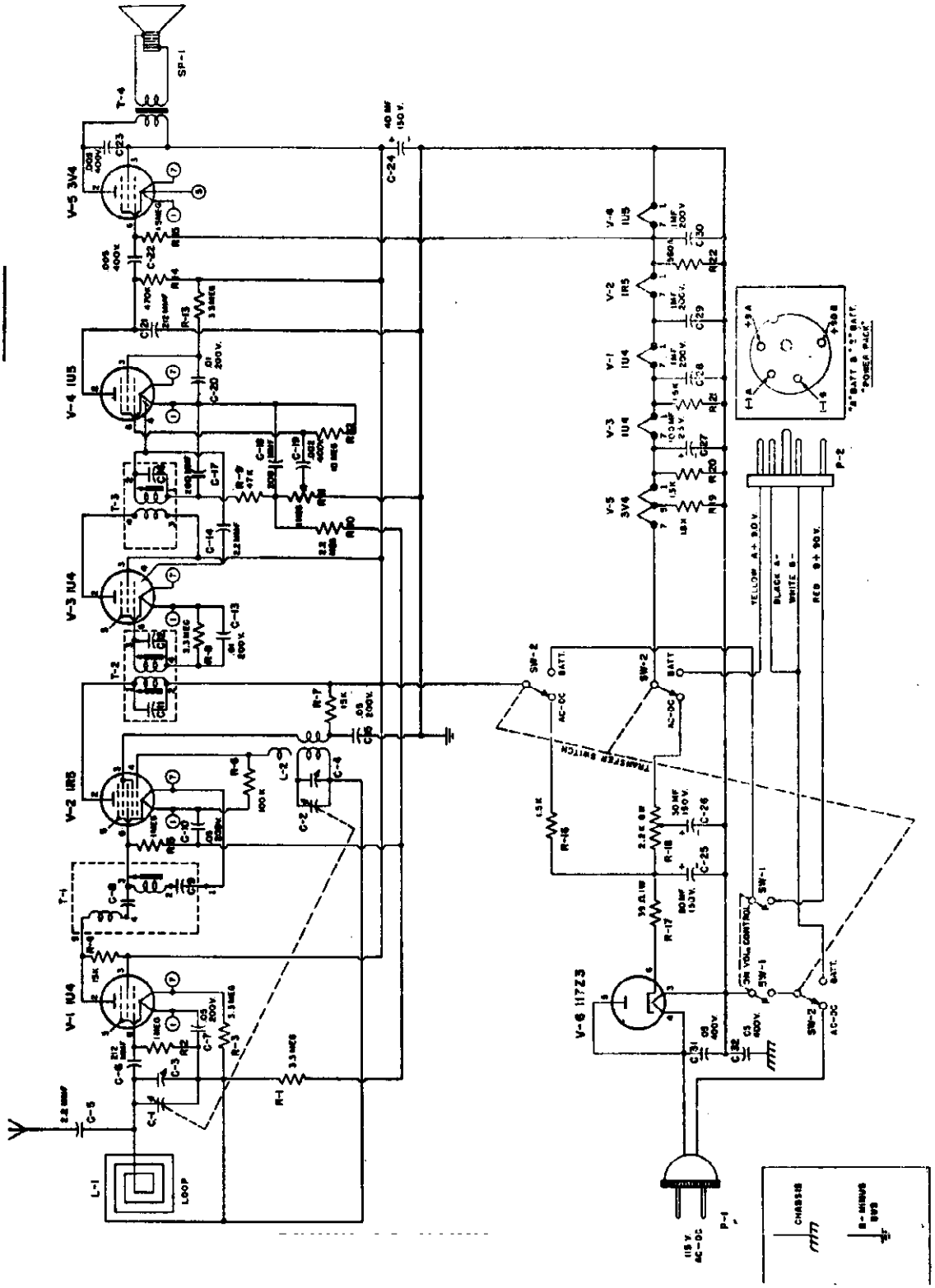

Fig. 2—Schematic Diagram, Chassis 120068B

©John F. Rider

MODEL 575, Ch. 120068A, 120068B

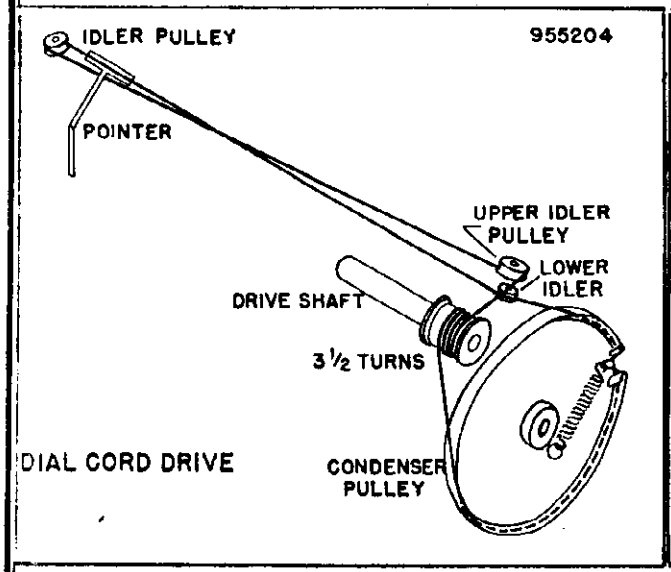

Fig. 3—Dial Cord Stringing

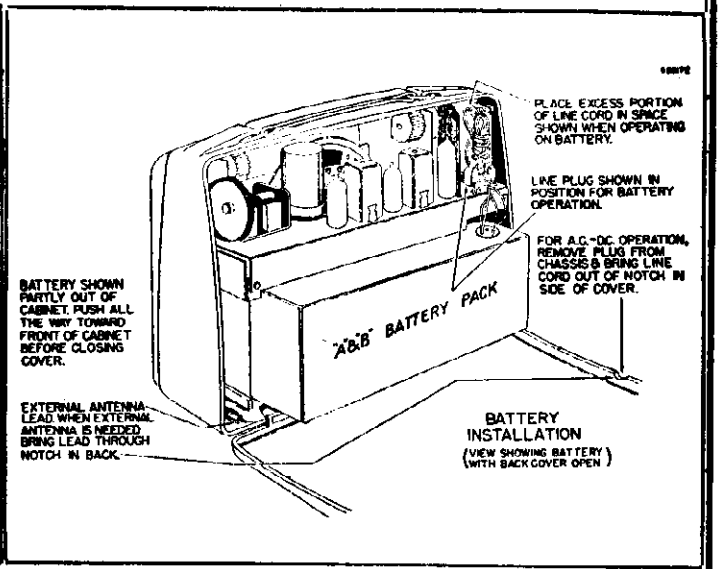

Fig. 4—Battery Replacement

CABINET AND DIAL PARTS

†PART No.	DESCRIPTION	†PART No.	DESCRIPTION
140182°	Cabinet	460082°	Knob
140183S°	Cabinet back, with hinge springs	808205	Cabinet catch clip
460081°	Speaker grille	280079	Cover catch stud
520092	Dial crystal	525041	Dial pointer
520085	Dial backplate	280070	Drive shaft
595006°	Handle, with rings	530002	Drive cord (30")
		587040	Drive cord spring

°Specify color when ordering

950136

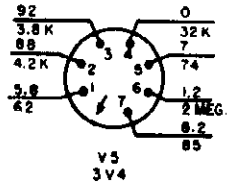

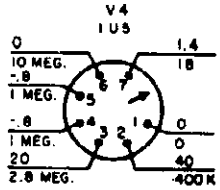

CONDITIONS FOR VOLTAGE AND RESISTANCE READINGS

1. Measurements made for 120 volt a.c. operation.
2. Voltages shown are + d.c. unless otherwise indicated.
3. All measurements made with voltohmyst or equivalent.
4. Upper values are voltage, lower values resistance on diagram. NC=no connection; K=kilohms; Meg.=megohms; INF.=infinity.
5. Measurements made on Chassis 120068B.
6. Normal tolerance on components makes possible a variation of ±15% from readings shown.

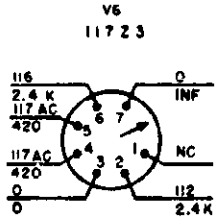

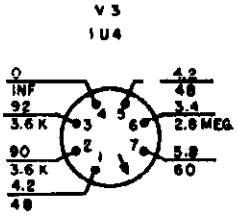

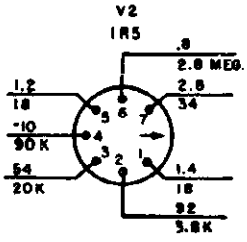

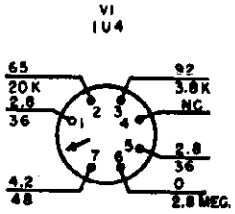

Fig. 5—Voltage and Resistance Readings—Model 575

© John F. Rider

MODEL 575, Ch. 120068A, 120068B

REPLACEMENT PARTS LIST

CHASSIS 120068A

Symbol	†Part No.	DESCRIPTION
C-1	900043	Variable Condenser—Antenna
C-2		Variable Condenser—Oscillator
C-3	Pt. of C-1	Trimmer
C-4	Pt. of C-2	Trimmer
C-5	920060	.05 mf., paper, 200v,
C-6	928104 or 910000	212 mmf., ceramic, 300v, ±20% 220 mmf., mica, ±20%
C-7	Pt. of L-2	Trimmer
C-8	920060	.05 mf., paper, 200v
C-9	920060	.05 mf., paper, 200 v
C-10		
C-11	Pt. of T-1	
C-12	920092	.01 mf., paper, 200 v
C-13		
C-14	Pt. of T-2	
C-15	915005	2.2 mmf., Ceramic, ±20%
C-16		200 mmf., diode
C-17	928032	200 mmf., filter
C-18	920515	.002 mf., paper, 400v
C-19	920092	.01 mf., paper, 200v
C-20	928104 or 910000	212 mmf., ceramic, 300v ±20% 220 mmf., mica, ±20%
C-21	920180	.005 mf., paper, 400v
C-22	920180	.005 mf., paper, 400v
C-23		40 mf., 150v
C-24	925059-	80 mf., 150v electrolytic
C-25		30 mf., 150v electrolytic
C-26		100 mf., 25v
C-27	920040	.1 mf., paper, 200v
C-28	920040	.1 mf., paper, 200v
C-29	920040	.1 mf., paper, 200v
C-30	920539	.05 mf., paper, 400v
L-1	700039	Loop Antenna
L-2	708060	Wave trap
L-3	716029	Oscillator coil
P-1	583012P	Line cord and plug
P-2	585033	Battery cable and plug assembly
R-1	351330	3.3 megohm, carbon, ½w, ±20%
R-2	351330	3.3 megohm, carbon, ½w, ±20%
R-3	340770	15,000 ohm, carbon, ½w, ±10%
R-4	351130	470,000 ohm, carbon, ½w, ±20%
R-5	350970	100,000 ohm, carbon, ½w, ±20%
R-6	340770	15,000 ohm, carbon, ½w, ±10%
R-7	351330	3.3 megohm carbon, ½w, ±20%
R-8	Pt. of C-16 and C-17	47,000 ohm, carbon, ½w, ±10%
R-9	390063	1 megohm, Volume Control
R-10	351450	10 megohm, carbon, ½w, ±20%
R-11	351290	2.2 megohm, carbon, ½w, ±20%
R-12	351330	3.3 megohm, Carbon, ½w, ±20%
R-13	351130	470,000 ohm, carbon, ½w, ±20%
R-14	351250	1.5 megohm, carbon, ½w, ±20%
R-15	340530	1,500 ohm, carbon, ½w, ±10%
R-16	370150	39 ohm, carbon, 1 w, ±10%
R-17	394041	2,200 ohm, w.w., 8w, ±5%
R-18	340550	1,800 ohm, carbon, ½w, ±10%
R-19	340530	1,500 ohm, carbon, ½w, ±10%
R-20	340530	1,500 ohm, carbon, ½w, ±10%
R-21	340430	560 ohm, carbon, ½w, ±10%
T-1	720525 or 720062	1st. and 2nd. I-F transformer I.F. transformer
T-2	720066	Diode I-F single tuned transformer
T-3	734039	Output transformer
SP-1	180052	PM Speaker—5"
SW-1	Pt. of R-9	On-off switch
SW-2	510008	Transfer switch
V-1	800017	R-F amplifier—1U4
V-2	800110	Converter—1R5
V-3	800017	I-F amplifier—1U4
V-4	800019	Detector, a.v.c., a-f amp.—1U5
V-5	800018	Power output—3V4
V-6	800013	Rectifier—117Z3

CHASSIS 120068B

Symbol	†Part No.	DESCRIPTION
C-1	900043	Variable condenser—Antenna
C-2		Variable condenser—Oscillator
C-3	Pt. of C-1	Trimmer
C-4	Pt. of C-2	Trimmer
C-5	Pt. of L-1	2.2 mmf.
C-6	928104 or 910000	212 mmf., ceramic, 300v, ±20% 220 mmf., mica, ±20%
C-7	920060	.05 mf., paper, 200v, ±25%
C-8	Pt. of T-1	
C-9	Pt. of T-1	
C-10	920060	.05 mf., paper, 200v, ±25%
C-11	Pt. of T-2	
C-12	Pt. of T-2	
C-13	920092	.01 mf., paper, 200v
C-14	915005	2.2 mmf., ceramic, ±20%
C-15	920060	.05 mf., paper, 200v
C-16	Pt. of T-3	
C-17	928032	200 mmf., diode
C-18		200 mmf., filter
C-19	920515	.002 mf., paper, 400v
C-20	920092	.01 mf., paper, 200v
C-21	928104 or 910000	212 mmf., ceramic, 300v, ±20% 220 mmf., mica, ±20%
C-22	920180	.005 mf., paper, 400v
C-23	920180	.005 mf., paper, 400v
C-24		40 mf., 150v
C-25	925059-A	80 mf., 150v electrolytic
C-26		30 mf., 150v electrolytic
C-27		100 mf., 25v
C-28	920040	.1 mf., paper, 200v
C-29	920040	.1 mf., paper, 200v
C-30	920040	.1 mf., paper, 200v
C-31	920539	.05 mf., paper, 400v
C-32	920539	.05 mf., paper, 400v
L-1	700042	Loop antenna
L-2	716029	Oscillator coil
P-1	583017-P	Line cord and plug
P-2	585033	Battery cable and plug assy.
R-1	351330	3.3 megohm, carbon, ½w, ±20%
R-2	351210	1 megohm, carbon, ½w, ±20%
R-3	351330	3.3 megohm, carbon, ½w, ±20%
R-4	340770	15,000 ohm, carbon, ½w, ±10%
R-5	351210	1 megohm, carbon, ½w, ±20%
R-6	350970	100,000 ohm, carbon, ½w, ±20%
R-7	340770	15,000 ohm, carbon, ½w, ±10%
R-8	351330	3.3 megohm, carbon, ½w, ±20%.
R-9	Pt. of C-17 and C-18	47,000 ohm, carbon, ½w, ±10%
R-10	351290	2.2 megohm, carbon, ½w, ±20%
R-11	390063	1 megohm, volume control
R-12	351450	10 megohm, carbon, ½w, ±20%
R-13	351330	3.3 megohm, carbon, ½w, ±20%
R-14	351130	470,000 ohm, carbon, ½w, ±20%
R-15	351250	1.5 megohm, carbon, ½w, ±20%
R-16	340530	1,500 ohm, carbon, ½w, ±10%
R-17	370150	39 ohm, carbon, 1w, ±10%
R-18	394041	2,200 ohm, w.w., 8w, ±5%
R-19	340550	1,800 ohm, carbon, ½w, ±10%
R-20	340530	1,500 ohm, carbon, ½w, ±10%
R-21	340530	1,500 ohm, carbon, ½w, ±10%
R-22	340430	560 ohm, carbon, ½w, ±10%
T-1	708029	Wave trap
T-2	720525 or 720062	1st. and 2nd. I-F transformer 1st. and 2nd. I-F transformer
T-3	720066	Diode I-F single tuned transformer
T-4	734039-A	Output transformer
SP-1	180052	PM Speaker—5"
SW-1	Pt. of R-11	On-off switch
SW-2	510043	Transfer switch
V-1	800017	R-F amplifier—1U4
V-2	800110	Converter—1R5
V-3	800017	I-F amplifier—1U4
V-4	800019	Detector, a.v.c., a-f amp.—1U5
V-5	800018	Power output—3V4
V-6	800013	Rectifier—117Z3

†Specify part number when ordering

©John F. Rider

©John F. Rider

REPLACEMENT PARTS LIST

Symbol	†Part No.	DESCRIPTION
V1	12SA7GT	Converter
V2	12SK7GT	I-f ampifier
V3	12SQ7GT	Detector, a.v.c., a-f amplifier
V4	50L6GT	Power output
V5	35Z5GT	Rectifier
C1	920040	.1 mfd., 200 volt, paper
C2	920010	.002 mfd., 600 volt, paper
C3, C4	910000	220 mmf., mica (alt. part 928104)
C5	920180	.005 mfd., 400 volt, paper
C6	920020	.02 mfd., 400 volt, paper
C7	925009	50-50 mfd., 150 volt, elect.
C8	920030	.05 mfd., 400 volt, paper
C9	920052 900035*	Two-gang, variable condenser
C10	920050#	.2 mfd., 200 volt, paper
R1, R5	351490	15 megohms, ½ watt
R2	340810# Part of L2	22 kilohms, ½ watt

Symbol	†Part No.	DESCRIPTION
R3	351330	3.3 megohms, ½ watt
R4	390015	.5 megohm, volume cont.
R6, 7	351130	470 kilohms, ½ watt
R8	340290	150 ohms, ½ watt
R9	370490	1000 ohms, 1 watt
R10	370150	39 ohms, 1 watt
R11	351050#	220 kilohms, ½ watt
L1	700033	Loop antenna
L2	716024 716026#	Oscillator coil
T1	720525	First i-f transformer
T2	720529	Second i-f transformer
T3	734031	Output transformer
SP1	180045	P.M. speaker
SW1	Part of R4	Line Switch
P.L.	807000	Dial light, 6-8v., .15 amp.
	507090	Dial light socket
	583060 583010P#	Line cord and plug

† Specify part number when ordering. # Chassis 120014B only. * Chassis 120071A only.

CABINET AND DIAL PARTS

DESCRIPTION	Model 581 Chassis 120014A, 14B	Model 594 Chassis 120071A	Model 595 Chassis 120071A
Cabinet, ivory plastic	140267	140197	———
walnut plastic	———	140190	———
ebony plastic	———	140198	———
walnut wood	———	———	140195
Knob, ivory plastic	460151	———	———
clear plastic	———	460107	460107
Dial crystal	520034	520074 or 520034	520077 or 520080
Dial pointer, ivory	525042	———	———
black	———	525036	525036
Dial backplate	520105	520050	520050
Drive shaft	280024	280024	280024
Drive cord	530050 (12")	530050 (10½")	530050 (10½")
Drive spring	587000	587000	587000
Cabinet back	575059	575059	575285
Handle	460151	———	———

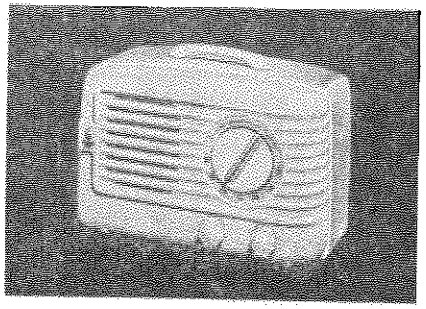

MODEL 581

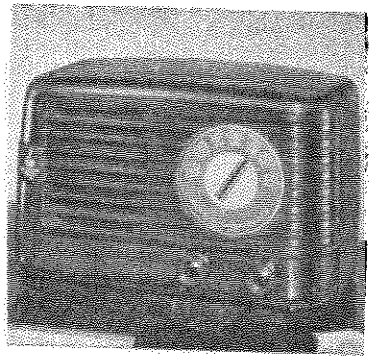

MODEL 594

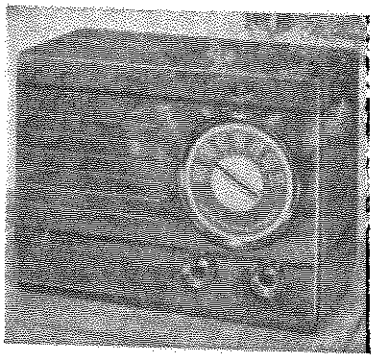

MODEL 595

© John F. Rider

INSTRUCTIONS FOR VOLTAGE AND RESISTANCE READINGS

1. Voltage readings are in d.c. volts and resistance readings in ohms unless otherwise specified.
2. All measurements made with voltohmyst.
3. Socket connections are shown as bottom views.
4. Measured values are from socket pin to common negative, unless otherwise specified.
5. Line voltage maintained at 117 volts for voltage readings.
6. Nominal tolerance on component values makes possible a variation of ± 15% in voltage and resistance readings.
7. Volume control at maximum with no signal applied, for voltage measurements.

VOLTAGE READINGS

SYMBOL	TUBE	PIN 1	PIN 2	PIN 3	PIN 4	PIN 5	PIN 6	PIN 7	PIN 8
V1	12SA7GT	0	24 AC	95	95	-13	0	12 AC	-2
V2	12SK7GT	0	36 AC	0	-2	0	95	24 AC	95
V3	12SQ7GT	0	-1	0	-2	-.5	55	0	12 AC
V4	50L6GT	NC	90 AC	110	95	0	NC	36 AC	6
V5	35Z5GT	NC	117 AC	112 AC	114	110 AC	NC	90 AC	114

RESISTANCE READINGS

SYMBOL	TUBE	PIN 1	PIN 2	PIN 3	PIN 4	PIN 5	PIN 6	PIN 7	PIN 8
V1	12SA7GT	0	48	1K*	1K*	24K	0	32	3 Meg.
V2	12SK7GT	0	60	0	3 Meg.	0	1K*	48	1K*
V3	12SQ7GT	0	15 Meg.	0	3 Meg.	.5 Meg.	540K*	0	32
V4	50L6GT	NC	110	160*	900*	.5 Meg.	NC	60	150
V5	35Z5GT	NC	148	145	0*	190	NC	110	0*

NC = no connection; K = kilohm; Meg. = megohm.
* Readings taken to pin 8 of V5.

ALIGNMENT PROCEDURE

1. Use isolation transformer if available. If not, connect a 0.1 mfd. condenser in series with low side of signal generator and chassis.
2. Volume control should be at maximum position; output of signal generator should be no higher than necessary to obtain an output reading.
3. Use an insulated alignment screwdriver for adjusting.

	DUMMY ANTENNA	SIGNAL GENERATOR COUPLING	SIGNAL GENERATOR FREQUENCY	RADIO DIAL SETTING	METER OUTPUT	ADJUST	REMARKS
1	0.1 mfd.	High side to pin 8 (grid) of 12SA7GT (V1). Low side to chassis.	455 kc	Variable condenser fully open.	Across voice coil.	T2, T1,	Adjust for maximum output. If isolation transformer is not used, reduce dummy antenna to 0.001 mfd. to reduce hum modulation.
2	200 mmfd.	High side to external antenna lead. Low side to chassis.	1620 kc	Variable condenser fully open.	Across voice coil.	Trimmer condenser on oscillator section C9B.	Adjust for maximum output.
3	200 mmfd.	High side to external antenna lead. Low side to chassis.	1450 kc	Tune for maximum output.	Across voice coil.	Trimmer condenser on antenna section C9A.	Adjust for maximum output.

DESCRIPTION

TYPE: Single band (AM) superheterodyne

FREQUENCY RANGE: 540-1620 KC.

TYPES OF TUBES:

1—12SA7GT converter
1—12SK7GT i-f amplifier
1—12SQ7GT detector, a.v.c., a-f amplifier
1—50L6GT power output
1—35Z5GT rectifier

NOTE: Metal tubes, types 12SA7, 12SK7, and 12SQ7 may be used on same chassis.

POWER SUPPLY: A.c. or d.c.

VOLTAGE RATING: 105-125 volts

POWER CONSUMPTION: 30 watts

CURRENT DRAIN: 0.24 amp. at 117 volts a.c.

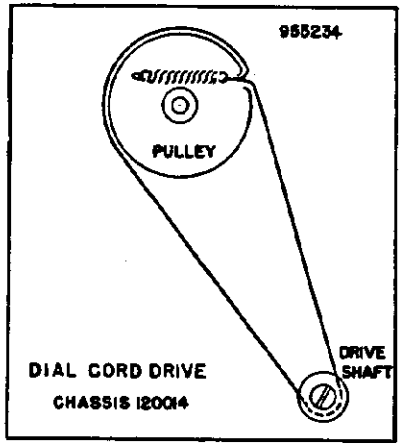

MODELS 581, Ch. 120014A,
120014B; 594, 595, Ch. 120071A

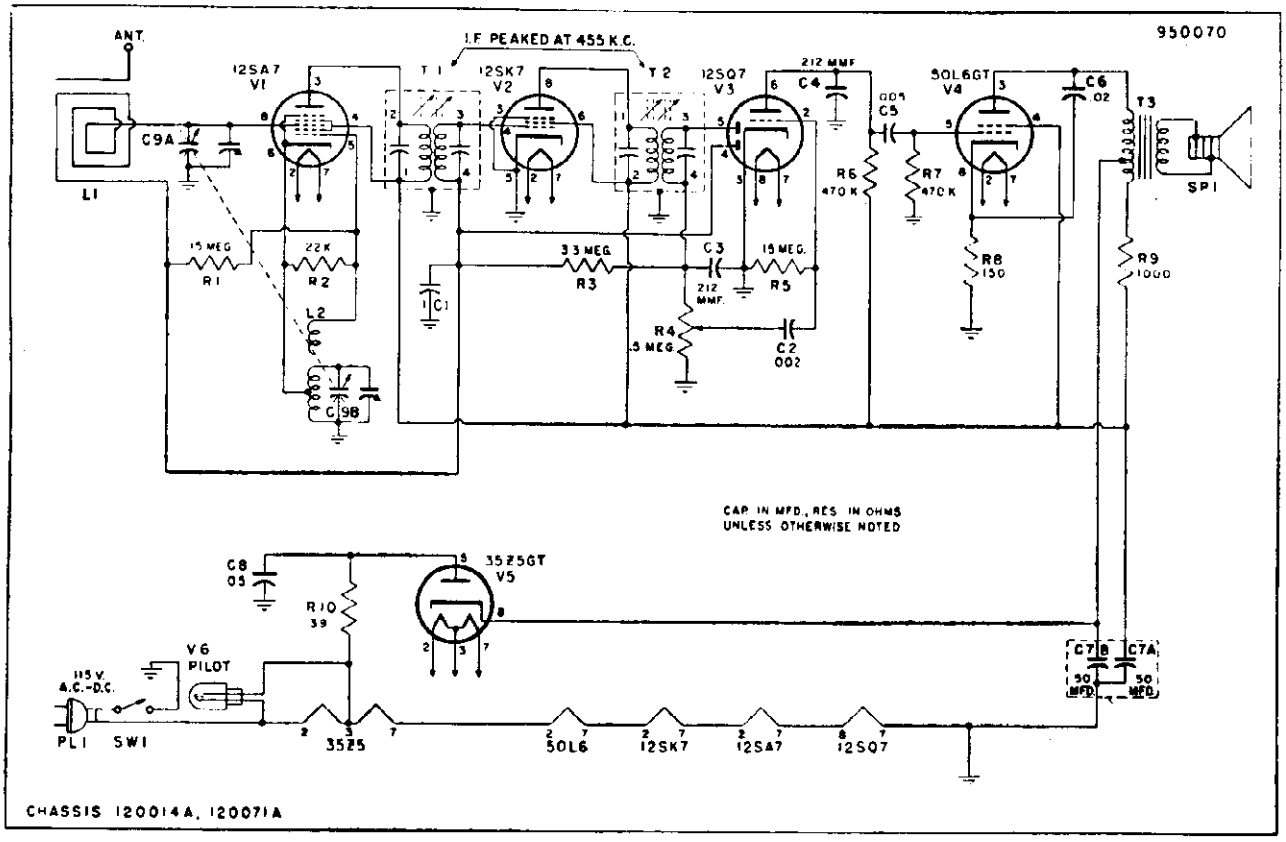

SCHEMATIC CIRCUIT DIAGRAM — Chassis 120014A, Model 581
Chassis 120071A, Models 594, 595

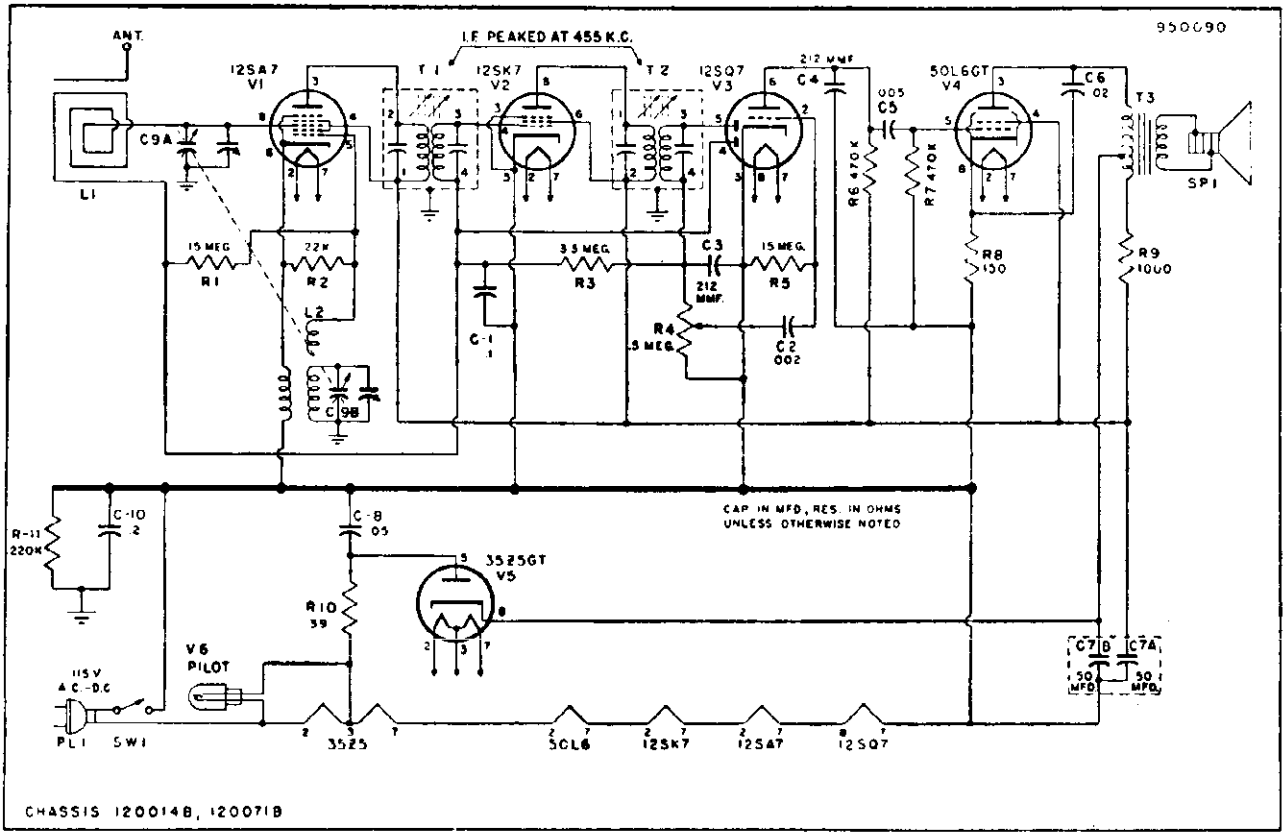

SCHEMATIC CIRCUIT DIAGRAM — Chassis 120014B, Model 581

©John F. Rider

MODELS 587, Ch. 120033A, 120033B; 610,616, Ch. 120100A, 120100B

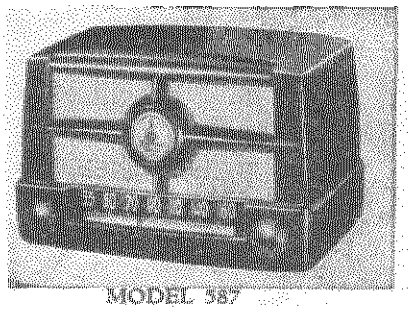

MODEL 587

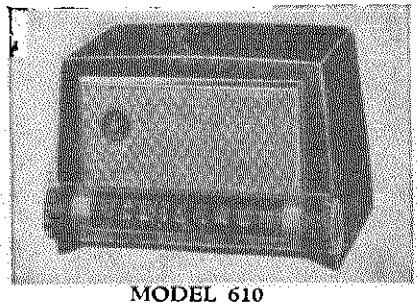

MODEL 610

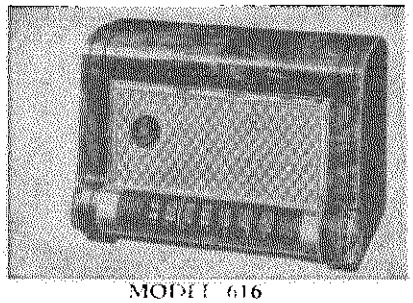

MODEL 616

REPLACEMENT PARTS LIST

CHASSIS 120033A, 120100A

Symbol	† Part No.	DESCRIPTION
V1	12SA7GT	Converter
V2	12SK7GT	I-f amplifier
V3	12SQ7GT	Detector, a.v.c., a-f amplifier
V4	50L6GT	Power output
V5	35Z5GT	Rectifier
C1, C2	900023	Two-gang, variable condenser
C3	920040	.1 mfd., 200 volt, paper
C4	920515	.002 mfd., 400 volt, paper
C5, C6	910000	220 mmf., mica (Alt. part 928104)
C7	920180	.005 mfd., 400 volt, paper
C8	920020	.02 mfd., 400 volt, paper
C9	920030	.05 mfd., 400 volt, paper
C10, C11	925061	30-50 mfd., 150 volt, electrolytic
L1	700023FH	Loop antenna
L2	716018	Oscillator coil
R1, R4	351490	15 megohms, ½ watt
R2	Part of L2	22 kilohms, ½ watt
R3	351330	3.3 megohms, ½ watt
R5, R6	351130	470 kilohms, ½ watt
R7	340290	150 ohms, ½ watt
R8	370490	1000 ohms, 1 watt
R9	370150	39 ohms, 1 watt
R10	390024	.5 megohms, volume control (Alt. part 390062) #.
T1	720021	First i-f transformer
T2	720021	Second i-f transformer
T3	734023	Output transformer
SP1	180032H	P.M. speaker
SW1	Part of R10	Line switch
P.L.	807000	Dial light*
	507003	Dial light socket*
	583005	Line cord

CHASSIS 120033B, 120100B

Symbol	† Part No.	DESCRIPTION
V1	12SA7GT	Converter
V2	12SK7GT	I-f amplifier
V3	12SQ7GT	Detector, a.v.c., a-f amplifier
V4	50L6GT	Power output
V5	35Z5GT	Rectifier
C1, C2	900023	Two-gang, variable condenser
C3, C9	920030	.05 mfd., 400 volt, paper
C4	920515	.002 mfd., 400 volt, paper
C5, C6	910000	220 mmf., mica (Alt. part 928104)
C7	920180	.005 mfd., 400 volt, paper
C8	923082	.02 mfd., 400 volt, paper
C10, C11	925061	30-50 mfd., 150 volt, electrolytic
C12	920040	.1 mfd., 200 volt, paper
L1	700023FH	Loop antenna
L2	716026	Oscillator coil
R1, R4	351490	15 megohms, ½ watt
R2	340810	22 kilohms, ½ watt
R3	351330	3.3 megohms, ½ watt
R5, R6	351130	470 kilohms, ½ watt
R7	340290	150 ohms, ½ watt
R8	370490	1000 ohms, 1 watt
R9	370150	39 ohms, 1 watt
R10	390024	.5 megohm, volume control (Alt. part 390062)°
R11	351050	220 kilohms, ½ watt
T1	720021	First i-f transformer
T2	720021	Second i-f transformer
T3	734024	Output transformer
SP1	180032H	P.M. speaker
SW1	Part of R10	Line switch
P.L.	807000	Dial light△
	507003	Dial light socket△
	583013P	Line cord

* Chassis 120033A only; # Chassis 120100A only. △Chassis 120033B only; °Chassis 120100B only.

CABINET AND DIAL PARTS

DESCRIPTION	Model 587	Model 610	Model 616
Cabinet	140265 (Brown)	460097	140239A (Wood)
Grille	140275 (Ebony)	140168 (Plastic)	460097
Baffle	470454 (Grille & baffle)	575448	575448
Knob	450115	460088	460088
Drive shaft	280035	280055	280055
Dial drive cord	530002 (28")	530002 (31")	530002 (31")
Dial drive spring	587040	587040	587040
Dial backplate	520048	520104	520104
Pointer	525023	525033	525033

©John F. Rider

MODELS 587, Ch. 120033A, 120033B;
610, 616, Ch. 120100A, 120100B

DESCRIPTION

TYPE: Single-band (AM) superheterodyne.

FREQUENCY RANGE: 540-1620 kc.

TYPE OF TUBES:

1—12SA7GT, converter

1—12SK7GT i-f amplifier

1—12SQ7GT, detector, a.v.c., a-f amplifier

1—50L6GT, power output

1—35Z5GT, rectifier

POWER SUPPLY: A.c. or d.c.
VOLTAGE RATING: 105-125 volts.
POWER CONSUMPTION: 30 watts.
CURRENT DRAIN: 0.24 amp. at 117 volts a.c.

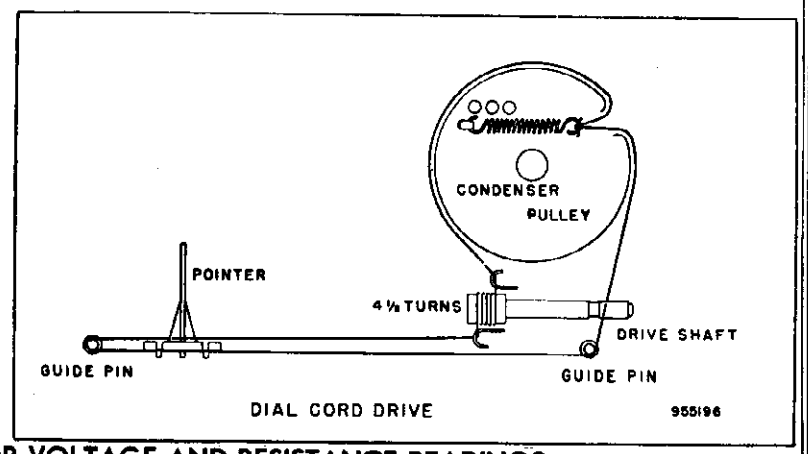

INSTRUCTIONS FOR VOLTAGE AND RESISTANCE READINGS

1. Voltage readings are d.c. volts and resistance readings in ohms, unless otherwise specified.
2. All measurements made with voltohmyst.
3. Socket connections are shown as bottom views.
4. Measured values are from socket pin to common negative, unless otherwise noted.
5. Line voltage maintained at 117 volts a.c. for voltage readings.
6. Nominal tolerance on component values makes possible a variation of ± 15% in voltage and resistance readings.
7. Volume control at maximum with no signal applied, for voltage measurements.

VOLTAGE READINGS

SYMBOL	TUBE	PIN 1	PIN 2	PIN 3	PIN 4	PIN 5	PIN 6	PIN 7	PIN 8
V1	12SA7GT	0	25AC	92	92	-10	0	12AC	-1.0
V2	12SK7GT	0	36AC	0	-1.0	0	92	25AC	92
V3	12SQ7GT	0	-1.0	0	-.8	0	60	0	12AC
V4	50L6GT	0	36AC	110	92	0	0	83AC	5.4
V5	35Z5GT	NC	117AC	NC	NC	115AC	0	83AC	116

RESISTANCE READINGS

SYMBOL	TUBE	PIN 1	PIN 2	PIN 3	PIN 4	PIN 5	PIN 6	PIN 7	PIN 8
V1	12SA7GT	230K	32	880*	880*	24K	0	16	3 Meg.
V2	12SK7GT	230K	48	0	3 Meg.	0	880*	32	880*
V3	12SQ7GT	230K	14 Meg.	0	550K	0	450K*	0	16
V4	50L6GT	230K	48	220*	880*	500K	0	108	150
V5	35Z5GT	NC	150	NC	NC	190	0	108	0*

K=kilohms; Meg.=megohms; NC=no connection; * Measured to pin 8 of V5, 35Z5GT.

ALIGNMENT INSTRUCTIONS

1. To position pointer, turn variable condenser fully closed and set pointer to reference mark at low frequency end of dial backplate.
2. Use isolation transformer if available. If not, connect a 0.1 mfd. condenser in series with low side of signal generator and chassis.
3. Volume control should be at maximum position; output of signal generator should be no higher than necessary to obtain an output reading.
4. Use an insulated alignment tool for all adjustments.

ALIGNMENT PROCEDURE

	DUMMY ANTENNA	SIGNAL GENERATOR COUPLING	SIGNAL GENERATOR FREQUENCY	RADIO DIAL SETTING	METER OUTPUT	ADJUST	REMARKS
1	0.1 mfd.	High side to grid (pin 8) of 12SA7GT(V1). Low side to chassis.	455 kc.	Variable condenser fully open.	Across voice coil.	Second i-f trans. T2 and first i-f trans. T1.	Adjust for maximum output. If isolation transformer is not used, reduce dummy antenna to .001 mfd. to reduce hum modulation.
2	200 mmfd.	High side to external antenna lead. Low side to chassis.	1620 kc.	Variable condenser fully open.	Across voice coil.	Oscillator trimmer on C2.	Adjust for maximum output.
3	200 mmfd.	High side to external antenna lead. Low side to chassis.	1450 kc.	Tune for maximum output.	Across voice coil.	Antenna trimmer on C1.	Adjust for maximum output.

©John F. Rider

MODELS 587, Ch. 120033A, 120033B;
610, 616, Ch. 120100A, 120100B

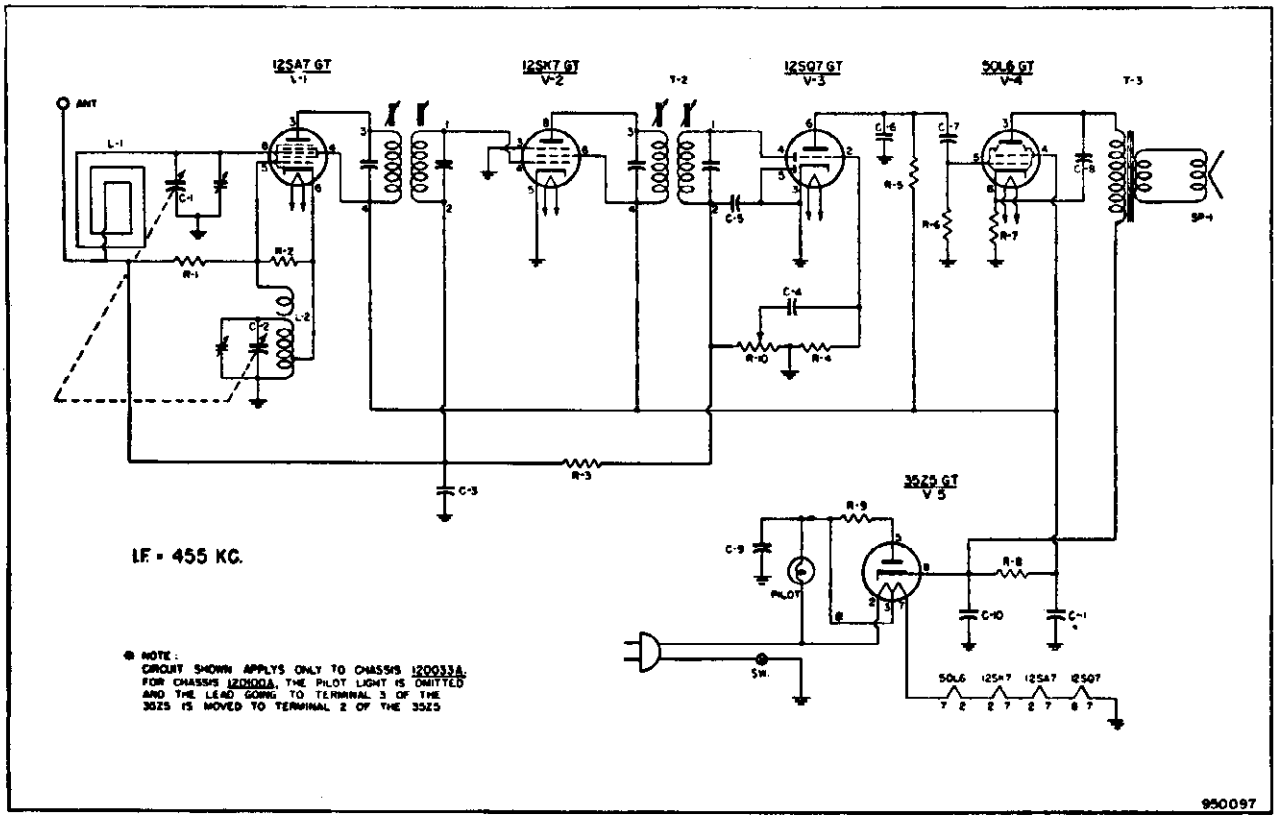

SCHEMATIC DIAGRAM—CHASSIS 120033A, 120100A

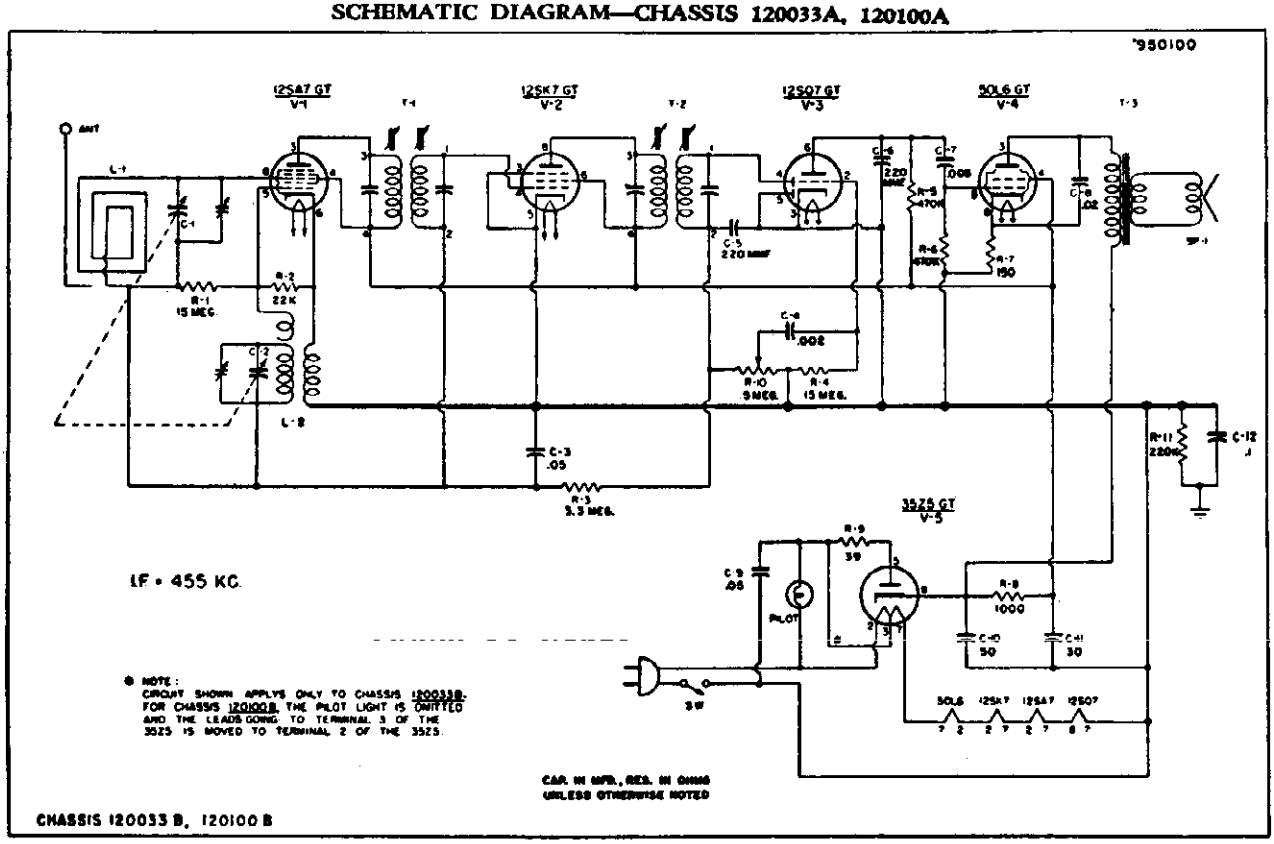

SCHEMATIC DIAGRAM—CHASSIS 120033B, 120100B

©John F. Rider

MODELS 590, 623, Ch. 120101A, 120101B; 635, Ch. 120108B

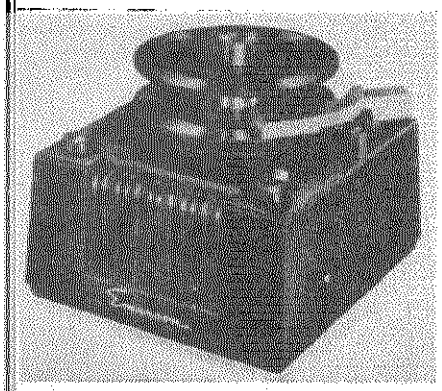

MODEL 590

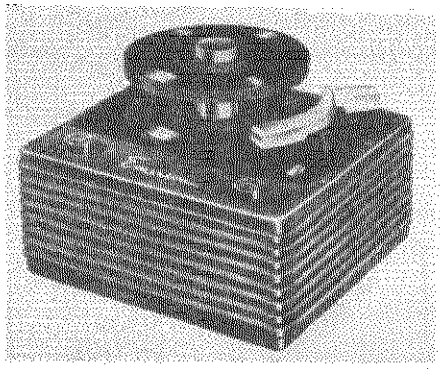

MODEL 623



MODEL 635

GENERAL NOTES

1. All models are equipped with an automatic record changer that plays up to ten 7-inch, 45 rpm records only. A permanent type needle is supplied.
2. If replacements are made or the wiring disturbed in the r-f section of Model 635, the receiver should be carefully realigned.
3. Model 635 has a self-contained antenna and does not require an additional antenna. For permanent installations, however, if it desired to improve reception of weak stations, an additional outdoor antenna may be connected to the colored lead at the rear of the cabinet.
4. The self-contained loop antenna has directional properties. It is important, therefore, once a station is tuned in, that the cabinet be rotated back and forth through a quarter-turn and left at that position where maximum volume is obtained.

DESCRIPTION

TYPE: Models 590, 623—Automatic phonograph, 45 rpm. Model 635—Single band superheterodyne with automatic record changer, 45 rpm.

FREQUENCY RANGE: 540-1620 kc.

TYPE OF TUBES:

Models 590, 623—Chassis 120101A or B.
1—12AV6, audio amplifier
1—50C5, audio output
1—35W4, rectifier

Model 635—Chassis 120108B
1—12BE6, converter
1—12BA6, i-f amplifier
1—12AT6, detector, a.v.c., a-f amplifier
1—50B5, power output
1—35W4, rectifier

POWER SUPPLY: 105-125 volts, 60 cycles a.c. only

POWER CONSUMPTION—50 watts.

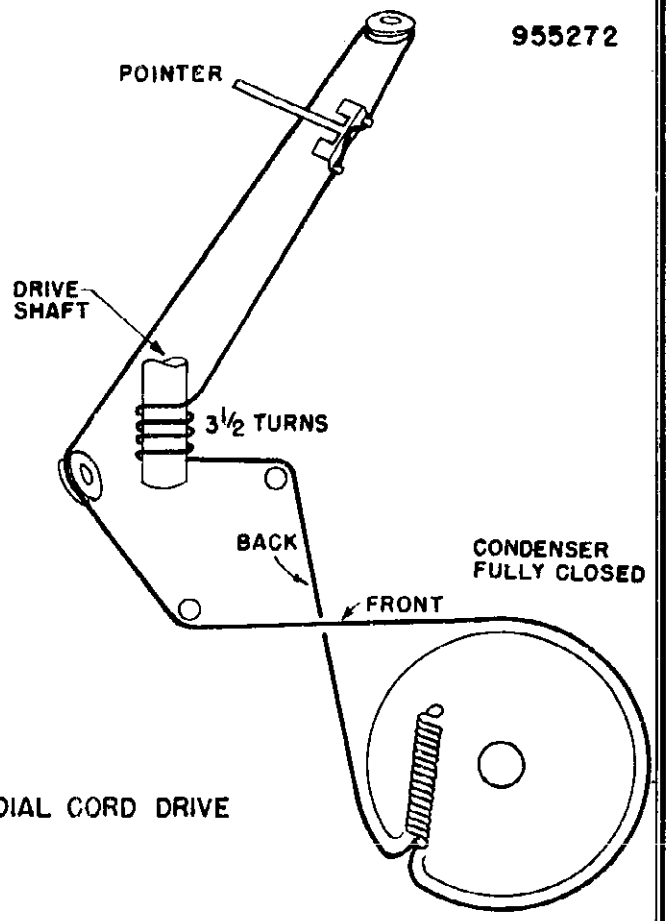

Dial Cord Stringing, Model 635

©John F. Rider

MODELS 590, 623, Ch. 120101A, 120101B; 635, Ch. 120108B

CONDITIONS FOR VOLTAGE AND RESISTANCE READINGS

1. Voltages indicated are positive d.c., resistances are in ohms, unless otherwise indicated.
2. Measurements made with voltohmyst or equivalent.
3. Line voltage maintained at 120 volts a.c. for voltage measurements.
4. Socket connections are shown as bottom views, with measurements from pin to common negative.
5. Volume control at maximum; radio-phono switch in radio position; no signal applied for Model 635 measurements.
6. Nominal tolerance on component values makes possible a variation of ± 15% in voltage and resistance readings.
7. On the diagrams, upper values are voltage; lower values are resistance. NC denotes no connection, K is kilohms, MEG is megohms, INF. is infinity. Resistances marked * are measured to pin 7 of rectifier (B+).

ALIGNMENT INSTRUCTIONS — MODEL 635

1. To position pointer, turn variable condenser fully closed and set pointer to reference mark at low-frequency end of dial backplate.
2. Use isolation transformer if available. If not, connect a .1 mfd. condenser in series with low side of signal generator and B—.
3. Volume control should be at maximum position; radio-phono switch in radio position. Output of signal generator should be no higher than necessary to obtain an output reading. Use an insulated screw driver for adjusting.

STEP	DUMMY ANTENNA	SIGNAL GENERATOR OUPLING	SIGNAL GENERATOR FREQUENCY	RADIO DIAL SETTING	OUTPUT METER	ADJUST	REMARKS
1	.1 mfd.	High side to grid (pin 7) of V1 (12BE6). Low side to chassis.	455 KC	Variable condenser fully open.	Across voice coil.	T2, T1	Adjust for maximum output. If isolation transformer is not used, reduce dummy ant. to .001 mfd. to reduce hum modulation.
2	200 mmf.	Form loop of several turns and radiate signal into receiver.	1620 KC	"	Across voice coil.	Trimmer C-4. (Osc.)	Adjust for maximum output.
3	200 mmf.	"	1400 KC	Tune for maximum output.	Across voice coil.	Trimmer C-3. (Ant.)	Adjust for maximum output.

950137

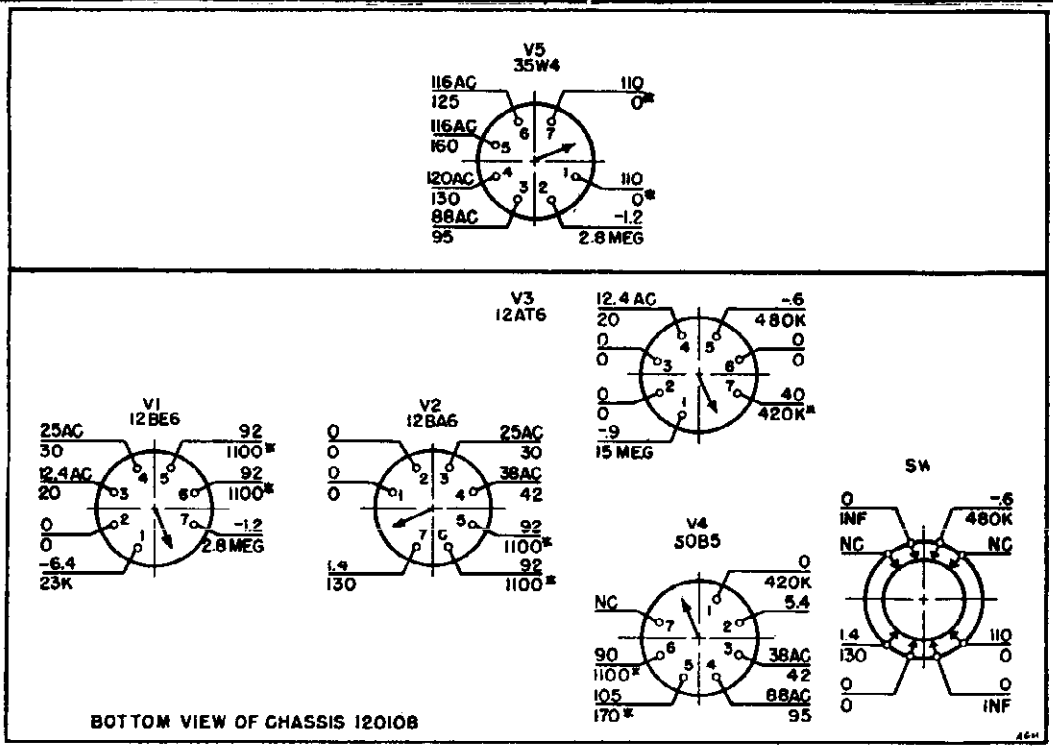

Voltage and Resistance Analysis—Chassis 120108B

MODELS 590, 623, Ch. 120101A, 120101B; 635, Ch. 120108B

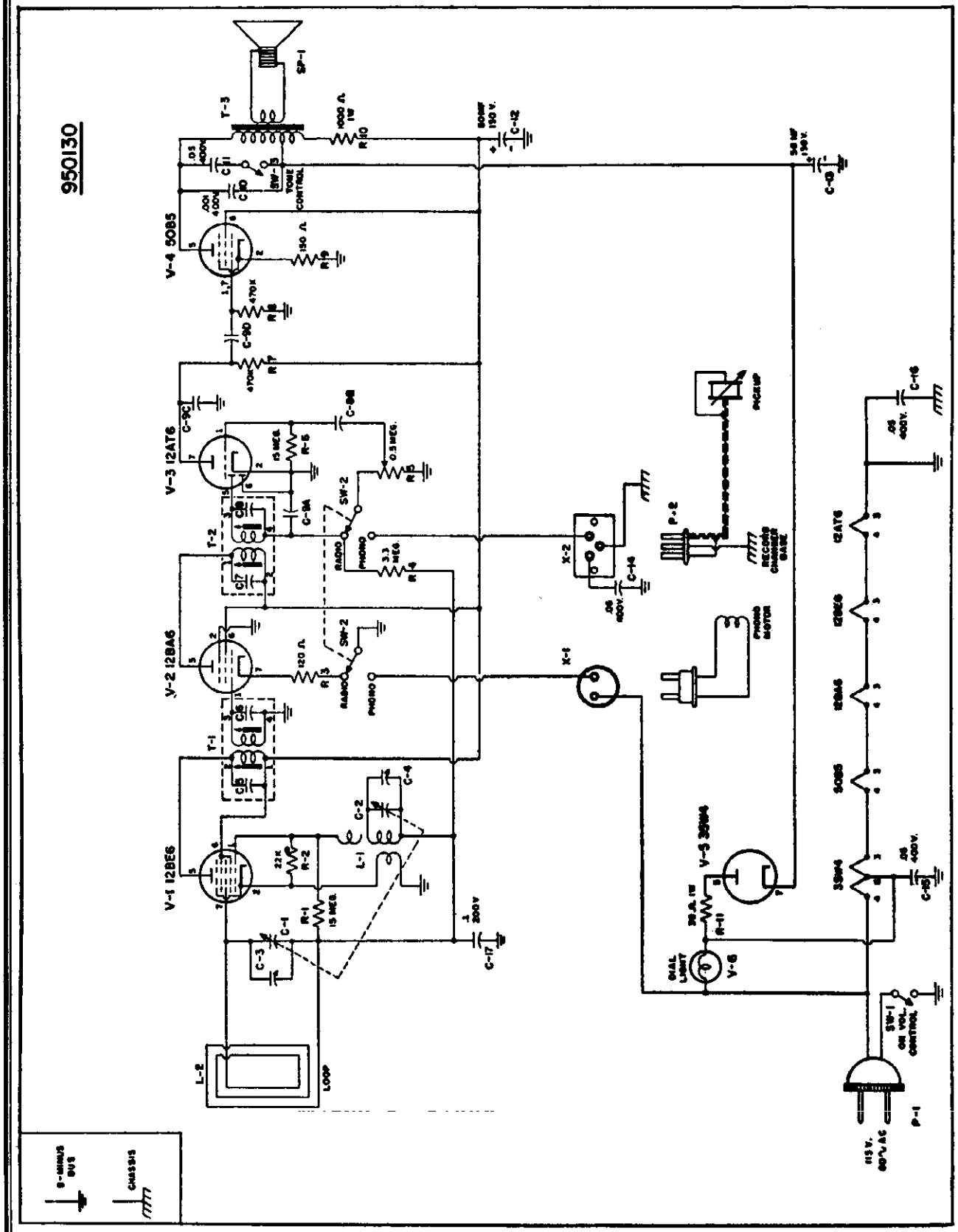

Schematic Diagram, Model 635—Chasis 120108B

©John F. Rider

MODELS 590, 623, Ch. 120101A, 120101B; 635, Ch. 120108B

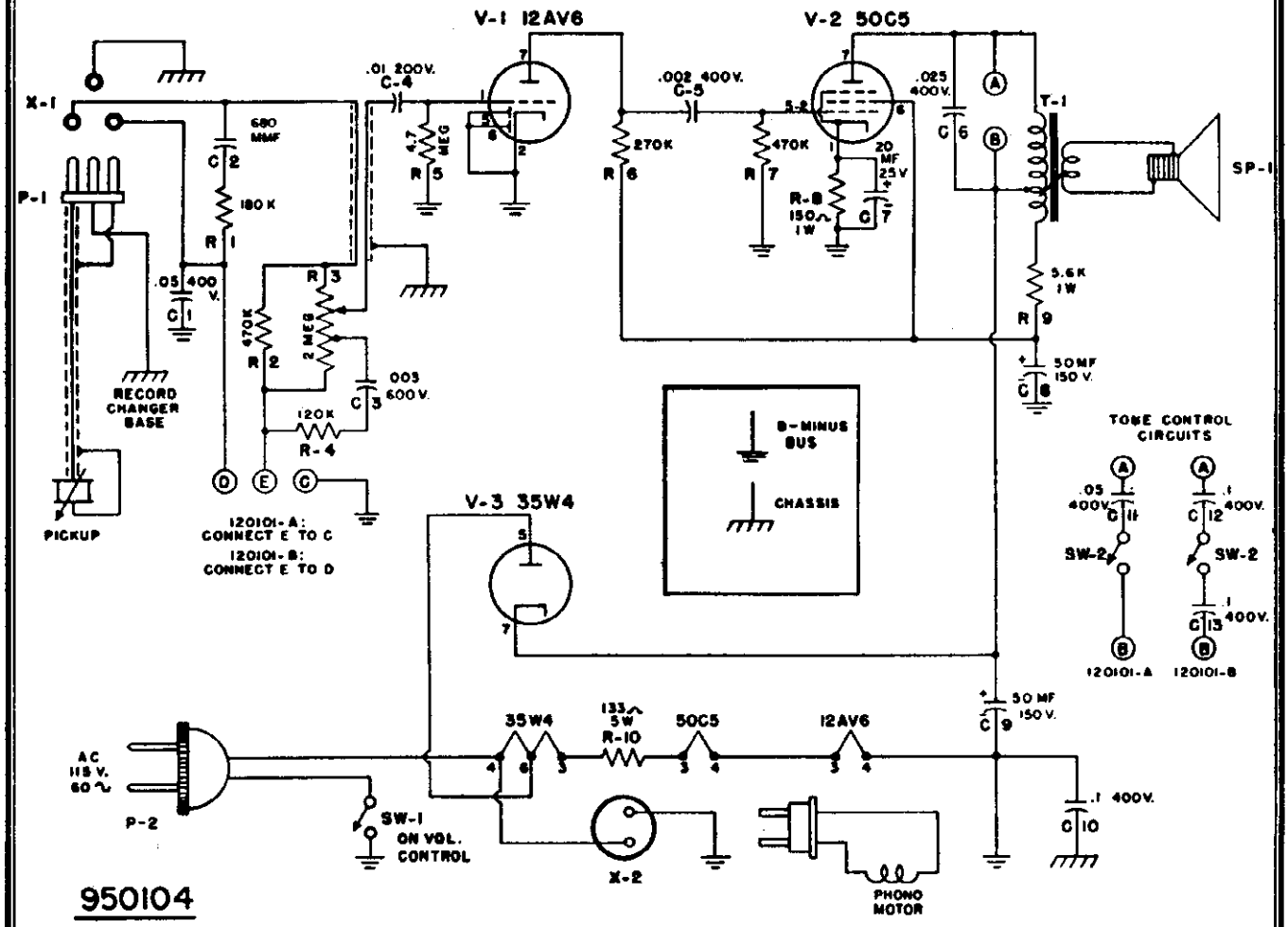

Schematic Diagram, Models 590, 623—Chassis 120101A, B

950138

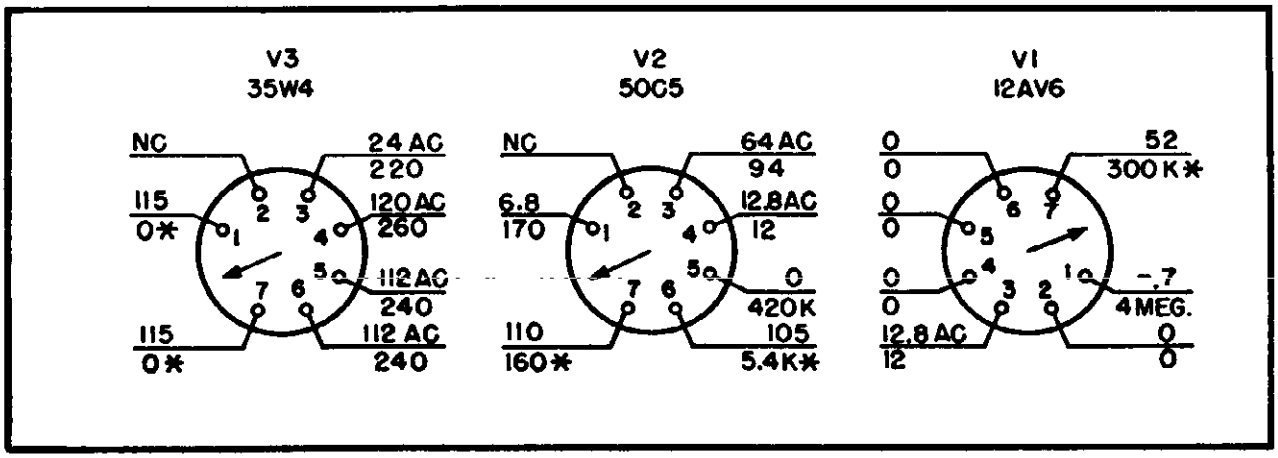

BOTTOM VIEW - CHASSIS 120101

Voltage and Resistance Analysis—Chassis 120101A, B

©John F. Rider

MODELS 590, 623, Ch. 120101A, 120101B; 635, Ch. 120108B

REPLACEMENT PARTS LIST

CHASSIS 120101A, 120101B

Symbol	†PART No.	DESCRIPTION
C-1	920030	.05 mf., paper, 400v
C-2	910009	680 mmf., mica,
C-3	920544	.003 mf., paper, 600v
C-4	920092	.01 mf., paper, 200v
C-5	920515	.002 mf., paper, 400v
C-6	920220	.025 mf., paper, 400v
C-7	925152	20 mf., 20v
C-8		50 mf., electrolytic, 150v
C-9		50 mf., 150v
C-10	920250	.1 mf., paper, 400v
C-11	920030	.05 mf., paper, 400v
C-12	920250	.1 mf., paper, 400v
C-13	920250	.1 mf., paper, 400v
P-1	505015	Pickup plug
P-2	583014	Line cord and plug
R-1	341030	180,000 ohm, carbon, ½w, ±10%
R-2	351130	470,000 ohm, carbon, ½w, ±20%
R-3	390083	2 megohm, volume control
R-4	340990	120,00 ohm, carbon, ½w, ±10%
R-5	351370	4.7 megohm, carbon, ½w, ±20%
R-6	351070	270,000 ohm, carbon, ½w, ±20%
R-7	351130	470,000 ohm, carbon, ½w, ±20%
R-8	370290	150 ohm, carbon, 1w, ±10%
R-9	370670	5,600 ohm, carbon, 1w, ±10%
R-10	394160	133 ohm, w.w., 5w, ±5%
SP-1	180052	PM Speaker—5"
SW-1	Pt. of R-3	On-off switch
SW-2	510048	Tone control switch
T-1	734049	Output transformer
V-1	800034	Audio amplifier—12AV6
V-2	800032	Audio output—50C5
V-3	800526	Rectifier—35W4
X-1	508003	Pickup socket
X-2	585037	Socket and cable assembly

CHASSIS 120108B

Symbol	†PART No.	DESCRIPTION
C-1	900066	Variable condenser—Antenna
C-2		Variable condenser—Oscillator
C-3	Pt. of C-1	Trimmer
C-4	Pt. of C-2	Trimmer
C-5	Pt. of T-1	
C-6	Pt. of T-1	
C-7	Pt. of T-2	
C-8	Pt. of T-2	
C-9A	470310	220 mmf. — Multiple condenser
C-9B		2000 mmf. — Multiple condenser
C-9C		220 mmf. — Multiple condenser
C-9D		5000 mf. — Multiple condenser
C-10	923109	.001 mf.,, paper, 600v
C-11	920030	.05 mf., paper, 400v
C-12	925163	50 mf., electrolytic, 150v
C-13		50 mf., electrolytic, 150v
C-14	923105	.05 mf., paper, 400v
C-15	920030	.05 mf., paper, 400v
C-16	920030	.05 mf., paper, 400v
C-17	920040	.1 mf., paper, 200v
L-1	716044	Oscillator coil
P-1	583023	Line cord and plug
R-1	351490	15 megohm, carbon, ½w, ±20%
R-2	340810	22,000 ohm, carbon, ½w, ±10%
R-3	340270	120 ohm, carbon, ½w, ±10%
R-4	351330	3.3 megohm, carbon ½w, ±20%
R-5	510069	500,000 ohm, volume, control
R-6	351490	15 megohm, carbon, ½w, ±20%
R-7	351130	470,000 ohm, carbon, ½w, ±20%
R-8	351130	470,000 ohm, carbon, ½w, ±20%
R-9	340290	150 ohm, carbon, ½w, ±10%
R-10	370490	1,000 ohm, carbon, 1w, ±20%
R-11	370150	39 ohm, carbon, 1w, ±20%
SP-1	180052	PM Speaker—5"
SW-1	Pt. of R-5	On-off switch
SW-2	Pt. of R-5	Radio-phono switch
SW-3	510068	Tone control switch
T-1	720055	1st. I.F. transformer
T-2	720055	2nd. I.F. transformer
T-3	734055	Output transformer
V-1	800525	Converter—12BE6
V-2	800524	I.F. amplifier—12BA6
V-3	800523	Detector, avc, a-f amp.—12AT6
V-4	800527	Power output—50B5
V-5	800526	Rectifier —35W4
V-6	807000	Dial light
X-1	585051	Cable and socket assembly
X-2	508003	Pickup socket

†Specify part number when ordering.

CABINET AND DIAL PARTS

MODELS 590, 623

†PART No.	DESCRIPTION
140272	Cabinet—Model 590
140280	Cabinet—Model 623
140274	Cabinet bottom—Model 590
620115	Cabinet bottom—Model 623
280104	Reject button—Model 590
587049	Lever spring—Model 590
410650	Reject lever—Model 590
819046	Record changer assembly —Model 590
820021	Pickup and arm assembly —Model 590
470501	Record changer assembly —Model 623
460470S	Knob—Model 590
460128	Knob—Model 623

MODEL 635

†PART No.	DESCRIPTION
140294	Cabinet body
140295	Cabinet lid
140296	Cabinet bottom
410849	Hinge
575529	Baffle
819046	Record changer assembly
410802	Reject lever
450029	Reject button
587077	Lever spring
450041S	Knob—tuning
450064	Knob—tone control
450063	Knob—phono, radio
520115	Dial crystal

© John F. Rider

MODELS 597, 607, Ch. 120073B, 120074A

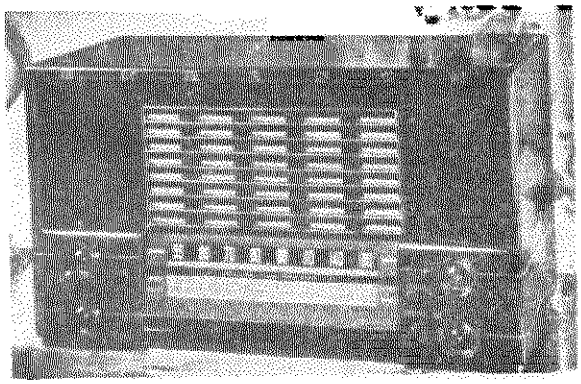

MODEL 597

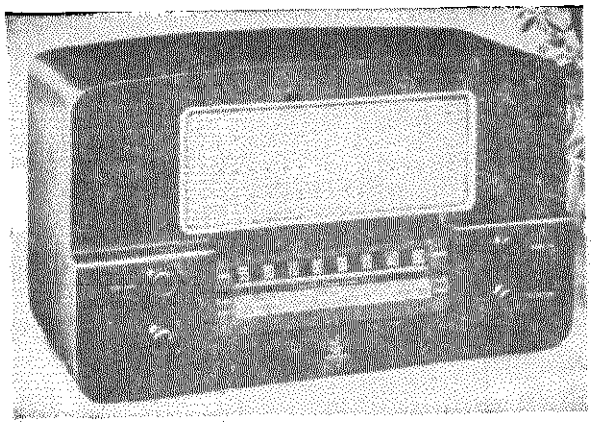

MODEL 607

DESCRIPTION

TYPE: Three band superheterodyne

FREQUENCY RANGE:

Broadcast— 535-1620 kc.
Short wave 1— 3.2-7.5 mc.
Short wave 2— 9.0-22.0 mc.

TYPE OF TUBES:

1—6SB7Y, converter
1—6SG7, i-f amplifier
1—6SQ7, detector, a.v.c., a-f amplifier
1—6K6GT/G, power output
1—5Y3GT, rectifier

POWER SUPPLY: 50-60 cycles a.c.

VOLTAGE RATING:

Chassis 120073B—105-125 volts
Chassis 120074A—105-125 volts or 210-240 volts
POWER CONSUMPTION: 82 watts

CURRENT DRAIN: 0.7 amps. at 117 volts

GENERAL NOTES

1. If replacements are made or the wiring disturbed in the r-f section of the circuit, the receiver should be carefully realigned.
2. A self-contained loop antenna is provided for broadcast band reception. For maximum reception, rotate the receiver through a quarter of a circle after tuning in desired station, and leave at position resulting in greatest volume.
3. An internal power line antenna is provided for relatively strong short wave signals. The line cord must be completely uncoiled for effective operation of this antenna.
4. An external antenna is recommended for maximum short wave reception. To connect the external antenna, first disconnect the lead from the screw terminal on the loop marked "ANT." Connect the external antenna lead in its place.
5. To operate the set on the external antenna for broadcast band reception as well, loosen the terminal screw fastening the connecting link to "LOOP" on the broadcast antenna switch. Turn the link to "EXT. ANT." position and tighten the terminal screw to fasten the link in place.
6. A receptacle is provided at the rear of the chassis for connection of a phono pickup to the receiver. The range switch must be in the "PHONO" position for operation with a phonograph.
7. The band spread tuning control, located at the lower left section of the front panel, is effective only on short wave band 2.
8. Chassis 120073B operates on 105-125 volts, 50-60 cycles a.c. only; chassis 120074A is provided with a voltage changeover switch located on the power transformer at the rear of the set and may operate on 105-125 volts or 210-240 volts, 50-60 cycles a.c.

©John F. Rider

MODELS 597, 607, Ch. 120073B, 120074A

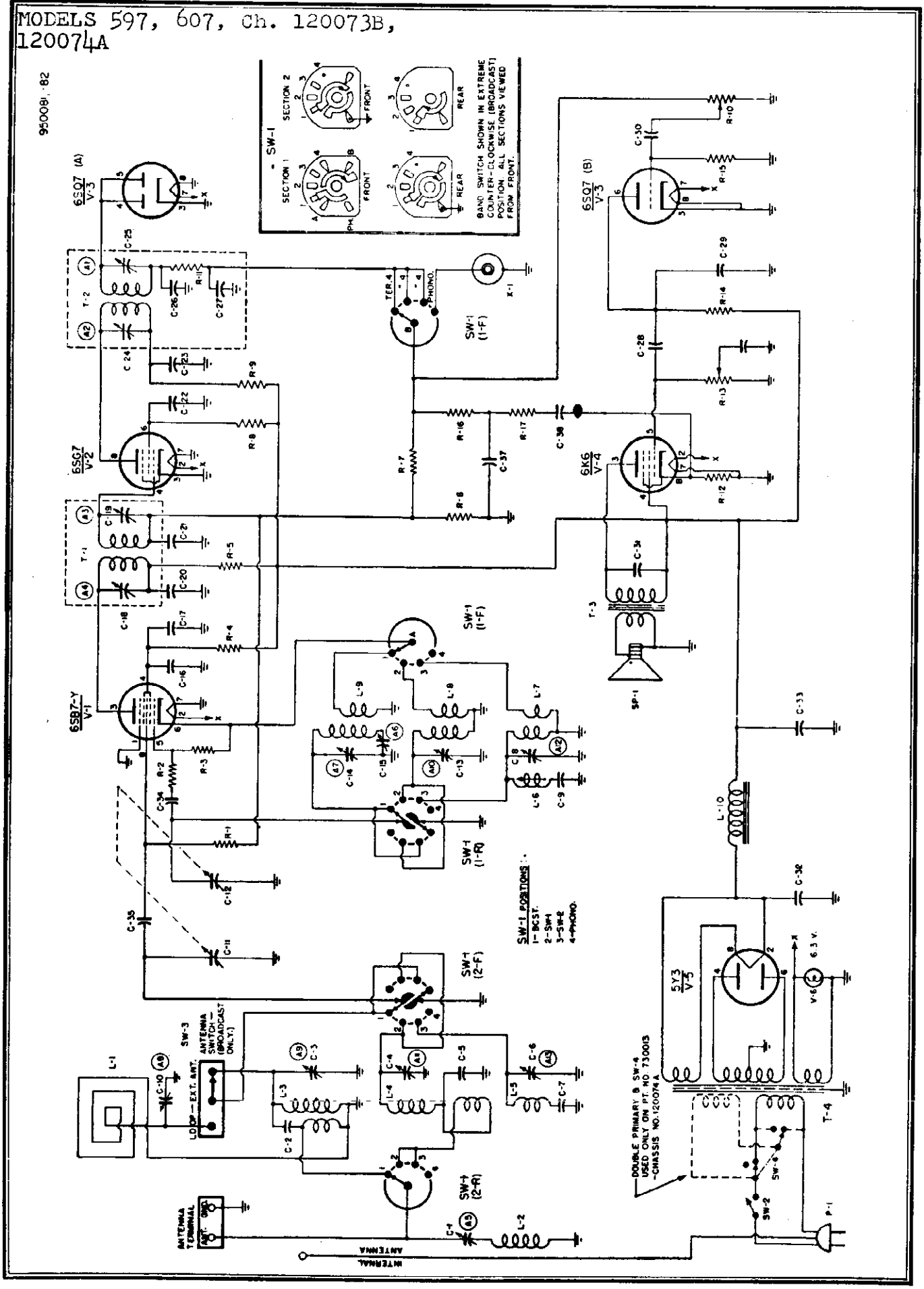

©John F. Rider

MODELS 597, 607, Ch. 120073B, 120074A

REPLACEMENT PARTS LIST

Symbol	† Part No.	DESCRIPTION
V1	6SB7Y	Converter
V2	6SG7	I-f amplifier
V3	6SQ7	Detector, a.v.c., a-f amplifier
V4	6K6GT/G	Power output
V5	5Y3GT	Rectifier
C1	Part of L2	Trimmer, wave trap
C2	Part of L3	2.2 mmf., mica
C3	Part of L3	Trimmer, broadcast ant. coil
C4	Part of L4	Trimmer, S.W.-1 ant. coil
C5	915009	2200 mmf., silver mica.
C6	Part of L5	Trimmer, S.W.-2 ant. coil
C7	915008	3500 mmf., silver mica
C8	Part of L7	Trimmer, S.W.-2 osc. coil
C9	910825	56 mmf., mica (Alt. part 928021)
C10	Part of L1	Trimmer, loop antenna
C11, C12	900048	Two-gang, variable condenser
C13	Part of L8	Trimmer, S.W.-1 osc. coil
C14	Part of L9	Trimmer, broadcast osc. coil
C15	900039	350-700 mmf., padder cond.
C16, C20, C22, C23	920090	.01 mfd., 400 volt, paper
C17	925114	8 mfd., 350 volt, electrolytic
C18, C19	Part of T1	Trimmer, i-f
C21, C38	920030	.05 mfd., 400 volt, paper
C24, C25	Part of T2	Trimmer, i-f
C26, C27	Part of T2	110 mmf., mica
C28	920210	.01 mfd., 600 volt, paper
C29, C35	910014	470 mmf., mica (Alt. part 928019)
C30	920010	.002 mfd., 600 volt, paper
C31, C37	920180	.005 mfd., 400 volt, paper
C32, C33	925113	20-30 mfd., 350 volt, electrolytic
C34	910010	110 mmf., mica
C36	920543	.002 mfd., 400 volt, paper

Symbol	† Part No.	DESCRIPTION
L1	700037	Antenna loop
L2	708015	Wave trap
L3, L4, L5	710017	Antenna coil, three band
L6	708014	Bandspread coil
L7, L8, L9	716027	Oscillator coil, three band
L10	737001*	Filter choke
	737008#	Filter choke
P1	583023	Line cord and plug, and int. ant.
R1, R14, R16, R17	351130	470 kilohms, ½ watt
R2	350290	150 ohms, ½ watt
R3	340810	22 kilohms, ½ watt
R4	370730	10 kilohms, 1 watt
R5, R9	350490	1000 ohms, ½ watt
R6, R7	351330	3.3 megohms, ½ watt
R8	370830	27 kilohms, 1 watt
R10	390058	.5 megohm, volume control
R11	Part of T2	47 kilohms, ½ watt
R12	370410	470 ohms, 1 watt
R13	390059	.4 megohm, tone control
R15	351490	15 megohms, ½ watt
SP1	180031P	P.M. speaker
SW1	510036	Band-change switch
SW2	Part of R10	Line switch
SW3	Part of L1	Loop-external antenna switch
SW4	Part of T4#	Primary voltage switch
T1	720064	First i-f transformer
T2	720065	Second i-f transformer
T3	734036*	Output transformer
	734037#	Output transformer
T4	730012*	Power transformer
	730013#	Power transformer
X1	508010	Phono socket
	807020	Dial light
	507006	Dial light socket

* Chassis 120073B only; # Chassis 120074A only; † Specify part no. when ordering.

CABINET AND DIAL PARTS

† Part No.	DESCRIPTION
140217	Cabinet, walnut plastic (Model 597)
140186	Cabinet, wood (Model 607)
575338	Cabinet back (Model 597)
575339	Cabinet back (Model 607)
520065	Escutcheon (Model 607)
460470	Knob, black push-on
460041	Knob, indicator (Model 597)
460083	Knob, indicator (Model 607)

†Part No.	DESCRIPTION
520088	Dial crystal (Model 597)
520089	Dial crystal (Model 607)
410416	Dial backplate
280060	Drive shaft, tuning
280062	Drive shaft, bandspread
587070	Dial drive spring
530002	Dial drive cord
525017	Pointer

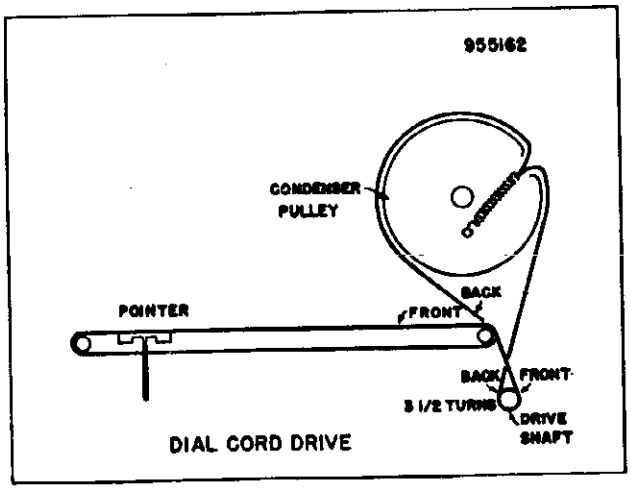

DIAL CORD DRIVE

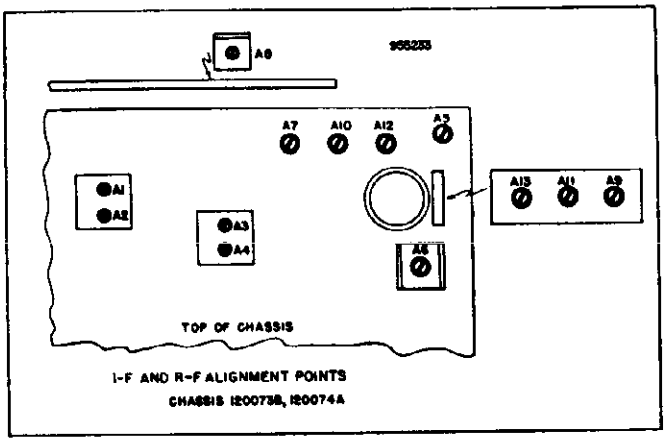

I-F AND R-F ALIGNMENT POINTS
CHASSIS 120073B, 120074A

© John F. Rider

MODELS 597, 607, Ch. 120073B, 120074A

INSTRUCTIONS FOR VOLTAGE AND RESISTANCE READINGS

1. Voltage readings are in d.c. volts and resistance readings in ohms, unless otherwise specified.
2. Measurements made with voltohmyst.
3. Socket connections are shown as bottom views. Values are measured from socket pin to common negative, unless otherwise noted.
4. Line voltage maintained at 117 volts a.c. for voltage readings.
5. Nominal tolerance on component values makes possible a variation of ± 15% in readings.
6. Volume control at maximum, with no signal applied and bandswitch in broadcast position, for voltage measurements.

VOLTAGE READINGS

SYMBOL	TUBE	PIN 1	PIN 2	PIN 3	PIN 4	PIN 5	PIN 6	PIN 7	PIN 8
V1	6SB7Y	0	6.3AC	254	105	-7.6	0	0	-.8
V2	6SG7	0	0	0	-2.2	0	145	6.3AC	250
V3	6SQ7	0	-1.2	0	-.7	-.7	105	6.3AC	0
V4	6K6	-.6	0	245	258	0	-.6	6.3AC	5.8
V5	5Y3	117AC #	294	NC	290AC	NC	290AC	NC	290

RESISTANCE READINGS

SYMBOL	TUBE	PIN 1	PIN 2	PIN 3	PIN 4	PIN 5	PIN 6	PIN 7	PIN 8
V1	6SB7Y	0	.2	1.5K*	11K*	20K	.2	0	3 Meg.
V2	6SG7	0	0	0	3 Meg.	0	29K*	.2	1.5K*
V3	6SQ7	0	14 Meg.	0	500K	500K	450K*	.2	0
V4	6K6	800K	0	1K*	500*	380K	1 Meg.	.2	480
V5	5Y3	8 #	0*	NC	180	NC	180	NC	0*

# Measured to switch SW2
K=kilohms
* Measured to Pin 2 of V5, 5Y3.
Meg=megohms
NC=no connection

ALIGNMENT INSTRUCTIONS

1. To position pointer, turn variable condenser fully closed and set pointer to reference mark on dial backplate at the low freqnency end of the dial.
2. Volume control should be set at maximum position. The output of the signal generator should be no higher than necessary to obtain an output reading. Attenuate the signal input as alignment proceds. Use an insulated alignment tool for all adjustments.
3. Use isolation transformer if available; otherwise connect a .1 mfd. condenser in series with low side of signal generator to chassis.
4. Connect output meter across voice coil for all alignment steps.
5. Refer to illustration on page 3 for location of alignment points.

ALIGNMENT PROCEDURE

STEP	SIGNAL GENERATOR COUPLING	SIG. GEN. FREQ.	BANDSWITCH POSITION	DIAL SETTING	ADJUST	PROCEDURE
1	High side through .1 mfd., dummy antenna to grid (Pin 8) of 6SB7Y (V1). Low side to chassis.	455KC.	Broadcast.	Tuning condenser fully open.	A1, A2 (Trans. T1), and A3, A4 (Trans. T2).	Adjust for maximum output. Reduce dummy antenna to 200 mmf., if isolation trans. is not used.
2	High side through 200 mmf. dummy antenna to "ANT." term.. on antenna terminal strip. Low side to chassis.	455KC.	Broadcast.	Tuning condenser fully open.	A5 (Trimmer C1, on wave trap).	Adjust for minimum output.
3	" Antenna switch (SW3) in "EXT. ANT." position.	1450KC.	Broadcast.	Set pointer to 1450 kc. on dial.	A7 (Trimmer C14), A9 (Trimmer C3).	Adjust for maximum output (oscillator and ant. trimmers).
4	"	600KC.	Broadcast.	Set pointer to 600 kc. on dial.	A6 (Padder C15).	Adjust for maximum output (oscillator padder).
5	"	1450KC.	Broadcast.	Set pointer to 1450 kc. on dial.	A7 (Trimmer C14) only	Readjust for maximum output (oscillator trimmer) , if necesscary.
6	"	7.5MC	Short wave 1.	Set pointer to 7.5 mc. on dial.	A10 (Trimmer C13).	Adjust for maximum output.
7	"	6.5MC	Short wave 1.	Tune for max. output.	A11 (Trimmer C4).	Adjust for maximum output.
8	" Bandspread slug halfway out of L6.	22.5MC.	Short wave 2.	Set pointer to 22.5 mc. on dial.	A12 (Trimmer C8).	Adjust for maximum output.
9	"	21.5MC.	Short wave 2.	Tune for max. output.	A13 (Trimmer C6).	Adjust for maximum output.
10	Form loop of several turns and radiate signal into receiver broadcast loop. Move ant. switch link to "loop" position.	1450KC.	Broadcast	Tune for max. output.	A8 (Trimmer C10).	Adjust for maximum output.

© John F. Rider

MODELS 599, 601,
Ch. 120075B

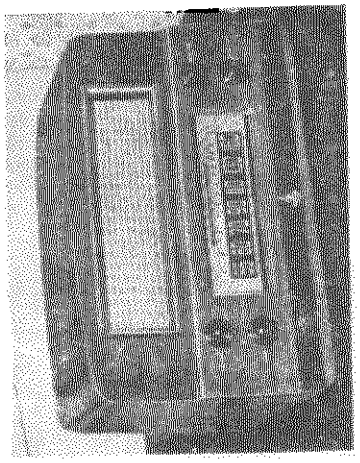

MODEL 601

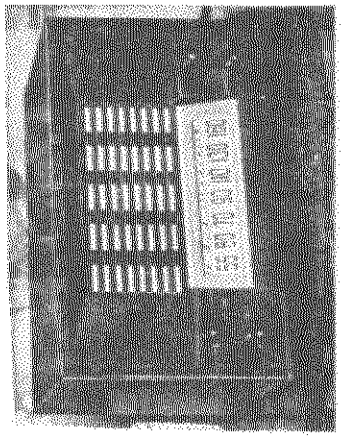

MODEL 599

©John F. Rider

MODELS 599, 601,
Ch. 120075B

INSTRUCTIONS FOR VOLTAGE AND RESISTANCE READINGS

1. Voltage readings are d.c. volts and resistance readings in ohms, unless otherwise specified.
2. All measurements made with voltohmyst.
3. Socket connections are shown as bottom views.
4. Measured values are from socket pin to common negative, unless otherwise noted.
5. Line voltage maintained at 117 volts a.c. for voltage readings.
6. Nominal tolerance on component values makes possible a variation of ± 15% in voltage and resistance readings.
7. Volume control at maximum with no signal applied, for voltage measurements.

VOLTAGE READINGS

SYMBOL	TUBE	PIN 1	PIN 2	PIN 3	PIN 4	PIN 5	PIN 6	PIN 7	PIN 8
V1	6SS7	0	24AC	0	-1.2	0	64	29AC	54
V2	12SA7	0	41AC	98	64	-5	0	29AC	-1.5
V3	6SS7	0	48AC	0	-1.2	0	64	41AC	92
V4	12SQ7	0	-1	0	-.4	0	58	0	12AC
V5	12SQ7	0	0	1.2	0	0	64	24AC	12AC
V6	35L6GT	0	48AC	120	100	0	96	83AC	7
V7	35L6GT	0	83AC	120	100	117AC	0	117AC	7
V8	117Z6GT	NC	117AC	117AC	125	NC	NC	0	125

RESISTANCE READINGS

SYMBOL	TUBE	PIN 1	PIN 2	PIN 3	PIN 4	PIN 5	PIN 6	PIN 7	PIN 8
V1	6SS7	0	22	0	3 Meg.	0	5.5K*	28	10K*
V2	12SA7	0	38	1K*	5.5K*	21K	0	28	3 Meg.
V3	6SS7	0	44	0	3 Meg.	0	5.5K*	38	1K*
V4	12SQ7	0	15 Meg.	0	600K	3 Meg.	500K*	0	11
V5	12SQ7	0	12K	15K	0	0	440K*	23	11
V6	35L6GT	0	44	100*	1K*	420K	18K	62	95
V7	35L6GT	0	62	100*	1K*	420K	NC	72	95
V8	117Z6GT	NC	72	88	0*	88	0	0	0*

K=kilohms; Meg.=megohms; NC=no connection; * Measured to pins 4, 8 of V8, 117Z6GT

ALIGNMENT INSTRUCTIONS

1. To position pointer, turn variable condenser fully closed and set pointer to reference mark at low frequency end of dial backplate.
2. Use isolation transformer if available. If not, connect a 0.1 mfd. condenser in series with low side of signal generator and chassis.
3. Volume control should be at maximum position; output of signal generator should be no higher than necessary to obtain an output reading.
4. Use an insulated alignment tool for all adjustments.

ALIGNMENT PROCEDURE

	DUMMY ANTENNA	SIGNAL GENERATOR COUPLING	SIGNAL GENERATOR FREQUENCY	RADIO DIAL SETTING	OUTPUT METER	ADJUST	REMARKS
1	0.1 mfd.	High side to pin 8 (grid) of 12SA7 (V2). Low side to chassis.	455 KC.	Variable condenser fully open.	Across voice coil.	Second i-f trans. T2 and first i-f trans. T1..	Adjust for maximum output. If isolation transformer is not used, reduce dummy antenna to .001 mfd. to reduce hum modulation.
2	0.1 mfd.	High side to external antenna lead. Low side to chassis	455 KC.	Variable condenser fully open.	Across voice coil.	Trimmer cond. C4, on wave trap.	Adjust for minimum output.
3	200 mmf.	"	1620 KC.	Variable condenser fully open.	Across voice coil.	Trimmer cond. on C2.	Adjust for maximum output.
4	200 mmf.	"	1450 KC.	Tune for maximum output.	Across voice coil.	Trimmer cond. on C1.	Adjust for maximum output.

MODELS 599, 601,
Ch. 120075B

DESCRIPTION

TYPE: Single band (AM) superheterodyne

FREQUENCY RANGE: 540-1620 kc.

TYPE OF TUBES:

1—6SS7, r-f amplifier
1—12SA7, converter
1—6SS7, i-f amplifier
1—12SQ7, detector, a.v.c., audio amplifier
1—12SQ7, phase inverter
2—35L6GT, push-pull power output
1—117Z6GT, rectifier

POWER SUPPLY: A.c. or d.c.

VOLTAGE RATING: 105-125 volts

POWER CONSUMPTION: 40 watts

CURRENT DRIN: 0.34 amp. at 117 volts a.c.

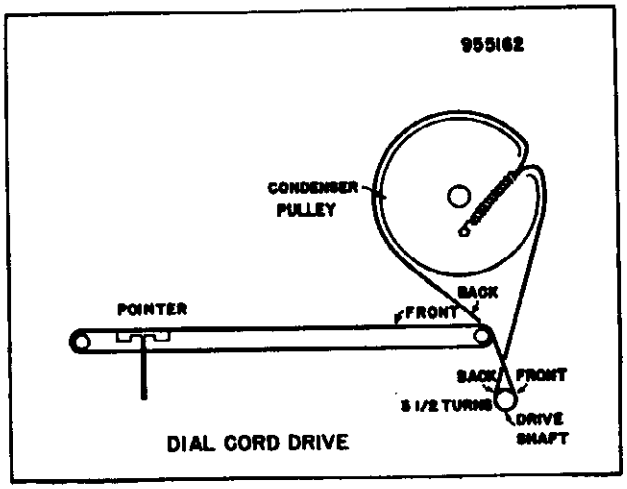

DIAL CORD DRIVE

REPLACEMENT PARTS LIST

Symbol	† Part No.	DESCRIPTION
V1	6SS7	R-f amplifier
V2	12SA7	Converter
V3	6SS7	I-f amplifier
V4	12SQ7	Detector, a.v.c., a-f amplifier
V5	12SQ7	Phase inverter
V6	35L6GT	Power output
V7	35L6GT	Power output
V8	117Z6GT	Rectifier
C1, C2	900036	Two-gang, variable condenser
	Part of C1, C2	Trimmers, ant. and osc.
C3	928104	212 mmf., ceramic
C4	Part of L2	Trimmer, wave trap
C5	920040	.1 mfd., 200 volt, paper
C6	920060	.05 mfd., 200 volt, paper
C7	920030	.05 mfd., 400 volt, paper
C10		
C8, C9,	928013	100 mmf., ceramic
C11	925119	10 mfd., 25 volt, elect.
C12, C13	920010	.002 mfd., 600 volt, paper
C14	920050	.2 mfd., 200 volt, paper
C15, C16	920090	.01 mfd., 400 volt, paper
C17	920230	.005 mfd., 600 volt, paper
C18, C19,	925103	10-50-50 mfd., 150 volt, elect.
C20		
L1	700032	Loop antenna
L2	708060	Wave trap

Symbol	† Part No.	DESCRIPTION
L3	716023	Oscillator coil
R1, R2	351050	220 kilohms, ½ watt
R3	340730	10 kilohms, ½ watt
R4, R10	351490	15 megohms, ½ watt
R5	340810	22 kilohms, ½ watt
R6	340650	4700 ohms, ½ watt
R7	340890	47 kilohms, ½ watt
R8	351330	3.3 megohms, ½ watt
R9	390051	.5 megohm, volume control
R11, R19	340770	15 kilohms, ½ watt
R12	390061	.4 megohm, tone control
R13, R14,	351130	470 kilohms, ½ watt
R15, R16		
R17	370250	100 ohms, 1 watt
R18	330750	12 kilohms, ½ watt
R20	340050	15 ohms, ½ watt
R21	394038	820 ohms, 5 watt, w.w.
R22	370490	1000 ohms, 1 watt
SP1	180041	P.M. speaker, 6"
SW1	510031	Line switch
T1	720033	First i-f transformer
T2	720033	Second i-f transformer
T3	734033	Output transformer
P.L.	807003	Dial light, 115 volt
	507009	Dial light socket
	583014	Line cord and plug

CABINET AND DIAL PARTS

† Part No.	DESCRIPTION
140216	Cabinet, walnut plastic (Model 599)
140221	Cabinet, wood (Model 601)
575288	Cabinet back (Model 599)
575319	Cabinet back (Model 601)
460470	Knob, black push-on
520065	Escutcheon (Model 601)
520075	Dial crystal (Model 599)

† Part No.	DESCRIPTION
520091	Dial crystal (Model 601)
520091	Dial crystal (Model 601)
525037	Pointer
520083	Dial backplate
280058	Drive shaft
530002	Dial drive cord (56")
587070	Dial drive spring

©John F. Rider

MODEL 613, Ch. 120085A, 120085B

SERVICE NOTES

MODEL: 613

CHASSIS MODELS 120085A, 120085B

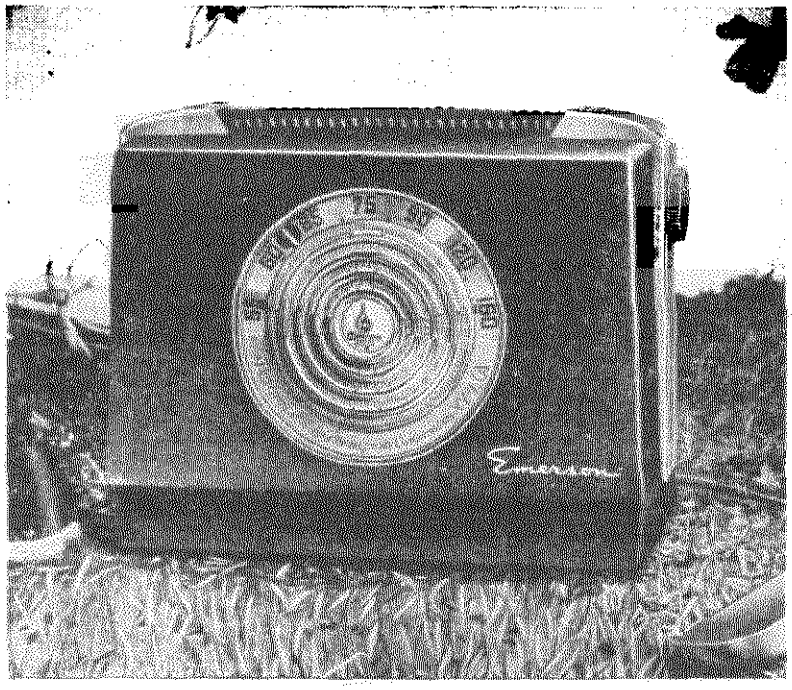

DESCRIPTION

TYPE: Three way (battery, a.c., d.c.) portable superheterodyne.

FREQUENCY RANGE: 540-1620 KC.

TYPE OF TUBES:

1—1R5, pentagrid converter
1—1U4, i-f amplifier
1—1U5, detector, a.v.c., a-f amplifier
1—3V4, or 3Q4, power output
1—Selenium rectifier

POWER SUPPLY: "A" and "B" batteries, or a.c., or d.c.

VOLTAGE RATING:

Line operation—105-125 volts, a.c. or d.c.
Battery operation—1½ volts "A" supply
67½ volts "B" supply

POWER CONSUMPTION: Line operation, 20 watts

CURRENT CONSUMPTION:

"A" battery—.250 amp.
"B" battery—.009 amp.
117 volts a.c.—.170 amp.

GENERAL NOTES

1. Line Operation: Open the rear cover which is held closed by the catch studs. Remove the line cord plug from its receptacle at the right side of the chassis (looking from the rear). Remove the line cord and insert the plug into a suitable outlet. When the power supply is d.c. and the receiver remains inoperative, remove the plug, turn it half-way around and reinsert in the outlet to obtain proper polarity.
2. Battery operation: Remove the line plug from the outlet and insert in the receptacle at the side of the chassis. The receiver will not operate from batteries if the plug is out of the chassis receptacle. Coil the loose portion of the line cord and store it carefully in the space provided.
3. Battery Complement: Replace "A" battery with standard "D" flashlight cell. Replace "B" battery with 67½ volt Eveready No. 467 or equivalent.
4. The color coding of the battery cable is as follows:

Red—B+	Yellow—A+
White—B—	Black—A—

5. If replacements are made in the r-f section of the circuit, carefully realign the receiver.
6. The receiver has a salf contained antenna and normally does not require an additional antenna connection. For installations in a location where reception is weak, connect an outside antenna to the colored lead at the rear of the cabinet. Do not use a ground connection.
7. The self-contained loop antenna has directional properties. After a station is tuned in, it is important that the set be rotated through a quarter turn to obtain the position which results in the greatest volume.

MODEL 613, Ch. 120085A, 120085B

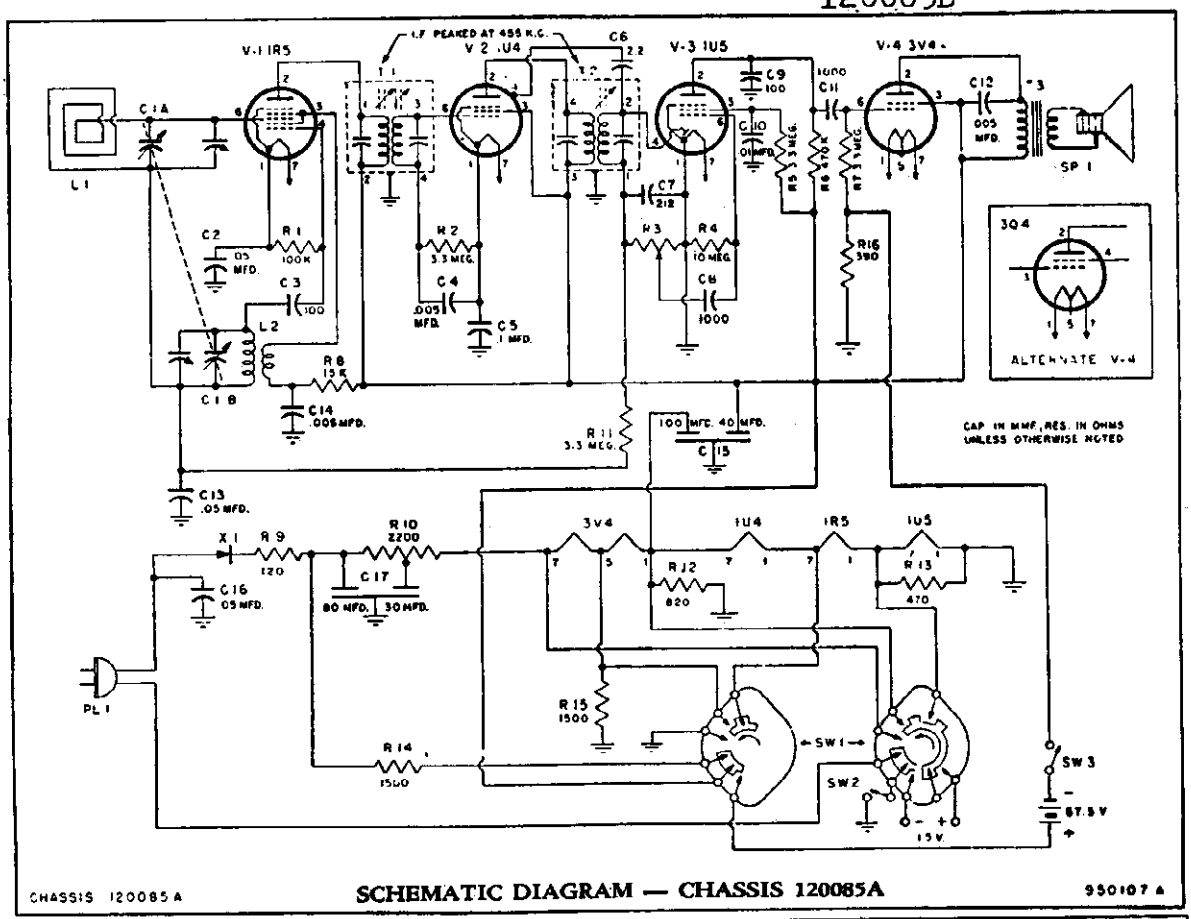

CHASSIS 120085A — SCHEMATIC DIAGRAM — CHASSIS 120085A — 950107 A

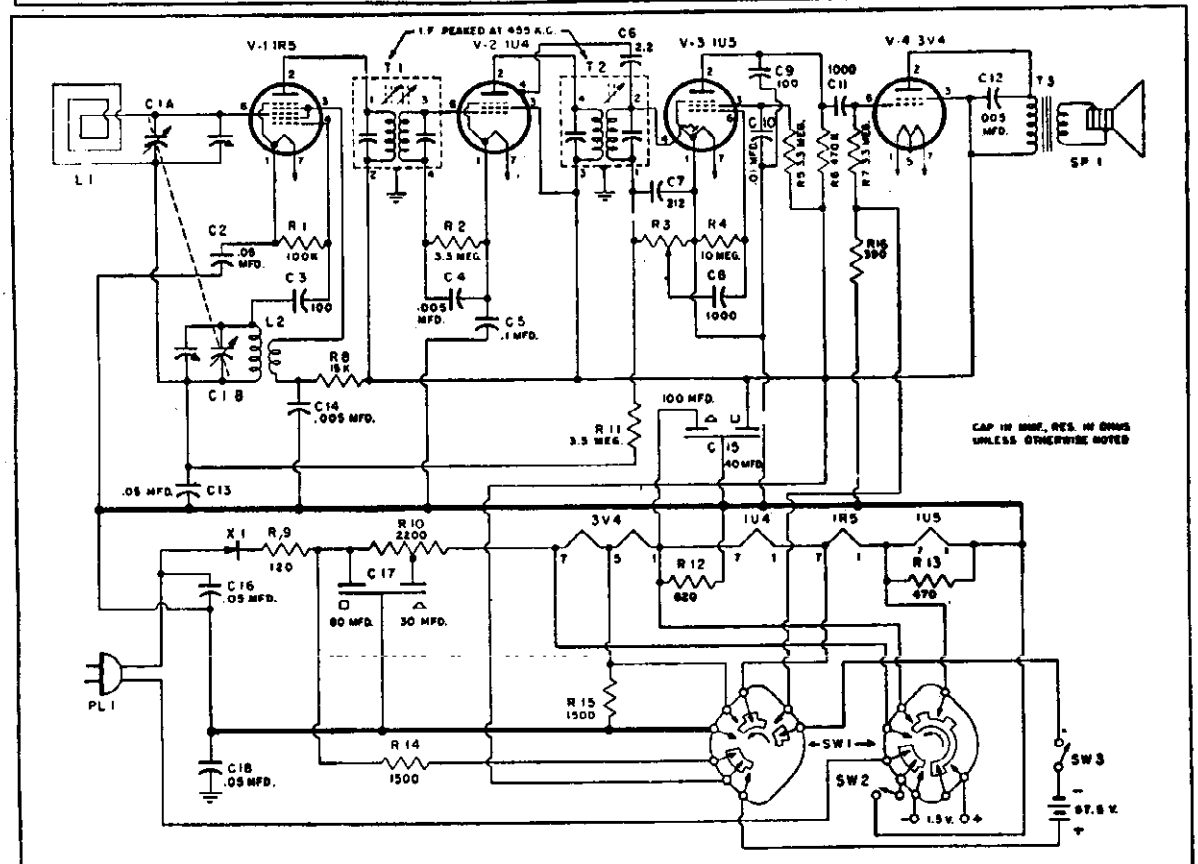

CHASSIS 120085B — SCHEMATIC DIAGRAM — CHASSIS 120085B — 950107 B

©John F. Rider

MODEL 613, Ch. 120085A, 120085B

ALIGNMENT PROCEDURE

1. Use battery power when available. When a.c. power is used, connect the line cord through an isolation transformer if available. Otherwise connect a 0.1 mfd. condenser in series with the low side of the signal generator and B—.
2. Set the volume control at maximum. The output of the signal generator should be no higher than that necessary to obtain an output reading. Attenuate the signal input as alignment proceeds. Use an insulated alignment tool.
3. Maintain the loop in the same position relative to the chassis as when the receiver is in the cabinet.
4. Oscillator and antenna trimmers are reached from bottom of chassis.

	DUMMY ANTENNA	SIGNAL GENERATOR COUPLING	SIGNAL GENERATOR FREQUENCY	RADIO DIAL SETTING	OUTPUT METER	ADJUST	REMARKS
1	0.1 mfd.	High side to grid (pin 6) of V1 (1R5). Low side to chassis.	455 KC.	Variable condenser fully open.	Across voice coil.	Primary and secondary of T2 and T1.	Adjust for maximum output. If a.c. is used, without an isolation transformer, reduce dummy antenna to 200 mmf., to reduce hum modulation.
2	200 mmf.	High side to external antenna lead. Low side to chassis.	1620 KC.	Variable condenser fully open.	Across voice coil.	Oscillator trimmer on C1B.	Adjust for maximum output.
3	200 mmf.	"	1400 KC.	Tune for maximum output.	Across voice coil.	Antenna trimmer on C1A.	Adjust for maximum output.

INSTRUCTIONS FOR VOLTAGE AND RESISTANCE READINGS

1. Voltage and resistance readings are measured for 117 volt a.c. line operation.
2. Socket connections are shown as bottom views. Measurements are taken from socket pin to chassis (chassis 120085A) or socket pin to common negative (chassis 120085B).
3. Voltages are in volts d.c. and resistances in ohms, unless otherwise indicated.
4. Measurements made with voltohmyst.
5. For voltage measurements, set volume control at maximum, with no signal applied.
6. Nominal tolerance on component values makes possible a variation of ± 15% in voltage and resistance readings.

VOLTAGE READINGS

SYMBOL	TUBE TYPE	PIN 1	PIN 2	PIN 3	PIN 4	PIN 5	PIN 6	PIN 7
V1	1R5	1.5	88	60	-3.2	1.5	0	2.8
V2	1U4	2.8	88	88	0	2.8	2.0	4.0
V3	1U5	0	43	18	.4	0	0	1.5
V4	3V4 or 3Q4	4.0	84	0	88	5.3	5.3	6.7

RESISTANCE READINGS

SYMBOL	TUBE TYPE	PIN 1	PIN 2	PIN 3	PIN 4	PIN 5	PIN 6	PIN 7
V1	1R5	24	3600	18K	110K	24	5 meg.	36
V2	1U4	36	3600	3600	Inf.	36	3.2 meg.	44
V3	1U5	0	480K	3.5 meg.	1.2 meg.	1.2 meg.	12 meg.	24
V4	3V4 or 3Q4	44	4100	4 meg.	3600	58	4100	70

K=kilohms; Meg.=megohms; Inf.=infinity.

© John F. Rider

MODEL 613, Ch. 120085A, 120085B

REPLACEMENT PARTS LIST

SYMBOL	†Part No.	DESCRIPTION
V1	1R5	Converter
V2	1U4	I-f amplifier
V3	1U5	Detector, a.v.c., a-f amplifier
V4	3V4 or 3Q4	Power output
X1	817012	Selenium rectifier
C1A} C1B}	900057	Two-gang, variable condenser (used with loop ant. 700044). Alt. part 900047 (used with loop ant. 700041).
C2	920571	.05 mfd., 200 volt, paper
C3	928013	100 mmf., ceramic
C4	920470	.005 mfd., 150 volt, paper
C5	920573	.1 mfd., 200 volt, paper
C6	915005	2.2 mmf., ceramic
C7	928104	212 mmf., ceramic
C8	928003	1000 mmf., ceramic
C9	928013	100 mfd., ceramic
C10	920570	.01 mfd., 150 volt, paper
C11	928003	1000 mmf., ceramic
C12	920470	.005 mfd., 150 volt, paper
C13	920571	.05 mfd., 200 volt, paper
C14	928109	.005 mfd., ceramic
C15	{925155* {925136BΔ	40 mfd., 150 volt; 100 mfd., 25 volt, electrolytic
C16	920572	.05 mfd., 400 volt, paper
C17	{Part of C15* {925135BΔ	80-30 mfd., 150 volt, electrolytic
L1	700044	Loop antenna (Alt. part 700041)
L2	716031	Oscillator coil
R1	350970	100 kilohms, ½ watt
R2	351330	3.3 megohms, ½ watt
R3	390066	1 megohm, volume control
R4	351450	10 megohms, ½ watt
R5	351330	3.3 megohms, ½ watt
R6	351130	470 kilohms, ½ watt
R7	351330	3.3 megohms, ½ watt
R8	340770	15 kilohms, ½ watt
R9	394018	120 ohms, 3 watt
R10	394041	2200 ohms, wirewound
R11	351330	3.3 megohms, ½ watt
R12	340470	820 ohms, ½ watt
R13	340410	470 ohms, ½ watt
R14	340530	1500 ohms, ½ watt
R15	340530	1500 ohms, ½ watt
R16	340390	390 ohms, ½ watt
SP1	{180060* {180060BΔ	P.M. speaker, 4"
SW1	{510044* {510053Δ	Power-transfer switch
SW2} SW3}	Part of R3	On-off switch
T1	720525	First i-f trans.
T2	720066	Second i-f trans.
T3	{734053* {734053BΔ	Output transformer
	{583025* {583026Δ	Line cord
	585009	Battery cable, "B"
	470261	Battery contact assembly, "A"

†Specify part numbers when ordering.
*Chassis 120085A only.
ΔChassis 120085B only.

NOTE: Condensers C7, C8, C8, C10, and C11 may be combined in one ceramic unit, part number 928034.

CABINET AND DIAL PARTS

†Part No.	DESCRIPTION	†Part No.	DESCRIPTION
140236	Cabinet	530002	Drive cord (28")
140237	Cabinet back	587023	Drive cord spring
460091	Knob	410514	Dial backplate
520096	Dial and grille	525043	Pointer
460123	Handle	280084	Pointer shaft
280083	Drive shaft	531319	Pointer pulley

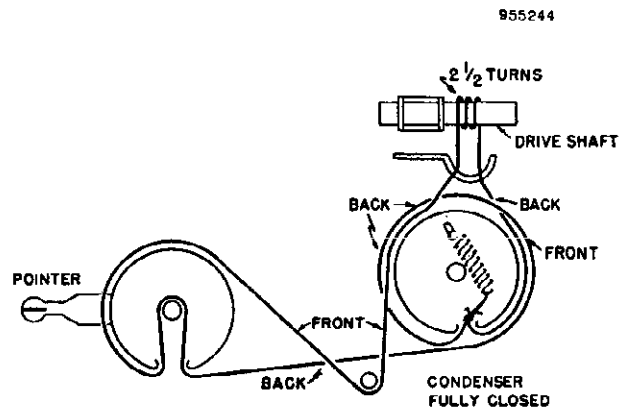

DIAL CORD DRIVE

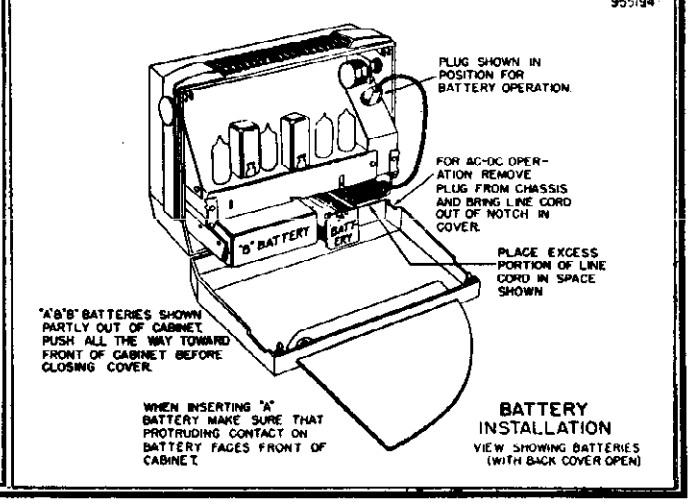

BATTERY INSTALLATION
VIEW SHOWING BATTERIES (WITH BACK COVER OPEN)

© John F. Rider

MODEL 643,
Ch. 120111A

DESCRIPTION

TYPE: Three way, four band, portable superheterodyne

FREQUENCY RANGE:
Broadcast - 535-1620 kc.
Short Wave 1 - 2.75-5.6 mc.
Short Wave 2 - 5.5-10.3 mc.
Short Wave 3 - 10.0-18.5 mc.

TYPE OF TUBES:
1 - 1L6, converter
1 - 1U4, i-f amplifier
1 - 1U5, detector, a.v.c., a-f amplifier
1 - 3V4, a-f power output
1 - 117Z3, rectifier

POWER SUPPLY: A and B batteries, a.c., or d.c.

VOLTAGE RATING:
Line operation - 115 or 230 volts a.c.
115 volts d.c.
Battery operation - 9 volts A supply
90 volts B supply

POWER CONSUMPTION: 115 volt a.c. line operation - 20 watts

CURRENT CONSUMPTION:
A battery - 0.055 amp.
B battery - 0.013 amp.
115 volts a.c. - 0.170 amp.

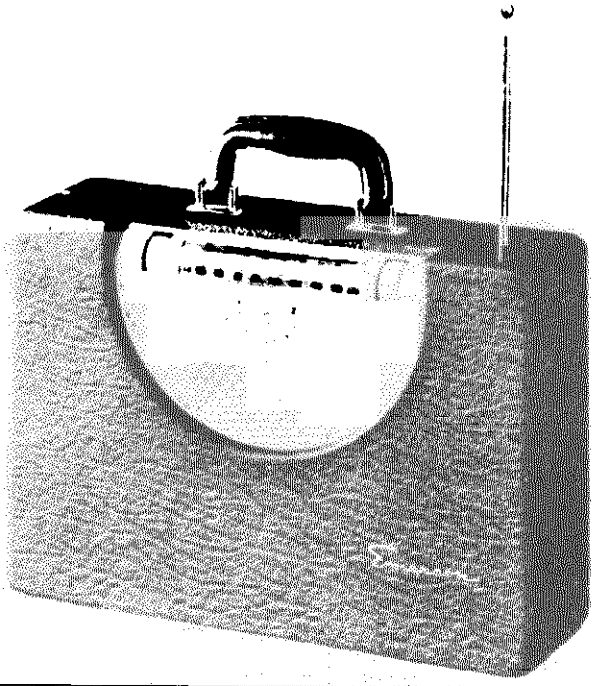

GENERAL NOTES

1. LINE OPERATION: Pry open the rear cover which is held closed by two catch studs. Remove the line cord plug from its receptacle at the right side of the chassis (looking from the rear). Bring the line cord out through the notch in the side of the cover.
   a) 115 volt a.c. or d.c. operation - Insert the small, three-prong plug in the corresponding receptacle, adjacent to the line cord. Insert the line cord plug in a suitable outlet. When the power supply is d.c., reverse the plug if the receiver is inoperative, to obtain proper polarity.
   b) 230 volt a.c., 50 to 60 cycle operation - Connect the small three-prong plug at the end of the line from the step-down transformer, to the receptacle adjacent to the line cord. Insert the line cord plug in a 230 volt a.c. only outlet.
2. BATTERY OPERATION: Remove the line cord plug from the outlet and insert in the receptacle at the right side of the chassis. Coil the loose portion of the line cord and store in the space provided under the chassis.
3. BATTERY COMPLEMENT: Replace the two 45 volt B batteries with Eveready No. 482 or equivalent. Replace the two 4½ volt A batteries with Eveready No. 746 or equivalent.
4. If components are replaced in the r-f section of the circuit, carefully realign the receiver.
5. The receiver has two self-contained antennas, for broadcast and short-wave reception, and normally does not require an additional antenna connection. For installations in a location where reception is poor, or where it is desired to improve reception, connect an external antenna to the colored lead at the left side of the chassis. Bring the lead through the hole provided in the back cover. The external antenna will function for all positions of the band switch.
6. The self-contained loop antenna operates only in the broadcast band and has directional properties. After a station is tuned in, it is important that the set be rotated through a quarter-turn, to obtain the position which results in greatest volume.
7. The telescoping antenna operates only for the short wave bands and must be fully extended for best reception.
8. To remove the chassis, first remove the telescoping antenna fastening screw at the bottom of the cabinet. Remove the chassis mounting screws and disconnect the broadcast loop leads. Note the color coding of the three leads and their clip connections. Remove the chassis and telescoping antenna. Loosen the clamp screw and slide off the connecting lead, together with the clamp.

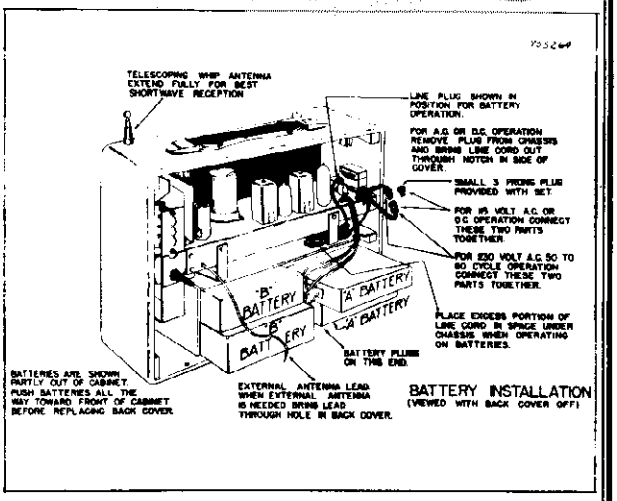

BATTERY INSTALLATION
(VIEWED WITH BACK COVER OFF)

BATTERY INSTALLATION DIAGRAM

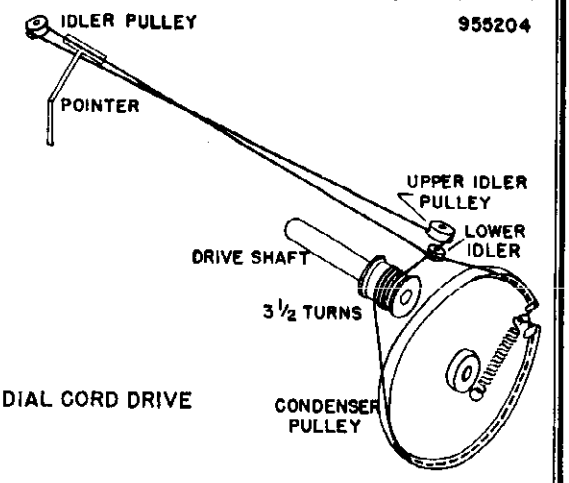

DIAL STRINGING DIAGRAM

©John F. Rider

MODEL 643,
Ch. 120111A

CONDITIONS FOR VOLTAGE AND RESISTANCE ANALYSIS

1. Voltage readings are d.c. volts, resistance readings are ohms, unless otherwise noted. Values above line are voltage; values below line indicate resistance.
2. Voltage readings measured for 117 volt a.c. line operation.
3. All measurements made with voltohmyst, or equivalent.
4. Socket connections are shown as bottom views, with values measured from socket pin to chassis.
5. No signal applied and band switch in BC position, for voltage and resistance measurements.
6. Nominal tolerance on component values makes possible a variation of ±15% in readings.
7. On the voltage and resistance diagram, fig. 2, K = kilohms, MEG = megohms, INF. = infinity.

ALIGNMENT PROCEDURE

1. To position pointer, turn variable condenser fully closed and set pointer to reference mark on dial backplate at the low frequency end of the dial.
2. Volume control should be set at maximum position. The output of the signal generator should be no higher than necessary to obtain an output reading. Attenuate the signal input as alignment proceeds. Use an insulated alignment tool for all adjustments.
3. Use isolation transformer if available; otherwise connect a .1 mfd. condenser in series with low side of signal generator to chassis.
4. Connect output meter across voice coil for all alignment steps.
5. Refer to fig. 3 for location of alignment trimmers.
6. For BC alignment of the receiver, maintain the loop in the same position relative to the chassis as when the receiver is in the cabinet.
7. For SW alignment of the receiver, maintain the telescoping antenna closed.

STEP	SIGNAL GENERATOR COUPLING	SIGNAL GENERATOR FREQUENCY	BAND SWITCH POSITION	DIAL SETTING	ADJUST	PROCEDURE
1	High side through 0.1 mfd. to grid (pin 6) of V-1 (1L6). Low side to chassis.	455 KC.	BC	Tuning condenser fully open.	T-2, T-1	Peak for maximum output. Reduce coupling condenser to 200 mmf. if isolation transformer is not used.
2	High side through 200 mmf. to external antenna lead. Low side to chassis.	1620 KC.	BC	Tuning condenser fully open.	C-24 (BC osc.)	Peak for maximum output.
3	"	1420 KC.	BC	Tune for maximum output.	C-2 (BC ant.)	"
4	"	5.4 MC.	SW1	Set pointer to 5.4 MC.	C-25 (SW1 osc.)	"
5	"	5.0 MC.	SW1	Tune for maximum output.	C-23 (SW1 ant.)	"
6	"	10.0 MC.	SW2	Set pointer to 10.0 MC.	C-26 (SW2 osc.)	"
7	"	9.5 MC.	SW2	Tune for maximum output.	C-22 (SW2 ant.)	"
8	"	18.0 MC.	SW3	Set pointer to 18.0 MC.	C-27 (SW3 osc.)	"
9	"	17.0 MC.	SW3	Tune for maximum output.	C-21 (SW3 ant.)	"

955278

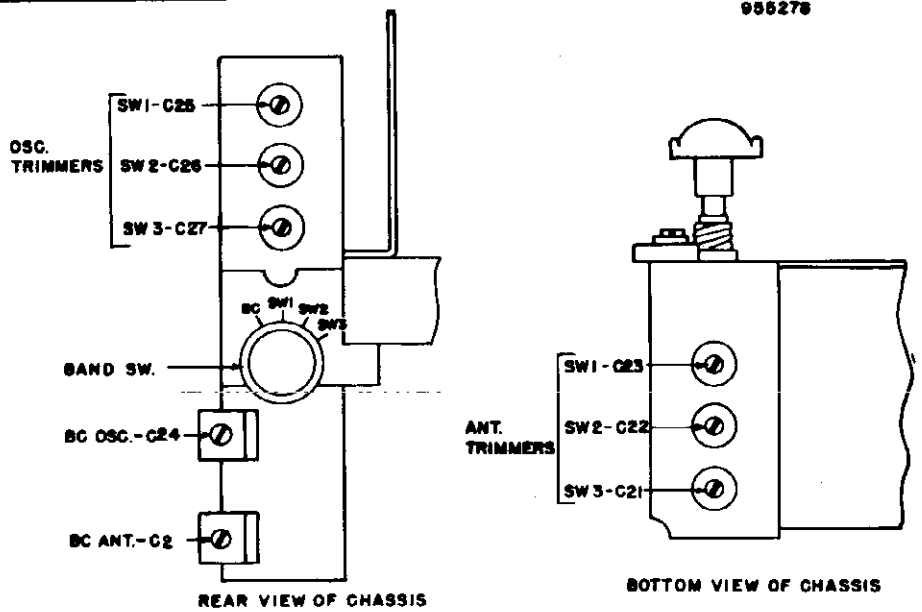

LOCATION OF ALIGNMENT TRIMMERS

©John F. Rider

MODEL 643,
Ch. 120111A

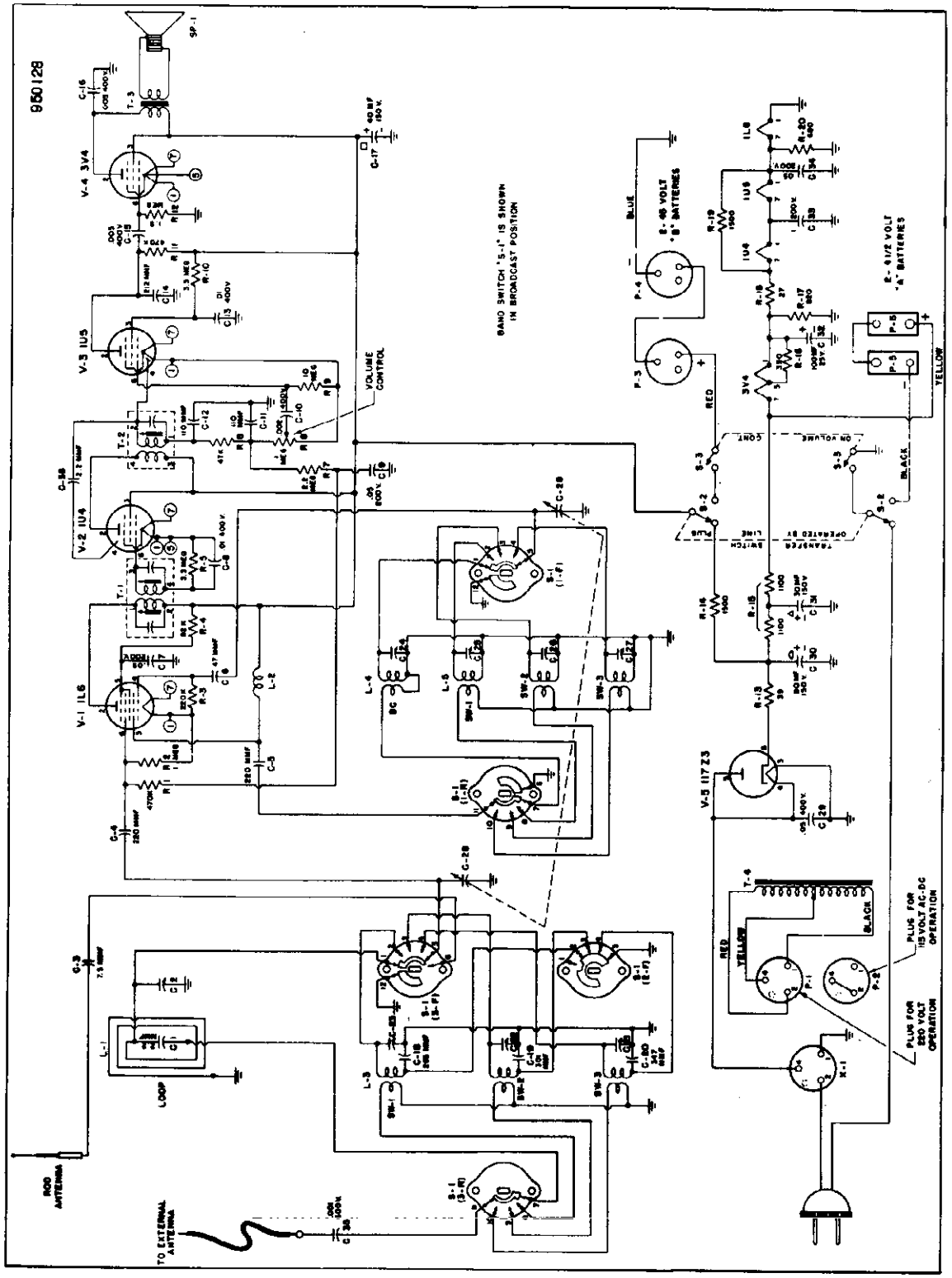

SCHEMATIC DIAGRAM - MODEL 643, CHASSIS 120111A

©John F. Rider

MODEL 643,
Ch. 120111A

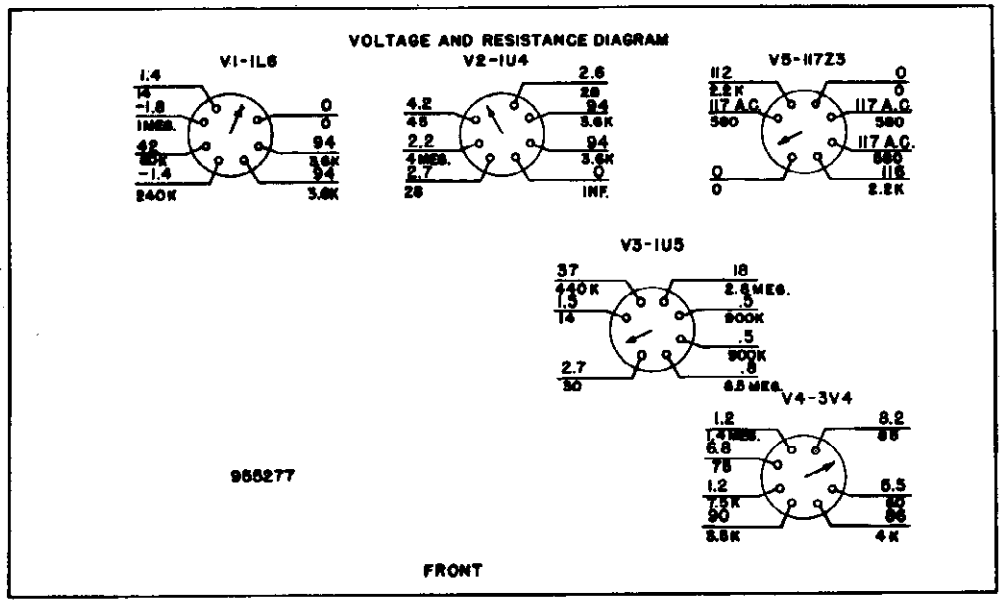

BOTTOM VIEW OF CHASSIS

VOLTAGE AND RESISTANCE DIAGRAM

REPLACEMENT PARTS LIST

SYMBOL	†PART NO.	DESCRIPTION
C-1	915005	2.2 mmf., Ceramic (Pt. of loop assy) ±20%
C-2	900031	Loop trimmer
C-3	928105A	7.5 mmf., Ceramic ±10%
C-4	910000	220 mmf., Mica ±20%
C-5	910000	220 mmf., Mica ±20%
C-6	928038	47 mmf., Ceramic ±10%
C-7	920060	.05 mf., Paper 200V
C-8	920090	.01 mf., Paper 400V
C-9	920060	.05 mf., Paper 200V
C-10	920515	.002 mf., Paper 400V
C-11	928032	110 mmf. (Combined with R-6)
C-12		110 mmf.
C-13	920090	.01 mf., Paper 400V
C-14	928104	212 mmf., Ceramic ±20%
C-15	920180	.005 mf., Paper 400V
C-16	920180	.005 mf., Paper 400V
C-17	925059	40 mfd., Elect. 150V
C-18	915021	265 mmf., Silver Mica ±2%
C-19	915019	301 mmf., Silver Mica ±2%
C-20	915022	347 mmf., Silver Mica ±2%
C-21	Pt. of L-3	Trimmer
C-22	Pt. of L-3	Trimmer
C-23	Pt. of L-3	Trimmer
C-24	900100	Broadcast osc. trimmer (Pt. of L-4)
C-25	Pt. of L-5	Trimmer
C-26	Pt. of L-5	Trimmer
C-27	Pt. of L-5	Trimmer
C-28	900067	Two gang variable capacitor
C-29	920539	.05 mf., Paper 400V
C-30	Pt. of C-17	80 mf., Elect. 150V
C-31	Pt. of C-17	30 mf., Elect. 150V
C-32	Pt. of C-17	100 mf., Elect. 25V
C-33	920040	.1 mf., Paper 200V
C-34	920060	.05 mf., Paper 200V
C-35	920170	.001 mf., Paper 600V
C-36	915005	2.2 mmf., Ceramic ±20%
R-1	351130	470,000 ohm, Carbon ½W ±20%
R-2	351210	1 megohm, Carbon ½W ±20%
R-3	351050	220,000 ohm, Carbon ½W ±20%
R-4	340950	82,000 ohm, Carbon ½W ±10%
R-5	351330	3.3 megohm, Carbon ½W ±20%
R-6		47,000 ohm, (Pt. of C-11 & C-12)
R-7	351290	2.2 megohm, Carbon ½W ±20%
R-8	390063	1 megohm, Volume Control
R-9	351450	10 megohm, Carbon ½W ±20%
R-10	351330	3.3 megohm, Carbon ½W ±20%
R-11	351130	470,000 ohm, Carbon ½W ±20%
R-12	351250	1.5 megohm, Carbon ½W ±20%
R-13	370150	39 ohm, Carbon 1W ±10%
R-14	340530	1,500 ohm, Carbon ½W ±10%
R-15	394041	2,200 ohm, W.W., C.T., Metal Clad ± 5%
R-16	370390	390 ohm, Carbon 1W ±10%
R-17	340470	820 ohm, Carbon ½W ±10%
R-18	340110	27 ohm, Carbon ½W ±10%
R-19	340530	1,500 ohm, Carbon ½W ±10%
R-20	340450	680 ohm, Carbon ½W ±10%
L-1	700042	Loop Antenna
L-2	708095	R.f. Choke
L-3	710027	Three-band Ant. Coil
L-4	716045	Broadcast-band Osc. Coil
L-5	716046	Three-band Osc. Coil
T-1	720525 or	1st I.F. Transformer
	720062	1st I.F. Transformer
T-2	720066A	2nd I.F. Transformer
T-3	734039	Output Transformer
T-4	720021	230 V. Conversion Transformer
V-1	800043	Converter - 1L6
V-2	800017	I.F. Amplifier - 1U4
V-3	800019	Det., A.V.C., A.F. Amp. - 1U5
V-4	800018	Audio Output - 3V4
V-5	800013	Rectifier - 117Z3
S-1	510066	Band Switch
S-2	510008	Transfer Switch
S-3	Pt. of R-8	On-off Switch
P-1	505055	Plug - Conversion Transformer
P-2	585314	Plug - Shorting
P-3	585049	Battery Cable Assembly
P-4		
P-5		
P-6		
X-1	505054	Female Line Plug
SP-1	180052	Speaker - 5"

CABINET AND DIAL PARTS

†PART NO.	DESCRIPTION	†PART NO.	DESCRIPTION
140316	Cabinet	410836	Escutcheon plate
140317	Cabinet back	410837	Telescoping antenna
460102	Speaker grille	505056	Adaptor
410835	Grille bracket	525041	Pointer
460104	Knob, tuning and volume	530002	Dial cord (30")
520116	Dial crystal	587040	Dial cord spring
450117	Knob, band switch		

† Specify part number when ordering.

©John F. Rider

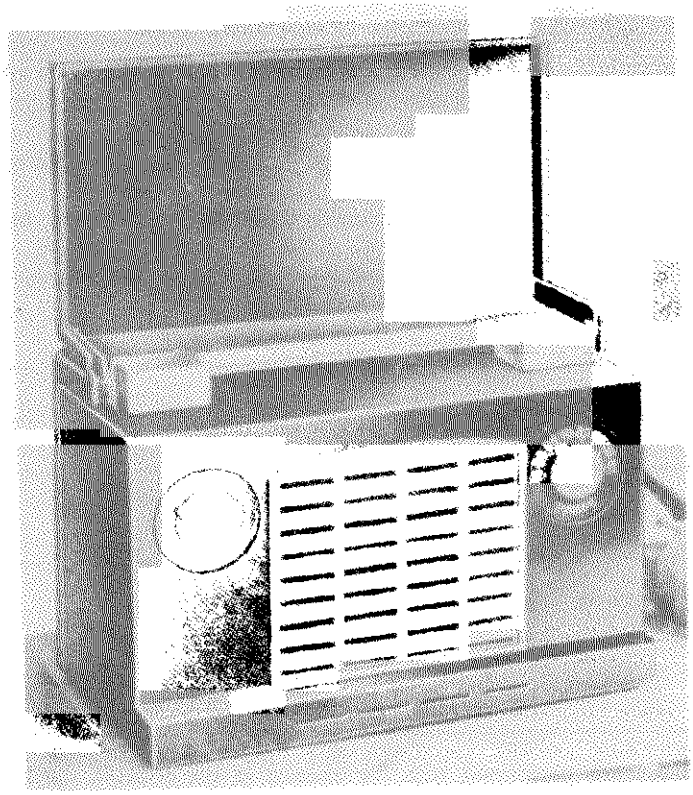

Power Supply: 105-125 V., 40-60 cycles AC
Same Voltage DC—Power Consumption 10 Watts
Battery Operation: 1—67½ V B — 3—1½ V D Cells in parallel
Frequency Range: 1640 — 530 KC
I.F. Circuits: 456 KC

Tubes: 1R5 Osc. Converter
1T4 I.F. Amplifier
1S5 Det. AVC A.F.
3S4 Power Output

Rectifier, Selinium
Speaker 4" P.M. 1 oz. Alnico V Magnet.
Speaker Transformer 5500 ohms - 400 cycles
Speaker Voice Coil 3.2 ohms.

PARTS LIST

Part No.	*Description*
12.11	Tubular Condenser .05 mf 200 V
12.12	Tubular Condenser .05 mf 400 V
12.14	Tubular Condenser .1 mf 200 V
12.65	Tubular Condenser .002 mf 200 V
17.7	Ceramic Condenser 200 mmf ± 20%
17.18	Ceramic Condenser 50 mmf ± 20%
17.21	Ceramic Condenser 100 mmf ± 20%
22.5	Electrolytic Condenser 100 mf 15 V
22.13	Electrolytic Condenser 150 mmf 15 V
22.64	Electrolytic Condenser 40-40 mf 150 V
27.36	Variable Condenser 2 gang
37.184	Oscillator Coil
37.188	Input & Diode I.F. Transformer
37.189	Loop
47.23	Battery—Electric Switch
52.54	Volume Control with on-off switch
62.175	A-Battery Retainer
72.35	Power Cord
92.280	B Battery Connector
97.190	Cabinet (specify color)
97.261	Loop Cover (specify color)
107.42	4" Speaker 1 oz. with Transformer
112.18	Rectifier Selenium
117.15	W. W. Resistor
132.10	Padder Condenser
142.7	Knob-Pointer (specify color)
142.68	Knob-Tuning (specify color)
142.69	Knob-Volume (specify color)

©John F. Rider

ALIGNMENT PROCEDURE

No attempt should be made to realign the various circuits until all other causes have been checked, unless the condition is so obvious as to indicate that realignment is necessary. Then proceed as follows:

Disconnect Loop leads—Remove Chassis from Cabinet.
Volume Control full on.
Low range A.C. meter connected across voice coil to indicate output.
Keep signal generator attenuated so as to maintain 1/2 scale reading on output meter.
Use battery power when available.

Receiver Condenser at:	Signal Generator	Dummy Antenna	Connect Signal Generator to:	Refer to Chassis Layout for Location of Trimmers
1 Fully closed	Exactly 456 KC	.1 MF	Chassis Ground and Control Grid 1R5 Rear Section Var. Cond.	Adjust for maximum output L1, L2, L3 and L4.
2 Fully closed	Approx. 538 KC	.1 MF		Adjust for maximum output T3
3 Fully open	Exactly 1650 KC	.1 MF		Adjust for maximum output T1
Repeat Operations 2 and 3. The next two operations are performed with the chassis in the cabinet, the loop connected and tuning indicator in position.				
4 Approx. 1500 KC	Approx. 1500 KC		Radiating Loop 20" from Receiver	Adjust T2 for maximum output.
5 Approx. 600 KC	Approx. 600 KC		Radiating Loop 20" from Receiver	Adjust T3 for max. while rocking variable cond.

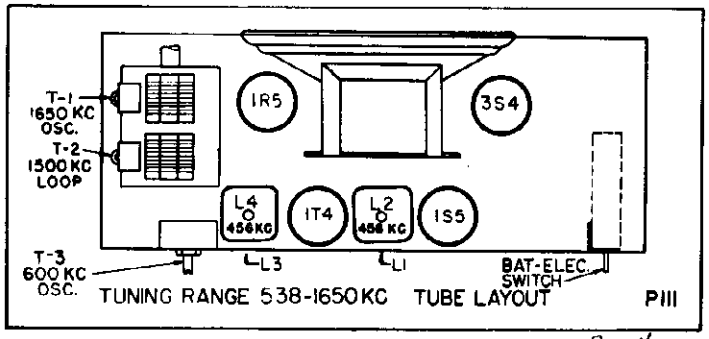

Part No. 102-207-1

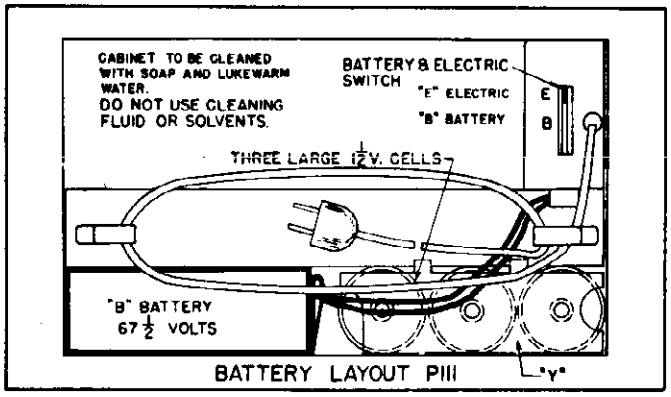

A 102-207-2

©John F. Rider

MODEL P111

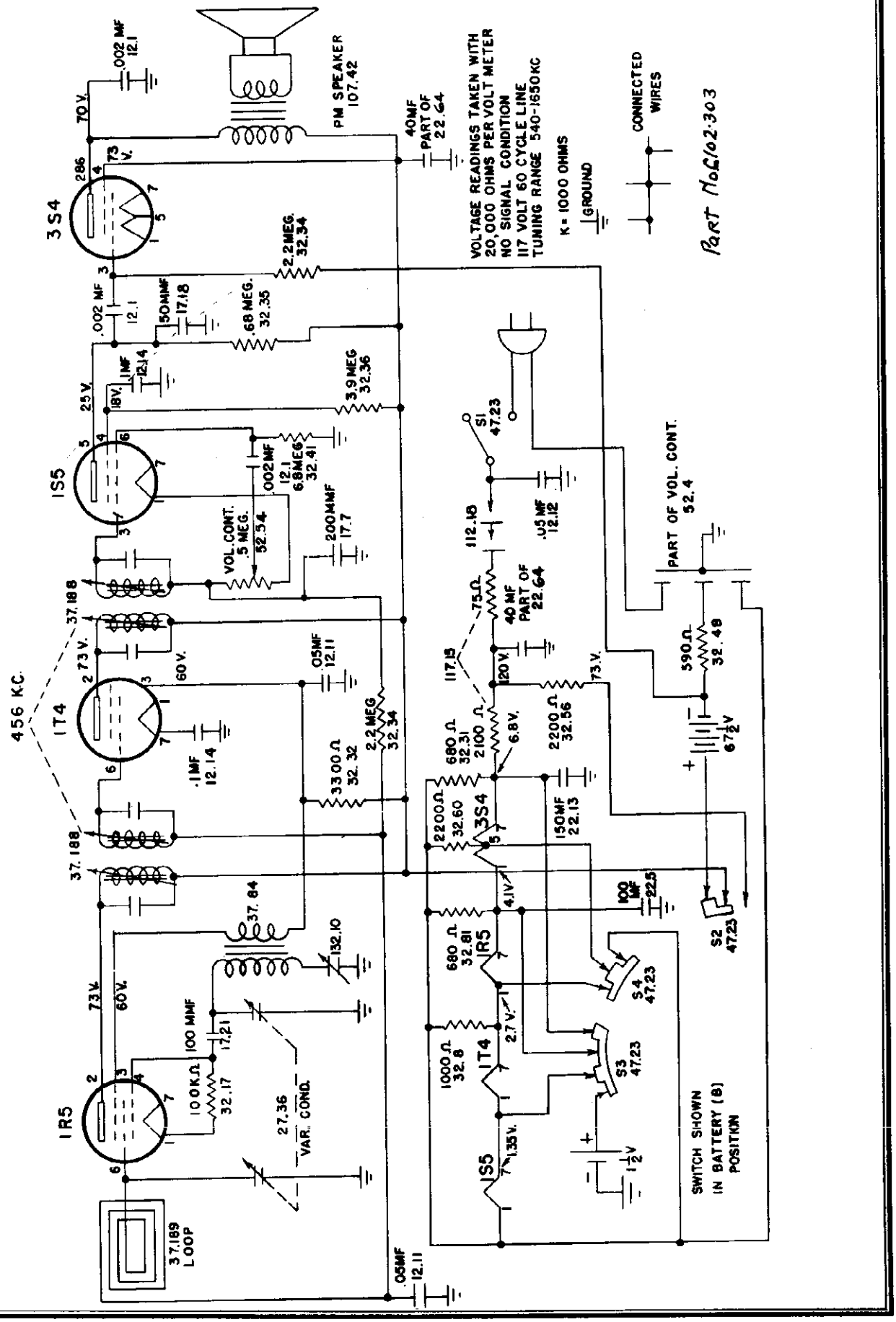

© John F. Rider

MODEL 830

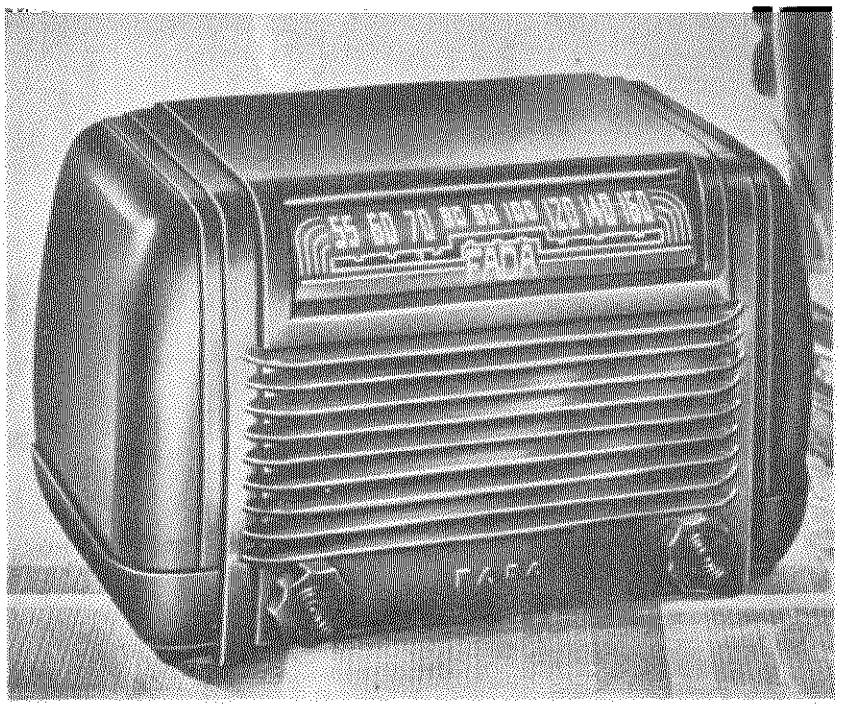

PARTS LIST

Part No.	Description
12.4	Tubular Condenser .005 mf 600 V
12.6	Tubular Condenser .01 mf 400 V
12.9	Tubular Condenser .03 mf 400 V
12.11	Tubular Condenser .05 mf 200 V
12.12	Tubular Condenser .05 mf 400 V
17.21	Ceramic Condenser, 100 mmf, ± 20%
17.22	Ceramic Condenser, 250 mmf, ± 20%
22.38	3 Sec. Electrolytic Condenser, 30-40-20 mf 150 W.V.
27.31	Variable Condenser
37.57	Oscillator Coil
37.157	Loop Antenna & Back
37.80	Output I.F. Transformer, complete
37.81	Input I.F. Transformer, complete
52.31	Volume Control with Switch
72.1	Power Cord (Approved)
77.133	Dial Scale (Calibrated)
77.145	Dial Pointer
77.146	Reflector paper
77.5	Dial plate cord
77.134	Drive
97.139	Cabinet, State color
142.26	Cabinet Knobs, State color
107.32	4" P.M. Speaker
42.40	Speaker Transformer for above
117.1	30 ohm 1 W. Resistor

Power supply: 40-60 cycles, 105-125V AC
Same Voltage DC

Power consumption: 30 Watts
Frequency Range: 530-1680 KC
I.F. Circuits: 456 KC

Tubes:		
	Osc.-Converter	12BE6
	I.F. Amplifier	12BA6
	Det. Avc. A.F.	12AT6
	Power Output	50B5
	Rectifier	35W4

Speaker: 4" P.M. 1 oz. "Alnico V" Magnet
Speaker Transformer: 2500 ohms—400 cycles
Speaker Voice Coil: 3.2 ohms

©John F. Rider

ALIGNMENT PROCEDURE

The chassis may be removed from the cabinet by pulling off the knobs, removing the back and the two screws on the back of the chassis.

No attempt should be made to realign the various circuits until all other causes have been checked, unless the condition is so obvious as to indicate that realignment is necessary. Then proceed as follows:

Volume Control full on.

Low range A.C. meter connected across voice coil to indicate output.

Keep signal generator attenuated so as to maintain ½ scale reading on output meter.

Make certain that dial pointer is exactly on index line (top left side of dial plate) when variable condenser is fully meshed.

Use only mild soap and water to clean cabinet and knobs. **Never use cleaning fluids.**

Receiver Dial at:	Signal Generator	Dummy Antenna	Connect Signal Generator to:	Refer to Chassis Layout for Location of Trimmers
Full Open	Exactly 456 KC	.1 MF	Control Grid 12BE6 Tube Rear Section Variable Condenser	Adjust for Maximum Output L1, L2, L3 & L4
Full Open	Exactly 1680 KC		Radiating Loop (½ meter) 20" from Receiver Loop	Adjust for Maximum Output T1
Approx. 1500 KC	Approx. 1500 KC		Radiating Loop (½ meter) 20" from Receiver Loop	Adjust for Maximum Output T2
Approx. 600 KC	Approx. 600 KC		Radiating Loop (½ meter) 20" from Receiver Loop	Check tracking and bend slotted end plate (rear section) of variable, if necessary.

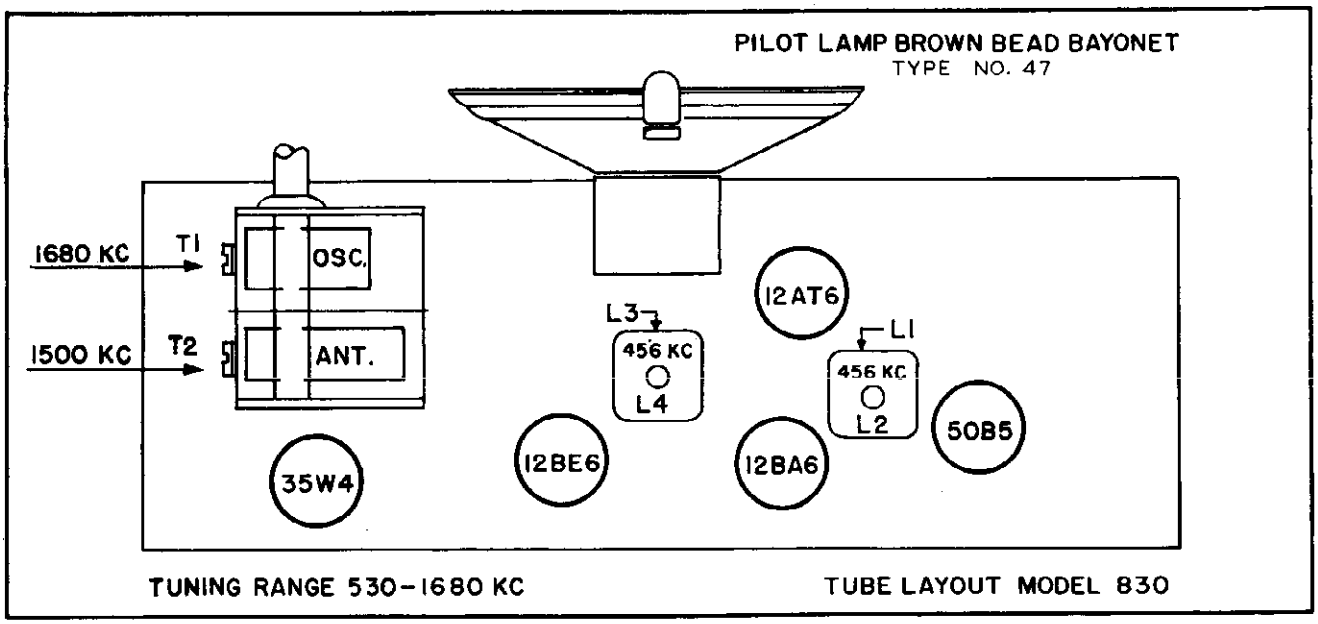

TUNING RANGE 530–1680 KC

TUBE LAYOUT MODEL 830

©John F. Rider

MODEL 830

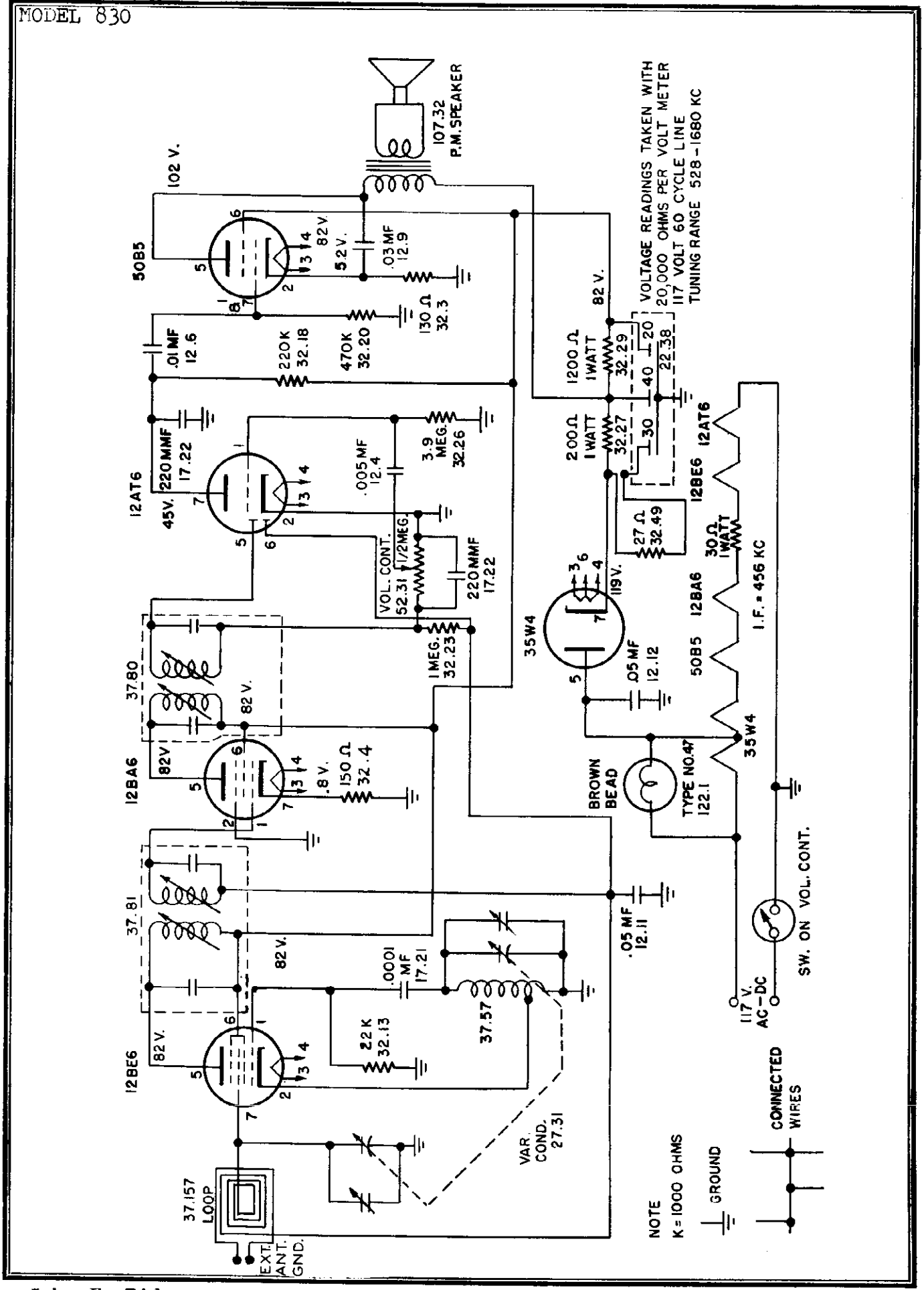

© John F. Rider

©John F. Rider

PARTS LIST

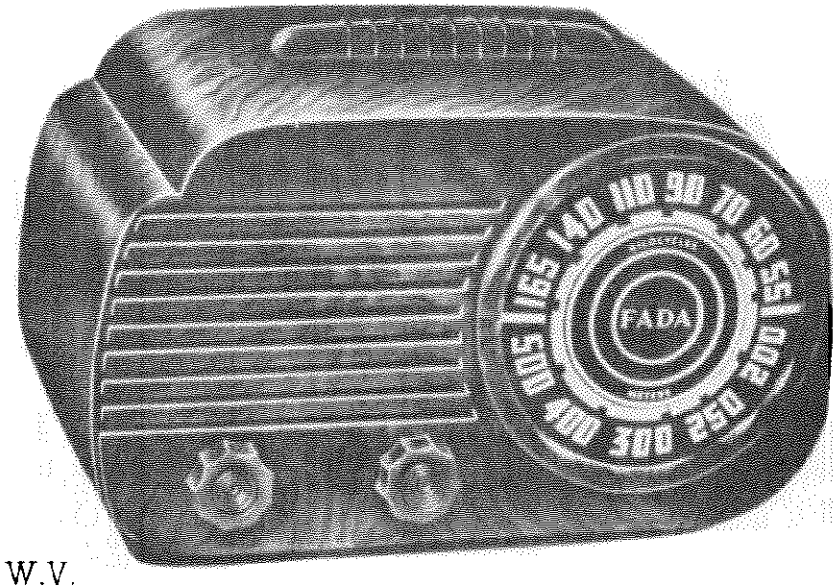

Part No.	Description
12.19	Tubular Condenser, .005 mf, 400 V
12.6	Tubular Condenser, .01 mf, 400 V
12.9	Tubular Condenser, .03 mf, 400 V
12.11	Tubular Condenser, .05 mf, 200 V
12.12	Tubular Condenser, .05 mf, 400 V
17.18	Ceramic Condenser, 50 mmf, ±20%
17.21	Ceramic Condenser, 100 mmf, ±20%
17.22	Ceramic Condenser, 220 mmf, ±20%
22.19	3 Section Electrolytic Condenser, 30-40-20 mf, 150 W.V.
27.18	Variable Condenser
37.57	Oscillator Coil
37.64	Loop Antenna
37.61	Input I.F. Transformer, complete
37.33	Output I.F. Transformer, complete
37.66	I.F. Trap
52.16	Volume Control with Switch
72.1	Power Cord
77.167	Dial Pointer
77.165	Dial Scale (Calibrated)
97.216	Cabinet — state color
142.26	Cabinet Knobs — state color
97.80	Cabinet Handle — state color
107.20	4" P.M. Speaker less Transformer
42.2	Speaker Transformer for Above
117.1	30 ohm 1 W. Resistor

Power supply (40-60 cycles AC) 105-125V AC-DC
Power consumption: 30 Watts
Frequency Range: 1680-530 KC
I.F. Circuits: 456 KC

Tubes:		
	R.F. Amplifier	12BA6
	Osc. Converter	12BE6
	I.F. Amplifier	12BA6
	Det. Avc. A.F.	12AT6
	Power Output	35B5
	Rectifier	35W4

Speaker: 4" P.M. 1 oz. "Alnico V" Magnet
Speaker Transformer: 2500 ohms—400 cycles
Speaker Voice Coil: 3.2 ohms

MODEL 845

ALIGNMENT PROCEDURE

The chassis may be removed from the cabinet by pulling off the knobs, removing the four screws on the bottom, and raising the handle.

No attempt should be made to realign the various circuits until all other causes have been checked, unless the condition is so obvious as to indicate that realignment is necessary. Then proceed as follows:

Volume Control full on.

Low range A.C. meter connected across voice coil to indicate output.

Keep signal generator attenuated so as to maintain ½ scale reading on output meter.

Make certain that dial pointer is exactly horizontal when variable condenser is fully meshed.

Use only mild soap and water to clean cabinet. Never use cleaning fluids.

Receiver Dial at:	Signal Generator	Dummy Antenna	Connect Signal Generator to:	Refer to Chassis Layout for Location of Trimmers
Full Open	Exactly 456 KC	.1 MF	Control Grid 12BA6 Tube (R.F.) (Top) Rear Section Variable Condenser	Adjust for Maximum Output T1, T2, T3 & T4
Full Open	Exactly 456 KC	.1 MF	Control Grid 12BA6 Tube (R.F.) (Top) Rear Section Variable Condenser	Adjust for Minimum Output T5
Full Open	Exactly 1680 KC	200 MMF	Leads at Rear for Ext. Ant. and Gnd.	Adjust for Maximum Output T6
Approx. 1500 KC	Approx. 1500 KC	200 MMF	Leads at Rear for Ext. Ant. and Gnd.	Adjust for Maximum Output T7
Approx. 600 KC	Approx. 600 KC	200 MMF	Leads at Rear for Ext. Ant. and Gnd.	Check tracking and bend slotted end plate (rear section) of variable, if necessary.

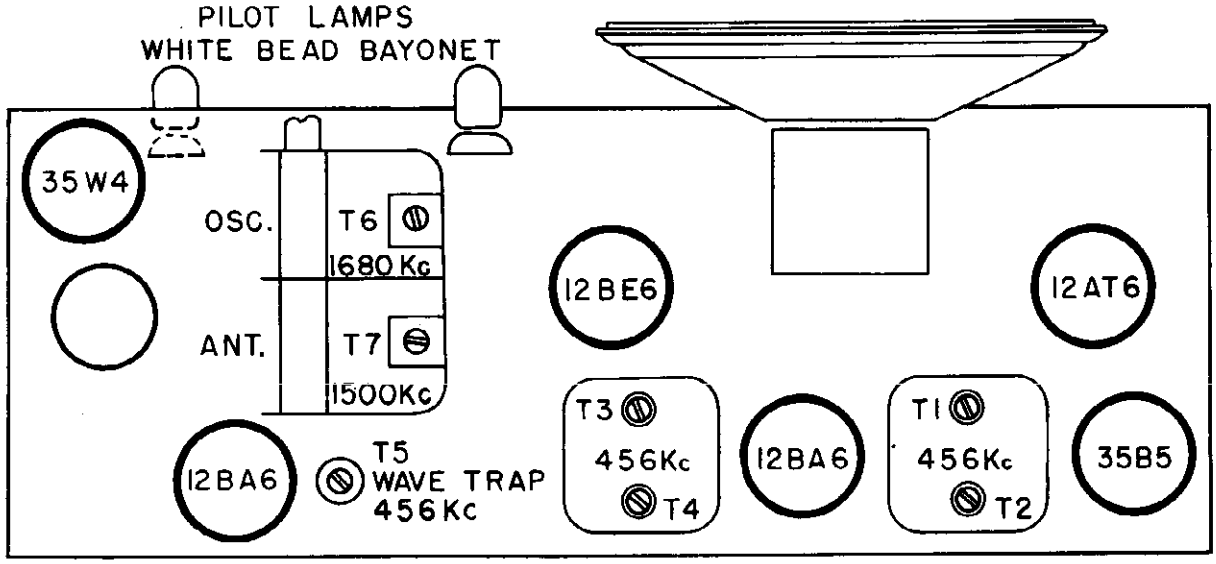

TUNING RANGE 530-1680 Kc TUBE LAYOUT 845

© John F. Rider

MODEL 845

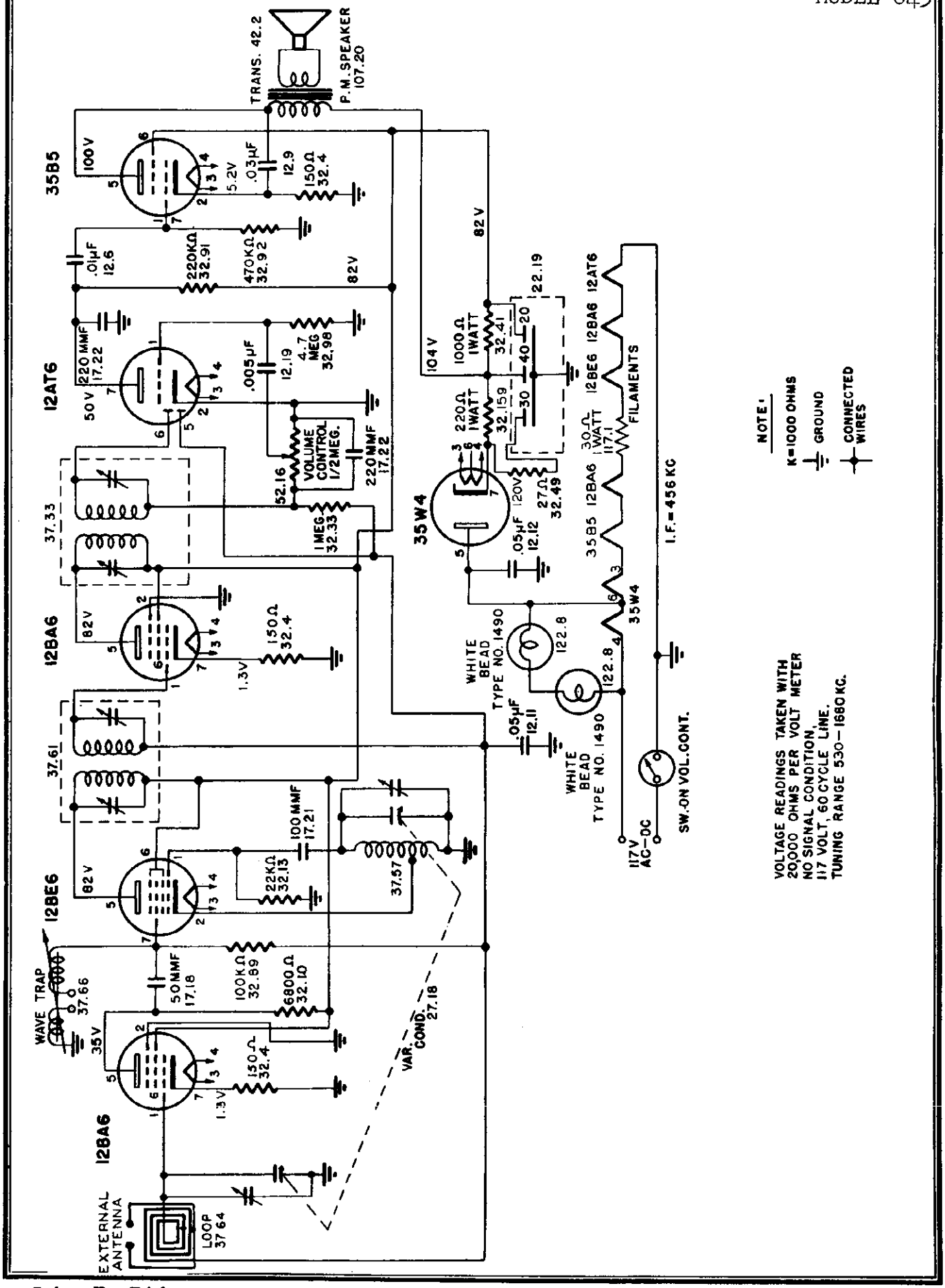

© John F. Rider

©John F. Rider

PARTS LIST

Part No.	Description
12.19	Tubular Condenser, .005 mf, 400 V
12.6	Tubular Condenser, .01 mf, 400 V
12.9	Tubular Condenser, .03 mf, 400 V
12.11	Tubular Condenser, .05 mf, 200 V
12.12	Tubular Condenser, .05 mf, 400 V
17.22	Ceramic Condenser, 220 mmf, ±20%
22.45	2 Section Electrolytic Condenser, 30-30 mf, 150 W.V.
27.33	Variable Condenser
37.153	Oscillator Coil
37.146	Loop Antenna
37.80	Input or Output I.F. Transformer, complete
52.32	Volume Control with Switch
72.1	Power Cord
77.150	Dial Slide
77.151	Dial Pointer
97.184W	Cabinet, Polystyrene - Walnut
97.184V	Cabinet, Polystyrene - Ivory
97.184M	Cabinet, Polystyrene - Maroon
142.25W	Knobs—Walnut
142.25V	Knobs—Ivory
142.25M	Knobs—Maroon
107.35	4" P.M. Speaker with Transformer

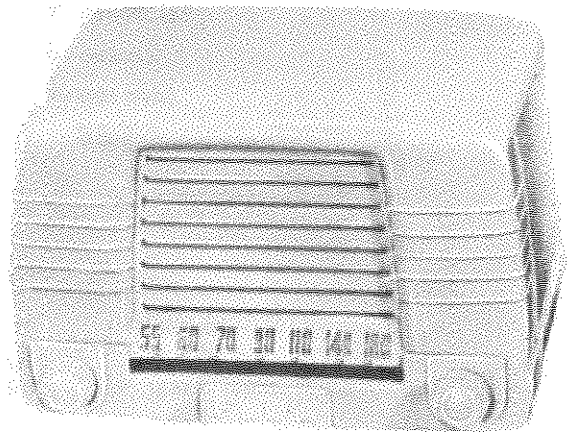

Power supply: 40-60 cycles, 105-125V AC
Same Voltage DC

Power consumption: 30 Watts
Frequency Range: 530-1680 KC
I.F. Circuits: 456 KC

Tubes:	Osc.-Converter	12BE6
	I.F. Amplifier	12BA6
	Det. Avc. A.F.	12AT6
	Power Output	50B5
	Rectifier	35W4

Speaker: 4" P.M. .68 oz. "Alnico V" Magnet
Speaker Transformer: 2500 ohms—400 cycles
Speaker Voice Coil: 3.2 ohms

ALIGNMENT PROCEDURE

The chassis may be removed from the cabinet by pulling off the knobs and removing the two screws on the bottom.

No attempt should be made to realign the various circuits until all other causes have been checked, unless the condition is so obvious as to indicate that realignment is necessary. Then proceed as follows:

Volume Control full on.

Low range A.C. meter connected across voice coil to indicate output.

Keep signal generator attenuated so as to maintain ½ scale reading on output meter.

Make certain that dial pointer is at inside edge of left leg of track when variable condenser is fully meshed.

Use only mild soap and water to clean cabinet. Never use cleaning fluids.

Receiver Dial at:	Signal Generator	Dummy Antenna	Connect Signal Generator to:	Refer to Chassis Layout for Location of Trimmers
Full Open	Exactly 456 KC	1 MF	Control Grid 12BE6 Tube (Top) Rear Section Variable Condenser	Adjust for Maximum Output L1, L2, L3 & L4
Full Open	Exactly 1680 KC	200 MMF	Leads at Rear for Ext. Ant. and Gnd.	Adjust for Maximum Output T1
Approx. 1500 KC	Approx. 1500 KC	200 MMF	Leads at Rear for Ext. Ant. and Gnd.	Adjust for Maximum Output T2
Approx. 600 KC	Approx. 600 KC	200 MMF	Leads at Rear for Ext. Ant. and Gnd.	Check tracking and bend slotted end plate (rear section) of variable, if necessary.

PILOT LAMP BROWN BEAD BAYONET NO. 47

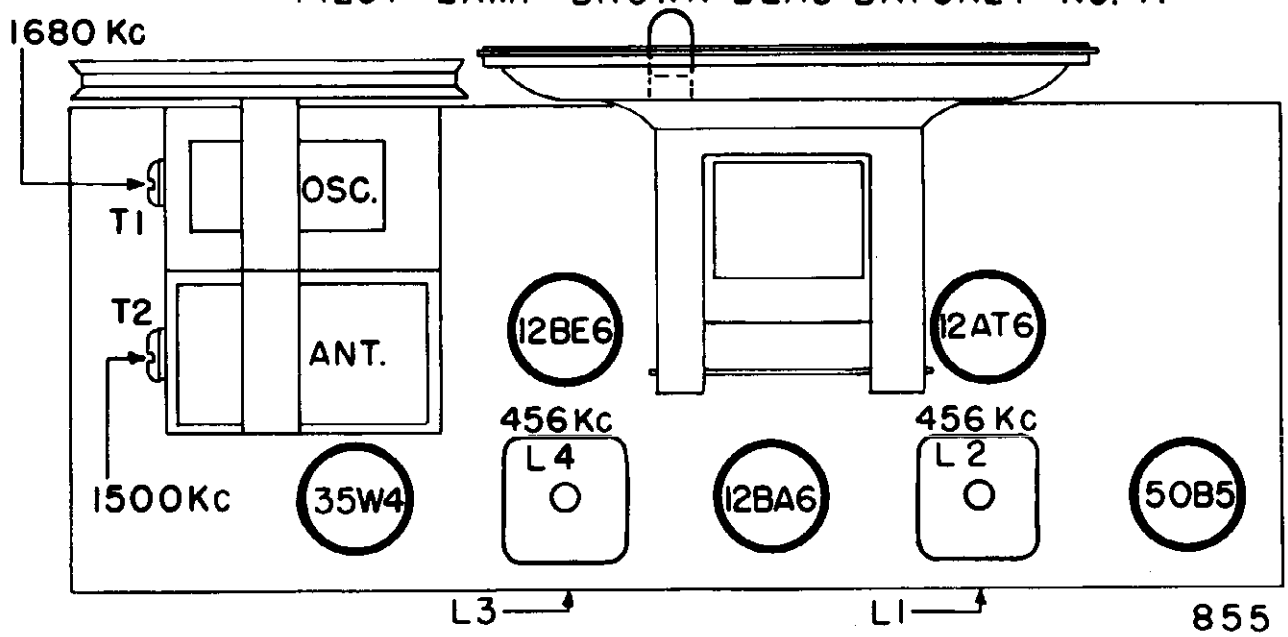

TUNING RANGE 530-1680Kc

855 TUBE LAYOUT

© John F. Rider

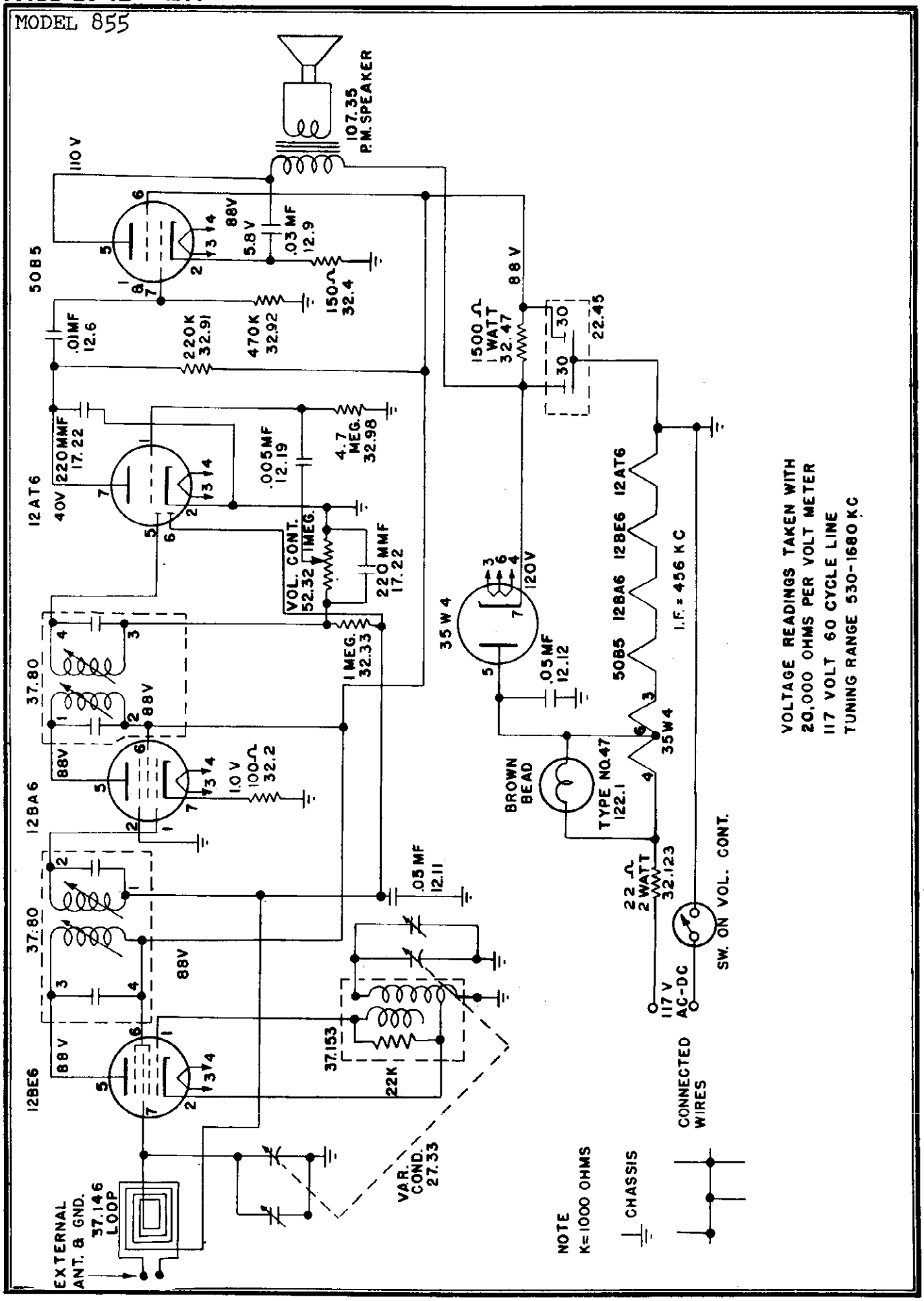
MODEL 855
107.35 P.M. SPEAKER
110 V
5085
88V
5.8 V
.03 MF 12.9
150 Ω 32.4
.01MF 12.6
220K 32.91
470K 32.92
1500 Ω 1 WATT 32.47
88 V
30
30
22.45
12AT6
40V
220MMF 17.22
.005MF 12.19
4.7 MEG. 32.98
VOL. CONT. 1 MEG. 52.32
220 MMF 17.22
1 MEG. 32.33
35W4
120V
.05MF 12.12
5085 12BA6 12BE6 12AT6
I.F. = 456 KC
37.80
88V
12BA6
88V
10 V
100 Ω 32.2
.05 MF 12.11
37.80
88V
12BE6
88 V
37.153
22K
VAR. COND. 27.33
EXTERNAL ANT. & GND.
37.146 LOOP
BROWN BEAD TYPE NO.47 122.1
35W4
22 Ω 2 WATT 32.123
117 V AC-DC
SW. ON VOL. CONT.
CONNECTED WIRES
CHASSIS
NOTE
K=1000 OHMS
VOLTAGE READINGS TAKEN WITH
20,000 OHMS PER VOLT METER
117 VOLT 60 CYCLE LINE
TUNING RANGE 530-1680 KC

© John F. Rider

©John F. Rider

GENERAL DESCRIPTION

NOTE: While the descriptions and illustrations in this manual refer specifically to the Model PR-12 portable Federal Recorder, they apply to all models - console as well as portable.

Two-Piece Carrying Case

The Federal Recorder type PR-12 is built into a two-piece carrying case. The lower section houses the recorder proper with the amplifier, driving mechanism and controls. The upper section or the lid contains the loud speaker and cable bracket. In setting up for operation the case is placed so that the speaker protective grill is on the top side. Inside the lid of the case is mounted an 8-inch electro-dynamic speaker with a bracket for wrapping the speaker cable and line cord. The lid or cover of the case acts as the baffle board for the speaker.

The lid is removed from the body part of the case by unfastening the two front latches, raising as one does the lid of a suit case. After the lid is raised past the vertical position it may be unhooked from its hinges and set alongside the recorder proper or at cable length from it.

Panel Controls

All the recorder controls are located on the front panel. Referring to Figure 1, the switch marked (1) on the left-hand side of the front panel turns the amplifier on or off. This switch, however, does not control the amplifier until the speaker cable (19) is plugged into the socket (20) on the rear left-hand corner of the top panel.

The switch just below marked (2) turns the driving motor on or off. The motor may be started by this switch whether the speaker plug is in or out. The turntable (21) is engaged to the motor by the action of the control lever (14) and the holding knob (15) in a manner described in a later section.

The tone knob (3) is used to control the tone only when a record is played back. There is no provision for controlling the tone while recording. Within the frequency range of the recorder the sound is recorded exactly as it is. If it were possible to control tone while recording it could cause, at the discretion of the operator, an unnatural recording to be made.

The speaker switch (4) controls the connection of the speaker and the cutting head (27) to the amplifier output. When this switch is turned to "IN" position the loud speaker is connected to the output of the amplifier. (No recording can be made until this switch is thrown to "OUT" position.) With this switch in the "OUT" position the cutting head is connected across the output of the amplifier, the monitering meter (12) is connected to the amplifier to give a visual indication of the recording level. The loud speaker is also faintly connected to give an audible monitering of the program or material being recorded.

The gain control (5) is a fader type of volume control. When the bar type knob is turned to the left of the "center mark" under the word GAIN the volume for the radio or the playback is increased. If the right-hand switch (9) is thrown to the RADIO position the gain control acts to control radio volume. If it is thrown to PICKUP position the gain control acts to control the volume on play back. When the gain control knob is turned to the right of the "center mark" it acts to control the volume of the amplifier when microphone is used.

The jack marked MIKE (6) is used to receive the microphone plug (7) whenever a recording is to be made with microphone. This jack will accommodate any high impedance type of microphone except those requiring a polarizing voltage. The microphone used should have for best results a sensitivity falling within the range of -56 to -72 decibels.

The switch at the right-hand side of the panel marked (9) connects either the radio tuner or the pickup to the amplifier, depending upon whether it is in the RADIO or the PICKUP position. With this switch in the RADIO position, the amplifier switch on, and the speaker plug in its socket, the "Station Selector" dial (11) should light up. It requires a half minute or so for the radio tuner tubes to heat up after switching the radio on.

The Station Selector dial is calibrated in kilocycles, thereby enabling easy selection of the main stations. Stations are tuned in by the tuning knob (10).

The radio volume knob (8) is used to control the volume of the radio tuner. This acts to control the radio tuner volume before it is fed into the amplifier. The center gain control, when turned to RADIO side, acts to control the radio volume after the tuner is fed into the amplifier. The use of these two controls for regulating the volume of the radio to proper monitering level is explained in a later section.

Drive Between Motor and Turntable

The power from the motor is transmitted to the inner rim of the turntable by a rubber pulley beneath the turntable. This rubber pulley is shown in Figure 2 marked (38). It is mounted on the pulley lever (14). When the pulley lever is pushed toward the rear it engages the rubber pulley between the motor shaft (39) and the inside rim of the turntable thus enabling the motor to drive the turntable. The inside rim of the turntable is marked (40) on Figure 2. The knob (15) fastens the pulley lever into position. Pulling the lever forward draws the rubber pulley away from between the motor pulley and the turntable rim, thus disengaging the turntable from the driving motor. Do not push lever so hard as to put excess friction between turntable and motor.

When the recorder is not in use the motor must be left disengaged from the turntable. This relieves the pressure on the rubber pulley, thereby preventing the formation of a dented spot in the rubber pulley which in time might develop a thump.

Drive Between Turntable and Cutting Head

The turntable is set on a tapered spindle (41) of Figure 2. It is normally held on this spindle by the spindle thumb nut (22) of Figure 1. During recording and playback this center thumb screw is unnecessary, since the weight of the turntable holds it sufficiently solid to the tapered spindle. This spindle runs in ball bearings inside the cast gear housing (42) see Figure 7. On this spindle and inside the gear housing is a worm gear which drives a fibre gear. This fibre gear drives the shaft (43) which in turn engages with the precision ground lead screw (45) through the medium of a small worm gear and a fibre gear (44).

The lead screw finger (47) becomes engaged with the threads of the lead screw when the cutting head is lowered on to a record in the cutting position, thereby carrying the head slowly across the record while it is turning. Whenever the cutting head is raised from the record it disengages the lead screw finger from the threads of the lead screw.

HOW TO MAKE RECORDINGS WITH MICROPHONE

1. Remove top lid of case which contains speaker and set it a few feet away from recorder. (See Figure 1).
2. Plug speaker cable plug (19) into socket (20) located on the rear left-hand side of panel. This plug fits in only one position.
3. Plug power cord (18) into A. C. outlet only (100 to 117 volt 60 cycles). Converter must be used for D. C. current.
4. Put cutting needle all the way into the cutting head (27) so that flat part of the needle rests against the set screw. If a sapphire is used it is necessary to push weight adjustment (31) forward a few notches to get proper depth of cut.
5. Unscrew turntable holding thumb nut (22). This nut is left-hand thread and turns to right to unscrew. Place record on turntable (21) and on top of felt pad (24) so that the driving pin (23) engages in one of the driving holes of the record. It is not necessary to fasten the record down with the center thumb nut.
6. Get the turntable properly engaged in gear so that when you are ready to make recording you will lose no time. Do this as follows: Loosen knob (15) and push the lever (14) toward rear until you feel it engaging. Hold lever in this position and switch motor switch (2) to ON position. The turntable will start turning. Adjust the lever so that turntable is running full speed without slipping. Now tighten the lever knob (15). (A quick test for determining whether the turntable lever is adjusted properly is to press the thumb against the outside rim of the turntable gently, yet with sufficient pressure to determine that it would not slip while cutting a record.) Motor switch may be left on while making the next few operations or you can turn it off.
7. Plug microphone plug (7) into panel jack marked MIKE (6).
8. Throw speaker switch (4) to OUT position.
9. Turn amplifier on by switching AMP-ON switch (1) to ON position. The green pilot lamp (13) will light up. Allow about thirty seconds for amplifier to warm up. Note: (It is impossible to turn amplifier on unless the speaker plug has been plugged in as described in direction 2 above. The motor can operate the turntable whether the speaker plug is in or out.)
10. Switch right-hand switch (9) marked RADIO PICKUP to pickup side. This operation is not strictly essential, but it allows the radio portion of the recorder to be turned off while recording with microphone.
11. Have subject speak a few words or play a few notes in front of the microphone and turn the center gain control (5) to the right of the center mark (the side marked MIKE) until the monitering meter (12) swings and averages around the red line. Occasional audio peaks or high notes will make the needle swing full scale but the proper level is obtained when the average is around the red line.

A trial or two will enable you easily to recognize and obtain proper level. For a person talking, a good distance away from microphone is 8 to 12 inches; for singing, 12 inches to 4 feet; for instrument recording, 2 feet to 20 feet, depending upon loudness of instrument.

12. Have turntable running. Holding the cutting head (27) in right hand and cutting arm (34) in left hand bring cutting head over desired starting point on disc. Lower the cutting arm easily so as to engage it into the drive mechanism and then gently lower the cutting head on to the record. (The cutting head is adjusted at the factory to cut the proper depth on acetate record.)
13. When recording is completed, even if only a part of the record is used, lift the cutting head from the record and replace it on the armrest (35).
14. While the turntable is still running, remove the shavings from the record by working them toward the center with the finger tips, or a moderately stiff brush. Note: (These shavings are highly inflammable.)

HOW TO PLAY BACK

1. Turn the center gain control slightly to the left of the center mark (the side marked RADIO-PICKUP).
2. Throw speaker switch (4) to IN position.
3. Put a pickup needle all the way into the head of the pickup (16). Fasten the needle with the thumbscrew into the head of the pickup. (Do not turn this thumbscrew with force.)

4. Remove the pickup from its holder and place very gently on to the revolving record at the beginning of the cut.
5. Adjust the volume to desired value with the center gain control, turning it to the left of the center mark or to the side marked RADIO PICKUP.
6. The tone control (3) may be used to obtain the desired tone. This tone control is effective only on playback; it cannot be used to control the tone of the radio or when recording.
7. Commercial record may be placed by unscrewing the driving pin from the turntable. It is not necessary to fasten record down with center thumb nut when playing.

HOW TO RECORD RADIO PROGRAMS

1. To make a good radio recording it is essential first to properly tune in the station, using the load speaker as indicator. Since the radio tuner is of the tuned radio frequency type to insure high fidelity it is essential to take a little care in properly tuning and adjusting volume of radio before starting to record.
2. Connect the antenna (approximately 30 feet long) to the antenna binding post (25). A ground connection is not required for the Federal Recorder.
3. The first six directions under HOW TO OPERATE RECORDING WITH MICROPHONE apply also to making a radio recording.
4. Throw the right-hand switch (9) to RADIO. This should illuminate the station selector dial.
5. Throw the speaker switch to IN position.
6. Set the center gain control about 1/8 of a turn to the left of the center mark.
7. Set the radio volume control (8) about half way between minimum and maximum.
8. Tune in the station and program to be recorded. Do this tuning carefully, making sure that there are no interfering stations or noises. (See paragraph HOW TO USE AS HOME RADIO for additional pointers on operating radio.)
9. The proper volume for recording is obtained by using both the radio control and the center gain control. By a trial the proper setting of each control can be determined. If the radio volume control (8) is turned low and the center gain control turned high a slight distortion may be introduced. Most distortion is apt to be introduced if the radio volume control is turned high and the center gain control set near minimum. Best results will be obtained by placing the center gain control middle way between maximum and minimum and then adjusting to proper volume with the radio volume control.
10. Throw the speaker switch to OUT position but before doing so make sure the radio volume is turned near minimum; otherwise the volume may be too great for the monitering meter.
11. Raise the radio volume with the radio volume control until monitering meter averages around the red line.
12. Proceed with recording as in directions 12-13-14 under HOW TO OPERATE RECORDING WITH MICROPHONE.
13. It is possible to cut into any "off the air" recording and make a personal comment. This is done by inserting the microphone plug into the "mike" jack and turning the center gain control from its radio position to the mike position - that is, from left to right. This fades the radio program out and brings the microphone into play. When comment has been made into microphone you may get back to the radio recording by turning the center gain control back to where it originally was set.

HOW TO USE AS PUBLIC ADDRESS SYSTEM

1. Plug microphone into jack on panel marked MIKE.
2. Have radio turned off. This is done by having the right-hand toggle switch to PICKUP position.
3. Turn amplifier switch to ON position.
4. Throw speaker switch to IN position. Turn center gain control to right, on "mike" side of the center mark, until desired volume is obtained.

When using the Federal Recorder as a Public Address system it is necessary to have the loud speaker and the microphone removed from one another by considerable distance in order to eliminate the howling due to acoustic feed back between speaker and mike. Speaker should be ahead of microphone and microphone turned at 180 degrees from speaker. Best results may be obtained by using an extension cable and having the microphone isolated from speaker. The extension cable can be obtained from the Federal Recorder Company.

HOW TO USE AS A HOME RADIO

Although it is not one of the major intents of the Federal Recorder machine, it can be used as an ordinary home radio set.
Since the radio tuner and amplifier are of the high fidelity type for the express purpose of making true radio recording, it cannot be used with the same flexibility and type of control as is a commercial type home radio. The tuner does not have as good sensitivity or selectivity as the 9 or 10-tube superheterodyne commercial receivers nor will it control with the same ease. However, with the station properly tuned in, the fidelity will greatly surpass the commercial receiver. The radio tuner is purposely built this way to insure exact reproduction of the radio program, even though a little care is required to get the station properly tuned in.

An antenna about thirty feet long will give satisfactory results. Connect to antenna binding post (25) in Figure 1, No ground is necessary.
Set the center gain control about mid way to left and control volume with radio volume control.

PROTECTION OF MONITERING METER

The volume required for proper recording is considerably less than the normal output of the amplifier. With this in mind the following precaution must be observed for the protection of the monitering meter: Never have radio or microphone gain turned up high when switching the speaker switch to the OUT position for making a recording. Always start with a low gain and raise it to the required level.

ADJUSTING CUTTING HEAD USE OF CUTTING DEPTH GAUGE

The cutting head is adjusted to the proper cutting angle at the factory and ordinarily need never be changed. The pressure of the cutting needle on the record determines the depth of the cut into the acetate coating. If the cut is too light, the groove will not be deep enough for the pickup needle to follow on playback. The pickup will either jump out of the groove or else act to straighten out the groove and destroy the wavey track representing the recorded material. If the cut is too deep the cutting head must labor, in order to impress the vibrations of the cutting needle into the coating, so that some of the original frequencies will not be recorded. This means an unnatural recording and produces what is sometimes called an echo.
The position of the counter balance weight (31) on the slide rod (30) controls the depth of the cut.
The proper position of the counter balance weight is determined with the aid of the Depth Gauge (46 of Figure 6) which is furnished with each Federal Recorder.
The depth gauge consists of a piece of spring material fastened into a small block. Near the tip end of the spring is a small round dent. The gauge is held on the surface of the record with the finger so that the point of the cutting needle sets in the small dent on the spring. The proper adjustment of the balance weight is obtained when the tip of the spring is caused just to touch the surface of the record, with the cutting arm fully engaged into the lead screw.
NOTE: In order to make sure that the cutting arm is in the proper cutting position and fully engaged in the lead screw gear it is well to allow the turntable to turn a few rounds with only the cutting head lifted slightly off the record. The adjustments of the balance weight must be done with the felt pad between the turntable and the record.

CARE TO BE TAKEN WHEN CARRYING

After completing a recording and just before closing it up to move to another position make sure that the center thumb nut (22 of Figure 1). is tightened. This holds the turntable fast on the spindle, preventing it from falling off and doing damage to the rest of the machine.
It is advisable to remove the needle from the pickup since any bump against it can cause damage to the crystal located in the head of the pickup. Make sure the pickup is rigidly held in its support.
Fasten the cutting head securely with the thumb nut on the cutting head rest (35).
Make sure that the speaker cable and power cord are wrapped so that the plug ends of the cord do not flop around into the speaker cone or the other parts on the top panel.

CLEANING DRIVE MECHANISM

It is necessary often to remove the turntable and clean bits of shavings and dirt away from the rubber drive pulley (38 of Figure 2). Particular care must be taken to see that the driving face of the rubber pulley is kept free from grit and shavings. A small bit of shavings stuck on the pulley will cause a thumping noise which may be recorded into the record with the program, or distort the recording.
The driving face of the rubber pulley can be cleaned with alcohol or Carbona (Never gasoline).

It is often necessary to wipe out the inner rim of the turntable, especially the track where the rubber pulley runs. Sometimes it is necessary to remove grease or dirt films from the motor pulley (39 of Figure 2).
The lead screw (45 of Figure 7) must be kept free of dirt, shavings and especially any small gritty particles. Every few months the threads of this screw should be cleaned with a brush and alcohol, and then greased, (see section under LUBRICATION).

LUBRICATION

Following is a list of the places to be lubricated, showing the kind of lubricant and how often it should be used.
1. The rubber pulley bearing (38A of Figure 2): To lubricate the rubber pulley unscrew the round head screw holding it in place and remove it from its shaft. After cleaning put a small bit of automobile chassis lubricant or ordinary vaseline inside and on the lower shoulder of the fibre bushing in the rubber pulley. Replace pulley and fasten with holding screw and washer.
This pulley should be greased every few days, depending upon amount of use.
2. The cutting head pivot screws (33 of Figure 6). should be oiled with a drop of light machine oil every two or three weeks, depending upon amount of use. The cutting head should always be free to turn on these two pivot screws in order that the cutting head can follow any up and down movement while it is cutting.
3. The lead screw pivot points (48 of Figure 7) occasionally require a small amount of chassis grease.
4. The lead screw threads should be kept greased with a little chassis grease or vaseline.

©John F. Rider

©John F. Rider

This may be applied with the tip of the finger through the opening in lead screw cover (45 of Figure 7).
5. The cutting arm guide rod (49 of Figure 2). must be kept oiled throughout its length with a light grade of machine oil.
This rod should be oiled whenever it is seen to be getting dry or when the cutting head arm ceases to move freely from inside of record to outside or outside in when moved by hand.
6. The grease retaining cup which houses the lead screw textolite gear should be kept filled with an automobile chassis lubricant. Some lubrication may be required every three or four months (50 of Figure 7).
7. The driving motor (51 of Figure 7) has two small oil holes close to the rubber mounting rings (53) which require a couple of drops of very light oil every few months depending upon amount of use.

HINTS FOR ACETATE RECORDING

The shaft of the SAPHROID needle has a flat portion along its length and the needle should be inserted so that the set screw tightens up against this flat.
The "V" shape needle has no flat portion but has an indentation just above the point. This indentation faces you when held in front of the cutting head.
Insert needle all the way into the cutting head. It is of great advantage to use a sharp needle, as this will minimize surface noise. We suggest setting aside one record for test purposes. Then test each needle by cutting a few lines on this record. If the needle cuts quietly, reproduction will be quiet. If the needle is dull, it will hiss and squeak loudly, resulting in noisy reproduction. A simple way to check is to put one's ear as close as possible to the needle and listen to the cutting. Under proper conditions, the needle noise should be barely audible. All Federal Recorders come adjusted with the proper needle angle. This angle, when facing the cutter, is 95°. If necessary, the angle may be changed by adjusting the screws in back of the cutter head as shown in Figure 6.
In cutting, the shavings should be kept away from the cutting needle. If your machine is made to cut from the "inside-out" the shavings will automatically take care of themselves. Occasionally, in starting the thread may catch at the needle. If this occurs, push it away toward the center. When cutting from the "outside-in" both cutter and shavings are travelling in the same direction and more care must be taken to see that these shavings are clear of the cutting needle. This can be done by using a soft brush or by using the finger-tips lightly.
Do not press fingers or brush on record while cutting as this tends to slow down record and produce "wows" in the recording that are noticeable when playing back.
NOTE: A few drops of high grade machine oil, when spread over the surface of an acetate record before recording, will result in a smoother and more quiet cut. This procedure is especially beneficial when using discs which are either cold or have hardened due to age.

HINTS FOR USE OF MICROPHONE

A few trial recordings with the microphone will enable one to become familiar with a few of the "tricks" in recording to obtain best results.
For voice recordings, where the level is at a natural conversation, the microphone should be held from about eight inches to two feet from the mouth.
For singing, a distance of from two to eight feet will be found most suitable.
For recording piano, a distance of from six to fifteen feet gives the best results. When recording a piano, place the microphone on the high side of the keyboard so that the high notes will come through better. These distances are somewhat governed by the surroundings and the type of room.
Where the recording of an orchestra is to be made, the highest toned instruments should be closest to the microphone. For recording an orchestra in a room where sound reflection from the ceiling may cause reverberation it is best to place a cloth over the microphone when it is tilted face up.
If the microphone is tilted with the face up it is essentially non-directional and will give best recording where sounds all around the microphone are to be recorded.

TROUBLES AND REMEDIES

Excessive Needle Scratch

Needle scratch is caused by a defective needle, a faulty or chilled record, or recording at too low level.
A poor grade acetate record blank often has grit or hard spots. This will cause excessive scratch. Use only good grade acetate records. The Federal Recorder "Perma Disc" is one of the quietest records known and in general runs very consistent as to softness.
When recording is at too low level excessive amplification is required on playback. This brings out scratch and background noises. Cut all records so that the moniter averages around the red line.

Cutting Needle Runs in Single Groove

If the cutting needle runs in single groove the lead screw finger is not engaging in the lead screw.

Cutting Through Coating Into Aluminum Disc

If the cutting needle cuts through into the aluminum disc the cutting depth is too great. To correct this follow the instructions for the use of the depth gauge in one of the preceding sections.

Playback Needle Will Not Track

The failure of the playback needle to track may be caused by either a dull playback needle or too light a cut on the record.
If the playback needle is very blunt it may be too large to fit into the groove in the record. The only remedy in this case is to replace the needle.
If the cut is not deep enough the playback needle cannot follow in the groove. To correct this adjust to proper cutting depth. A properly cut groove gives a black and shiny shaving about the thickness of ordinary human hair.

Cutting Head Not Free to Move Up and Down

This is due to the cutting head pivot screws (33 of Figure 6) being too tight or requiring a bit of oil. The cutting head should be free enough to follow any up and down movement of turntable.

Playback Needle Repeats in Single Groove

This may be due to over cutting or because of shavings becoming tangled in cutting needle while recording.
When shavings become entangled about the cutting needle they may pull on the needle or lift it from the record and set it into the next groove. In cutting, the shavings should be kept cleared from the needle. See the notes under HINTS FOR ACETATE RECORDING.
If recording is done at too high a level some note or word in the recording may occur at greater than normal level, causing the cutting needle to make a cut in the space intended for the adjacent groove. This is sometimes called "cutting into next groove". The only remedy in this case is to lower the recording level. Record so that the average swing of the monitor is around the "red line."

Turntable Growls

This may be caused by shavings getting under the turntable and getting caught into the rubber drive pulley. See notes under CLEANING.

Chatter of Cutting Head

Chatter is caused usually by one of four things:
1. Needle may not be inserted tightly into cutting head.
2. Loose pivot screws.
3. Improper angle of needle on record.
4. Dirt between the finger and the lead screw. The proper cutting angle is made at the factory and ordinarily need not be corrected. This angle can be changed by the adjusting screw on the back side of the cutting head bracket. For correct cutting angle see illustration of Figure 7.

Wows or Wavering

A wow is described as a noticeable and unnaturaly change of pitch in a musical note. This effect is most noticeable on long sustained notes. This change of pitch is caused by a change of speed in the turntable while cutting. This is caused by slippage or a momentary loss of inertia in the turntable while recording, too deep a cut or a chilled record.
Any slippage in the drive mechanism while recording will cause a wow. This may be caused by dirt or grease on the motor shaft or rubber pulley. Improper adjustment of the pulley lever (44 of Figure 2, will cause slippage.
A hard spot on the record will act to slow the turntable down while recording which will cause a wow on play back.
A cold record is a very common cause of wows. When the temperature is low the acetate coating becomes hard, making it difficult to cut properly.

Radio Whistles When Tuning Station

This is caused by the radio tuner being out of line or improperly trimmed up. A proper alignment of the radio tuner stages will correct this whistle. Often the tuner may be only partly out of trim causing whistle when radio volume is turned up full. In such case it is usually satisfactory to keep the radio volume control turned below this point.

Radio Insensitive

This can be caused by either a bad tube in the radio tuner or by the tuner being considerably out of trim.

Amplifier Troubles

Troubles and remedies in the radio and amplifier cannot be outlined in such a manner as to be beneficial to the average Recorder owner. All such troubles should be taken up only by a reliable service man or authorized service station.

CARE OF RECORDS

The acetate material used for coating records is unstable chemically because of the use of volatile materials to give the coating plasticity. Open storage, cold, or heat acts to make the coating brittle or harder. This in turn tends to make noisy recordings.
NOTE: The records themselves are not highly in lammable because of the metal base. The shavings, however, are highly inflammable and should not be disposed of in a careless manner.

MODEL PR-12

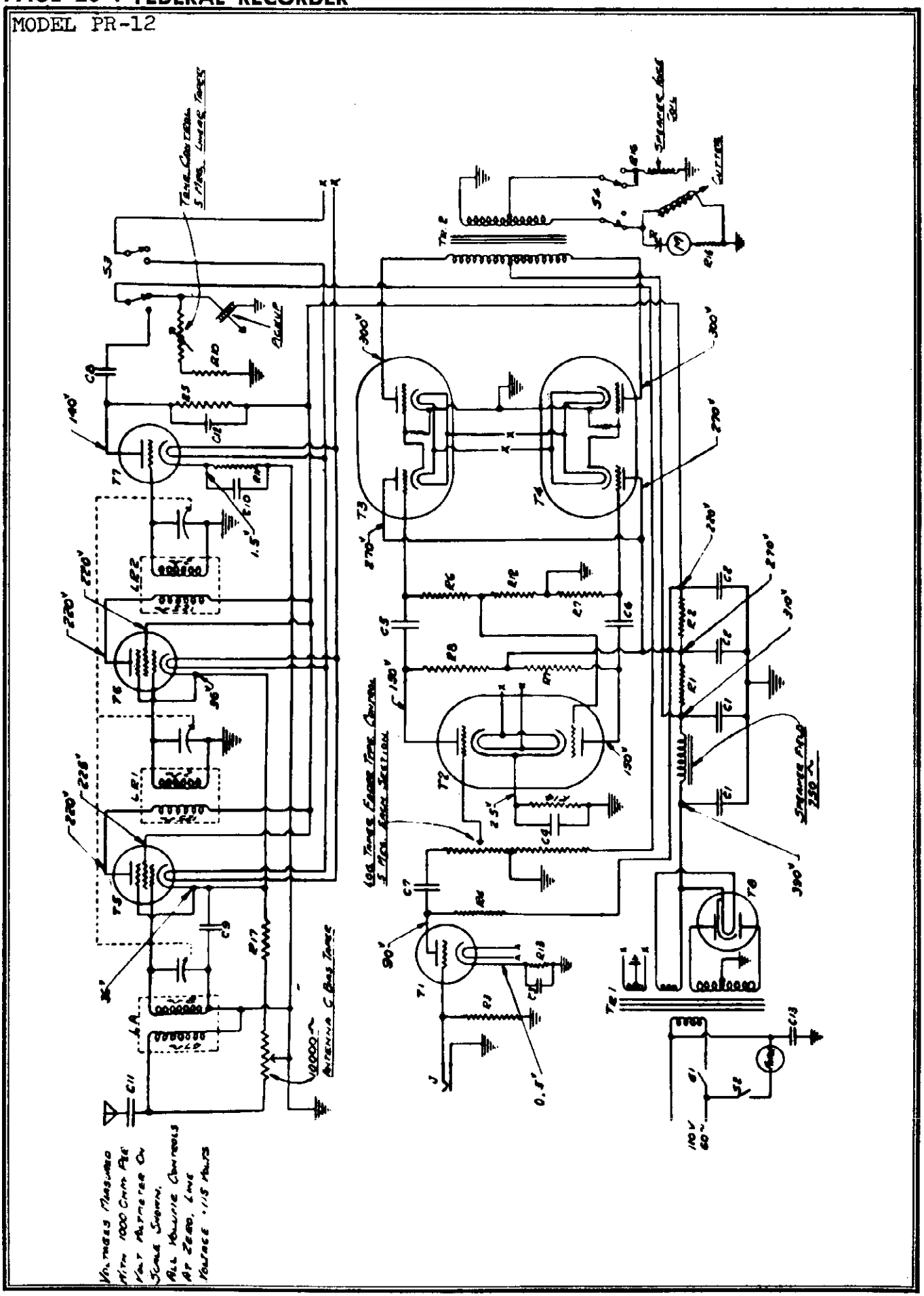

©John F. Rider

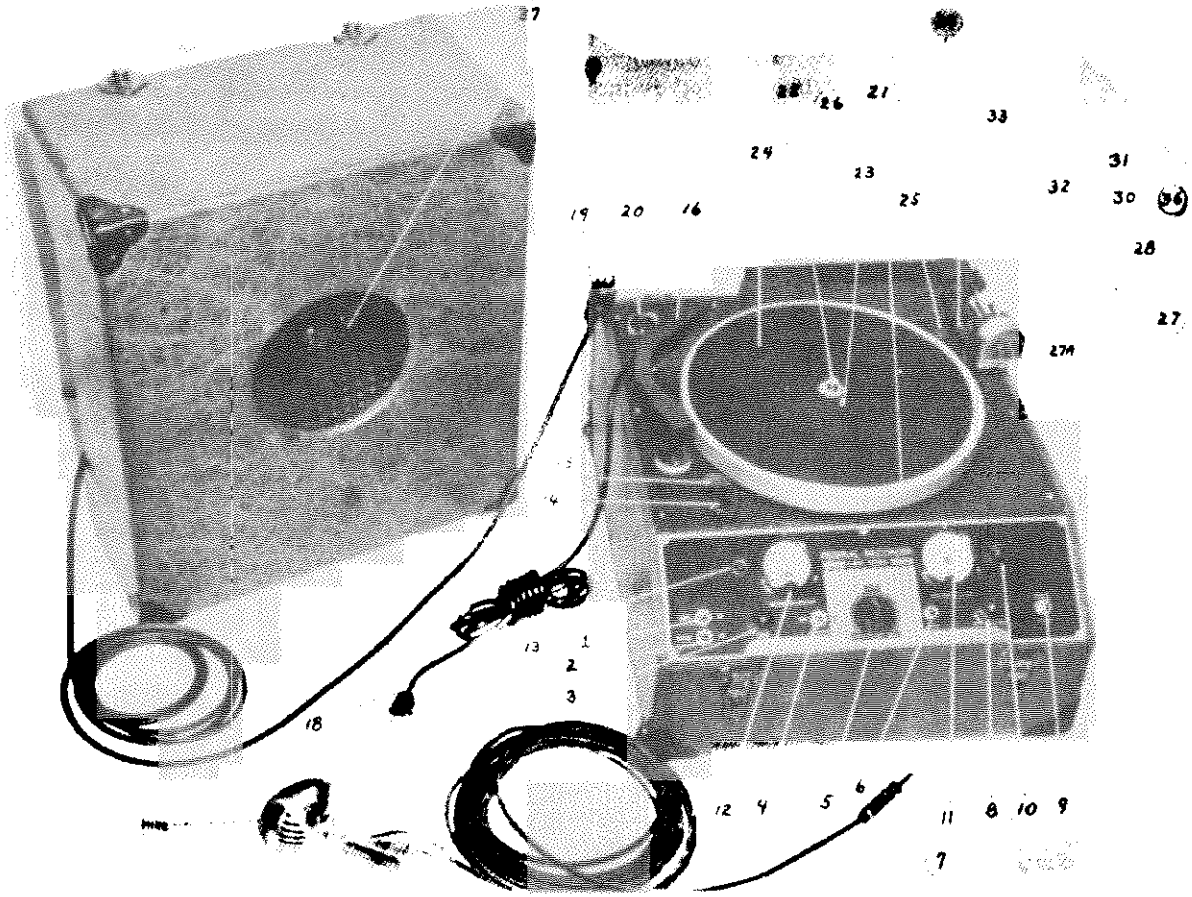

Figure 1

1—Switch "Amp"—"ON".
2—Switch "Motor"—"ON"
3—Tone Control.
4—Speaker Switch "OUT"—"IN".
5—Gain Control.
6—Mike Jack.
7—Mike Plug.
8—Radio Volume.
9—Switch "Radio"—"Pickup".
10—Station Selector Tuning Knob.
11—Station Selector Dial.
12—Monitering Meter.
13—Pilot Lamp.
14—Pulley Lever.
15—Pulley Lever Knob.
16—Pickup.
18—A. C. Line Cord and Plug.
19—Speaker Cable and Plug.
20—Speaker Socket.
21—Turntable.
22—Center Thumb Nut.
23—Drive Pin.
24—Felt Pad.
25—Antenna Binding Post.
26—Lead Screw Cover.
27—Cutting Head.
27A—Cutting Head Needle Thumb Screw.
28—Cutting Head Bracket.
30—Balance Rod.
31—Balance Weight.
32—Balance Weight Thumb Screw.
33—Cutting Head Pivot Screw.
34—Cutting Head Arm.
36—Cutting Head Rest Thumb Screw.
37—Speaker Protective Grill.

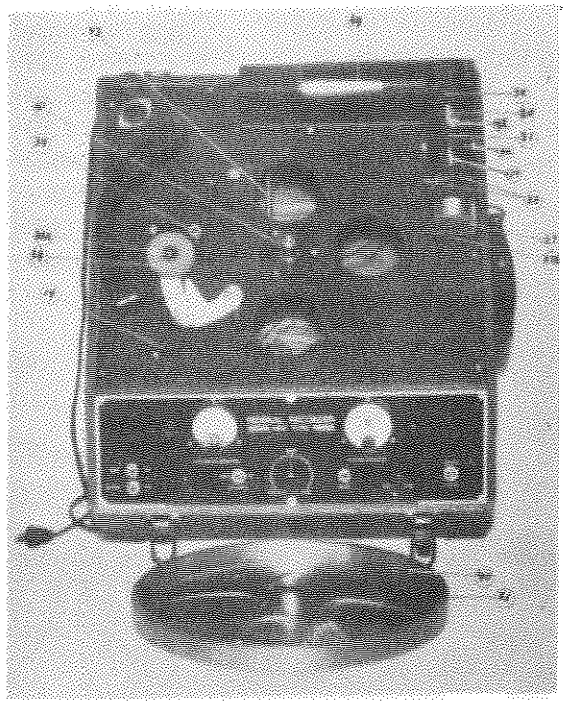

Figure 2

14—Pulley Lever.
21—Turntable.
27—Cutting Head.
27A—Cutting Head Needle Thumb Screw.
29—Cutting Head Adjusting Spring.
30—Balance Rod.
31—Balance Weight.
32—Balance Weight Thumb Screw.
33—Cutting Head Pivot Screw.
34—Cutting Head Arm.
36—Cutting Head Rest Thumb Screw.
38—Rubber Pulley.
38A—Rubber Pulley Bearing.
39—Motor Shaft Pulley.
40—Inner Race of Spindle.
41—Spindle (beveled part).
43—Shaft Out of Gear Box.
49—Cutting Arm Guide Rod.

©John F. Rider

Circuit Diagram Legend



Figure 4

LA--Antenna Transformer.
LR1—First R. F. Coil.
LR2—Second R. F. Coil.
C1--8-8 Mfd First Section Filter.
C2—8-8 Mfd Second Section Filter.
C3—5 Mfd 25 Volt Cathode By-Pass Condenser (Mike Amp.).
C4--5 Mfd 25 Volt Cathode By-Pass Condenser (6N7).
C5 -.1- 600 Volt Coupling (To Grid of T3).
C6—.1-- 600 Volt Coupling (To Grid of T4).
C7—.01— 400 Volt Coupling (Mike Amp. to Grid).
C8—.01— 400 Volt Coupling (Det. to Amp.).
C9—.1—200 Volt By-Pass (R. F. Coil).
C10—.1—200 Volt By-Pass (Det. Coil).
C11—.001 600 Volt Antenna Series Condenser.
C12—.0005 400 Volt Det. Plate Condenser.
C13—.1— 400 Volt A. C. Line to Ground By-Pass.
R1—2000 Ohms 5 Watts.
R2—15000 Ohms 2 Watts.
R3—5 Meg ¼ Watt.
R4—.5 Meg ¼ Watt.
R5—.5 Meg ¼ Watt.
R6—.25 Meg ¼ Watt.
R7—.25 Meg ¼ Watt.
R8—.1 Meg ¼ Watt.
R9—.1 Meg ¼ Watt.
R10—.1 Meg ¼ Watt.
R11—50,000 Ohms ¼ Watt.
R12—15,000 Ohms ¼ Watt.
R13—1500 Ohms ¼ Watt.
R14--1500 Ohms ¼ Watt.
R15—100 Ohms ¼ Watt.
R16--60 Ohms ¼ Watt.
R17—3500 Ohms ¼ Watt.
S1—Amp. Switch S. P. S. T.
S2—Motor Switch S. P. S. T.
S3—D. P. D. T. Switch.
S4—D. P. D. T. Switch.
R—Rectifier (Monitering).
M—Monitering Meter.
J—Mike Jack.

TR1—Power Transformer, General Transformer 7F37.
TR2—Output Transformer, Kenyon S.
T1—First Audio.
T2—Second Audio.
T3—Power Output.
T4—Power Output.
T5—First R. F.
T6—Second R. F.
T7—Detector.
T8—Rectifier.

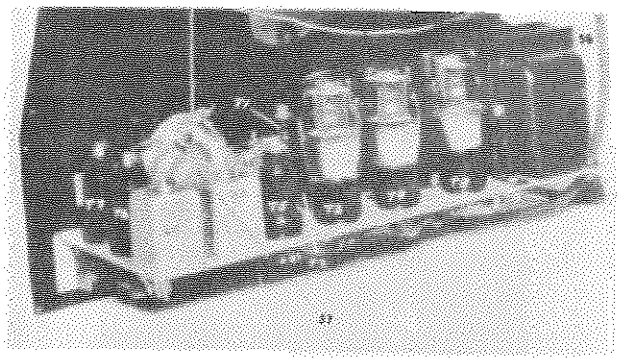

Figure 5

TUBES

T1—6F5 Microphone amplifier stage or pre-amplifier.
T2—6N7 Second amplifier stage.
T3—6N6G Power stage.
T4—6N6G Power stage.
T5—6K7 R. F. Amplifier.
T6—6K7 R. F. Amplifier.
T7—6J7 Detector stage (up to serial No. 800) 6F5 after No. 800.
T8—5V4G Rectifier.
56—Power Transformer.
57—Tuning Condenser.

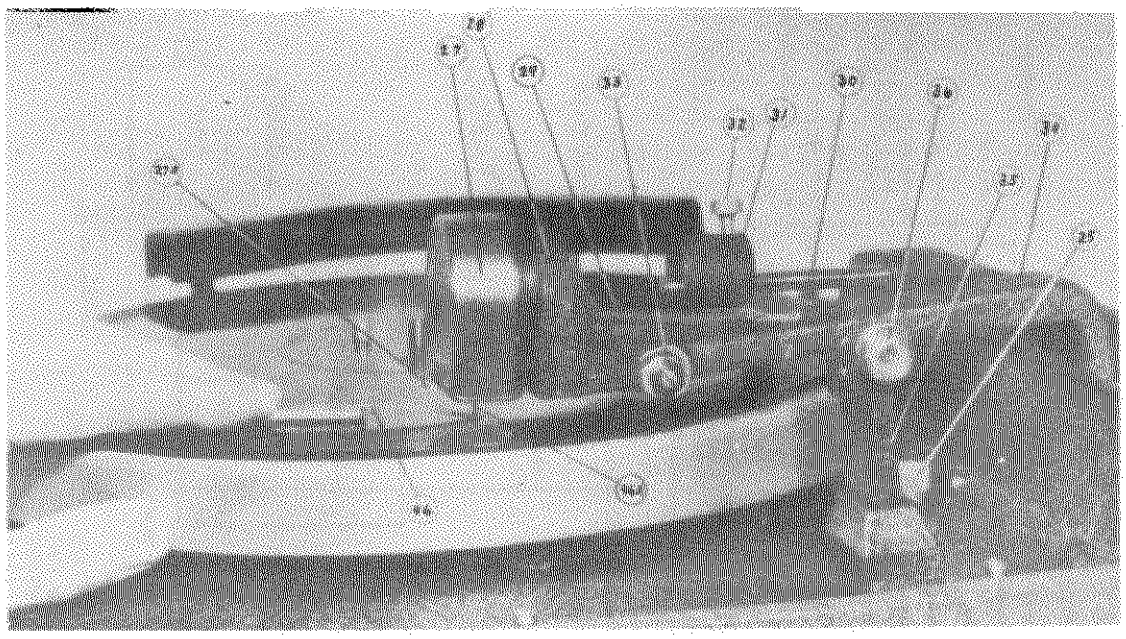

Figure 6

27—Cutting Head.
27A—Cutting Head Needle Thumb Screw.
28—Cutting Head Bracket.
29—Cutting Head Adjusting Spring.
30—Balance Rod.
31—Balance Weight.
32—Balance Weight Thumb Screw.
33—Cutting Head Pivot Screw.
34—Cutting Head Arm.
35—Cutting Head Rest.
36—Cutting Head Rest Thumb Screw.
46—Depth Gauge.
46A—Cutting Needle.

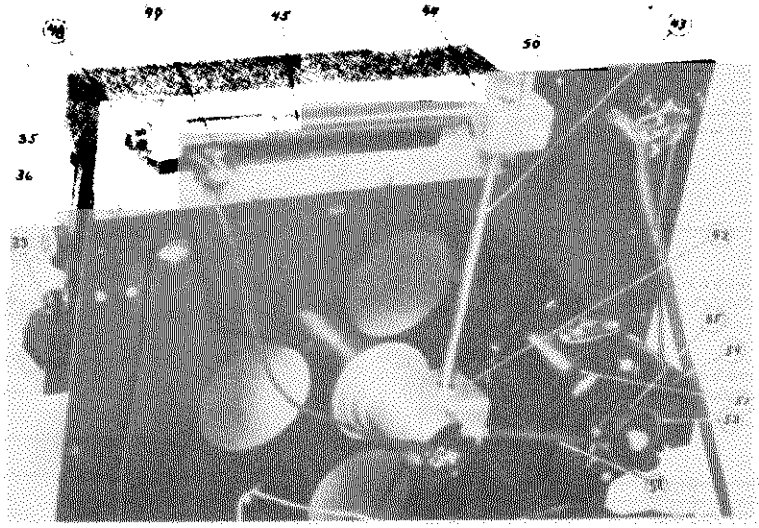

Figure 7

33—Cutting Head Pivot Screw.
35—Cutting Head Rest.
36—Cutting Head Rest Thumb Screw.
42—Gear Housing.
43—Shaft Out of Gear Box.
44—Fibre Gear.
45—Lead Screw.
47—Lead Screw Finger.
48—Lead Screw Pivot Points.
50—Grease Retaining Cup.
51—Motor.
52—Motor Supporting Spring.
53—Motor Rubber Mounts.
54—Motor Mounting Bracket.
55—Motor Clamping Rings.

©John F. Rider

MODEL 12LP,
Little Pro

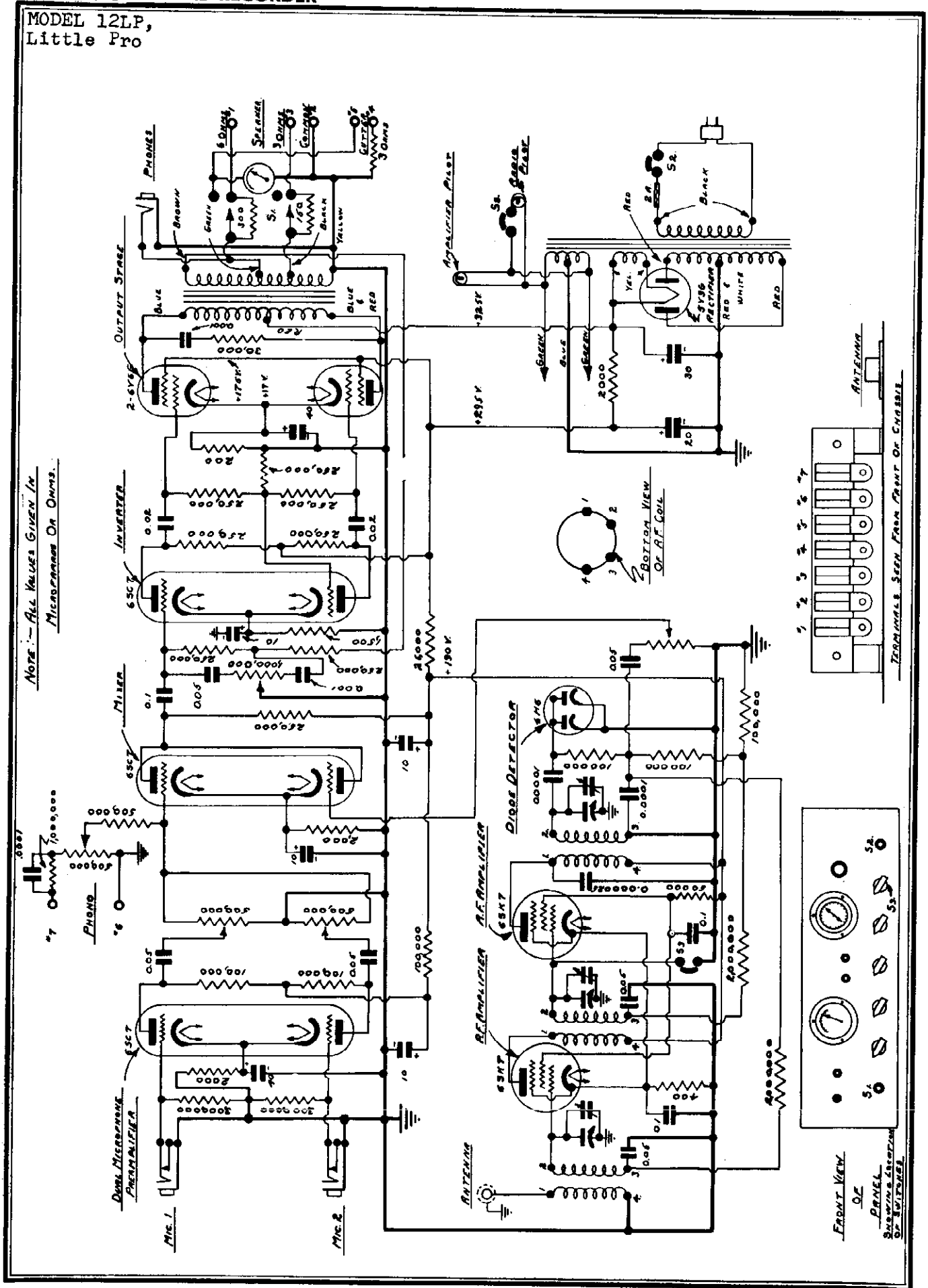

©John F. Rider

MODEL 12LP,
Little Pro

IMPORTANT INSTRUCTIONS

Regular phonograph speed of 78 RPM is obtained when rubber motor pulley is in standard position with the larger diameter at top. For 33-1/3 RPM, remove the little spring at top, lift up pulley, and replace with small diameter at top. Pointer lever can then be moved to "33" as marked on plate. Be sure to replace spring before starting motor. Always lock roller arm so that it will not move when machine is in operation

In playing commerical records, it is not necessary to remove the extra pin on the turntable. Simply place the record in position and the pin will be depressed into the turntable. Be sure when placing a blank disk on the turntable for recording that one of the three holes fits over this extra pin. This prevents the disk from slipping.

Be sure to start the turntable revolving when you engage the rubber motor pulley. This special alloy steel 17-lb. turntable is made extra heavy so that its flywheel action improves the quality of recordings. Starting it by hand prevents excessive wear on the rubber pulley.

REPLACEMENT PARTS FOR NEW "LITTLE PRO" FEDERAL RECORDER

Part No.	Description
28943	Speaker Unit (10" Jenssen)
28841	Pick-up Arm
29311	Drive Pulley, Complete Assembly
29310	Drive Pulley Shaft
29303	Drive Pulley Link
28867	Hair Spring Fastener
28881	Motor Switch
29198	Cast Iron Turntable, Complete Assembly
29302	Turntable Shaft
28896	Record Drive Button
28945	Spring for Record Drive Button
28836	Overhead Drive, Complete Assembly
28837	Tie Bar
28857	Drive Shaft
28846	Worm
28812	Worm Spindle Cap
28983	Lead Screw (L.H. Thread) Complete Assembly
28875	Collar
28890	Stop Ring for Cutting Head
55076	Cutting Head (Webster R-84)
28845	Worm Gear
28879	Pivot Screw, Cone Point, Slotted
28884	Black Bakelite Knob
28806	Cutting Head Mounting Bracket
28808	Cutting Head Hinge Plate
28947	Carriage Stop Stud
28986	Tension Device, Complete Assembly
28877	Tension Screw
28840	Spring Extension
28861	Tension Spring
28959	Electrical Connection Socket
28957	Electrical Connection Plug
29333	Microphone (Shure 98-13B) and Base
50948	Microphone Plug
56003	25-foot Speaker Extension Cord Assembly
55018	Rectifier Tube - 5Y3G - (1 used)
55019	Output Tube - 6V6GT - (2 used)
28172	Amplifier Tube - 6SK7 - (2 used)
29175	Amplifier Tube - 6SC7 - (3 used)
55020	Detector Tube - 6H6 - (1 used)

©John F. Rider

MODEL 12LP,
Revised

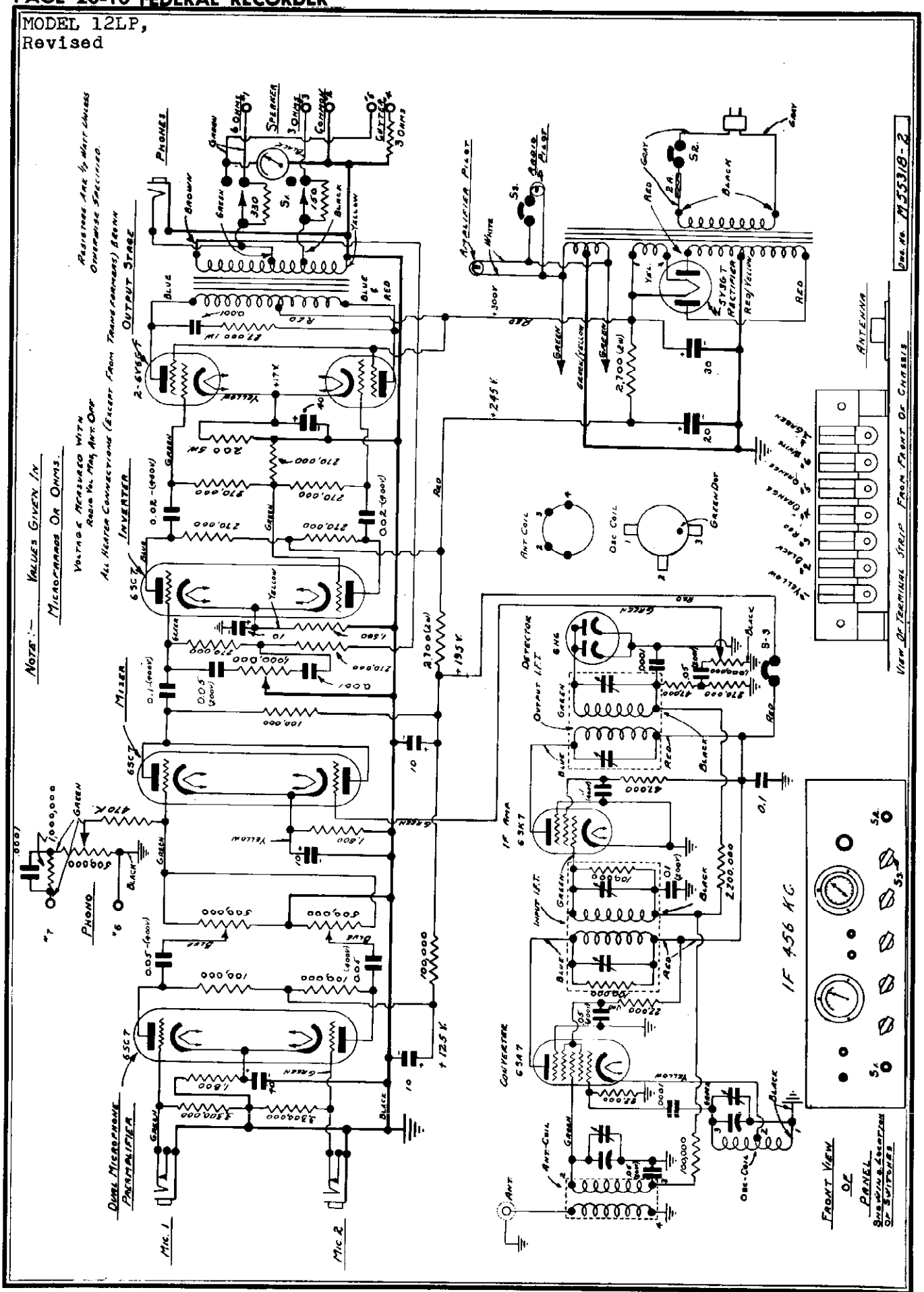

©John F. Rider

Cutter angle

The cutter head may be adjusted by loosening screw 6 in Fig. 1 and moving recording head until stylus is in a position to produce a reflection from a blank record as shown in Fig. 4. For 90°, adjustment to angles of 87° to 89° may perform better with some stylii.

Depth of cut

This is the most important single item that will mean the difference between good and bad recordings. The depth of cut can be adjusted by turning tension screw 1 in Fig. 3. clockwise to decrease depth, counterclockwise to increase depth. This adjustment can then be locked by turning screw 2. Fig.3. clockwise. The depth should be such that the width of the space between grooves is the same as the width of the groove as shown in Fig. 5. It is very important that this relationship be maintained. If the walls are narrower than the groove, there is danger of either cutting into adjacent grooves, or deforming the wall between grooves, resulting in echoes and other spurious responses. If the groove is not deep enough, that is, the walls are wider than the groove, there is danger that the pickup will not stay in the groove.

The depth of cut may be observed with a magnifying glass or small microscope.

Alignment of recorder mechanism with respect to record surface

The recorder mechanism should be almost parallel to record surface. For best results the end nearest the outside of record should be approximately 1/64" closer to record than at the center. The object of doing this is to maintain the depth of cut at the outside and the inside of record approximately the same.

Before proceeding with alignment of the mechanism, make sure that turntable is level with edge of idler pulley as shown in Fig. 2. If this is not so, loosen screws 1, 2, and 3, (Fig. 7) and then adjust screw 4 until turntable is at proper level. Screws 1, 2, and 3 should now be tightened. Spindle 3 (Fig. 3 and 6) should fit in its socket without wobbling. As this pin wears, the fit should be checked and adjusted by raising or lowering the spindle by means of screw 5 and locked by screw 6, (Fig. 7).

Place a blank record on the turntable and then place recorder mechanism on center pin of turntable, turning knob 4 (Fig. 3) until mechanism rests on the record. The cutter should be in raised or non-recording position. Referring to Fig. 6, mounting bracket 4 should be centered in end bracket 5 and should turn freely without binding. This can be adjusted by means of nuts 1 and screws 2. Loosen set screw 6 and raise or lower mechanism by turning set screw 7 clockwise or counterclockwise until the distance between the guide rod and the record near the outside of the turntable is 1/64" greater than the distance near the center. The turntable should now be set in motion and the set screw wrench inserted in hole 8 in spindle 3, and spindle turned until the recorder mechanism can be lifted from and lowered on center pin of turntable freely or until all signs of mechanical noise or vibration such as knocking disappear. Set screw 6 should now be tightened.

Center pin

The center pin in the turntable may be pressed out and replaced. Replacement may be desirable after considerable use due to wear caused by slipping records on and off. A snug fit is necessary for recording and re-

©John F. Rider

MODEL 12LP,
Revised

producing records without "wow". The pin furnished is 0.2800 $^{+.000}_{-.001}$ inch diameter. It may be replaced by a pin 0.2835 ± .0005 inch diameter if a snug fit is wanted in reproducing commercial shellac records.

Lubrication and maintenance

Points 7, 8, and 9 (Fig. 1) should be lubricated with a light high grade oil occasionally.

The worm gear and worm wheel on recorder mechanism should be lubricated every two or three months with a light grease such as Vaseline. Pivot bearings 9 and 10 (Fig. 6) should be lubricated with a drop of light machine oil every two or three weeks.

The motor should be lubricated every two or three months by dropping a few drops of light high grade oil in hole 7 (Fig. 7).

The lead screw and guide shaft should be cleaned with Carbona. This should be done quite frequently since dust and dirt will accumulate on these parts and hinder operation of machine. If the amplifier becomes noisy, the tubes and all plug connections should be checked. The idler pulley and rim of turntable should be kept clean and free of oil and grease.

Caution - Never replace fuse with another of higher rating.

TECHNICAL DATA - Electrical

Power supply rating (complete recorder): 105-125 V, 60 c.p.s.

Power supply rating: 105-125 V
50-60 c.p.s.
82 watts

Fuse: Two amperes located under chassis.

Tubes:		
	Converter	RCA 6SA7
	I.F.	" 6SK7
	Detector	" 6H6
	Mic. Amplifier	" 6SC7
	Mixer	" 6SC7
	Inverter	" 6SC7
	Power Output	" 2-6V6-GT/G
	Rectifier	" 5Y3-GT/G

Pilot lamps: 2 Mazda #46
6.3 V, 0.25 A.
Radio: Superheterodyne
Frequency range: 540-1670KC
Intermediate frequency: 456KC
Gain amplifier: Mic. 1) -- 3900
Mic. 2)
Phono -- 10.3

Frequency response: 50-10,000 c.p.s.
Frequency compensation (equalizer) :
High freq. boost + 13.5 db at 9000 c.p.s.
" " cut - 25 db at 9000 c.p.s.

Input impedances:	
Mic. 1	3 meg
Mic. 2	3 meg

MODEL 12LP,
Revised

Phono has built-in equalizer for crystal pickup.
Radio built in.

Maximum input levels:
Mic. 1 and 2 - 10db*)
Phono +16db*) 1000 c.p.s.

Output impedances: 3 and 6 ohms
Power output: 9 watts undistorted
11 watts maximum

Speaker: 10" pm dynamic
Voice coil imp.
6 ohms at 400 c.p.s.

Cutter Head: Magnetic
Impedance 2.5 ohms
at 400 c.p.s.
3 ohm series equalizer
built into amp. requires 3.5 V. r.m.s.

Pickup: Crystal 1 1/8 oz. pressure

Microphone: Crystal

* 0.001 W-Zero level

TECHNICAL DATA - Mechanical

Dimensions: 18½ x 17-1/8 x 14"
Net Weight: 64.5 lbs.
Turntable: size 12" diameter. Special alloy steel wt. 14 lbs.
Motor: Constant speed induction 1550 r.p.m., Power Output, 12 watts.
Speed: 78 or 33-1/3 r.p.m.
Recording lines: 100 per inch
Direction of feed: Std. outside in. Available on order inside out.
Center Pin: 0.280 $^{+.000}_{-.001}$ inch diameter (removable.)

REPLACEMENT PARTS LIST

Name and Description	Part No.
Jack, microphone input	55052
Jack, monitor	55053
Knob, radio dial	55054
Knob, bar	55055
Sockets, tube	48034
Sockets, antenna	55059
Plug, antenna	55060
Fuseholder	55056
Fuse, 2 ampere	48294
Plug, amplifier and motor power	29323
Shell, amplifier and motor power plug	29324
Resistor, variable 500 K, microphone and phonograph volume control	55015
Resistor, variable, 1 megohm, equalizer control	55017
Resistor, variable, 1 megohm with switch, radio volume control	55129
Resistor, ½ watt 3.3. megohm	45227
" ½ " 2.2 "	45225
" ½ " 1.0 "	50891
" ½ " .47 "	45228
" ½ " .27 "	45224

©John F. Rider

MODEL 12LP,
Revised

"	½	"	.10 "	55034
"	½	"	47,000 ohm	45223
"	1	"	27,000 "	45234
"	1	"	22,000 "	45226
"	1½	"	22,000 "	45232
"	2	"	2,700 "	45233
"	1½	"	1,800 "	45229
"	1½	"	1,500 "	55037
"	2½	"	330 "	45230
"	2½	"	200 "	55042
"	2½	"	150 "	55067
"	1	"	3 "	55074

Capacitor

"	0.01	mfd	200	volt	paper	56313
"	0.05	"	"	"	"	56309
"	0.02	"	400	"	"	43535
"	0.05	"	"	"	"	43591
"	0.1	"	"	"	"	43660
"	0.0001	"	500	"	mica	55010
"	0.001	"	500	"	"	55011
"	30-20-10-40	"			electrolytic	55012
"	10-20-20	"			"	55013
"	50	"	25	volt	"	47760
"	variable gang, tuning					55130

Transformer, power 55022
" , output 55021
Switch, amplifier, SBST toggle 55024
" output, DPDT " 55025
Meter, recording 55320
Lamp, radio and amplifier pilot, 6.3 V. #46 55026
Coil, antenna 55131
" oscillator 55132
" input IF 55133
" output IF 55134

Switch, motor 28881
Motor 28843
Pulley, motor, 60 cycle 56021
" " 50 " 55118
" " 60 RPM 55470
Screw, set, motor pulley 28871
Spring, motor mounting 28982
Idler pulley 29311
Shaft, idler pulley 45020
Nut, idler pulley 55472
Lead screw assembly - outside - inside 55338
Shaft assembly, overhead drive - outside - inside 56031
" " " " inside - outside 55436
Lead screw and collar assembly - inside - outside 55437
Spring, cutting head tension 28861
Cutting head assembly 55100
Pickup arm assembly 45237
Center pin 0.2800 $^{+.000}_{-.001}$ diameter 29199
Center pin 0.2835 ±.0005 inch diameter 55577

©John F. Rider

MODEL 12LP,
Revised

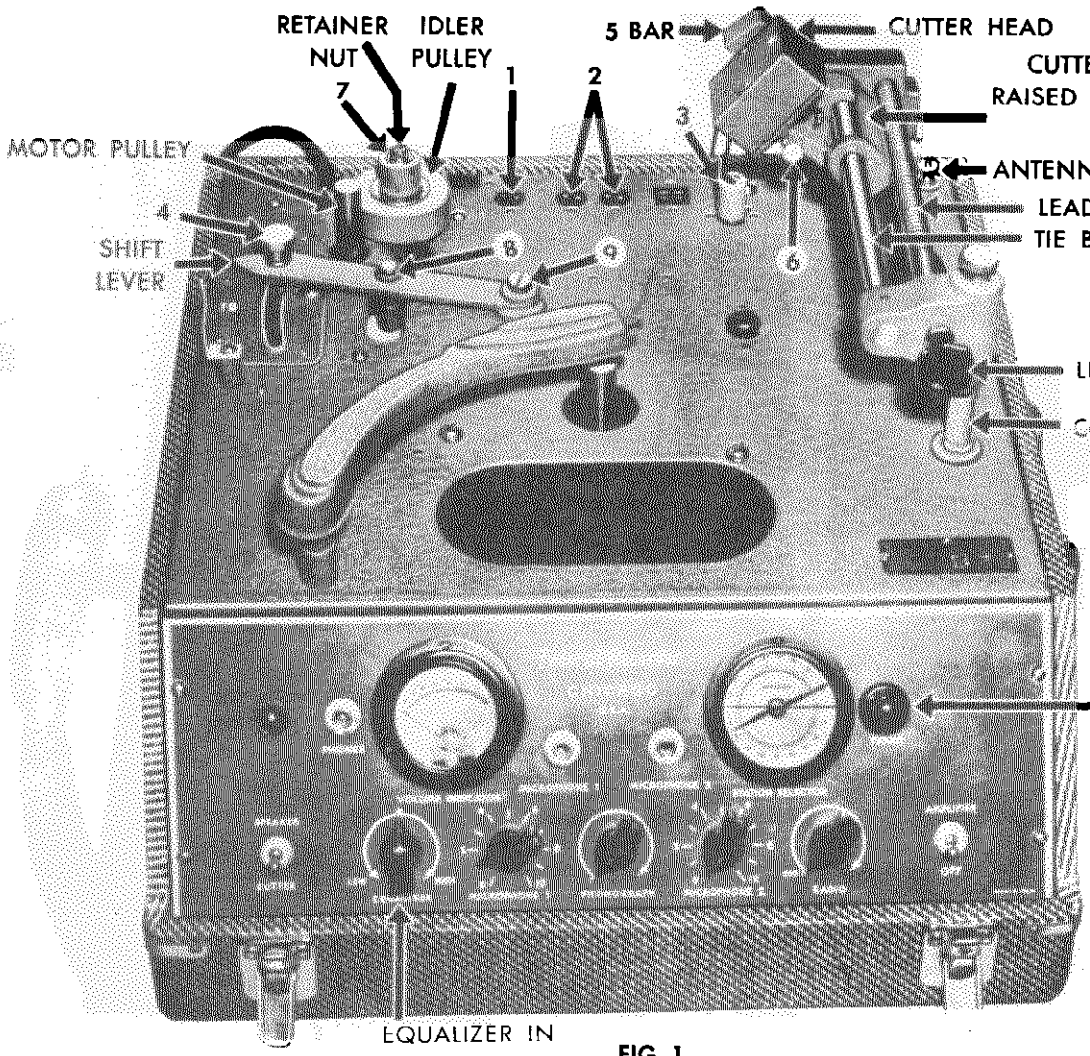

FIG. 1

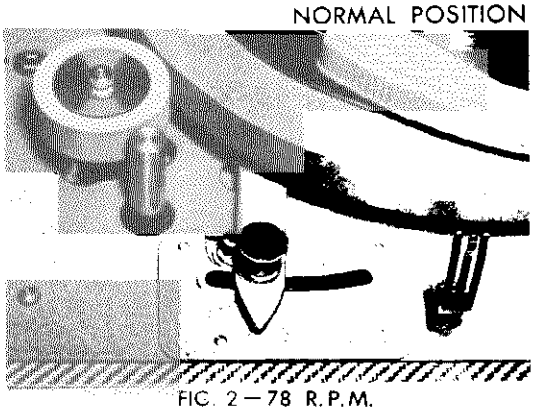

FIG. 2 — 78 R.P.M.

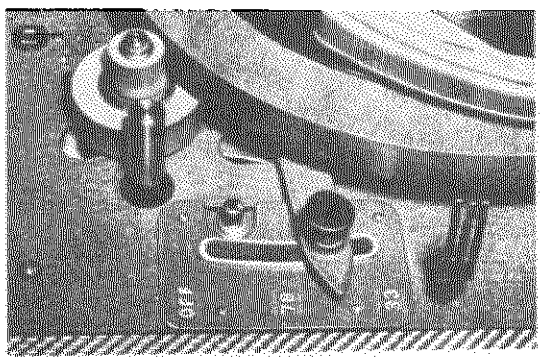

FIG. 2 — 33⅓ R.P.M.

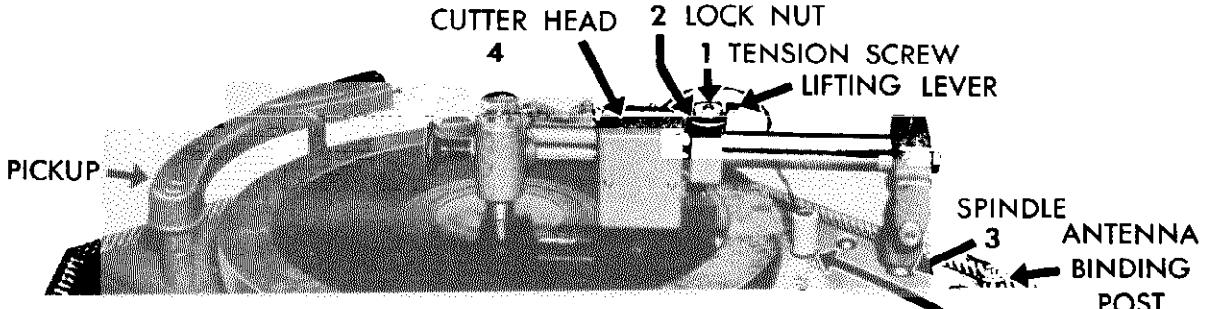

FIG. 3
CUTTER MECHANISM IN RECORDING POSITION

© John F. Rider

©John R. Rider

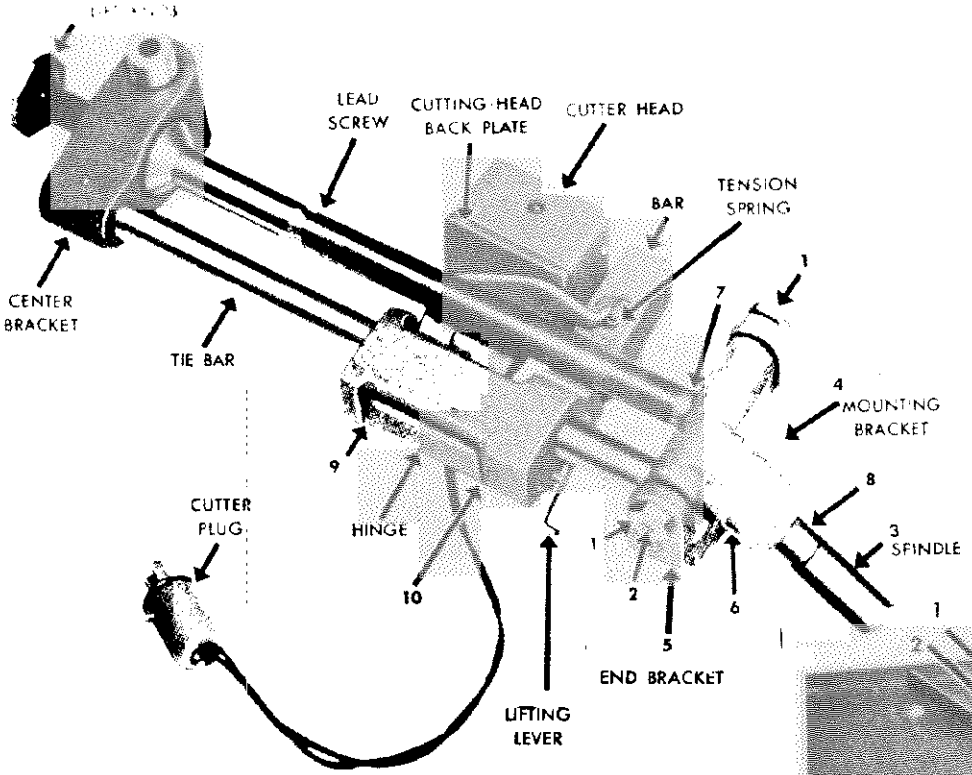

FIG. 6
RECORDER MECHANISM

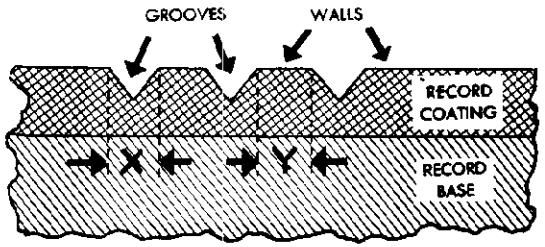

X SHOULD BE LESS THAN OR EQUAL TO Y

FIG. 5

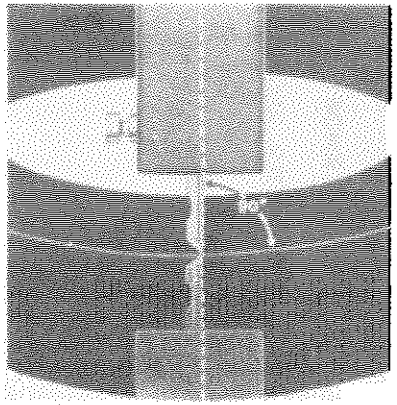

FIG. 4
CORRECT POSITION OF STYLUS

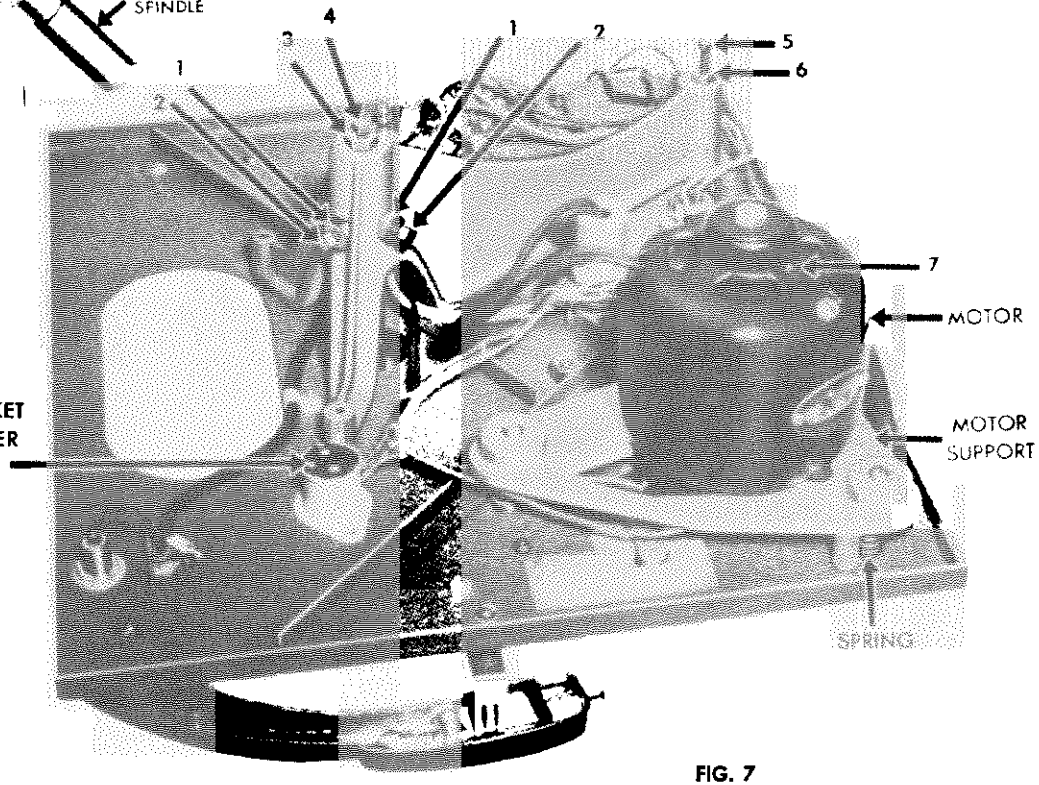

FIG. 7

Instructions for Installation and Operation

For Model 101 — Radio, Phonograph and Recorder Combination

This receiver consists of a six-tube superheterodyne phono-radio and recorder combination. An improved filter circuit, automatic volume control, a beam power output tube and oversized electro-dynamic speaker are incorporated for improved performance. The frequency range covered is standard broadcast, 530 to 1700 kilocycles. This range covers all of the standard American broadcast stations and some of the low-frequency police transmitters.

TUBES:

6A8G, 6K7GT, 6H4GT, 6J7GT, 6V6GT, 6X5G.

TUBE SOCKET LOCATIONS

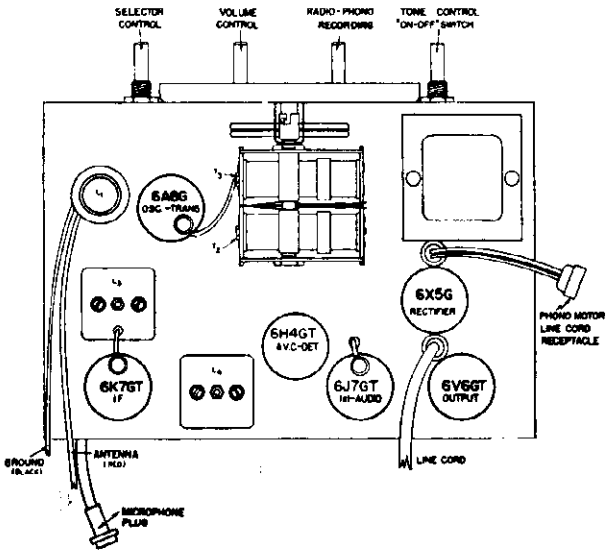

ANTENNA AND GROUND CONNECTIONS:

The leadin (wire running from outside antenna to radio) should be spliced to the antenna lead (red wire) at the rear of the cabinet.

A good ground connection is of real importance. Firmly secure a wire to a water or steam radiator pipe, by means of a "Ground Clamp" designed for the purpose. The pipe must be thoroughly scraped so that the clamp makes contact with bright metal. If no such ground is available, a wire clamped to a piece of galvanized pipe which has been driven a few feet into moist earth will serve. The ground wire should be spliced to the black lead at rear of cabinet.

PHONO - RADIO AND RECORDING SWITCH:

The knob of this switch is marked with the numbers from one to five.

To receive radio programs set the number 5 opposite the small brass marker above the knob.

To play phonograph records or home recordings set the number 4 opposite the brass marker.

To make a record of a radio program set the number 3 opposite the brass marker.

To make a record of speech or music picked up on the microphone furnished with the instrument set the number 2 opposite the brass marker.

To use the equipment as a public address system set the number 1 opposite the marker.

©John F. Rider

IMPORTANT
INSTRUCTIONS FOR HOME RECORDING

INSTRUCTIONS FOR HOME RECORDING:

First place a recording needle in the head of the recorder arm. To do this loosen set-screw projecting from end and insert needle in hole on underside of recorder arm. Make sure that the set-screw is tight so that the needle is firmly held in place. Be sure that flat side of needle point faces towards the rear of cabinet. Place a blank disc on the turntable, making sure that the small pin on the turntable projects through one of the three small holes near the center of the disc. This is absolutely necessary to prevent the disc from slipping and ruining the recording.

If you wish to record a radio program set the "Phono-Radio Record" switch so that the number "5" is opposite the brass marker above the knob. Tune in the desired radio program and advance the volume control so that the program is heard loudly, but so that it is not rough or distorted. Remember the record will sound the same as the program. Noise or static if present will be recorded along with the music. Having adjusted the radio controls, set the "Phono-Radio Record" switch knob so that the number "3" is opposite the marker. The program will still be heard, but now the recording head is operating and the recording needle is vibrating in unison with the sound coming from the speaker. Raise the recorder arm and move it over the record, then lower the arm until the needle point almost touches the record. If the point is about one-quarter inch from the edge of the record lower the arm slowly and release it. If the position is not correct at the first trial, remember that the arm must be RAISED before the needle point can be relocated.

You are now recording the radio program on the record blank and the recorder will continue to operate without further attention until the needle reaches the label at the inside of the disc. When this point is reached, lift the recorder arm and return to its rest. Failure to do this will result in the needle cutting through the coating and digging into the disc, with possible injury to the recorder. During the time the recording is being made you will note a fine thread which piles up into a heap about $\frac{1}{2}$ inch from the point at which the recording needle touches the record. This thread should be brushed lightly toward the center of the disc with a handkerchief or soft brush, and not allowed to collect under recording needle.

To play the record you have just made set the "Phono-Radio Record" switch knob so that the number "4" is opposite the marker, and proceed to play the same as any phonograph record.

CAUTION—NEVER play home recordings with a needle that has been used to play regular records. To do so may ruin the recording.

To record from microphone, insert microphone plug into connector as shown in drawing. Set "Phono-Radio Record" switch so the number "1" is opposite the marker. Speak into microphone and advance volume control until speech is reproduced from the loud speaker in the set. This is simply a test to indicate that the microphone is operating properly. Next set "Phono-Radio Record" switch so that the number "2" is opposite the marker. Turn volume control to right as far as possible. The recording head is now functioning and you proceed to make a recording of voice or music from the microphone in exactly the same manner as the radio recording was made. In recording speech keep microphone at least six inches from your mouth and speak in a normal tone of voice.

©John F. Rider

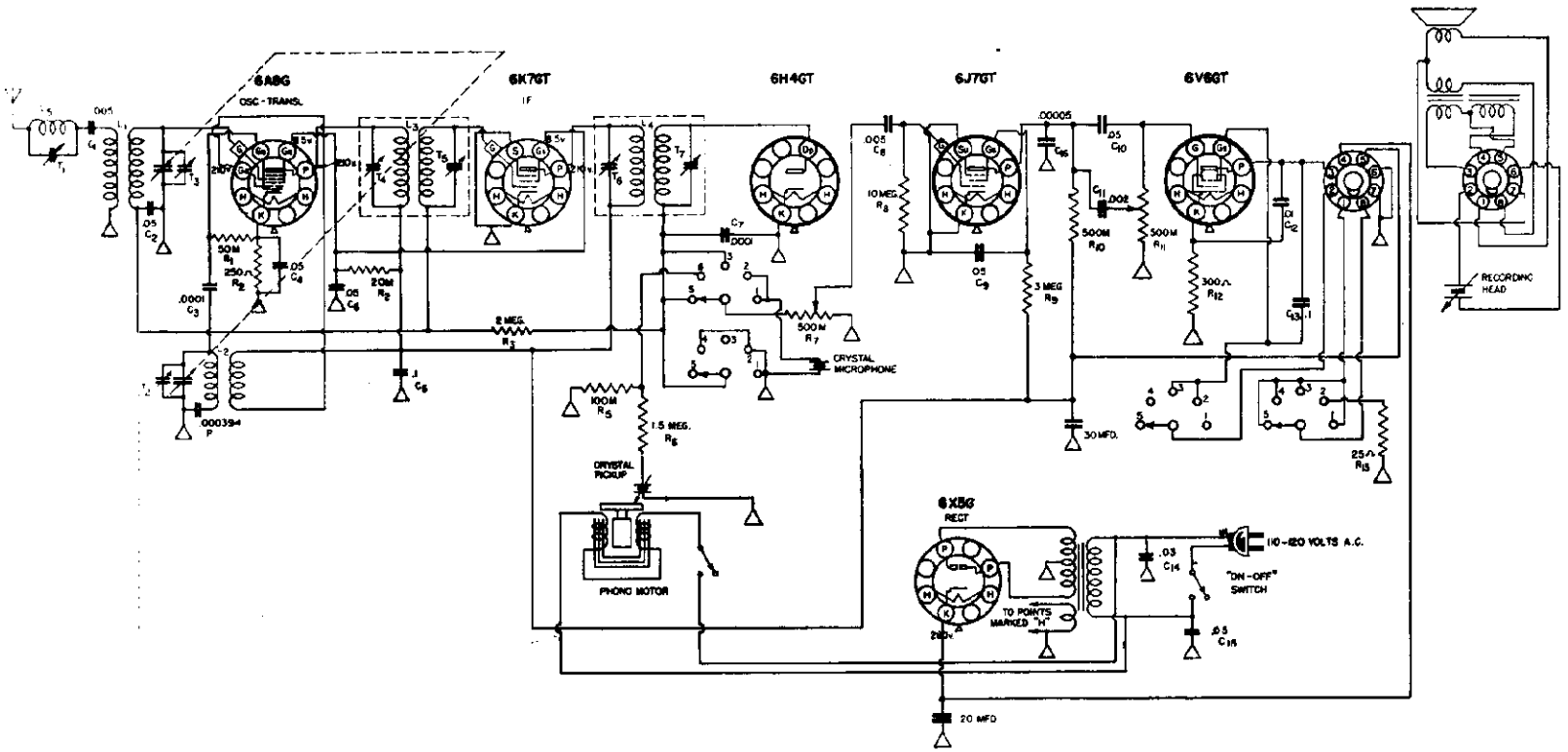

PARTS LIST

SCHEMATIC LOCATION	PART No.	DESCRIPTION
	T993	Cabinet—walnut table
	1106412	Clip—grid
L1	1102854	Coil—antenna
L2	1102866	Coil—oscillator
L3	1103313	Coil—I.F. input transformer
L4	1103514	Coil—I.F. output transformer
L5	1103161	Coil—wave-trap
V	1101642	Condenser—variable
E1	1102046	Condenser—electrolytic dry, 20 mf, 450 volts
E2	1102047	Condenser—electrolytic dry, 30 mf, 350 volts
P	1101910	Condenser—padder, fixed
C1, C8	1101916	Condenser—.005, 400 volts
C2, C4, C6, C9, C16	1101917	Condenser—.05, 400 volts
C3, C7	1101921	Condenser—.0001, mica
C5, C13	1101925	Condenser—.1, 400 volts
C11	1101919	Condenser—.002, 400 volts
C12	1101936	Condenser—.01, 600 volts
C14	1101927	Condenser—.05, 600 volts
C15	1101928	Condenser—.03, 600 volts
	1101821	Connector—microphone, female
R7	1102431	Control—volume
R11	1102444	Control—tone, with switch
	1105574	Cord—power
	1104040	Dial—scale
	1104568	Dial—drum
	1104220	Dial—escutcheon
	1104518	Dial—cable and spring
	1104117	Dial—pointer
	1103969	Knob—volume control
	1103967	Knob—phono radio-recording
	1103968	Knob—on-off, tone
	1103933	Knob—tuning
	1104924	Lamp—pilot, No. 51
	1105994	Leaflet—instruction
	1105413	Needle cup
R1	1102327	Resistor—50,000 ohms, 1/4 watt
R2	1102323	Resistor—250 ohms, 1/4 watt
R3	1102337	Resistor—2 megohms, 1/4 watt
R4	1102338	Resistor—20,000 ohms, 1/4 watt
R5	1102336	Resistor—100,000 ohms, 1/4 watt
R6	1102329	Resistor—1.5 megohms, 1/4 watt
R8	1102335	Resistor—10 megohms, 1/4 watt
R9	1102328	Resistor—3 megohms, 1/4 watt
R10	1102313	Resistor—1/2 megohm, 1/4 watt
R12	1102318	Resistor—300 ohms, 1/2 watt, wire wound
R13	1102333	Resistor—25 ohms, 2 watt, wire wound
	1101815	Socket—pilot light
	1101881	Socket—octal
	1105832	Speaker—6", dynamic
	1103730	Switch—radio-phono, recording
	1103812	Switch—on-off, toggle
	1101011	Transformer—power, 50-60 cycles
	1101012	Transformer—power, 25 cycles

MODELS 111, 116

ALIGNMENT PROCEDURE

GENERAL DATA

The alignment of this receiver requires the use of a test oscillator that will cover the frequencies of 456, 600, 1400 and 1720 KC and an output meter to be connected across the primary or secondary of the output transformer. If possible, all alignments should be made with the volume control on maximum and the test oscillator output as low as possible to prevent the AVC from operating and giving false readings.

CORRECT ALIGNMENT PROCEDURE

The intermediate frequency (I.F.) stages should be aligned properly as the first step. After the I.F. transformers have been properly adjusted and peaked, the Broadcast band should be aligned.

I.F. ALIGNMENT

With the gang condenser set at minimum, adjust the test oscillator to 456 KC and connect the output to the grid of the first detector tube (6A8GT) through a .05 or .1 mfd. condenser. The ground on the test oscillator should be connected to the chassis base. Align all three I.F. trimmers to peak or maximum reading on the output meter.

BROADCAST BAND ALIGNMENT

Connect the antenna to the generator through a 200 MMF dummy and the ground of the set (Black wire) to the generator ground. Set the dial and generator at 1720 KC. Align the BC oscillator trimmer for maximum output. Set the generator at 1400 KC and tune-in signal with the dial. Adjust antenna trimmer for maximum output. Next set the generator at 600 KC and tune in the signal with the dial to check if the gang condenser or coils have been damaged. This receiver requires no adjustment at this point as it employs a cut section gang.

CKT NO.	PART NO.	DESCRIPTION	CKT NO.	PART NO.	DESCRIPTION	CKT NO.	PART NO.	DESCRIPTION
R1	N-1280	30,000 OHM .5W 20%	C1	N-1345	.05 MFD. 200V.	1	N-3404	LOOP ANTENNA COIL
R2	N-1327	90,000 OHM .5W 20%	C2	N-1345	.05 MFD. 200V.	2	N-1452	OSCILLATOR COIL
R3	N-1476	25,000 OHM .5W 20%	C3	N-1478	.25 MFD. 200V.	3	N-1598	1ST I.F. TRANSFORMER
R4	N-1262	1 MEGOHM .5W 20%	C4	N-3440	15 MFD. 300V. ELECTRO.	4	N-3461	2ND I.F. TRANSFORMER
R5	N-1288	100 OHM .5W 10%	C5		15 MFD.	5		SPEAKER FIELD (200 OHMS)
R6	N-1237	2,000 OHM .5W 20%	C6	N-1351	.1 MFD. 200V.	6	N-3438	POWER TRANSFORMER
R7	N-1474	25,000 OHM .5W 20%	C7	N-1376	100 MMFD.	7		SWITCH ON VOLUME CONTROL
R8	N-1479	150,000 OHM .5W 20%	C8	N-1478	.25 MFD. 200V.	8	N-980	PHONO MOTOR SWITCH
R9	N-1288	250,000 OHM .5W 20%	C9	N-1344	.01 MFD. 400V.	9	N-3456	MICROPHONE
R10	N-1418	6 MEGOHM .5W 20%	C10	N-3436	75 MMFD.	10		PICK-UP (ON N-3443)
R11	N-1283	125 OHM 1W 10%	C11	N-1344	.01 MFD. 400V.	11	N-3385	NEON MONITOR (G.E. NE-7)
			C12	N-1344	.01 MFD. 400V.	12		CUTTING HEAD (ON N-3443)
R13	N-2288	4 MEGOHM .5W 20%	C13	N-3455	.004 MFD. 600V.	13	N-3437	OUTPUT TRANSFORMER
R14	N-1479	150,000 OHM .5W 20%				14	N-3436	5" DYNAMIC SPEAKER
R15	N-1285	500,000 OHM .5W 20%				15	N-3443	PHONO MOTOR AND TURNTABLE
R16	N-3085	500,000 OHM VOL CONT.						
R17	N-1277	200,000 OHM .5W 20%						
R18	N-1289	4 MEGOHM .5W 20%						
R19	N-1284	300,000 OHM .5W 20%						
R20	N-1278	100,000 OHM .5W 20%						
R21	N-3480	1.5 MEGOHM .5W 20%						
R22	N-3452	35 OHM .5W 10%						
R23	N-3454	4.5 OHM .5W 10%						

©John F. Rider

MODELS 111, 116

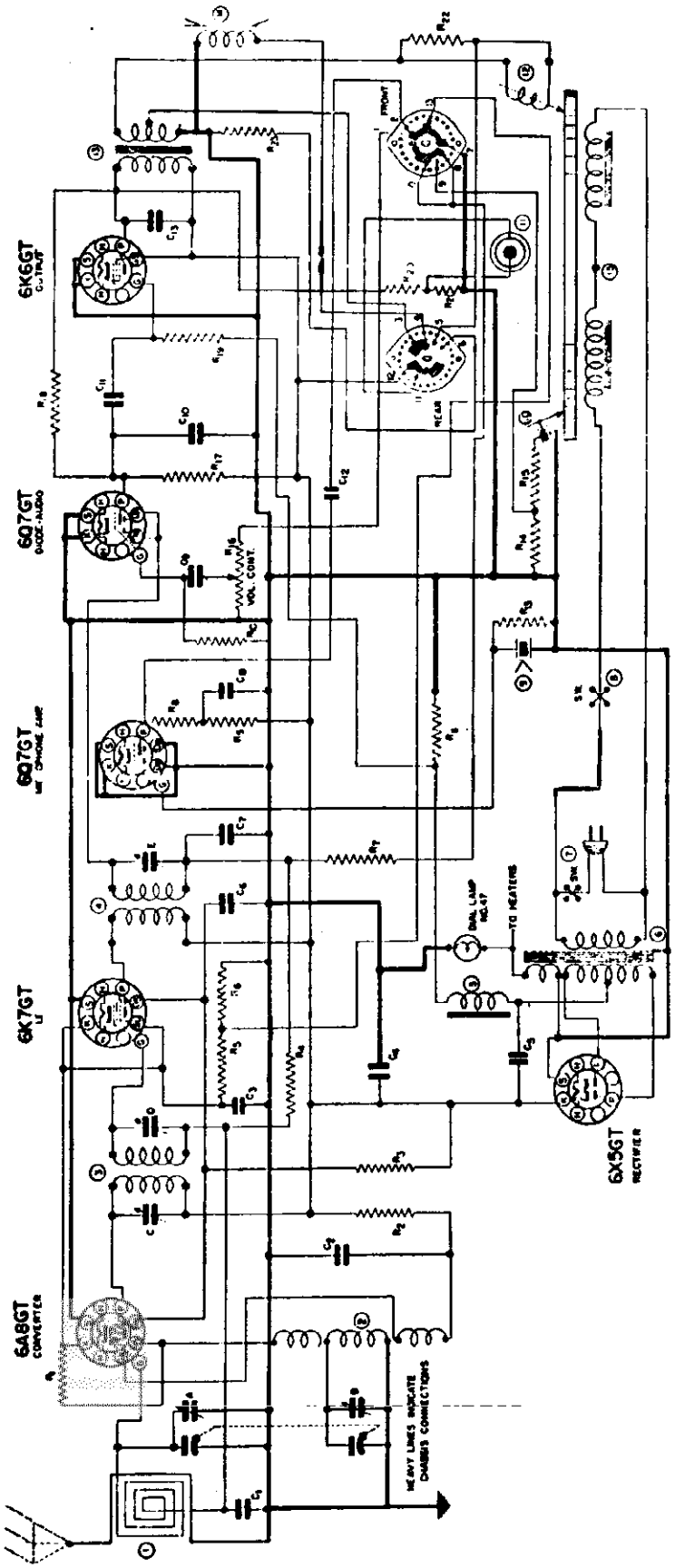

I.F. 456 K.C.

6 TUBE A.C. SUPERHETERODYNE SINGLE BAND RECORDER-PHONO-RADIO COMB.

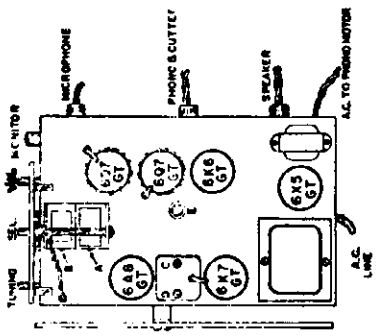

SELECTOR SWITCH POSITION VIEWED FROM SHAFT END	CONTACTS CLOSED
RADIO	2-4, 10-12, 13-15
PHONO	2-4, 9-10, 7-8
RADIO RECORDER	2-4, 10-12, 9-11
MICRO. RECORDER	2-4, 10-12, 1-2
HOME BROADCAST NO.	2-4, 10-12, 1-2

©John F. Rider

MODELS 118, 119

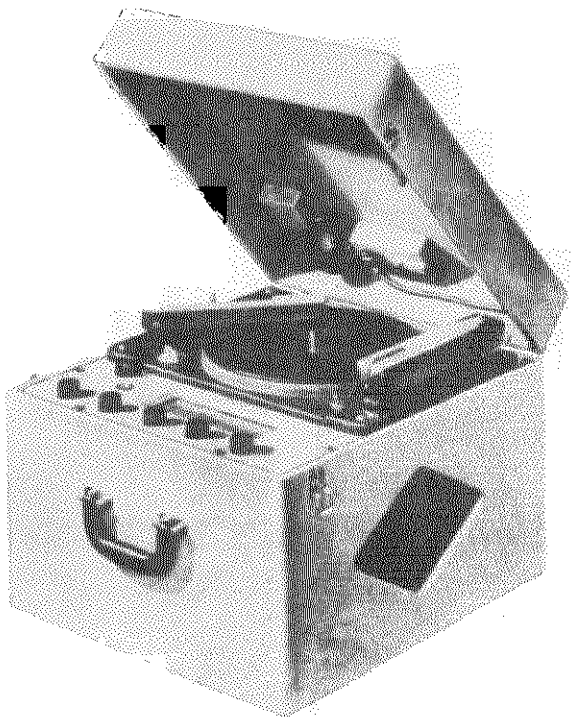

Federal Recording Radio
No. 118 Dual Speed Portable

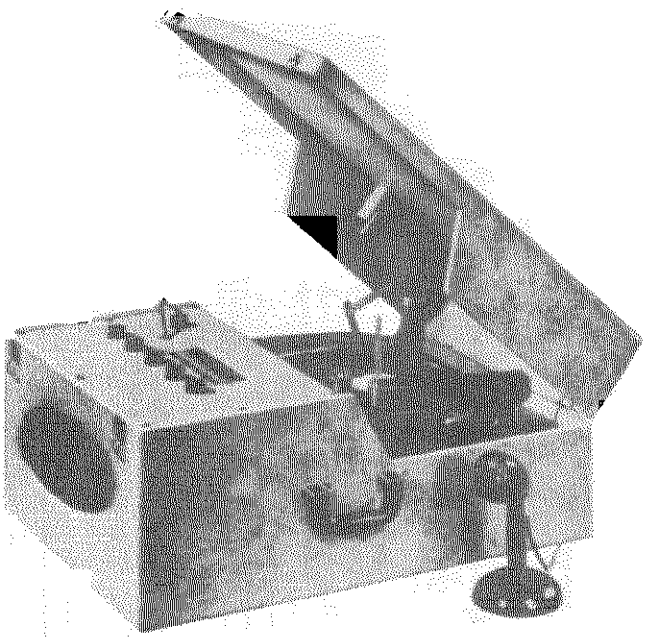

Federal Recording Radio
No. 119 Portable with Record Changer

POWER SOURCES

This instrument will operate on 110 to 125 volt—60 cycle current only. Never plug into a higher voltage line or the parts will be seriously damaged. Never use current of any other frequency than 60 cycles, as the motor in this instrument is made for 60 cycle operation only. If you are in doubt about your home current, you should consult your local power company.

ADJUSTMENTS

If it is necessary to adjust the cutting arm proceed as follows:

1. With the turntable stopped, lower the cutting arm over the turntable so that the stylus rests on the disc. Measure the distance between the disc and the bottom edge of the arm. This distance should be ¼ of an inch. The cutting head will extend slightly below the bottom of the cutting arm, but the distance should be measured from the bottom of the cutting arm. The best spot to make this measurement is at the end of the arm, just below the opening from which protrudes the knurled thumb screw which locks the stylus into the cutting head. When properly adjusted, the thumb screw will be approximately in, or slightly above, the center of the opening in the end of the arm. If the arm is lower than ¼ of an inch, raise the arm to a vertical position. Loosen the lock nut on screw 'A' (see fig. No. 2) and turn the screw to the left. Lower the arm again onto the disc and make your measurement. Do this until the proper distance is set. Then retighten the lock nut to hold the screw into place.

If the arm is higher than ¼ of an inch, turn screw 'A' to the right until the proper setting is made.

After the correct adjustments have been made on screw 'A', it is only necessary to turn the screw 'B' (see fig. No. 2) to the right to increase the width of the groove or to the left to decrease the width.

ALIGNMENT PROCEDURE

Remove the chasis from the cabinet before attempting to align this receiver. To do this, proceed as follows:

Loosen and remove the four screws from the four corners of the motor plate. Next, loosen and remove the four wood screws in the control panel. Remove the control knobs by pulling straight up on the knobs. Raise up the motor plate and lift out the control panel. Pull out the plugs connecting the motor plate to the chassis. Loosen and remove the four screws in the front end of the cabinet and lift out the chassis.

©John F. Rider

A signal generator having the following frequencies is necessary: 456KC, 600KC, 1400KC, 6MC, 16MC, 18.3MC. An output meter of some kind should be connected across the speaker leads at the output tube.

When aligning this receiver, always keep the volume control turned full on and the generator output as low as possible. See Fig. No. 3 for location of adjustments.

I. F. ALIGNMENT: Connect the leads from generator to the stator plates of the 'RF' section of the gang condenser, through a .05 condenser. Make sure that the ground lead from the generator is connected to some point on the chassis.
Adjust the generator to 456KC.
Adjust the four trimmer screws in the I.F. cans until a maximum reading is noted on the output meter. The gang condenser should be turned all the way out during these adjustments.

'B' BAND ALIGNMENT: Connect the generator leads to the 'Ant' and 'Gnd' leads of the chassis through a .0002 condenser. Set the generator to 1400KC and turn the tuning control until the pointer is directly over 140 on the 'B' band scale. If necessary, adjust the 'B' band oscillator trimmer, (which is located underneath the chassis) until the 1400KC signal from the generator is heard. Next set the generator to 600KC and tune the receiver until the 600KC signal is tuned in. Turn the 'B' band padding condenser very slowly to the right or left and at the same time rock the tuning control back and forth until a maximum reading is noted on the output meter. Next reset the generator to 1400KC and tune the receiver to 140 on the scale. If the signal has shifted, then readjust the 'B' band osc. trimmer. Place the loop antenna so that it is in approximately the same relative position as it would be in the cabinet. With the generator still at 1400KC and the receiver still tuned to 140 on the scale, adjust the 'B' band loop antenna trimmer till the output meter shows a maximum reading.

"D" BAND ALIGNMENT: Connect the generator leads to the "Ant." and "Gnd" leads of the receiver through a 400 ohm resistor. Turn the tuning control so that the pointer is at the extreme right end of the 'D' Band scale. Set the generator to 18.3MC and adjust the 'D' band osc. trimmer, till the signal is heard. Make sure that you hear the fundamental frequency and not the image. This may be checked by tuning the receiver to approximately 17.4MC while the generator is still at 18.3MC. At this point, you should hear a weaker signal which indicates that it is the image frequency. Next set the generator to 16MC and tune the receiver to 16MC. Tune the signal in carefully. Adjust the 'D' band antenna trimmer and at the same time rock the tuning control back and forth till a maximum reading is noted on the output meter. Next set the generator to 6MC and tune the receiver to that signal. No adjustment should be necessary at 6MC. A fixed oscillator padding condenser is used for this frequency.

TUBE AND TRIMMER LOCATION
110-125 VOLTS 60 CYCLE A.C.

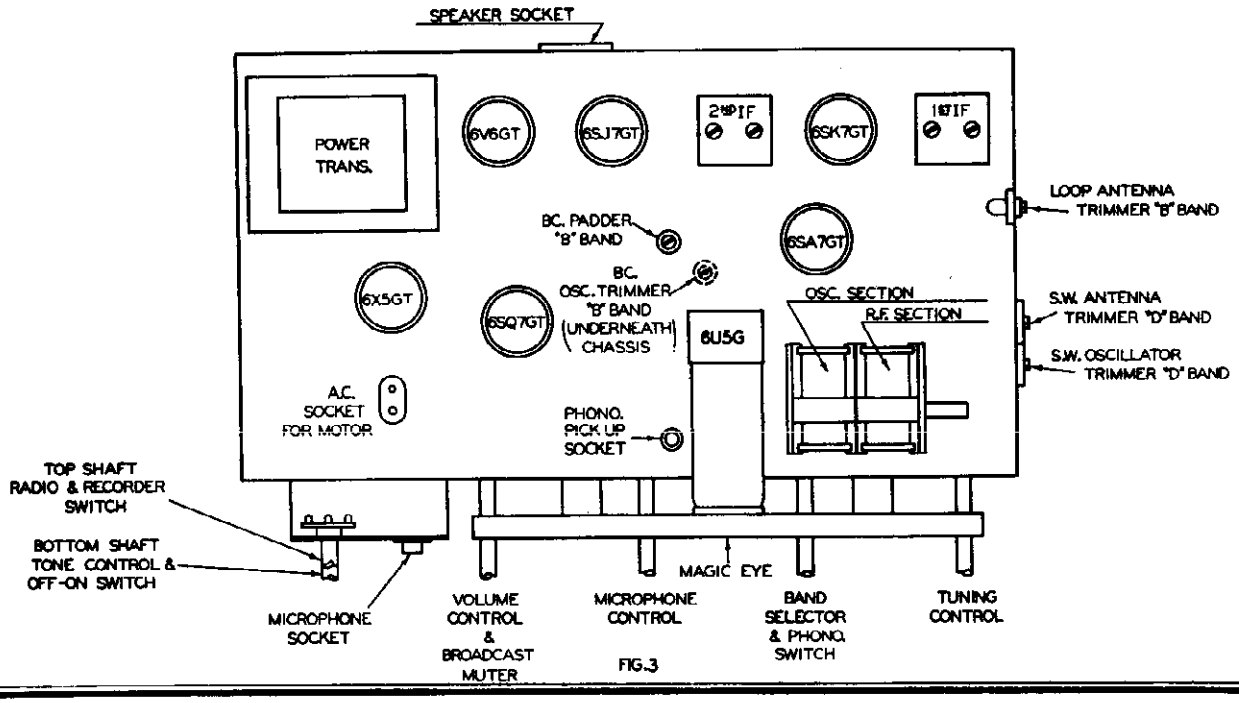

FIG. 3

©John F. Rider

MODELS 118, 119

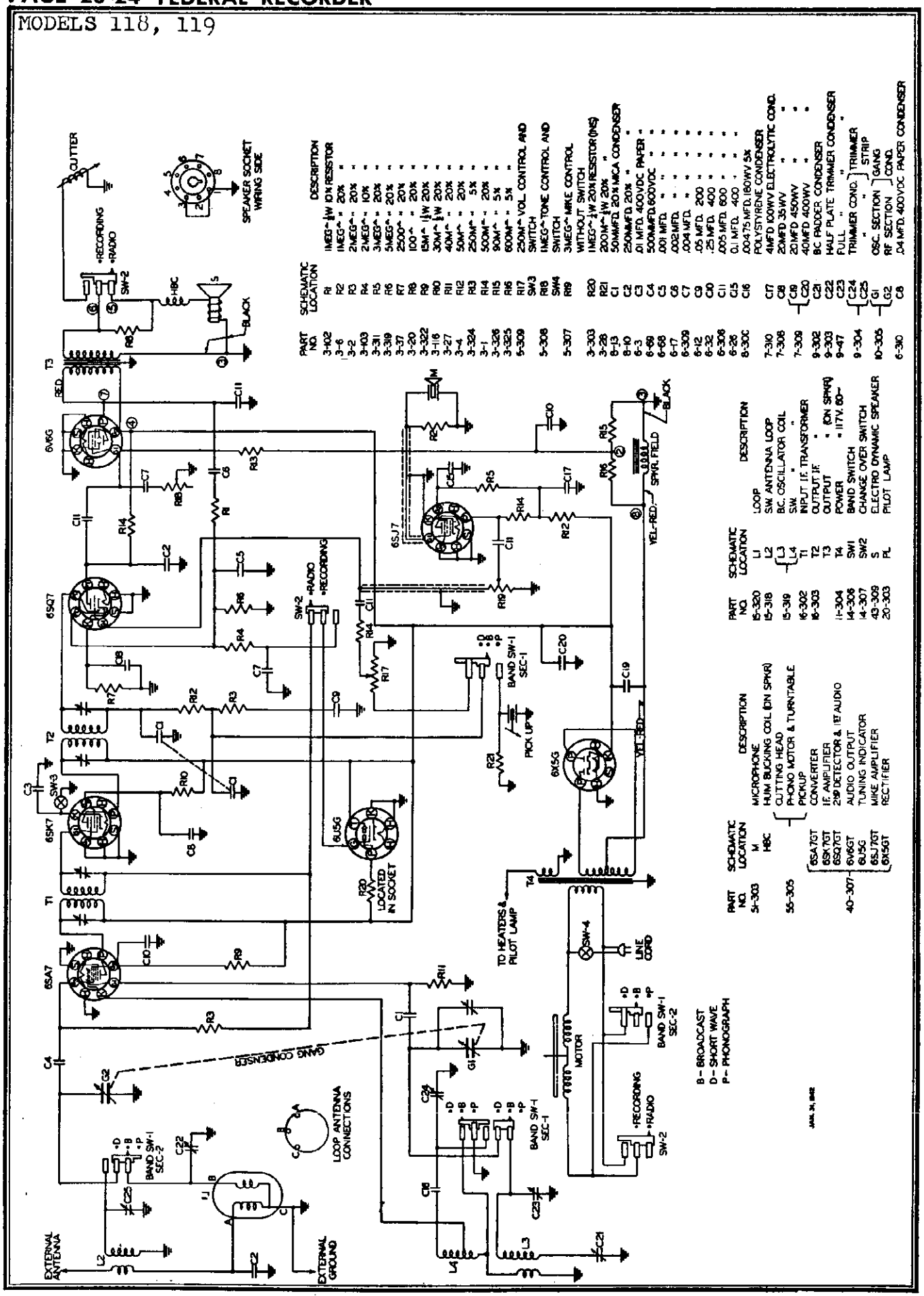

PART NO.	SCHEMATIC LOCATION	DESCRIPTION
3-102	R1	1MEG^ ½W DN RESISTOR
3-6	R2	1MEG^ " 20% "
3-2	R3	2MEG^ " 20% "
3-103	R4	2MEG^ " 10% "
3-31	R5	3MEG^ " 20% "
3-39	R6	5MEG^ " 20% "
3-37	R7	2500^ " 20% "
3-20	R8	100^ " 20% "
3-322	R9	15M^ ½W 20% "
3-116	R10	30M^ ½W 20% "
3-27	R11	40M^ " 20% "
3-4	R12	50M^ " 20% "
3-324	R13	250M^ " 5% "
3-1	R14	500M^ " 20% "
3-326	R15	90M^ " 5% "
3-325	R16	600M^ " 5% "
5-309	R17	250M^ VOL CONTROL AND SWITCH
5-308	R18	1MEG^ TONE CONTROL AND SWITCH
5-307	R19	3MEG^ MIKE CONTROL WITHOUT SWITCH
3-303	R20	1MEG^ ½W 20% RESISTOR (INS)
3-28	R21	200M^ " " " "
8-13	C1	50MMFD 20% MICA CONDENSER
8-10	C2	250MMFD 20% "
6-3	C3	.01 MFD. 400VDC PAPER "
6-68	C4	500MMFD.600VDC " " "
6-68	C5	.001 MFD. " " " "
6-17	C6	.002 MFD. " " " "
6-309	C7	.004 MFD. " " " "
6-12	C8	.05 MFD. 200 " " " "
6-32	C9	.25 MFD. 400 " " " "
6-306	C10	.005 MFD. 600 " " " "
6-26	C11	0.1 MFD. 400 " " " "
8-300	C12	.00475 MFD. 1800V 5% POLYSTYRENE CONDENSER
	C13	4MFD 100WV ELECTROLYTIC COND.
7-310	C17	20MFD 35WV " "
7-308	C18	20MFD 450WV " "
7-309	C19	40MFD 400WV " "
	C20	BC PADDER CONDENSER
9-302	C21	HALF PLATE TRIMMER CONDENSER
9-303	C22	FULL " " "
9-47	C23	TRIMMER COND. " TRIMMER
9-304	C24	" " STRIP
	C25	OSC. SECTION GANG
10-305	G1	RF SECTION COND.
	G2	.04 MFD. 400VDC PAPER CONDENSER
6-310	C8	

PART NO.	SCHEMATIC LOCATION	DESCRIPTION
		LOOP
15-320	L1	SW. ANTENNA LOOP
15-318	L2	BC. OSCILLATOR COIL
15-319	L3 L4	SW. " "
16-302	T1	INPUT I.F. TRANSFORMER
16-303	T2	OUTPUT I.F. "
	T3	OUTPUT " (ON SPKR)
11-304	T4	POWER " 117V. 60~
14-306	SW1	BAND SWITCH
14-307	SW2	CHANGE OVER SWITCH
43-309	S	ELECTRO DYNAMIC SPEAKER
20-303	PL	PILOT LAMP

PART NO.	SCHEMATIC LOCATION	DESCRIPTION
54-303	M	MICROPHONE
	H8C	HUM BUCKING COIL (ON SPKR)
56-305		CUTTING HEAD
		PHONO MOTOR & TURNTABLE
		PICKUP
	6SA7GT	CONVERTER
	6SK7GT	IF. AMPLIFIER
	6SQ7GT	2ND DETECTOR & 1ST AUDIO
40-307	6V6GT	AUDIO OUTPUT
	6U5G	TUNING INDICATOR
	6SJ7GT	MIKE AMPLIFIER
	6X5GT	RECTIFIER

©John F. Rider

INSTALLATION

POWER SUPPLY. This receiver is designed for operation on a power supply of 110 to 120 volts, 60 cycle, alternating current. Before inserting power plug, be sure that your house is wired for the correct voltage and current for which this set is designed. If you are in doubt, call up your local power company for the necessary information. Never plug into a direct current (DC) outlet.

ANTENNA AND GROUND CONNECTIONS. This receiver has a built-in loop antenna and ordinarily will require no external antenna. The excellent design of this loop is such as to give maximum pickup from stations having wide variations in signal strength. In poor localities for reception, such as locations in metal buildings, near iron ore deposits, steel structures, or in localities remote from broadcasting stations, reception can be improved by using an outside antenna with a length of from 50 to 100 feet including lead-in. This lead-in is connected to the **blue** lead extending from the chassis. The loop antenna will also work on the short wave band, but to obtain maximum reception on the short waves it is advisable to use an outside antenna.

A good ground connection is necessary to secure maximum performance on both radio and recorder. Connect the **black** ground wire to a water pipe or steam radiator by means of a ground clamp. The pipe should be thoroughly cleaned so that this clamp makes a positive contact with the metal. If no ground is available, one can be made by driving a piece of pipe into moist earth.

LOCATION OF CABINET. If the cabinet is placed close to a flat wall it is necessary to allow a minimum space of 3 inches between the rear of the cabinet and the wall. This is necessary to secure proper tone quality and ventilation for the radio. The cabinet should stand firmly on its four feet. If the cabinet wobbles, fold up a piece of paper and place under the leg which does not rest securely on the floor.

ALIGNMENT DATA AND SERVICING

Lack of sensitivity and poor tone quality may be due to any one or a combination of causes such as weak or defective tubes or speaker, open or grounded bias resistor, bypass condenser, etc. Never attempt to realign set until all other possible sources of trouble have been first thoroughly investigated and definitely proved not to be the cause.

NOTE: IT IS ABSOLUTELY NECESSARY THAT AN ACCURATELY CALIBRATED TEST OSCILLATOR WITH SOME TYPE OF OUTPUT MEASURING DEVICE BE USED WHEN ALIGNING THE RECEIVER AND THAT THE PROCEDURE BE CAREFULLY FOLLOWED, OTHERWISE THE RECEIVER WILL BE INSENSITIVE AND THE DIAL CALIBRATION WILL BE INCORRECT. THE TRIMMERS WILL BE REFERRED TO BY THEIR FUNCTION AS INDICATED ON THE PARTS DIAGRAM.

ALIGNMENT PROCEDURE

GENERAL DATA. The alignment of this receiver requires the use of a test oscillator that will cover the frequencies of 456, 600, 1400, 1720, 6000, 15000 and 18300 KC and an output meter to be connected across the primary or secondary of the output transformer. If possible, all alignments should be made with the volume control on maximum and the test oscillator output as low as possible to prevent the AVC from operating and giving false readings.

CORRECT ALIGNMENT PROCEDURE. The intermediate frequency (I.F.) stages should be aligned properly as the first step. After the I.F. transformers have been properly adjusted and peaked, the Broadcast and Short Wave bands in the order given, should be aligned.

I.F. ALIGNMENT. With the wave switch in the Broadcast Band and the gang condenser set at minimum, adjust the test oscillator to 456 KC and connect the output to the grid of the first detector tube (6A8GT) through a .05 or .1 mfd. condenser. The ground on the test oscillator should be connected to the chassis buss. Align all four I.F. trimmers to peak or maximum reading on the output meter.

BROADCAST BAND ALIGNMENT. With the switch turned to the broadcast position, connect the antenna to the generator through a 200 MMF dummy and the ground of the set (Black wire) to the generator ground. Set the dial and generator at 1720 KC. Align the BC oscillator trimmer for maximum output. Set the generator at 1400 KC and tune-in signal with the dial. Adjust antenna trimmer for maximum output. Next set the generator at 600 KC and tune in the signal with the dial. Adjust the BC pad by rocking the gang back and forth while adjusting the pad until maximum output is attained. Recheck the adjustment at 1400 KC as the pad adjustment may have caused misalignment.

SHORT WAVE BAND ALIGNMENT. With the band switch turned to the S. W. position, connect the generator to the antenna with a 400 ohm dummy and the ground of the set (Black wire) to the generator ground. Adjust the S. W. oscillator to give a maximum output with the dial at 18300 KC (extreme end). Set the generator at 15000 KC and tune-in the signal with the dial. Adjust the antenna trimmer for maximum output. With a strong signal input turn the dial to approximately 1 M. C. lower in frequency and pick up the image frequency. If the image is not received, it will be necessary to return the dial to 18300 KC to reduce the capacity in the oscillator trimmer until a second signal is received. Proceed as before with the alignment of the antenna and recheck for image frequency. Check the sensitivity at 6000 KC to determine if the coils and mica pad are not defective.

© John F. Rider

MODEL 201

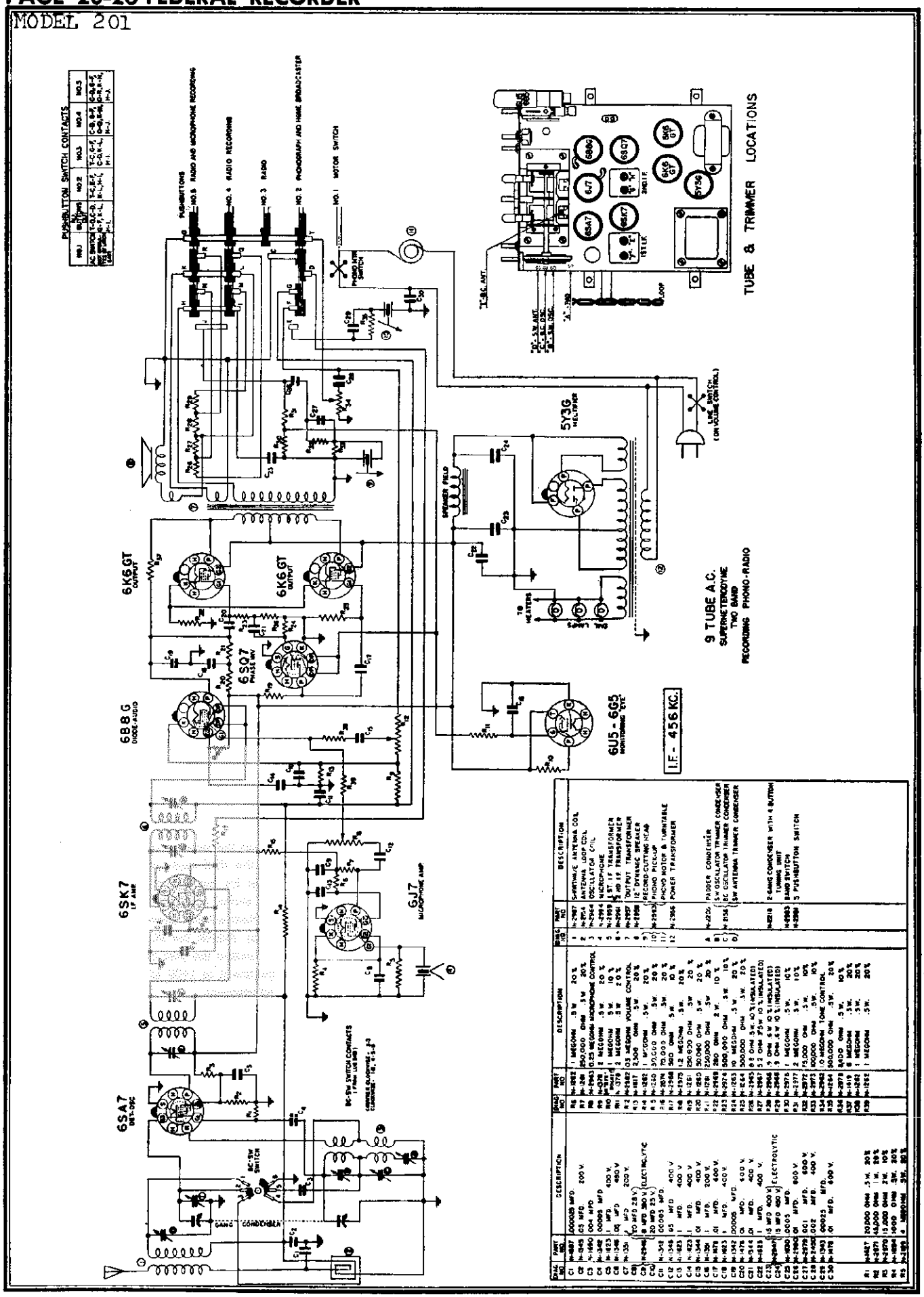

©John F. Rider

ALIGNMENT DATA AND SERVICING

Lack of sensitivity and poor tone quality may be due to any one or a combination of causes such as weak or defective tubes or speaker, open or grounded bias resistor, bypass condenser, etc. Never attempt to realign set until all other possible sources of trouble have been first thoroughly investigated and definitely proved not to be the cause.

NOTE: IT IS ABSOLUTELY NECESSARY THAT AN ACCURATELY CALIBRATED TEST OSCILLATOR WITH SOME TYPE OF OUTPUT MEASURING DEVICE BE USED WHEN ALIGNING THE RECEIVER AND THAT THE PROCEDURE BE CAREFULLY FOLLOWED, OTHERWISE THE RECEIVER WILL BE INSENSITIVE AND THE DIAL CALIBRATION WILL BE INCORRECT. THE TRIMMERS WILL BE REFERRED TO BY THEIR FUNCTION AS INDICATED ON THE PARTS DIAGRAM.

ALIGNMENT PROCEDURE

GENERAL DATA. The alignment of this receiver requires the use of a test oscillator that will cover the frequencies of 456, 600, 1400, and 1720 KC and an output meter to be connected across the primary or secondary of the output transformer. If possible, all alignments should be made with the volume control on maximum and the test oscillator output as low as possible to prevent the AVC from operating and giving false readings.

CORRECT ALIGNMENT PROCEDURE. The intermediate frequency (I.F.) stages should be aligned properly as the first step. After the I.F. transformers have been properly adjusted and peaked, the Broadcast band should be aligned.

I.F. ALIGNMENT. With the gang condenser set at minimum, adjust the test oscillator to 456 KC and connect the output to the grid of the first detector tube (6SA7) through a .05 or .1 mfd. condenser. The ground on the test oscillator should be connected to the chassis base. Align all four I.F. trimmers to peak or maximum reading on the output meter.

BROADCAST BAND ALIGNMENT. Connect the antenna to the generator through a 200 MMF dummy and the ground of the set (Black wire) to the generator ground. Set the dial and generator at 1720 KC. Align the BC oscillator trimmer for maximum output. Set the generator at 1400 KC and tune-in signal with the dial. Adjust antenna trimmer for maximum output. Next set the generator at 600 KC and tune in the signal with the dial to check if the gang condenser or coils have been damaged. This receiver requires no adjustment at this point as it employs a cut section gang.

DIAG NO.	PART NO.	DESCRIPTION
R1	N-1778	100,000 OHM .5W 20%
R2	N-1779	150,000 OHM .5W 20%
R3	N-1627	20,000 OHM .5W 20%
R4	N-2716	15,000 OHM 2 W. 10%
R5	N-1482	250 OHM .5W 20%
R6	N-1260	50,000 OHM .5 W 20%
R7	N-1262	1 MEGOHM .5W. 20%
R8	N-2571	250,000 OHM .5W 10%
R9	N-1696	400,000 OHM .5W 20%
R10	N-5250	125,000 OHM .5W 20%
R11	N-2572	300,000 OHM .5W. 10%
R12	N-1419	6 MEGOHM .5W. 20%
R13	N-3213	5MEGOHM VOLUME CONTROL
R14	N-1419	6 MEGOHM .5W. 20%
R15	N-1776	100,000 OHM .5W. 20%
R16	N-1778	100,000 OHM .5W. 20%
R17	N-3214	25 MEGOHM TONE CONTROL
R18	N-3235	250 OHM 1W. 10%
R19	N-1627	20,000 OHM .5W. 20%
R20	N-3236	4.5 OHM 3W. 10%
R21	N-1262	1 MEGOHM .5W. 20%

DIAG NO.	PART NO.	DESCRIPTION
C1	N-1345	.05 MFD. 200 V.
C2	N-2980	.01 MFD. 600 V.
C3	N-1834	.002 MFD 600 V.
C4	N-1623	.1 MFD. 400 V.
C5	N-1347	.006 MFD. 600 V.
C6	N-1351	.1 MFD 200 V.
C7	N-1346	.05 MFD. 400 V.
C8	N-1374	100 MMFD. (MICA)
C9	N-1376	.02 MFD. 400 V.
C10	N-1347	.006 MFD. 600 V.
C11	N-1343	250 MMFD. (MICA)
C12	N-1973	.02 MFD. 600 V.
C13	N-1347	.006 MFD. 600 V.
C14	N-1623	.1 MFD. 400 V.
C15	N-3234	.001 MFD. 1000 V.
C16	N-3216	20 MFD 350V. ELECTROLYTIC
C17		15 MFD 250V.
C18		20 MFD. 25V.
C19		6 MFD. 200V.
C20	N-1478	.01 MFD. 600 V.

DIAG NO.	PART NO.	DESCRIPTION
1	N-3209	LOOP ANTENNA COIL
2	N-3210	OSCILLATOR COIL
3		CUTTING HEAD
4	N-2993	PHONO MOTOR & TURNTABLE
5		PICK-UP
6	N-3211	1ST. I.F. TRANSFORMER
7	N-3212	2ND. I.F. TRANSFORMER
8	N-3232	MICROPHONE
9	N-3205	OUTPUT TRANSFORMER
*10	N-3204	8" DYNAMIC SPEAKER
11	N-3206	POWER TRANSFORMER
*12	N-3256	6" DYNAMIC SPEAKER
	N-3207	TWO GANG CONDENSER
	N-3215	SELECTOR SWITCH
	N-1980	PHONO MOTOR SWITCH

*8" SPKR. USED ON CONSOLE MODEL
6" SPKR. USED ON TABLE MODEL

SELECTOR SWITCH CONTACTS				
POSITION (VIEWED FROM SHAFT END)	SECTION 1		SECTION 2	
	FRONT	REAR	FRONT	REAR
1-RADIO	1-4	5-7	8-11	—
2- PHONOGRAPH	2-4	—	9-11	—
3-RADIO RECORDING	3-4	5-9	9-11	5-8
4-MICROPHONE RECORDING	4-10	—	10-11	4-8
5-RADIO-HOME BROADCASTING	4-10	—	9-11	—

6 TUBE—A.C.
SUPERHETERODYNE
SINGLE BAND
RECORDER-PHONO-RADIO

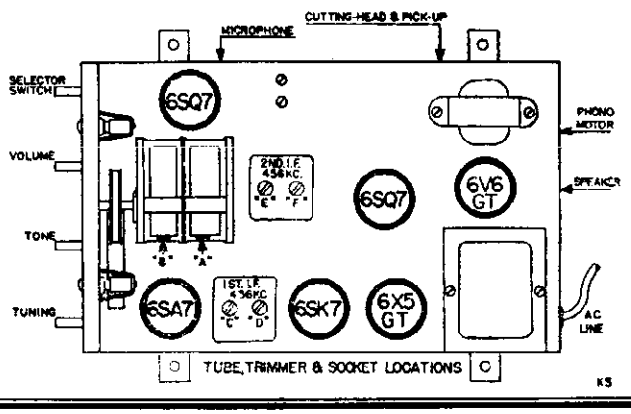

© John F. Rider

MODELS 106, 211

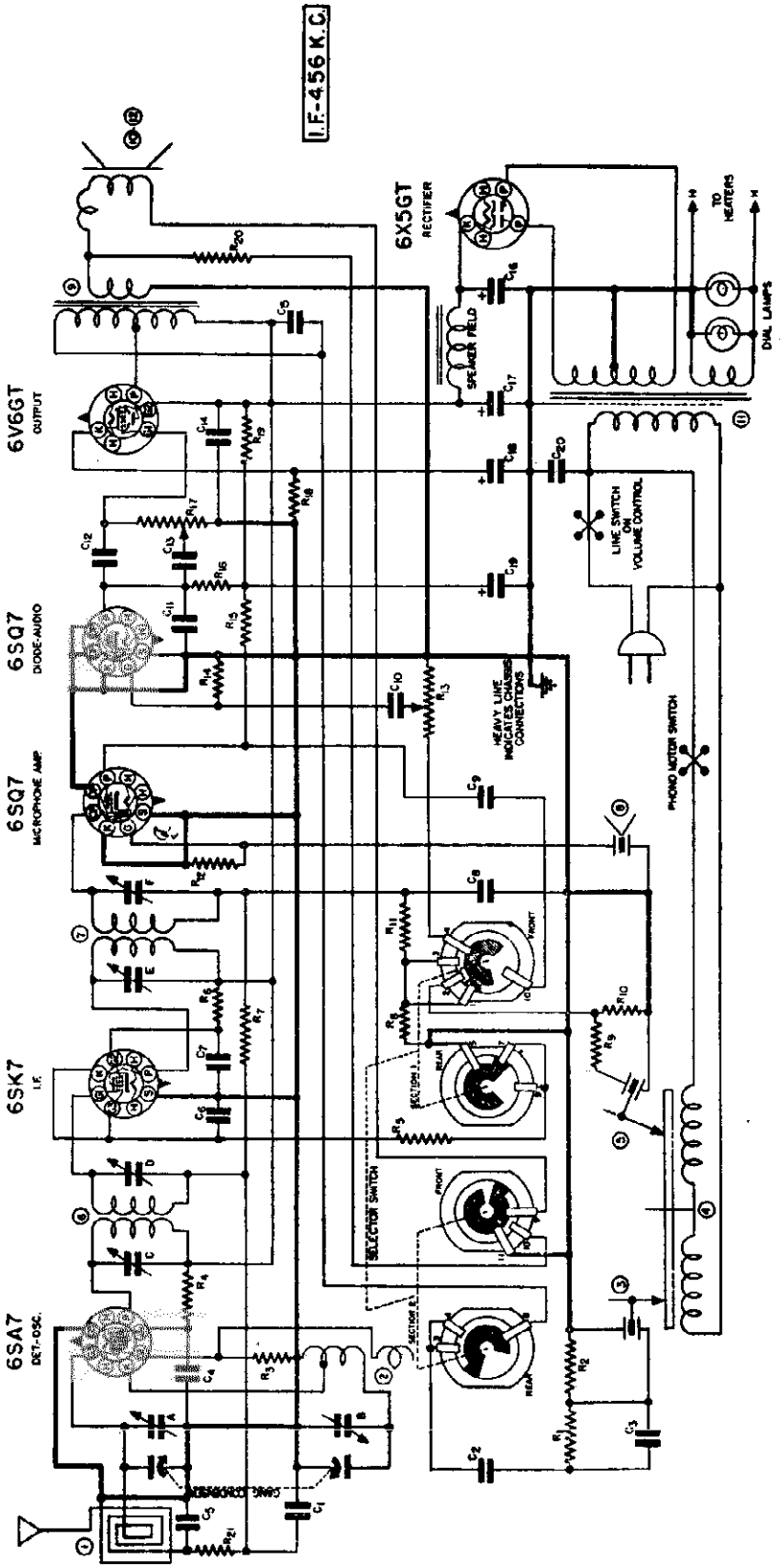

©John F. Rider

ALIGNMENT DATA AND SERVICING

Lack of sensitivity and poor tone quality may be due to any one or a combination of causes such as weak or defective tubes or speaker, open or grounded bias resistor, bypass condenser, etc. Never attempt to realign set until all other possible sources of trouble have been first thoroughly investigated and definitely proved not to be the cause.

NOTE: IT IS ABSOLUTELY NECESSARY THAT AN ACCURATELY CALIBRATED TEST OSCILLATOR WITH SOME TYPE OF OUTPUT MEASURING DEVICE BE USED WHEN ALIGNING THE RECEIVER AND THAT THE PROCEDURE BE CAREFULLY FOLLOWED, OTHERWISE THE RECEIVER WILL BE INSENSITIVE AND THE DIAL CALIBRATION WILL BE INCORRECT. THE TRIMMERS WILL BE REFERRED TO BY THEIR FUNCTION AS INDICATED ON THE PARTS DIAGRAM.

GENERAL DATA. The alignment of this receiver requires the use of a test oscillator that will cover the frequencies of 456, 600, 1400, and 1720 KC and an output meter to be connected across the primary or secondary of the output transformer. If possible, all alignments should be made with the volume control on maximum and the test oscillator output as low as possible to prevent the AVC from operating and giving false readings.

CORRECT ALIGNMENT PROCEDURE. The intermediate frequency (I.F.) stages should be aligned properly as the first step. After the I.F. transformers have been properly adjusted and peaked, the Broadcast band should be aligned.

I.F. ALIGNMENT. With the gang condenser set at minimum, adjust the test oscillator to 456 KC and connect the output to the grid of the first detector tube (6SA7) through a .05 or .1 mfd. condenser. The ground on the test oscillator should be connected to the chassis base. Align all four I.F. trimmers to peak or maximum reading on the output meter.

BROADCAST BAND ALIGNMENT. Connect the antenna to the generator through a 200 MMF dummy and the ground of the set (Black wire) to the generator ground. Set the dial and generator at 1720 KC. Align the BC oscillator trimmer for maximum output. Set the generator at 1400 KC and tune-in signal with the dial. Adjust antenna trimmer for maximum output. Next set the generator at 600 KC and tune in the signal with the dial to check if the gang condenser or coils have been damaged. This receiver requires no adjustment at this point as it employs a cut section gang.

RECORD CHANGER SERVICING

(1) Lever for setting to play 10-inch or 12-inch records, Manual playing or Remove records. Mechanism as shown is set for playing 10-inch records.

(2) "On" and "Off" switch for operating the record playing mechanism. Not used on some models.

(3) Trip mechanism designed to handle automatically records with either spiral run-in or oscillating grooves.

(4) Record Support Fingers.

(5) Turntable Shaft.

(6) Trip Rod Tension Spring.

(7) Adjustment for run-in or spiral-grooved records.

(8) Adjusting lock screws for controlling position of power take off wheel (12).

(9) Rubber-tired Drive Wheel. By means of a spring, this wheel contacts the steel pulley on the motor and the inside flange of the turntable; driving the table in clockwise rotation.

(10) Adjusting screws for locking tone arm in position so that needle will rest properly on edge of record.

(11) Trip rod.

(12) Rubber-tired power take-off wheel. Through the trip mechanism, this wheel contacts the inside flange of the turntable during the change cycle from one record to the next, but does not operate during the playing of a record.

(13) Pickup Arm.

(14) Needle Set Screw.

(15) Record Support Arm.

(16) Master Trip Cam.

(17) Mounting Holes. Rubber washers or springs should be used when bolting changer in cabinet to absorb possible vibration.

(18) Reject Button. By pressing this button, changing mechanism operates immediately regardless of needle position on the record. Also by pressing this button, the first record will drop on turntable.

(19) Position for Lever (1) when playing 12-inch records.

(20) Position for Lever (1) for Manual playing, Removing records or Cutting records.

(21) Adjusting screw for setting vertical movement of tone arm. If properly set, no further adjustment will be necessary.

(22) Adjustable Tie Bar used for positioning record support arms. The adjustment of this bar properly made should require no further attention.

(23) Rim Drive Electric Motor. Be sure Voltage and Cycles are correct for your Power Line.

(24) Cutter Arm. At all times except when actually recording, cutter arm is placed on cutter arm support rest (28).

(25) Adjusting Screw by which the tension on the cutter head equalizing spring may be varied for different types of records.

(26) Cutting Stylus clamp screw.

(27) Adjusting screw and lock nut for proper spacing between cutter arm and record.

(28) Cutter arm support rest. Prevents interference with reproduction and also removes all strain on cutter-head equalizing spring. Full lines show shipping position—dotted, Installation Position.

(29) Lead Screw.

(30) Follower Arm and Spring Cam. This arm and cam mesh with lead screw (29) to provide lateral motion of cutter arm during recording.

(31) Depressible Pin in turntable for driving home recording disc.

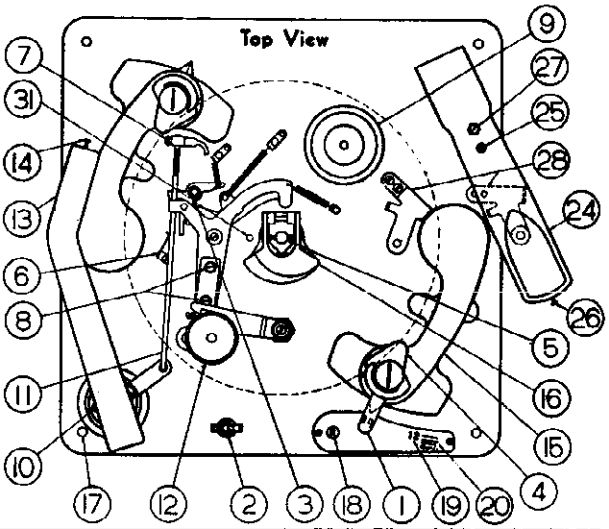

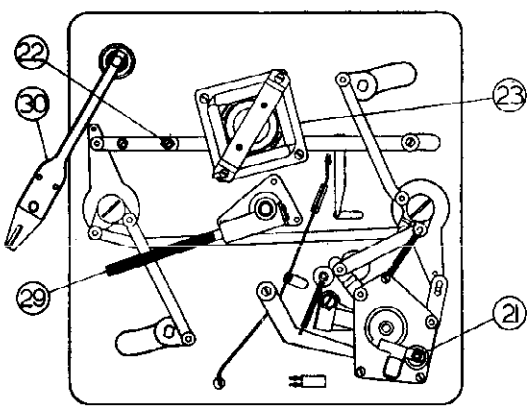

Bottom View

©John F. Rider

MODEL 301

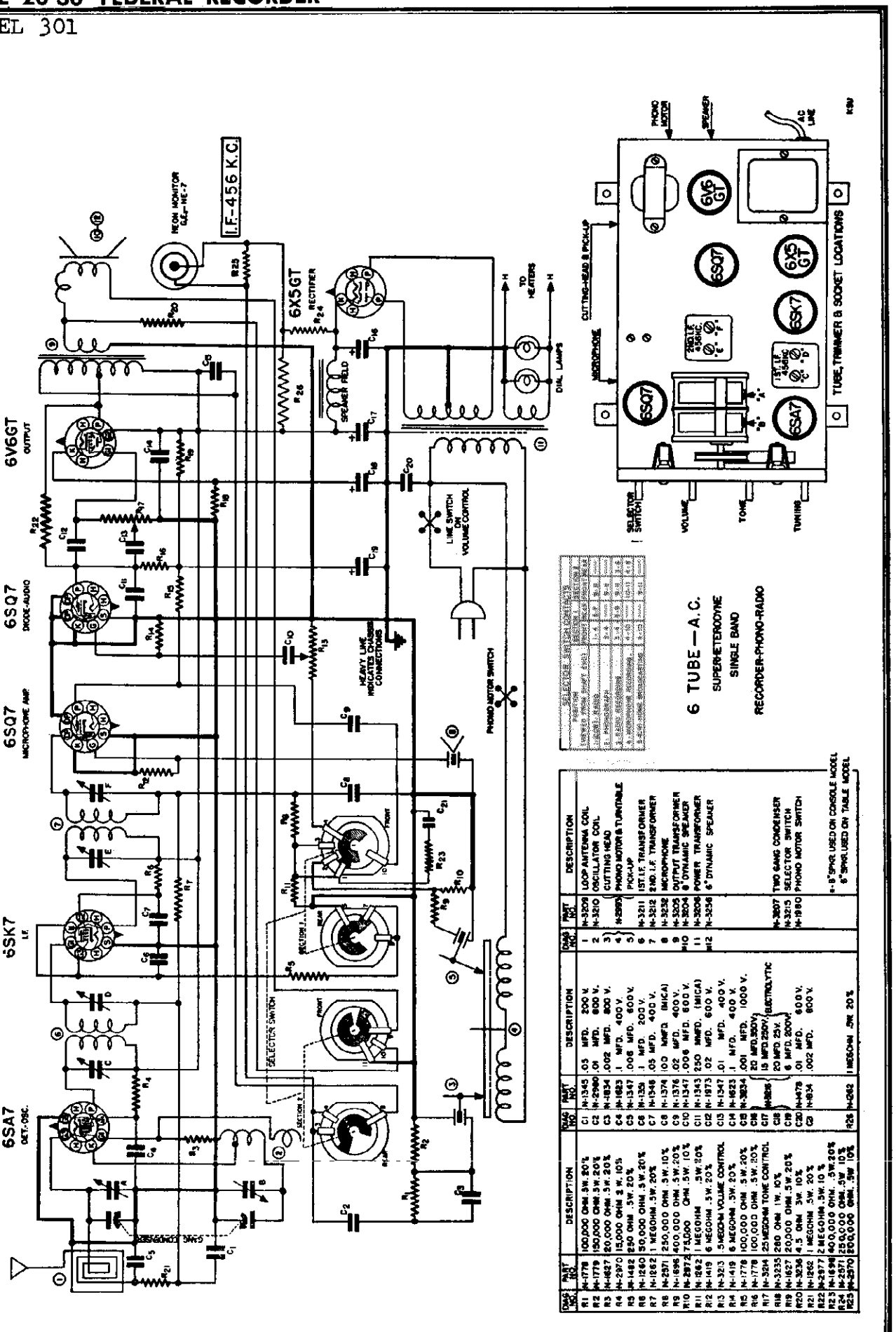

6 TUBE—A.C.

SUPERHETERODYNE

SINGLE BAND

RECORDER-PHONO-RADIO

CKT. SYM.	PART NO.	DESCRIPTION
R1	N-1778	100,000 OHM .5W. 20%
R2	N-1779	150,000 OHM .5W. 20%
R3	N-1827	20,000 OHM .5W. 20%
R4	N-2970	15,000 OHM 2 W. 10%
R5	N-1482	250 OHM .5W. 20%
R6	N-1240	50,000 OHM .5W. 20%
R7	N-1262	1 MEGOHM .5W. 20%
R8	N-2571	250,000 OHM .5W. 10%
R9	N-1696	400,000 OHM .5W. 20%
R10	N-2972	75,000 OHM .5W. 10%
R11	N-1262	1 MEGOHM .5W. 20%
R12	N-1419	6 MEGOHM .5W. 20%
R13	N-3213	.5 MEGOHM VOLUME CONTROL
R14	N-1419	6 MEGOHM .5W. 20%
R15	N-1778	100,000 OHM .5W. 20%
R16	N-1778	100,000 OHM .5W. 20%
R17	N-3241	25 MEGOHM TONE CONTROL
R18	N-3235	280 OHM 1W. 10%
R19	N-1627	20,000 OHM .5W. 20%
R20	N-3236	4.5 OHM 3W. 10%
R21	N-1262	1 MEGOHM .5W. 20%
R22	N-2977	2 MEGOHM .5W. 10%
R23	N-1698	400,000 OHM .5W. 20%
R24	N-2571	250,000 OHM .5W. 10%
R25	N-2970	200,000 OHM .5W. 10%

CKT. SYM.	PART NO.	DESCRIPTION
C1	N-1345	.05 MFD. 200 V.
C2	N-2960	.01 MFD. 600 V.
C3	N-1834	.002 MFD. 800 V.
C4	N-1823	.1 MFD. 400 V.
C5	N-1347	.006 MFD. 600 V.
C6	N-1351	.1 MFD. 200 V.
C7	N-1348	.05 MFD. 400 V.
C8	N-1374	100 MMFD. (MICA)
C9	N-1376	.02 MFD. 400 V.
C10	N-1347	.006 MFD. 600 V.
C11	N-1343	250 MMFD. (MICA)
C12	N-1973	.02 MFD. 600 V.
C13	N-1347	.01 MFD. 400 V.
C14	N-1823	.1 MFD. 400 V.
C15	N-3234	.001 MFD. 1000 V.
C16		20 MFD.250V.
C17	N-3235	15 MFD.250V. ELECTROLYTIC
C18		20 MFD. 25 V.
C19	N-1478	8 MFD. 200V.
C20	N-1478	.01 MFD. 600 V.
C21	N-834	.002 MFD. 600 V.
R26	N-1262	1 MEGOHM .5W. 20%

PART NO.	DESCRIPTION
N-3209	LOOP ANTENNA COIL
N-3210	OSCILLATOR COIL
	CUTTING HEAD
N-3295	PHONO MOTOR & TURNTABLE
	PICK-UP
N-3211	1ST I.F. TRANSFORMER
N-3212	2ND I.F. TRANSFORMER
N-3232	MICROPHONE
N-3205	OUTPUT TRANSFORMER
N-3204	8" DYNAMIC SPEAKER
N-3206	POWER TRANSFORMER
N-3256	6" DYNAMIC SPEAKER
N-3207	TWO GANG CONDENSER
N-3215	SELECTOR SWITCH
N-1980	PHONO MOTOR SWITCH

*-8" SPKR. USED ON CONSOLE MODEL
8" SPKR. USED ON TABLE MODEL

©John F. Rider

ALIGNMENT DATA AND SERVICING

Lack of sensitivity and poor tone quality may be due to any one or a combination of causes such as weak or defective tubes or speaker, open or grounded bias resistor, bypass condenser, etc. Never attempt to realign set until all other possible sources of trouble have been first thoroughly investigated and definitely proved not to be the cause.

NOTE: IT IS ABSOLUTELY NECESSARY THAT AN ACCURATELY CALIBRATED TEST OSCILLATOR WITH SOME TYPE OF OUTPUT MEASURING DEVICE BE USED WHEN ALIGNING THE RECEIVER AND THAT THE PROCEDURE BE CAREFULLY FOLLOWED, OTHERWISE THE RECEIVER WILL BE INSENSITIVE AND THE DIAL CALIBRATION WILL BE INCORRECT. THE TRIMMERS WILL BE REFERRED TO BY THEIR FUNCTION AS INDICATED ON THE PARTS DIAGRAM.

ALIGNMENT PROCEDURE

GENERAL DATA. The alignment of this receiver requires the use of a test oscillator that will cover the frequencies of 456, 600, 1400, 1720, 6000, 15000 and 18300 KC and an output meter to be connected across the primary or secondary of the output transformer. If possible, all alignments should be made with the volume control on maximum and the test oscillator output as low as possible to prevent the AVC from operating and giving false readings.

CORRECT ALIGNMENT PROCEDURE. The intermediate frequency (I.F.) stages should be aligned properly as the first step. After the I.F. transformers have been properly adjusted and peaked, the Broadcast and Short Wave bands in the order given, should be aligned.

I.F. ALIGNMENT. With the wave switch in the Broadcast Band and the gang condenser set at minimum, adjust the test oscillator to 456 KC and connect the output to the grid of the first detector tube (6SA7) through a .05 or .1 mfd. condenser. The ground on the test oscillator should be connected to the chassis ground. Align all four I.F. trimmers to peak or maximum reading on the output meter.

BROADCAST BAND ALIGNMENT. With the switch turned to the broadcast position, connect the antenna to the generator through a 200 MMF dummy and the ground of the set (Black wire) to the generator ground. Set the dial and generator at 1720 KC.

Align the BC oscillator trimmer for maximum output. Set the generator at 1400 KC and tune-in signal with the dial. Adjust antenna trimmer for maximum output. Next set the generator at 600 KC and tune in the signal with the dial. Adjust the BC pad by rocking the gang back and forth while adjusting the pad until maximum output is attained. Recheck the adjustment at 1400 KC as the pad adjustment may have caused misalignment.

SHORT WAVE BAND ALIGNMENT. With the band switch turned to the S. W. position, connect the generator to the antenna with a 400 ohm dummy and the ground of the set (Black wire) to the generator ground. Adjust the S. W. oscillator to give a maximum output with the dial at 18300 KC (extreme end). Set the generator at 15000 KC and tune-in the signal with the dial. Adjust the antenna trimmer for maximum output. With a strong signal input turn the dial to approximately 1 M. C. lower in frequency and pick up the image frequency. If the image is not received, it will be necessary to return the dial to 18300 KC to reduce the capacity in the oscillator trimmer until a second signal is received. Proceed as before with the alignment of the antenna and recheck for image frequency. Check the sensitivity at 6000 KC to determine if the coils and mica pad are not defective.

RECORD CHANGER SERVICING

(1) Lever for setting to play 10-inch or 12-inch records, Manual playing or Remove records. Mechanism as shown is set for playing 10-inch records.
(2) "On" and "Off" switch for operating the record playing mechanism. Not used on some models.
(3) Trip mechanism designed to handle automatically records with either spiral run-in or oscillating grooves.
(4) Record Support Fingers.
(5) Turntable Shaft.
(6) Trip Rod Tension Spring.
(7) Adjustment for run-in or spiral-grooved records.
(8) Adjusting lock screws for controlling position of power take off wheel (12).
(9) Rubber-tired Drive Wheel. By means of a spring, this wheel contacts the steel pulley on the motor and the inside flange of the turntable; driving the table in clockwise rotation.
(10) Adjusting screws for locking tone arm in position so that needle will rest properly on edge of record.
(11) Trip rod.
(12) Rubber-tired power take-off wheel. Through the trip mechanism, this wheel contacts the side flange of the turntable during the change cycle from one record to the next, but does not operate during the play of a record.
(13) Pickup Arm.
(14) Needle Set Screw.
(15) Record Support Arm.
(16) Master Trip Cam.
(17) Mounting Holes. Rubber washers or springs should be used when bolting changer in cabinet to absorb possible vibration.
(18) Reject Button. By pressing this button, changing mechanism operates immediately regardless of needle position on the record. Also by pressing this button, the first record will drop on turntable.
(19) Position for Lever (1) when playing 12-inch records.
(20) Position for Lever (1) for Manual playing, Removing records or Cutting records.
(21) Adjusting screw for setting vertical movement of tone arm. If properly set, no further adjustment will be necessary.
(22) Adjustable Tie Bar used for positioning record support arms. The adjustment of this bar properly made should require no further attention.
(23) Rim Drive Electric Motor. Be sure Voltage and Cycles are correct for your Power Line.
(24) Cutter Arm. At all times except when actually recording, cutter arm is placed on cutter arm support rest (28).
(25) Adjusting Screw by which the tension on the cutter head equalizing spring may be varied for different types of records.
(26) Cutting Stylus clamp screw.
(27) Adjusting screw and lock nut for proper spacing between cutter arm and record.
(28) Cutter arm support rest. Prevents interference with reproduction and also removes all strain on cutter-head equalizing spring. Full lines show shipping position—dotted, Installation Position.
(29) Lead Screw.
(30) Follower Arm and Spring Cam. This arm and cam mesh with lead screw (29) to provide lateral motion of cutter arm during recording.
(31) Depressible Pin in turntable for driving home recording disc.

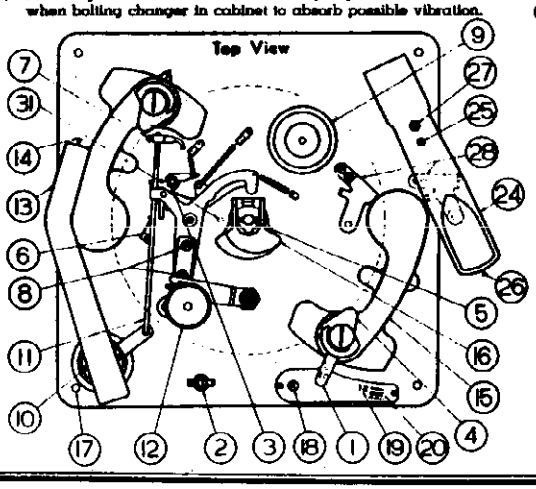

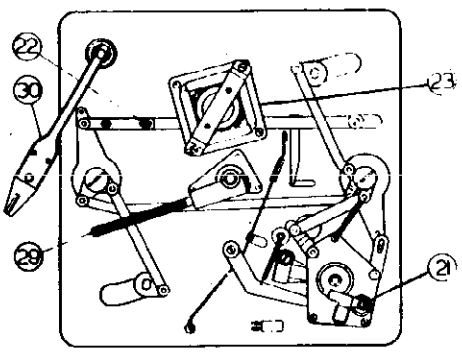

Bottom View

©John F. Rider

MODELS 306, 311

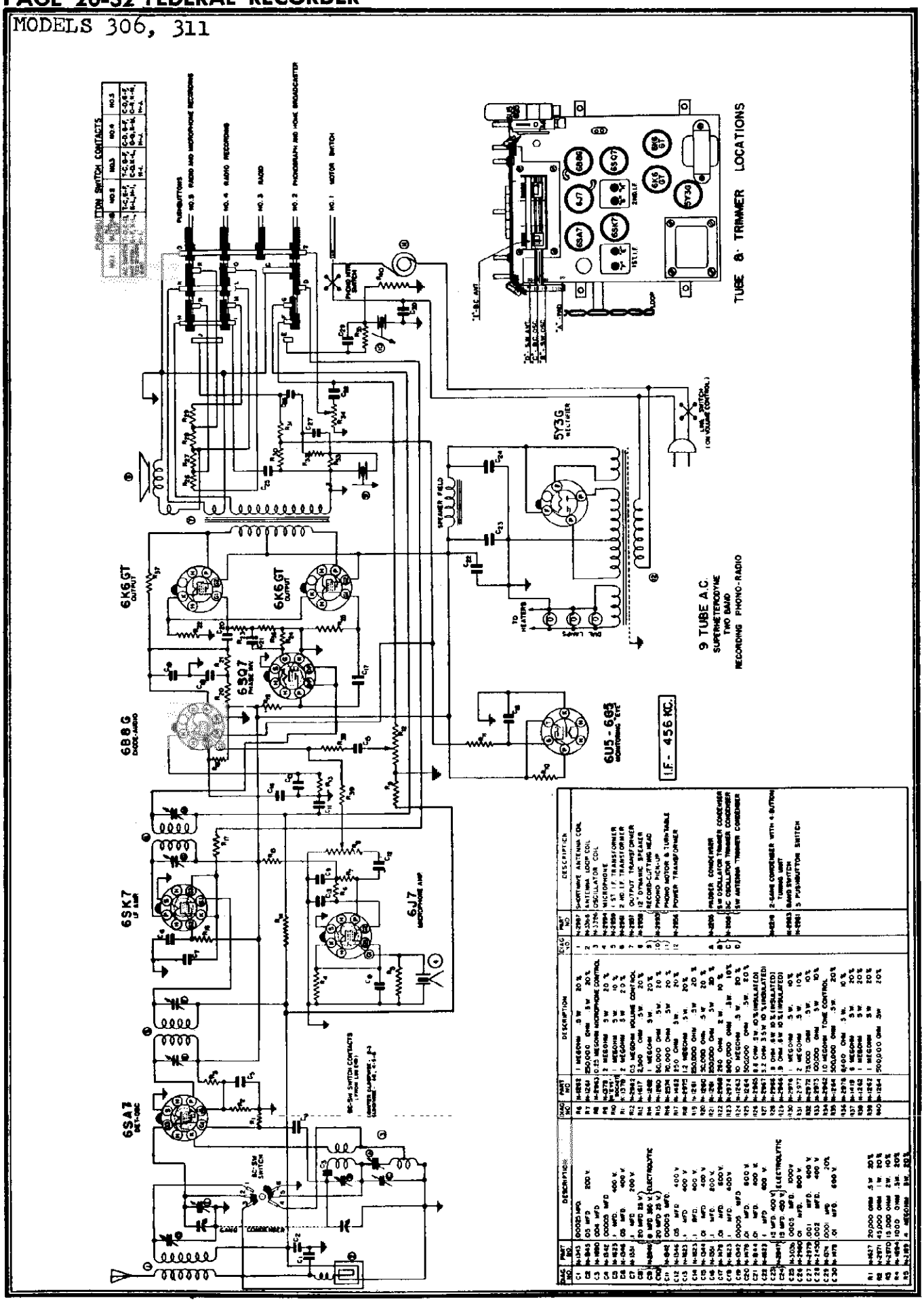

©John F. Rider

MODELS 401, 402, 403, 404, 405, 406, 407

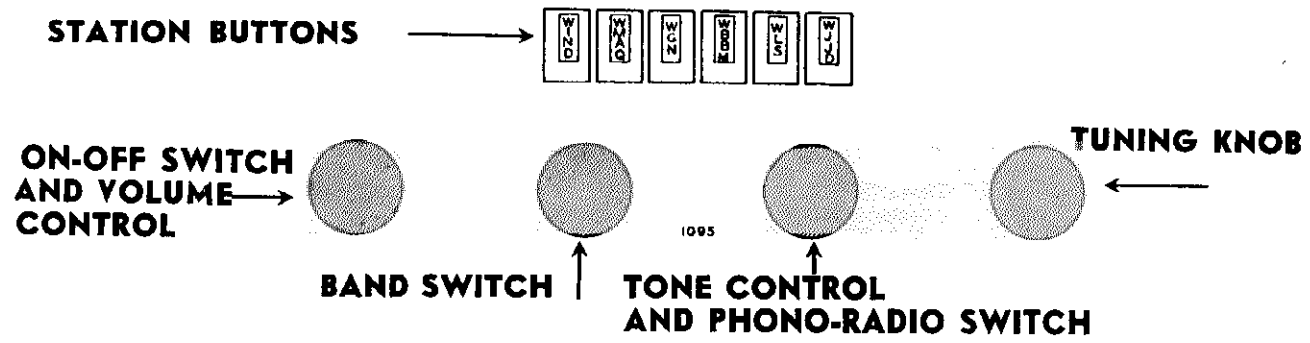

PROCEDURE FOR SETTING THE STATION BUTTONS

Make a list of your six favorite stations, those which you tune in regularly. It is better to list the station with the lowest kilocycle number first, the station with the next higher kilocycle number next, and so on.

Grasp the left-hand button at the sides (depress the adjacent button) and pull it out as far as it will go. A click will be heard. If it is impossible to depress the button which is adjacent to the button you are setting, rotate the tuning knob a few turns.

Select the first station from the list you have prepared. *Carefully* tune in this station by means of the manual tuning knob until the dark sector in the tuning eye is narrowest.

Now lock the mechanism by pushing the button all the way in until it is felt to lock into place.

Proceed in the same manner to set stations on any of the remaining buttons. Any button may be used for any station you can receive, although it will be more convenient to set the stations so that the kilocycle numbers increase from left to right.

Remove the correct station call letter tab from the sheets supplied by bending the sheet back and forth at the score mark until the tab can be broken off. Press the tab all the way to the bottom of the space provided in the button. Cover the call letter tab with a celluloid tab, pressing this in until it snaps into place.

Changing the setting of one button will not affect the setting of any of the other buttons.

SPECIFICATIONS

Power Consumption	90 Watts (At 117 volts 60 cycles) 122 Watts (Motor Operating)
Power Output	4 Watts Undistorted 5.5 Watts Maximum
Selectivity	35 KC Broad at 1000 Times Signal
Intermediate Frequency	456 KC
Speaker	12" Electro-Dynamic
Tuning Frequency Range	
B Range	535 to 1610 KC
D Range	5.35 to 18.3 MC
Sensitivity—External Antennas—(For 0.5 Watt output)	
B Range	2.0 Microvolts Average
D Range	4.0 Microvolts Average

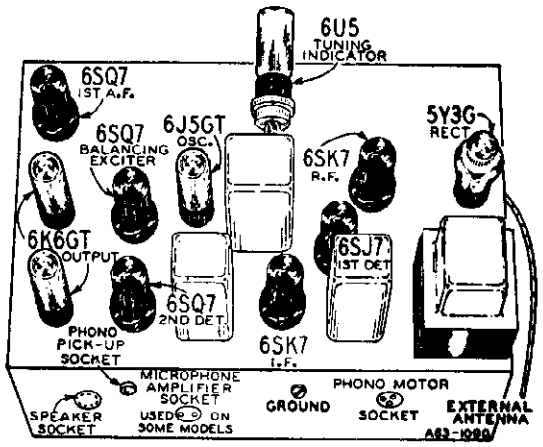

DRIVE CORD REPLACEMENT

Turn gang condenser to open position. Use new drive cord 55" in length.

Secure one end of tension spring to hook on drive pulley. Bend spring around drive pulley shaft—see illustration. Pass cord through slot in pulley rim. Wind cord ¼ turn clockwise (from drive pulley end of chassis) around drive pulley. Pass cord around idler pulleys A, B, C and D as in illustration. Then wind cord 2½ turns clockwise (from front of chassis) around tuning shaft spool. These turns should progress away from chassis. Pass cord over top of drive pulley for ¾ turn clockwise (from drive pulley end of chassis) and through slot in pulley rim. Fasten cord to tension spring—see illustration.

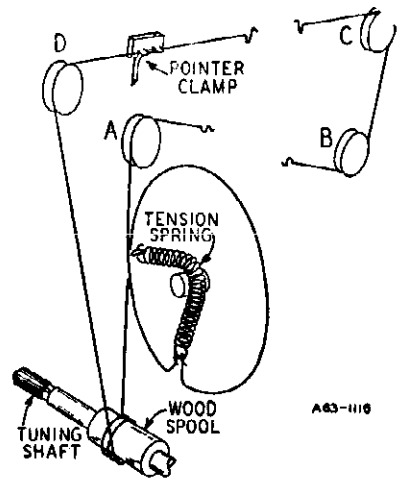

©John F. Rider

MODELS 401, 402, 403, 404, 405, 406, 407

ALIGNMENT PROCEDURE

Volume Control—Maximum All Adjustments.

Connect Radio Chassis to Ground Post of Signal Generator with a Short Heavy Lead.

Allow Chassis and Signal Generator to "Heat Up" for several minutes.

The following equipment is required for aligning:
An all Wave Signal Generator which will provide an accurately calibrated signal at the test frequencies as listed.
Output Indicating Meter — Non-Metallic Screw driver.
Dummy Antennas—.1 mf., 100 mmf., and 400 ohms.

	SIGNAL GENERATOR FREQUENCY SETTING	SIGNAL GENERATOR CONNECTION AT RADIO	DUMMY ANTENNA	BAND SWITCH SETTING	CONDENSER SETTING	ADJUST TRIMMERS TO MAXIMUM
I.F.	456 KC	Signal Grid of 1st Det.	.1 mf.	B Range	Turn Rotor to Full Open	1st I.F. (C15) & (C16) 2nd I.F. (C18) & (C19)
RANGE D	18,300 KC	Antenna Lead	400 Ohm	D Range	Turn Rotor to Full Open	Oscillator Range D (C11)
	17,000 KC	Antenna Lead	400 Ohm	D Range	Turn Rotor to Max. Output	Ant. Range D (C1) Int. Range D (C4) Rock Rotor—See Note B
RANGE B	1610 KC	Antenna Lead	100 mmf.	B Range	Turn Rotor to Full Open	Oscillator Range B (C13)
	1400 KC	Antenna Lead	100 mmf.	B Range	Turn Rotor to Max. Output Set Indicator to 1400 KC—See Note A	Ant. Range B (C2) Int. Range B (C6)
	600 KC	Antenna Lead	100 mmf.	B Range	Turn Rotor to Max. Output	600 KC (C14) Rock Rotor—See Note B
LOOP RANGE B	1400 KC	Antenna Lead	100 mmf.	B Range	Turn Rotor to Max. Output	Ant. Range B (C2)

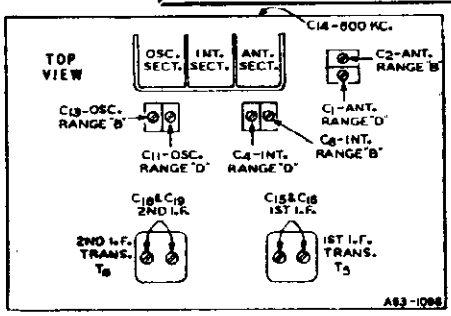

NOTE A—If the pointer is not at 1400 KC on the dial, remove pointer from drive cord. Set pointer at the 1400 KC mark on the dial scale. Attach pointer to drive cord.

NOTE B—Turn the rotor back and forth and adjust the trimmer until the peak of greatest intensity is obtained.

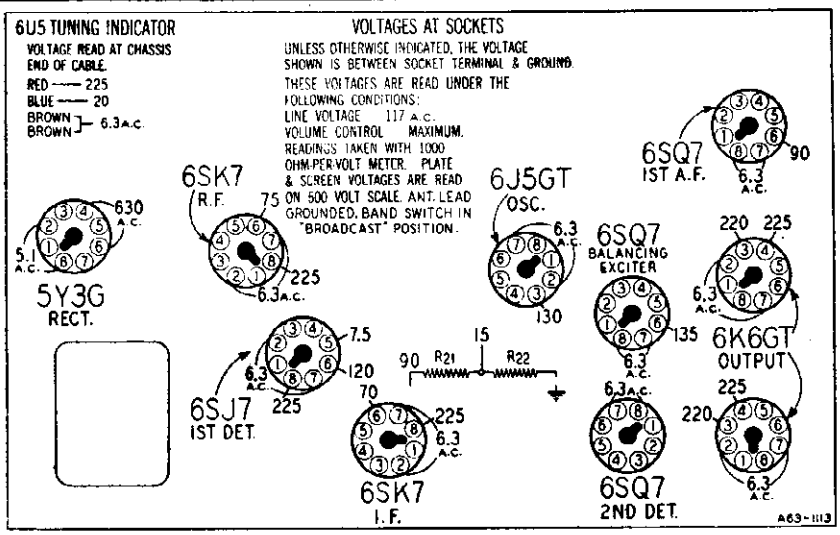

REPLACEMENT PARTS LIST

NOTICE: There is a chassis number label on the chassis. The chassis number identifies the radio as to chassis, dial, and issue number. When ordering parts or writing, be sure to mention the chassis number.

MISCELLANEOUS

Part No.	Description
12A422	12" Electro-Dynamic Speaker complete with Output Transformer Cone and Voice Coil Assembly (Specify part number and letters stamped on Speaker) Output Transformer (Specify part number and letters stamped on Speaker)
3A303	Tube or Speaker Socket—Octal (8 prong)
3A304	Phono Motor Socket
3A305	Single Pin Tip Socket (Phono)
3A307	Pre-Amplifier Socket
13X448	Tuning Eye Tube Socket and Cable Assembly complete with 1 Megohm Resistor
13X328	Line Cord and Plug Assembly
3A222	Band Change Switch
10A433	Knob (Band Change Switch)
10A430	Knob (Tone Control)
10A431	Knob (Tuning)
10A432	Knob (Volume Control and On-Off Switch)
26A231	Foil Aerial Assembly

TRANSFORMERS AND COILS

9A1545	T1	Antenna Transformer Assembly—"B" and "D" Range
9A1564	T2	Loop Aerial Assembly—"B" Range
9A1543	T3	Interstage Transformer Assembly—"B" and "D" Range
9A1542	T4	Oscillator Coil Assembly—"B" and "D" Range
9A1534	T5	1st I.F. Transformer and Can Assembly
9A1535	T6	2nd I.F. Transformer and Can Assembly
	T7	Output Transformer (See "Miscellaneous")
53X185	T8	117 Volt, 60 Cycle Standard Power Transformer

CONDENSERS

17A182	C1	1.9—15 mmf.	Trimmer	
	C2	1.9—15 mmf.		
D66501	C3	.0005 mf.	400 Volt Tubular	
17A182	C4	1.9—15 mmf.	Trimmer	
	C6	1.9—15 mmf.		
47X78	C5	20 mmf.	Molded	
47X57	C7	100 mmf.	Molded	
B66203	C8, C10, C30	.02 mf.	200 Volt Tubular	
46X348	C9	.0037 mf.	1800 Volt Tubular	
17A182	C11	1.9—15 mmf.	Trimmer	
	C13	1.9—15 mmf.		
47X53	C12	33 mmf.	Molded	
17A175	C14	300—600 mmf.	600 K.C. Padder	
17A136	C15	50—120 mmf.	1st I. F. Trimmer	
	C16	50—120 mmf.		
B66503	C17	.05 mf.	200 Volt Tubular	
17A137	C18	50—120 mmf.	2nd I.F. Trimmer	
	C19	85—185 mmf.		
47X172	C20A	60 mmf.	Dual Mica	
	C20B	60 mmf.		
B66183	C21	.01 mf.	200 Volt Tubular Molded	
47X65	C22	250 mmf.	Mica	
DB6203	C23, C24, C26	.02 mf.	400 Volt Tubular	
B66254	C25	.25 mf.	200 Volt Tubular	
F66202	C27, C28	.002 mf.	600 Volt Tubular	
45X322	C29A	20 mf.	450 Volt Dry Electrolytic	
	C29B	40 mf.	450 Volt	
D66104	C31	.10 mf.	400 Volt Tubular Molded	
47X150	C32	100 mmf.	Mica	
14A157	1 Gang Condenser Complete with Drive Pulley			

RESISTORS

C95203	R1	20,000 Ohm	1.0 Watt	Carbon
B95205	R2, R7	2 Megohm	0.5 Watt	Carbon
B95403	R3	40,000 Ohm	0.5 Watt	Carbon
B94502	R4	5,000 Ohm	0.5 Watt	Carbon
D84183	R5	16,000 Ohm	2.0 Watt	Carbon
B95103	R6	80,000 Ohm	0.5 Watt	Carbon
B95503	R8	50,000 Ohm	0.5 Watt	Carbon
B95105	R9	1 Megohm	0.5 Watt	Carbon
36X328	R10	500,000 Ohm	Volume Control and On-Off Switch	
B95505	R11	5 Megohm	0.5 Watt	Carbon
40X270	R12	6 Megohm	Tone Control and Phono-Radio Switch	
B95154	R13, R20	150,000 Ohm	0.5 Watt	Carbon
B93205	R14	2 Megohm	0.5 Watt	Carbon
B93305	R15	3 Megohm	0.5 Watt	Carbon
B95605	R16	6 Megohm	0.5 Watt	Carbon
B95254	R17, R18	250,000 Ohm	0.5 Watt	Carbon
B93154	R19	150,000 Ohm	0.5 Watt	Carbon
B93304	R21	300,000 Ohm	0.5 Watt	Carbon
B93903	R22	90,000 Ohm	0.5 Watt	Carbon
C94153	R23	15,000 Ohm	1.0 Watt	Carbon
C94203	R24	20,000 Ohm	1.0 Watt	Carbon
	R25	1 Megohm (Part of Tuning Eye Tube Socket and Cable Assembly)		

AUTOMATIC TUNING AND DIAL ASSEMBLY

20A90	Automatic Tuning Assembly complete with 3 Section Gang Condenser and Drive Pulley
24A353	Dial Mounting Plate Assembly complete with Idler Pulleys, Cardboard Dial Scale and Clear Glass Crystal
17X58	Clear Glass Crystal
41X26	Clamp for Glass Crystal
38X360	Cardboard Dial Scale
15X163	Pointer for Dial Scale
28X137	55" Drive Cord (30 Lb. Test) Tension Spring for Drive Cord
26X360	Tuning Shaft
25X560	Bracket for Tuning Shaft
24X452	Wooden Spool for Tuning Shaft
19X204	"C" Washers for Tuning Shaft
7A126	Dial Lamp Socket and Cable Assembly
7A32	Dial Lamp (No. 51)
4X655	Escutcheon for Dial Escutcheon Screws No. 2x3/16" Fh. Fr. Oval Hd. Wood Screws Stat. Bronze
10A435	Station Buttons
26A315	Set of Call Letter Sheets and Celluloid Tabs
5KX548	Celluloid Tabs only (Sheet of 8)

©John F. Rider

MODELS 401, 402, 403, 404, 405, 406, 407

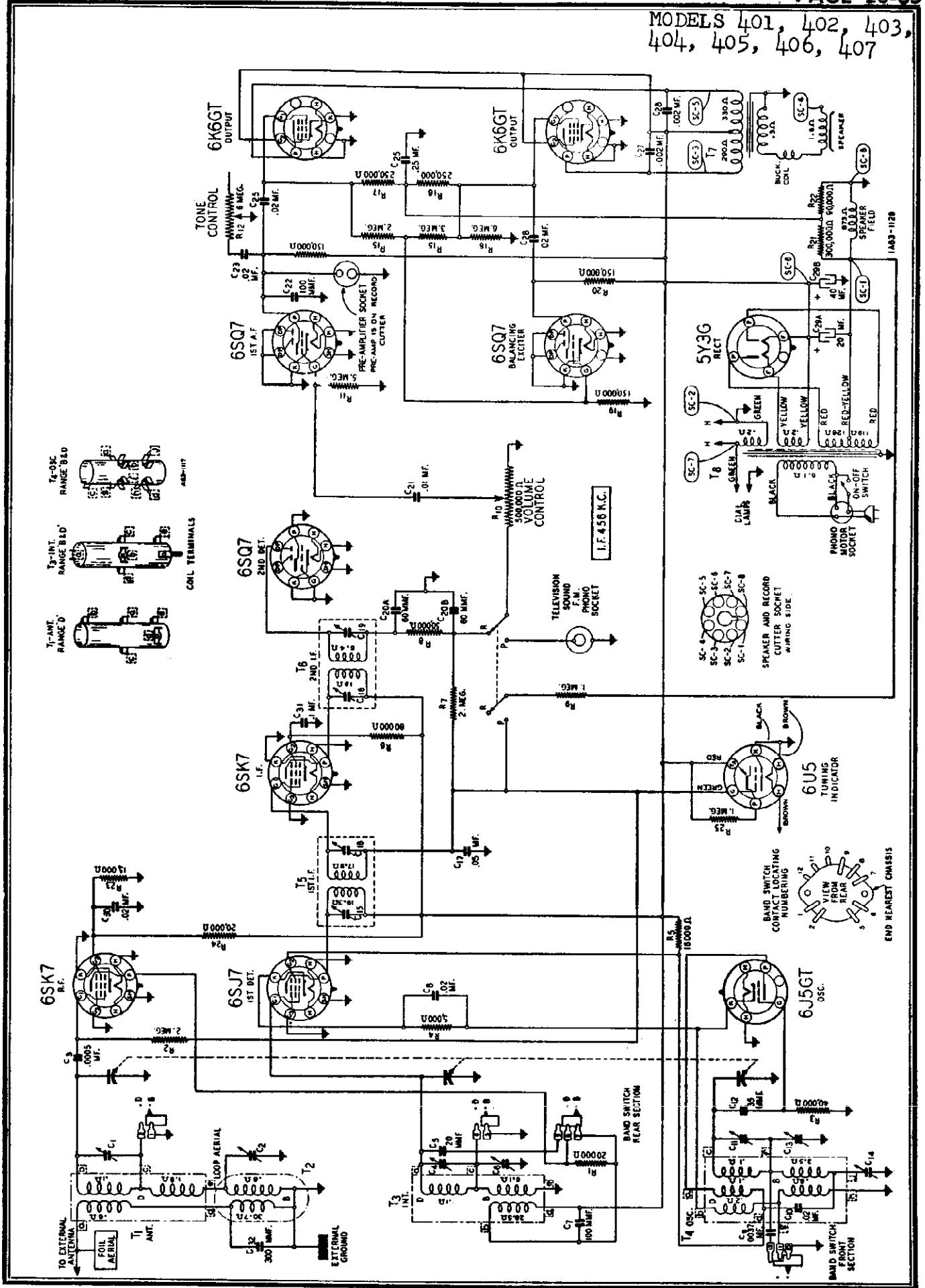

© John F. Rider

©John F. Rider

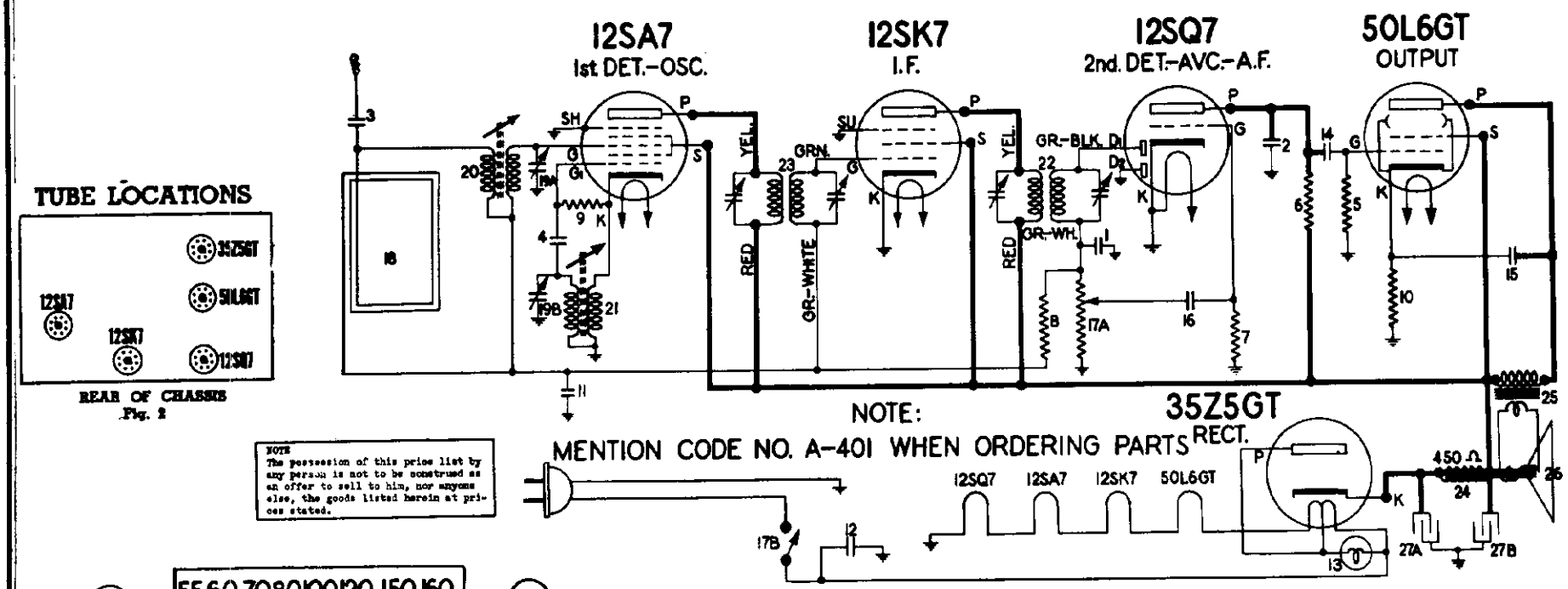

TUBE LOCATIONS

REAR OF CHASSIS
Fig. 2

NOTE
The possession of this price list by any person is not to be construed as an offer to sell to him, nor anyone else, the goods listed herein at prices stated.

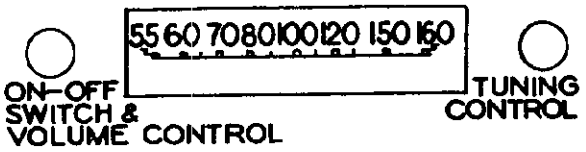

SOCKET VOLTAGES

VOLUME CONTROL ON FULL DIAL SET TO 540 KC.

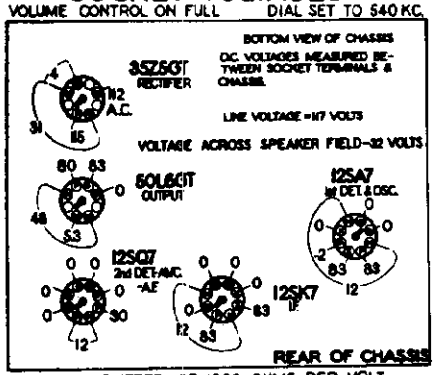

USE A VOLTMETER OF 1000 OHMS PER VOLT

MISCELLANEOUS PARTS

PART NUMBER	DESCRIPTION
501996	Cabinet back only
114955	Clamp - for drive cord
112784	Clip - coil mounting
116946	Cord - tuning mech. drive (6 ft. length)
117057	Cord - dial drive (3 ft. length)
502005	Dial Scale
501140	Drive - drum & bushing
501135	Drive - shaft & disc
501370	Escutcheon
501995	Knob - tuning or volume
500218	Pointer
81145	Retaining ring - for tuning shaft - Per C
85827	Set Screw - 8/32 square head
160028	Socket - condenser mtg.(used with alum. can only)
118690	Socket - octal base
500499	Socket - pilot lamp (with leads)
161384	Spring - dial cord tension
501145	Spring - tension for tuning mech.
500218	Tuning shaft
111972	Washer - extruded & tapped (mtg.)
111456	Washer - spring washer for tuning shaft - Per C
500219	Window - dial

ELECTRICAL PARTS

DIAGRAM NUMBER	PART NUMBER	DESCRIPTION
1-2	83539	Condenser - mica 260 mmfd.
3	85061	Condenser - mica 51 mmfd.
4	88688	Condenser - mica 200 mmfd.
5	112971	Resistor - insulated, 470,000 ohm ½ watt
6	112987	Resistor - insulated, 220,000 ohm ½ watt
7	116050	Resistor - insulated, 10 meg. ½ watt
8	116058	Resistor - 2.2 meg. ½ watt
9	116059	Resistor - insulated, 22,000 ohm ½ watt
10	116092	Resistor - 140 ohm, 1 watt-wire wound
11-12	116619	Condenser - .05 mfd. 600 volt
13	118921	Lamp-Dial (Mazda #47)
14-15	119193	Condenser - .01 mfd. 600 volt
16	119875	Condenser - .002 mfd. 600 volt
17A-17B	500223	Volume Control - 1 meg. (with switch)
18	501150	Loop Antenna
19A-19B	501223	Condenser - trimmer (2 sections) (A-35 mmfd.) (B-238 mmfd.)
20	501157	Coil - antenna (with slug)
21	501158	Coil - oscillator (with slug)
22	501166	Transformer - 2nd I.F.
23	501233	Transformer - 1st I.F.
24	R-500916	Speaker - dynamic (4")
25	R-501163	Transformer - output for R-500916 Spkr.
26	R-501164	Cone & Voice Coil for R-500916 Spkr.
27A-27B	501213	Electrolytic Condenser (A-40 mfd. - 150 volt) (B-20 mfd. - 150 volt)

MODEL S-7402-8

ALIGNMENT PROCEDURE

1. Connect output meter across voice coil or from 50L6GT plate through a .1 mfd. condenser to chassis.
2. Set Volume Control in maximum position.
3. Connect signal generator ground through a .1 mfd. condenser to chassis.
4. Set dial pointer to 160 with slugs all the way out.

Dummy Ant. in Series with Sig. Gen.	Connection Sig. Gen. Output to Receiver	Sig. Gen. Freq.	Receiver Dial Setting	Trimmer No.	Trimmer Description	Type of Adjustment
200 Mmfd. Mica Condenser	Grid of 12SA7 Tube	455 KC	Any place where it does not affect signal	1-2 3-4	2nd I.F. 1st I.F.	Adjust screws on top of I.F. cans for maximum output
200 Mmfd. Mica Condenser	Antenna Terminal	1600 KC	1600 KC	5	B.C. Osc.	Adjust for maximum output
200 Mmfd. Mica Condenser	Antenna Terminal	1600 KC	Tune to 1600 KC Gen. Sig.	6	B.C. Ant.	Adjust for maximum output
200 Mmfd. Mica Condenser	Antenna Terminal	1400 KC	Tune to 1400 KC Gen. Signal	7	B.C. Ant. Coil	Adjust moveable Antenna Coil for maximum output

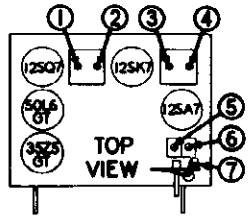

NOTE: After completing adjustment No. 7 return slugs to maximum out position and check trimmer No. 6. If no appreciable change in trimmer adjustment is necessary for maximum output, the antenna circuit is tracking. If the trimmer No. 6 requires considerable change it will be necessary to repeat adjustment No. 7 again. These two adjustments (Nos. 6 & 7) should be made several times until no change in trimmer adjustment for maximum output is necessary at either point.

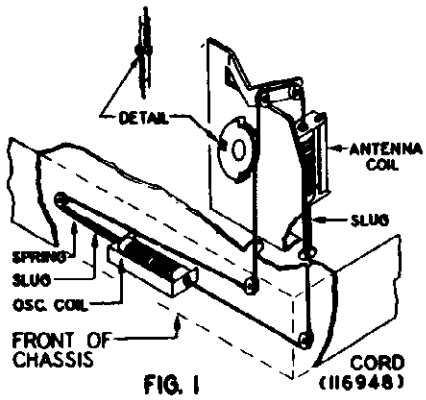

FIG. 1

TO RESTRING TUNING MECHANISM

1. Form a loop in one end of the cord and attach it to the hook nearest to the dot on the slug marked with a yellow dot. Form another loop through the hook farthest from the dot on the slug with the white dot and adjust the length so that the distance from the iron end of one slug to the iron end of the other is 2 15/16 inches.
2. Attach another length of cord to the other end of the yellow dot slug and drop the assembly through the hole in the top of the antenna coil leaving the newly added length of cord on the top end.
3. Pass the lower slug through the hole in the chassis, around the lower pulley and through the oscillator coil.
4. Now pass the cord from the top end over the two pulleys at the top of the mounting bracket, around the rear side of the small irregularly shaped pulley (see Fig. 1) threading it through the slots as shown in the "Detail" drawing and across the front down through the second hole in the chassis. Pass the cord under the upper pulley and around the top of the left hand pulley.
5. Form a loop and attach to spring (part no. 501145). Attach spring to slug in oscillator coil and adjust loop in cord to give normal tension.
6. The iron slug in the oscillator coil should project 1/32" from the end of the coil when the drive pulley is in its maximum counter-clockwise position. This may be adjusted by sliding the cord in the slots shown in the "Detail" drawing.
7. If the procedure outlined in the steps above has been carefully followed, the colored dot ends of the slugs will enter the coil last when the slugs are fully entered in the coils.
8. After restringing tuning mechanism, perform the alignment indicated under " Alignment Procedure " above.

DRUM SHOWN WITH SLUGS IN FULL OUT POSITION

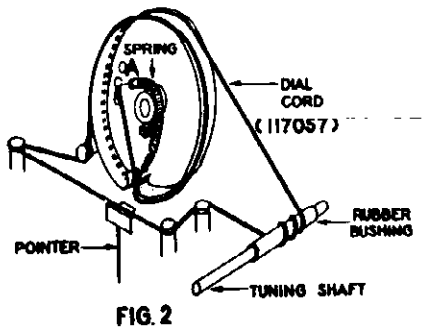

FIG. 2

TO RESTRING DIAL CORD

1. Set drum to position shown in Figure 2 with slugs in full out position (shown in Fig. 1).
2. Attach one end of the dial cord to point A on the drum.
3. Pass the cord through the opening at the bottom of the drum around the rear of the left side over the top and make two and one half turns around the rubber bushing on the tuning shaft as shown in Fig. 2.
4. Pass the cord around the guides as shown and over the front edge of the drum around and up through the opening at the bottom of the drum.
5. Attach spring to point A and bring it over hub of drum.
6. Form a loop in the cord and adjust for normal tension on the spring. (See Fig. 2).
7. Set the pointer to 1600 KC on the dial scale with the drum in the maximum counter-clockwise position.

©John F. Rider

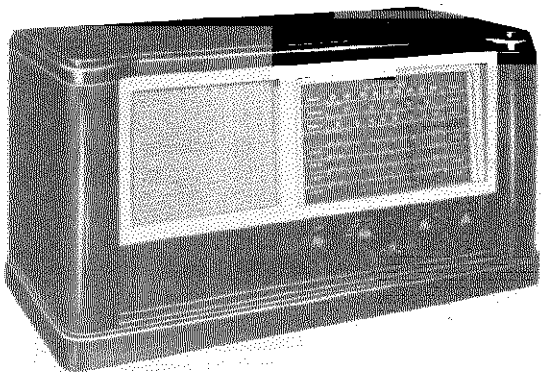

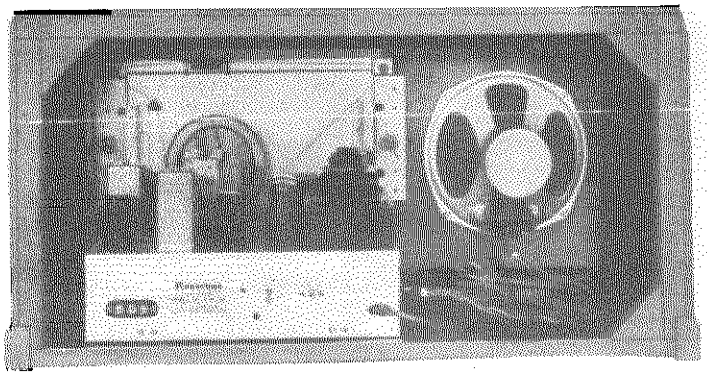

FREQUENCY RANGES:

Standard Broadcast Band	540-1725 KC.
Intermediate Band	1.8-5.8 MC.
Short Wave Band	5.8-15.5 MC.
16-13 Meter Spread Band	17.1-22.2 MC.
19 Meter Spread Band	14.5-17.1 MC.
25 Meter Spread Band	11.17-12.2 MC.
31 Meter Spread Band	9.28-9.8 MC.

TUBE COMPLEMENT:

6SK7—R.F. Amplifier
6K8—Oscillator—1st Detector
6SK7—I.F. Amplifier
6SQ7—2nd Detector—A.V.C.—Phase Inverter
6SQ7—1st Audio
6K6GT } Power Output
6K6GT } (Push-pull)
5Y3GT—Rectifier

POWER OUTPUT:

Undistorted—4.5 watts
Maximum—7.0 watts

I.F. FREQUENCY:

455 KC.

SPEAKER:

8 inch P.M. Dynamic
Voice coil impedance—4.4 ohms

POWER SUPPLY:

110, 125, 150, 200, 225 or 245 volts
50-60 cycles A.C.
70 watts (at 125 volts)

TUNING CONDENSER:

3 section gang;
Double rotor, Double stator;
shock resistant mounting

AUDIO OSCILLATION

The audio system of this receiver utilizes a two stage type of inverse feed-back arrangement and should it ever be necessary to replace the speaker or output transformer it is important to maintain a definite phase relationship in the feed-back circuit. If the connections to the output transformer are reversed or if the feed-back connection is made to the wrong side of the output transformer secondary, the system will become regenerative instead of degenerative. Under those conditions audio oscillation may result. If that occurs, oscillation may be prevented by reversing the connections to the primary of the output transformer.

©John F. Rider

MODEL 4-A-39

400 OHM Carbon Resistor	"A" terminal at rear of chassis.	9.5 MC	31 Meter (*Position 7)	9.5 Mc.	21	31 Meter Oscillator	Adjust for maximum output. Check to see if proper peak was obtained by setting the signal generator to 9.6 Mc. and then tune radio in vicinity of 9.5 Mc. If image signal is not heard, realign at 9.5 Mc. with trimmer screw farther in. Recheck image.
400 OHM Carbon Resistor	"A" terminal at rear of chassis.	9.5 MC	31 Meter (*Position 7)	Tune to 9.5 Mc. generator signal.	22	31 Meter Antenna	Adjust for maximum output. Try to increase output by detuning trimmer and retuning receiver dial until maximum output is obtained.
					23	31 Meter R.F.	
400 OHM Carbon Resistor	"A" terminal at rear of chassis.	15 MC	S.W. (*Position 3)	15 Mc.	24	S.W. Oscillator	Adjust for maximum output. Check to see if proper peak was obtained by tuning in image at approx. 14.1 MC. If image does not appear, realign at 15 MC, with trimmer screw farther out. Recheck image.
400 OHM Carbon Resistor	"A" terminal at rear of chassis.	15 MC	S.W. (*Position 3)	Tune to 15 Mc. generator signal.	25	S.W. Antenna	Adjust for maximum output. Try to increase output by detuning trimmer and retuning receiver dial until maximum output is obtained.
					26	S.W. R.F.	

* Position 1 corresponds to extreme counter-clockwise setting of band switch. Succeeding positions are numbered in ascending order as switch is rotated clockwise.

TOP VIEW OF CHASSIS

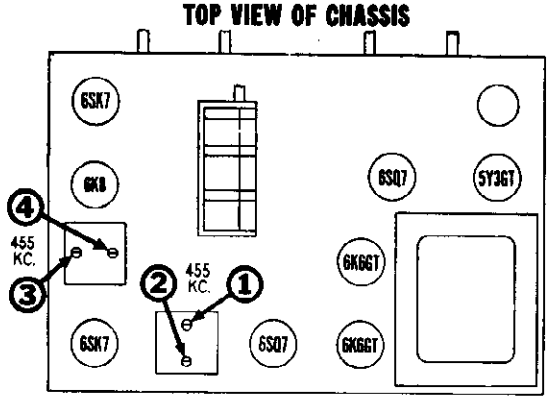

BOTTOM VIEW OF CHASSIS

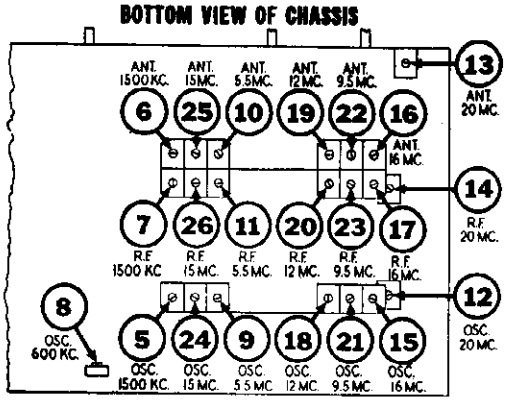

STAGE GAIN MEASUREMENT PROCEDURE

REQUIRED INSTRUMENTS: The amount of amplification or "gain" of each of the stages of this receiver may be measured with an A.C. Vacuum Tube Voltmeter or a "channel" type instrument containing a tuned and calibrated amplifier.

PROCEDURE: It is exceedingly important to adhere to the procedure outlined below since the accuracy of these measurements will be affected to a considerable extent by the failure to establish proper operating conditions.

1. Be sure that R.F. and I.F. stages are carefully and accurately aligned by utilizing the alignment procedure given above.
2. Connect Signal Generator as shown below.
3. The values of stage gain which are given here were measured with a fixed bias of 3 volts on the control grids of all R.F. and I.F. tubes which are connected to the A.V.C. circuit. Therefore, these values are not intended to indicate the full capability of a stage but they will serve as a convenient basis for determining proper operation. In order to duplicate the fixed bias voltage, connect the negative terminal of a 3 volt battery to A.V.C. at the black lead of the 1st I.F. transformer and connect the positive battery lead to the receiver chassis.
4. Set Signal Generator for operation at 600 Kc with 400 cycle modulation and carefully tune radio receiver to this signal by using an output meter to indicate peak output. If a local station interferes, set generator to a nearby frequency and re-tune the receiver.
5. R.F. and I.F. circuits are slightly de-tuned when contact is made with an instrument probe and this action, which is indicated by a change in the output meter reading, may seriously affect the gain measurement. Therefore, it is important to adjust the associated circuit trimmer for a maximum output meter reading and to set the input signal level to a convenient reference point on the gain measuring instrument while the probe is making contact. After removing the probe it is again necessary to adjust the trimmer so as to obtain the same output meter reading and thereby assure that the signal voltage at the specified point has not changed as a result of circuit de-tuning.
6. When using a "channel" type instrument, carefully tune it for maximum output at desired frequency before making measurements.

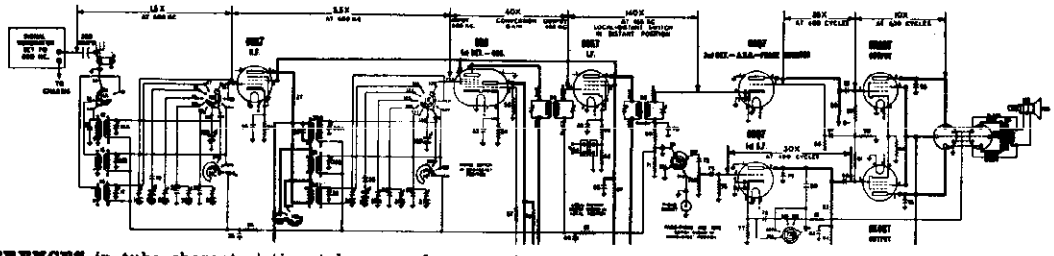

DIFFERENCES in tube characteristics, tolerance of parts, adjustment of tuned circuits and variations in line voltage will influence stage gain. These factors should be given due attention in event the gain of a stage varies extensively from the values shown above.

©John F. Rider

ALIGNMENT PROCEDURE

1. When gang condenser is fully meshed, dial pointer should be in the position indicated by the last division below 550 on the dial. If it is set incorrectly, release pointer clip on dial cord and reposition pointer.
2. Connect an output meter across the speaker voice coil or from the plate of the 6K6GT tube to chassis through a 0.1 Mfd. condenser.
3. Connect the ground lead of the signal generator to the receiver chassis.
4. Set volume control to maximum volume position and use a weak signal from the signal generator.
5. Set Radio-Phono and Tone switch to "Radio-Bass" position.
6. Set Local-Distant switch to "Distant" position.

IMPORTANT: Align this receiver in exactly the order shown below. The 13-16 Meter band must be aligned before any of the other short wave bands.

DUMMY ANT. IN SERIES WITH SIGNAL GENERATOR	CONNECT HIGH SIDE OF SIGNAL GENERATOR TO	SIGNAL GENERATOR FREQUENCY	BAND SWITCH POSITION	RECEIVER DIAL SETTING	TRIMMER NUMBER	TRIMMER DESCRIPTION	TYPE OF ADJUSTMENT
200 MMFD. Mica Condenser	Cap of 6K8	455 KC	Broadcast (*Position 1)	Any point where it does not affect the signal.	1-2	2nd I.F.	Adjust for maximum output. Then repeat adjustment.
					3-4	1st I.F.	
200 MMFD. Mica Condenser	"A" terminal at rear of chassis.	1500 KC	Broadcast (*Position 1)	1500 Kc.	5	Broadcast Oscillator (Shunt)	Adjust for maximum output.
200 MMFD. Mica Condenser	"A" terminal at rear of chassis.	1500 KC	Broadcast (*Position 1)	Tune to 1500 Kc. generator signal.	6	Broadcast Antenna	Adjust for maximum output.
					7	Broadcast R.F.	
200 MMFD. Mica Condenser	"A" terminal at rear of chassis.	600 KC	Broadcast (*Position 1)	Tune to 600 Kc. generator signal.	8	Broadcast Oscillator (Series Pad)	Adjust for maximum output. Try to increase output by detuning trimmer and retuning receiver dial until maximum output is obtained.
200 MMFD. Mica Condenser	"A" terminal at rear of chassis.	Repeat adjustment of trimmers 5, 6, and 7 at 1500 Kc. Then re-check adjustment of trimmer 8 at 600 Kc.					
400 OHM Carbon Resistor	"A" terminal at rear of chassis.	5.5 MC	Intermediate (*Position 2)	5.5 Mc.	9	Intermediate Oscillator	Adjust for maximum output. Check to see if proper peak was obtained by tuning in image at approx. 4.6 MC. If image does not appear, realign at 5.5 MC, with trimmer screw farther out. Recheck image.
400 OHM Carbon Resistor	"A" terminal at rear of chassis.	5.5 MC	Intermediate (*Position 2)	Tune to 5.5 Mc. generator signal.	10	Intermediate Antenna	Adjust for maximum output. Try to increase output by detuning trimmer and retuning receiver dial until maximum output is obtained.
					11	Intermediate R.F.	
400 OHM Carbon Resistor	"A" terminal at rear of chassis.	20 MC	13-16 Meter (*Position 4)	20 Mc.	12	13-16 Meter Oscillator	Adjust for maximum output. Check to see if proper peak was obtained by tuning in image at approx. 20.9 MC. If image does not appear, realign at 20 MC. with trimmer screw in a different position. Recheck image.
400 OHM Carbon Resistor	"A" terminal at rear of chassis.	20 MC	13-16 Meter (*Position 4)	Tune to 20 Mc. generator signal.	13	13-16 Meter Antenna	Adjust for maximum output. Try to increase output by detuning trimmer and retuning receiver dial until maximum output is obtained.
					14	13-16 Meter R.F.	
400 OHM Carbon Resistor	"A" terminal at rear of chassis.	16 MC	19 Meter (*Position 5)	16 Mc.	15	19 Meter Oscillator	Adjust for maximum output. Check to see if proper peak was obtained by tuning in image at approx. 16.9 MC. If image does not appear, realign at 16 MC. with trimmer screw in a different position. Recheck image.
400 OHM Carbon Resistor	"A" terminal at rear of chassis.	16 MC	19 Meter (*Position 5)	Tune to 16 Mc. generator signal.	16	19 Meter Antenna	Adjust for maximum output. Try to increase output by detuning trimmer and retuning receiver dial until maximum output is obtained.
					17	19 Meter R.F.	
400 OHM Carbon Resistor	"A" terminal at rear of chassis.	12 MC	25 Meter (*Position 6)	12 Mc.	18	25 Meter Oscillator	Adjust for maximum output. Check to see if proper peak was obtained by setting the signal generator to 11.1 Mc. and then tune radio in vicinity of 12 Mc. If image signal is not heard, realign at 12 Mc. with trimmer screw farther in. Recheck image.
400 OHM Carbon Resistor	"A" terminal at rear of chassis.	12 MC	25 Meter (*Position 6)	Tune to 12 Mc. generator signal.	19	25 Meter Antenna	Adjust for maximum output. Try to increase output by detuning trimmer and retuning receiver dial until maximum output is obtained.
					20	25 Meter R.F.	

(Continued on next page)

* Position 1 corresponds to extreme counter-clockwise setting of band switch. Succeeding positions are numbered in ascending order as switch is rotated clockwise.

©John F. Rider

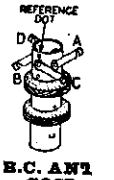

B.C. ANT. COIL 502710



INT. ANT. COIL 502713



S.W. ANT. COIL 502716



B.C. R.F. COIL 502711



INT. R.F. COIL 502714



S.W. R.F. COIL 502717

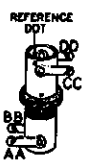

B.C. OSC. COIL 502712



INT. OSC. COIL 502715

Lettered terminals in illustrations correspond to similarly lettered terminals on the circuit diagram

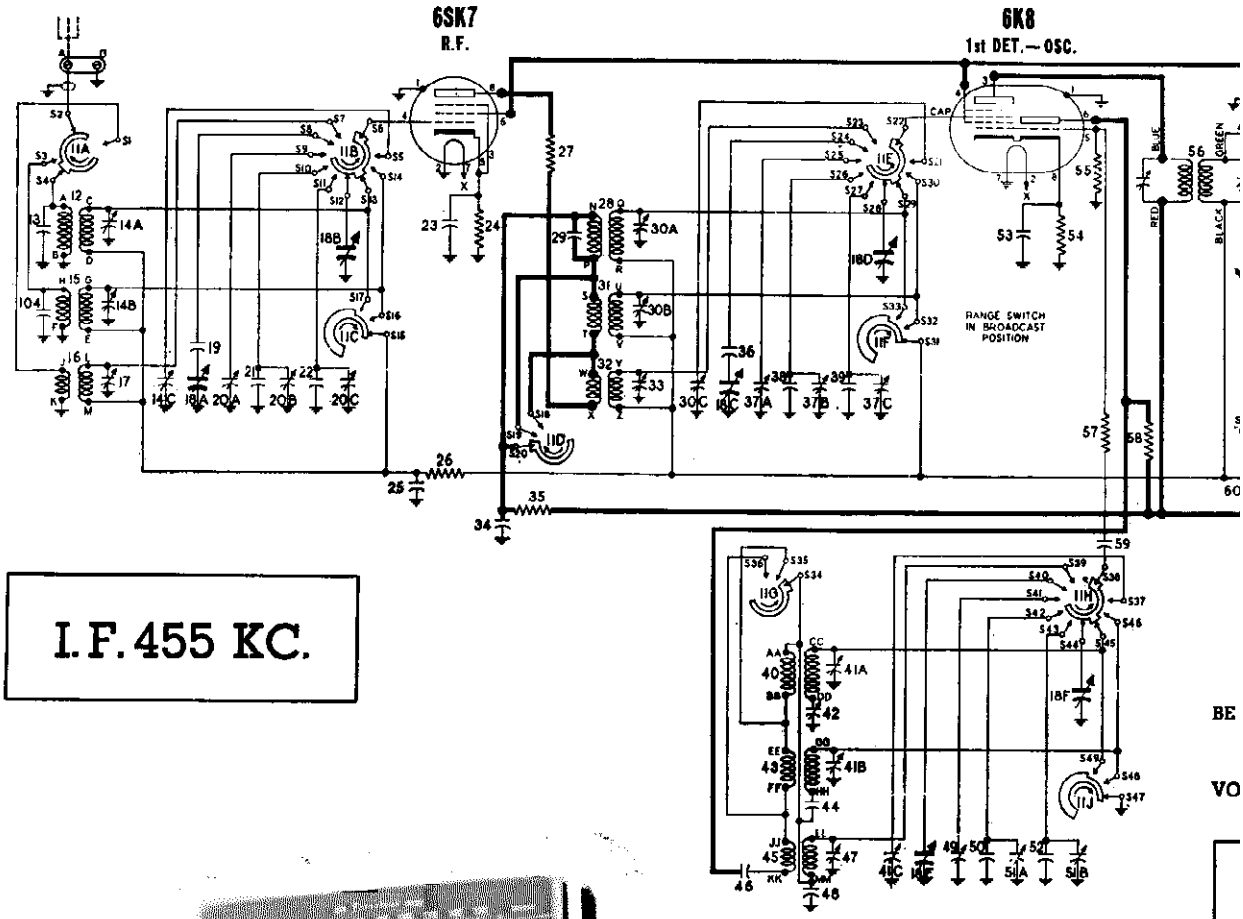

I.F. 455 KC.

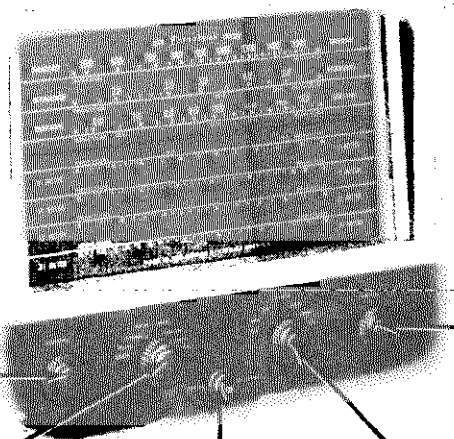

ON-OFF SWITCH AND VOLUME CONTROL

Turn this knob clockwise to turn set on. Continuing clockwise will increase volume.

MARCHA — VOLUMEN

Para usar el radio voltée esta perilla a la derecha y luego para aumentar el volumen hágalo a la izquierda.

TUNING CONTROL

Use this control to tune receiver to the desired station.

SINTONIZACION

Voltée esta perilla a la derecha o izquierda hasta dar con la estación deseada.

TONE AND RADIO-PHONO SWITCH

Use to select most pleasing tone and also to switch from radio to phonograph operation when using a separate record player. Starting at extreme counter-clockwise setting and turning clockwise, first 3 positions are for radio and next 3 are for phono.

CAMBIADOR DE TONO Y RADIO-FONO

Use éste para escoger el tono más agradable y también para el tonógrafo cuando se hace uso de un tocador de discos separado. Empezando al extremo derecho voltée

LOCAL-DISTANT SWITCH

Use the "DISTANT" position when tuning for weak stations. The "LOCAL" position is used to reduce inter-station noise when tuning for strong stations.

CAMBIADOR DE POSICIONES

Use la posición DISTANT para sintonizar estaciones débiles o de poca potencia y la posición LOCAL para re-

BAND SWITCH

Use to select desired tuning range. Title of each position corresponds with marking at side of dial scale for that range.

CAMBIADOR DE BANDA

Use éste para sintonizar teniendo en cuenta que cada posición esta

RADIO-PHONO & TONE SWITCH 502719

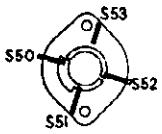

FRONT VIEW

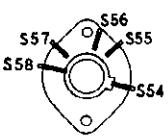

REAR VIEW

Lettered terminals in illustrations correspond to similarly lettered ter-

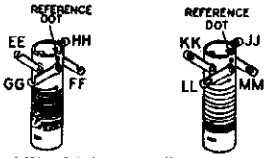

INT. OSC. COIL 502715

S.W. OSC. COIL 502718

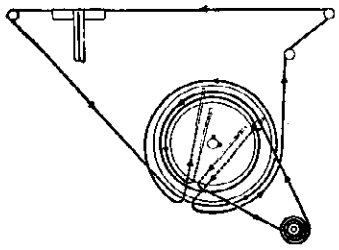

DIAL AND POINTER DRIVE CORD ARRANGEMENT

To string dial cord, set gang condenser to fully meshed position and use following parts:

113177 Tension Spring
114955 Clip on end of cord
119087 Ring
502773 Cord (8 feet)
4½ ft. for pointer drive
3½ ft. for tuning drive

circuit diagram.

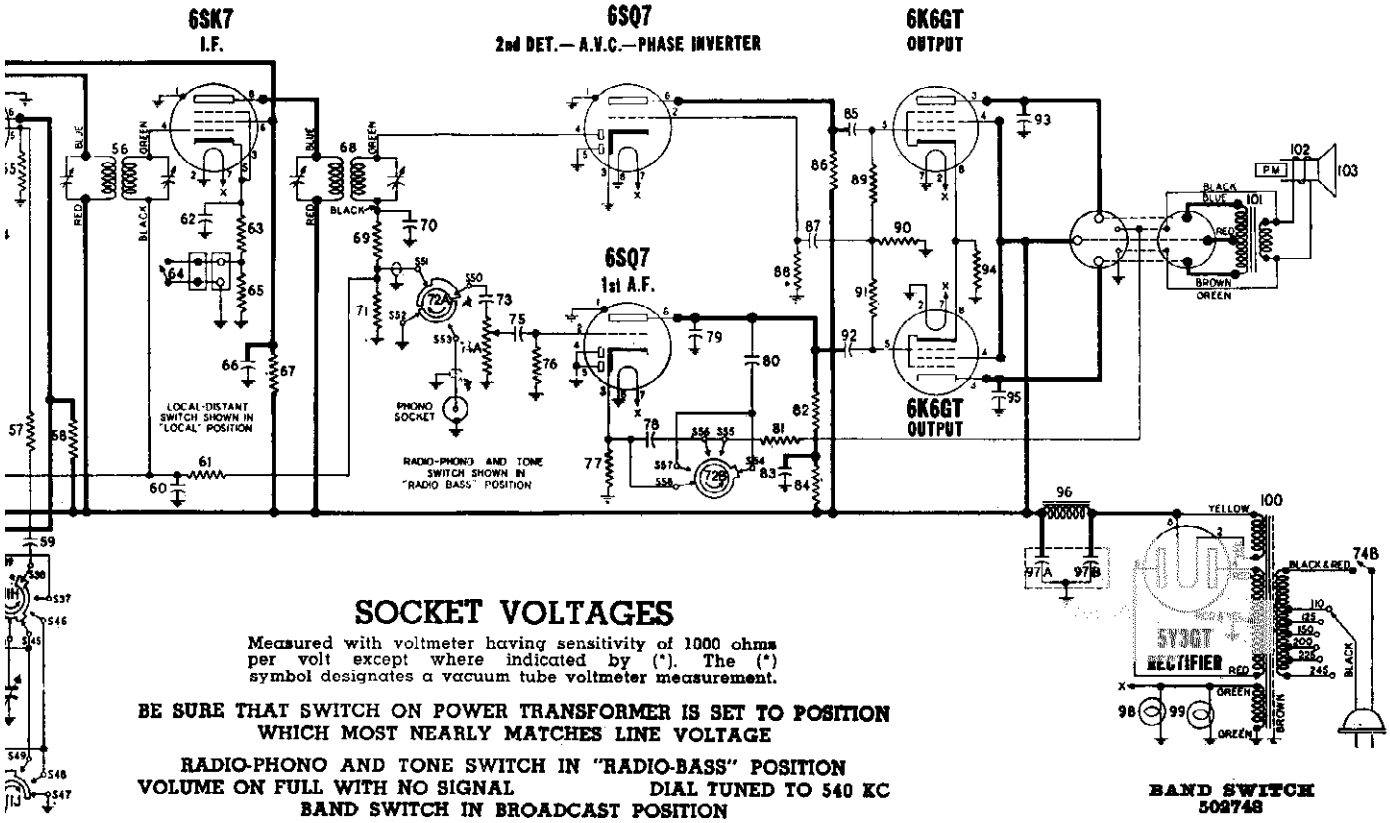

SOCKET VOLTAGES

Measured with voltmeter having sensitivity of 1000 ohms per volt except where indicated by (*). The (*) symbol designates a vacuum tube voltmeter measurement.

BE SURE THAT SWITCH ON POWER TRANSFORMER IS SET TO POSITION WHICH MOST NEARLY MATCHES LINE VOLTAGE

RADIO-PHONO AND TONE SWITCH IN "RADIO-BASS" POSITION
VOLUME ON FULL WITH NO SIGNAL — DIAL TUNED TO 540 KC
BAND SWITCH IN BROADCAST POSITION

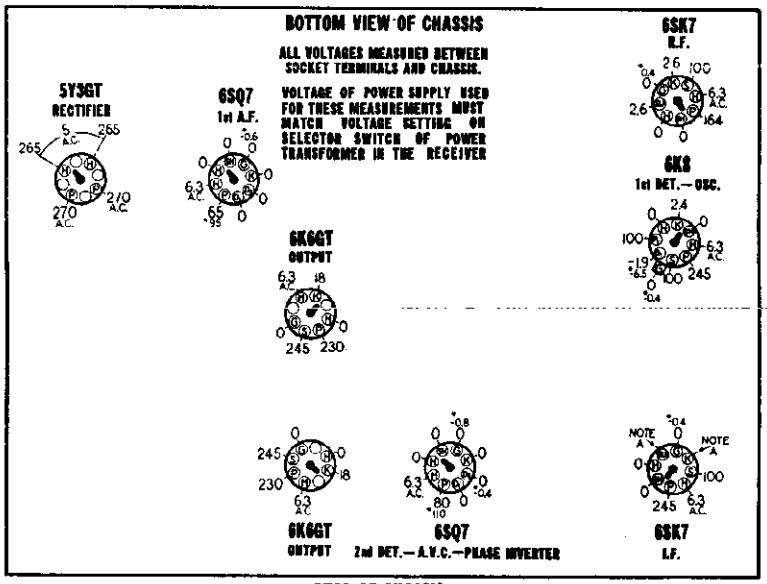

BAND SWITCH 502748

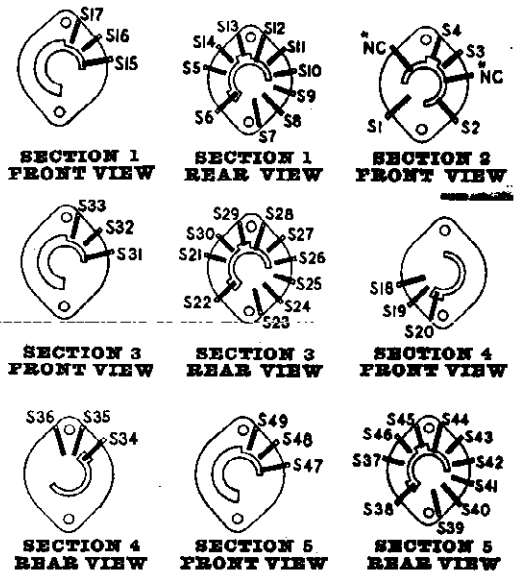

NOTE A: The voltage at the cathode or suppressor terminals of this tube is 10

PARTS LIST

DIA-GRAM NO.	PART NO.	DESCRIPTION
		CONDENSERS
13	502787	Condenser—mica 100 Mmfd. 500 volt
14A, B, C	502753	Condenser—trimmer assembly A—1.6 to 18 Mmfd. B—1.6 to 18 Mmfd. C—3 to 35 Mmfd.
17	502758	Condenser—trimmer; 1.6 to 18 Mmfd.
18A to E	502749	Condenser—variable gang
19	502778	Condenser—ceramic 200 Mmfd. 500 volt
20A, B, C	502754	Condenser—trimmer assembly A—3 to 35 Mmfd. B—3 to 35 Mmfd. C—1.6 to 18 Mmfd.
21	502779	Condenser—ceramic 56 Mmfd. 500 volt
22	502884	Condenser—mica 120 Mmfd. 500 Volt
23	502806	Condenser—.05 Mfd. 200 volt
25	502806	Condenser—.05 Mfd. 200 volt
29	502787	Condenser—mica 100 Mmfd. 500 volt
30A, B, C	502753	Condenser—trimmer assembly A—1.6 to 18 Mmfd. B—1.6 to 18 Mmfd. C—3 to 35 Mmfd.
33	502758	Condenser—trimmer; 1.6 to 18 Mmfd.
34	502807	Condenser—.05 Mfd. 400 volt
36	502778	Condenser—ceramic 200 Mmfd. 500 volt
37A, B, C	502754	Condenser—trimmer assembly A—3 to 35 Mmfd. B—3 to 35 Mmfd. C—1.6 to 18 Mmfd.
38	502779	Condenser—ceramic 56 Mmfd. 500 volt
39	502884	Condenser—mica 120 Mmfd. 500 Volt
41A, B, C	502753	Condenser—trimmer assembly A—1.6 to 18 Mmfd. B—1.6 to 18 Mmfd. C—3 to 35 Mmfd.
42	502922	Condenser—trimmer; 300 to 600 Mmfd.
44	502791	Condenser—mica 1600 Mmfd. 500 volt
46	502792	Condenser—mica 4000 Mmfd. 500 volt
47	502756	Condenser—trimmer; 2 to 6 Mmfd.
48	502793	Condenser—mica 5600 Mmfd. 500 volt
49	502757	Condenser—trimmer; 6.5 to 35 Mmfd.
50	502167	Condenser—ceramic 68 Mmfd. 500 volt
51A, B	502755	Condenser—trimmer assembly A—3 to 35 Mmfd. B—1.6 to 18 Mmfd.
52	502789	Condenser—mica 160 Mmfd. 500 volt
53	502806	Condenser—.05 Mfd. 200 volt
59	502787	Condenser—mica 100 Mmfd. 500 volt
60	502806	Condenser—.05 Mfd. 200 volt
62	502806	Condenser—.05 Mfd. 200 volt
66	502807	Condenser—.05 Mfd. 400 volt
70	502787	Condenser—mica 100 Mmfd. 500 volt
73	502802	Condenser—.004 Mfd. 600 volt
75	502802	Condenser—.004 Mfd. 600 volt
78	502808	Condenser—.25 Mfd. 200 volt
79	502787	Condenser—mica 100 Mmfd. 500 volt
80	502803	Condenser—.006 Mfd. 600 volt
83	502809	Condenser—.25 Mfd. 400 volt
85	502805	Condenser—.02 Mfd. 400 volt
87	502804	Condenser—.01 Mfd. 400 volt
92	502805	Condenser—.02 Mfd. 400 volt
93	502802	Condenser—.004 Mfd. 600 volt
95	502802	Condenser—.004 Mfd. 600 volt
97A, B	502720	Condenser—electrolytic A—15 Mfd. 400 volt B—20 Mfd. 400 volt
104	502788	Condenser—mica 130 Mmfd. 500 volt

DIA-GRAM NO.	PART NO.	DESCRIPTION
		RESISTORS
24	502125	Resistor—carbon 220 ohms ¼ watt
26	502134	Resistor—carbon 470,000 ohms ¼ watt
27	502478	Resistor—carbon 1000 ohms ¼ watt
35	502795	Resistor—carbon 4700 ohms ½ watt
54	502125	Resistor—carbon 220 ohms ¼ watt
55	502131	Resistor—carbon 47,000 ohms ¼ watt
57	502794	Resistor—carbon 68 ohms ¼ watt
58	502801	Resistor—carbon 39,000 ohms ½ watt
61	502135	Resistor—carbon 2.2 Meg. ¼ watt
63	502125	Resistor—carbon 220 ohms ¼ watt
65	502796	Resistor—carbon 8200 ohms ¼ watt
67	502981	Resistor—carbon 15,000 ohms 2 watt
69	502131	Resistor—carbon 47,000 ohms ¼ watt
71	502134	Resistor—carbon 470,000 ohms ¼ watt
74A, B	502750	Volume control—with switch; 2 meg.
76	502136	Resistor—carbon 10 meg. ¼ watt
77	502794	Resistor—carbon 68 ohms ¼ watt
81	502126	Resistor—carbon 470 ohms ¼ watt
82	502133	Resistor—carbon 220,000 ohms ¼ watt
84	502132	Resistor—carbon 100,000 ohms ¼ watt
86	502133	Resistor—carbon 220,000 ohms ¼ watt
88	502136	Resistor—carbon 10 meg. ¼ watt
89	502133	Resistor—carbon 220,000 ohms ¼ watt
90, 91	502133	Resistor—carbon 220,000 ohms ¼ watt
94	502813	Resistor—wire wound 300 ohms 2 watt
		COILS AND TRANSFORMERS
12	502710	Coil—BC. antenna
15	502713	Coil—Int. antenna
16	502716	Coil—S.W. antenna
28	502711	Coil—BC. R.F.
31	502714	Coil—Int. R.F.
32	502717	Coil—S.W.R.F.
40	502712	Coil—BC. oscillator
43	502715	Coil—Int. oscillator
45	502719	Coil—S.W. oscillator
56	502725	Transformer—1st I.F.
68	502726	Transformer—2nd I.F.
96	502751	Coil—filter choke
100	502747	Transformer—power
101	502776	Transformer—output for M-502775 spkr.
		OTHER ELECTRICAL PARTS
11A to J	502748	Switch—band
64	502916	Switch—local-distant
72A, B	502719	Switch—tone control
98, 99	110629	Lamp—dial (Mazda No. 44) 6.3V 0.25 Amps
102	502775	Speaker—P.M. dynamic (8 inch)
103	502777	Cone & voice coil for M-502775 speaker
		MISCELLANEOUS
	502724	Background for dial
	160026	Base for mtg. electrolytic condenser
	504566	Cabinet
	500420	Clamp—for dial glass
	112745	Clip—coil mtg.
	114955	Clip—retainer on end of dial cord
	502773	Cord—dial drive (8 ft. required)...Per ft.
	504344	Dial scale—glass
	117029	Drum—for dial drive
	502705	Knob—tone or band switch
	502704	Knob—volume or tuning
	502762	Plug—for Local-Distant switch
	502984	Plug—Speaker
	502772	Pointer
	81145	Retaining ring for tuning shaft
	119087	Ring for dial cord
	113463	Rubber pad for mtg. chassis
	116584	Rubber spacer for mtg. dial scale
	85827	Screw—No. 8-32 for dial drum
	112874	Screw—No. 10 x 1⅛ for mtg. chassis
	118608	Shaft—tuning control
	502770	Socket—for dial lamp
	502761	Socket—for Local-Distant switch
	502769	Socket—for speaker
	114876	Socket—octal base
	160039	Socket—phono. plug
	113177	Spring—dial cord tension
	502767	Terminal strip—"A G"
	119886	Washer—felt for knobs

©John F. Rider

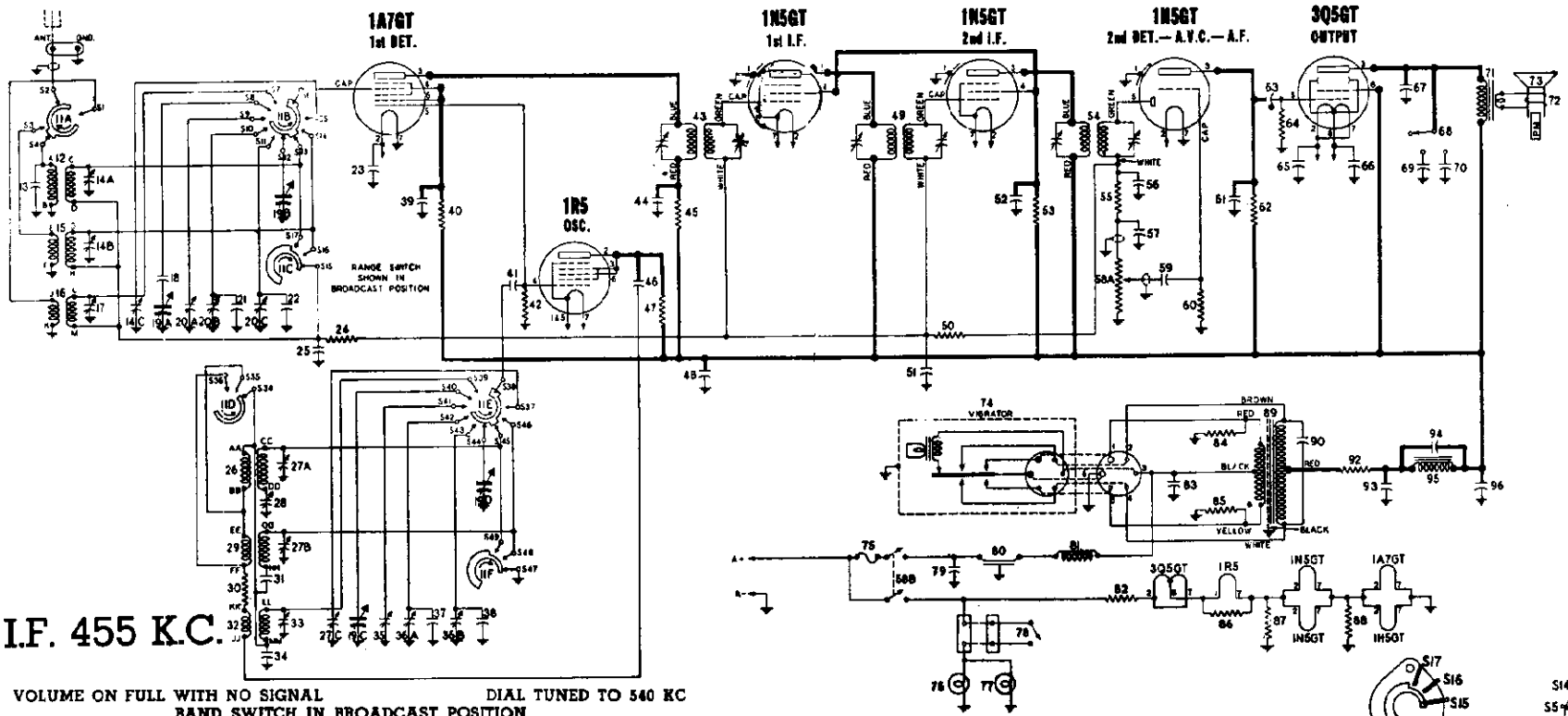

VOLUME ON FULL WITH NO SIGNAL
BAND SWITCH IN BROADCAST POSITION

DIAL TUNED TO 540 KC

BOTTOM VIEW OF CHASSIS

ALL VOLTAGES MEASURED BETWEEN SOCKET TERMINALS AND CHASSIS.
6 VOLT BATTERY USED FOR THESE MEASUREMENTS.
AVERAGE BATTERY DRAIN = 1.0 AMP.
B SUPPLY DRAIN = 10 MA.

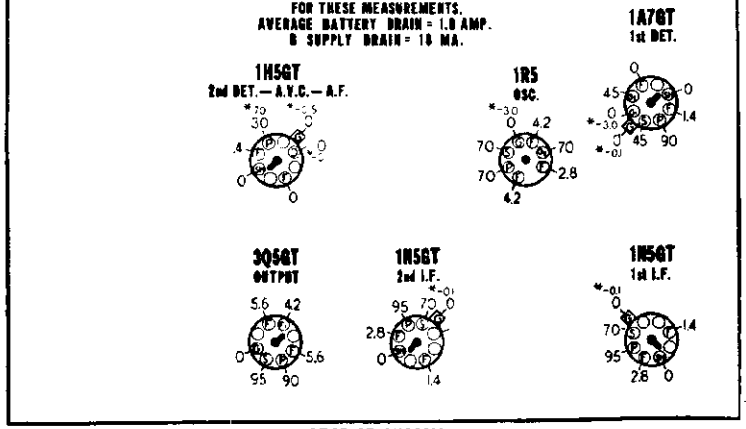

REAR OF CHASSIS

SOCKET VOLTAGES

Measured with voltmeter having sensitivity of 1000 ohms per volt except where indicated by (*). The (*) symbol designates a vacuum tube voltmeter measurement.

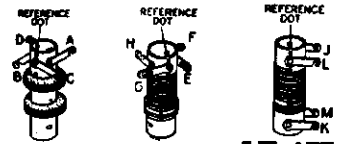

B.C. ANT. COIL 502872 | INT. ANT. COIL 502874 | S.W. ANT. COIL 502716

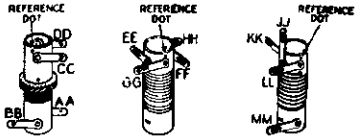

B.C. OSC. COIL 502873 | INT. OSC. COIL 502875 | S.W. OSC. COIL 502876

Lettered terminals in illustrations correspond to similarly lettered terminals on the circuit diagram.

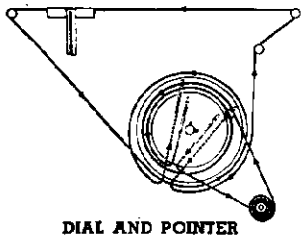

DIAL AND POINTER DRIVE CORD ARRANGEMENT

To string dial cord, set gang condenser to fully meshed position and use following parts:

113177	Tension Spring
114955	Clip on end of cord
119087	Ring
502773	Cord (6 feet)
	4½ ft. for pointer drive
	3½ ft. for tuning drive

SECTION 1 FRONT VIEW

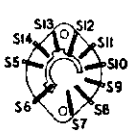

SECTION 1 REAR VIEW

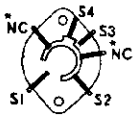

SECTION 2 FRONT VIEW
*No Connection



SECTION 3 REAR VIEW



SECTION 4 FRONT VIEW

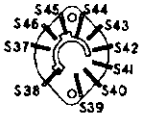

SECTION 4 REAR VIEW

*Not used; may serve as wiring junction point.

BAND SWITCH 502855

ALIGNMENT PROCEDURE

1. When gang condenser is fully meshed, dial pointer should be in the position indicated by the last division below 550 on the dial. If it is set incorrectly, release pointer clip on dial cord and reposition pointer.
2. Connect an output meter across the speaker voice coil or from the plate of the 3Q5GT tube to chassis through a 0.1 Mfd. condenser.
3. Connect the ground lead of the signal generator to the receiver chassis.
4. Set volume control to maximum volume position and use a weak signal from the signal generator.

IMPORTANT: Align this receiver in exactly the order shown below. The 13-16 Meter band must be aligned before any of the other short wave bands.

DUMMY ANT. IN SERIES WITH SIGNAL GENERATOR	CONNECT HIGH SIDE OF SIGNAL GENERATOR TO	SIGNAL GENERATOR FREQUENCY	BAND SWITCH POSITION	RECEIVER DIAL SETTING	TRIMMER NUMBER	TRIMMER DESCRIPTION	TYPE OF ADJUSTMENT
200 MMFD. Mica Condenser	Cap of 1A7GT	455 KC	Broadcast (*Position 1)	Any point where it does not affect the signal.	1-2	3rd I.F.	Adjust for maximum output. Then repeat adjustment.
					3-4	2nd I.F.	
					5-6	1st I.F.	
200 MMFD. Mica Condenser	"ANT" terminal at rear of chassis.	1500 KC	Broadcast (*Position 1)	1500 Kc.	7	Broadcast Oscillator (Shunt)	Adjust for maximum output.
200 MMFD. Mica Condenser	"ANT" terminal at rear of chassis.	1500 KC	Broadcast (*Position 1)	Tune to 1500 Kc. generator signal.	8	Broadcast Antenna	Adjust for maximum output.
200 MMFD. Mica Condenser	"ANT" terminal at rear of chassis.	600 KC	Broadcast (*Position 1)	Tune to 600 Kc. generator signal.	9	Broadcast Oscillator (Series Pad)	Adjust for maximum output. Try to increase output by detuning trimmer and retuning receiver dial until maximum output is obtained.
200 MMFD. Mica Condenser	"ANT" terminal at rear of chassis.	Repeat adjustment of trimmers 7 and 8 at 1500 Kc Then recheck adjustment of trimmer 9 at 600 Kc.					
400 OHM Carbon Resistor	"ANT" terminal at rear of chassis.	5.5 MC	Intermediate (*Position 2)	5.5 Mc.	10	Intermediate Oscillator	Adjust for maximum output. Check to see if proper peak was obtained by tuning in image at approx. 4.6 MC. If image does not appear, realign at 5.5 MC, with trimmer screw farther out. Recheck image.
400 OHM Carbon Resistor	"ANT" terminal at rear of chassis.	5.5 MC	Intermediate (*Position 2)	Tune to 5.5 Mc. generator signal.	11	Intermediate Antenna	Adjust for maximum output. Try to increase output by detuning trimmer and retuning receiver dial until maximum output is obtained.
400 OHM Carbon Resistor	"ANT" terminal at rear of chassis.	20 MC	13-16 Meter (*Position 4)	20 Mc.	12	13-16 Meter Oscillator	Adjust for maximum output. Check to see if proper peak was obtained by tuning in image at approx. 20.9 MC. If image does not appear, realign at 20 MC. with trimmer screw in a different position. Recheck image.
400 OHM Carbon Resistor	"ANT" terminal at rear of chassis.	20 MC	13-16 Meter (*Position 4)	Tune to 20 Mc. generator signal.	13	13-16 Meter Antenna	Adjust for maximum output. Try to increase output by detuning trimmer and retuning receiver dial until maximum output is obtained.
400 OHM Carbon Resistor	"ANT" terminal at rear of chassis.	16 MC	19 Meter (*Position 5)	16 Mc.	14	19 Meter Oscillator	Adjust for maximum output. Check to see if proper peak was obtained by tuning in image at approx. 16.9 MC. If image does not appear, realign at 16 MC. with trimmer screw in a different position. Recheck image.
400 OHM Carbon Resistor	"ANT" terminal at rear of chassis.	16 MC	19 Meter (*Position 5)	Tune to 16 Mc. generator signal.	15	19 Meter Antenna	Adjust for maximum output. Try to increase output by detuning trimmer and retuning receiver dial until maximum output is obtained.
400 OHM Carbon Resistor	"ANT" terminal at rear of chassis.	12 MC	25 Meter (*Position 6)	12 Mc.	16	25 Meter Oscillator	Adjust for maximum output. Check to see if proper peak was obtained by setting the signal generator to 11.1 Mc. and then tune radio in vicinity of 12 Mc. If image signal is not heard, realign at 12 Mc. with trimmer screw further in. Recheck image.
400 OHM Carbon Resistor	"ANT" terminal at rear of chassis.	12 MC	25 Meter (*Position 6)	Tune to 12 Mc. generator signal.	17	25 Meter Antenna	Adjust for maximum output. Try to increase output by detuning trimmer and retuning receiver dial until maximum output is obtained.

*Position 1 corresponds to extreme counter-clockwise setting of band switch. Succeeding positions are numbered in ascending order as switch is rotated clockwise.

©John F. Rider

400 OHM Carbon Resistor	"ANT" terminal at rear of chassis.	9.5 MC	31 Meter (*Position 7)	9.5 Mc.	18	31 Meter Oscillator	Adjust for maximum output. Check to see if proper peak was obtained by setting the signal generator to 9.6 Mc. and then tune radio in vicinity of 9.5 Mc. If image signal is not heard, realign at 9.5 Mc. with trimmer screw further in. Recheck image.
400 OHM Carbon Resistor	"ANT" terminal at rear of chassis.	9.5 MC	31 Meter (*Position 7)	Tune to 9.5 Mc. generator signal.	19	31 Meter Antenna	Adjust for maximum output. Try to increase output by detuning trimmer and retuning receiver dial until maximum output is obtained.
400 OHM Carbon Resistor	"ANT" terminal at rear of chassis.	15 MC	S.W. (*Position 3)	15 Mc.	20	S.W. Oscillator	Adjust for maximum output. Check to see if proper peak was obtained by tuning in image at approx. 14.1 MC. If image does not appear, realign at 15 MC, with trimmer screw further out. Recheck image.
400 OHM Carbon Resistor	"ANT" terminal at rear of chassis.	15 MC	S.W. (*Position 3)	Tune to 15 Mc. generator signal.	21	S.W. Antenna	Adjust for maximum output. Try to increase output by detuning trimmer and retuning receiver dial until maximum output is obtained.

*Position 1 corresponds to extreme counter-clockwise setting of band switch. Succeeding positions are numbered in ascending order as switch is rotated clockwise.

TOP VIEW OF CHASSIS

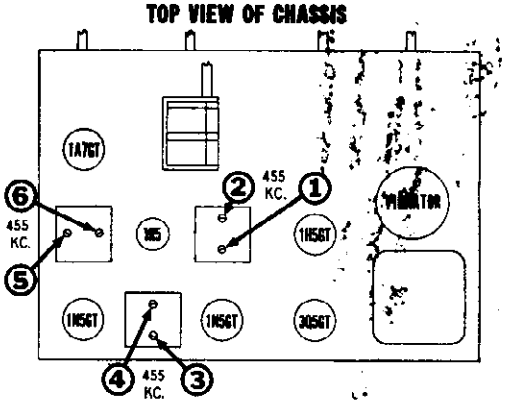

BOTTOM VIEW OF CHASSIS

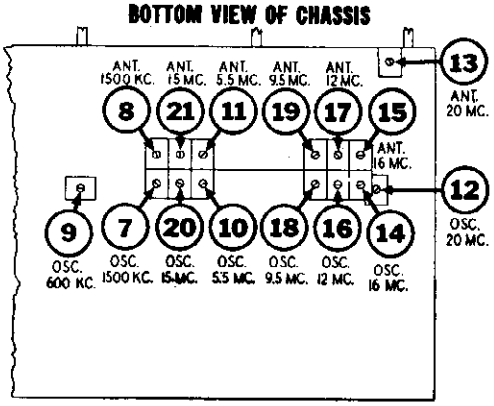

STAGE GAIN MEASUREMENT PROCEDURE

REQUIRED INSTRUMENTS: The amount of amplification or "gain" of each of the stages of this receiver may be measured with an A.C. Vacuum Tube Voltmeter or a "channel" type instrument containing a tuned and calibrated amplifier.

PROCEDURE: It is exceedingly important to adhere to the procedure outlined below since the accuracy of these measurements will be affected to a considerable extent by the failure to establish proper operating conditions.

1. Be sure that R.F. and I.F. stages are carefully and accurately aligned by utilizing the alignment procedure given above.
2. Connect Signal Generator as shown below.
3. The values of stage gain which are given here were measured with a fixed bias of 1½ volts on the control grids of all R.F. and I.F. tubes which are connected to the A.V.C. circuit. Therefore, these values are not intended to indicate the full capability of a stage but they will serve as a convenient basis for determining proper operation. In order to duplicate the fixed bias voltage, connect the negative terminal of a 1½ volt battery to A.V.C. at the white lead of the 2nd I.F. transformer and connect the positive battery lead to the receiver chassis.
4. Set Signal Generator for operation at 600 Kc with 400 cycle modulation and carefully tune radio receiver to this signal by using an output meter to indicate peak output. If a local station interferes, set generator to a nearby frequency and re-tune the receiver.
5. R.F. and I.F. circuits are slightly de-tuned when contact is made with an instrument probe and this action, which is indicated by a change in the output meter reading, may seriously affect the gain measurement. Therefore, it is important to adjust the associated circuit trimmer for a maximum output meter reading and to set the input signal level to a convenient reference point on the gain measuring instrument while the probe is making contact. After removing the probe it is again necessary to adjust the trimmer so as to obtain the same output meter reading and thereby assure that the signal voltage at the specified point has not changed as a result of circuit de-tuning.
6. When using a "channel" type instrument, carefully tune it for maximum output at desired frequency before making measurements.

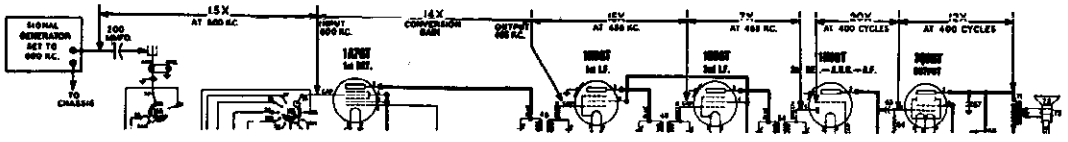

DIFFERENCES in tube characteristics, tolerance of parts, adjustment of tuned circuits and variations in line voltage will influence stage gain. These factors should be given due attention in event the gain of a stage varies extensively from the values shown above.

© John F. Rider

MODEL 4-A-40

PARTS LIST

DIA-GRAM NO.	PART NO.	DESCRIPTION
		COILS AND TRANSFORMERS
12	502872	Coil—BC. antenna
15	502874	Coil—Int. antenna
16	502716	Coil—S.W. antenna
26	502873	Coil—BC. oscillator
29	502875	Coil—Int. oscillator
32	502876	Coil—S.W. oscillator
43	502869	Transformer—1st I.F.
43	502870	Transformer—2nd I.F.
54	502871	Transformer—3rd I.F.
71	502919	Transformer—output for M-502918 spkr.
81	502861	Coil—choke in "A" supply lead
89	502900	Transformer—power
95	502898	Coil—filter choke
		OTHER ELECTRICAL PARTS
11A to F	502855	Switch—band
68	117025	Switch—tone control
72	502918	Speaker—P.M. dynamic (8 inch) with output transformer
73	502920	Cone & voice coil for M-502918 speaker
74	110800	Vibrator
75	110895	Fuse—3 amp. 250 volt
76, 77	118921	Lamp—dial (Mazda No. 47) 6-8 volt, 150 Ma.
78	502943	Switch—dial lamp
		MISCELLANEOUS PARTS
	502724	Background for dial
	504568	Cabinet
	500420	Clamp for dial glass
	502859	Clip—battery
	112745	Clip—coil mtg.
	114955	Clip—retainer on end of dial cord
	502773	Cord—dial drive (8 ft. required) per ft.
	504344	Dial scale—glass
	117029	Drum—for dial drive
	502864	Fuse retainer and "A" supply lead
	502705	Knob—tone or band switch
	502704	Knob—volume or tuning
	502762	Plug for dial lamp connection
	502772	Pointer
	81145	Retaining ring for tuning shaft
	119087	Ring for dial cord
	113463	Rubber pad for mtg. chassis
	116584	Rubber Spacer for mtg. Dial Scale
	85827	Screw—No. 8-32 for dial drum
	112874	Screw—No. 10 x 1⅛ for mtg. chassis
	118606	Shaft—tuning control
	502856	Shield cup clips—for retaining vibrator shield
	117716	Shield—tube
	502899	Socket for dial lamp
	502761	Socket for dial lamp connection
	114876	Socket octal base
	502982	Socket miniature type—7 prong
	502858	Socket—vibrator
	113177	Spring—dial cord tension
	502767	Terminal strip "GND ANT"
	119886	Washer—felt for knobs

DIA-GRAM NO.	PART NO.	DESCRIPTION
		CONDENSERS
13	502787	Condenser—mica 100 Mmfd. 500 volt
14A, B, C	502753	Condenser trimmer assembly A—1.6 to 18 Mmfd. B—1.6 to 18 Mmfd. C—3 to 35 Mmfd.
17	502758	Condenser—trimmer; 1.6 to 18 Mmfd.
18	502778	Condenser—ceramic 200 Mmfd. 500 volt
19A,19B 19C,19D	502868	Condenser—variable gang
20A, B, C	502862	Condenser—trimmer assembly A—3 to 35 Mmfd. B—3 to 35 Mmfd. C—3 to 35 Mmfd.
21	502779	Condenser—ceramic 56 Mmfd. 500 volt
22	502884	Condenser—mica 120 Mmfd. 500 volt
23	502808	Condenser .25 Mfd. 200 volt
25	502806	Condenser—.05 Mfd. 200 volt
27A, B, C	502753	Condenser—trimmer assembly A—1.6 to 18 Mmfd. B—1.6 to 18 Mmfd. C—3 to 35 Mmfd.
28	502922	Condenser—trimmer 300 to 600 Mmfd.
31	502883	Condenser—mica 1800 Mmfd. 500 volt
33	502756	Condenser—trimmer; 2 to 6 Mmfd.
34	502793	Condenser—mica 5600 Mmfd. 500 volt
35	502757	Condenser—trimmer; 6.5 to 35 Mmfd.
36A, B	502863	Condenser trimmer assembly A—3 to 35 Mmfd. A—3 to 35 Mmfd.
37	502167	Condenser—ceramic 68 Mmfd. 500 volt
38	502789	Condenser—mica 160 Mmfd. 500 volt
39	502880	Condenser—.1 Mfd. 400 volt
41	502787	Condenser—mica 100 Mmfd. 500 volt
44	502805	Condenser—.02 Mfd. 400 volt
46	502792	Condenser—mica 4000 Mmfd. 500 volt
48	502890	Condenser—.1 Mfd. 400 volt
51	502806	Condenser—.05 Mfd. 200 volt
52	502807	Condenser—.05 Mfd. 400 volt
56, 57	502882	Condenser—220 Mmfd. 500 volt
58	502803	Condenser—.006 Mfd. 600 volt
61	502882	Condenser—220 Mmfd. 500 volt
63	502804	Condenser—.01 Mfd. 400 volt
65	502878	Condenser—.5 Mfd. 200 volt
66	502865	Condenser—electrolytic 100 Mfd. 8 volt
67	502881	Condenser—.002 Mfd. 400 volt
69	502802	Condenser—.004 Mfd. 600 volt
70	502804	Condenser—.01 Mfd. 400 volt
79	502878	Condenser—.5 Mfd. 200 volt
80	502860	Drain Plate—260 Mmfd. 100 volt
83	502878	Condenser—.5 Mfd. 200 volt
90	502879	Condenser—.01 Mfd. 1000 volt
93	502866	Condenser—electrolytic 20 Mfd. 200 volt
94	502890	Condenser—.1 Mfd. 400 volt
96	502867	Condenser—electrolytic 10 Mfd. 200 volt
		RESISTORS
24	502134	Resistor—carbon 470,000 Ohms ¼ watt
30	502886	Resistor—carbon 33 Ohms ¼ watt
40	502889	Resistor—carbon 22,000 Ohms ¼ watt
42	502131	Resistor—carbon 47,000 Ohms ¼ watt
45	502291	Resistor—carbon 4,700 Ohms ¼ watt
47	502459	Resistor—carbon 6,800 Ohms ¼ watt
50	502268	Resistor—carbon 1 Meg. ¼ watt
53	502890	Resistor—carbon 56,000 Ohms ¼ watt
55	502131	Resistor—carbon 47,000 Ohms ¼ watt
58A, B	119357	Vol. Control—with switch 250,000 Ohms
60	502136	Resistor—carbon 10 Meg. ¼ watt
62	502892	Resistor—carbon 330,000 Ohms ¼ watt

SPECIFICATIONS

FREQUENCY RANGES:

Standard Broadcast Band	540-1725 KC.
Intermediate Band	1.8-5.8 MC.
Short Wave Band	5.8-15.5 MC.
16-13 Meter Spread Band	17.1-22.2 MC.
19 Meter Spread Band	14.5-17.1 MC.
25 Meter Spread Band	11.17-12.2 MC.
31 Meter Spread Band	9.28-9.8 MC.

I.F. FREQUENCY:

455 KC.

POWER OUTPUT:

Undistorted—.2 watt
Maximum—.35 watts

TUBE COMPLEMENT:

1A7GT—1st Detector
1R5—Oscillator
1N5GT—1st I.F. Amplifier
1N5GT—2nd I.F. Amplifier
1H5GT—2nd Detector—A.V.C.—1st Audio
3Q5GT—Output

TUNING CONDENSER:

2 Section gang;
Double rotor, Double stator;
Shock resistant mounting

SPEAKER:

8 inch P.M. Dynamic
Voice coil impedance—3.5 ohms

POWER SUPPLY:

6 Volt Battery
(Synchronous Vibrator Type)
1 Amp. Average Battery Drain

© John F. Rider

MODEL 43-6485

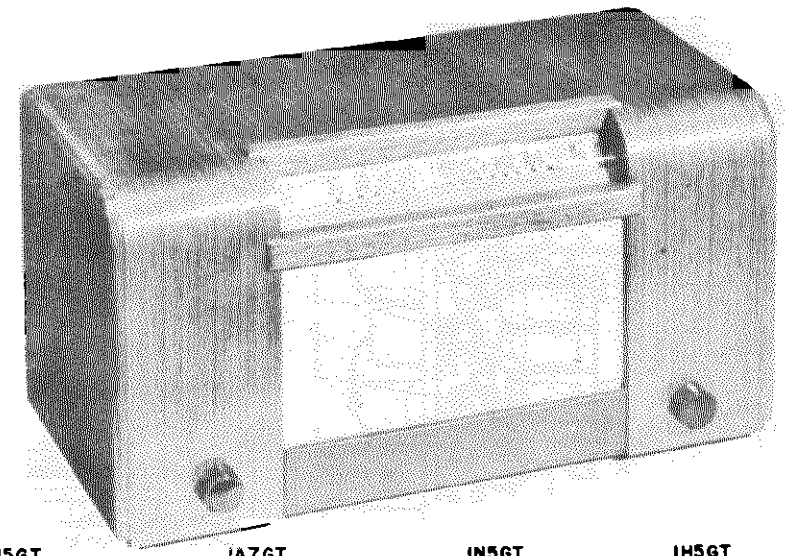

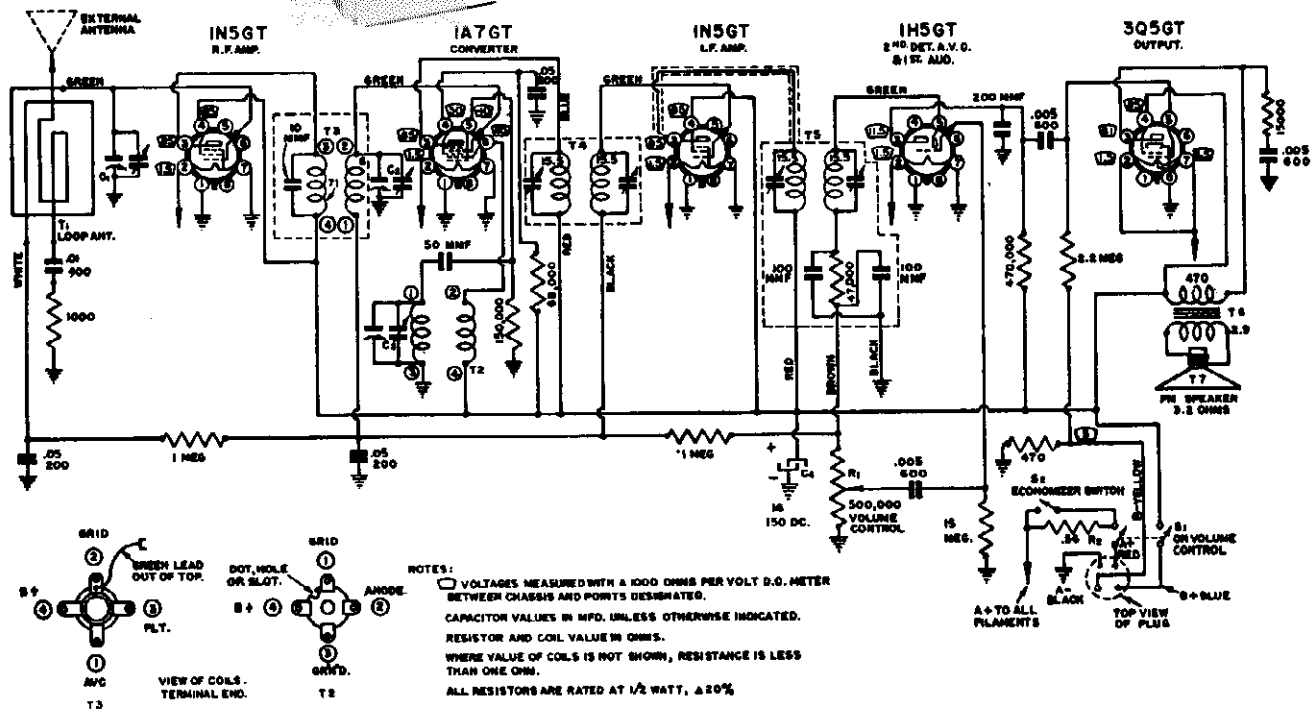

Note on "B" Models—Resistor - 68,000 Ohm in Screen Circuit of 1A7GT Tube, Replaced with 33,000 Ohm.

Voltage at Terminal #4 on 1A7GT Tube Increased to 48 (Average).

- Output meter across 3.2-ohm output load.
- Volume control at maximum for all adjustments.
- Align for maximum output. Reduce input as needed to keep output near 0.4 volts.
- Loop antenna should be connected to receiver and in its proper position when making adjustments.

SIGNAL GENERATOR				TUNER SETTING	ADJUST TRIMMERS TO MAXIMUM OUTPUT IN ORDER SHOWN
FREQUENCY	COUPLING CAPACITOR	CONNECTION TO RADIO	GROUND CONNECTION		
455 KC	.1	Grid Cap of 1N5GT (I.F.)	To Chassis	Capacitor full open (plates out of mesh)	2 trimmers on output IF can T5 (25622)
455 KC	.1	Grid Cap of 1A7GT	To Chassis	Capacitor full open (plates out of mesh)	2 trimmers on input IF can T4 (25621)
1620 KC	200 Mmf	Antenna Lead	To Chassis	Capacitor full open (plates out of mesh)	Oscillator trimmer C3 on gang
1400 KC	200 Mmf	Antenna Lead	To Chassis	Set dial pointer at 1400 KC	Antenna and R. F. trimmers C1, C2 on gang

©John F. Rider

© John F. Rider

Part No.	Description
	DIAL AND TUNING PARTS
25774	Screw - Set 8-32 x 1/8 (Used In Worm Gear of Tuning Condenser)
25808	Plate - Assembly (Includes Dial Backing Plate with Bracket, Track and Pointer)
26281	Cord - Dial (Includes Spring and Pointer Coupling)
	TRANSFORMERS AND COILS
25594	Transformer - Speaker (Includes Mounting Clamp)
25597	Coil - R.F. (Includes Shield Can and 10 MMF. Condenser)
25598	Coil - Oscillator
25609	Loop Antenna (Includes Mounting Strips and Terminals)
25621	Transformer - IF Input
25622	Transformer - IF Output (Complete In Can - Includes 2- 100 MMF. Capacitors Built-In With Trimmers)
25319	S.P.S.T. Slide Switch
25553-A	Back - Chassis (Removable Back Plate)
25593	5" P.M. Speaker
25603	Cap - Grid
25612	Plug - 4 Prong (For Battery Cable)
25618-A	Screw - 10-32 x 7/8 (For Mounting Chassis)
25620	Socket - Octal (For Tubes)
25696	Knob - Bakelite
26259	End - L.H.
26268-A	Cabinet - Wood
26271	End - R.H.
	CAPACITORS
25592	3 Gang Tuning Capacitor Including Trimmers
25600	Electrolytic 16 MFD. 150V.
14061	.005 MFD. 600V. Tubular
8661	.05 MFD. 300V. Tubular
8583	.01 MFD. 400V. Tubular
17091	50 MMF. Mica
14370	200 MMF. Mica
	RESISTORS
25367	Control-Volume Including On-Off Switch
25613	.56 Ohm 1/2 Watt 10% Wire Wound
25085	470 Ohm 1/2 Watt 20%
25414	1,000 Ohm 1/2 Watt 20%
17164	15,000 Ohm 1/2 Watt 20%
25144	33,000 Ohm 1/2 Watt 20%

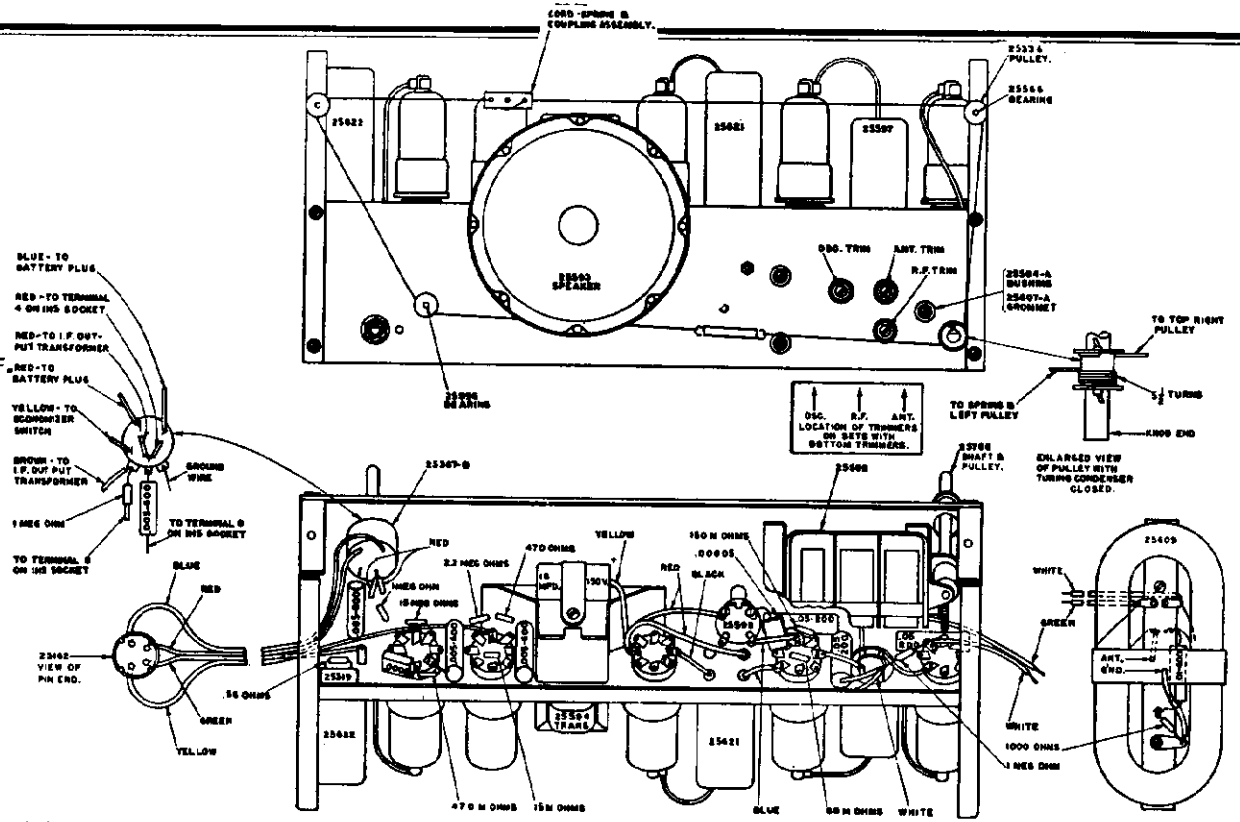

14616	150,000 Ohm 1/2 Watt 20%
25042	470,000 Ohm 1/2 Watt 20%
8766	1 Megohm 1/2 Watt 20%
25134	2.2 Megohm 1/2 Watt 20%
14365	15 Megohm 1/2 Watt 20%
	DIAL AND TUNING PARTS
25336	Pulley - Wood
25558	Track (For Pointer)
25559	Pointer
2556-C	Bearing - Short (For Upper Wood Pulley)
25571-D	Shaft - Tuning (Includes "Spool" Pulley)
25616-A	Scale - Dial
255696-C	Bearing - Long (For Lower Wood Pulley)
25654	Screw - Wood #4 x 1/4 (Mounting Dial Back Plate)

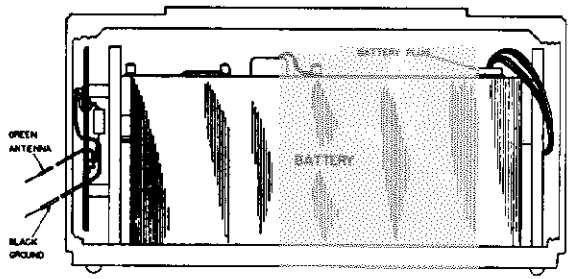

BATTERY INSTALLATION

REMOVAL OF CHASSIS—If it is found necessary for any reason to remove the radio chassis from the cabinet, proceed as follows: Remove knobs by pulling straight off, disconnect battery by removing plug, and remove two screws inserted through bottom of cabinet. Chassis can be removed now. (Note—After installing chassis in cabinet see that the bakelite strip attached to dial cord is engaged with the pin on the dial pointer.)

MODEL 43-6730

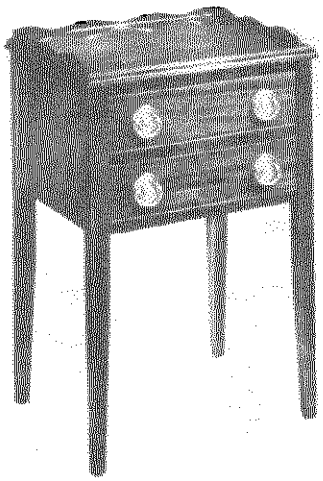

DIAL CORD REPLACEMENT—Is best accomplished by replacing complete cord assembly No. 25834 which is made up to correct length. In an emergency 30 lb. fish line may be used. See picture of chassis for correct installation.

DIAL SCALE REPLACEMENT—Remove chassis. Remove pointer track by removing the two wood screws holding it to the cabinet. Dial scale may now be lifted out from front of cabinet. When installing new scale —see that long screws in track bracket engage the notches in the ends of the scale.

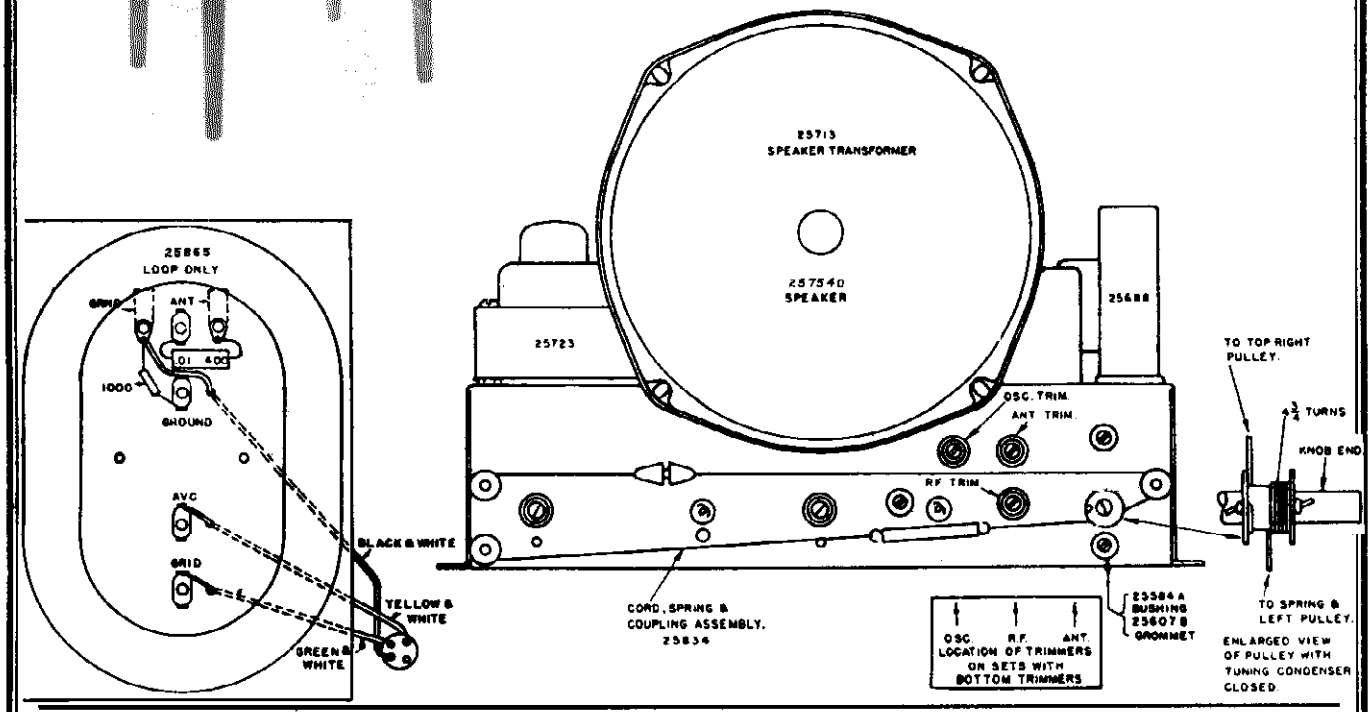

ALIGNMENT PROCEDURE

Volume control at maximum volume and output from signal generator no higher than is necessary to obtain output reading. Use insulated alignment screw driver for adjusting.

DUMMY ANT.	SIGNAL GENERATOR COUPLING	SIGNAL GENERATOR FREQUENCY	RADIO DIAL SETTING	OUTPUT METER	ADJUST	REMARKS
.1 mfd	High side to top (grid) cap 1AT. Low side to chassis.	455 kc.	High freq. and tuning gang at minimum capacity	Across voice coil	T5 output I.F., T4 input I.F.	Adjust for maximum output
.0001 mfd	High side to ant. wire (green). Low side to chassis.	1620 kc.	High freq. and tuning gang at minimum capacity	Across voice coil	C3, Osc. Trim	Adjust for maximum output
.0001 mfd	High side to ant. wire (green). Low side to chassis.	1400 kc.	Tune in 1400 kc. signal.	Across voice coil	C1, C2 Ant. Trim and R.F. Trim	Adjust for maximum output

© John F. Rider

MODEL 43-6730

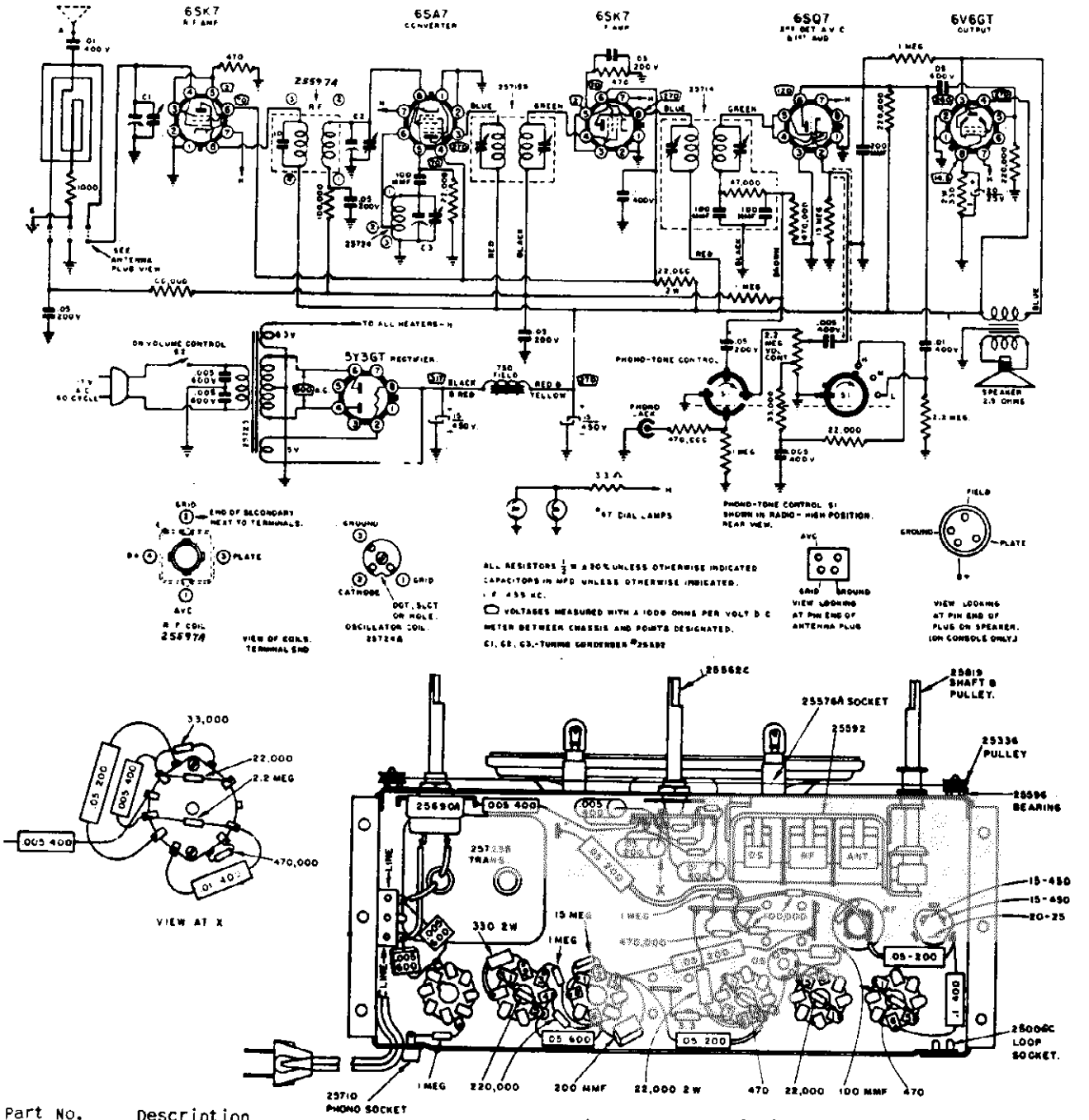

Part No.	Description
25068A	Cord—AC and Plug
25572A	Bracket—Tuning Condenser—Front
25573	Bracket—Tuning Condenser—Rear
25574	Bracket—Speaker
25578C	Dial Pointer
25580A	Bracket—Pointer Track
25592	Condenser—Tuning C-1, C-2, C-3
25596	Bearings—For Wood Pulleys
25597A	Coil—R. F.
25688	Condenser—Filter 15-450, 15-450, 20-25
25690A	Control—Volume (with AC Switch S-2)
25693	Plug—For Loop
25696	Knob—Volume and Tuning
25710	Phono—Pick-Up Socket
25724A	Coil—Oscillator
25731F	Cabinet
25753B	Dial Scale—Glass
25755F	Bracket—Hinge

Part No.	Description
25829	Knob—Tone
25834	Cord—Dial (includes Spring and Pointer Coupling)
25855	Antenna—Loop
25006C	Socket—For Loop
25336	Pulley—Wood—Small
25562C	Switch—Tone S-1
25576A	Socket—Dial Lamp
25607B	Rubber—Grommets
25620	Socket—Octal
25711A	Track—Pointer
25713	Transformer—Output—Speaker
25714	Transformer—I. F. Output
25715D	Transformer—I. F. Input
25723B	Transformer—Power 60 Cycles
25754D	Speaker—With Transformer
25774	Screw—Set For Worm Gear (Tuning Cond.)
25819	Pulley Manual Drive With Shaft

©John F. Rider

MODEL 43-7660B

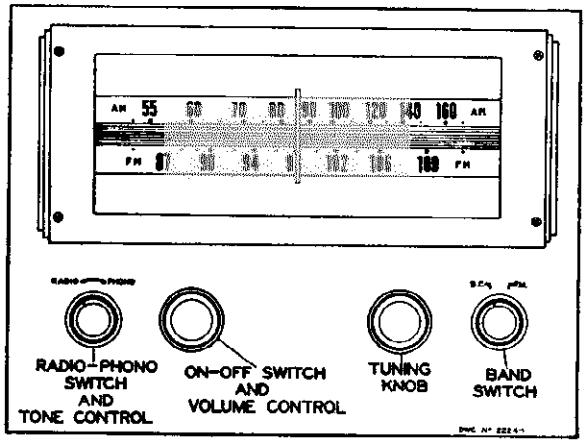

ELECTRICAL SPECIFICATIONS

Power Supply.....105 to 125 volts, AC, 60-cycles; Chassis only 122 watts. With phono operation 150 watts.

Frequency Range....Broadcast Band—535 to 1620 kc.
FM—Band 88 to 108 mc.

Intermediate Freq...AM-455 kc; FM-10.7 mc.

Selectivity.....AM-48 kc. broad at 1000 times signal, measured at 1000 kc.
I.F. FM-180 kc. broad at 2 times down.
I.F. FM-320 kc. broad at 10 times down.

AM Sensitivity.....(For .5 watt output with external antenna)—3 microvolts average.

FM Sensitivity.....(For .5 watt output)—10 microvolts average.

Power Output.....8 watts, 10% distortion. 10 watts maximum.

Loud Speaker.....12" electrodynamic. Voice coil impedance 3.2 ohms, 400 cycles.

Tube and Lamp Complement.....6BA6, FM—AM R.F. stage.
12AT7, FM—AM oscillator and mixer.
6BA6, FM—AM—1st I.F.
6BA6, FM—2nd I.F.
6AL5, FM—ratio detector.
6AT6, AM detector.
A. F. AMP. and A.V.C.
6SN7, Push-pull. Driver and phase-inverter.
5U4G, rectifier.
6V6, output.
6V6, output.
T-44 dial lamp (2 used).

Automatic changer..Webster 50 with QT Cartridge. (Manual 619-4).

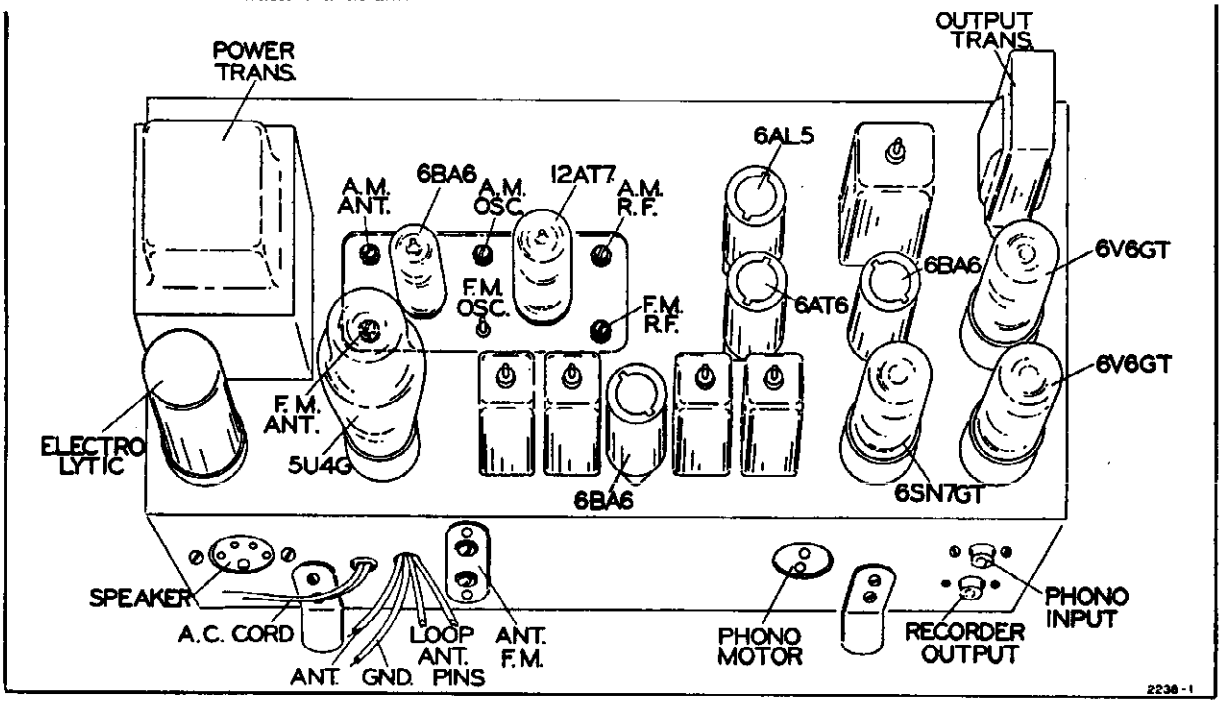

Chassis — top view

©John F. Rider

MODEL 43-7660B

ALIGNMENT PROCEDURE

FM Band Section I.F. and R.F.

A non-metallic alignment tool must be used.

IMPORTANT— No alignment of the FM section of this radio should be attempted unless you are positive that the circuits are in need of adjustment and you have the necessary equipment.

All components used in this radio are extremely stable and the tuned circuits should require no adjustment over a long period of time.

NOTE— The following alignment is based on the use of the new Simpson vacuum tube voltmeter which has a "floating ground". In other words, the meter, when used as a vacuum tube volt-meter, can have both the positive and negative sides connected to points above ground and still give true readings.

A standard AM signal generator is required.

FM - I. F. ALIGNMENT

Band Switch in FM Position. Dummy Antenna .1 Mfd.

SIGNAL GENERATOR FREQUENCY	CONNECTION TO RADIO	VACUUM TUBE VOLT METER CONNECTION TO RADIO	ADJUSTMENT TO BE MADE	ADJUST FOR
10.7 Mc. Use about .1 volt	Pin No. 1 of 6BA6 No. 3 and ground	Pin No. 2 of 6AL5 and ground	Primary of T5	Resonance should be about 3 volts
10.7 Mc. Use about .1 volt	Pin No. 1 of 6BA6 No. 3 and ground	See note "A"	Secondary of T5	Zero. Use zero center scale See note "B"
10.7 Mc. Use about 3300 microvolts	Pin No. 1 of 6BA6 No. 2 and ground	Pin No. 2 of 6AL5 and ground	Primary and Secondary of T4A 10.7 m.c. windings See I.F. view	Resonance should be about 3 volts
10.7 Mc. Use about 200 microvolts	Pin No. 2 of 12AT7 and ground	Pin No. 2 of 6AL5 and ground	Primary and Secondary of 10.7 m.c. windings of T3A See I.F. view	Resonance should be about 3 volts

NOTES ON FM — I. F. ALIGNMENT

NOTE "A" Connect two resistors, 100K OHMS each, from Pin No. 2 of 6AL5 to ground. These resistors must be matched within 5%. Connect as shown in dotted lines on schematic diagram. Connect vacuum tube voltmeter between the mid-point of the resistors and point zz.

NOTE "B" If T5 has been tampered with, it is possible that no crossover point will be found at first. Careful adjustment of both primary and secondary is necessary.

GENERAL: Input signals should be adjusted to give approximately 3 volts. The ratio detector is operating at reasonable level at this point and will give the truest indication of correct alignment with the procedure specified.

FM - R. F. ALIGNMENT

Check pointer so that it coincides with the right hand marker to the extreme right when iron cores are all the way out.

For adjustment, see dial mechanism illustration.

SIGNAL GENERATOR FREQUENCY	CONNECTION TO RADIO	DUMMY ANTENNA	ADJUST	VACUUM TUBE VOLT METER CONNECTION TO RADIO	ADJUST TO
100 Mc. Use about 10 microvolts	FM Antenna Terminals See note	300 ohms	C58 Osc. C60 R. F. C56 Ant.	Pin No. 2 of 6AL5 and Ground	Resonance about 3 volts

NOTE: If a signal generator with the above fundamental frequency is not available, it is sometimes possible to use harmonics. Use extreme care in picking harmonics. An alternate procedure is to use a local station carrier of known frequency to align the FM Band and to use the vacuum tube volt-meter as above for resonance indication. A weak carrier, however, will not produce 3 volts.

NOTE: Connect 300 ohms in series with hot side of generator and connect to one screw. Connect cold side of generator to other screw.

©John F. Rider

MODEL 43-7660B

ALIGNMENT PROCEDURE

Broadcast Band Section I.F. and R.F.

The alignment procedure below includes the sensitivities at the inputs of various stages. All signal input values are based on an output of ½ watt. This may be measured by disconnecting the speaker voice coil and substituting a 3.2-ohm resistor across the secondary winding of the output transformer. A reading of 1.3 volts AC across this resistor will be approximately equivalent to a ½-watt output with the speaker connected. The volume control must be set at maximum. The tone control must be set for maximum treble.

The signal source must be an accurately calibrated signal generator capable of supplying the frequencies designated, modulated 30% with a 400-cycle audio signal. A 400 cycle audio signal is required for the audio measurement. Variations in sensitivities of plus or minus 25% are usually permissable.

A M - I. F. ALIGNMENT

Band Switch in AM Position. Tune Set to 1400 Kc. Dummy Antenna .1 Mfd.

SIGNAL GENERATOR FREQUENCY	CONNECTION TO RADIO	ADJUSTMENTS TO BE MADE	ADJUST FOR
455 Kc. Use 1000 microvolts	Pin No. 1 of 6BA6 No. 2 and ground	Primary and Secondary of T4B AM windings See I. F. view	Maximum output Should be ½ watt.
455 Kc. Use 30 microvolts	Pin No. 2 of 12AT7 and ground	Primary and Secondary of T3B AM windings See I. F. view	Maximum output Should be ½ watt.
400 cycles. Use 28 millivolts	Hot end of volume control and ground	None	Maximum output Should be ½ watt.

BROADCAST BAND - R. F. ALIGNMENT

Check pointer so that it coincides with the right hand marker to the extreme right when iron cores are all the way out.
For adjustment, see dial mechanism illustration.

SIGNAL GENERATOR FREQ.	CONNECTION TO RADIO	DUMMY ANTENNA	ADJUST
1620 Kc. Use 3 microvolts	AM Antenna and Ground	200 mmf.	C59, C57, C61. For maximum, ½ watt

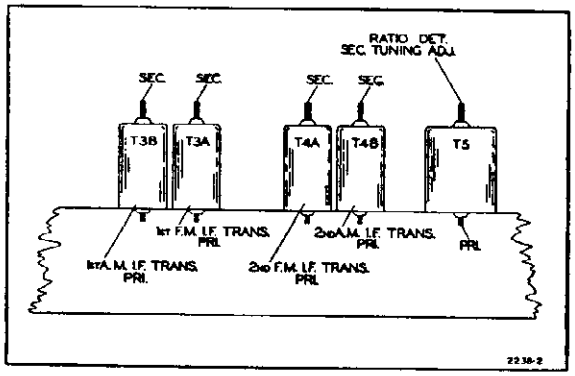

I. F. VIEW

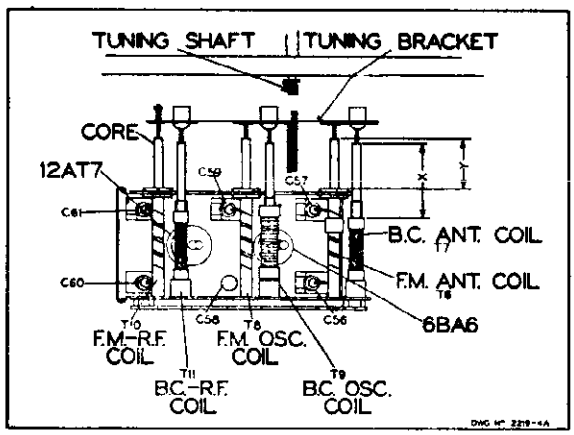

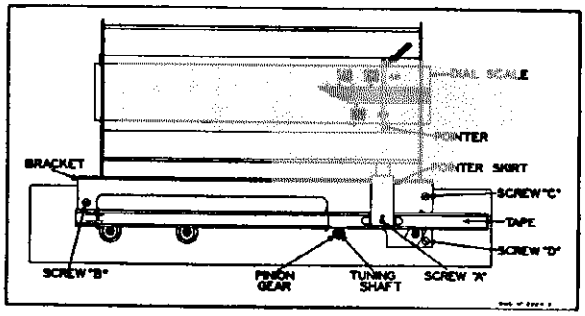

Loosen screws "C" and "D" so that teeth of tape can be properly meshed with pinion gear to give proper pointer travel.

TUNER ADJUSTMENT

With tuner all the way out, dimension "X" should be 1½ inches. "Y" should be 1-1/32 inches. "X" is from the end of the slug to edge of the coil winding. Check these dimensions before R.F. alignment is attempted of either the AM or FM Band. No slug adjustment should be necessary since the slugs are properly set at the factory.

©John F. Rider

MODEL 43-7660B

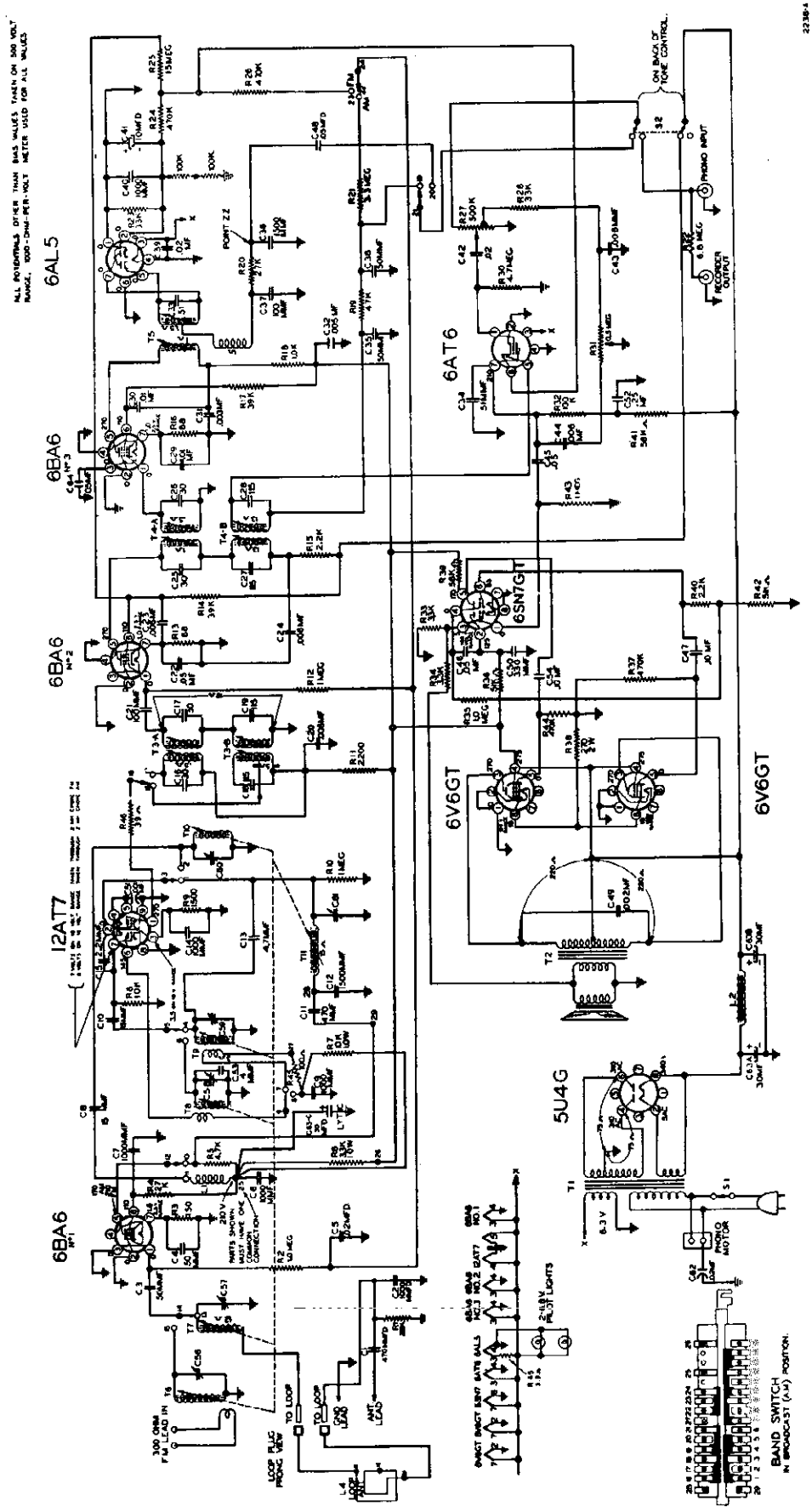

NOTE: Two 100K ohm resistors in series from Pin No. 2 of the 6AL5 to ground are connected as shown only when aligning the FM I. F. Refer to FM I. F. alignment procedure.

NOTE: Some sets used 250 ohm—5 watt resistor for R38.

RECORD CHANGER: See Webster Model 50, Page RCD.CH. 15-1 through RCD.CH. 15-9

©John F. Rider

MODEL 43-7660B

Ref. No.	Part No.	Description	Qty. Used
		TUNER PARTS	
		Condensers	
C58	A-8H-15444	Trimmer, FM oscillator	1
C56, 57, 59, 61	A-2M-12618	Trimmer plate, large	4
C60	A-2M-14368	Trimmer plate, small	1
	A-5M-12615	Locator, for trimmer plates	5
C59, C61	B-6M-12616-S-2	Silvered mica film	2
C56, 57, 60	A-6M-12616	Clear mica film	3
	A-3C-12617	Spacer, for trimmer plates	5
C1, C11	C-8G-11732	470 mmf, ceramic	2
C2	C-8G-13695	1000 mmf, ceramic	1
C6, 7, 9, 14, 51	C-8G-13201	1000 mmf, ceramic	5
C12	C-8G-11731	1500 mmf, ceramic	1
C10, C8	C-8G-13017	15 mmf, ceramic	2
C3, C4	C-8G-11484	50 mmf, ceramic	2
C13	A-8G-12495-6	4.7 mmf, ceramic	1
C15	A-8G-12495-4	2.2 mmf, ceramic	1
C53	C-8G-15859	4 mmf, ceramic	1
C5	C-8D-16677	.02 x 200 volts, paper	1
		Resistors	
R4	C-9B2-79	27K ohms, 1 watt	1
R1	C-9B1-21	22K ohms, ½ watt	1
R3	C-9B1-52	150 ohms, ½ watt	1
R5	C-9B1-17	4700 ohms, ½ watt	1
R8	C-9B1-19	10K ohms, ½ watt	1
R2, R10	C-9B1-31	1 megohm, ½ watt	2
R21	C-9B1-34	3.3 megohms, ½ watt	1
R45	C-9B1-50	100 ohms, ½ watt	1
R46	C-9B1-45	39 ohms, ½ watt	1
R9	C-9B1-64	1500 ohms, ½ watt	1
R6	C-9B2-6	3300 ohms, 1 watt	1
R7	C-9B2-74	10K ohms, 1 watt	1
		Coils	
T8	B-13D-13027-1	F.M. oscillator coil	1
—	B-51A-13056	Core for F.M. oscillator coil	1
T6	B-13E-13028	FM antenna coil	1
—	B-51A-13058	Core for FM antenna coil	1
T10	B-13C-13029	FM R.F. coil	1
—	B-51A-13057	Core for FM R.F. coil	1
T9	A-13D-15704	B.C. oscillator coil	1
—	B-51A-12722	Core for B.C. oscillator coil	1
T7	B-13E-13031	B.C. Antenna coil	1
T11	B-13C-13032	B.C. R.F. coil	1
—	B-51A-12723	Core for B.C. ant. and R.F. coil	2
		Miscellaneous	
	B-20B-15628	Slide switch	1
	A-15B-12997	7-prong min., tube socket	1
	A-15B-13430	9-prong min., tube socket	1
	B-3A-15415	Lead screw	1
	A-3J-12309	Pinion gear	1
	A-49A-14439	Drive pring	2
	A-49A-13228	Tension spring	1
	A-49A-12394	Spiral spring for slugs	3
	B-2J-13006	Rack tape with teeth and pointer bracket	1
	B-2D-15416	Guide for rack tape	1
	B-2D-15649	Pointer carriage	1
	A-5M-13741	Pointer	1
	32F4SE-11488	4-40 x ⅛" screw for pointer	2
		MAIN CHASSIS PARTS	
		Condensers	
C63A, C63B, C63C	B-8C-13601	Electrolytic filter condenser, 30-30-30 x 450 volts	1
C52	C-8D-13439	.25 mfd x 400 volts	1
C54, C47	C-8D-10760	.1 mfd x 400 volts	2
C31	C-8D-11013	.003 x 600 volts	1
C44, 43, 24, 23, 20	C-8D-10785	.006 x 600 volts	5
C29, C30	C-8D-10761	.01 x 400 volts	2
C46, C45	C-8D-10815	.05 x 400 volts	2
C49	C-8D-10789	.002 x 600 volts	1
C48, C22	C-8D-10770	.05 x 200 volts	2
C64	C-8D-15860	.05 x 200 volts	1
C41	A-8C-13132	Electrolytic, 10 mfd x 50 volts	1
C62	C-8J-11321	.02 x 600 volts, molded case	1
C35	A-8G-13962	.005 x 500 volts, ceramic	1
C21	C-8G-11734	100 mmf, ceramic	1
C38	C-8G-13059	1500 mmf, ceramic	1
C34	C-8G-13060	51 mmf, ceramic	1
C40	C-8G-13201	1000 mmf, ceramic	1
C50	C-8G-11741	330 mmf, ceramic	1
C37	C-8F3-225	100 mmf, mica	1
C39, C42	C-8D-11304	.02 x 200 volts, paper	2
C35, C36	A-8F-13047	Mica condenser, 50 mmf, dual	1
		Resistors	
R27, S1	A-10A-13114	Volume control and switch, 500K ohms	1
R31, S2	A-11A-15645	Tone control and phono radio switch	1
R22	C-9B1-36	6.8 megohms, ½ watt	1
R32	C-9B1-86	100K ohms, ½ watt	1
R44, R37	C-9B1-94	470K ohms, ½ watt	2
R41, R39	C-9B1-83	56K ohms, ½ watt	2
R33, R34	C-9B1-68	3300 ohms, ½ watt	2
R30	C-9B1-35	4.7 megohms, ½ watt	1
R23, R28	C-9B1-80	33K ohms, ½ watt	2
R20	C-9B1-79	27K ohms, ½ watt	1
R13, R16	C-9B1-48	68 ohms, ½ watt	2
R14, R17	C-9B2-81	39K ohms, 1 watt	2
R24, R26	C-9B1-29	470K ohms, ½ watt	2
R25	C-9B1-302	15 megohms, ½ watt	1
R19	C-9B1-23	47K ohms, ½ watt	1
R12,R43,R35	C-9B1-31	1 megohm, ½ watt	3
R40	C-9B1-66	2200 ohms, ½ watt	1
R36, R42	C-9B1-200	51K ohms, ½ watt	2
R38	C-9B4-55	270 ohms, 2 watts	1
R18	C-9B1-13	1000 ohms, ½ watt	1
R11, R15	C-9B2-15	2200 ohms, 1 watt	2
R45	C-9B1-1069	3.3 ohms, ½ watt	1
		Coils	
	B-13A-15680	Input I.F. transformer, 455 kc.	1
	B-13B-15681	Output I.F. transformer, 455 kc.	1
	B-13A-15682	Input I.F. transformer, 10.7 megohms	1
	B-13B-15683	Second I.F. transformer, 10.7 megohms	1
	B-13M-15684	Ratio detector, 10.7 megs.	1
	C-13E-15687	Loop antenna assembly	1
		Transformers	
T1	B-12A-13038-1	Power transformer, 105-125 volts, 50-60 cycles, primary	1
T2	B-12C-13042-1	Output transformer, for speaker	1
		Speaker	
	B-18B-13043-1	Electrodynamic speaker, 12" less output transformer	1
		Miscellaneous	
	C-30B-13734	Dial scale	1
	B-30B-13943	Dial glass	1
	2G-13596	Escutcheon	1
	56D2-12463	Screws for escutcheon	4
	B-5B-13737-56	Knob, mahogany—small with dot	2
	B-5B-13738-56	Knob, mahogany—large, without dot	2
	A-3A-15630	Shaft for band switch	1
	A-43D-12934	"U" speed clip	1
	A-55C-12935	Ball bearing	1
	B-47A-13801	Pilot lite assembly	1
	A-46A-11739	Pilot lite bulb, 6-8 volts	2
	A-2H-10974	Tube shield	4
	A-15C-13174	7-prong, min., tube socket	4
	A-15B-10440	8-prong, octal, socket	4
	A-7B-13050	FM dipole socket	1
	A-15B-11538	Speaker socket	1
	A-19B-12468	Phono-motor socket	1
	A-19B-11044	Recorder socket	1
	A-19B-12170	Phono input socket	1
	B-14M-11479	AC line cord	1
	32K10-14306	10-32 x 1 inch, chassis mounting screws	4
		RECORD CHANGER	
	B-201-13109	Record changer (Webster 50) with QT cartridge	1
	See Coronado Phono Service Manual No. 619-4		
	QT	Crystal Cartridge with needle	1
		Needle only	1

©John F. Rider

MODEL 94RA1-43-6945A

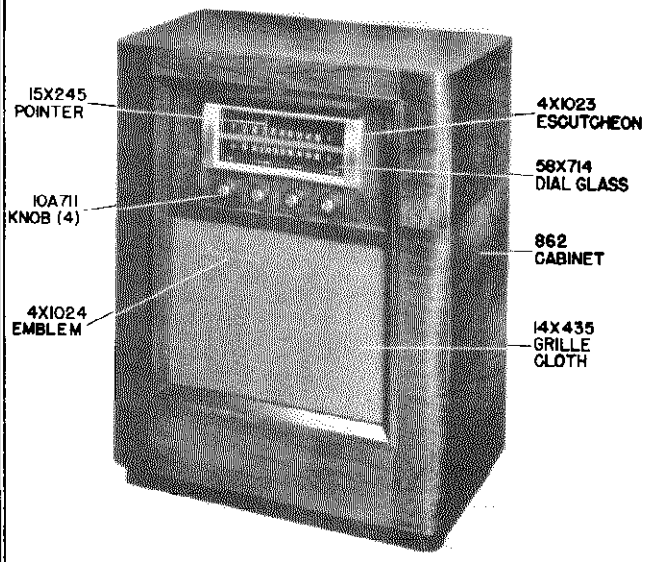

ELECTRICAL SPECIFICATIONS

Power Supply.....105-125 volts AC 50-60 cycles, 60 watts.

Frequency Ranges.....Broadcast 540-1600 KC
Frequency Modulation 88-108 MC

Intermediate Frequency....AM—455KC
FM—10.7 MC

Selectivity.....AM—50 KC broad at 1000 times signal, measured at 1000 KC
I.F. FM—200 KC broad at 2 times down
I.F. FM—800 KC broad at 200 times down

AM Sensitivity.....(For .5 watt output with external antenna) 20 microvolts average

FM Sensitivity.....(For .5 watt output)
200 microvolts average

Power Output.....4.5 watts maximum
2.5 watts 10% distortion

Loud Speaker.....10" PM Dynamic

Voice Coil Impedance.....3.2 ohms 400 cycles

GENERAL DESCRIPTION

This is a two band, six tube (plus rectifier tube) receiver for the reception of both AM and FM stations. The I-F stages use the latest type high gain miniature type tubes and built-in Aerials are provided for the FM and Broadcast bands. Features include, compensator circuits to prevent oscillator drift, automatic volume control, beam power output stage, PM dynamic loud speaker and an electrostatic shield in the power transformer to reduce power line noise.

The receiver is housed in a console cabinet with controls provided for tuning, volume, tone and band or phono selection.

Tube and Dial Lamp Complement

1 6BE6 FM-AM Converter
1 6BA6 1st I-F Amplifier
1 6BA6 2nd I-F Amplifier
1 6AL5 FM Discriminator
1 6AV6 Audio Amplifier, AM 2nd Detector and AVC
1 6V6GT Audio Output
1 5Y3GT Rectifier
2 No. 47 Dial Lamps

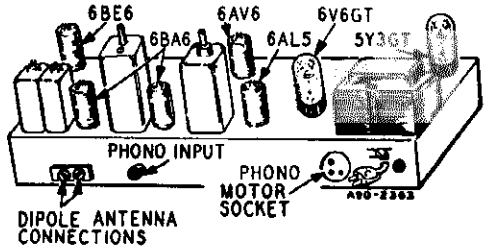

TUBE SOCKET VOLTAGES

Socket voltages are shown on the schematic diagram at the tube socket terminals. All voltages are between the socket terminal and chassis ground. Plate, screen and cathode voltages were taken with a 1000 ohm-per-volt meter with a 300 volt scale used for plate and screen voltages. Audio grid voltages were read with a vacuum tube volt-meter. Conditions of measurement are:

Line voltage.....117 Volts AC
Signal Input.....None

A variation of ±10% is usually permissible.

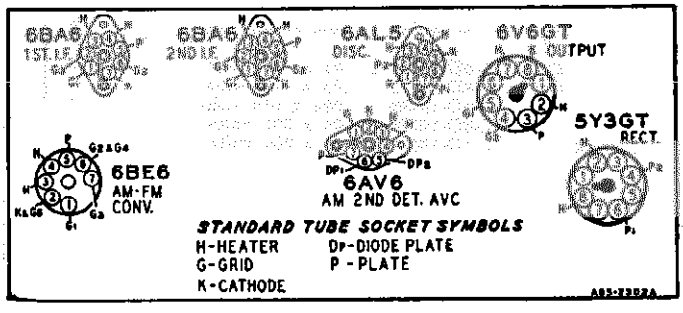

© John F. Rider

MODEL 94RA1-43-6945A

ALIGNMENT PROCEDURES

AM STAGES

The following is required for aligning:

An All Wave Signal Generator Which Will Provide an Accurately Calibrated Signal at the Test Frequencies as Listed.

Output Indicating Meter, Non-Metallic Screwdriver, Dummy Antennas — .1 mf, and 50mmf.

Volume Control Maximum all Adjustments.

Connect Radio Chassis to Ground Post of Signal Generator with a Short Heavy Lead.

Allow Chassis and Signal Generator to "Heat Up" for Several Minutes.

SIGNAL GENERATOR						
FREQUENCY SETTING	CONNECT GENERATOR OUTPUT TO	THROUGH DUMMY ANTENNA	CONNECT GROUND TO	GANG CONDENSER SETTING	ADJUST	ADJUST FOR
455 KC	Control Grid 1st 6BA6 Pin No. 1	.1 mf	Chassis Base	Rotor Fully Open	2nd I.F. C-14 and C-15	Maximum Output
455 KC	Control Grid 6BE6 Pin No. 7 1st Det.	.1 mf	Chassis Base	Rotor Fully Open	1st I.F. Pri. and Sec. (7) and (8)	Maximum Output
1620 KC	Control Grid 6BE6 Pin No. 7	.1 mf	Chassis Base	Rotor Fully Open	Oscillator C-39	Maximum Output
1400 KC	External Antenna Lead	50 mmf	Chassis Base	Turn Rotor to Max. Output. Set Pointer to 1400 KC See Note A	Antenna C-35	Maximum Output

NOTE A—If the pointer is not at 1400 KC on the dial, reset pointer to the 1400 KC mark on the dial scale.

FM STAGES

The following is required for aligning:

An accurately calibrated signal generator providing unmodulated signals at the test frequencies listed below.

Non-metallic screwdriver.

Dummy Antennas and I-F Loading Resistor — .01 mf, 300 ohms and 100K ohms

Zero center scale DC vacuum tube voltmeter having a range of approximately 3 volts.

(If a zero center scale meter is not available, a standard scale vacuum tube voltmeter may be used by reversing the meter connections for negative readings).

Allow chassis and signal generator to "Heat Up" for several minutes.

	SIGNAL GENERATOR		THROUGH DUMMY ANTENNA	BAND SWITCH SETTING	GANG CONDENSER SETTING	ADJUST	ADJUST FOR
	FREQUENCY SETTING	CONNECT GENERATOR OUTPUT TO					
Discriminator	10.7 MC	6BA6 2nd I-F Pin 1 and Chassis	.01 mf	FM	Rotor Fully Open	Disc. Pri. (1) Note A	Maximum Deflection
	10.7 MC	6BA6 2nd I-F Pin 1 and Chassis	.01 mf	FM	Rotor Fully Open	Disc. Sec. (2) Note B	
	10.7 MC	6BA6 2nd I-F Pin 1 and Chassis	.01 mf	FM	Rotor Fully Open	Disc. Pri. (1) Note A	Maximum Deflection
	10.7 MC	6BA6 2nd I-F Pin 1 and Chassis	.01 mf	FM	Rotor Fully Open	Disc. Sec. (2) Note B	
I-F	10.7 MC Note E	6BA6 1st I-F Pin 1 and Chassis	.01 mf	FM	Rotor Fully Open	2nd I-F (3) Note C	Maximum Deflection
	10.7 MC	Unsolder lead from Pin 7 to band switch. Insert 100K ohm resistor between Pin 7 and Ground and feed signal into Pin 7 of 6BE6	.01 mf	FM	Rotor Fully Open	1st I-F Pri. (5) Note C	Maximum Deflection
	10.7 MC	Same as above	.01 mf	FM	Rotor Fully Open	1st I-F Sec. (6) Note C	Maximum Deflection
RECHECK I-F ADJUSTMENTS IN ORDER GIVEN							
Ant. and Osc.	108.5 Note D	Disconnect built-in dipole antenna and connect generator to dipole terminals with resistor in series	300 ohms	FM	Rotor Fully Open	Osc. C-38	Maximum Deflection
	104.5	Same as above	300 ohms	FM	Tune rotor for max. AVC voltage	Ant. C-37	Maximum Deflection
RECHECK ANTENNA & OSC. ADJUSTMENTS IN ORDER GIVEN							

FM ALIGNMENT NOTES

NOTE A—The zero center scale DC vacuum tube voltmeter is to be connected between chassis ground and the AVC line. A signal of .1 volt must be fed into the receiver for this adjustment.

Note output voltage on the zero center DC vacuum tube voltmeter.

NOTE B—Disconnect zero center DC vacuum tube voltmeter from AVC and connect it at the audio takeoff point at the 27 K ohm resistor (R-11) and its junction with the terminal strip. Adjust for zero voltage indication.

NOTE C—Connect zero center DC vacuum tube voltmeter as in Note A. Adjust input to give same output on the zero center DC vacuum tube voltmeter as in Note A.

NOTE D—Remove the 100 K. ohm load resistor and solder the lead from pin 7 of 6BE6 tube to the band switch before attempting to check the antenna and oscillator adjustments.

NOTE E—2nd I-F trimmers (AM) must be aligned before attempting to adjust 2nd I-F (FM) tuning slug.

©John F. Rider

MODEL 94RA1-43-6945A

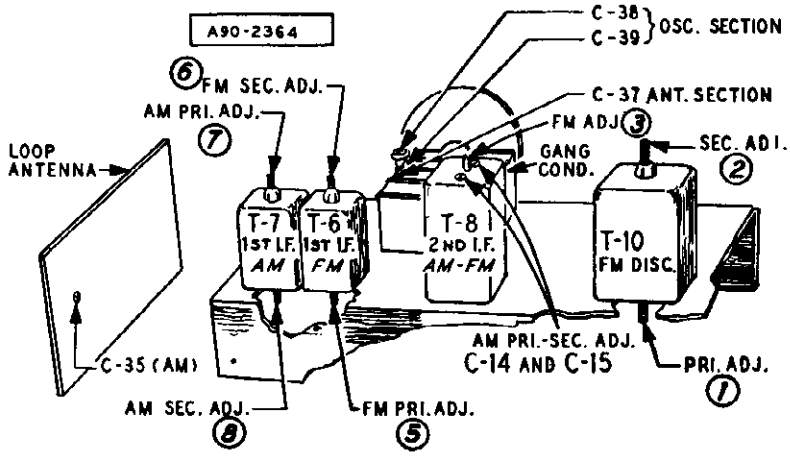

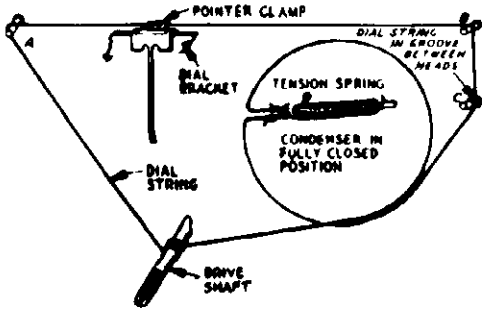

DRIVE CORD REPLACEMENT

DIAL POINTER CORD

Use a new 10X38 drive cord assembly or a new length of cord 46 inches long for the installation. Install the cord as shown in the illustration, winding three turns clockwise around the drive shaft with the turns progressing away from the chassis. After completing the installation rotate the drive shaft a few turns to take up the slack in the cord.

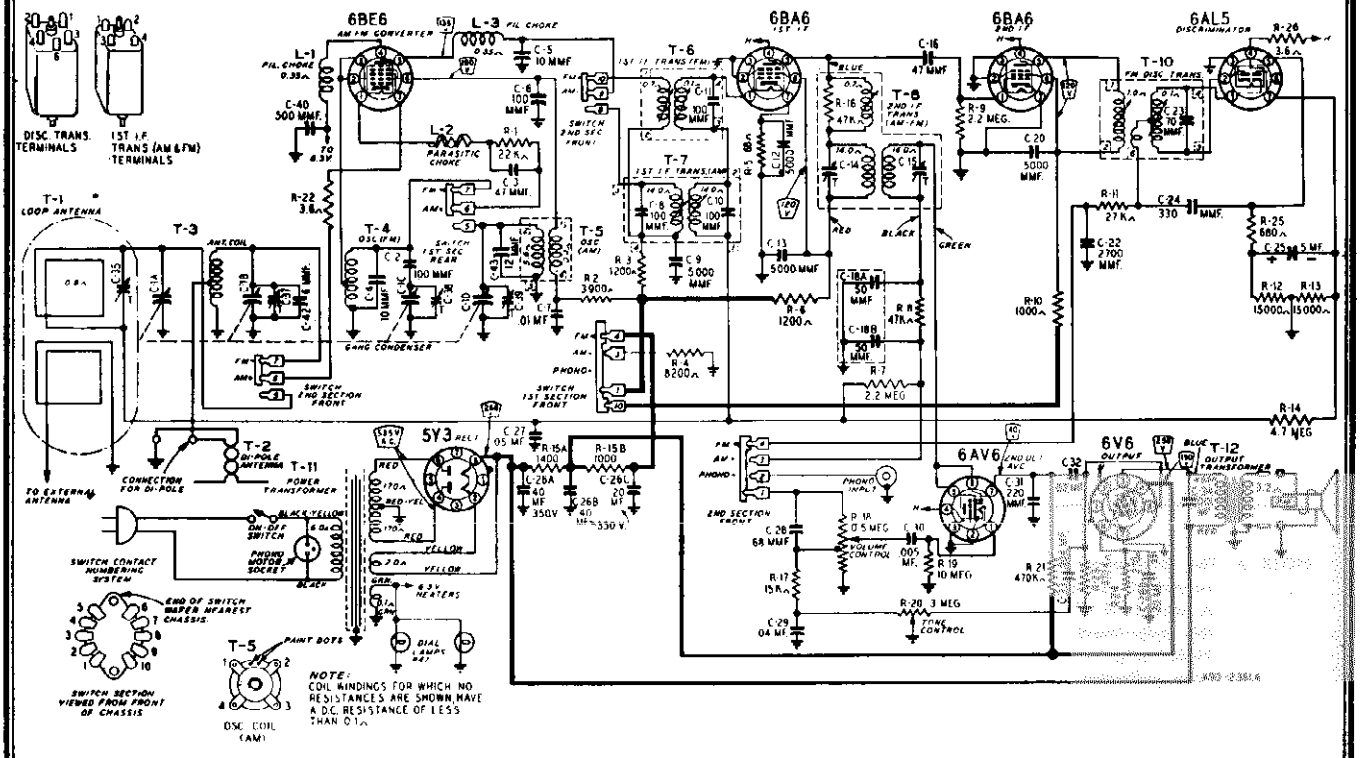

©John F. Rider

MODEL 94RA1-43-6945A

CAPACITORS

SYMBOL	PART NO.	DESCRIPTION	VALUE	TOL.	RATING
C-1A, C-1B, C-1C, C-1D	14A204	Gang Condenser & Pulley			
C-2	47X511	Ceramic	100 MMF	5%	
C-3	47X517	Ceramic	47 MMF	10%	
C-4	47X523	Ceramic	10 MMF	10%	
C-5	47X512	Ceramic	10 MMF	5%	
C-6	47X476	Molded Mica	100 MMF	20%	
C-7	D66103	Tubular	.01 MF	25%	400V
C-8, C-10	Part of T-7 (1st I.F. Trans.-AM)				
C-11	Part of T-6 (1st I.F. Trans.-FM)				
C-9, C-12, C-13, C-20	47X507	Silvered Ceramic (4)	5000 MMF		
C-14, C-15	Part of T-8 (2nd I.F. Trans.-AM-FM)				
C-16	47X463	Ceramic	47 MMF	20%	
C-18A, C-18B	47X112	Dual Mica	50-50 MMF		
C-22	47X492	Molded Mica	2700 MMF	10%	
C-23	Part of T-10 (Discriminator Trans.)				
C-24	47X529	Silvered Mica	330 MMF	10%	
C-25	45X361	Dry Electrolytic	5 MF		100V
C-26A	45X359	4 section Electrolytic	40 MF		350V
C-26B			40 MF		350V
C-26C			20 MF		350V
C-26D			20 MF		25V
C-27	B66503	Tubular	.05 MF	25%	200V
C-28	47X471	Molded Mica	68 MMF	20%	
C-29	B66403	Tubular	.04 MF	25%	200V
C-30	D66502	Tubular	.005 MF	25%	400V
C-31	47X468	Ceramic	220 MMF	20%	
C-32	D66203	Tubular	.02 MF	25%	400V
C-33	B66402	Tubular	.004 MF	25%	200V
C-34	H66102	Tubular	.001 MF	25%	800V
C-35	17A235	Trimmer	2-24 MMF		
C-37, C-39	Part of C-1 Gang Condenser				
C-38	26A489	*Trimmer Ass'y.	1-8 MMF		
C-40	47X508	Ceramic	500 MMF	20%	
C-42	47X521	Ceramic	6 MMF	10%	
C-43	47X522	Ceramic	12 MMF	10%	

* Consists of: 17A257 Tubular Trimmer Slug
17A258 Tubular Trimmer Sleeve

RESISTORS

SYMBOL	PART NO.	DESCRIPTION	VALUE	TOL.	RATING
R-1	B84223	Carbon	22K ohm		0.5W
R-2	B83392	Carbon	3900 ohm		0.5W
R-3, R-6	B84122	Carbon (2)	1200 ohm		0.5W
R-4	B84822	Carbon	8200 ohm		2.0W
R-5	B83680	Carbon	68 ohm		0.5W
R-7, R-9	B85225	Carbon (2)	2.2 megohm		0.5W
R-8	B85473	Carbon	47K ohm		0.5W
R-10	B84102	Carbon	1000 ohm		0.5W
R-11	B84273	Carbon	27K ohm		0.5W
R-12, R-13, R-17	B84153	Carbon (3)	15K ohm		0.5W
R-14	B85475	Carbon	4.7 megohm		0.5W
R-15A, R-15B	43X224	Wire Wound	1400 ohm		6.0W
			1000 ohm		4.0W
R-16	Part of T-8 (2nd I.F. Transformer AM-FM)				
R-21, R-23	B85474	Carbon (2)	470K ohm		0.5W
R-18	36X379	Volume Control & Switch	.5 megohm		
R-19	B85106	Carbon	10 megohm		0.5W
R-20	40X288	Tone Control	3 megohm		
R-22, R-26	43X233	Wire Wound (2)	3.6 ohm		0.5W
R-24	B84271	Carbon	270 ohm		0.5W
R-25	B84681	Carbon	680 ohm		0.5W

TRANSFORMERS AND COILS

SYMBOL	PART NO.	DESCRIPTION
L-1, L-3	9A1882	Filament Choke (2)
L-2	9A1940	Parasitic Choke
T-1	9A1972	"B" Range Loop Antenna Assembly
T-2	9A2003	Dipole Antenna Assembly
T-3	9A1956	Antenna Coil Assembly
T-4	9A1938	Oscillator Coil Assembly (FM)
T-5	9A1929	Oscillator Coil Assembly (AM)
T-6	9A1932	1st I.F. Coil Assembly (FM)
T-7	9A1934	1st I.F. Coil Assembly (AM)
T-8	9A1973	2nd I.F. Coil Assembly (AM-FM)
T-10	9A1970	Discriminator Coil Assembly
T-11	53X290	Power Transformer
T-12	51X134	Output Transformer

MISCELLANEOUS

2A383	Band Change Switch
3A303	Molded Octal Tube Socket (2)
3A304	Phono Motor Socket
3A305	Phono Scoket (Single Pin)
3A426	Tube Socket (miniature) (4)
3A427	Tube Socket (miniature for AM-FM converter)
7A103	#47 Pilot Light (2)
7A215	Pilot Light Socket Assembly
12A480	10" P.M. Speaker
S-25X31	Dial Bracket Assembly
	Consists of:
	25X1610 Dial Bracket
	20X1508 Eyelet
	20X1580 Shoulder Rivet (2)
	20X1581 Shoulder Rivet
	25X1611 Support Bracket, L.H.
	25X1612 Support Bracket, R.H.
	20X1564 Tubular Rivet 3/16" (2)
S-58X21	Dial Assembly
	Consists of:
	S25X31 Dial Bracket Assembly
	58X714 Dial Glass
	41X86 Light Shield (2)
	8X195 Rubber Strip (2)
	28X564 Spring (4)
	28X56 Trimount Stud (4)
6X21	Rubber Grommet (4)
10X38	Drive Cord Assembly
13X546	Line Cord and Plug Assembly
15X245	Pointer
19X179	Flat Washer (Mtg. Set to Cabinet) (3)
19X192	"C" Washer (Drive Shaft) (2)
19X434	#8 Flat Washer (Mtg. 53X290) (2)
20X260	Condenser Cushion Stud (3)
26X509	Drive Shaft
28X113	Drive Cord Tension Spring
30X547	Line Cord Clamp

©John F. Rider

MODEL 94RA1-43-6945B

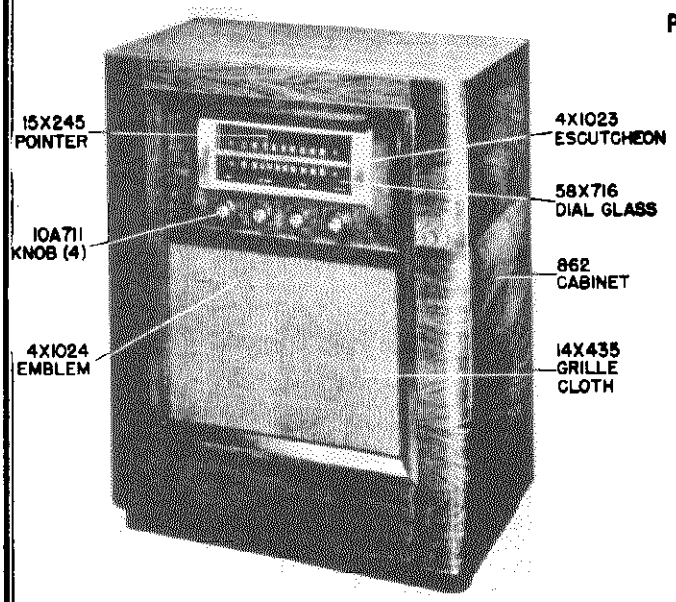

ELECTRICAL SPECIFICATIONS

Power Supply	105-125 volts AC 50-60 cycles, 60 watts.
Frequency Ranges	Broadcast 540-1600 KC Frequency Modulation 88-108 MC
Intermediate Frequency	AM—455KC FM—10.7 MC
Selectivity	AM—45 KC broad at 1000 times signal, measured at 1000 KC I.F. FM—200 KC broad at 2 times down I.F. FM—950 KC broad at 200 times down
AM Sensitivity	(For .5 watt output with external antenna) 10 microvolts average
FM Sensitivity	(For .5 watt output) 100 microvolts average
Power Output	4.5 watts maximum 2.5 watts 10% distortion
Loud Speaker	10" PM Dynamic
Voice Coil Impedance	3.2 ohms 400 cycles

GENERAL DESCRIPTION

This is a two band, six tube (plus rectifier tube) receiver for the reception of both AM and FM stations. The I-F stages use the latest type high gain miniature type tubes and built-in Aerials are provided for the FM and Broadcast bands. Features include, compensator circuits to prevent oscillator drift, automatic volume control, beam power output stage, PM dynamic loud speaker and an electrostatic shield in the power transformer to reduce power line noise.

The receiver is housed in a console cabinet with controls provided for tuning, volume, tone and band or phono selection.

Tube and Dial Lamp Complement

1 6BA7 FM-AM Converter
1 6BA6 1st I-F Amplifier
1 6BA6 2nd I-F Amplifier
1 6AL5 FM Discriminator
1 6AV6 Audio Amplifier, AM 2nd Detector and AVC
1 6V6GT Audio Output
1 5Y3GT Rectifier
2 No. 47 Dial Lamps

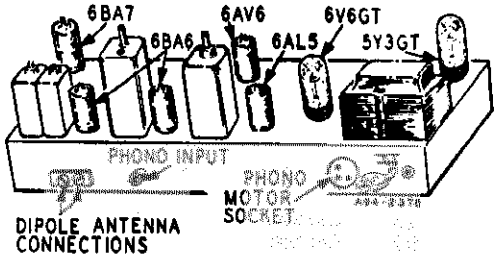

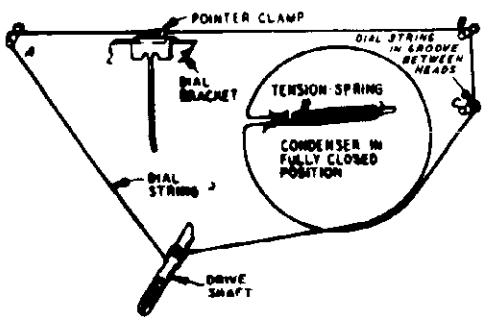

DRIVE CORD REPLACEMENT

DIAL POINTER CORD

Use a new 10X38 drive cord assembly or a new length of cord 46 inches long for the installation. Install the cord as shown in the illustration, winding three turns clockwise around the drive shaft with the turns progressing away from the chassis. After completing the installation rotate the drive shaft a few turns to take up the slack in the cord.

©John F. Rider

MODEL 94RA1-43-6945B

ALIGNMENT PROCEDURES

AM STAGES

The following is required for aligning:
An All Wave Signal Generator Which Will Provide an Accurately Calibrated Signal at the Test Frequencies as Listed.
Output Indicating Meter, Non-Metallic Screwdriver, Dummy Antennas — .1 mf, and 50mmf.

Volume Control Maximum all Adjustments.
Connect Radio Chassis to Ground Post of Signal Generator with a Short Heavy Lead.
Allow Chassis and Signal Generator to "Heat Up" for Several Minutes.

SIGNAL GENERATOR						
FREQUENCY SETTING	CONNECT GENERATOR OUTPUT TO	THROUGH DUMMY ANTENNA	CONNECT GROUND TO	GANG CONDENSER SETTING	ADJUST	ADJUST FOR
455 KC	Control Grid 1st 6BA6 Pin No. 1	.1 mf	Chassis Base	Rotor Fully Open	2nd I.F. C-21 and C-22	Maximum Output
455 KC	Control Grid 6BA7 Pin No. 7 1st Det.	.1 mf	Chassis Base	Rotor Fully Open	1st I.F. Pri. and Sec. (7) and (8)	Maximum Output
1620 KC	Control Grid 6BA7 Pin No. 7	.1 mf	Chassis Base	Rotor Fully Open	Oscillator C-7	Maximum Output
1400 KC	External Antenna Lead	50 mmf	Chassis Base	Turn Rotor to Max. Output Set Pointer to 1400 KC See Note A	Antenna C-2	Maximum Output

NOTE A—If the pointer is not at 1400 KC on the dial, reset pointer to the 1400 KC mark on the dial scale.

FM STAGES

The following is required for aligning:
An accurately calibrated signal generator providing unmodulated signals at the test frequencies listed below.
Non-metallic screwdriver.
Dummy Antennas and I-F Loading Resistor—2500 mmf, 300 ohms and a 3300 ohm .5 watt resistor with short leads.

Zero center scale DC vacuum tube voltmeter having a range of approximately 3 volts.
(If a zero center scale meter is not available, a standard scale vacuum tube voltmeter may be used by reversing the meter connections for negative readings).
Allow chassis and signal generator to "Heat Up" for several minutes.

	SIGNAL GENERATOR		THROUGH DUMMY ANTENNA	BAND SWITCH SETTING	GANG CONDENSER SETTING	ADJUST	ADJUST FOR
	FREQUENCY SETTING	CONNECT GENERATOR OUTPUT TO					
Discriminator	10.7 MC	6BA6 2nd I-F Pin 1 and Chassis	2500 mmf	FM	Rotor Fully Open	Disc. Pri. (1) Note A	Maximum Deflection
	10.7 MC	6BA6 2nd I-F Pin 1 and Chassis	2500 mmf	FM	Rotor Fully Open	Disc. Sec. (2) Note B	
	10.7 MC	6BA6 2nd I-F Pin 1 and Chassis	2500 mmf	FM	Rotor Fully Open	Disc. Pri. (1) Note A	Maximum Deflection
	10.7 MC	6BA6 2nd I-F Pin 1 and Chassis	2500 mmf	FM	Rotor Fully Open	Disc. Sec. (2) Note B	
I-F	10.7 MC Note E	6BA6 1st I-F Pin 1 and Chassis	2500 mmf	FM	Rotor Fully Open	2nd I-F (3) Note C	Maximum Deflection
Discriminator	10.7 MC	6BA6 2nd I-F Pin 1 and Chassis	2500 mmf	FM	Rotor Fully Open	Disc. Pri. (1) Note A	Maximum Deflection
I-F	10.7 MC	Antenna and Chassis	2500 mmf	FM	Rotor Fully Open	1st. I-F Pri. and Sec. (5) and (6) Note C	Maximum Deflection
	10.7 MC	Antenna and Chassis Solder a 3300 ohm resistor across terminals 3 and 4 of 1st. I-F trans.	2500 mmf	FM	Rotor Fully Open	1st. I-F Pri. (5) Note C	Maximum Deflection
	10.7 MC	Antenna and Chassis Note D	2500 mmf	FM	Rotor Fully Open	1st. I-F Sec. (6) Note C	Maximum Deflection
RECHECK I-F ADJUSTMENTS IN ORDER GIVEN							
Oscillator	108.4 Note F	Disconnect built-in dipole antenna and connect generator to dipole terminals with resistor in series	300 ohms	FM	Rotor Fully Open	Osc. C-12	Maximum Deflection
Antenna	104.5	Same as above	300 ohms	FM	Tune rotor for max. AVC voltage	Ant. C-3	Maximum Deflection
RECHECK ANTENNA & OSC. ADJUSTMENTS IN ORDER GIVEN							

FM ALIGNMENT NOTES

NOTE A—The zero center scale DC vacuum tube voltmeter is to be connected between chassis ground and the AVC line. A signal of .1 volt must be fed into the receiver for this adjustment.
Note output voltage on the zero center DC vacuum tube voltmeter

NOTE B—Disconnect zero center DC vacuum tube voltmeter from AVC and connect it at the audio takeoff point at the 27 K ohm resistor (R-11) and its junction with the terminal strip. Adjust for zero voltage indication.

NOTE C—Connect zero center DC vacuum tube voltmeter as in Note A. Adjust input to give same output on the zero center DC vacuum tube voltmeter as in Note A.

NOTE D—Unsolder 3300 ohm resistor from terminals 3 and 4 of 1st I-F transformer and resolder across terminals 1 and 2.

NOTE E—2nd I F trimmers (AM) must be aligned before attempting to adjust 2nd I-F (FM) tuning slug.

NOTE F—Remove the 3300 ohm load resistor before attempting to check the antenna and oscillator adjustments.

©John F. Rider

MODEL 94RA1-43-6945B

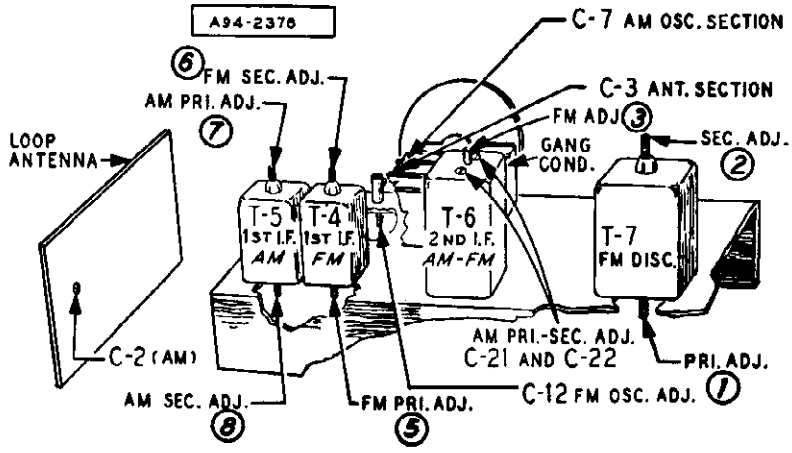

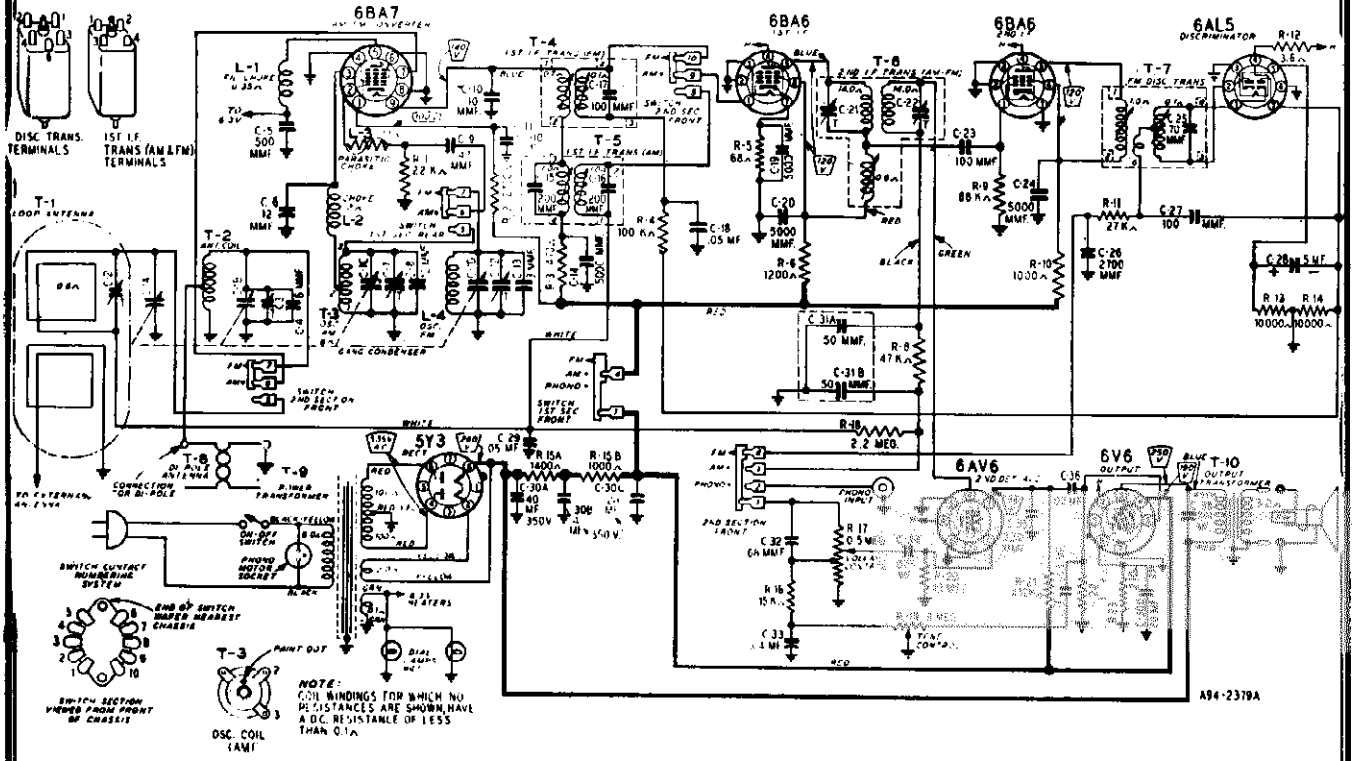

TUBE SOCKET VOLTAGES

Socket voltages are shown on the schematic diagram at the tube socket terminals. All voltages are between the socket terminal and chassis ground. Plate, screen and cathode voltages were taken with a 1000 ohm-per-volt meter with a 300 volt scale used for plate and screen voltages. Audio grid voltages were read with a vacuum tube volt-meter. Conditions of measurement are:

Line voltage.....117 Volts AC

Signal Input.....None

A variation of ±10% is usually permissible.

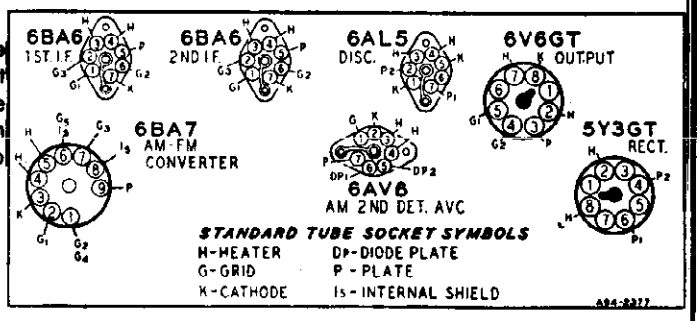

©John F. Rider

MODEL 94RA1-43-6945B

SYMBOL	PART NO.	DESCRIPTION	VALUE	TOL.	RATING
		CAPACITORS			
C-1A C-1B C-1C C-1D	14A204	Gang Condenser and Pulley			
C-2	17A235	Trimmer	2-24 MMF		
C-4	47X521	Ceramic	6 MMF	10%	
C-5	47X508	Ceramic	500 MMF	20%	
C-6 C-8	47X522	Ceramic (2)	12 MMF	10%	
C-9	47X517	Ceramic	47 MMF	10%	
C-10	47X512	Ceramic	10 MMF	5%	
C-11 C-14 C-19 C-20 C-24	47X507	Silvered Mica (5)	5000 MMF		
C-12	17A255	Tubular Trimmer			
C-13	47X547	Ceramic	3 MMF	10%	
C-18 C-29	B66503	Tubular (2)	.05 MF	25%	200V
C-23	47X497	Ceramic	100 MMF	20%	
C-26	47X492	Molded Mica	2700 MMF	10%	
C-27	47X526	Molded Mica	100 MMF	10%	
C-28	45X361	Dry Electrolytic	5 MF		100V
C-30A	45X359	4 Section Electrolytic	40 MF		350V
C-30B			40 MF		350V
C-30C			20 MF		250V
C-30D			20 MF		25V
C-31A C-31B	47X112	Dual Mica	50-50 MMF		
C-32	47X471	Molded Mica	68 MMF	20%	
C-33	B66403	Tubular	.04 MF	25%	200V
C-34	D66502	Tubular	.005 MF	25%	400V
C-35	47X468	Ceramic	220 MMF	20%	
C-36	D66203	Tubular	.02 MF	25%	400V
C-37	B66402	Tubular	.004 MF	25%	200V
C-38	H66102	Tubular	.001 MF	25%	600V
		RESISTORS			
R-1	B84223	Carbon	22K Ohms		0.5W
R-2	B83272	Carbon	2700 Ohms		0.5W
R-3	B84471	Carbon	470 Ohms		0.5W
R-4	B84104	Carbon	100K Ohms		0.5W
R-5	B83680	Carbon	68 Ohms		0.5W
R-6	B84122	Carbon	1200 Ohms		0.5W
R-8	B85473	Carbon	47K Ohms		0.5W
R-9	B85683	Carbon	68K Ohms		0.5W
R-10	B84102	Carbon	1000 Ohms		0.5W
R-11	B84273	Carbon	27K Ohms		0.5W
R-12	43X233	W.W. Resistor	3.6 Ohms		0.5W
R-13 R-14	B84103	Carbon (2)	10K Ohms		0.5W
R-15A R-15B	43X224	W.W. Resistor			
R-16	B84153	Carbon	15K Ohms		0.5W
R-17	36X379	Volume Control and Switch			
R-18	B85225	Carbon	2.2 Megohms		0.5W
R-19	40X288	Tone Control			
R-20	B85106	Carbon	10 Megohms		0.5W
R-21 R-22	B85474	Carbon (2)	470K Ohms		0.5W
R-23	B84271	Carbon	270 Ohms		0.5W
		TRANSFORMERS AND COILS			
L-1	9A1882	Filament Choke			
L-2	35A1	Insulated Choke	2 μh		
L-3	9A1940	Parasitic Choke			
L-4	9A2021	Oscillator Coil Assembly (FM)			
T-1	9A1972	"B" Range Loop Antenna Assembly			
T-2	9A1956	Antenna Coil Assembly			
T-3	9A1997	Oscillator Coil Assembly (AM)			
T-4	9A1932	1st. I.F. Coil Assembly (FM)			
T-5	9A1998	1st. I.F. Coil Assembly (AM)			
T-6	9A1999	2nd. I.F. Coil AM-FM Assembly			
T-7	9A1970	Discriminator Coil Assembly			
T-8	9A2003	Dipole Antenna Assembly			
T-9	53X290	Power Transformer			
T-10	51X134	Output Transformer			
		MISCELLANEOUS			
	2A383	Band Change Switch			
	3A303	Molded Octal Tube Socket (2)			
	3A304	Phono Motor Socket			
	3A305	Phono Socket (Single Pin)			
	3A426	Tube Socket (miniature) (4)			
	3A443	Tube Socket (miniature for AM-FM converter)			
	7A103	#47 Pilot Light (2)			
	7A215	Pilot Light Socket Assembly			
	12A480	10" P.M. Speaker			
	S-25X31	Dial Bracket Assembly			
		Consists of:			
		25X1610 Dial Bracket			
		20X1508 Eyelet			
		20X1580 Shoulder Rivet (2)			
		20X1581 Shoulder Rivet			
		25X1611 Support Bracket, L.H.			
		25X1612 Support Bracket, R.H.			
		20X1564 Tubular Rivet 3/16" (2)			
	S-58X24	Dial Assembly			
		Consists of:			
		S25X31 Dial Bracket Assembly			
		58X716 Dial Glass			
		41X86 Light Shield (2)			
		8X195 Rubber Strip (2)			
		28X564 Spring (4)			
		28X56 Trimount Stud (4)			
	6X21	Rubber Grommet (4)			
	10X38	Drive Cord Assembly			
	13X546	Line Cord and Plug Assembly			
	19X179	Flat Washer (Mtg. Set to Cabinet) (3)			
	19X192	"C" Washer (Drive Shaft) (2)			
	19X434	#8 Flat Washer (Mtg. 53X290) (2)			
	20X260	Condenser Cushion Stud (3)			
	26X509	Drive Shaft			
	28X113	Drive Cord Tension Spring			
	30X547	Line Cord Clamp			

©John F. Rider

MODEL 94RA1-43-7605A

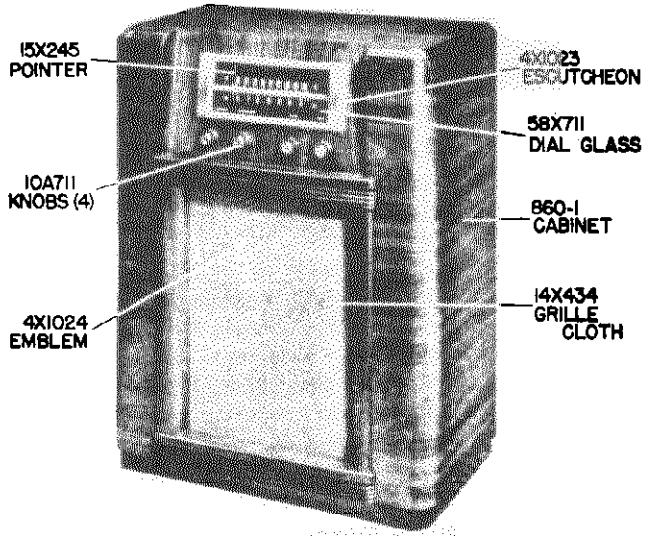

GENERAL DESCRIPTION

This model is a five tube (plus rectifier tube) AC console receiver with automatic record changer. Controls are provided for tuning, volume, tone, and band selection. The dial scale is calibrated in two bands, the broadcast band in channel numbers to cover frequencies between 540-1600 KC and the short wave band directly in megacycles from 5.75 to 18.3 MC. Other features include a built-in loop antenna, automatic volume control, beam power audio output stage and a PM dynamic speaker. A switch is provided on the tone control for selection of either radio or phono operation.

ELECTRICAL SPECIFICATIONS

Power Supply	105-125 volts AC, 60 cycles, 45 watts. (65 watts phono operating)
Frequency Range	B range—540-1600 KC D range—5.75 to 18.3 MC
Intermediate Frequency	455 KC
Selectivity	40 KC broad at 1000 times signal, 1000 KC
Sensitivity	(for .5 watt output) with external antenna B range—9 microvolts average D range—20 microvolts average
Power Output	4 watts maximum 2.3 watts, 10% distortion
Loud Speaker	10" PM dynamic
Voice Coil Impedance	3.2 ohms at 400 cycles
Record Changer	VM-800 RECORD CHANGER*
Tube and Dial Light Complement	1 6SA7 Mixer 1 6SK7 1st I-F Amplifier 1 6SF7 2nd I-F Amplifier & 2nd Det. 1 6SJ7 1st A-F Amplifier 1 6V6GT Power Output 1 6X5GT Rectifier 2 No. 47 Dial Lamps

* See Manual No. 619-5 under Phonographs for parts.

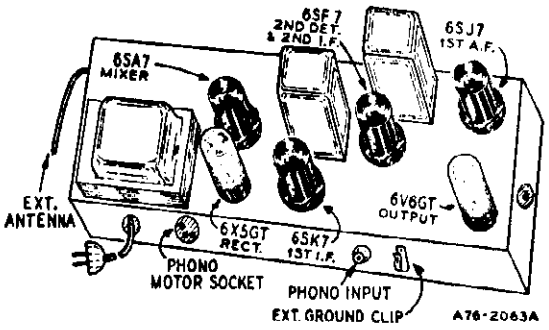

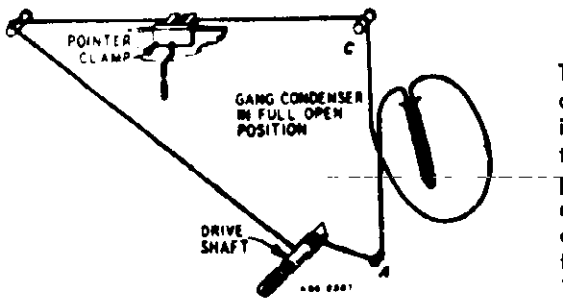

DRIVE CORD REPLACEMENT

Turn the gang condenser to the fully open position. Use a new 10X53 drive cord assembly or a piece of cord 48 inches long and tie one end to the tension spring. Hook the other end of the tension spring to the tab on the drive pulley. Pass the cord through the slot in the drive pulley rim around idler stud A and wind three and one-half turns clockwise around the tuning shaft (turns must progress away from chassis). Then pass cord over idler studs B and C. Wrap cord counterclockwise around drive pulley, stretch tension spring and fasten free end of cord to spring.

©John F. Rider

MODEL 94RA1-43-7605A

ALIGNMENT PROCEDURE

Volume Control—Maximum All Adjustments.

Connect Radio Chassis to Ground Post of Signal Generator with a Short Heavy Lead.

Allow Chassis and Signal Generator to "Heat Up" for several minutes.

The following equipment is required for aligning:
An All Wave Signal Generator which will provide an accurately calibrated signal at the test frequencies as listed.
Output Indicating Meter; Non-Metallic Screwdriver.
Dummy Antennas—.1 mf., 50 mmf., and 400 ohms.

	SIGNAL GENERATOR		Dummy Antenna	Band Switch Setting	CONDENSER SETTING	ADJUST TRIMMERS TO MAXIMUM
	Frequency Setting	Connection at Radio				
I-F	455 kc	6SA7, Pin 8	.1 mf	B Range	Turn Rotor to Full Open	2nd I-F (C-20) & (C-21) 1st I-F (C-15) & (C-16)
RANGE B	1620 kc	Antenna Lead	50 mmf	B Range	Turn Rotor to Full Open	Oscillator Range B (C9)
	1400 kc	Antenna Lead	50 mmf	B Range	Tune Rotor to Max. Output. Set Indicator to 1400 KC. See Note A	Antenna Range B (C3)
	600 kc	Antenna Lead	50 mmf	B Range	Tune Rotor to Max. Output	600 kc (C8) Rock Rotor—See Note B
Repeat above oscillator adjustments at 1620 and 600 KC until readjusting the oscillator Range B Trimmer (C9) causes no further improvement in output.						
RANGE D	18.3 mc	Antenna Lead	400 Ohm	D Range	Turn Rotor to Full Open	Oscillator Range D (C10)
	16 mc	Antenna Lead	400 Ohm	D Range	Tune Rotor to Max. Output	Antenna Range D (C2) Rock Rotor—See Note B
LOOP RANGE B	Reassemble chassis in cabinet. 1400 kc	Antenna Lead	50 mmf	B Range	Tune Rotor to Max. Output	Antenna Range B (C3)

After each range is completed, repeat the procedure as a final check.

NOTE A—If the pointer is not at 1400 KC on the dial, re-set pointer at the 1400 KC mark on the dial scale.

NOTE B—Turn the rotor back and forth and adjust the trimmer until the peak of greatest intensity is obtained.

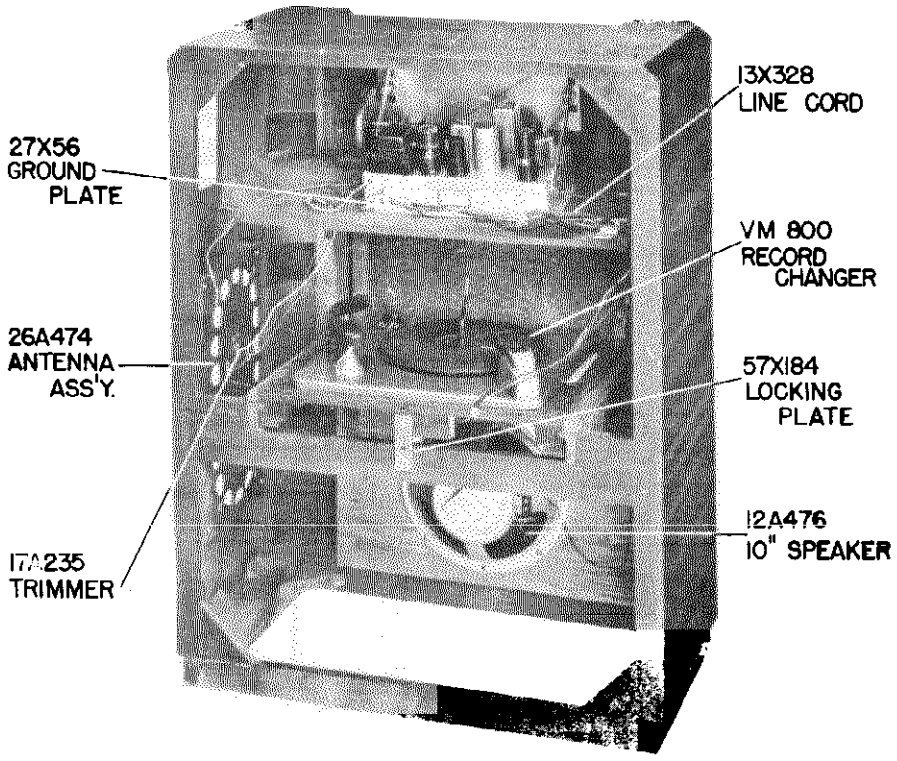

© John F. Rider

MODEL 94RA1-43-7605A

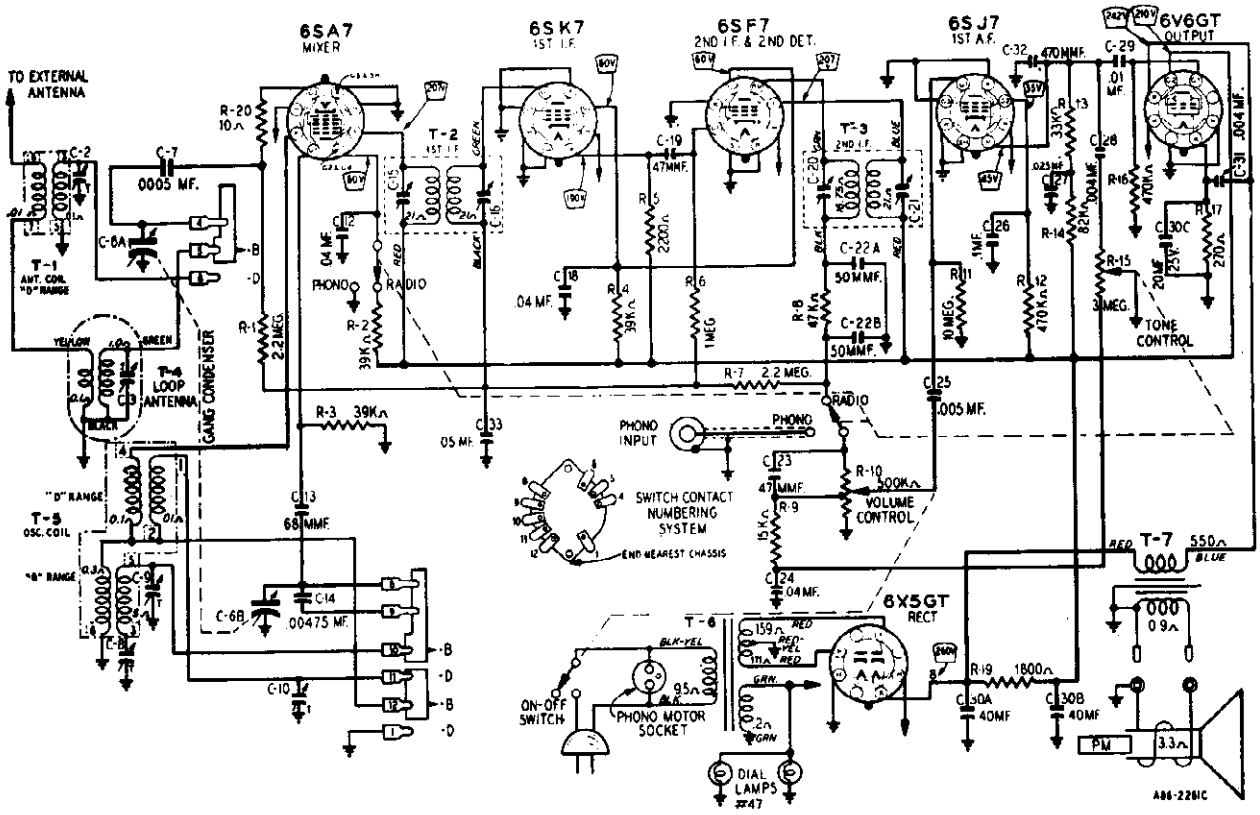

TUBE SOCKET VOLTAGES

Socket voltages are shown on the schematic diagram at the tube socket terminals. All voltages are between the socket terminal and chassis ground.

The readings were taken with a 1000 ohm per volt meter and all plate and screen voltages read on a 500 volt scale. Conditions of measurement are:

Line voltage.....117 volts AC
Volume control.....maximum
Signal input.....none

A variation of +10% is usually permissible.

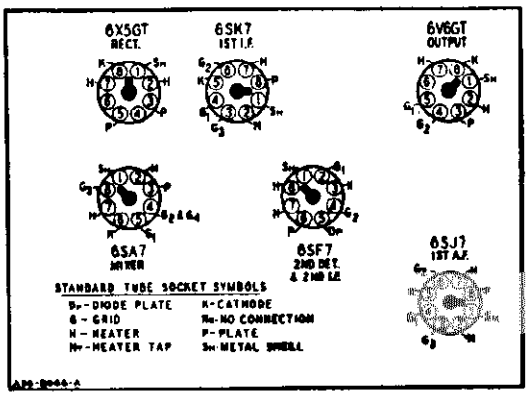

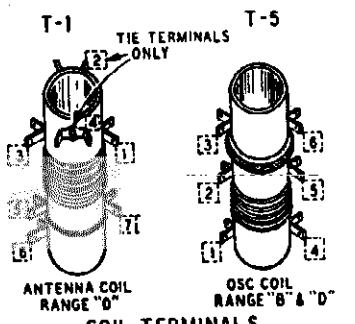

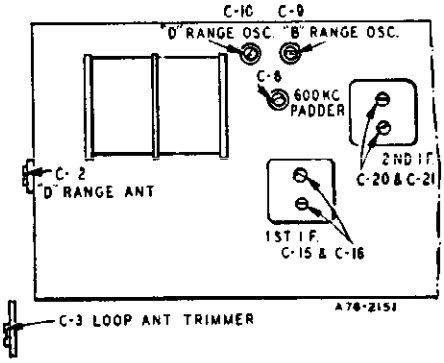

©John F. Rider

MODEL 94RA1-43-7605A

SYMBOL	PART NO.	DESCRIPTION	VALUE	RATING
		CAPACITORS		
C-2	17A164	Trimmer	5-50 MMF	
C-3	17A235	Trimmer	2-24 MMF	
C-6A, C-6B	14A206	Gang condenser with drive pulley		
C-7	B66501	Tubular	.0005 MF	200V
C-8	17A155	Trimmer	350-430 MMF	
C-9, C-10	17A109	Dual Trimmer	2.5-35 MMF	
C-12, C-18	D66403	Tubular (2)	.04 MF	400V
C-13	47X466	Moulded	68 MMF	
C-14	46X289	Tubular	.00475 MF	
C-15, C-16		Part of T-2 (1st I-F coil assembly)		
C-19, C-23	47X463	Moulded (2)	47 MMF	
C-20, C-21		Part of T-3 (2nd I-F coil assembly)		
C-22A, C-22B	47X112	Dual mica	50-50 MMF	
C-24	D64403	Tubular	.04 MF	400V
C-25	D66502	Tubular	.005 MF	400V
C-26	D67104	Tubular	.10 MF	400V
C-27	D64253	Tubular	.025 MF	400V
C-28	D66402	Tubular	.004 MF	400V
C-29	D66103	Tubular	.01 MF	400V
C-30A			40 MF	450V
C-30B	45X346	3 section	40 MF	450V
C-30C		Electrolytic	20 MF	25V
C-31	H66402	Tubular	.004 MF	800V
C-32	47X467	Moulded	470 MMF	
C-33	B66503	Tubular	.05 MF	200V
		RESISTORS		
R-1, R-7	B85225	Carbon (2)	2.2 megohm	0.5W
R-2, R-4	C84393	Carbon (2)	39K ohm	1.0W
R-3	B84393	Carbon	39K ohm	0.5W
R-5	B84222	Carbon	2200 ohm	0.5W
R-6	B85105	Carbon	1 megohm	0.5W
R-8	B85473	Carbon	47K ohm	0.5W
R-9	B84153	Carbon	15K ohm	0.5W
R-10	36X358	Volume control & line switch	500K ohm	
R-11	B85106	Carbon	10 megohms	0.5W
R-12, R-16	B85474	Carbon (2)	470K ohm	0.5W
R-13	B84333	Carbon	33K ohm	0.5W
R-14	B84823	Carbon	82K ohm	0.5W
R-15	40X276	Tone control & radio phono switch	3.0 megohm	
R-17	C84271	Carbon	270 ohm	1.0W
R-19	D84182	Carbon	1800 ohm	2.0W
R-20	B85100	Carbon	10 ohm	0.5W
		TRANSFORMERS AND COILS		
T-1	9A1917	"D" Range antenna coil assembly		
T-2	9A1814	1st I-F coil assembly		
T-3	9A1815	2nd I-F coil assembly		
T-4	26A474	"B" Range loop antenna assembly		
T-5	9A1918	"B" & "D" Range oscillator coil assembly		
T-6	53X282	60 cycle, Standard power transformer		117V
T-7	51X134	Output transformer		
		DIAL AND DRIVE ASSEMBLY		
	S-58X20	Dial bracket ass'y (including dial bracket, idler pulley, rivets, and dial glass)		
	6X21	Rubber grommet (3) } Mtg. gang cond.		
	20X329	Cond. cushion stud (3) } Mtg. gang cond.		
	26X435	Drive shaft		
	19X192	"C" Washer (for drive shaft) (2)		
	15X245	Pointer		
	28X113	Drive cord tension spring		
	10X53	Drive cord assembly		
	7A103	No. 47 Pilot light bulb (2)		
	7A224	Pilot light socket assembly		
	53X711	Dial glass		
	4X1023	Escutcheon		
		MISCELLANEOUS		
	12A476	10" P.M. speaker		
	3A303	Tube socket-octal (8 prong) moulded (6)		
	3A304	Phono motor socket		
	3A305	Phono socket-single pin tip		
	2A372	Band change switch		
	13X328	Line cord and plug assembly		
	10A711	Knob (tuning) (4)		

© John F. Rider

MODELS 94RA1-43-7656A,
94RA1-43-7657A



ELECTRICAL SPECIFICATIONS

Power Supply	105-125 volts AC 60 cycles, 80 watts, 100 watts with record changer
Frequency Ranges	Broadcast 540-1600 KC Frequency Modulation 88-108 MC
Intermediate Frequency	AM—455 KC FM—10.7 MC
Selectivity	AM—43 KC broad at 1000 times signal, measured at 1000 KC I.F. FM—200 KC broad at 2 times down I.F. FM—760 KC broad at 200 times down
AM Sensitivity	(For .5 watt output with external antenna) 10 microvolts average
FM Sensitivity	(For .5 watt output) 30 microvolts average
Power Output	8.5 watts maximum 6.0 watts 10% distortion
Loud Speaker	12" PM Dynamic
Voice Coil Impedance	3.2 ohms 400 cycles
Record Changer	Webster No. 146
Tube and Dial Lamp Complement	1 6BA6 AM-FM R-F Amplifier 1 12AT7 FM & AM Osc. & Mixer 1 6BA6 FM-AM 1st I-F Amplifier 1 6BA6 FM 2nd I-F Amplifier 1 6AL5 FM Detector 1 6AV6 Audio Amplifier, AM 2nd Detector and AVC 2 6K6-GT Audio Output 1 5Y3-GT Rectifier 1 6AV6 Phase Inverter 2 No. 47 Dial Lamps

DRIVE CORD REPLACEMENT

Use a new 10X38 drive cord assembly or a new length of cord 46 inches long for the installation, winding three turns clockwise around the drive shaft with the turns progressing away from the chassis. After completing the installation, rotate the drive shaft a few turns to take up the slack in the cord.

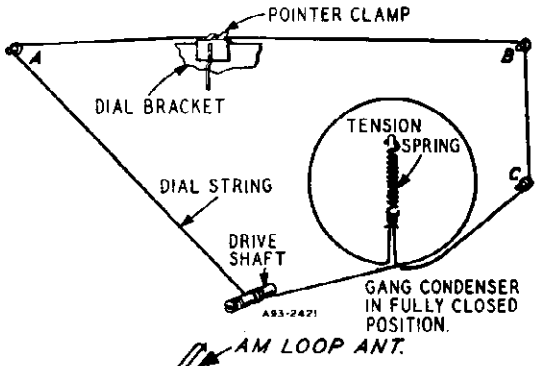

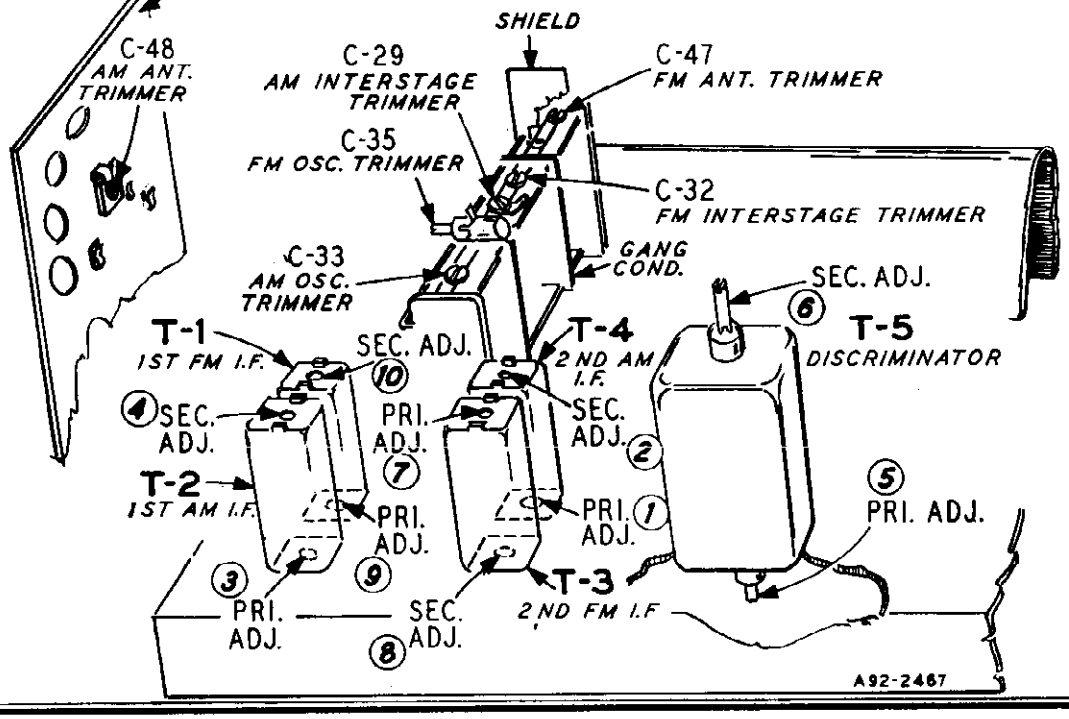

©John F. Rider

MODELS 94RA1-43-7656A,
94RA1-43-7657A

ALIGNMENT PROCEDURE

AM STAGES

The following is required for aligning:
An All Wave Signal Generator Which Will Provide an Accurately Calibrated Signal at the Test Frequencies as Listed.
Output Indicating Meter, Non-Metallic Screwdriver, Dummy Antennas —.1 mf, 200 mmf.
Volume Control—Maximum all Adjustments
Connect Radio Chassis to Ground Post of Signal Generator with a Short Heavy Lead.
Allow Chassis and Signal Generator to "Heat Up" for Several Minutes.

SIGNAL GENERATOR		CONNECT GENERATOR OUTPUT TO	THROUGH DUMMY ANTENNA	BAND SWITCH SETTING	GANG CONDENSER SETTING	ADJUST	ADJUST FOR
	FREQUENCY SETTING						
I-F	455 kc	12AT7 Pin 7 and Chassis	.1 mf	Broadcast	Rotor Fully Open	2nd I-F Pri. & Sec. (1) & (2) 1st I-F Pri. & Sec. (3) & (4)	Maximum Output
Broadcast	1620 kc	External ant. lead	200 mmf	Broadcast	Rotor Fully Open	Broadcast Oscillator C-33	
	1400 kc	External ant. lead	200 mmf	Broadcast	Turn Rotor to Max. Output	Broadcast Interstage C-29	
	1400 kc	External ant. lead	200 mmf	Broadcast	Set pointer to 1400 kc See Note A	Loop Antenna C-48	

Note A—If the pointer is not at 1400 KC on dial, reset pointer at the 1400 KC mark on the dial scale.

FM STAGES

The following equipment is required for aligning:
An accurately calibrated signal generator providing unmodulated signals at the test frequencies listed below.
Non-metallic screwdriver.
Dummy Antennas and I-F Loading Resistor—.01 mf, 300 ohms and 1000 ohms.
Zero center scale DC vacuum tube voltmeter having a range of approximately 3 volts.
(If a zero center scale meter is not available, a standard scale vacuum tube voltmeter may be used by reversing the meter connections for negative readings.)
Allow chassis and signal generator to warm up for several minutes.

	SIGNAL GENERATOR		THROUGH DUMMY ANTENNA	BAND SWITCH SETTING	GANG CONDENSER SETTING	ADJUST	ADJUST FOR
	FREQUENCY SETTING	CONNECT GENERATOR OUTPUT TO					
Discriminator	10.7 MC Note B	6BA6 2nd I-F Pin 1 and Chassis	.01 mf	FM	Rotor Fully Open	Disc. Pri. (5) Note A	Maximum Deflection
	10.7 MC Note B	6BA6 2nd I-F Pin 1 and Chassis	.01 mf	FM	Rotor Fully Open	Disc. Sec. (6) Note C	Zero Center
I-F	10.7 MC Note F	6BA6 1st I-F Pin 1 and Chassis	.01 mf	FM	Rotor Fully Open	2nd I-F Pri. Note A and D (7) 2nd I-F Sec. Note A and E (8)	Maximum Deflection
Discriminator	10.7 MC Note F	6BA6 1st I-F Pin 1 and Chassis	.01 mf	FM	Rotor Fully Open	Disc. Pri. (5) Note A	Maximum Deflection
	10.7 MC Note F	6BA6 1st I-F Pin 1 and Chassis	.01 mf	FM	Rotor Fully Open	Disc. Sec. (6) Note C	Zero Center
	10.7 MC Note F	FM-RF Gang Condenser terminal	.01 mf	FM	Rotor Fully Open	1st I-F Pri. (9) 1st I-F Sec. (10) Notes A, D & E	Maximum Deflection
Recheck I-F Adjustments in order given							
R-F & Osc.	108.4 Note H	Disconnect dipole and connect generator to dipole terminals with resistor in series	300 ohms	FM	Rotor Fully Open	Oscillator C-35 Note G	Maximum Deflection
	104.5	Disconnect dipole and connect generator to dipole terminals with resistor in series	300 ohms	FM	Tune Rotor for Max. AVC voltage	FM Interstage C-32	Maximum Deflection
	104.5	Disconnect dipole and connect generator to dipole terminals with resistor in series	300 ohms	FM	Tune Rotor for Max. AVC voltage	Ant. C-47	Maximum Deflection
Recheck R-F and Osc. Adjustments in order given							

NOTE A—Test Equipment connections are as given in the table. The zero center scale DC vacuum tube voltmeter is to be connected between chassis ground and the AVC line at the junction of resistor R-22 and condenser C-18 for all adjustments except the discriminator secondary adjustment, for which See Note C.

NOTE B—A signal of .1 volt must be fed into the receiver for this adjustment.

NOTE C—Disconnect zero center DC vacuum tube voltmeter from AVC and connect to junction of R-18 and C-62. Adjust for zero voltage indication.

NOTE D—Before adjusting Pri. core connect 1000 ohm load resistor across the 2nd I.F. secondary terminals. Input may have to be increased to .1 volt if receiver is *badly* mis-aligned.

NOTE E—Disconnect 1000 ohm load resistor from secondary terminals and connect across the 2nd I.F. primary terminals. Input may have to be increased to .1 volt if receiver is *badly* mis-aligned.

NOTE F—Input can be reduced to 10,000 microvolts.

NOTE G—Oscillator frequency above signal frequency.

NOTE H—Remove the 1000 ohm load resistor before attempting to check the R-F and oscillator adjustments.

© John F. Rider

MODELS 94RA1-43-7656A,
94RA1-43-7657A

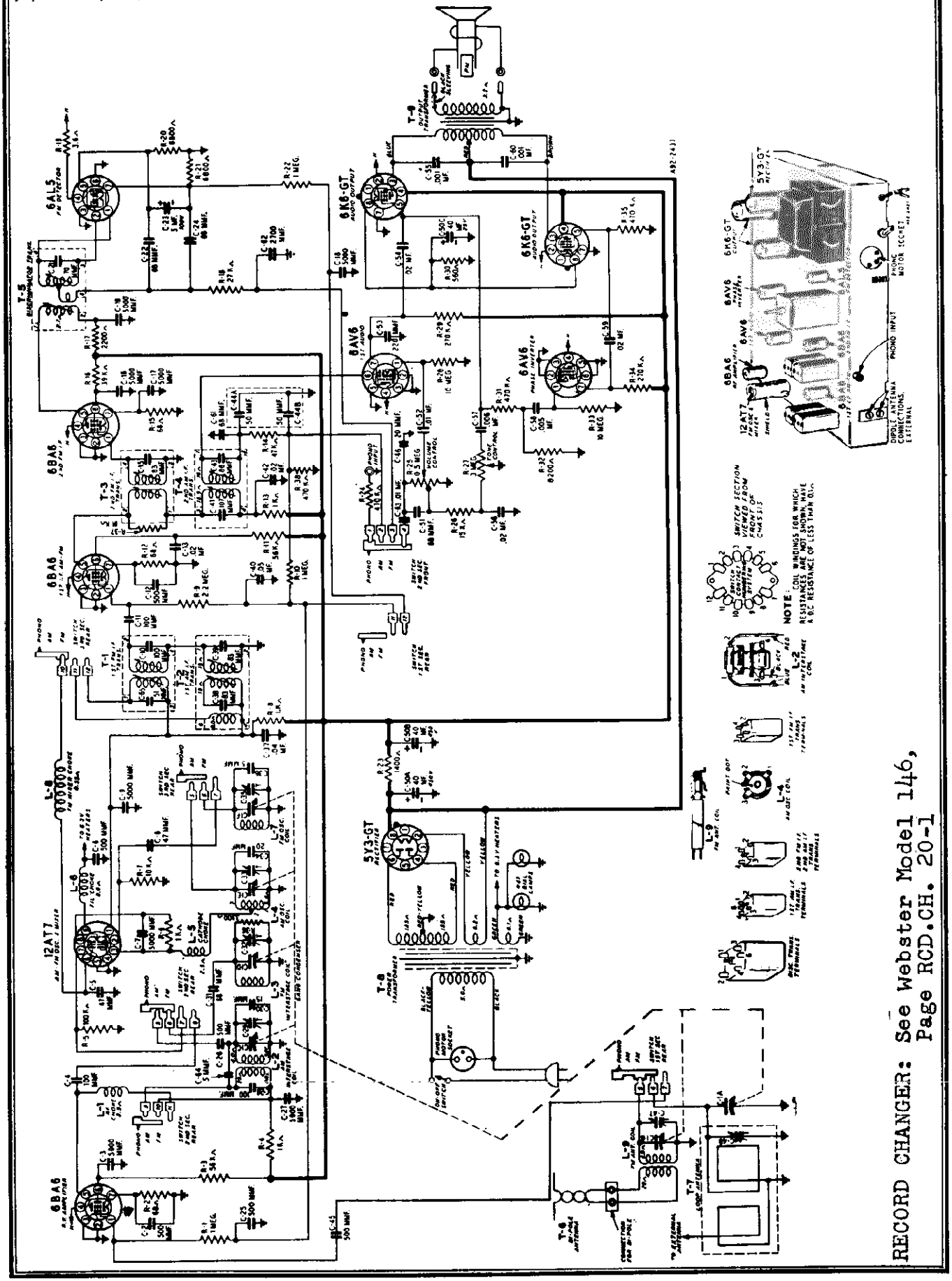

MODELS 94RA1-43-7656A,
94RA1-43-7657A

TUBE SOCKET VOLTAGES

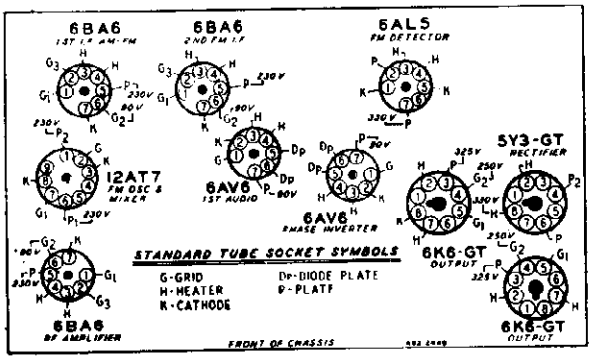

Socket voltages are shown on the Bottom Socket diagram at the tube socket terminals. All voltages are between the socket terminal and chassis ground. Plate, screen and cathode voltages were taken with a 1000 ohm-per-volt meter with a 300 volt scale used for plate and screen voltages. Audio grid voltages were read with a vacuum tube volt-meter. Conditions of measurement are:

Line voltage .....117 Volts AC
Signal Input .....None
A variation of ±10% is usually permissible.

Ref. No.	DESCRIPTION	Part No.
	CAPACITORS	
C-1	Gang Condenser and Pulley	14A207
C-2, C-6, C-12, C-25, C-26, C-45	Capacitor, Ceramic 500 mmf ± 20%	47X496
C-3, C-7, C-9, C-16, C-17, C-18, C-19, C-27	Capacitor, Silvered Mica, 5000 mmf	47X507
C-4	Capacitor, Ceramic, 100 mmf ± 20%	47X497
C-5	Capacitor, Ceramic, 47 mmf ± 5%	47X499
C-8	Capacitor, Ceramic 47 mmf ± 10%	47X498
C-10, C-65	Part of T-1	
C-11, C-28	Capacitor, Ceramic, 100 mmf ± 10%	47X550
C-13, C-42, C-54, C-59	Capacitor, Tubular, .02 mf 600 V	F66203
C-15	Part of T-3	
C-21	Part of T-5	
C-22, C-24, C-31, C-51	Capacitor, Ceramic, 68 mmf ± 10%	47X501
C-23	Capacitor, Dry Electrolytic, 5 mf 100 V	45X361
C-29, C-32, C-33, C-47	Part of C-1	
C-30	Capacitor, Ceramic, 15 mmf ± 10%	47X552
C-34, C-46	Capacitor, Ceramic 20 mmf ± 10%	47X516
C-35	Capacitor, Trimmer, 1-8 mmf	26A489
C-36, C-64	Capacitor, Ceramic, 5 mmf ± 10%	47X549
C-37	Capacitor, Tubular, .04 mf 600 V	F66403
C-38, C-39	Part of T-2	
C-40	Capacitor, Tubular, .05 mf 200 V	B66503
C-41, C-43	Part of T-4	
C-44A, C-44B	Capacitor, Dual Mica, 50-50 mmf.	47X112
C-48	Part of T-7	
C-50A, C-50B, C-50C	Capacitor, 3 section Electrolytic (40 mf 450 V. / 40 mf 450 V. / 40 mf 25 V.)	45X374
C-52	Capacitor, Tubular, .01 mf 600 V.	F66103
C-53	Capacitor, Ceramic, 220 mmf ± 20%	47X468
C-55, C-60	Capacitor, Tubular, .001 mf 600 V	F66102
C-56	Capacitor, Tubular, .02 mf 200 V	B66203
C-57	Capacitor, Tubular, .006 mf 600 V	F66602
C-58	Capacitor, Tubular, .005 mf 200 V	B66502
C-61	Capacitor, Ceramic, 68 mmf ± 20%	47X471
C-62	Capacitor, Molded Mica, 2700 mmf ± 10%	47X492
C-63	Capacitor, Tubular, .01 mf 120 V	46X328
	RESISTORS	
R-1, R-10, R-22	Resistor, Carbon 1 Megohm .5 W.	B85105
R-2, R-12, R-15	Resistor, Carbon 68 Ohms .5 W.	B83680
R-3, R-11	Resistor, Carbon 56K Ohms .5 W.	B84563
R-4, R-6, R-8, R-13	Resistor, Carbon 1000 Ohms .5 W.	B84102
R-5	Resistor, Carbon 100K Ohms .5W.	B85104
R-7	Resistor, Carbon 10K Ohms .5 W.	B84103
R-9	Resistor, Carbon 2.2 Megohm .5 W.	B85225

©John F. Rider

MODELS 94RA1-43-7656A,
94RA1-43-7657A

Ref. No.	DESCRIPTION	Part No.
R-14	Resistor, Carbon 47K Ohms .5 W.	B85473
R-16	Resistor, Carbon 39K Ohms 1.0 W.	C84393
R-17	Resistor, Carbon 2200 Ohms .5 W.	B85222
R-18	Resistor, Carbon 27K Ohms .5 W.	B84273
R-19	Resistor, Wire Wound 3.6 Ohms .5 W.	43X233
R-20, R-21	Resistor, Carbon 6800 Ohms .5 W.	B83682
R-23	Resistor, Wire Wound 1400 Ohms 5.0 W.	43X242
R-24, R-31, R-35, R-38	Resistor, Carbon, 470 K Ohms .5 W	B85474
R-25	Volume Control & Switch .5 meg.	36X381
R-26	Resistor, Carbon 15K Ohms .5 W.	B85153
R-27	Tone Control 3 meg.	40X289
R-28, R-33	Resistor, Carbon 10 Megohm .5 W.	B85106
R-29, R-34	Resistor, Carbon 270K Ohms .5 W.	B85274
R-30	Resistor, Carbon 560 Ohms 2.0 W.	D83561
R-32	Resistor, Carbon 8200 Ohms .5 W.	B84822
R-36	Resistor, Carbon 3300 Ohms .5 W.	B84332
R-37	Resistor, Carbon 91K Ohms .5 W.	B84913

COILS AND TRANSFORMERS

L-1, L-5	Choke, Insulated 2 uh	35A1
L-2	Coil, Interstage (AM)	9A2025
L-3	Coil, Interstage (FM)	9A2024
L-4	Coil, Oscillator (AM)	9A2022
L-6	Choke, Filament	9A1881
L-7	Coil, Oscillator (FM)	9A2023
L-8	Choke (FM Mixer Plate ½ uh)	35A3
L-9	Coil, Antenna (FM)	9A2027
T-1	1st I.F. Coil Assembly (FM)	9A2034
T-2	1st I.F. Coil Assembly (AM)	9A2029
T-3	2nd I.F. Coil Assembly (FM)	9A2030
T-4	2nd I.F. Coil Assembly (AM)	9A1963
T-5	Discriminator Coil Assembly	9A1970
T-6	Dipole Antenna Assembly	9A2004
T-7	"B" Range Loop Antenna Assembly	9A1972
T-8	Power Transformer	53X286
T-9	Output Transformer	51X142

Ref. No.	DESCRIPTION	Part No.
	DIAL AND TUNING PARTS	
	Escutcheon	4X1023
	Rubber Grommets (Mtg. Gang Condenser)	6X21
	Condenser Cushion Stud (Mtg. Gang Condenser)	20X260
	Drive Cord Assembly	10X38
	Pointer	15X245
	"C" Washer (Drive Shaft)	19X192
	Drive Shaft	26X510
	Drive Cord Tension Spring	28X113
	Dial Bracket Assembly	S-25X31
	Consisting of:	
	Tubular Rivet	20X1564
	Shoulder Rivet	20X1580
	Shoulder Rivet	20X1581
	Eyelet	20X1508
	Dial Bracket	25X1610
	Support Bracket, L. H.	25X1611
	Support Bracket, R. H.	25X1612
	Dial Assembly	S-58X26
	Consisting of:	
	Dial Bracket Assembly	S-25X31
	Rubber Strip	8X195
	Trimount Stud	28X56
	Spring	28X564
	Light Shield	41X86
	Dial Glass	58X720
	MISCELLANEOUS	
	Band Change Switch	2A387
	Phono Motor Socket	3A304
	Phono Socket (Single Pin)	3A305
	Molded Octal Tube Socket	3A435
	Tube Socket (miniature, for AM-FM Converter)	3A436
	Tube Socket (Miniature)	3A439
	No. 47 Pilot Light	7A103
	Pilot Light Socket Assembly	7A215
	Knobs (Blonde)	10A728
	Knobs (Mahogany)	10A729
	12" P.M. Speaker	12A490
	Line Cord & Plug Assembly	13X546
	Tube Shield (Miniature)	32X390
	Tube Shield (AM-FM Converter)	32X388

©John F. Rider

MODEL 94RA1-43-7751A

GENERAL DESCRIPTION

This radio is a 7 tube (including rectifier tube) AC receiver with automatic record changer, designed for reception of stations in the standard broadcast band between 540 and 1600 kilocycles and FM (Frequency Modulation) stations in the newly allocated FM Band of 88 - 108 megacycles. Controls are provided on the front panel for tuning, tone, volume and band or phono selection. Special features include two built-in antennas, automatic volume control, compensator circuits to prevent oscillator drift, beam power output stage, permanent magnet dynamic speaker and an electrostatic shield in the power transformer to reduce power line noise.



Tube and Dial Lamp Complement

1 6BA7 FM-AM Converter
1 6BA6 1st I-F Amplifier
1 6BA6 2nd I-F Amplifier
1 6AL5 FM Discriminator
1 6AV6 Audio Amplifier, AM 2nd Detector and AVC
1 6V6GT Audio Output
1 6X5GT Rectifier
2 No. 47 Dial Lamp

MODEL 94RA1-43-7751A

ELECTRICAL SPECIFICATIONS

Power Consumption —
117 volts AC—60 cycles 35 Watts
55 watts phono operating

Power Output —
1.5 watts maximum
.9 watts 10% distortion

Speaker—8" PM dynamic

Frequency Ranges —
Broadcast 540-1600 KC
Frequency modulation 88-108 MC

Intermediate Frequency —
AM 455 KC —.FM 10.7 MC

Selectivity — AM — 60 KC broad at 1000 times signal, measured at 1000 KC

I.F. FM—200 KC broad at 2 times down

I.F. FM — 700 KC broad at 200 times down

AM Sensitivity—(For .5 watt output with external antenna)
10 microvolts average

FM Sensitivity—(For .5 watt output)
100 microvolts average

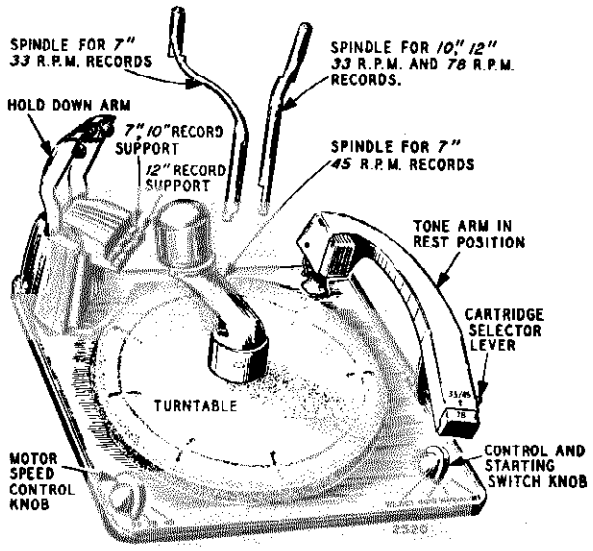

DRIVE CORD REPLACEMENT

Replacement of the drive cord may be accomplished as shown in the illustration. For this purpose use the new drive cord assembly listed in the Replacement Parts List. Turn the gang condenser until the plates are fully meshed. Then install the string as shown, winding three turns clockwise around the tuning shaft with the turns progressing away from the chassis. After the cord is installed, rotate the tuning shaft several times in order to take up any slack in the cord.

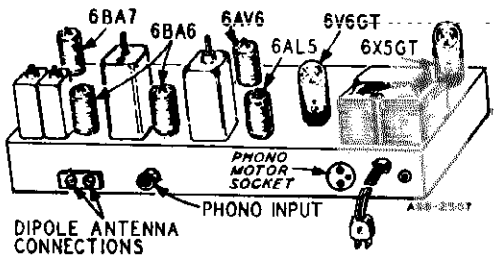

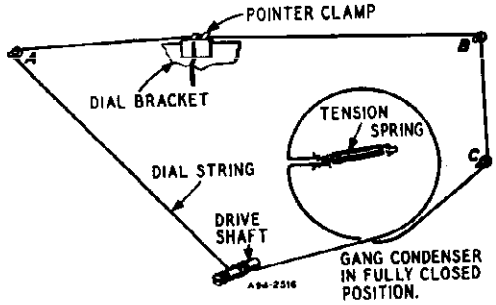

©John F. Rider

©John F Rider

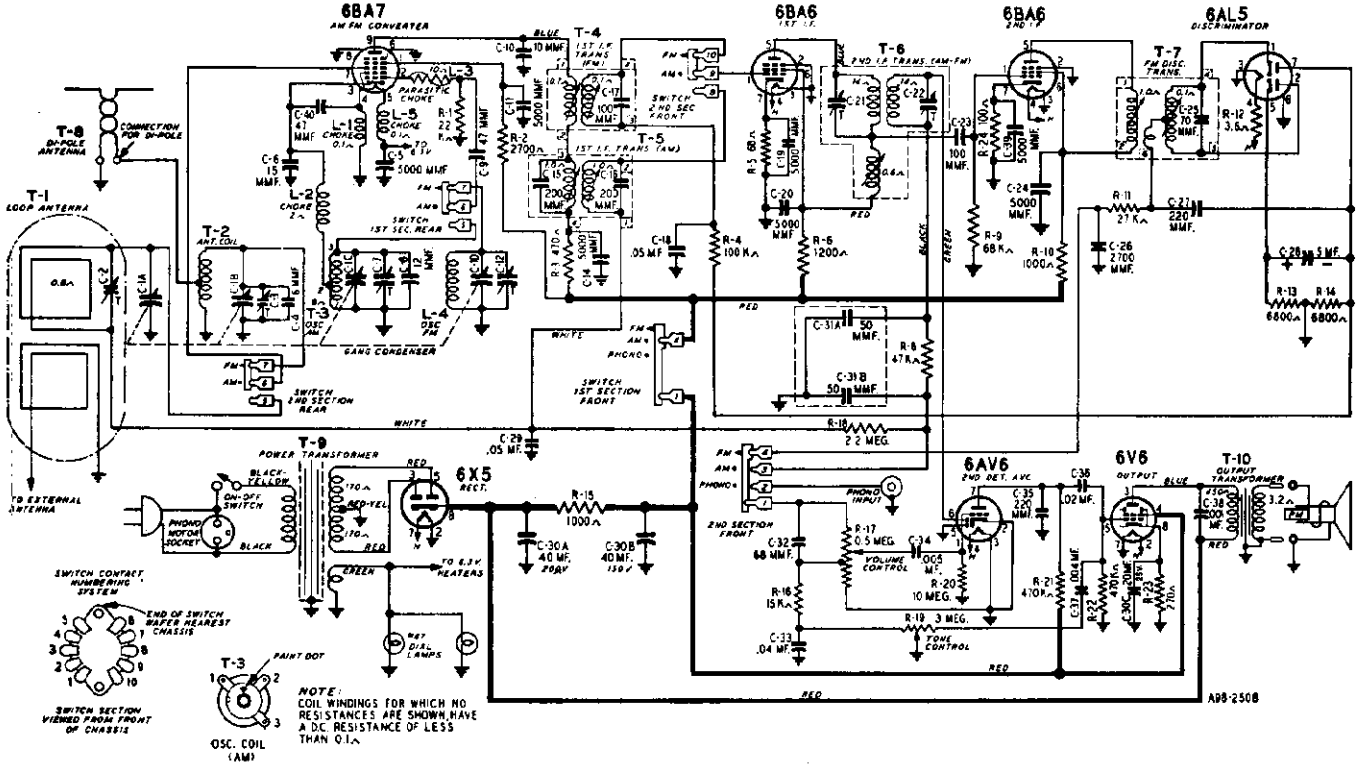

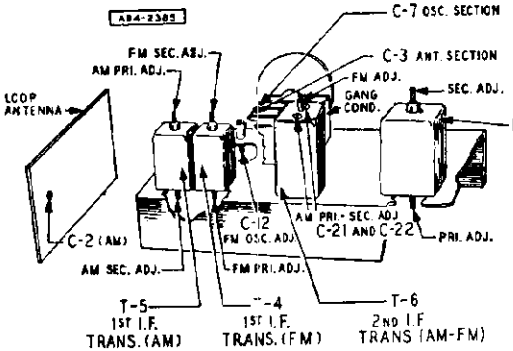

TUBE SOCKET VOLTAGES

Socket voltages are shown on the Bottom Socket diagram at the tube socket terminals. All voltages are between the socket terminal and chassis ground. Plate, screen and cathode voltages were taken with a 1000 ohm-per-volt meter with a 300 volt scale used for plate and screen voltages. Audio grid voltages were read with a vacuum tube volt-meter. Conditions of measurement are:

Line voltage .....117 Volts AC
Signal Input .....None
A Variation of ±10% is usually permissible.

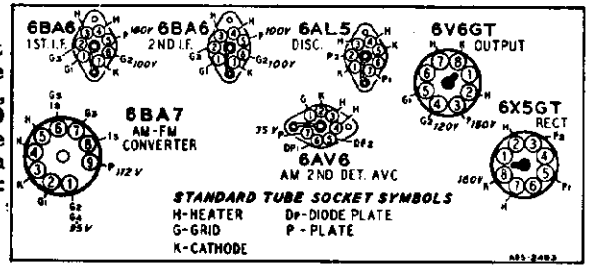

MODEL 94RA1-43-7751A

ALIGNMENT PROCEDURES

AM STAGES

Volume Control Maximum all Adjustments.

Connect Radio Chassis to Ground Post of Signal Generator with a Short Heavy Lead.

Allow Chassis and Signal Generator to "Heat Up" for Several Minutes.

The following is required for aligning:

An All Wave Signal Generator Which Will Provide an Accurately Calibrated Signal at the Test Frequencies as Listed.

Output Indicating Meter, Non-Metallic Screwdriver, Dummy Antennas — .1 mf, and 50 mmf.

SIGNAL GENERATOR					
FREQUENCY SETTING	CONNECTION AT RADIO	GROUND CONNECTION	DUMMY ANTENNA	GANG CONDENSER SETTING	ADJUST TUNING SLUGS AND TRIMMERS
455 KC	Control Grid 1st 6BA6 Pin No. 1	Chassis Base	.1 mf	Turn Rotor to Full Open	2nd I.F. C-21 & C-22
455 KC	Control Grid 6BA7 Pin No. 7 1st Det.	Same as above	.1 mf	Turn Rotor to Full Open	1st I.F. Pri. & Sec.
1620 KC	Control Grid 6BA7 Pin No. 7	Same as above	.1 mf	Turn Rotor to Full Open	Oscillator C-7
1400 KC	External Antenna Clip	Same as above	50 mmf	Turn Dial to 1400 KC. See Note A	Antenna C-2

NOTE A—Set pointer at the 1400 KC mark on the dial scale. Attach pointer to drive cord.

FM STAGES

Allow chassis and signal generator to warm up for several minutes.

The following equipment is required for aligning:

An accurately calibrated signal generator providing unmodulated signals at the test frequencies listed below.

Non-metallic screwdriver.

Dummy Antennas and I-F Loading Resistor—2500 mmf, 300 ohms and a 3300 ohm .5 watt resistor with short leads.

Zero center scale DC vacuum tube voltmeter having a range of approximately 3 volts.

(If a zero center scale meter is not available, a standard scale vacuum tube voltmeter may be used by reversing the meter connections for negative readings.)

	SIGNAL GENERATOR					
	FREQUENCY SETTING	CONNECTION AT RADIO	DUMMY ANTENNA	BAND SWITCH SETTING	CONDENSER SETTING	ADJUSTMENT FOR MAX. METER DEFLECTION
Discriminator	10.7 MC	6BA6 2nd I-F Pin 1 & Chassis	2500 mmf	FM	Rotor Fully Open	Disc. Pri. Note A
	10.7 MC	Same as above	2500 mmf	FM	Rotor Fully Open	Disc. Sec. Note B
	10.7 MC	Same as above	2500 mmf	FM	Rotor Fully Open	Disc. Pri. Note A
	10.7 MC	Same as above	2500 mmf	FM	Rotor Fully Open	Disc. Sec. Note B
I-F	10.7 MC Note E	6BA6 1st I-F Pin 1 & Chassis	2500 mmf	FM	Rotor Fully Open	2nd I-F Note C
Discriminator	10.7 MC	6BA6 2nd I-F Pin 1 & Chassis	2500 mmf	FM	Rotor Fully Open	Disc. Pri. Note A
I-F	10.7 MC	Antenna and Chassis	2500 mmf	FM	Rotor Fully Open	1st. I-F Pri. and Sec. and Note C
	10.7 MC	Antenna and Chassis Solder a 3300 ohm resistor across terminals 3 and 4 of 1st. I-F trans.	2500 mmf	FM	Rotor Fully Open	1st. I-F Pri. Note C
	10.7 MC	Antenna and Chassis Note D	2500 mmf	FM	Rotor Fully Open	1st. I-F Sec. Note C
	RECHECK I-F ADJUSTMENTS IN ORDER GIVEN					
Oscillator	108.4 Note F	Disconnect dipole antenna and connect generator to dipole terminals with resistor in series	300 ohms	FM	Rotor Fully Open	Osc. C-12
Antenna	104.5	Same as above	300 ohms	FM	Tune rotor for max. AVC voltage	Ant. C-3
	RECHECK ANTENNA & OSC. ADJUSTMENTS IN ORDER GIVEN					

FM ALIGNMENT NOTES

NOTE A—The zero center scale DC vacuum tube voltmeter is to be connected between chassis ground and the AVC line. A signal of .1 volt must be fed into the receiver for this adjustment.
Note output voltage on the zero center DC vacuum tube voltmeter.

NOTE B—Disconnect zero center DC vacuum tube voltmeter from AVC and connect it to the audio takeoff point at the 27 K ohm resistor (R-11) and its junction with the terminal strip. Adjust for zero voltage indication.

NOTE C—Connect zero center DC vacuum tube voltmeter as in Note A. Adjust input to give same output on the zero center DC vacuum tube voltmeter as in Note A.

NOTE D—Unsolder 3300 ohm resistor from terminals 3 and 4 of 1st I-F transformer and resolder across terminals 1 and 2.

NOTE E—2nd I-F Trimmers (AM) must be aligned before attempting to adjust 2nd I-F (FM) tuning slug.

NOTE F—Remove the 3300 ohm load resistor before attempting to check the antenna and oscillator adjustments.

© John F. Rider

MODEL 94RA1-43-7751A

REPLACEMENT PARTS LIST

When ordering parts, specify part number, model number and any other pertinent information.

Ref. No.	DESCRIPTION	Part No.
	CAPACITORS	
C-1	Gang Condenser & Pulley	14A204
C-2	Capacitor, Trimmer; 2-24 mmf	17A256
C-3, C-7	Part of C-1 (Gang Condenser)	
C-4	Capacitor, Ceramic; 6 mmf	47X521
C-5, C-11, C-14, C-19, C-20, C-24, C-39	Capacitor, Ceramic; 5000 mmf	47X507
C-6	Capacitor, Ceramic; 15 mmf	47X552
C-8	Capacitor, Ceramic; 12 mmf	47X522
C-9	Capacitor, Ceramic; 47 mmf ± 10%	47X517
C-10	Capacitor, Ceramic; 10 mmf	47X512
C-12	Capacitor, Trimmer; 1-8 mmf	17A255
C-15, C-16	Part of T-5 (1st I-F Trans. AM)	
C-17	Part of T-4 (1st I-F Trans. FM)	
C-18, C-29	Capacitor, Tubular; .05 mf 200 V	B66503
C-21, C-22	Part of T-6 (2nd I-F Trans. AM-FM)	
C-23	Capacitor, Ceramic; 100 mmf	47X476
C-25	Part of T-7 (FM Disc. Trans.)	
C-26	Capacitor, Molded Mica; 2700 mmf	47X492
C-27, C-35	Capacitor, Ceramic; 220 mmf	47X468
C-28	Capacitor, Dry Electrolytic; 5 mf 100 V	45X361
C-30A, C-30B, C-30C	Capacitor, Dry Electrolytic; 40 mf 200 V, 40 mf 150 V, 20 mf 25 V	45X360
C-31A, C-31B	Capacitor, Dual Mica; 50-50 mmf	47X112
C-32	Capacitor, Molded Mica; 68 mmf	47X471
C-33	Capacitor, Tubular; .04 mf 200 V	B66403
C-34	Capacitor, Tubular; .005 mf 400 V	D66502
C-36	Capacitor, Tubular; .02 mf 400 V	D66203
C-37	Capacitor, Tubular; .004 mf 200 V	B66402
C-38	Capacitor, Tubular; .001 mf 800 V	H66102
C-40	Capacitor, Ceramic; 47 mmf ± 20%	47X509
	RESISTORS	
R-1	Resistor, Carbon; 22K ohms 0.5 W	B84223
R-2	Resistor, Carbon; 2700 ohms 0.5 W	B84272
R-3	Resistor, Carbon; 470 ohms 0.5 W	B84471
R-4	Resistor, Carbon; 100K ohms 0.5 W	B85104
R-5	Resistor, Carbon; 68 ohms 0.5 W	B83680
R-6	Resistor, Carbon; 1200 ohms 0.5 W	B85122
R-8	Resistor, Carbon; 47K ohms 0.5 W	B85473
R 9	Resistor, Carbon; 68K ohms 0.5 W	B84683
R-10	Resistor, Carbon; 1000 ohms 0.5 W	B85102
R-11	Resistor, Carbon; 27K ohms 0.5 W	B85273
R-12	Resistor, Wirewound; 3.6 ohms 0.5 W	43X233
R-13, R-14	Resistor, Carbon; 6800 ohms 0.5 W	B84682
R-15	Resistor, Carbon; 1000 ohms 2.0 W	D84102
R-16	Resistor, Carbon; 15K ohms 0.5 W	B85153
R-17	Volume Control & Switch; .5 megohm	36X372
R-18	Resistor, Carbon; 2.2 megohms 0.5 W	B85225
R-19	Tone Control; 3 megohms	40X285
R-20	Resistor, Carbon; 10 megohms 0.5 W	B85106
R-21, R-22	Resistor, Carbon; 470K ohms 0.5 W	B85474
R-23	Resistor, Carbon; 270 ohms 0.5 W	B84271
R-24	Resistor, Carbon; 100 ohms 0.5 W	B84101
	TRANSFORMERS AND COILS	
L-1, L-5	Choke, Filament	9A2044
L-2	Choke, Insulated 2 uh.	35A5
L-3	Choke, Parasitic	9A1940
L-4	Coil, Oscillator (FM)	9A2021
T-1	"B" Range Loop Antenna Assembly	9A2052
T-2	Coil, Antenna	9A1956
T-3	Coil, Oscillator (AM)	9A1997
T-4	1st I-F Trans. (FM)	9A2037
T-5	1st I-F Trans. (AM)	9A2038
T-6	2nd I-F Trans. (AM-FM)	9A1999
T-7	Discriminator Coil Assembly	9A2036
T-8	Dipole Antenna	9A2003
T-9	Power Transformer	53X291
T-10	Output Transformer	51X134
	DIAL AND TUNING PARTS	
	Rubber Grommets (mtg. Gang Cond.)	6X67
	Pointer	15X251
	"C" Washer (Drive Shaft)	19X192
	Condenser Cushion Stud	20X260
	Drive Shaft	26X486
	Drive Cord Tension Spring	28X113
	Dial Glass	58X725
	MISCELLANEOUS	
	Band Change Switch	2A375
	Tube Socket, Molded (Octal)	3A303
	Phono Motor Socket	3A304
	Phono Socket (Single Pin)	3A305
	Tube Socket (Miniature)	3A426
	Tube Socket (AM-FM Converter)	3A443
	No. 47 Pilot Light	7A103
	Pilot Light Socket Assembly	7A199
	Knob (Tuning)	10A699
	Knob (Off-Volume)	10A700
	Knob (Tone)	10A701
	Knob (FM-BC-PH)	10A702
	Speaker, 8" P.M.	12A477
	Record changer—3 speed	28A165
	Escutcheon	4X1060
	Drive Cord Assembly	10X72
	Line Cord & Plug Assembly	13X546
	Line Cord Clamp	30X547

© John F. Rider

MODEL 94RA1-43-7853A

MODEL 94RA1-43-7853A

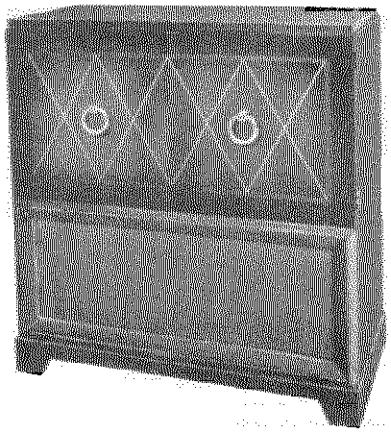

GENERAL DESCRIPTION

This radio is a 7 tube (including rectifier tube) AC receiver with automatic record changer, designed for reception of stations in tthe standard broadcast band between 540 and 1600 kilocycles and FM (Frequency Modulation) stations in the newly allocated FM Band of 88-108 megacycles. Controls are provided on the front panel for tuning, tone, volume and band or phono selection. Special features include two built-in antennas, automatic volume control, compensator circuits to prevent oscillator drift, beam power output stage, permanent magnet dynamic speaker and an electrostatic shield in the power transformer to reduce power line noise.

Tube and Dial Lamp Complement

1 6BA7 FM-AM Converter
1 6BA6 1st I-F Amplifier
1 6BA6 2nd I-F Amplifier
1 6AL5 FM Discriminator
1 6AV6 Audio Amplifier, AM 2nd Detector and AVC
1 6V6GT Audio Output
1 5Y3GT Rectifier
2 No. 47 Dial Lamps

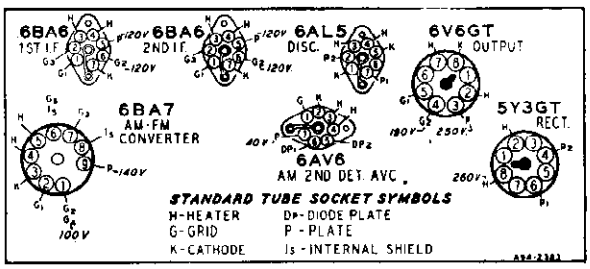

TUBE SOCKET VOLTAGES

Socket voltages are shown on the Bottom Socket diagram at the tube socket terminals. All voltages are between the socket terminal and chassis ground. Plate, screen and cathode voltages were taken with a 1000 ohm-per-volt meter with a 300 volt scale used for plate and screen voltages. Audio grid voltages were read with a vacuum tube volt-meter. Conditions of measurement are:

Line voltage .....117 Volts AC
Signal Input .....None
A Variation of ±10% is usually permissible.

ELECTRICAL SPECIFICATIONS

Power Supply	105-125 volts AC 60 cycles, 60 watts. 80 watts with record changer.
Frequency Ranges	Broadcast 540-1600 KC Frequency Modulation 88-108 MC
Intermediate Frequency	AM—455 KC FM—10.7 MC
Selectivity	AM—45 KC broad at 1000 times signal, measured at 1000 KC I.F. FM—200 KC broad at 2 times down I.F. FM—950 KC broad at 200 times down
AM Sensitivity	(For .5 watt output with external antenna) 10 microvolts average
FM Sensitivity	(For .5 watt output) 100 microvolts average
Power Output	4.5 watts maximum 2.5 watts 10% distortion
Loud Speaker	8" PM Dynamic
Voice Coil Impedance	3.2 ohms 400 cycles

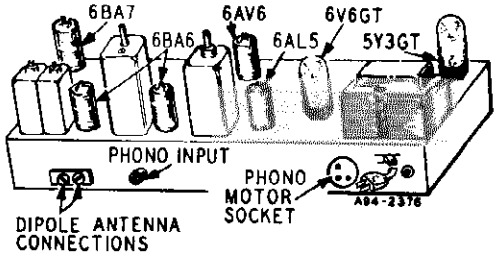

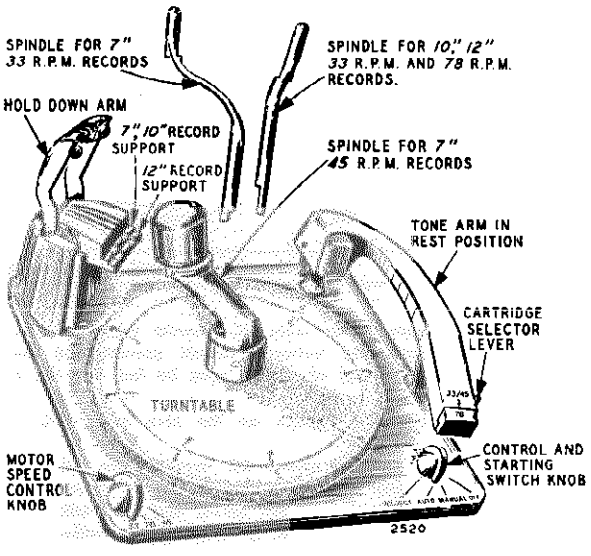

©John F. Rider

MODEL 94RA1-43-7853A

ALIGNMENT PROCEDURES

AM STAGES

Volume Control Maximum all Adjustments.

Connect Radio Chassis to Ground Post of Signal Generator with a Short Heavy Lead.

Allow Chassis and Signal Generator to "Heat Up" for Several Minutes.

The following is required for aligning:

An All Wave Signal Generator Which Will Provide an Accurately Calibrated Signal at the Test Frequencies as Listed.

Output Indicating Meter, Non-Metallic Screwdriver, Dummy Antennas — .1 mf, and 50 mmf.

SIGNAL GENERATOR					
FREQUENCY SETTING	CONNECTION AT RADIO	GROUND CONNECTION	DUMMY ANTENNA	GANG CONDENSER SETTING	ADJUST TUNING SLUGS AND TRIMMERS
455 KC	Control Grid 1st 6BA6 Pin No. 1	Chassis Base	.1 mf	Turn Rotor to Full Open	2nd I.F. C-21 & C-22
455 KC	Control Grid 6BA7 Pin No. 7 1st Det.	Same as above	.1 mf	Turn Rotor to Full Open	1st I.F. Pri. & Sec.
1620 KC	Control Grid 6BA7 Pin No. 7	Same as above	.1 mf	Turn Rotor to Full Open	Oscillator C-7
1400 KC	External Antenna Clip	Same as above	50 mmf	Turn Dial to 1400 KC. See Note A	Antenna C-2

NOTE A—Set pointer at the 1400 KC mark on the dial scale. Attach pointer to drive cord

FM STAGES

Allow chassis and signal generator to warm up for several minutes.

The following equipment is required for aligning:

An accurately calibrated signal generator providing unmodulated signals at the test frequencies listed below.

Non-metallic screwdriver.

Dummy Antennas and I-F Loading Resistor—2500 mmf, 300 ohms and a 3300 ohm .5 watt resistor with short leads.

Zero center scale DC vacuum tube voltmeter having a range of approximately 3 volts.

(If a zero center scale meter is not available, a standard scale vacuum tube voltmeter may be used by reversing the meter connections for negative readings.)

	SIGNAL GENERATOR					
	FREQUENCY SETTING	CONNECTION AT RADIO	DUMMY ANTENNA	BAND SWITCH SETTING	CONDENSER SETTING	ADJUSTMENT FOR MAX. METER DEFLECTION
Discriminator	10.7 MC	6BA6 2nd I-F Pin 1 & Chassis	2500 mmf	FM	Rotor Fully Open	Disc. Pri. Note A
	10.7 MC	Same as above	2500 mmf	FM	Rotor Fully Open	Disc. Sec. Note B
	10.7 MC	Same as above	2500 mmf	FM	Rotor Fully Open	Disc. Pri. Note A
	10.7 MC	Same as above	2500 mmf	FM	Rotor Fully Open	Disc. Sec. Note B
I-F	10.7 MC Note E	6BA6 1st I-F Pin 1 & Chassis	2500 mmf	FM	Rotor Fully Open	2nd I-F Note C
Discriminator	10.7 MC	6BA6 2nd I-F Pin 1 & Chassis	2500 mmf	FM	Rotor Fully Open	Disc. Pri. Note A
I-F	10.7 MC	Antenna and Chassis	2500 mmf	FM	Rotor Fully Open	1st. I-F Pri. and Sec. and Note C
	10.7 MC	Antenna and Chassis Solder a 3300 ohm resistor across terminals 3 and 4 of 1st. I-F trans.	2500 mmf	FM	Rotor Fully Open	1st. I-F Pri. Note C
	10.7 MC	Antenna and Chassis Note D	2500 mmf	FM	Rotor Fully Open	1st. I-F Sec. Note C
	RECHECK I-F ADJUSTMENTS IN ORDER GIVEN					
Oscillator	108.4 Note F	Disconnect dipole antenna and connect generator to dipole terminals with resistor in series	300 ohms	FM	Rotor Fully Open	Osc. C-12
Antenna	104.5	Same as above	300 ohms	FM	Tune rotor for max. AVC voltage	Ant. C-3
	RECHECK ANTENNA & OSC. ADJUSTMENTS IN ORDER GIVEN					

FM ALIGNMENT NOTES

NOTE A—The zero center scale DC vacuum tube voltmeter is to be connected between chassis ground and the AVC line. A signal of .1 volt must be fed into the receiver for this adjustment.
Note output voltage on the zero center DC vacuum tube voltmeter.

NOTE B—Disconnect zero center DC vacuum tube voltmeter from AVC and connect it to the audio takeoff point at the 27 K ohm resistor (R-11) and its junction with the terminal strip. Adjust for zero voltage indication.

NOTE C—Connect zero center DC vacuum tube voltmeter as in Note A. Adjust input to give same output on the zero center DC vacuum tube voltmeter as in Note A.

NOTE D—Unsolder 3300 ohm resistor from terminals 3 and 4 of 1st I-F transformer and resolder across terminals 1 and 2.

NOTE E—2nd I-F Trimmers (AM) must be aligned before attempting to adjust 2nd I-F (FM) tuning slug.

NOTE F—Remove the 3300 ohm load resistor before attempting to check the antenna and oscillator adjustments.

© John F. Rider

©John F. Rider

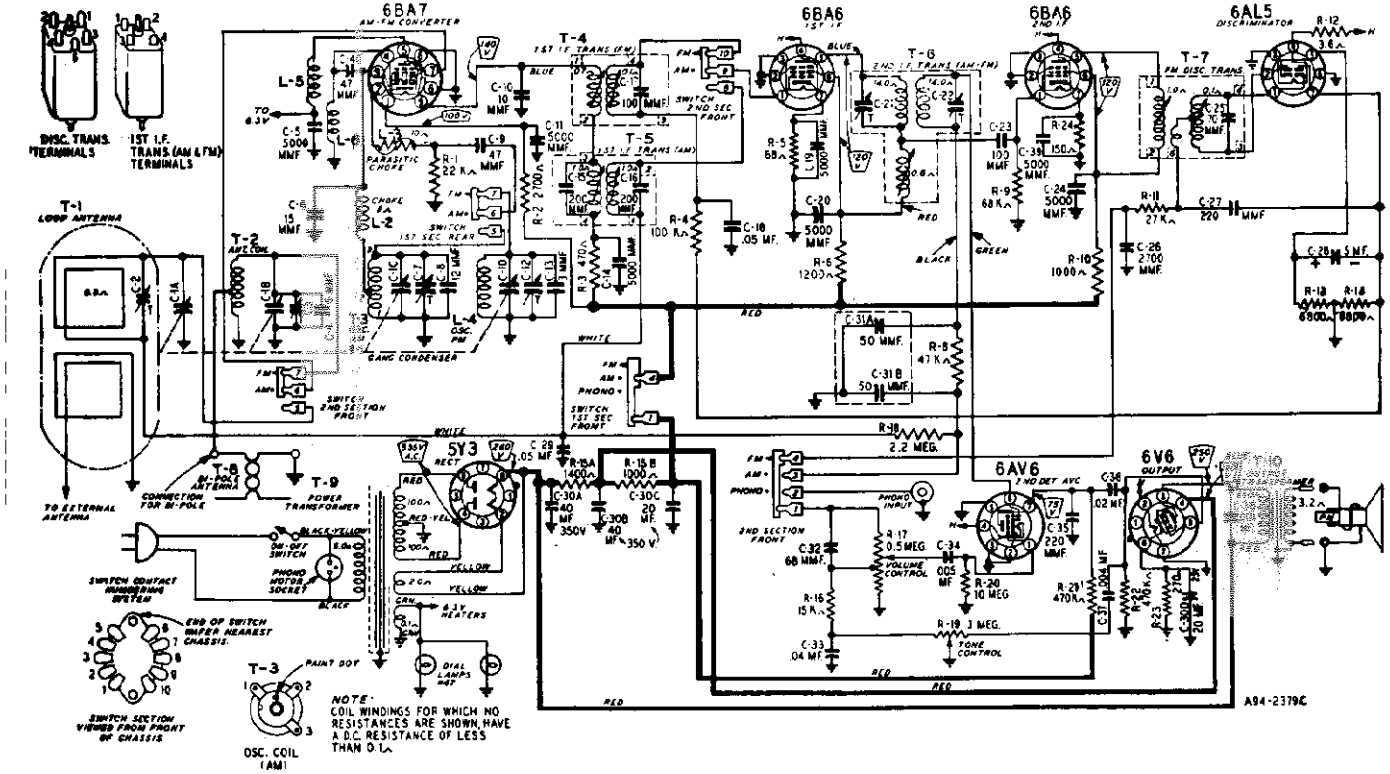

DRIVE CORD REPLACEMENT

Replacement of the drive cord may be accomplished as shown in the illustration. For this purpose use the new drive cord assembly listed in the Replacement Parts List. Turn the gang condenser until the plates are fully meshed. Then install the string as shown, winding three turns clockwise around the tuning shaft with the turns progressing away from the chassis. After the cord is installed, rotate the tuning shaft several times in order to take up any slack in the cord.

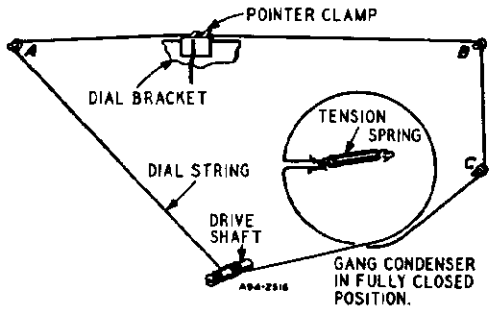

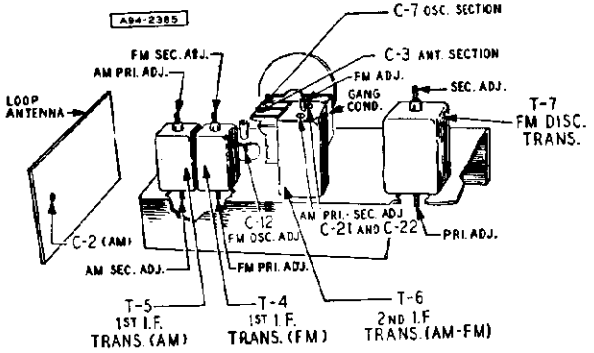

MODEL 94RA1-43-7853A

REPLACEMENT PARTS LIST

When ordering parts, specify part number, model number and any other pertinent information.

Ref. No.	DESCRIPTION	Part No.
	CAPACITORS	
C-1	Gang Condenser & Pulley	14A204
C-2	Capacitor, Trimmer; 2-24 mmf	17A256
C-3, C-7	Part of C-1 (Gang Condenser)	
C-4	Capacitor, Ceramic; 6 mmf	47X521
C-5, C-11, C-14, C-19, C-20, C-24, C-39	Capacitor, Ceramic; 5000 mmf	47X507
C-6	Capacitor, Ceramic; 15 mmf	47X552
C-8	Capacitor, Ceramic; 12 mmf	47X522
C-9	Capacitor, Ceramic; 47 mmf ± 10%	47X517
C-10	Capacitor, Ceramic; 10 mmf	47X512
C-12	Capacitor, Trimmer; 1-8 mmf	17A255
C-15, C-16	Part of T-5 (1st I-F Trans. AM)	
C-17	Part of T-4 (1st I-F Trans. FM)	
C-18, C-29	Capacitor, Tubular; .05 mf 200 V	B66503
C-21, C-22	Part of T-6 (2nd I-F Trans. AM-FM)	
C-23	Capacitor, Ceramic; 100 mmf	47X476
C-25	Part of T-7 (FM Disc. Trans.)	
C-26	Capacitor, Molded Mica; 2700 mmf	47X492
C-27, C-35	Capacitor, Ceramic; 220 mmf	47X468
C-28	Capacitor, Dry Electrolytic; 5 mf 100 V	45X361
C-30A	Capacitor, Dry Electrolytic; 40 mf 350 V	45X359
C-30B	Capacitor, Dry Electrolytic; 40 mf 350 V	45X359
C-30C	Capacitor, Dry Electrolytic; 40 mf 350 V	45X359
C-30D	Capacitor, Dry Electrolytic; 20 mf 25 V	45X359
C-31A, C-31B	Capacitor, Dual Mica; 50-50 mmf	47X112
C-32	Capacitor, Molded Mica; 68 mmf	47X471
C-33	Capacitor, Tubular; .04 mf 200 V	B66403
C-34	Capacitor, Tubular; .005 mf 400 V	D66502
C-36	Capacitor, Tubular; .02 mf 400 V	D66203
C-37	Capacitor, Tubular; .004 mf 200 V	B66402
C-38	Capacitor, Tubular; .001 mf 800 V	H66102
C-40	Capacitor, Ceramic; 47 mmf ± 20%	47X509
	RESISTORS	
R-1	Resistor, Carbon; 22K ohms 0.5 W	B84223
R-2	Resistor, Carbon; 2700 ohms 0.5 W	B84272
R-3	Resistor, Carbon; 470 ohms 0.5 W	B84471
R-4	Resistor, Carbon; 100K ohms 0.5 W	B85104
R-5	Resistor, Carbon; 68 ohms 0.5 W	B83680
R-6	Resistor, Carbon; 1200 ohms 0.5 W	B85122
R-8	Resistor, Carbon; 47K ohms 0.5 W	B85473
R 9	Resistor, Carbon; 68K ohms 0.5 W	B84683
R-10	Resistor, Carbon; 1000 ohms 0.5 W	B85102
R-11	Resistor, Carbon; 27K ohms 0.5 W	B85273
R-12	Resistor, Wirewound; 3.6 ohms 0.5 W	43X233
R-13, R-14	Resistor, Carbon; 6800 ohms 0.5 W	B84682
R-15A	Resistor, Wirewound; 1000 ohms 4.0 W	43X224
R-15B	Resistor, Wirewound; 1400 ohms 6.0 W	43X224
R-16	Resistor, Carbon; 15K ohms 0.5 W	B85153
R-17	Volume Control & Switch; .5 megohm	36X372
R-18	Resistor, Carbon; 2.2 megohms 0.5 W	B85225
R-19	Tone Control; 3 megohms	40X285
R-20	Resistor, Carbon; 10 megohms 0.5 W	B85106
R-21, R-22	Resistor, Carbon; 470K ohms 0.5 W	B85474
R-23	Resistor, Carbon; 270 ohms 0.5 W	B84271
R-24	Resistor, Carbon; 150 ohms 0.5 W	B84151
	TRANSFORMERS AND COILS	
L-2	Choke, Insulated 2 uh.	35A5
L-3	Choke, Parasitic	9A1940
L-4	Coil, Oscillator (FM)	9A2021
L-5, L-6	Choke, Filament	9A2044
T-1	"B" Range Loop Antenna Assembly	9A2051
T-2	Coil, Antenna	9A1956
T-3	Coil, Oscillator (AM)	9A1997
T-4	1st I-F Trans. (FM)	9A2037
T-5	1st I-F Trans. (AM)	9A2038
T-6	2nd I-F Trans. (AM-FM)	9A1999
T-7	Discriminator Coil Assembly	9A2036
T-8	Dipole Antenna	9A2005
T-9	Power Transformer	53X290
T-10	Output Transformer	51X134
	DIAL AND TUNING PARTS	
	Rubber Grommets (mtg. Gang Cond.)	6X21
	Pointer	15X252
	"C" Washer (Drive Shaft)	19X192
	Condenser Cushion Stud	20X260
	Drive Shaft	26X486
	Drive Cord Tension Spring	28X113
	Dial Glass	58X726
	MISCELLANEOUS	
	Band Change Switch	2A384
	Tube Socket, Molded (Octal)	3A303
	Phono Motor Socket	3A304
	Phono Socket (Single Pin)	3A305
	Tube Socket (Miniature)	3A426
	Tube Socket (AM-FM Converter)	3A443
	No. 47 Pilot Light	7A103
	Pilot Light Socket Assembly	7A197
	Knob	10A729
	Speaker, 8" P.M.	12A477
	Record changer—3 speed	28A165
	Escutcheon	4X1060
	Drive Cord Assembly	10X72
	Line Cord & Plug Assembly	13X546
	Line Cord Clamp	30X547

© John F. Rider

MODELS 94RA1-43-8510A,
94RA1-43-8511A

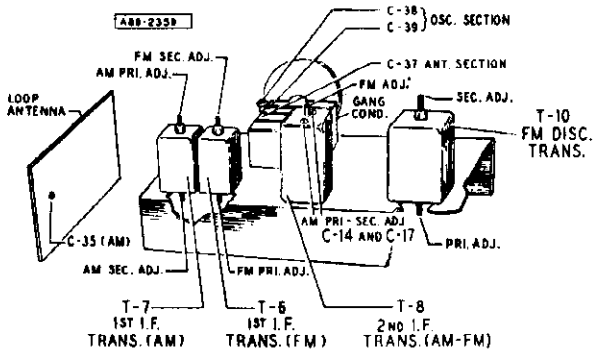

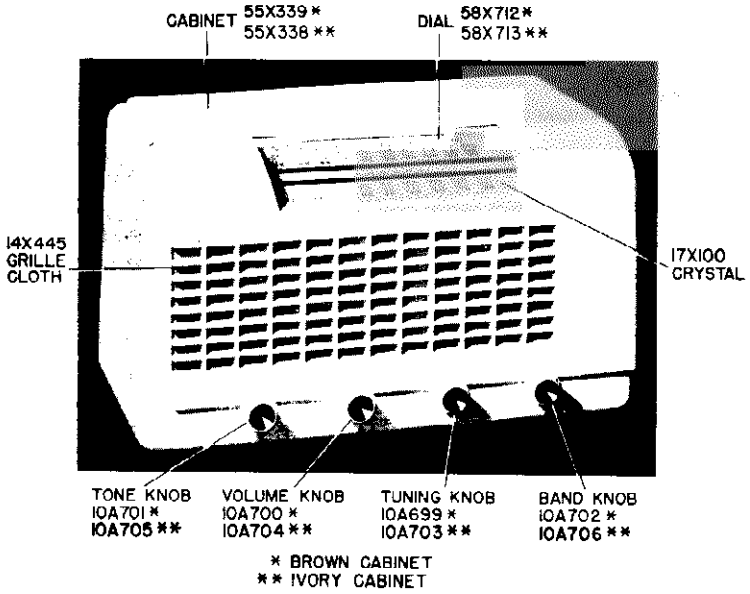

GENERAL DESCRIPTION

Your new radio is a 7 tube (including rectifier tube) AC receiver designed for reception of stations in the standard broadcast band between 540 and 1600 kilocycles and FM (Frequency Modulation) stations in the newly allocated FM band of 88 - 108 megacycles. Controls are provided on the front panel for tuning, tone, volume and band or phono selection. Special features include two built-in antennas, automatic volume control, compensator circuits to prevent oscillator drift, beam power output stage, permanent magnet dynamic speaker and an electrostatic shield in the power transformer to reduce power line noise. A socket labeled PHONO is provided on the back of the chassis to which an external record player may be connected.

ELECTRICAL SPECIFICATIONS

Power Consumption—
117 volts AC—35 watts

Power Output—
1.5 watts maximum
.9 watts 10% distortion

Speaker—4 x 6 inch oval PM dynamic

Frequency Ranges—
Broadcast 540-1600 KC
Frequency modulation 88-108 MC

Intermediate Frequency—
AM 455 KC — FM 10.7 MC

Selectivity — AM — 60 KC broad at 1000 times signal, measured at 1000 KC
I.F. FM—200 KC broad at 2 times down
I.F. FM—700 KC broad at 200 times down

AM Sensitivity—(For .5 watt output with external antenna)
60 microvolts average

FM Sensitivity—(For .5 watt output)
150 microvolts average

Tube and Dial Lamp Complement

1 6BE6 FM-AM Converter
1 6BA6 1st I-F Amplifier
1 6BA6 2nd I-F Amplifier
1 6AL5 FM Discriminator
1 6AV6 Audio Amplifier, AM 2nd Detector and AVC
1 6V6GT Audio Output
1 6X5GT Rectifier
1 No. 47 Dial Lamp

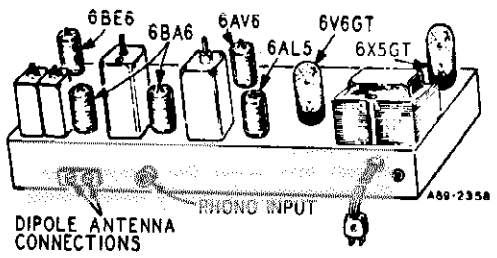

©John F. Rider

MODELS 94RA1-43-8510A,
94RA1-43-8511A

ALIGNMENT PROCEDURES

AM STAGES

Volume Control Maximum all Adjustments.

Connect Radio Chassis to Ground Post of Signal Generator with a Short Heavy Lead.

Allow Chassis and Signal Generator to "Heat Up" for Several Minutes.

The following is required for aligning:

An All Wave Signal Generator Which Will Provide an Accurately Calibrated Signal at the Test Frequencies as Listed.

Output Indicating Meter, Non-Metallic Screwdriver, Dummy Antennas — .1 mf, and 50 mmf.

SIGNAL GENERATOR					
FREQUENCY SETTING	CONNECTION AT RADIO	GROUND CONNECTION	DUMMY ANTENNA	GANG CONDENSER SETTING	ADJUST TUNING SLUGS AND TRIMMERS
455 KC	Control Grid 1st 6BA6 Pin No. 1	Chassis Base	.1 mf	Turn Rotor to Full Open	2nd I.F. C-14 & C-17
455 KC	Control Grid 6BE6 Pin No. 7 1st Det.	Same as above	.1 mf	Turn Rotor to Full Open	1st I.F Pri. & Sec.
1620 KC	Control Grid 6BE6 Pin No. 7	Same as above	.1 mf	Turn Rotor to Full Open	Oscillator C-39
1400 KC	External Antenna Clip	Same as above	50 mmf	Turn Dial to 1400 KC. See Note A	Antenna C-35

NOTE A—Attach pointer to drive cord and position at 1400 KC mark on dial scale.

FM STAGES

Allow chassis and signal generator to warm up for several minutes. The following equipment is required for aligning:

An accurately calibrated signal generator providing unmodulated signals at the test frequencies listed below.

Non-metallic screwdriver.

Dummy Antennas and I-F Loading Resistor—.01 mf, 300 ohms and 100 K ohms.

Zero center scale DC vaccum tube voltmeter having a range of approximately 3 volts.

(If a zero center scale meter is not available, a standard scale vacuum tube voltmeter may be used by reversing the meter connections for negative readings.)

	SIGNAL GENERATOR					
	FREQUENCY SETTING	CONNECTION AT RADIO	DUMMY ANTENNA	BAND SWITCH SETTING	CONDENSER SETTING	ADJUSTMENT FOR MAX. METER DEFLECTION
Discriminator	10.7 MC	6BA6 2nd I-F Pin 1 & Chassis	.01 mf	FM	Rotor to Full Open	Disc. Pri. Note A
	10.7 MC	Same as above	.01 mf	FM	Same as above	Disc. Sec. Note B
	10.7 MC	Same as above	.01 mf	FM	Same as above	Disc. Pri. Note A
	10.7 MC	Same as above	.01 mf	FM	Same as above	Disc. Sec. Note B
I-F	10.7 MC Note E	6BA6 1st IF Pin 1 & Chassis	.01 mf	FM	Same as above	2nd I-F Note C
	10.7 MC	Unsolder lead from Pin 7 to band switch. Insert 100K ohm resistor between Pin 7 & Ground and feed signal into Pin 7 of 6BE6	.01 mf	FM	Same as above	1st I-F Pri. Note C
	10.7 MC	Same as above	.01 mf	FM	Same as above	1st I-F Sec. Note C
	RECHECK I-F ADJUSTMENTS IN ORDER GIVEN					
Ant. & Osc.	108.5 Note D	Disconnect built-in line antenna and connect generator to dipole terminals with resistor in series.	300 ohms	FM	Rotor to Full Open	Osc. C-38
	104.5	Same as above	300 ohms	FM	Tune rotor for max. AVC voltage	Ant. C-37

RECHECK ANTENNA & OSC. ADJUSTMENTS IN ORDER GIVEN

FM ALIGNMENT NOTES

NOTE A—The zero center scale DC vacuum tube voltmeter is to be connected between chassis ground and the AVC line. A signal of .1 volt must be fed into the receiver for this adjustment.
Note output voltage on the zero center DC vacuum tube voltmeter

NOTE B—Disconnect zero center DC vacuum tube voltmeter from AVC and connect it at the audio takeoff point at the 27 K ohm resistor (R-11) and its junction with the terminal strip. Adjust for zero voltage indication.

NOTE C—Connect zero center DC vacuum tube voltmeter as in Note A. Adjust input to give same output on the zero center DC vacuum tube voltmeter as in Note A.

NOTE D—Remove the 100 K ohm load resistor and solder the lead from pin 7 of 6BE6 tube to the band switch before attempting to check the antenna and oscillator adjustments.

NOTE E—2nd I-F trimmers (AM) must be aligned before attempting to adjust 2nd I-F (FM) tuning slug.

©John F. Rider

MODELS 94RA1-43-8510A,
94RA1-43-8511A

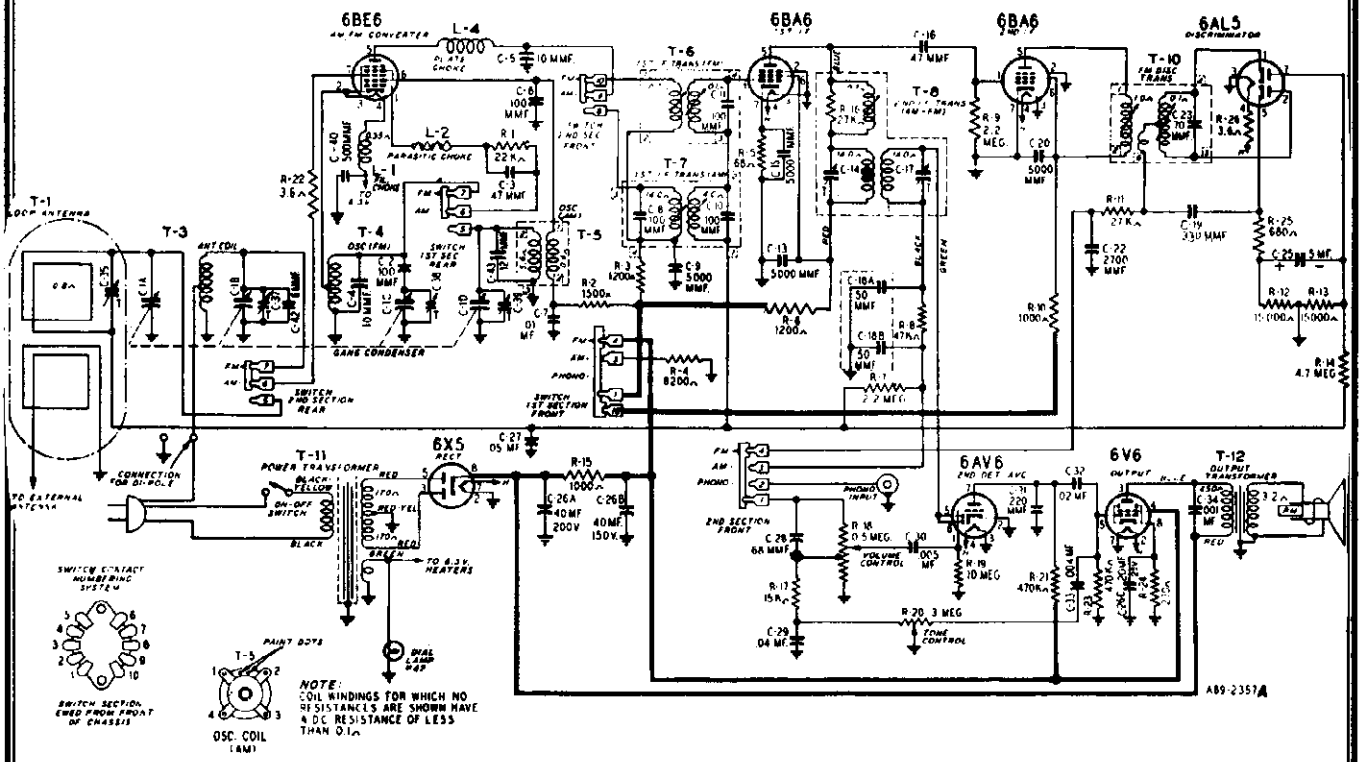

DRIVE CORD REPLACEMENT

Replacement of the drive cord may be accomplished as shown in the illustration. For this purpose use the new drive cord assembly listed in the Replacement Parts List. Turn the gang condenser until the plates are fully meshed. Then install the string as shown, winding three turns clockwise around the tuning shaft with the turns progressing away from the chassis. After the cord is installed, rotate the tuning shaft several times in order to take up any slack in the cord.

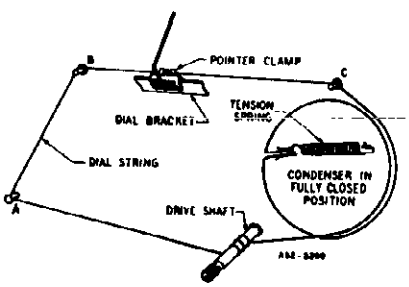

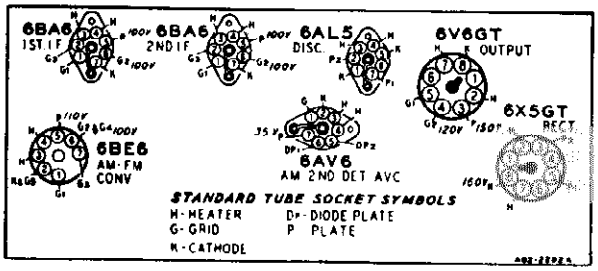

TUBE SOCKET VOLTAGES

Socket voltages are shown on the Bottom Socket diagram at the tube socket terminals. All voltages are between the socket terminal and chassis ground. Plate, screen and cathode voltages were taken with a 1000 ohm-per-volt meter with a 300 volt scale used for plate and screen voltages. Audio grid voltages were read with a vacuum tube volt-meter. Conditions of measurement are:

Line voltage .....117 Volts AC
Signal Input .....None
A Variation of ±10% is usually permissible.

©John F. Rider

MODELS 94RA1-43-8510A,
94RA1-43-8511A

SYMBOL	PART NO.	DESCRIPTION	VALUE	TOL.	RATING
		CAPACITORS			
C-1	14A204	Gang Condenser and Pulley			
C-2	47X511	Ceramic	100 MMF	5%	
C-3	47X517	Ceramic	47 MMF	10%	
C-4	47X523	Ceramic	10 MMF	10%	
C-5	47X512	Ceramic	10 MMF	5%	
C-6	47X476	Molded Mica	100 MMF	20%	
C-7	D66103	Tubular	.01 MF	25%	400V
C-9, C-13, C-15, C-20	47X507	Silvered Mica (4)	5000 MMF		
C-16	47X463	Ceramic	47 MMF	20%	
C-18A, C-18B	47X112	Dual Mica	50-50 MMF		
C-19	47X529	Ceramic	330 MMF	10%	
C-22	47X492	Molded Mica	2700 MMF	10%	
C-25	45X361	Dry Electrolytic	5 MF		100V
C-26A	45X360	3 Section Electrolytic	40 MF		200V
C-26B			40 MF		150V
C-26C			20 MF		25V
C-27	B66503	Tubular	.05 MF	25%	200V
C-28	47X471	Molded Mica	68 MMF	20%	
C-29	B66403	Tubular	.04 MF	25%	200V
C-30	D66502	Tubular	.005 MF	25%	400V
C-31	47X468	Ceramic	220 MMF	20%	
C-32	D66203	Tubular	.02 MF	25%	400V
C-33	B66402	Tubular	.004 MF	25%	200V
C-34	H66102	Tubular	.001 MF	25%	600V
C-35	17A256	Trimmer Condenser			
C-38	26A489	*Trimmer Assembly			
C-40	47X508	Ceramic	500 MMF	20%	
C-42	47X521	Ceramic	6 MMF	10%	
C-43	47X522	Ceramic	12 MMF	10%	

* Consists of: 17A257 Tubular Trimmer Slug
17A258 Tubular Trimmer Sleeve

SYMBOL	PART NO.	DESCRIPTION	VALUE	TOL.	RATING
		RESISTORS			
R-1	B84223	Carbon	22K Ohms		0.5W
R-2	B84152	Carbon	1500 Ohms		0.5W
R-3, R-6	B84122	Carbon (2)	1200 Ohms		0.5W
R-4	D84822	Carbon	8200 Ohms		2.0W
R-5	B83680	Carbon	68 Ohms		0.5W
R-7, R-9	B85225	Carbon (2)	2.2 Megohms		0.5W
R-8	B85473	Carbon	47K Ohms		0.5W
R-10	B84102	Carbon	1000 Ohms		0.5W
R-11	B84273	Carbon	27K Ohms		0.5W
R-12, R-13, R-17	B84153	Carbon (3)	15K Ohms		0.5W
R-14	B85475	Carbon	4.7 Megohms		0.5W
R-15	D84102	Carbon	1000 Ohms		2.0W
R-18	36X372	Volume Control and Switch			
R-19	B85106	Carbon	10 Megohms		0.5W
R-20	40X285	Tone Control			
R-21, R-23	B85474	Carbon (2)	470K Ohms		0.5W
R-22, R-26	43X233	W.W. Resistor (2)	3.6 Ohms		0.5W
R-24	B84271	Carbon	270 Ohms		0.5W
R-25	B84681	Carbon	680 Ohms		0.5W
		TRANSFORMERS AND COILS			
L-1, L-4	9A1882	Filament Choke (2)			
L-2	9A1940	Parasitic Choke			
T-1	9A1994	"B" Range Loop Antenna Assembly			
T-3	9A1956	Antenna Coil Assembly			
T-4	9A1938	Oscillator Coil Assembly (FM)			
T-5	9A1929	Oscillator Coil Assembly (AM)			
T-6	9A1932	1st I.F. Coil Assembly (FM)			
T-7	9A1934	1st I.F. Coil Assembly (AM)			
T-8	9A1973	2nd I.F. Coil AM-FM Assembly			
T-10	9A1970	Discriminator Coil Assembly			
T-11	53X291	Power Transformer			
T-12	12A478	4" x 6" P.M. Speaker (oval) with output trassformer			
		MISCELLANEOUS			
	2A375	Band Change Switch			
	3A303	Molded Octal Tube Socket (2)			
	3A305	Phono Socket (Single Pin)			
	3A426	Tube Socket (miniature) (4)			
	3A427	Tube Socket (miniature for AM-FM converter)			
	7A103	#47 Pilot Light			
	7A216	Pilot Light Socket Assembly			
	25A1044	Diffuser and Clamp Assembly Consists of: 30X541 Diffuser Clamp, 41X82 Diffuser			
	6X21	Rubber Grommet (4)			
	10X68	Drive Cord Assembly			
	S-13X613	Line Cord and Plug Assembly			
	15X236	Pointer			
	19X107	Flat Washer (Mtg. Speaker) (4)			
	19X434	#8 Flat Washer (Mtg. 53X291) (2)			
	19X432	Flat Washer (Mtg. Set to Cabinet & Loop to set) (6)			
	19X192	"C" Washer (Drive Shaft) (2)			
	20X260	Condenser Cushion Stud (3)			
	20X1609	Tinnerman Speed Nut (Mtg. Crystal to cabinet) (3)			
	22X476	Chassis Base (with bracket)			
	25X1606	Dial Bracket			
	26X486	Drive Shaft			
	28X113	Drive Cord Tension Spring			
	30X532	Dial Clamp (2)			
	30X547	Line Cord Clamp			

©John F. Rider

MODELS 94RA1-43-8510B,
94RA1-43-8511B

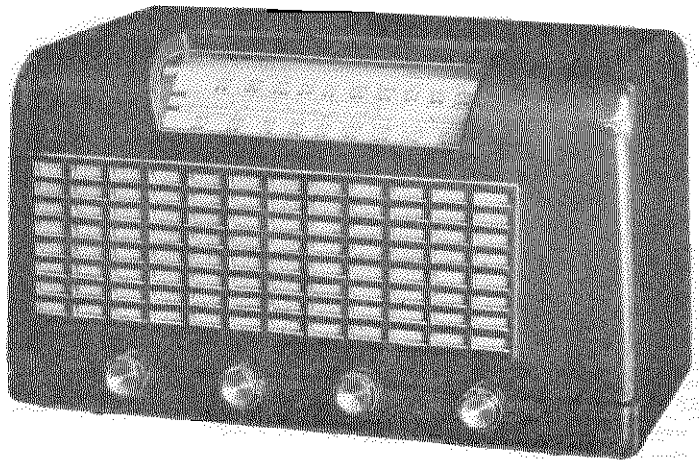

GENERAL DESCRIPTION

This radio is a 7 tube (including rectifier tube) AC receiver designed for reception of stations in the standard broadcast band between 540 and 1600 kilocycles and FM (Frequency Modulation) stations in the newly allocated FM Band of 88 - 108 megacycles. Controls are provided on the front panel for tuning, tone, volume and band or phono selection. Special features include a built-in loop antenna for broadcast reception, a hank antenna for the reception of FM stations, automatic volume control, compensator circuits to prevent oscillator drift, beam power output stage, permanent magnet dynamic speaker and an electrostatic shield in the power transformer to reduce power line noise. A socket labeled PHONO is provided on the back of the chassis to which an external record player may be connected.

Tube and Dial Lamp Complement

1 6BA7 FM-AM Converter
1 6BA6 1st I-F Amplifier
1 6BA6 2nd I-F Amplifier
1 6AL5 FM Discriminator
1 6AV6 Audio Amplifier, AM 2nd Detector and AVC
1 6V6GT Audio Output
1 6X5GT Rectifier
1 No. 47 Dial Lamp

ELECTRICAL SPECIFICATIONS

Power Consumption —
117 volts AC—35 Watts

Power Output —
1.5 watts maximum
.9 watts 10% distortion

Speaker—5" PM dynamic

Frequency Ranges —
Broadcast 540-1600 KC
Frequency modulation 88-108 MC

Intermediate Frequency —
AM 455 KC — FM 10.7 MC

Selectivity — AM — 60 KC broad at 1000 times signal, measured at 1000 KC

I.F. FM—200 KC broad at 2 times down

I.F. FM — 700 KC broad at 200 times down

AM Sensitivity—(For .5 watt output with external antenna)
10 microvolts average

FM Sensitivity—(For .5 watt output)
100 microvolts average

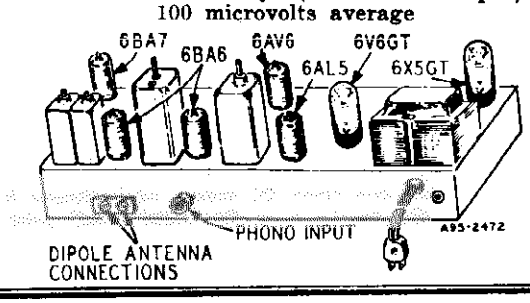

©John F. Rider

MODELS 94RA1-43-8510B,
94RA1-43-8511B

ALIGNMENT PROCEDURES

AM STAGES

Volume Control Maximum all Adjustments.

Connect Radio Chassis to Ground Post of Signal Generator with a Short Heavy Lead.

Allow Chassis and Signal Generator to "Heat Up" for Several Minutes.

The following is required for aligning:

An All Wave Signal Generator Which Will Provide an Accurately Calibrated Signal at the Test Frequencies as Listed.

Output Indicating Meter, Non-Metallic Screwdriver, Dummy Antennas — .1 mf, and 50 mmf.

SIGNAL GENERATOR					
FREQUENCY SETTING	CONNECTION AT RADIO	GROUND CONNECTION	DUMMY ANTENNA	GANG CONDENSER SETTING	ADJUST TUNING SLUGS AND TRIMMERS
455 KC	Control Grid 1st 6BA6 Pin No. 1	Chassis Base	.1 mf	Turn Rotor to Full Open	2nd I.F. C-21 & C-22
455 KC	Control Grid 6BA7 Pin No. 7 1st Det.	Same as above	.1 mf	Turn Rotor to Full Open	1st I.F. Pri. & Sec.
1620 KC	Control Grid 6BA7 Pin No. 7	Same as above	.1 mf	Turn Rotor to Full Open	Oscillator C-7
1400 KC	External Antenna Clip	Same as above	50 mmf	Turn Dial to 1400 KC. See Note A	Antenna C-2

NOTE A—Set pointer at the 1400 KC mark on the dial scale. Attach pointer to drive cord.

FM STAGES

Allow chassis and signal generator to warm up for several minutes.

The following equipment is required for aligning:

An accurately calibrated signal generator providing unmodulated signals at the test frequencies listed below.

Non-metallic screwdriver.

Dummy Antennas and I-F Loading Resistor—2500 mmf, 300 ohms and a 3300 ohm .5 watt resistor with short leads.

Zero center scale DC vacuum tube voltmeter having a range of approximately 3 volts.

(If a zero center scale meter is not available, a standard scale vacuum tube voltmeter may be used by reversing the meter connections for negative readings.)

	SIGNAL GENERATOR					
	FREQUENCY SETTING	CONNECTION AT RADIO	DUMMY ANTENNA	BAND SWITCH SETTING	CONDENSER SETTING	ADJUSTMENT FOR MAX. METER DEFLECTION
Discriminator	10.7 MC	6BA6 2nd I-F Pin 1 & Chassis	2500 mmf	FM	Rotor Fully Open	Disc. Pri. Note A
	10.7 MC	Same as above	2500 mmf	FM	Rotor Fully Open	Disc. Sec. Note B
	10.7 MC	Same as above	2500 mmf	FM	Rotor Fully Open	Disc. Pri. Note A
	10.7 MC	Same as above	2500 mmf	FM	Rotor Fully Open	Disc. Sec. Note B
I-F	10.7 MC Note E	6BA6 1st I-F Pin 1 & Chassis	2500 mmf	FM	Rotor Fully Open	2nd I-F Note C
Discriminator	10.7 MC	6BA6 2nd I-F Pin 1 & Chassis	2500 mmf	FM	Rotor Fully Open	Disc. Pri. Note A
I-F	10.7 MC	Antenna and Chassis	2500 mmf	FM	Rotor Fully Open	1st. I-F Pri. and Sec. and Note C
	10.7 MC	Antenna and Chassis Solder a 3300 ohm resistor across terminals 3 and 4 of 1st. I-F trans.	2500 mmf	FM	Rotor Fully Open	1st. I-F Pri. Note C
	10.7 MC	Antenna and Chassis Note D	2500 mmf	FM	Rotor Fully Open	1st. I-F Sec. Note C
	RECHECK I-F ADJUSTMENTS IN ORDER GIVEN					
Oscillator	108.4 Note F	Disconnect hank antenna and connect generator to dipole terminals with resistor in series	300 ohms	FM	Rotor Fully Open	Osc. C-12
Antenna	104.5	Same as above	300 ohms	FM	Tune rotor for max. AVC voltage	Ant. C-3
	RECHECK ANTENNA & OSC. ADJUSTMENTS IN ORDER GIVEN					

FM ALIGNMENT NOTES

NOTE A—The zero center scale DC vacuum tube voltmeter is to be connected between chassis ground and the AVC line. A signal of .1 volt must be fed into the receiver for this adjustment.
Note output voltage on the zero center DC vacuum tube voltmeter.

NOTE B—Disconnect zero center DC vacuum tube voltmeter from AVC and connect it to the audio takeoff point at the 27 K ohm resistor (R-11) and its junction with the terminal strip. Adjust for zero voltage indication.

NOTE C—Connect zero center DC vacuum tube voltmeter as in Note A. Adjust input to give same output on the zero center DC vacuum tube voltmeter as in Note A.

NOTE D—Unsolder 3300 ohm resistor from terminals 3 and 4 of 1st I-F transformer and resolder across terminals 1 and 2.

NOTE E—2nd I-F Trimmers (AM) must be aligned before attempting to adjust 2nd I-F (FM) tuning slug.

NOTE F—Remove the 3300 ohm load resistor before attempting to check the antenna and oscillator adjustments.

© John F. Rider

MODELS 94RA1-43-8510B,
94RA1-43-8511B

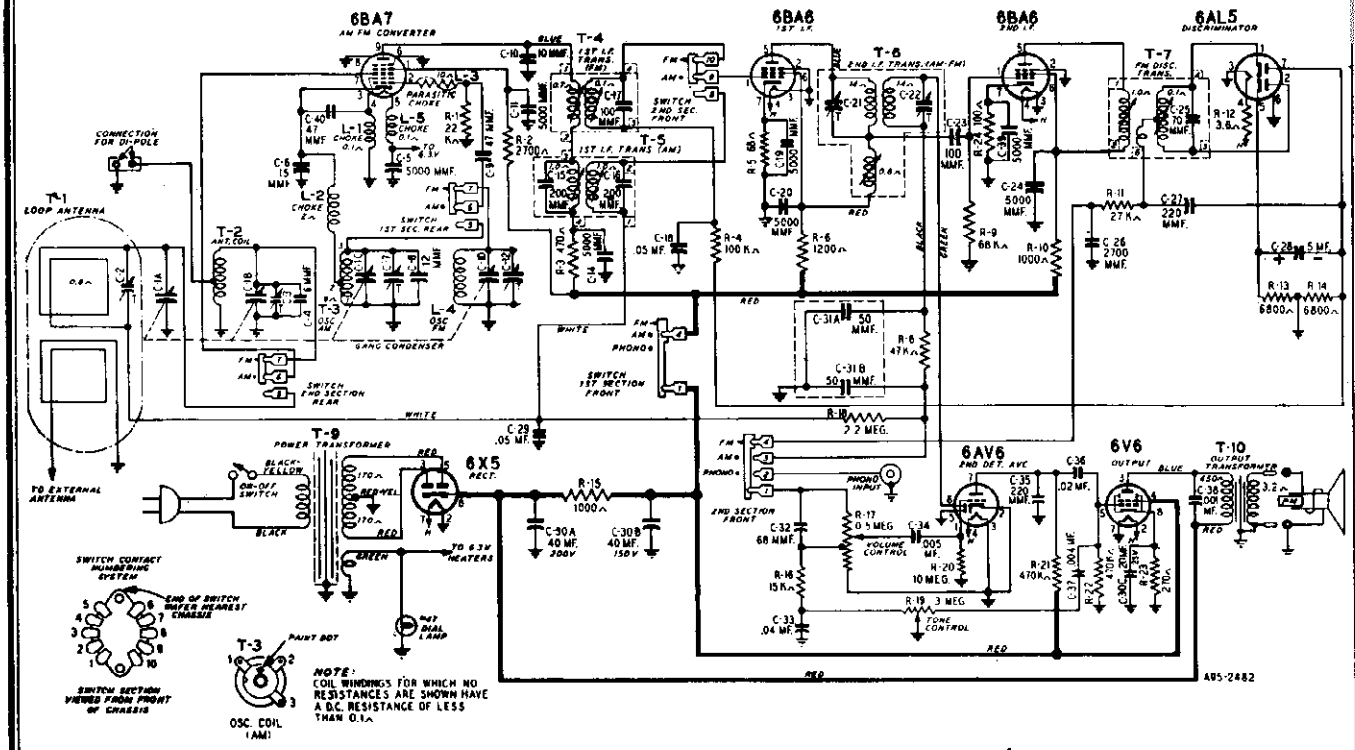

DRIVE CORD REPLACEMENT

Replacement of the drive cord may be accomplished as shown in the illustration. For this purpose use the new drive cord assembly listed in the Replacement Parts List. Turn the gang condenser until the plates are fully meshed. Then install the string as shown, winding three turns clockwise around the tuning shaft with the turns progressing away from the chassis. After the cord is installed, rotate the tuning shaft several times in order to take up any slack in the cord.

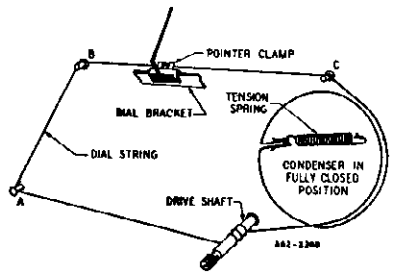

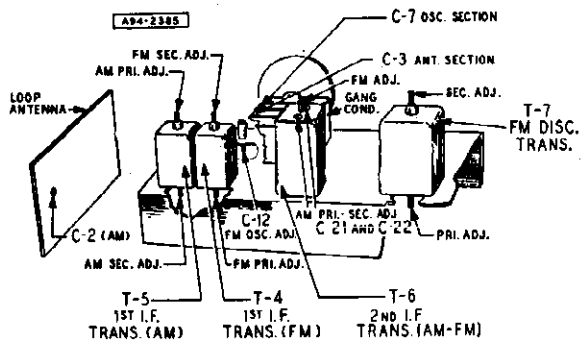

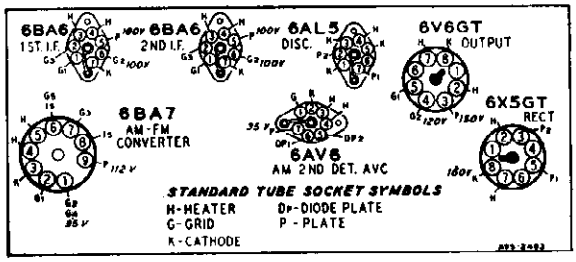

TUBE SOCKET VOLTAGES

Socket voltages are shown on the Bottom Socket diagram at the tube socket terminals. All voltages are between the socket terminal and chassis ground. Plate, screen and cathode voltages were taken with a 1000 ohm-per-volt meter with a 300 volt scale used for plate and screen voltages. Audio grid voltages were read with a vacuum tube volt-meter. Conditions of measurement are:

Line voltage .....117 Volts AC
Signal Input .....None
A Variation of ±10% is usually permissible.

© John F. Rider

MODELS 94RA1-43-8510B,
94RA1-43-8511B

REPLACEMENT PARTS LIST

Ref. No.	DESCRIPTION	Part No.
	CAPACITORS	
C-1	Gang Condenser & Pulley	14A204
C-2	Capacitor, Trimmer; 2-24 mmf	17A256
C-3, C-7	Part of C-1 (Gang Condenser)	
C-4	Capacitor, Ceramic; 6 mmf	47X521
C-5, C-11, C-14, C-19, C-20, C-24, C-39	Capacitor, Ceramic; 5000 mmf	47X507
C-6	Capacitor, Ceramic; 15 mmf	47X552
C-8	Capacitor, Ceramic; 12 mmf	47X522
C-9	Capacitor, Ceramic; 47 mmf ± 10%	47X517
C-10	Capacitor, Ceramic; 10 mmf	47X512
C-12	Capacitor, Trimmer; 1-8 mmf	17A255
C-15, C-16	Part of T-5 (1st I-F Trans. AM)	
C-17	Part of T-4 (1st I-F Trans. FM)	
C-18, C-29, C-21, C-22	Part of T-6 (2nd I-F Trans. AM-FM)	
C-23	Capacitor, Ceramic; 100 mmf	47X476
C-25	Part of T-7 (FM Disc. Trans.)	
C-26	Capacitor, Molded Mica; 2700 mmf	47X492
C-27, C-35	Capacitor, Ceramic; 220 mmf	47X468
C-28	Capacitor, Dry Electrolytic; 5 mf 100 V	45X361
C-30A, C-30B, C-30C	Capacitor, Dry Electrolytic; 40 mf 200 V, 40 mf 150 V, 20 mf 25 V	45X360
C-31A, C-31B	Capacitor, Dual Mica; 50-50 mmf	47X112
C-32	Capacitor, Molded Mica; 68 mmf	47X471
C-33	Capacitor, Tubular; .04 mf 200 V	B66403
C-34	Capacitor, Tubular; .005 mf 400 V	D66502
C-36	Capacitor, Tubular; .02 mf 400 V	D66203
C-37	Capacitor, Tubular; .004 mf 200 V	B66402
C-38	Capacitor, Tubular; .001 mf 800 V	H66102
C-40	Capacitor, Ceramic; 47 mmf ± 20%	47X509
	RESISTORS	
R-1	Resistor, Carbon; 22K ohms 0.5 W	B84223
R-2	Resistor, Carbon; 2700 ohms 0.5 W	B84272
R-3	Resistor, Carbon; 470 ohms 0.5 W	B84471
R-4	Resistor, Carbon; 100K ohms 0.5 W	B85104
R-5	Resistor, Carbon; 68 ohms 0.5 W	B83680
R-6	Resistor, Carbon; 1200 ohms 0.5 W	B85122
R-8	Resistor, Carbon; 47K ohms 0.5 W	B85473
R-9	Resistor, Carbon; 68K ohms 0.5 W	B84683
R-10	Resistor, Carbon; 1000 ohms 0.5 W	B85102
R-11	Resistor, Carbon; 27K ohms 0.5 W	B85273
R-12	Resistor, Wirewound; 3.6 ohms 0.5 W	43X233
R-13, R-14	Resistor, Carbon; 6800 ohms 0.5 W	B84682
R-15	Resistor, Carbon; 1000 ohms 2.0 W	D84102
R-16	Resistor, Carbon; 15K ohms 0.5 W	B85153
R-17	Volume Control & Switch; .5 megohm	36X372
R-18	Resistor, Carbon; 2.2 megohms 0.5 W	B85225
R-19	Tone Control; 3 megohms	40X285
R-20	Resistor, Carbon; 10 megohms 0.5 W	B85106
R-21, R-22	Resistor, Carbon; 470K ohms 0.5 W	B85474
R-23	Resistor, Carbon; 270 ohms 0.5 W	B84271
R 24	Resistor, Carbon; 100 ohms 0.5 W	B84101

Ref. No.	DESCRIPTION	Part No.
	TRANSFORMERS AND COILS	
L-1, L-5	Choke, Filament	9A2044
L-2	Choke, Insulated 2 uh.	35A5
L-3	Choke, Parasitic	9A1940
L-4	Coil, Oscillator (FM)	9A2021
T-1	"B" Range Loop Antenna Assembly	9A2040
T-2	Coil, Antenna	9A1956
T-3	Coil, Oscillator (AM)	9A1997
T-4	1st I-F Trans. (FM)	9A2037
T-5	1st I-F Trans. (AM)	9A2038
T-6	2nd I-F Trans. (AM-FM)	9A1999
T-7	Discriminator Coil Assembly	9A2036
T-9	Power Transformer	53X291
T-10	Output Transformer (See Miscellaneous)	
	DIAL AND TUNING PARTS	
	Diffuser & Clamp Assembly	25A1044
	consisting of:	
	Diffuser Clamp	30X541
	Diffuser	41X82
	Rubber Grommets (mtg. Gang Cond.)	6X67
	Pointer	15X236
	Crystal	17X100
	"C" Washer (Drive Shaft)	19X192
	Condenser Cushion Stud	20X260
	Drive Shaft	26X486
	Drive Cord Tension Spring	28X113
	Dial Clamp	30X532
	Dial Glass (Brown Cabinet)	58X712
	Dial Glass (Ivory Cabinet)	58X713
	Dial Bracket Assembly	S-25X28
	consisting of:	
	Rivet	20X1580
	Dial Bracket	25X1606
	MISCELLANEOUS	
	Band Change Switch	2A375
	Tube Socket, Molded (Octal)	3A303
	Phono Socket (Single Pin)	3A305
	Tube Socket (Miniature)	3A426
	Tube Socket (AM-FM Converter)	3A443
	No. 47 Pilot Light	7A103
	Pilot Light Socket Assembly	7A216
	Knob (Tuning)	10A699
	Knob (Off-Volume) Brown Cabinet	10A700
	Knob (Tone) Brown Cabinet	10A701
	Knob (FM-BC-PH) Brown Cabinet	10A702
	Knob (Tuning)	10A703
	Knob (Off-Volume) Ivory Cabinet	10A704
	Knob (Tone) Ivory Cabinet	10A705
	Knob (FM-BC-PH) Ivory Cabinet	10A706
	Speaker, 5" P.M. with Output Transformer	12A493
	Drive Cord Assembly	10X68
	Line Cord & Plug Assembly	13X546
	Line Cord Clamp	30X547
	Grille Cloth (Ivory Cabinet)	14X444
	Grille Cloth (Brown Cabinet)	14X445
	Speaker Baffle	14X463
	Cabinet (Ivory)	55X338
	Cabinet (Brown)	55X339

©John F. Rider

MODEL 94RA2-43-9195A

Power Supply.....105-125 volts, AC or DC
Frequency on AC.....50 to 60 cycles
Power Consumption....Radio 25 watts, Phono 50 watts
Frequency Range.....540 to 1650 KC
Intermediate Freq......455 KC
Antenna.....Built in loop, provision for external antenna
Tuning.....2-gang condenser, vernier drive
Speaker.....4-inch PM Dynamic, V.C. Impedance 3.2 ohms
Power Output.....1.0 watt undistorted, 1.5 watts maximum
Antenna Sensitivity.....75 microvolts average for 50 milliwattt output
Selectivity.....70 KC wide at 1000 x signal at 1000 KC
Tube Complement.....12BE6 Converter; 12BA6 IF Amp.; 12AT6 Det.-AVC-Audio; 50C5 Output; 35W4 Rectifier.
Phonograph.....VM Type 800 (See Manual 619-5)
Volume Control.....Fader type, clockwise radio, counterclockwise phono, center minimum volume

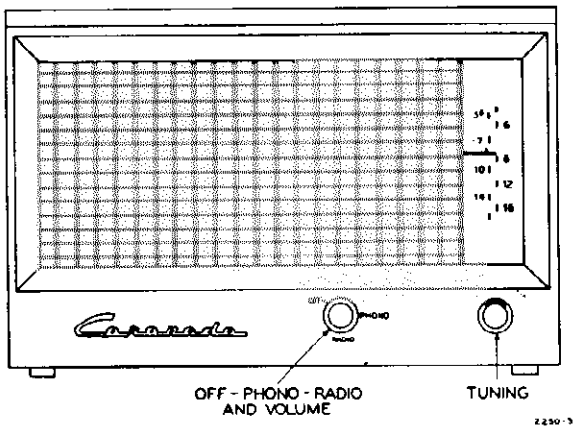

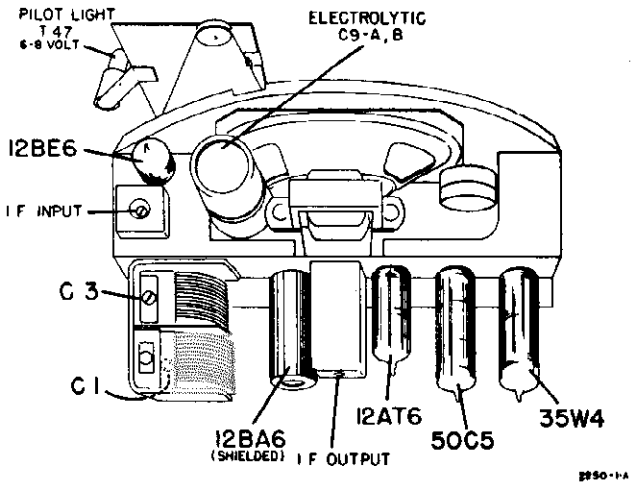

ALIGNMENT PROCEDURE

Allow unit to heat for a few minutes before starting alignment.
Volume control set to maximum.
Output meter across speaker.

- Align for maximum output.
- Keep input as low as readable meter reading of output will permit.

SIGNAL GENERATOR				*TUNER SETTING*	*ADJUST TRIMMERS FOR MAXIMUM OUTPUT (in order shown)*
Frequency	*Coupling Capacitor*	*Connection to Radio*	*Connection Ground*		
455 KC	0.1 mfd	12BE6 Grid (pin 7)	B-	Rotor full open	2nd IF transformer trimmers 1st IF transformer trimmers
1650 KC	0.1 mfd	12BE6 Grid	B-	Rotor full open	Oscillator Trimmer C3
1400 KC	200 mmf	External Ant. Clip	B-	Tune for maximum at 1400 on dial	Antenna Trimmer C1

©John F. Rider

© John F. Rider

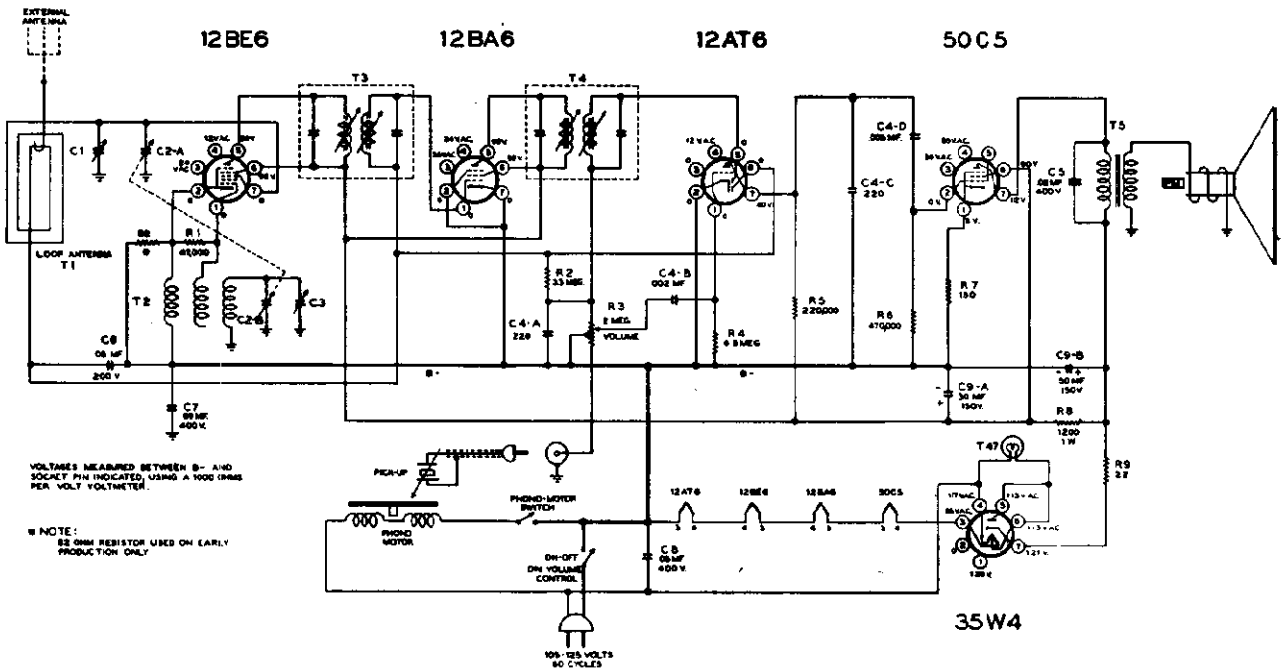

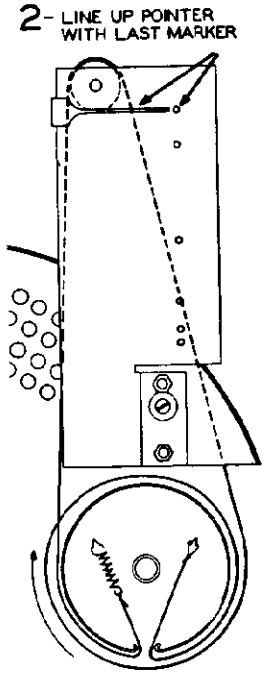

2250-2

DRIVE CORD REPLACEMENT

Ref. No.	Part No.	Description	
		CONDENSERS	
C1	On gang	Antenna trimmer	1
C2 A, B	B-8A-16493	2-Gang condenser	1
C3	On gang	Oscillator trimmer	1
C4 A,B,C,D	A-201-14397	Capacitor strip, ceramic 220 mmf, .002 mf, 220 mmf, .005 mf	1
C5	C-8D-10774	.02 mf, 400 volts, paper	1
C6	C-8D-10770	.05 mf, 200 volts, paper	1
C7	C-8D-11251	.09 mf, 400 volts, paper	1
C8	C-8D-10813	.05 mf, 400 volts, paper	1
C9 B, A	A-8C-15924	Electrolytic, 50-30 mf, 150 volts	1
		RESISTORS	
R1	C-9B1-23	47K ohms, ½ watt, 10%	1
R2	C-9B1-34	3.3 megohms, ½ watt, 20%	1
R3	A-10A-16497	2 megs. vol. cont. w/switch	1
R4	C-9B1-36	6.8 megohms, ½ watt, 20%	1
R5	C-9B1-27	220K ohms, ½ watt, 10%	1
R6	C-9B1-29	470K ohms, ½ watt, 10%	1
R7	C-9B1-22	150 ohms, ½ watt, 10%	1
R8	C-9B2-63	1200 ohms, 1 watt, 10%	1
R9	C-9B1-3	22 ohms, ½ watt, 10%	1
	C-9B1-49	82 ohms, ½ watt, 10%	1

T1		
T2		
T3		
T4		
T5		

	COILS and TRANSFORMERS	
C-13E-16494	Loop antenna	1
B-13D-15914	Oscillator coil	1
B-13A-13071	Input IF transformer	1
B-13B-13072	Output IF transformer	1
B-18A-16537	Output transformer and speaker	1
	DIAL PARTS	
A-2M-16492	Dial Drum	1
B-30A-16466	Dial scale	1
A-2C-16465	Background plate	1
A-3H-10622	Pulley	1
A-53A-10989	Dial cord (20" approx.)	1
A-2G-16491	Dial pointer	1
A-49A-10887	Cord tension spring	1
B-2C-16469	Chassis mtg. plate	1
A-23G-16467	Dial scale background	
	MISCELLANEOUS	
A-14M-11479-3	Line cord and plug	1
A-47A-11470	Pilot light assy.	1
A-46A-10793	No. 47 Pilot bulb	1
B-2M-15200	Cinch button (loop mtg.)	6
A-2M-10096	Cinch button (front cover)	3
B-5B-16511-41	Knob tuning	1
B-5B-16535-41	Knob volume	1
A-23M-13157	Connector cap (motor leads)	2
B-201-13304-5	Record changer	

BRC(5D153) - Part No. 23D-17670
PRO. B-30 G-3M—S-500—041849

MODELS 94RA31-43-8115A,
94RA31-43-8115B, 94RA31-43-8116A

POWER SUPPLY

This receiver is designed to operate on either an A.C. or D.C. power supply. The following operation ratings should be observed:

Voltages ..... 105-125 Volts, A.C. or D.C.
Frequency ..... 50 to 60 cycles on A.C.

If in doubt as to the voltage and frequency supplied to your home, telephone your local power company.

When operating on a D.C. source, it is necessary to insert the power plug with the proper polarity. If the set fails to function after an interval sufficient for the tubes to reach their operating temperature, reverse the power plug in the outlet.

NOTE:
REPLACEMENT PARTS LIST WILL SERVE FOR ALL THREE MODELS.

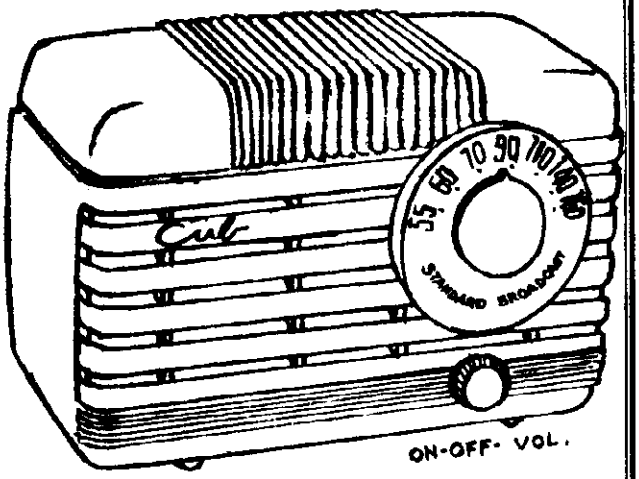

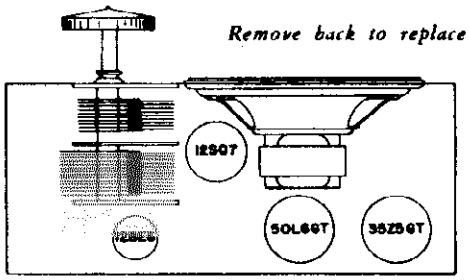

TUBE LOCATIONS FOR "BH" DIAGRAM

MODEL No. 94RA31-43-8116A

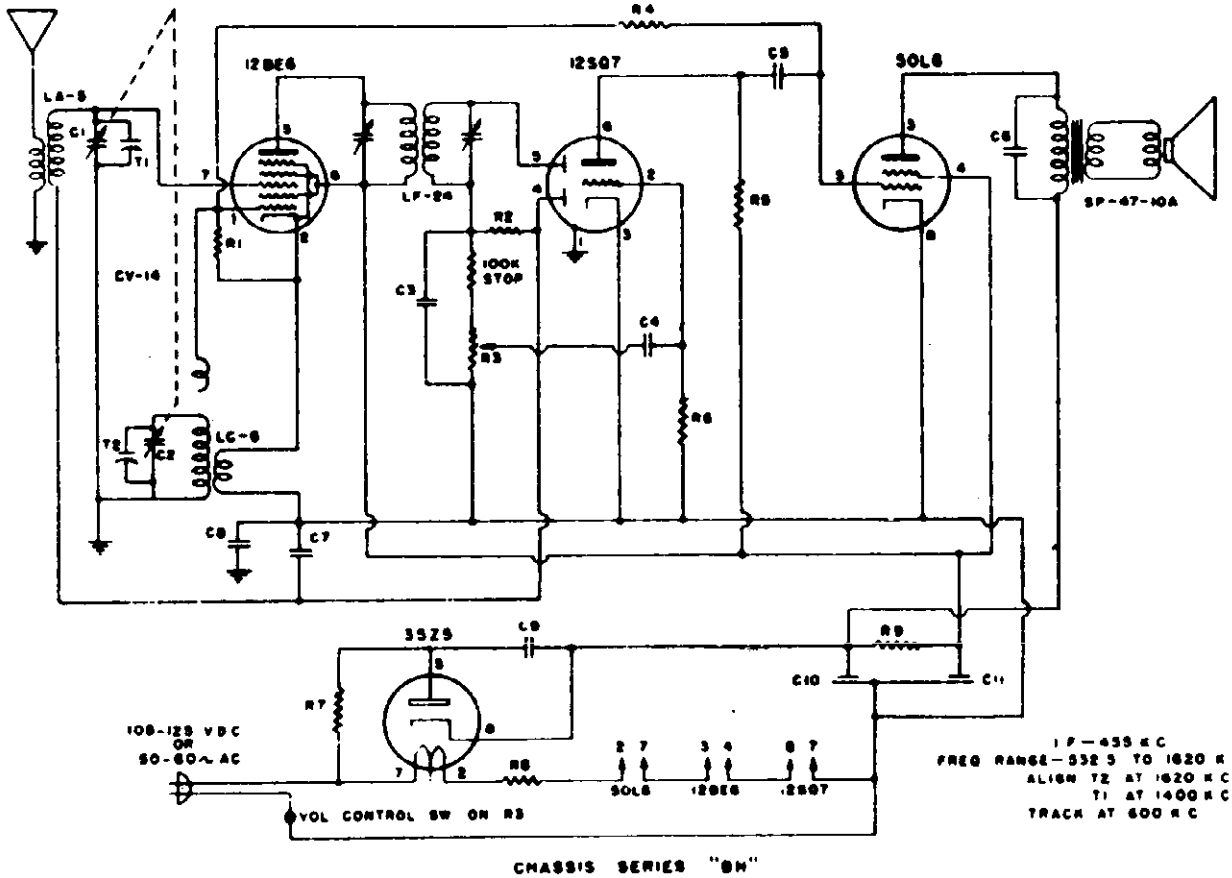

CHASSIS SERIES "BH"

©John F. Rider

MODELS 94RA31-43-8115B,
94RA31-43-8116A

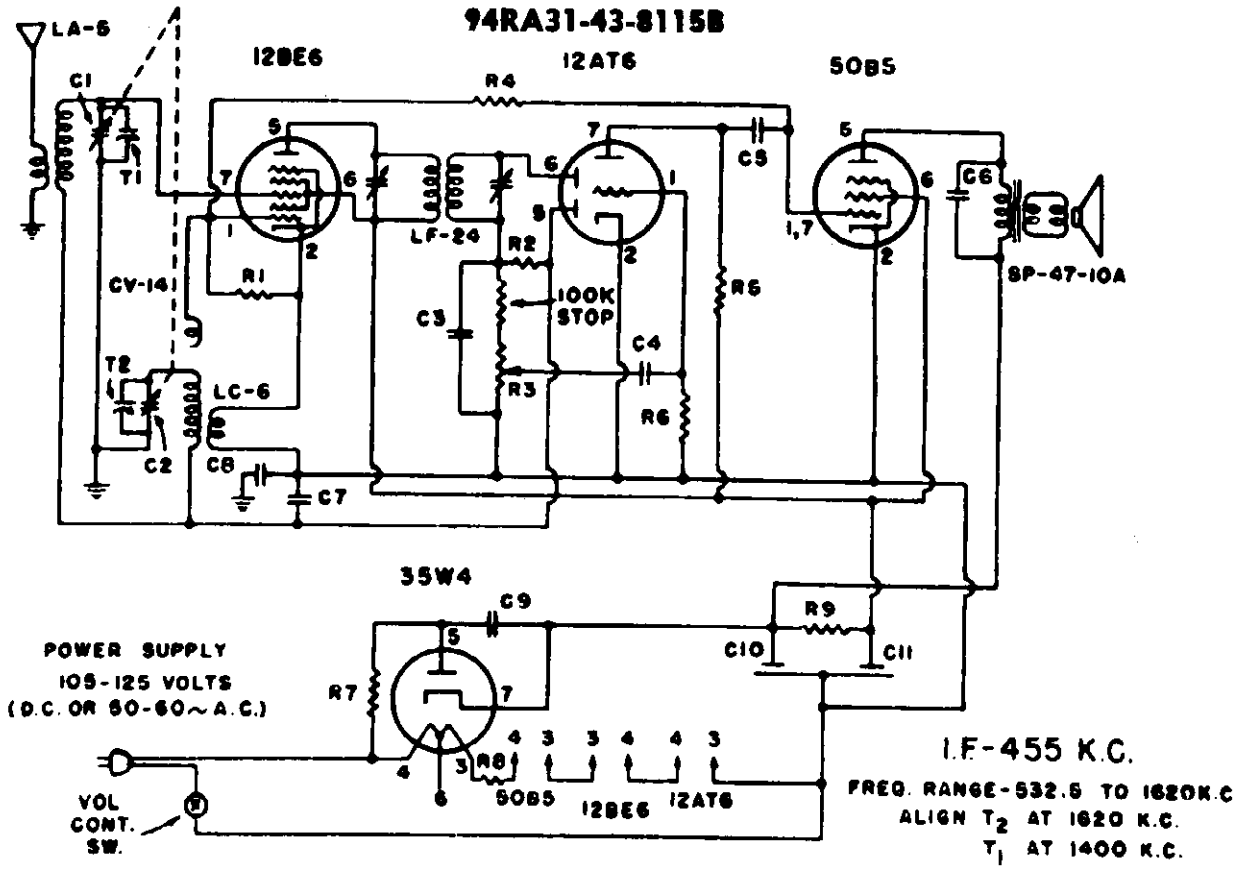

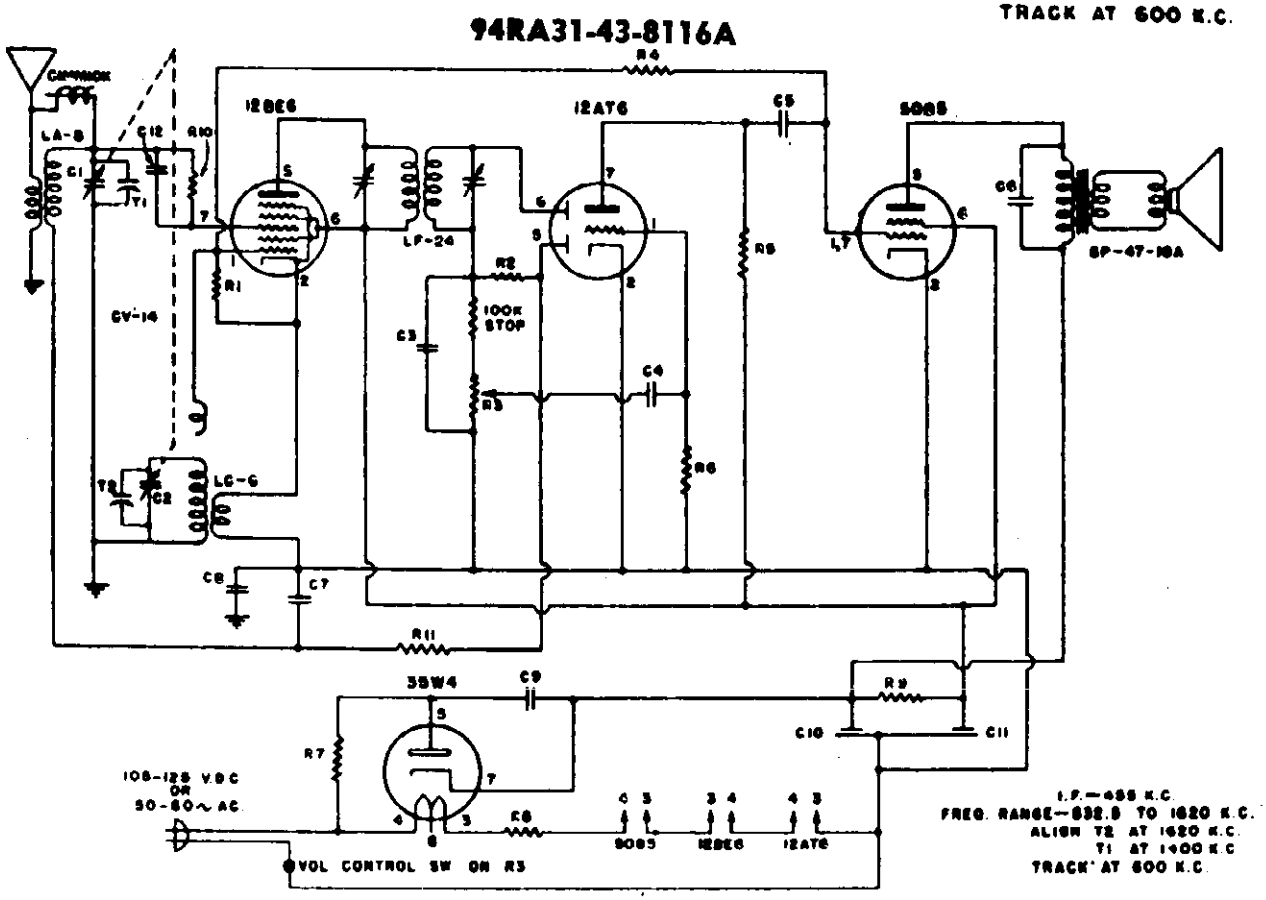

©John F. Rider

MODELS 94RA31-43-8115A, 94RA31-43-8115B, 94RA31-43-8116A

ELECTRICAL SPECIFICATIONS

Power Supply ..... 105-125 Volts D.C. or 50-60 Cycles A.C. 30 Watts

Frequency Range ..... 532.5 to 1620 kc.

Intermediate Freq. ..... 455 kc.

Tuning ..... Two gang capacitor

Speaker ..... 4 inch PM 3.5 ohm voice coil impedance

Power Output ..... 1 watt undistorted 1.5 watt maximum

Sensitivity ..... 800 Microvolts at 50 milliwatts Output

Selectivity ..... 120 kc broad at 1000 times signal at 1000 kc.

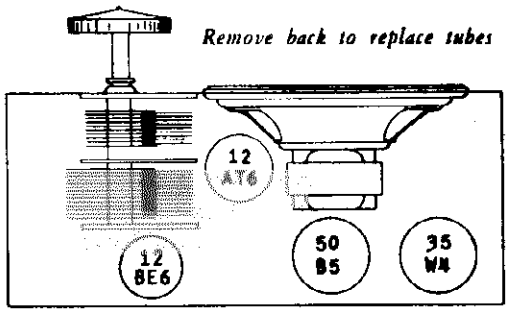

TUBE LOCATIONS FOR "AG" & "AR" DIAGRAMS

REPLACEMENT PARTS LIST

When ordering parts, specify part number, model number and series

Ref. No.	*Part No.*	*Description*
		CAPACITORS
C1, C2	CV14	Variable Condenser (2 gang)
C3	CM151-1	.00015 mfd 500V mica cond.
C4	CP202-2	.002 mfd 400V paper cond.
C5	CP502-2	.005 mfd 200V paper cond.
C6, C9	CP203-1	.02 mfd 400V paper cond.
C7, C8	CP503-4	.05 mfd 200V paper cond.
C10,C11	CE15**	2 x 40 mfd 150V Elect.
		** CE-20 May Be Substituted.
		RESISTORS
R1	RC183-2	18,000 ohms ½W 10%
R2	RC475-1	4.7 megohms ½W 20%
R3	VC-11	2 meg. vol. cont., 100 K Stop
R4	RC334-1	330,000 ohms ½W 20%
R5	RC224-1	220,000 ohms ½W 20%
R6	RC106-1	10 megohms ½W 20%
R7	RC180-1	18 ohms ½W 20%
R8	RC390-5	39 ohms 1W 10%
R9	RC222-5	2200 ohms 1W 10%
		COILS & TRANSFORMERS
	LA-5	Antenna Coil
	LC-6	Oscillator Coil
	LF-24	I.F. Transformer
		MISCELLANEOUS
	CB-100A	Walnut
	KN-20-2	Knob
	KN-21-2	Pointer Knob
	SP-47-10A	4" PM Speaker
		ADDITIONS TO MODEL No. 94RA31-43-8116A FOR UNDERWRITERS APPROVAL
R10	RC183-2	18,000 ohms ½W 10%
R11	RC224-1	220,000 ohms ½W 20%
C12	CM501-1	500 mmf mica cond.
	LA-8	Antenna Coil

ALIGNMENT PROCEDURE

- Output meter across 3.5 ohm output load.
- Volume control at maximum for all adjustments.
- Align for maximum output. Reduce input as needed to keep output near 0.4 volts.

SIGNAL GENERATOR				*SETTING TUNER*	*ADJUST TRIMMERS TO MAXIMUM OUTPUT (in order shown)*
Frequency	*Coupling Factor*	*Connection to Receiver*	*Ground Connection*		
455 kc	.1 mfd	12BE6 Grid	B—	Rotor full open (Plates out of mesh)	Input and output trimmers on IF cans
1620 kc	.1 mfd	12BE6 Grid	B—	Rotor full open (Plates out of mesh)	Oscillator trimmer T2
1400 kc	75 mmf	Hank	B—	1400 kc	Antenna trimmer T1

© John F. Rider

MODEL 94RA31-43-9841A

SERVICE DATA

ELECTRICAL SPECIFICATIONS

Power Supply	105-125 volts DC or 50-60 cycles AC 15 watts
Batteries	A—4½ volts. 100 ma. B—67½ volts. 8 ma. average.
Frequency Range	532½ to 1620 kc.
Intermediate Freq.	455 kc.
Tuning	Two-gang capacitor
Antenna	Built-in loop
Speaker	4 inch PM; voice coil Impedance 3.5 ohms.
Power Output	80 milliwatts undistorted 140 milliwatts maximum
Sensitivity	750 microvolts per meter for 50 milliwatt output
Selectivity	55 kc broad at 1000 times signal at 1000 kc.

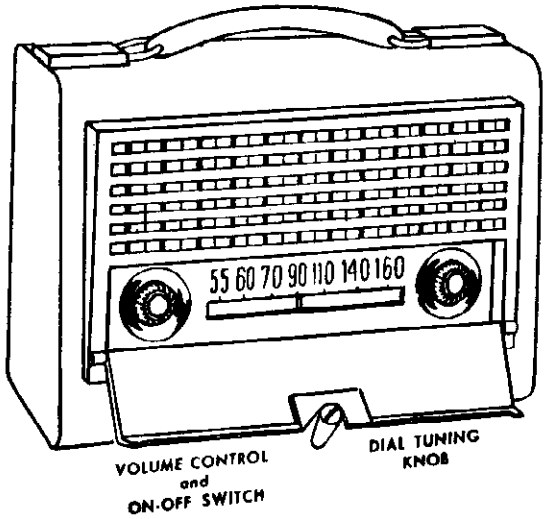

INSTALLATION

TUBES

Be sure each of the tubes is in place and inserted firmly in its socket.

The tube location of each tube is shown on the card attached to the back of the cabinet. Your receiver is equipped and tested at the factory with the tubes that are shipped with it.

POWER SUPPLY

This receiver is designed to operate on either an A.C. or D.C. power supply. The following operation ratings should be observed:

Voltages ..... 105 125 Volts, A.C. or D.C.
Frequency ..... 50 to 60 cycles on A.C.

If in doubt as to the voltage and frequency supplied to your home, telephone your local Power Company.

When operating on a D.C. source, it is necessary to insert the power plug with the proper polarity. If the set fails to function after an interval sufficient for the tubes to reach their operating temperature, reverse the power plug in the outlet.

The battery supply to be used with this receiver is as follows:

"A" supply ..... 4½ volts
Use Coronado No. 42-266 or equivalent.

"B" supply ..... 67½ volts.
Use Coronado No. 42-304 or equivalent.

ANTENNA SYSTEM

This receiver is equipped with a built in Antenna System, which obviates the necessity of using an antenna connection for receiving most local, and some distant stations.

When tuning Broadcast Stations, it may be found advisable to rotate the radio about its position of rest until the most distant station regularly enjoyed is heard the clearest. In some vicinities where there is a localized noise interference prevalent, it is best to rotate the radio cabinet to a position which gives a minimum of noise.

OPERATION

TO OPERATE ON AC OR DC

Plug the line cord into the nearest convenient wall outlet through the opening provided in the back.

TO OPERATE ON BATTERIES

To operate on batteries insert line cord plug in chasis receptacle as shown in diagram.

©John F. Rider

TUNING CONTROL

The knob at the right is the tuning control. Stations are tuned manually by turning this tuning control. The dial calibration numbers are in tenths of the actual kilocycle readings. To convert these calibrations to kilocycles, as is shown in most radio log books, add a "0" to the end of each number. After the desired station is heard, adjust this knob to the point of maximum volume and most realistic reproduction. This position of exact tune is very important as it is only when the receiver is in this position that the full, rich tone is available. The volume control may now be set to give the desired volume.

VOLUME CONTROL and POWER SWITCH

The volume control and power switch are operated by a common control knob at the left of the cabinet. When the control is in extreme counter-clockwise position, the receiver power is off. From this position a slight clockwise rotation will turn the power on and by further clockwise rotation, volume may be increased until the full output of the receiver is obtained. To conserve batteries and tubes, be sure that the receiver is turned off when it is not in use.

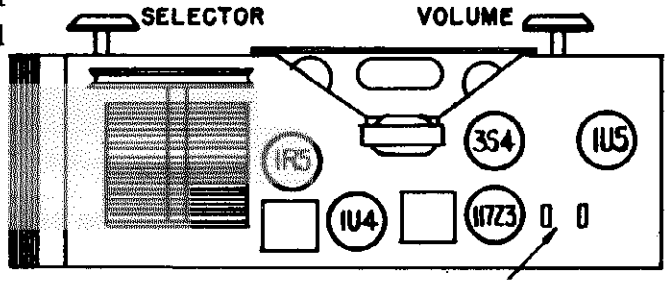

INSERT LINE CORD PLUG HERE FOR BATTERY OPERATION

MAINTENANCE

CAUTION

Always remove the power cord from its receptacle before starting to replace tubes or batteries.

Do not allow cells which have become too weak to operate the set properly to remain in the set for any length of time.

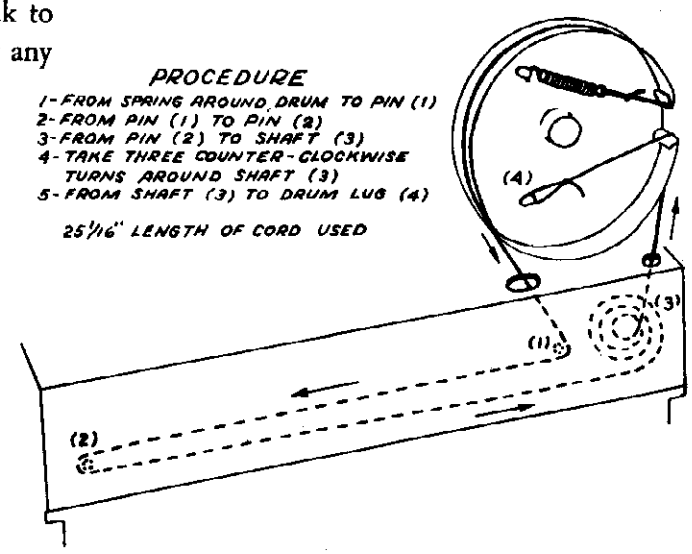

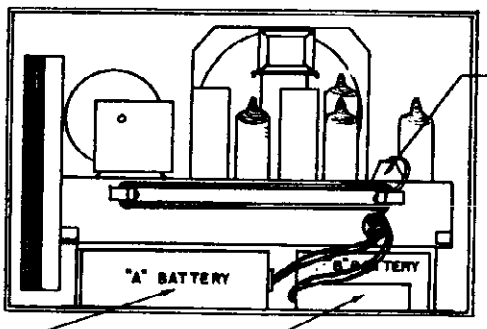

Line cord plug shown in position for battery operation, with line cord wrapped around line cord retainers.

For A.C.-D.C. operation remove plug from chassis, unwrap cord and bring out of notch in side of cover.

Insert two-prong plug into "A" BATTERY. Make sure large pin engages large contact in battery. Excessive force is not required to push plug into battery.

Place "B" BATTERY so that contacts are toward bottom. Snap fasteners onto battery.

©John F. Rider

MODEL 94RA31-43-9841A

ALIGNMENT PROCEDURE

- Output meter across 3.2 ohm output load.
- Volume control at maximum for all adjustments.
- Align for maximum output. Reduce input as needed to keep output near 0.4 volts.

SIGNAL GENERATOR				SETTING TUNER	ADJUST TRIMMERS TO MAXIMUM OUTPUT (in order shown)
Frequency	Coupling Factor	Connection to Receiver	Ground Connection		
455 kc	.1 mfd	1R5 Grid	B—	Rotor full open (Plates out of mesh)	Input and output trimmers on IF cans
1620 kc	.1 mfd	1R5 Grid	B—	Rotor full open (Plates out of mesh)	Oscillator trimmer T2
1400 kc		Radiating Loop		1400 kc*	Antenna trimmer T1

Five markings on the dial bracket represent respectively 532½ kc., 600 kc., 1000 kc., 1400 kc. and 1620 kc., reading from left to right. These points are to be used for the alignment of the receiver.

REPLACEMENT PARTS LIST

When ordering parts, specify part number, model number and series.

CAPACITORS

Ref. No.	Part No.	Description
C1	CP-102-3	.001 mfd, 200 volt paper
C2-C3, C4-C5	CC-5-2	ceramic condenser block
C6	CM-470-1	.000047 mfd mica cond.
C7	CP-503-2	.05 mfd, 150 volt, paper
C8	CP-103-7	.01 mfd, 400 volt, paper
C9	CP-104-5	.1 mfd, 400 volt, paper
C10, C17	CP-503-1	.05 mfd, 400 volt, paper
C11	CE-17	Elect. con. 40 mfd. 150 V.
C12		Elect. con. 40 mfd. 150 V.
C13		Elect. con. 200 mfd. 10 V.
C14	CP-502-2	.005 mfd, 400 volt, paper
C15, C16	CV-15	Variable condenser
T1, T2		Trimmers on variable

RESISTORS

R1	RC-180-1	18 ohms,	½ watt 20%
R2	RC-153-1	15,000 ohms,	½ watt 20%
R3	RC-104-1	100,000 ohms,	½ watt 20%
R4	RC-106-1	10 megohms,	½ watt 20%
R5	RC-222-2	2,200 ohms,	½ watt 10%
R6	RC-622-5	6,200 ohms,	1 watt 10%
R7	RC-105-1	1 megohm,	½ watt 20%
R8	RC-335-1	3.3 megohms,	½ watt 20%
R9	RC-390-2	39 ohms,	½ watt 10%
R10	RC-225-1	2.2 megohms,	½ watt 20%
R11	RC-681-2	680 ohms,	½ watt 10%
R12	RC-152-2	1,500 ohms,	½ watt 10%
R13	RC-270-3	27 ohms,	½ watt 5%
R14	RC-391-2	390 ohms,	½ watt 10%
R15	RP-5	Candohm Res. 2550 ohms ± 5%	

COILS AND TRANSFORMERS

Ref. No.	Part No.	Description
	LC-8	Oscillator coil
	LF-22	IF transformer
	LP-11	Loop antenna

MISCELLANEOUS

Ref. No.	Part No.	Description
	VC-16	Vol. control—1 meg. D.P.S.T. SW.
S2,3,4, 5,6,7,	SW-11	Battery switch 6 pole—D.T.
	SP-41-18	4 inch spkr. 1 oz. mag.—O.T.
	PN-16	Pointer
	CR-2	Drive cord
	SG-1	Spring for drive cord
	KN-29	Knob
	BK-15	Cabinet back
	CB-112	Assembled cabinet (without back and handle)
	HA-6	Handle for cabinet
	RE-8	Handle retainer

FOR PRICES; SEE CORRESPONDING KEY NUMBER IN PRICE LIST.

©John F. Rider

MODEL 94RA31-43-9841A

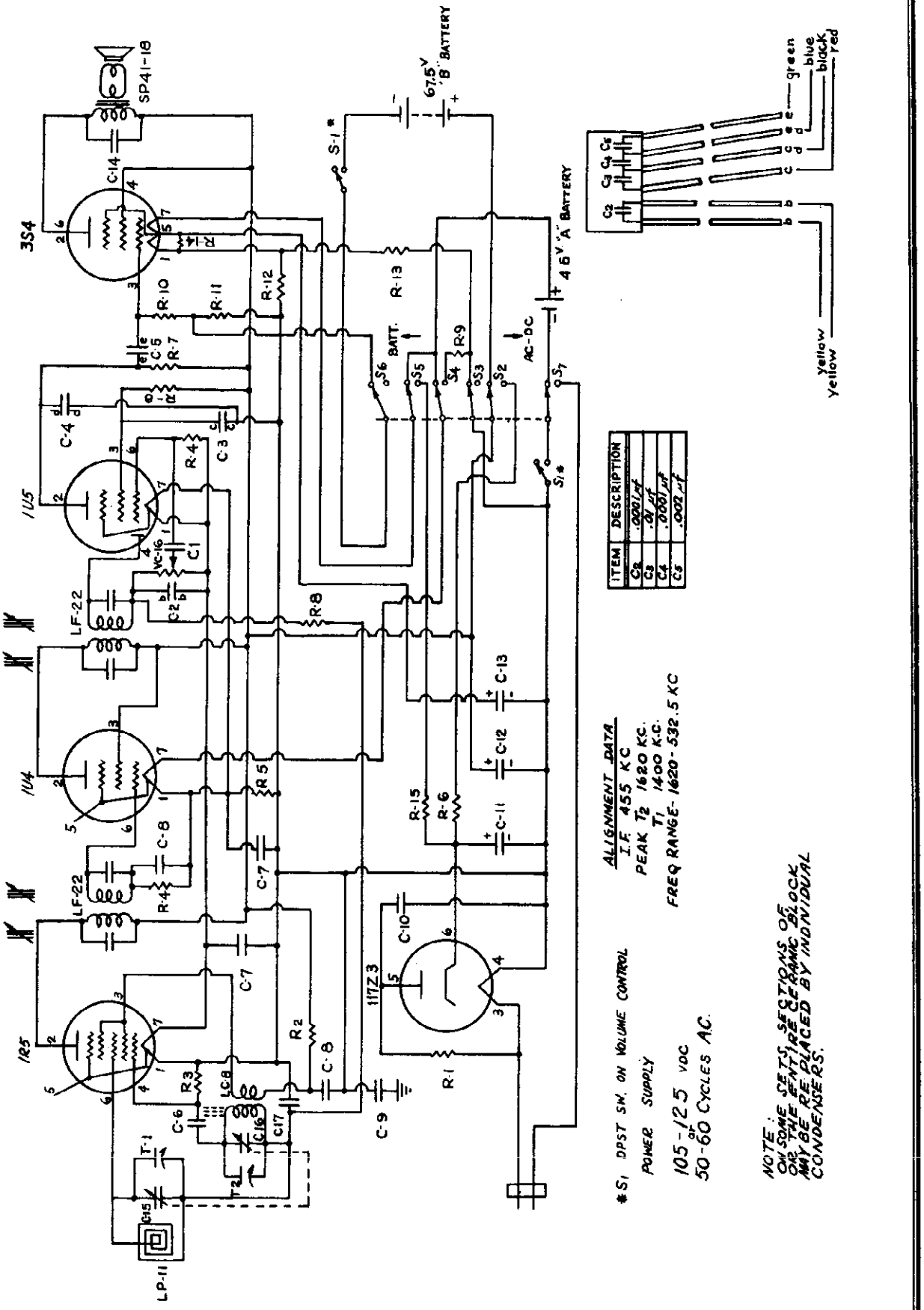

©John F. Rider

©John F. Rider

MODELS 94RA33-43-8130C, 94RA33-43-8131C

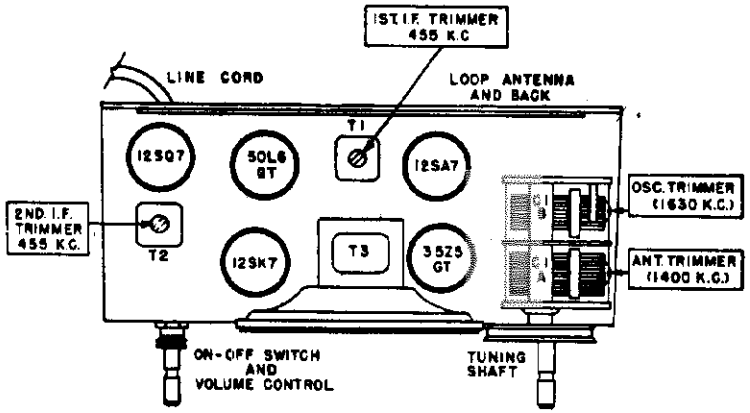

SPECIFICATIONS

Power Supply	117 volts 60 cycle AC, 117 volts DC, 29 watts
Frequency Range	535 KC to 1630 KC
Intermediate Frequency	455 KC
Antenna	Built-in Loop
Tuning	Variable Capacity
Speaker	4", P.M. voice coil impedance 3.2 ohms
Power Output	0.75 watt undistorted, 1.8 watts maximum
Sensitivity	500 uv/m average for 50 milliwatts output
Selectivity	65 KC broad at 1000 times, signal at 1000 KC

Tubes used are as follows:

12SA7 Oscillator-Converter
12SQ7 AVC, Detector and Audio
12SK7 I.F. Amplifier
50L6GT Power Output
35Z5GT Power Rectifier

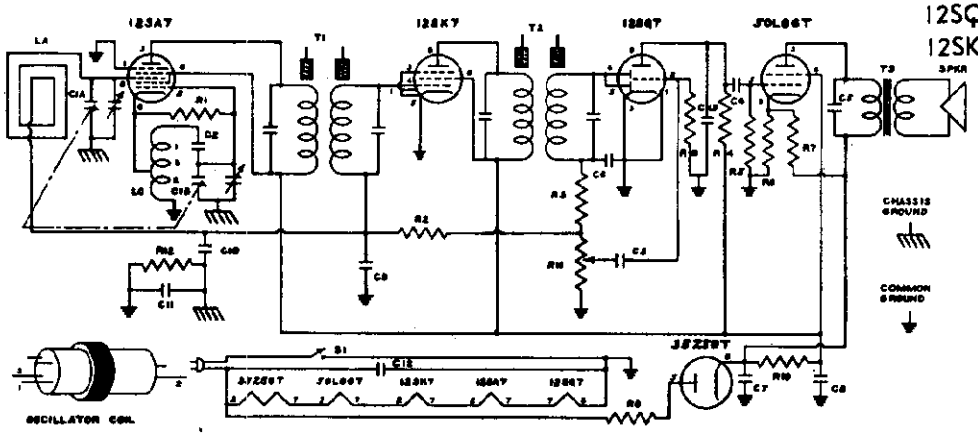

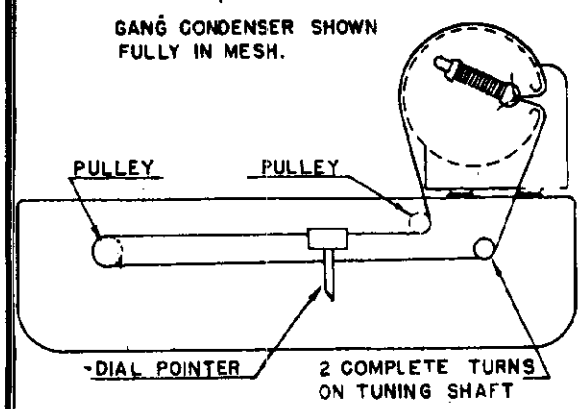

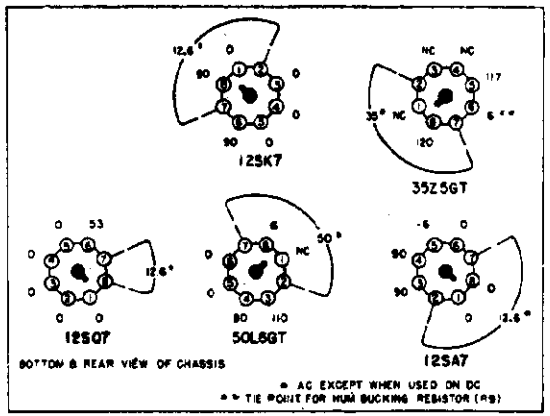

MODELS 94RA33-43-8130C, 94RA33-43-8131C

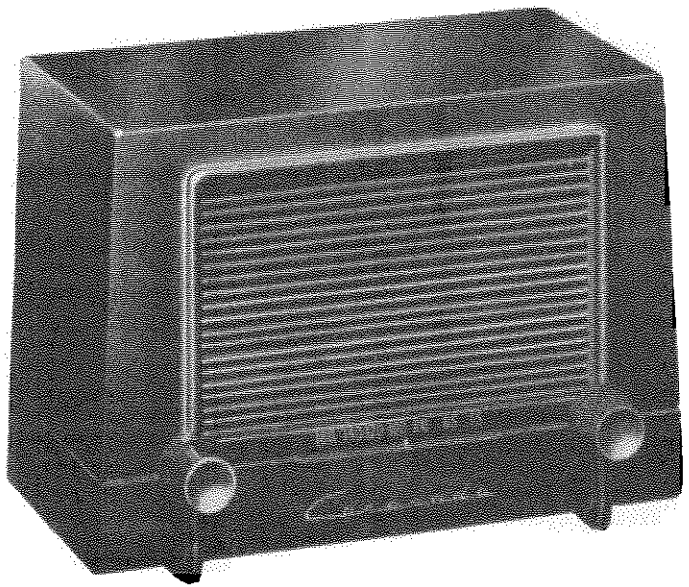

MODELS 94RA33-43-8130C,
94RA33-43-8131C

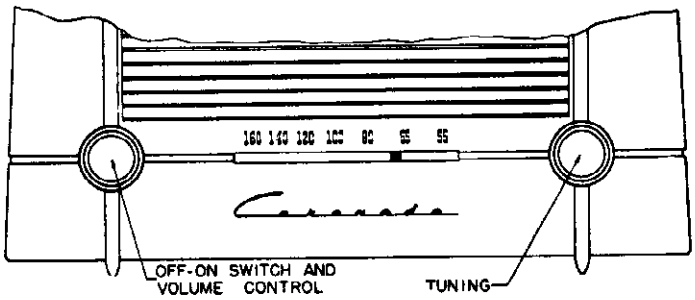

ALIGNMENT PROCEDURE

The following procedure is for use only by competent servicemen having the proper equipment.

The alignment should be made with volume control fully on, and the output from the Signal Generator as low as possible, to prevent AVC action from interfering with proper alignment.

With the output meter connected across the voice coil of the speaker, the output meter reading for 50 milliwatts is 0.4 volts, using a signal which is modulated 400 c.p.s.

Adjust all trimmers for maximum output. Repeat the alignment procedure given below as a final check.

CAUTION: This is an AC/DC receiver and when aligning the set it is necessary to isolate the Signal Generator or the Receiver from the line by use of a transformer, or to place a .2 MFD condenser in each test lead of the Signal Generator.

SIGNAL GENERATOR			POSITION	ADJUST FOR
Frequency	Dummy Antenna	Connection to Radio	OF VARIABLE	MAXIMUM OUTPUT
455 KC	.1 MFD	12SA7 Grid	Fully	T1 & T2
		Stator C1A	Open	
1630 KC	.1 MFD	12SA7 Grid	Fully	C1B
		Stator C1A	Open	Oscillator
		Loosely	Tune in	
1400 KC		Coupled	Signal	C1A
		To Loop	Generator	Antenna

Connect low side of Signal Generator to common negative.

PARTS VALUES FOR T-65 GAMBLE'S AC-DC MUSETTE

CIRCUIT SYMBOL	COMPONENTS PART NO.	DESCRIPTION	VALUE	RATING
C1A-C1B	E81650-1	Condenser, 2 gang		
C2	C026	Condenser, paper	.02 MFD	600 volts
C3, C4, C5	C0056	Condenser, paper	.005 MFD	600 volts
C6, C13	C2505M	Condenser, mica	250 MMF	500 volts
C7	C40-20-1.5	Electrolytic	40 MFD	150 volts
C8	C40-20-1.5	Electrolytic	20 MFD	150 volts
C9, C10, C11	C052	Condenser, paper	.05 MFD	200 volts
C12	C054	Condenser, paper	.05 MFD	400 volts
R1	R223.5	Resistor	22K ohm	1/2 watt
R2	R105.5	Resistor	1 megohm	1/2 watt
R3	R473.5	Resistor	47K ohm	1/2 watt
R4, R5, R12	R474.5	Resistor	470K ohm	1/2 watt
R6	R121.5	Resistor	120 ohm	1/2 watt
R7	R1031	Resistor	10K ohm	1 watt
R8	R106.5	Resistor	10 megohm	1/2 watt
R9	R270.5	Resistor	27 ohm	1/2 watt
R10	R1021	Resistor	1000 ohm	1 watt
R11	R105VCS	Volume control and switch	1 megohm	
LA	T65-L	Antenna loop		
LO	T65-O	Oscillator coil		
T1	T111-31-A	I.F. transformer		
T2	T111-31-A	I.F. transformer		
T3	E-81645-T	Output transformer		
S1	R105VCS	Switch S.P.S.T. on volume control		

MECHANICAL PARTS

PART NO.	DESCRIPTION	PART NO.	DESCRIPTION
M1605	Chassis	H81644-5	Octal tube socket, wafer
M1607	Dial bracket	W1602	Line cord and plug
T111-31-B	I.F. mounting clip	P1601	Cabinet, ivory
A1601	Dial cord assembly	P1601A	Cabinet, brown
M1602	Dial drive shaft	H81649-8	Knob, ivory
M1601	Dial pointer	H81649-8A	Knob, brown
M1604-A	Small idler pulley	E-81645-S	Speaker, 4" P.M.
M1604-B	Idler pulley rivet	H1601	Snap-in trimount
M1603	Large idler pulley		

© John F. Rider

SPECIFICATIONS

Physical Dimensions:
Width 14½ in.
Depth 14½ in.
Height 23⅛ in.
Weight 18 lbs.

Power Consumption 50 watts

Electrical Data:

Tuning Range—500-1600 kc.
Intermediate Freq.—455 kc.
Power Output—⅛ watt

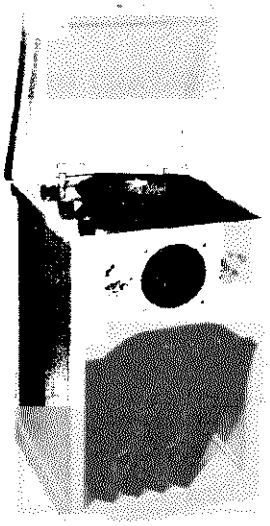

Model
4SJ3A1

Loudspeaker
5¼ in. PM, voice coil 3.20 ohms at 400 cycles

Pickup—High impedance crystal

Tube Complement:
1 12SA7 Converter
1 12SQ7 Detector, 1st Audio Amplifier
1 50L6GT Power Output
1 35Z5GT Rectifier

DESCRIPTION

The model 4SJ3A1 is an AC toy radio-phonograph employing a superheterodyne circuit.

ALIGNMENT INSTRUCTIONS

1. Turn S1 to Radio and volume to maximum. Connect an output meter across the speaker voice coil. Connect generator ground to B- through a .1 mfd. condensor, and the high side to pin 8 of the 12SA7 tube through .03 mfd. Tune generator to 445 kc. and tune T1 trimmers for maximum output reading.
2. Remove generator connection to pin 8, unsolder antenna and attach generator to L1 through 25 mmfd. Turn tuning condenser of set fully open. Set generator to 1620 kc. Tune oscillator trimmer on tuning gang for maximum reading; set R.F. trimmer for maximum output reading. Use only enough generator output to get a reading on the output meter.

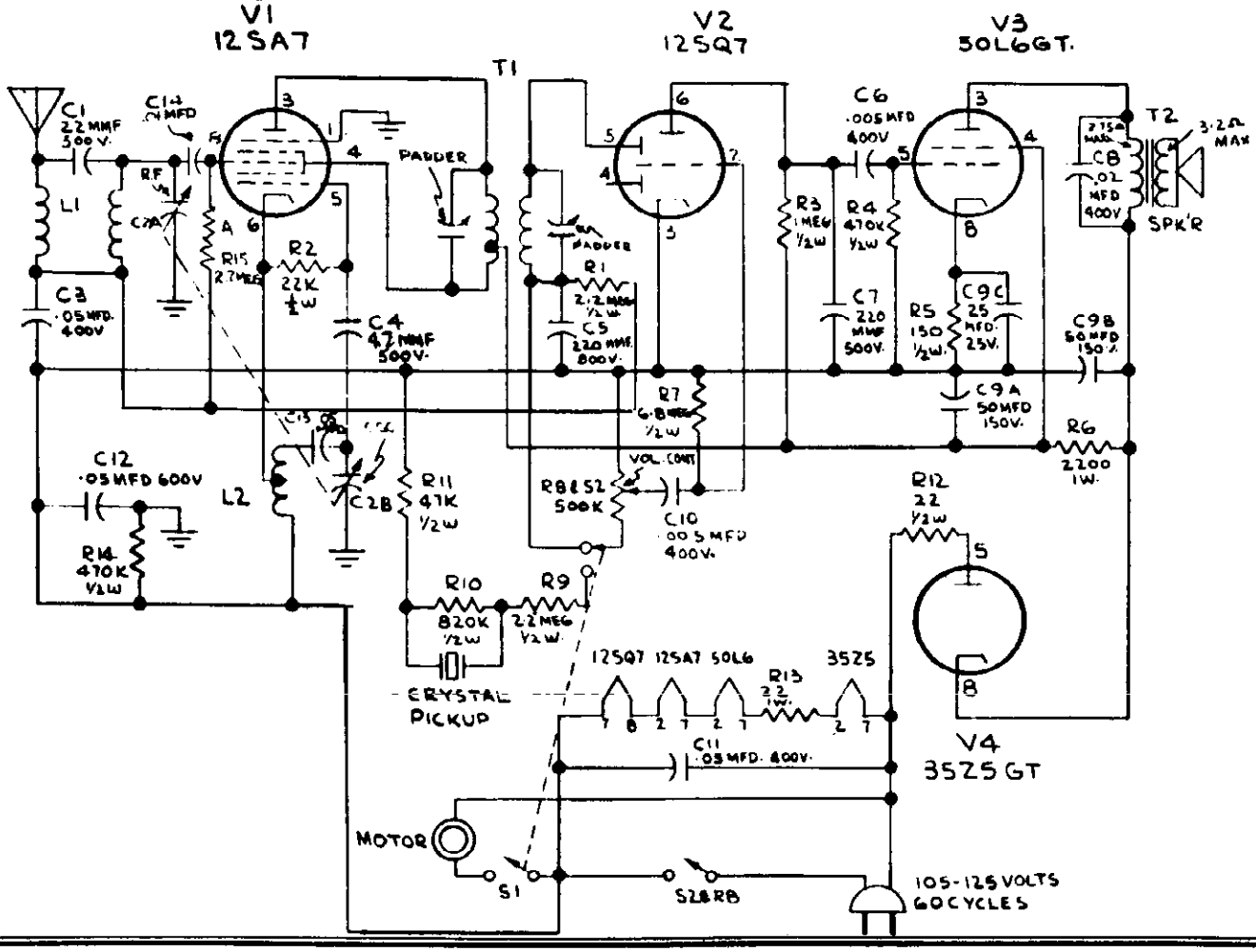

©John F. Rider

SPECIFICATIONS

CABINET:

	64	65
Model		
Color	Brown Mahogany	Ivory
Height	6⅜ in.	6⅜ in.
Width	11½ in.	11½ in.
Depth	6¼ in.	6¼ in.

ELECTRICAL RATING (INPUT):

Voltage ..... 105-120 volts, a-c
Frequency ..... 60 cycles
Wattage ..... 30 watts

OPERATING FREQUENCIES:

Intermediate Frequency ..... 455 kc
Broadcast Band ..... 540-1600 kc

POWER OUTPUT:

Undistorted 1
Maximum 1.75

LOUDSPEAKER:

Type ..... Alnico 5 PM
Outside Cone Diameter 4-inch
Voice Coil Impedance (400 cycles) ..... 3.5 ohms

TUBE COMPLEMENT:

Oscillator-Converter ..... Type 12SA7
I-F Amplifier ..... Type 12SK7
Detector and 1st Audio ..... Type 12SQ7
Power Output ..... Type 50C5
Rectifier ..... Type 35W4

CAUTION: One side of the power line is connected to B–. Avoid any ground connections direct to B–. Use an isolating transformer when making service adjustments with the chassis removed from the cabinet.

RADIO CIRCUIT ALIGNMENT

ALIGNMENT FREQUENCIES:

R-F ..... 1500 kc
R-F ..... 1620 kc
I-F ..... 455 kc

EQUIPMENT REQUIRED:

1. Test oscillator with tone modulation.
2. A-c output meter, 1½ volts full scale.
3. 0.05 mf. paper capacitor.
4. Loop.
5. Insulated screwdriver.

PROCEDURE—GENERAL:

1. With the tuning scale control wheel turned so that the gang condenser plates are fully meshed, the index should read approximately ¼ inch to the right of the 550 kc scale calibration mark. If it does not, remove the control wheel from the gang condenser shaft and replace it for correct position. CAUTION: Do not attempt to correct the position by rotating the wheel on the shaft as this will cause the knob to slip.
2. For i-f alignment, it is necessary to remove the chassis from the cabinet.
3. Connect the output meter across the loudspeaker voice coil terminals.
4. Keep radio volume control at maximum and attenuate the test oscillator signal output so that the output meter reading never exceeds 1.0 volt.
5. Connect the capacitor as listed in column 2 between the output "High Side" of the test oscillator and the point of input specified. The oscillator output cable ground lead is connected to receiver chassis.
6. For alignment of the oscillator and antenna trimmers, the input signal should be inductively coupled to the radio loop antenna, L1, by connecting a four-turn, six-inch diameter loop of bell wire across the signal generator output terminals, and then locating the loop to face the radio antenna loop about one foot away. To prevent possible errors in reference to previous signal measurement readings, the loop with respect to the radio loop should not be changed during any one set of adjustments.

ALIGNMENT CHART

Step	Connect Test Oscillator to	Test Osc. Setting	Dial Drum Setting	Adjust Trimmers for Maximum Output
1	12SK7 grid (4) in series with 0.05 mf. cap.	455 kc	Minimum Capacity	2nd i-f trans. trimmers, C14 and C15
2	12SA7 grid (8) in series with 0.05 mf. cap.	455 kc	Minimum Capacity	1st i-f trans. trimmers, C8 and C9
3	Inductively coupled to radio loop	1620 kc	Minimum Capacity	C4 (oscillator)
4	Inductively coupled to radio loop	1500 kc	Tune for Maximum	C3 (antenna)

STAGE GAIN AND VOLTAGE CHECKS

Stage gain measurements by vacuum tube voltmeter or imilar measuring devices may be used to check circuit performance and isolate trou le. The gain values listed may have olerances of 20%. Readings taken with low signal input so hat AVC is not effective.

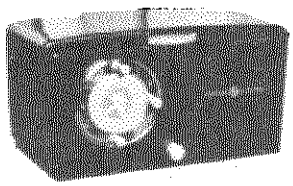

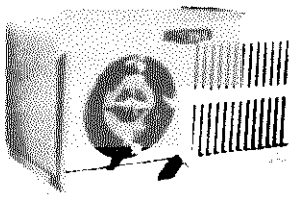

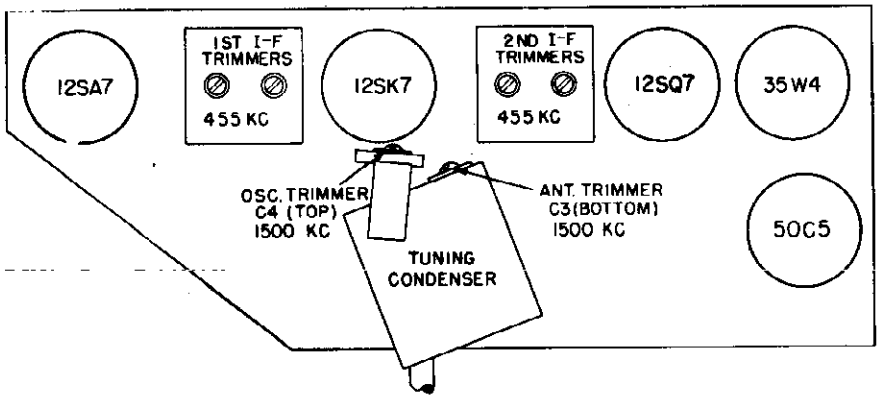

Fig. 1. Tube and Trimmer Location

ER-S-64

©John F. Rider

MODELS 64, 65

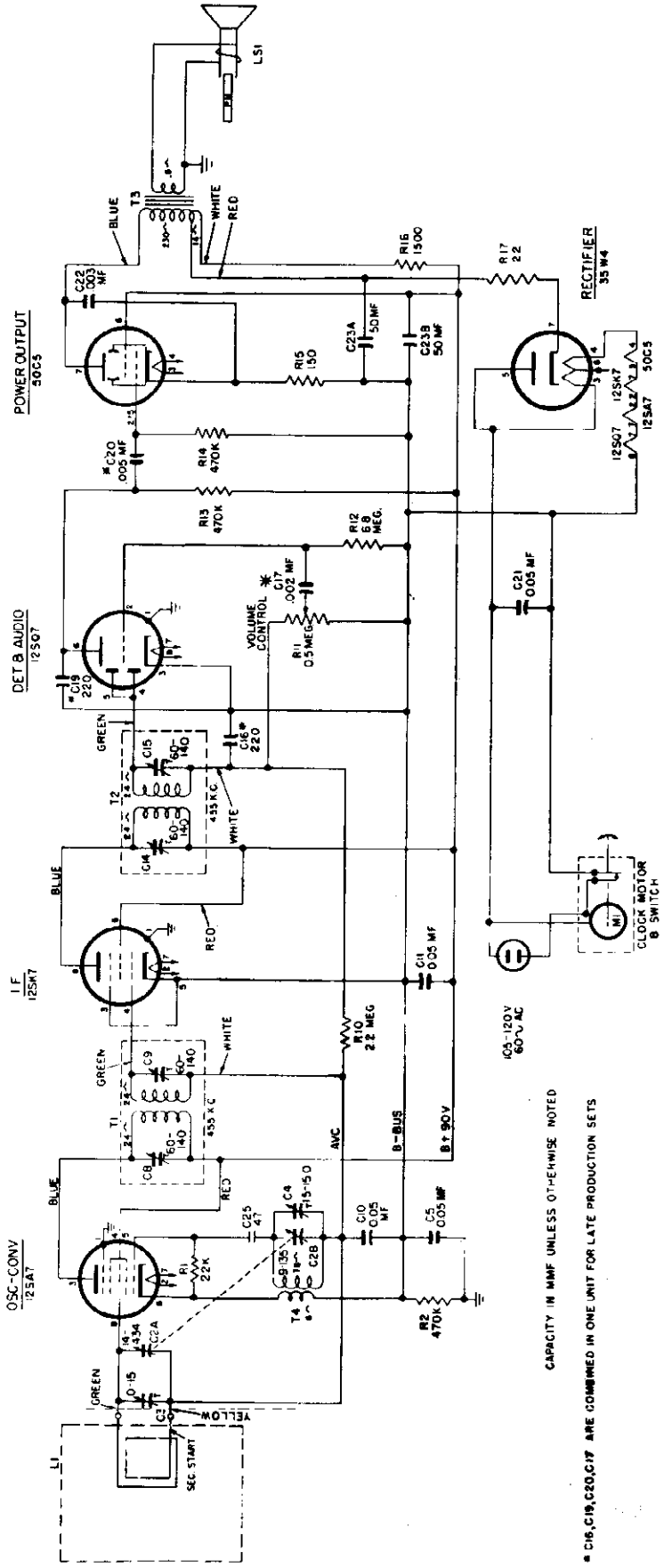

Fig. 2. Schematic Diagram, Models 64 and 65

©John F. Rider

(1) I-F Stage Gains.

12SA7 Grid to 12SK7 Grid.....50 @ 455 kc
12SK7 Grid to 12SQ7 Diode Plate.....50 @ 455 kc

(2) Audio Gain.

0.15 volts at 400 cycles across the volume control (R11) with control set at maximum will give approximately ½-watt output across the loudspeaker, LS1, voice coil.

(3) Oscillator Grid Bias.

D-c voltage developed across the oscillator grid leak (R1) average 8.5 volts at 1000 kc.

(4) Socket Pin Voltages.

Figure 3 shows voltages from all tube pins to B– unless otherwise specified. Voltage readings much higher or lower than those specified may help localize defective components or tubes.

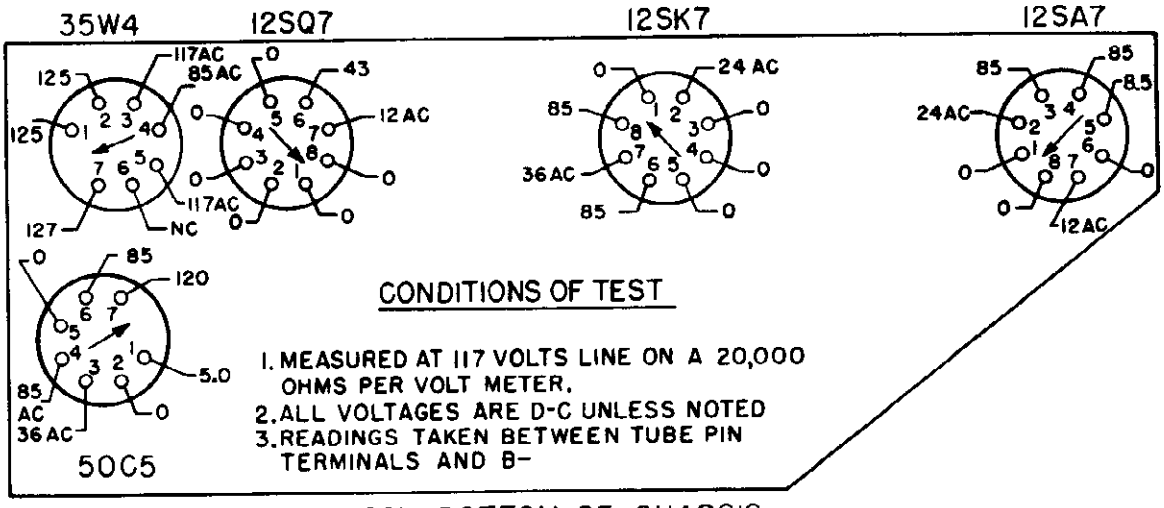

Fig. 3. Socket Voltages

CLOCK SERVICE

Figures 4 and 5 show clock parts referred to in the following paragraphs and the parts list.

CLOCK MOVEMENT DISASSEMBLY

1. Remove clock movement from case. When removing knobs, note that the Alarm-Set knob is a left-hand thread, while Wake Up-Manual and Sleep are pull-off knobs.
2. Remove Bezel, Hands and Dial Faces.
3. Remove the motor assembly by removing two screws (3 and 4) and break two soldered joints on Field. The Field and Rotor Assembly (11 and 2) can now be removed. The Rotor is held by friction only, to the Field.
4. Remove Switch Assembly by removing two screws (12) from base plate.
5. Remove Switch Shaft Assembly (13) and spacer.
6. Remove Alarm-Set Shaft Assembly (6) and spacer.
7. Remove the three front plate assembly screws that are located under the Dial Face and then remove Front Plate.
8. Remove the following gear assemblies and control levers in the order listed below:

(a) Sweep Control Shaft and Segment Gear (30)
(b) Alarm Dial Gear (16)
(c) Hour Hand Gear (17)
(d) Alarm Signal Cam and Gear, and Friction Washer (27, 26)
(e) Sweep Control Switch Lever (29)
(f) Pinion Drive Gear Assembly (15) (drives Sleep Control Segment Gear)
(g) Alarm Control Switch Cam Lever (8)
(h) Time Set Shaft and Gear, and Spacer (14, 20)
(i) Drive Gear and Pinion Assembly (28)
(j) Minute Hand Gear (18)
(k) Sweep Second Hand Gear (19)

CLOCK MOVEMENT REASSEMBLY

Reassemble in the reverse order of disassembly, observing the following precautions:

1. The spring washer (26) should curve away from the gear when placed on the Alarm Cam Gear Assembly (27).
2. The Switch Cam Lever fork (8) must straddle the base plate post as shown in the illustration.
3. After reassembly of front plate, check the Sweep Second Gear (19) through the hole in the base plate to make sure it is free to turn.
4. Proceed with Alarm and Switch Adjustments as described below before installing hands.

ALARM AND SWITCH ADJUSTMENTS

1. Turn Wake Up-Manual shaft to ALARM position.
2. Slowly rotate Time Set shaft clockwise until the contacts 21 and 22 of the Switch Assembly close.
3. Replace Dial Face, Alarm Dial, the Minute, Hour and Second Hands. Set all Hands and Dial so that they indicate 12 o'clock. Make sure all Hands and Alarm Dial are tight on their respective shafts.
4. With Alarm Set knob pulled out, continue to rotate Time Set shaft clockwise and note that the Alarm vibrator arm drops against field core approximately 7–10 minutes later.
5. Set alarm at some other selected position and make sure mechanism actuates within limits (±1 minute).
6. Check alarm tone of vibrator. This can be adjusted by either bending vibrator arm nearer or farther away from field core. Bend arm near anchor point.

CLEANING AND LUBRICATION

To clean, completely disassemble and clean all moving parts in carbon tetrachloride or some similar cleaner.

The inside of the sleeves and shaft surfaces may be cleaned of oxidized oil by rubbing with a fine grade of steel wool dampened in carbon tetrachloride.

Do not use too much oil and apply by means of a small wire (drop oiler). Too much oil collects dust and later oxidizes. Use only recommended clock oil, such as Nye's Celebrated Oil which may be purchased from Wm. F. Nye Co., Inc., New Bedford, or equivalent.

CLOCK TROUBLES

1. Clock will not operate—Defective field coil, defective rotor, binding of parts.
2. Clock loses time—Binding parts, too little friction on minute hand sleeve assembly, defective rotor. Clock time set shaft bent and rubs against hole in clock bracket.
3. Noisy Clock—Rotor defective, alarm armature improperly adjusted, loose parts, or binding of moving parts.

© John F. Rider

MODELS 64, 65

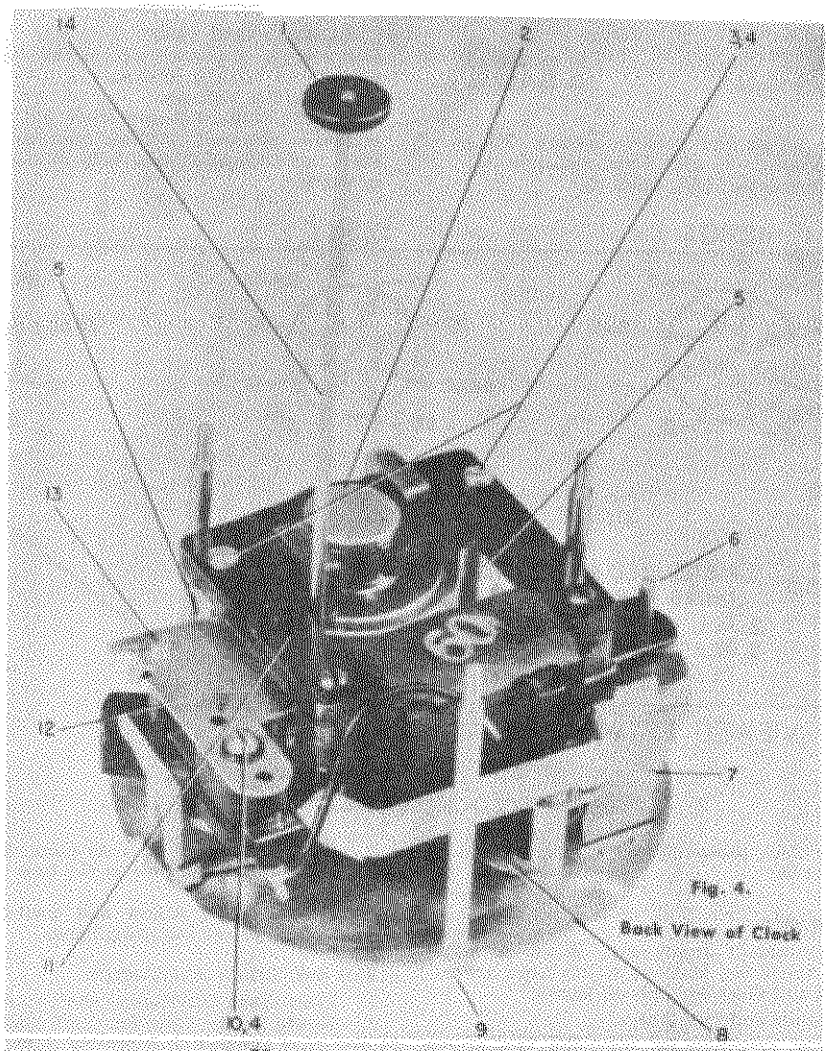

Fig. 4.
Back View of Clock

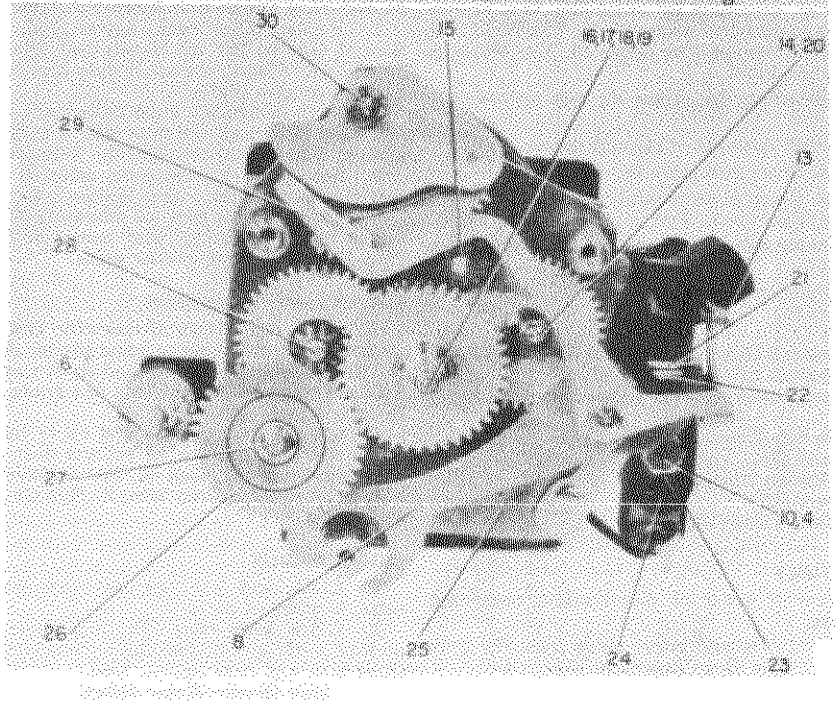

Fig. 5. Front View of Clock, Front Plate Removed

©John F. Rider

PRODUCTION CHANGES

C16, C17, C19, AND C20

Early production receivers use individual component capacitors C16, C17, C19, and C20, while other chassis incorporate these in a single four-section unit, catalogued RCW-3013. Some differences in capacitor values for the above components may be noted in early receivers from that shown in the schematic diagram. These values are not critical, however, and the stock catalogue item corresponding to the capacitor symbol in the parts list can be used when replacement is necessary.

The lead identification for the four-section ceramic capacitor RCW-3013 (K67J836) can be observed from the illustration of Figure 6.

ANTENNA LOOP, RAB-054 AND RAB-097

Though the Models 64, 65, 66, and 67 Clock-Radio receivers have been designed and connected to operate with a single loop input inductance, some production was made using the loop and antenna primary assembly (RAB-054) of earlier model clock-radios (Models 60 and 62). This assembly of Cabinet Back with loop and antenna primary is illustrated with circuit connections for the Models 64, 65, 66, and 67, as shown in Figure 7. Connections to the primary circuit winding are not made.

In other productions of the Models 64, 65, 66, and 67 the single pick-up loop, L1 (antenna primary omitted) was incorporated in Cabinet Back RAB-097 whose circuit connections are given in Figure 8.

The two cabinet backs are interchangeable on all the above models.

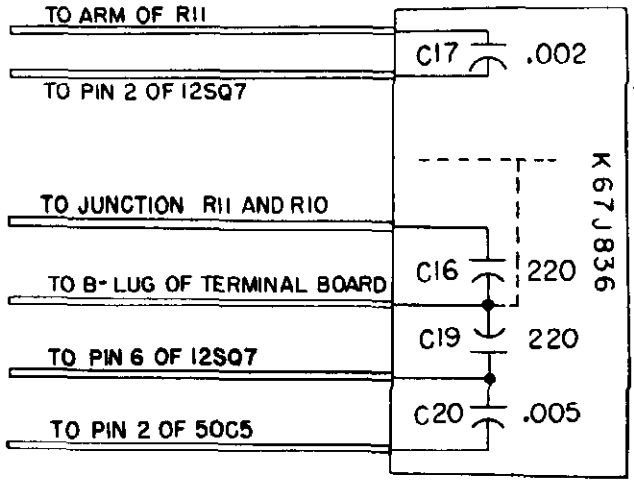

Fig. 6. Capacitor RCW-3013 (K67J836)

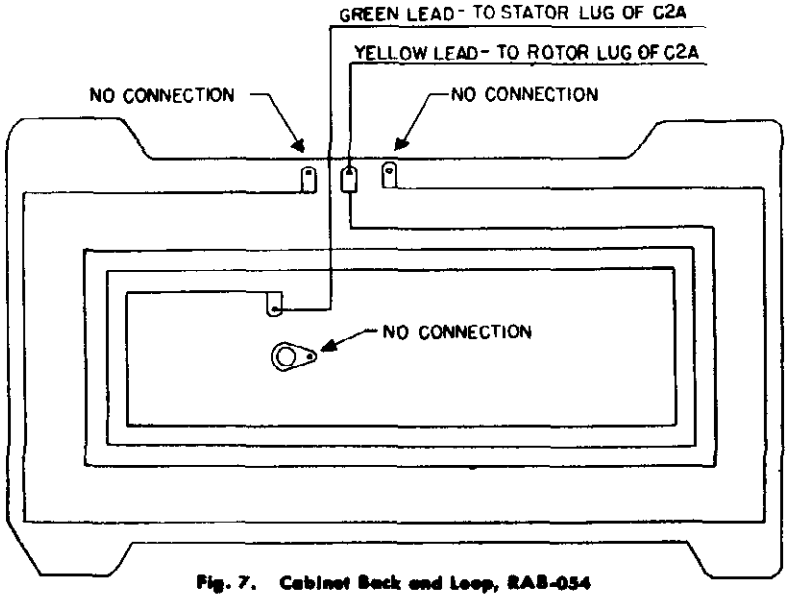

Fig. 7. Cabinet Back and Loop, RAB-054

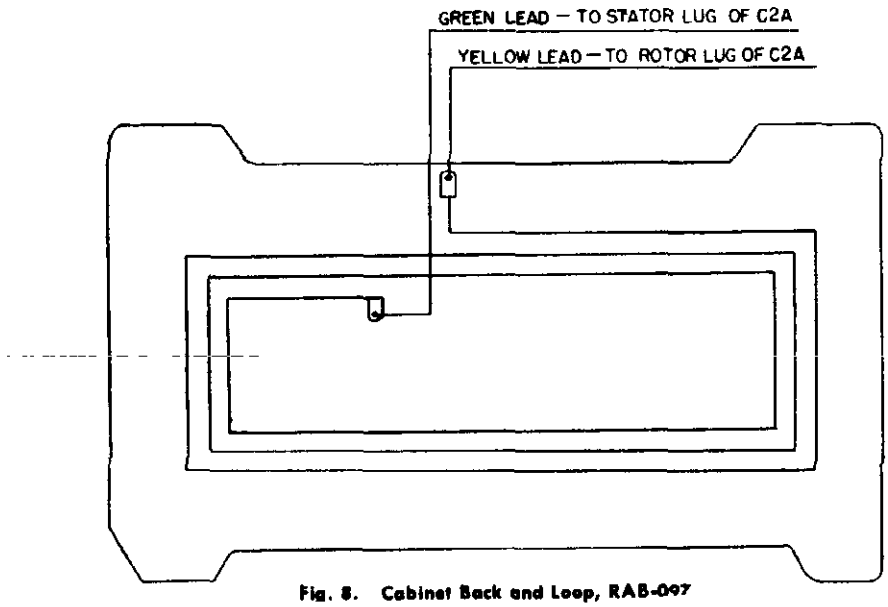

Fig. 8. Cabinet Back and Loop, RAB-097

©John F. Rider

MODELS 64, 65

RADIO REPLACEMENT PARTS LIST

Cat. No.	Symbol	Description
UNIVERSAL REPLACEMENT PARTS		
UCC-028	C5, 10, 11	CAPACITOR—.05 mf., 400 v., paper
UCC-036	C17	CAPACITOR—.002 mf., 600 v., paper; see production change
UCC-039	C20	CAPACITOR .005 mf., 600 v., paper; see production change
UCU-1036	C16, 19	CAPACITOR—220 mmf., mica; see production change
UOP-421	LS1	SPEAKER—PM loudspeaker
URD-009	R17	RESISTOR—22 ohms, ½ w., carbon
URD-029	R15	RESISTOR—150 ohms, ½ w., carbon
URD-081	R1	RESISTOR—22,000 ohms, ½ w., carbon
URD-113	R2, 13, 14	RESISTOR—470,000 ohms, ½ w., carbon
URD-129	R10	RESISTOR—2.2 meg., ½ w., carbon
URD-141	R12	RESISTOR—6.8 meg., ½ w., carbon
URF-053	R16	RESISTOR—1500 ohms, 2 w., carbon
SPECIALIZED REPLACEMENT PARTS		
RAB-054	L1	BACK—Cabinet back cover (includes loop L1 and antenna primary)
RAB-097	L1	BACK—Cabinet back cover includes loop L1 (antenna primary omitted)
RAC-060		SHIELD PLATE—Metal plate covers bottom of chassis
RAC-073		MOUNTING BRACKET—Metal back cover holds clock to cabinet
SPECIALIZED REPLACEMENT PARTS (Cont'd)		
RAU-304		CABINET—Brown plastic (Model 64)
RAU-305		CABINET—White plastic (Model 65)
RCC-045	C21	CAPACITOR—.05 mf., 600 v., paper
RCC-074	C22	CAPACITOR—.003 mf., 600 v., paper
RCE-050	C23A, 23B	CAPACITOR—50 mf., 150 v.; 50 mf., 150 v., dry electrolytic
RCT-021	C2A, 2B	CAPACITOR—Tuning capacitor (oscillator and r-f section)
RCW-1043	C25	CAPACITOR 47 mmf., ceramic
RCW-3013	C16, 17, 19, 20	CAPACITOR—220 mmf., .002 mf., 220 mmf., .005 mf., (4 section ceramic)
RDK-028		KNOB—Volume control knob
RDK-094		KNOB—Tuning dial wheel
RDS-082		SCALE—Dial scale
RHC-018		SNAP FASTENER—For cabinet back
RJC-004		CLIP Loop connector clip
RJS-092		SOCKET—Tube socket for 50C5, 35W4
RJS-116		SOCKET—Tube socket for 12SA7
RJS-117		SOCKET—Tube socket for 12SK7, 12SQ7
RLC-090	T4	COIL—Oscillator coil
RRC-054	R11	POTENTIOMETER—0.5 meg., volume control
RTL-094	T1	TRANSFORMER—1st I-F transformer
RTL-095	T2	TRANSFORMER—2nd I-F transformer
RTO-036	T3	TRANSFORMER—Output transformer
RWL-009		CORD—Power cord (brown) for Model 64
RWL-016		CORD—Power cord (white) for Model 65
RZC-009	M1	CLOCK—60 cycle, 105-125 v., clock assembly

†CLOCK REPLACEMENT PARTS LIST

Cat. No.	Symbol	Description
MISCELLANEOUS		
XC3X36	1	KNOB—Time set shaft knob (bronze)
XC4X5		KNOB—Alarm set knob (ivory)
XC31X26		HAND—Sweep second hand
XC32X199		HANDS—Hour and minute hands (luminous)
XC53X31		BEZEL—Outer mounting rim
XC53X117		BEZEL—Numeral ring (gold finish)
XC55X15		DIAL—Alarm dial scale
XC58X16		CRYSTAL—Glass crystal
XC59X247		RING—Color ring for numeral bezel
XC59X716		KNOB—Wake-up Manual and Sleep control knob (ivory)
XC61X937		DIAL—Clock dial scale (luminous)
CLOCK MOVEMENT		
XC1X1	3	SCREW—Holds field core to baseplate, #4-40 x 1 ⅛" long, round head
XC1X2	4	LOCKWASHER—Under screw head of switch assembly mounting screw and field core mounting
XC1X6	10	SCREW—Used to assemble switch assembly to switch bracket
XC1X43	23	HEX NUT—For screw mounting switch assembly to switch bracket
XC10X141	14	SHAFT ASSEMBLY—Time set shaft and gear assembly
XC11X11	6	SHAFT ASSEMBLY—Alarm set shaft and gear assembly
XC13X11	17	GEAR ASSEMBLY—Hour hand gear and sleeve assembly
XC14X32	18	GEAR ASSEMBLY—Minute hand friction gear, pinion gear and sleeve assembly
XC15X3	16	GEAR ASSEMBLY—Alarm dial gear and sleeve assembly
XC16X14	19	GEAR ASSEMBLY—Sweep second hand gear and shaft assembly
XC17X8	27	GEAR AND CAM—Alarm signal cam and gear assembly
XC34X173	9	FRONT PLATE ASSEMBLY—Complete with case studs and alarm set shaft spring (7)
CLOCK MOVEMENT (Cont'd)		
XC35X93	25	BASE PLATE AND BACK GEAR—Base plate assembled complete with studs, back gear and pinion, and vibrator
XC40X76	24	SWITCH INSULATOR ASSEMBLY—Consists of: two plastic and one fibre switch contact spring spacers
XC40X77	28	GEAR AND SPRING ASSEMBLY—Drives alarm dial gear and hour hand gear (complete with pinion and shaft, pinion and gear, spring, washers and retaining clip)
XC40X80	21	CONTACT ASSEMBLY—Lower switch contact and spring
XC40X185		SPRING—Switch control shaft index spring (for cam indexed control shafts)
XC40X194	29	LEVER—Sleep control switch lever
XC40X196	15	GEAR AND SPRING ASSEMBLY—Pinion drive for sleep control segment gear (consists of pinion gear, pinion gear and shaft, spring, washers, and retaining clip)
XC40X197	8	LEVER—Alarm control switch cam lever
XC40X198	22	CONTACT ASSEMBLY—Upper switch contact and spring with attached fibre arm
XC40X202	5	SPACER BUSHING—Field core spacer at screw mounting to base plate
XC40X252	26	WASHER—Alarm signal cam and gear friction washer
XC40X275		SPACER BUSHING — Wake-up Manual switch control shaft bushing
XC40X276	20	SPACER BUSHING—For time set shaft
XC40X277	30	SHAFT—Sleep control shaft and gear segment assembly
XC44X38	2	MOTOR ROTOR ASSEMBLY—Cased rotor and pinion (60 cycles)
XC45X69	11	MOTOR FIELD ASSEMBLY—Consists of: core, shading poles, and field coil (60 cycles)
XC59X699	13	SHAFT ASSEMBLY—Wake-up Manual control shaft assembly (detent spring index type)
XC59X723	13	SHAFT ASSEMBLY—Wake-up Manual control shaft assembly (cam index type)
XC64X1		SCREW—Switch bracket and front plate mounting screws

© John F. Rider

MODELS 66, 67,
Clock Radio

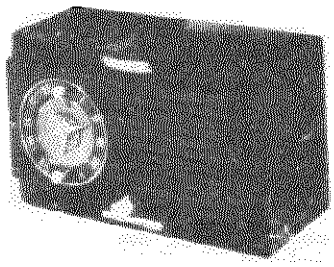

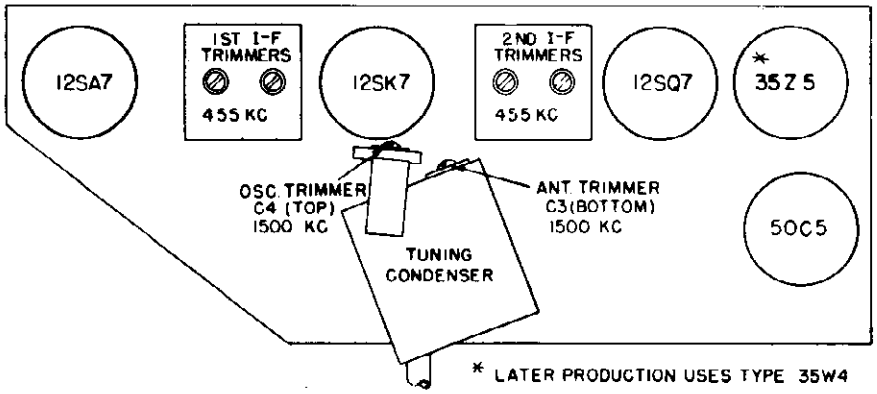

Fig. 1. Tube and Trimmer Location

SPECIFICATIONS

CABINET:

	66	67
Model		
Color	Mahogany	Ivory
Height	$6\frac{3}{16}$ in.	$6\frac{3}{16}$ in.
Width	$10\frac{1}{2}$ in.	$10\frac{1}{2}$ in.
Depth	$5\frac{3}{8}$ in.	$5\frac{3}{8}$ in.

ELECTRICAL RATING (INPUT):

Voltage . . . . . 105-120 volts, a-c
Frequency . . . . . 60 cycles
Wattage . . . . . 30 watts

OPERATING FREQUENCIES:

Intermediate Frequency . . . . . 455 kc
Broadcast Band . . . . . 540-1600 kc

POWER OUTPUT:

Undistorted 1
Maximum 1.75

LOUDSPEAKER:

Type . . . . . Alnico 5 PM
Outside Cone Diameter 4-inch
Voice Coil Impedance (400 cycles) . . . . . 3.5 ohms

TUBE COMPLEMENT:

Oscillator-Converter . . . . . Type 12SA7
I-F Amplifier . . . . . Type 12SK7
Detector and 1st Audio . . . . . Type 12SQ7
Power Output . . . . . Type 50C5
Rectifier . . . . . (early production) . . . . . Type 35Z5GT
Rectifier . . . . . (late production) . . . . . Type 35W4

CAUTION: One side of the power line is connected to B—. Avoid any ground connections direct to B—. Use an isolating transformer when making service adjustments with the chassis removed from the cabinet.

PRODUCTION CHANGES:

1. Later production receivers use a 35W4 type rectifier tube in place of the Type 35Z5 tube in the first production chassis. Insets in Figure 2 and Figure 3 show the changes in wiring and voltage measurements respectively, where the 35W4 type rectifier is substituted for the 35Z5.
2. Early production receivers also use individual component capacitors C16, 17, 19, and 20; while later chassis incorporate these capacitors in a four-section unit cataloged RCW-3013.

RADIO CIRCUIT ALIGNMENT

ALIGNMENT FREQUENCIES:

R-F . . . . . 1500 kc
R-F . . . . . 1620 kc
I-F . . . . . 455 kc

EQUIPMENT REQUIRED:

1. Test oscillator with tone modulation.
2. A-c output meter, $1\frac{1}{2}$ volts full scale.
3. 0.05 mf. paper capacitor.
4. Loop.
5. Insulated screwdriver.

PROCEDURE—GENERAL:

1. With the tuning scale control wheel turned so that the gang condenser plates are fully meshed, the index should read approximately $\frac{3}{16}$ inch to the right of the 550 kc scale calibration mark. If it does not, remove the control wheel from the gang condenser shaft and replace it for correct position. CAUTION: Do not attempt to correct the position by rotating the wheel on the shaft as this will cause the knob to slip.
2. For i-f alignment, it is necessary to remove the chassis from the cabinet.
3. Connect the output meter across the loudspeaker voice coil terminals.
4. Keep radio volume control at maximum and attenuate the test oscillator signal output so that the output meter reading never exceeds 1.0 volt.
5. Connect the capacitor as listed in column 2 between the output "High Side" of the test oscillator and the point of input specified.
6. For alignment of the oscillator and antenna trimmers, the input signal should be inductively coupled to the radio loop antenna, L1, by connecting a four-turn, six-inch diameter loop of bell wire across the signal generator output terminals, and then locating the loop to face the radio antenna loop about one foot away. To prevent possible errors in reference to previous signal measurement readings, the loop with respect to the radio loop should not be changed during any one set of adjustments.

ALIGNMENT CHART

Step	Connect Test Oscillator to—	Test Osc. Setting	Dial Drum Setting	Adjust Trimmers for Maximum Output
1	12SK7 grid (4) in series with 0.05 mf. cap.	455 kc	Minimum Capacity	2nd i-f trans. trimmers, C14 and C15
2	12SA7 grid (8) in series with 0.05 mf. cap.	455 kc	Minimum Capacity	1st i-f trans. trimmers, C8 and C9
3	Inductively coupled to radio loop	1620 kc	Minimum Capacity	C4 (oscillator)
4	Inductively coupled to radio loop	1500 kc	Tune for Maximum	C3 (antenna)

STAGE GAIN AND VOLTAGE CHECKS

Stage gain measurements by vacuum tube voltmeter or similar measuring devices may be used to check circuit performance and isolate trouble. The gain values listed may have tolerances of 20%. Readings taken with low signal input so that AVC is not effective.

©John F. Rider

MODELS 66, 67,
Clock Radio

(1) R-F and I-F Stage Gains.
12SA7 Grid to 12SK7 Grid.....50 @ 455 kc
12SK7 Grid to 12SQ7 Diode Plate.....50 @ 455 kc

(2) Audio Gain.
0.15 volts at 400 cycles across the volume control (R11) with control set at maximum will give approximately ½-watt output across the loudspeaker, LS1, voice coil.

(3) Oscillator Grid Bias.
D-c voltage developed across the oscillator grid leak (R1) averages 8.5 volts at 1000 kc.

(4) Socket Pin Voltages.
Figure 3 shows voltages from all tube pins to B— unless otherwise specified. Voltage readings much higher or lower than those specified may help localize defective components or tubes.

CLOCK SERVICE

Figure 4 shows clock parts referred to in the following paragraphs and the parts list.

CLOCK MOVEMENT DISASSEMBLY

1. Remove clock movement from case. When removing knobs, note that the Alarm-Set knob is a left-hand thread, while Alarm-Radio is a pull-off knob.
2. Remove Bezel, Hands and Dial Face.
3. Remove the motor assembly by removing two screws (A) and break two soldered joints on Field. The Field and Rotor Assembly (R) can now be removed. The Rotor is held by friction only to the Field.
4. Remove Switch Assembly (B) by removing two screws from base plate.
5. Remove Switch Shaft Assembly (C) and spacer.
6. Remove Alarm-Set Shaft Assembly (D) and spacer.
7. Remove the three front plate assembly screws that are located under the Dial Face and then remove Front Plate.
8. Remove Alarm Gear Sleeve Assembly (E), Hour Gear Sleeve Assembly (F), Minute Gear Sleeve Assembly (G), and Sweep Second Gear Shaft Assembly (H).
9. Remove Alarm Cam Gear Assembly (I) and Spring Washer (J).
10. Remove Alarm-Set Gear (K).
11. Remove Time-Set Gear and Shaft Assembly (L).
12. Remove Switch Cam Lever (M).

CLOCK MOVEMENT REASSEMBLY

Reassemble in the reverse order of disassembly, observing the following precautions:

1. The spring washer (J) should curve away from the gear when placed on the Alarm Cam Gear Assembly (I).
2. The Switch Cam Lever (M) fork must straddle the base plate post as shown in the illustration.
3. After reassembly of front plate, check the Sweep Second Gear (H) through the hole in the base plate to make sure it is free to turn.
4. Proceed with Alarm and Switch Adjustments as described below before installing hands.

ALARM AND SWITCH ADJUSTMENTS

1. Turn Alarm-Radio shaft to ALARM position.
2. Slowly rotate Time Set shaft clockwise until the contacts of the Switch Assembly (B) close.
3. Replace Dial Face, Alarm Dial, the Minute, Hour and Second Hands. Set all Hands and Dial so that they indicate 12 o'clock. Make sure all Hands and Alarm Dial are tight on their respective shafts.
4. With Alarm Set knob pulled out, continue to rotate Time Set shaft clockwise and note that the vibrator arm (N) drops against field core approximately 7–10 minutes later.
5. Set alarm at some other selected position and make sure mechanism actuates within limits (±1 minute).
6. Check alarm tone of vibrator. This can be adjusted by either bending vibrator arm nearer or farther away from field core. Bend arm near anchor point.

CLEANING AND LUBRICATION

To clean, completely diassemble and clean all moving parts in carbon tetrachloride or some similar cleaner.

The inside of the sleeves and shaft surfaces may be cleaned of oxidized oil by rubbing with a fine grade of steel wool dampened in carbon tetrachloride.

Do not use too much oil and apply by means of a small wire (drop oiler). Too much oil collects dust and later oxidizes. Use only recommended clock oil, such as Nye's Celebrated Oil which may be purchased from Wm. F. Nye Co., Inc., New Bedford, or equivalent.

CLOCK TROUBLES

1. Clock will not operate—Defective field coil, defective rotor, binding of parts.
2. Clock loses time—Binding parts, too little friction on minute hand sleeve assembly, defective rotor. Clock time set shaft bent and rubs against hole in clock bracket.
3. Noisy Clock—Rotor defective, alarm armature improperly adjusted, loose parts, or binding of moving parts.

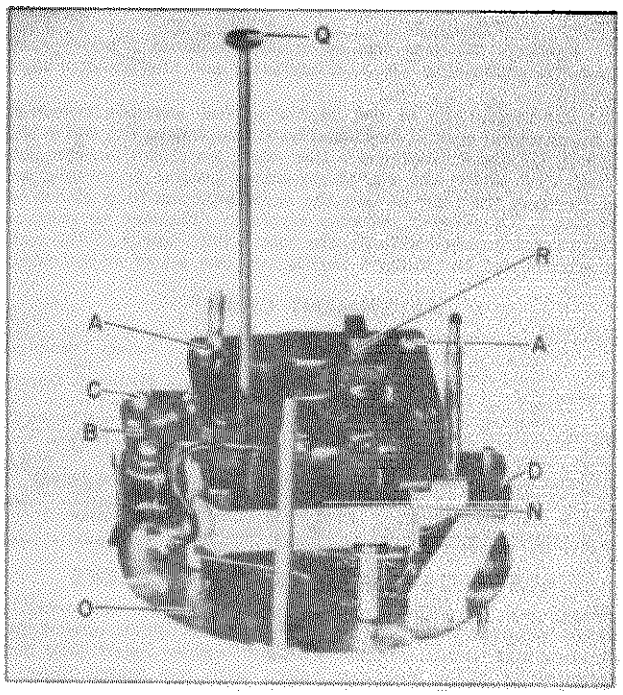

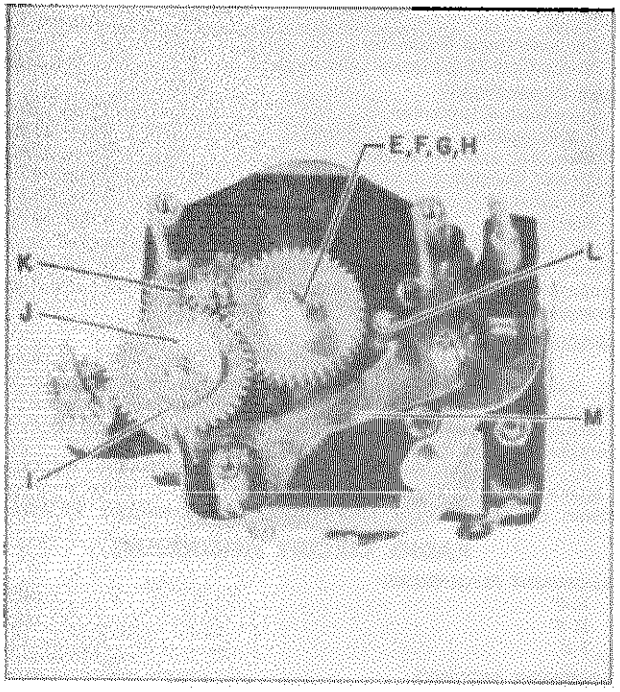

Fig. 4. Clock Part Identification

© John F. Rider

MODELS 66, 67,
Clock Radio

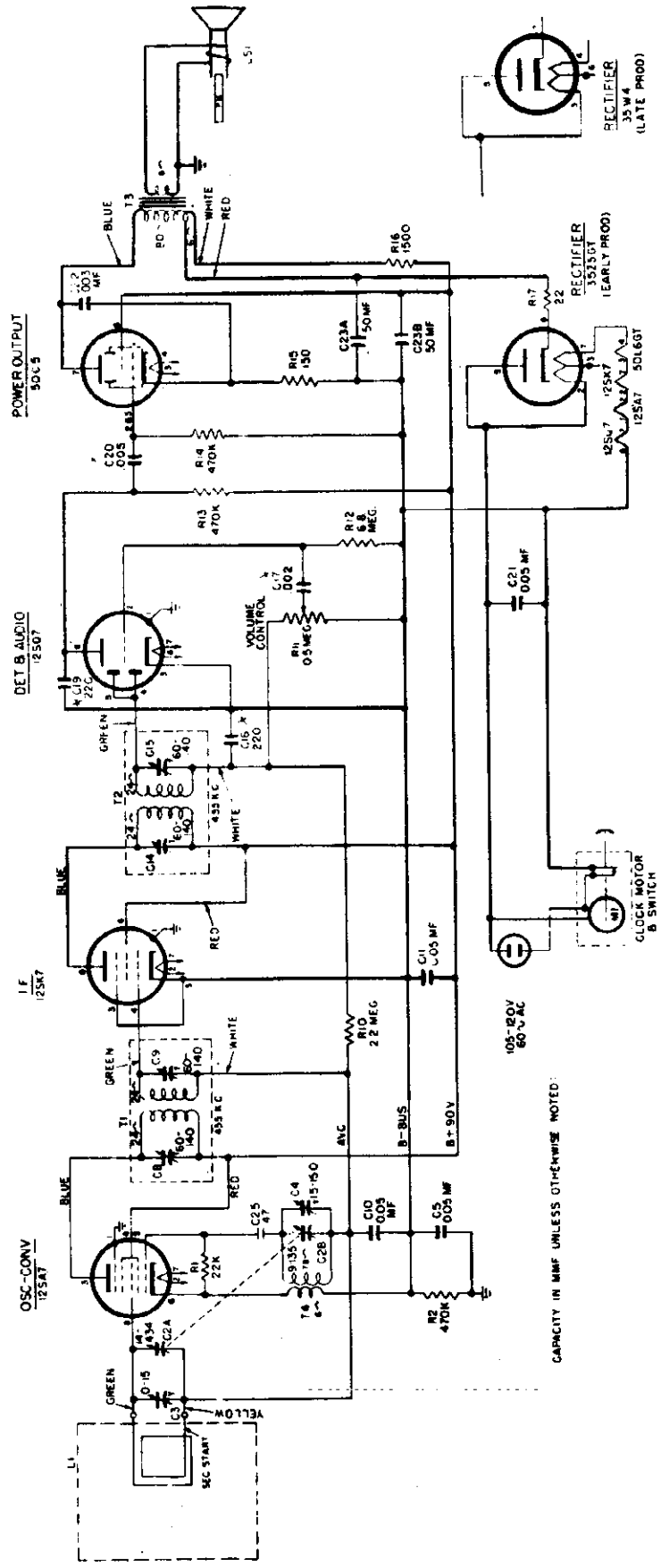

Fig. 2. Schematic Diagram, Models 66 and 67

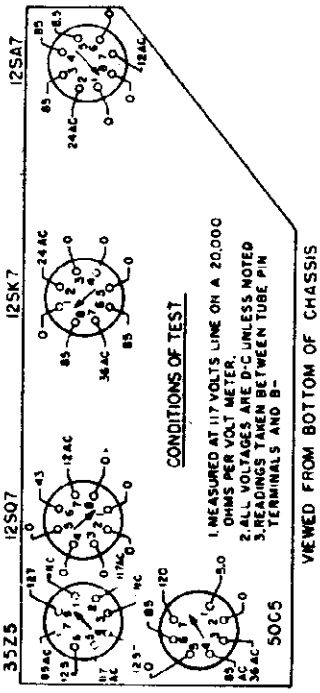

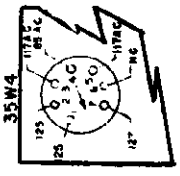

Fig. 3. Socket Voltages

©John F. Rider

MODELS 66, 67,
Clock Radio

MODEL 66 AND 67 REPLACEMENT PARTS

Cat. No.	Symbol	Description
UNIVERSAL REPLACEMENT PARTS		
UCC-028	C5, 10, 11	CAPACITOR .05 mf., 400 v., paper
UCC-630	C17, 20	CAPACITOR—.01 mf., 600 v., paper (used in early production) (may replace respective sections of RCW-3013)
UCU-036	C16, 19	CAPACITOR—220 mmf., mica (used in early production) (may replace respective sections of RCW-3013)
UOP-421	LS1	SPEAKER—PM loudspeaker
URD-009	R17	RESISTOR—22 ohms, ½ w., carbon
URD-029	R15	RESISTOR—150 ohms, ½ w., carbon
URD-081	R1	RESISTOR—22,000 ohms, ½ w., carbon
URD-113	R2,13,14	RESISTOR—470,000 ohms, ½ w., carbon
URD-129	R10	RESISTOR—2.2 meg., ½ w., carbon
URD-141	R12	RESISTOR—6.8 meg., ½ w., carbon
URE-053	R16	RESISTOR—1500 ohms, 2 w., carbon
SPECIALIZED REPLACEMENT PARTS		
RAB-054	L1	BACK—Cabinet back cover (includes loop L1)
RAC-074		MOUNTING BRACKET—Metal back cover holds clock to cabinet
RAU-020		CABINET—Brown plastic (Model 66)
RAU-021		CABINET—White plastic (Model 67)
RCC-045	C21	CAPACITOR—.05 mf., 600 v., paper
RCC-074	C22	CAPACITOR—.003 mf., 600 v., paper

Cat. No.	Symbol	Description
SPECIALIZED REPLACEMENT PARTS (Cont'd)		
RCE-050	C23A, 23B	CAPACITOR—50 mf., 150 v., 50 mf., 150 v., dry electrolytic
RCT-021	C2A, 2B	CAPACITOR—Tuning capacitor (oscillator and r-f section)
RCW-1043	C25	CAPACITOR—47 mmf., ceramic
RCW-3013	C16, 17, 19, 20	CAPACITOR—220 mmf., .002 mf., 220 mmf, .005 mf., (4 section ceramic) (see UCC-630 UCU-036)
RDK-028		KNOB—Volume control knob
RDK-094		KNOB—Tuning dial wheel
RDS-047		SCALE—Dial scale (Model 66)
RDS-050		SCALE—Dial scale (Model 67)
RJC-004		CLIP—Loop connector clip
RJS-092		SOCKET—Tube socket for 50C5, 35W4
RJS-116		SOCKET—Tube socket for 12SA7
RJS-117		SOCKET—Tube socket for 12SK7, 12SQ7, 35Z5-GT
RLC-051	T4	COIL—Oscillator coil
RHH-004		SNAP FASTENER—For cabinet back
RRC-054	R11	POTENTIOMETER—0.5 meg., volume control
RTL-094	T1	TRANSFORMER—1st I-F transformer
RTL-095	T2	TRANSFORMER—2nd I-F transformer
RTO-036	T3	TRANSFORMER—Output transformer
RWL-009		CORD—Power cord (brown) for Model 66
RWL-016		CORD—Power cord (white) for Model 67
RZC-005	M1	CLOCK—60 cycle, 105-125 v., clock assembly

CLOCK REPLACEMENT PARTS LIST

Cat. No.	Symbol	Description
MISCELLANEOUS		
XC3X49	Q	TIME SET SHAFT KNOB Bronze
XC4X5		ALARM SET KNOB—Ivory
XC10X131	L	TIME SET GEAR AND SHAFT ASSEMBLY
XC11X11	D	ALARM SET SHAFT ASSEMBLY
XC31X26		SWEEP SECOND HAND
XC32X167		HOUR AND MINUTE HANDS
XC34X139	O	FRONTPLATE ASSEMBLY
XC53X100		INNER BEZEL—2 9/16 in., round, maroon
XC54X29		OUTER BEZEL—Brass
XC55X11		ALARM DIAL
XC58X16		CRYSTAL—2 9/16 in., round
XC59X234		NUMERAL COLOR RING—Bronze
XC59X699	C	SWITCH SHAFT ASSEMBLY
XC59X716		SWITCH KNOB Ivory
XC60X712		DIAL FACE—(On frontplate)
CLOCK MOVEMENT		
XC1X1	A	SCREW—Holds Field, No. 4-40X1 ⅛ in. R. H.
XC1X2		No. 1204 LOCKWASHER
XC1X6		SCREW No. 4-40 x ⅛ in. R. H.
XC1X43		HEX NUT

Cat. No.	Symbol	Description
CLOCK MOVEMENT (Cont'd)		
XC13X11	F	HOUR GEAR SLEEVE ASSEMBLY
XC14X15	G	MINUTE GEAR SLEEVE ASSEMBLY
XC15X3	E	ALARM GEAR SLEEVE ASSEMBLY
XC16X14	H	SWEEP SECOND GEAR SHAFT ASSEMBLY
XC17X8	I	ALARM GEAR SHAFT ASSEMBLY
XC35X39		BASEPLATE ASSEMBLY
XC40X13		RIVET—Vibrator
XC40X76		SWITCH ASSEMBLY—Consists of Contact Block (top), Contact Block (bottom), Contact Spring Insulator
XC40X77	K	ALARM SET GEAR ASSEMBLY
XC40X78	M	SWITCH CAM LEVER ASSEMBLY
XC40X79		UPPER CONTACT SPRING ASSEMBLY
XC40X80		LOWER CONTACT SPRING AND TIP ASSEMBLY
XC40X202		SPREADER POST
XC40X252	J	CAM GEAR SPRING WASHER
XC40X260		SPACER—Switch shaft
XC40X261		TIME SET SHAFT SPACER
XC40X262		TIME SET SHAFT SPACER
XC40X263		ALARM SHUT-OFF SPACER
XC44X38		ROTOR UNIT—60 cycles
XC45X69	R	FIELD COIL ASSEMBLY—60 cycle
XC64X1-2-3		FRONTPLATE SCREW

©John F. Rider

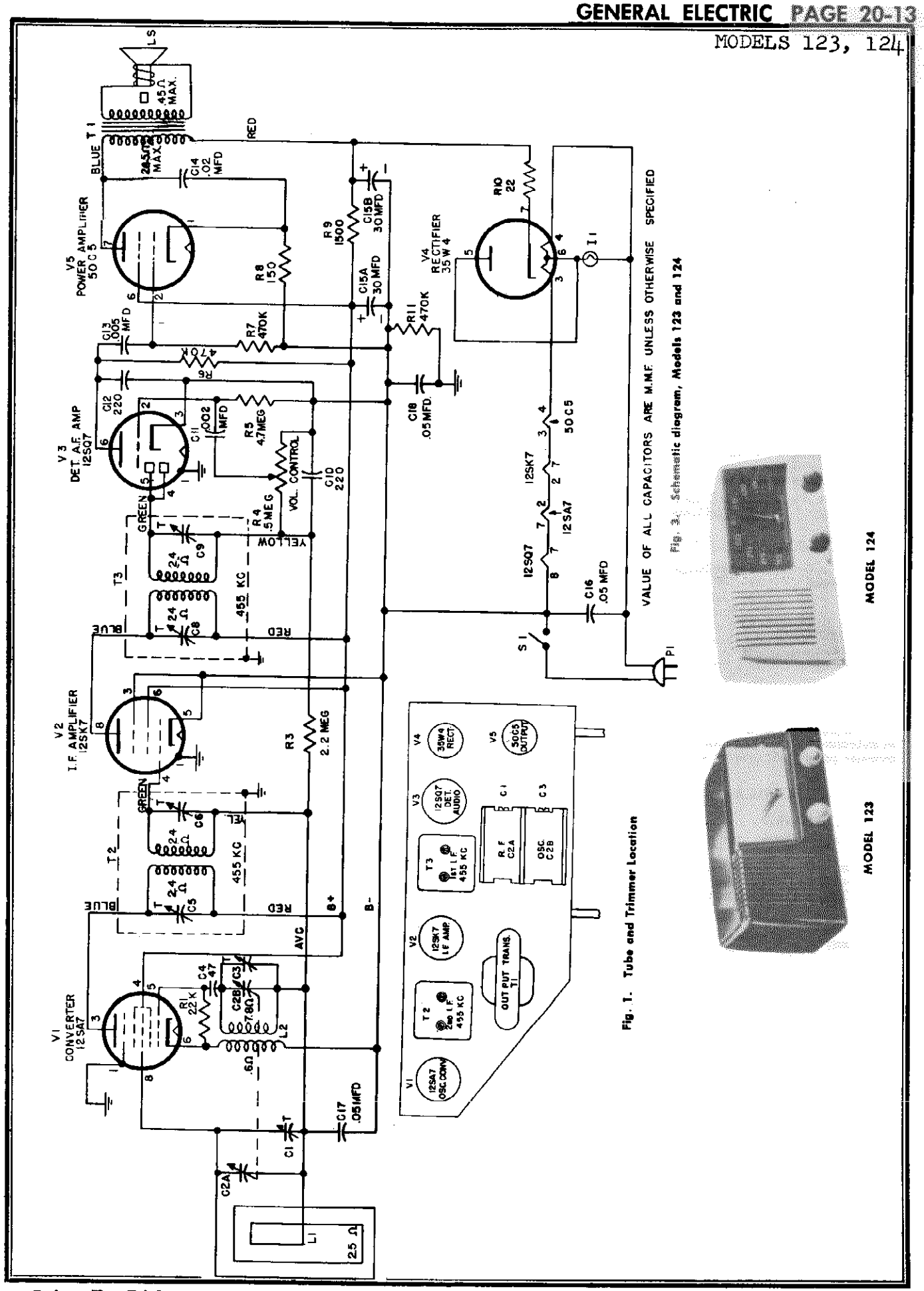

Fig. 1. Tube and Trimmer Location

Fig. 3. Schematic diagram, Models 123 and 124

MODEL 124

MODEL 123

© John F. Rider

MODELS 123, 124

SPECIFICATIONS

CABINET	Description	Model 123	Model 124
	Material	Brown	Ivory
	Height	6⅛ in.	6⅛ in.
	Width	12½ in.	12½ in.
	Depth	7¼ in.	7¼ in.
ELECTRICAL RATING	Voltage	105–125	
	Frequency	50–60 cycles or DC	
	Wattage	26 at 117 volts input	
OPERATING FREQUENCIES	Standard Broadcast	540–1600 kc	
	I-F Amplifier	455 kc	
POWER OUTPUT	Undistorted	1 watt	
	Maximum	1.75 watts	
LOUDSPEAKER	Type	Alnico VPM	
	Outside Cone Diameter	4 inches	
	Voice Coil Impedance at 400 Cycles	3.2 ohms	
TUBE COMPLEMENT	(V1) Oscillator-Converter	12SA7	
	(V2) I-F Amplifier	12SK7	
	(V3) Detector-Audio	12SQ7	
	(V4) Rectifier	35W4	
	(V5) Audio Power Amplifier	50C5	
	(I1) Pilot Lamp	G-E Mazda No. 47	

GENERAL INFORMATION

The Model 123 and 124 is a five-tube a-c or d-c superheterodyne AM standard broadcast receiver equipped with an efficient built-in antenna loop and incorporating automatic volume control, an oversize permanent magnet speaker, and beam power output.

ELECTRICAL CIRCUIT ALIGNMENT

EQUIPMENT REQUIRED

1. Test oscillator, tone amplitude-modulated.
2. A-C output meter, 1½ volts full scale.
3. .05 mfd., paper capacitor.
4. Insulated screwdriver.
5. Coupling loop for test oscillator (see text).
6. Isolation power transformer.

ALIGNMENT PROCEDURE

The alignment steps are given in the table form of the Alignment Chart. Adjustment trimmers are shown in the illustration of Fig. 1.

1. The chassis is removed from the cabinet with the antenna loop and back attached and the speaker leads reconnected.
2. An isolation transformer should be used for the receiver power source when aligning or servicing, AC-DC receivers, to prevent short circuiting of equipment and shock hazard.
3. The output meter is connected across the terminals of the loudspeaker voice coil.
4. The receiver volume control should be turned to maximum and test oscillator signal output attenuated during alignment to develop not more than 1¼ volts output meter reading at the loudspeaker.
5. For i-f alignment, the high side of the signal generator output cable should be connected through a .05 mfd. paper capacitor to the points indicated in the Alignment Chart. The low side of the output cable is connected to the receiver chassis.
6. To align the oscillator and r-f trimmers, the signal generator output is inductively coupled to the radio loop, L1, by connecting a four-turn, six-inch diameter loop of bell wire across its output terminals and then locating the loop about one foot from the radio loop antenna. To prevent possible errors in comparative peak readings, the position of signal generator loop with respect to the radio loop antenna should not be changed during measurement.

ALIGNMENT CHART

Step	Connect Test Oscillator to:	Test Osc. Setting	Radio Dial Setting	Adjust Trimmers for Maximum
	I-F ALIGNMENT			
1	V2, 12SK7 grid ((Pin 4), in series with .05 mfd.	455 KC	.....	C9 and C8 of second i-f transformer, T3
2	V1, 12SA7 grid (Pin 8), in series with .05 mfd.	455 KC	.....	C6 and C5 of first i-f transformer, T2
3	V1, 12SA7 grid (Pin 8), in series with .05 mfd.	455 KC	.....	Recheck adjustment of C9, C8, C6, C5, for maximum
	R-F ALIGNMENT			
4	Inductively coupled to radio loop	1620 KC	Minimum capacity C2A, C2B	C3, oscillator trimmer
5	Inductively coupled to radio loop	1500 KC	1500 KC	C1, r-f trimmer

STAGE GAINS AND VOLTAGE CHECKS

Stage gain measurements by vacuum tube voltmeter or similar measuring device may be used to check circuit performance and isolate trouble. The gain values listed may have tolerances of 20 per cent. Readings are taken with low signal input so that AVC is not effective.

1. I-F GAIN

12SA7 Grid to 12SK7 Grid ..... 50 @ 455 KC
12SK7 Grid to 12SQ7 Diode Plate ..... 50 @ 455 KC

2. AUDIO GAIN

Input of 0.15 volts at 400 cycles across volume control (R4) with control set at maximum will develop approximately ½ watt output across the speaker voice coil terminals.

3. OSCILLATOR GRID BIAS

D-C voltage developed across the oscillator grid leak (R1) averages 8.5 volts at 1000 kc.

4. TUBE SOCKET PIN VOLTAGES

Fig. 4 shows voltages from tube pins to B−. Voltage readings differing greatly from those specified may help localize defective components.

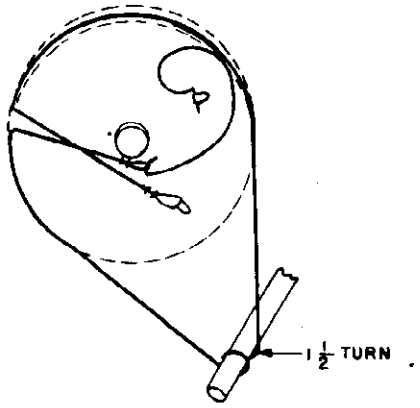

Fig. 2. Dial Stringing Diagram

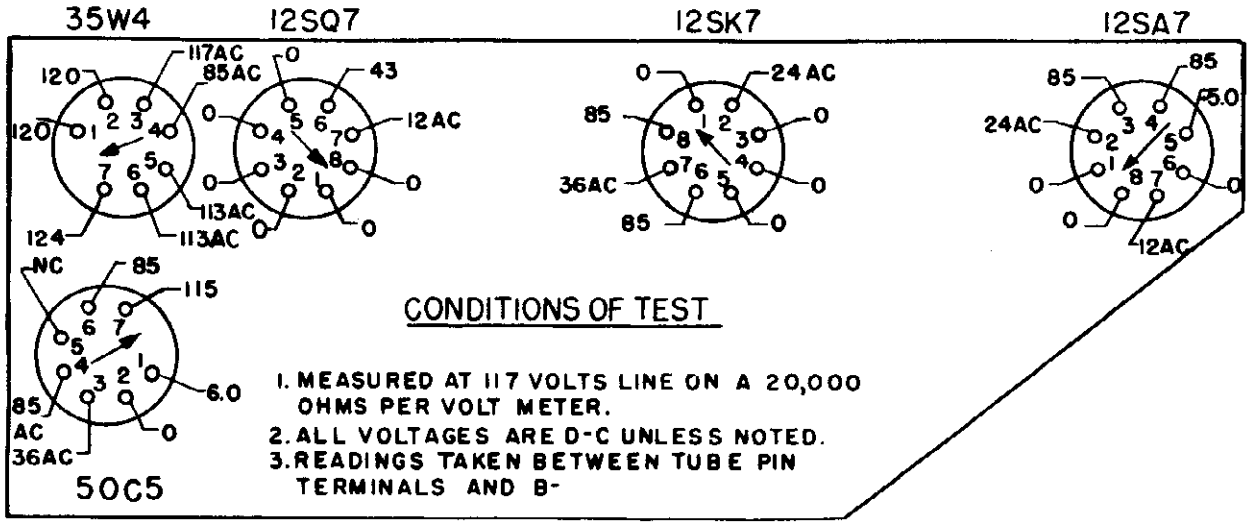

Fig. 4. Socket Voltages

ER-S-123

UNIVERSAL REPLACEMENT PARTS

UCC-028	C17, 18	CAPACITOR—05. mf., 400 v., paper
UCC-041	C14	CAPACITOR—.02 mf., 600 v., paper
UCC-045	C16	CAPACITOR—.05 mf., 600 v., paper
UCU-020	C4	CAPACITOR—47 mmf., ceramic
UOP-487	LS1	LOUDSPEAKER
URD-009	R10	RESISTOR—22 ohms, ½ w., carbon
URD-029	R8	RESISTOR—150 ohms, ½ w., carbon
URD-081	R1	RESISTOR—22,000 ohms, ½ w., carbon
URD-113	R6, 7, 11	RESISTOR—470,000 ohms, ½ w., carbon
URD-127	R5	RESISTOR—4.7 meg., ½ w., carbon
URD-129	R3	RESISTOR—2.2 meg., ½ w., carbon
URF-053	R9	RESISTOR—1500 ohms, 2 w., carbon

SPECIALIZED REPLACEMENT PARTS

RAB-095	L1	LOOP AND BACK—Cabinet back and antenna loop
RAU-037		CABINET—Model 124 plastic cabinet (ivory)
RAU-306		CABINET—Model 123 plastic cabinet (brown)
RCE-046	C15A, B	CAPACITOR—30-30 mf., 150 volt, dual section electrolytic
RCT-037	C2A, B	CAPACITOR—Tuning capacitor
RCW-3025	C10, 11, 12, 13	CAPACITOR—220 mmf., .002 mf., 220 mmf., .005 mf., four-section ceramic
RDC-032		DIAL CORD—Bulk dial cord
RDK-174		KNOB—Off-volume or tuning control knob (Model 123)

CAT. NO.	SYMBOL	DESCRIPTION

SPECIALIZED REPLACEMENT PARTS (CONT'D)

RDK-175		KNOB—Off-volume or tuning control knob (Model 124)
RDP-048		POINTER—Dial scale pointer
RDS-083		DIAL SCALE—
RDW-021		DIAL SCALE WINDOW—
RHC-017		CLIP—Mounting clip for oscillator coil, L2
RHG-018		GROMMET—Cushion grommet for mounting tuning capacitor
RHH-002		FASTENER—For mounting dial scale window to cabinet
RHJ-005		SPACER WASHER—Used with cushion grommet to mount tuning capacitor
RHM-061		SPEED NUT—Clip holds loudspeaker to Model 124 cabinet
RJC-004		CONNECTOR—For loudspeaker or antenna loop leads
RJS-003		SOCKET—Tube socket for 12SA7, 12SK7, or 12SG7
RJS-092		SOCKET—Tube socket for 50C5 or 35W4
RJX-031		SOCKET ASSEMBLY Pilot light socket and bracket
RLC-090		COIL—Oscillator coil, L2
RMS-118		SPRING—Dial cord tension spring on tuning drive drum
RRC-106	R4, S1	POTENTIOMETER—500,000 ohm volume control and switch
RTL-094	T2	TRANSFORMER—1st i-f transformer
RTL-095	T3	TRANSFORMER—2nd i-f transformer
RTO-069	T1	TRANSFORMER—Output transformer
RWL-009		POWER CORD—

©John F. Rider

MODELS 135, 136

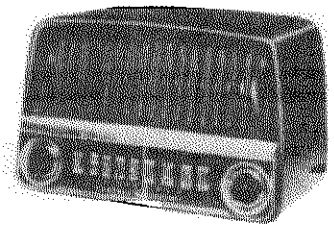

MODEL 135

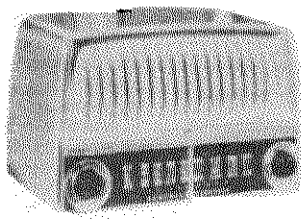

MODEL 136

SPECIFICATIONS

CABINET	Description	Model 135	Model 136
	Material	Brown	Ivory
	Height	8⅜ in.	8¾ in.
	Width	12⅝ in.	12⅝ in.
	Depth	7 in.	7 in.
ELECTRICAL RATING	Voltage	105–125	
	Frequency	50–60 cycles or DC	
	Wattage	25 at 117 volts input	
OPERATING FREQUENCIES	Standard Broadcast	540–1600 kc	
	I-F Amplifier	455 kc	
POWER OUTPUT	Undistorted	1 watt	
	Maximum	1.75 watts	
LOUDSPEAKER	Type	Alnico V PM	
	Outside Cone Diameter	4 inches	
	Voice Coil Impedance at 400 Cycles	3.2 ohms	
TUBE COMPLEMENT	(V1) Oscillator-Converter	12SA7	
	(V2) I-F Amplifier	12SK7	
	(V3) Detector-Audio	12SQ7	
	(V4) Rectifier	35Z5GT	
	(V5) Audio Power Amplifier	50L6GT	
	(I1) Pilot Lamp	G-E Mazda No. 47	

GENERAL INFORMATION

The Model 135 and 136 are four-tube (plus rectifier tube) a-c or d-c superheterodyne AM standard broadcast receivers equipped with an efficient built-in antenna loop and incorporating automatic volume control, an oversize permanent magnet speaker, and beam power output.

ELECTRICAL CIRCUIT ALIGNMENT

EQUIPMENT REQUIRED

1. Test oscillator, tone amplitude-modulated.
2. A-C output meter, 1½ volts full scale.
3. .05 mfd., paper capacitor.
4. Insulated screwdriver.
5. Coupling loop for test oscillator (see text).
6. Isolation power transformer.

ALIGNMENT PROCEDURE

The alignment steps are given in the table form of the Alignment Chart. Adjustment trimmers are shown in the illustration of Fig. 3.

1. The chassis is removed from the cabinet with the antenna loop and back attached and the speaker leads reconnected.
2. An isolation transformer should be used for the receiver power source when aligning or servicing AC-DC receivers, to prevent short circuiting of equipment and shock hazard.
3. The output meter is connected across the terminals of the loudspeaker voice coil.
4. The receiver volume control should be turned to maximum and test oscillator signal output attenuated during alignment to develop not more than 1¼ volts output meter reading at the loudspeaker.
5. For i-f alignment, the high side of the signal generator output cable should be connected through a .05 mfd. paper capacitor to the points indicated in the Alignment Chart. The low side of the output cable is connected to the receiver chassis.
6. To align the oscillator and r-f trimmers, the signal generator output is inductively coupled to the radio loop, L1, by connecting a four-turn, six-inch diameter loop of bell wire across its output terminals and then locating the loop about one foot from the radio loop antenna. To prevent possible errors in comparative peak readings, the position of signal generator loop with respect to the radio loop antenna should not be changed during measurement.

ALIGNMENT CHART

Step	Connect Test Oscillator to:	Test Osc. Setting	Radio Dial Setting	Adjust Trimmers for Maximum
	I-F ALIGNMENT			
1	V2, 12SK7 grid (Pin 4), in series with .05 mfd.	455 KC	.....	C9 and C8 of second i-f transformer, T3
2	V1, 12SA7 grid (Pin 8), in series with .05 mfd.	455 KC	.....	C6 and C5 of first i-f transformer, T2
3	V1, 12SA7 grid (Pin 8), in series with .05 mfd.	455 KC	.....	Recheck adjustment of C9, C8, C6, C5, for maximum
	R-F ALIGNMENT			
4	Inductively coupled to radio loop	1620 KC	Minimum capacity C2A, C2B	C3, oscillator trimmer
5	Inductively coupled to radio loop	1500 KC	1500 KC	C1, r-f trimmer

STAGE GAINS AND VOLTAGE CHECKS

Stage gain measurements by vacuum tube voltmeter or similar measuring device may be used to check circuit performance and isolate trouble. The gain values listed may have tolerances of 20 per cent. Readings are taken with low signal input so that AVC is not effective.

1. I-F GAIN

12SA7 Grid to 12SK7 Grid ..... 50 @ 455 KC
12SK7 Grid to 12SQ7 Diode Plate ..... 50 @ 455 KC

2. AUDIO GAIN

Input of 0.15 volts at 400 cycles across volume control (R4) with control set at maximum will develop approximately ½ watt output across the speaker voice coil terminals.

3. OSCILLATOR GRID BIAS

D-C voltage developed across the oscillator grid leak (R1) averages 8.5 volts at 1000 kc.

4. TUBE SOCKET PIN VOLTAGES

Fig. 5 shows voltages from tube pins to B—. Voltage readings differing greatly from those specified may help localize defective components.

©John F. Rider

©John F. Rider

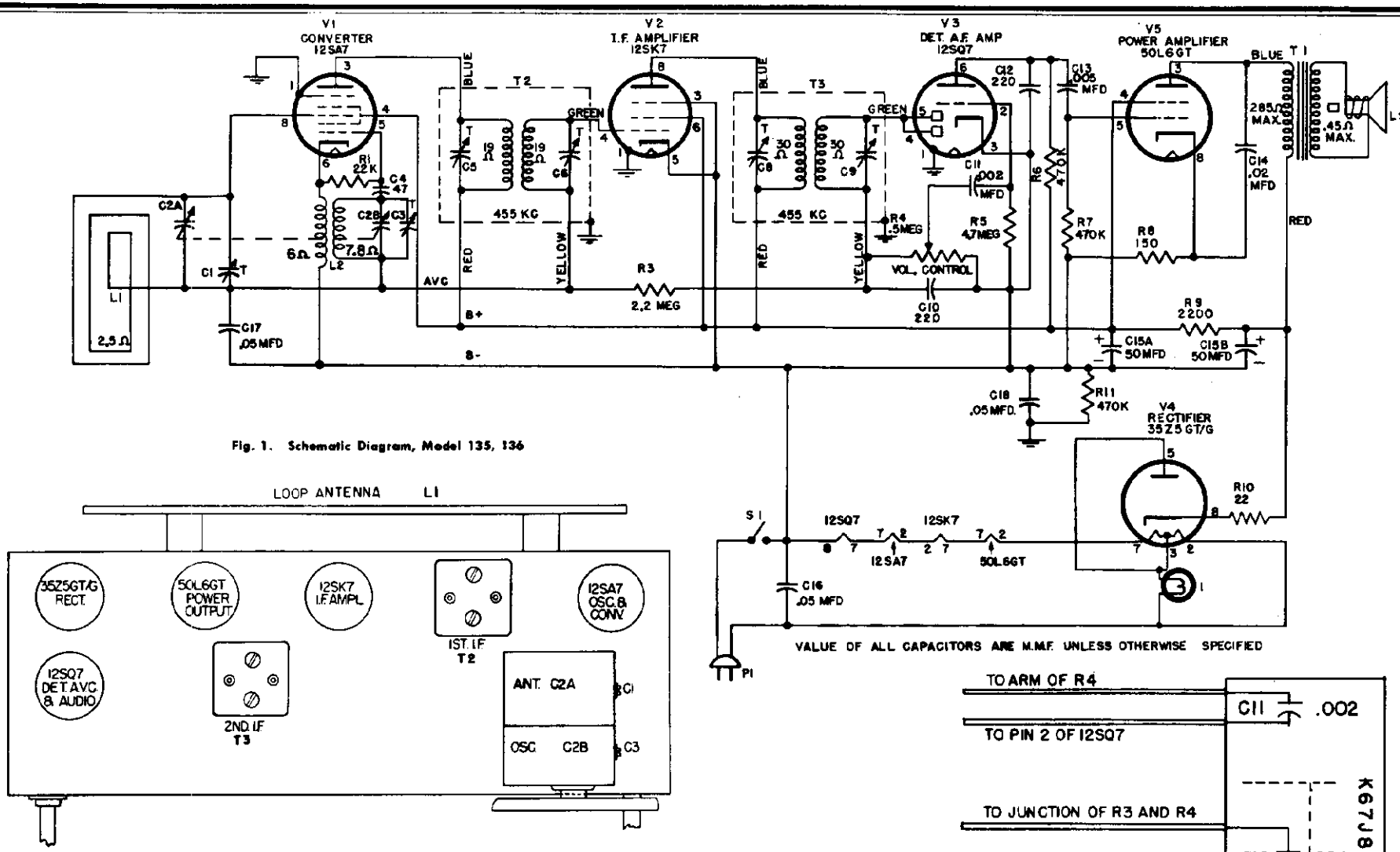

Fig. 1. Schematic Diagram, Model 135, 136

Fig. 3. Tube and Trimmer Location

CAPACITORS C10, 11, 12, AND C13

UNIT K67J836

Some production receivers use a four-section ceramic unit incorporating capacitors C10, 11, 12 and C13. The ceramic unit, RCW-3013, is illustrated in Fig. 2 for lead identification to capacitor sections and chassis circuit wiring. Other receivers may be found to have individual component capacitors in place of the four-section ceramic unit.

REPLACEMENT

If in a circuit analysis the ceramic unit is found to be defective; the entire unit may be replaced by the identical part RCW-3013 or, the defective section may be located and disconnected from the receiver circuit and the equivalent single components used in its place. The alternate capacitors are listed in the parts section as follows: UCC-036, C11, UCC-039, C13; and UCU-1036, C10 or C12.

Fig. 2. Capacitor RCW-3013 (K67J836)

© John F. Rider

MODELS 135, 136 REPLACEMENT PARTS LIST

CAT. NO.	SYMBOL	DESCRIPTION
		UNIVERSAL REPLACEMENT PARTS
UCC-028	C17, 18	CAPACITOR—.05 mf., 400 v., paper
UCC-036	C11	CAPACITOR—.002 mf., 600 v., paper (alternate replacement for RCW-3013)
UCC-039	C13	CAPACITOR—.005 mf., 600 v., paper (alternate replacement for RCW-3013)
UCC-045	C16	CAPACITOR—.05 mf., 600 v., paper
UCC-631	C14	CAPACITOR—.02 mf., 600 v., paper
UCU-020	C4	CAPACITOR—47 mmf., ceramic
UCU-1036	C10, 12	CAPACITOR—220 mmf., mica (alternate replacement for RCW-3013)
UOP-487	LS	LOUDSPEAKER
URD-009	R10	RESISTOR—22 ohms, ½ w., carbon
URD-029	R8	RESISTOR—150 ohms, ½ w., carbon
URD-081	R1	RESISTOR—22,000 ohms, ½ w., carbon
URD-113	R6, 7, 11	RESISTOR—470,000 ohms, ½ w., carbon
URD-129	R3	RESISTOR—2.2 meg., ½ w., carbon
URD-137	R5	RESISTOR—4.7 meg., ½ w., carbon
URF-057	R9	RESISTOR—2200 ohms, 2 w., carbon
		SPECIALIZED REPLACEMENT PARTS
RAB-070	L1	LOOP AND BACK—Antenna loop and cabinet back
RAC-059		COVER—Cover shield for bottom of chassis
RAU-302		CABINET—Brown, plastic cabinet with dial scale (Model 135)
RAU-303		CABINET—Ivory, plastic cabinet with dial scale (Model 136)
RAX-026		BACK PLATE—Dial scale back plate
RCE-050	C15A, B	CAPACITOR—50 mf., 150 v.; 50 mf., 150 v.; electrolytic
RCT-036	C2A, B C1, C3	TUNING CAPACITOR—(2)-section gang with trimmers, C1 and C3
RCW-3013	C10, 11, 12, 13	CAPACITOR—220 mmf., .002 mf., 220 mmf., .005 mf., four-section ceramic (see UCC-036, UCC-039, UCU-1036)
RDC-032		CORD—Bulk dial cord
RDK-020		KNOB—Volume or tuning control knob (Model 136)
RDK-031		KNOB—Volume or tuning control knob (Model 135)
RDP-045		POINTER—Dial scale pointer
RHC-017		CLIP—Mounting clip for oscillator coil L2
RHG-018		GROMMET—Cushion mounting for tuning capacitor C2A, B
RHH-004		SNAP FASTENER—Holds loop back to cabinet
RHJ-005		SPACER—Spacer bushing for mounting tuning capacitor C2A, B
RHM-039		CLIP—Clip for pilot light
RHM-063		SPEED NUT—Speed nut clip fastening speaker to cabinet bosses
RJC-004		CONNECTOR—Antenna loop lead connecting clip
RJS-003		SOCKET—Tube socket
RJS-096		SOCKET—Pilot light socket and leads
RLC-090	L2	COIL—Oscillator coil
RMM-093		SHIELD—Light shield for pilot light
RMS-118		SPRING—Dial cord tension spring
RMU-051		SHAFT—Tuning shaft
RRC-100	R4, S1	POTENTIOMETER—500,000 ohms, volume control and switch S1
RTL-092	T2	TRANSFORMER—First i-f transformer
RTL-093	T3	TRANSFORMER—Second i-f transformer
RTO-063	T1	TRANSFORMER—Audio output transformer
RWL-009		POWER CORD—A-C power cord and plug

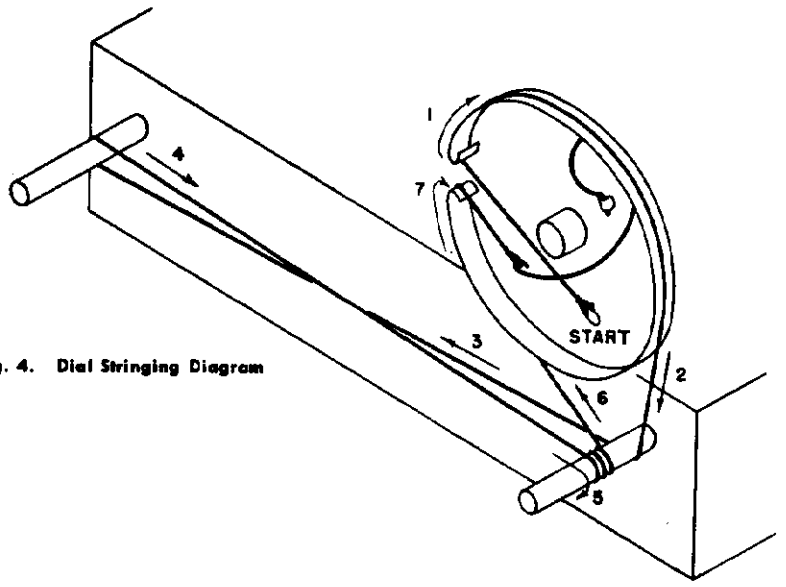

Fig. 4. Dial Stringing Diagram

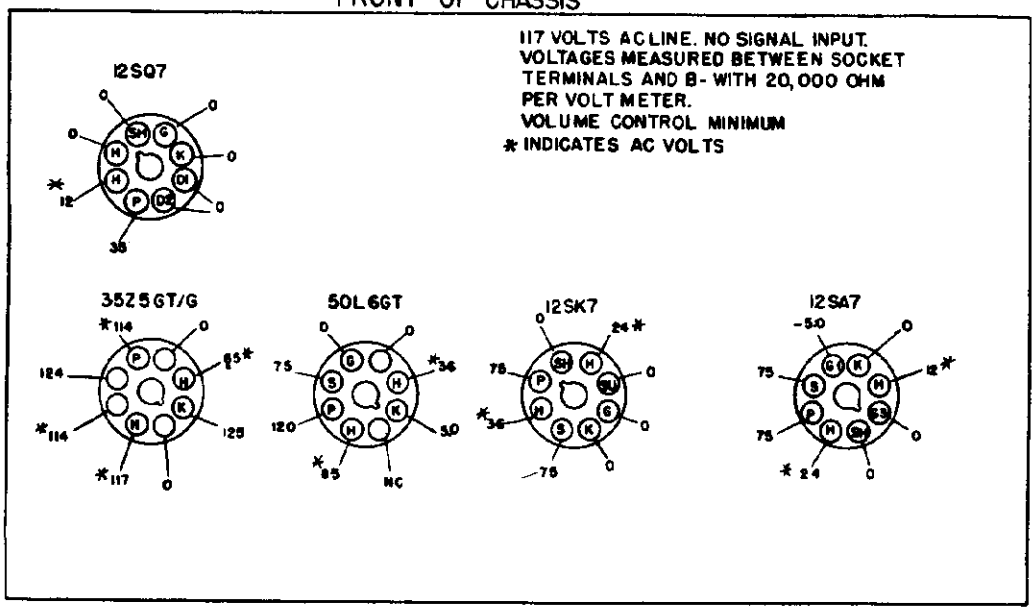

Fig. 5. Socket Voltages

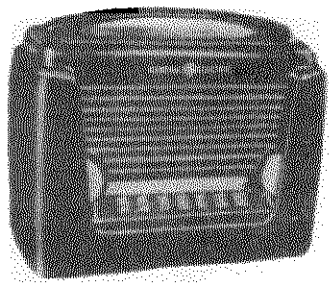

POWER SUPPLY:	Model 141 Battery Operation only. Battery.....Eveready No. 756, or equivalent Model 143 (AC or DC Operation) Voltage.....105–120 volts Frequency (on AC).....50–60 cycles Power Consumption.....15 watts Battery Operation Battery....Eveready No. 756 or equivalent
OPERATING FREQUENCIES:	Broadcast Band.....540–1600 KC I-F Amplifier.....455 KC
POWER OUTPUT:	Undistorted, Model 141.....130 milliwatts Maximum, Model 141.....200 milliwatts Undistorted, Model 143.....130 milliwatts Maximum, Model 143.....200 milliwatts
LOUDSPEAKER:	Type.....Alnico PM Outside Cone Diameter.....4 inches Voice Coil Impedance (400 cycles)...3.2 ohms
TUBE COMPLEMENT:	Oscillator-Converter.....1R5 I-F Amplifier.....1T4 Detector Audio Amplifier.....1S5 Power Amplifier.....3V4

GENERAL INFORMATION

The Model 141 or 143 portable radio is a four-tube superheterodyne broadcast receiver with a range of 540 to 1600 kc. The Model 141 operates on battery only, while for the Model 143 the power source may be either 105 to 125 volts, 50 to 60 cycles, or direct current, when a power outlet is available. The receiver will also operate from its battery source, thus making it independent of external electric power, providing excellent operation in any location where external power is not available.

BATTERY—AC OR DC OPERATION (MODEL 143 ONLY)

The left knob turns on the battery provided that the power plug is well inserted into the socket on the chassis.

For AC or DC supply (105-120 volts, 50 to 60 cycle operation), the same knob switches on the power when the power plug is pulled out of its socket on the chassis and inserted into the house outlet.

ELECTRICAL CIRCUIT ALIGNMENT

ALIGNMENT FREQUENCIES

R-F.....1620 and 1500 KC
I-F.....455 KC

EQUIPMENT REQUIRED

1. Test Oscillator with Tone Modulation.
2. AC Output Meter.
3. .05 Mf. Paper Capacitor.
4. Insulated Screwdriver.
5. Antenna Loop.

PROCEDURE—GENERAL

The Alignment Chart gives the alignment procedure with correct sequence of trimmer adjustments.

ALIGNMENT CHART

Step	Test-Osc. Connected to:	Test-Osc. Frequency	Radio Pointer Setting	Adjust for Maximum Meter Reading
1	1T4 grid (Pin 6) in series with .05 mf capacitor	455 KC	550 KC	2nd I-F transformer (T2) primary and secondary coils.
2	1R5 grid (Pin 6) in series with .05 mf capacitor	455 KC	550 KC	1st I-F transformer (T1) primary and secondary coils.
3	Inductively coupled	1620 KC	Gang condenser completely open	C2B
4	Inductively coupled	1500 KC	Tune for max. signal. Then set dial pointer at 1500 KC on dial mark	C1B

The chassis must be removed from the cabinet during i-f alignment.

The test oscillator output signal should be attenuated so that the output meter reading never exceeds ½ volt. Connect the capacitor listed in column 2 of Alignment Chart between the "high side" of the test oscillator and the point of input specified.

The output meter should be connected to the chassis ground; the "high side" of the oscillator output should be connected as indicated in the Alignment Chart. During the entire alignment procedure, the volume control should be at its maximum position. For alignment of the oscillator and r-f trimmers, the input signal should be inductively coupled to the radio loop antenna by connecting a 4-turn, 6-inch diameter loop of bell wire across the signal generator output terminals, and locate the loop about one foot from the radio loop antenna. To prevent possible errors in peak readings, the position of the loop with respect to the radio loop antenna should not be changed during any one set of adjustments.

STAGE GAIN AND VOLTAGE CHECKS

Stage gain by vacuum voltmeter or similar measuring device may be used to check circuit performance and isolate trouble. The gain values listed may have tolerances of 20 per cent. Reading should be taken with low signal input so that the AVC is not effective.

1. R-F STAGE GAINS

	141	143	
1R5 Grid (Pin 6) to 1T4 (Pin 6)	17	20	@1000 KC
1T4 Grid (Pin 6) to 1S5 Diode Plate (Pin 3)	65	50	@ 455 KC

2. AUDIO GAINS

.02 volt at 400 cycles across volume control (R4) with control set at maximum will give approximately .050 watts output across speaker voice coil.

3.

DC voltage developed across oscillator grid resistor (R1) averages 2.0 volts at 1000 kc with respect to B minus.

4. SOCKET PIN VOLTAGES

Fig. 5 and 6 show voltages from all tube pins to B−. Voltage readings much lower than those specified may help localize defective components or tubes.

© John F. Rider

MODELS 141, 143

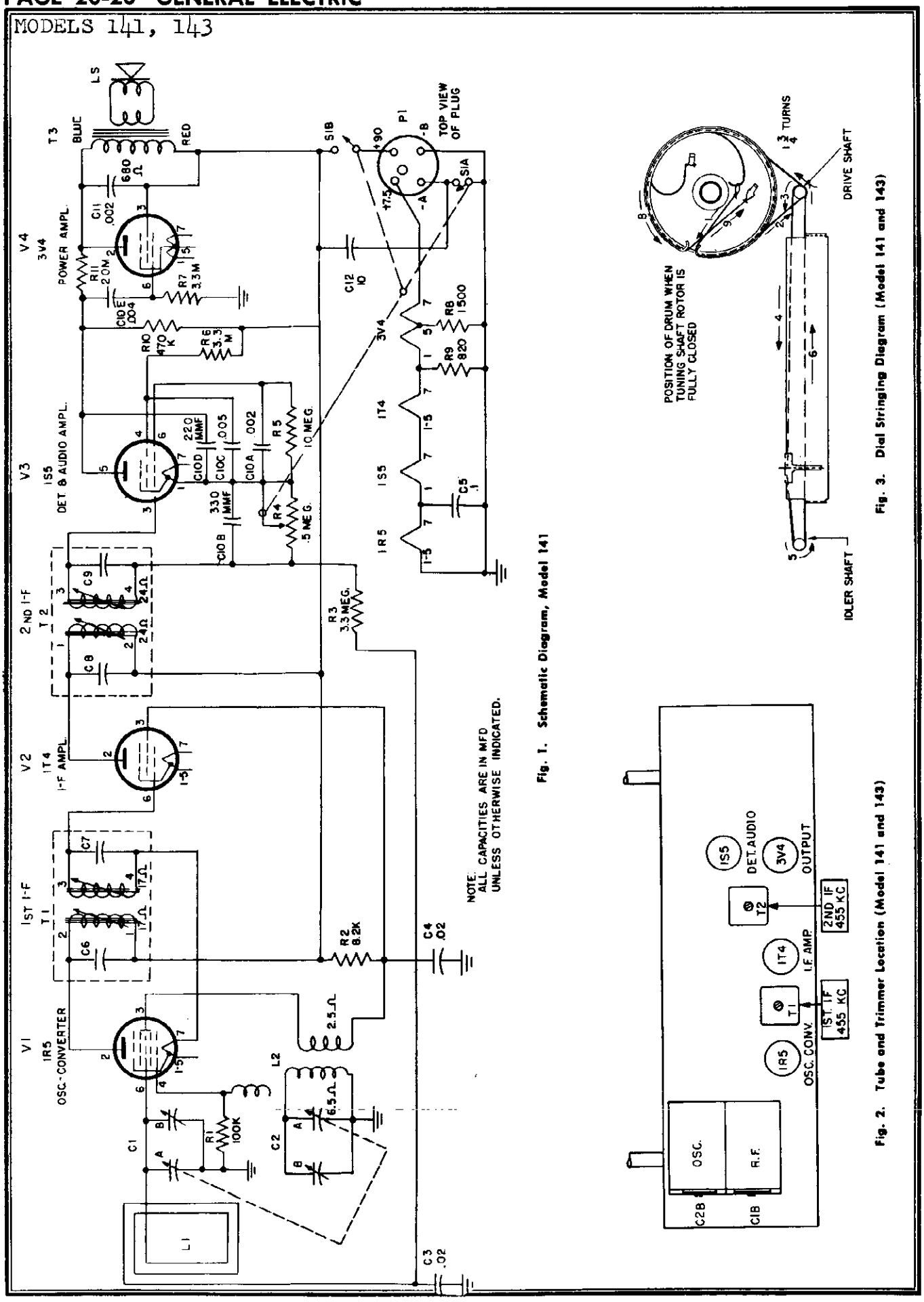

Fig. 1. Schematic Diagram, Model 141

Fig. 3. Dial Stringing Diagram (Model 141 and 143)

Fig. 2. Tube and Trimmer Location (Model 141 and 143)

©John F. Rider

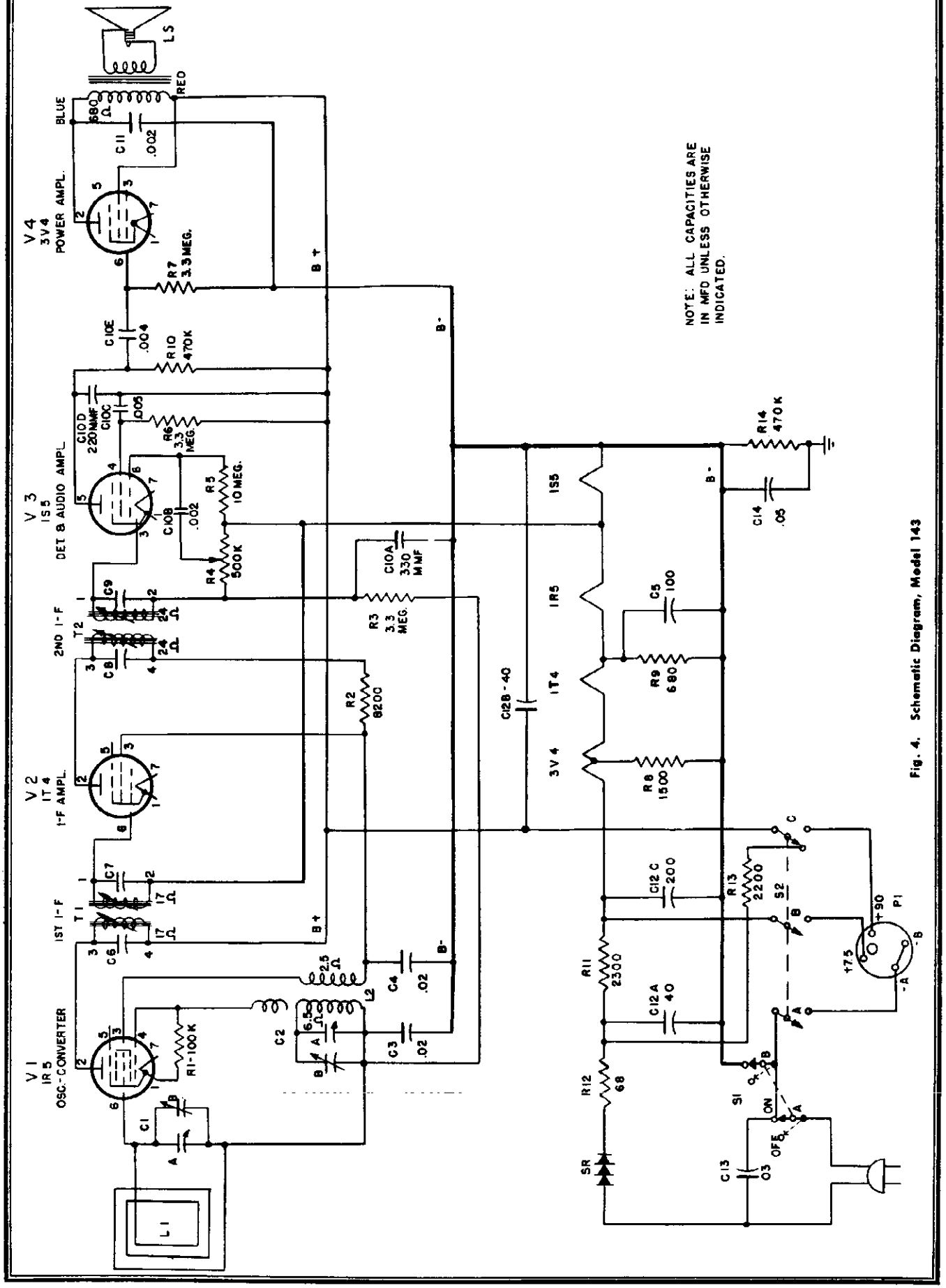

Fig. 4. Schematic Diagram, Model 143

©John F. Rider

MODELS 141, 143

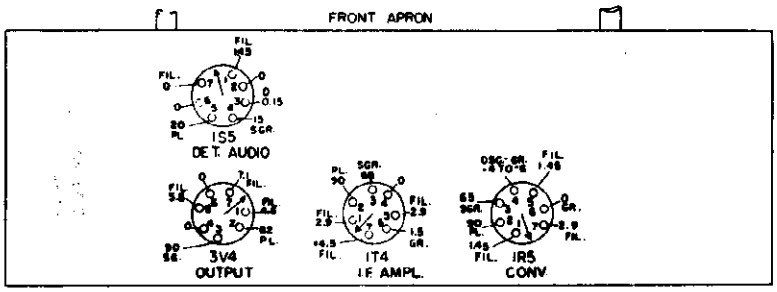

BOTTOM VIEW OF CHASSIS

DC VOLTAGE TO B MINUS MEASURED WITH 20,000 OHMS PER VOLT METER. RECEIVER OPERATING ON 120 VOLTS AC. BATTERY VOLTAGES ARE SIMILAR.

Fig. 5. Socket Voltages, Model 141

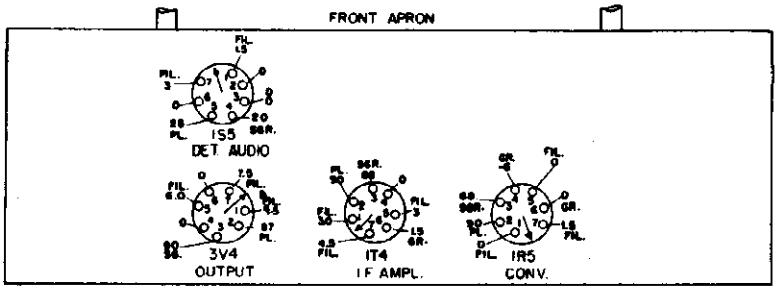

BOTTOM VIEW OF CHASSIS

DC VOLTAGE TO B MINUS MEASURED WITH 20,000 OHMS PER VOLT METER. RECEIVER OPERATING ON FRESH BATTERY.

Fig. 6. Socket Voltages, Model 143

MODELS 141, 143

REPLACEMENT PARTS LIST

Cat. No.	Symbol	Description
		UNIVERSAL REPLACEMENT PARTS
UCC-002	C11	CAPACITOR—.002 mf, 200 v, paper
UCC-009	C3, 4	CAPACITOR—.02 mfd, 200 v, paper
UCC-028	C14	CAPACITOR—.05 mfd, 400 v, paper
UCC-042	C13	CAPACITOR—.03 mfd, 400 v, paper
UCC-048	C5	CAPACITOR—.1 mfd, 400 v, paper
URD-045	R9**	RESISTOR—680 ohms, ½ w, carbon
URD-047	R9*	RESISTOR—820 ohms, ½ w, carbon
URD-053	R8	RESISTOR—1500 ohms, ½ w, carbon
URD-071	R2	RESISTOR—8200 ohms, ½ w, carbon
URD-097	R1	RESISTOR—100,000 ohms, ½w, carbon
URD-113	R10**, 14**	RESISTOR—470,000 ohms, ½ w, carbon
URD-133	R3, 6, 7	RESISTOR—3.3 meg, ½ w, carbon
URD-145	R5	RESISTOR—10 meg, ½ w, carbon
URE-021	R12**	RESISTOR—68 ohms, 1 w, carbon
URE-057	R13**	RESISTOR—2200 ohms, 1 w, carbon
UOP-457		SPEAKER—PA speaker, 4 inches
RHJ-005**		SPACER—For tuning capacitor
RHM-061		CLIP—Speaker clip
RHY-010		HANDLE—Handle for cabinet
RJC-016		TERMINAL—Speed nut
RJS-024**		MOUNTING PLATE—For electrolytic capacitor
RJS-100		SOCKET—Tube socket for IR5
RJS-124		SOCKET—Tube socket for IS5 & 3V4
RJS-125		SOCKET—Tube socket for 1T4 tube
RHC-015		CLIP—Oscillator coil clip
RJC-016		TERMINAL—Speed nut
RLC-089	L2	COIL—Oscillator coil
RLL-035	L1	LOOP—Loop antenna
RMC-040		CATCH—Spring catch
RMS-118		SPRING—Dial spring
RMU-049		SHAFT—Tuning shaft

Cat. No.	Symbol	Description
RRC-107	R4, S1	VOLUME CONTROL—Volume control and switch
RRD-1015	R11*	RESISTOR—20 meg, ½w, carbon
RRW-042	R11**	RESISTOR—2300 ohms, 10 w, w.w.
RSW-058	S2**	SWITCH—Power plug switch
RTL-052	T1**	TRANSFORMER—I-F transformer
RTL-051	T2*	TRANSFORMER—I-F transformer
RTL-079	T1*, 2**	TRANSFORMER—I-F transaformer
RTO-070	T3	TRANSFORMER—Output transformer
RWL-005**		POWER CORD
		SPECIALIZED REPLACEMENT PARTS
RAB-096		BACK—Cabinet back
RAU-308		CABINET—Plastic cabinet
RCE-095**	C12A, B, C	CAPACITOR—Electrolytic capacitor 40 mf, 150 v; 40 mf, 250 v; 200 mf, 20 v
RCE-098*	C12	CAPACITOR—Electrolytic capacitor 10 mf
RCE-099	C5	CAPACITOR—Electrolytic capacitor, 100 mfd
RCT-036	C1, 2	CAPACITOR—Tuning capacitor
RCW-3015	C10A, B, 10C, D, E	CAPACITOR—Ceramic combination 220 mmf, .002 mf, .005, 220 mmf, .004 mf
RDC-032		DIAL CORD
RDK-136		KNOB
RDP-047		POINTER—Dial pointer
REX-005	SR	RECTIFIER—Selenium rectifier
RHB-006		BUTTON—Plug button
RHC-015		CLIP—Oscillator coil clip
RHC-016		COTTER PIN—For drive axle
RHC-020		COTTER PIN—Cotter pin for handle
RHE-009		EYELET—Eyelet for cabinet
RHG-006**		GROMMET—For power cord
RHG-018**		GROMMET—For tuning capacitor
RHI-009		HINGE—Hinge for cabinet

*For Model 141 only.
**For Model 143 only.

©John F. Rider

MODEL 165

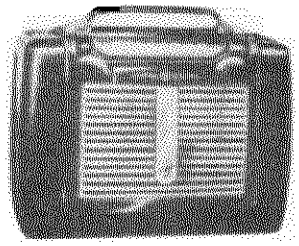

SPECIFICATIONS

CABINET:	Composition ..... Plastic Height ..... 9½ inches Length ..... 12½ inches Width ..... 5½ inches Weight (with batteries) ..... 11 pounds
POWER SUPPLY:	Battery ..... Eveready No. 753, or equivalent AC or DC operation ..... 105–115 volts Frequency (on AC) ..... 60 cycles Power Consumption ..... 25 watts
OPERATING FREQUENCIES:	Broadcast Band ..... 540–1600 kc I-F Amplifier ..... 455 kc
POWER OUTPUT:	Undistorted ..... 180 milliwatts Maximum ..... 250 milliwatts
LOUDSPEAKER:	Type ..... Alnico PM Outside Cone Diameter ..... 4 inches Voice Coil Impedance (400 cycles) ... 3.2 ohms
TUBE COMPLEMENT:	R-F Amplifier ..... 1T4 Oscillator-Converter ..... 1R5 I-F Amplifier ..... 1T4 Detector Audio Amplifier ..... 1S5 Power Amplifier 3V4

GENERAL INFORMATION

The Model 165 portable radio is a five-tube superheterodyne broadcast receiver with a range of 540 to 1600 kc. The power source may be either 105–115 volts, 50–60 cycles a-c, or d-c, when a power outlet is available. The receiver will also operate from its battery source, thus making it independent of external electrical power, providing excellent operation in any location where external power is not available.

BATTERY—AC OR DC OPERATION.

The left knob turns on the battery, provided that the power plug is well inserted into the socket in the chassis.

For a-c or d-c supply (105–115 volts, 50 to 60 cycle operation), the same knob switches on the power when the power plug is pulled out of its socket in the chassis and inserted into the house outlet.

ELECTRICAL CIRCUIT ALIGNMENT

EQUIPMENT REQUIRED:

1. Test Oscillator with Tone Modulation.
2. A-C Output Meter.
3. Paper Capacitor .05 Mf.
4. Insulated Screwdriver.
5. Coupling Loop for Test Oscillator (see text).
6. Isolation Transformer.

PROCEDURE—GENERAL.

1. The Alignment Chart gives the alignment procedure with correct sequence of trimmer adjustments. The chassis must be removed from the cabinet during i-f alignment. The locations of the i-f and r-f adjustments are shown in Figure 2.

2. The "low" side of the test oscillator output should be connected to the chassis ground; the "high" side should be connected as indicated in the alignment chart. The test oscillator output signal should be attenuated so that the output meter reading never exceeds ½ volt. Connect the capacitor listed in column 2 of the alignment chart between the "high" side of the test oscillator and the point of input specified.

PRECAUTION: If the signal generator is a-c operated, use an isolating transformer between the power supply and the radio receiver input. The use of an isolating capacitor is not recommended, as a-c through the capacitor will introduce hum modulation and/or create the possibility of a burned out signal generator attenuator.

3. The output meter should be connected across the voice coil terminals of the speaker.

4. During the entire alignment procedure the volume control should be rotated clockwise to its maximum position.

5. For alignment of the oscillator and r-f trimmers, the input signal should be inductively coupled to the radio loop antenna by connecting a 4-turn, 6-inch diameter loop of bell wire across the signal generator output terminals, and locate the loop about one foot from the radio loop for alignment. The position of the loop with respect to the radio loop should not be changed during any one set of adjustments to prevent possible errors in peak readings.

6. The antenna loop acquires a different inductance in the position when the back is closed. Therefore, the adjustment of the antenna and r-f trimmers has to be made with the back closed, through the two openings on the right side of the cabinet which normally are closed by plug buttons. After adjustments have been completed, the two plug buttons have to be put in place again.

ALIGNMENT CHART

Step	Test-Osc. Connected to:	Test-Osc. Frequency	Radio Pointer Setting	Adjust for Maximum Meter Reading
1	1T4 I-F grid in series with .05 mf. capacitor	455 KC	550 KC	Iron cores of I-F transformer T2
2	1R5 converter grid in series with .05 mf. capacitor	455 KC	550 KC	Iron cores of I-F transformer T1
3	Repeat Step 1 and 2			
4	Inductively coupled	1500 KC	1500 KC	Trimmers C15 and C16*
5	Inductively coupled	600 KC	600 KC	Iron core of T4 on back apron of chassis.

*Chassis in cabinet and cabinet back (with loop) closed; remove plug buttons for adjustment.

STAGE GAINS AND VOLTAGE CHECKS

In order to check circuit performance and facilitate trouble shooting, the measurement of stage gain by means of a vacuum voltmeter or similar measuring device is recommended. The gain values listed may have tolerances of 20%. Readings should be taken with low signal input so that the AVC is not effective.

(1) R-F STAGE GAINS.

1T4 R-F Grid (Pin 6) to 1R5 Grid (Pin 6) .... 12 @ 1000 KC
1R5 Grid (Pin 6) to 1T4 Grid (Pin 6) ..... 18 @ 1000 KC
1T4 Grid (Pin 6) to 1S5 Diode Plate (Pin 3) .. 45 @ 455 KC

(2) AUDIO GAIN.

.020 volt at 400 cycles across volume control (R13) with control set at maximum will give approximately .05 watts output across speaker voice coil.

© John F. Rider

MODEL 165

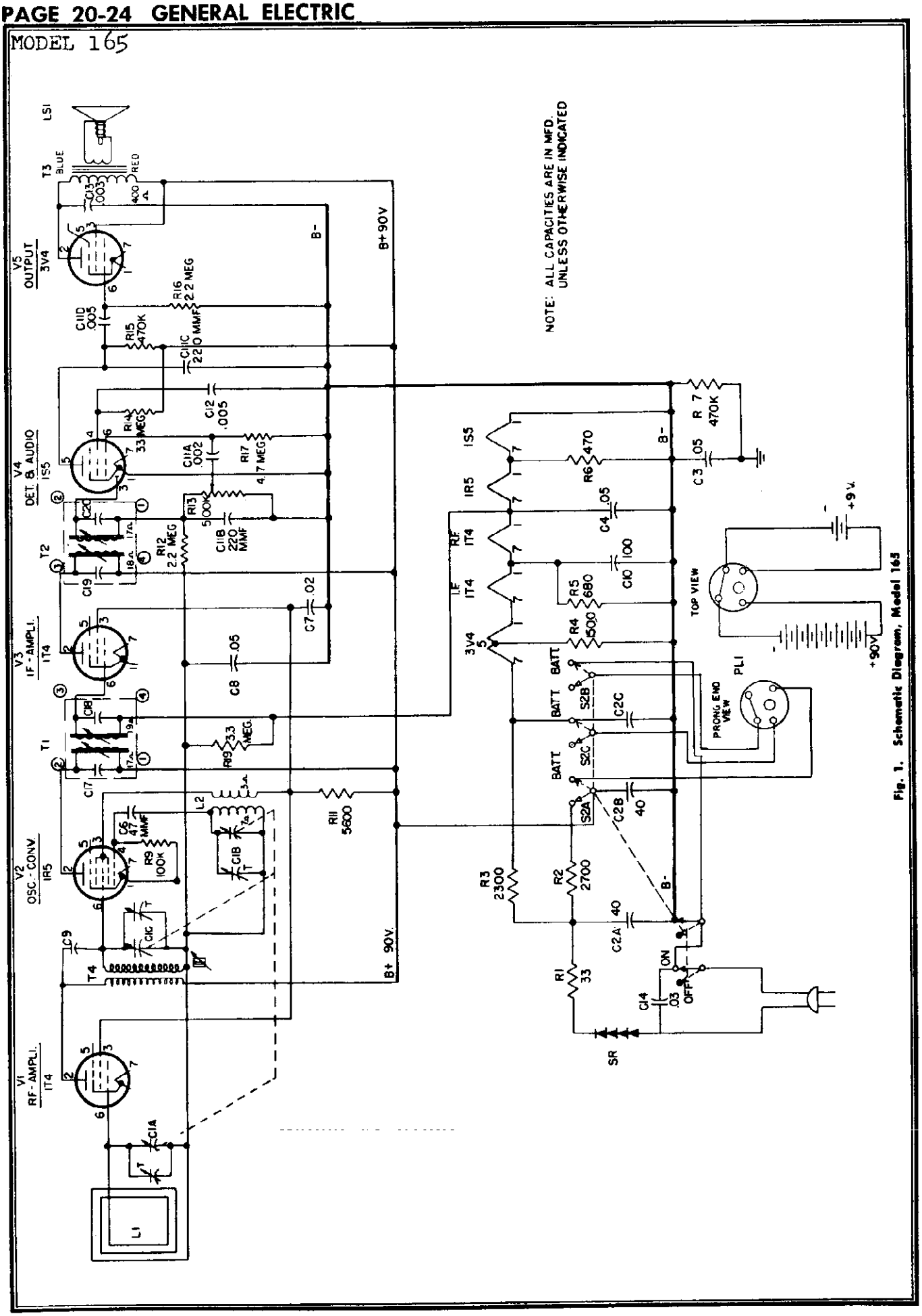

Fig. 1. Schematic Diagram, Model 165

©John F. Rider

(3)

D-C voltage developed across oscillator grid resistor (R9) averages −8 volts at 1000 kc with respect to B−.

(4) HUM

The hum voltage measured at the primary of the output transformer should not exceed 0.4 volts. This measurement should be made with an a-c voltmeter of a sensitivity of 20,000 ohm/volt in series with .5 mf. capacitor.

(5) SOCKET PIN VOLTAGES.

Figure 4 shows voltages from all tube pins to B−. Voltage readings much lower than those specified may help localize defective components or tubes.

(6) MULTIPLE CERAMIC CAPACITOR (K68-1128).

This multiple capacitor unit is of the ceramic capacitor type and contains five capacitors C11A, B, C, D and C12. This unit, RCW-3015, is illustrated in Figure 5 for lead identification. If during service the ceramic capacitor unit is found to be defective, the entire unit may be replaced by the identical part, RCW-3015, or the defected section may be located and disconnected from the receiver circuit and the equivalent single components used in its place.

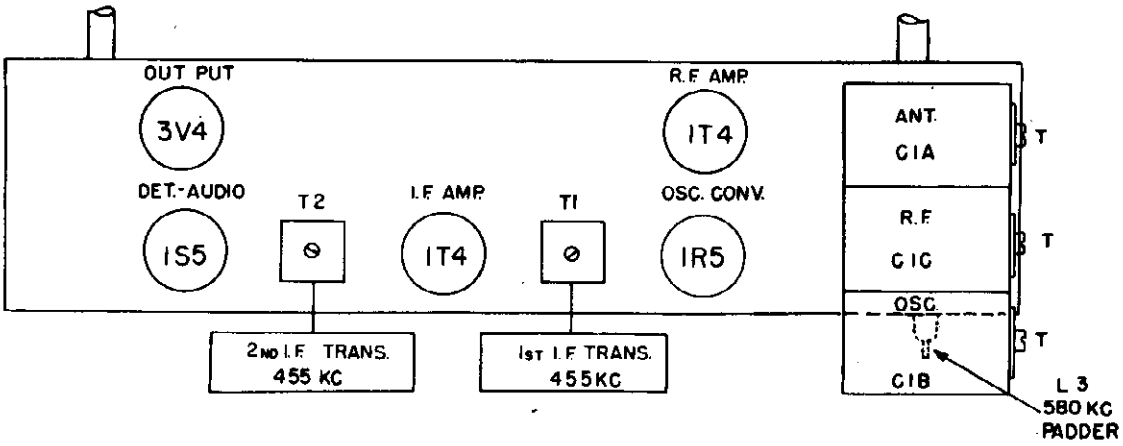

Fig. 2. Tube and Trimmer Location (Model 165)

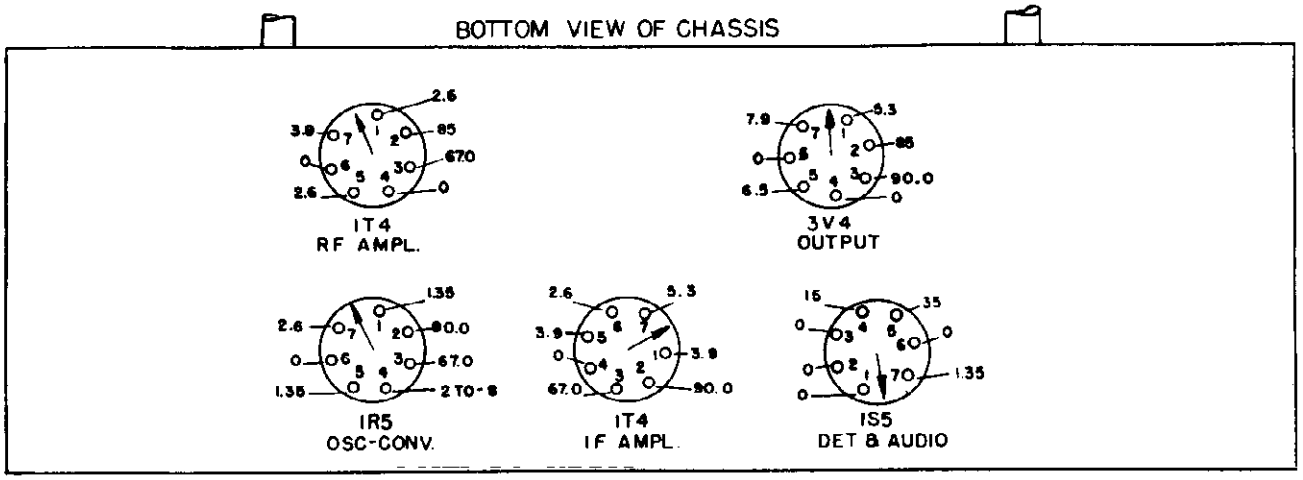

D C VOLTAGES TO GROUND UNLESS OTHERWISE SPECIFIED
ALL RATINGS ARE A.C OPERATION MEASURED WITH REFERENCE TO B-
RATINGS FOR BATTERY ARE SIMILAR TO AC RATINGS
VOLTAGE IS MEASURED WITH 20,000 OHMS PER VOLT METER

Fig. 4. Socket Voltages, (Model 165)

©John F. Rider

MODEL 165

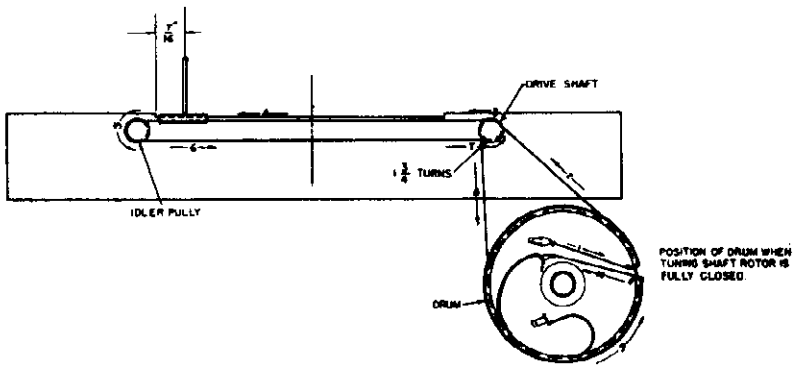

Fig. 3. Dial Stringing Diagram (Model 165)

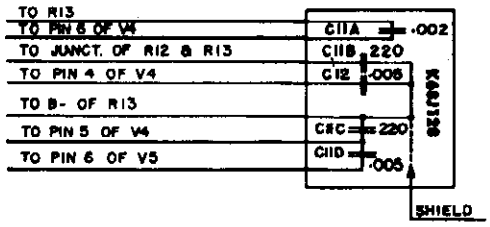

Fig. 5. Connections for Capacitor RCW-3015(K68J128)

MODEL 165
REPLACEMENT PARTS LIST

Cat. No.	Symbol	Description
UNIVERSAL REPLACEMENT PARTS LIST		
UCC-623	C13	CAPACITOR—.003 mf., 600 v., paper
UCC-631	C7	CAPACITOR—.02 mf., 600 v., paper
UCC-633	C14	CAPACITOR—.03 mf., 600 v., paper
UCC-635	C3, 4, 5	CAPACITOR—.05 mf., 600 v., paper
UCE-067	C10	CAPACITOR—100 mf., 10 v., electrolytic
UOP-457	LS1	SPEAKER—4-inch PM
URD-041	R6	RESISTOR—470 ohms, ½ w., carbon
URD-045	R5	RESISTOR—680 ohms, ½ w., carbon
URD-053	R4	RESISTOR—1500 ohms, ½ w., carbon
URD-067	R11	RESISTOR—5600 ohms, ½ w., carbon
URD-097	R9	RESISTOR—100,000 ohms, ½ w., carbon
URD-113	R7, 15	RESISTOR—470,000 ohms, ½ w., carbon
URD-129	R12, 16	RESISTOR—2.2 meg., ½ w., carbon
URD-133	R14, 19	RESISTOR—3.3 meg., ½ w., carbon
URD-137	R17	RESISTOR—4.7 meg., ½ w., carbon
URE-013	R1	RESISTOR—33 ohms, 1 w., carbon
URE-059	R2	CAPACITOR—2700 ohms, 1 w., carbon
SPECIALIZED REPLACEMENT PARTS		
RAB-107		BACK—Cabinet back
RAS-001		STRAP—Battery strap
RAU-310		ASSEMBLY—Cabinet assembly
RCE-095	C2, A, B, C	CAPACITOR—40 mf.-40 mf., 150 v., 20 mmf., 25 v., electrolytic
RCT-039	C1, A, B, C	CAPACITOR—Tuning capacitor
RCW-1073	C6	CAPACITOR—47 mmf., ceramic
RCW-1075	C9	CAPACITOR—4 mmf., ceramic
RCW-3015	C11, A, B, C, D C12	CAPACITOR—.002 mf.—220 mmf.—.005 mmf.— 220 mmf.—.005 mmf.
RDC-032		DIAL CORD—Roll of 25 yards
RDK-136		KNOB—Volume or tuning control knob
RDP-040		POINTER—Dial pointer
RDS-088		SCALE—Dial scale
RER-001	SR	RECTIFIER—Selenium rectifier
RHB-006		BUTTON—Plug button
RHC-015		CLIP—Clip for oscillator coil
RHC-016		HAIRPIN COTTER
RHG-018		GROMMET—Grommet for tuning condenser
RHJ-005		SPACER—For tuning condenser
RHM-052		CLIP—For loop antenna
RHM-065		CLIP—For grille
RHR-005		RIVET—Tubular rivet for door hinge
RHX-013		ASSEMBLY—Handle assembly
RJC-016		CONTACT—For speaker lead
RJP-025	PL1	PLUG—Battery plug
RJS-024		MOUNTING PLATE—For electrolytic capacitor
RJS-100		SOCKET—Tube socket for 1R5 tube
RJS-124		SOCKET—Tube socket
RJS-125		SOCKET—Tube socket for 1T4 tube
RLC-068	L2	COIL—Oscillator coil
RLL-038	L1	LOOP—Loop antenna
RMS-039		CLIP—"C" clip
RMS-118		SPRING—Dial spring
RMS-191		SPRING CATCH—For cabinet back
RMW-009		PULLEY—Idler pulley
RRC-083	R13, S1A, B	VOLUME CONTROL—Volume control, 500,000 ohms, and switch
RRW-027	R3	RESISTOR—2300 ohms, 10 w.
RSW-058	S2A, B, C	SWITCH—Power switch
RTB-001	T4	TRANSFORMER—R-F transformer
RTL-052	T1	TRANSFORMER—1st I-F transformer
RTL-079	T2	TRANSFORMER—2nd I-F transformer
RTO-050	T3	TRANSFORMER—Output transformer
RWL-005		CORD—Power cord

©John F. Rider

SPECIFICATIONS

CABINET	Material.....Plastic (brown) Height.....8⅝ in. Width.....13$\frac{1}{16}$ in. Depth.....8 in.
ELECTRICAL RATING	Voltage.....105–125 Frequency.....50–60 cycles or DC Wattage.....26 at 117 volts input
OPERATING FREQUENCIES	Standard Broadcast.....540–1600 kc I-F Amplifier.....455 kc
POWER OUTPUT	Undistorted.....1 watt Maximum.....1.75 watts
LOUDSPEAKER	Type.....Alnico V PM Outside Cone Diameter.....5¼ inches Voice Coil Impedance at 400 Cycles..3.2 ohms
TUBE COMPLEMENT	(V1) R-F Amplifier.....12SK7 (V2) Oscillator-Converter.....12SA7 (V3) I-F Amplifier.....12SK7 (V4) Detector-Audio.....12SQ7 (V5) Rectifier.....35Z5 (V6) Audio Power Amplifier.....35L6 (I1) Pilot Lamp.....G-E Mazda No. 47

GENERAL INFORMATION

The Model 226 is a five-tube (plus rectifier tube) table model a-c or d-c superheterodyne Standard AM Broadcast receiver. It is equipped with an efficient built-in antenna loop which is connected to an R-F amplifier stage providing increased gain. This receiver employs automatic volume control, beam power output and an oversize permanent magnet loudspeaker.

ELECTRICAL CIRCUIT ALIGNMENT

EQUIPMENT REQUIRED

1. Test oscillator, tone amplitude-modulated.
2. A-C output meter, 1½ volts full scale.
3. .05 mfd., paper capacitor.
4. Insulated screwdriver.
5. Coupling loop for test oscillator (see text).
6. Isolation power transformer.

ALIGNMENT PROCEDURE

The alignment steps are given in the table form of the Alignment Chart. Adjustment trimmers are shown in the illustration of Fig. 3.

1. The chassis is removed from the cabinet with the antenna loop and back attached and the speaker leads reconnected.
2. An isolation transformer should be used for the receiver power source when aligning or servicing AC-DC receivers, to prevent short circuiting of equipment and shock hazard.
3. The output meter is connected across the terminals of the loudspeaker voice coil.
4. The receiver volume control should be turned to maximum and test oscillator signal output attenuated during alignment to develop not more than 1¼ volts output meter reading at the loudspeaker.
5. For i-f alignment, the high side of the signal generator output cable should be connected through a .05 mfd. paper capacitor to the points indicated in the Alignment Chart. The low side of the output cable is connected to the receiver chassis.
6. To align the oscillator and r-f trimmers, the signal generator output is inductively coupled to the radio loop, L1, by connecting a four-turn, six-inch diameter loop of bell wire across its output terminals and then locating the loop about one foot from the radio loop antenna. To prevent possible errors in comparative peak readings, the position of signal generator loop with respect to the radio loop antenna should not be changed during measurement.

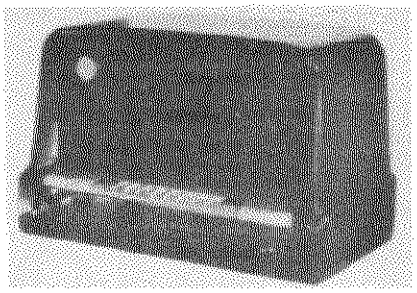

MODEL 226

ALIGNMENT CHART

Step	Connect Test Oscillator to:	Test Osc. Setting	Radio Dial Setting	Adjust Trimmers for Maximum
	I-F ALIGNMENT			
1	V3, 12SK7 grid (Pin 4), in series with .05 mfd.	455 KC	.....	C9 and C8 of second i-f transformer, T3
2	V2, 12SA7 grid (Pin 8), in series with .05 mfd.	455 KC	.....	C7 and C6 of first i-f transformer, T2
3	V2, 12SA7 grid (Pin 8), in series with .05 mfd.	455 KC	.....	Recheck adjustment of C9, C8, C7, C6, for maximum
	R-F ALIGNMENT			
4	Inductively coupled to radio loop	1620 KC	Minimum capacity C1A, C1B	C3, oscillator trimmer
5	Inductively coupled to radio loop	1500 KC	1500 KC	C2, r-f trimmer

STAGE GAINS AND VOLTAGE CHECKS

Stage gain measurements by vacuum tube voltmeter or similar measuring device may be used to check circuit performance and isolate trouble. The gain values listed may have tolerances of 20 per cent. Readings are taken with low signal input so that AVC is not effective.

1. I-F GAIN

12SA7 Grid to 12SK7 Grid.....50 @ 455 KC
12SK7 Grid to 12SQ7 Diode Plate.....50 @ 455 KC

2. AUDIO GAIN

Input of 0.15 volts at 400 cycles across volume control (R6) with control set at maximum will develop approximately ½ watt output across the speaker voice coil terminals.

3. OSCILLATOR GRID BIAS

D-C voltage developed across the oscillator grid leak (R4) averages 8.5 volts at 1000 kc.

4. TUBE SOCKET PIN VOLTAGES

Fig. 5 shows voltages from tube pins to B−. Voltage readings differing greatly from those specified may help localize defective components.

© John F. Rider

©John F. Rider

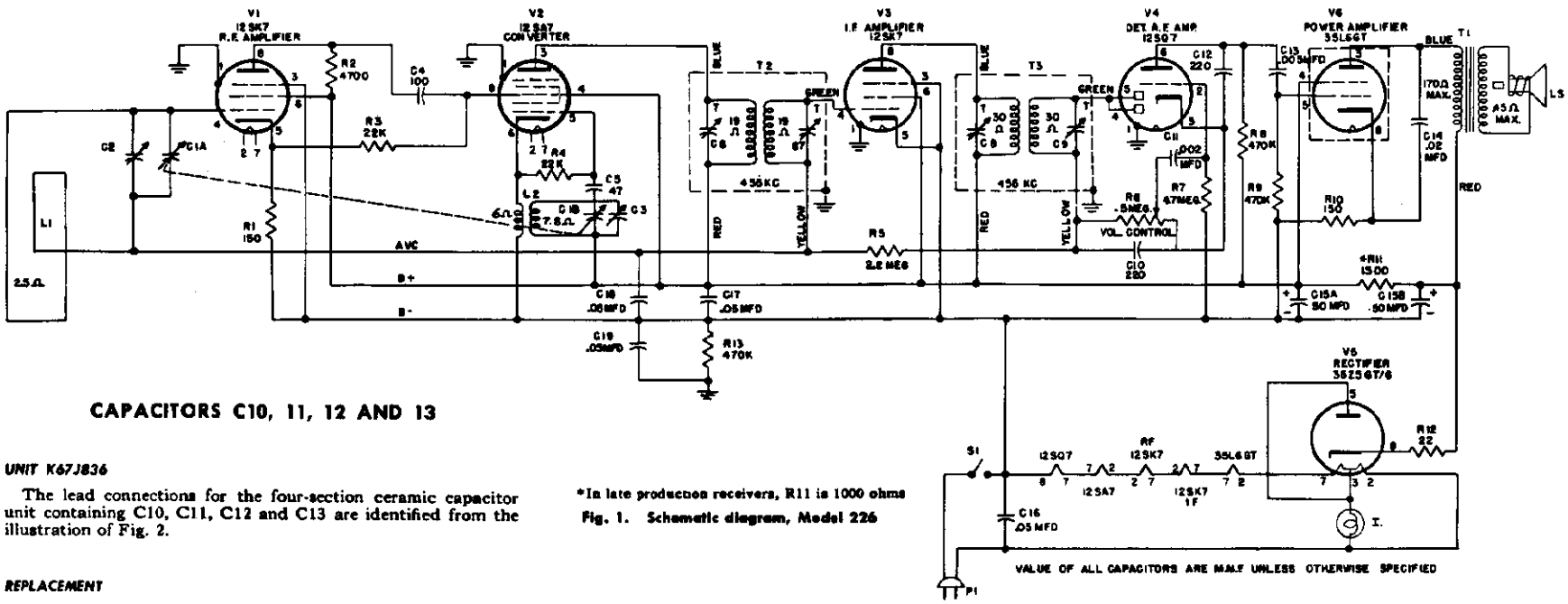

Fig. 1. Schematic diagram, Model 226

*In late production receivers, R11 is 1000 ohms

CAPACITORS C10, 11, 12 AND 13

UNIT K67J836

The lead connections for the four-section ceramic capacitor unit containing C10, C11, C12 and C13 are identified from the illustration of Fig. 2.

REPLACEMENT

The four-section unit is catalogued RCW-3013 in the parts list for direct replacement. However, any single section may be replaced by one of the single unit capacitors catalogued for the respective capacitor symbol. These items are: UCC-036, C11; UCC-039, C13; and UCU-1036, C10 or C12.

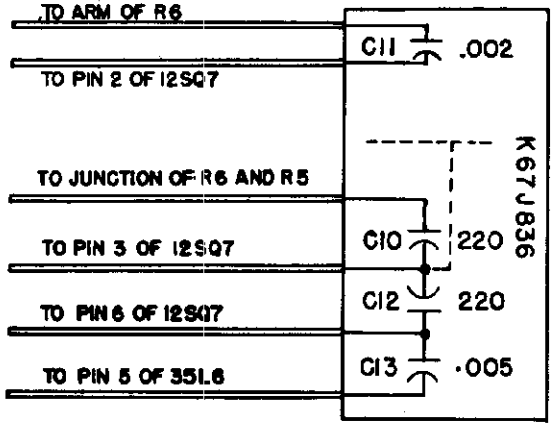

Fig. 2. Capacitor RCW-3013 (K67J836)

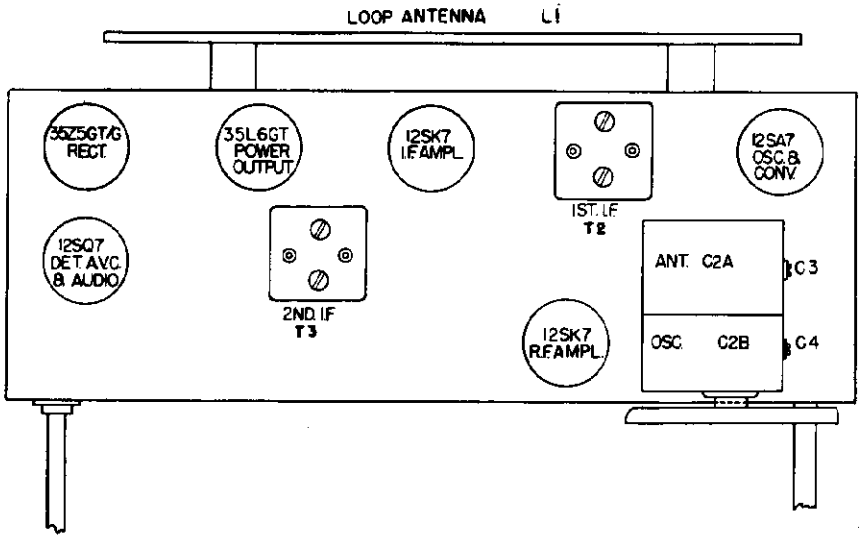

Fig. 3. Tube and Trimmer Location

© John F. Rider

MODEL 226 REPLACEMENT PARTS LIST

CAT. NO.	SYMBOL	DESCRIPTION
		UNIVERSAL REPLACEMENT PARTS
UCC-036	C11	CAPACITOR—.002 mf., 600 v., paper (alternate replacement for RCW-3013)
UCC-039	C13	CAPACITOR—.005 mf., 600 v., paper (alternate replacement for RCW-3013)
UCC-041	C14	CAPACITOR—.02 mf., 600 v., paper
UCC-045	C16, 17, 18, 19	CAPACITOR—.05 mf., 600 v., paper
UCU-020	C5	CAPACITOR—47 mmf., mica
UCU-028	C4	CAPACITOR—100 mmf., mica
UCU-1036	C10, 12	CAPACITOR—220 mmf., mica (alternate replacement for RCW-3013)
URD-009	R12	RESISTOR—22 ohms, ½ w., carbon
URD-029	R1, 10	RESISTOR—150 ohms, ½ w., carbon
URD-065	R2	RESISTOR—4700 ohms, ½ w., carbon
URD-081	R3, 4	RESISTOR—22,000 ohms, ½ w., carbon
URD-113	R8, 9, 13	RESISTOR—470,000 ohms, ½ w., carbon
URD-129	R5	RESISTOR—2.2 meg., ½ w., carbon
URD-137	R7	RESISTOR—4.7 meg., ½ w., carbon
URF-053	R11	RESISTOR—1500 ohms, 2 w., carbon
UOP-577	LS	LOUDSPEAKER—
		SPECIALIZED REPLACEMENT PARTS
RAB-108	L1	CABINET BACK—With antenna loop
RAU-311		CABINET—Brown cabinet (plastic)
RCE-050	C15A, B	CAPACITOR—50 mf., 150 v.; 50 mf., 150 v.; dry electrolytic
RCT-036	C1A, B, C2, 3	CAPACITOR—Two-section tuning capacitor with trimmers
RCW-3013	C10, 11, 12, 13	CAPACITOR—220 mmf., .002 mf., 220 mmf., .005 mf. four section, ceramic. (see UCC-036, UCC-039, UCU-1036)
RDC-032		CORD—Bulk dial cord
RDK-181		KNOB—Volume or tuning control knob
RDP-049		POINTER—Dial scale pointer
RDS-089		DIAL SCALE
RHC-017		CLIP—Mounting clip for oscillator coil L2
RHG-018		GROMMET—Cushion mounting for tuning capacitor C1A and C1B
RHH-004		SNAP FASTENER—Holds loop back to cabinet
RHJ-005		SPACER—Spacer bushing for mounting tuning capacitor
RHM-039		CLIP—Clip for pilot light
RJC-004		CONNECTOR—Antenna loop lead connecting clip
RJS-003		SOCKET—Tube socket
RJS-096		SOCKET ASSEMBLY—Pilot light socket
RLC-090	L2	COIL—Oscillator coil
RMS-120		SPRING—Dial cord tension spring
RMX-149		SHAFT AND BUSHING—Tuning shaft and mounting bushing
RRC-077	R6, S1	POTENTIOMETER—500,000 ohms; volume control and switch S1
RTL-092	T2	TRANSFORMER—First i-f transformer
RTL-093	T3	TRANSFORMER—Second i-f transformer
RTO-075	T1	TRANSFORMER—Audio output transformer
RWL-009		POWER CORD—A-c power cord and plug

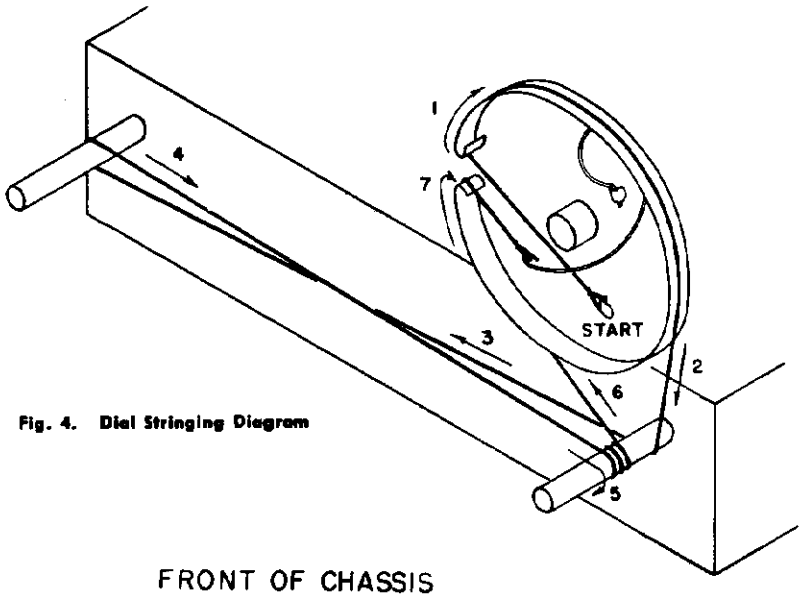

Fig. 4. Dial Stringing Diagram

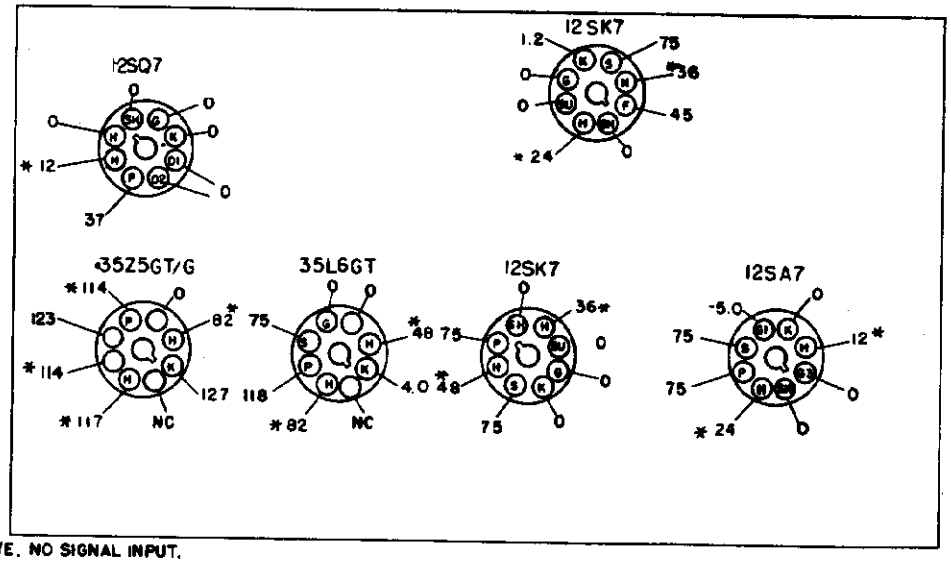

117 VOLTS AC LINE. NO SIGNAL INPUT.
VOLTAGES MEASURED BETWEEN SOCKET TERMINALS AND B- WITH 20,000 OHMS PER VOLT METER.
VOLUME CONTROL MINIMUM
*INDICATES AC VOLTS

Fig. 5. Socket Voltages

MODELS 329, 330

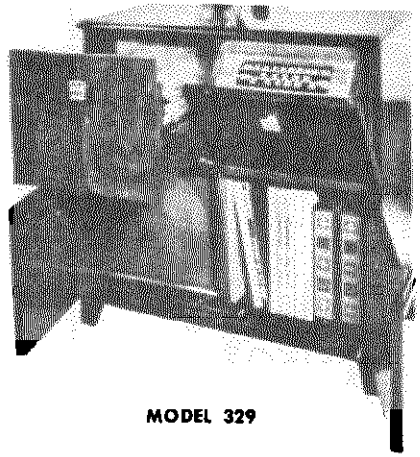

MODEL 329

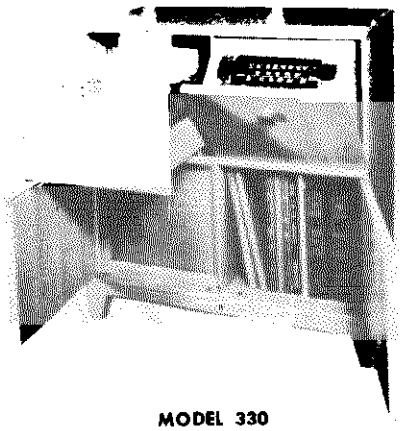

MODEL 330

For Service Data; See G.E. Model 324, Vol. 19, Pages 19-22 through 19-27.

SPECIFICATIONS

CABINET

Model	329	330
Material	Wood	Wood
Color	Mahogany	Blonde
Height	32½ in.	32½ in.
Width	31⅝ in.	31⅝ in.
Depth	16 1/16 in.	16 1/16 in.

ELECTRICAL

Voltage	105–125
Frequency	60 cps
Wattage (Radio)	65 watts
Wattage (Phono)	80 watts

OPERATING FREQUENCIES

AM	540–1620 kc
FM	88–108 mc

INTERMEDIATE FREQUENCIES

AM	455 kc
FM	10.7 mc

POWER OUTPUT

Undistorted	3.0 watts
Maximum	5.0 watts

LOUDSPEAKER

Type	Alnico permanent magnet
Outside Diameter of Cone	12 inches
Voice Coil Impedance at 400 cycles	3.2 ohms

TUBE COMPLEMENT

(V1) Converter	6BE6
(V2) R-F and 1st FM-IF Amplifier	6BA6
(V3) Second FM and 1st AM-IF Amplifier	6BA6
(V4) FM Limiter	6AU6
(V5) AM Detector, FM Discriminator, and Audio Amplifier	6T8
(V6) Power Output	6V6
(V7) Rectifier	5Y3GT
(V8) Phono Preamplifier	6SC7

PHONOGRAPH PICK-UP

Type	Variable reluctance
D-C Resistance	340 ohms

ANTENNA

AM	Built-in loop or outside antenna
FM	Power cord antenna, or 300 ohm FM dipole antenna

GENERAL

Models 329 and 330 are combination AM and FM receivers and phonograph. Model 329 is housed in a dark mahogany cabinet, while Model 330 is housed in a blonde cabinet.

The P15 phonograph in Models 329 and 330 is designed to play either automatically or manually 45 rpm seven-inch records 33⅓ rpm, 7-, 10- or 12-inch records or the standard 78 rpm 10- or 12-inch records. The pickup has a stylus selector to select either a 3 mil radius stylus for playing standard or wide groove records or a 1 mil radius stylus for playing the 33⅓ LP, 45 rpm records.

For service information and replacement parts on the P15 record changer, refer to ER-S-P15.

These models are designed to operate either from built-in antennas or from an external AM antenna or FM dipole antenna. On AM it is merely necessary to connect an external antenna to the terminal screw marked "Antenna." On FM, to operate the receiver from the built-in power line antenna, it is necessary to connect the green wire coming out of the rear of the chassis, to the left-hand terminal screw of the antenna terminal strip. For operation from a 300-ohm FM dipole, remove this green wire from the terminal and connect the 300-ohm transmission line to the terminals marked "DIPOLE."

On AM, the limiter tube, V4-6AU6, is not used. The i-f signal is fed from T5 to the detector V5.

On FM, the set uses a reflex circuit, the Armstrong type discriminator, and a special limiter circuit.

SERVICE INFORMATION—Alignment, socket voltages, dial stringing, tube and trimmer location, etc., refer to ER-S-324.

REPLACEMENT PARTS—Refer to replacement parts list of ER-S-324 except for those parts lised below.

Cabinet and knobs for Model 329 are the same as those listed for Model 324. Cabinet and knobs for Model 330 are the same as those listed for Model 328.

Cat. No.	Symbol	Description
RLI-029	L4	COIL—FM r-f coil
RLI-056	L2	COIL—FM antenna coil
RMS-004		SPRING—Dial cord tension spring
RTP-302	T8	TRANSFORMER—Power transformer for 60 cycle

© John F. Rider

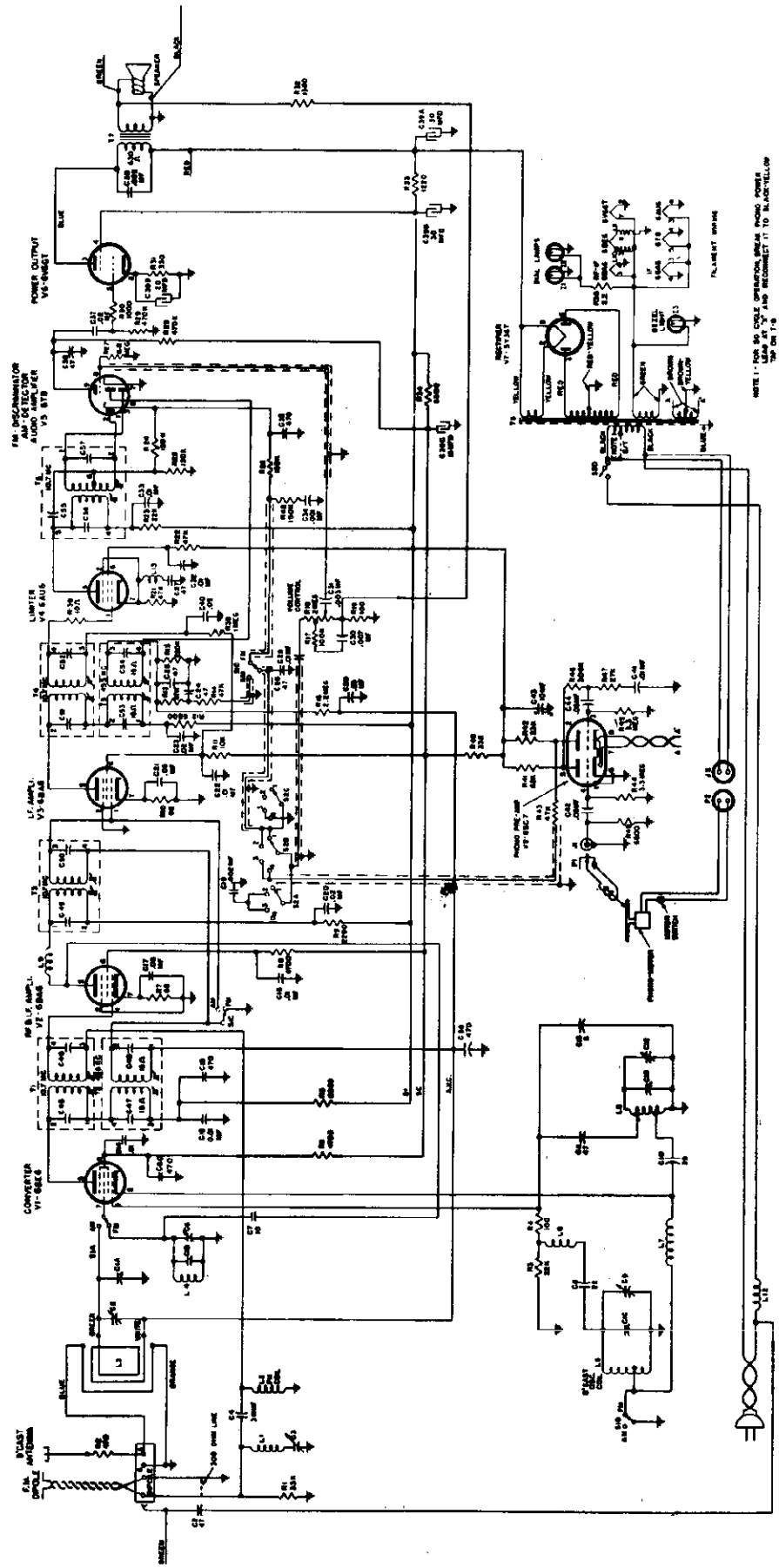

Fig. 1. Schematic for Models 329 and 330

MODELS 92-523,
92-524, 92-525, 92-526

GENERAL INFORMATION

TYPE -AC-DC table model superheterodyne with loop antenna

TUNING RANGE - 535 to 1620 Kc

IF FREQUENCY - 455 Kc

TUBE COMPLEMENT - 12BE6 - Converter
12BA6 - IF Amplifier
12AT6 - Detector, AVC & 1st AF Amp
50C5 - Power Amplifier
35W4 - Rectifier

POWER SUPPLY - 117V AC (50 to 60 cycles) or DC, 30 watts

CAUTION: Never connect antenna or chassis to water pipe, radiator or other ground.

ALIGNMENT

If AC power is used, use an isolation transformer between power line and receiver. If isolation transformer is not available, connect low side of signal generator to B- through .1 mf capacitor.

Connect low range output meter across speaker voice coil and set volume control at maximum. For greatest accuracy, keep output of receiver at approximately .05 watt (.05 watt = .40 volt on output meter) throughout alignment by reducing signal generator output as stages are brought into alignment. Use a small fibre screwdriver for aligning IF & diode transformers.

STEP	DUMMY ANTENNA	GENERATOR CONNECTION	GENERATOR FREQUENCY	POINTER SET TO	ADJUST	REMARKS
IF ALIGNMENT						
1.	.1 mf	Rear stator of tuning cap	455 Kc	Gang opened	1, 2, 3 & 4	Adjust for maximum.
RF ALIGNMENT						
2.	"	"	1620 Kc	"	5	Adjust for maximum.
3.	None	Radiation loop*	1400 Kc	Tune for maximum	6	Adjust for maximum.

*Connect generator output to 5" diameter, 3 turn loop & couple to receiver loop. Keep loops at least 12" apart.

©John F. Rider

MODELS 92-523,
92-524, 92-525, 92-526

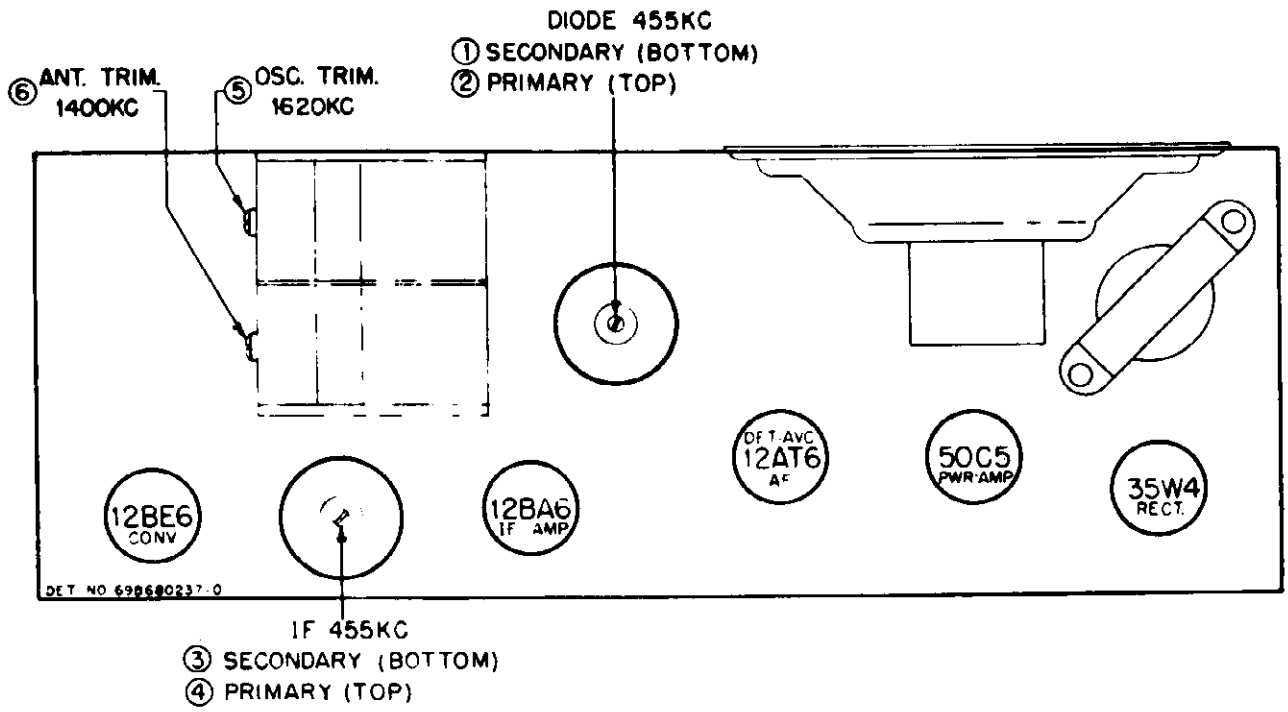

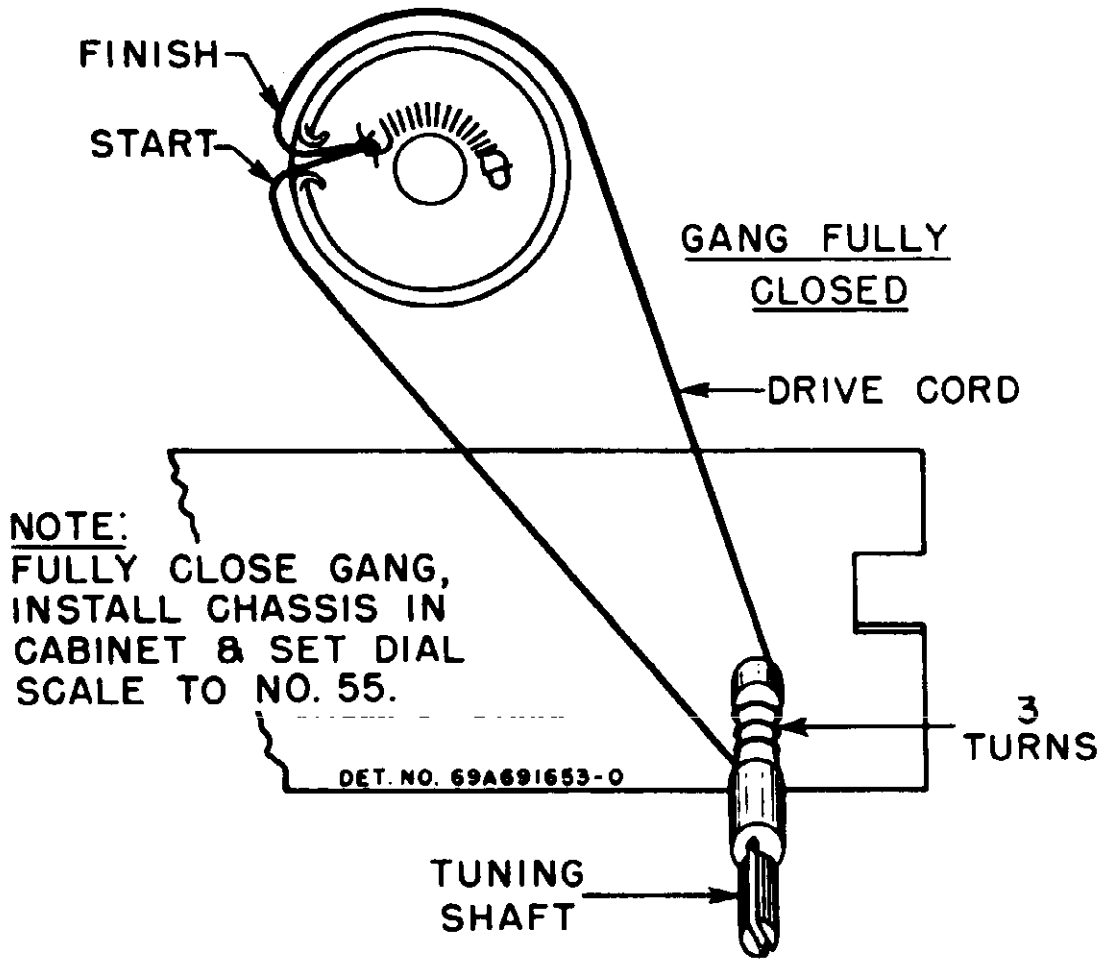

©John F. Rider

MODELS 92-523,
92-524, 92-525, 92-526

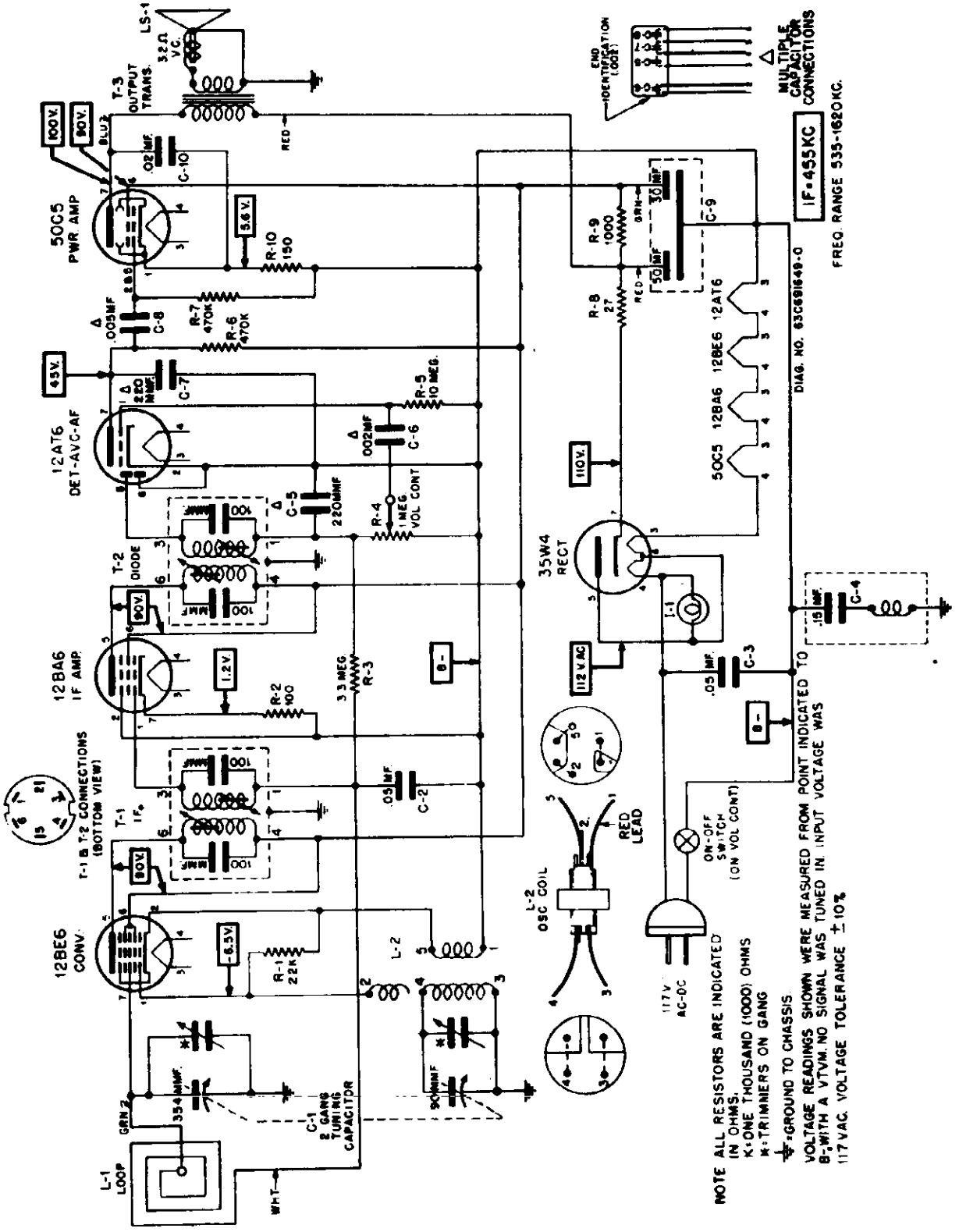

©John F. Rider

MODELS 92-523,
92-524, 92-525, 92-526

Ref. No.	Part No.	Description
CHASSIS PARTS - ELECTRICAL		
Capacitors		
C-1	1X485960	Variable, 2-gang: includes pulley .....
C-2	8K691444	Paper: .05 mf 200V .....
C-3	8K691443	Paper: .05 mf 400V .....
C-4	8A691842	Paper: .15 mf (resonant at 455 Kc) .....
C-5, 6, 7, 8	21B482847	Ceramic, multiple: 220 mmf; .002 mf; 220 mmf; .005 mf (all 400 wv) .....
C-9	23A691441	Electrolytic: 50 mf - 30 mf/150V .....
C-10	8A691442	Paper: .02 mf 400V .....
Dial Light		
I-1	65X11854	Bulb: 6.3V-.15A; tubular; clear; #47 .....
Coils		
L-1	24K691446	Loop Antenna: includes back panel .....
L-2	24K690762	BC Oscillator Coil .....
Speaker		
LS-1	50K691765 or 50C478138	Speaker, PM: 4"; 3.2 ohm VC .....
Resistors		
	Note:	All resistors are insulated carbon type unless otherwise specified.
R-1	6R6028	22,000 20% 1/2W .....
R-2	6R6018	100 20% 1/2W .....
R-3	6R2118	3.3 meg 20% 1/2W .....
R-4	18A691440	Volume Control: 1 meg; includes ON-OFF switch .....
R-5	6R2109	10 meg 20% 1/2W .....
R-6	6R6032	470,000 20% 1/2W .....
R-7	6R6032	470,000 20% 1/2W .....
R-8	6R5683	27 10% 1/2W .....
R-9	6R3953	1000 20% 1W .....

Ref. No.	Part No.	Description
Resistors (cont'd)		
R-10	6R3992	150 20% 1/2W .....
Switch		
S-1	-	SPST switch: part of volume control R-4 .....
Transformers		
T-1	24B482863	IF, 455 Kc: complete .....
T-2	24B482865	Diode, 455 Kc: complete .....
T-3	25K485973	Output Transformer .....
CHASSIS PARTS - MECHANICAL		
	7K690449	Bracket, loop mtg .....
	7A690445	Bracket, pilot light mtg .....
	7A77337	Bracket, tuning shaft mtg .....
	11M8944	Cord, dial: 18 lb; blk .....
	30A470651	Core, line & plug: 6 ft long .....
	46K680318	Core, iron: threaded (for T-1 & T-2) .....
	5A19658	Eyelet, spacer (gang mtg) .....
	5A70404	Grommet, rubber (gang mtg) .....
	14A482844	Insulator, cord outlet .....
	29R3010	Lug, soldering: #6; hot tinned (gang) .....
	2S7051	Palnut, hex: 3/8-32 x 9/16; cad pl (volume control mtg) .....
	5S7771	Rivet: .088 x 3/16; stl; pol nkl (tube socket mtg)
	5S7707	Rivet: .122 x 5/32 stl; nkl pl (spring tube shield mtg & output transformer mtg) .....
	5S7701	Rivet: .122 x 3/16; stl; nkl pl (tuning shaft bracket mtg) .....
	3S2294	Screw, machine: 6-32 x 1/2 plain hex head; locking type; cad pl (gang mtg) .....
	3S7205	Screw, machine: 8-32 x 1/4 slotted hex head; locking type; cad pl (pilot light brkt mtg) .....

©

MODELS 92-523, 92-524, 92-525, 92-526

CHASSIS PARTS - MECHANICAL (cont'd)

	3S3398	Screw, sheet metal: #6 x 3/8 PKZ plain hex head; cad pl (bracket, loop mtg) .....
	3S7454	Screw, sheet metal: #8 x 1/4 PKZ plain hex head; cad pl (speaker mtg) .....
	3S7455	Screw, sheet metal: #8 x 3/8 PKA slotted acorn head; antique copper finish (loop mtg) .....
	47A482845	Shaft, tuning .....
	26K485936	Shield, coil (T-1 & T-2) .....
	26A481521	Shield, spring (tube shield) .....
	9A485979	Socket, pilot light & bracket .....
	9A472534	Socket, tube: miniature .....
	41A691088	Spring, tension coil (elect. cap retaining).....
	41A14111	Spring, tension coil (dial cord) .....
	4A70015	Washer, "C" (tuning shaft retainer) .....
	4S7633	Washer, flat: 9/16 x 11/64 x .033 stl; cad pl (loop mtg) .....
	4K482859	Washer, insulated shoulder (loop mtg brkt) .....
CABINET PARTS		
	16E690434	Cabinet, table model: plastic; walnut (12-59W)..
	16K690438	Cabinet, table model: plastic; ivory (12-59I)...
	16K690436	Cabinet, table model: plastic; green (12-59G)...
	16K691447	Cabinet, table model: plastic; maroon (12-59M)..
	42A485984	Clip, dial scale retainer .....
	36B690442	Knob, control: plastic; walnut (12-59W) .....
	36K690444	Knob, control: plastic; ivory (12-59I) .....
	36K691460	Knob, control: plastic; green (12-59G) .....
	36K691459	Knob, control: plastic; maroon (12-59M) .....
	38A25507	Plug, split (loop & back to cabinet mtg) .....
	34C690441	Scale, dial .....
	3S7374	Screw, machine: 8-32 x 5/16 plain hex head; cad pl (chassis mtg) .....

©John F. Rider

MODELS EX-102, EX-103

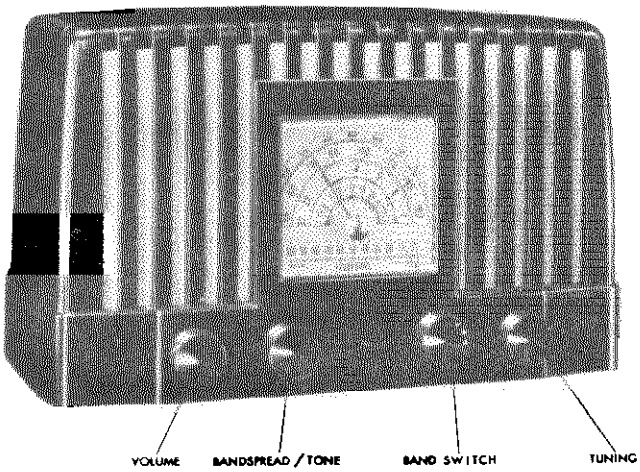

Fig. 1. Front view of Model EX-102 showing controls.

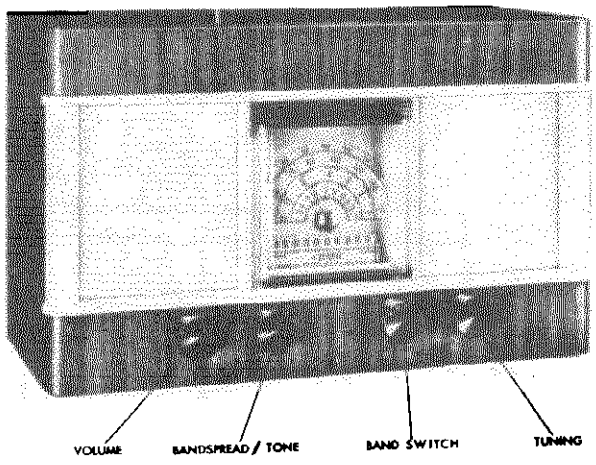

Fig. 2. Front view of Model EX-103 showing controls.

GENERAL: Models EX-102 and EX-103 are five tube, table model superheterodyne radio receivers, capable of receiving broadcast and short wave stations in three bands as follows: Band No. 1 (broadcast band)—540 to 1625 kc; Band No. 2 (short wave range 1)—2.2 to 7.1 mc; Band No. 3 (short wave range 2)—6.9 to 22 mc. Models EX-102 and EX-103 are electrically identical, but have different cabinets. Both models have ballast tubes which permit operation from 210 to 250 volts a-c/d-c as well as from 105 to 125 volts a-c/d-c power source. Both models have a built-in antenna plus provision for external antenna and ground system. Power drain is 25 watts at 117 volts for both models.

TUBE TYPES AND THEIR FUNCTIONS: type 12SA7GT/G—mixer/oscillator; type 12SK7GT/G—first i-f amplifier; type 12SQ7GT/G—detector, avc, and first audio amplifier; type 35L6GT/G—audio power amplifier; type 35Z5GT/G—power rectifier.

CONTROLS AND THEIR USE: VOLUME control—turn clockwise to turn on receiver and adjust volume; BANDSPREAD/TONE control—turn clockwise to operate bandspread and adjust tone; BANDSWITCH control—turn knob from left to right, as indicated by dots on knob, for bands 1, 2 or 3; TUNING control—turn knob clockwise or counterclockwise to locate desired station.

DETAILED SERVICE INFORMATION

IF FREQUENCY	RECEIVER OVERALL SELECTIVITY	IMAGE RATIO	*RECEIVER OVERALL SENSITIVITY	AUDIO OUTPUT
455kc	8.5kc wide at 6db down 16kc wide at 20db down 32kc wide at 40db down (for 500 milliwatt output)	65:1 at 1000kc (loop) 20:1 at 2.5mc (ant.) 8:1 at 7.0mc (ant.) 6:1 at 15.0mc (ant.) 3:1 at 20.0mc (ant.)	117 microvolt at 1000 kc 200 microvolt at 2.5 mc 140 microvolt at 6mc 322 microvolt at 8mc 115 microvolt at 20mc	0.8 watt with less than 10% distortion

*Readings for 500 milliwatt constant output. Speaker disconnected and replaced with a 3.2 ohm load resistor. Signal from generator modulated 30% at 400 cycles.

HOW TO RESTRING DIAL CORDS

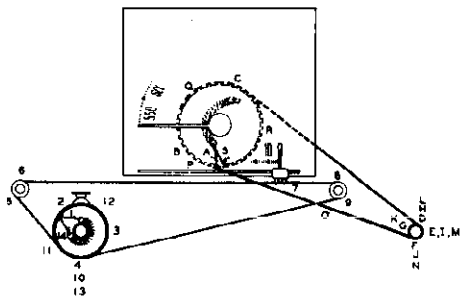

Fig. 3. Dial cable stringing procedure; main tuning is indicated by letters, and band spread tuning is indicated by numbers.

To restring the main tuning dial cord, cut a 25" length of 18 lb test dial cord and tie one end to the tension spring of the main tuning capacitor drive pulley at position "A" on the diagram. Following the letters "A" through "S", wind the cord on the pulley and knob drive shaft. At position "S", stretch the tension spring and tie the cord securely. Cut off the excess cord. Note that three turns are wound on the knob drive shaft.

To restring the bandspread tuning dial cord, cut a 30" length of the dial cord and follow the procedure as explained above, except start at position "1" on the diagram and proceed through position "14". Then turn knob pulley maximum clockwise, slide pointer to 100 and insert cord in clip on pointer. Note that the knob pulley has two turns.

©John F. Rider

MODELS EX-102,
EX-103

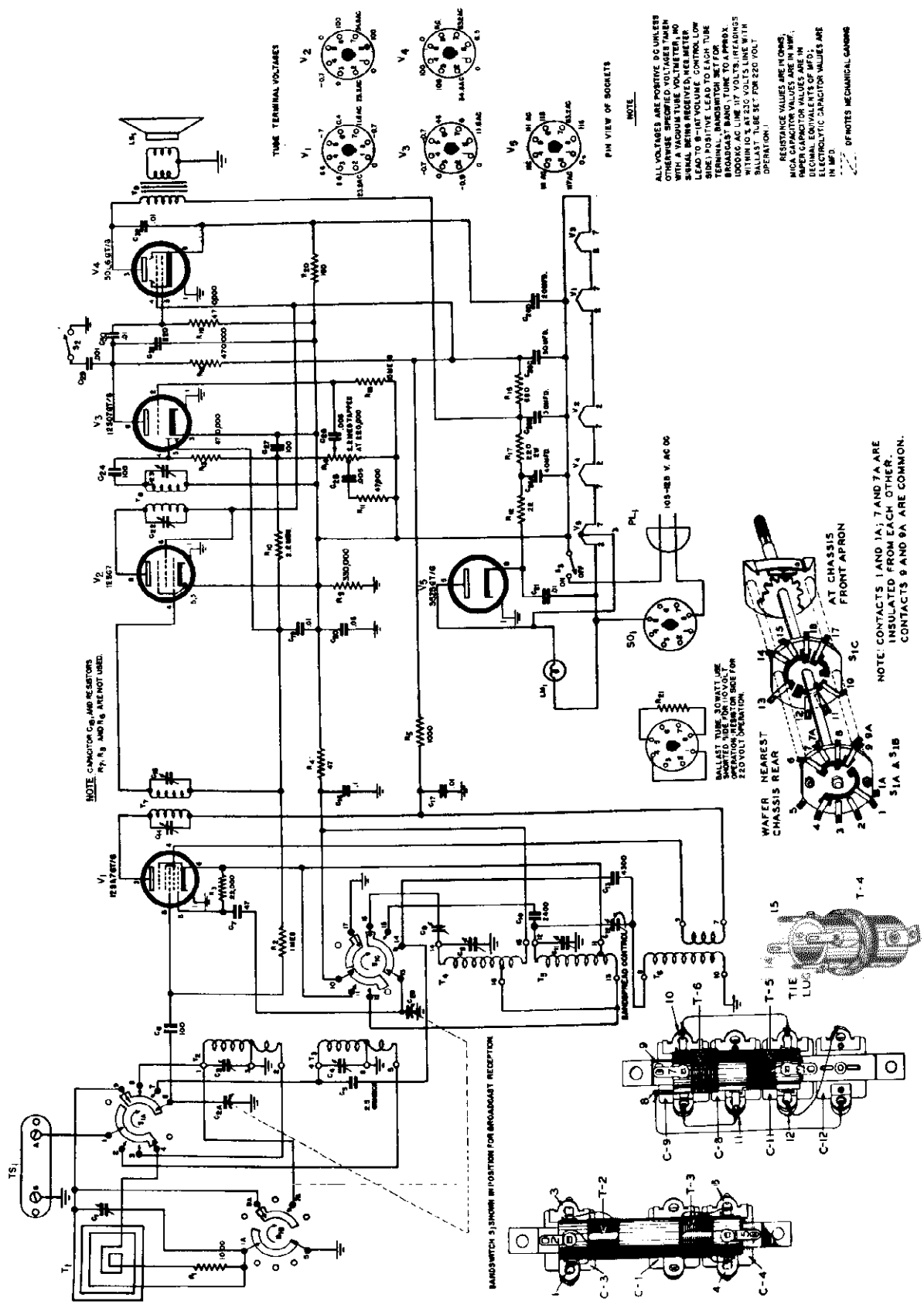

Fig. 4. Schematic Wiring Diagram of Models EX-102 and EX-103.

©John F. Rider

MODELS EX-102, EX-103

ALIGNMENT INSTRUCTIONS

EQUIPMENT:

1. Signal Generator capable of ranges indicated in the ALIGNMENT CHART below, including a 400 cycle audio modulator.
2. Standard RMA dummy antenna which consists of a 200 mmf capacitor in series with a 20 uh r-f choke which is shunted by a 400 mmf capacitor in series with a 400 ohm carbon resistor.
3. Output meter capable of handling 1 watt of audio power.
4. Non-metallic screw driver.

CONNECTIONS: Connect signal generator "cold" lead to negative return of receiver circuits, NOT to chassis. The "hot" lead is connected as indicated in the chart below.

Connect the output meter across the voice coil of the speaker and adjust the meter for 3 ohm impedance.

CAUTION: *See that the ballast tube is in the proper position with respect to the power line voltage.*

CONTROL SETTINGS: After allowing the receiver to warm up about ten minutes, set the controls as follows: VOLUME control full clockwise; BANDSPREAD tuning control at "0"; BANDSWITCH and main TUNING controls as indicated in the following chart.

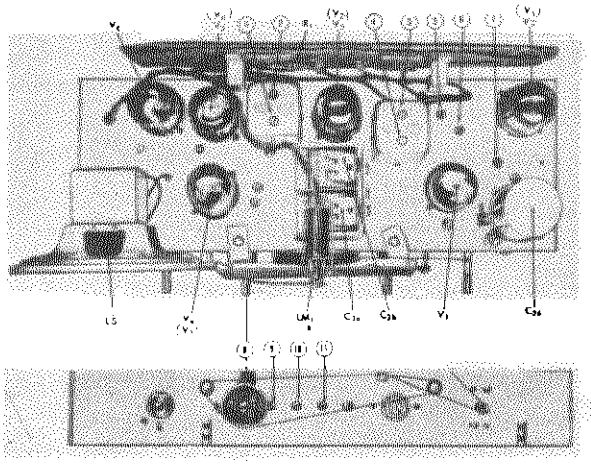

Fig. 6. Models EX-102 and EX-103, view showing alignment points.

DUMMY ANT. IN SERIES WITH SIG. GENERATOR	CONNECTION OF SIG. GENERATOR OUTPUT TO RECEIVER	SIGNAL GEN. FREQUENCY SETTING	BAND SWITCH SETTING	RECEIVER DIAL SETTING	ADJUST SLUG PADDER OR TRIMMER NO.	TRIMMER DESCRIPTION	TYPE OF ADJUSTMENT MAKE ADJUSTMENT FOR:	STEP NO.
IF Adjustment none	**On mixer section stator of tuning condenser gang	455kc	Range 1 (Broadcast)	1625kc	3 & 4 1 & 2	Diode IF Input IF	Maximum output Maximum output Repeat steps 1 & 2	1 2 3
RANGE 1 (Broadcast band)—								
Standard	Couple to loop	1500kc	Range 1	1500kc	11	Osc. Trimmer	Maximum output	4
RMA Dummy*	aerial	1500kc	(Broadcast)	1500kc	6	Antenna shunt trimmer	Maximum output	5
		600kc		600kc	10	Osc. padder	Maximum output Repeat step 4	6 7
RANGE 3 (Short wave range 6.9 to 22mc)—Align oscillator for this band with bandspread indicator drive pulley set screw loose and pointer set at zero. After completing the OSCILLATOR alignment, tighten the screws securely without changing the pointer setting from zero.								
Standard RMA Dummy*	"A" on antenna terminal strip	22mc	Range 3	22mc	8	Bandspread & Osc. trimmer	Maximum output	8
		20mc		20mc	†5	Antenna shunt trimmer	Maximum output	9
RANGE 2 (Short wave range 2.2 to 7.1mc,)—								
Standard	"A" on antenna	6mc	Range 2	6mc	9	Osc. trimmer	Maximum output	10
RMA Dummy	terminal strip	6mc		6mc	7	Antenna shunt trimmer	Maximum output	11

NOTE: Bandspread indicator MUST be at ZERO when making all adjustments.
Band 2 oscillator trimmer (9) must be set AFTER bandspread trimmer (8) (Range 3 oscillator trimmer) is aligned.
†Rock the main tuning capacitor slightly (turn back and forth slowly) when making these adjustments.
*Standard RMA dummy antenna consists of a 200mmf condenser in series with a 20uh r-f choke, the choke being shunted by a 400 mmf condenser in series with a 400 ohm carbon resistor.
**Connect Sig. Gen. ground lead to receiver negative return, not to chassis. This applies only for I-F adjustment.

©John F. Rider

MODELS EX-102, EX-103

REPLACEMENTS PARTS LIST

REF. NO.	DESCRIPTION	HALLICRAFTER'S PART NUMBER
	CAPACITORS	
C-1, 3 & 4	Antenna trimmers; 3 section unit	44A162
C-2	Main tuning capacitor; 2 sections, ganged; 12.3 to 354.6 mmf, each section; air	48B165
C-5	2.5 mmf gimmick; twisted insulated leads. NOT FURNISHED AS A REPLACEMENT PART SHOWN FOR REFERENCE ONLY.	
C-6, 24 & 27	100 mmf; 20%; 500 vdcw; mica	CM20A101M
C-7	47 mmf; 20%; 500 vdcw; mica	CM20A470M
C-8, 9, 11 & 12	Oscillator trimmer; 4 section	44B161
C-10	2400 mmf; 20%; 500 vdcw; mica	CM30A242M
C-13	4300 mmf; 10%; 500 vdcw; mica	CM35A432K
C-14 & 15	Trimmers for IF transformer, T-7. NOT A REPLACEABLE PART. Furnished with replacement transformer T-7. SEE LISTING REF. No. T-7	
C-16	0.1 mfd; +40-15%; 600 vdcw; tubular paper	46AX104J
C-17, 19, 21 30 & 32	0.01 mfd; 20%; 600 vdcw; tubular paper	46AX103F
C-25 & 28	0.005 mfd; +40−15%; 600 vdcw; tubular paper	46AZ502J
C-20	0.05 mfd; +40 −15%; 600 vdcw; tubular paper	46AY503J
C-22 & 23	Trimmers for IF transformer, T-8. NOT A SEPARATE REPLACEMENT PART. FURNISHED WITH REPLACEMENT TRANSFORMER T-8. SEE LISTING REF. NO. T-8.	
C-26A, B, C & D	Electrolytic; 4 section unit; sect. A— 40 mfd, 150 vdcw; sect. B & C—are each 30 mfd, 150 vdcw; Sect. D—20 mfd, 25 vdcw.	45B095
C-29	0.001 mfd; 20%; 600 vdcw; tubular paper	46AZ102H
C-31	220 mmf; 20%; 500 vdcw; mica	CM20A221M
	PILOT LAMPS	
LM-1	6/8 volt @ 150 ma; brown bead; bayonet base; G.E. type 47	39A004
	LOUD SPEAKER	
LS-1	Loud Speaker	85B038
	PLUGS	
PL-1	Line cord with two prong plug; 6 ft cord	87A078
	RESISTORS	
R-1 & 5	1000 ohm; 20%; ½ watt; carbon; (NOTE: R-1 is included with antenna loop transformer ref. no. T-1, but is available as a separate replacement part.)	RC20A102M
R-2	1 megohm; 20%; ½ watt; carbon	RC20AE105M
R-3	22,000 ohm; 20%; ½ watt; carbon	RC20AE223M
R-4	47 ohm; 20%; ½ watt; carbon	RC20AE470M
R-13, 18 & 19	470,000 ohm; 20%; ½ watt; carbon	RC20AE474M
R-9	330,000 ohm; 20%; ½ watt; carbon	RC20AE334M
R-10	2.2 megohm; 20%; ½ watt; carbon	RC20AE225M
R-11	47,000 ohm; 20%; ½ watt; carbon	RC20AE473M
R-12	22 ohm; 20%; 1 watt; carbon	RC30AE220M
R-14 & S-3	VOLUME control; 500,000 ohm variable; includes SPST toggle action switch, S-3 on rear.	25A561
R-15	680 ohm; 20%; 1 watt; carbon	RC30AE681M
R-16	10 megohm; 20%; ½ watt; carbon	RC20AE106M
R-17	220 ohm; 20%; ½ watt; carbon	RC20AE221M
R-20	150 ohm; 20%; ½ watt; carbon	RC20AE151M
R-21	Ballast tube; 460 ohm nominal; 30 watt; resistance is between pins 5 & 8; pins 1 and 4 are shorted.	24B856

REF. NO.	DESCRIPTION	HALLICRAFTER'S PART NUMBER
	SWITCHES	
S-1	Bandswitch; rotary; 2 section, 3 position	60B250
S-2	Tone control switch	60A246
S-3	Receiver on/off switch; part of resistor R-14 assembly. NOT FURNISHED AS A SEPARATE REPLACEMENT PART. REFER TO REF. NO. R-14.	
	TRANSFORMERS	
T-1	Antenna loop assembly; includes resistor R-1	57C104
T-2 & 3	Mixer coil assembly for short wave bands, both short wave ranges	51B814
T-4	Oscillator coil for local broadcast band	51A811
T-5 & 6	Oscillator coil assembly for short wave bands, both short wave ranges	51B815
T-7	Input IF transformer; 455kc; trimmer tuned	50B196-5
T-8	Diode IF transformer; 455kc; trimmer tuned	50B196-2
T-9	Audio output transformer; matches output tube to 3 ohm voice coil of PM speaker.	55B080-2
	TERMINAL STRIPS	
TS-1	External antenna and ground connector strip;	88A569

MISCELLANEOUS COMPONENTS COMMON TO BOTH MODELS

QUANT. IN EQUIPMENT	DESCRIPTION	HALLICRAFTER'S PART NUMBER
1	Pilot lamp dial socket; bayonet base	86A036-1
1	Bracket; tuning capacitor mounting	67B561
1	Bracket; tuning shaft mounting	67A582
1	Steel tuning shaft	74A176
1	Acetate dial window	22B161
1	Main tuning dial scale pointer	82A106
1	Bandspread tuning dial scale pointer	82A107
1	Calibrated dial scale	83B271
1	Drive pulley	28A022
2	Idler pulley	28A023
1	Line cord lock	76A299
1	Electrolytic capacitor (C-26) hold down clamp	76A300
1	Cam for switch, S—	77A207
5	Tube sockets; octal; Amphenol type MIP-8	6A256
1	Tube socket; octal; same as Amphenol type MIP-8 except has two keyways 180 degrees apart.	6A255

MISCELLANEOUS COMPONENTS FOR MODEL EX-102 ONLY

1	Cabinet; bakelite; ebony finish	66E307-1
3	Knob; bakelite; ebony finish	15B067-3
1	Knob; bakelite; ebony finish with dot	15B075-3
1	Cabinet; bakelite; walnut finish	66E307-2
3	Knob; bakelite; walnut finish	15B067-2
1	Knob; bakelite; walnut finish with dot	15B075-2
1	Cabinet; bakelite; ivory finish	66E307-3
3	Knob; bakelite; ivory finish	15B067-1
1	Knob; bakelite; ivory finish with dot	15B075-1
1	Cabinet bottom plate	63C246

MISCELLANEOUS COMPONENTS FOR MODEL EX-103 ONLY

1	Cabinet; wood	66E316
4	Knob; wood	15B075-4
1	Dial escutcheon; brass	7C027
1	Cabinet back; cardboard	32C339

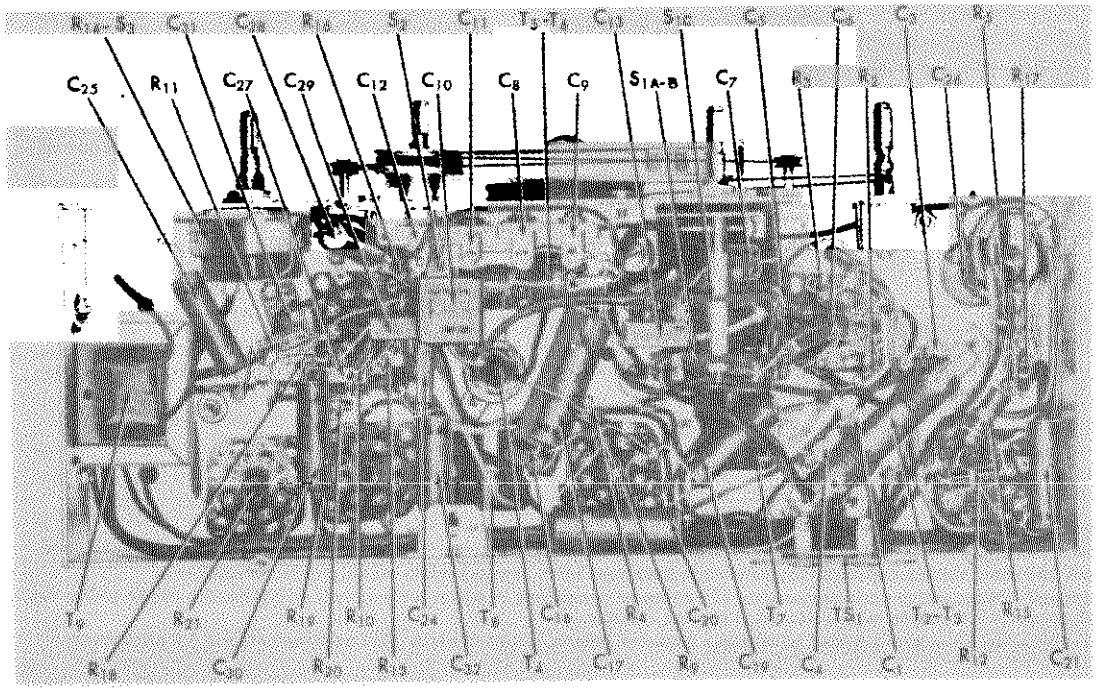

Fig. 5. Models EX-102 and EX-103 bottom view of chassis showing location of component parts.

MODELS EX-104, EX-106

GENERAL

Tubes	Five plus rectifier
Speaker	6-inch P.M.
Speaker V.C. Impedance	3.2 ohms
Headset Output	High Impedance
Antenna	
EX-104	Built-in cabinet antenna. Provisions for external long wire antenna.
EX-106	Provision for an external long wire antenna only. Supplied with shielded lead.
Phono Input	High Impedance
Tuning	Manual
Tuning Range	Broadcast 540 kc -1700 kc Shortwave A - 2.2 mc - 7.5 mc Shortwave B - 7 mc - 22 mc Shortwave C - 9 mc - 12 mc
Intermediate Frequency	455 kc
Power Supply	
EX-104	105/125 V. or 210/250 V. 60 cycles AC
EX-106	6.8 V. DC @ 7 amperes

Note - A battery charger must not raise the supply voltage above 7.5 volts with the receiver operating.

Power Consumption	
EX-104	55 Watts
EA-106	48 Watts

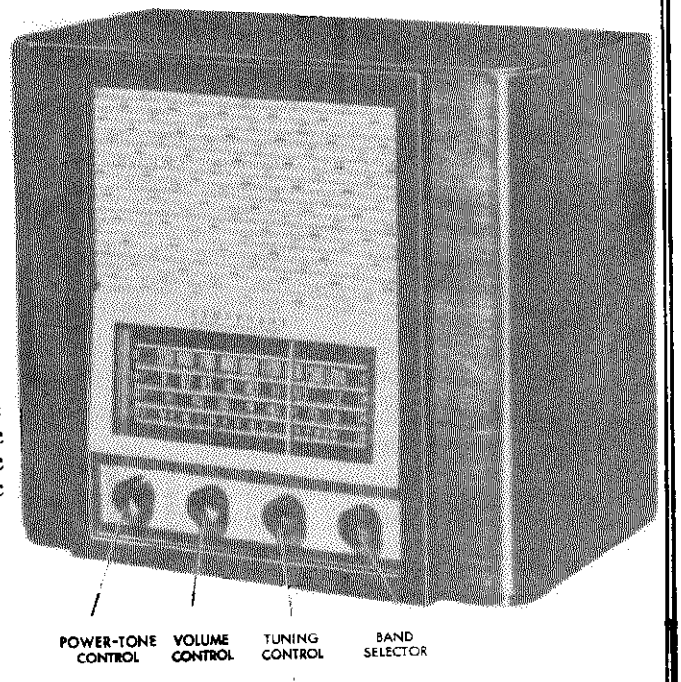

RESTRINGING DIAL CORD

Restring the dial drive with 30 lb. test dial cord. Tie one end to the tension spring and follow the sequence outlined in Fig. 1. Stretch the tension spring and tie the end of the cord securely to the spring as shown.

Set the tuning condenser at maximum capacity (closed), attach the pointer to the string and line it up with the left hand index mark on the dial scale.

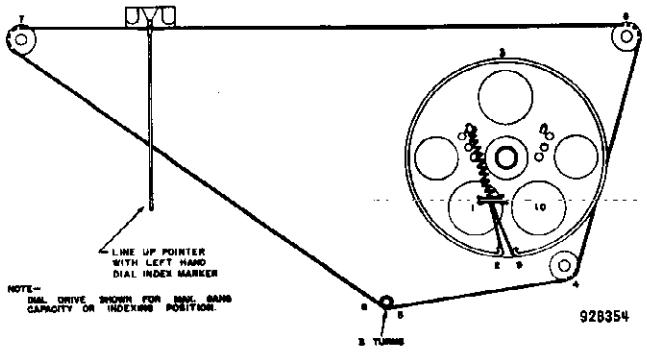

Fig. 1. Dial cable stringing procedure.

REPLACING LAMPS

Replace dial lamps with 6-8 V. Mazda #44 (Blue bead) pilot lamps or equivalent. To gain access to defective dial lamps, the chassis must be removed from the cabinet. Remove the four knobs (pull straight off the shafts), four mounting screws located at the bottom of the cabinet and disconnect the speaker plug to separate the chassis from the cabinet. On Model EX-104 the cabinet antenna lead must also be disconnected.

REPLACING FUSES

The Model EX-106 uses a battery cable fuse. Make replacements with a 15-ampere type 3AG fuse.

ALIGNMENT PROCEDURE:

Since all connections and adjustments necessary for alignment are accessible from the top of the chassis, the receiver may be aligned without removing the chassis from the cabinet. The output transformer is located on the under side of the chassis, hence, the output meter connection should be made at the speaker socket. (3-ohm V.C.).

All alignment adjustments are made at maximum volume. Refer to the alignment chart for the dial and band switch settings.

The standard RMA dummy antenna specified in the alignment chart consists of a 200 mmf condenser in series with a 20 uh r-f choke which is shunted by a 400 mmf condenser in series with a 400 ohm carbon resistor.

© John F. Rider

MODELS EX-104,
EX-106

ALIGNMENT CHART

Step	Dummy Antenna	Signal Generator Coupling	Signal Generator Frequency	Band Switch Setting	Receiver Dial Setting	Adjust
1	.01 mfd capacitor	Connect to rear section stator of tuning cap.	455 kc	BC	1000 kc	ABCD
2	Std RMA dummy	Connect to terminals "A" and "G" of antenna terminal strip TS_1.	1500 kc	BC	1500 kc	E*F
			600 kc		600 kc	G*
3	Std RMA dummy	See step 2.	6 mc	SW(A)	6 mc	H*I
4	Std RMA dummy	See step 2.	20 mc	SW(B)	20 mc	J*K
5	Std RMA dummy	See step 2.	11.5 mc	SW(C)	11.5 mc	L*M
			9.2 mc		9.2 mc	N*O

* Note - Calibration adjustment.

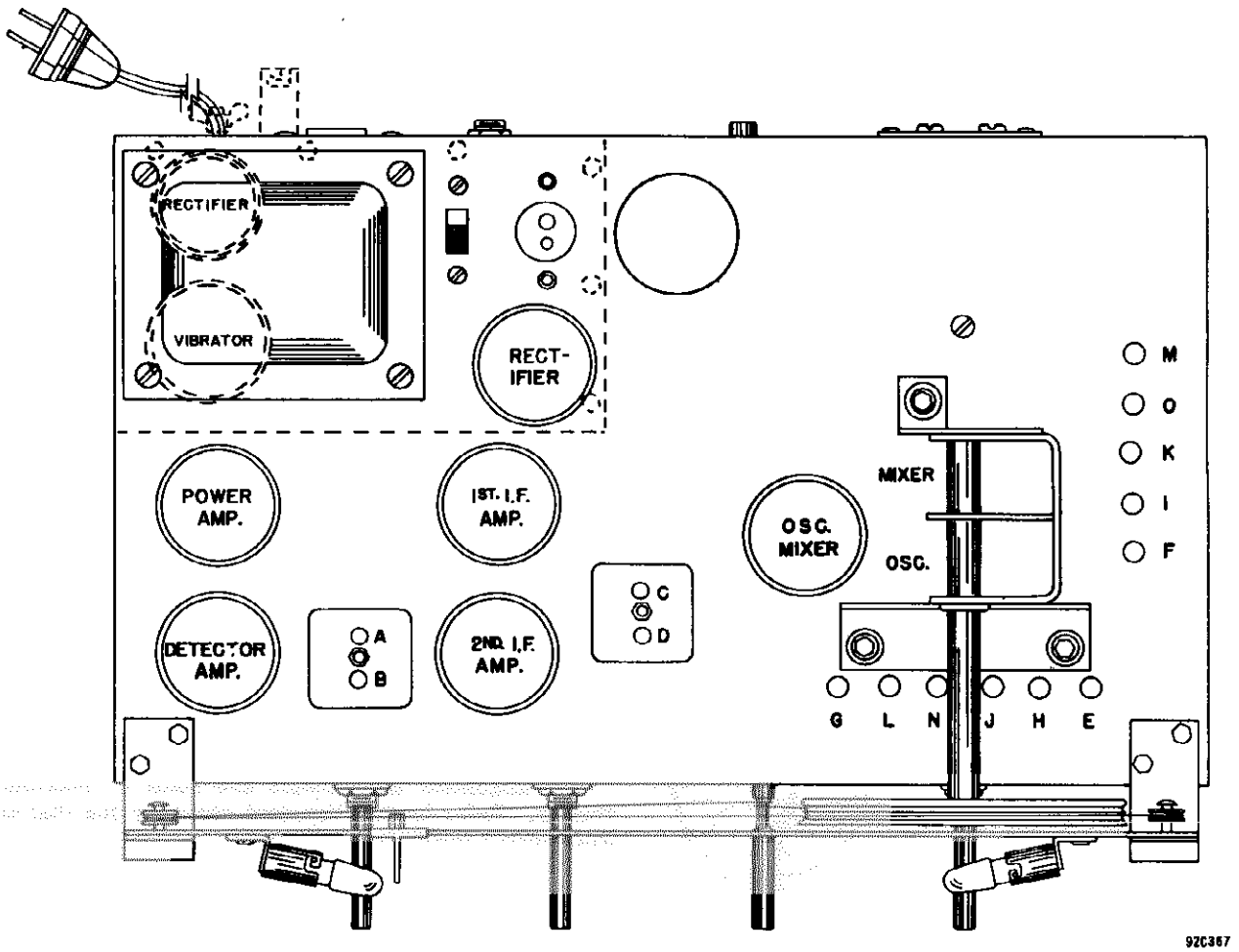

Fig. 2. Top view, alignment points.

©John F. Rider

MODELS EX-104, EX-106

Fig. 3. Top view, component location, Model EX-104.

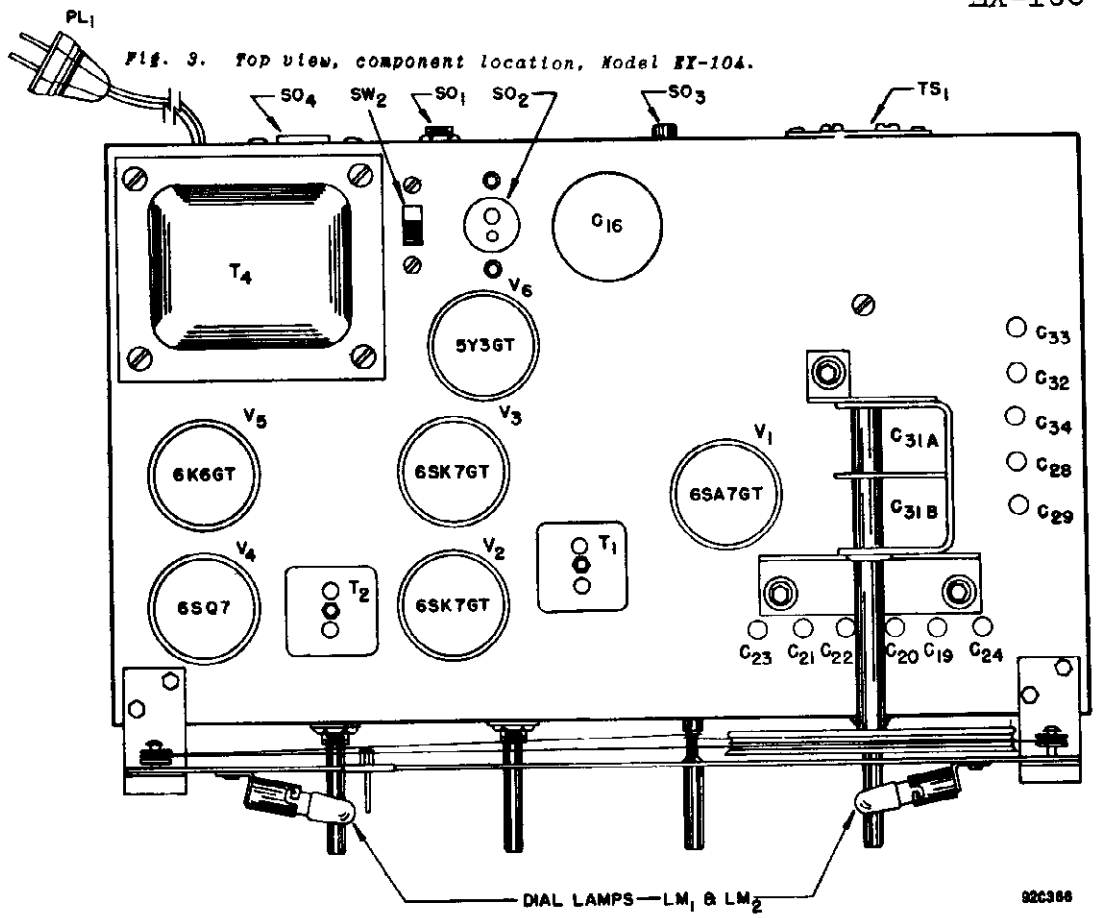

Fig. 4. Top view, component location, Model EX-106.

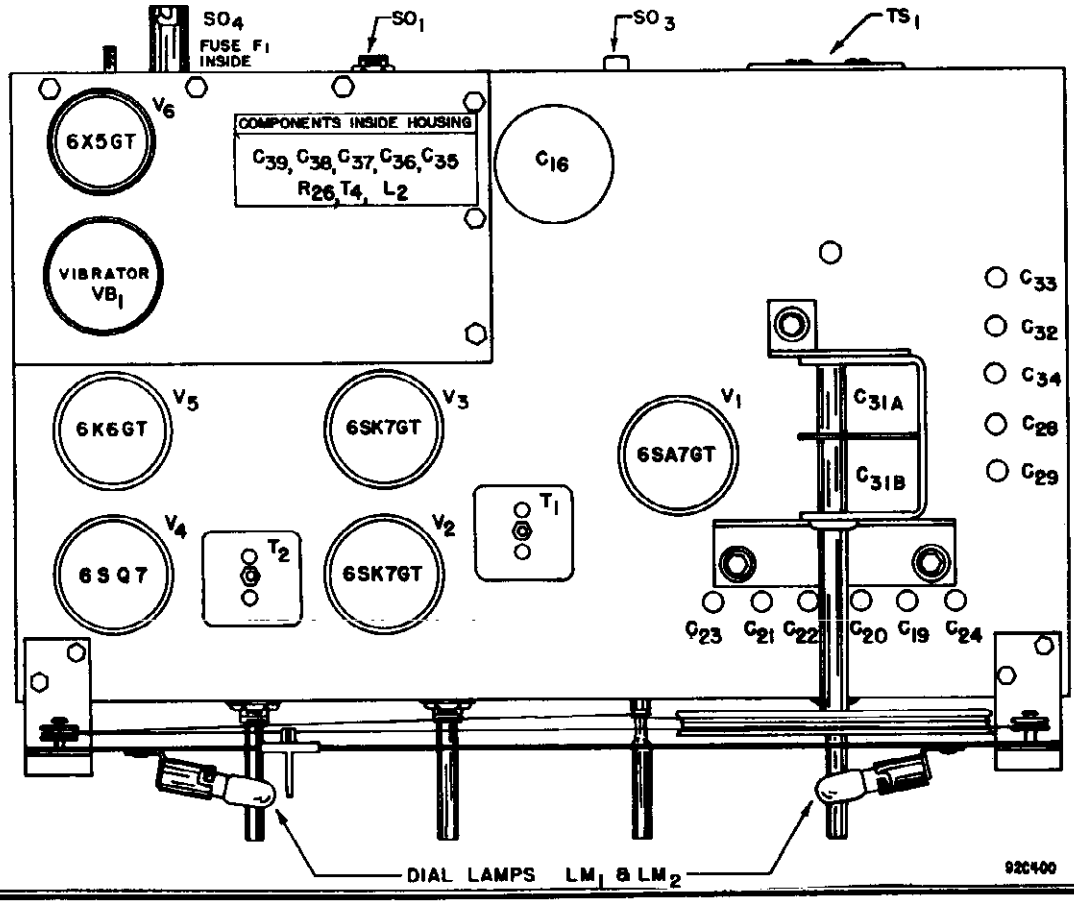

MODELS EX-104,
EX-106

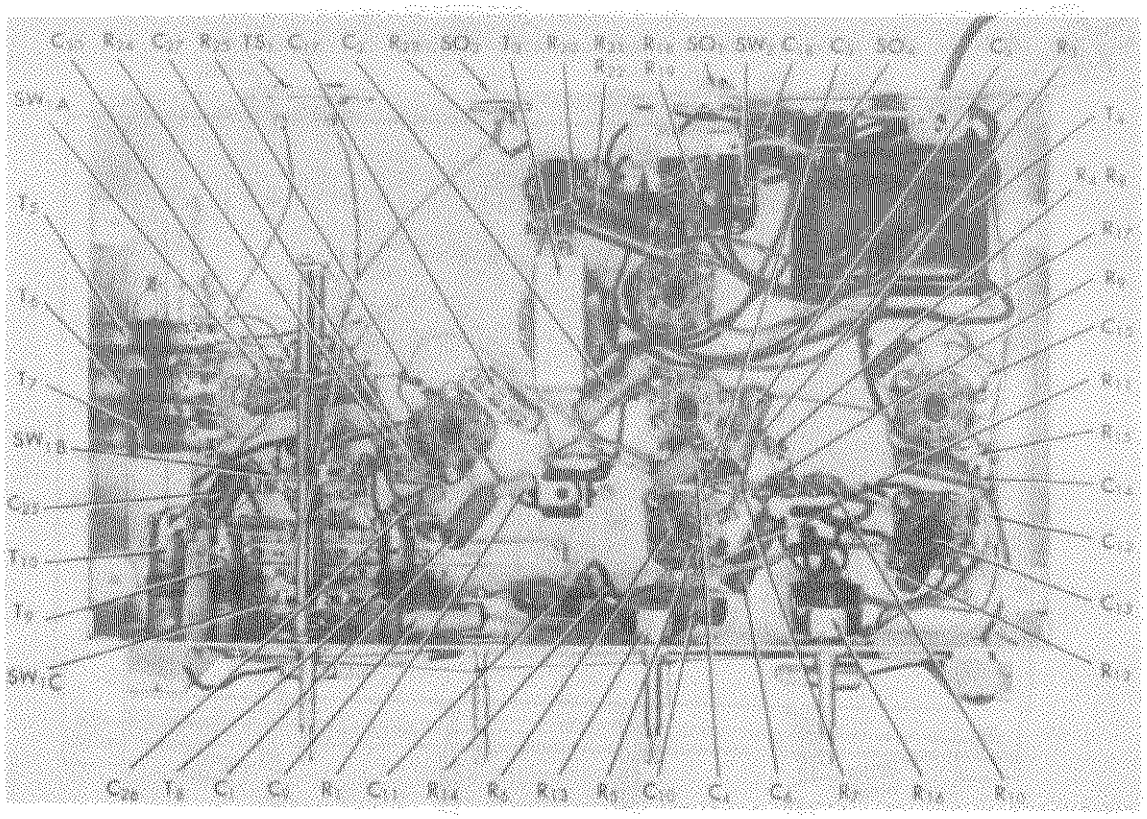

Fig. 5. Bottom view, component location, Model EX-104.

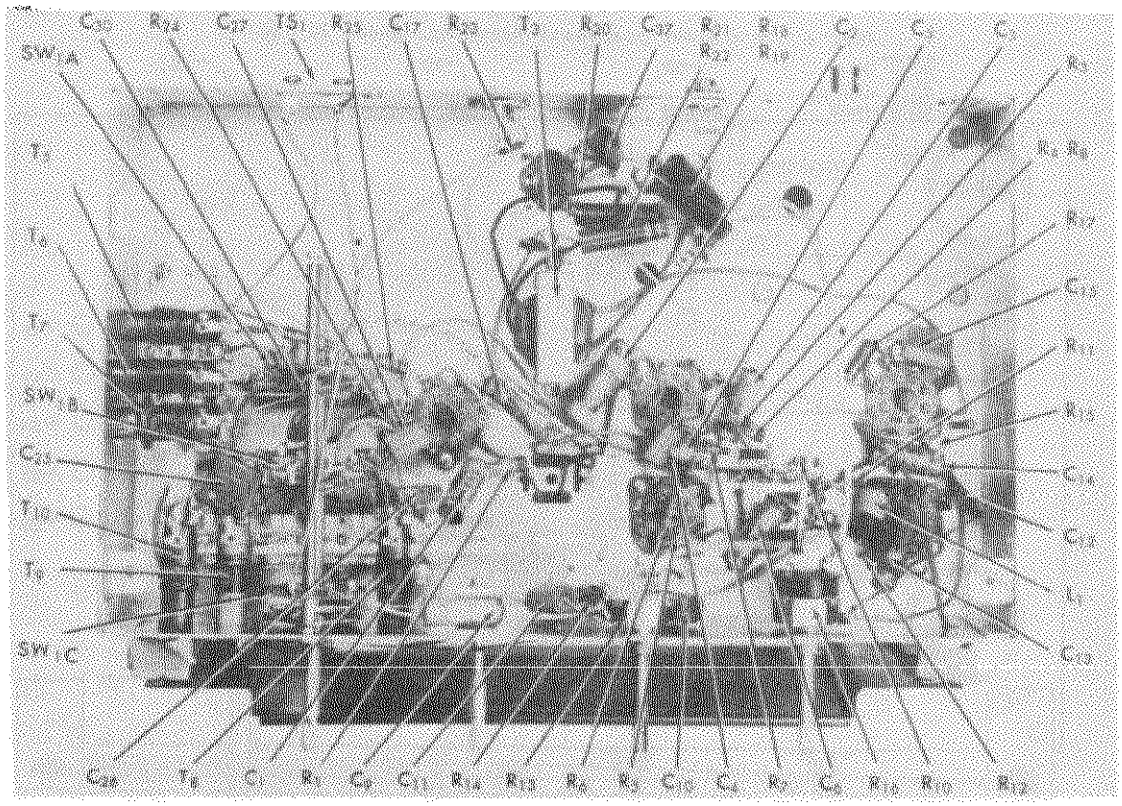

Fig. 6. Bottom view, component location, Model EX-106.

©John F. Rider

© John F. Rider

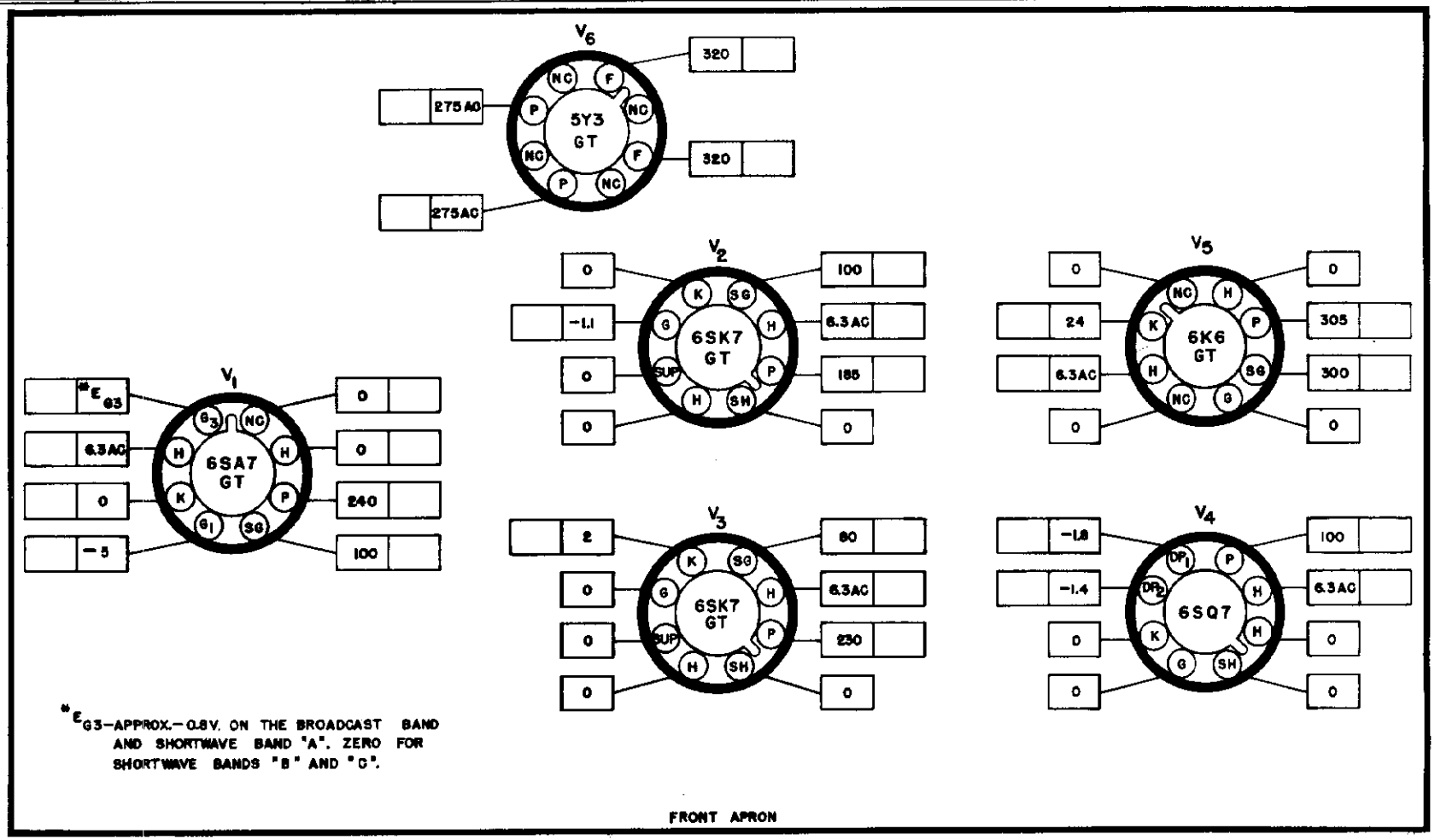

NOTES—

1. SOCKET VIEWS ARE BOTTOM VIEWS.
2. ALL VOLTAGES ARE MEASURED BETWEEN TUBE SOCKET TERMINALS AND CHASSIS WITH ZERO SIGNAL INPUT.
3. LINE VOLTAGE — 117 V. A.C. BATTERY VOLTAGE — 6.6 V. D.C.
4. ALL VOLTAGES SHOWN ARE DC UNLESS OTHERWISE SPECIFIED.
5. DC VOLTAGES SHOWN WERE MEASURED WITH A 20,000 OHM / VOLT METER.
6. "NC" — NO CONNECTION (VOLTAGE SHOWN FOR THIS TERMINAL ONLY WHEN TERMINAL IS USED AS A TIE LUG.)
7. ☐ SPACE PROVIDED FOR SERVICE METER READINGS.
8. WHEN USING THE CHART FOR MODEL EX-106 DISREGARD TUBE V-6. PLATE AND SCREEN VOLTAGES WILL RUN SLIGHTLY LOWER THAN SHOWN AND THE AC VOLTAGE SHOWN FOR THE HEATERS WILL BE A DC VOLTAGE EQUAL TO THE BATTERY SUPPLY VOLTAGE.

92C392

Fig. 7. Tube socket voltage chart.

MODELS EX-104,
EX-106

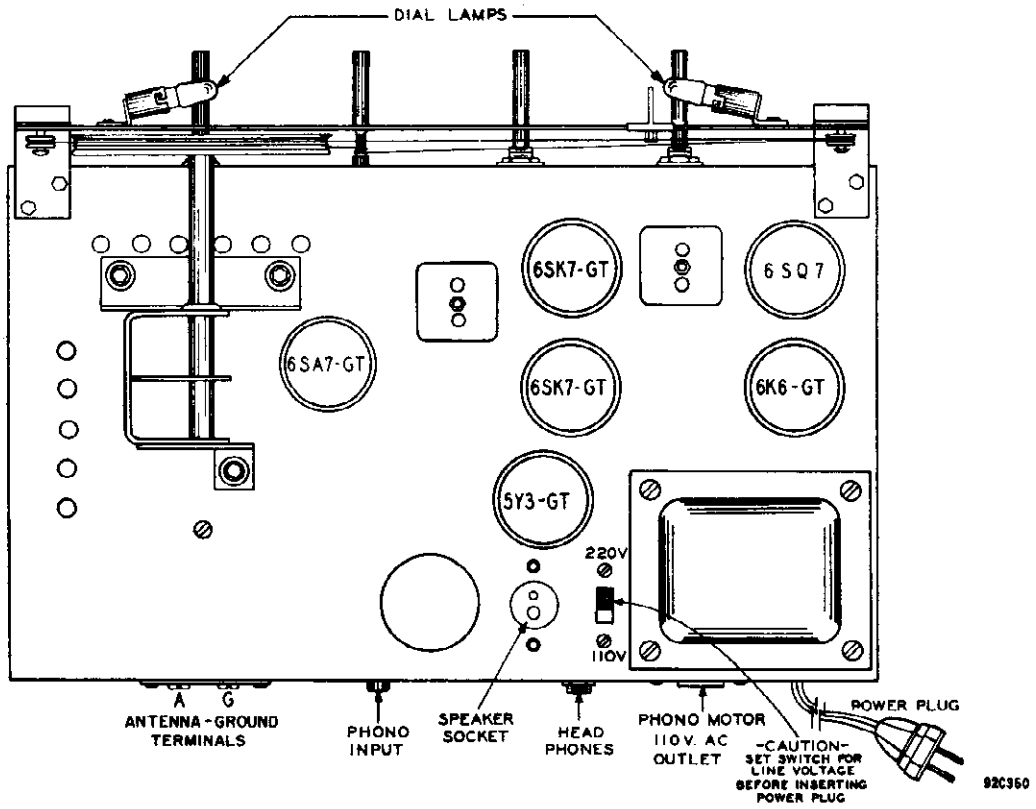

Fig. 8. Top view of Model EX-104 showing location of tubes and dial lamps.

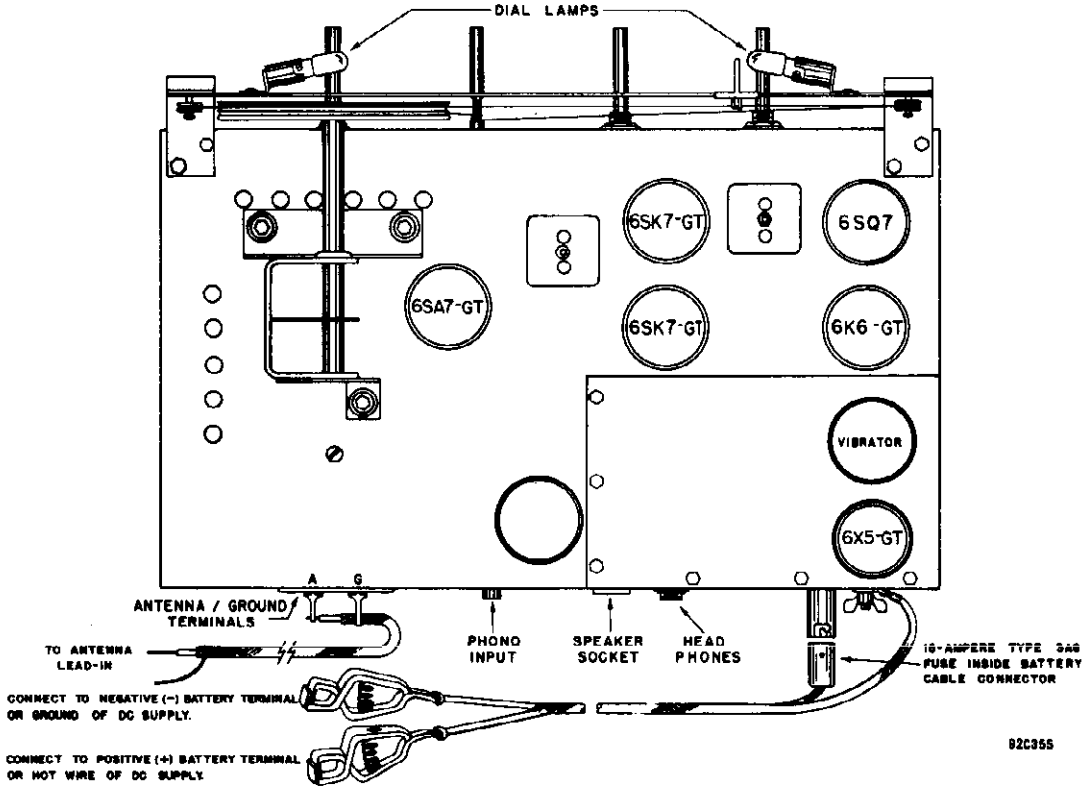

Fig. 9. Top view of Model EX-106 showing location of tubes and dial lamps.

©John F. Rider

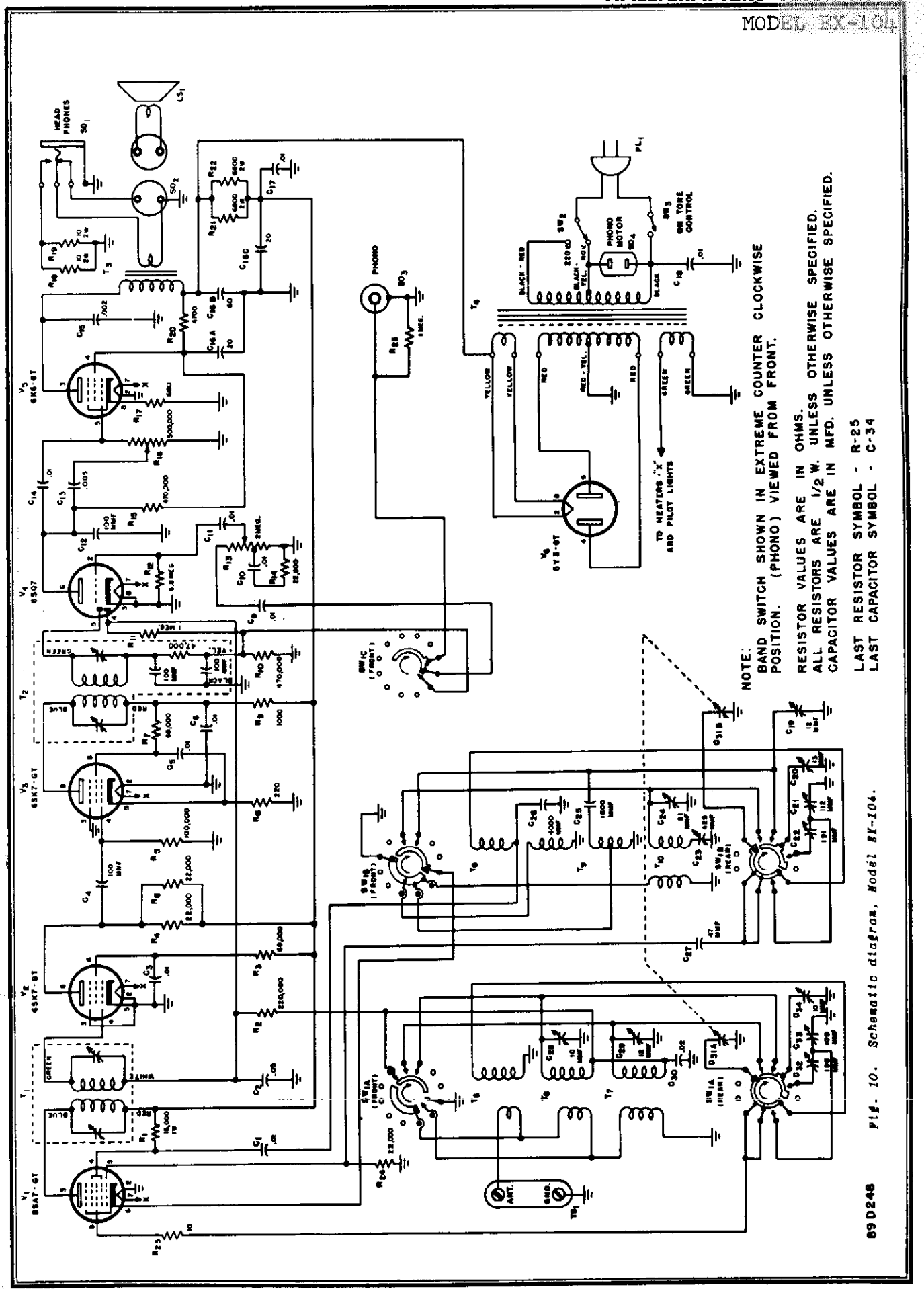

Fig. 10. Schematic diagram, Model EX-104.

MODEL EX-106

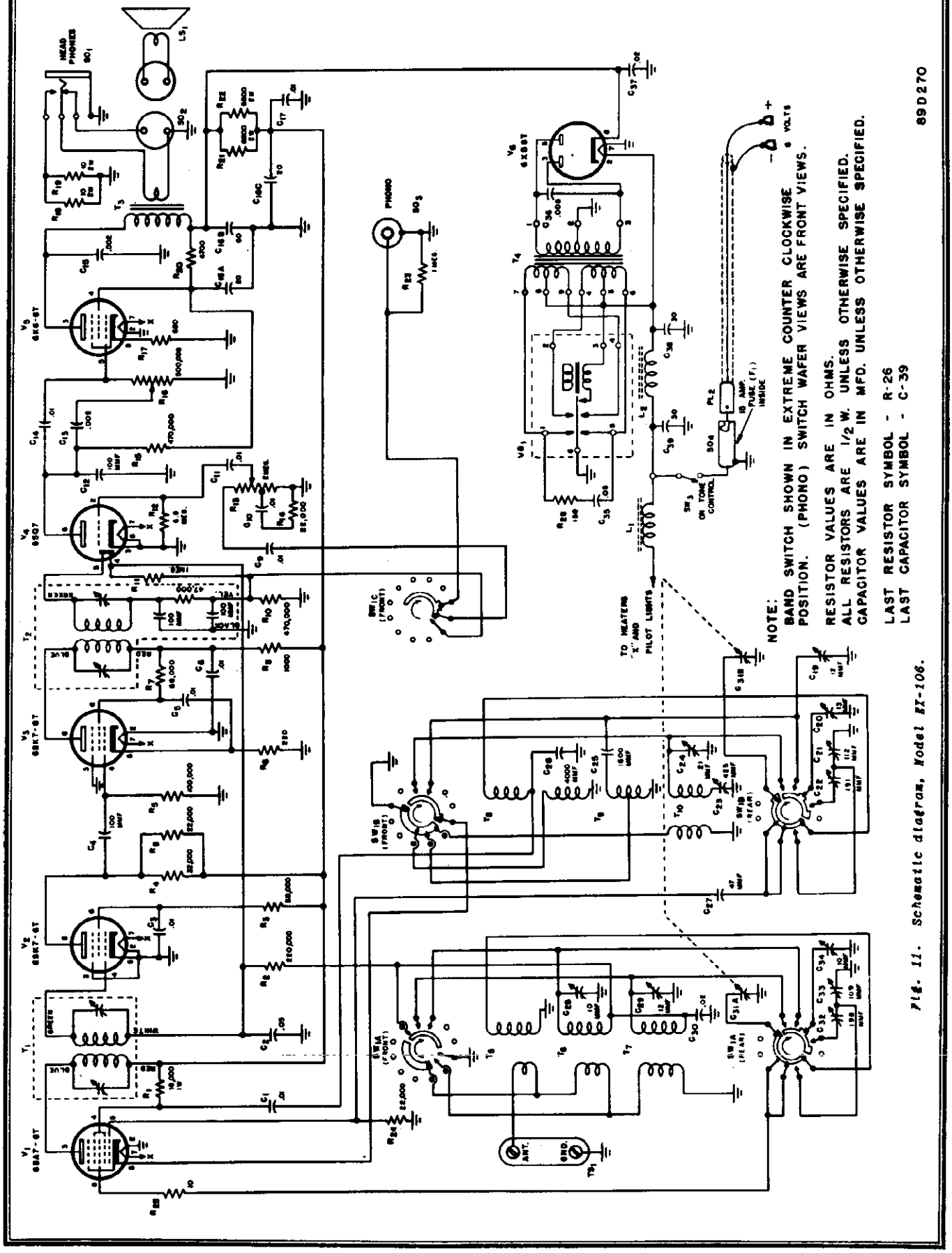

Fig. 11. Schematic diagram, Model EX-106.

©John F. Rider

MODELS EX-104, EX-106

SERVICE PARTS LIST

Ref. No.	Description	Hallicrafters Part Number
	CAPACITORS	
C-1,3,5,6,9, 10,11,14,17	.01 mfd. 600 V., tubular paper	46AZ103F
C-2	.05 mfd. 600 V., tubular paper	46AY503F
C-4,12	100 mmf. 500 V., mica	CM20A101M
C-13	.005 mfd. 600 V., tubular paper	46AZ502J
C-15	.002 mfd. 600 V., tubular paper	46AZ202J
C-16	60-20-20 mfd. 450 V., electrolytic	45B113
*C-18	.01 mfd. 600 V., molded paper	46AG103J
C-19,20,21, 22,23,24	Trimmer assembly, 6 section oscillator stage	44B217
C-25	1600 mmf. 2% 500 V., mica	CM30C162G
C-26	4000 mmf. 5% 500 V., mica	CM35A402J
C-27	47 mmf. 500 V., mica	CM20A470M
C-28,29,32, 33,34	Trimmer assembly, 5 section, antenna stage	44B216
C-30,**37	.02 mfd. 600 V., tubular paper	46AY203F
C-31	Tuning condenser, 2 section	48B184
**C-35	.05 mfd. 150 V., tubular paper	46A094
**C-36	.008 mfd. 1600 V., tubular paper	46A098-3
C-38,39	30 mfd. 25 V., electrolytic	45A034
	RESISTORS	
R-1	18,000 ohms 1 watt, carbon	RC30AE183M
R-2	220,000 ohms ½ watt, carbon	RC20AE224M
R-3,7	68,000 ohms ½ watt, carbon	RC20AE683M
R-4,8	22,000 ohms ½ watt, carbon	RC20AE223K
R-5	100,000 ohms ½ watt, carbon	RC20AE104M
R-6	220 ohms ½ watt, carbon	RC20AE221M
R-9	1000 ohms ½ watt, carbon	RC20AE102M
R-10,15	470,000 ohms ½ watt, carbon	RC20AE474M
R-11,23	1 megohm ½ watt, carbon	RC20AE105M
R-12	6.8 megohm ½ watt, carbon	RC20AE685M
R-13	Resistor, variable, 2 megohms, tapped	25B621
R-14,24	22,000 ohms ½ watt, carbon	RC20AE223M
R-16	Resistor, variable, 500,000 ohms	25B640
R-17	680 ohms 1 watt, carbon	RC30AE681M
R-18,19	10 ohms 2 watts, carbon	RC40AE100M
R-20	4700 ohms ½ watt, carbon	RC20AE472M
R-21,22	6800 ohms 2 watts, carbon	RC40AE682M
R-25	10 ohms ½ watt, carbon	RC20AE100M
**R-26	150 ohms ½ watt, carbon	RC20AE151K
	TRANSFORMERS AND COILS	
T-1	Transformer, 1st I.F.	50C365
T-2	Transformer, detector stage	50C364
T-3	Transformer, audio output	55B104-1
*T-4	Transformer, power	52C149
**T-4	Transformer, power	52C162
T-5	Transformer, antenna stage, SW(B) (C)	51B1018
T-6	Transformer, antenna stage, SW(A)	51B960
T-7	Transformer, antenna stage, BC	51B957

SERVICE PARTS LIST (Cont.)

Ref. No.	Description	Hallicrafters Part Number
	TRANSFORMERS AND COILS (Cont.)	
T-8	Transformer, oscillator stage, SW(B) (C)	51B964
T-9	Transformer, oscillator stage, SW(A)	51B963
T-10	Transformer, oscillator stage, BC	51B962
**L-1, **2	Coil, hash filter	53A100
	SWITCHES	
SW-1	Band switch assembly	60B290
*SW-2	Line voltage switch, S.P.D.T.	60A228
SW-3	Power switch, part of tone control R-16	
	PLUGS AND SOCKETS	
*PL-1	Line cord and plug	87A078
SO-1	Receptacle, headphone jack	36AO36-1
SO-2	Receptacle, speaker	88A072
SO-3	Receptacle, phono	36A029
*SO-4	Receptacle, phono motor	10A015
-	Socket, octal (tube)	6A190
-	Socket, 6 contact (vibrator)	**6A282
-	Socket, dial light	86A054
	TUBES, RECTIFIERS AND LAMPS	
V-1	Type 6SA7GT, mixer	90X6SA7GT
V-2,3	Type 6SK7GT, 1st and 2nd I.F.	90X6SQ7
V-4	Type 6SQ7, detector and 1st audio	90X6SQ7
V-5	Type 6K6GT, audio power amp.	90X6K6GT
*V-6	Type 5Y3GT, rectifier	90X5Y3GT
**V-6	Type 6X5GT, rectifier	90X6X5GT
LM-1,2	Lamp, 6-8 V., 250 MA., Mazda #44	39A003
	MISCELLANEOUS	
TS-1	Terminal strip, antenna	88A327
-	Lock, line cord	*76A299
-	Cable, dial drive	38A001
-	Spring, dial drive	75A006
-	Rail, pointer	67B727
-	Dial scale	83C322
-	Pointer	82A135
-	Escutcheon	7C057
-	Dial glass	22B189
LS-1	Speaker, P.M.	85C063
-	Knob, volume, tone and tuning	15B068-3
-	Knob, band switch	15B137
-	Capacity plate (cabinet antenna)	*69B203-1
-	antenna) Clip, coil mtg.	76A326
-	Clamp, vibrator	**76C075
-	Antenna cable assembly	**87A1666
**VB1	Vibrator (6 Volt)	27B146
-	Battery cable assembly	**87C1665
**F1	Fuse, 15 amp. (3AG)	39A317

* Used on Model EX-104 only.
** Used on Model EX-106 only.

©John F. Rider

MODELS EC-403,
EC-404, Rev.

GENERAL

Tubes . . . . . Fourteen plus rectifier

Speaker. . . . . 15" PM or twin 10" PM

Antennas . . . . . Built-in loop, "AM"
Built-in dipole, "FM"

Provision for external Antennas.

Tuning . . . . . Manual and mechanical push-button 5 P.B. for "AM" and 5 P.B. for "FM".

Tuning Range . . . . . (BC) 540 kc - 1700 kc
(A) 15 mc - 18 mc
(B) 9 mc - 12 mc
(C) 5.8 mc - 18 mc
(FM) 88 mc - 108 mc

Intermediate Frequency . . . 455 kc/10.7 mc

Power Supply . . . . . 105-125 V. 60 cycle AC

Power Consumption . . . . . 180 watts

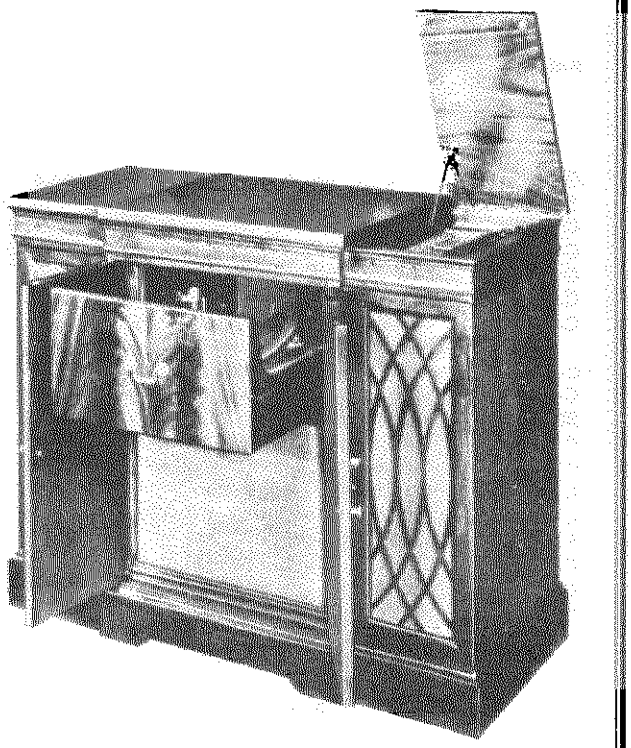

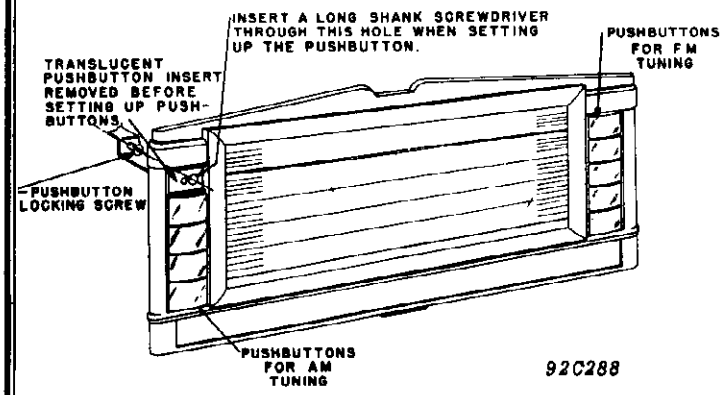

Fig. 1. View showing pushbutton setup.

INSERTING CALL LETTERS

1. Slide out metal insert from translucent insert assembly. (See Fig. 2).
2. Insert call letter tab.
3. Replace metal insert.
4. Replace translucent insert assembly into push-button.

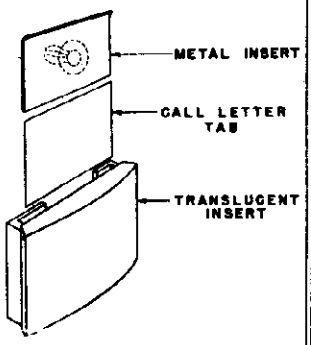

Fig. 2. Inserting call setters

BUTTON SETTING

Insulate the muting switch contacts before setting the lower group of AM pushbuttons. See Fig. 3.

1. Select any one pushbutton.
2. Pull translucent insert straight out.
3. Insert screw driver blade through large hole of push-button into slot of locking screw. (See Fig. 1).
4. Loosen locking screw about one-half turn. (Not more than one full turn.)
5. With pushbutton depressed, carefully tune in desired station with the manual control and tighten the locking screw.
6. Replace the translucent insert with the proper station call letters inserted.

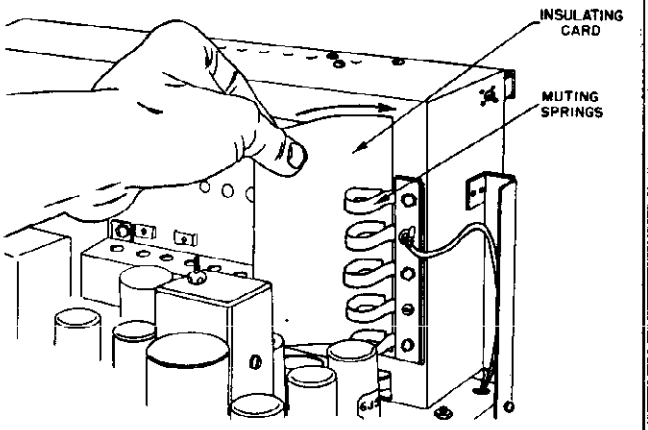

Fig. 3. Insulating the muting switch contacts.

© John F. Rider

DIAL CORD STRINGING INSTRUCTIONS

To restring either the "FM" or "AM" dial drive systems, cut a five foot length of 9 lb. test dial cord and follow the stringing procedure illustrated in Fig. 4. Note that the start and finish of both drives are located at the tension spring on the drum.

Index the pointer carriage as described under ALIGNMENT PROCEDURE.

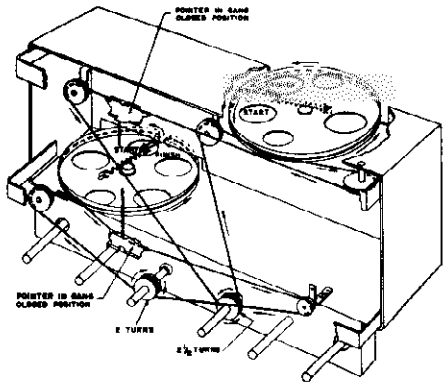

Fig. 4. Dial cable stringing procedure.

ALIGNMENT PROCEDURE

Removal of the receiver chassis from the cabinet requires the use of other calibration means than the dial glass. Calibration strips mounted on the pointer rails are provided for alignment purposes.

To use these calibration strips, it is necessary to remove the dial plate (brown metal cover) in the following manner:

1. Remove dial pointers. Pull them straight out of their spring clips.
2. Remove the two dial lamp sockets.
3. Remove dial plate fastened to the chassis with seven sheet metal screws.

With the variable condensers fully meshed, the right hand side of the pointer carriage will be indexed to zero on the calibration strips. Refer to Fig. 5.

The receiver is equipped with AUTOMATIC FREQUENCY CONTROL on the FM band to compensate for mechanical variations in the pushbutton mechanism. The correction factor is approximately 5 times: AFC takes hold 100 kc before the station frequency is reached and releases before tuning 450 kc beyond the station frequency when receiving a 0.1 volt signal.

The standard RMA dummy specified in the alignment chart consists of a 200 mmf condenser in series with a 20 uh r-f choke which is shunted by a 400 mmf condenser in series with a 400 ohm carbon resistor.

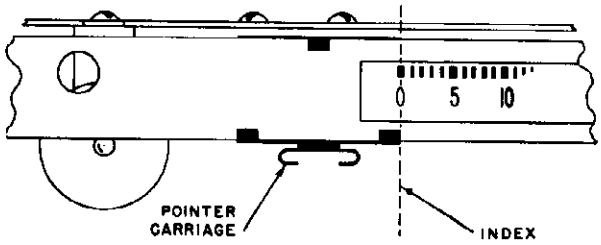

Fig. 5. Calibration strip detail.

ALIGNMENT CHART

Step	Dummy Antenna	Signal Generator Coupling	Signal Generator Frequency	Band Switch Pos.	Radio Tuned To	Cal. No.	Adjust	Remarks
1	0.01 mfd. cap.	To stator plates of center section of AM tuning cap.	455 kc	"BC"	1000 kc	55	S3, S6, S2, S5, S1 & S4	Adjust for max. output TREBLE tone control set at No. 1.
2	0.01 mfd. cap.	To stator plates of center section of FM tuning cap.	10.7 mc (No modulation)	"FM"	Mid-scale	55	S9, S12, S13, S8, S11, S7, & S10	Adjust for max. AVC voltage as measured between pin No. 7 of 6AL5 and ground with an electronic voltmeter.
3	0.01 mfd. cap.	To stator plates of center section of FM tuning cap.	10.7 mc (No modulation)	"FM"	Mid-scale	55	S14	Adjust for zero voltage as measured between junction L16 and C34 and ground with an electronic voltmeter.
4	Std. RMA dummy.	To terminals "A" and "G" on ant. term. strip. TS_1.	1500 kc	"BC"	1500 kc	82	F*, H, and I	Adjust for max. output as in step 1.
			600 kc	"BC"	600 kc	15.5	G*	
5	Std. RMA dummy	To terminals "A" and "G" on ant. term. strip. TS_1.	16 mc	"C"	16 mc	84	E*, R, and S	Adjust for max. output as in step 1.
6	Std. RMA dummy.	To terminals "A" and "G" on ant. term. strip. TS_1.	18 mc	"A"	18 mc	94.5	A*, O, and N	Adjust for max. output as in step 1.
			15 mc	"A"	15 mc	7.5	B*, P and Q	
7	Std. RMA dummy.	To terminals "A" and "G" on ant. term. strip. TS_1.	12 mc	"B"	12 mc	91.5	C*, J, and K	Adjust for max. output as in step 1.
			9 mc	"B"	9 mc	6.5	D*, L	
8	Two 150 ohm carbon resistors.	To terminals "D" and "D" on ant. term. strip; one 150 ohm resistor in each lead.	108 mc	"FM"	108 mc	83.5	T*, U, and V	Adjust for max. limiter grid voltage as measured between pin No. 4 of the 6SH7 and ground with a 100,000 ohm resistor in series with the voltmeter probe.

* Note— Calibration adjustments.

©John F. Rider

MODELS EC-403, EC-404, Rev.

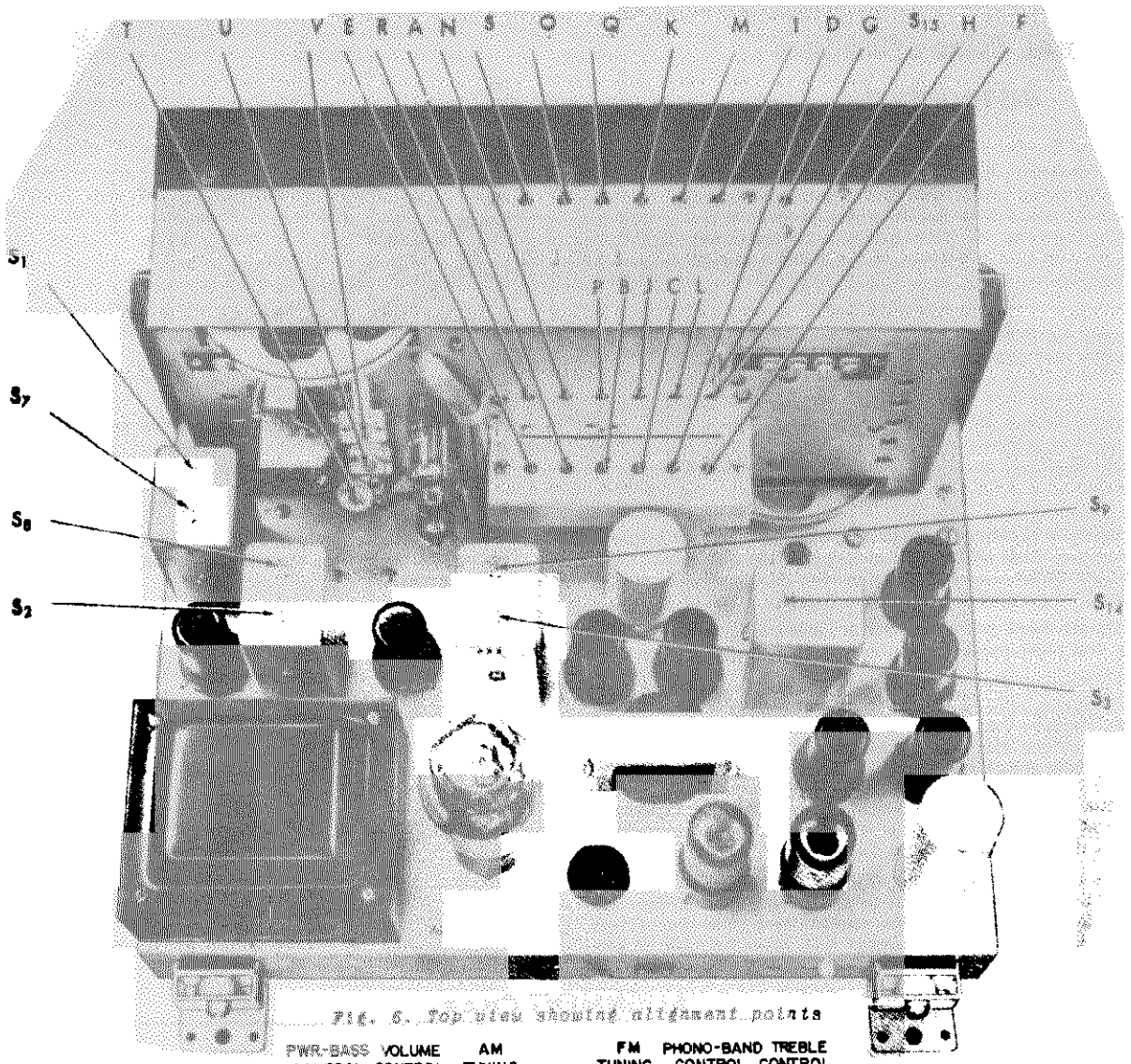

Fig. 6. Top view showing alignment points

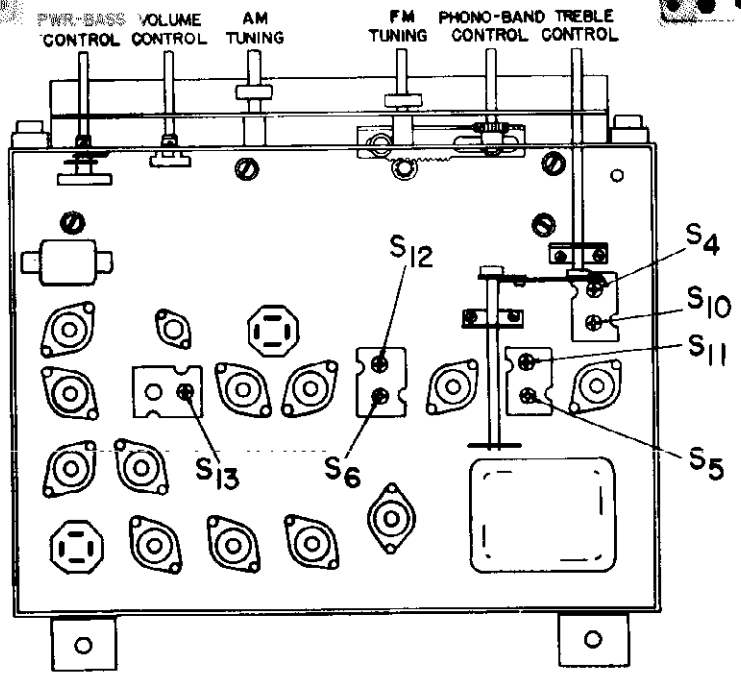

Fig. 7. Bottom view showing alignment points.

© John F. Rider

MODELS EC-403, EC-404, Rev.

Fig. 8. Bottom view of receiver showing component location.

© John F. Rider

MODELS EC-403, EC-404, Rev.

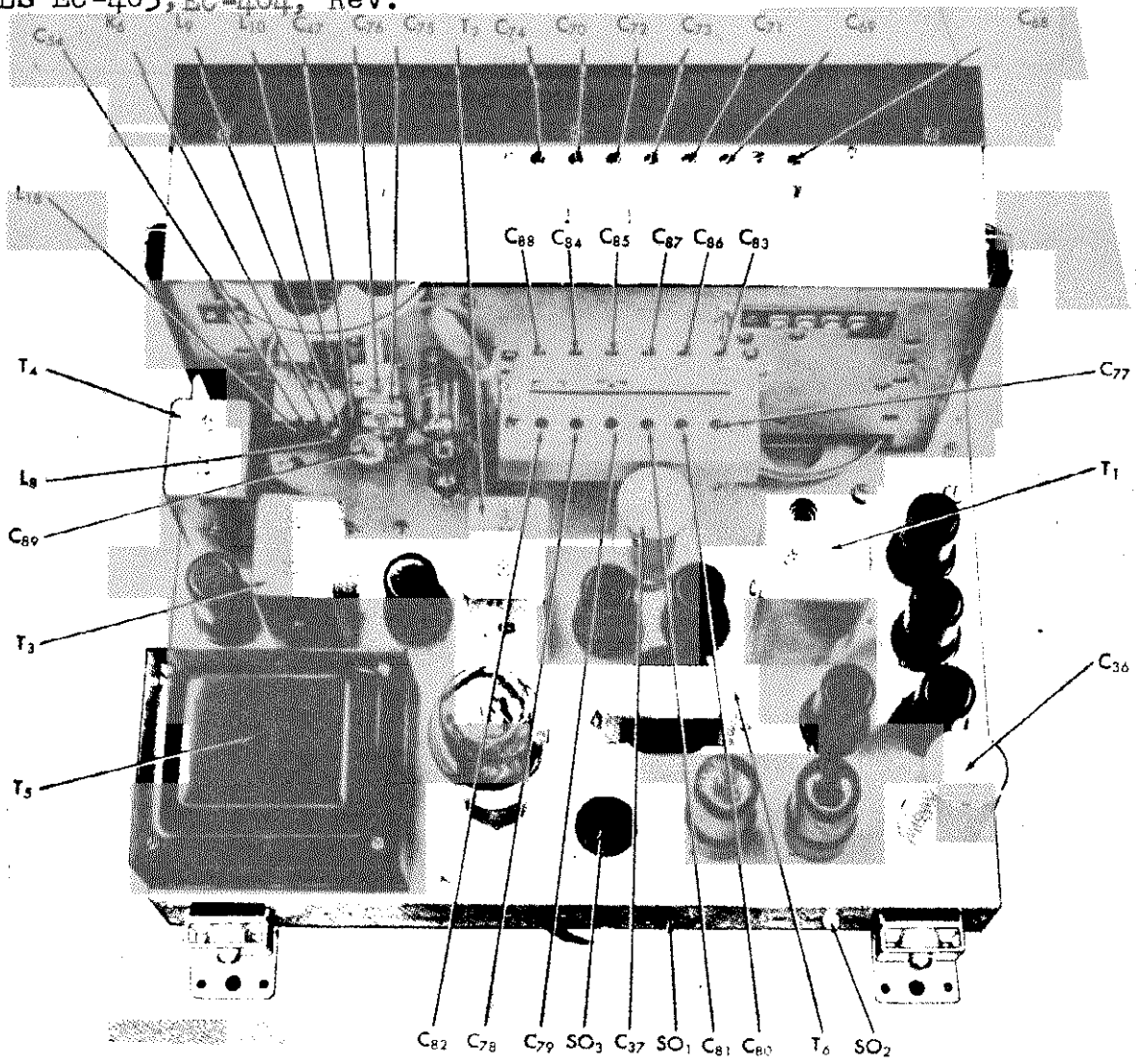

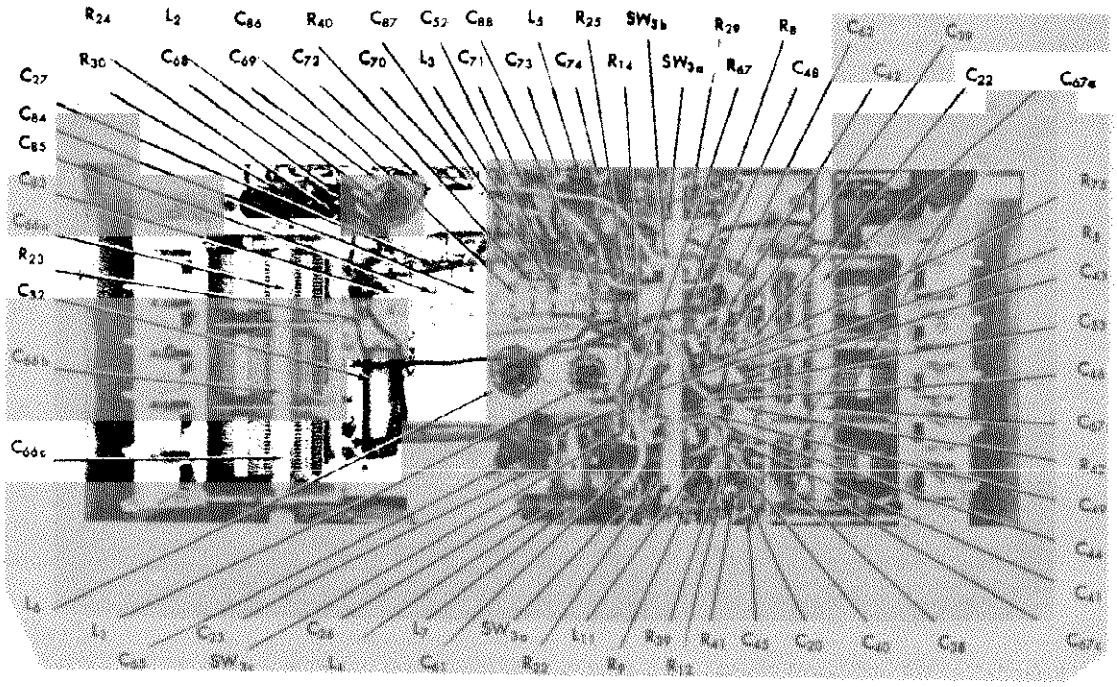

Fig. 10. Front view of R.F. chassis showing component location.

© John F. Rider

MODELS EC-403, EC-404, Rev.

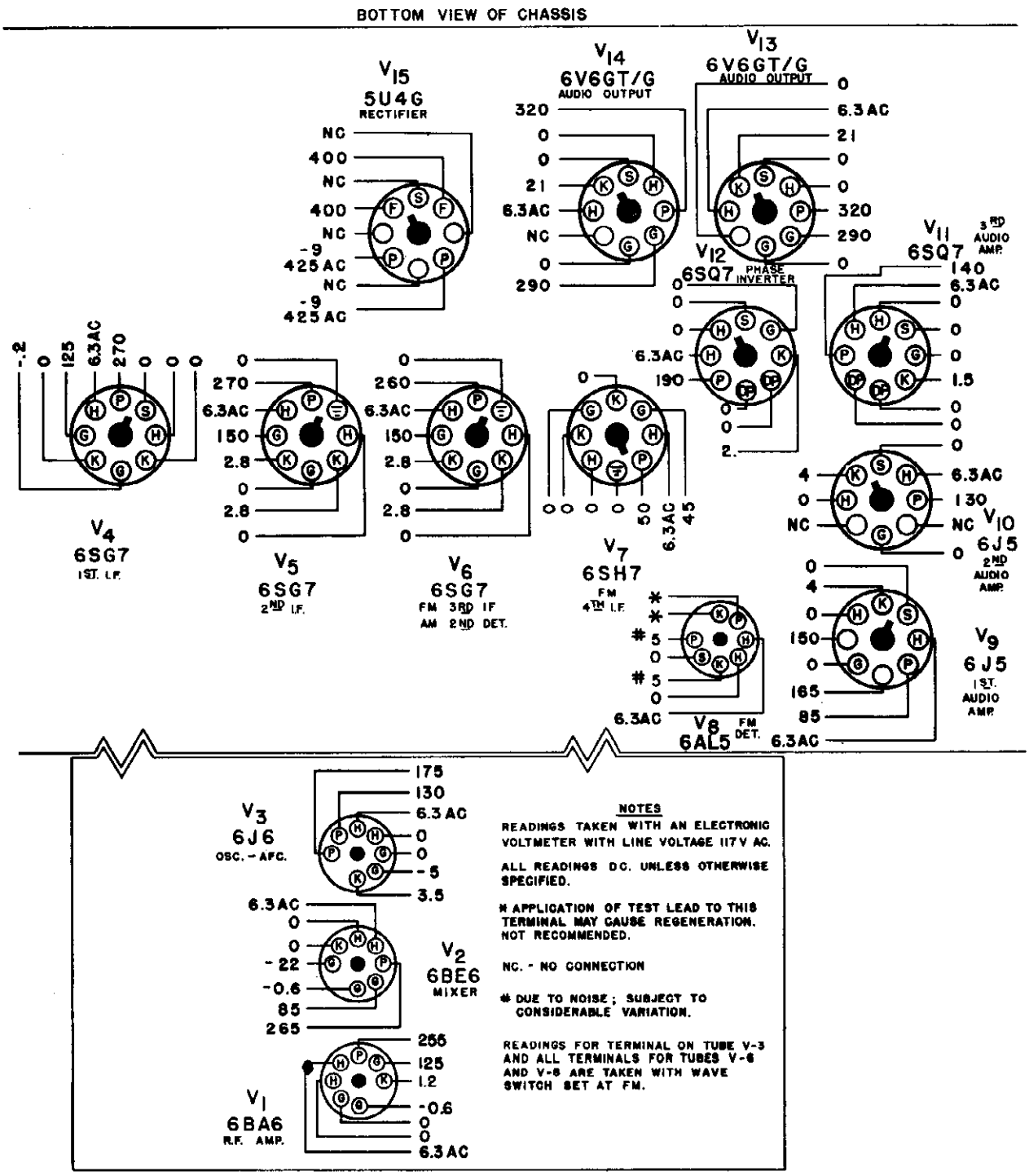

Fig. 11. Tube voltage chart.

©John F. Rider

MODELS EC-403,
EC-404, Rev.

SERVICE PARTS LIST

Ref. No.	Description	Hallicrafter's Part Number
	CONDENSERS	
C-1,4,5,6,8,12, 13,14,15,16,17, 18,20,21,22,23, 24,35,90	.01 mfd. 600 V., tubular	46AZ103F
C-3,26,27,28	.02 mfd. 600 V., tubular	46AY203F
C-11,31,32,50, 51,93	.05 mfd. 600 V., tubular	46AY503F
C-7,34	.003 mfd. 600 V., tubular	46AZ302J
C-25	.01 mfd. 600 V., molded	46AG103J
C-30	.1 mfd. 200 V., tubular	46AU104H
C-33	.005 mfd. 600 V., tubular	46AZ502J
C-36	60-20 mfd. 450 V., 20 mfd. 30 V., electrolytic	45B099
C-37	40-10 mfd. 450 V., 20 mfd. 30 V., electrolytic	45B100
C-38,39	500 mmf. 500 V., ceramic	47A147
C-40,42,43,44	1000 mmf. 500 V., ceramic	47A148
C-41	10,000 mmf. 150 V., ceramic	47B32103N1
C-45	10 mmf. 500 V., ceramic	47A149
C-46,47	47 mmf. 500 V., ceramic	47A150
C-48	1.5 mmf. ceramic	47A160-3
C-49	10 mmf. 500 V., mica	CM20A100K
C-52,64	100 mmf. 500 V., mica	CM20A101M
C-54	22 mmf. 500 V., mica	CM20A220K
C-55	22 mmf. 500 V., mica	CM20A220M
C-56,57,58	220 mmf. 500 V., mica	CM20A221M
C-60,61,62	47 mmf. 500 V., mica	CM20A470M
C-63	1000 mmf. 500 V., mica	CM30A102M
C-65	3900 mmf. 500 V., mica	CM35A392J
C-66	Tuning condenser, AM	48C176
C-67	Tuning condenser, FM	48C175
C-68	570 mmf. trimmer	44A189
C-69,70,71,72, 73,74	Trimmer assembly, antenna stage	44B190
C-75	Trimmer, FM, mixer stage	44A192
C-76	Trimmer, FM, antenna stage	44A194
C-77,78,79, 80,81,82	Trimmer assembly, oscillator stage	44B195
C-83,84,85, 86,87,88	Trimmer assembly, mixer stage	44B196
C-89	Trimmer, FM, oscillator stage	44A218
C-92	39 mmf. 500 V., ceramic	CC30SH390M
	RESISTORS	
R-1,2	330 ohms 5 watts WW	24A864
R-3	47 ohms 4 watts, carbon	RC65CE470M
R-4	2 megohms, volume control	25A571
R-5	10 ohms ½ watt, carbon	RC20AE100M
R-6,8	100 ohms ½ watt, carbon	RC20AE101M
R-9,12,13,14,77	1000 ohms ½ watt, carbon	RC20AE102M
R-15	10,000 ohms ½ watt, carbon	RC20AE103M
R-16	15,000 ohms ½ watt, carbon	RC20AE153M
R-17,19,20,21, 22,23,24	100,000 ohms ½ watt, carbon	RC20AE104M
R-26,27,28,29, 30,31,83	1 megohm ½ watt, carbon	RC20AE105M
R-32	150 ohms ½ watt, carbon	RC20AE151M
R-33,34	100,000 ohms ½ watt, carbon	RC20AE104K
R-35,36,37,38,39	220 ohms ½ watt, carbon	RC20AE221M
R-40	2200 ohms ½ watt, carbon	RC20AE222M
R-41,42	22,000 ohms ½ watt, carbon	RC20AE223M
R-43,44,52,64	220,000 ohms ½ watt, carbon	RC20AE224M
R-45,50,51	330,000 ohms ½ watt, carbon	RC20AE334M
R-46	680 ohms ½ watt, carbon	RC20AE681K
R-47,49	150,000 ohms ½ watt, carbon	RC20AE154M
R-48	3300 ohms ½ watt, carbon	RC20AE332M
R-53	3900 ohms ½ watt, carbon	RC20AE392K
R-54	8200 ohms ½ watt, carbon	RC20AE822K
R-55	470 ohms ½ watt, carbon	RC20AE471M
R-58,59	47,000 ohms ½ watt, carbon	RC20AE473M
R-60	68,000 ohms ½ watt, carbon	RC20AE683K
R-62,65	470,000 ohms ½ watt, carbon	RC20AE474M
R-63	390,000 ohms ½ watt, carbon	RC20AE394K
R-66	100,000 ohms 1 watt, carbon	RC30AE104M
R-67	33,000 ohms 1 watt, carbon	RC30AE333M
R-68,69,70	47,000 ohms 1 watt, carbon	RC30AE473M
R-71	22,000 ohms 1 watt, carbon	RC40AE223M
R-72,73,74	10,000 ohms 2 watts, carbon	RC40AE103M
R-75	33,000 ohms 2 watts, carbon	RC40AE333K
R-76	330 ohms 10 watts, WW	24BG331E
R-79	33,000 ohms ½ watt, carbon	RC20AE333M
R-80	68,000 ohms 1 watt, carbon	RC30AE683K
R-81	6.8 ohms 1 watt, carbon	RC30AE068K
R-82	4700 ohms ½ watt, carbon	RC20AE472M
R-84	68 ohms 2 watts, carbon	RC40AE680M
	TRANSFORMERS AND COILS	
T-1	Transformer, FM detector	50C208
T-2,3	Transformer, interstage IF	50C209
T-4	Transformer, 1st IF	50C210
T-5	Transformer, power	52C151
T-6	Transformer, audio output	55B086
L-1	Mixer coil, SW band	51B905
L-2	Antenna coil, BC band	51B906
L-3	Loading coil, loop	51B907
L-4	Oscillator coil, SW band	51B908
L-5	Antenna coil, SW band	51B909
L-6	Mixer coil, BC band	51B910
L-7	Oscillator coil, BC band	51B911
L-8	Oscillator coil, FM band	51B914
L-9	Mixer coil, FM band	51B915
L-10	Antenna coil, FM band	51B916
L-11	Plate choke, oscillator stage	53B008
L-12	Filament choke	53B009
L-13,14,15,16	RF choke	53A106
L-18	RF choke antenna stage	53A115
L-19	BC loop antenna	57C106
L-20	FM folded doublet	57C108-1
	SWITCHES	
SW-1	Power & bass tone switch assembly	60B265
SW-2	Treble switch assembly	60B264
SW-3	Band switch	60C266
SW-4	Muting switch	18A092
	PLUGS AND SOCKETS	
PL-1	Line cord and plug	87B1625
SO-1	Receptacle, phono motor	10A015
SO-2	Jack, phono pick-up	36A034
SO-3	Socket, speaker	6A277
	Socket, octal (tube)	6A190
	Socket, octal (6V6GT tubes)	6A296
	Socket, miniature (tube)	6B297
	Socket & bracket, dial light, L.H.	86A046
	Socket & bracket, dial light, R.H.	86A047
	Socket, cabinet pilot light	86B050-1
	TUBES, RECTIFIERS AND LAMPS	
V-1	Type 6BA6, R.F. amp.	90X6BA6
V-2	Type 6BE6, mixer stage.	90X6BE6
V-3	Type 6J6, oscillator AFC.	90X6J6
V-4,5,6	Type 6SG7, 1st, 2nd IF, 3rd FM IF, 2nd detector stage.	90X6SG7
V-7	Type 6SH7, 4th FM IF	90X6SH7
V-8	Type 6AL5, FM detector.	90X6AL5
V-9,10	Type 6J5, 1st and 2nd audio amp.	90X6J5
V-11,12	Type 6SQ7, 3rd audio amp. phase inverter	90X6SQ7
V-13,14	Type 6V6GT/G, audio output stage.	90X6V6GT/G
V-15	Type 5U4G, rectifier.	90X5U4G
LM-1,2	Lamp, dial, GE #44.	39A003
LM-3	Lamp, pilot, GE #47.	39A004
	MISCELLANEOUS	
TS-1	Terminal strip, antenna	88A277
TS-2	Terminal strip, loop	88A278
	Shield, tube base	69A169
	Shield, tube	69A104
	Spring, tube retainer	75A076
	Shield, FM coil section	69C172
	Shield, dial light	86A037
	Carriage, pointer	67B645
	Pointer, FM	82B139
	Pointer, AM	82B143
	Spring, pointer	75A132
	Push-button (brown)	17B028
	Insert, push-button, lucite	17A027
	Insert, push-button, metal	17A029
	Call letters	17A026
	Spring, dial, drive	75A006
	Cord, dial drive	38A017
	Escutcheon	7DO39
	Dial glass (control)	22B177
	Dial glass (calibrated)	22D192
	Knob (tuning and volume controls)	15B093
	Knob & pin ass'y (band switch and tone tone controls)	15A129
	Transmission line, loop	87A1615-1
	Jewel, pilot lamp	86A057
	Bracket, pilot lamp	67A765
	Speaker, PM (model 403)	85C045
	Speaker, PM (4 pin plug) (model 404)	85C043
	Speaker, PM (5 pin plug) (model 404)	85C047
	Record changer	115C002-3

©John F. Rider

MODEL S-51

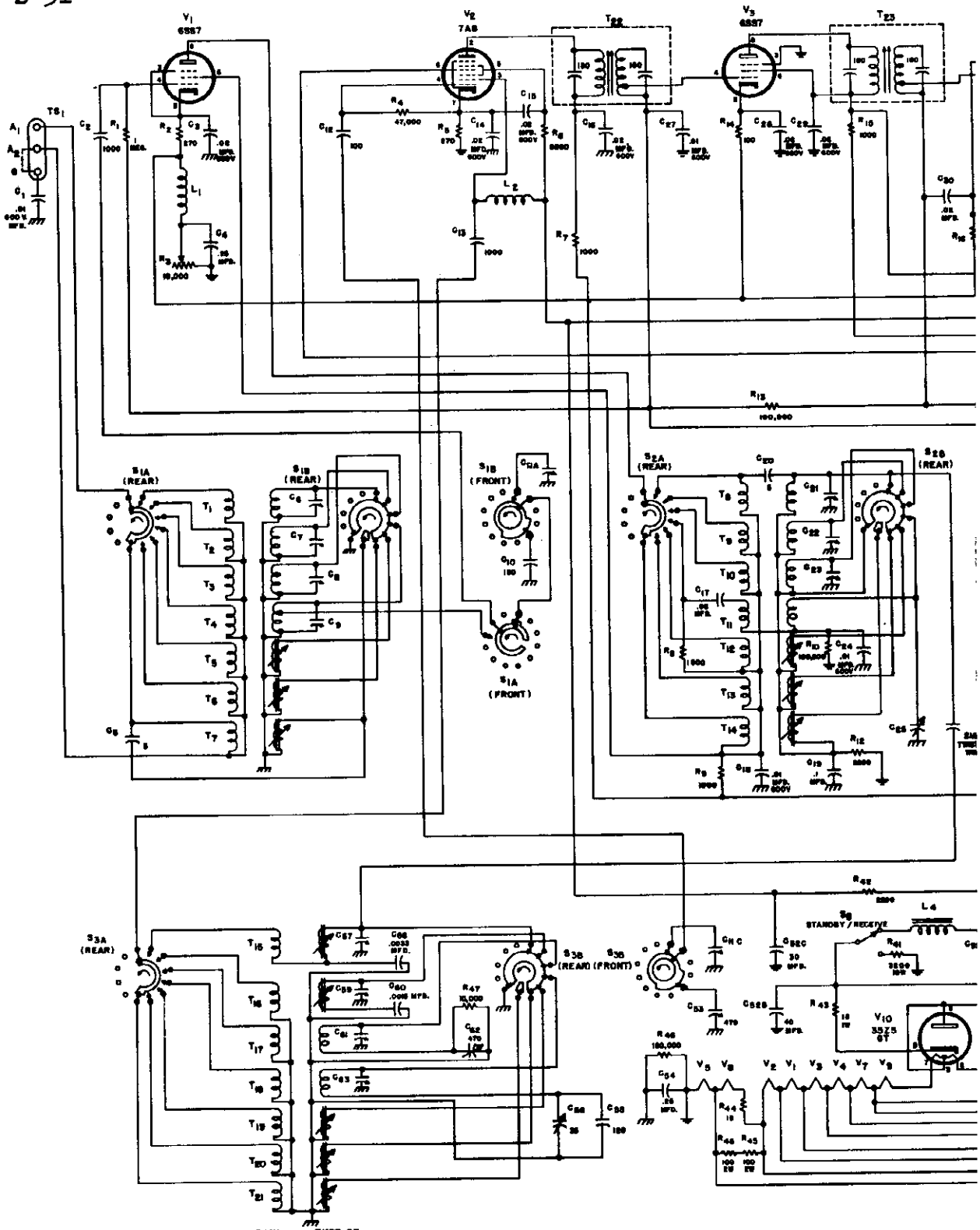

RANGE SWITCH POSITION	FREQUENCY RANGE	TYPE OF RECEPTION
A.	200 — 300 KC	FIXED FREQUENCY
B.	2.0 — 3.0 MC	" "
C.	2.0 — 3.0 MC	" "
1.	132 — 40.5 KC	GENERAL COVERAGE
2.	485 — 1530 KC	" "
3.	1450 — 4650	" "
4.	4.2 — 13.0 MC	" "

BAND SWITCH IN "A" BAND, EXTREME COUNTER CLOCKWISE POSITION.

NOTE:
RESISTOR VALUES ARE IN OHMS.
ALL RESISTORS ARE 1/2 W. UNLESS OTHERWISE SPECIFIED.
CAPACITOR VALUES ARE IN MMF. UNLESS OTHERWISE SPECIFIED.

CHASSIS GROUND.
CIRCUIT GROUND.

LAST CAPACITOR —— C64, C108, C204, C306.
LAST RESISTOR —— R46, R105, R204, R306.

©John F. Rider

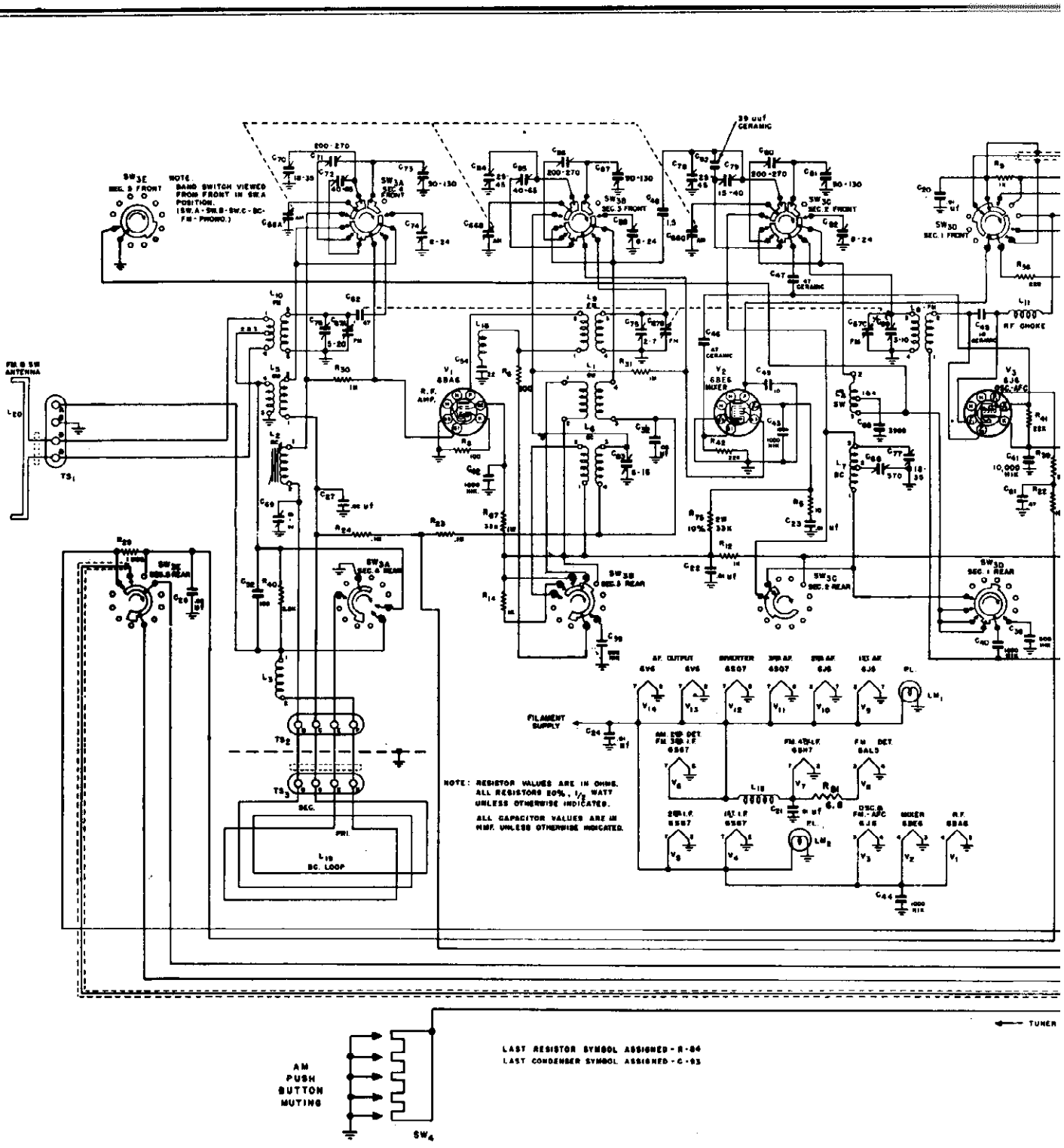
NOTE
BAND SWITCH VIEWED FROM FRONT IN SW.A POSITION
(SW.A - SW.B - SW.C - BC - FM - PHONO.)
NOTE: RESISTOR VALUES ARE IN OHMS. ALL RESISTORS 20%, 1/2 WATT UNLESS OTHERWISE INDICATED.
ALL CAPACITOR VALUES ARE IN MMF. UNLESS OTHERWISE INDICATED.
LAST RESISTOR SYMBOL ASSIGNED - R-84
LAST CONDENSER SYMBOL ASSIGNED - C-93
AM PUSH BUTTON MUTING
TUNER
FILAMENT SUPPLY
R.F. AMP.
MIXER
RF CHOKE
PRI.
SEC.
BC. LOOP

©John F. Rider

MODELS EC-403, EC-404, Rev.

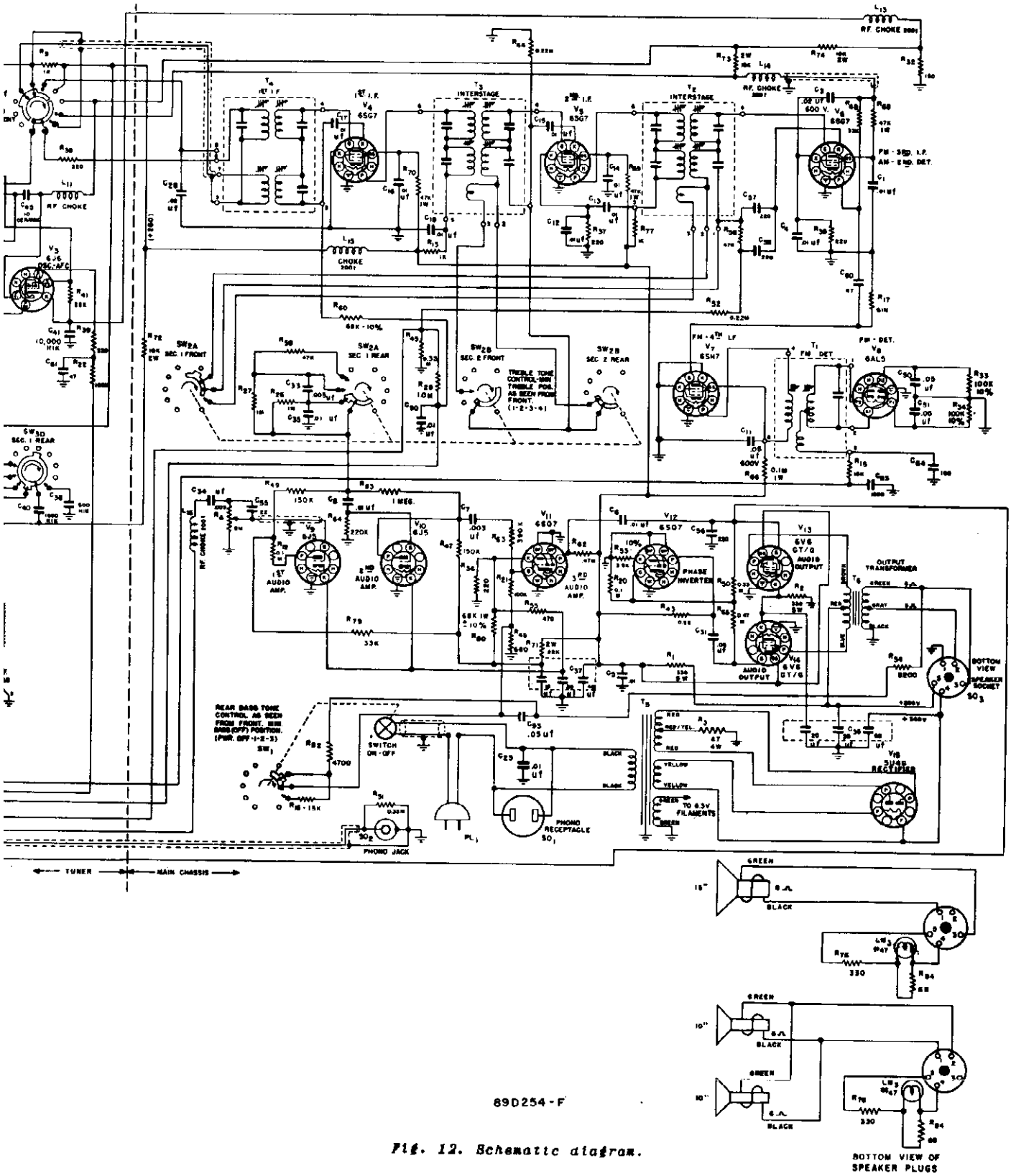

89D254-F

Fig. 12. Schematic diagram.

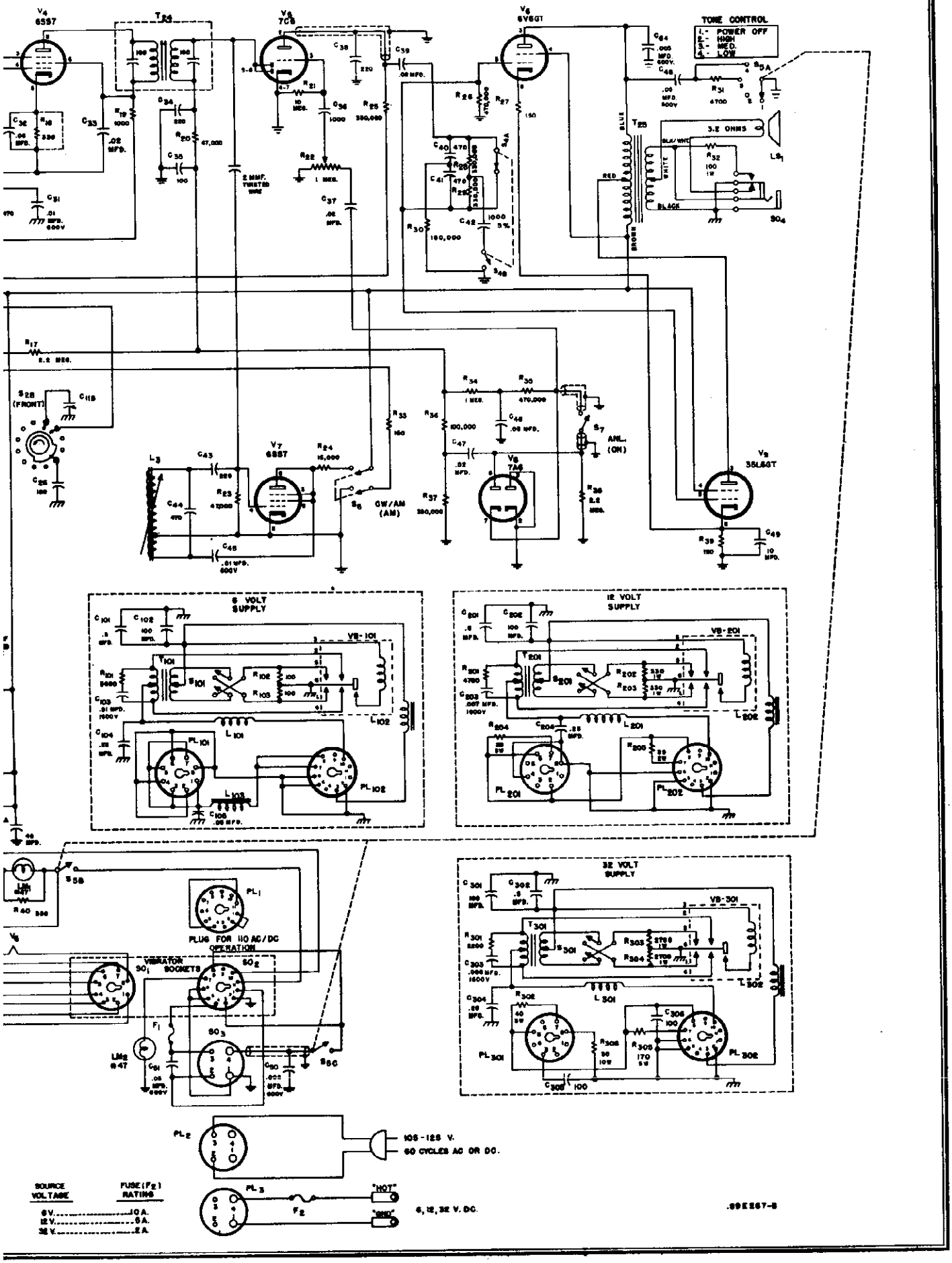
TONE CONTROL
1 - POWER OFF
2 - HIGH
3 - MED.
4 - LOW
6 VOLT SUPPLY
12 VOLT SUPPLY
32 VOLT SUPPLY
PLUG FOR 110 AC/DC OPERATION
VIBRATOR SOCKETS
105 - 125 V.
60 CYCLES AC OR DC.
"HOT"
"GND"
6, 12, 32 V. DC.
SOURCE VOLTAGE
FUSE (Fg) RATING
6V. ..... 10 A.
12V. ..... 5 A.
32V. ..... 2 A.
.99E267-8

GENERAL

Tubes . . . . . Nine plus rectifier
Speaker . . . . . 5-inch P.M.
Speaker V.C. Impedance. . . 3.2 ohms
Headset Output. . . . . Low Impedance
Antenna . . . . . Provision for external antenna
Tuning . . . . . Manual

Tuning Range

Range	Frequency	Reception
A	200 kc - 300 kc	Fixed Frequency
B	2.0 mc - 3.0 mc	" "
C	2.0 mc - 3.0 mc	" "
1	132 kc - 405 kc	General Coverage
2	485 kc - 1530 kc	" "
3	1450 kc - 4550 kc	" "
4	4.2 mc - 13.0 mc	" "

Intermediate Frequency. . .445 kc
Power Supply . . . . . 105-125 V. DC or 60 cycles AC. Provisions for 6 V., 12 V., 32 V. DC operation.
Power Consumption . . . .30 Watts

6 V., 12 V., AND 32 V. OPERATION

The Model S-51 Receiver may be operated from a 6 V., 12 V., or 32 V. source by inserting the correct power supply adapter unit. This adapter unit is plugged into the dual socket located on the top of the receiver chassis. Remove the jumper plug before inserting the low voltage adapter unit. One adapter unit is available for each of the above source voltages.

DC Source Voltage	Adapter Unit Part No.	Identification Stamp	Use Cable No.	Fuse Rating
6 Volts	1X629	6 VOLTS	87B1661	10 amperes
12 Volts	1X630	12 VOLTS	87B1661-1	5 amperes
32 Volts	1X631	32 VOLTS	87B1661-2	2 amperes

When operating the receiver with the adapter, the power cable normally used for 117 V. AC/DC operation is replaced with the power cable supplied with the adapter unit and plugged into the same receptacle on the receiver. Connect the fused power cable lead to the "hot" side of the DC source and the unfused lead to the ground or "cold" side of the supply. Disregard polarity of the DC supply as this is taken care of by a reversing switch located on the back side of the adapter unit.

RESTRINGING DIAL CORD

To restring the general coverage tuning dial cord, cut a 24-inch length of 30 lb. test dial cord and tie one end to the tension spring of the main tuning capacitor drive pulley at position "1" on the diagram. Follow the numbers "1" through "7" and at position "7" stretch the tension spring and tie the cord securely.

REPLACING LAMPS

Refer to Fig. 7. for location of the two dial lamps used in the receiver. Defective lamps may be replaced through the cabinet cover. Replace defective lamps with 6-8 V. Mazda #47 (Brown bead) lamps or equivalent.

REPLACING FUSES

A line fuse protects the receiver when operating from a 105-125 V. AC/DC source. This fuse is accessible at the rear apron of the receiver chassis. Replace defective fuses with type 3AG fuses with a one ampere rating.

Protective fuses for 6 V., 12 V., and 32 V. operation are located in the power cable. Refer to the paragraph on low voltage operation for fuse ratings. Replace defective fuses with the type 3AG body size.

CAUTION - Do not replace defective fuses with one of higher current rating than specified. Use the correct fuse and avoid costly repairs.

FIXED FREQUENCY CHANNEL ADJUSTMENTS

Adjustment of the fixed frequency channels for code and radio telephone reception in the 200 kc to 300 kc or 2000 kc to 3000 kc ranges is accomplished as described below. A total of three fixed frequency channels are available, one channel in the 200 kc to 300 kc range and two channels in the 2000 kc to 3000 kc range.

Set the band or range switch at "A" for a channel in the 200 kc to 300 kc band or either "B" or "C" for a channel in the 2000 kc to 3000 kc band.

Lift the hinged cabinet cover and with a small screwdriver, adjust the screws identified as "Ao", "Am", and "Aa" for the "A" band or "Bo", "Bm", and "Ba" for the "B" band, etc. Refer to Fig. 2. Make the adjustments in the order "O" "M" "A" (Oscillator, Mixer and Antenna),

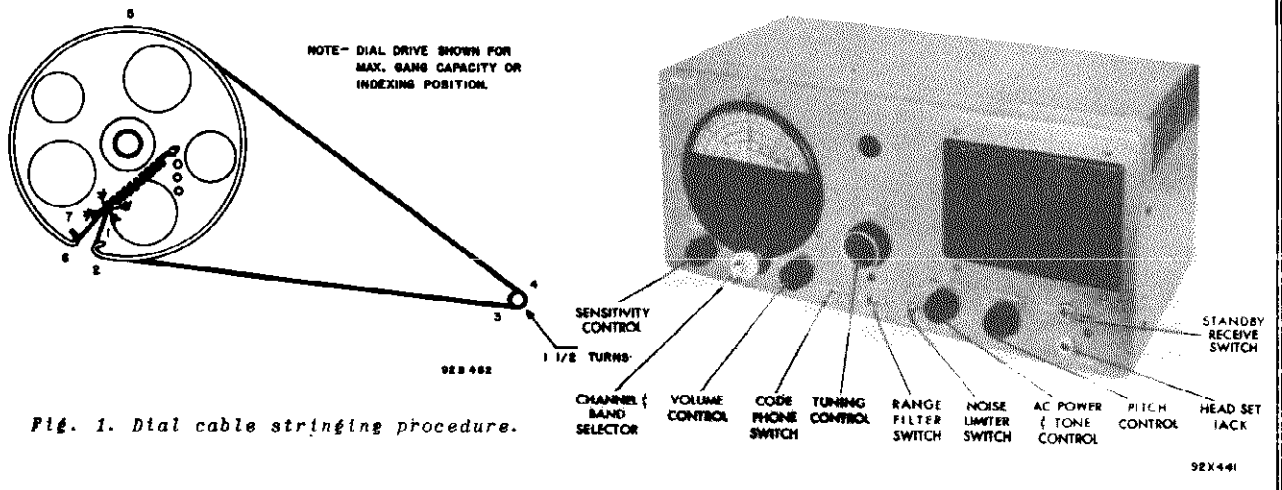

Fig. 1. Dial cable stringing procedure.

©John F. Rider

MODEL S-51

ALIGNMENT CHART

Step	Dummy Antenna	Signal Generator Coupling	Signal Generator Frequency	Band Switch Setting	Receiver Dial Setting	Adjust	Remarks
1	.1 mfd. If an isolation transformer is not used, change dummy ant. to .001 mfd. to reduce hum modulation	High side to stator plates in center section of tuning gang; low side to chassis.	445 kc	"2"	Tuning cap. fully open	S1,2,3, 4,5,6	Adjust for maximum audio output at speaker voice coil. Use just enough signal generator output to obtain a 50 mw audio level.
2	See step 1.	See step 1	445 kc (No modulation)	"2"	See step 1	S7	With the CW/AM switch set at CW remove the pitch control knob and adjust S-7 for zero beat. Replace the knob with the dot in the center position.
3	Std. RMA dummy	High side to "A1" on antenna strip; low side to chassis. Jumper connected between "A2" and "G"	350 kc	"1"	350 kc	*A,B,C	Maximum output as in step 1.
			150 kc		150 kc	*D	
4	Std. RMA dummy	See step 3	1400 kc	"2"	1400 kc	*E,F,G	Maximum output as in step 1.
			600 kc		600 kc	*H	
5	Std. RMA dummy	See step 3	4 mc	"3"	4 mc	*I,J,K	Maximum output as in step 1.
			1800 kc		1800 kc	*S8	
6	Std. RMA dummy	See step 3	12 mc	"4"	12 mc	*L,M,N	Maximum output as in step 1.
			5 mc		5 mc	*S9	

*Note - Calibration adjustments.

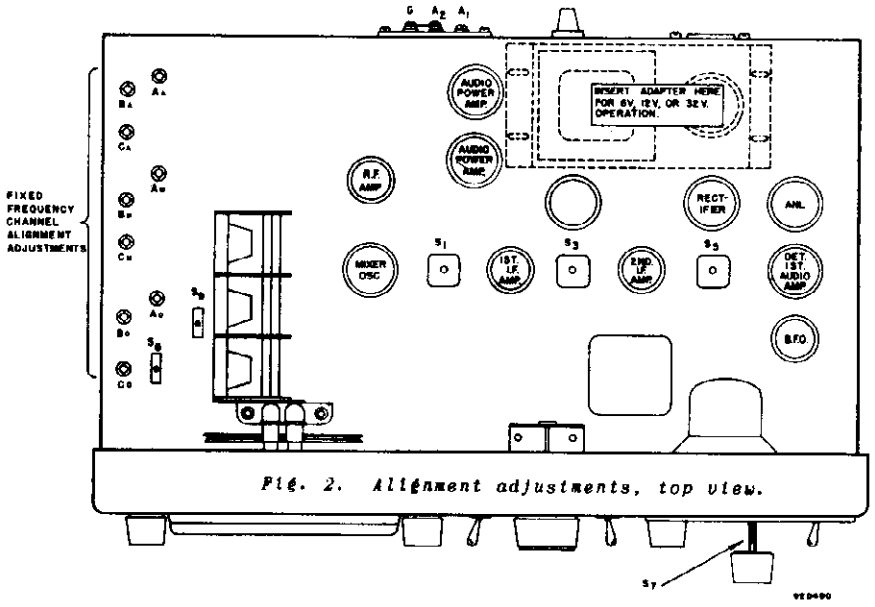

Fig. 2. Alignment adjustments, top view.

TONE — Set at HIGH
STANBY-RECEIVE — Set at RECEIVE

For the settings of the remaining controls, refer to the alignment chart.

It will be necessary to remove the receiver chassis from the cabinet to make some of the alignment adjustments. The chassis is held in the cabinet by three screws along both the bottom edge of the front panel and the rear of the cabinet, and two screws on either side of the front panel.

The standard RMA dummy mentioned in the alignment chart consists of a 200 mmf. condenser in series with a 20 uh r-f choke which is shunted by a 400 mmf condenser in series with a 400 ohm carbon resistor.

adjusting the oscillator screw ("O") as you would normally tune in a station and adjusting the "M" and "A" screws for maximum volume. When setting up a channel for code reception, set the PITCH CONTROL at mid position and tune the "O" adjustment for zero beat. The PITCH CONTROL may then be set for the desired pitch when copying code signals on the particular fixed frequency channel.

ALIGNMENT PROCEDURE

Set the following controls before alignment:

SENSITIVITY	Set at maximum
VOLUME	Set at maximum
CW/AM switch	Set at AM (see step 2)
RANGE FILTER	Set at OFF
NOISE LIMITER	Set at OFF

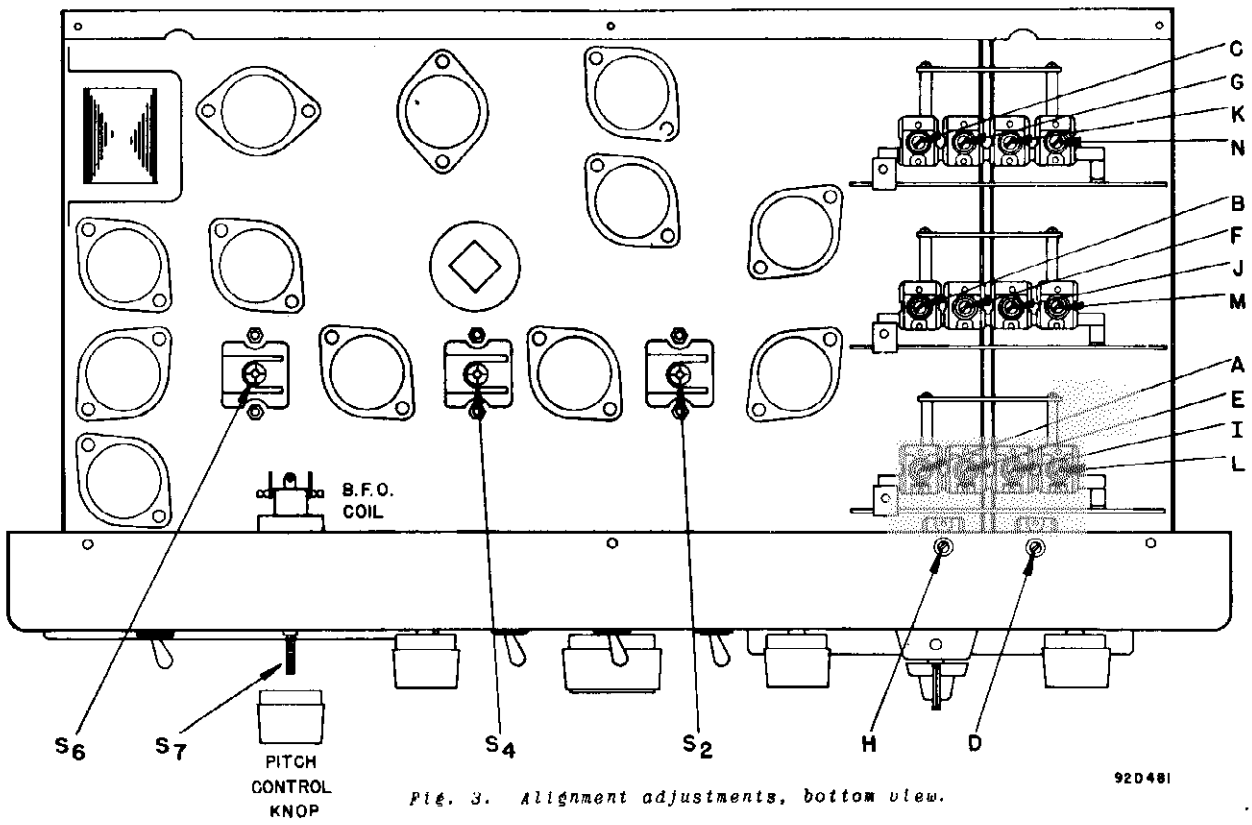

Fig. 3. Alignment adjustments, bottom view.

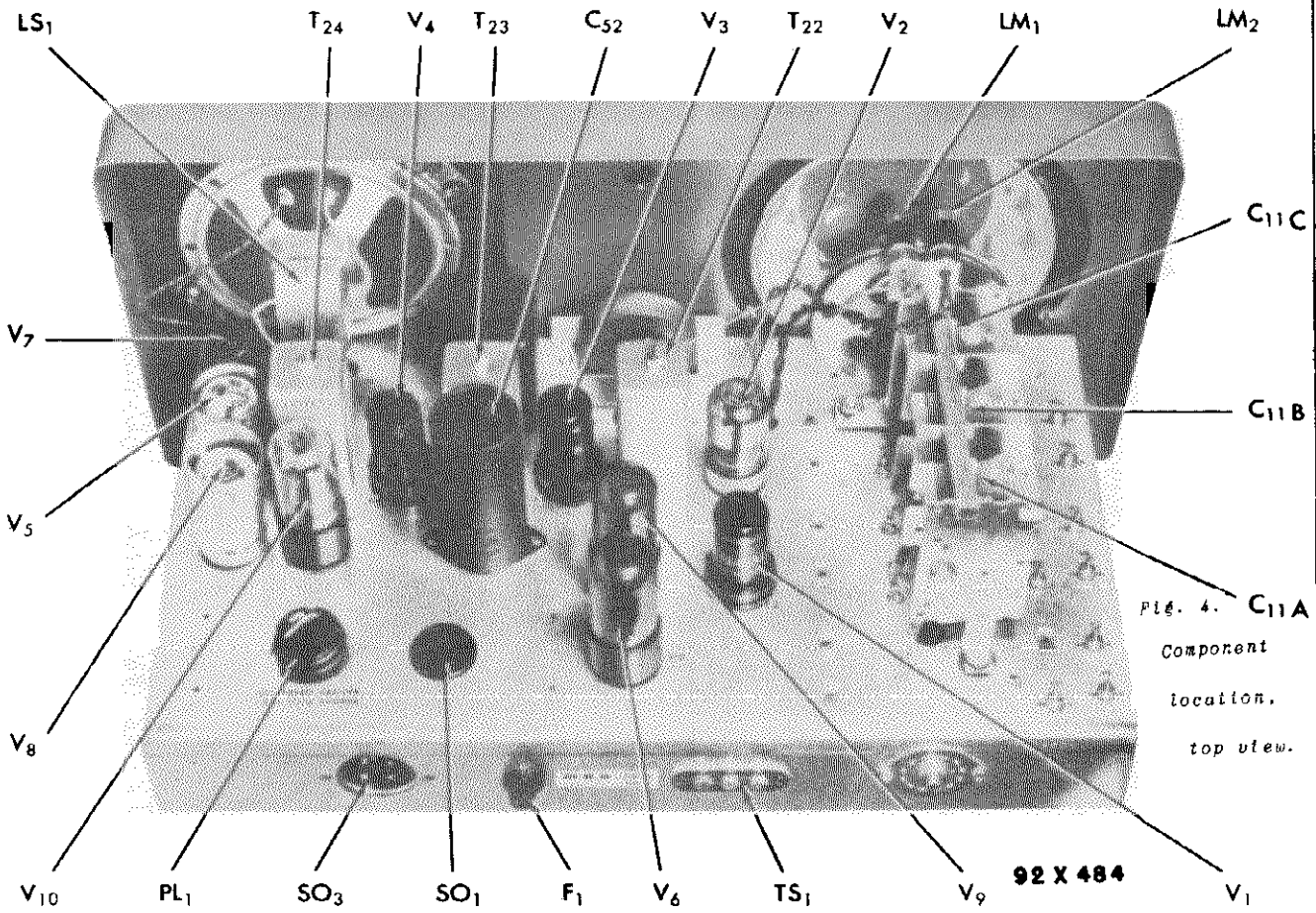

Fig. 4. Component location, top view.

© John F. Rider

MODEL S-51

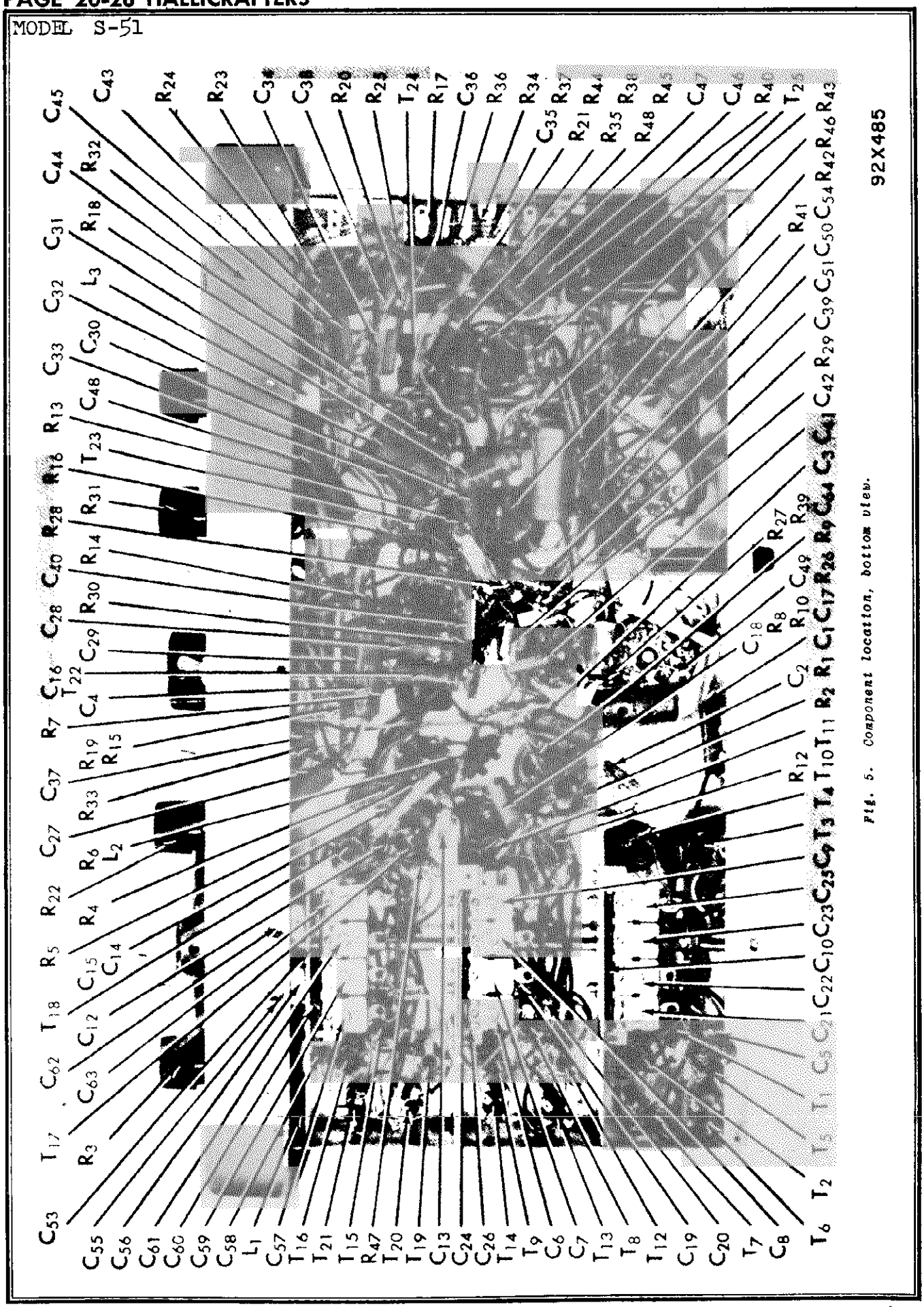

Fig. 5. Component location, bottom view.

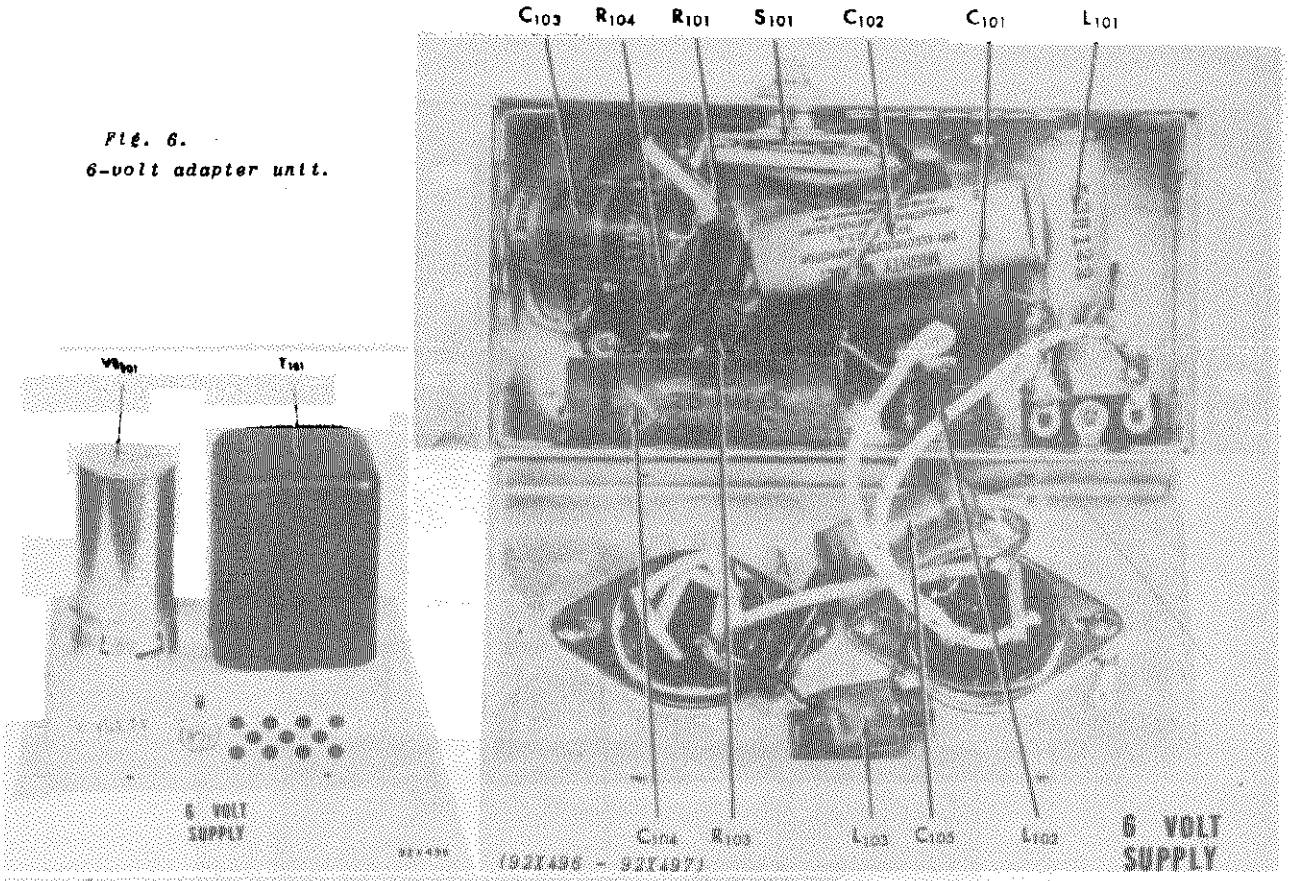

Fig. 6.
6-volt adapter unit.

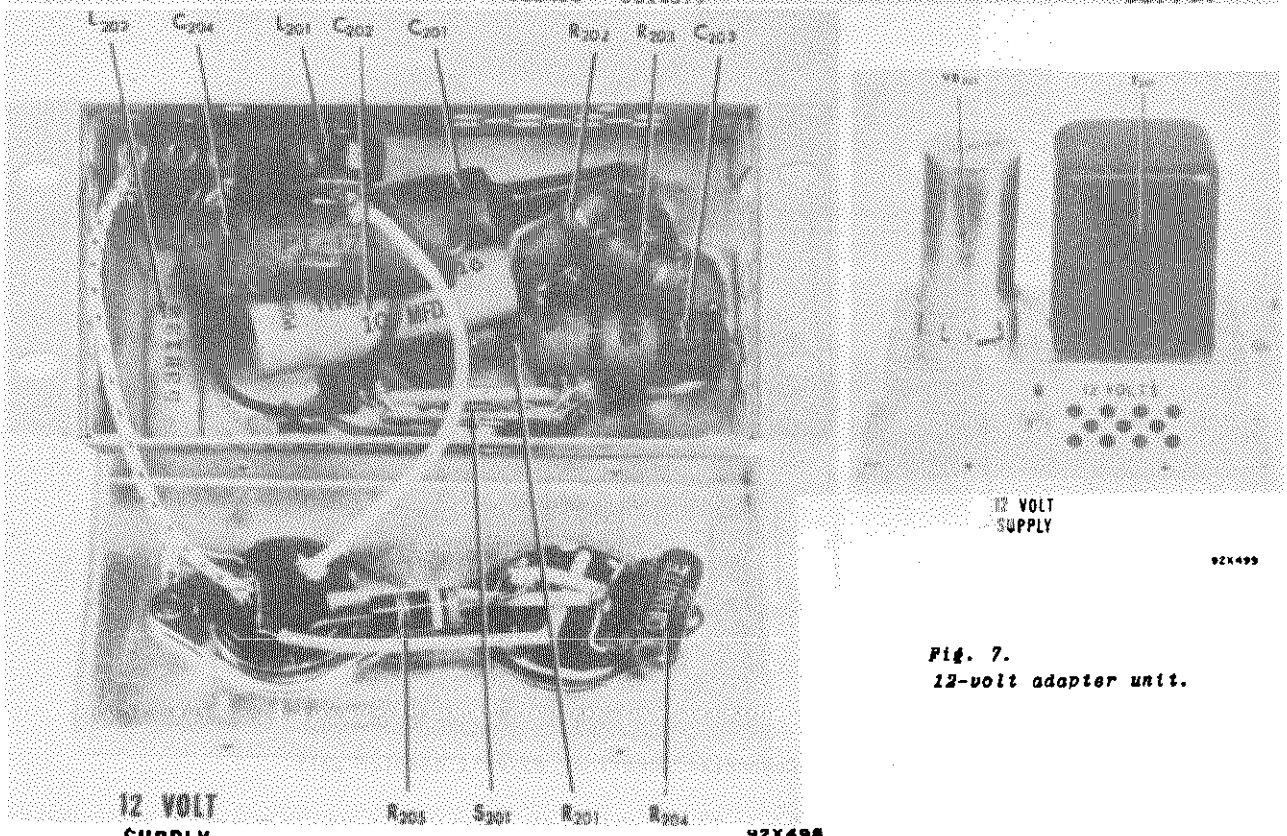

Fig. 7.
12-volt adapter unit.

© John F. Rider

MODEL S-51

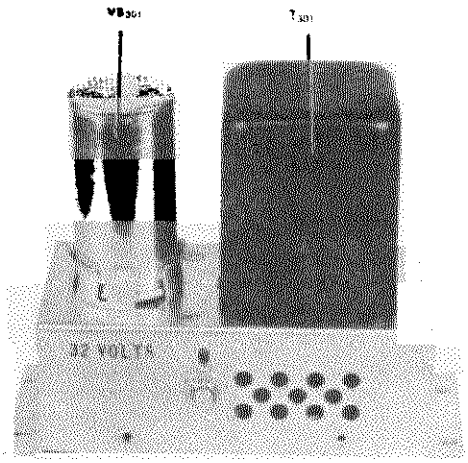

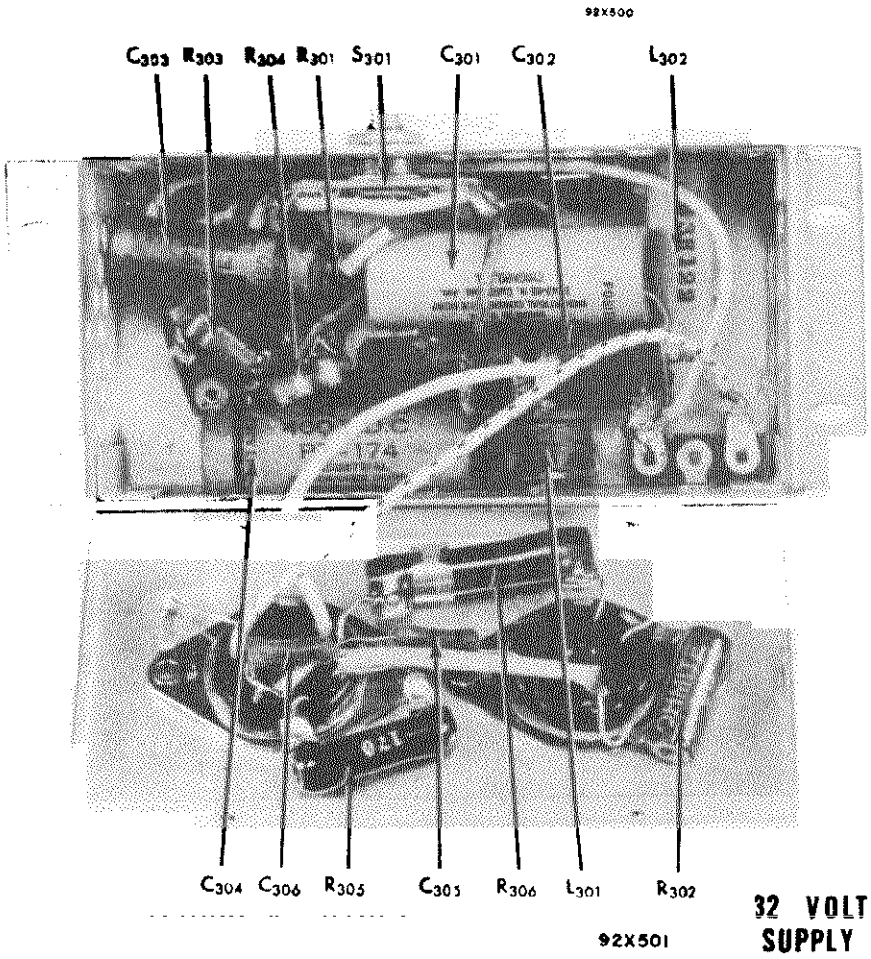

Fig. 8. Component location, 32-volt adapter unit.

©John F. Rider

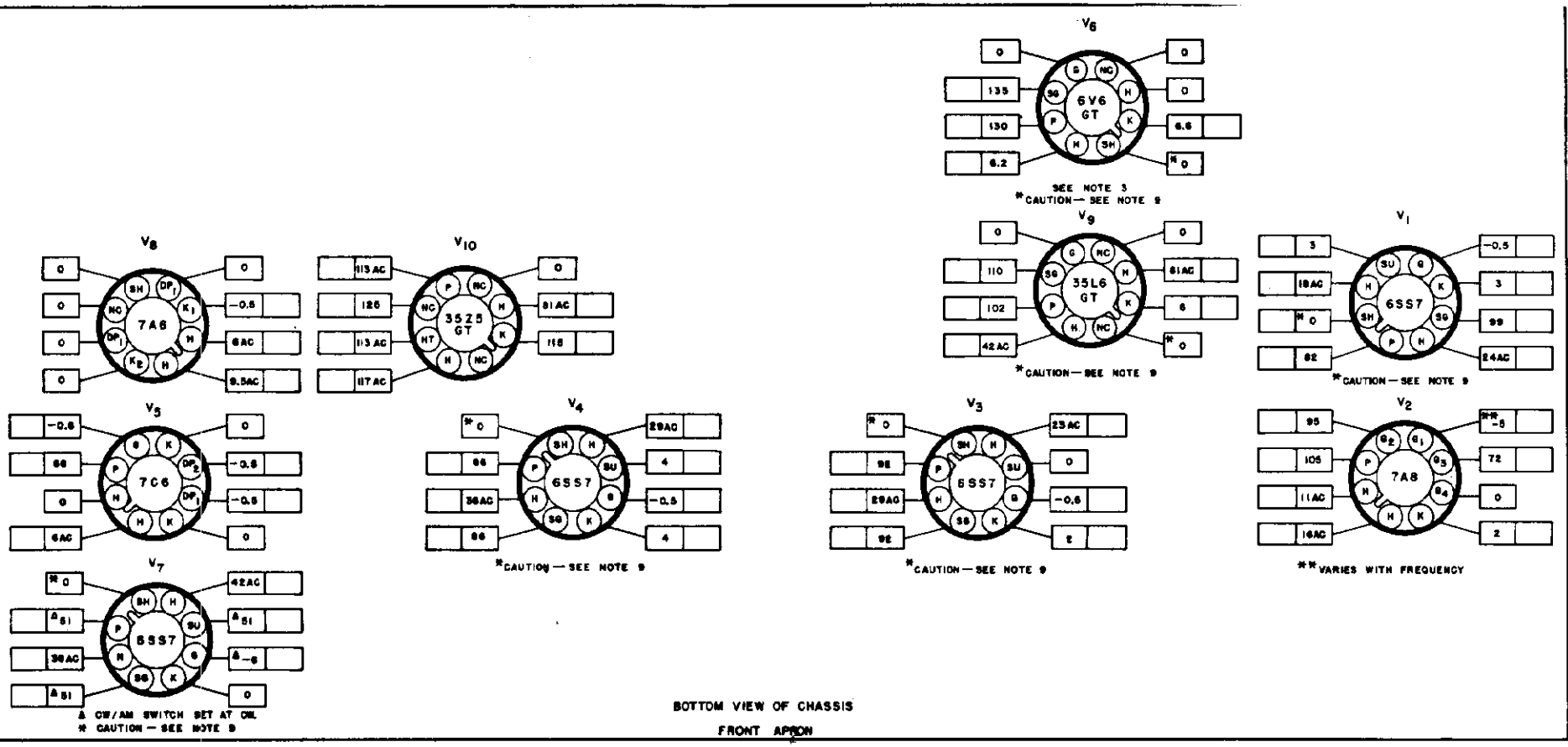

NOTES—

1. SOCKET VIEWS ARE BOTTOM VIEWS.
2. ALL VOLTAGES ARE MEASURED BETWEEN TUBE SOCKET TERMINALS AND THE ELECTRICAL GROUND BUSS (NOT CHASSIS) WITH ZERO SIGNAL INPUT.
3. LINE VOLTAGE — 117 V. AC (SOCKET VOLTAGE READINGS FOR TUBE V_8 TAKEN WITH A 6V. DC SOURCE AND VIBRAPACK). AC VOLTAGES SHOWN WILL BE DC WHEN OPERATING FROM A 117 V. DC SOURCE. HEATER VOLTAGES SHOWN ARE FOR 117 V. SOURCE ONLY. FOR HEATER ARRANGEMENTS FOR 6V., 12V. AND 32V. SOURCES SEE CIRCUIT DIAGRAMS IN THIS ILLUSTRATION.
4. ALL VOLTAGES SHOWN ARE DC UNLESS OTHERWISE SPECIFIED.
5. DC VOLTAGES SHOWN WERE MEASURED WITH AN ELECTRONIC VOLTMETER.
6. "NC" — NO CONNECTION. (VOLTAGE SHOWN FOR THIS TERMINAL ONLY WHEN TERMINAL IS USED AS A TIE LUG).
7. ☐ SPACE PROVIDED FOR SERVICE METER READINGS.
9. ALL READINGS TAKEN WITH PLUG POLARIZED SO THAT GROUND BUSS AND CHASSIS ARE AT SAME POTENTIAL WITH THE CHASSIS GROUNDED.
10. STANDBY / RECEIVE SWITCH SET AT RECEIVE; CW/AM SWITCH SET AT AM; NOISE LIMITER SWITCH SET AT OFF.

HEATER CIRCUIT FOR 6V. DC OPERATION

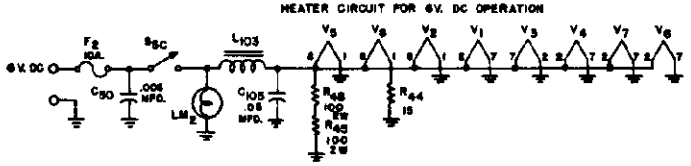

HEATER CIRCUIT FOR 12V. DC OPERATION

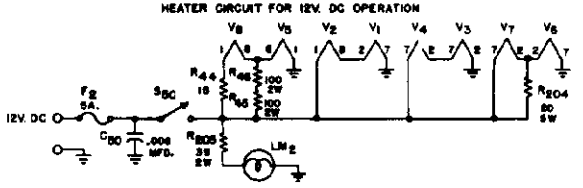

HEATER CIRCUIT FOR 32V. DC OPERATION

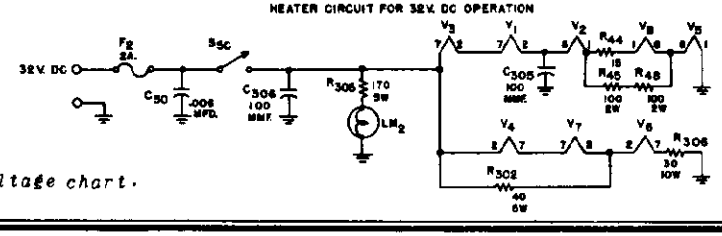

Fig. 9. Tube socket voltage chart.

920486

MODEL S-51

SERVICE PARTS LIST

CONDENSERS

Ref. No.	Description	Hallicrafters Part Number
C-1,18,24,27, 31,45	.01 mfd. 600 V., tubular paper	46AZ103J
C-2,13,36	1000 mmf. 500 V., mica	CM20A102M
C-17,30,33, 37,39,47	.02 mfd. 200 V., tubular paper	46AU203J
C-3,14,15, 16,28,29	.02 mfd. 600 V., tubular paper	46AZ203J
C-4	.25 mfd. 200 V., tubular paper	46AT254J
C-5,20	5 mmf. 500 V., ceramic	47B20050M5
C-6,7,8,9	Trimmer assembly, 4 section, antenna sta	44B228
C-10,26	150 mmf. 2% 500 V., silver mica	CM20C151G
C-11	Tuning condenser, 3 section	48C194
C-12,35	100 mmf. 500 V., mica	CM20A101M
C-19	.1 mfd. 200 V., tubular paper	46AU104J
C-21,22,23,25	Trimmer assembly, 4 section, mixer stag	44B227
C-32,46	.05 mfd. 200 V., tubular paper	46AU503J
C-34,38,43	220 mmf. 500 V., mica	CM20A221M
C-40,41,44	470 mmf. 500 V., mica	CM20A471J
C-42	1000 mmf. 5% 500 V., mica	CM20B102J
C-48,51	.05 mfd. 600 V., tubular paper	46AY503F
C-49	10 mfd. 25 V., electrolytic	45A121
C-50	.006 mfd. 600 V., tubular paper	46AZ602J
C-52	40-40-30 mfd. 450 V., electrolytic	44B120
C-53	470 mmf. 500 V., silver mica	CM20C471J
C-54,104,204, 304	.25 mfd. 400 V., tubular paper	46AW254J
C-55	120 mmf. 500 V., silver mica	CM20C121J
C-56	Trimmer, variable, oscillator section	44B230
C-57,59,61,63	Trimmer assembly, 4 section, oscillator se	44B352
C-58	.0033 mfd. 500 V., mica	CM30A332K
C-60	.0015 mfd. 500 V., mica	CM30A152J
C-62	Trimmer, variable, oscillator section	44B231
C-64	.003 mfd. 600 V., tubular paper	46AZ302J
C-101,201,302	.5 mfd. 120 V., tubular paper	46A139
C-102, 202	100 mfd. 25 V., electrolytic	45A116
C-103	.01 mfd. 1600 V., tubular paper	46A098-2
C-105	.05 mfd. 200 V., tubular paper	46A091
C-203	.007 mfd. 1600 V., tubular paper	46A098-4
C-301	100 mfd. 50 V., electrolytic	45A115
C-303	.006 mfd. 1600 V., tubular paper	46A055
C-305,306	100 mmf. 500 V., ceramic	47A045

RESISTORS

R-1,34	1 megohm ½ watt, carbon	RC20AE105M
R-2,5	270 ohms ½ watt, carbon	RC20AE271K
R-3	Resistor, variable, 10,000 ohms	25B582
R-4,20,23	47,000 ohms ½ watt, carbon	RC30AE473M
R-6	6800 ohms ½ watt, carbon	RC20AE682K
R-7,9,15,19	1000 ohms ½ watt, carbon	RC20AE102M
R-8	1500 ohms ½ watt, carbon	RC20AE152K
R-10,13,36	100,000 ohms ½ watt, carbon	RC20AE104M
R-12,42	2200 ohms ½ watt, carbon	RC20AE222M
R-14	100 ohms ½ watt, carbon	RC20AE101K
R-16	470 ohms ½ watt, carbon	RC20AE471K
R-17,38	2.2 megohms ½ watt, carbon	RC20AE225M
R-18,40	330 ohms ½ watt, carbon	RC20AE331M
R-21	10 megohms ½ watt, carbon	RC20AE106M
R-22	1 megohm, variable, VOLUME control	25B583
R-24	15,000 ohms ½ watt, carbon	RC20AE153K
R-25,37	330,000 ohms ½ watt, carbon	RC20AE334M
R-26,35	470,000 ohms ½ watt, carbon	RC20AE474M
R-27,33,39	150 ohms ½ watt, carbon	RC20AE151K
R-28,29	330,000 ohms ½ watt, carbon	RC20AE334J
R-30	160,000 ohms ½ watt, carbon	RC20AE164J
R-31	4700 ohms ½ watt, carbon	RC20AE472M
R-32	100 ohms 1 watt, carbon	RC30AE101M
R-41	3200 ohm 10 watts, wire wound	24BG322E
R-43	15 ohms 1 watt, carbon	RC30AE150M
R-44	15 ohms ½ watt, carbon	RC20AE150K
R-45,48	100 ohms 2 watts, carbon	RC40AE101M
R-46	150,000 ohms ½ watt, carbon	RC20AE154M
R-47	10,000 ohms ½ watt, carbon	RC20AE103M
R-101	5600 ohms ½ watt, carbon	RC20AE562K
R-102,103	100 ohms 1 watt, carbon	RC30AE101K
R-201	4700 ohms ½ watt, carbon	RC20AE472K
R-202,203	330 ohms 1 watt, carbon	RC30AE331K
R-204	20 ohms 5 watts, wire wound	24BF200E
R-205	39 ohms 2 watts, carbon	RC40AE390K
R-301	2200 ohms ½ watt, carbon	RC20AE222K
R-302	40 ohms 5 watts, wire wound	24BF400E
R-303,304	2700 ohms 1 watt, carbon	RC30AE272K
R-305	170 ohms 5 watts, wire wound	24BF171E
R-306	30 ohms 10 watts, wire wound	24BG300E

TRANSFORMERS AND COILS

T-1	Transformer, antenna stage, band 4.	51B1004
T-2	Transformer, antenna stage, band 3.	51B1005
T-3	Transformer, antenna stage, band 2.	51B1006
T-4	Transformer, antenna stage, band 1.	51B1007
T-5,6	Transformer, antenna stage, bands B & C.	51B1016
T-7	Transformer, antenna stage, band A.	51B1008
T-8	Transformer, mixer stage, band 4.	51B1000
T-9	Transformer, mixer stage, band 3.	51B1001
T-10	Transformer, mixer stage, band 2.	51B1002
T-11	Transformer, mixer stage, band 1.	51B1003
T-12,13	Transformer, mixer stage, bands B & C.	51B1017

TRANSFORMERS AND COILS (Cont.)

T-14	Transformer, mixer stage, band A.	51B1009
T-15	Transformer, oscillator stage, band 4.	51B996
T-16	Transformer, oscillator stage, band 3.	51B997
T-17	Transformer, oscillator stage, band 2.	51B998
T-18	Transformer, oscillator stage, band 1.	51B999
T-19,20	Transformer, oscillator stage, bands B & C.	51B1013
T-21	Transformer, oscillator stage, band A.	51B1010
T-22	Transformer, 1st I.F.	50C222
T-23	Transformer, 2nd I.F.	50C223
T-24	Transformer, diode detector	50C224
T-25	Transformer, audio output	55B106
T-101	Transformer, vibrator supply (6 volts)	52C158
T-201	Transformer, vibrator supply (12 volts)	52C159
T-301	Transformer, vibrator supply (32 volts)	52C160
L-1	R.F. choke	56B002
L-2	R.F. choke	53A121
L-3	Coil, B.F.O. stage	54B033-1
L-101,201,301	R. F. choke	53B005
L-102,202,302	R. F. choke, iron core	53A122
L-103	R. F. choke, iron core	53A100

SWITCHES

S-1	Band switch assembly, antenna section	60B314
S-2,3	Band switch assembly, mixer & osc. sections	60B313
S-4	Switch, toggle, 2 circuit	60A327-1
S-5	Switch, power and TONE	60B311
S-6	Switch, toggle, DPST, CW/AM	60A192
S-7	Switch, toggle, SPST, NOISE LIMITER	60A138-3
S-8	Switch, toggle, SPDT, STANDBY/RECEIVE	60A102-3
S-101,201,301	Switch, polarity (Part of vibrator power supply)	60B315

TUBES, RECTIFIERS AND LAMPS

V-1,3,4,7	Type, 6SS7, antenna, 1st I.F. amp., 2nd I.F. amp. and BFO stages	90X6SS7
V-2	Type, 7A8, mixer & osc.	90X7A8
V-5	Type, 7C6, detector & 1st audio amp.	90X7C6
V-6	Type, 6V6GT, audio power amp. (6,12,32 V. operations)	90X6V6GT
V-8	Type, 7A6, ANL	90X7A6
V-9	Type 35L6GT, audio power amp. (117 V. AC/DC opr.)	90X35L6GT
V-10	Type 35Z5GT, rectifier	90X35Z5GT
LM-1,2	Lamp 6-8 V., Mazda #47. (Brown bead)	39A004

PLUGS AND SOCKETS

SO-1	Socket, octal (Vibrator power supply receptacle and tube)	6A035
SO-2	Socket, 11 pin (Vibrator power supply receptacle)	6A290
SO-3	Receptacle, AC line cord	10A269
SO-4	Receptacle, head phones	36B004
	Socket, loktal (tube)	6A213
PL-1	Plug, 11 pin (Adapter for 115 V. AC/DC operation)	10A273
PL-101,201,301	Plug, octal (Part of vibrator power supply)	10A239
PL-102,202,302	Plug, 11 pin (Part of vibrator power supply)	10A271
	Receptacle, fuse	6A196
	Socket, dial light	86A059
	Socket, 6 prong, (Part of vibrator power supply)	6A282

©John F. Rider

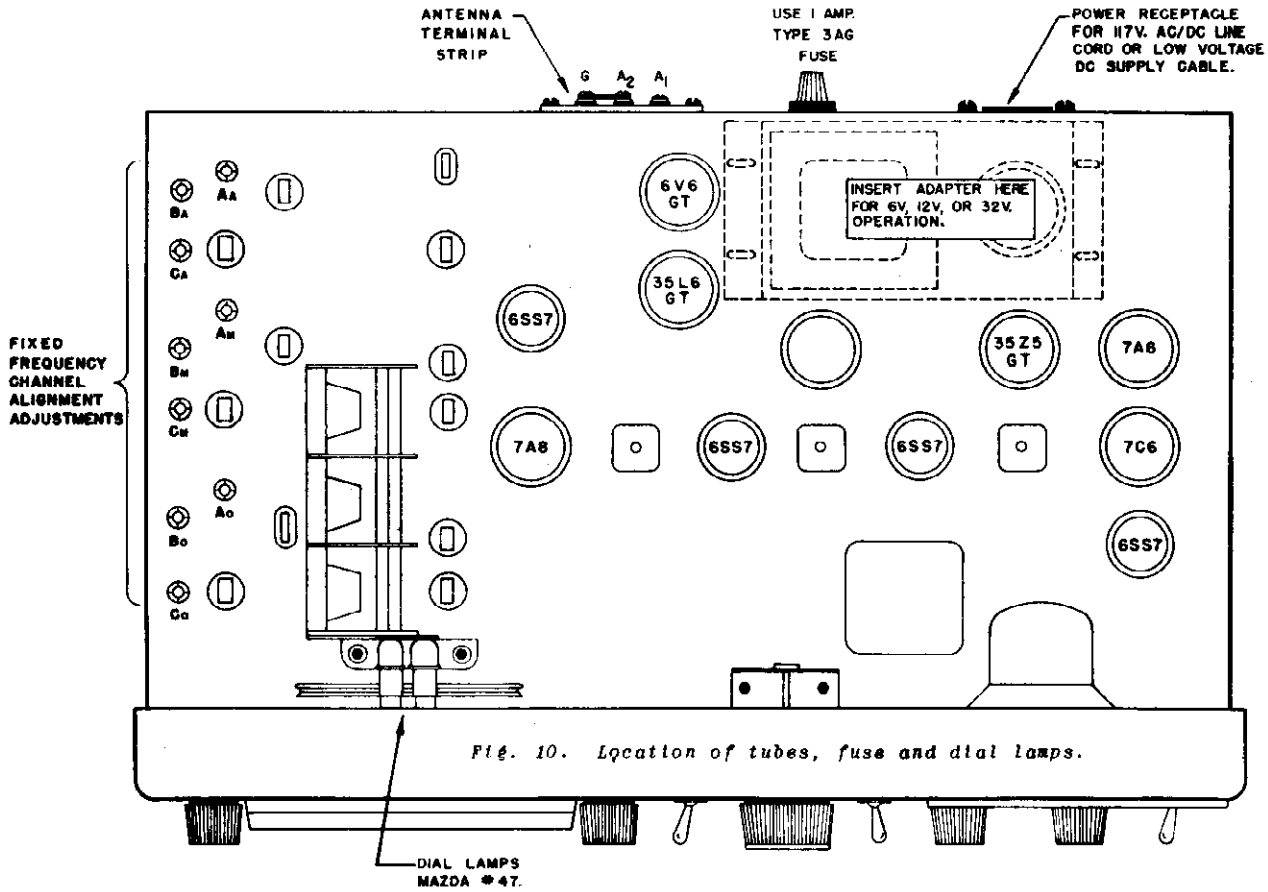

Fig. 10. Location of tubes, fuse and dial lamps.

SERVICE PARTS LIST (Cont.)

MISCELLANEOUS

TS-1	Terminal strip, antenna	88A032
	Plate, electrolytic cond. mtg.	8A749
	Clip, coil mtg.	76A326
	Shaft, bandswitch	74A239
	Shaft, tuning drive	74A242
	Flywheel, tuning drive	71A178
	Bracket, tuning drive shaft bearing	67A779
	Washer, spring (tuning drive shaft)	4A195
	"C" washer (tuning drive shaft)	4A269
	Cord, dial drive	38A019
	Spring, dial cord	75A012
	Shield, tube (V5, V8)	69B195
F-1	Fuse, 1 amp. type 3AG. (115 V. AC/DC operation)	39A306
F-2	Fuse, 10 amp. type 3AG (6V. operation)	39A309
F-2	Fuse, 5 amp. type 3AG (12 V. operation)	39A313
F-2	Fuse, 2 amp. type 3AG (32 V. operation)	39A307
	Dial scale	83C334
	Dial, escutcheon	7C033-1
	Gasket, dial escutcheon	12A040
	Window, glass	22A199
	Baffle, speaker	63C223
	Speaker assembly	85B050
	Grill, speaker	7C016-1
	Knob assembly, bandswitch	15B088-1
	Knob, TUNING	15A047
	Knob, SENSITIVITY, VOLUME	15B050
	Knob, TONE	15B049
	Knob, PITCH CONTROL	15A058
PL-2	Power cable, 117 V. AC/DC operation	87B1660
PL-3	Power cable, 6 V. operation	87B1661
PL-3	Power cable, 12 V. operation	87B1661-1
PL-3	Power cable, 32 V. operation	87B1661-2
VB-101	Vibrator unit, 6V. operation	27A143
VB-201	Vibrator unit, 12 V. operation	27A144
VB-301	Vibrator unit, 32 V. operation	27A145

©John F. Rider

MODEL S-72

GENERAL

Tubes	Eight plus selenium rectifier
Speaker	5-inch PM
Speaker V.C. Impedance	3.2 ohms (100 ohm headset tap)
Headset Output	For 500 to 5000-ohm phones
Antenna	Loop for band 1
	Whip for bands 2, 3 and 4
	Provisions for connection to an external antenna
Tuning	Manual

Tuning Range

Band Selector Position	Frequency Range
1.	550 kc - 1600 kc
2.	1500 kc - 4.4 mc
3.	4.5 mc - 11.5 mc
4.	11 mc - 30 mc

Intermediate Frequency	455 kc.
Power Supply	105-125 V. DC/60 cycles AC or Battery Pack
Power Consumption	25 Watts

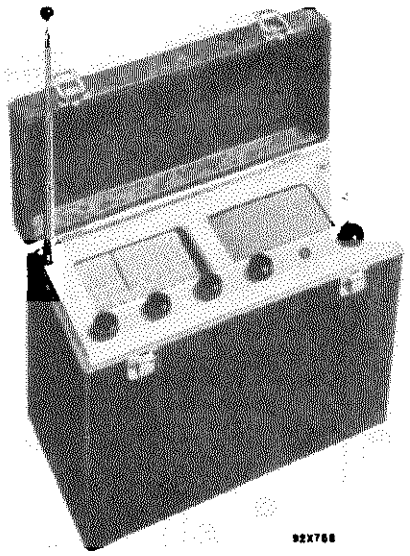

RESTRINGING DIAL CORD

GENERAL COVERAGE DIAL

To restring the general coverage tuning dial drive, cut a 32-inch length of 30 lb. test dial cord and tie one end to the tie-point "1" shown in Fig. 1. Follow the number sequence "1" through "12" and at position "12" stretch the tension spring and tie the cord securely. Note that the string is wrapped around the drive shaft three and a fraction times for proper traction. Close the gang capacitor and attach the pointer so that it is aligned with the index marks on the left side of the dial scales.

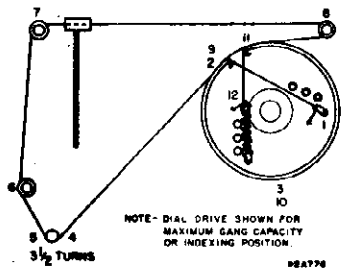

Figure 1. Dial cable stringing procedure, general coverage

BAND SPREAD DIAL

To restring the band spread tuning dial drive, cut a 24-inch length of 30 lb. test dial cord and tie one end to the tension spring in the band spread pulley at position "A" in Figure 2. Turn the pulley counter-clockwise to the stop and string up the drive following the lettered sequence "A" through "E" and at position "E" stretch the tension spring and tie the cord securely.

In cases where the set screw on the band spread pulley has been loosened, set the general coverage dial to the frequency of a signal generator or local short wave station and tune in the signal with the band spread drive shaft. Turn the pulley counter clockwise to the stop, tighten the set screw and attach the band spread pointer and index it at 100 on the band spread dial scale.

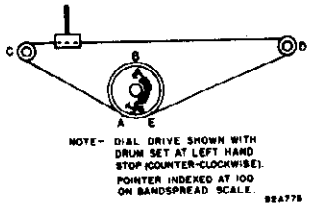

Figure 2. Dial cable stringing procedure, band spread

BATTERY REPLACEMENT

A strip of canvas webbing and a hold down screw are used to keep the battery in the cabinet. To replace the battery, disconnect the battery plug and loosen the hold down screw. Refer to Fig. 3.

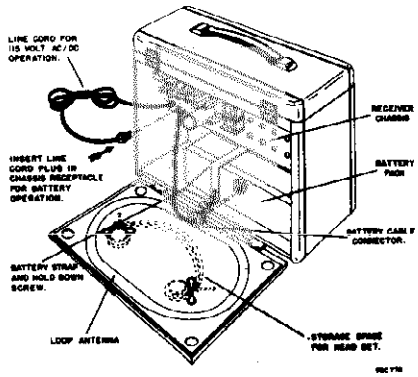

Figure 3. Battery compartment

© John F. Rider

Suitable replacement packs can be found from the list shown below.

REPLACEMENT BATTERY LIST

Manufacturer	Type No.	Manufacturer	Type No.
BRIGHT STAR	66-50	OLIN	0615 0614
BURGESS	G6M60 F6A60	RAY-O-VAC	AB878 AB994
DELCO	8760	RCA	VS018 VS019
EVERREADY	754 753	SEARS ROEBUCK	67E605
GENERAL	60BF65 60A6F65	USALITE	680
MONTGOMERY WARD	62A35M 62A33	WESTERN WIZARD	60B6F6/5 60A6F6/5
NATIONAL UNION	N808		

NOTE - Only one battery pack of the type listed above is required.

CAUTION - When the receiver is to operate on batteries it is necessary to insert the line cord plug in the chassis receptacle as shown in Fig. 3.

ALIGNMENT PROCEDURE

It will be necessary to remove the receiver chassis from the cabinet to make the I F. alignment adjustments. To do this, *first, remove all the knobs from* the control panel; next, unfasten the ANL switch and phone jack from the front panel; then, unsolder the antenna connections, two for the loop antenna and one for the whip antenna; last, remove the two screws fastened to the cabinet through the angle brackets mounted on the chassis and lift out of the case.

The primaries of the I.F. transformers are adjusted from the bottom of the chassis and the secondaries are adjusted from the top of the chassis.

Before starting the alignment procedure, check the position of the general coverage dial pointer at the low frequency end of the range. The pointer should index at the maximum capacity of the tuning capacitor.

Set the following controls before alignment.

VOLUME . . . . . Set at maximum

VOICE/CODE . . . . . Set at maximum VOICE

ANL. . . . . Set at OFF

BAND SPREAD . . . . Set at 0

ALIGNMENT CHART

Step	Dummy Antenna	Signal Generator Coupling	Signal Generator Frequency	Band Switch Setting	Receiver Dial Setting	Adjust	Remarks
1.	None	*Stator plates* in center section of tuning gang	455 kc	"1"	1000 kc	A,B,C,D	Maximum audio output at speaker voice coil. Use just enough signal generator output to obtain a 50 mw signal level.
2.	None	See step 1.	455 kc (No mod.)	"1"	1000 kc	E	With the VOICE/CODE switch set at CODE, adjust E for a 1000 cycle note.
3.	Just before r-f amplifier alignment, run band spread pointer to zero to check operation of the band spread compression trimmer. If the trimmer is fully tight before the pointer reaches zero, loosen the set screw on the drum dial and turn the drive shaft clockwise until the trimmer is fully compressed. Now back off the trimmer one and one-half turns and turn the pulley counter-clockwise until the pointer indicates 100. Now tighten the set screw on the shaft. This check permits the compression trimmer to work over its operating range without binding. Before proceeding to the next step, set the band spread dial at 0						
4.	10 mmf from ext. antenna lead to chassis.	Couple the generator to the ext. ant. lead thru a 15 mmf capacitor	30 mc	"4"	30 mc	F,G,H	*Maximum output as in step 1.*
5.	See step 4.	See step 4.	11.5 mc	"3"	11.5 mc	I,J,K	Maximum output as in step 1.
6.	See step 4.	See step 4.	4.4 mc	"2"	4.4 mc	L,M,N	Maximum output as in step 1.
*7.	See step 4.	See step 4.	1500 kc	"1"	1500 kc	O,P,Q	Maximum output as in step 1.

*NOTE - Loop must be reconnected for this step.

©John F. Rider

MODEL S-72

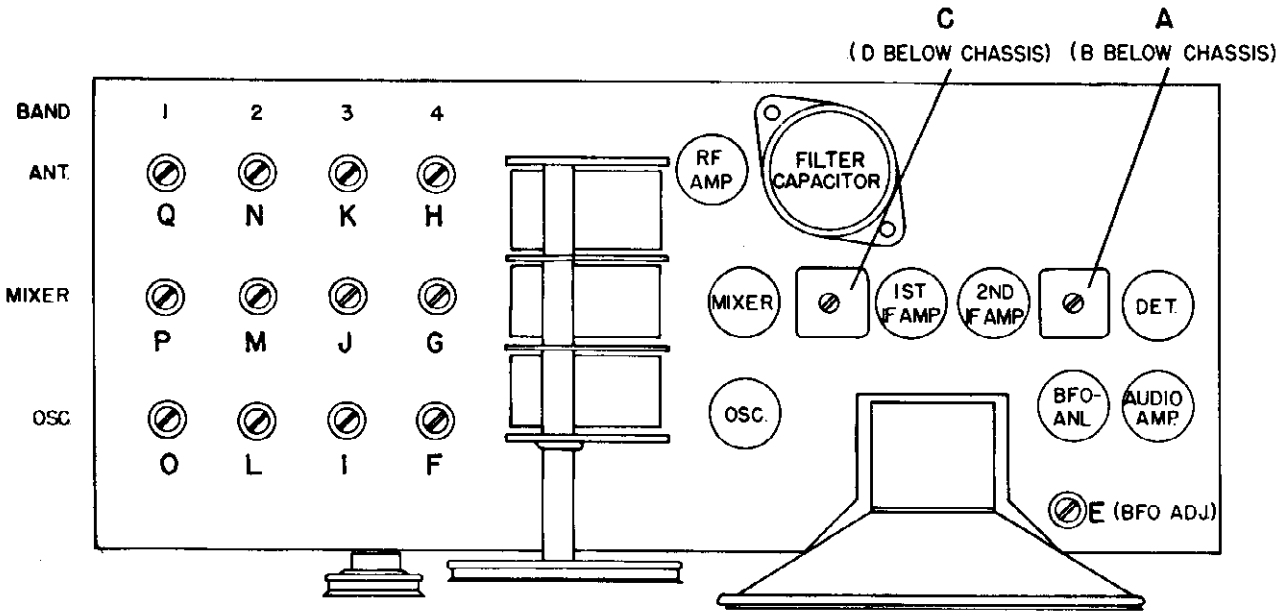

Figure 4. Alignment points

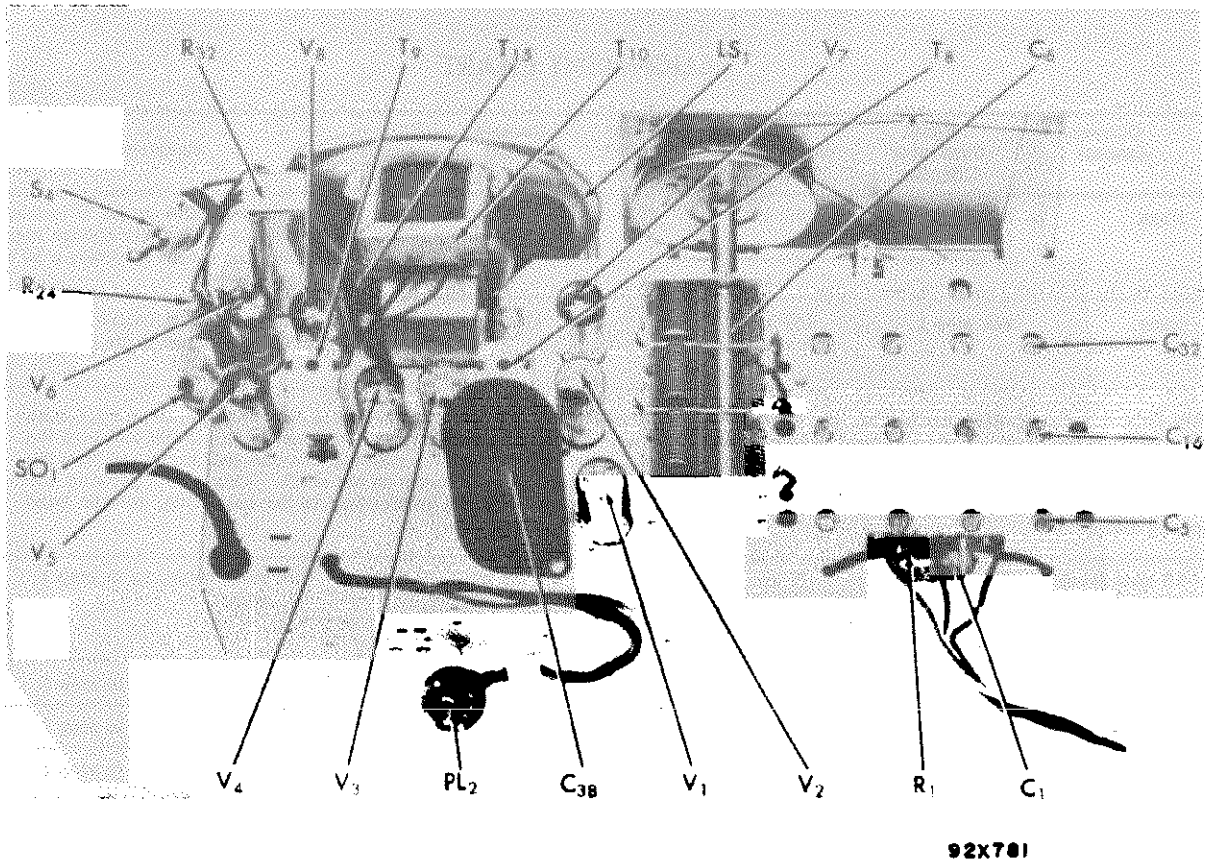

Figure 5. Top view, component location

©John F. Rider

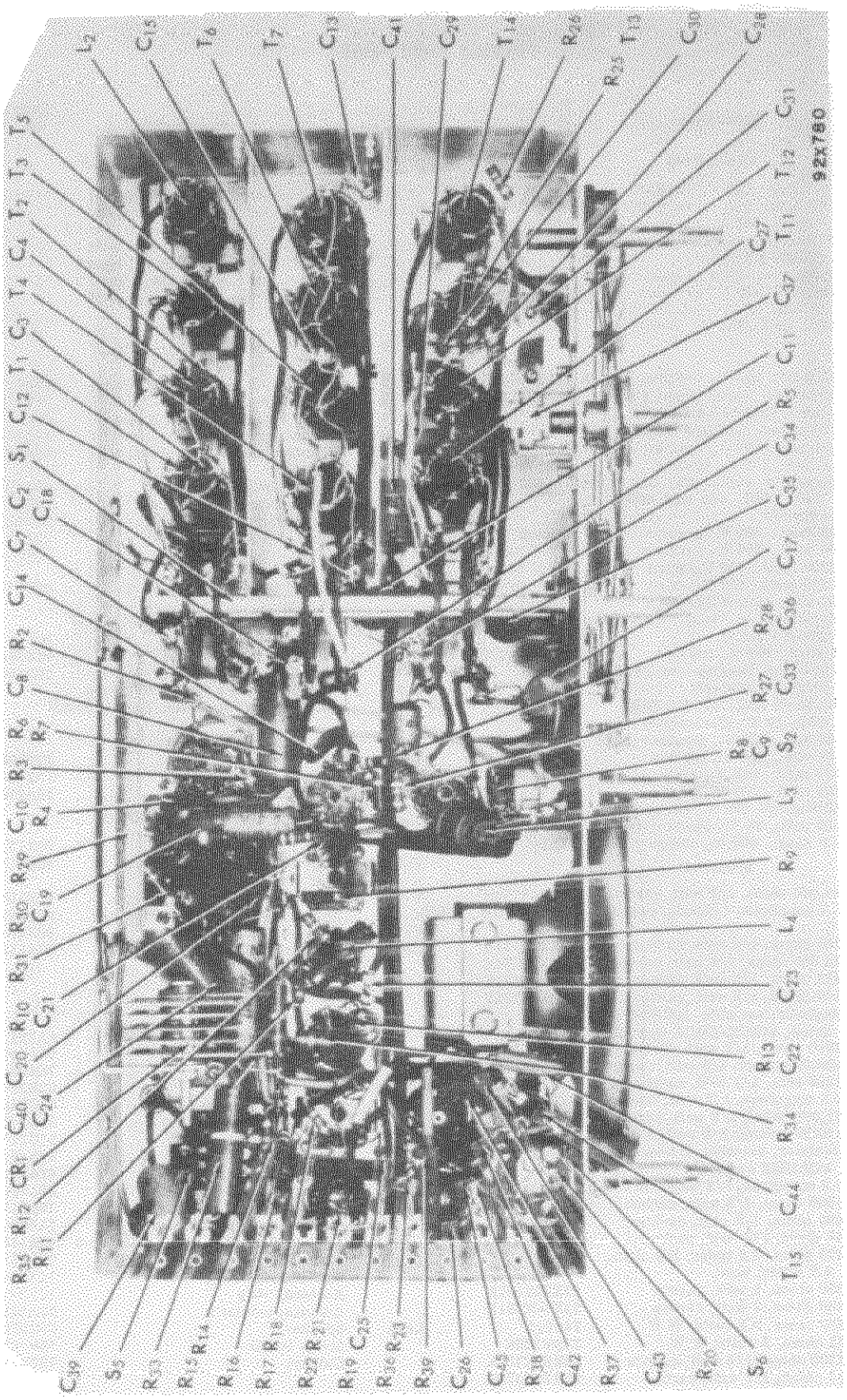
L5
C15
T4
L2
C3
C4
C5
L1
R20
R21
T10
C9
C8
T5
T3
T2
C2
T1
C1
T4
C4
C7
C14
R2
C6
R3
R4
R7
C10
R5
R19
C16
R1
C18
R18
R17
C19
C20
C21
C24
R12
R11
C39
5B1
R27
R28
R16
R15
R14
R13
R26
R25
R24
R23
R22
C38
C37
R36
R35
R34
R33
R32
C36
C35
R31
R30
C34
C33
C32
C31
C30
C29
C28
C27
C26
C25
C23
C22
R10
R9
R8
C17
C12
C13
R29
C40
C41
C42
C43
C44
T13
T12
T11
T9
T8
T7
T6
C11
C10
R37
R38
R39
R40
R41
R42
R43
R44
R45
R46
R47
R48
R49
R50
R51
R52
R53
R54
R55
R56
R57
R58
R59
R60
R61
R62
R63
R64
R65
R66
R67
R68
R69
R70
R71
R72
R73
R74
R75
R76

MODEL S-72

SERVICE PARTS LIST

Ref. No.	Description	Hallicrafter's Part Number
	CAPACITORS	
C-1,33,42	.003 mfd., 600 V., tubular	46AZ302J
C-2,13,23,34	100 mmf., 500 V., ceramic	47B20101K5
C-3,4,15	15 mmf., 500 V., ceramic	47B20150K5
C-5	Trimmer, ant. assy., 4 sections (Bands 1,2,3,4)	44B374-1
C-6	Tuning capacitor, 3 section	48C221
C-7,18	68 mmf., 500 V., ceramic	47B20680K5
C-8	.05 mfd., 200 V., tubular	46AU503J
C-9,10,11,14, 20,21,22, 35	5000 mmf., 500 V., ceramic	47A168
C-12	47 mmf., 500 V., ceramic	47B20470K5
C-16	Trimmer, mixer assy., 4 sections, (Bands 1,2,3,4)	44B374-2
C-17	Capacitor, resonant (455KC)	46A150
C-19	.01 mfd., 600 V., tubular	46AY103J
C-24	.1 mfd., 200 V., tubular	46AU104J
C-25	Capacitor, composite; .002, .005, .0001, .005 mfd, 500 V., ceramic	47A203
C-27	22 mmf., 500 V., ceramic	47B20220K5
C-28	50 mmf., 500 V., ceramic	47B20500K5
C-29	3900 mmf., 500 V., mica	47X35A392J
C-30	1400 mmf., 500 V., mica	47X30A142J
C-31	Padder, adjustable, (Band 1)	44A376
C-32	Trimmer, osc. assy., 4 sections (Band 1,2,3,4)	44B374
C-36	7 mmf., 500 V., ceramic	47X20UK070K
C-37	Capacitor, band spread, (with shaft and bracket)	44B375
C-38	60-20-20 mfd., 150 V., 1000 mfd., 10 V., electrolytic	45B155
C-39	.02 mfd., 600 V., moulded paper	46BR203L6
C-40	.02 mfd., 200 V., tubular	46AU203J
C-41,44	470 mmf., 500 V., mica	47X20A471K
C-43	100 mmf., 500 V., mica	47X20A101M
C-45,26	1000 mmf., 500 V., ceramic	47B20102K5
C-46	100 mfd., 25 V., electrolytic	45A116
C-47	5.6 mmf., 500 V., composition	47A160-7
	RESISTORS	
R-1	10,000 ohms, 1/2 watt, carbon	23X20X103K
R-2,6,10,13, 14,15	4.7 megohms, 1/2 watt, carbon	23X20X475M
R-3	150 ohms, 1/2 watt, carbon	23X20X151K
R-4,37	22,000 ohms, 1/2 watt, carbon	23X20X223K
R-5,19	470 ohms, 1/2 watt, carbon	23X20X471K
R-7,24	100 ohms, 1/2 watt, carbon	23X20X101K
R-8	Resistor, variable, 500,000 ohms, VOICE/CODE control	25B847
R-9	2200 ohms, 1/2 watt, carbon	23X20X222K
R-11	100,000 ohms, 1/2 watt, carbon	23X20X104K
R-12	6800 ohm, 1/2 watt, carbon	23X20X682K
R-16,23,39	2.2 megohms, 1/2 watt, carbon	23X20X225M
R-17,27,38	47,000 ohms, 1/2 watt, carbon	23X20X473K
R-18,22	470,000 ohms, 1/2 watt, carbon	23X20X474K
R-20	Resistor, variable, 2 megohm, VOLUME control	25B839
R-21	3.3 megohms, 1/2 watt, carbon	23X20X335M
R-25	1000 ohms, 1/2 watt, carbon	23X20X102K
R-26	680 ohms, 1/2 watt, carbon	23X20X681K
R-28	47 ohms, 1/2 watt, carbon	23X20X470K
R-29	270 ohms, 2.3 watts; 350 ohms, 5.5 watts; W.W.	24A912
R-30,34	560 ohms, 1 watt, carbon	23X30X561K
R-31	680 ohms, 1 watt, carbon	23X30X681K
R-32	600 ohms, 9.3 watts, W.W.	24A913
R-33	22 ohms, 2 watts, W.W.	24BV220E
R-35	1200 ohms, 1/2 watt, carbon	23X20X122K
R-36	33 ohms, 1/2 watt, carbon	23X20X330K

Ref. No.	Description	Hallicrafter's Part Number
	TRANSFORMERS AND COILS	
T-1	Transformer, antenna stage, band 4	51B1139
T-2	Transformer, antenna stage, band 3	51B1138
T-3	Transformer, antenna stage, band 2	51B1137
T-4	Transformer, mixer stage, band 4	51B1143
T-5	Transformer, mixer stage, band 3	51B1142
T-6	Transformer, mixer stage, band 2	51B1141
T-7	Transformer, mixer stage, band 1	51B1140
T-8	Transformer, 1st I.F.	50C233
T-9	Transformer, 2nd I.F.	50C234
T-10	Transformer, audio output (part of speaker assy. LS-1)	
T-11	Transformer, osc. stage, band 4	51B1147
T-12	Transformer, osc stage, band 3	51B1146
T-13	Transformer, osc. stage, band 2	51B1145
T-14	Transformer, osc. stage, band 1	51B1144
T-15	Transformer, B.F.O. (with mtg. clip)	50B402
L-1	Loop antenna	57C125
L-2	Coil, antenna loading (band 1)	51B1136
L-3	Choke, R.F.	53A008
L-4	Choke, filament	53A121
	SWITCHES	
S-1	Switch, band (6 section assy. complete)	60C362
S-2	Switch, VOICE/CODE, (Part of r-f gain control, R-8)	
S-3	Switch, TONE	60A361
S-4	Switch, ANL, (S.P.S.T.)	60A365
S-6	Switch, ON-OFF (D.P.S.T. power switch, part of volume control R-20)	
	PLUGS AND SOCKETS	
PL-1	Line cord	87B1683
PL-2	Battery plug, 6 prong	10A344
SO-1	Jack, phone	36A036
	TUBES AND RECTIFIERS	
V-1	Type 1T4, r-f amplifier	90X1T4
V-2,3,4	Type 1U4, mixer, 1st and 2nd i-f amplifier	90X1U4
V-5,8	Type 1U5, detector and B.F.O.	90X1U5
V-6	Type 3V4, audio power amplifier	90X3V4
V-7	Type 1R5, oscillator	90X1R5
CR-1	Rectifier, selenium	27A151
	MISCELLANEOUS	
	Socket, 7 prong miniature (tube)	6A292
	Lock, line cord	76A397
	Escutcheon	7D109
	Escutcheon, dial	22B250
	Plate, dial	83C355
	Knob	15B172
	Knob (with dot)	15B177
	Pointer, main tuning	82A161
	Pointer, band spread	82A161-1
	Dial cord	38A001
	Spring, general coverage dial	75A012
	Spring, band spread dial	75A070
	Assembly, pulley, bushing and cam	41X13604
	Pulley, idler	28A052-7
	Shaft, main tuning	74A274
	Antenna, whip	72A035
	Antenna, insulator	65A533
LS-1	Speaker	85C093
	Strap, battery	76B467
	Cabinet	78F423

©John F. Rider

MODELS SX-62

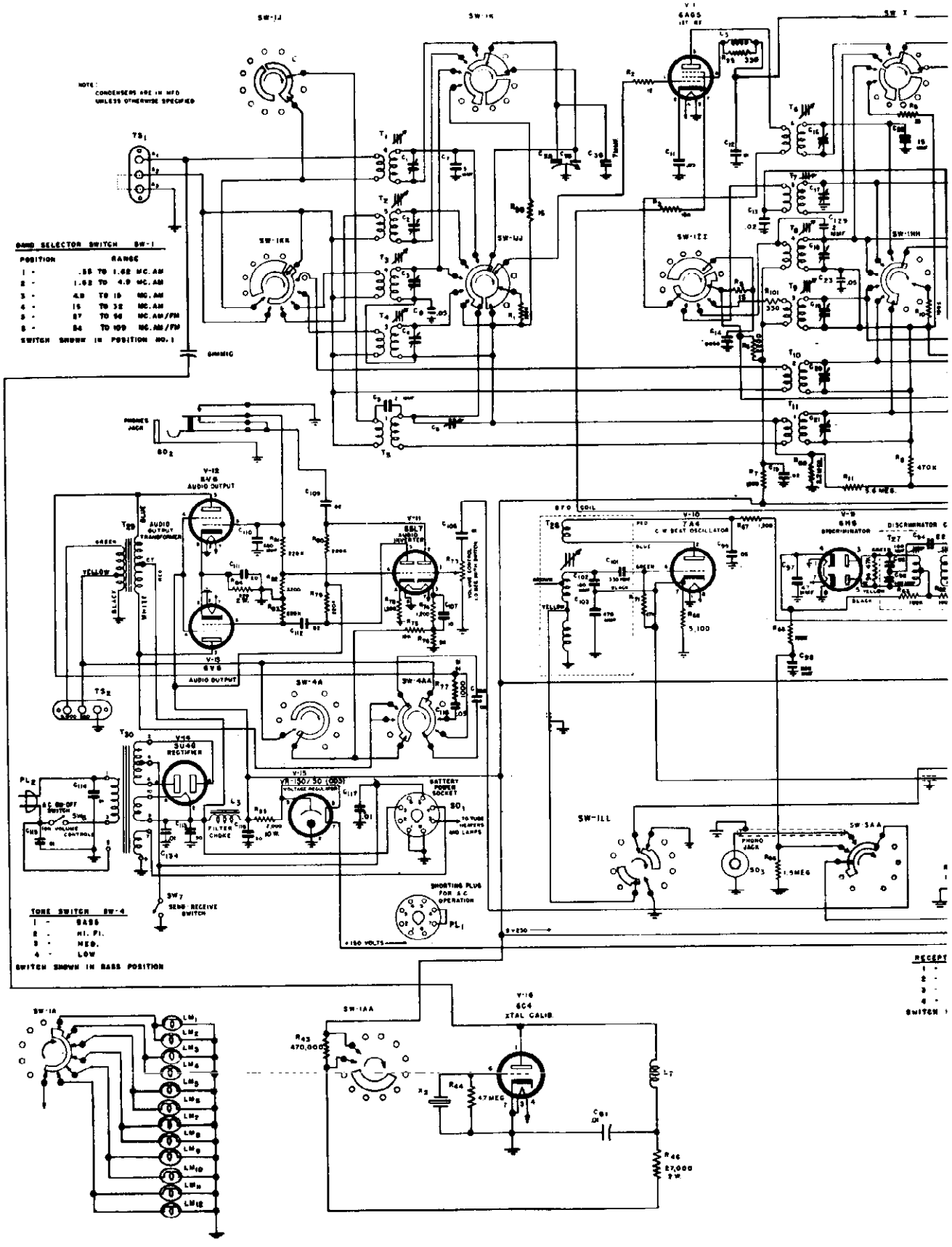

©John F. Rider

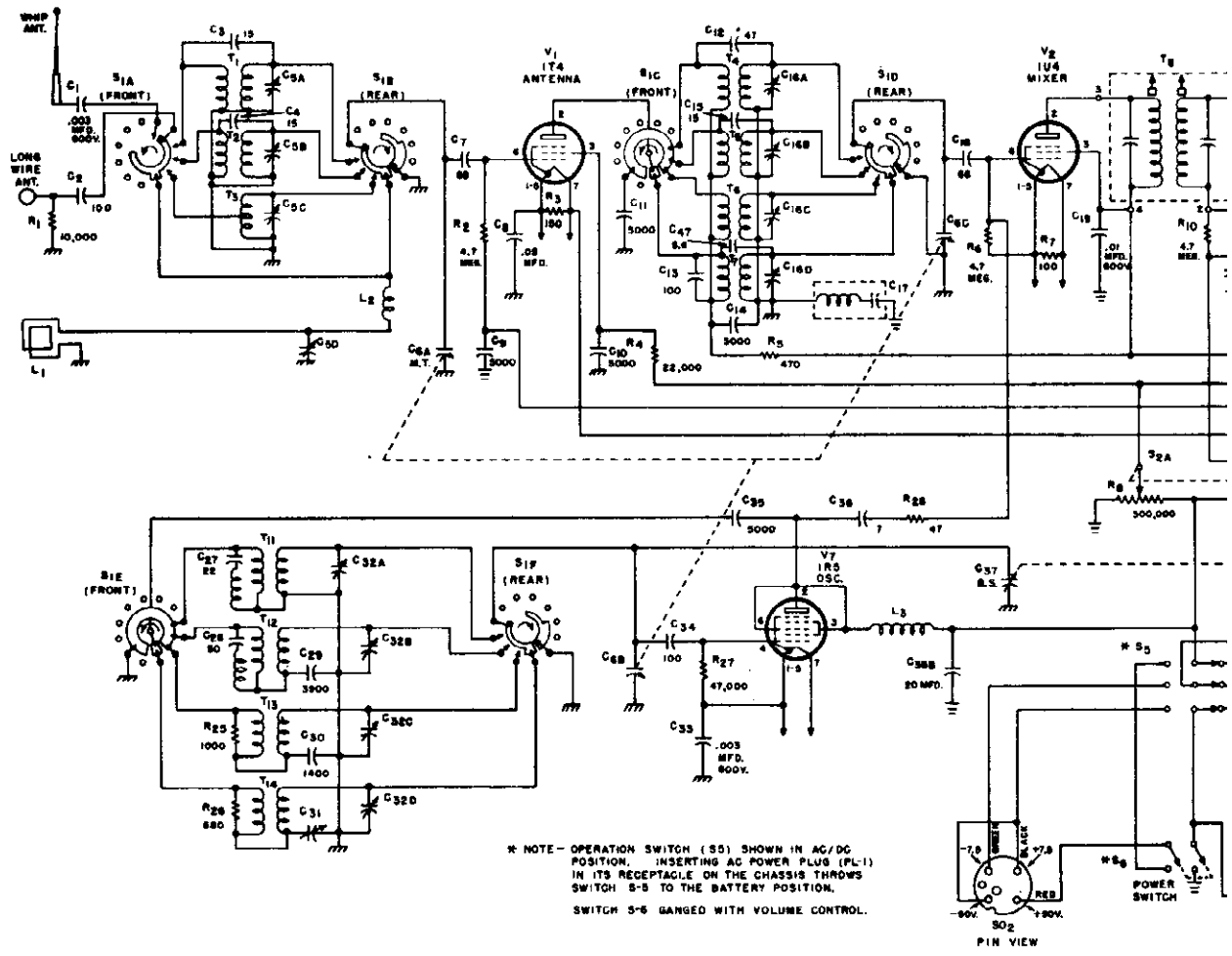

NOTES –

1. SOCKET VIEWS ARE BOTTOM VIEWS.
2. ALL VOLTAGES ARE MEASURED BETWEEN TUBE SOCKET TERMINALS & THE ELECTRICAL GROUND BUSS (NOT CHASSIS) WITH ZERO SIGNAL INPUT.
3. LINE VOLTAGE — 117 V. AC. BATTERY VOLTAGES TAKEN WITH FRESH BATTERY PACK.
4. ALL VOLTAGES SHOWN ARE DC UNLESS OTHERWISE SPECIFIED.
5. DC VOLTAGES SHOWN WERE MEASURED WITH AN ELECTRONIC VOLTMETER.
6. "NC" — NO CONNECTION.
7. "NR" — NOT READABLE (READING GENERALLY MEANINGLESS)
8. ▭ SPACE PROVIDED FOR SERVICE METER READINGS.
9. ▱ UPPER VOLTAGE READINGS IN INDICATOR SPACE SHOW BATTERY OPERATION.
10. VOLTAGES FOR TUBE V-8, ARE SHOWN WITH VOICE-CODE SWITCH IN CODE POSITION.
11. ALL READINGS TAKEN WITH LINE PLUG POLARIZED SO THAT GROUND BUSS & CHASSIS ARE AT SAME POTENTIAL AS THE CHASSIS GROUND.

920777

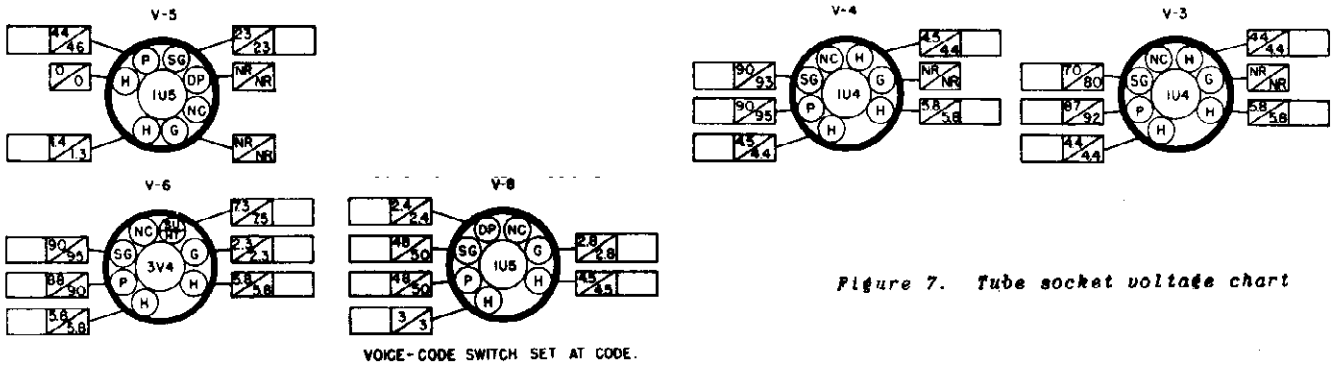

Figure 7. Tube socket voltage chart

FRONT APRON
BOTTOM VIEW OF CHASSIS

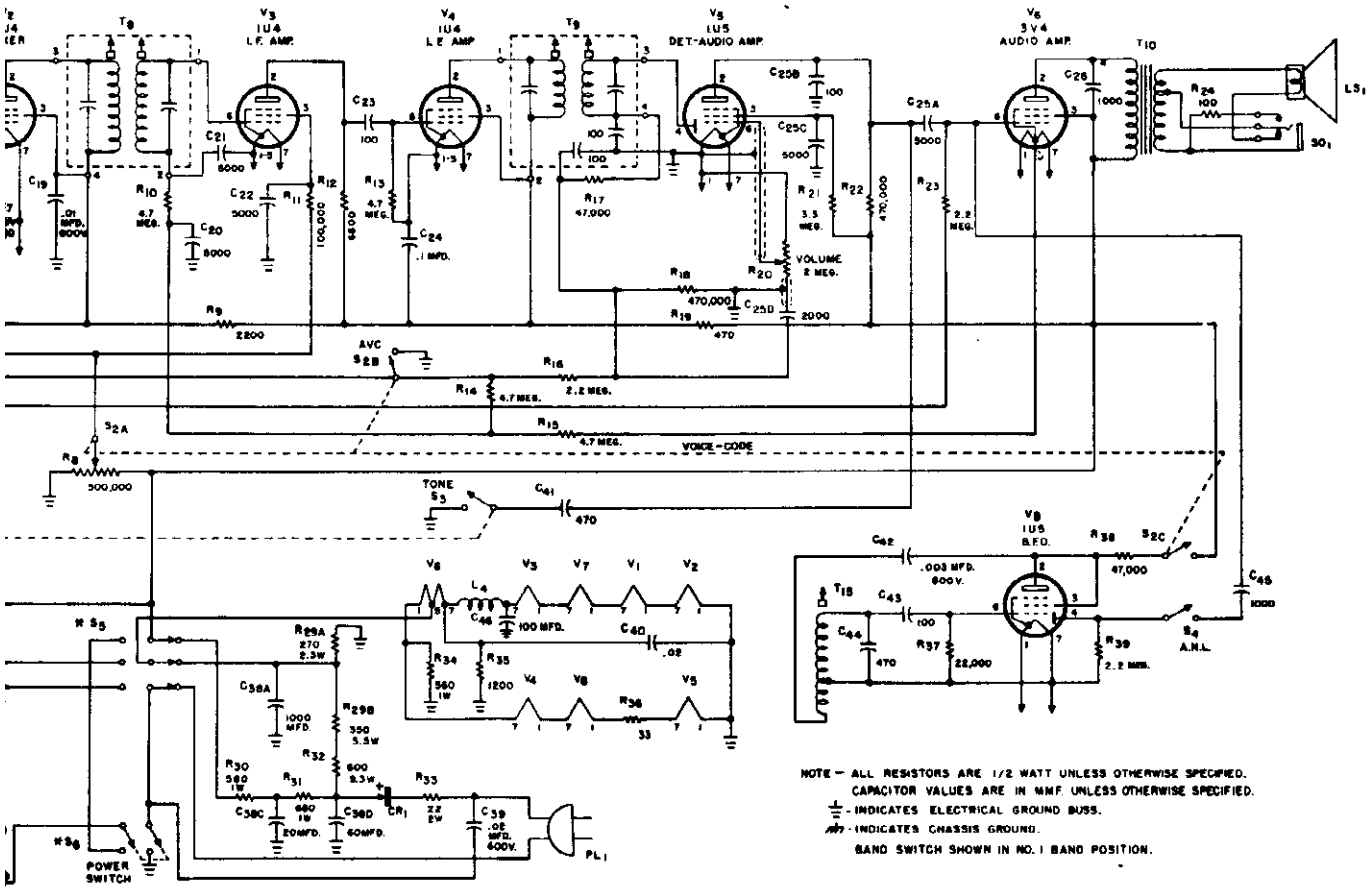

Fig. 8. Schematic diagram

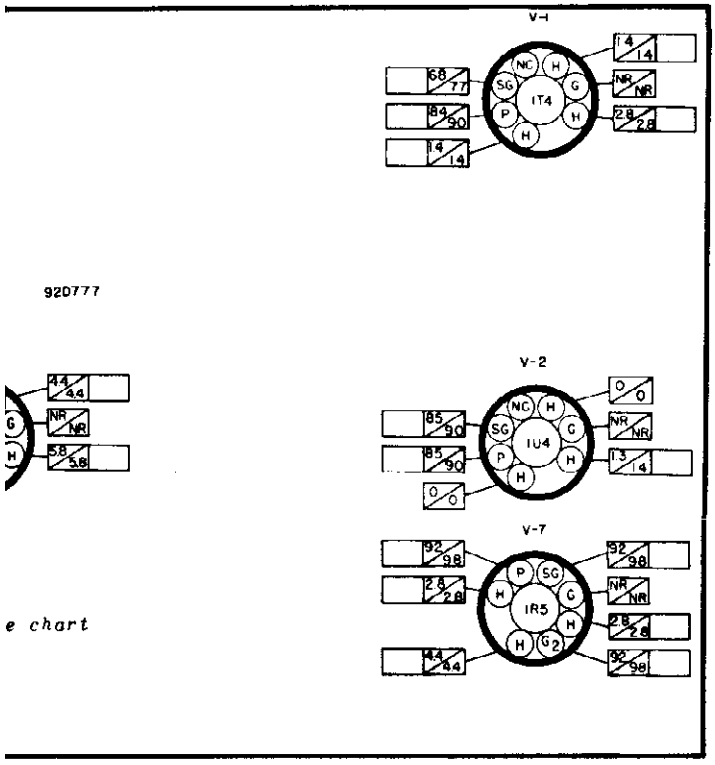

e chart

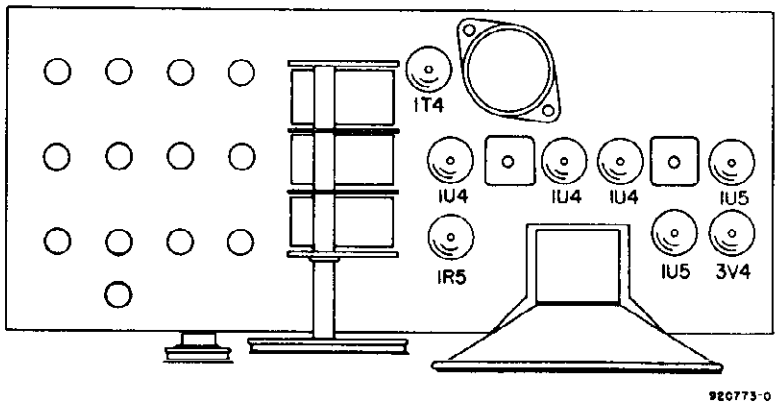

Fig. 9. Top view, location of tubes and dial lamp

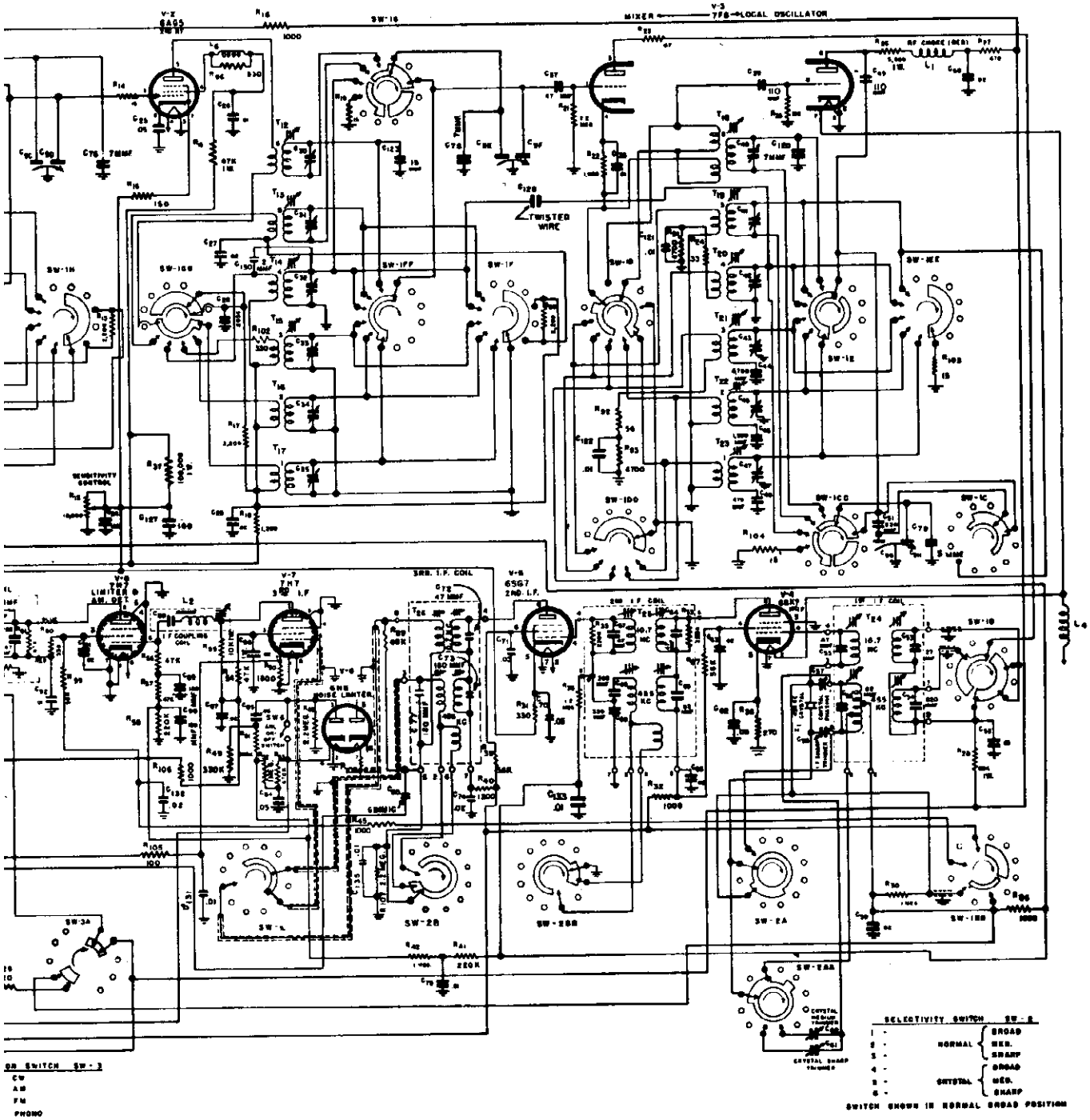

NOTE-

RESISTOR VALUES ARE IN OHMS.

ALL RESISTORS ARE 1/2 WATT, UNLESS OTHERWISE SPECIFIED.

CONDENSER VALUES ARE IN MFD. UNLESS OTHERWISE SPECIFIED

89D282-0

LAST RESISTOR SYMBOL ASSIGNED - R_{108}

LAST CAPACITOR SYMBOL ASSIGNED - C_{135}

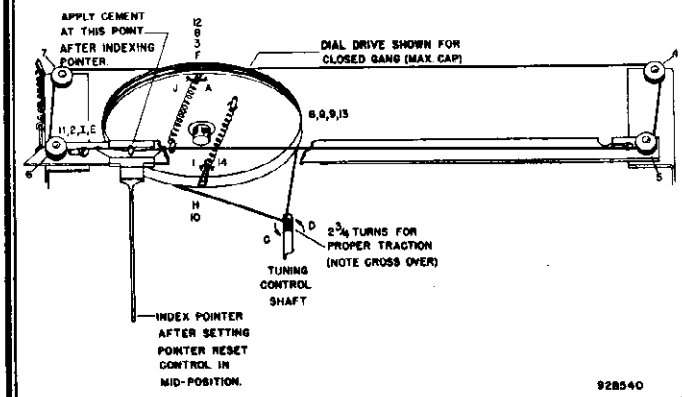

Figure 1. Dial cable stringing procedure

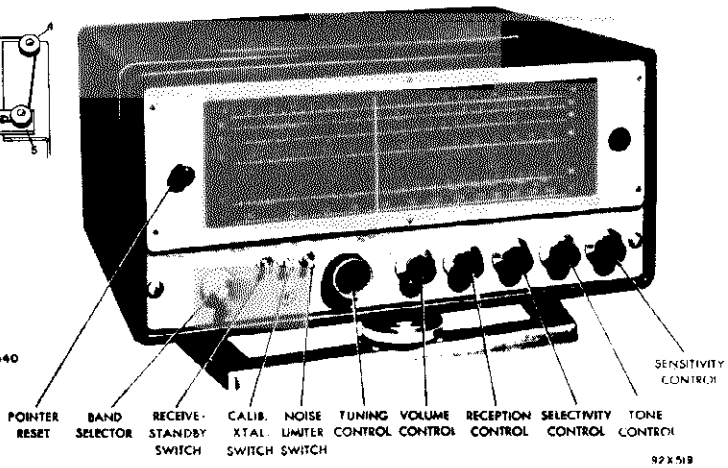

GENERAL

Tubes . . . . . Fourteen plus voltage regulator and rectifier

Speaker Output . . . . . 500/5000 ohms

Headset Output . . . . . High impedance

Antenna Input . . . . . For 50 to 600 ohm line or single wire lead-in.

Phono Input . . . . . High impedance

External Power Connector . . . Std. octal socket

Tuning Range

Band	Frequency Range	Type of Reception
1	550 kc - 1620 kc	AM/CW
2	1.62 mc - 4.9 mc	AM/CW
3	4.9 mc - 15 mc	AM/CW
4	15 mc - 32 mc	AM/CW
5	27 mc - 56 mc	AM/FM/CW
6	54 mc - 109 mc	AM/FM/CW

Intermediate Frequency . . . . 455 kc/10.7 mc

Power Supply . . . . Standard Model 105-125 V. 60 Cycles AC

Universal Model 105-250 V. 25/60 cycles AC

Power Consumption . . . . . 120 Watts

POSITIONING CONTROL KNOBS

BAND SELECTOR . . . As required by flat on shaft
VOLUME . . . . . Set at 10 for full clockwise rotation
RECEPTION . . . . . As required by markings
SELECTIVITY. . . . . As required by markings
TONE . . . . . As required by markings
SENSITIVITY . . . . . Set at 10 for full clockwise rotation

RESTRINGING DIAL CORD

Restring the tuning condenser drive with a 45 - inch length of 30 lb. test dial cord. Tie one end of the cord to the tension spring at position "1" and follow the stringing sequence "1" "14" as shown. At position "14" stretch the tension spring and tie the cord securely to the spring. Note that the dial cord is wrapped around the tuning drive shaft two and three-quarters times for proper traction.

Restring the dial pointer drive with a 75 - inch length of 30 lb. test dial cord. Tie one end of the cord to the tension spring at position "A" and follow the stringing sequence "A" through "J" as illustrated. At position "J" stretch the tension spring and tie the cord securely.

Index the dial pointer by setting the tuning gang at maximum capacity, the RESET control in the middle of its range and aligning the pointer with the left hand dial index marker.

REPLACING LAMPS

Refer to Fig. 9. for the location of the twelve dial lamps used in the receiver. To gain access to defective lamps, reach in through the cabinet cover, remove the light shield (4 sheet metal screws), and unclip the dial lamp socket by compressing the side springs. The socket may then be brought out into the open to change the defective lamp. Replace defective lamps with 6-8 V. Mazda #44 (Blue bead) lamps, or equivalent.

ALIGNMENT PROCEDURE

IF AMP. ALIGNMENT (455 kc) - Set the controls as follows:

BAND SELECTOR . . . . . 550/1620 kc range
RECEIVE/STANDBY switch . . . RECEIVE
CALIB. XTAL switch . . . . . OFF
NOISE LIMITER switch . . . . . OFF
VOLUME control . . . . . Near maximum
RECEPTION control . . . . . AM
SELECTIVITY control . . . . . NORMAL/SHARP
SENSITIVITY control . . . . . Near maximum

Set tuning dial pointer at approximately 1,000 kc.

© John F. Rider

MODELS SX-62

Connect high side of signal generator through an 0.1 mfd. capacitor to pin #1, of the 7F8 converter tube. With signal generator set at approximately 455 kc align slugs S-1,3,5,10,12 and 14 for maximum output.

Set RECEPTION control at CW and adjust slug S-8 for a 1,000 cycle note.

Set the SELECTIVITY control at CRYSTAL/BROAD. While slowly turning slug S-10 in one direction across the resonant setting obtained above, "rock" the signal generator tuning and observe the dip in the output meter reading as the adjustment passes through the response of the crystal filter. The correct setting of the slug S-10 is in the center of the observed dip. Set the signal generator at the weaker of the two responses obtained on either side of zero beat and adjust the crystal phasing trimmer C-57 for the null.

Set the SELECTIVITY control at CRYSTAL/SHARP and with trimmer C-61 set near minimum capacity, slowly increase its capacity while "rocking" the signal generator and adjust for maximum output. It may be necessary at this point to reduce the signal generator input and the receiver sensitivity to prevent overloading. After peaking the adjustment, turn the trimmer in until a drop in output of about 2 db. occurs. At this point the sharp crystal will have very good selectivity without sacrificing too much gain.

Tune the signal generator to exact crystal frequency and note output meter reading. Set the SELECTIVITY control at CRYSTAL/BROAD and note the drop in output, and output meter reading. Now switch to CRYSTAL/MEDIUM and with trimmer C-60 near minimum capacity, slowly increase its capacity, while "rocking" the signal generator, until the output meter indicates about midway between the output readings obtained in sharp crystal and broad crystal positions.

Set the SELECTIVITY control at CRYSTAL/SHARP and reset signal generator for the exact crystal frequency. Switch to NORMAL/SHARP and reset slugs S-1,3,5,12,14 and trimmer C-58 for maximum output.

Set the RECEPTION control at CW and adjust the BFO slug S-8 for zero beat.

IF AMP. ALIGNMENT (10.7 mc) - Set the mc controls as follows:

BAND SELECTOR - - - - - - 27/56 mc range
RECEIVE/STANDBY switch - RECEIVE
CALIB. XTAL switch - - - - OFF
NOISE LIMITER switch - - - OFF
VOLUME - - - - - - - - - - Near maximum
RECEPTION control - - - - AM
SELECTIVITY control - - - - NORMAL/SHARP
SENSITIVITY control - - - - Near Maximum

Set tuning dial pointer at approx. midscale.

Connect the high side of the signal generator through an 0.1 mfd. capacitor to pin #1 of the 7F8 converter tube. Set signal generator at 10.7 mc and adjust slugs S-4, 6, 9, 13 and 15 for maximum output. Now set slugs S-2 and S-11 for maximum output, but do not readjust slugs S-4,6,9,13 and 15.

Set RECEPTION control at CW and adjust slug S-17 for zero beat.

Set RECEPTION control at FM and adjust slug S-16 for maximum output. Now set Slug S-7 for the null or minimum output as indicated on the output meter. Check the discriminator by slowly tuning the signal generator through 10.7 mc and observe the two maximum audio level readings on the output meter. If the two peaks are equal the job is done; if not, it may be necessary to reset Slug S-16 until a reasonable balance is obtained.

RF AMP ALIGNMENT

After completing the alignment of the IF amplifier stages, the RF amplifier stages may be aligned according to the following alignment chart. Connect the high side of the signal generator to terminal A-1 through the dummy antenna specified and connect a jumper between antenna terminal A-2 and GND. Use just enough signal generator output to obtain a 500 milliwatt audio output level for best results.

ALIGNMENT CHART

Dummy Antenna	Signal Generator Frequency	Band Selector Range	Radio Dial Setting	Adjust	Remarks
RMA	1500 kc	550-1600 kc	1500 kc	C-47*, 6, 21, 35	Adjust for max. output
	600 kc		600 kc	S-36*	
RMA	4.5 mc	1.62-4.9 mc	4.5 mc	C-45*, 20, 34	Adjust for max. output
	2.0 mc		2.0 mc	S-35*	
RMA	14.0 mc	4.9-15 mc	14.0 mc	C-43*, 4, 19, 33	Adjust for max. output
	7.0 mc		7.0 mc	S-34*, 22, 26, 30	
RMA	28 mc	15-32 mc	28 mc	C-42*, 3, 18, 32	Adjust for max. output
	18 mc		18 mc	S-33*, 21, 25, 29	
300-ohm non-inductive resistor	50 mc	27-56 mc	50 mc	C-41*, 2, 17, 31	Adjust for max. output
	30 mc		30 mc	S-32*, 20, 24, 28	
300-ohm non-inductive resistor	105 mc	54-109 mc	105 mc	C-40*, 1, 16, 30	Adjust for max. output
	60 mc		60 mc	S-31*, 19, 23, 27	

* Note - Calibration adjustment

Note - The standard RMA dummy antenna mention in the alignment chart consists of a 200 mmf condenser in series with a 20 uh r-f choke which is shunted by a 400 mmf condenser in series with a 400 ohm carbon resistor.

© John F. Rider

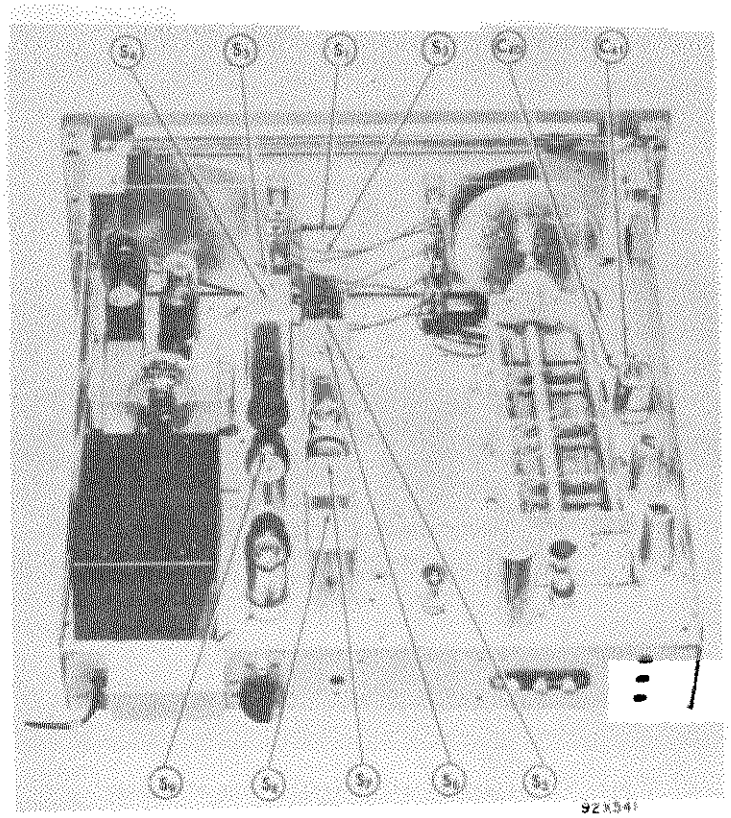

Fig. 2. Alignment adjustments, top view

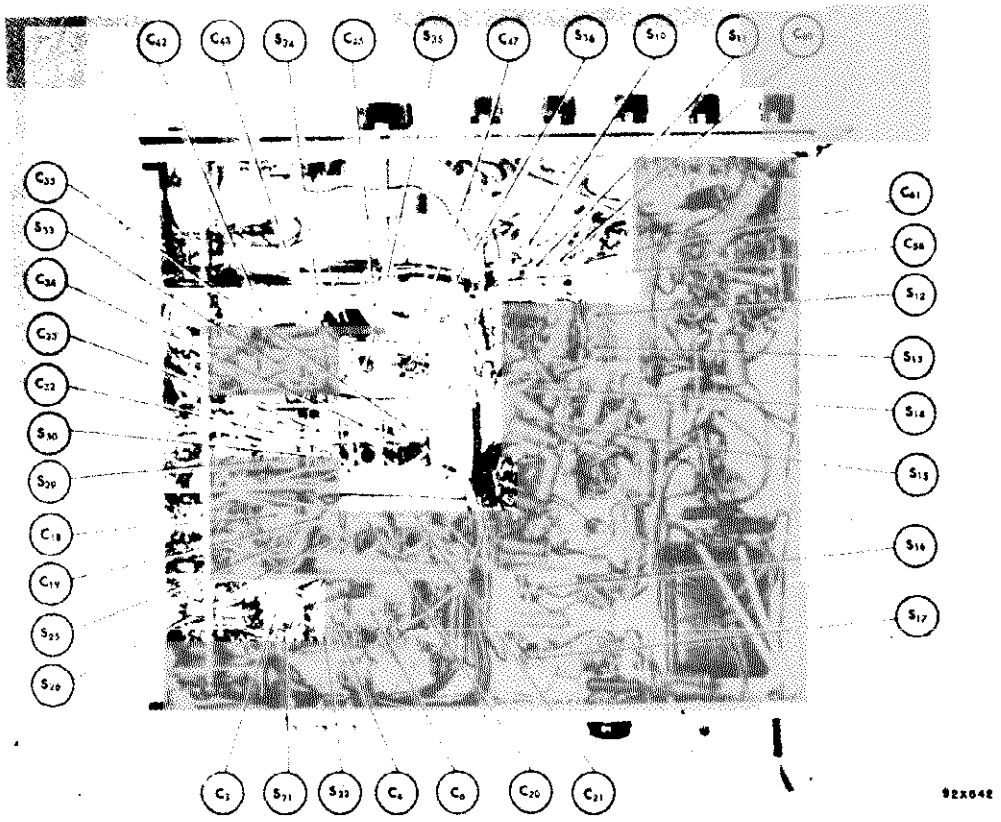

Fig. 3. Alignment adjustments, bottom view

© John F. Rider

MODELS SX-62

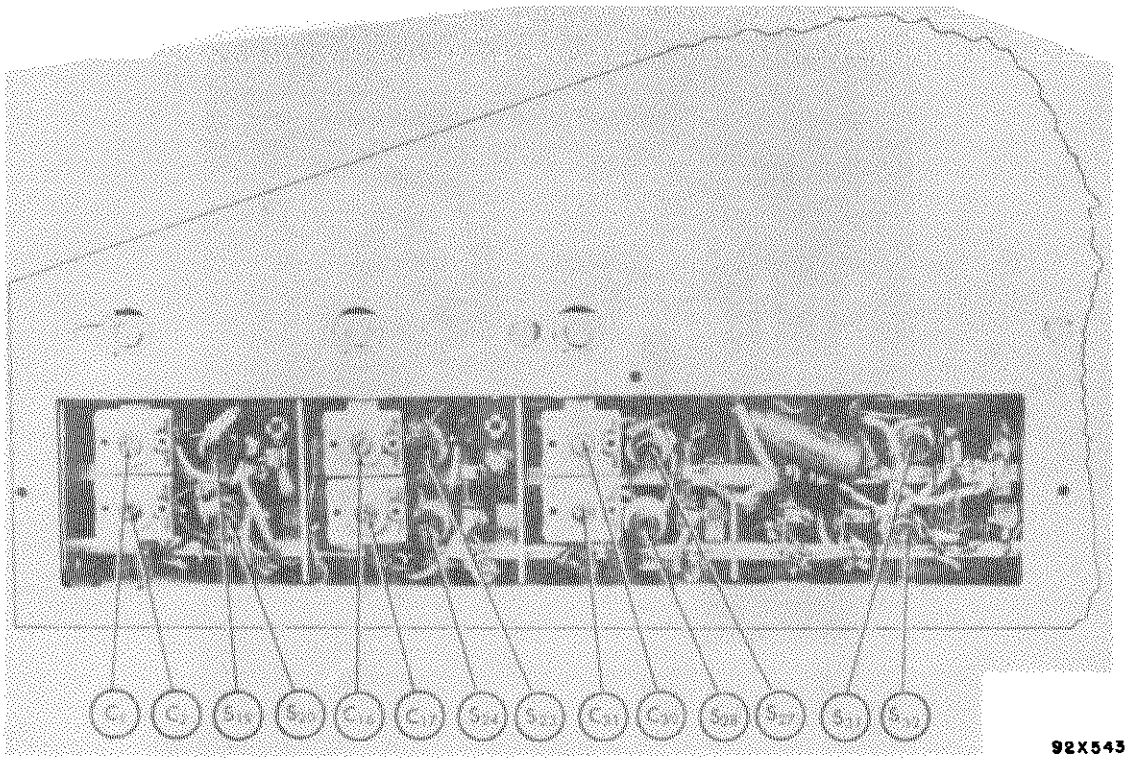

Fig. 4. Alignment adjustments, left side view

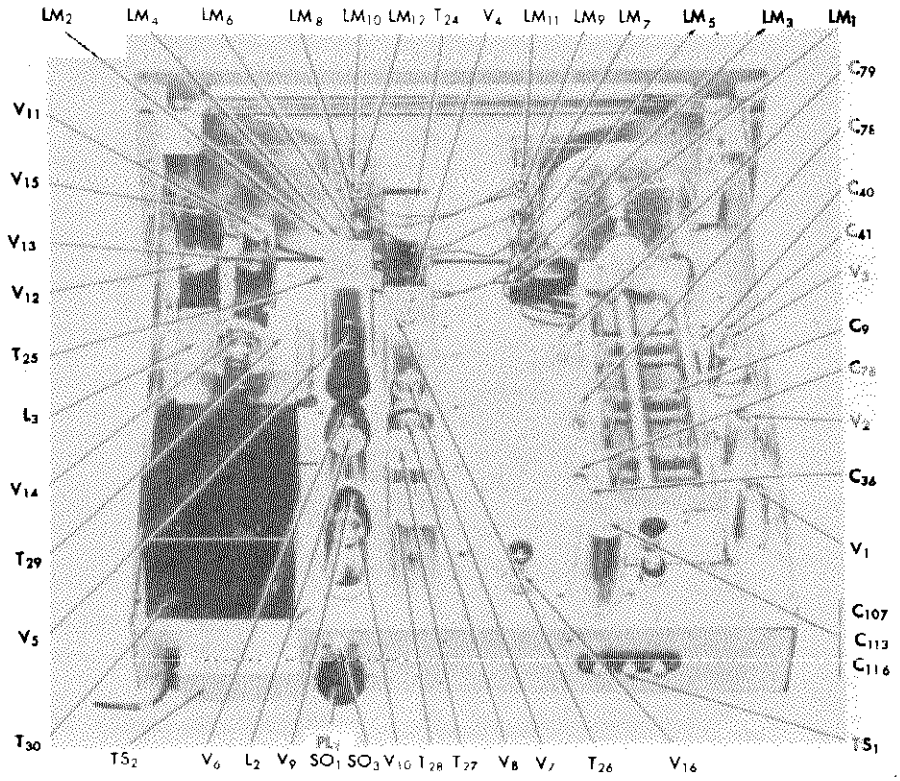

Fig. 5. Component locations, top view

© John F. Rider

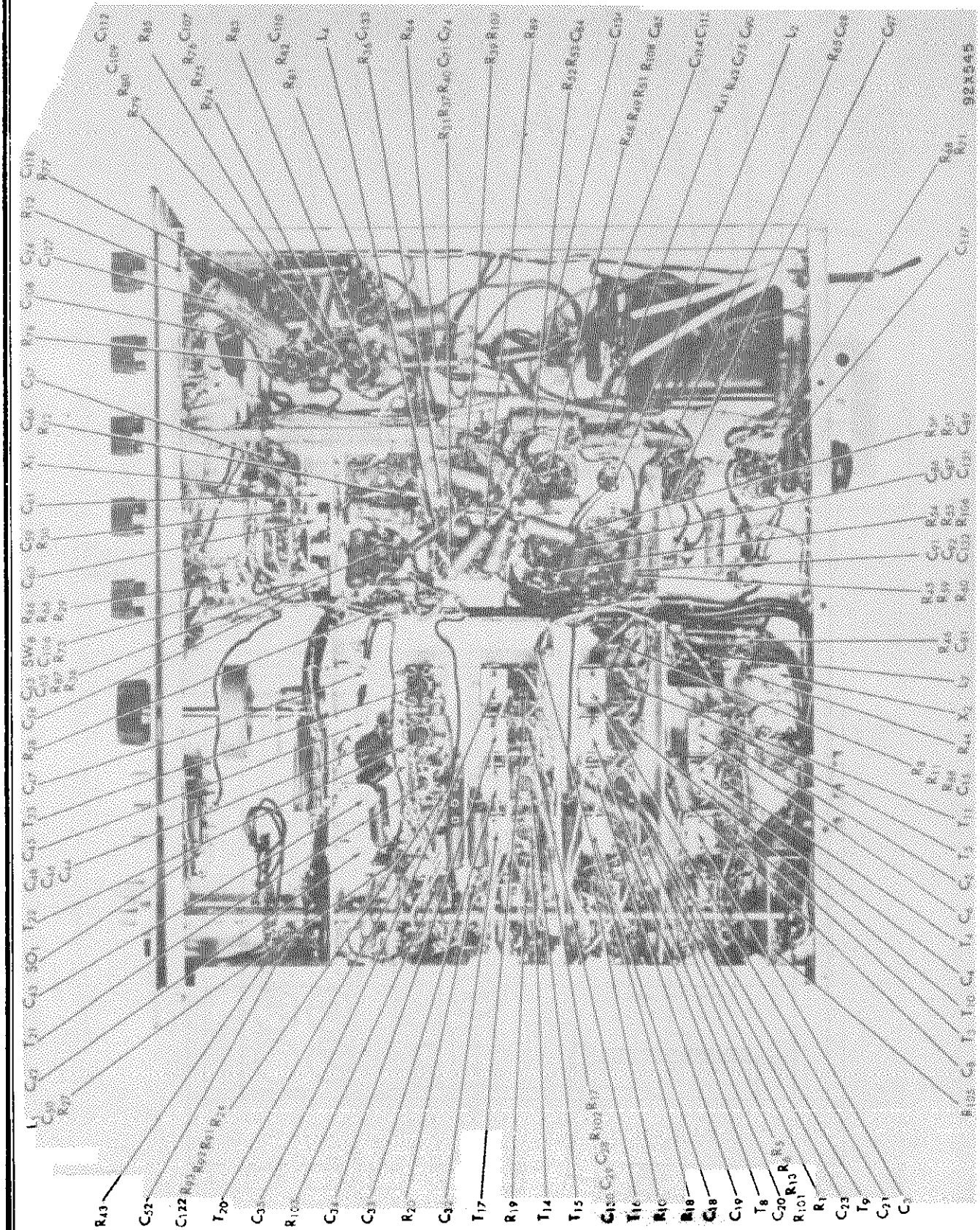

Fig. 6. Component locations, bottom view

© John F. Rider

MODELS SX-62

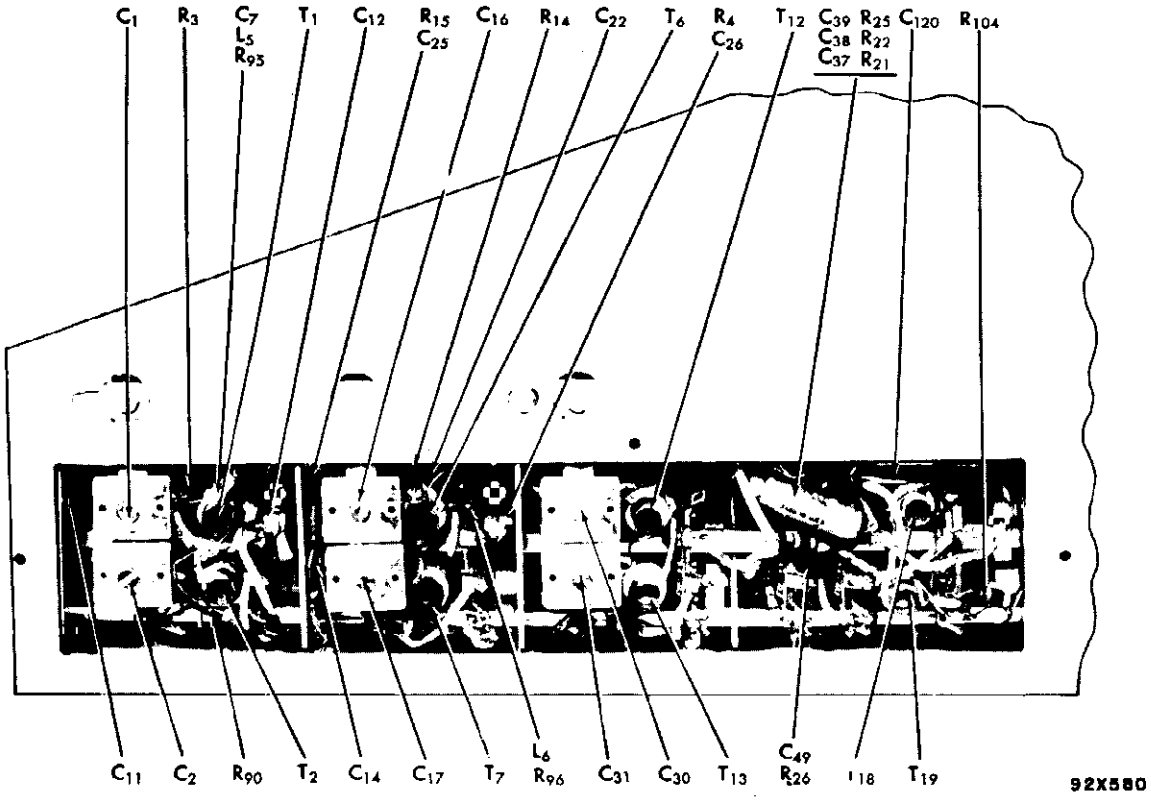

Fig. 7. Component locations, left side view.

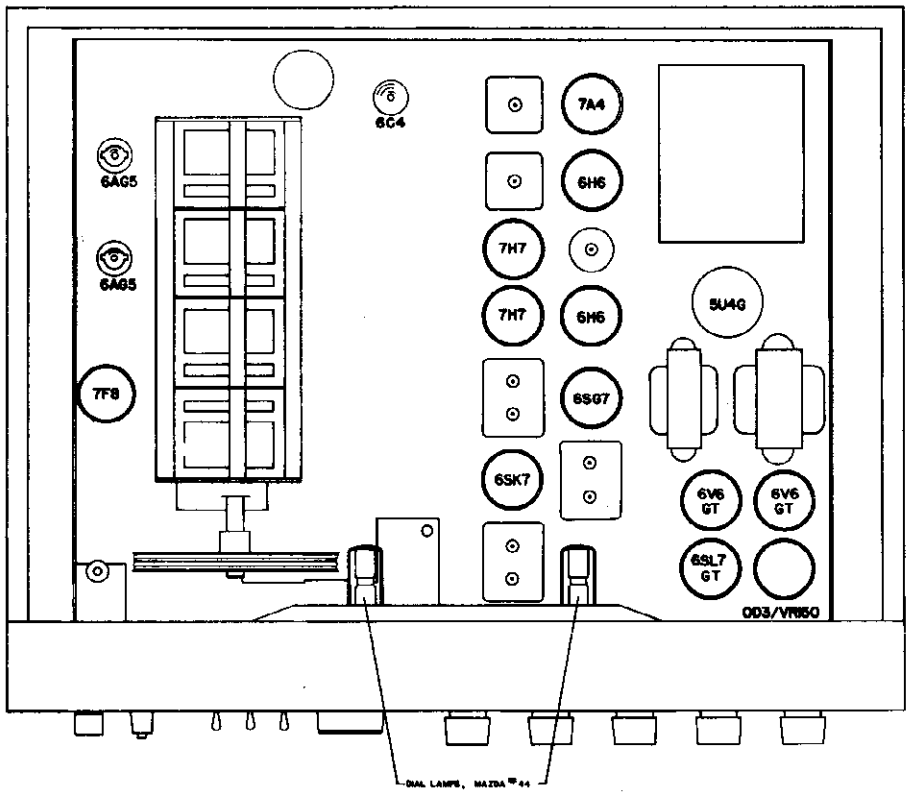

Fig. 8. Top view, location of tubes and dial lamps

©John F. Rider

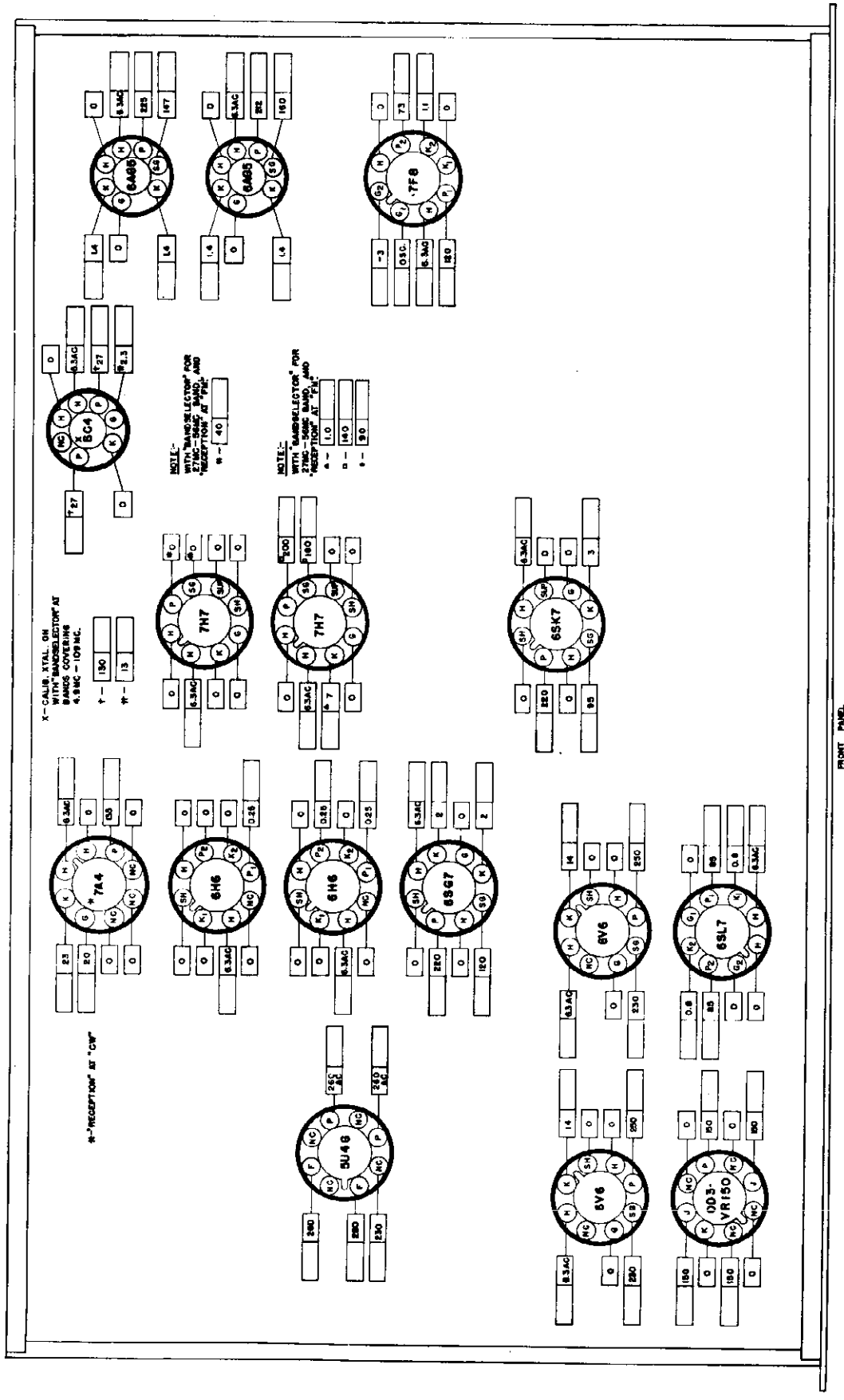

Fig. 9. Tube socket voltage chart

©John F. Rider

MODELS SX-62

SERVICE PARTS LIST

Ref. No.	Description	Hallicrafters Part Number
	CONDENSERS	
C-1,2,16,17, 30,31	Trimmers, adjustable: 2 section; antenna, RF amp. and mixer stages	44B165
C-3,4,6,18,19, 20,21,32,33, 34,35	Part of transformers T-3,4, 5,8,9,10,11,14,15,16 & 17 respectively	
C-5,129,130	2 mmf. 500 V., bakelite	47A160-4
C-7,79	5 mmf. 500 V., ceramic	CC20UK050D
C-8,11,25	.05 mfd. 200 V., tubular	49A091
C-9	Capacitor, main tuning	48C204
C-12,26,38,75, 81,92,106, 117,121,122, 131,133,134, 135	.01 mfd. 600 V., tubular	46AZ103J
C-13,15,27,29, 50,59,63,74, 86,87,91,109, 112,132	.02 mfd. 600 V., tubular	46AY203J
C-14,28	5600 mmf. 500 V., mica	CM35A562M
C-22,123	15 mmf. 500 V., ceramic	CC20UK150K
C-23,62,70, 84,85	.05 mfd. 200 V., tubular	46AU503J
C-24	.25 mfd. 200 V., tubular	46AT254J
C-36,76,78,120	7 mmf. 500 V., ceramic	CC20UK070K
C-37,97	47 mmf. 500 V., mica	CM20A470K
C-39,49	110 mmf. 500 V., ceramic	CC25UK111J
C-40,41,57	Trimmer, adjustable, oscillator section, bands 5 & 6; and crystal phasing	44A078
C-42	Trimmer, adjustable, oscillator section, band 4	44A347
C-43,45	Trimmers, adjustable, oscillator section, bands 2 & 3	44A047
C-44	4700 mmf. 2% 500 V., silver mica	CM35C472G
C-46	1500 mmf. 2% 500 V., silver mica	CM30C152G
C-47	Trimmer, adjustable, oscillator section, band 1	44A076
C-48	470 mmf. 2% 500 V., mica	CM20A471G
C-51	220 mmf. 2% 500 V., mica	CM25E221G
C-52,66,71, 99,108,118	.05 mfd. 600 V., tubular	46AY503J
C-58,60,61	Trimmer, adjustable, crystal phasing	44B164
C-89,90	180 mmf. 500 V., mica	CM20A181K
C-98	560 mmf. 500 V., mica	CM25A561K
C-107	10 mfd. 25 V., electrolytic	45A121
C-110	680 mmf. 500 V., mica	CM25A681K
C-111,113,116	20 mfd. 25 V., 30-20 mfd. 450 V., electrolytic	45A041
C-114,115	.01 mfd. 600 V., moulded paper	46BR103J
C-127	100 mfd. 25 V., electrolytic	45A116
	RESISTORS	
R-1,10,51	100,000 ohms ½ watt, carbon	RC20AE104M
R-2	12 ohms ½ watt, carbon	RC20AE120K
R-3,15	150 ohms ½ watt, carbon	RC20AE151K
R-4,54	47,000 ohms 1 watt, carbon	RC30AE473K
R-5,9,14,19, 90,103,104	15 ohms ½ watt, carbon	RC20AE150M
R-6,13,17,20	2200 ohms ½ watt, carbon	RC20AE222M
R-7,18,40,67, 74,78	1200 ohms ½ watt, carbon	RC20AE122K
R-8,43,53	470,000 ohms ½ watt, carbon	RC20AE474M
R-11	5.6 megohms ½ watt, carbon	RC20AE565K
R-12	Resistor, variable, SENSITIVITY control	25A548

Ref. No.	Description	Hallicrafters Part Number
	RESISTORS (Cont.)	
R-16,22,32, 45,86,106	1000 ohms ½ watt, carbon	RC20AE102M
R-21,48,107	2.2 megohms ½ watt, carbon	RC20AE225M
R-23	47 ohms ½ watt, carbon	RC20AE470M
R-24	33 ohms ½ watt, carbon	RC20AE330M
R-25,75	10,000 ohms ½ watt, carbon	RC20AE103K
R-26	5600 ohms 1 watt, carbon	RC30AE562K
R-27	470 ohms ½ watt, carbon	RC20AE471M
R-28	68,000 ohms 1 watt, carbon	RC30AE683K
R-29	120 ohms ½ watt, carbon	RC20AE121K
R-30,42,52	1 megohm ½ watt, carbon	RC20AE105M
R-31,60	330 ohms ½ watt, carbon	RC20AE331K
R-36	1.2 megohms ½ watt, carbon	RC20AE125K
R-37	100,000 ohms 1 watt, carbon	RC30AE104K
R-38	270 ohms ½ watt, carbon	RC20AE271K
R-39,59,87	56,000 ohms ½ watt, carbon	RC20AE563
R-41,58,79,80, 81,83	220,000 ohms ½ watt, carbon	RC20AE224K
R-44	4.7 megohms ½ watt, carbon	RC20AE475K
R-46	27,000 ohms 2 watt, carbon	RC40AE273K
R-49	330,000 ohms ½ watt, carbon	RC20AE334K
R-50	1800 ohms ½ watt, carbon	RC20AE182K
R-55	10,000 ohms 1 watt, carbon	RC30AE103K
R-56,57,71,94	47,000 ohms ½ watt, carbon	RC20AE473K
R-65	150,000 ohms ½ watt, carbon	RC20AE154K
R-66	1 megohm ½ watt, carbon	RC20AE155K
R-68	5100 ohms 5% ½ watt, carbon	RC20AE512J
R-73	Resistor, variable, VOLUME control	25A549
R-76,92	56 ohms ½ watt, carbon	RC20AE560K
R-77	1000 ohms 2 watts, carbon	RC40AE102K
R-82	8200 ohms ½ watt, carbon	RC20AE822K
R-84	220 ohms 2 watts, carbon	RC40AE221K
R-85	2000 ohms 10 watts, WW	24BG202D
R-88	2.2 megohms ½ watt, carbon	RC20AE225K
R-89	68,000 ohms ½ watt, carbon	RC20AE683K
R-91,93	4700 ohms ½ watt, carbon	RC20AE472K
R-101,102	330 ohms ½ watt, carbon	RC20AE331M
R-105	100 ohms ½ watt, carbon	RC20AE101K
R-108	6.8 ohms 1 watt, carbon	RC30AE068K
	TRANSFORMERS AND COILS	
T-1	Transformer, antenna stage, band 6	51B829
T-2	Transformer, antenna stage, band 5	51B828
T-3	Transformer, antenna stage, band 4	51B990
T-4	Transformer, antenna stage, band 3	51B826
T-5	Transformer, antenna stage, band 1	51B823
T-6,12	Transformer, RF and converter stages, band 6	51B833
T-7	Transformer, RF stage, band 5	51B832
T-8,14	Transformer, RF and converter stages, band 4	51B989
T-9	Transformer, RF stage, band 3	51B987
T-10	Transformer, antenna stage, band 2	51B825
T-11	Transformer, RF stage, band 1	51B824
T-13	Transformer, converter stage, band 5	51B844
T-15	Transformer, converter stage, band 3	51B988
T-16	Transformer, converter stage, band 2	51B986

© John F. Rider

Ref. No.	Description	Hallicrafters Part Number
	TRANSFORMERS AND COILS (Cont.)	
T-17	Transformer, converter stage, band 1	51B985
T-18	Transformer, oscillator stage, band 6	51B839
T-19	Transformer, oscillator stage, band 5	51B838
T-20	Transformer, oscillator stage, band 4	51B991
T-21	Transformer, oscillator stage, band 3	51B836
T-22	Transformer, oscillator stage, band 2	51B835
T-23	Transformer, oscillator stage, band 1	51B834
T-24	Transformer, 1st IF amp stage	50C198
T-25	Transformer, 2nd IF amp stage	50C190
T-26	Transformer, 3rd IF amp stage	50C373
T-27	Transformer, FM detector	50C191
T-28	Transformer, BFO	54C032
T-29	Transformer, audio output	55B077
T-30	Transformer, power (115 V. 50/60 cycles)	52C141
*T-30	Transformer, power (115/230 V. 25/60 cycles)	52C131
L-1	RF choke (coded red)	53B008
L-2	IF coupling coil	53B104
L-3	Choke, filter	56B067
L-4	RF choke, filament	53A009
L-5,6	RF choke, screen (wound on R-95 & R-96)	37A117
L-7	Plate coil (Tube V-16)	53A139
	SWITCHES	
SW-1	Switch, BAND SELECTOR	60B329
SW-2	Switch, SELECTIVITY	60A234
SW-3	Switch, RECEPTION	60C330
SW-4	Switch, TONE	60C236
SW-5,6,7	Switch, toggle, SPST	60A138
SW-8	Switch, power (Part of volume control R-73)	
	PLUGS AND SOCKETS	
PL-1	Plug, octal (with jumpers)	35A003
PL-2	Plug and cord, power	87A078
SO-1	Socket, octal (BATTERY POWER and tube)	6A035
SO-2	Connector, PHONES	36B030
SO-3	Connector, PHONO	36A029
	Socket, miniature (6AG5 tube)	6A268
	Socket, miniature (6C4 tube)	6A292
	Socket, loktal (7H7 & 7A4 tube)	6A213
	Socket, loktal (7F8 tube)	6A223
	Socket, dial light	86B073

Ref. No.	Description	Hallicrafters Part Number
	TUBES, RECTIFIERS AND LAMPS	
V-1,2	Type 6AG5, antenna & RF amplifier	90X6AG5
V-3	Type 7F8, oscillator/converter	90X7F8
V-4	Type 6SK7, 1st IF amplifier	90X6SK7
V-5	Type 6SG7, 2nd IF amplifier	90X6SG7
V-6,9	Type 6H6, noise limiter & discriminator	90X6H6
V-7,8	Type 7H7, 3rd IF amplifier & AM detector	90X7H7
V-10	Type 7A4, BFO	90X7A4
V-11	Type 6SL7GT, phase inverter	90X6SL7GT
V-12,13	Type 6V6GT, AF power amplifier	90X6V6GT
V-14	Type 5U4G, rectifier	90X5U4G
V-15	Type OD3/VR150, voltage regulator	90XVR150
V-16	Type 6C4, calibration oscillator	90X6C4
LM-1,2,3,4,5, 6,7,8,9,10, 11,12	Lamp, 6-8 V., Mazda #44 (Blue bead)	39A003
	MISCELLANEOUS	
TS-1,2	Terminal strip, antenna or speaker	88A567
	Screw, knurled head, for above terminal strip	3A1371
X-1	Crystal, 455 KC	19A123
X-2	Crystal, calibration, 500 KC	19A1211
	Lock, line cord	76A299
	Pulley, condenser drive	28B068
	Flywheel, dial drive	71A187
	Shaft, general coverage dial	74A252
	Dial cord	38A019
	Escutcheon	7D078
	Window, general coverage dial	22C214
	Dial scale (calibrated)	22D215
	Clip, dial scale & window mtg.	76A043
	Shaft, index control	74A013
	Washer, "C" type, index control shaft	4A333
	Spring, dial drive & pointer index	75A013
	Dial pointer	67B835
	Knob, BAND SELECTOR control	15A088-2
	Knob, RECEPTION control	15A045
	Knob, SELECTIVITY control	15A063
	Knob, TONE control	15A062
	Knob, SENSITIVITY control	15A064
	Knob, TUNING control	15A047
	Knob, POINTER RESET	15A074-1
	Knob, VOLUME	15A097
	Mounting foot, rubber	16A029

* Universal model only.

MODEL FM-1,
FM Tuner

This Heathkit Frequency Modulation Tuner operates on the super regenerative principle and covers the new FM Band 88-108 Megacycles. It is 110V 60 cy power transformer operated. The tuning coils are ready assembled to the tuning condenser and the IF transformer is assembled and aligned--the tuning condenser is also aligned and set for peak performance and the trimmers are soldered to prevent misalignment during assembly. The tuner incorporates the latest type vernier slide rule dial. The dial cable is special long wearing nylon for years of service. As this unit is power transformer operated, it can safely be attached to AC-DC type receivers for amplification without danger.

The newer types of insulated resistors have a higher wattage rating. The 1/4 watt size is now rated at 1/2 watt and these are used in this kit.

Resistors and potentiometers have a tolerance rating of plus or minus 20% unless otherwise stated. Therefore, a one megohm unit may test between 800,000 and 1,200,000 ohms. The Heathkit circuits are designed to accommodate these variations.

In connecting the tuner to an amplifier, be certain that the grounded side of the tuner is connected to the grounded side of the amplifier. The usual connecting cable is a single shielded wire and the grounded side is the shield. The tuner may be connected to the phonograph or FM connection of any radio. The connecting plug depends on the type of radio and should be obtained from the radio dealer. For local stations, a single wire approximately 3 feet long can be connected to one of the antenna terminals but for distant reception an FM dipole antenna is recommended with connections. On single wire, try each post and use one with best results.

The table below lists the voltages measured between the chassis and tube socket contact. Measurements were taken with 1,000 ohms per volt voltmeter--normal variation of plus or minus 15% are to be expected due to line voltage variations.

	12A6		14F8
Pin 1	0	Pin 1	0
2	9-12VAC	2	0
3	110-150VAC	3	110-140V
4	110-150VAC	4	0
5	110-150VAC	5	40-50V
6	(used as tie point)	6	110-140V
7	0	7	9-12VAC
8	120-150V	8	3-20V

©John F. Rider

MODEL FM-1,
FM Tuner

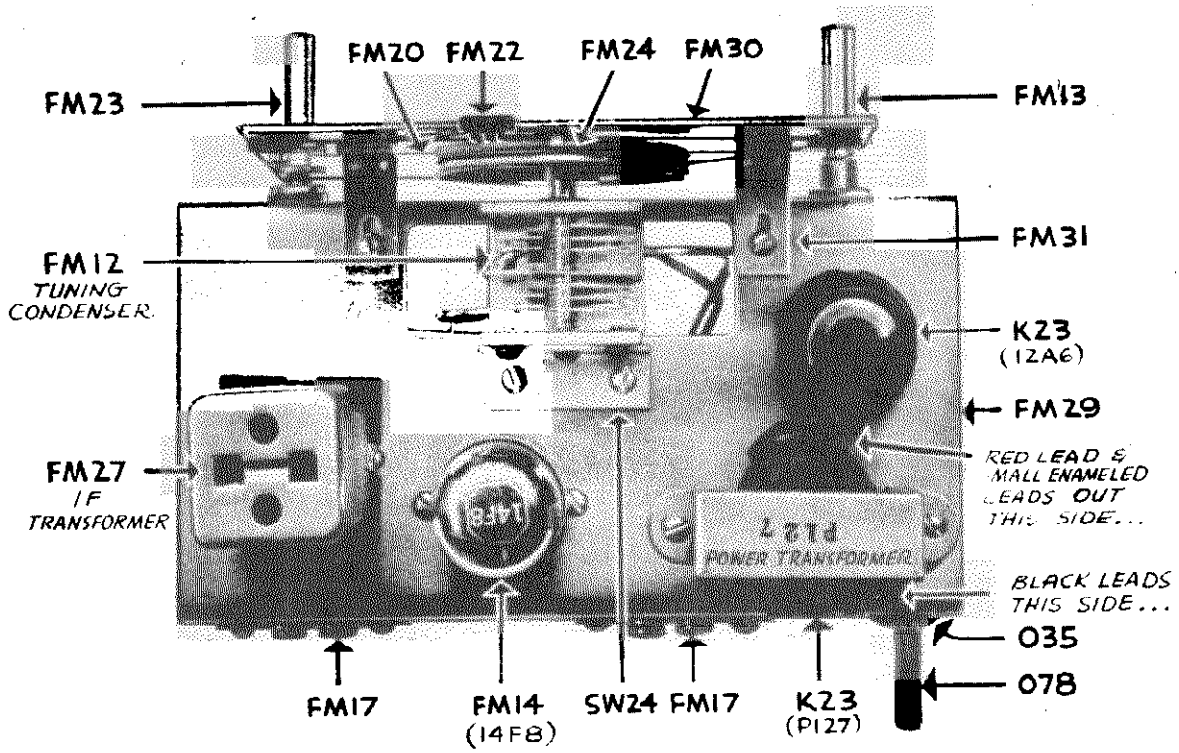

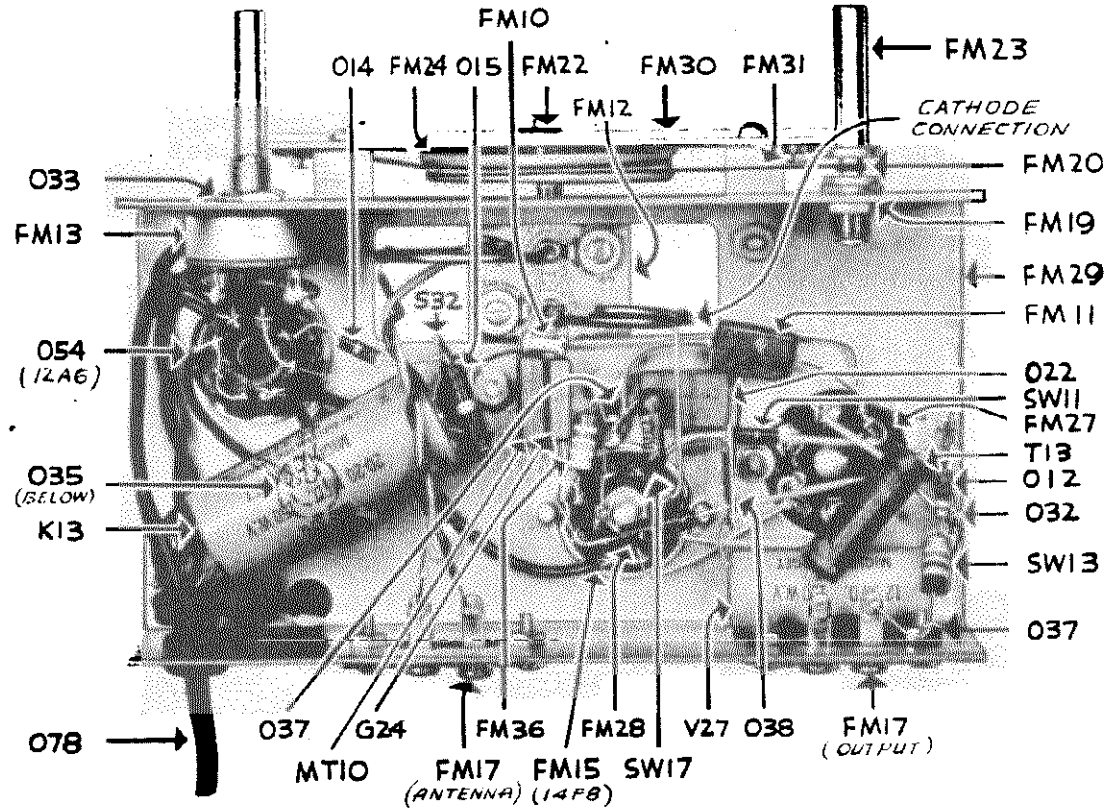

©John F. Rider

MODEL FM-1,
FM Tuner

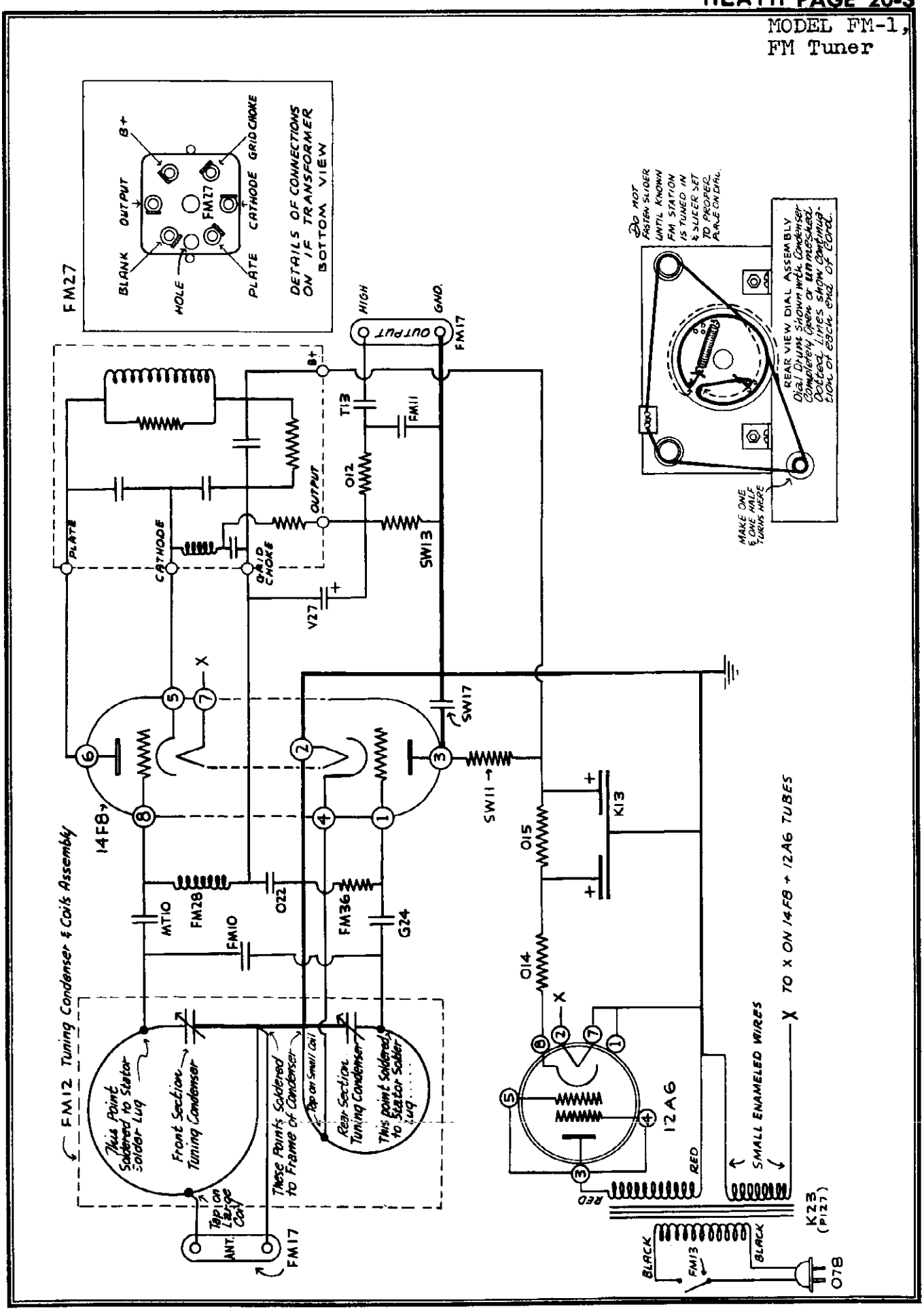

©John F. Rider

FM 1 FM TUNER PARTS LIST

Part No.	No. Parts	Description
SW11	1	100 Ohm Resistor
014	1	470 Ohm Resistor
015	1	2000 Ohm Resistor
SW13	1	22000 Ohm Resistor
FM36	1	27000 Ohm Resistor
012	1	100000 Ohm Resistor
FM10	1	3 MMF Ceramic Condenser
G24	1	47 MMF Mica Condenser
MT10	1	470 MMF Mica Condenser
FM11	1	1000 MMF Mica Condenser
SW17	1	1000 MMF Ceramic Condenser
022	1	.005 MFD Condenser
T13	1	.01 MFD 300V Condenser
V27	1	12 MFD 150V Electrolytic Condenser
K13	1	20-20 MFD 150V Electrolytic Cond.
FM12	1	Tuning Condenser with Coils
FM13	1	Rotary Switch SPST
FM14	1	14F8 Tube
K23	1	12A6 Tube
FM15	1	Loctal Tube Socket
054	1	Octal Tube Socket
043	1	Octal Socket Ring
FM16	2	Brown Acorn Knobs
FM17	2	Screw Type Dual Terminal Strips
038	1	Single Terminal Strip
S32	2	Dual Terminal Strips
0101	1	3/8" Lock Washer
031	14	6-32 x 3/8 Screws
S22	16	6-32 x 1/4 Nuts
FM18	1	#8-32 Set Screw for pulley
033	1	Control Nut
FM19	1	Drive Shaft Nut
035	2	3/8" Grommet
037	3	Soldering Lugs
FM20	1	Pc. Dial Cable (28")
FM21	1	Dial Cable Spring
FM22	1	Slide Pointer
FM23	1	Drive Shaft
FM24	1	Pulley
FM25	1	Length Hookup Wire (2 ft.)
FM26	1	Length Spaghetti (4 in.)
078	1	Line Cord
FM27	1	IF Transformer
FM28	1	RF Choke
K25	1	Power transformer (P127)
FM29	1	Chassis
SW24	1	Condenser Mounting Bracket
K16	3	6-32 x 3/16 Screws
FM30	1	Dial Plate Assembly
FM31	2	Dial Mounting Brackets
FM32	1	Set of Instructions
FM33	1	Parts List
FM34	1	Schematic
FM35	1	Pictorial
FM44	L	Photo Print

©John F. Rider

MODELS C530, 530;
Ch. 137

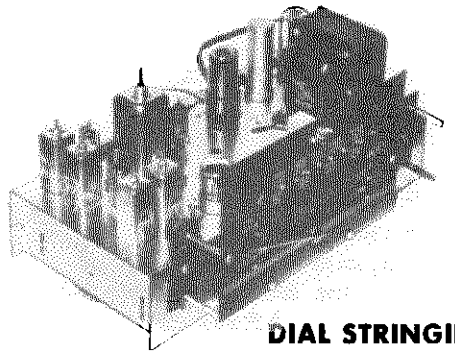

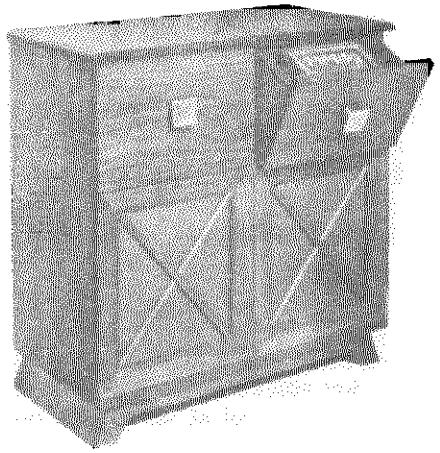

DIAL STRINGING

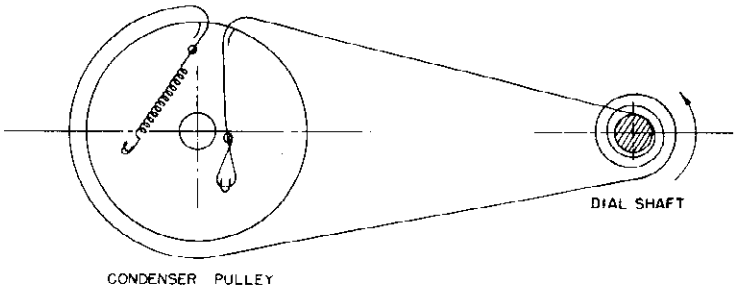

BLOCK DIAGRAM:

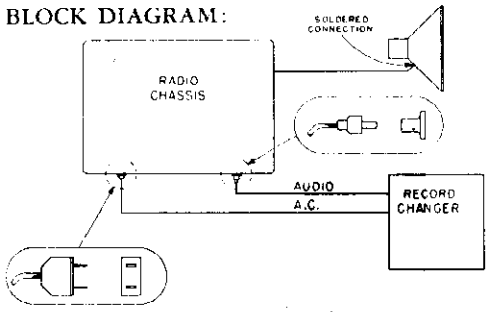

ELECTRICAL AND MECHANICAL DATA

Frequency Range	(AM) 535 KC to 1650 KC (FM) 88 MC to 108 MC
Intermediate Frequency	(AM) 455 KC, (FM) 10.7 MC
Power Supply	117 volts AC, 60 cycles
Output Impedance	3.2 ohms at 400 cycles
Power output (Undistorted)	3.5 watts
Power output (Maximum)	5 watts

Record Changer:

One of the following:
78 R.P.M. Webster Model 148
78 R.P.M. Webster Model 149
78 and 33⅓ R.P.M. Webster Model 246
78 and 33⅓ R.P.M. V.M. Corporation Model 400-D-3

TUBE COMPLEMENT

1	7F8	FM Oscillator—Converter	1	6AL5	FM Detector
1	6BE6	AM Oscillator—Converter	1	6AT6	AM Detector—AVC 1st Audio (AM-FM)
1	6BA6	AM-FM 1st IF Amplifier	1	6V6GT	Power Output
1	6BA6	FM 2nd IF Amplifier	1	5Y3GT	Rectifier

SOCKET VOLTAGES

Tube	Position	1	2	3	4	5	6	7	8	Band Switch
7F8	FM Osc.—Conv.	—2*	0	230	0	4	240	6.3 AC	0	FM
6BE6	AM Osc.—Conv.	—12*	0	0	6.3 AC	230	120	0	—	AM
6BA6	FM-AM IF	—0.8*	0	0	6.3 AC	230	95	1	—	FM
6BA6	FM 2nd IF	0	0	0	6.3 AC	230	85	1	—	FM, AM
6AT6	AM Det.- 1st AF	—1.5*	0	0	6.3 AC	—2.7*	0	100	—	AM
6AL5	FM Disc.	0	—1*	0	6.3 AC	—0.5*	NC	—0.5*	—	FM
6V6GT	AF Output	0	0	280	250	0	NC	6.3 AC	14	FM, AM
5Y3GT	Rect.	—	5V AC to pin 8	NC	260 AC	NC	260 AC	NC	300	FM, AM

All voltages measured to chassis unless otherwise noted.
DC voltages measured with 20,000 ohm/volt meter.
All voltages DC unless otherwise noted.

All measurements made with no signal input to receiver.
* Must be measured with VTVM with 100,000 ohm composition resistor in series with probe.

©John F. Rider

MODELS C530, 530;
Ch. 137

ALIGNMENT PROCEDURE

NOTES

1—Before beginning alignment, the pointer must be set at the highest mark on the dial with the tuning condenser fully open.

2—The AM section should be completely aligned before beginning the FM alignment.

3—The set should be allowed to warm up 15 minutes before aligning.

4—An output meter should be connected across the speaker voice coil for AM alignment. Keep the volume control at maximum on AM and use as low a signal input as possible for AM and FM.

5—For AM and FM tracking, bend plates of the variable (RF Section) as required.

6—In FM alignment, care must be taken to set the receiver oscillator frequency 10.7 MC *above* the incoming signal frequency.

7—The dummy antenna for FM alignment is two 150 ohm composition resistors; one in series with each generator lead.

ALIGNMENT CHART

STEP NO.	BAND SWITCH POSITION	SIGNAL GENERATOR	CONNECTION TO RECEIVER	DUMMY ANTENNA	DIAL SETTING	ADJUST	REMARKS
1	AM	455 KC Mod.	6BE6 Conv. Grid Pin 7	0.1 mfd	1600 KC	T2 Pri., Sec., T4 Pri., Sec.	Adjust for Max. output
2	AM	1600 KC Mod.	Ext. Antenna Clip	0.1 mfd	1600 KC	C19 BC Osc. Trimmer	Adjust for Max. output
3	AM	1400 KC Mod.	Ext. Antenna Clip	0.1 mfd	1400 KC	C4 BC RF Trimmer	Adjust for Max. output
4	AM	600 KC Mod.	Ext. Antenna Clip	0.1 mfd	600 KC	See Note 5	See Note 5
5	FM	10.7 MC CW	FM Ant. Terminals	0.1 mfd	107 MC	T1 Pri. & Sec., T3 Pri. & Sec.; T5 Pri. only	Tune for Max. reading, VTVM from point A to chassis. See Ratio Detector Alignment.
6	FM	10.7 MC CW	FM Ant. Terminals	0.1 mfd	107 MC	T5 Sec.	Tune for Zero reading, VTVM from resistor junction to point C. See Ratio Detector Alignment
7	FM	107 MC CW	FM Ant. Terminals	300 ohms See Note 7	107 MC	C6 FM Osc. Trimmer	Adjust for Max. with VTVM from point A to chassis. See Note 6.
8	FM	107 MC CW	FM Ant. Terminals	300 ohms	107 MC	C9 FM RF Trimmer	Adjust for Max. with VTVM from Point A to chassis.
9	FM	98 MC CW	FM Ant. Terminals	300 ohms	98 MC	See Note 5	Adjust for Max. with VTVM from Point A to chassis.
10	FM	88 MC CW	FM Ant. Terminals	300 ohms	88 MC	See Note 5	Adjust for Max. with VTVM from Point A to chassis.

RATIO DETECTOR ALIGNMENT

(T1 and T3 should be tuned before tuning T5.)

TUNING T5 PRIMARY

Locate the ratio detector test points A, B, and C on the schematic diagram. Solder two 100,000 ohm composition resistors in series from point "A" to chassis. Connect a VTVM from point "A" to chassis and feed 10.7 MC CW into the FM antenna terminals. Adjust T5 primary (bottom slug) for maximum reading, setting the generator output to give about one volt meter reading. (An insulated aligning tool should be used for this adjustment.)

TUNING T5 SECONDARY

Connect the VTVM probe to point "C" and the VTVM common or ground lead to the junction of the two 100,000 ohm resistors. Tune T5 secondary until the meter reading reverses polarity. Set the slug at this zero point.

CHECKING BAND WIDTH

Connect the signal generator to the grid of the 2nd FM IF tube. Set the generator to 100,000 microvolts at 10.7 MC CW. Shift the generator frequency above and below 10.7 MC and record the frequencies at which the maximum positive and negative meter readings are obtained. The difference between these two readings is the bandwidth of the ratio detector and should be 250 to 300 KC.

Remove the two 100,000 ohm resistors before beginning the FM RF alignment.

©John F. Rider

MODELS C530, 530;
Ch. 137

TUBE AND TRIMMER LOCATIONS

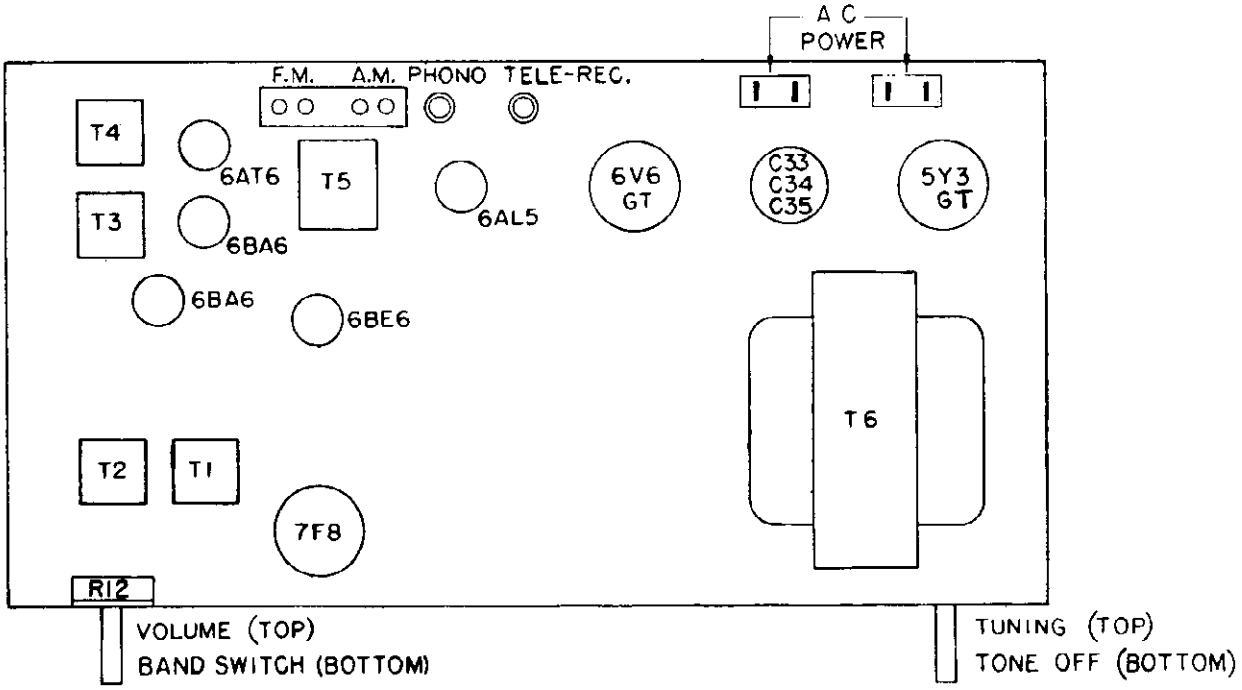

TOP VIEW OF CHASSIS

TUBE LOCATION

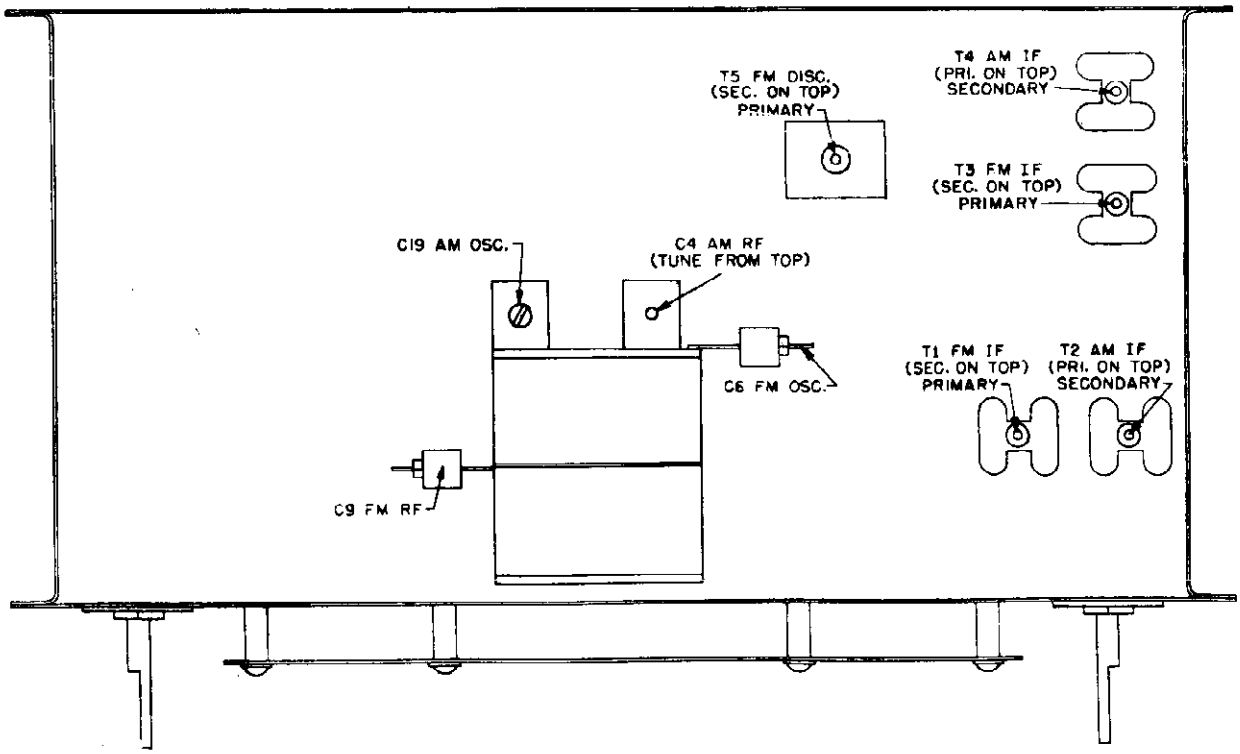

TRIMMER LOCATION—BOTTOM VIEW

©John F. Rider

MODELS C530, 530;
Ch. 137

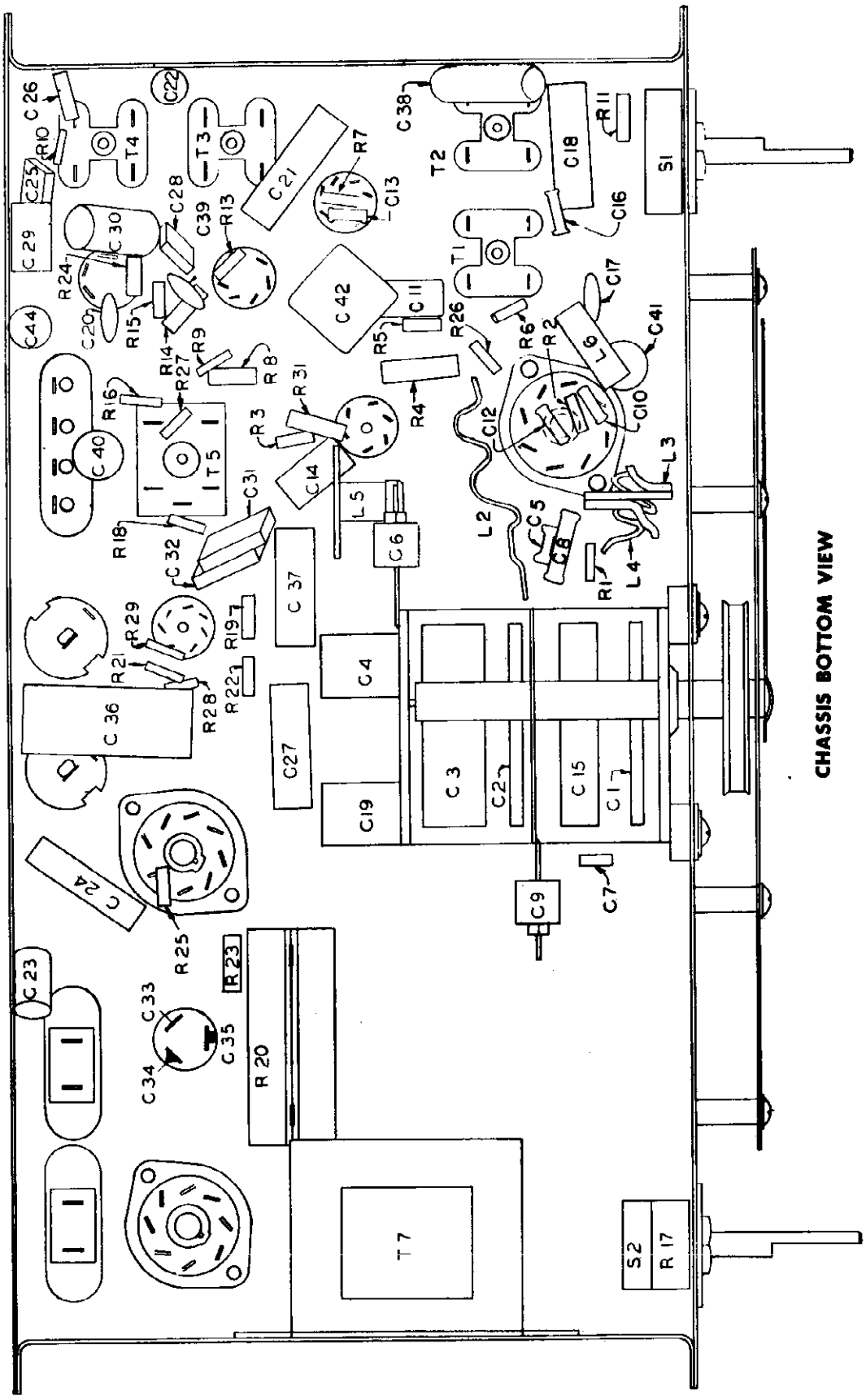

©John F. Rider

MODELS C530, 530;
Ch. 137

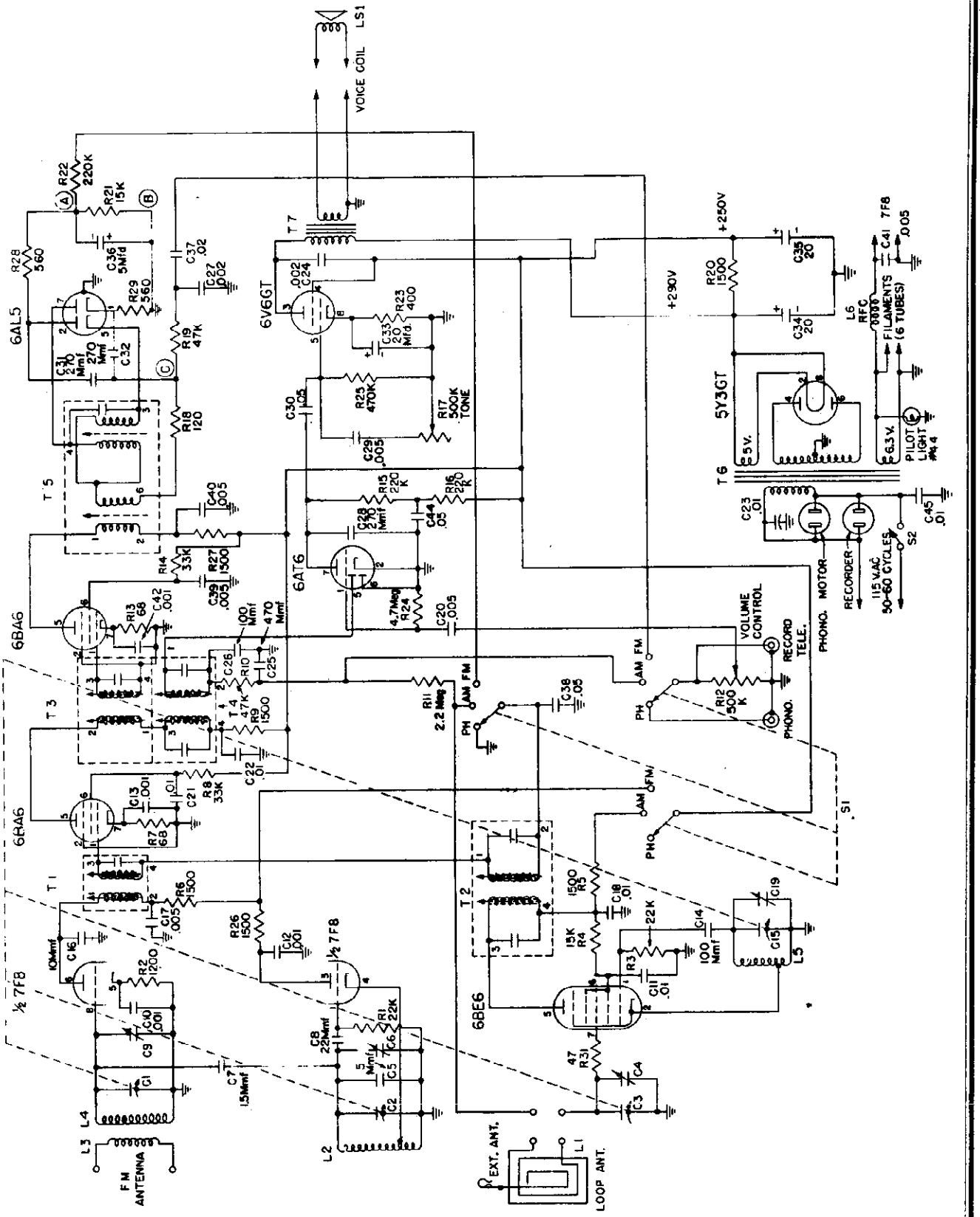

©John F. Rider

MODELS C530, 530;
Ch. 137

CHASSIS 137 PARTS LIST

Symbol	Description			Hoffman Part Nos.
C1, C2, C3, C15	4 Section Variable			4410
C4, C19	Trimmer (AM Section)			4313
C5	5 Mmf	±10%	Ceramic N750	4028
C6, C9	Trimmer (FM Section)			4318
C7	1.5 Mmf	±10%	Mica	4024
C8	22 Mmf	±10%	Ceramic N150	4021
C10, C12, C13, C42	1000 Mmf		Ceramic Hi-K	4025
C11, C18, C21, C22, C23	.01 Mfd	400V	Paper	4112
C14, C26	100 Mmf	±20%	Mica	4000
C16	10 Mmf	±10%	Ceramic	4027
C17, C20, C39, C40, C41	5000 Mmf		Ceramic Hi-K	4029
C24, C27	.002 Mfd	600V	Paper	4118
C25	470 Mmf	±20%	Mica	4003
C28, C31, C32	270 Mmf	±20%	Mica	4001
C29	.005 Mfd	600V	Paper	4102
C30, C44	.05 Mfd	400V	Paper	4101
C33	20 Mfd	25V	Electrolytic	4200
C34, C35	20 Mfd	450V	Electrolytic	
C36	5 Mfd	50V	Electrolytic	4209
C37	.02 Mfd	400V	Paper	4106
C38	.05 Mfd	200V	Paper	4100
R1, R3	22,000 Ohm	±20%	½W Carbon	4501
R2	1200 Ohm	±10%	½W Carbon	4553
R4	15,000 Ohm	±20%	1W Carbon	4539
R5, R6, R9, R26, R27	1500 Ohm	±20%	½W Carbon	4534
R7, R13	68 Ohm	±20%	½W Carbon	4524
R8, R14	33,000 Ohm	±20%	1W Carbon	4556
R10, R19	47,000 Ohm	±20%	½W Carbon	4504
R11	2.2 Meg	±20%	½W Carbon	4502
R12	.5 Meg Pot. (Volume Control)			4804
R15, R16, R22	.22 Meg	±20%	½W Carbon	4500
R17	.5 Meg Pot. W/switch (Tone Control)			4812
R18	120 Ohm	±10%	½W Carbon	4546
R20	1500 Ohm (W.W.)	±5%	6½W	4701
R21	15,000 Ohm	±20%	½W Carbon	4521
R23	400 Ohm	±10%	1W Carbon	4587
R24	4.7 Meg	±20%	½W Carbon	4544
R25	.47 Meg	±20%	½W Carbon	4506
R28, R29	560 Ohm	±10%	½W Carbon	4507
L1	Loop Antenna (AM)			5279
L2	Oscillator Coil (FM)			5247
L3	Antenna Primary (FM)			5258
L4	Antenna Secondary (FM)			5248
L5	Oscillator Coil (AM)			5282
L6	Filament Choke			5266
T1	1st FM IF Transformer			5284
T2	1st AM IF Transformer			5286
T3	2nd FM IF Transformer			5285
T4	2nd AM IF Transformer			5287
T5	Ratio Detector Transformer			5288
T6	Power Transformer			5012
T7	Output Transformer			5122
S1	Band Switch			6002
S2	On-Off Switch (Part of R17)			
	Dial			2217A
	Knob, Indicator (Specify Color)			3514
	Knob, Plain (Specify Color)			3510
	Plug, Phono			6203
	Pointer, Dial			518
	Socket, Loctal			6105
	Socket, Miniature			6118
	Socket, Octal			6103
	Socket, Phono			6121
	Socket, Pilot Lamp			6110
	Socket, AC Power			6108
	Spring, Dial Cable			9507
	Strip, Antenna Terminal			424

NOTE: In some cases the following substitutions have been made:
C24 is two .001 Mfd 600V in parallel.
C27 is two .001 Mfd 600V in parallel.
C42 is 1050 Mmf ±5% Mica.
R8 and R14 are each 47,000 ohm ±20% 1 Watt.
R23 is two 820 ohm ±10% ½ Watt in parallel.

©John F. Rider

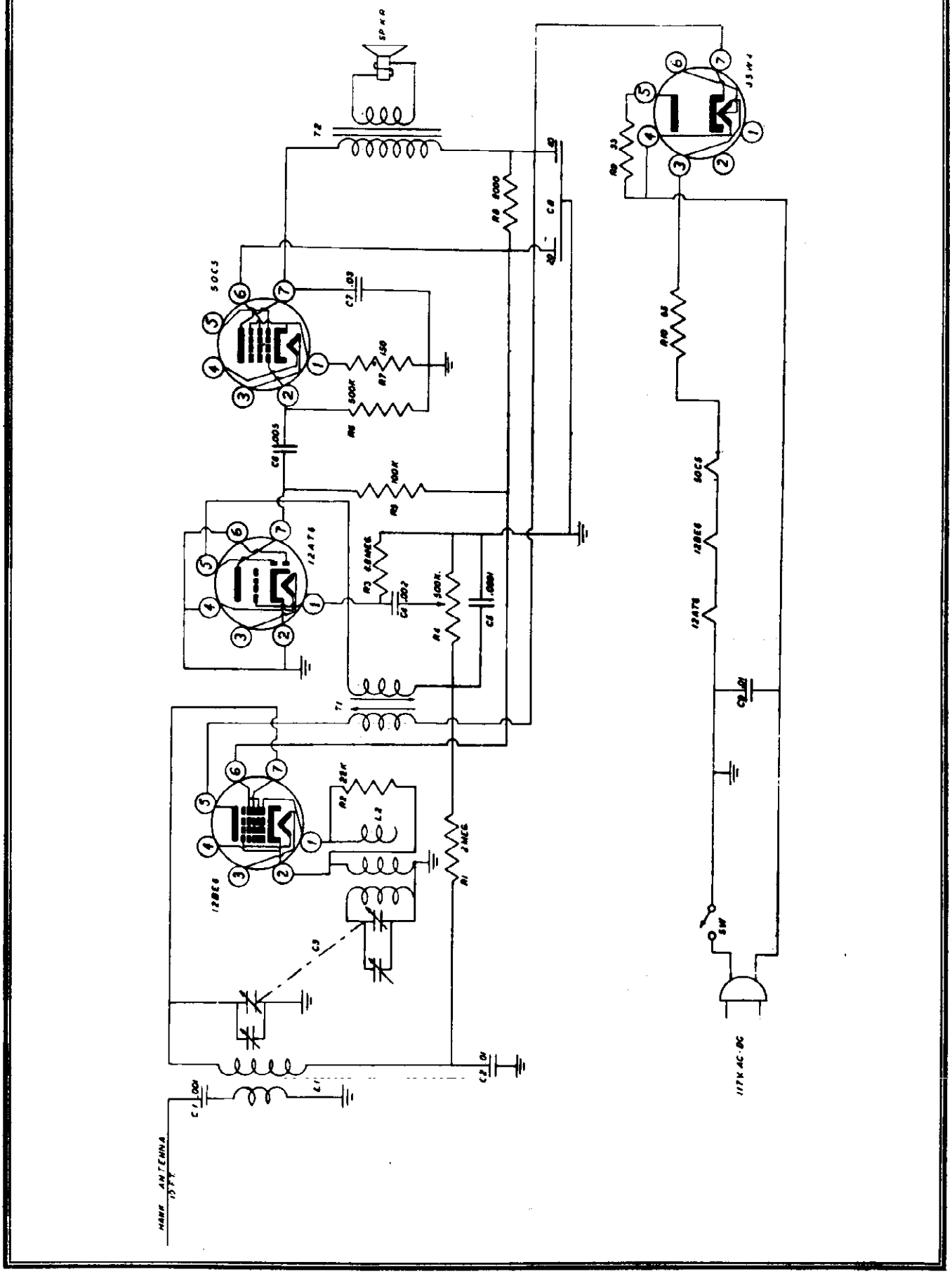

©John F. Rider

MODEL 501

ANTENNA	GEN. COUPLING	GEN. FREQ.	RADIO DIAL	OUTPUT METER	ADJUST
1. .02mfd	Hi side to front section of tuning condenser	455 kcs	closed max. cap.	across V.C.	T1 bottom slug first for max. output T1 top slug for max. output.
2. 50mmf	Ant. coil Ant. input Remove bank	545 kcs	closed max. cap.	across V.C.	adjust osc. trimmer (front section tuning condenser) for max. output
3. 50mmf	same as No. 2	1500 kcs.	1500 kcs.	across V.C.	adjust rear section tuning condenser trimmer for uniform output between 545kc and 1500 kc

Circuit Location	Part No.	Description
C1		Condenser, paper tubular, .001mfd., 400v
C3	29A002	Condenser, variable 2 gang
C2		Condenser, paper tubular, .01 mfd., 400v
C4		Condenser, paper tubular, .002mfd., 400v
C5		Condenser, mica, .0001mfd., 600v
C6		Condenser, paper tubular, .005 mfd., 400v
C7		Condenser, paper tubular, .03 mfd., 400v
C8	31E003	Condenser, tubular cardboard, 40X20mfd, 150v
C9		Condenser, paper tubular, .01 mfd., 400v
R1		Resistor, composition, 2 meg., ½ watt
R2		Resistor, composition, 22k., ½ watt
R3		Resistor, composition, 6.8 meg., ½ watt
R4	26G008	Resistor, variable, 500k ohms
R5		Resistor, composition, 100k., ½ watt
R6		Resistor, composition, 500k., ½ watt
R7		Resistor, composition, 150 ohms, 1 watt
R8		Resistor, composition, 2k., 1 watt
R9		Resistor, composition, 33 ohms, ½ watt
R10		Resistor, wire wound, 65 ohms, 5 watts
L1	35D004	Coil, antenna
L2	35C002	Coil, oscillator
T1	18A005	Transformer, I.F. 455 KCS.
T2	15D001	Transformer, audio output
SP'K'R	19H100	Speaker, 4" P. M.
12BE6		Tube, 12BE6
12AT6		Tube, 12AT6
50C5		Tube, 50C5
35W4		Tube, 35W4
	5D004	Knob, pointer, walnut, split spline
	5D005	Knob, pointer, ivory, split spline
	5D006	Knob, walnut, split spline
	5D007	Knob, ivory, split spline
	11G007	Cover, back, chipboard
	40B011	Cabinet, model 1010 walnut
	40B010	Cabinet, model 1010 ivory

©John F. Rider

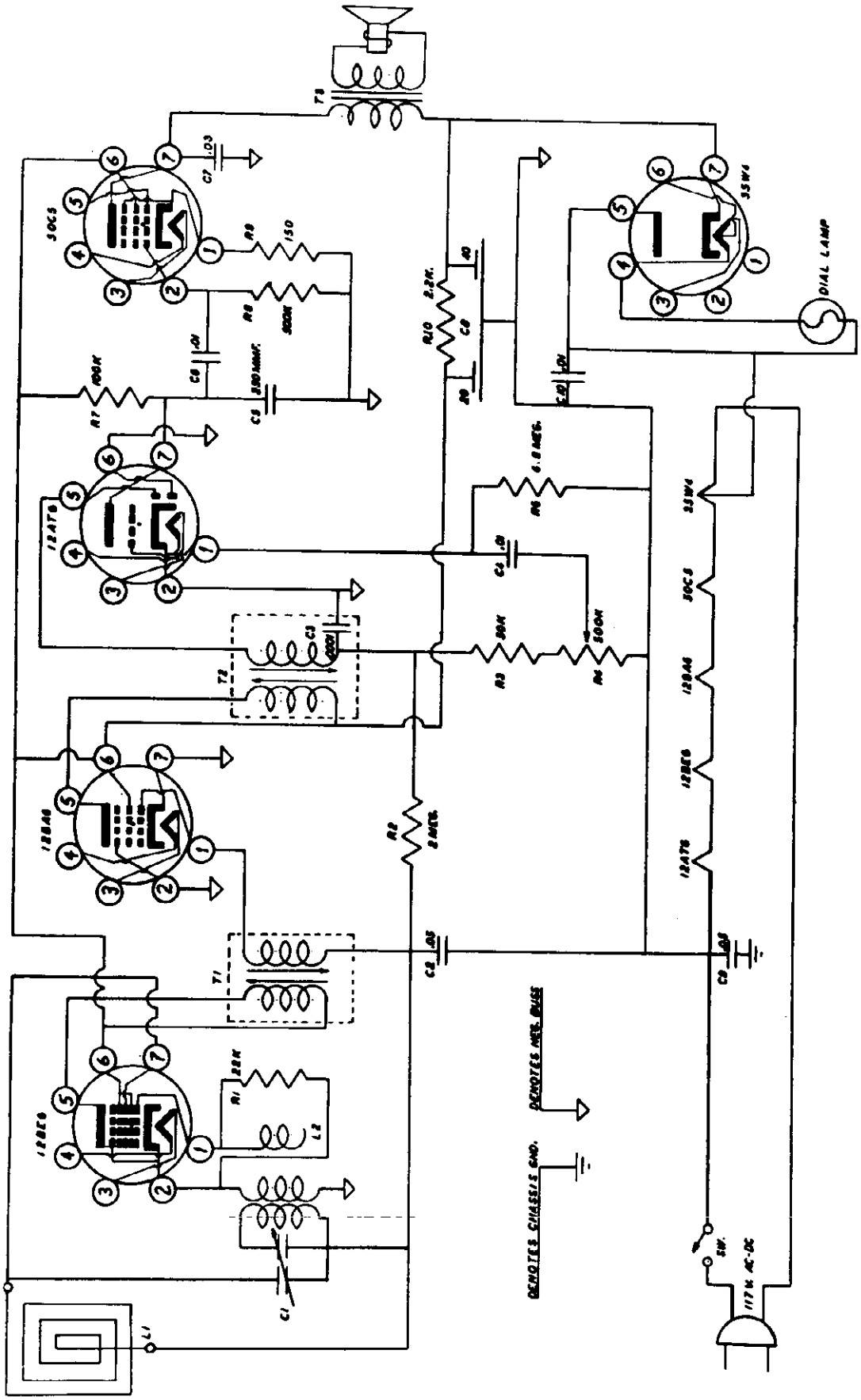

©John F. Rider

MODEL 503

	ANTENNA	GEN. COUPLING	GEN. FREQ.	RADIO DIAL	OUTPUT METER	ADJUST
1.	.02mfd.	Connect gen. hi side to osc. section of tuning condenser. Connect gen. gnd. to radio neg. buss.	455 kcs.	open min. cap.	across V.C.	Adjust T2 top & bottom slug for max output. Adjust T1 top and bottom slugs for max. output
2.	50mmf	Connect gen. Hi side to antenna lead. (rear section tuning condenser) Connect gen. gnd. to radio neg. buss.	1400 kcs.	1400 kcs.	across V.C.	Tune osc. trimmer for max output.
3.	50mmf	same as No. 2.	600 kcs.	600 kcs.	across V.C.	Adjust for uniform output between 1400 kc and 600 kc.

Circuit Location	Part No.	Description
R1		Resistor, composition, 22k, ½ w.
R2		Resistor, composition, 2 meg., ½ w.
R3		Resistor, composition, 50k, ½ w.
R4	26G009	Resistor, variable, 500k, w/switch
R6)		
C4)	40L103	Caprister, 6.8 meg., ½w. .01 mfd, 400v
R7&C5	40L101	Caprister, 100k, ½ w., 250mmf., 400v.
R8&C6	40L102	Caprister, 500k, ½w., .01 mfd., 400v.
C1	29A003	Condenser, variable 2 gang
R9		Resistor, 150 ohms, 1 watt
R10		Resistor, composition, 2.2k., 1 watt
C5-C9		Condenser, paper tubular, .05mfd., 400v.
C3		Condenser, ceramic, 100mmf., 400v., (inT2)
C7		Condenser, paper tubular, .03mfd., 400v.
C8	31E003	Condenser, electrolytic, 40X20mfd, 150v.
C10		Condenser, paper tubular, .01mfd., 400v.
L1	35D003	Loop, antenna
L2	35C001	Coil, oscillator, with capacity winding 50mmf
T1	18A005	Transformer, I.F. 455 kc.
T2	18A006	Transformer, I.F. 455 kc. with 100mmf. diode filter
T3	15L001	Transformer, audio output
S[illegible]KR	19H101	Speaker, 4" P.M.
Dial Lamp		Lamp, dial. miniature bayonet No. 47
Sw.		Switch, off-on, on vol. cotrol R4
	40B008	Cabnet, plastic, walnut
	40B009	Cabinet, plastic, ivory
	2R100	Pointer, dial
	22103	Glass, dial plate with calibration
	5D008	Knob, push on, split knurl
1 12BE6		12BE6
12BA6		1 12BA6
12AT6		12AT6
		50C5
50C5		35W4
35W4		
	11G006	Cover, back, chipboard

©John F. Rider

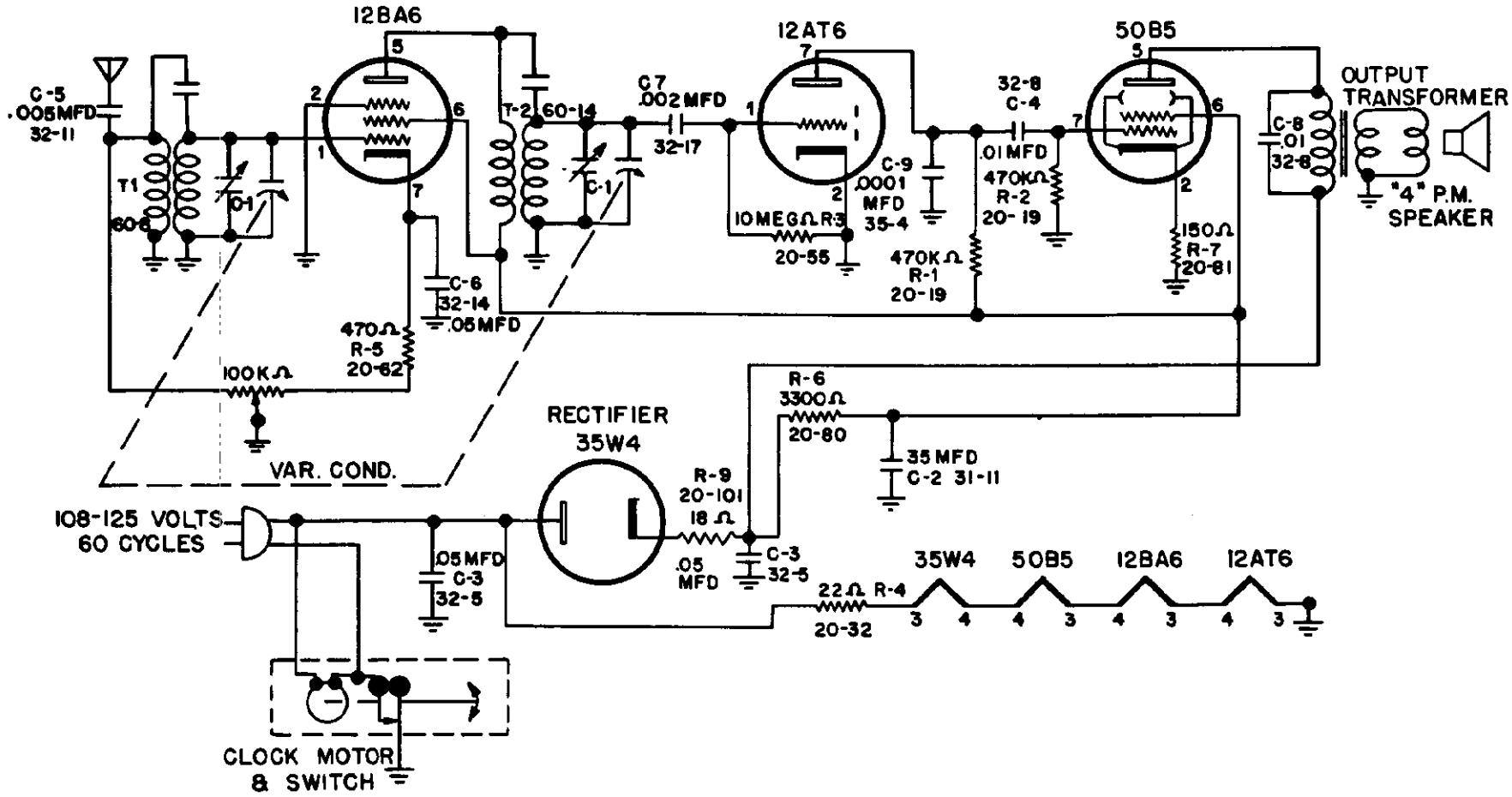

108-125 VOLTS, 60 CYCLES
RANGE 540-1650 KC

MODEL 920A

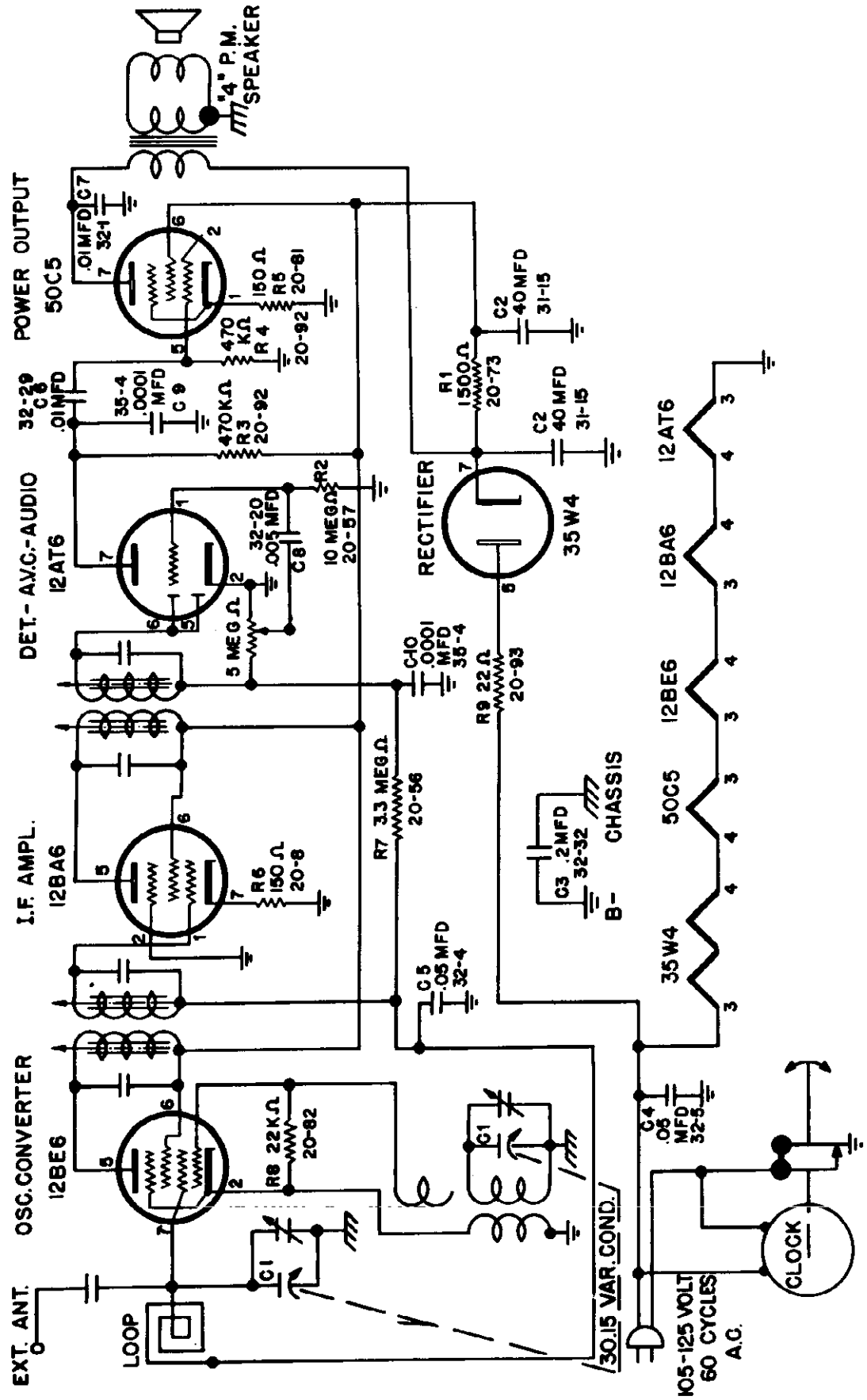

©John F. Rider

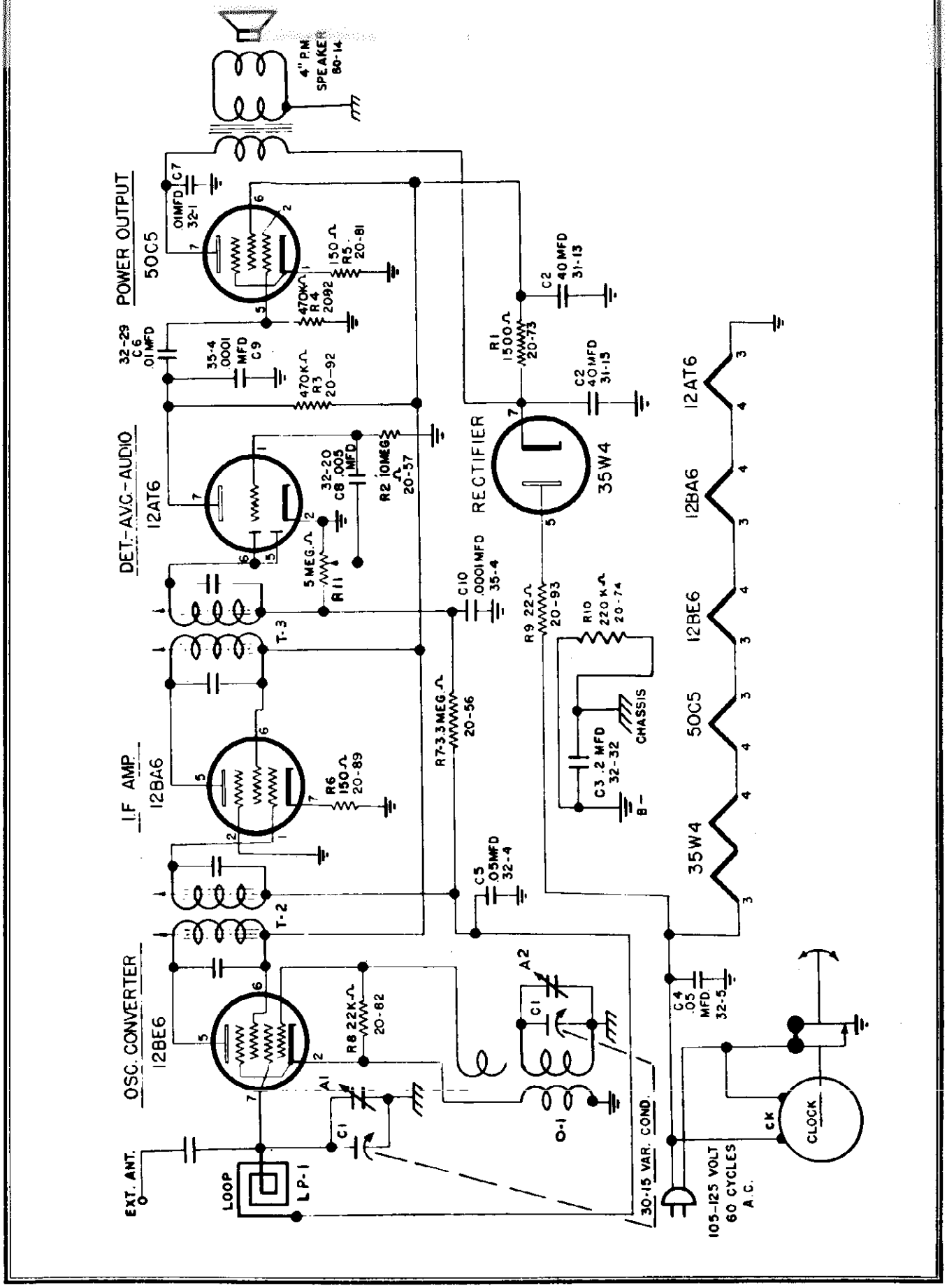
4" P.M. SPEAKER 80-14
POWER OUTPUT
50C5
.01MFD C7 32-1
150Ω R5 20-81
470Ω R4 2092
C2 40 MFD 31-13
32-29 C6 .01MFD
35-4 .0001 MFD C9
470K Ω R3 20-92
R1 1500Ω 20-73
C2 40MFD 31-13
DET.-AVC.-AUDIO
12AT6
32-20 C8 .005 MFD
R2 10MEG Ω 20-57
RECTIFIER
35W4
5 MEG. Ω R11
C10 .0001MFD 35-4
R9 22Ω 20-93
R10 220K Ω 20-74
T-3
R7-3.3 MEG. Ω 20-56
C3 .2 MFD 32-32
CHASSIS
B-
I.F. AMP
12BA6
R6 150Ω 20-89
C5 .05MFD 32-4
T-2
OSC. CONVERTER
12BE6
R8 22K Ω 20-82
A2
C1
A1
C1
O-1
EXT. ANT.
LOOP
LP-1
30-15 VAR. COND.
C4 .05 MFD 32-5
105-125 VOLT 60 CYCLES A.C.
CK
CLOCK
12AT6
12BA6
12BE6
50C5
35W4

© John F. Rider

MODELS 921, 935, 936

ALIGNMENT PROCEDURE

- Output meter across voice coil (3.2 ohm)
- Volume control at maximum for all adjustments.
- Align for maximum output. Reduce input as needed to keep output near 1.28 volts (0.5 watt).

SIGNAL GENERATOR				TUNER SETTING	ADJUST TRIMMERS TO MAXIMUM OUTPUT (in order shown)
Frequency	Coupling Capacitor	Connections to Receiver	Ground Connection		
455 kc	0.1 mfd.	12BE6 grid	B—	Rotor full open (Plates out of mesh)	Input and output slugs of IF cans
1650 kc	0.1 mfd.	12BE6 grid	B—	Rotor full mesh (Plates out of mesh)	Oscillator trimmer A2
1500 kc		Radiating Loop		1500 kc*	Antenna trimmer A1

* Seven markings on the dial bracket represent respectively 550 kc, 600 kc, 700 kc, 900 kc, 1100 kc, 1400 kc, and 1600 kc reading from left to right. These points are to be used for the alignment of the receiver.

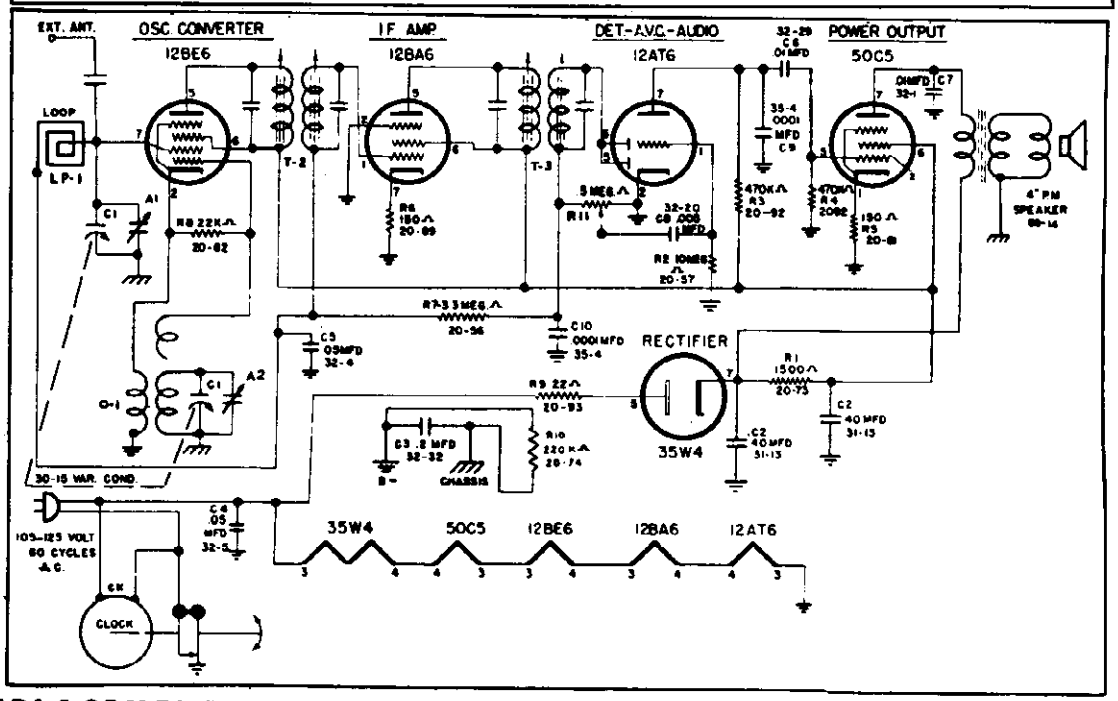

REPLACEMENT PARTS LIST

Ref. No.	Part No.	DESCRIPTION
		CAPACITATORS
C1	30-15	Variable Condenser, 2 gang
C2	31-13	40 mfd.—40 mfd., 150 volt dual electrolytic condenser
C3	32-32	.2 mfd., 200 volt, paper
C4	32-5	.05 mfd., 400 volt, paper
C5	32-4	.05 mfd., 200 volt, paper
C6	32-1	.01 mfd., 400 volt, paper
C7	32-1	.01 mfd., 400 volt, paper
C8	32-20	.005 mfd., 600 volt, paper
C9	35-4	.0001 mfd., 500 volt, mica
C10	35-4	.0001 mfd., 500 volt, mica
		RESISTORS
R1	20-73	1500 ohm, 1 watt 20%
R2	20-57	10 megohm, ¼ watt 20%
R3	20-92	470,000 ohm, ¼ watt 20%
R4	20-92	470,000 ohm, ¼ watt 20%
R5	20-81	150 ohm, ½ watt 20%
R6	20-89	150 ohm, ¼ watt 20%
R7	20-56	3.3 megohm, ¼ watt 20%
R8	20-82	22,000 ohm, ¼ watt 20%
R9	20-93	22 ohm, ½ watt 20%
R10	20-74	220,000 ohm, ¼ watt 20%
R11	50-15B	½ meg. volume control with switch
		COILS AND TRANSFORMERS
O-1	60-9	Oscillator coil
T-2	61-11	Input IF transformer
T-3	61-11	Output IF transformer
LP-1	62-15	Loop antenna
		MISCELLANEOUS
80-14	80-14	4 inch P.M. speaker with output transformer
	122-19	Selector knob
	122-15	Volume knob
	120-33	Cabinet—walnut
CK	140-6	Clock

©John F. Rider

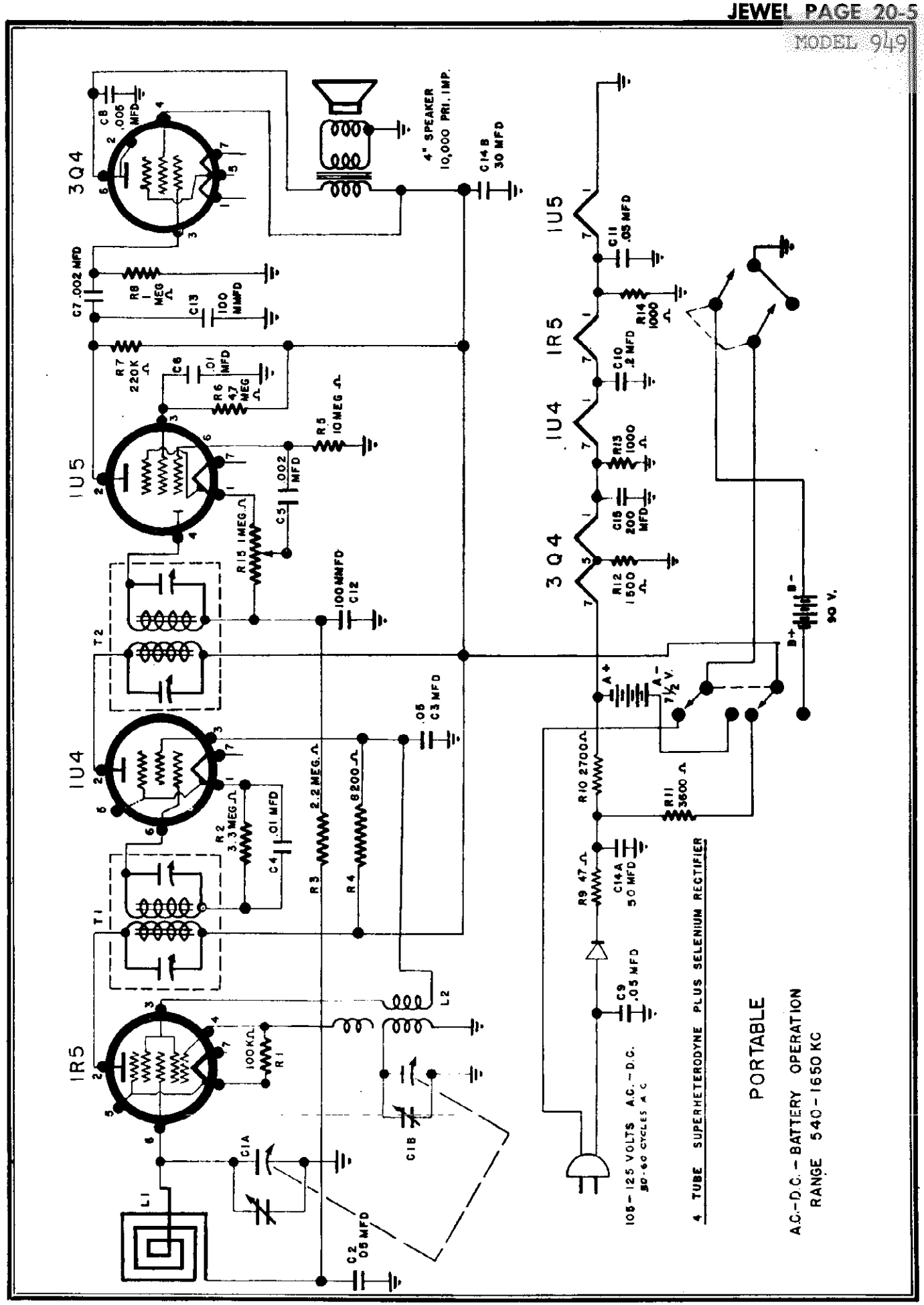
3Q4
IU5
IU4
IR5
4" SPEAKER
10,000 PRI. IMP.
C14B 30 MFD
C8 .006 MFD
C7 .002 MFD
R8 1 MEG Ω
C13 100 MMFD
R7 220K Ω
C6 .01 MFD
R6 47 MEG Ω
R5 10 MEG Ω
C5 .002 MFD
R15 1 MEG Ω
100 MMFD C12
T2
T1
.05 C3 MFD
R2 3.3 MEG Ω
C4 .01 MFD
R3 2.2 MEG Ω
R4 8200 Ω
L2
100 KΩ R1
C1A
C1B
L1
C2 .05 MFD
C11 .05 MFD
R14 1000 Ω
C10 .2 MFD
R13 1000 Ω
C15 200 MFD
R12 1500 Ω
A+
A- 1½ V.
B+
B- 90 V.
R10 2700 Ω
R11 3600 Ω
R9 47 Ω
C14A 50 MFD
C9 .05 MFD
105-125 VOLTS A.C.-D.C.
50-60 CYCLES A.C.
4 TUBE SUPERHETERODYNE PLUS SELENIUM RECTIFIER
PORTABLE
A.C.-D.C.-BATTERY OPERATION
RANGE 540-1650 KC

© John F. Rider

MODEL 955

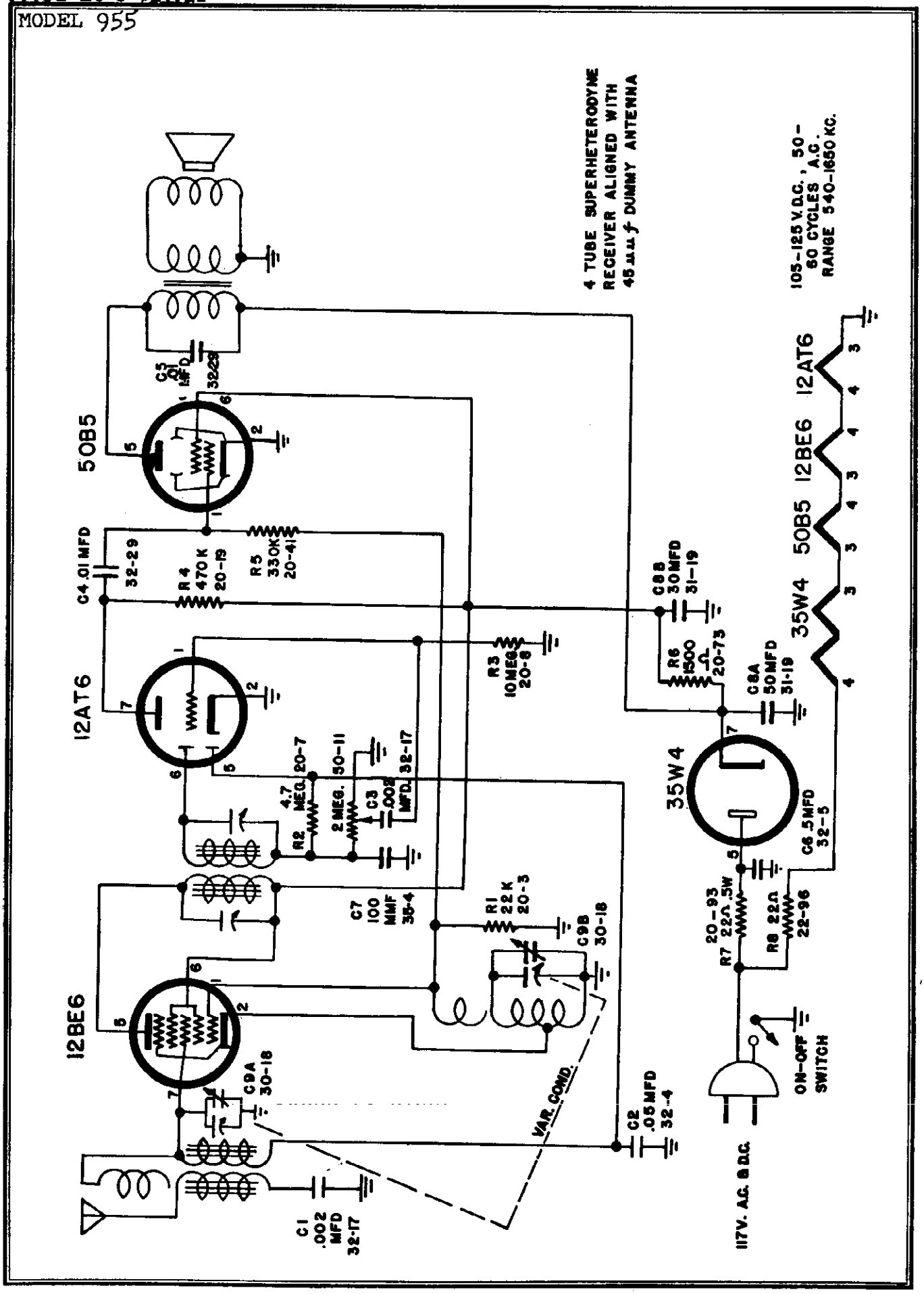

©John F. Rider

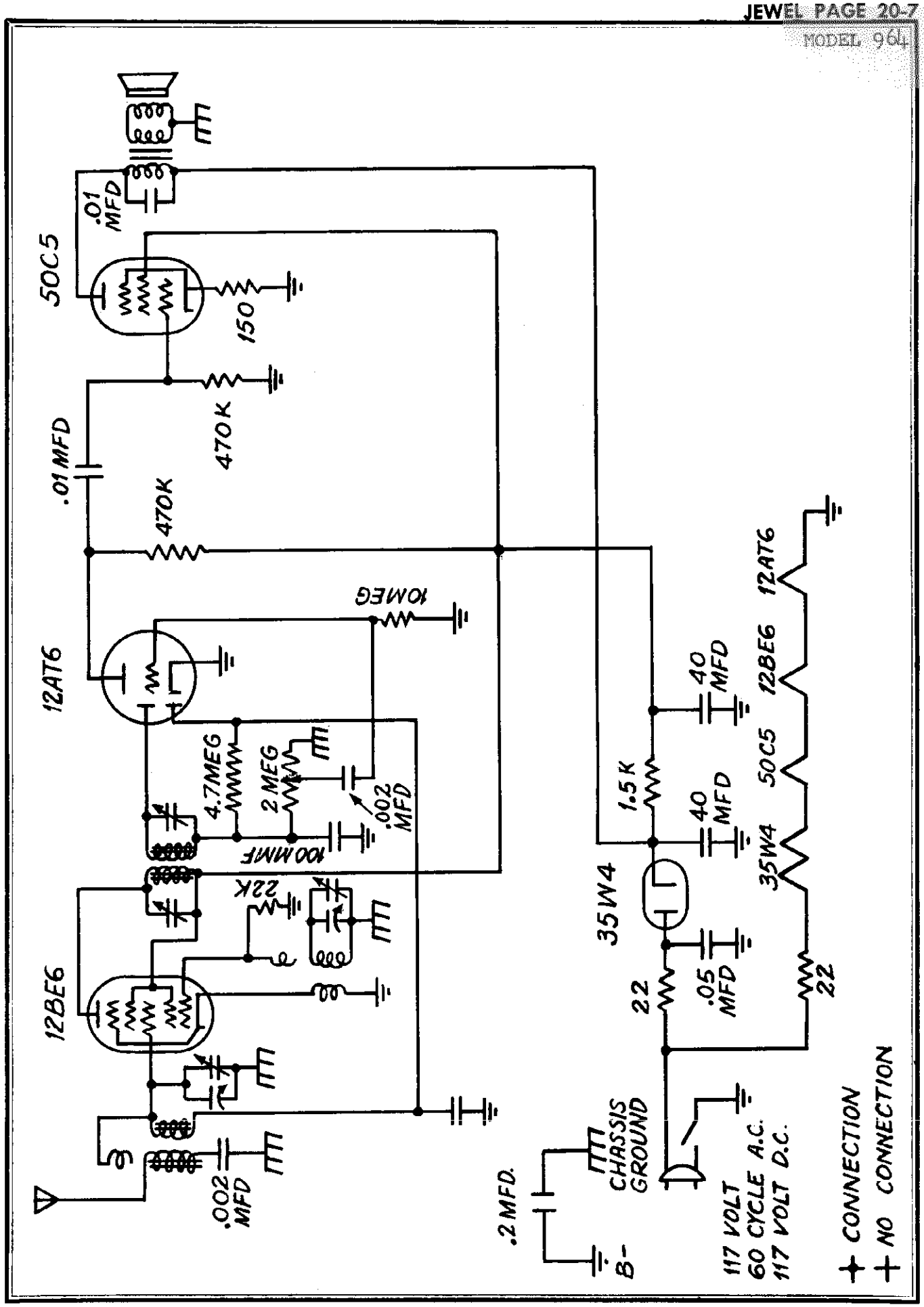
50C5
.01 MFD
150
470K
.01 MFD
470K
10MEG
12AT6
4.7MEG
2 MEG
.002 MFD
100MMF
22K
12BE6
.002 MFD
.2 MFD.
CHASSIS GROUND
B-
117 VOLT 60 CYCLE A.C.
117 VOLT D.C.
35W4
1.5K
40 MFD
40 MFD
12BE6
12AT6
50C5
35W4
22
.05 MFD
22
+ CONNECTION
+ NO CONNECTION

© John F. Rider

MODEL 970

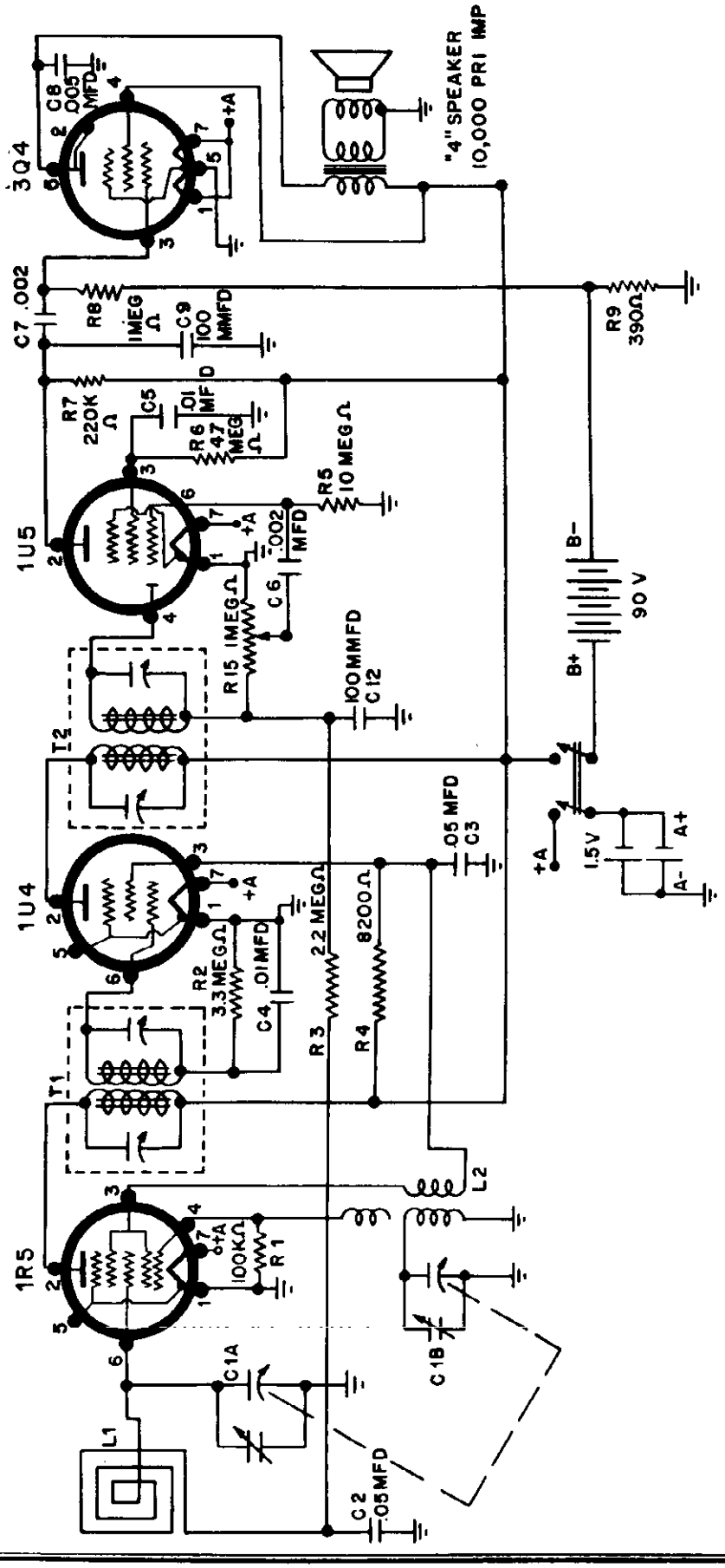

©John F. Rider

MODEL 980

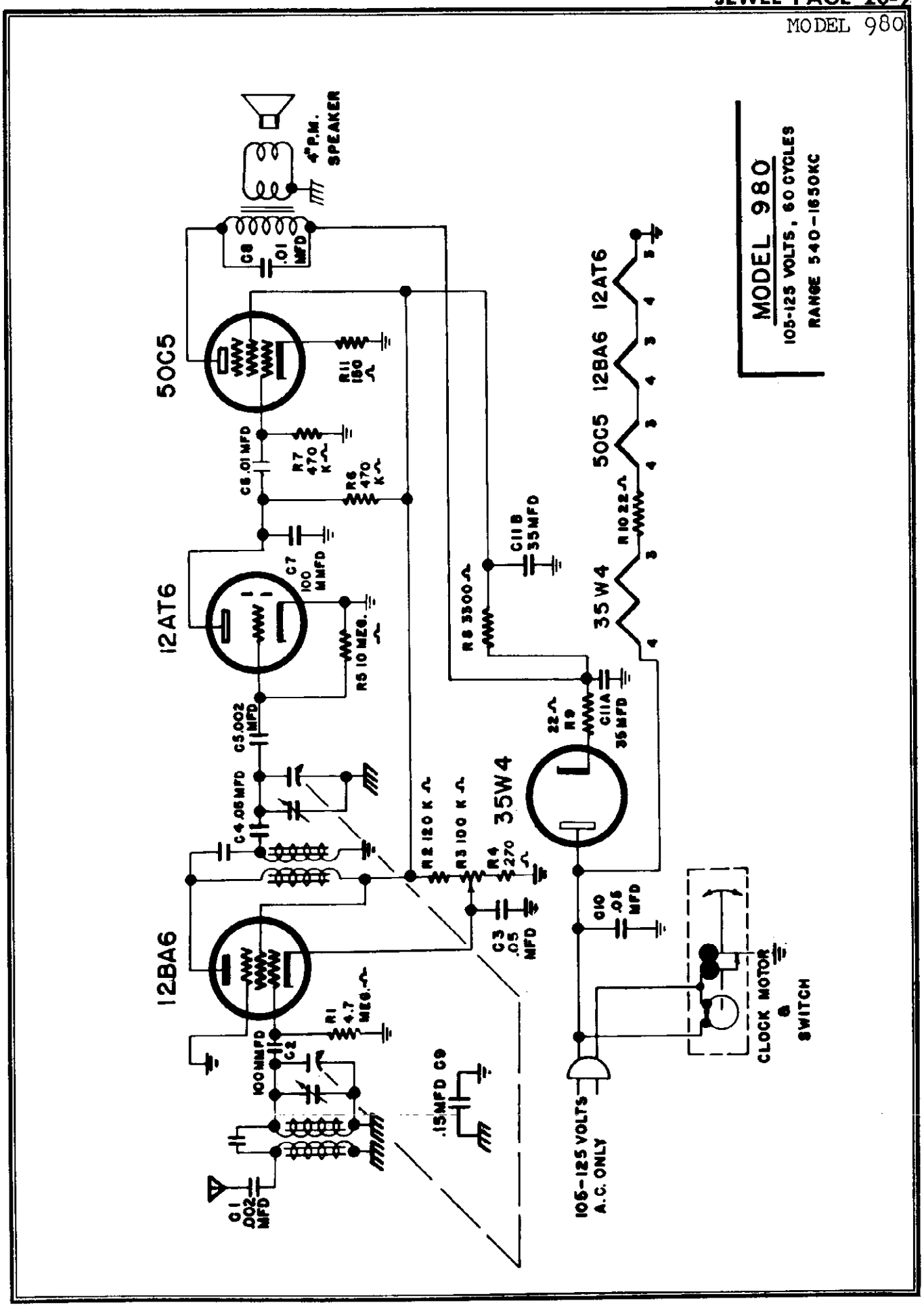

©John F. Rider

MODELS 6A47WT,
6A47WTR, 6AWC2, 6AWC3

INSTALLATION

YOUR RADIO IS DESIGNED FOR 110 TO 120 V. ONLY.

Installing The Outside Antenna.

The built in loop antenna on your Radio is highly efficient for the reception of local or nearby stations on the broadcast band. Short-wave reception will require some sort of an antenna connected to the set -- 5 to 15 ft. of wire stretched on the floor and connected to one of the antenna clips.

However, in locations where reception with the built in loop antenna is not satisfactory, a good outside antenna should be installed. The total length of the outside antenna, including the lead-in, should be from 50 to 80 ft. for good operation, and it should be as high as possible. Keep the antenna away from metallic objects such as other wires, guttering, grounded fire escapes, etc.

When the antenna is connected to a receiver, the antenna trimmer on the back of the chassis base must be readjusted. To do this, connect the antenna to one of the antenna terminals in the rear of the set; tune in a weak station near 600 kc. (60 on the dial); and adjust the trimmer screw with a screw driver until the signal is loudest. Antennas shorter than about 30 ft. should be connected to the SHORT Ant. clip; those much longer than this will need to be connected to the LONG Ant clip. If in doubt which to use, try both adjusting the trimmer for each, and use the connection which gives the best performance.

A good ground connection should always be provided when an outside antenna is used, and sometimes it is useful in reducing noise even when no antenna is connected to the set. Connect a wire from the GND clip in the rear of the receiver to a convenient water pipe, radiator, or conduit. If none of these are available, a wire may be run to a metal stake or pipe driven into the ground to a distance of 4 to 6 ft.

PREPARing Record Changer For Operation.

The record changer has been mounted tightly to the cabinet shelf (or drawer bottom in the Console Model) to prevent damage in shipping. A string tied around the needle arm post holds the drawer closed in the Console Model. Cut this string BEFORE trying to open the drawer. Before attempting to use the phonograph, loosen the three mounting bolt nuts on the UNDER SIDE of the shelf or drawer until the record changer is floating on its shock absorbers. (These mounting bolts are located on top of the rectangular base.) Now, remove the two rubber bands that hold the pickup arm secure and remove the cardboard holder. Remove the cardboard disc from the turntable. Finally, remove the needle guard from the pick-up arm by grasping the guard with your thrum and forefinger at the rounded ends and pulling firmly but gently downward.

Operation.

Broadcast Band (535 - 1620 Kilocycles); The broadcast band is calibrated in channel numbers. Add a zero to the dial number to get the kilocycle number.

Short-Wave Band (9 to 15.6 Megacycles) ; The short-wave band is calibrated in megacycles.

©John F. Rider

MODELS 6A47WT,
6A47WTR, 6AWC2, 6AWC3

Tone Control and Phono-Radio Switch:

Turning the knob all the way to the right throws a switch which cuts out radio reception and connects the phonc-jack on the rear of the chassis base. Phonograph records may then be played through Model 6A47WT by connecting any record player to this jack. To restore radio reception, turn the tone knob all the way to the left to throw the switch back to the radio portion.

Band Switch:

This knob has two positions. The position to the right (SW) switches the tuning to the short-wave band. The position to the left (BC) provides reception on the regular broadcast band.

SERVICE DATA

Stringing the Dial Drum.

1. Turn the gang condenser to FULL CLOSED position.
2. Attach the looped end of the line cord assembly (Part #WCA103) to lug "D" as shown in the diagram.
3. String the cord through the opening on the rim of the pulley, down behind the dial and under the tuning shaft.
4. Take four turns around the shaft in a clockwise direction as viewed from the front of the chassis, progressing outward from the chassis. (Check to be sure that none of the turns lie on top of one another to avoid sloppy tuning).
5. Continue stringing the cord from the tuning shaft up to and around the small pulley "C" at the upper left hand corner of the dial bracket (as viewed from the front of the chassis). In going from the shaft to pulley "C", be sure to lead the cord between the bracket mounting leg and the tone control shaft.
6. Now, string the cord along the upper edge of the dial bracket to pulley "B" at the upper right hand corner of the bracket. (As the cord passes along the top of the dial, be sure to thread it through the opened prongs on the dial pointer.)

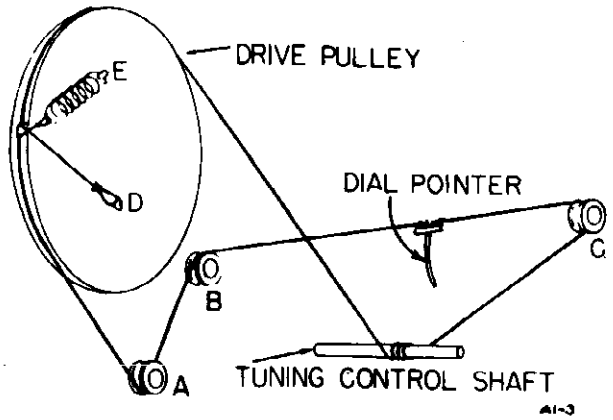

7. String the cord over the pulley "B" downward around pulley "A" (at the lower right hand corner of the chassis as viewed from the front), up through the opening on the rim of the dial pulley, and hook to the tension spring which has been hooked over lug "E" on the pulley.

©John F. Rider

The stringing is now completed. To fasten the pointer to the cord:

1. With the gang condenser still in CLOSED POSITION, slide the pointer to the last dot at the left hand end of the BC band (as viewed from the front of the chassis).
2. Pull the cord out from the prongs in the pointer and wrap a small piece of 1/4" tape around it at the point where the pointer pronts come.
3. Re-insert, and bend the two end prongs backward over the tape and middle prong forward. This fastens the pointer securely to the cord in the correct position, completing the stringing of the dial.

STRINGING THE TUNER

In order to string the tuner, remove tuner assembly from the chassis and remove the dial drum from the condenser shaft with a soldering iron. In doing this, it is important to note the position of the dial drum relative to the condenser plates, in order to reassemble properly.

Part #WCA102 --cord and core assembly is used for stringing the tuner. Proceed as follows:

1. Remove the S.W. coil from the fuse clip brackets.
2. Insert the S.W. coil as shown in the diagram, attaching the tuner spring to loop "E" and allowing the spring to lie loose until it is to be stretched around the pulleys and connected to the right hand hook of the B.C. core.
3. Replace the S.W. coil in the fuse clips in the approximate position shown in the diagram.
4. Rotate the gang condenser to FULL OPEN position (counter-clockwise looking from above as in the diagram).
5. Pull the core by means of the cord fastened to the left hand hook, until the left end of the core is exactly 1/4" from the first tooth on the larger radius of the cam (tooth "A" with cam rotated 180° from position shown on the diagram).
6. Proceed with the stringing as shown in the diagram, making sure that the cord is not unduly stretched or left loose between any of the teeth on the cam.

When the stringing has been completed around the cam:

7. Lay the B.C. core, which has been attached to the other end of the cord, on the bracket and remove the BC coil from the clips that hold it.
8. Insert the B.C. core in the coil form and push it through (with a small wire) until the bare hook comes into view at the other end.
9. Replace the B.C. coil in the approximate position shown on the diagram.
10. Recheck the gang--it should be in FULL OPEN position.
11. Grasp the tuner shaft firmly to prevent it from rotating. String the cordloop with the spring attached, from the right end of the S.W. core around pulley "B" only. Hook the spring to the right hand hook on the B.C. core. (The spring should be barely accessible at the right end of the B.C. coul.)
12. Release the gang condenser (being sure it is still in FULL OPEN position), and stretch the spring around the second pulley "C". Be careful not to damage the spring during this operation.
13. Adjust the B.C. coil to its correct position by sliding the coil to a point 1 1/4" from the right-hand end of the B.C. core to the beginning of the coil winding. The tuner is now strung and ready for adjustment of the S.W. coil position.

©John F. Rider

MODELS 6A47WT,
6A47WTR, 6AWC2, 6AWC3

Turn the gang condenser to its FULL CLOSED position. Insert a piece of wire which has been marked 5/8" from one end into the coil form until it hits the S.W. core. The distance from the left end of the coil form to the left end of the core should be 5/8". If this measure is not within 1/32", there has been some error made during the stringing procedure or the parts are defective. Carefully review the steps taken. If no apparent error is in evidence and the measure does not fall within this tolerance, get in touch with your Lytle & Canon firm who will furnish you a complete tuner sub-assembly already strung.

If the final measure was within the tolerance, the tuner is properly strung and ready to be replaced on the chassis base. Solder the dial drum back on, making sure that you replace it in the same position with respect to the gang plates as it originally was.

WARNING: When removing the B.C. and S.W. coils from the fuse clips, be careful not to break the fine wires or loosen any soldered connections.

NOTE: The S.W. core is distinguished from the B.C. core in that the S.W. core has a somewhat lighter color and a more satiny surface.

To remove the tubes in the 6A47WTR model it is necessary to remove the record changer first. To do this, remove the three mounting screws in the base of the changer. Disconnect all "plug-ins" as described. Lift the record changer out of the cabinet. Next, remove the three screws holding the metal cover in front of the changer and remove this cover. The tubes should now be easily accessible without removing the set from the cabinet. If not, proceed as described in the preceeding paragraph and remove the chassis from the cabinet.

ALIGNMENT PROCEDURE

I.F. Alignment

Whenever one or both I.F. transformers (T3 and T4) are changed, or the wiring associated with these transformers or with the 6SA7 or 6SF7 tubes is disturbed, it is imperative to realign the I.F. transformers. Proceed as follows:

1. Connect an output meter, a.c. voltmeter, or other suitable instrument across either primary or secondary of the output transformer, T5.
2. Turn the volume control to its maximum (clockwise); and turn the bandswitch to BC (counterclockwise).
3. Connect a signal generator from the input grid (pin 8) of the 6SA7 tube to ground, and feed in a modulated signal at 455 kc., using as small an input signal as possible yet maintaining a convenient deflection on the output meter.
4. Adjust each of the 4 screws on top the I.F. transformers for maximum output, at the same time decreasing the input from the signal generator to be sure to get a true maximum reading.
5. When this is completed, the I.F. transformers are in alignment.

R.F. Alignment:

When service operations of any sort have been performed on the antenna coil, interstage coils (T1, T2), loop antenna, gang condenser-oscillator assembly, 6SG7 tube, or circuits associated with any of these, it is important to realign the R.F. circuits for best performance.

©John F. Rider

Shortened Alignment Procedure

If the service operations have not involved the gang condenser-oscillator assembly or its associated capacitors (C18, C19, C13, C14, a shortened procedure may be used, as follows:

1. Connect the output meter and check the I.F. alignment.
2. Using broadcast stations as a guide, check the calibration of the broadcast and short-wave bands. (If no stations are available, use a signal generator--it is less likely to be accurate however, WWV time signals on 10 mc. and 15 mc. can sometimes be used to check the short-wave band calibrations). If the calibration is not reasonably close, the complete alignment procedure will be necessary. If satisfactory, proceed to connect the signal generator or multivibrator from GND terminal to the LONG ANT terminal on the loop frame.
3. Turn the band switch to BC, and set the dial to about 600 kc.
4. If a multivibrator is used, adjust the loop trimmer C6 for maximum output. If a signal generator is used, tune in the signal at about 600 kc. and adjust C6 for maximum output.
5. Turn to 1500 kc. and tune in a signal.
6. Adjust trimmers C7 and C4 for maximum output.
7. Go back to 600 kc. and disconnect the signal generator or multivibrator from the LONG ANT terminal, but leave the wire from the signal source in the vicinity of the antenna terminals. Turn up the signal source output so that the signal can be heard and readjust C6 for maximum output.
8. Reconnect the lead from the signal source to the SHORT ANT terminal through a 600 ohm resistor.
9. Turn the band switch to SW and the dial to 15 mc. Tune in a signal from the signal source at this point. (Be sure you have the correct signal and not an image.)
10. Adjust trimmers C2 and C3 for maximum output, "rocking" the tuning control as you do so.

The receiver is now in alignment for reception with the loop antenna. If an external antenna is used, the loop trimmer C6 must be realigned with the actual antenna connected as described in the installation instructions.

Complete R.F. Alignment Procedure

It is strongly recommended that the receiver be returned to the factory for any repairs involving replacement or any adjustment of the gang condenser-osicllator assembly (tuner assembly) other than adjustment of trimmers C4 and C7. If, however, it has been necessary to replace the gang condenser-oscillator assembly or capacitors C18, C19, C13, or C14 in the field, the alignment procedure is as follows:

1. Set the dial pointer so that it lines up exactly with the left hand and mark when the gang is fully closed.
2. Connect the output meter, Turn the volume control to its maximum and the bandswitch to BC. Feed in the signal generator on the grid of the 6SA7 (pin 8 to ground).
3. Check the I.F. alignment. Set the signal generator to 1000 kc. and check the generator calibration against a broadcast signal in place of the generator . Adjust C19 so that the receiver is on calibration at this point.
4. Throw the bandswitch to SW. Set the signal generator to 12 mc. and adjust C18 so that the correct signal (the one which comes in at the higher frequency on the receiver dial) is right on the 12 mc. mark.
5. From here on, follow the shortened procedure until the alignment of the receiver is complete.

©John F. Rider

MODELS 6A47WT,
6A47WTR, 6AWC2, 6AWC3

SUPPLEMENT

F M Operation

FM Band--88 to 180 Megacycles:

Turn the radio on by turning the volume control knob to the right. Turn the Frequency Modulation tuner on by turning the "FM On-Off" switch to the right. Wait a few seconds for the tubes to heat. Turn the tone control knob clockwise until a click is heard. The receiver will now be set for FM reception.

FM Tuning Knob:

Turn the FM tuning knob until the station is heard. Rotate the knob slowly back and forth across the station desired. The station may be heard in three positions -- the correct position is the center one in which the signal is the clearest and strongest. If the signal is too strong, reduce it by means of the VOLUME CONTROL.

Antenna:

For reception of distant stations, and improved results in locations unfavorable to FM reception, install an outside FM dipole antenna, equipped with a 300 ohm flat lead-in. Disconnect the built in antenna, by removing the wires from terminals #1 and #3 on the tuner chassis. Connect the lead-in wires of the outside antenna to the same terminals.

FM Tuner:

If your radio does not have an FM band, an FM tuner may be installed.

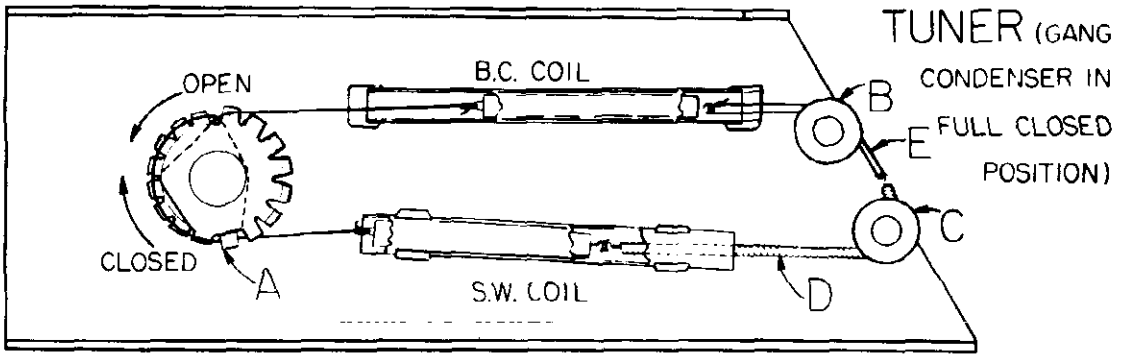

©John F. Rider

MODELS 6A47WT,
6A47WTR, 6AWC2, 6AWC3

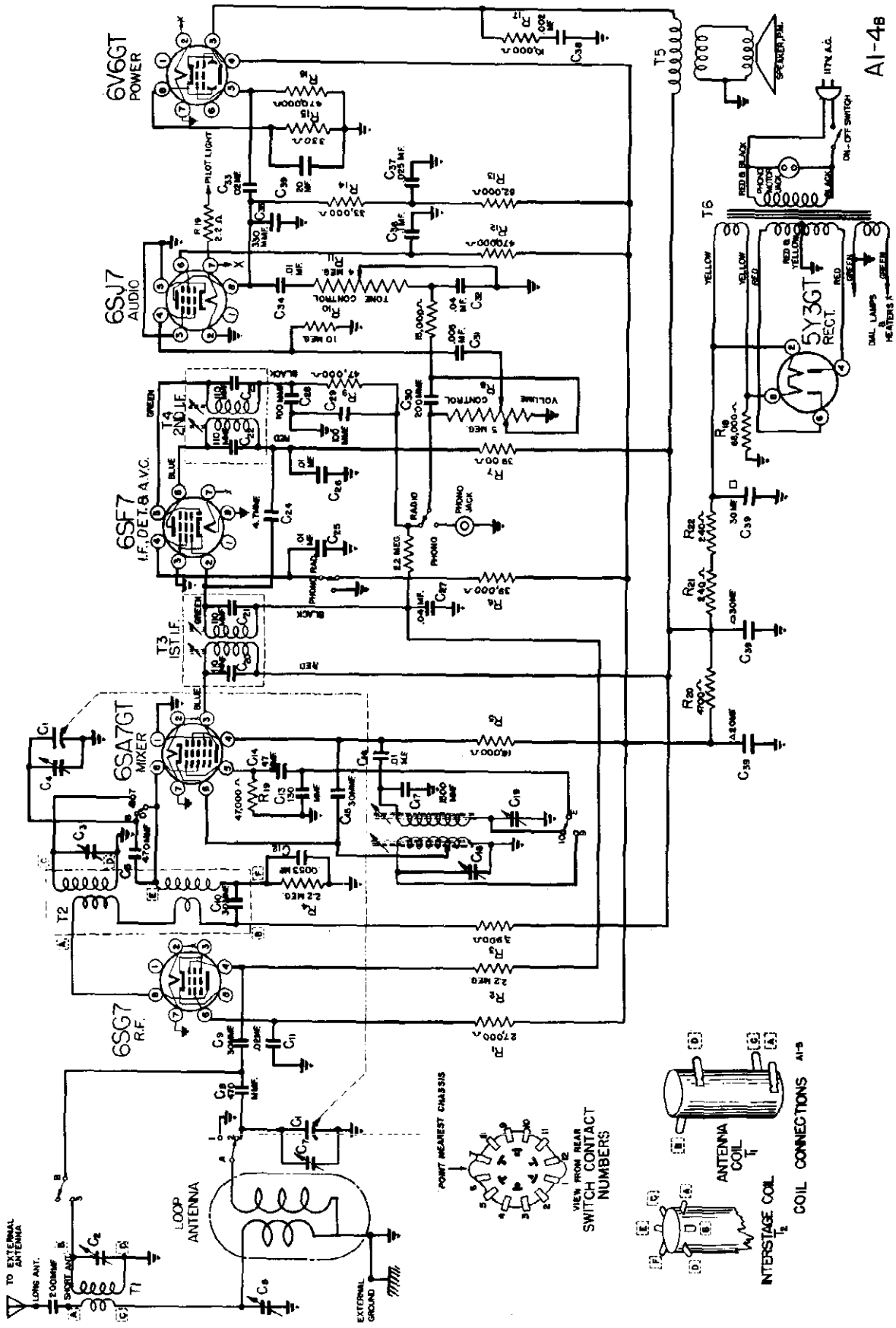

©John F. Rider

MODELS 6A47WT,
6A47WTR, 6AWC2, 6AWC3

CONDENSERS

Code No.	SPECIFICATIONS	Tolerances	
C 24	4.7 mmf.	600 v.	.5%
C 15, C4	30 mmf.	600 v.	10%
C 14	47 mmf.	600 v.	10%
C 13	130 mmf.	600 v.	5%
C 10, C 30	200 mmf.	600 v.	20%
C 35	330 mmf.	600 v.	20%
C 5, C 8	470 mmf.	600 v.	3%
C 17	1500 mmf.	600 v.	10%
C 38	0.002 mfd.	600 v.	25%
C 12	0.005 mfd.	400 v.	10%
C 31	0.0053 mfd.	400 v.	5%
C 11, C 16, C 25, C 34	0.01 mfd.	400 v.	20%
C 33	0.02 mfd.	400 v.	20%
C 37	0.025 mfd.	400 v.	20%
C 27, C 32	0.04 mfd.	200 v.	20%
C 36	0.01 mfd.	400 v.	20%
C 26	0.01 mfd.	600 v.	20%
C 39	4 sect. electrolytic		
	30 mfd.	450 v.	-50%
	30 mfd.	450 v.	10%
	20 mfd.	450 v.	
	20 mfd.	25 v.	

TRANSFORMERS & COILS

Part No.	Code No.	Description
TRX 101	T6	Power Supply
TRX 102	T5	Output Transformer
TRX 103	T3	1st I.F. Transformer
TRX 104	T4	2nd I.F. Transformer
CLA 102	T2	R.F. Interstage Coil
CLA 101	T1	S.W. Antenna Coil
CLA 107	Loop Antenna Assembly for	6A47WT
CLA 115	Loop Antenna Assembly for	6A47WTR
CLA 116	Loop Antenna Assembly for	6AWC2 & 6AWC3

KNOBS & CONTROLS

PART NO.	Description
SWX 101	Band Switch Assembly
KNX 101A	Band Switch
KNX 102	Tuning Knob
KNX 103	Volume Control Knob
KNX 104	Tone Control Knob
SHX 100C	Tuning Shaft Assembly
PHX 100A	Volume Control Assembly
PHX 101	Tone Control Assembly

©John F. Rider

MODELS 6A47WT,
6A47WTR, 6AWC2, 6AWC3

PART NO.	Description
BEX 103	Mounting Sleeve
BRA 118	Tuner Assembly Complete
BRA 123	Dial and Bracket Assembly Complete
DNX 100	Glass Dial Plate
FHX 101	A.C. Line Cord Lock
FSA 100	Mounting Parts Assembly
PHA 103	Complete Dial and Cord
PHA 105	Speaker Assembly Complete 6A47WT Model
PHA 106	Speaker Assembly Complete 6A47WTR Model
PHX 102	Speaker 6A47WT Model
PHX 103	Speaker 6A47WTR Model
PHX 104	Speaker 5AWC2 and 6AWC3 Models
RCX 101	Aero-Record Changer Model E
RIX 105	Grommet for Mounting
RIX 107	Washer for Mounting
RIX 117	Mounting Screw
SMX 146	Speaker Cover - 6A47WTR Model
SMX 163	Loop Shield - 6AWC2 and 6AWC3 Models
SOX 100	Socket Octal
Sox 103	Phone Motor Socket 3 Prong
SPX 115	Dial Cord Spring
WCA 103	Dial and Cord Assembly
WCX 101	A.C. Line Cord with Plug
WCX 102	Dial Cord

RESISTORS

Code No.	Specifications	Tolerances	
R 10	10 meg.	1/2 w.	20%
R 2, R 23	2.2 meg.	1/2 w.	10%
R 12			
R 16	470,000 ohms	1/2 w.	10%
R 13	82,000 ohms	1/2 w.	10%
R 18	68,000 ohms	2 w.	20%
R 9, R 4	47,000 ohms	1/2 w.	10%
R 6	39,000 ohms	1/2 w.	10%
R 14	33,000 ohms	1/2 w.	10%
R 1	27,000 ohms	1/2 w.	10%
R 5	18,000 ohms	2 w.	10%
R 24	15,000 ohms	1/2 w.	20%
R 17	10,000 ohms	1/2 w.	10%
R 20	4,700 ohms	2 w.	20%
R 7, R 3	3,900 ohms	1/2 w.	10%
R 15	300 ohms	1 w.	10%
R 21, R 22	240 ohms	2 w.	10%
R 19	2.2 ohms	1/2 w.	10%

©John F. Rider

MODEL 130, Playfellow,
Ch. CR-215

SPECIFICATIONS

Power supply	117 volts 60 cycles AC
Power consumption	58 watts
Power output	1.9 watts
Intermediate frequency	455 kc.
Tuning frequency range	540-1620 kc.
Tubes:	
Converter	12SA7
I-F Amplifier	12SK7
Detector, AVC and First Audio	12SQ7
Power output	50L6GT
Rectifier	35Z5GT
PM Speaker:	
Voice coil impedance (400 cycles)	3.0 ohms
Output transformer	2,000/3 ohms

ALIGNMENT PROCEDURE

The alignment of this receiver requires the use of an accurately calibrated r-f signal generator and an output meter. All trimmer condenser locations are shown on the chassis layout diagram. The radio volume control should be turned to maximum and the signal generator output kept as low as possible during alignment to prevent the AVC from operating and giving false readings. All alignment adjustments can be made with the loop antenna leads connected.

I-F ALIGNMENT

1. Connect the output of the signal generator to the control grid (pin No. 8) of the 12SA7 tube through a .00025 mfd. capacitor. The ground on the signal generator should be connected to the radio chassis.

2. Turn the condenser gang until it is completely meshed (low-frequency end of dial calibration) and set the input selector switch to RADIO.

3. Adjust the signal generator to EXACTLY 455 kc. and peak the second i-f transformer and the first i-f transformer in that order.

BROADCAST BAND ALIGNMENT

1. Check the tuning dial pointer adjustment. When the plates of the tuning condenser are completely meshed the dial pointer must be in line with the last calibration mark at the low frequency end of the dial. If it is not, remove escutcheon plate and move.

2. Form three turns of wire into a loop, connect this loop to the signal generator, and loosely couple it to the receiver loop antenna in the cabinet lid.

3. Set the signal generator and the radio receiver to 1400 kc. and adjust the 1400 kc. oscillator trimmer.

4. Set the signal generator and dial to 600 kc. While rocking the gang back and forth around 600 kc. adjust the oscillator coil slug for maximum output.

5. Check the 1400 calibration and correct if necessary with the oscillator trimmer.

SPECIAL SERVICE INFORMATION

The following information is provided for the service man who has a vacuum tube voltmeter or a similar measuring instrument available.

STAGE GAINS*

R-F on Converter to I-F Grid at:	
600 kc.	47
I-F on Converter Grid to I-F Grid at:	
455 kc. (gang closed)	59
I-F Grid to Detector Plate at:	
455 kc.	50

OSCILLATOR OUTPUT VOLTAGE

The DC voltage developed across the Oscillator Grid Resistor at:

600 kc. ..... 7.0 V.

or 0.32 ma. through 22,000 ohm Oscillator Grid Resistor.

AUDIO GAIN

Voltage required across the Volume Control to produce 0.5 watt speaker output** at 400 cycles is .19 volt with Input Selector Switch in RAD setting.

*Variations of ±20% are permissible. All readings made with sufficient input signal to provide 0.5 watt speaker output.

**0.5 watt speaker output at 400 cycles is equivalent to a reading of 1.22 volts as measured by a high resistance AC voltmeter across the voice coil of speaker.

© John F. Rider

MODEL 130, Playfellow,
Ch. CR-215

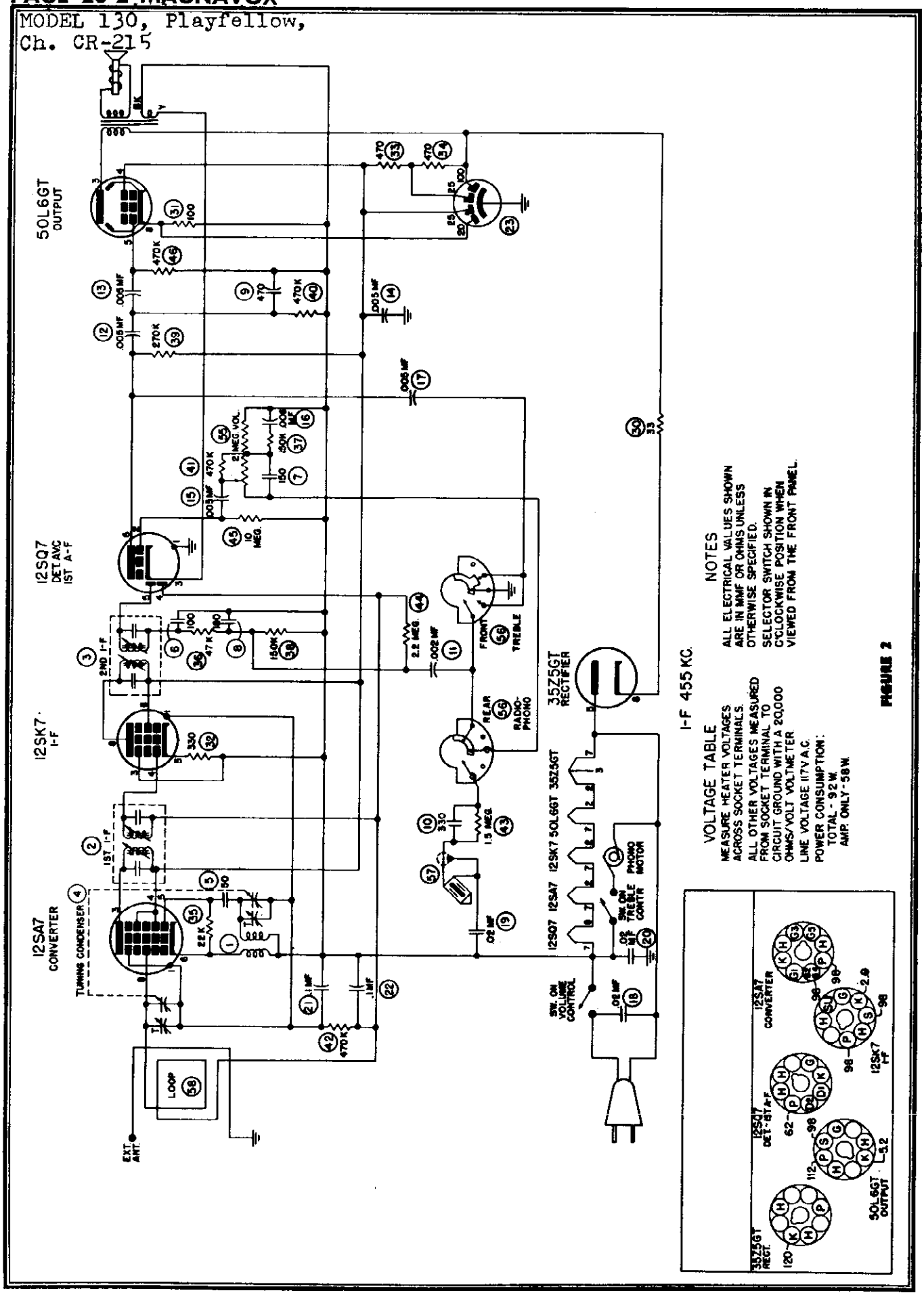

©John F. Rider

MODEL 130, Playfellow,
Ch. CR-215

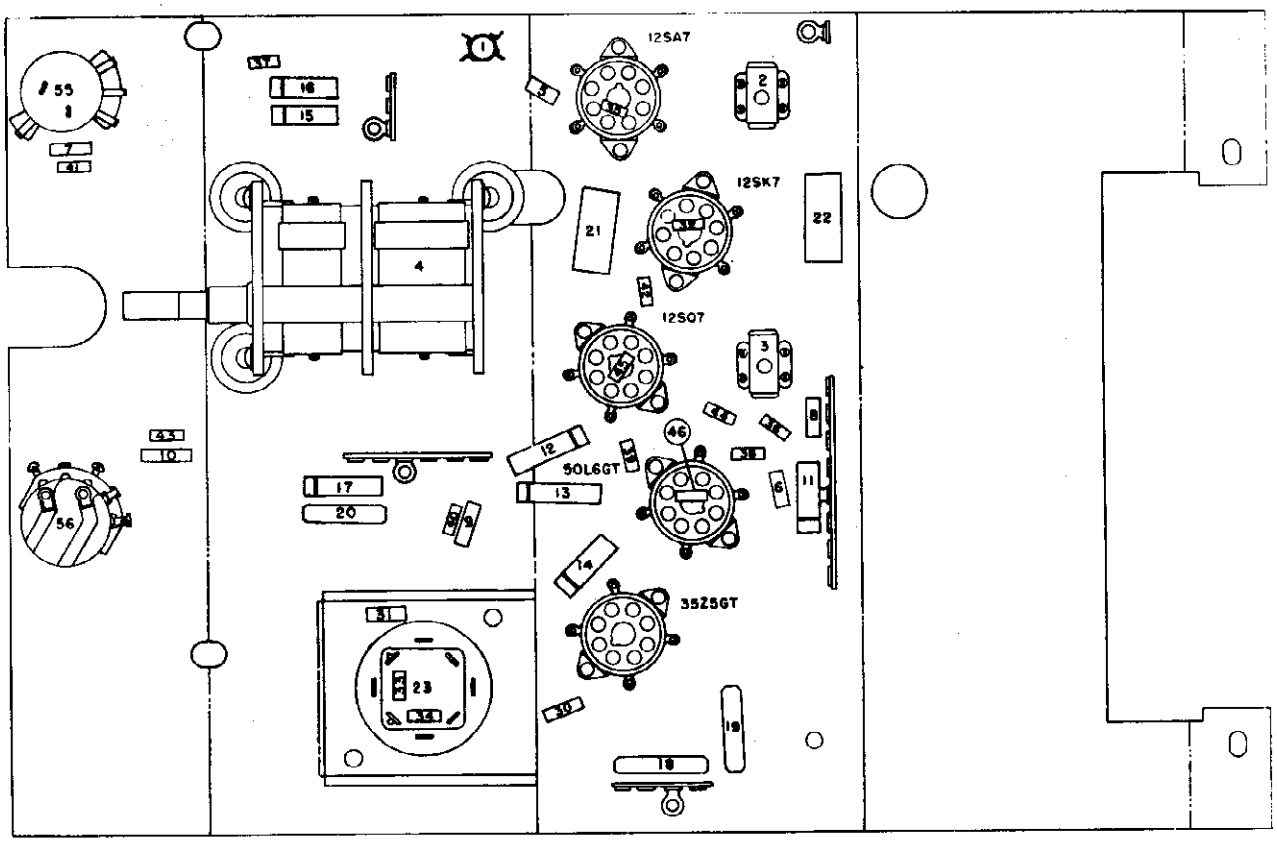

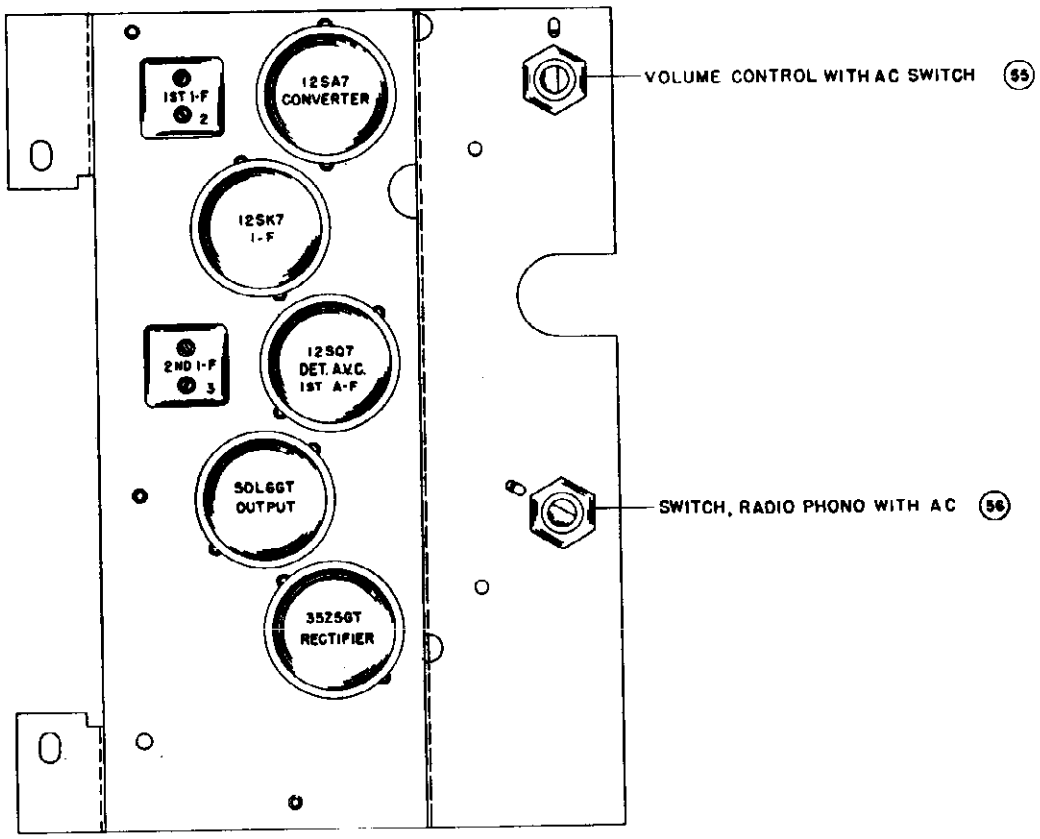

FIGURE 3

©John F. Rider

MODEL 130, Playfellow,
Ch. CR-215

PARTS LIST

REFERENCE NO.	DESCRIPTION	MAGNAVOX PART NO.
1	Coil, oscillator	360343–1
2	Transformer, first i-f	360342–1
3	Transformer, second i-f	360342–1
4	Condenser, two-gang tuning	260102–1
5	Capacitor, ceramic, 50 mmf. ±10%, 500V	250088–39
6	Capacitor, mica, 100 mmf.	250159–98
7	Capacitor, mica, 150 mmf. ±10%	250159–84
8	Capacitor, mica, 180 mmf. ±10%	250159–85
9	Capacitor, mica, 470 mmf. 500 V.	250159–102
10	Capacitor, mica, 330 mmf. ±10%	250159–88
11	Capacitor, paper, .002 mfd. 600 V.	250152–44
12	Capacitor, paper, .005 mfd. ±10%, 400 V.	250169–14
13	Capacitor, paper, .005 mfd. ±10%, 400 V.	250169–14
14	Capacitor, tubular, .005 mfd. 600 V.	250152–41
15	Capacitor, tubular, .005 mfd. 600 V.	250152–41
16	Capacitor, paper, .006 mfd. ±10%, 400 V.	250169–15
17	Capacitor, paper, .005 mfd. 600 V.	250152–41
18	Capacitor, paper, .02 mfd. 600 V.	250129–3
19	Capacitor, paper, .02 mfd. 600 V.	250129–3
20	Capacitor, paper, .02 mfd. 600 V.	250129–3
21	Capacitor, tubular, .1 mfd. 200 V.	250152–13
22	Capacitor, tubular, .1 mfd. 200 V.	250152–13
23	Capacitor, electrolytic, 100 mfd. 150 V., 25 mfd. 150 V., 25 mfd. 150 V., 20 mfd. 25 V.	270021–19
30	Resistor, composition, 33 ohms, ½ W.	230084–4
31	Resistor, composition, 100 ohms, 1 W.	230085–7
32	Resistor, composition, 330 ohms, ½ W.	230084–10
33	Resistor, composition, 470 ohms, ½ W.	230084–11
34	Resistor, composition, 470 ohms, ½ W.	230084–11
35	Resistor, composition, 22,000 ohms, ½ W.	230084–21
36	Resistor, composition, 47,000 ohms, ½ W.	230084–23
37	Resistor, composition, 150,000 ohms, ±10%, ½ W.	230084–88
38	Resistor, composition, 150,000 ohms, ½ W.	230084–26
39	Resistor, composition, 270,000 ohms, ±10%, ½ W.	230084–91
40	Resistor, composition, 470,000 ohms, ±10%, ½ W.	230084–94
41	Resistor, composition, 470,000 ohms, ½ W.	230084–29
42	Resistor, composition, 470,000 ohms, ½ W.	230084–29
43	Resistor, composition, 1.5 megohm, ½ W.	230084–32
44	Resistor, composition, 2.2 megohm, ½ W.	230084–33
45	Resistor, composition, 10 megohm, ½ W.	230084–37
46	Resistor, composition, 470,000 ohms, ±10%, ½ W.	230084–94
55	Control, volume with AC switch, 2 megohm	220074–6
56	Switch, radio phono, with AC switch	160193–1
57	Crystal pickup, QVR-12	560101–7
58	Antenna loop assembly	*

*The part number of the loop antenna assembly changes with different cabinets, therefore it is important that you specify the STYLE NUMBER of the instrument when ordering a replacement loop antenna assembly.

©John F. Rider

©John F. Rider

ALIGNMENT PROCEDURE

Alignment of this receiver requires the use of an accurately calibrated RF signal generator, range 455 kc. to 107 mc., an output meter, and a vacuum tube voltmeter of greater than 10 megohm input impedance. All trimmer condensers can be identified by stampings on the chassis and gang condenser cover and are shown on the chassis layout diagram.

The pointer on the radio dial should line up with the first vertical mark on the low frequency end of the dial glass. If the pointer does not line up, loosen the pointer on the dial string and move it to correct position. Re-tighten and re-cement the pointer to the string. Be sure the gang is fully meshed for this pointer alignment. Align AM first.

AM ALIGNMENT

I-F ALIGNMENT

1. Set volume, treble, and bass controls to maximum. Set Band Switch to Broadcast position, and dial pointer to 1000 kc.
2. Tune the signal generator to EXACTLY 455 kc.
3. Connect output of modulated signal generator to the signal grid of the 6BE6 (pin 7) through a .01 mfd. capacitor and signal generator ground to radio chassis.
4. AM and FM i-f transformers on this model are separate and can be identified on the chassis layout diagram Figure 3.
5. Connect output meter across voice coil of speaker and adjust the i-f transformers for peak output as indicated on the output meter.

ALTERNATE VISUAL ALIGNMENT OF I-F STAGES

1. Connect 455 kc. sweep generator having approximately 20 kc. sweep to signal grid of 6BE6 (pin 7) through a .01 mfd. capacitor. Connect an oscilloscope through a 1 megohm isolating resistor across the 150,000 ohm diode load resistor. Align for best possible peak and symmetry.

R-F ALIGNMENT

1. Remove the signal generator lead from the 6BE6 grid and connect it across H and L on terminal strip on the rear of the chassis. The high side of the signal generator should be connected to H and the signal generator ground to L.
2. Check the tuning dial pointer adjustment. When the plates of the tuning condenser are completely meshed, the dial pointer must be in line with the last calibration mark at the low frequency end of the dial. If it is not, slide the pointer on its string to the correct position. Be sure to crimp the lugs (on the rear of the pointer) tightly around the string to hold the pointer in adjustment.
3. Set the signal generator and the radio receiver to 1400 kc., adjust the 1400 kc. oscillator trimmer and the 1400 kc. r-f trimmer for maximum output.
4. Set the signal generator and radio receiver to 600 kc. Adjust the oscillator and r-f coil slugs for maximum output. If considerable adjustment was necessary re-check the 1400 kc. trimmer settings.
5. Replace chassis in cabinet and connect loop antenna leads to proper terminals on the rear of the chassis.
6. Form three turns of wire into a loop, connect this loop to the signal generator and loosely couple it to the receiver loop antenna.
7. With the signal generator and dial at 1400 kc., adjust the loop antenna trimmer for maximum output.

MODEL CR-216

FM ALIGNMENT

DISCRIMINATOR ALIGNMENT

1. Tune signal generator to EXACTLY 10.775 mc. and connect to pin 4 of the 6SH7 Limiter tube socket through a .01 mfd. capacitor.

2. Connect a DC vacuum tube voltmeter between point "B" on schematic diagram and ground (across .00047 mfd. capacitor—Pin 6 on 6H6 to ground).

3. Peak both discriminator slugs at 10.775 mc.

4. Retune signal generator to exactly 10.7 mc. and adjust bottom slug for zero volts.

5. The DC voltage at 10.625 mc. should be within 10% of the voltage at 10.775 mc. and of opposite polarity.

Note: If the signal generator is not capable of sufficient output to produce a readable DC voltage, the amplification of the last i-f stage can be used to increase the signal input to the limiter for discriminator alignment. To accomplish this, align the last i-f stage as indicated in "IF Alignment". Then align discriminator as above leaving the signal generator connected to the grid of the 6SG7 2nd i-f tube.

I-F ALIGNMENT

1. Connect high side of signal generator, through a .01 mfd. capacitor and a 1000 ohm resistor in series, to pin 4 of the 6SG7 2nd i-f tube. Connect low side of generator to chassis.

2. Close gang condenser and connect vacuum tube voltmeter across 220,000 ohm limiter grid resistor; (Point "A" on schematic to ground). Adjust signal generator output until a reading of at least 3 volts is obtained. In order to reduce regeneration caused by the vacuum tube voltmeter leads, a 1-megohm isolating resistor, connected with as short leads as possible to point "A" should be used in series with the vacuum tube voltmeter. Align the 3rd i-f transformer for best peak as indicated on voltmeter.

3. Repeat above for each succeeding transformer by connecting signal generator to signal grid of first i-f tube 6SG7 then to the signal grid of 6BE6 converter. The i-f stages should be aligned in this order.

WARNING—After each i-f stage has been aligned, do not repeak with the signal into the grid of the 6BE6.

ALTERNATE VISUAL ALIGNMENT OF I-F STAGES

1. Replace signal generator with sweep generator having approximately 300 kc. sweep and tune generator to 10.7 mc. Connect oscilloscope across 220,000 ohm limiter grid resistor through a 1-megohm isolating resistor. The order of alignment is the same as when using a vacuum tube voltmeter. Each i-f transformer should be individually aligned for best peak and symmetry.

R-F ALIGNMENT

1. Connect vacuum tube voltmeter across limiter grid resistor as in FM I-F alignment.

2. Ground one side of the FM Antenna by placing a wire jumper from one FM connection on the antenna terminal strip to the ground connection.

3. Connect unmodulated signal generator through a 300 ohm resistor to ungrounded antenna post and chassis, and tune signal generator to 107 mc.

4. Set radio dial to 107 mc. and tune oscillator trimmer to peak output on vacuum tube voltmeter. Adjust signal generator output until a reading of at least 3 volts is obtained.

5. Tune 107 mc. r-f and antenna trimmers for maximum indication on voltmeter—it may be necessary to rock the dial while adjusting the r-f trimmer.

SPECIAL SERVICE INFORMATION

The following information is provided for the service man who has a vacuum tube voltmeter or a similar measuring instrument available.

STAGE GAINS*

Antenna Post to R-F Grid at:

600 kc.	5.00
98 mc.	1.15

R-F Grid to Converter Grid at:

600 kc.	14.5
98 mc.	9.4

©John F. Rider

R-F on Converter Grid to 455 kc. on I-F Grid at:

600 kc.	25.0
98 mc.	3.2

I-F on Converter Grid to 1st I-F Grid at:

455 kc. (gang closed)	28.0

1st I-F Grid to 2nd I-F Grid** at:

455 kc.	95
10.7 mc.	33

2nd I-F Grid to Limiter Grid at:

10.7 mc.	33.4

OSCILLATOR OUTPUT VOLTAGE

The DC voltage developed across the Oscillator Grid Resistor (105) at:

600 kc.	6.6V.
98 mc.	6.0V.

or 0.3 ma. through 22,000 ohm Oscillator Grid Resistor at 600 kc. and 0.27 ma. at 98 mc.

AUDIO GAIN

Voltage required across the Volume Control to produce 0.1 watt speaker output*** at 400 cycles is .016 volt with Input Selector Switch in BDCST. setting.

*Variations of ±20% are permissible. All readings made with sufficient input signal to provide 0.5 watt speaker output. 0.5 speaker output at 400 cycles is equivalent to a reading of 1.25V. as measured by a high resistance AC voltmeter across the voice coil of the speaker.
**Detector Plate on AM.
***0.1 watt speaker output at 400 cycles is equivalent to a reading of 0.55 volts as measured by a high resistance AC voltmeter across the voice coil of speaker.

DIAL CORD REPLACEMENT

Two separate drive cables are used in the CR-216 dial assembly. One cable is used to transmit the motion from the tuning knob to the large pulley that is coupled to the condenser gang; the other cable actuates the dial pointer whenever the large pulley on the condenser gang is rotated. Separate instructions for replacing either of these cables is given in the following paragraphs.

CONDENSER DRIVE CABLE REPLACEMENT

Remove dial assembly after taking out four screws on each side of chassis. Slide a short length (approximately ½ inch) of sleeving over one end of a length of dial cable, form a small loop and tie a knot in the manner shown on Figure 1. Tie spring to opposite end of cable making length excluding spring 19½ inches. Hook loop over the metal hook in pulley "D" and lace the cable through the pulley slot and around the pulley in a counterclockwise direction when viewed from the rear of the dial assembly keeping the cable to the rear of the pulley groove. Lace the cable around the smaller diameter portion of the tuning control shaft wrapping 2½ turns *from front to back;* then around the opposite side of pulley "D" into the pulley through the slot. Hook the end of tension spring "F" in the hole provided in pulley "D", completing this operation.

DIAL POINTER DRIVE CABLE REPLACEMENT

Remove dial assembly after taking out four screws on each side of chassis. Slip a one-half inch length of sleeving over a 42-inch length of dial cable. Tie the two ends to the loop end of the cable spring "E" securely so that the cable doubled measures 19⅝ inches end to end excluding spring.

Place spring hook in top hole and draw cable through slot of pulley "D". Loop one end of cable around pulley "D" in a clockwise direction in front of condenser drive cable (viewing dial assembly from front) then loop the remaining end around pulley in a counterclockwise direction. Secure both ends of cable to chassis at edge of pulley slot with scotch tape, keeping piece of sleeving on remaining loop of cable.

Replace dial assembly and loop cable over pulley "A". While holding cable taut remove scotch tape and loop cable over pulleys "B" and "C" as shown in Figure 1.

Turn the tuning control shaft until the condenser gang is completely meshed and slide the dial pointer on its track until it is in line with the last calibration mark at the low frequency end of the dial. The short piece of sleeving installed prior to the stringing operation should be slid to the rear of the dial pointer and the crimping lug on the pointer pressed over the sleeving. After checking to make certain that the condenser gang is completely meshed and the dial pointer is in the position specified previously, apply a few drops of cement to each end of the sleeving to which the dial pointer is fastened. This completes the operation.

©John F. Rider

MODEL CR-216

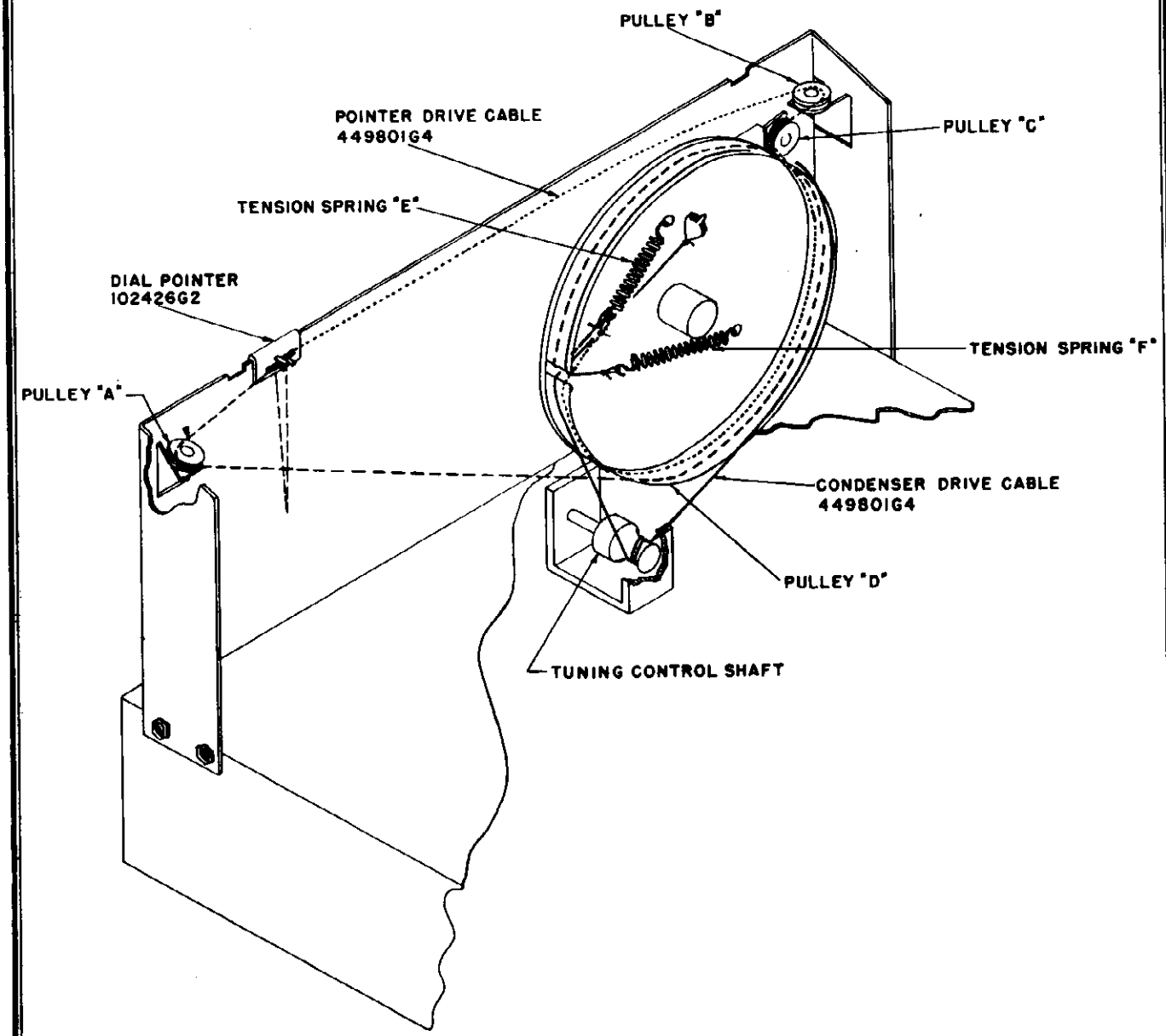

FIGURE 1

MODEL CR-216

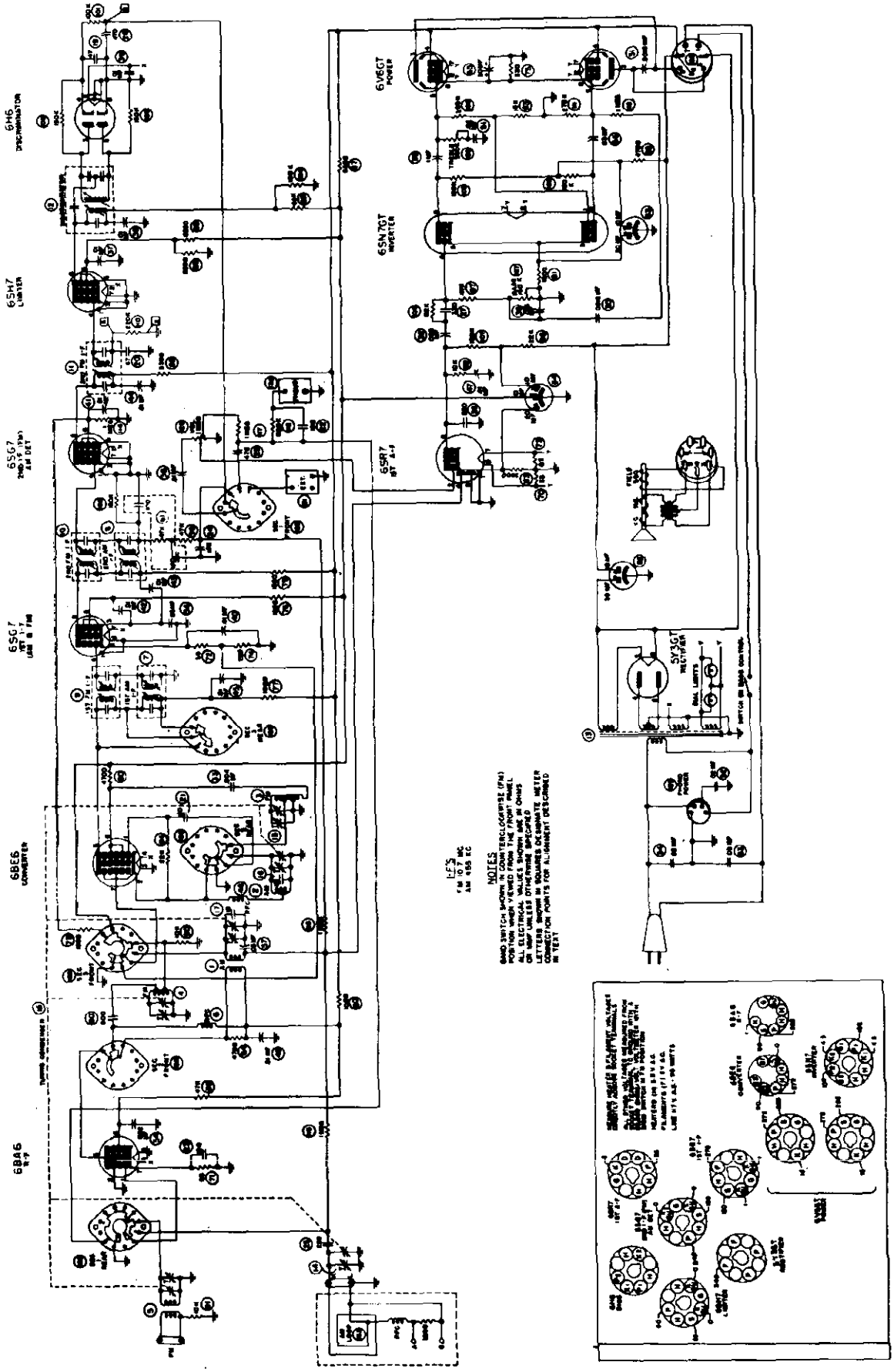

FIGURE 2

MODEL CR-216

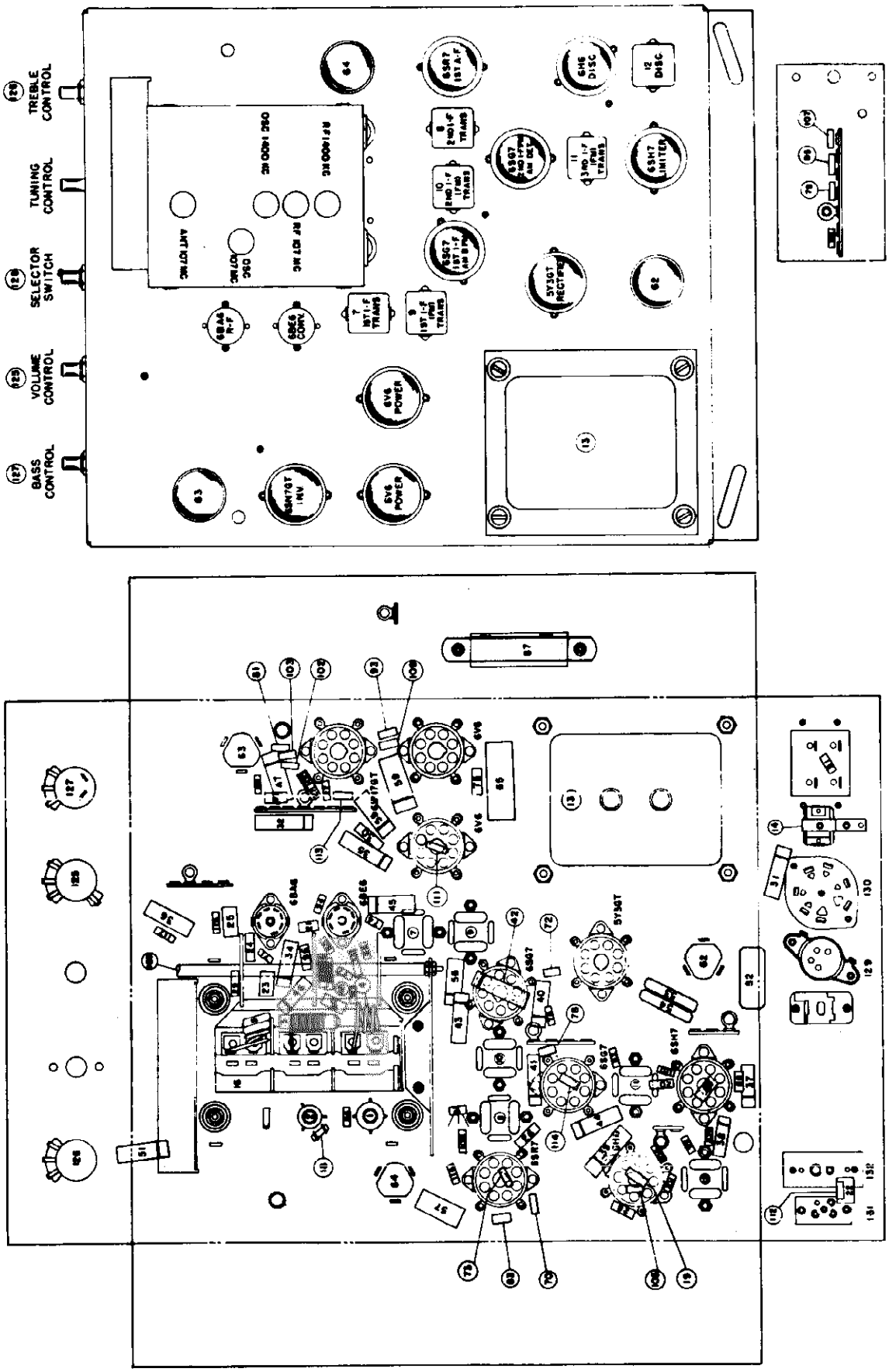

FIGURE 3

PARTS LIST

REFERENCE NO.	DESCRIPTION	MAGNAVOX PART NO.
1	Coil assembly, r-f (AM)	360348G1
2	Coil assembly, oscillator (AM)	360349G1
3	Coil assembly, oscillator (FM)	360323G1
4	Coil assembly, r-f (FM)	360322G2
5	Coil assembly, antenna (FM)	360321G2
6	Coil, choke	360284G1
7	Transformer, first i-f	360350G1
8	Transformer, second i-f	360350G2
9	Transformer, first i-f (FM)	360351G1
10	Transformer, second i-f (FM)	360351G1
11	Transformer, third i-f (FM)	360351G1
12	Transformer, discriminator	360352G1
13	Transformer, power	300050G1
14	Capacitor, variable trimmer	250046G2
15	Capacitor, variable trimmer	260067G5
16	Capacitor, three-gang tuning	260103G1
17	Capacitor, ceramic, 10 mmf. ± 5%, 500 V.	250088G8
18	Capacitor, ceramic, 10 mmf. ±5%, 500 V.	250088G8
19	Capacitor, mica, 47 mmf. 500 V.	250159G96
20	Capacitor, mica, 47 mmf. 500 V.	250159G96
21	Capacitor, ceramic, 50 mmf. ±10%, 500 V.	250088G39
22	Capacitor, mica, 100 mmf. ±10%, 500 V.	250159G82
23	Capacitor, mica, 100 mmf. 500 V.	250159G98
24	Capacitor, mica, 100 mmf. 500 V.	250159G98
25	Capacitor, mica, 220 mmf. 500 V.	250159G100
26	Capacitor, mica, 220 mmf. 500 V.	250159G100
27	Capacitor, mica, 330 mmf. ±10%, 500 V.	250159G88
28	Capacitor, mica, 470 mmf. 500 V.	250159G102
29	Capacitor, mica, 470 mmf. ±10%, 500 V.	250159G90
30	Capacitor, mica, 1800 mmf. ±5%, 500 V.	250160G44
31	Capacitor, paper, .0015 mfd. ±10%, 600 V.	250169G1
32	Capacitor, paper, .005 mfd. 600 V.	250152G41
33	Capacitor, ceramic, .004 mfd. 350 V.	250088G34
34	Capacitor, paper, .002 mfd. 600 V.	250152G44
35	Capacitor, paper, .015 mfd. ±10%, 200 V.	250169G5
36	Capacitor, paper, .01 mfd. 200 V.	250152G18
37	Capacitor, paper, .01 mfd. 200 V.	250152G18
38	Capacitor, paper, .01 mfd. 200 V.	250152G18
39	Capacitor, paper, .01 mfd. 200 V.	250152G18
40	Capacitor, paper, .01 mfd. 200 V.	250152G18
41	Capacitor, paper, .01 mfd. 600 V.	250152G38
42	Capacitor, paper, .01 mfd. 600 V.	250152G38
43	Capacitor, paper, .01 mfd. 600 V.	250152G38
44	Capacitor, paper, .01 mfd. 600 V.	250152G38
45	Capacitor, paper, .01 mfd. 600 V.	250152G38

©John F. Rider

MODEL CR-216

REFERENCE NO.	DESCRIPTION	MAGNAVOX PART NO.
46	Capacitor, paper, .01 mfd. 600 V.	250152G38
47	Capacitor, paper, .01 mfd. 600 V.	250152G38
48	Coil, choke	360284G1
51	Capacitor, paper, .02 mfd. 200 V.	250152G17
52	Capacitor, paper, .02 mfd. 600 V.	250129G3
53	Capacitor, paper, .02 mfd. 600 V.	250129G3
54	Capacitor, paper, .02 mfd. 600 V.	250129G3
55	Capacitor, paper, .03 mfd. 600 V.	250152G36
56	Capacitor, paper, .05 mfd. 200 V.	250152G15
57	Capacitor, paper, .05 mfd. 200 V.	250152G15
59	Capacitor, paper, .1 mfd. 600 V.	250152G33
60	Capacitor, ceramic, 500 mmf.	250088G31
61	Capacitor-resistor filter	250170G1
62	Capacitor, electrolytic, 30-10 mfd. 475 V.	270023G2
63	Capacitor, electrolytic, 10 mfd. 450 V.—20 mfd. 25 V.	270023G6
64	Capacitor, electrolytic, 10-10 mfd. 450 V.—20 mfd. 25 V.	270023G7
65	Capacitor, electrolytic, 20 mfd. 25 V.	270027G2
70	Resistor, composition, 33 ohms, ½ W.	230084G4
71	Resistor, composition, 68 ohms, ½ W.	230084G6
72	Resistor, composition, 68 ohms, ½ W.	230084G6
73	Resistor, composition, 82 ohms, ±10%, ½ W.	230084G49
74	Resistor, composition, 220 ohms, ½ W.	230084G9
75	Resistor, composition, 330 ohms, 2 W.	230086G56
76	Resistor, composition, 1000 ohms, ½ W.	230084G13
77	Resistor, composition, 1000 ohms, ½ W.	230084G13
78	Resistor, composition, 1000 ohms, ½ W.	230084G13
79	Resistor, composition, 1000 ohms, ½ W.	230084G13
80	Resistor, composition, 1000 ohms, ½ W.	230084G13
81	Resistor, composition, 1500 ohms, ½ W.	230084G14
82	Resistor, composition, 3300 ohms, ½ W.	230084G16
83	Resistor, composition, 3900 ohms, ½ W. ±10%	230084G69
84	Resistor, composition, 4700 ohms, ½ W.	230084G17
85	Resistor, composition, 4700 ohms, ½ W.	230084G17
86	Resistor, composition, 4700 ohms, ½ W.	230084G17
87	Resistor, wire wound, 6500 ohms, ±10%	240035G9
88	Resistor, composition, 8200 ohms, ±10%, 1 W.	230085G73
89	Resistor, composition, 8200 ohms, ±10%, 1 W.	230085G73
90	Resistor, composition, 10,000 ohms, ½ W.	230084G19
91	Resistor, composition, 10,000 ohms, ½ W.	230084G19
92	Resistor, composition, 10,000 ohms, 1 W.	230085G19
93	Resistor, composition, 15,000 ohms, ±5%, ½ W.	230084G187
94	Resistor, composition, 22,000 ohms, ½ W.	230084G21
95	Resistor, composition, 22,000 ohms, ½ W.	230084G21
96	Resistor, composition, 47,000 ohms, 1 W.	230085G23
97	Resistor, composition, 47,000 ohms, ½ W.	230084G23
98	Resistor, composition, 47,000 ohms, ½ W.	230084G23
99	Resistor, composition, 68,000 ohms, ±10%, ½ W.	230084G84
100	Resistor, composition, 82,000 ohms, ±10%, ½ W.	230084G85
101	Resistor, composition, 100,000 ohms, ±10%, ½ W.	230084G86
102	Resistor, composition, 100,000 ohms, ½ W.	230084G25

REFERENCE NO.	DESCRIPTION	MAGNAVOX PART NO.
103	Resistor, composition, 100,000 ohms, ½ W.	230084G25
104	Resistor, composition, 100,000 ohms, ½ W.	230084G25
105	Resistor, composition, 150,000 ohms, ±10%, ½ W.	230084G88
106	Resistor, composition, 150,000 ohms, ±10%, ½ W.	230084G88
107	Resistor, composition, 150,000 ohms, ½ W.	230084G26
108	Resistor, composition, 150,000 ohms, ½ W.	230084G26
109	Resistor, composition, 220,000 ohms, ±5%, ½ W.	230084G215
110	Resistor, composition, 220,000 ohms, ½ W.	230084G27
111	Resistor, composition, 270,000 ohms, ±10%, ½ W.	230084G91
112	Resistor, composition, 820,000 ohms, ±10%, ½ W.	230084G97
113	Resistor, composition, 1 megohm, ±5%, ½ W.	230084G231
114	Resistor, composition, 1 megohm, ½ W.	230084G31
115	Resistor, composition, 1 megohm, ½ W.	230084G31
116	Resistor, composition, 1 megohm, ½ W.	230084G31
117	Resistor, composition, 1 megohm, ½ W.	230084G31
125	Control, volume	220074G1
126	Control, treble	220072G8
127	Control, bass, with switch	220073G5
128	Switch, selector	160194G1
129	Socket, motor	180501G5
130	Socket, speaker	180504G16
131	Socket, external	180060G1
132	Socket, phono	189741G1
133	Loop antenna	*

SPECIFICATIONS

Power supply	117 volts 50/60 cycles AC
Power consumption	95 watts
Power output	10 watts
Intermediate frequency	455 kc./10.7 mc.
Tuning frequency range:	
Broadcast Band	540-1620 kc.
FM Band	88—108 mc.
Tubes:	
R-F Amplifier	6BA6
Converter	6BE6
1st I-F Amplifier (AM-FM)	6SG7
2nd I-F (FM), Detector and AVC (AM)	6SG7
Limiter	6SH7
Discriminator	6H6
First Audio	6SR7
Inverter	6SN7GT
Power output (push-pull stage)	(2) 6V6GT
Rectifier	5Y3GT
Dial Lamps	Mazda No. 44
Speaker:	
Field coil resistance	500 ohms
Voice coil impedance (400 cycles)	3.0 ohms
Output transformer	8,000/3 ohms

©John F. Rider

MODEL CR-217

GENERAL

Model CR-217 radio chassis is an AM-FM tuner that must be used in conjunction with a power amplifier such as the AMP-116 for speaker operation. Heater and plate voltages for the CR-213 radio chassis are supplied from the amplifier chassis; it is therefore essential that the radio and amplifier chassis be interconnected during alignment or for other electrical service operations.

METHOD OF REMOVING CHASSIS FROM CABINET

Model CR-217 radio chassis is designed for easy removal from the cabinet in which it is installed. As the radio panel is permanently fastened to the chassis, the control knobs need not be removed when the chassis is taken out of the cabinet for service.

To remove the chassis, first remove the antenna leads from their terminals and all plugs from the receptacles on the rear of the chassis. Then remove the two Phillips-head screws from the angular slots in the flange at the rear of the chassis.

In the Embassy the chassis is removed through the front panel opening. Remove the three wood cleats (secured by wood screws) in front of the chassis panel. Lift the rear of the chassis about an inch and pull it straight back enough to disengage the two hook plates from the chassis tray and then remove the chassis through the front of the cabinet. Never remove the chassis tray from the cabinet it has been properly positioned to bring the radio panel in place when the chassis is replaced.

To replace the chassis slide it into the cabinet from the front and push it in far enough for the hook plates on the chassis to engage the slots in the chassis tray. With the chassis in this position install the three wood cleats in front of the chassis panel. Push the chassis forward until the panel is approximately 1/16" from the back of the cleats and secure in position with tho two Phillips head screws.

CAUTION: Make sure the chassis panel does not touch the wood cleats or acoustic feedback may result. Replace all plugs in their receptacles and the antenna leads on their correct terminals. The antenna terminal board for the loop antenna connections is designated L-H. The two terminals on the loop are designated L and H; the leads connected to these terminals should be wired to the corresponding terminals (L and H) on the chassis.

ALIGNMENT PROCEDURE

Alignment of this receiver requires the use of an accurately calibrated RF signal generator, range 455 kc. to 107mc., an output meter, and a vacuum tube voltmeter of approximately 10 megohm input impedance. All trimmer condensers can be identified by stampings on the chassis and gang condenser cover and are shown on the chassis layout diagram.

The pointer on the radio dial should line up with the first horizontal mark on the low frequency end of the dial glass. If the pointer does not line up, loosen the screws on the pointer drive pulley at the end of the tuning gang and adjust the pointer setting; tighten the screws after this adjustment. Be sure the gang is fully meshed for this pointer alignment.

AM ALIGNMENT

I-F ALIGNMENT

1. Set range control to position No. 1. Set volume, treble and bass controls to maximum, the Band Switch to Broadcast position, and dial pointer to 1000 kc.

2. Tune the signal generator to EXACTLY 455 kc.

3. Connect output of modulated signal generator to the signal grid of the 6SB7Y (pin 8) through a .01 mfd. capacitor and signal generator ground to radio chassis.

4. All i-f transformers on this chassis are slug-tuned. Both slug adjustments for 455 kc. are located on top of the transformers; the 10.7 mc. adjustments are accessible on the bottom.

5. Connect output meter across voice coil of 15-inch speaker and peak in order the third, second and first i-f transformers.

6. Use only enough signal input to give a readable indication on voltmeter so that the AVC will not operate and give false readings.

ALTERNATE VISUAL ALIGNMENT OF I-F STAGES

1. Connect 455 kc. sweep generator having approximately 40 kc. sweep to signal grid of 6SB7Y (pin 8) through a .01 mfd. capacitor. Connect an oscilloscope through a 1 megohm isolating resistor across the 220,000 ohm diode load resistor. Align for best possible peak with range switch in position No. 1, and symmetry in position No. 4.

© John F. Rider

BROADCAST BAND R-F ALIGNMENT

1. Connect signal generator through .00025 mfd. capacitor to antenna and ground terminals on antenna terminal strip on rear of chassis. Be sure "Ant-loop" switch on top of the chassis is in the ANT. position. Connect output meter as for AM i-f alignment.

2. Tune signal generator to 1400 kc.

3. Set dial to 1400 kc. and adjust oscillator, r-f and antenna trimmers for maximum indication on meter.

4. Set signal generator to 600 kc. and tune radio to signal. Adjust the 600 kc. padder to maximum output while simultaneously rocking the gang.

5. 1400 kc. calibration should then be checked and re-adjusted if necessary with the 1400 kc. oscillator trimmer.

SHORT WAVE BAND R-F ALIGNMENT

1. Set the Band Switch to Short Wave and replace the .00025 mfd. capacitor in series with the signal generator lead to the antenna terminal, with a 400-ohm resistor.

2. Set the signal generator and the receiver to 15 mc. and adjust the oscillator, r-f and antenna trimmers for maximum indication on the meter. While adjusting the 15 mc. oscillator trimmer, two peaks may be observed; only one is the correct peak for 15 mc. alignment. To obtain the correct peak, screw trimmer in to maximum capacitance, then decrease until the first peak is observed. This is the correct one.

Another method for checking for the correct peak is to tune the receiver to 15.91 mc. with signal generator at 15 mc. and with the output increased. If the 15 mc. oscillator trimmer is properly adjusted, the signal will be received at 15.91 mc. if incorrectly aligned, the signal will be received at 14.09 mc.

FM ALIGNMENT

DISCRIMINATOR ALIGNMENT

1. Tune signal generator to EXACTLY 10.775 mc. and connect to pin 4 of the 6SH7 limiter tube socket through a .01 mfd. capacitor.

2. Connect a DC vacuum tube voltmeter from Pin 4 on 6H6 tube socket to ground through a 1 megohm isolating resistor.

3. Peak both discriminator slugs at 10.775 mc.

4. Retune signal generator to exactly 10.7 mc. and adjust bottom slug for zero volts.

5. The DC voltage at 10.625 mc. should be within 10% of the voltage at 10.775 mc. and of opposite polarity.

Note: If the signal generator is not capable of sufficient output to produce a readable DC voltage, the amplification of the last i-f stage can be used to increase the signal input to the limiter for discriminator alignment. To accomplish this, align the last i-f stage as indicated in "IF Alignment". Then align discriminator as above leaving the signal generator connected to the grid of the 6SG7 2nd i-f tube.

I-F ALIGNMENT

1. Connect high side of signal generator, through a .01 mfd. capacitor and a 1000 ohm resistor in series, to pin 4 of the 6SG7 2nd i-f tube. Connect low side of generator to chassis.

2. Close gang condenser and connect vacuum tube voltmeter across 220,000 ohm limiter grid resistor; (Points "A" to "X" on schematic). Adjust signal generator output until a reading of at least 3 volts is obtained. In order to reduce regeneration caused by the vacuum tube voltmeter leads, a 1-megohm isolating resistor, connected with as short leads as possible to point "A" should be used in series with the vacuum tube voltmeter. Align the 3rd i-f transformer for best peak as indicated on voltmeter.

3. Repeat above for the 2nd and 1st transformer by connecting signal generator to signal grid of first i-f tube 6SG7 then to the signal grid of 6SB7Y converter. The i-f stages should be aligned in this order.

WARNING—After each i-f stage has been individually aligned, do not repeak with the signal into the grid of the 6SB7Y.

ALTERNATE VISUAL ALIGNMENT OF I-F STAGES

1. Replace signal generator with sweep generator having approximately 300 kc. sweep and tune generator to 10.7 mc. Connect oscilloscope across 220,000 ohm limiter grid resistor through a 1-megohm isolating resistor. The order of alignment is the same as when using a vacuum tube voltmeter. Each i-f transformer should be individually aligned for best peak and symmetry.

R-F ALIGNMENT

1. Connect vacuum tube voltmeter across limiter grid resistor as in FM I-F alignment. Adjust signal generator output until a reading of at least 3 volts is obtained.

2. Ground one side of the FM Antenna by placing a wire jumper from one FM connection on the antenna terminal strip to the ground connection.

3. Connect unmodulated signal generator through a 300 ohm resistor to ungrounded antenna post and chassis, and tune signal generator to 107 mc.

4. Set radio dial to 107 mc. and tune oscillator trimmer to peak output on vacuum tube voltmeter.

5. Tune 107 mc. r-f and antenna trimmers for maximum indication on voltmeter—it may be necessary to rock the gang while adjusting the r-f trimmer.

SPECIAL SERVICE INFORMATION

The following information is provided for the service man who has a vacuum tube voltmeter or a similar measuring instrument available.

STAGE GAINS*

Antenna Post to R-F Grid at:

600 kc.	5.8
6.5 mc.	2.9
98 mc.	1.0

R-F Grid to Converter Grid at:

600 kc.	11.6
6.5 mc.	9.5
98 mc.	6.8

R-F on Converter Grid to 455 kc. on I-F Grid at:

600 kc.	1.7
6.5 mc.	2.4
98 mc.	6.8

I-F on Converter Grid to 1st I-F Grid at:

455 kc. (dial pointer at 600 kc.)	2.6

1st I-F Grid to 2nd I-F Grid at:

455 kc.	20.5
10.7 mc.	37

2nd I-F Grid to Limiter Grid at:

10.7 mc.	34.5

AUDIO GAIN

Voltage required across the Volume Control to produce 0.1 watt speaker output** at 400 cycles is:

.013 volt with Amplifier AMP-116

with Band Switch in BDCST setting.

OSCILLATOR OUTPUT VOLTAGE

The DC voltage developed across the Oscillator Grid Resistor (105) at:

600 kc.	4.5V.
6.5 mc.	4.6V.
98 mc.	5.4V.

or 0.3 ma. through 15,000 ohm Oscillator Grid Resistor at 600 kc., 0.31 ma. at 6.5 mc. and 0.36 ma. at 98 mc.

*Variations of ± 20% are permissible. All AM readings made with sufficient input signal to provide 0.5 watt speaker output. 0.5 watt speaker output at 400 cycles is equivalent to a reading of 2.75V. as measured by a high resistance AC voltmeter across the voice coil of the 15-inch speaker.

**0.1 watt speaker output at 400 cycles is equivalent to a reading of 1.22 volts as measured by a high resistance AC voltmeter across the voice coil of 15-inch speaker.

10 KC. FILTER ADJUSTMENT

This chassis incorporates a 10 kc. filter circuit to eliminate the beat note heard as a whistle between stations on the broadcast band. If the trimmer is out of adjustment the following procedure should be observed:

1. Adjust the range control switch to the No. 3 setting.

2. Remove the phono pickup plug from the radio chassis and connect the output of an audio oscillator to the phonograph pickup socket. Adjust the oscillator to exactly 10,000 cycles.

3. Set the band selector to PHONO and adjust the 10 kc. trimmer for minimum output.

4. If an audio oscillator is not available for making this adjustment set the band selector to BDCST, set the range control to position 4, connect the antenna to the receiver and set the gang condenser to a point between two stations on adjacent channels having approximately the same power. If the 10 kc. trimmer is out of adjustment, a whistle will be heard. Adjust the trimmer until the whistle is eliminated.

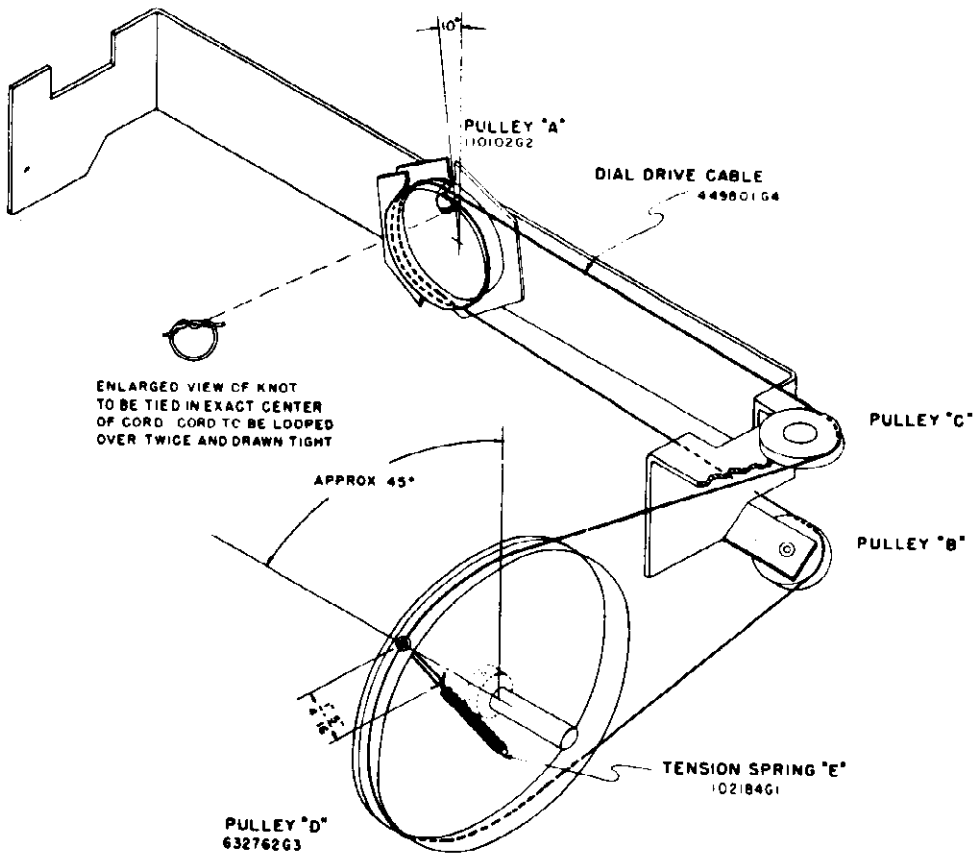

FIGURE 1

DIAL CORD REPLACEMENT

Rotate the brass pulley designated "A" in Figure 1 until the dial pointer strikes the stop at the high frequency end of the dial calibration. In this condition the slot in pulley "A" should be approximately ten degrees to the left of being vertical see Figure 1. If the slot in the pulley is in some other position under the above mentioned conditions, the pointer set screw is probably loose and has allowed the pointer to slip.

To correct this condition, first remove the glass dial and loosen the pointer screw. Then while holding pulley "A" so that its slot is approximately ten degrees to the left of vertical (when viewed from the rear) adjust the pointer until it is resting against the stop at the high frequency end of its travel. Then tighten the pointer set screw securely and replace the glass dial.

Completely unmesh the condenser gang and check the location of the hole or slot in pulley "D". If this hole is not approximately 45 degrees back from vertical as shown on Figure 1, loosen the two No. 6 Allen set screws in the hub of pulley "D" and slip the pulley on its shaft (while holding the condenser gang unmeshed) until the specified adjustment is obtained; then tighten one of the set screws securely. It will be shown later that this is a temporary setting. Next, tie a double knot in the exact center of a 25-inch length of dial cable and fold the cable back on itself so that the knot is at one end. The correct method for tying this knot is shown as an inset on Figure 1. Grasp the cable near the knotted end and slide it into the pulley slot so that the knot is against the inside rim of the pulley as shown in the sketch. The piece of cable nearest the dial frame should be wound in the direction shown for one-half turn; then over the lower pulley "B", around the bottom of the large pulley "D" and into the hole. Pull the cable

©John F. Rider

taut and wrap the end around the small hook on pulley "D" temporarily.

The remaining piece of cable should be wound around pulley "A" in the direction shown, for one complete turn, over the upper pulley "C", and over the top of pulley "D". Thread the end through the small hole in pulley "D" and pull both ends of the cable taut. With one end of tension spring "E" fastened to the hook on pulley "D" lace the two free ends of the cable through the opposite end of the spring and tie a knot at a point that will allow 1/4" to 5/16" of cable between the spring and the inside rim of pulley "D". Be sure to tie the knot around one coil of the spring in the manner shown.

Now with the condenser gang completely meshed, check the position of the dial pointer. If it is not in line with the last calibration mark at the low frequency end of the dial, loosen the set screw in pulley "D" and turn it until the pointer is in the specified position. Be sure that the condenser gang does not move during this adjustment. Then tighten the two screws in pulley "D" securely completing the operation.

CONDENSER GANG DRIVE ADJUSTMENTS

Whenever any of the mechanical parts in the condenser gang drive assembly require replacement due to rough handling or for any other reason, it is extremely important that clearances and adjustments shown on Figures 2 and 3 are correct; otherwise, the tuning mechanism will be sluggish or it may slip during operation.

In reassembling the mechanism after any part was replaced, follow the procedure outlined below:

1. Assemble the Tuning Shaft, Drive Collar, Compression Spring and Flywheel in the order shown on Figure 3. The distance between the front of the Drive Collar and the front of the Tuning Shaft must be 1 1/8

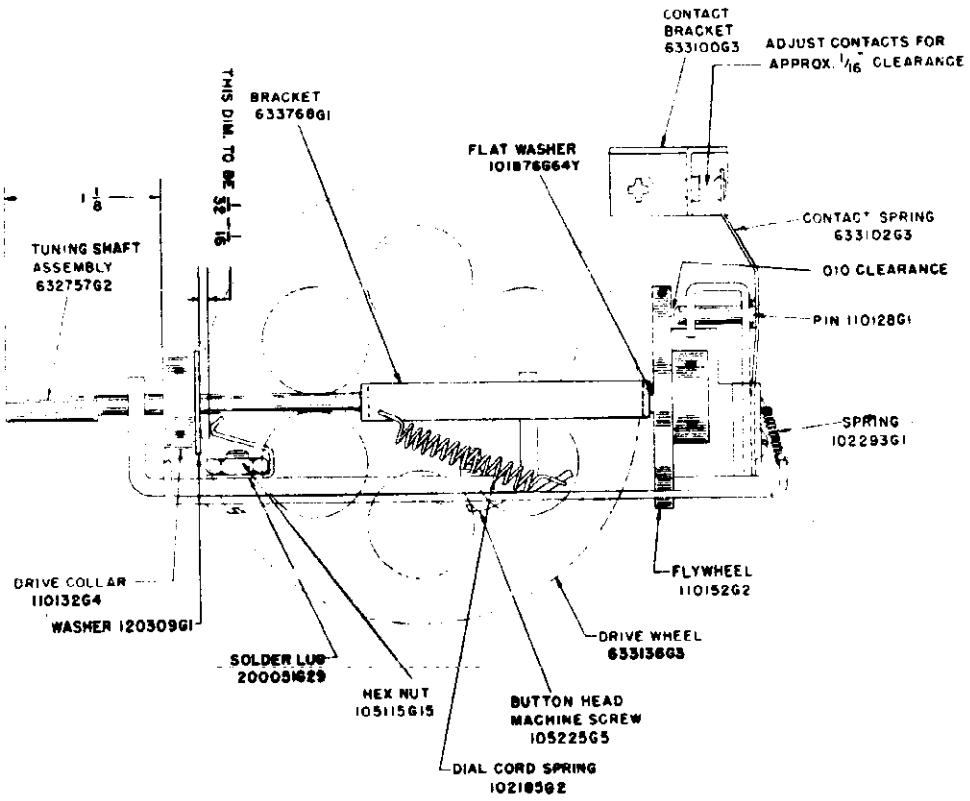

FIGURE 2

© John F. Rider

inches as specified on Figure 2. Install the Flywheel on the rear of the Tuning Shaft and slide it forward until it nearly touches the edge of the Drive Wheel; then tighten one of the set screws in the Flywheel hub. Insert a .010" gauge between the Flywheel and the Pin, and while holding the gauge in this position, loosen the set screw in the Flywheel hub that was previously tightened. The Compression Spring should force the Flywheel back against the gauge—when this occurs, tighten both set screws in the Flywheel hub.

2. Adjust the Muting Switch contact clearance by loosening the two screws in the Contact Bracket and sliding the bracket in the required direction until a 1/16" clearance is obtained. If this adjustment cannot be obtained in the manner prescribed, bend the Contact Bracket until proper clearance is realized.

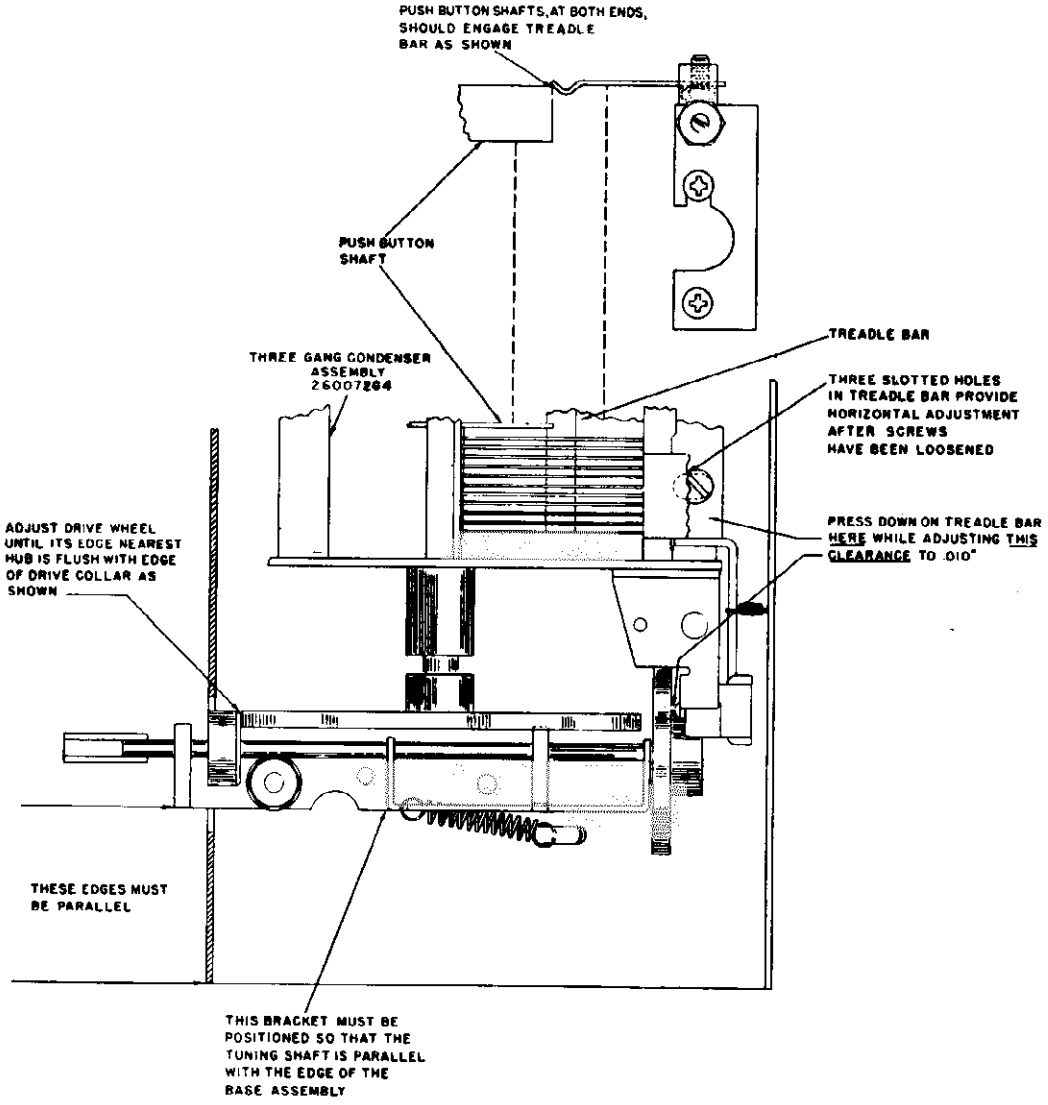

FIGURE 3

3. The Drive Wheel is properly located on its shaft when its edge nearest the hub is in line with the outside edge of the Drive Collar as shown on Figure 3. Two Allen set screws in the Drive Wheel hub provide a means of adjusting the position of this wheel.

4. When the adjustment outlined in paragraph 2 is correct, the proper contact clearance will automatically be obtained when the Muting Switch is to be "unmuted" while the push buttons are being set. While pressure is applied to any one of the push buttons while they are being set up, a pressure applied simultaneously to the Tuning Control knob will cause the Muting Switch contacts to open. Detailed instructions on setting up these push buttons are shown elsewhere in this bulletin.

5. If the push button shafts at both ends do not engage the Treadle Bar as shown on Figure 3, the three screws in the Treadle Bar must be loosened and the Treadle Bar should be moved until the required condition is obtained.

©John F. Rider

MODEL CR-217

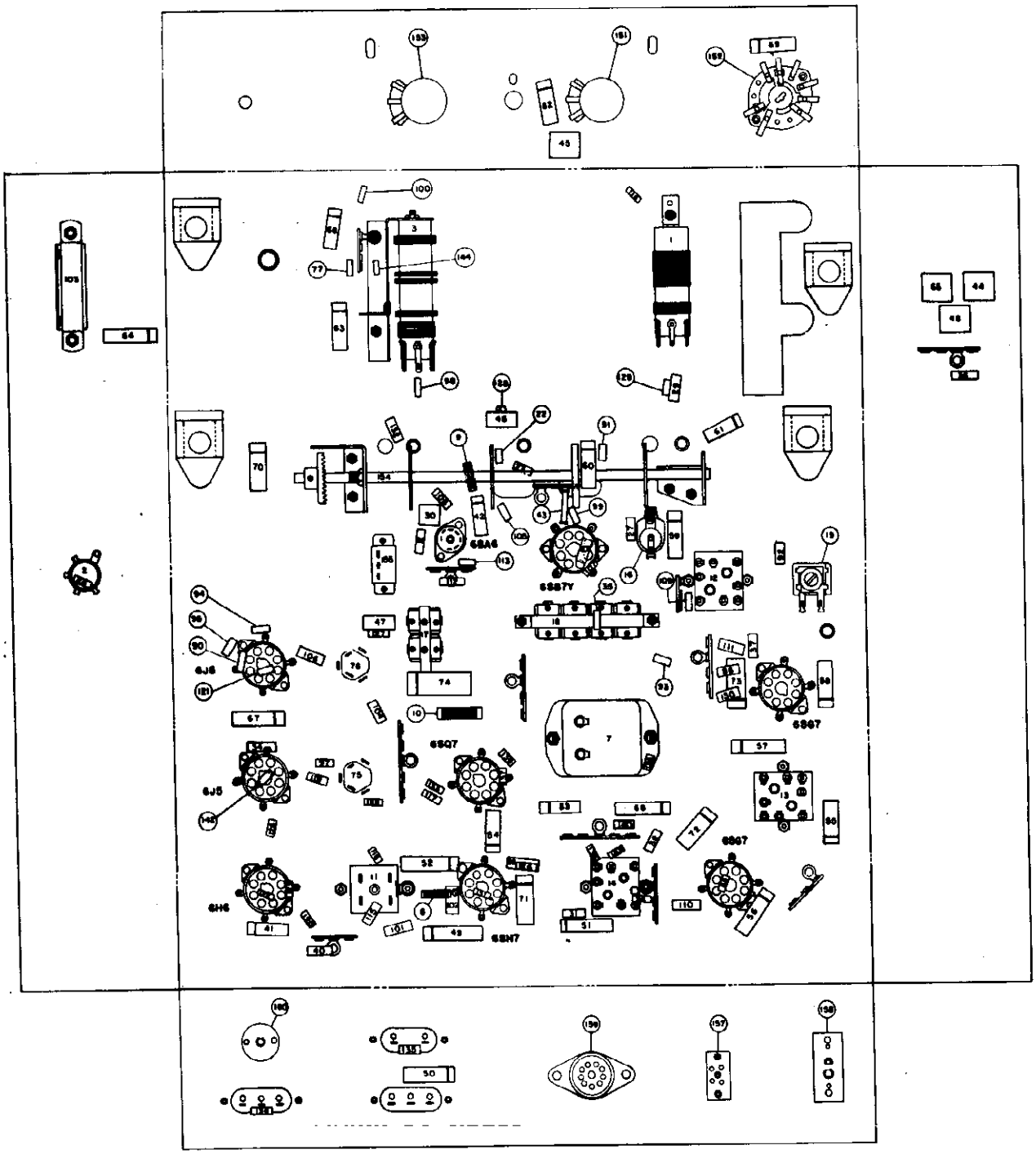

FIGURE 5

©John F. Rider

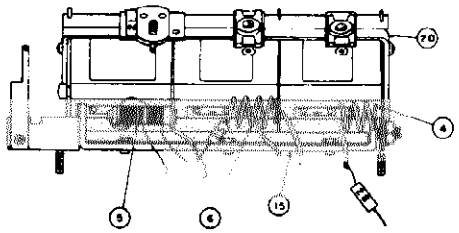
70
4
5
6
15

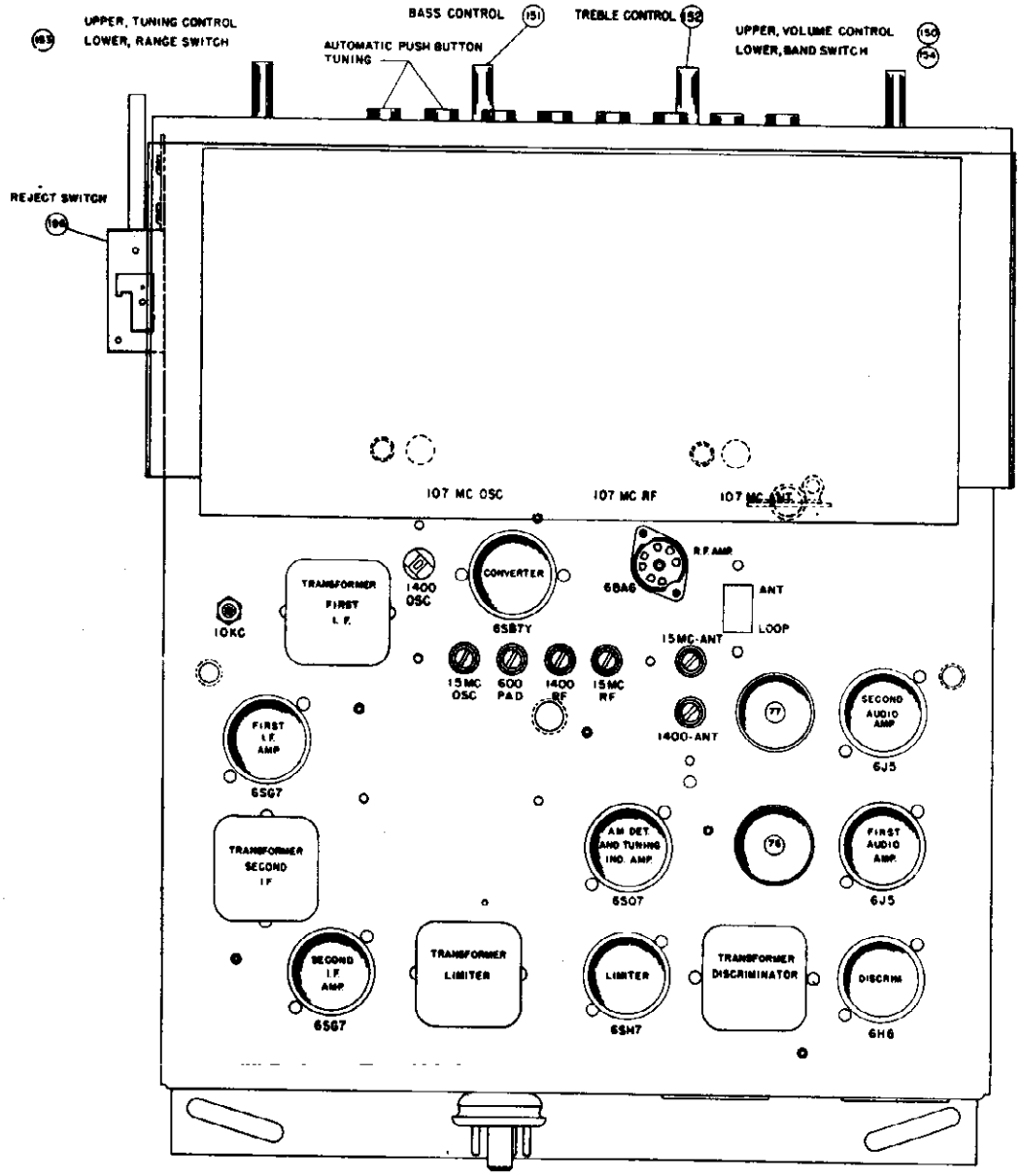
UPPER, TUNING CONTROL
LOWER, RANGE SWITCH
AUTOMATIC PUSH BUTTON TUNING
BASS CONTROL 151
TREBLE CONTROL 152
UPPER, VOLUME CONTROL 150
LOWER, BAND SWITCH 154
REJECT SWITCH 190
107 MC OSC
107 MC RF
107 MC ANT.
TRANSFORMER FIRST I.F.
1400 OSC
CONVERTER
6SBTY
6BA6
R.F. AMP
ANT
LOOP
10KC
15MC-ANT
15MC OSC
600 PAD
1400 RF
15MC RF
1400-ANT
77
SECOND AUDIO AMP
6J5
FIRST I.F. AMP
6SG7
TRANSFORMER SECOND I.F.
AM DET AND TUNING IND. AMP
6SQ7
76
FIRST AUDIO AMP
6J5
SECOND I.F. AMP
6SG7
TRANSFORMER LIMITER
LIMITER
6SH7
TRANSFORMER DISCRIMINATOR
DISCRIM
6H6

MODEL CR-217

PARTS LIST

REFERENCE NO.	DESCRIPTION	MAGNAVOX PART NO.
1	Coil Assembly, Oscillator (AM)	360298G1
2	Coil Assembly, Antenna (AM)	360299G1
3	Coil Assembly, R.F. (AM)	360300G1
4	Coil Assembly, Antenna (FM)	360296G3
5	Coil Assembly, Oscillator (FM)	360295G1
6	Coil Assembly, R.F. (FM)	360297G3
7	Coil Assembly, 10 K.C.	360244G1
8	Choke Coil	360284G1
9	Choke Coil	360284G1
10	Choke Coil, Filament	360264G1
11	Transformer (Discriminator)	360305G1
12	Transformer, I.F.	360285G1
13	Transformer, I.F.	360285G1
14	Transformer, Limiter	360286G1
15	Capacitor, Variable, Three Gang Tuning	260075G1
16	Capacitor, Variable, Oscillator Trimmer (Broadcast)	260067G4
17	Capacitor, Variable, 2 Trimmer	260080G1
18	Capacitor, Variable, 4 Trimmer and Oscillator Padder	260082G1
19	Capacitor, Variable, 10 K.C. Trimmer	259610G2
20	Capacitor, Trimmer Assembly	260084G1
21	Capacitor, Ceramic, 3mmf.	250088G38
22	Capacitor, Ceramic & Composition, 6 mmf.	250164G2
23	Capacitor, Ceramic & Composition, 10 mmf.	250164G3
24	Capacitor, Ceramic & Composition, 10 mmf.	250164G3
25	Capacitor, Ceramic, 35 mmf.	250088G40
26	Capacitor, Mica, 47 mmf.	250159G96
27	Capacitor, Ceramic, 50 mmf.	250088G39
28	Capacitor, Ceramic, 50 mmf.	250088G39
29	Capacitor, Mica, 100 mmf.	250159G98
30	Capacitor, Mica, 100 mmf.	250159G98
31	Capacitor, Mica, 220 mmf.	250159G100
32	Capacitor, Mica, 220 mmf.	250159G100
34	Capacitor, Mica, 330 mmf.	250159G101
35	Capacitor, Silver Mica, 335 mmf., ±1%	250085G38
36	Capacitor, Mica, 470 mmf.	250159G102
37	Capacitor, Mica, 470 mmf.	250159G102
40	Capacitor, Mica, 820 mmf., ±10%	250159G132
41	Capacitor, Paper, .0012 mfd., ±10%, 600 V.	250169G12
42	Capacitor, Paper, .002 mfd., 600 V.	250152G44
43	Capacitor, Ceramic, .004 mfd.	250088G34
44	Capacitor, Molded Paper, .004 mfd., 600 V.	250129G7
45	Capacitor, Molded Paper, .005 mfd., 400 V.	250129G10
46	Capacitor, Mica, .0062 mfd., ±5%	250161G27
47	Capacitor, Mica, .0062 mfd., ±5%	250161G27
48	Capacitor, Molded Paper, .008 mfd., 400 V.	250129G11
49	Capacitor, Paper, .01 mfd., 600 V.	250152G38
50	Capacitor, Paper, .01 mfd., 600 V.	250152G38
51	Capacitor, Paper, .01 mfd., 600 V.	250152G38
52	Capacitor, Paper, .01 mfd., 600 V.	250152G38
53	Capacitor, Paper, .01 mfd., 600 V.	250152G38

©John F. Rider

MODEL CR-217

REFERENCE NO.	DESCRIPTION	MAGNAVOX PART NO.
54	Capacitor, Paper, .01 mfd., 600 V.	250152G38
55	Capacitor, Paper, .01 mfd., 600 V.	250152G38
56	Capacitor, Paper, .01 mfd., 600 V.	250152G38
57	Capacitor, Paper, .01 mfd., 600 V.	250152G38
58	Capacitor, Paper, .01 mfd., 600 V.	250152G38
59	Capacitor, Paper, .01 mfd., 600 V.	250152G38
60	Capacitor, Paper, .01 mfd., 600 V.	250152G38
61	Capacitor, Paper, .01 mfd., 600 V.	250152G38
62	Capacitor, Paper, .01 mfd., 600 V.	250152G38
63	Capacitor, Paper, .01 mfd., 600 V.	250152G38
64	Capacitor, Paper, .01 mfd., 600 V.	250152G38
65	Capacitor, Molded Paper, .012 mfd., 200 V.	250129G13
66	Capacitor, Paper, .015 mfd., ±10%, 200 V.	250169G5
67	Capacitor, Paper, .02 mfd., 600 V.	250152G37
68	Capacitor, Paper, .02 mfd., 600 V.	250152G37
69	Capacitor, Paper, .02 mfd., 600 V.	250152G37
70	Capacitor, Paper, .05 mfd., 200 V.	250152G15
71	Capacitor, Paper, .05 mfd., 200 V.	250152G15
72	Capacitor, Paper, .05 mfd., 200 V.	250152G15
73	Capacitor, Paper, .05 mfd., 200 V.	250152G15
74	Capacitor, Paper, .1 mfd., 600 V.	250152G33
75	Capacitor, Electrolytic, 10 mfd., 450 V.--20 mfd., 25 V.	270023G6
76	Capacitor, Electrolytic, 10 mfd., 450 V.--20 mfd., 25 V.	270023G6
77	Capacitor, Mica, 1500 mmf., ±10%, 500 V.	250160G66
86	Resistor, Composition, 33 Ohms, ½ W.	230084G4
87	Resistor, Composition, 33 Ohms, ½ W.	230084G4
88	Resistor, Composition, 68 Ohms, ½ W.	230084G6
89	Resistor, Composition, 68 Ohms, ½ W.	230084G6
90	Resistor, Composition, 100 Ohms, ±10%, ½ W.	230084G50
91	Resistor, Composition, 100 Ohms, ½ W.	230084G7
92	Resistor, Composition, 150 Ohms, ½ W.	230084G8
93	Resistor, Composition, 220 Ohms, ½ W.	230084G9
94	Resistor, Composition, 220 Ohms, ±10%, ½ W.	230084G54
95	Resistor, Composition, 470 Ohms, ½ W.	230084G11
96	Resistor, Composition, 1000 Ohms, ½ W.	230084G13
97	Resistor, Composition, 2200 Ohms, ½ W.	230084G15
98	Resistor, Composition, 4700 Ohms, ½ W.	230084G17
99	Resistor, Composition, 5600 Ohms, ±10%, ½ W.	230084G71
100	Resistor, Composition, 5600 Ohms, ±10%, ½ W.	230084G71
101	Resistor, Composition, 8200 Ohms, ±10%, 1 W.	230085G73
102	Resistor, Composition, 8200 Ohms, ±10%, 1 W.	230085G73
103	Resistor, Wire Wound, 8500 Ohms	240035G5
104	Resistor, Composition, 10,000 Ohms, 1 W.	230085G19
105	Resistor, Composition, 10,000 Ohms, ½ W.	230084G19
106	Resistor, Composition, 15,000 Ohms, 1 W.	230085G20
107	Resistor, Composition, 15,000 Ohms, ½ W.	230084G20
108	Resistor, Composition, 20,000 Ohms, ±5%, 1 W.	230085G190
109	Resistor, Composition, 22,000 Ohms, ½ W.	230084G21
110	Resistor, Composition, 33,000 Ohms, 1 W.	230085G22
111	Resistor, Composition, 33,000 Ohms, 1 W.	230085G22
112	Resistor, Composition, 33,000 Ohms, ±10%, 2 W.	230086G80
113	Resistor, Composition, 39,000 Ohms, ±10%, W.	230084G81

©John F. Rider

MODEL CR-217

REFERENCE NO.	DESCRIPTION	MAGNAVOX PART NO.
114	Resistor, Composition, 47,000 Ohms, ½ W.	230084G23
115	Resistor, Composition, 68,000 Ohms, ±10%, ½ W.	230084G84
117	Resistor, Composition, 100,000 Ohms, ½ W.	230084G25
118	Resistor, Composition, 100,000 Ohms, ½ W.	230084G25
119	Resistor, Composition, 100,000 Ohms, ½ W.	230084G25
120	Resistor, Composition, 100,000 Ohms, ±10%, ½ W.	230084G86
121	Resistor, Composition, 150,000 Ohms, ½ W.	230084G26
122	Resistor, Composition, 150,000 Ohms, ±10%, ½ W.	230084G88
123	Resistor, Composition, 150,000 Ohms, ±10%, ½ W.	230084G88
124	Resistor, Composition, 220,000 Ohms, ½ W.	230084G27
125	Resistor, Composition, 470,000 Ohms, ±10%, ½ W.	230084G94
126	Resistor, Composition, 220,000 Ohms, ½ W.	230084G27
127	Resistor, Composition, 220,000 Ohms, ½ W.	230084G27
128	Resistor, Composition, 220,000 Ohms, ½ W.	230084G27
129	Resistor, Composition, 220,000 Ohms, ½ W.	230084G27
130	Resistor, Composition, 470,000 Ohms, ½ W.	230084G29
131	Resistor, Composition, 470,000 Ohms, ½ W.	230084G29
132	Resistor, Composition, 470,000 Ohms, ½ W.	230084G29
133	Resistor, Composition, 470,000 Ohms, ½ W.	230084G29
134	Resistor, Composition, 1 Megohm, ½ W.	230084G31
135	Resistor, Composition, 1 Megohm, ½ W.	230084G31
136	Resistor, Composition, 1 Megohm, ½ W.	230084G31
137	Resistor, Composition, 1.5 Megohm, ½ W.	230084G32
138	Resistor, Composition, 1.5 Megohm, ½ W.	230084G32
139	Resistor, Composition, 2.2 Megohm, ½ W.	230084G33
140	Resistor, Composition, 2.2 Megohm, ½ W.	230084G33
142	Resistor, Composition, 4.7 Megohm, ½ W.	230084G35
143	Resistor, Composition, 4.7 Megohm, ½ W.	230084G35
144	Resistor, Composition, 33,000 Ohms, ±10%, ½ W.	230084G80
150	Control, Volume, 1 Megohm	220044G24
151	Control, Bass, 1 Megohm, With Switch	220073G6
152	Control, Treble	160178G1
153	Switch, Range	220044G26
154	Switch, Rotary Band Switch	160179G1
155	Switch, Ant.-Loop	160176G1
156	Switch, Reject	160188G1
157	Socket, External Input	180060G1
158	Socket, Phono.	189741G1
159	Socket, Amplifier	180427G2
160	Socket, Solenoid	182776G1
161	Antenna Loop Assembly	*
162	Solenoid	360313G1
163	Plug, Solenoid	189147G1
	Dial Glass Assembly	150303G1
	Push Button Assembly for Gang	260093G1

*The part number of the loop antenna assembly changes with different Cabinets. It is therefore important that you specify the STYLE NUMBER of the instrument when ordering a replacement loop antenna assembly.

©John F. Rider

MODEL CR-223

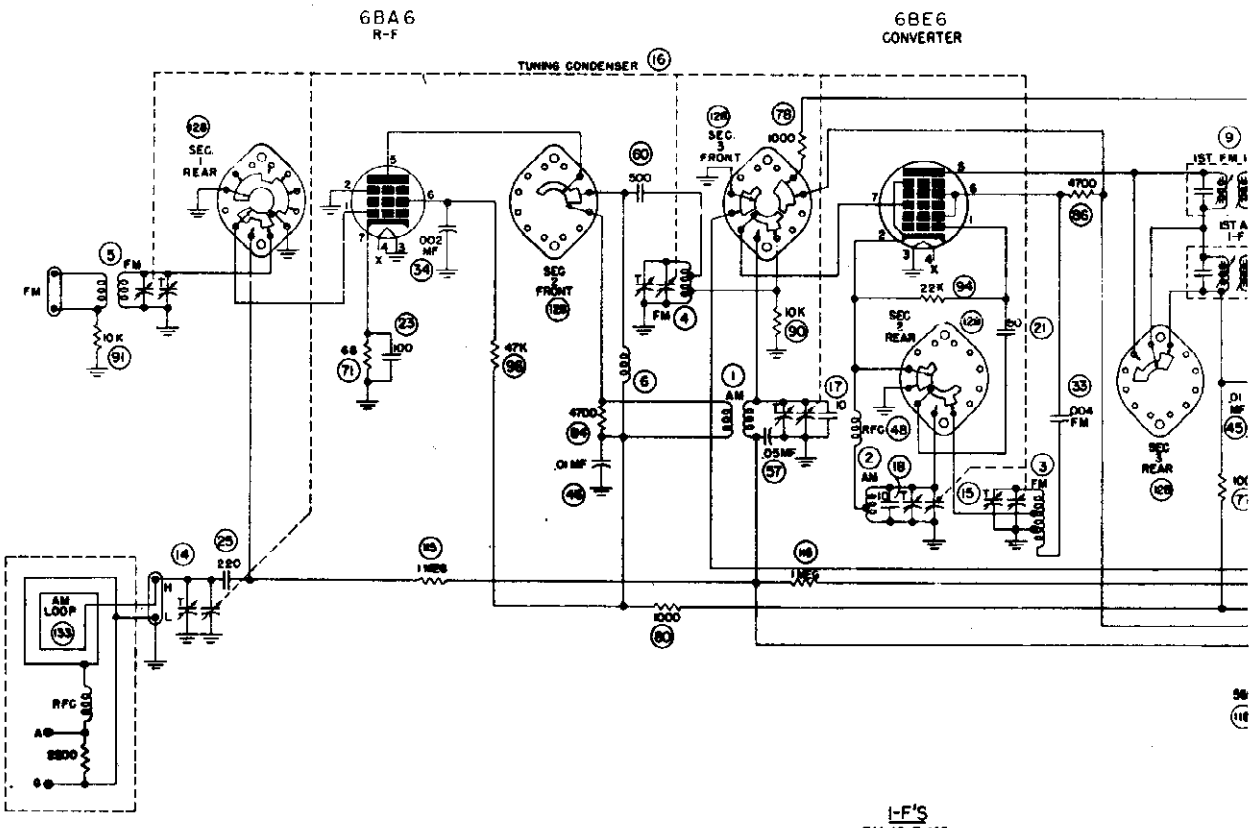

I-F'S
FM 10.7 MC.
AM 455 KC.

NOTES

BAND SWITCH SHOWN IN COUNTERCLOCKWISE (FM) POSITION WHEN VIEWED FROM THE FRONT PANEL.

ALL ELECTRICAL VALUES SHOWN ARE IN OHMS OR MMF UNLESS OTHERWISE SPECIFIED.

LETTERS SHOWN IN SQUARES DESIGNATE METER CONNECTION POINTS FOR ALIGNMENT DESCRIBED IN TEXT.

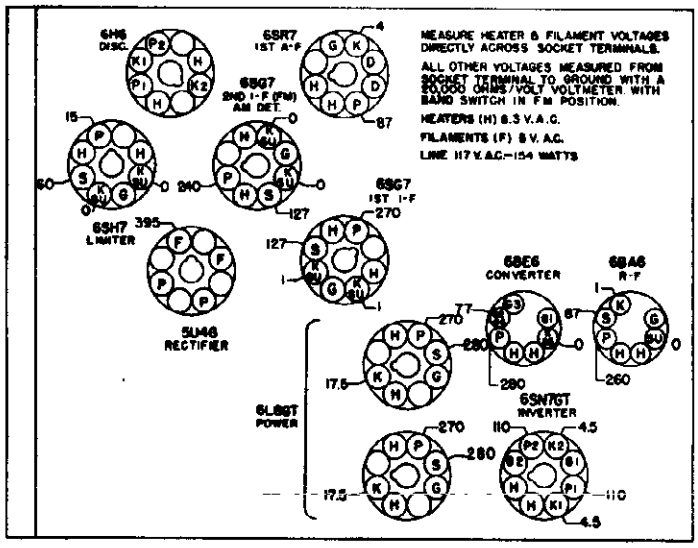

FIGURE 2

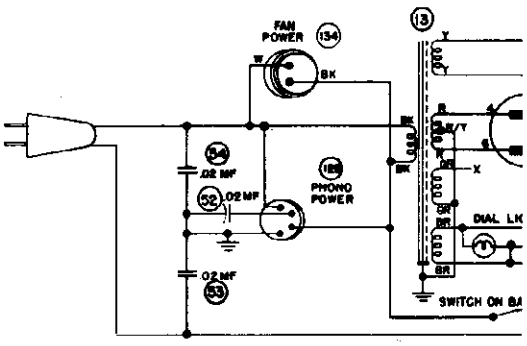

SPECIFICA

Power supply.....
Power consumption.....
Power output.....
Intermediate frequency.....
Tuning frequency range:
Broadcast Band.....
FM Band.....
Tubes:
R-F Amplifier.....
Converter.....
1st I-F Amplifier (AM-FM).....

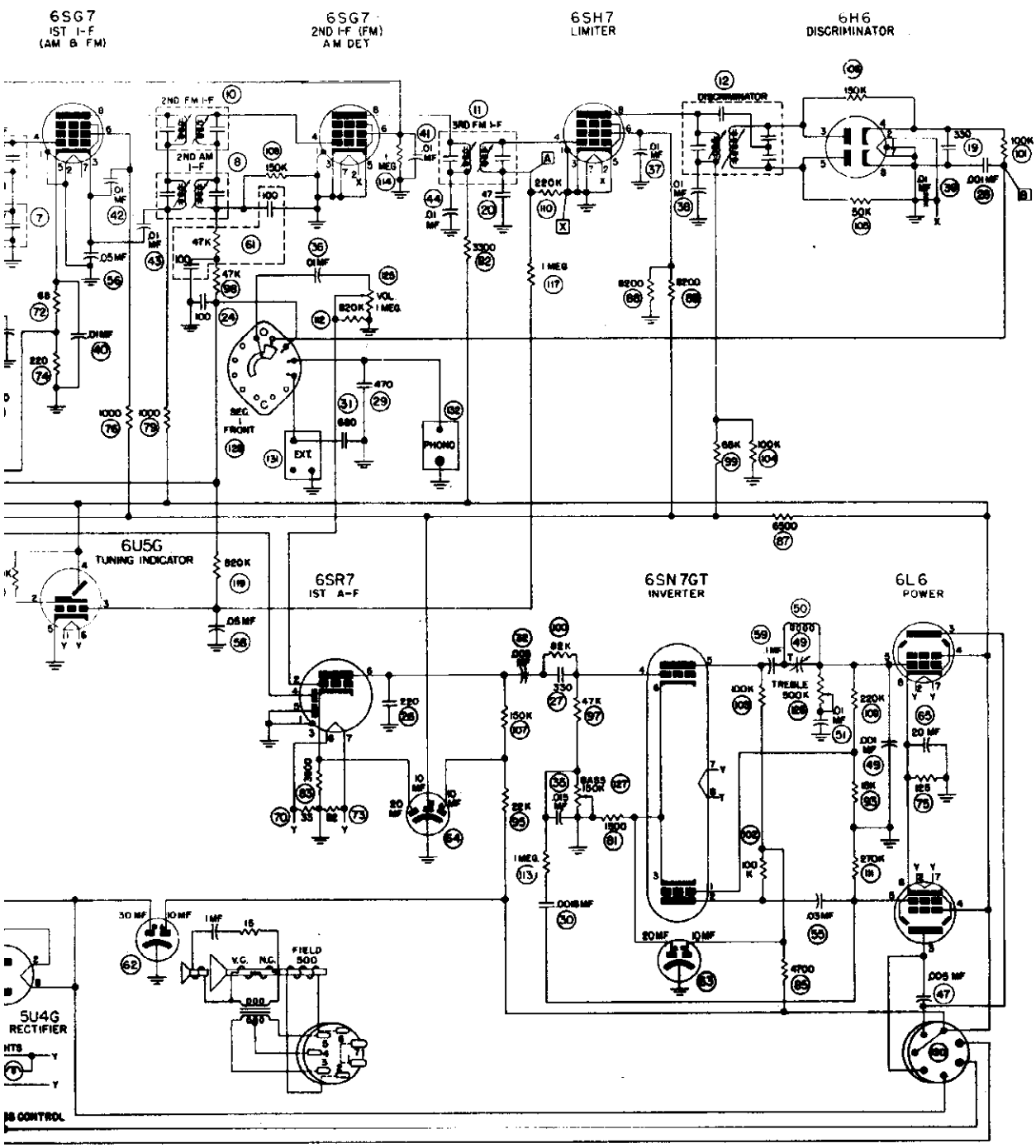

TIONS

	117 volts 50/60 cycles AC
	160 watts
	20 watts
	455 kc./10.7 mc.
	540-1620 kc.
	88—108 mc.
	6BA6
	6BE6
	6SG7

2nd I-F (FM), Detector and AVC (AM)	6SG7
Limiter	6SH7
Discriminator	6H6
First Audio	6SR7
Inverter	6SN7GT
Power output (push-pull stage)	(2) 6L6
Rectifier	5U4G
Tuning Indicator	6U5
Dial Lamps	Mazda No. 44
Speaker: coaxial	15" Dynamic 5" PM
Field coil resistance	500 ohms None
Voice coil impedance (400 cycles)	15 ohms 3.8 ohms
Output transformer	5000/15

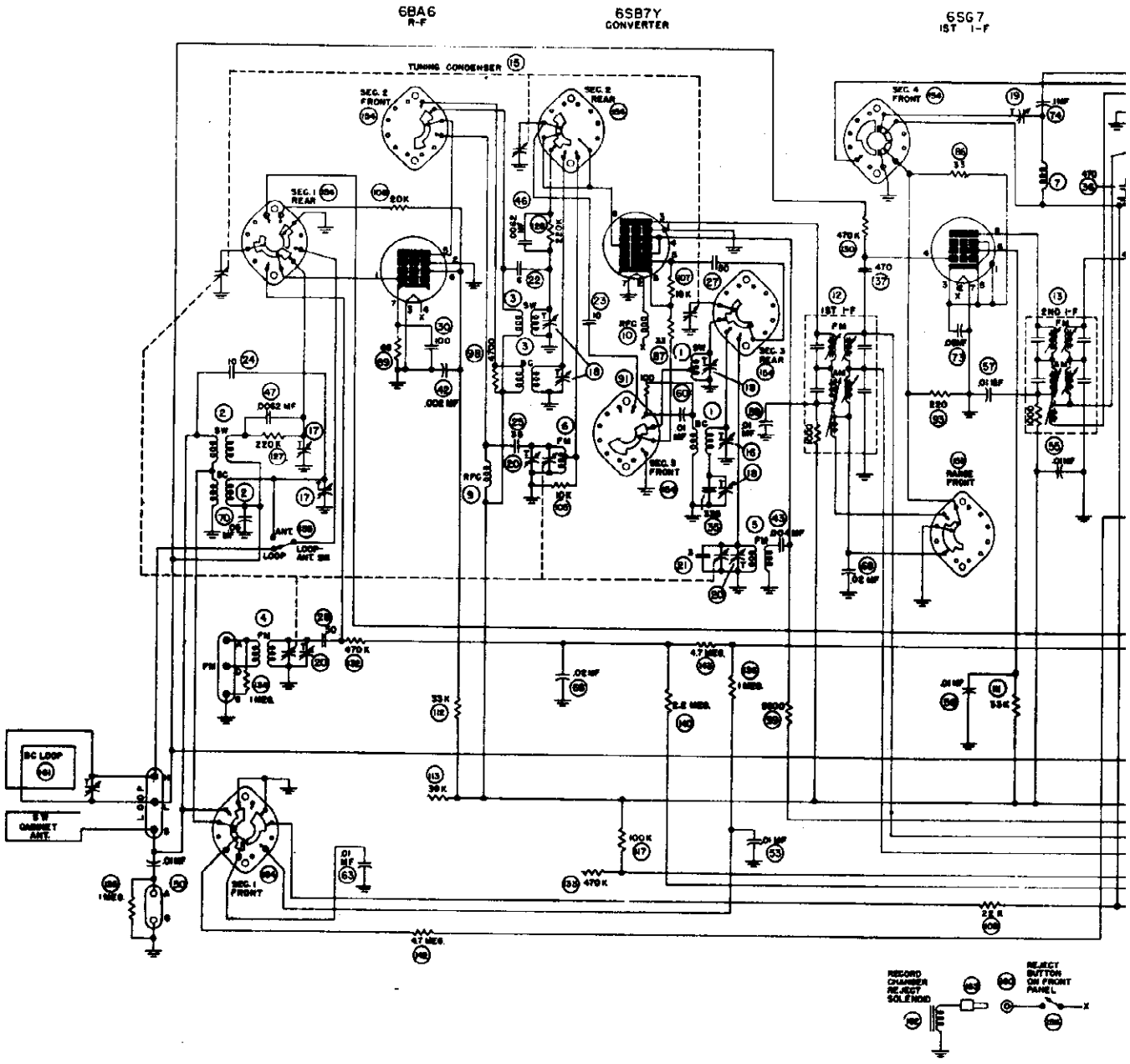

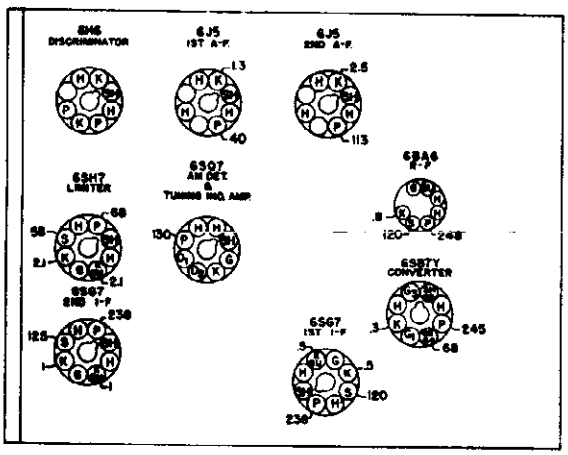

VOLTAGE TABLE

MEASURE HEATER VOLTAGES ACROSS SOCKET TERMINALS.

ALL OTHERS MEASURED FROM SOCKET TERMINAL TO GROUND WITH A 20,000 OHMS/VOLT VOLTMETER WITH BAND SWITCH IN SHORT WAVE POSITION.

HEATERS (H) 6.3 V. A.C.

LINE VOLTAGE 117 V. A.C.

I-F'S

AM 455 KC. FM 10.7 MC.

NOTES

1. BANDSWITCH, ITEM 154, SHOWN IN CLOCKWISE POSITION (BAND-SWITCH KNOB IN C'CLOCKWISE POSITION WHEN VIEWED FROM THE FRONT PANEL.
2. ALL ELECTRICAL VALUES SHOWN ARE IN MMF OR OHMS UNLESS OTHERWISE SPECIFIED.
3. LETTERS SHOWN IN SQUARES DESIGNATE METER CONNECTION POINTS FOR ALIGNMENT AS DESCRIBED IN TEXT.
4. RANGE SWITCH, ITEM 153, SHOWN IN C'CLOCKWISE POSITION WHEN VIEWED FROM THE FRONT PANEL.

FIGURE

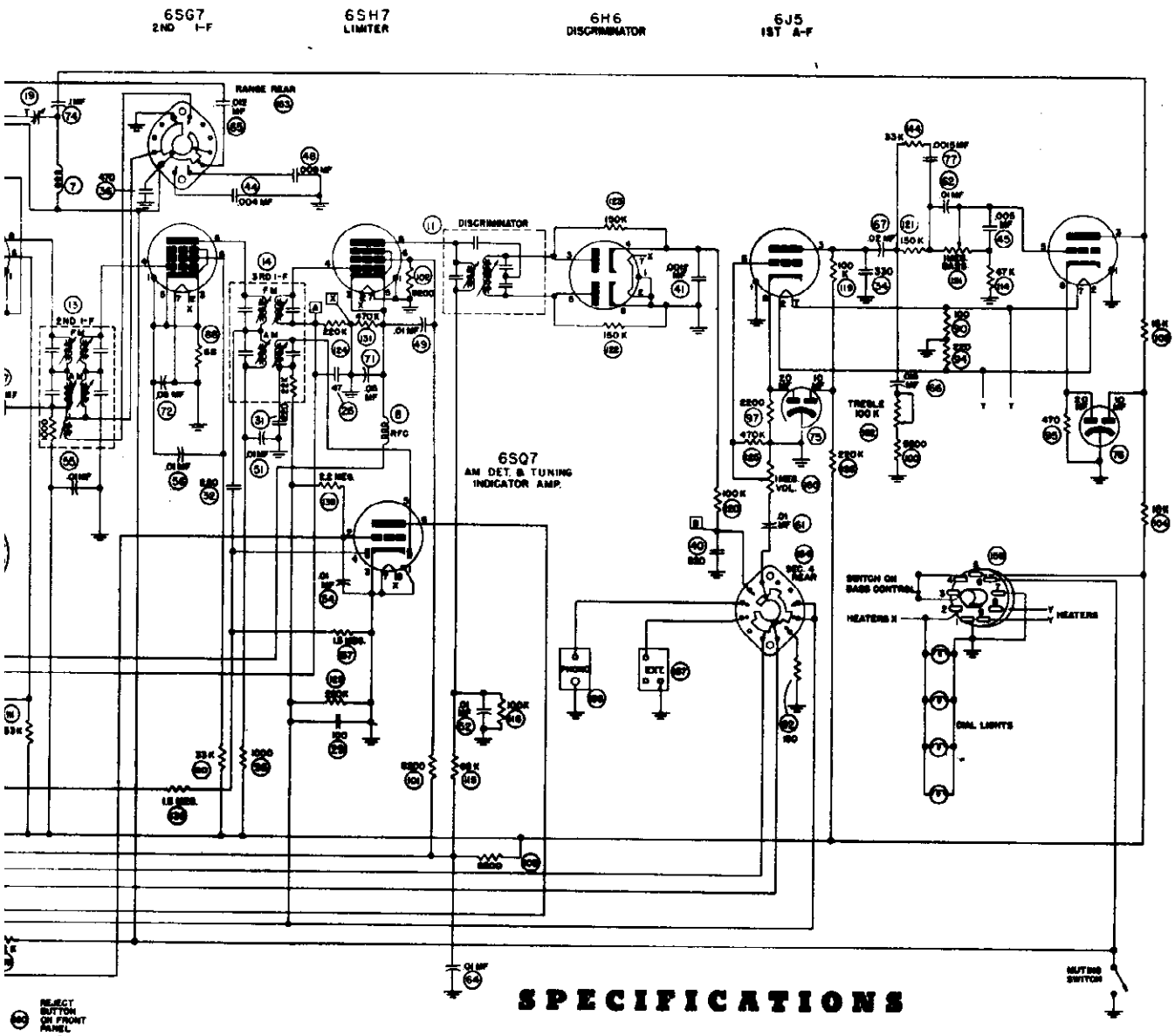

FIGURE 4

SPECIFICATIONS

Intermediate frequency	455 kc./10.7 mc.
Tuning frequency range:	
Broadcast Band	540—1620 kc.
Short Wave Band	5.9—17.3 mc.
FM Band	88—108 mc.
Tubes:	
R-F Amplifier	6BA6
Converter	6SB7Y
1st I-F Amplifier (AM-FM)	6SG7
2nd I-F Amplifier (AM-FM)	6SG7
Limiter	6SH7
Discriminator	6H6
Detector and AVC (AM) and Tuning Indicator Amplifier	6SQ7
First Audio	6J5
Second Audio	6J5
Dial Lamps	Mazda No. 44

FM ALIGNMENT

DISCRIMINATOR ALIGNMENT

1. Tune signal generator to EXACTLY 10.775 mc. and connect to pin 4 of the 6SH7 Limiter tube socket through a .01 mfd. capacitor.

2. Connect a DC vacuum tube voltmeter between point "B" on schematic diagram and ground (across .00047 mfd. capacitor—Pin 6 on 6H6 to ground).

3. Peak both discriminator slugs at 10.775 mc.

4. Retune signal generator to exactly 10.7 mc. and adjust bottom slug for zero volts.

5. The DC voltage at 10.625 mc. should be within 10% of the voltage at 10.775 mc. and of opposite polarity.

Note: If the signal generator is not capable of sufficient output to produce a readable DC voltage, the amplification of the last i-f stage can be used to increase the signal input to the limiter for discriminator alignment. To accomplish this, align the last i-f stage as indicated in "IF Alignment". Then align discriminator as above leaving the signal generator connected to the grid of the 6SG7 2nd i-f tube.

I-F ALIGNMENT

1. Connect high side of signal generator, through a .01 mfd. capacitor and a 1000 ohm resistor in series, to pin 4 of the 6SG7 2nd i-f tube. Connect low side of generator to chassis.

2. Close gang condenser and connect vacuum tube voltmeter across 220,000 ohm limiter grid resistor; (Point "A" on schematic to ground). Adjust signal generator output until a reading of at least 3 volts is obtained. In order to reduce regeneration caused by the vacuum tube voltmeter leads, a 1-megohm isolating resistor, connected with as short leads as possible to point "A" should be used in series with the vacuum tube voltmeter. Align the 3rd i-f transformer for best peak as indicated on voltmeter.

3. Repeat above for each succeeding transformer by connecting signal generator to signal grid of first i-f tube 6SG7 then to the signal grid of 6BE6 converter.

The i-f stages should be aligned in this order.

WARNING—After each i-f stage has been aligned, do not repeak with the signal into the grid of the 6BE6.

ALTERNATE VISUAL ALIGNMENT OF I-F STAGES

1. Replace signal generator with sweep generator having approximately 300 kc. sweep and tune generator to 10.7 mc. Connect oscilloscope across 220,000 ohm limiter grid resistor through a 1-megohm isolating resistor. The order of alignment is the same as when using a vacuum tube voltmeter. Each i-f transformer should be individually aligned for best peak and symmetry.

R-F ALIGNMENT

1. Connect vacuum tube voltmeter across limiter grid resistor as in FM I-F alignment.

2. Ground one side of the FM Antenna by placing a wire jumper from one FM connection on the antenna terminal strip to the ground connection.

3. Connect unmodulated signal generator through a 300 ohm resistor to ungrounded antenna post and chassis, and tune signal generator to 107 mc.

4. Set radio dial to 107 mc. and tune oscillator trimmer to peak output on vacuum tube voltmeter. Adjust signal generator output until a reading of at least 3 volts is obtained.

5. Tune 107 mc. r-f and antenna trimmers for maximum indication on voltmeter—it may be necessary to rock the dial while adjusting the r-f trimmer.

SPECIAL SERVICE INFORMATION

The following information is provided for the service man who has a vacuum tube voltmeter or a similar measuring instrument available.

STAGE GAINS*

Antenna Post to R-F Grid at:

600 kc.	5.00
98 mc.	1.15

R-F Grid to Converter Grid at:

600 kc.	14.5
98 mc.	9.4

R-F on Converter Grid to 455 kc. on I-F Grid at:

600 kc.	25.0
98 mc.	3.2

I-F on Converter Grid to 1st I-F Grid at:

455 kc. (gang closed)	28.0

1st I-F Grid to 2nd I-F Grid** at:

455 kc.	95
10.7 mc.	33

2nd I-F Grid to Limiter Grid at:

10.7 mc.	33.4

OSCILLATOR OUTPUT VOLTAGE

The DC voltage developed across the Oscillator Grid Resistor (105) at:

600 kc.	6.6V
98 mc.	6.0V

or 0.3 ma. through 22,000 ohm Oscillator Grid Resistor at 600 kc. and 0.27 ma. at 98 mc.

AUDIO GAIN

Voltage required across the Volume Control to produce 0.1 watt speaker output*** at 400 cycles is .016 volt with Input Selector Switch in BDCST. setting.

*Variations of ±20% are permissible. All readings made with sufficient input signal to provide 0.5 watt speaker output. 0.5 watt speaker output at 400 cycles is equivalent to a reading of 2.74V. as measured by a high resistance AC voltmeter across the output transformer secondary.

**Detector Plate on AM.

***0.1 watt speaker output at 400 cycles is equivalent to a reading of 1.25 volts as measured by a high resistance AC voltmeter across the voice coil of speaker.

©John F. Rider

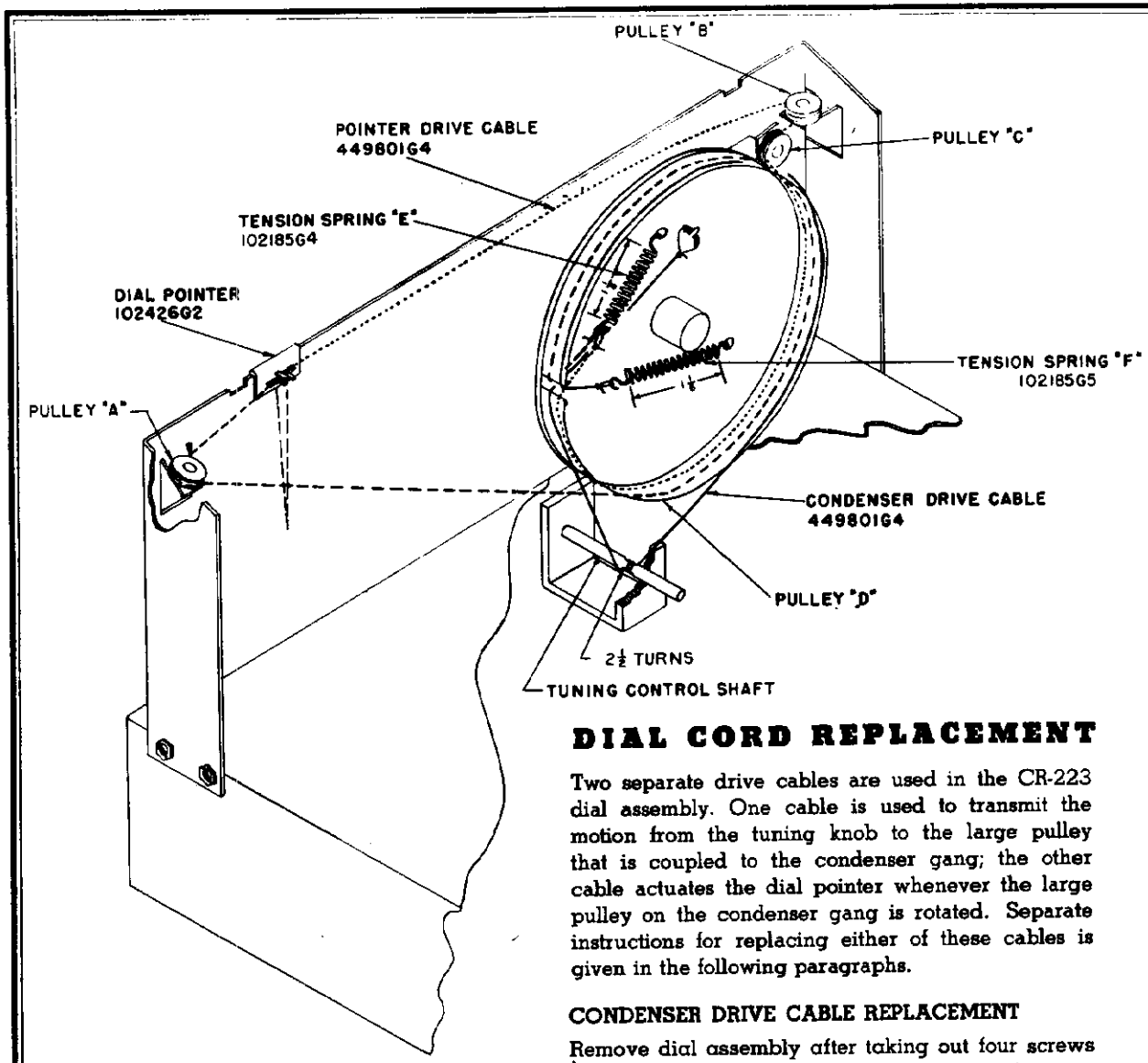

FIGURE 1

DIAL CORD REPLACEMENT

Two separate drive cables are used in the CR-223 dial assembly. One cable is used to transmit the motion from the tuning knob to the large pulley that is coupled to the condenser gang; the other cable actuates the dial pointer whenever the large pulley on the condenser gang is rotated. Separate instructions for replacing either of these cables is given in the following paragraphs.

CONDENSER DRIVE CABLE REPLACEMENT

Remove dial assembly after taking out four screws on each side of chassis. Slide a short length (approximately ½ inch) of sleeving over one end of a length of dial cable, form a small loop and tie a knot in the manner shown on Figure 1. Tie spring to opposite end of cable making length excluding spring 19½ inches. Hook loop over the metal hook in pulley "D" and lace the cable through the pulley slot and around the pulley in a counterclockwise direction when viewed from the rear of the dial assembly keeping the cable to the rear of the pulley groove. Lace the cable around the smaller diameter portion of the tuning control shaft wrapping 2½ turns *from front to back;* then around the opposite side of pulley "D" into the pulley through the slot. Hook the end of tension spring "F" in the hole provided in pulley "D", completing this operation.

DIAL POINTER DRIVE CABLE REPLACEMENT

Remove dial assembly after taking out four screws on each side of chassis. Slip a one-half inch length of sleeving over a 42-inch length of dial cable. Tie the two ends to the loop end of the cable spring "E" securely so that the cable doubled measures 19⅝ inches end to end excluding spring.

Place spring hook in top hole and draw cable through slot of pulley "D". Loop one end of cable around pulley "D" in a clockwise direction in front of condenser drive cable (viewing dial assembly from front) then loop the remaining end around pulley in a counterclockwise direction. Secure both ends of cable to chassis at edge of pulley slot with scotch tape, keeping piece of sleeving on remaining loop of cable.

Replace dial assembly and loop cable over pulley "A". While holding cable taut remove scotch tape and loop cable over pulleys "B" and "C" as shown in Figure 1.

Turn the tuning control shaft until the condenser gang is completely meshed and slide the dial pointer on its track until it is in line with the last calibration mark at the low frequency end of the dial. The short piece of sleeving installed prior to the stringing operation should be slid to the rear of the dial pointer and the crimping lug on the pointer pressed over the sleeving. After checking to make certain that the condenser gang is completely meshed and the dial pointer is in the position specified previously, apply a few drops of cement to each end of the sleeving to which the dial pointer is fastened. This completes the operation.

MODEL CR-223

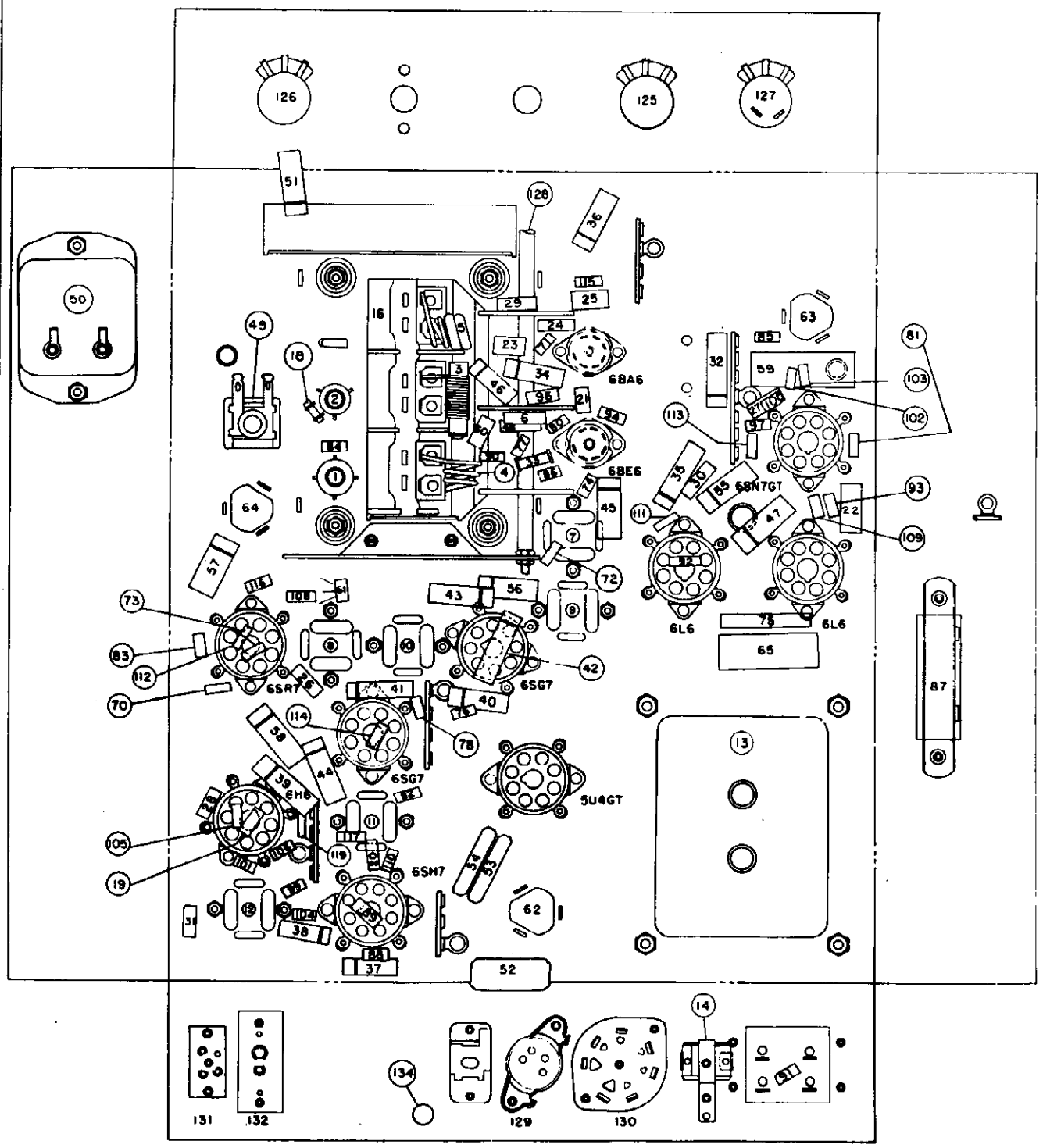

FIGURE 3

© John F. Rider

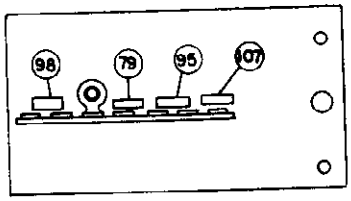
98
79
95
107

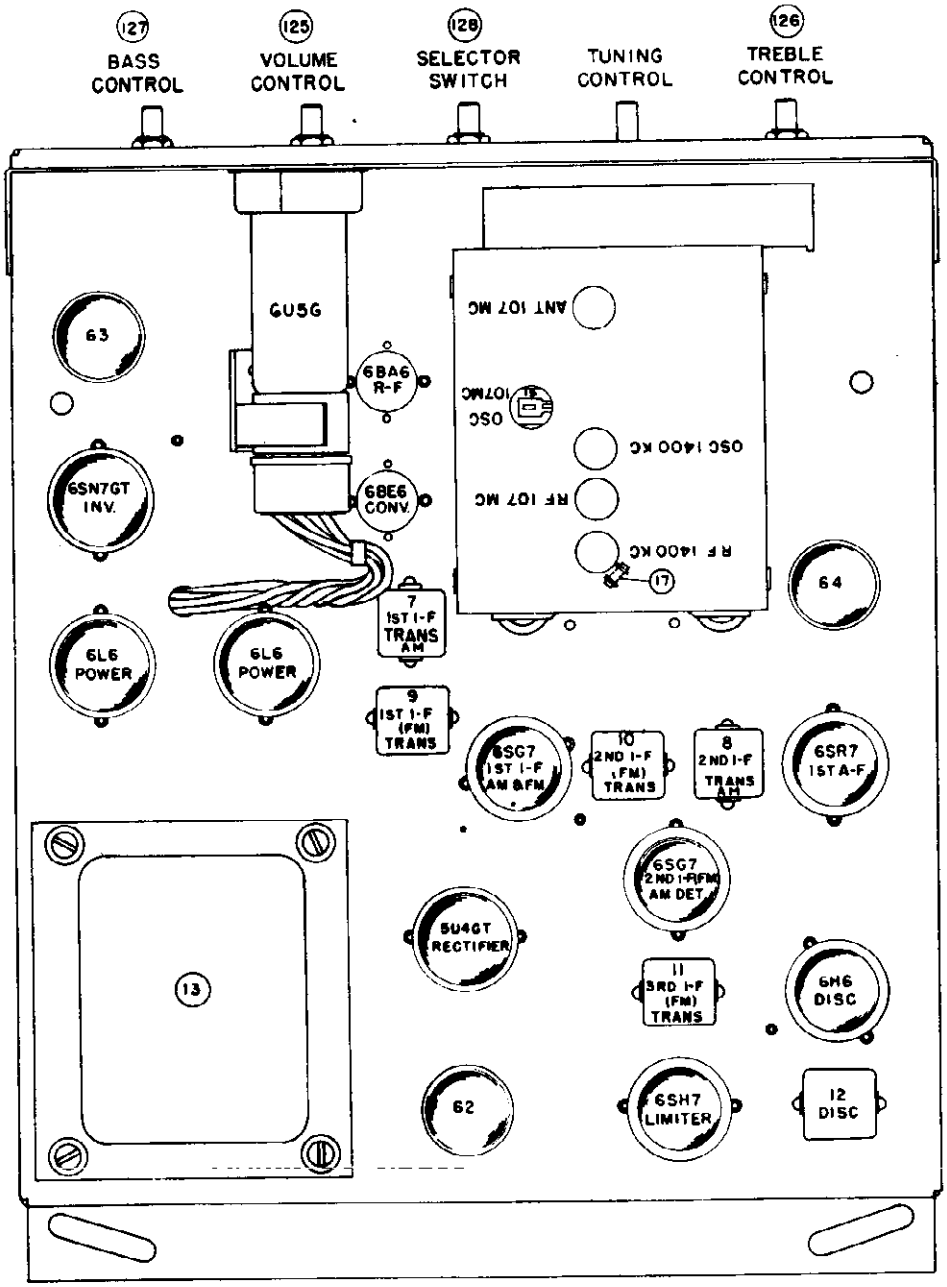
127
BASS CONTROL
125
VOLUME CONTROL
128
SELECTOR SWITCH
TUNING CONTROL
126
TREBLE CONTROL
63
6U5G
6BA6 R-F
6SN7GT INV.
6BE6 CONV.
7 1ST I-F TRANS AM
6L6 POWER
6L6 POWER
9 1ST I-F (FM) TRANS
6SG7 1ST I-F AM & FM
10 2ND I-F (FM) TRANS
8 2ND I-F TRANS AM
6SR7 1ST A-F
6SG7 2ND I-F(FM) AM DET.
5U4GT RECTIFIER
11 3RD I-F (FM) TRANS
6H6 DISC
13
62
6SH7 LIMITER
12 DISC
64
ANT 107 MC
OSC 107MC
OSC 1400 KC
RF 107 MC
RF 1400 KC
17

©John F. Rider

PARTS LIST

REFERENCE NO.	DESCRIPTION	MAGNAVOX PART NO.
1	Coil assembly, r-f (AM)	360348-1
2	Coil assembly, oscillator (AM)	360349-1
3	Coil assembly, oscillator (FM)	360323-1
4	Coil assembly, r-f (FM)	360322-2
5	Coil assembly, antenna (FM)	360321-2
6	Coil, choke	360284-1
7	Transformer, first i-f	360373-1
8	Transformer, second i-f	360373-2
9	Transformer, first i-f (FM)	360374-1
10	Transformer, second i-f (FM)	360374-1
11	Transformer, third i-f (FM)	360374-1
12	Transformer, discriminator	360375-1
13	Transformer, power	300052-2
14	Capacitor, variable trimmer	250046-2
15	Capacitor, variable trimmer	260067-5
16	Capacitor, three gang tuning	260103-1
17	Capacitor, ceramic, 10 mmf. ±5%, 500 V.	250088-8
18	Capacitor, ceramic, 10 mmf. ±5%, 500 V.	250088-8
19	Capacitor, mica, 330 mmf.	250159-101
20	Capacitor, mica, 47 mmf. 500 V.	250159-96
21	Capacitor, ceramic, 50 mmf. ±10%, 500 V.	250088-39
22	Capacitor, paper, .001 mfd. 600 V.	250152-45
23	Capacitor, mica, 100 mmf. 500 V.	250159-98
24	Capacitor, mica, 100 mmf. 500 V.	250159-98
25	Capacitor, mica, 220 mmf. 500 V.	250159-100
26	Capacitor, mica, 220 mmf. 500 V.	250159-100
27	Capacitor, mica, 330 mmf. ±10%, 5 V.	250159-88
28	Capacitor, paper, .001 mfd. 600 V.	250152-45
29	Capacitor, mica, 470 mmf. 500 V.	250159-102
30	Capacitor, mica, 1800 mmf. ±5%, 500 V.	250160-44
31	Capacitor, mica, 680 mmf. 500 V.	250159-136
32	Capacitor, paper, .003 mfd. 600 V.	250152-43
33	Capacitor, ceramic, .004 mfd. 350 V.	250088-34
34	Capacitor, paper, .002 mfd. 600 V.	250152-44
35	Capacitor, paper, .015 mfd. ±10%, 200 V.	250169-5
36	Capacitor, paper, .01 mfd. 200 V.	250152-18
37	Capacitor, paper, .01 mfd. 600 V.	250152-38
38	Capacitor, paper, .01 mfd. 600 V.	250152-38
39	Capacitor, paper, .01 mfd. 200 V.	250152-18
40	Capacitor, paper, .01 mfd. 200 V.	250152-18
41	Capacitor, paper, .01 mfd. 600 V.	250152-38
42	Capacitor, paper, .01 mfd. 600 V.	250152-38
43	Capacitor, paper, .01 mfd. 600 V.	250152-38
44	Capacitor, paper, .01 mfd. 600 V.	250152-38
45	Capacitor, paper, .01 mfd. 600 V.	250152-38
46	Capacitor, paper, .01 mfd. 600 V.	250152-38
47	Capacitor, paper, .005 mfd. 600 V.	250152-41
48	Coil, choke	360284-1
49	Trimmer, 10 kc.	259610-2
50	Coil, 10 kc.	360244-1
51	Capacitor, paper, .01 mfd. 200 V.	250152-18
52	Capacitor, paper, .02 mfd. 600 V.	250129-3
53	Capacitor, paper, .02 mfd. 600 V.	250129-3
54	Capacitor, paper, .02 mfd. 600 V.	250129-3
55	Capacitor, paper, .03 mfd. 600 V.	250152-36
56	Capacitor, paper, .05 mfd. 200 V.	250152-15
57	Capacitor, paper, .05 mfd. 200 V.	250152-15
58	Capacitor, paper, .05 mfd. 200 V.	250152-15
59	Capacitor, paper, .1 mfd. 400 V.	250152-33
60	Capacitor, ceramic, 500 mmf.	250088-31
61	Capacitor-resistor filter	250170-1
62	Capacitor, electrolytic, 30-10 mfd. 475 V.	270023-2
63	Capacitor, electrolytic, 10 mfd. 450 V. - 20 mfd. 25 V.	270023-6
64	Capacitor, electrolytic, 10-10 mfd. 450 V.--20 mfd. 25 V.	270023-7
65	Capacitor, electrolytic, 20 mfd. 25 V.	270027-2
70	Resistor, composition, 33 ohms, ½ W.	230084-4
71	Resistor, composition, 68 ohms, ½ W.	230084-6
72	Resistor, composition, 68 ohms, ½ W.	230084-6
73	Resistor, composition, 82 ohms, ±10%, ½ W.	230084-49
74	Resistor, composition, 220 ohms, ½ W.	230084-9
75	Resistor, composition, 125 ohms, 5 W.	240021-11
76	Resistor, composition, 1000 ohms, ½ W.	230084-13
77	Resistor, composition, 1000 ohms, ½ W.	230084-13
78	Resistor, composition, 1000 ohms, ½ W.	230084-13
79	Resistor, composition, 1000 ohms, ½ W.	230084-13
80	Resistor, composition, 1000 ohms, ½ W.	230084-13
81	Resistor, composition, 1500 ohms, ½ W.	230084-14

©John F. Rider

REFERENCE NO.	DESCRIPTION	MAGNAVOX PART NO.
82	Resistor, composition, 3300 ohms, ½ W.	230084-16
83	Resistor, composition, 3900 ohms, ±10%, ½ W.	230084-69
84	Resistor, composition, 4700 ohms, ½ W.	230084-17
85	Resistor, composition, 4700 ohms, ½ W.	230084-17
86	Resistor, composition, 4700 ohms, ½ W.	230084-17
87	Resistor, wire wound, 6500 ohms, ±10%	240035-9
88	Resistor, composition, 8200 ohms, ±10%, 1 W.	230085-73
89	Resistor, composition, 8200 ohms, ±10%, 1 W.	230085-73
90	Resistor, composition, 10,000 ohms, ½ W.	230084-19
91	Resistor, composition, 10,000 ohms, ½ W.	230084-19
93	Resistor, composition, 15,000 ohms, ±5%, ½ W.	230084-187
94	Resistor, composition, 22,000 ohms, ½ W.	230084-21
95	Resistor, composition, 22,000 ohms, ½ W.	230084-21
96	Resistor, composition, 47,000 ohms, 1 W.	230085-23
97	Resistor, composition, 47,000 ohms, ½ W.	230084-23
98	Resistor, composition, 47,000 ohms, ½ W.	230084-23
99	Resistor, composition, 68,000 ohms, ±10%, ½ W.	230084-84
100	Resistor, composition, 82,000 ohms, ±10%, ½ W.	230084-85
101	Resistor, composition, 100,000 ohms, ±10%, ½ W.	230084-86
102	Resistor, composition, 100,000 ohms, ½ W.	230084-25
103	Resistor, composition, 100,000 ohms, ½ W.	230084-25
104	Resistor, composition, 100,000 ohms, ½ W.	230084-25
105	Resistor, composition, 150,000 ohms, ±10%, ½ W.	230084-88
106	Resistor, composition, 150,000 ohms, ±10%, ½ W.	230084-88
107	Resistor, composition, 150,000 ohms, ½ W.	230084-26
108	Resistor, composition, 150,000 ohms, ½ W.	230084-26
109	Resistor, composition, 220,000 ohms, ±5%, ½ W.	230084-215
110	Resistor, composition, 220,000 ohms, ½ W.	230084-27
111	Resistor, composition, 270,000 ohms, ±10%, ½ W.	230084-91
112	Resistor, composition, 820,000 ohms, ±10%, ½ W.	230084-97
113	Resistor, composition, 1 megohm, ±5%, ½ W.	230084-231
114	Resistor, composition, 1 megohm, ½ W.	230084-31
115	Resistor, composition, 1 megohm, ½ W.	230084-31
116	Resistor, composition, 1 megohm, ½ W.	230084-31
117	Resistor, composition, 1 megohm, ½ W.	230084-31
118	Resistor, composition, 560,000 ohms, ½ W., ±10% (in tuning eye)	230084-95
119	Resistor, composition, 820,000 ohms, ½ W., ±10%	230084-97
125	Control, volume	220072-18
126	Control, treble	220072-8
127	Control, bass, with switch	220073-5
128	Switch, selector	160194-1
129	Socket, motor	180501-5
130	Socket, speaker	180504-16
131	Socket, external	180060-1
132	Socket, phono	189741-1
133	Loop antenna	*
134	AC socket and cable assembly for fan power	180505-5

*The part number of the Loop Antenna Assembly changes with different cabinets. It is therefore important that you specify the style number of the instrument when ordering a replacement Loop Antenna Assembly.

©John F. Rider

GENERAL

It frequently becomes necessary to make minor changes in the electrical circuit of a chassis to provide the correct response for different cabinets or speaker systems.

When this becomes necessary such a variation from the original chassis is indicated by a suffix letter; example: 500B.

Whenever necessary Service Bulletin Supplements will be issued with latest schematic drawings and parts lists indicating these changes.

METHOD FOR REMOVING CHASSIS FROM CABINET

Model CR-229 radio chassis is designed for easy removal from the cabinet in which it is installed. As the radio panel is permanently fastened to the chassis, the control knobs need not be removed when the chassis is taken out of the cabinet for service.

To remove the chassis, first remove the antenna leads from their terminals and all plugs from the receptacles on the rear of the chassis. Then remove the two Phillips-head screws from the angular slots in the flange at the rear of the chassis. Lift the rear of the chassis about one inch and pull it straight back. Never remove the chassis tray from the cabinet—it has been properly positioned to bring the radio panel in place when the chassis is replaced. In replacing the chassis, slide it so that the small hooks near the front, ride inside the flanges on the sides of the chassis tray. Push the chassis forward as far as it will go and the hook should then engage the slots in the chassis tray. Replace the two Phillips-head screws and nuts and tighten securely. Replace all plugs in their receptacles and the antenna leads on their correct terminals. The antenna terminal board for the loop antenna connections is designated L-H. The two terminals on the loop are designated L and H; the leads connected to these terminals should be wired to the corresponding terminals (L and H) on the chassis.

ALIGNMENT PROCEDURE

Alignment of this receiver requires the use of an accurately calibrated RF signal generator, range 455 kc. to 107 mc., an output meter, and a vacuum tube voltmeter of greater than 10 megohm input impedance. All trimmer condensers can be identified by stampings on the chassis and gang condenser cover and are shown on the chassis layout diagram.

The pointer on the radio dial should line up with the first vertical mark on the low frequency end of the dial glass. If the pointer does not line up, loosen the pointer on the dial string and move it to correct position. Re-tighten and re-cement the pointer to the string. Be sure the gang is fully meshed for this pointer alignment. Align AM first,

AM ALIGNMENT

I-F ALIGNMENT

1. Set volume, treble, and bass controls to maximum. Set Band Switch to Broadcast position, and dial pointer to 1000 kc.
2. Tune the signal generator to EXACTLY 455 kc.
3. Connect output of modulated signal generator to the signal grid of the 6BE6 (pin 7) through a .01 mfd. capacitor and signal generator ground to radio chassis.
4. AM and FM i-f transformers on this model are separate and can be identified on the chassis layout diagram Figure 3.
5. Connect output meter across voice coil of speaker and adjust the i-f transformers for peak output as indicated on the output meter.

ALTERNATE VISUAL ALIGNMENT OF I-F STAGES

1. Connect 455 kc. sweep generator having approximately 20 kc. sweep to signal grid of 6BE6 (pin 7) through a .01 mfd. capacitor. Connect an oscilloscope through a 1 megohm isolating resistor across the 150,000 ohm diode load resistor. Align for best possible peak and symmetry.

R-F ALIGNMENT

1. Remove the signal generator lead from the 6BE6 grid and connect it across H and L on terminal strip on the rear of the chassis. The high side of the signal generator should be connected to H and the signal generator ground to L.
2. Check the tuning dial pointer adjustment. When the plates of the tuning condenser are completely meshed, the dial pointer must be in line with the last calibration mark at the low frequency end of the dial. If it is not, slide the pointer on its string to the correct position. Be sure to crimp the lugs (on the rear of the pointer) tightly around the string to hold the pointer in adjustment.
3. Set the signal generator and the radio receiver to 1400 kc., adjust the 1400 kc. oscillator trimmer and the 1400 kc. r-f trimmer for maximum output.
4. Set the signal generator and radio receiver to 600 kc. Adjust the oscillator and r-f coil slugs for maximum output. If considerable adjustment was necessary re-check the 1400 kc. trimmer settings.
5. Replace chassis in cabinet and connect loop antenna leads to proper terminals on the rear of the chassis.
6. Form three turns of wire into a loop, connect this loop to the signal generator and loosely couple it to the receiver loop antenna.
7. With the signal generator and dial at 1400 kc., adjust the loop antenna trimmer for maximum output.

FM ALIGNMENT

DISCRIMINATOR ALIGNMENT

1. Tune signal generator to EXACTLY 10.775 mc. and connect to pin 4 of the 6SH7 Limiter tube socket through a .01 mfd. capacitor.

2. Connect a DC vacuum tube voltmeter between point "B" on schematic diagram and ground (across .00047 mfd. capacitor—Pin 6 on 6H6 to ground).

3. Peak both discriminator slugs at 10.775 mc.

4. Retune signal generator to exactly 10.7 mc. and adjust bottom slug for zero volts.

5. The DC voltage at 10.625 mc. should be within 10% of the voltage at 10.775 mc. and of opposite polarity.

Note: If the signal generator is not capable of sufficient output to produce a readable DC voltage, the amplification of the last i-f stage can be used to increase the signal input to the limiter for discriminator alignment. To accomplish this, align the last i-f stage as indicated in "IF Alignment". Then align discriminator as above leaving the signal generator connected to the grid of the 6SG7 2nd i-f tube.

I-F ALIGNMENT

1. Connect high side of signal generator, through a .01 mfd. capacitor and a 1000 ohm resistor in series, to pin 4 of the 6SG7 2nd i-f tube. Connect low side of generator to chassis.

2. Close gang condenser and connect vacuum tube voltmeter across 220,000 ohm limiter grid resistor; (Point "A" on schematic to ground). Adjust signal generator output until a reading of at least 3 volts is obtained. In order to reduce regeneration caused by the vacuum tube voltmeter leads, a 1-megohm isolating resistor, connected with as short leads as possible to point "A" should be used in series with the vacuum tube voltmeter. Align the 3rd i-f transformer for best peak as indicated on voltmeter.

3. Repeat above for each succeeding transformer by connecting signal generator to signal grid of first i-f tube 6SG7 then to the signal grid of 6BE6 converter. The i-f stages should be aligned in this order.

WARNING—After each i-f stage has been aligned, do not repeak with the signal into the grid of the 6BE6.

ALTERNATE VISUAL ALIGNMENT OF I-F STAGES

1. Replace signal generator with sweep generator having approximately 300 kc. sweep and tune generator to 10.7 mc. Connect oscilloscope across 220,000 ohm limiter grid resistor through a 1-megohm isolating resistor. The order of alignment is the same as when using a vacuum tube voltmeter. Each i-f transformer should be individually aligned for best peak and symmetry.

R-F ALIGNMENT

1. Connect vacuum tube voltmeter across limiter grid resistor as in FM I-F alignment.

2. Ground one side of the FM Antenna by placing a wire jumper from one FM connection on the antenna terminal strip to the ground connection.

3. Connect unmodulated signal generator through a 300 ohm resistor to ungrounded antenna post and chassis, and tune signal generator to 107 mc.

4. Set radio dial to 107 mc. and tune oscillator trimmer to peak output on vacuum tube voltmeter. Adjust signal generator output until a reading of at least 3 volts is obtained.

5. Tune 107 mc. r-f and antenna trimmers for maximum indication on voltmeter—it may be necessary to rock the dial while adjusting the r-f trimmer.

SPECIAL SERVICE INFORMATION

The following information is provided for the service man who has a vacuum tube voltmeter or a similar measuring instrument available.

STAGE GAINS*

Antenna Post to R-F Grid at:

600 kc.	5.00
98 mc.	1.15

R-F Grid to Converter Grid at:

600 kc.	14.5
98 mc.	9.4

© John F. Rider

600 kc. ..... 6.6V.
98 mc. ..... 6.0V.

or 0.3 ma. through 22,000 ohm Oscillator Grid Resistor at 600 kc. and 0.27 ma. at 98 mc.

AUDIO GAIN

Voltage required across the Volume Control to produce 0.1 watt speaker output*** at 400 cycles is .016 volt with Input Selector Switch in BDCST. setting.

*Variations of ±20% are permissible. All readings made with sufficient input signal to provide 0.5 watt speaker output. 0.5 speaker output at 400 cycles is equivalent to a reading of 1.25V. as measured by a high resistance AC voltmeter across the voice coil of the speaker.
**Detector Plate on AM.
***0.1 watt speaker output at 400 cycles is equivalent to a reading of 0.55 volts as measured by a high resistance AC voltmeter across the voice coil of speaker.

R-F on Converter Grid to 455 kc. on I-F Grid at:
600 kc. 25.0
98 mc. 3.2

I-F on Converter Grid to 1st I-F Grid at:
455 kc. (gang closed) 28.0

1st I-F Grid to 2nd I-F Grid** at:
455 kc. 95
10.7 mc. 33

2nd I-F Grid to Limiter Grid at:
10.7 mc. 33.4

OSCILLATOR OUTPUT VOLTAGE

The DC voltage developed across the Oscillator Grid Resistor (105) at:

DIAL CORD REPLACEMENT

Two separate drive cables are used in the CR-229 dial assembly. One cable is used to transmit the motion from the tuning knob to the large pulley that is coupled to the condenser gang; the other cable actuates the dial pointer whenever the large pulley on the condenser gang is rotated. Separate instructions for replacing either of these cables is given in the following paragraphs.

CONDENSER DRIVE CABLE REPLACEMENT

Remove dial assembly after taking out four screws on each side of chassis. Slide a short length (approximately ½ inch) of sleeving over one end of a length of dial cable, form a small loop and tie a knot in the manner shown on Figure 1. Tie spring to opposite end of cable making length excluding spring 19½ inches. Hook loop over the metal hook in pulley "D" and lace the cable through the pulley slot and around the pulley in a counterclockwise direction when viewed from the rear of the dial assembly keeping the cable to the rear of the pulley groove. Lace the cable around the smaller diameter portion of the tuning control shaft wrapping 2½ turns *from front to back;* then around the opposite side of pulley "D" into the pulley through the slot. Hook the end of tension spring "F" in the hole provided in pulley "D", completing this operation.

DIAL POINTER DRIVE CABLE REPLACEMENT

Remove dial assembly after taking out four screws on each side of chassis. Slip a one-half inch length of sleeving over a 42-inch length of dial cable. Tie the two ends to the loop end of the cable spring "E" securely so that the cable doubled measures 19⅝ inches end to end excluding spring.

Place spring hook in top hole and draw cable through slot of pulley "D". Loop one end of cable around pulley "D" in a clockwise direction in front of condenser drive cable (viewing dial assembly from front) then loop the remaining end around pulley in a counterclockwise direction. Secure both ends of cable to chassis at edge of pulley slot with scotch tape, keeping piece of sleeving on remaining loop of cable.

Replace dial assembly and loop cable over pulley "A". While holding cable taut remove scotch tape and loop cable over pulleys "B" and "C" as shown in Figure 1.

Turn the tuning control shaft until the condenser gang is completely meshed and slide the dial pointer on its track until it is in line with the last calibration mark at the low frequency end of the dial. The short piece of sleeving installed prior to the stringing operation should be slid to the rear of the dial pointer and the crimping lug on the pointer pressed over the sleeving. After checking to make certain that the condenser gang is completely meshed and the dial pointer is in the position specified previously, apply a few drops of cement to each end of the sleeving to which the dial pointer is fastened. This completes the operation.

© John F. Rider

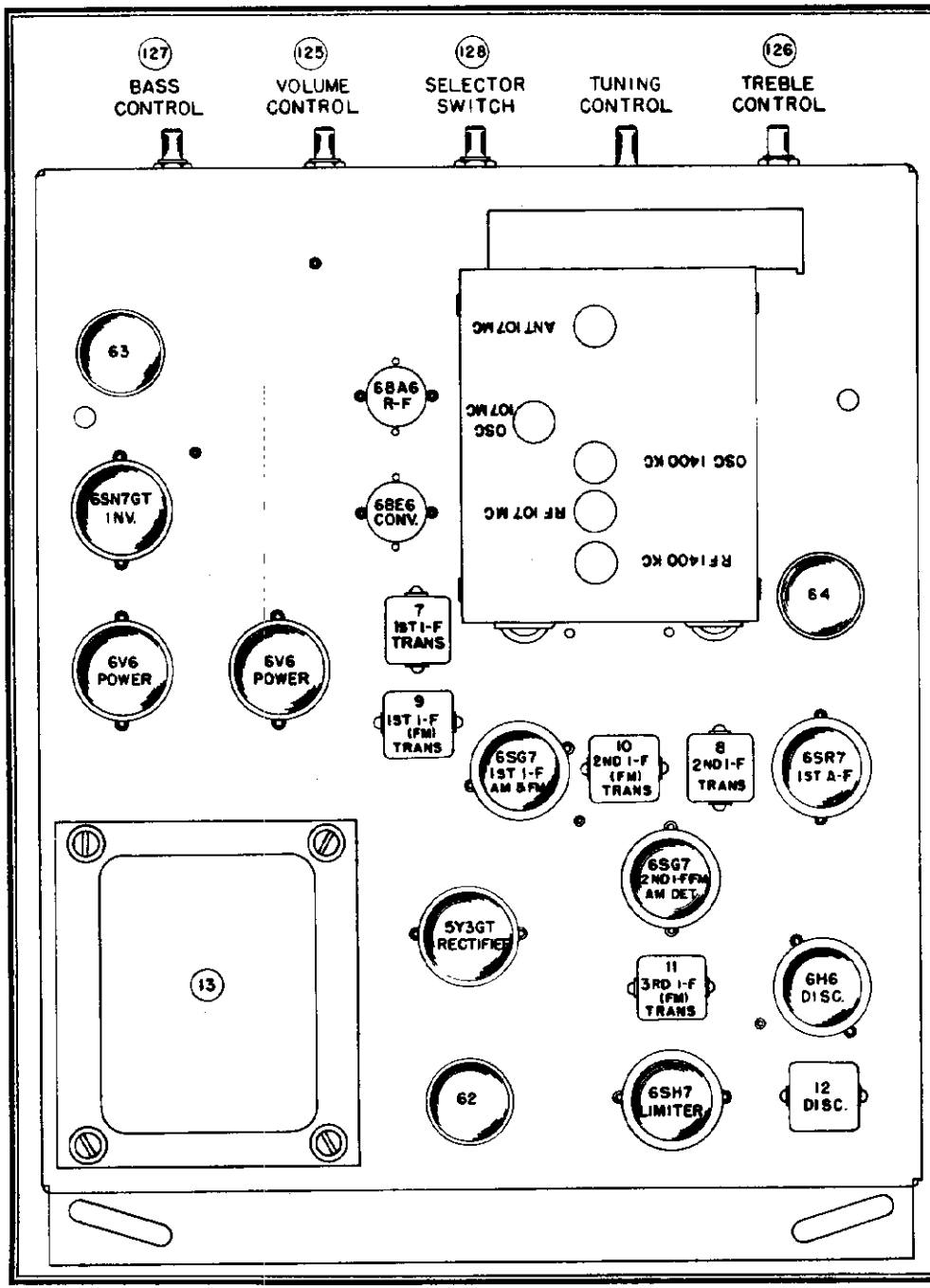
(127) BASS CONTROL
(125) VOLUME CONTROL
(128) SELECTOR SWITCH
TUNING CONTROL
(126) TREBLE CONTROL
63
6SN7GT INV.
6V6 POWER
6V6 POWER
6BA6 R-F
6BE6 CONV.
ANT 107 MC
OSC 107 MC
OSC 1400 KC
RF 107 MC
RF 1400 KC
7 1ST I-F TRANS
9 1ST I-F (FM) TRANS
6SG7 1ST I-F AM & FM
10 2ND I-F (FM) TRANS
8 2ND I-F TRANS
6SR7 1ST A-F
64
6SG7 2ND I-F FM AM DET.
5Y3GT RECTIFIER
11 3RD I-F (FM) TRANS
6H6 DISC.
13
62
6SH7 LIMITER
12 DISC.

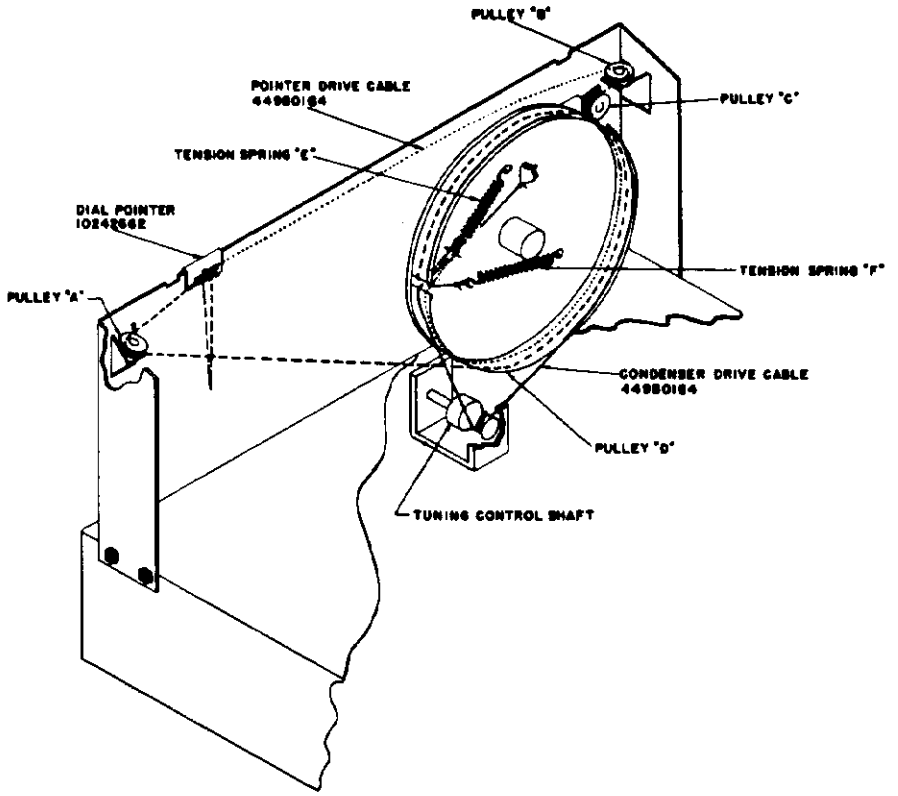
PULLEY "B"
POINTER DRIVE CABLE 4498O184
PULLEY "C"
TENSION SPRING "E"
DIAL POINTER 1024662
TENSION SPRING "F"
PULLEY "A"
CONDENSER DRIVE CABLE 4498O184
PULLEY "D"
TUNING CONTROL SHAFT

FIGURE 1

MODEL CR-229

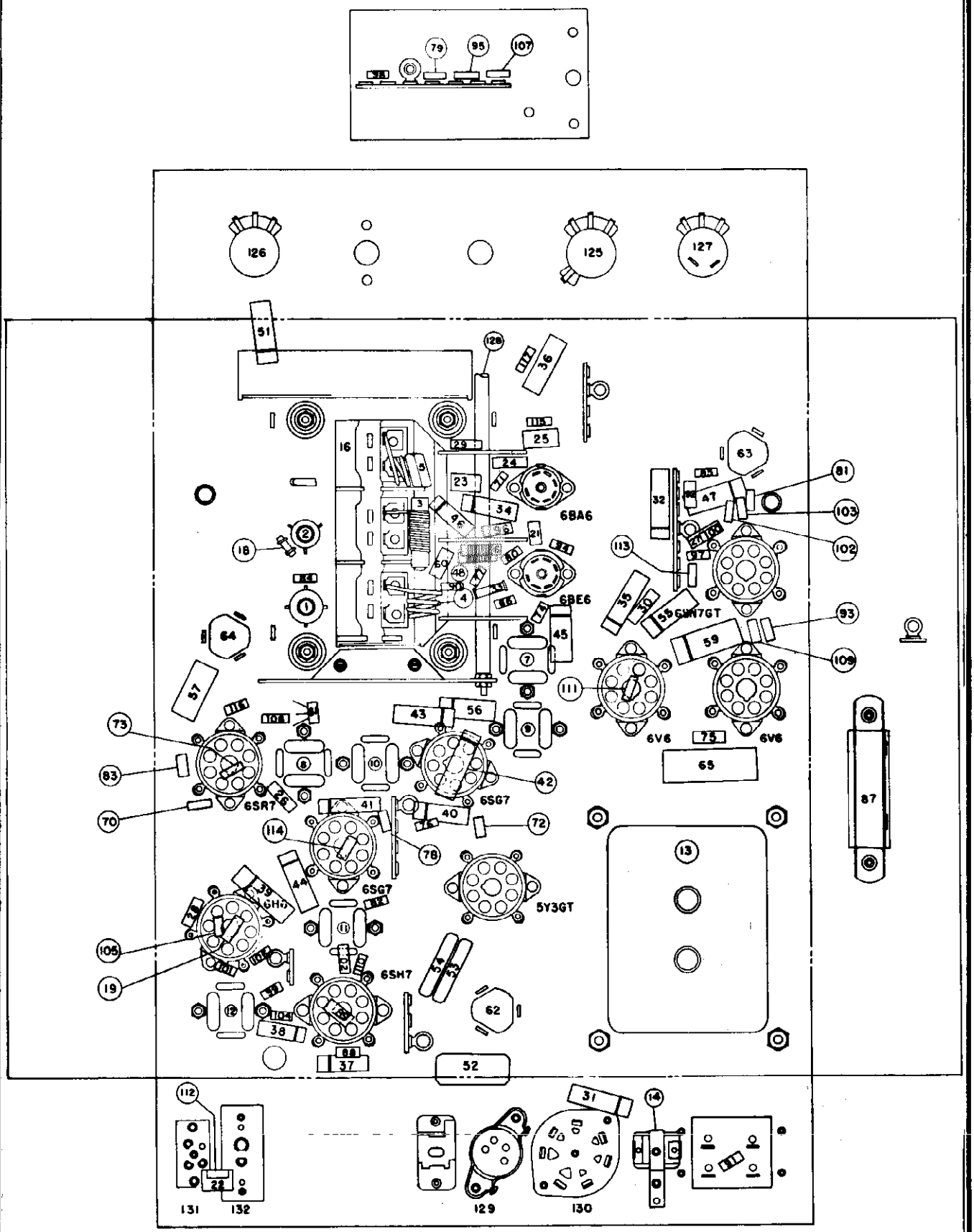

FIGURE 3

© John F. Rider

PARTS LIST

REFERENCE NO.	DESCRIPTION	MAGNAVOX PART NO.
1	Coil assembly, r-f (AM)	360348-1
2	Coil assembly, oscillator (AM)	360349-1
3	Coil assembly, oscillator (FM)	360323-1
4	Coil assembly, r-f (FM)	360322-2
5	Coil assembly, antenna (FM)	360321-2
6	Coil, choke	360284-1
7	Transformer, first i-f	360350-1
8	Transformer, second i-f	360350-2
9	Transformer, first i-f (FM)	360351-1
10	Transformer, second i-f (FM)	360351-1
11	Transformer, third i-f (FM)	360351-1
12	Transformer, discriminator	360352-1
13	Transformer, power	300050-2
14	Capacitor, variable trimmer	250046-2
15	Capacitor, variable trimmer	260067-5
16	Capacitor, three-gang tuning	260103-1
17	Capacitor, ceramic, 10 mmf. ±5%, 500 V.	250088-8
18	Capacitor, ceramic, 10 mmf. ±5%, 500 V.	250088-8
19	Capacitor, mica, 47 mmf. 500 V.	250159-96
20	Capacitor, mica, 47 mmf. 500 V.	250159-96
21	Capacitor, ceramic, 50 mmf. ±10%, 500 V.	250088-39
22	Capacitor, mica, 100 mmf. ±10%, 500 V.	250159-82
23	Capacitor, mica, 100 mmf. 500 V.	250159-98
24	Capacitor, mica, 100 mmf. 500 V.	250159-98
25	Capacitor, mica, 220 mmf. 500 V.	250159-100
26	Capacitor, mica, 220 mmf. 500 V.	250159-100
27	Capacitor, mica, 330 mmf. ±10%, 500 V.	250159-88
28	Capacitor, mica, 470 mmf. 500 V.	250159-102
29	Capacitor, mica, 470 mmf. ±10%, 500 V.	250159-90
30	Capacitor, mica, 1800 mmf. ±5%, 500 V.	250160-44
31	Capacitor, paper, .0015 mfd. ±10%, 600 V.	250169-1
32	Capacitor, paper, .005 mfd. 600 V.	250152-41
33	Capacitor, ceramic, .004 mfd. 350 V.	250088-34
34	Capacitor, paper, .002 mfd. 600 V.	250152-44
35	Capacitor, paper, .015 mfd. ±10%, 200 V.	250169-5
36	Capacitor, paper, .01 mfd. 200 V.	250152-18
37	Capacitor, paper, .01 mfd. 600 V.	250152-38
38	Capacitor, paper, .01 mfd. 600 V.	250152-38
39	Capacitor, paper, .01 mfd. 200 V.	250152-18
40	Capacitor, paper, .01 mfd. 200 V.	250152-18
41	Capacitor, paper, .01 mfd. 600 V.	250152-38
42	Capacitor, paper, .01 mfd. 600 V.	250152-38
43	Capacitor, paper, .01 mfd. 600 V.	250152-38
44	Capacitor, paper, .01 mfd. 600 V.	250152-38
45	Capacitor, paper, .01 mfd. 600 V.	250152-38
46	Capacitor, paper, .01 mfd. 600 V.	250152-38
47	Capacitor, paper, .01 mfd. 600 V.	250152-38
48	Coil, choke	360284-1
51	Capacitor, paper, .02 mfd. 200 V.	250152-17
52	Capacitor, paper, .02 mfd. 600 V.	250129-3
53	Capacitor, paper, .02 mfd. 600 V.	250129-3
54	Capacitor, paper, .02 mfd. 600 V.	250129-3
55	Capacitor, paper, .03 mfd. 600 V.	250152-36
56	Capacitor, paper, .05 mfd. 200 V.	250152-15
57	Capacitor, paper, .05 mfd. 200 V.	250152-15
59	Capacitor, paper, .1 mfd. 600 V.	250152-33
60	Capacitor, ceramic, 500 mmf.	250088-31
61	Capacitor, resistor filter	250170-1
62	Capacitor, electrolytic, 30-10 mfd. 475 V.	270023-2
63	Capacitor, electrolytic, 10 mfd. 450 V.—20 mfd. 25 V.	270023-6
64	Capacitor, electrolytic, 10-10 mfd. 450 V.—20 mfd. 25 V.	270023-7
65	Capacitor, electrolytic, 20 mfd. 25 V.	270027-2
70	Resistor, composition, 33 ohms, ½ W.	230084-4
71	Resistor, composition, 68 ohms, ½ W.	230084-6
72	Resistor, composition, 68 ohms, ½ W.	230084-6
73	Resistor, composition, 82 ohms, ±10%, ½ W.	230084-49
74	Resistor, composition, 220 ohms, ½ W.	230084-9
75	Resistor, composition, 330 ohms, 2 W.	230086-56
76	Resistor, composition, 1000 ohms, ½ W.	230084-13
77	Resistor, composition, 1000 ohms, ½ W.	230084-13
78	Resistor, composition, 1000 ohms, ½ W.	230084-13
79	Resistor, composition, 1000 ohms, ½ W.	230084-13
80	Resistor, composition, 1000 ohms, ½ W.	230084-13
81	Resistor, composition, 1500 ohms, ½ W.	230084-14
82	Resistor, composition, 3300 ohms, ½ W.	230084-16
83	Resistor, composition, 3900 ohms, ±10%, ½ W.	230084-69
84	Resistor, composition, 4700 ohms, ½ W.	230084-17
85	Resistor, composition, 4700 ohms, ½ W.	230084-17
86	Resistor, composition, 4700 ohms, ½ W.	230084-17
87	Resistor, wire wound, 6500 ohms, ±10%	240035-9
88	Resistor, composition, 8200 ohms, ±10%, 1 W.	230085-73
89	Resistor, composition, 8200 ohms, ±10%, 1 W.	230085-73
90	Resistor, composition, 10,000 ohms, ½ W.	230084-19
91	Resistor, composition, 10,000 ohms, ½ W.	230084-19
92	Resistor, composition, 10,000 ohms, 1 W.	230085-19
93	Resistor, composition, 15,000 ohms, ±5%, ½ W.	230084-187

MODEL CR-229

REFERENCE NO.	DESCRIPTION	MAGNAVOX PART NO.
94	Resistor, composition, 22,000 ohms, ½ W.	230084-21
95	Resistor, composition, 22,000 ohms, ½ W.	230084-21
96	Resistor, composition, 47,000 ohms, 1 W.	230085-23
97	Resistor, composition, 47,000 ohms, ½ W.	230084-23
98	Resistor, composition, 47,000 ohms, ½ W.	230084-23
99	Resistor, composition, 68,000 ohms, ±10%, ½ W.	230084-84
100	Resistor, composition, 82,000 ohms, ±10%, ½ W.	230084-85
101	Resistor, composition, 100,000 ohms, ±10%, ½ W.	230084-86
102	Resistor, composition, 100,000 ohms, ½ W.	230084-25
103	Resistor, composition, 100,000 ohms, ½ W.	230084-25
104	Resistor, composition, 100,000 ohms, ½ W.	230084-25
105	Resistor, composition, 150,000 ohms, ±10%, ½ W.	230084-88
106	Resistor, composition, 150,000 ohms, ±10%, ½ W.	230084-88
107	Resistor, composition, 150,000 ohms, ½ W.	230084-26
108	Resistor, composition, 150,000 ohms, ½ W.	230084-26
109	Resistor, composition, 220,000 ohms, ±5%, ½ W.	230084-215
110	Resistor, composition, 220,000 ohms, ½ W.	230084-27
111	Resistor, composition, 270,000 ohms, ±10%, ½ W.	230084-91
112	Resistor, composition, 820,000 ohms, ±10%, ½ W.	230084-97
113	Resistor, composition, 1 megohm, ±5%, ½ W.	230084-231
114	Resistor, composition, 1 megohm, ½ W.	230084-31
115	Resistor, composition, 1 megohm, ½ W.	230084-31
116	Resistor, composition, 1 megohm, ½ W.	230084-31
117	Resistor, composition, 1 megohm, ½ W.	230084-31
125	Control, volume	220074-1
126	Control, treble	270072-8
		220044-22
127	Control, bass, with switch	220073-5
		220045-8
128	Switch, selector	160194-1
129	Socket, motor	180501-5
130	Socket, speaker	180504-16
131	Socket, external	180060-1
132	Socket, phono	189741-1
133	Loop antenna	*

*The part number of the Loop Antenna Assembly changes with different cabinets. It is therefore important that you specify the style number of the instrument when ordering a replacement Loop Antenna Assembly.

©John F. Rider

MODEL CR-231

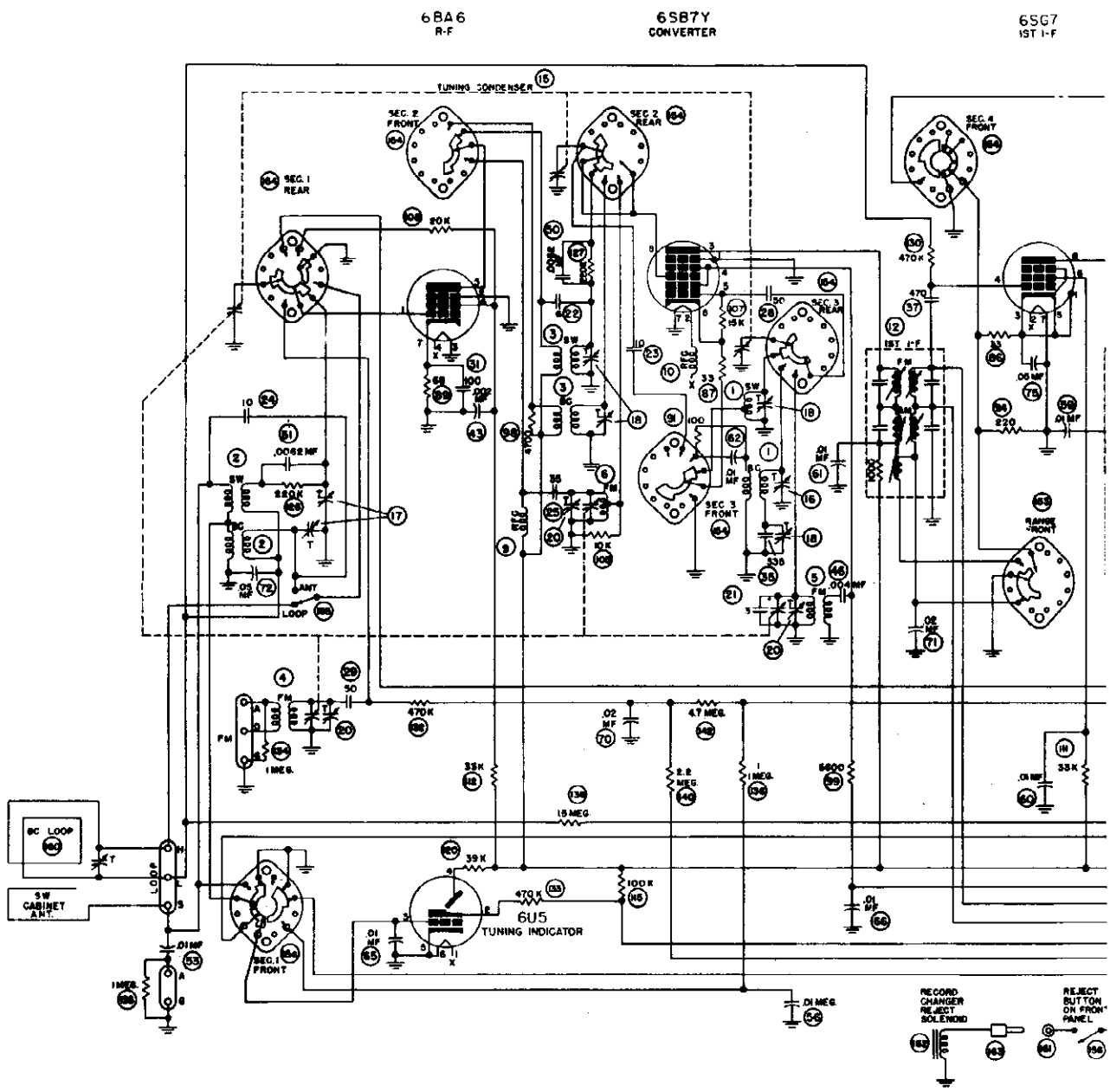

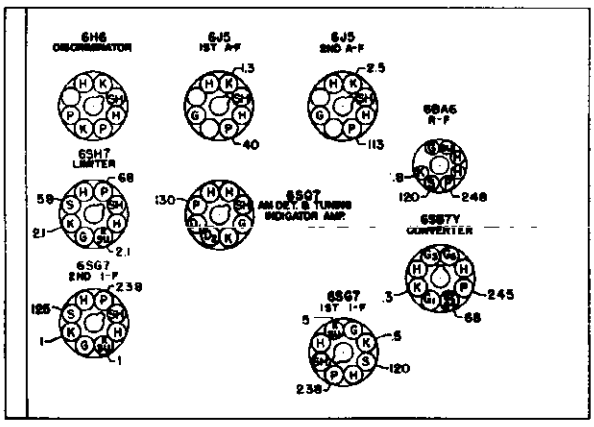

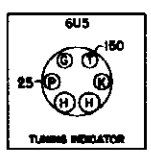

VOLTAGE TABLE

MEASURE HEATER VOLTAGES ACROSS SOCKET TERMINALS.

ALL OTHERS MEASURED FROM SOCKET TERMINAL TO GROUND WITH A 20,000 OHMS/VOLT VOLTMETER WITH BAND SWITCH IN SHORT WAVE POSITION.

HEATERS (H) 6.3 V. A.C.

LINE VOLTAGE 117 V. A.C.

I-F'S

AM 455 KC. FM 10.7 MC

NOTES

1. BANDSWITCH, ITEM 154, SHOWN IN CLOCKWISE POSITI SWITCH KNOB IN C'CLOCKWISE POSITION WHEN VIEW THE FRONT PANEL.
2. ALL ELECTRICAL VALUES SHOWN ARE IN MMF OR OHMS OTHERWISE SPECIFIED.
3. LETTERS SHOWN IN SQUARES DESIGNATE METER C POINTS FOR ALIGNMENT AS DESCRIBED IN TEXT.
4. RANGE SWITCH, ITEM 153, SHOWN IN C'CLOCKWISE PO WHEN VIEWED FROM THE FRONT PANEL.

SPECIFIC

Intermediate frequency.....

Tuning frequency range:

Broadcast Band.....

Short Wave Band.....

FM Band.....

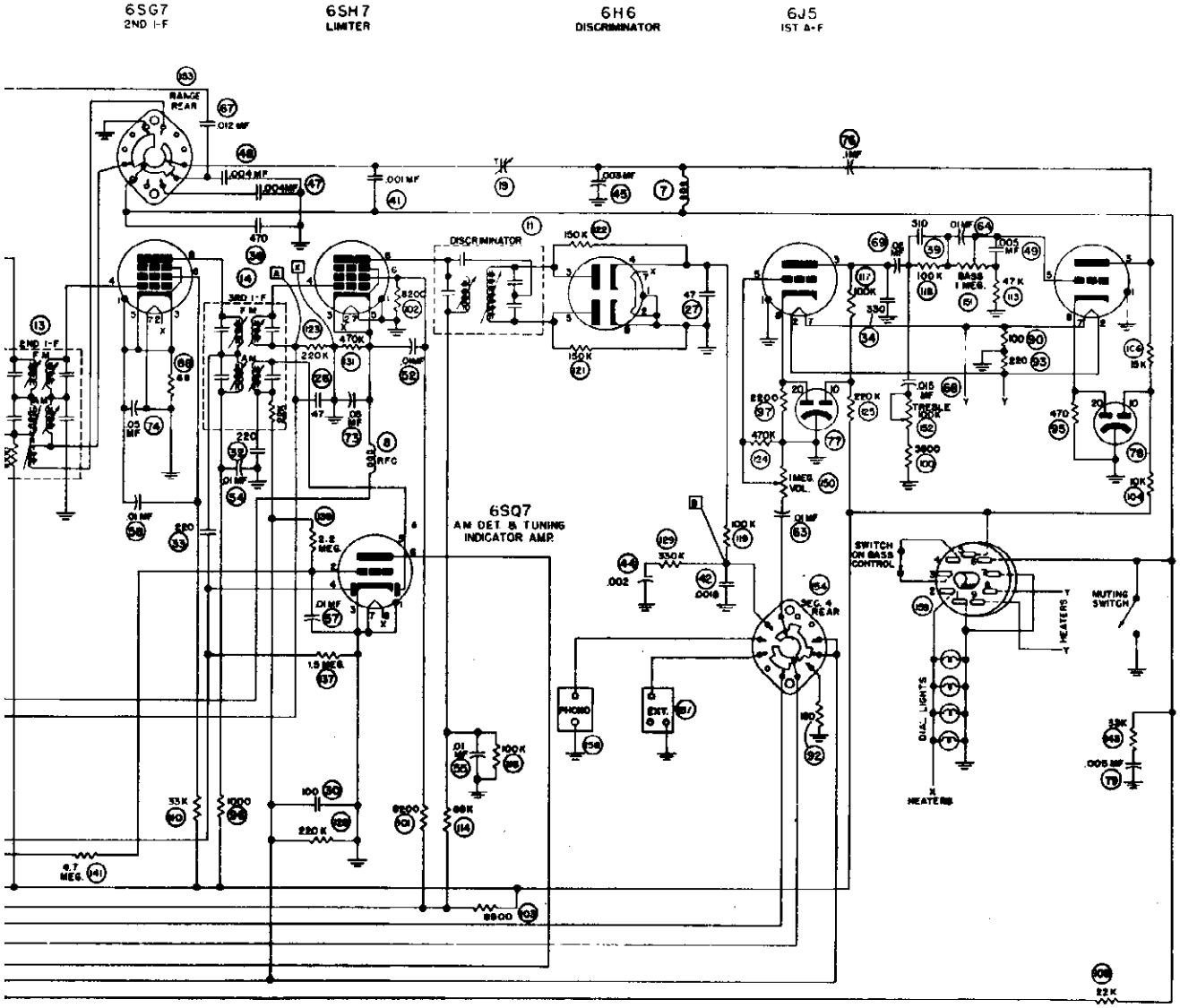

FIGURE 4

Tubes:

R-F Amplifier	6BA6
Converter	6SB7Y
1st I-F Amplifier (AM-FM)	6SG7
2nd I-F Amplifier (AM-FM)	6SG7
Limiter	6SH7
Discriminator	6H6
Detector and AVC (AM) and Tuning Indicator Amplifier	6SQ7
First Audio	6J5
Second Audio	6J5
Tuning Indicator	6U5
Dial Lamps	Mazda No. 44

IN (BAND-
ED FROM

UNLESS

NNECTIO

SITION

ATIONS

455 kc./10.7 mc.

540—1620 kc.

5.9—17.3 mc.

88—108 mc.

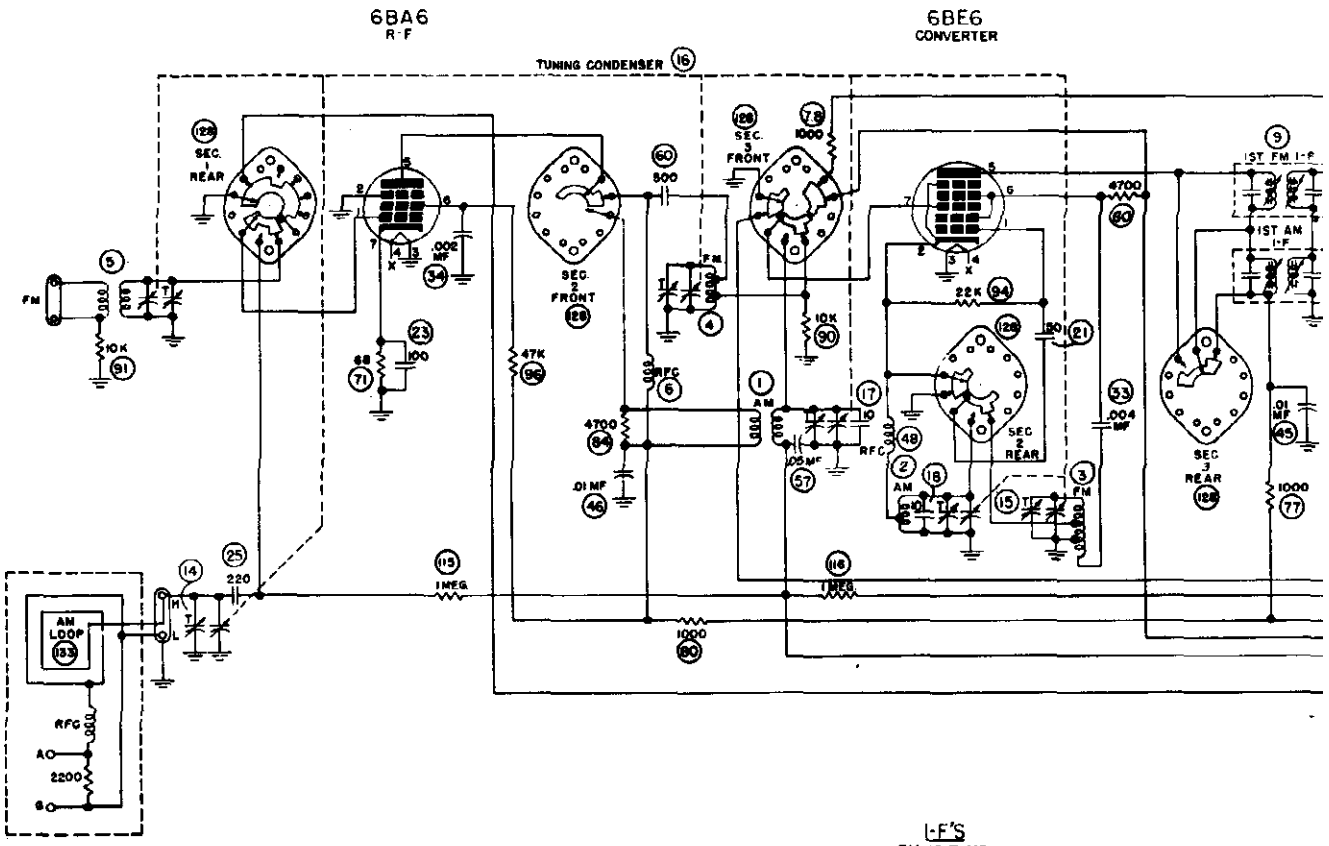

I-F'S
FM 10.7 MC.
AM 455 KC.

NOTES

BAND SWITCH SHOWN IN COUNTERCLOCKWISE (FM) POSITION WHEN VIEWED FROM THE FRONT PANEL.

ALL ELECTRICAL VALUES SHOWN ARE IN OHMS OR MMF UNLESS OTHERWISE SPECIFIED.

LETTERS SHOWN IN SQUARES DESIGNATE METER CONNECTION POINTS FOR ALIGNMENT DESCRIBED IN TEXT.

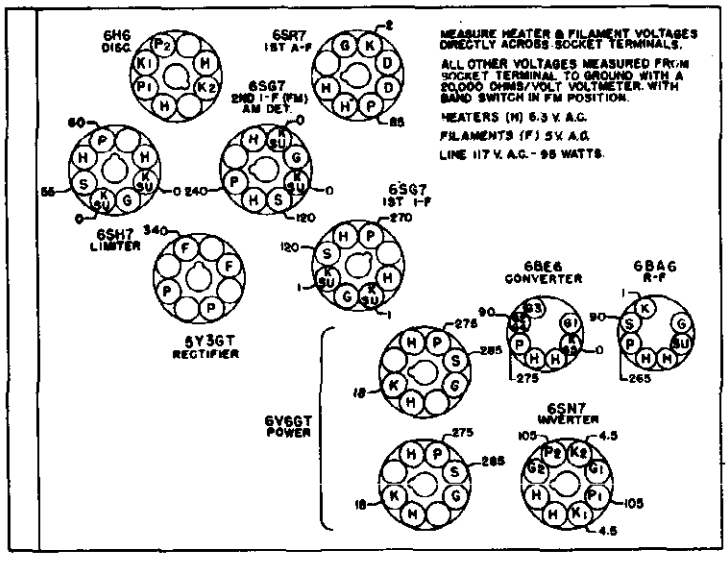

FIGURE 2

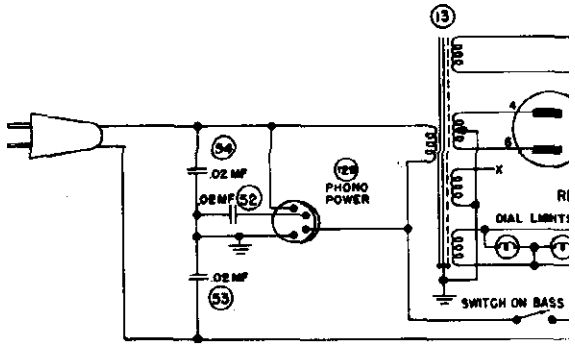

SPECIFICATI

Power supply 1
Power consumption .....
Power output .....
Intermediate frequency .....
Tuning frequency range:
Broadcast Band .....
FM Band .....
Tubes:
R-F Amplifier .....
Converter .....
1st I-F Amplifier (AM-FM) .....

MODEL CR-229

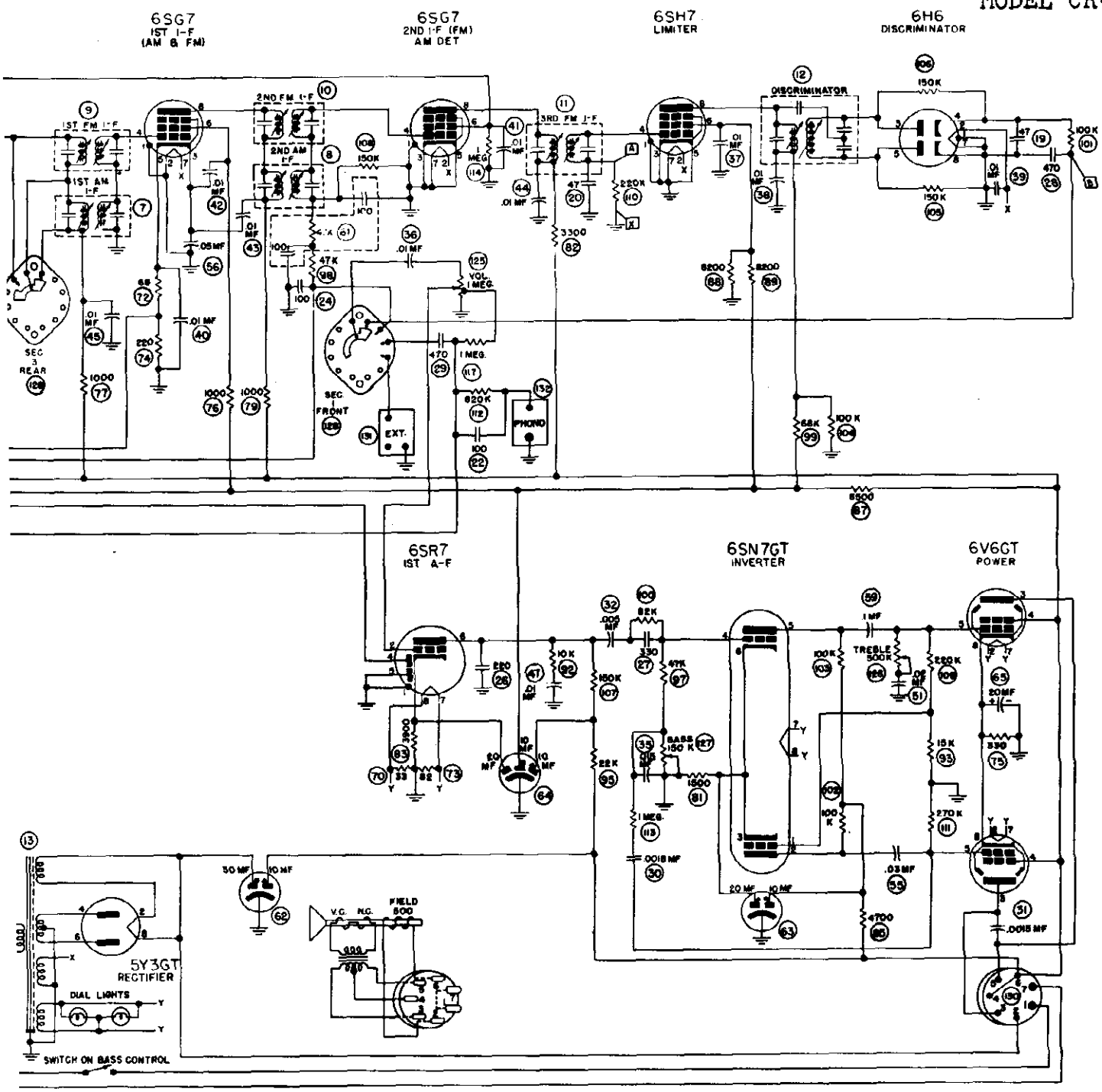

ICATIONS

	117 volts 50/60 cycles AC
	95 watts
	10 watts
	455 kc./10.7 mc.
	540-1620 kc.
	88—108 mc.
	6BA6
	6BE6
	6SG7
2nd I-F (FM), Detector and AVC (AM)	6SG7
Limiter	6SH7
Discriminator	6H6
First Audio	6SR7
Inverter	6SN7GT
Power output (push-pull stage)	(2) 6V6GT
Rectifier	5Y3GT
Dial Lamps	Mazda No. 44
Speaker:	
Field coil resistance	500 ohms
Voice coil impedance (400 cycles)	3.0 ohms
Output transformer	8,000/3 ohms

GENERAL

Model CR-231 radio chassis is an AM-FM tuner that must be used in conjunction with a power amplifier such as the AMP-111 for speaker operation. Heater and plate voltages for the CR-231 radio chassis are supplied from the amplifier chassis; it is therefore essential that the radio and amplifier chassis be interconnected during alignment or for other electrical service operations.

METHOD OF REMOVING CHASSIS FROM CABINET

Model CR-231 radio chassis is designed for easy removal from the cabinet in which it is installed. As the radio panel is permanently fastened to the chassis, the control knobs need not be removed when the chassis is taken out of the cabinet for service.

To remove the chassis, first remove the antenna leads from their terminals and all plugs from the receptacles on the rear of the chassis. Then remove the two Phillips-head screws from the angular slots in the flange at the rear of the chassis. Lift the rear of the chassis about one inch and pull it straight back. Never remove the chassis tray from the cabinet—it has been properly positioned to bring the radio panel in place when the chassis is replaced. In replacing the chassis, slide it so that the small hooks near the front ride inside the flanges on the sides of the chassis tray. Push the chassis forward as far as it will go and the hook should then engage the slots in the chassis tray. Replace the two Phillips-head screws and nuts and tighten securely. Replace all plugs in their receptacles and the antenna leads on their correct terminals. The antenna terminal board for the loop antenna connections is designated L-H. The two terminals on the loop are designated L and H; the leads connected to these terminals should be wired to the corresponding terminals (L and H) on the chassis.

ALIGNMENT PROCEDURE

Alignment of this receiver requires the use of an accurately calibrated RF signal generator, range 455 kc. to 107 mc., an output meter, and a vacuum tube voltmeter of approximately 10 megohm input impedance. All trimmer condensers can be identified by stampings on the chassis and gang condenser cover and are shown on the chassis layout diagram.

The pointer on the radio dial should line up with the first horizontal mark on the low frequency end of the dial glass. If the pointer does not line up, loosen the screws on the pointer drive pulley at the end of the tuning gang and adjust the pointer setting; tighten the screws after this adjustment. Be sure the gang is fully meshed for this pointer alignment.

AM ALIGNMENT

I-F ALIGNMENT

1. Set range control to position No. 1. Set volume, treble and bass controls to maximum, the Band Switch to Broadcast position, and dial pointer to 1000 kc.

2. Tune the signal generator to EXACTLY 455 kc.

3. Connect output of modulated signal generator to the signal grid of the 6SB7Y (pin 8) through a .01 mfd. capacitor and signal generator ground to radio chassis.

4. All i-f transformers on this chassis are slug-tuned. Both slug adjustments for 455 kc. are located on top of the transformers; the 10.7 mc. adjustments are accessible on the bottom.

5. Connect output meter across voice coil of 15-inch speaker and peak in order the third, second and first i-f transformers.

6. Use only enough signal input to give a readable indication on voltmeter so that the AVC will not operate and give false readings.

ALTERNATE VISUAL ALIGNMENT OF I-F STAGES

1. Connect 455 kc. sweep generator having approximately 40 kc. sweep to signal grid of 6SB7Y (pin 8) through a .01 mfd. capacitor. Connect an oscilloscope through a 1 megohm isolating resistor across the 220,000 ohm diode load resistor. Align for best possible peak with range switch in position No. 1, and symmetry in position No. 4.

BROADCAST BAND R-F ALIGNMENT

1. Connect signal generator through .00025 mfd. capacitor to antenna and ground terminals on antenna terminal strip on rear of chassis. Be sure "Ant-loop" switch on top of the chassis is in the ANT. position. Connect output meter as for AM i-f alignment.

© John F. Rider

2. Tune signal generator to 1400 kc.

3. Set dial to 1400 kc. and adjust oscillator, r-f and antenna trimmers for maximum indication on meter.

4. Set signal generator to 600 kc. and tune radio to signal. Adjust the 600 kc. padder to maximum output while simultaneously rocking the gang.

5. 1400 kc. calibration should then be checked and re-adjusted if necessary with the 1400 kc. oscillator trimmer.

SHORT WAVE BAND R-F ALIGNMENT

1. Set the Band Switch to Short Wave and replace the .00025 mfd. capacitor in series with the signal generator lead to the antenna terminal, with a 400-ohm resistor.

2. Set the signal generator and the receiver to 15 mc. and adjust the oscillator, r-f and antenna trimmers for maximum indication on the meter. While adjusting the 15 mc. oscillator trimmer, two peaks may be observed; only one is the correct peak for 15 mc. alignment. To obtain the correct peak, screw trimmer in to maximum capacitance, then decrease until the first peak is observed. This is the correct one.

Another method for checking for the correct peak is to tune the receiver to 15.91 mc. with signal generator at 15 mc. and with the output increased. If the 15 mc. oscillator trimmer is properly adjusted, the signal will be received at 15.91 mc.—if incorrectly aligned, the signal will be received at 14.09 mc.

FM ALIGNMENT

DISCRIMINATOR ALIGNMENT

1. Tune signal generator to EXACTLY 10.775 mc. and connect to pin 4 of the 6SH7 limiter tube socket through a .01 mfd. capacitor.

2. Connect a DC vacuum tube voltmeter from Pin 4 on 6H6 tube socket to ground through a 1 megohm isolating resistor.

3. Peak both discriminator slugs at 10.775 mc.

4. Retune signal generator to exactly 10.7 mc. and adjust bottom slug for zero volts.

5. The DC voltage at 10.625 mc. should be within 10% of the voltage at 10.775 mc. and of opposite polarity.

Note: If the signal generator is not capable of sufficient output to produce a readable DC voltage, the amplification of the last i-f stage can be used to increase the signal input to the limiter for discriminator alignment. To accomplish this, align the last i-f stage as indicated in "IF Alignment". Then align discriminator as above leaving the signal generator connected to the grid of the 6SG7 2nd i-f tube.

I-F ALIGNMENT

1. Connect high side of signal generator, through a .01 mfd. capacitor and a 1000 ohm resistor in series, to pin 4 of the 6SG7 2nd i-f tube. Connect low side of generator to chassis.

2. Close gang condenser and connect vacuum tube voltmeter across 220,000 ohm limiter grid resistor; (Points "A" to "X" on schematic). Adjust signal generator output until a reading of at least 3 volts is obtained. In order to reduce regeneration caused by the vacuum tube voltmeter leads, a 1-megohm isolating resistor, connected with as short leads as possible to point "A" should be used in series with the vacuum tube voltmeter. Align the 3rd i-f transformer for best peak as indicated on voltmeter.

3. Repeat above for the 2nd and 1st transformer by connecting signal generator to signal grid of first i-f tube 6SG7 then to the signal grid of 6SB7Y converter. The i-f stages should be aligned in this order.

WARNING—After each i-f stage has been individually aligned, do not repeak with the signal into the grid of the 6SB7Y.

ALTERNATE VISUAL ALIGNMENT OF I-F STAGES

1. Replace signal generator with sweep generator having approximately 300 kc. sweep and tune generator to 10.7 mc. Connect oscilloscope across 220,000 ohm limiter grid resistor through a 1-megohm isolating resistor. The order of alignment is the same as when using a vacuum tube voltmeter. Each i-f transformer should be individually aligned for best peak and symmetry.

R-F ALIGNMENT

1. Connect vacuum tube voltmeter across limiter grid resistor as in FM I-F alignment. Adjust signal generator output until a reading of at least 3 volts is obtained.

2. Ground one side of the FM Antenna by placing a wire jumper from one FM connection on the antenna terminal strip to the ground connection.

3. Connect unmodulated signal generator through a. 300 ohm resistor to ungrounded antenna post and chassis, and tune signal generator to 107 mc.

4. Set radio dial to 107 mc. and tune oscillator trimmer to peak output on vacuum tube voltmeter.

5. Tune 107 mc. r-f and antenna trimmers for maximum indication on voltmeter—it may be necessary to rock the gang while adjusting the r-f trimmer.

SPECIAL SERVICE INFORMATION

The following information is provided for the service man who has a vacuum tube voltmeter or a similar measuring instrument available.

STAGE GAINS*

Antenna Post to R-F Grid at:

600 kc.	5.8
6.5 mc.	2.9
98 mc.	1.0

R-F Grid to Converter Grid at:

600 kc.	11.6
6.5 mc.	9.5
98 mc.	6.8

R-F on Converter Grid to 455 kc. or I-F Grid at:

600 kc.	1.7
6.5 mc.	2.4
98 mc.	6.8

I-F on Converter Grid to 1st I-F Grid at:

455 kc. (dial pointer at 600 kc.)	2.6

1st I-F Grid to 2nd I-F Grid at:

455 kc.	20.5
10.7 mc.	37

2nd I-F Grid to Limiter Grid at:

10.7 mc.	34.5

AUDIO GAIN

Voltage required across the Volume Control to produce 0.1 watt speaker output** at 400 cycles is:

.013 volt with Amplifier AMP-111A

.008 volt with Amplifier AMP-111B or C

with Band Switch in BDCST setting.

OSCILLATOR OUTPUT VOLTAGE

The DC voltage developed across the Oscillator Grid Resistor (105) at:

600 kc.	4.5V.
6.5 mc.	4.6V.
98 mc.	5.4V.

or 0.3 ma. through 15,000 ohm Oscillator Grid Resistor at 600 kc., 0.31 ma. at 6.5 mc. and 0.36 ma. at 98 mc.

*Variations of ± 20% are permissible. All AM readings made with sufficient input signal to provide 0.5 watt speaker output. 0.5 watt speaker output at 400 cycles is equivalent to a reading of 2.75V. as measured by a high resistance AC voltmeter across the voice coil of the 15-inch speaker.

**0.1 watt speaker output at 400 cycles is equivalent to a reading of 1.22 volts as measured by a high resistance AC voltmeter across the voice coil of 15-inch speaker.

10 KC. FILTER ADJUSTMENT

This chassis incorporates a 10 kc. filter circuit to eliminate the beat note heard as a whistle between stations on the broadcast band. If the trimmer is out of adjustment the following procedure should be observed:

1. Adjust the range control switch to the No. 3 setting.

2. Connect the output of an audio oscillator to the phonograph pickup socket. Adjust the oscillator to exactly 10,000 cycles.

3. Set the band selector to PHONO and adjust the 10 kc. trimmer for minimum output.

4. If an audio oscillator is not available for making this adjustment set the band selector to BDCST, set the range control to position 3, connect the antenna to the receiver and set the gang condenser to a point between two stations on adjacent channels having approximately the same power. If the 10 kc. trimmer is out of adjustment, a whistle will be heard. Adjust the trimmer until the whistle is eliminated.

©John F. Rider

DIAL CORD REPLACEMENT

Rotate the brass pulley designated "A" in Figure 1 until the dial pointer strikes the stop at the high frequency end of the dial calibration. In this condition the slot in pulley "A" should be approximately ten degrees to the left of being vertical—see Figure 1. If the slot in the pulley is in some other position under the above mentioned conditions, the pointer set screw is probably loose and has allowed the pointer to slip.

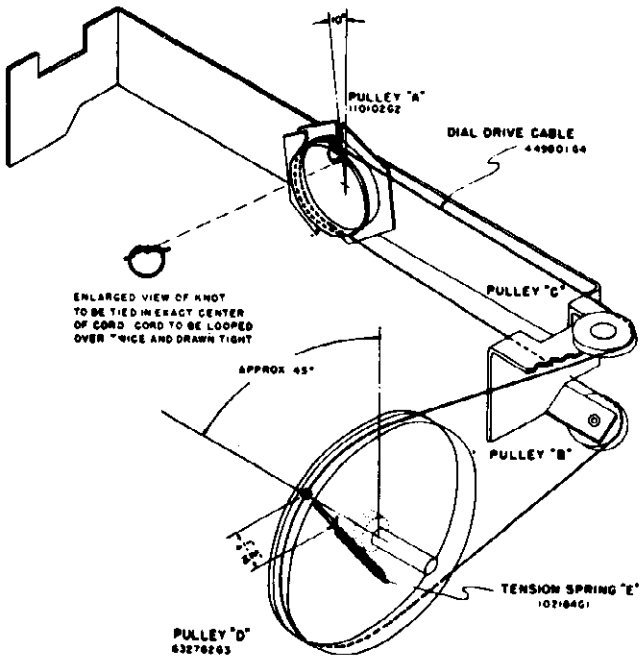

FIGURE 1

To correct this condition, first remove the glass dial and loosen the pointer screw. Then while holding pulley "A" so that its slot is approximately ten degrees to the left of vertical (when viewed from the rear) adjust the pointer until it is resting against the stop at the high frequency end of its travel. Then tighten the pointer set screw securely and replace the glass dial.

Completely unmesh the condenser gang and check the location of the hole or slot in pulley "D." If this hole is not approximately 45 degrees back from vertical as shown on Figure 1, loosen the two No. 6 Allen set screws in the hub of pulley "D" and slip the pulley on its shaft (while holding the condenser gang unmeshed) until the specified adjustment is obtained; then tighten one of the set screws securely. It will be shown later that this is a temporary setting. Next, tie a double knot in the exact center of a 25-inch length of dial cable and fold the cable back on itself so that the knot is at one end. The correct method for tying this knot is shown as an inset on Figure 1. Grasp the cable near the knotted end and slide it into the pulley slot so that the knot is against the inside rim of the pulley as shown in the sketch. The piece of cable nearest the dial frame should be wound in the direction shown for one-half turn; then over the lower pulley "B," around the bottom of the large pulley "D" and into the hole. Pull the cable taut and wrap the end around the small hook on pulley "D" temporarily.

The remaining piece of cable should be wound around pulley "A" in the direction shown, for one complete turn, over the upper pulley "C," and over the top of pulley "D." Thread the end through the small hole in pulley "D" and pull both ends of the cable taut. With one end of tension spring "E" fastened to the hook on pulley "D" lace the two free ends of the cable through the opposite end of the spring and tie a knot at a point that will allow 1/4" to 5/16" of cable between the spring and the inside rim of pulley "D." Be sure to tie the knot around one coil of the spring in the manner shown.

Now with the condenser gang completely meshed, check the position of the dial pointer. If it is not in line with the last calibration mark at the low frequency end of the dial, loosen the set screw in pulley "D" and turn it until the pointer is in the specified position. Be sure that the condenser gang does not move during this adjustment. Then tighten the two screws in pulley "D" securely completing the operation.

©John F. Rider

CONDENSER GANG DRIVE ADJUSTMENTS

Whenever any of the mechanical parts in the condenser gang drive assembly require replacement due to rough handling or for any other reason, it is extremely important that clearances and adjustments shown on Figures 2 and 3 are correct; otherwise, the tuning mechanism will be sluggish or it may slip during operation.

In reassembling the mechanism after any part was replaced, follow the procedure outlined below:

1. Assemble the Tuning Shaft, Drive Collar, Bracket, Tension Spring, Washer, and Flywheel in the order shown on Figure 3. The distance between the front of the Drive Collar and the front of the Tuning Shaft must be $1\frac{1}{8}$ inches as specified on Figure 2. Install

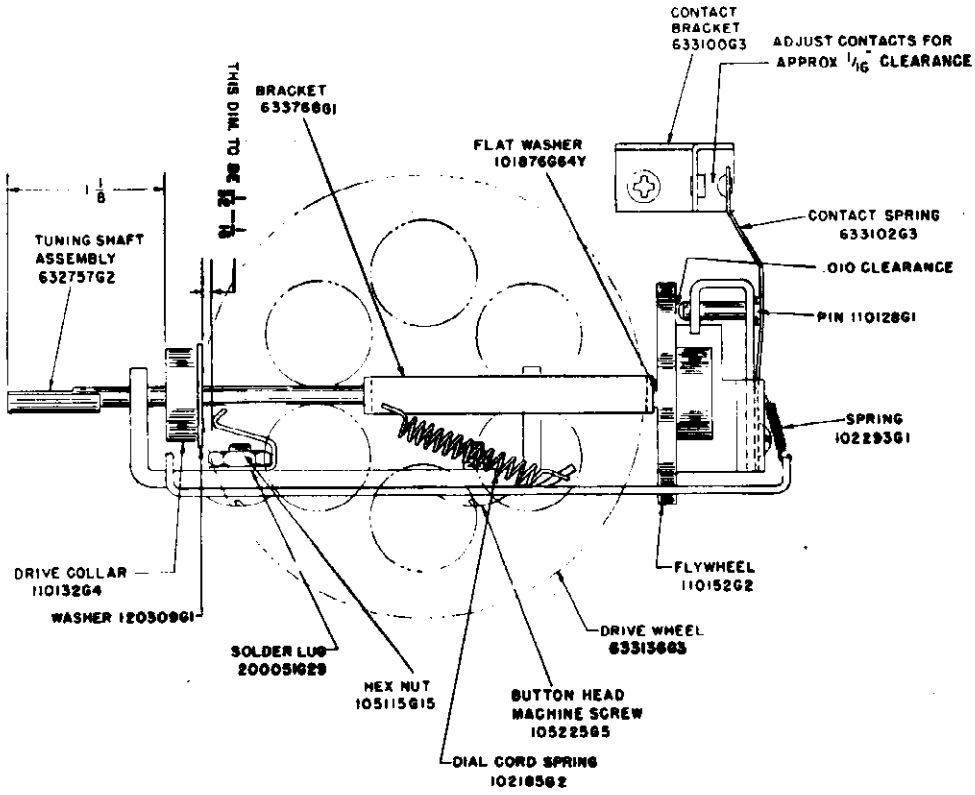

FIGURE 2

the Flywheel on the rear of the Tuning Shaft and slide it forward until it nearly touches the edge of the Drive Wheel; then tighten one of the set screws in the Flywheel hub. Insert a .010" gauge between the Flywheel and the Pin, and while holding the gauge in this position, loosen the set screw in the Flywheel hub that was previously tightened. The Tension Spring should force the Flywheel back against the gauge—when this occurs, tighten both set screws in the Flywheel hub.

2. Adjust the Muting Switch contact clearance by loosening the two screws in the Contact Bracket and sliding the bracket in the required direction until a 1/16" clearance is obtained. If this adjustment cannot be obtained in the manner prescribed, bend the Contact Bracket until proper clearance is realized.

3. The Drive Wheel is properly located on its shaft when its edge nearest the hub is in line with the outside edge of the Drive Collar as shown on Fig-

© John F. Rider

ure 3. Two Allen set screws in the Drive Wheel hub provide a means of adjusting the position of this wheel.

4. When the adjustment outlined in paragraph 2 is correct, the proper contact clearance will automatically be obtained when the Muting Switch is to be "unmuted" while the push buttons are being set. While pressure is applied to any one of the push buttons while they are being set up, a pressure applied simultaneously to the Tuning Control knob will cause the Muting Switch contacts to open. Detailed instructions on setting up these push buttons are shown elsewhere in this bulletin.

5. If the push button shafts at both ends do not engage the Treadle Bar as shown on Figure 3, the three screws in the Treadle Bar must be loosened and the Treadle Bar should be moved until the required condition is obtained.

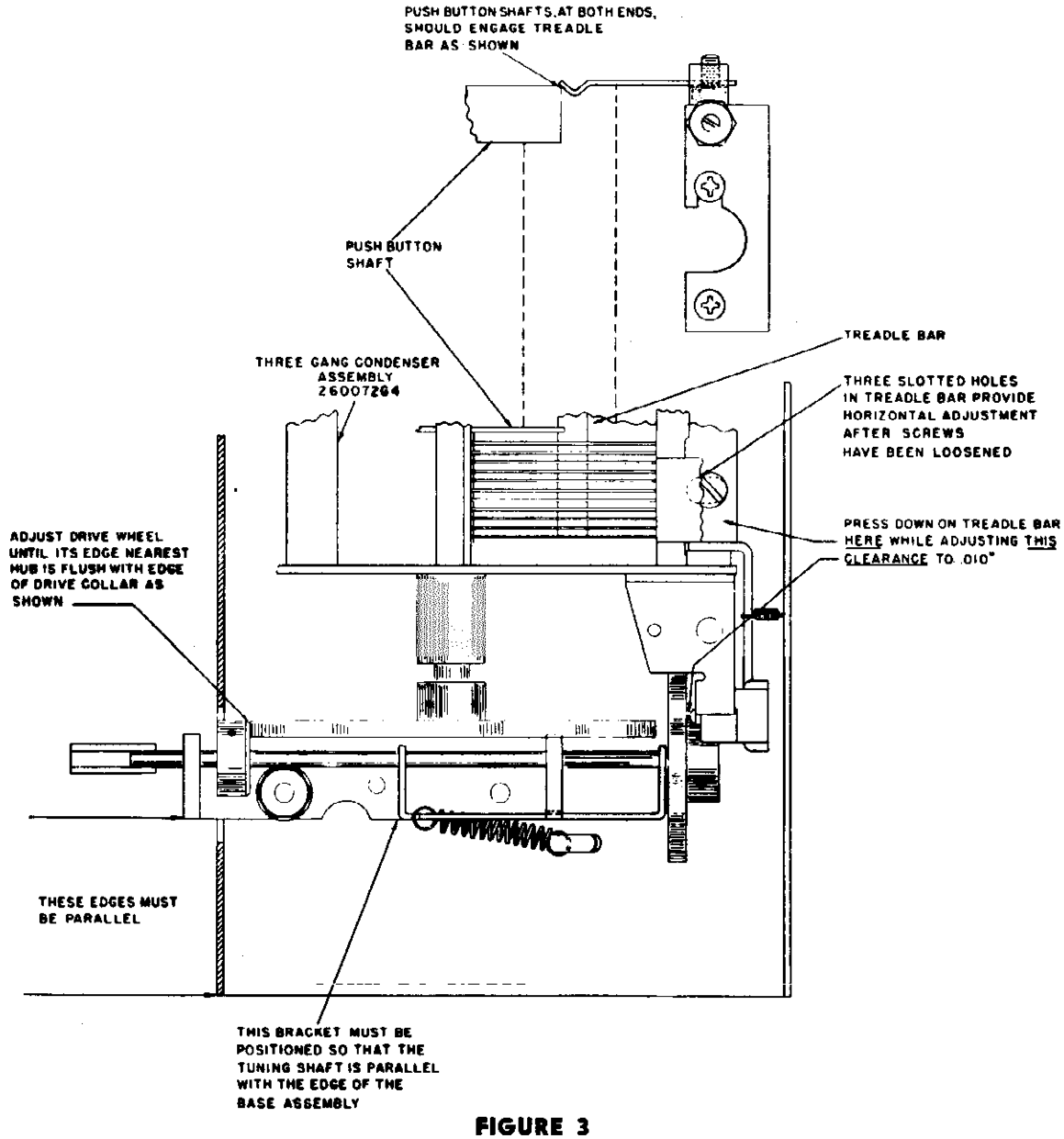

FIGURE 3

© John F. Rider

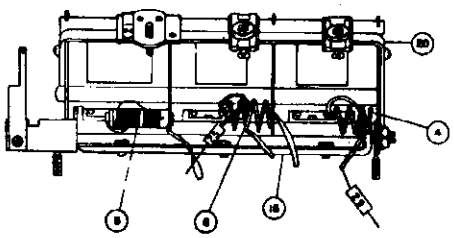

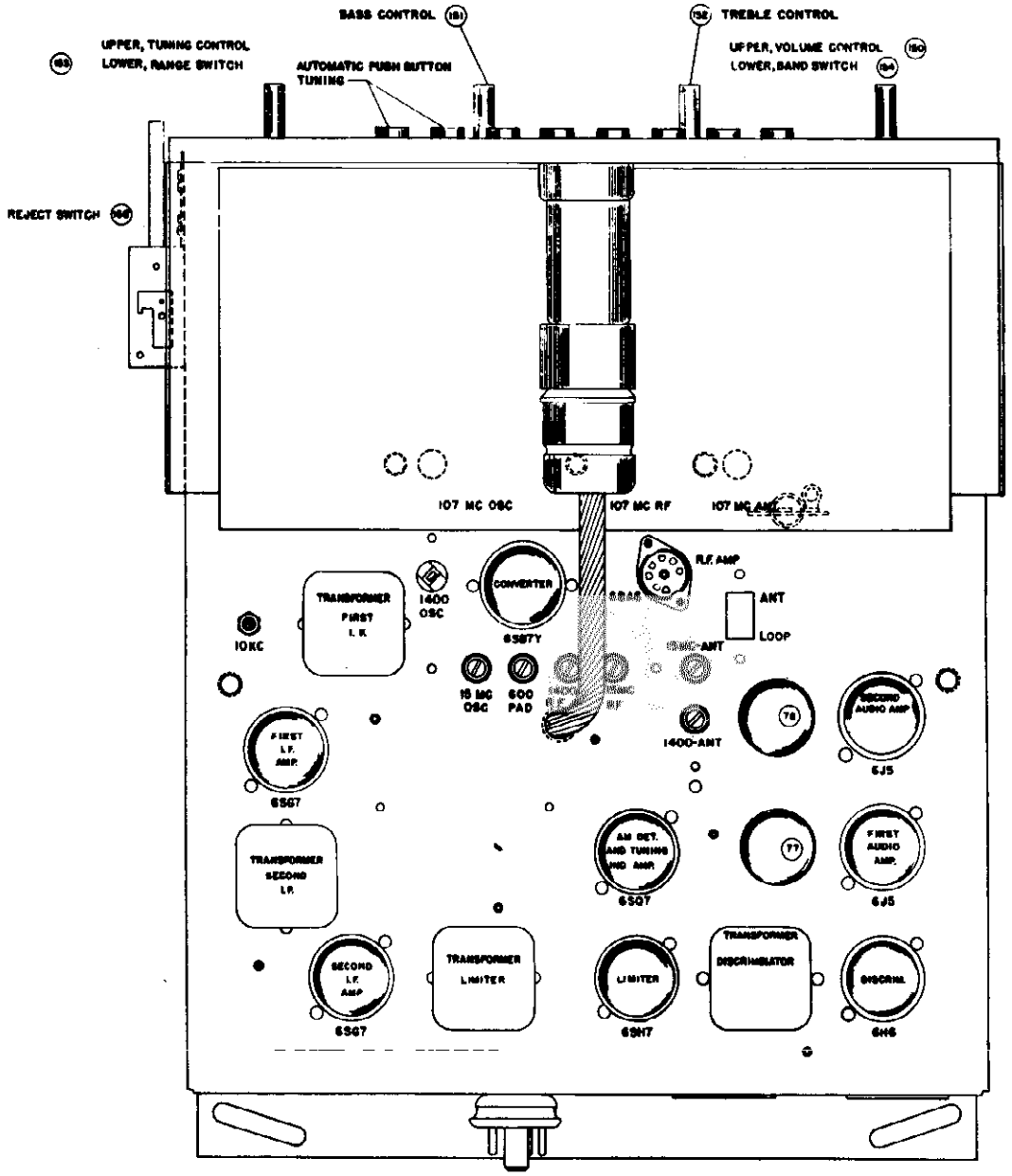
BASS CONTROL
TREBLE CONTROL
UPPER, TUNING CONTROL
LOWER, RANGE SWITCH
AUTOMATIC PUSH BUTTON TUNING
UPPER, VOLUME CONTROL
LOWER, BAND SWITCH
REJECT SWITCH
107 MC OSC
107 MC RF
107 MC ANT
R.F. AMP
ANT
LOOP
CONVERTER
6SB7Y
1400 OSC
10KC
TRANSFORMER FIRST I. F.
15 MC OSC
600 PAD
1400-ANT
FIRST I.F. AMP.
6SG7
SECOND AUDIO AMP.
6J5
AM DET. AND TUNING IND AMP.
6SQ7
FIRST AUDIO AMP.
6J5
TRANSFORMER SECOND I.F.
SECOND I.F. AMP
6SG7
TRANSFORMER LIMITER
LIMITER
6SN7
TRANSFORMER DISCRIMINATOR
DISCRIM.
6H6

©John F. Rider

MODEL CR-231

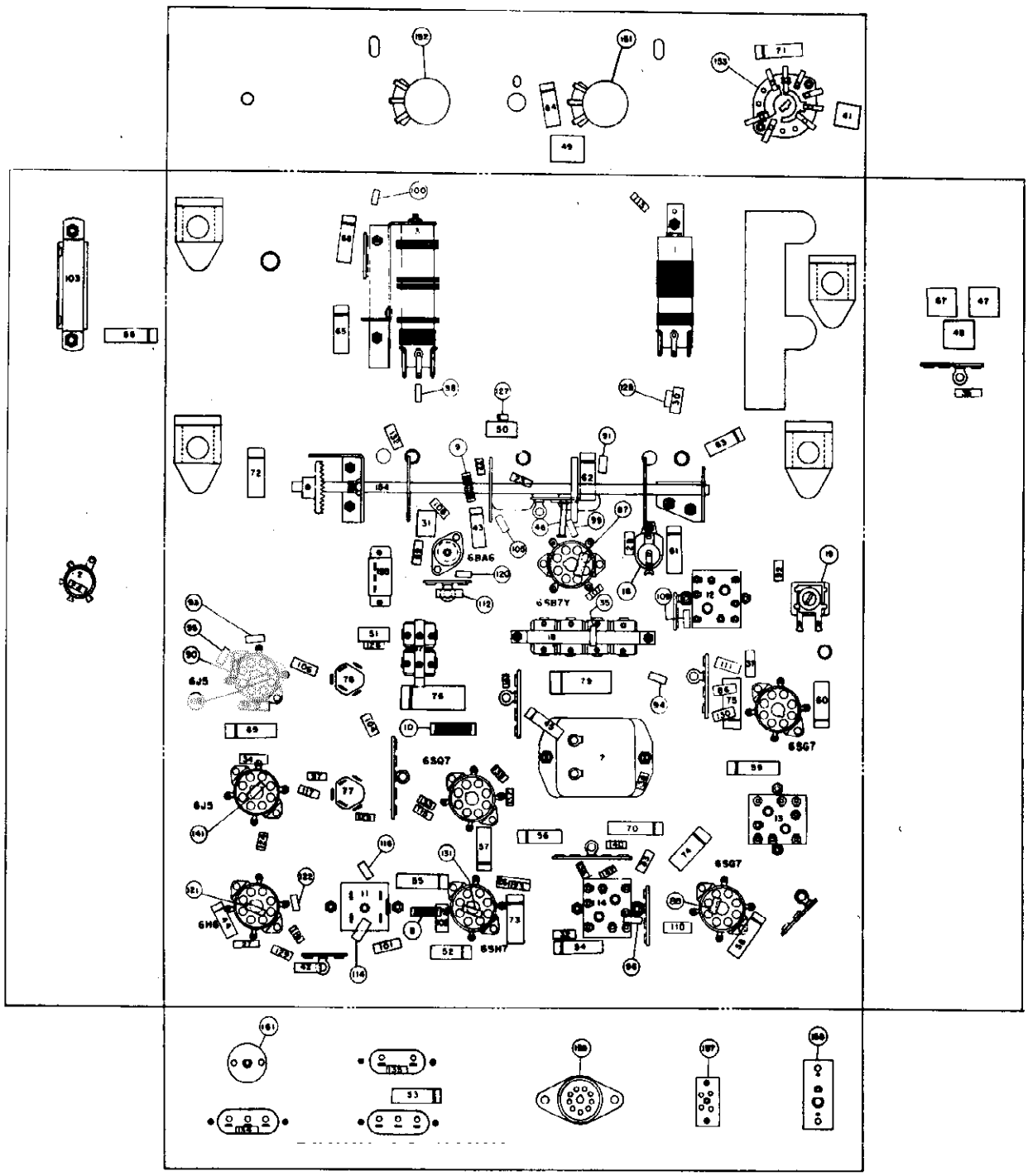

FIGURE 5

©John F. Rider

MODEL CR-231

PARTS LIST

REFERENCE NO.	DESCRIPTION	MAGNAVOX PART NO.
1	Coil Assembly, oscillator, AM	360298-1
2	Coil Assembly, antenna, AM	360299-1
3	Coil Assembly, r-f, AM	360300-1
4	Coil Assembly, antenna, FM	360296-3
5	Coil Assembly, oscillator, FM	360295-1
6	Coil Assembly, r-f, FM	360297-3
7	Coil Assembly, 10 kc.	360244-1
8	Coil, choke	360284-1
9	Coil, choke	360284-1
10	Coil, choke filament	360264-1
11	Transformer, discriminator	360305-1
12	Transformer, i-f	360285-1
13	Transformer, i-f	360285-1
14	Transformer, limiter	360286-1
15	Capacitor, variable, three gang tuning	260075-1
16	Capacitor, variable, oscillator trimmer, broadcast	260067-4
17	Capacitor, variable, 2 gang trimmer	260080-1
18	Capacitor, variable, 4 gang trimmers and oscillator padder	260082-1
19	Capacitor, variable, 10 kc. trimmer	259610-2
20	Capacitor, trimmer assembly	260084-1
21	Capacitor, ceramic, 3 mmf.	250088-38
22	Capacitor, ceramic & composition, 6 mmf.	250164-2
23	Capacitor, ceramic & composition, 10 mmf.	250164-3
24	Capacitor, ceramic & composition, 10 mmf.	250164-3
25	Capacitor, ceramic, 35 mmf.	250088-40
26	Capacitor, mica, 47 mmf.	250159-96
27	Capacitor, mica, 47 mmf.	250159-96
28	Capacitor, ceramic, 50 mmf.	250088-39
29	Capacitor, ceramic, 50 mmf.	250088-39
30	Capacitor, mica, 100 mmf.	250159-98
31	Capacitor, mica, 100 mmf.	250159-98
32	Capacitor, mica, 220 mmf.	250159-100
33	Capacitor, mica, 220 mmf.	250159-100
34	Capacitor, mica, 330 mmf.	250159-101
35	Capacitor, silver mica, 335 mmf., ±1%	250085-38
36	Capacitor, mica, 470 mmf.	250159-102
37	Capacitor, mica, 470 mmf.	250159-102
39	Capacitor, mica, 510 mmf., ±5%	250159-64
41	Capacitor, mica, 1000 mmf.	250160-82
42	Capacitor, mica, 1800 mmf., ±10%	250160-67
43	Capacitor, paper, .002 mfd., 600 V.	250152-44
44	Capacitor, paper, .002 mfd., 600 V., ±10%	250169-2
45	Capacitor, paper, .003 mfd., 600 V., ±10%	250169-6
46	Capacitor, ceramic, .004 mfd.	250088-34
47	Capacitor, molded paper, .004 mfd., 600 V.	250129-7
48	Capacitor, molded paper, .004 mfd., 600 V.	250129-7
49	Capacitor, molded paper, .005 mfd., 400 V.	250129-10
50	Capacitor, mica, .0062 mfd., ±5%	250161-27
51	Capacitor, mica, .0062 mfd., ±5%	250161-27
52	Capacitor, paper, .01 mfd., 600 V.	250152-38
53	Capacitor, paper, .01 mfd., 600 V.	250152-38
54	Capacitor, paper, .01 mfd., 600 V.	250152-38
55	Capacitor, paper, .01 mfd., 600 V.	250152-38

©John F. Rider

MODEL CR-231

REFERENCE NO.	DESCRIPTION	MAGNAVOX PART NO.
56	Capacitor, paper, .01 mfd., 600 V.	250152-38
57	Capacitor, paper, .01 mfd., 600 V.	250152-38
58	Capacitor, paper, .01 mfd., 600 V.	250152-38
59	Capacitor, paper, .01 mfd., 600 V.	250152-38
60	Capacitor, paper, .01 mfd., 600 V.	250152-38
61	Capacitor, paper, .01 mfd., 600 V.	250152-38
62	Capacitor, paper, .01 mfd., 600 V.	250152-38
63	Capacitor, paper, .01 mfd., 600 V.	250152-38
64	Capacitor, paper, .01 mfd., 600 V.	250152-38
65	Capacitor, paper, .01 mfd., 600 V.	250152-38
66	Capacitor, paper, .01 mfd., 600 V.	250152-38
67	Capacitor, molded paper, .012 mfd., 200 V.	250129-13
68	Capacitor, paper, .015 mfd., ±10%, 200 V.	250169-5
69	Capacitor, paper, .02 mfd., 600 V.	250152-37
70	Capacitor, paper, .02 mfd., 600 V.	250152-37
71	Capacitor, paper, .02 mfd., 600 V.	250152-37
72	Capacitor, paper, .05 mfd., 200 V.	250152-15
73	Capacitor, paper, .05 mfd., 200 V.	250152-15
74	Capacitor, paper, .05 mfd., 200 V.	250152-15
75	Capacitor, paper, .05 mfd., 200 V.	250152-15
76	Capacitor, paper, .1 mfd., 600 V.	250152-33
77	Capacitor, electrolytic, 10 mfd., 450 V.—20 mfd., 25 V.	270023-6
78	Capacitor, electrolytic, 10 mfd., 450 V.—20 mfd., 25 V.	270023-6
79	Capacitor, molded paper, .005 mfd., 400 V.	250152-41
86	Resistor, composition, 33 ohms, ½ W.	230084-4
87	Resistor, composition, 33 ohms, ½ W.	230084-4
88	Resistor, composition, 68 ohms, ½ W.	230084-6
89	Resistor, composition, 68 ohms, ½ W.	230084-6
90	Resistor, composition, 100 ohms, ±10%, ½ W.	230084-50
91	Resistor, composition, 100 ohms, ½ W.	230084-7
92	Resistor, composition, 150 ohms, ½ W.	230084-8
93	Resistor, composition, 220 ohms, ±10%, ½ W.	230084-54
94	Resistor, composition, 220 ohms, ½ W.	230084-9
95	Resistor, composition, 470 ohms, ½ W.	230084-11
96	Resistor, composition, 1000 ohms, ½ W.	230084-13
97	Resistor, composition, 2200 ohms, ½ W.	230084-15
98	Resistor, composition, 4700 ohms, ½ W.	230084-17
99	Resistor, composition, 5600 ohms, ±10%, ½ W.	230084-71
100	Resistor, composition, 5600 ohms, ±10%, ½ W.	230084-71
101	Resistor, composition, 8200 ohms, 1 W., ±10%	230085-73
102	Resistor, composition, 8200 ohms, 1 W., ±10%	230085-73
103	Resistor, strip, 8500 ohms	240035-5
104	Resistor, composition, 10,000 ohms, 1 W.	230085-19
105	Resistor, composition, 10,000 ohms, ½ W.	230084-19
106	Resistor, composition, 15,000 ohms, 1 W.	230085-20
107	Resistor, composition, 15,000 ohms, ½ W.	230084-20
108	Resistor, composition, 20,000 ohms, 1 W., ±5%	230085-190
109	Resistor, composition, 22,000 ohms, ½ W.	230085-21
110	Resistor, composition, 33,000 ohms, 1 W.	230085-22
111	Resistor, composition, 33,000 ohms, 1 W.	230085-22
112	Resistor, composition, 33,000 ohms, 2 W., ±10%	230086-80
113	Resistor, composition, 47,000 ohms, ½ W.	230084-23

©John F. Rider

REFERENCE NO.	DESCRIPTION	MAGNAVOX PART NO.
114	Resistor, composition, 68,000 ohms, ½ W., ±10%	230084-84
115	Resistor, composition, 100,000 ohms, ½ W.	230084-25
116	Resistor, composition, 100,000 ohms, ½ W.	230084-25
117	Resistor, composition, 100,000 ohms, ½ W.	230084-25
118	Resistor, composition, 100,000 ohms, ½ W.	230084-25
119	Resistor, composition, 100,000 ohms, ½ W., ±10%	230084-86
120	Resistor, composition, 39,000 ohms, ½ W., ±10%	230084-81
121	Resistor, composition, 150,000 ohms, ½ W., ±10%	230084-88
122	Resistor, composition, 150,000 ohms, ½ W., ±10%	230084-88
123	Resistor, composition, 220,000 ohms, ½ W.	230084-27
124	Resistor, composition, 470,000 ohms, ±10%, ½ W.	230084-94
125	Resistor, composition, 220,000 ohms, ½ W.	230084-27
126	Resistor, composition, 220,000 ohms, ½ W.	230084-27
127	Resistor, composition, 220,000 ohms, ½ W.	230084-27
128	Resistor, composition, 220,000 ohms, ½ W.	230084-27
129	Resistor, composition, 330,000 ohms, ½ W., ±10%	230084-92
130	Resistor, composition, 470,000 ohms, ½ W.	230084-29
131	Resistor, composition, 470,000 ohms, ½ W.	230084-29
132	Resistor, composition, 470,000 ohms, ½ W.	230084-29
133	Resistor, composition, 470,000 ohms, ½ W.	230084-29
134	Resistor, composition, 1 megohm, ½ W.	230084-31
135	Resistor, composition, 1 megohm, ½ W.	230084-31
136	Resistor, composition, 1 megohm, ½ W.	230084-31
137	Resistor, composition, 1.5 megohm, ½ W.	230084-32
138	Resistor, composition, 1.5 megohm, ½ W.	230084-32
139	Resistor, composition, 2.2 megohm, ½ W.	230084-33
140	Resistor, composition, 2.2 megohm, ½ W.	230084-33
141	Resistor, composition, 4.7 megohm, ½ W.	230084-35
142	Resistor, composition, 4.7 megohm, ½ W.	230084-35
143	Resistor, composition, 33,000 ohms, ½ W., ±10%	230084-80
150	Control, volume, 1 megohm	220044-24
151	Control, bass, 1 megohm with switch	230073-6
		230045-7
152	Control, treble	160178-1
153	Control, range	220044-26
		220072-12
154	Switch, rotary, band switch	160179-1
155	Switch, slide SPDT	160176-1
156	Switch, reject	160188-1
157	Socket, external input	180060-1
158	Socket, phono	189741-1
159	Socket, amplifier	180427-2
160	Antenna Loop Assembly	460637-1
161	Socket, solenoid	182776-1
162	Solenoid	360313-1
163	Plug, solenoid	189147-1
	Dial Glass Assembly	150303-1
	Push Button Assembly for gang	260093-1

©John F. Rider

MODEL CR-233

GENERAL

It frequently becomes necessary to make minor changes in the electrical circuit of a chassis to provide the correct response for different cabinets or speaker systems.

When this becomes necessary such a variation from the original chassis is indicated by a suffix letter; example: 500B.

Whenever necessary Service Bulletin Supplements will be issued with latest schematic drawings and parts lists indicating these changes.

METHOD FOR REMOVING CHASSIS FROM CABINET

Model CR-233 radio chassis is designed for easy removal from the cabinet in which it is installed. As the radio panel is permanently fastened to the chassis, the control knobs need not be removed when the chassis is taken out of the cabinet for service.

To remove the chassis, first remove the antenna leads from their terminals and all plugs from the receptacles on the rear of the chassis. Then remove the two Phillips-head screws from the angular slots in the flange at the rear of the chassis. Lift the rear of the chassis about one inch and pull it straight back. Never remove the chassis tray from the cabinet—it has been properly positioned to bring the radio panel in place when the chassis is replaced. In replacing the chassis, slide it so that the small hooks near the front, ride inside the flanges on the sides of the chassis tray. Push the chassis forward as far as it will go and the hook should then engage the slots in the chassis tray. Replace the two Phillips-head screws and nuts and tighten securely. Replace all plugs in their receptacles and the antenna leads on their correct terminals. The antenna terminal board for the loop antenna connections is designated L-H. The two terminals on the loop are designated L and H; the leads connected to these terminals should be wired to the corresponding terminals (L and H) on the chassis.

ALIGNMENT PROCEDURE

Alignment of this receiver requires the use of an accurately calibrated r-f signal generator, range 455 kc. to 107 mc., an output meter, and a vacuum tube voltmeter of greater than 10 megohm input impedance. All trimmer condensers can be identified by stampings on the chassis and gang condenser cover and are shown on the chassis layout diagram.

The pointer on the radio dial should line up with the first vertical mark on the low frequency end of the dial glass. If the pointer does not line up, loosen the pointer on the dial string and move it to correct position. Re-tighten and re-cement the pointer to the string. Be sure the gang is fully meshed for this pointer alignment. Align AM first.

AM ALIGNMENT

I-F ALIGNMENT

1. Set volume, treble, and bass controls to maximum. Set Band Switch to Broadcast position, and dial pointer to 1000 kc.
2. Tune the signal generator to EXACTLY 455 kc.
3. Connect output of modulated signal generator to the signal grid of the 6BE6 (pin 7) through a .01 mfd. capacitor and signal generator ground to radio chassis.
4. AM and FM i-f transformers on this model are separate and can be identified on the chassis layout diagram Figure 3.
5. Connect output meter across voice coil of speaker and adjust the i-f transformers for peak output as indicated on the output meter.

ALTERNATE VISUAL ALIGNMENT OF I-F STAGES

1. Connect 455 kc. sweep generator having approximately 20 kc. sweep to signal grid of 6BE6 (pin 7) through a .01 mfd. capacitor. Connect an oscilloscope through a 1 megohm isolating resistor across the 150,000 ohm diode load resistor. Align for best possible peak and symmetry.

R-F ALIGNMENT

1. Remove the signal generator lead from the 6BE6 grid and connect it across H and L on terminal strip on the rear of the chassis. The high side of the signal generator should be connected to H and the signal generator ground to L.

2. Set the signal generator and the radio receiver to 1400 kc., adjust the 1400 kc. oscillator trimmer and the 1400 kc. r-f trimmer for maximum output.

3. Set the signal generator and radio receiver to 600 kc. Adjust the oscillator and r-f coil slugs for maximum output. If considerable adjustment was necessary re-check the 1400 kc trimmer settings.

4. Replace chassis in cabinet and connect loop antenna leads to proper terminals on the rear of the chassis.

5. Form three turns of wire into a loop, connect this loop to the signal generator and loosely couple it to the receiver loop antenna.

6. With the signal generator and dial at 1400 kc., adjust the loop antenna trimmer for maximum output.

© John F. Rider

FM ALIGNMENT

DISCRIMINATOR ALIGNMENT

1. Tune signal generator to EXACTLY 10.775 mc. and connect to pin 4 of the 6SH7 Limiter tube socket through a .01 mfd. capacitor.

2. Connect a DC vacuum tube voltmeter between point "B" on schematic diagram and ground (across .00047 mfd. capacitor—Pin 6 on 6H6 to ground).

3. Peak both discriminator slugs at 10.775 mc.

4. Retune signal generator to exactly 10.7 mc. and adjust bottom slug for zero volts.

5. The DC voltage at 10.625 mc. should be within 10% of the voltage at 10.775 mc. and of opposite polarity.

Note: If the signal generator is not capable of sufficient output to produce a readable DC voltage, the amplification of the last i-f stage can be used to increase the signal input to the limiter for discriminator alignment. To accomplish this, align the last i-f stage as indicated in "IF Alignment". Then align discriminator as above leaving the signal generator connected to the grid of the 6SG7 2nd i-f tube.

I-F ALIGNMENT

1. Connect high side of signal generator, through a .01 mfd. capacitor and a 1000 ohm resistor in series, to pin 4 of the 6SG7 2nd i-f tube. Connect low side of generator to chassis.

2. Close gang condenser and connect vacuum tube voltmeter across 220,000 ohm limiter grid resistor; (Point "A" on schematic to ground). Adjust signal generator output until a reading of at least 3 volts is obtained. In order to reduce regeneration caused by the vacuum tube voltmeter leads, a 1-megohm isolating resistor, connected with as short leads as possible to point "A" should be used in series with the vacuum tube voltmeter. Align the 3rd i-f transformer for best peak as indicated on voltmeter.

3. Repeat above for each succeeding transformer by connecting signal generator to signal grid of first i-f tube 6SG7 then to the signal grid of 6BE6 converter. The i-f stages should be aligned in this order.

WARNING—After each i-f stage has been aligned, do not repeak with the signal into the grid of the 6BE6.

ALTERNATE VISUAL ALIGNMENT OF I-F STAGES

1. Replace signal generator with sweep generator having approximately 300 kc. sweep and tune generator to 10.7 mc. Connect oscilloscope across 220,000 ohm limiter grid resistor through a 1-megohm isolating resistor. The order of alignment is the same as when using a vacuum tube voltmeter. Each i-f transformer should be individually aligned for best peak and symmetry.

R-F ALIGNMENT

1. Connect vacuum tube voltmeter across limiter grid resistor as in FM I-F alignment.

2. Ground one side of the FM Antenna by placing a wire jumper from one FM connection on the antenna terminal strip to the ground connection.

3. Connect unmodulated signal generator through a 300 ohm resistor to ungrounded antenna post and chassis, and tune signal generator to 107 mc.

4. Set radio dial to 107 mc. and tune oscillator trimmer to peak output on vacuum tube voltmeter. Adjust signal generator output until a reading of at least 3 volts is obtained.

5. Tune 107 mc. r-f and antenna trimmers for maximum indication on voltmeter—it may be necessary to rock the dial while adjusting the r-f trimmer.

SPECIAL SERVICE INFORMATION

The following information is provided for the service man who has a vacuum tube voltmeter or a similar measuring instrument available.

STAGE GAINS*

Antenna Post to R-F Grid at:

600 kc.	5.00
98 mc.	1.15

R-F Grid to Converter Grid at:

600 kc.	14.5
98 mc.	9.4

© John F. Rider

MODEL CR-233

R-F on Converter Grid to 455 kc. on I-F Grid at:
600 kc. 25.0
98 mc. 3.2

I-F on Converter Grid to 1st I-F Grid at:
455 kc. (gang closed) 28.0

1st I-F Grid to 2nd I-F Grid** at:
455 kc. 95
10.7 mc. 33

2nd I-F Grid to Limiter Grid at:
10.7 mc. 33.4

OSCILLATOR OUTPUT VOLTAGE

The DC voltage developed across the Oscillator Grid Resistor (105) at:

600 kc. ..... 6.6V.
98 mc. ..... 6.0V.

or 0.3 ma. through 22,000 ohm Oscillator Grid Resistor at 600 kc. and 0.27 ma. at 98 mc.

AUDIO GAIN

Voltage required across the Volume Control to produce 0.1 watt speaker output*** at 400 cycles is .012 volt with Input Selector Switch in BDCST. setting.

*Variations of ±20% are permissible. All readings made with sufficient input signal to provide 0.5 watt speaker output. 0.5 speaker output at 400 cycles is equivalent to a reading of 1.25V. as measured by a high resistance AC voltmeter across the voice coil of the speaker.
**Detector Plate on AM.
***0.1 watt speaker output at 400 cycles is equivalent to a reading of 0.55 volts as measured by a high resistance AC voltmeter across the voice coil of speaker.

DIAL CORD REPLACEMENT

Two separate drive cables are used in the CR-233 dial assembly. One cable is used to transmit the motion from the tuning knob to the large pulley that is coupled to the condenser gang; the other cable actuates the dial pointer whenever the large pulley on the condenser gang is rotated. Separate instructions for replacing either of these cables is given in the following paragraphs.

CONDENSER DRIVE CABLE REPLACEMENT

Remove dial assembly after taking out four screws on each side of chassis. Slide a short length (approximately ½ inch) of sleeving over one end of a length of dial cable, form a small loop and tie a knot in the manner shown on Figure 1. Tie spring to opposite end of cable making length excluding spring 19½ inches. Hook loop over the metal hook in pulley "D" and lace the cable through the pulley slot and around the pulley in a counterclockwise direction when viewed from the rear of the dial assembly keeping the cable to the rear of the pulley groove. Lace the cable around the smaller diameter portion of the tuning control shaft wrapping 2½ turns *from front to back;* then around the opposite side of pulley "D" into the pulley through the slot. Hook the end of tension spring "F" in the hole provided in pulley "D", completing this operation.

DIAL POINTER DRIVE CABLE REPLACEMENT

Remove dial assembly after taking out four screws on each side of chassis. Slip a one-half inch length of sleeving over a 42-inch length of dial cable. Tie the two ends to the loop end of the cable spring "E" securely so that the cable doubled measures 19⅝ inches end to end excluding spring.

Place spring hook in top hole and draw cable through slot of pulley "D". Loop one end of cable around pulley "D" in a clockwise direction in front of condenser drive cable (viewing dial assembly from front) then loop the remaining end around pulley in a counterclockwise direction. Secure both ends of cable to chassis at edge of pulley slot with scotch tape, keeping piece of sleeving on remaining loop of cable.

Replace dial assembly and loop cable over pulley "A". While holding cable taut remove scotch tape and loop cable over pulleys "B" and "C" as shown in Figure 1.

Turn the tuning control shaft until the condenser gang is completely meshed and slide the dial pointer on its track until it is in line with the last calibration mark at the low frequency end of the dial. The short piece of sleeving installed prior to the stringing operation should be slid to the rear of the dial pointer and the crimping lug on the pointer pressed over the sleeving. After checking to make certain that the condenser gang is completely meshed and the dial pointer is in the position specified previously, apply a few drops of cement to each end of the sleeving to which the dial pointer is fastened. This completes the operation.

©John F. Rider

MODEL CR-233

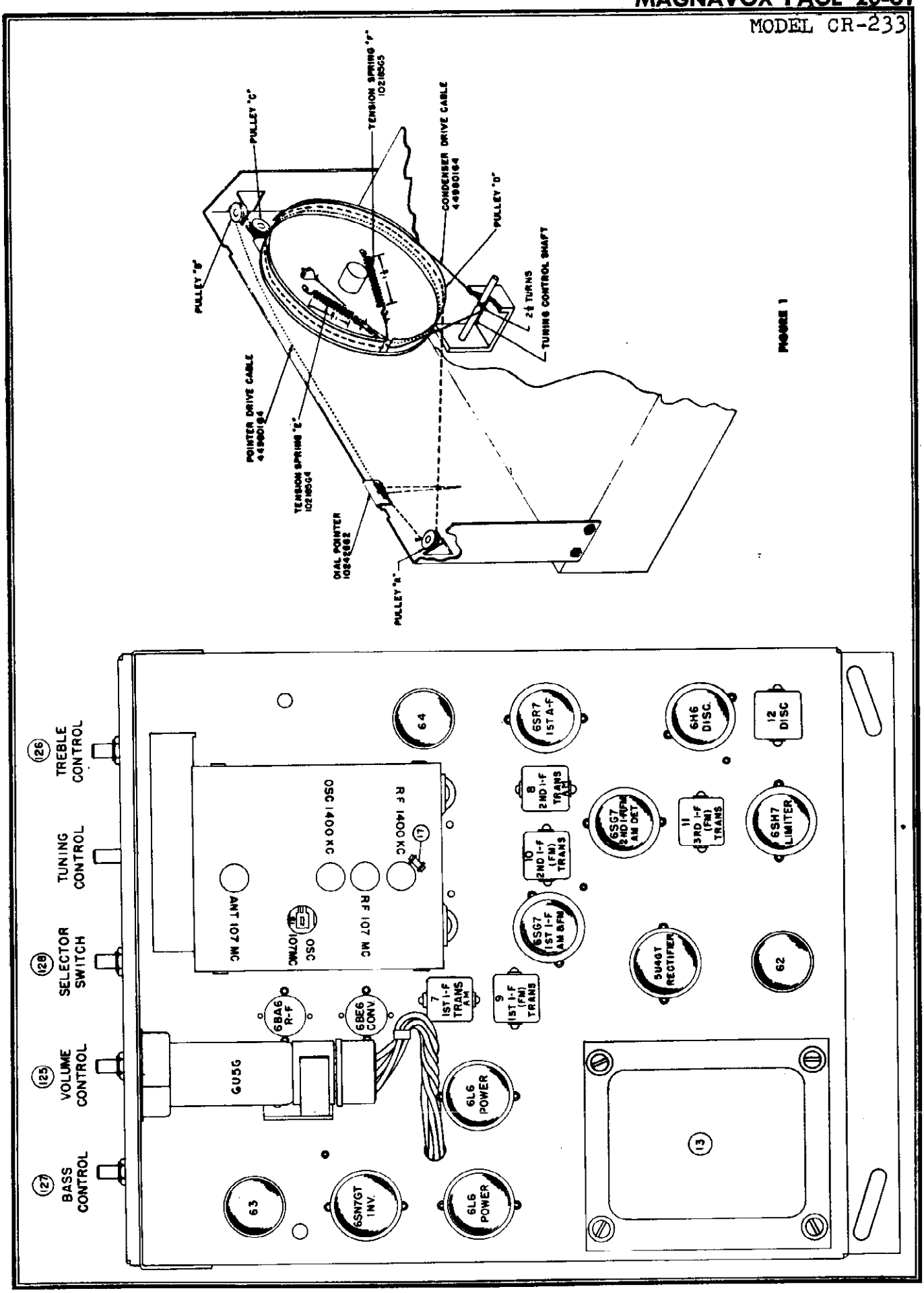

©John F. Rider

MODEL CR-233

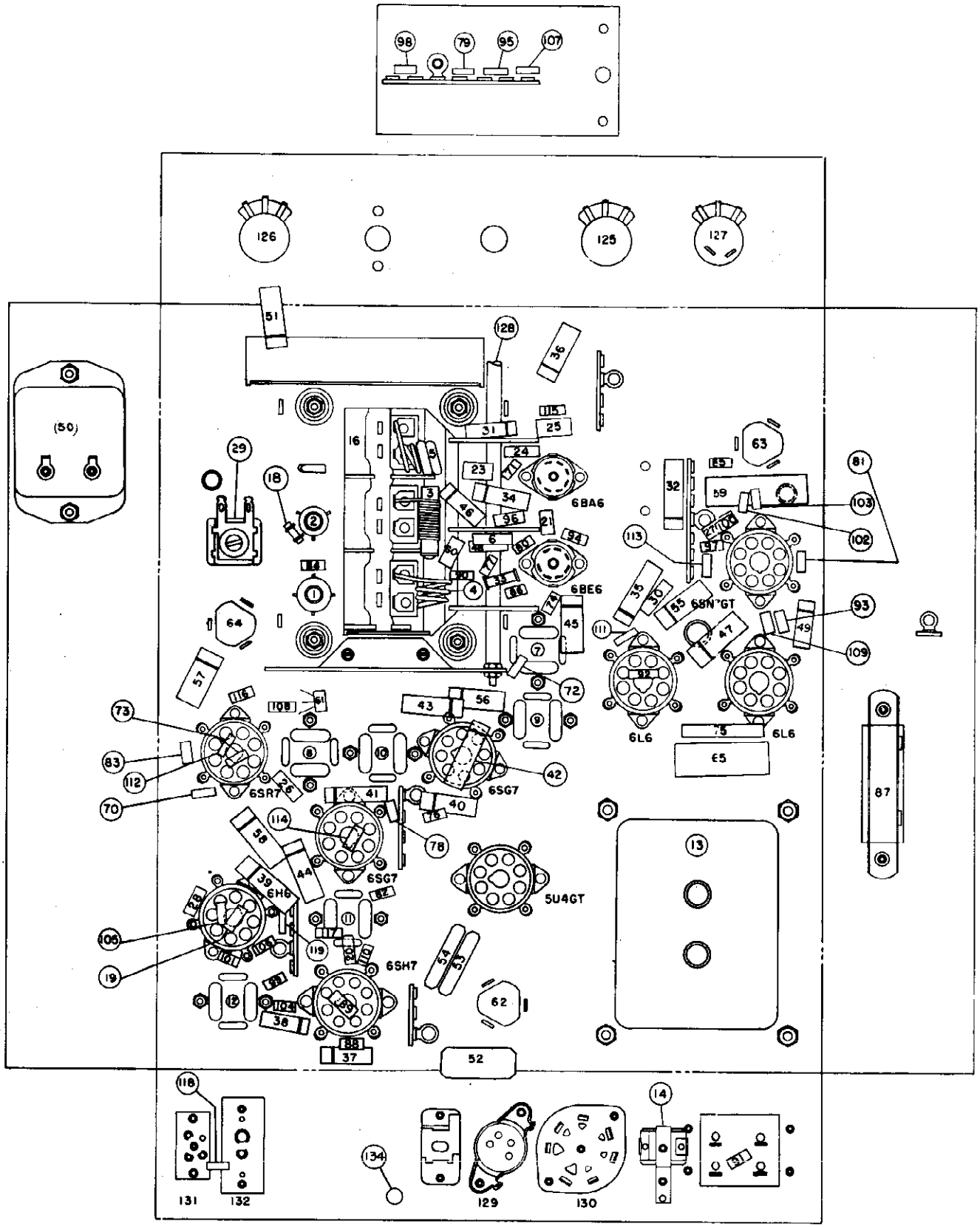

FIGURE 3

© John F. Rider

PARTS LIST

REFERENCE NO.	DESCRIPTION	MAGNAVOX PART NO.
1	Coil assembly, r-f (AM)	360348-1
2	Coil assembly, oscillator (AM)	360349-1
3	Coil assembly, oscillator (FM)	360323-1
4	Coil assembly, r-f (FM)	360322-2
5	Coil assembly, antenna (FM)	360321-2
6	Coil, choke	360284-1
7	Transformer, first i-f	360373-1
8	Transformer, second i-f	360373-2
9	Transformer, first i-f (FM)	360374-1
10	Transformer, second i-f (FM)	360374-1
11	Transformer, third i-f (FM)	360374-1
12	Transformer, discriminator	360375-1
13	Transformer, power	300052-2
14	Capacitor, variable trimmer	250046-2
15	Capacitor, variable trimmer	260067-5
16	Capacitor, three gang tuning	260103-1
17	Capacitor, ceramic, 10 mmf. ±5%, 500 V.	250088-8
18	Capacitor, ceramic, 10 mmf. ±5%, 500 V.	250088-8
19	Capacitor, mica, 47 mmf. 500 V.	250159-96
20	Capacitor, mica, 47 mmf. 500 V.	250159-96
21	Capacitor, ceramic, 50 mmf. ±10%, 500 V.	250088-39
23	Capacitor, mica, 100 mmf. 500 V.	250159-98
24	Capacitor, mica, 100 mmf. 500 V.	250159-98
25	Capacitor, mica, 220 mmf. 500 V.	250159-100
26	Capacitor, mica, 220 mmf. 500 V.	250159-100
27	Capacitor, mica, 330 mmf. ±10%, 500 V.	250159-88
28	Capacitor, mica, 470 mmf. 500 V.	250159-102
29	Capacitor, trimmer, 10 kc.	259610-2
30	Capacitor, mica, 1800 mmf. ±5%, 500 V.	250160-44
31	Capacitor, paper, .001 mfd. ±10%, 600 V.	250152-45
32	Capacitor, paper, .005 mfd. 600 V.	250152-41
33	Capacitor, ceramic, .004 mfd. 350 V.	250088-34
34	Capacitor, paper, .002 mfd. 600 V.	250152-44
35	Capacitor, paper, .015 mfd. ±10%, 200 V.	250169-5
36	Capacitor, paper, .01 mfd. 200 V.	250152-18
37	Capacitor, paper, .01 mfd. 600 V.	250152-38
38	Capacitor, paper, .01 mfd. 600 V.	250152-38
39	Capacitor, paper, .01 mfd. 200 V.	250152-18
40	Capacitor, paper, .01 mfd. 200 V.	250152-18
41	Capacitor, paper, .01 mfd. 600 V.	250152-38
42	Capacitor, paper, .01 mfd. 600 V.	250152-38
43	Capacitor, paper, .01 mfd. 600 V.	250152-38
44	Capacitor, paper, .01 mfd. 600 V.	250152-38
45	Capacitor, paper, .01 mfd. 600 V.	250152-38
46	Capacitor, paper, .01 mfd. 600 V.	250152-38
47	Capacitor, paper, .01 mfd. 600 V.	250152-38
48	Choke coil	360284-1
49	Capacitor, paper, .001 mfd. ±10%, 600 V.	250152-45
50	Coil assembly, 10 kc.	360244-2
51	Capacitor, paper, .01 mfd. 200 V.	250152-18
52	Capacitor, paper, .02 mfd. 600 V.	250129-3
53	Capacitor, paper, .02 mfd. 600 V.	250129-3
54	Capacitor, paper, .02 mfd. 600 V.	250129-3
55	Capacitor, paper, .03 mfd. 600 V.	250152-36
56	Capacitor, paper, .05 mfd. 200 V.	250152-15
57	Capacitor, paper, .05 mfd. 200 V.	250152-15
58	Capacitor, paper, .05 mfd. 200 V.	250152-15
59	Capacitor, paper, .1 mfd. 400 V.	250152-22
60	Capacitor, ceramic, 500 mmf.	250088-31
61	Capacitor-resistor filter	250170-1
62	Capacitor, electrolytic, 30-10 mfd. 475 V.	270023-2
63	Capacitor, electrolytic, 10 mfd. 450 V—20 mfd. 25 V.	270023-6
64	Capacitor, electrolytic, 10-10 mfd. 450 V.—20 mfd. 25 V.	270023-7
65	Capacitor, electrolytic, 20 mfd. 25 V.	270027-2
70	Resistor, composition, 33 ohms, ½ W.	230084-4
71	Resistor, composition, 68 ohms, ½ W.	230084-6
72	Resistor, composition, 68 ohms, ½ W.	230084-6
73	Resistor, composition, 82 ohms, ±10%, ½ W.	230084-49
74	Resistor, composition, 220 ohms, ½ W.	230084-9
75	Resistor, composition, 125 ohms, 5 W.	240021-11
76	Resistor, composition, 1000 ohms, ½ W.	230084-13
77	Resistor, composition, 1000 ohms, ½ W.	230084-13
78	Resistor, composition, 1000 ohms, ½ W.	230084-13
79	Resistor, composition, 1000 ohms, ½ W.	230084-13
80	Resistor, composition, 1000 ohms, ½ W.	230084-13
81	Resistor, composition, 1500 ohms, ½ W.	230084-14
82	Resistor, composition, 3300 ohms, ½ W.	230084-16
83	Resistor, composition, 3900 ohms, ±10%, ½ W.	230084-69
84	Resistor, composition, 4700 ohms, ½ W.	230084-17
85	Resistor, composition, 4700 ohms, ½ W.	230084-17
86	Resistor, composition, 4700 ohms, ½ W.	230084-17

MODEL CR-233

REFERENCE NO.	DESCRIPTION	MAGNAVOX PART NO.
87	Resistor, wire wound, 6500 ohms, ±10%	240035-9
88	Resistor, composition, 8200 ohms, ±10%, 1 W.	230085-73
89	Resistor, composition, 8200 ohms, ±10%, 1 W.	230085-73
90	Resistor, composition, 10,000 ohms, ½ W.	230084-19
91	Resistor, composition, 10,000 ohms, ½ W.	230084-19
92	Resistor, composition, 15,000 ohms, 1 W.	230085-20
93	Resistor, composition, 15,000 ohms, ±5%, ½ W.	230084-187
94	Resistor, composition, 22,000 ohms, ½ W.	230084-21
95	Resistor, composition, 22,000 ohms, ½ W.	230084-21
96	Resistor, composition, 47,000 ohms, 1 W.	230085-23
97	Resistor, composition, 47,000 ohms, ½ W.	230084-23
98	Resistor, composition, 47,000 ohms, ½ W.	230084-23
99	Resistor, composition, 68,000 ohms, ±10%, ½ W.	230084-84
100	Resistor, composition, 82,000 ohms, ±10%, ½ W.	230084-85
101	Resistor, composition, 100,000 ohms, ±10%, ½ W.	230084-86
102	Resistor, composition, 100,000 ohms, ½ W.	230084-25
103	Resistor, composition, 100,000 ohms, ½ W.	230084-25
104	Resistor, composition, 100,000 ohms, ½ W.	230084-25
105	Resistor, composition, 150,000 ohms, ±10%, ½ W.	230084-88
106	Resistor, composition, 150,000 ohms, ±10%, ½ W.	230084-88
107	Resistor, composition, 150,000 ohms, ½ W.	230084-26
108	Resistor, composition, 150,000 ohms, ½ W.	230084-26
109	Resistor, composition, 220,000 ohms, ±5%, ½ W.	230084-215
110	Resistor, composition, 220,000 ohms, ½ W.	230084-27
111	Resistor, composition, 270,000 ohms, ±10%, ½ W.	230084-91
112	Resistor, composition, 820,000 ohms, ±10%, ½ W.	230084-97
113	Resistor, composition, 1 megohm, ±5%, ½ W.	230084-231
114	Resistor, composition, 1 megohm, ½ W.	230084-31
115	Resistor, composition, 1 megohm, ½ W.	230084-31
116	Resistor, composition, 1 megohm, ½ W.	230084-31
117	Resistor, composition, 1 megohm, ½ W.	230084-31
118	Resistor, composition, 330,000 ohms, ±10%, ½ W.	230084-92
119	Resistor, composition, 820,000 ohms, ½ W.	230084-97
120	Resistor, composition, 560,000 ohms, ½ W. ±10% (in tuning eye)	230084-95
125	Control, volume	220072-18
126	Control, treble	220072-8
127	Control, bass, with switch	220073-5
128	Switch, selector	160194-1
129	Socket, motor	180501-5
130	Socket, speaker	180504-16
131	Socket, external	180060-1
132	Socket, phono	189741-1
133	Loop antenna	*
134	6 Volt socket and cable for cabinet pilot light	180458-2

*The part number of the Loop Antenna Assembly changes with different cabinets. It is therefore important that you specify the style number of the instrument when ordering a replacement Loop Antenna Assembly.

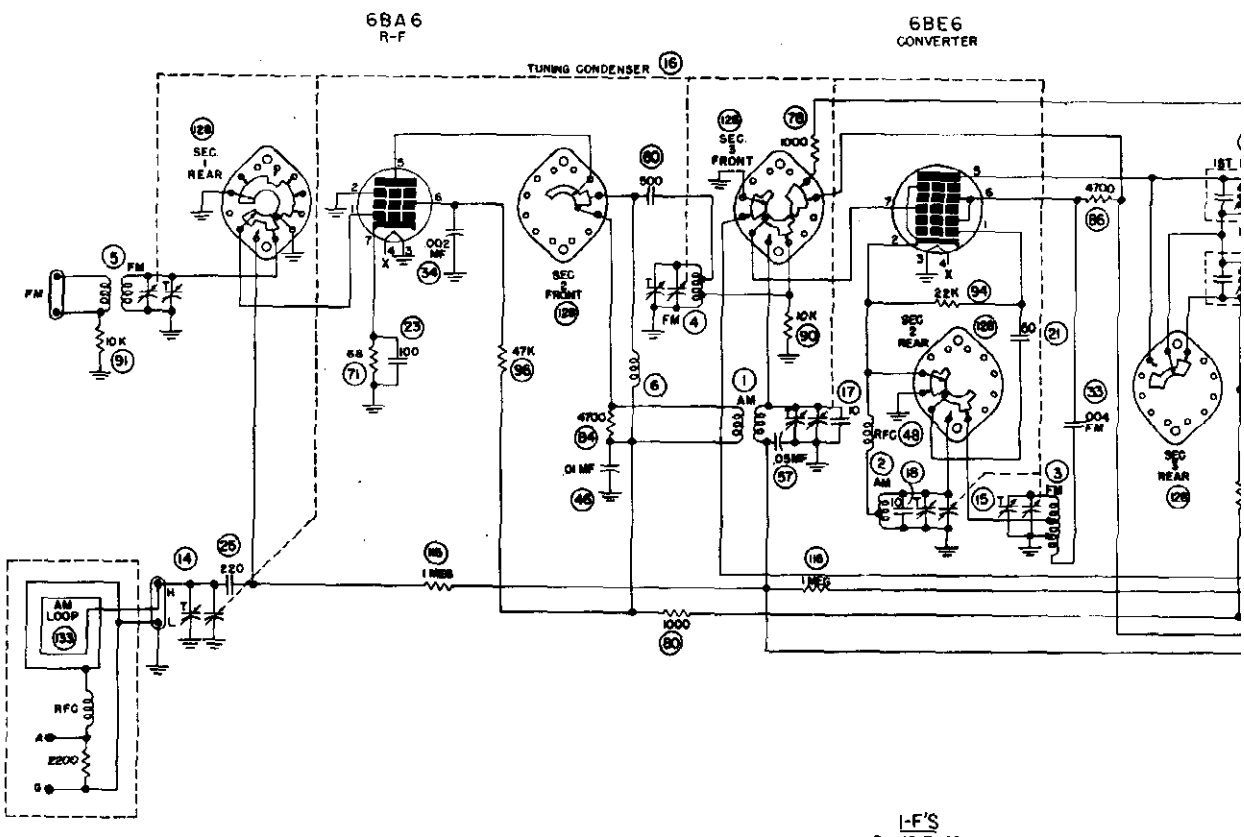

I-F'S
FM 10.7 MC.
AM 455 KC.

NOTES

BAND SWITCH SHOWN IN COUNTERCLOCKWISE (FM) POSITION WHEN VIEWED FROM THE FRONT PANEL.
ALL ELECTRICAL VALUES SHOWN ARE IN OHMS OR MMF UNLESS OTHERWISE SPECIFIED.
LETTERS SHOWN IN SQUARES DESIGNATE METER CONNECTION POINTS FOR ALIGNMENT DESCRIBED IN TEXT.

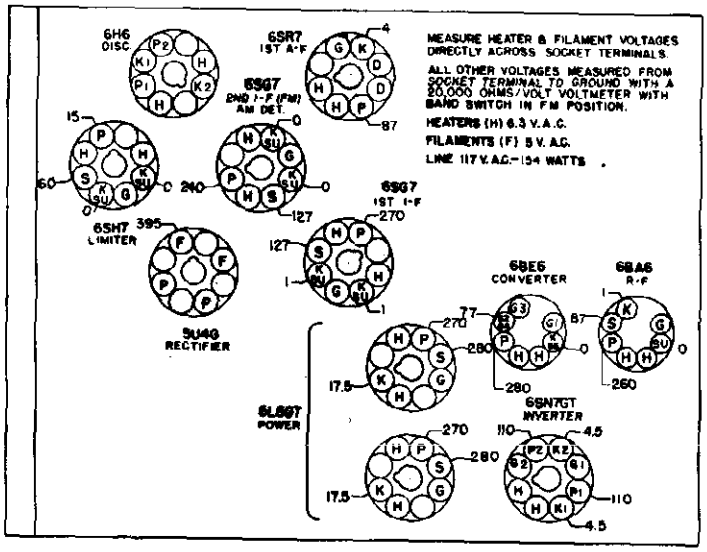

FIGURE 2

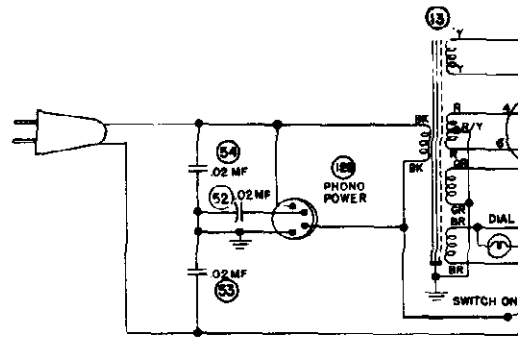

SPECIFICA

Power supply.....
Power consumption.....
Power output.....
Intermediate frequency.....
Tuning frequency range:
  Broadcast Band.....
  FM Band.....
Tubes:
  R-F Amplifier.....
  Converter.....
  1st I-F Amplifier (AM-FM).....

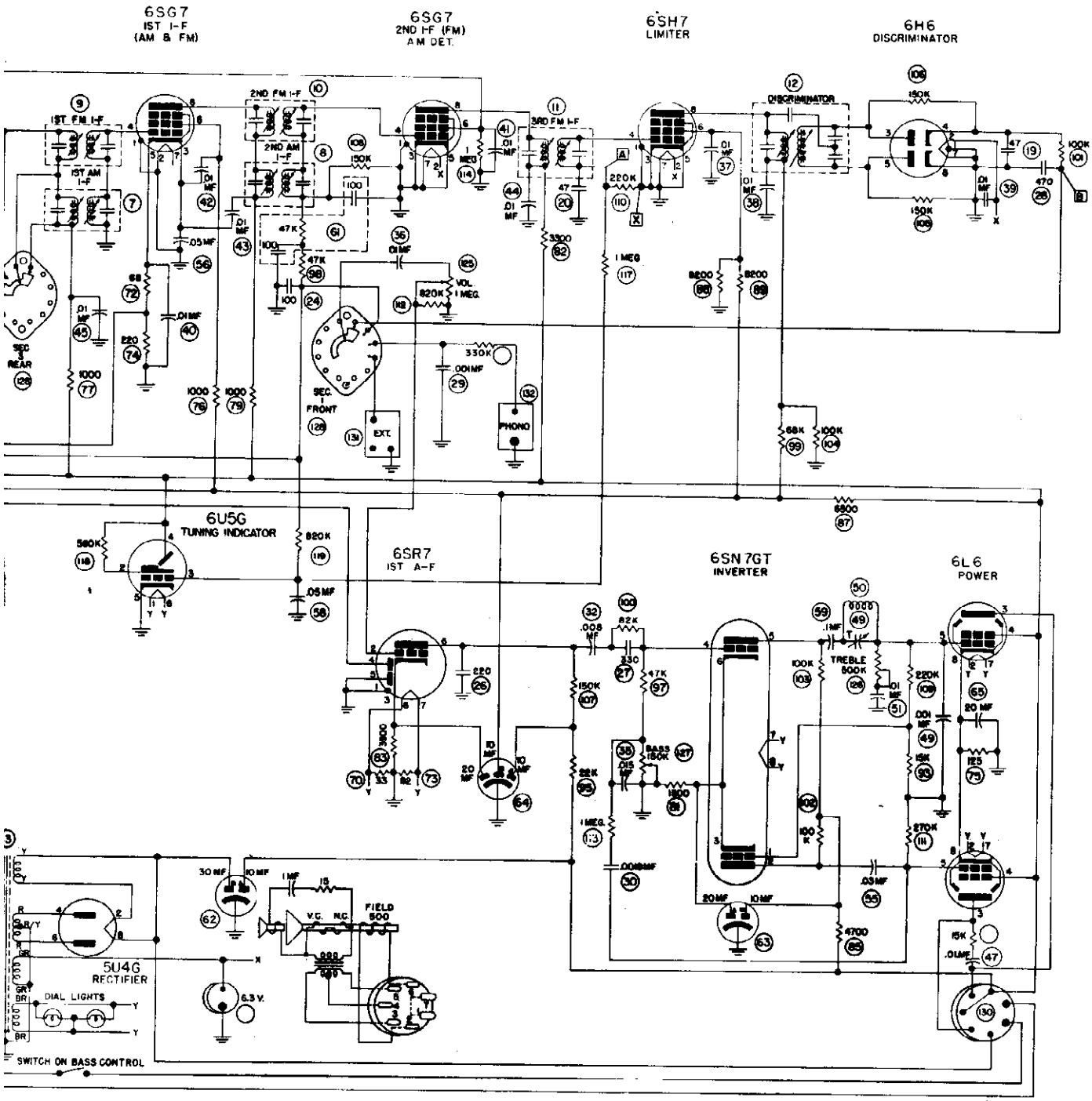

ICATIONS

	117 volts 50/60 cycles AC
	160 watts
	20 watts
	455 kc./10.7 mc.
	540-1620 kc.
	88—108 mc.
	6BA6
	6BE6
	6SG7
2nd I-F (FM), Detector and AVC (AM)	6SG7
Limiter	6SH7
Discriminator	6H6
First Audio	6SR7
Inverter	6SN7GT
Power output (push-pull stage)	(2) 6L6
Rectifier	5U4G
Tuning Indicator	6U5
Dial Lamps	Mazda No. 44

Speaker:	No. 583248	No. 583247
Field coil resistance	250 ohms	250 ohms
Voice coil impedance (400 cycles)	5.7 ohms	5.4 ohms
Output transformer	5000/3 ohms	

MODEL 7FM867,
Ch. 7C13D

ALIGNMENT

Before aligning, set the dial pointer as follows: close the tuning gang condenser (plates fully closed). Set pointer in line with the last mark at the low frequency end of the dial scale. Set volume control on full, keep the signal output as low as possible to prevent AVC action and false readings.

STEP DUMMY ANT. TEST OSC.

STEP	DUMMY ANT.	TEST OSC. CONNECTION	TEST OSC. FREQUENCY	RECEIVER DIAL	ADJUST	REMARKS
1	.01 mf.	Ant.	455KC Modulated	Any quiet spot	D-C-B-A for max. output	Repeat in reverse order
2	--	*Loop	1500KC Modulated	150	C2F for max. output	--
3	--	*Loop	1500KC Modulated	150	C1 for max. output	Rock Gang while tuning
4	300 ohms.	*FM terminals	19M.C. Unmodulated	Any quiet spot	L3 for min. output	Min. noise in speaker
5	300 ohms	FM terminals	104M.C. Unmodulated	104	C2h for min. output	Min. noise in speaker
6	300 ohms	FM terminals	104M.C. Unmodulated	104	C2g for min. output	Rock Gang while tuning

*All Steps: Connect output meter across speaker.
Step 2 & 3: Make a 2 turn loop & connect to signal generator. Loosely couple the 2 turn loop to receiver loop.
Step 4: Disconnect lug if present from FM dipole terminal. Connect hot side of generator through 300 ohm resistor to dipole terminal where lug was connected.

VOLTAGE TABLE

D. C. VOLTAGES MEASURED TO COMMON GROUND

TUBE	ELEMENT	PIN	VOLTS
12BE6 Converter	Plate	5	87
	Cathode	2	0
	Screen Grid	6	78
	Control Grid	1&7	.8
6SS7 I.F.Amplifier	Plate	8	87
	Cathode	5	0
	Screen Grid	6	78
	Control Grid	4	.8
12SQ7 Det-AVC 1st Audio Amplifier	Plate	6	56
	Cathode	3	0
	Control Grid	2	.9
	Diodes	4&5	.6 - .8
35L6 Output	Plate	3	105
	Cathode	8	5.3
	Screen	4	87
	Control Grid	5	0
35Z5 Rectifier	Cathode	8	112
FM 12AT7 Det. Section	Plate	1	99
	Cathode	3	37
	Grid	2	34
FM 12AT7 OSC. Section	Plate	6	99
	Cathode	8	0
	Grid	7	.4
6C4 F.M. R.F.	Plate	1&5	AM.87 F.M 100
	Cathode	7	1.5
	Grid	6	0

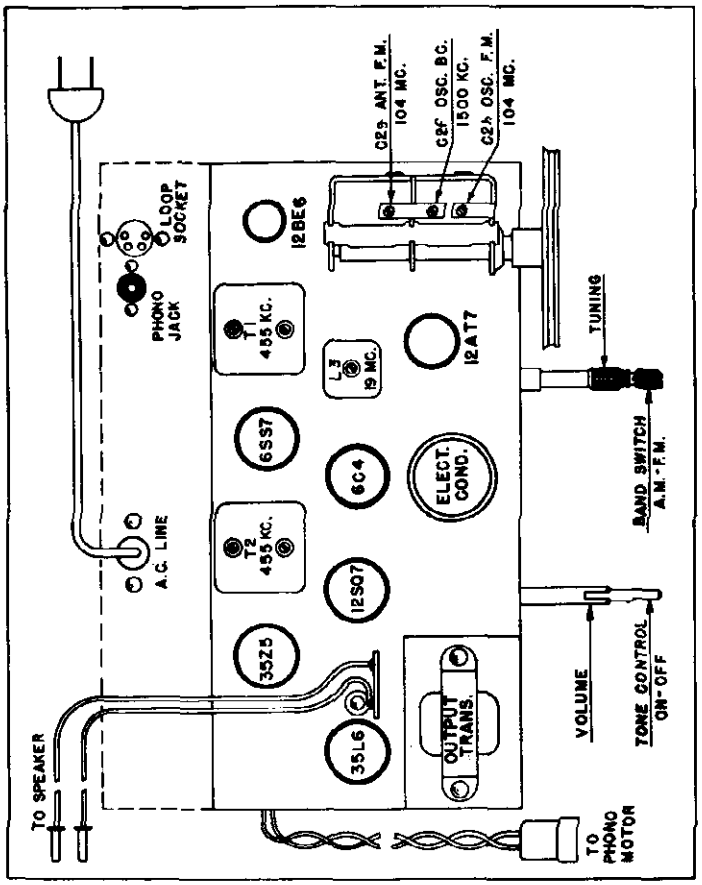

All Measurements made with line voltage at 117 A.C., volume control at minimum, no signal, using a vacuum tube volt meter.

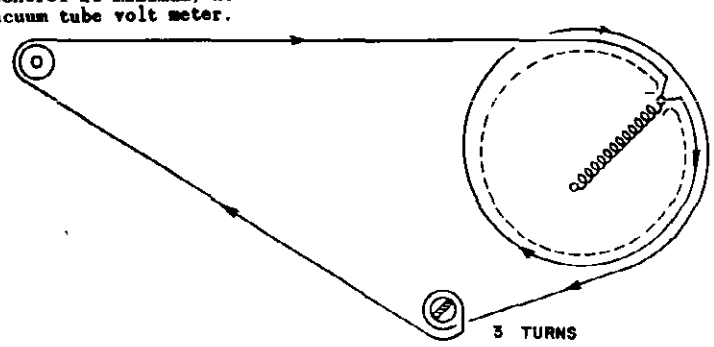

©John F. Rider

MODEL 7FM867,
Ch. 7C13D

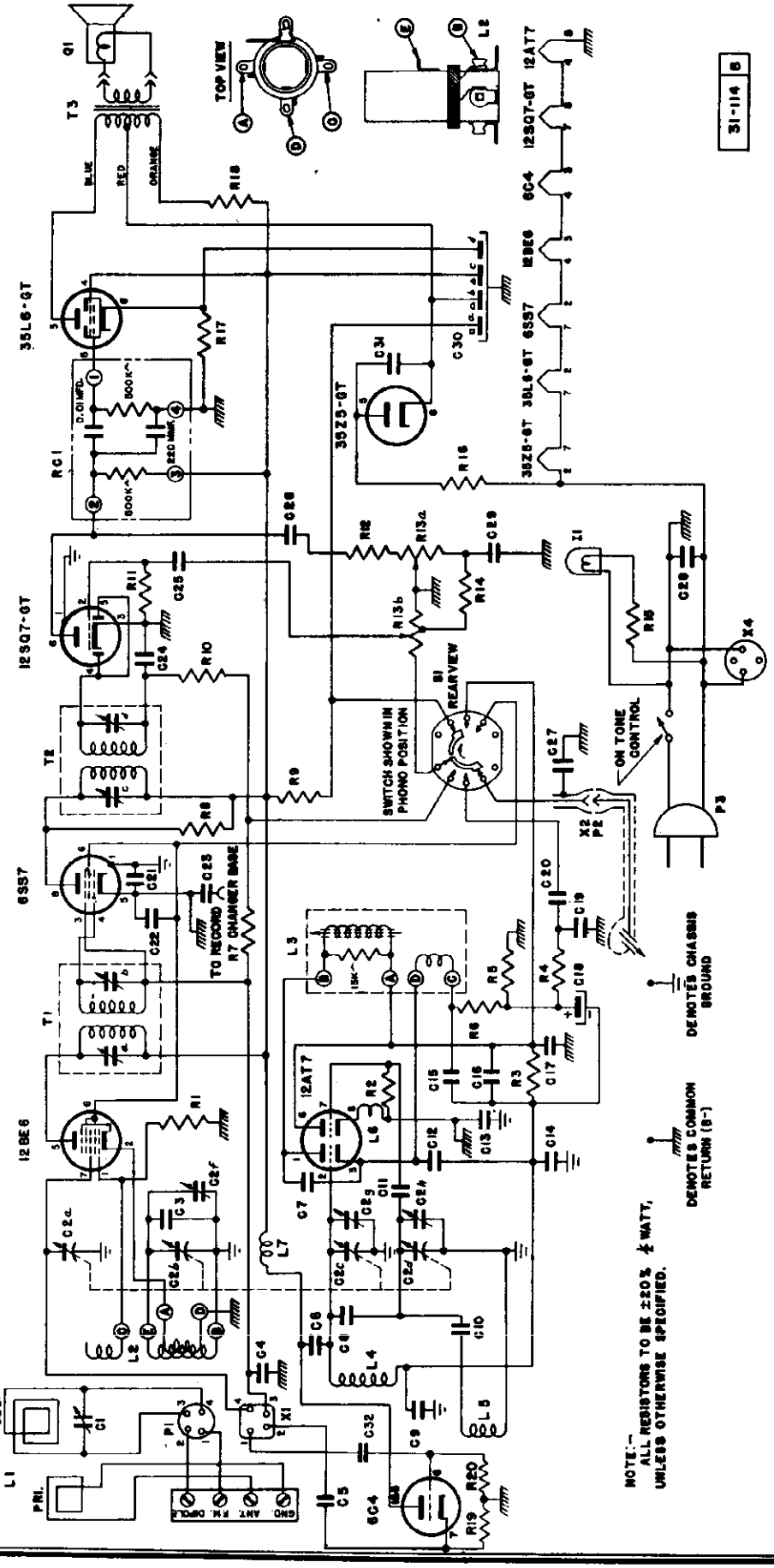

© John F. Rider

MODEL 7FM867,
Ch. 7C13D

Symbol Desig.	Part No.	Description
C1	8-59	Condenser Trimmer 2-30uuf. . . . .
C2a,b,c, d,f,g&h	7-33	" Variable gang tuning . . . . .
C3	6-88	" Ceramic 15uuf. 500V . . . . .
C4,23,27	015-8	" Paper .05uuf. 200v . . . . .
C5,14,19 22,31,32	4-6	" Ceramic 1000uuf. 500v 20% . .
C6	4-36	" " 5uuf. 500v ±.5uuf .
C7,11,12	4-5	" " 30uuf. 500v 20% . .
C8	6-134	" Bakelite 2.2uf. 500v . . . . .
C9,13	020-67	" Mica 470uuf. 500v . . . . .
C10	4-8	" Ceramic 68uuf. 500v 5%. . .
C15	021-38	" Mica 3300uuf. 500v . . . . .
C16	4-4	" Ceramic 5000uuf. 500v 20% . .
C17	6-228	" Mica 700uuf. 500v . . . . .
C18	19-58	" Electrolytic 10uf. 25v . . . . .
C20	015-6	" Paper .02uf. 200v . . . . .
C21	5-51	" " .2uf. 200v . . . . .
C24	020-53	" Mica 220uuf. 500v . . . . .
C25	016-5	" Paper .01uf. 400v . . . . .
C26	017-4	" " .005uf. 600v . . . . .
C28	016-8	" " .05uf. 400v . . . . .
C29	015-5	" " .01uf. 200v . . . . .
C30a,b,c,d	19-61	Condenser, electrolytic (a) 40uf (b) 100uf (c) 40uf @ 150v (d) 100uf @ 10v . . . . .
		(Unless specified all Resistors to be ± 20%)
R1,5,10	02-143	Resistor 22,000 ohm ½ watt . . . .
R2	02-150	" 33,000 ohm ½ " . . . . .
R3	02-178	" 150,000 " ½ " . . . . .
R4,8	02-171	" 100,000 " ½ " . . . . .
R6	02-94	" 1,500 " ½ " . . . . .
R7	02-234	" 3.3 megohm ½ " . . . . .
R19,18	03-90	" 1,200 ohm 1 " ± 10% . .
R11	02-255	" 10 megohm ½ " . . . . .
R12 (1st run)	02-118	" 5,600 ohm ½ " . . . . .
R12 (2nd run)	02-160	" 56,000 " ½ " . . . . .
R13a,b	13-30	(a) Tone control 2 Megohm (b) Volume Control 500,000 ohm . . . . .
R14	02-132	Resistor 12,000 ohm ½ watt 10% .
R15	04-69	" 390 " 2 " 10% .
R16	02-17	" 22 " ½ " . . . . .
R17	02-52	" 150 " ½ " . . . . .
R19,20	02-58	" 220 " ½ " . . . . .
I1	26-21	Pilot Lite, 110 volt baynet base . . . . .
L1	S-2017	Loop Antenna assembly . . . . .

©John F. Rider

MODEL 7FM867,
Ch. 7C13D

Symbol Desig.	Part No.	Description
L2	S-1684	Oscillator coil assembly . . . . .
L3	S-1678	S.R. F. M. " " . . . . .
L4 (1st run)	3-209	F.M. Antenna " " (inc'l coil form) . . .
L4 (2nd run)	3-209	" " " (less " ") . . .
L5 (1st run)	3-208	" Oscillator coil ass'y (inc'l coil form) . . .
L5 (2nd run)	3-208	" " " (less coil form) . . .
L6,L7	S-1928	Choke Coil assembly . . . . .
P1	18-32	Plug, 4 prong (Ant.) . . . . .
P2	18-47/ 140-6	Plug, Phono Pick-up . . . . .
P3	27-201	AC Line Cord & Plug (8') . . . . .
Q1	22-26	Speaker, 5" PM. . . . .
RC-1	37-1	Printed Plaque (Audio Coupling) . . . . .
S1	11-81	Band switch, (Phono & Band) . . . . .
T1	3-116	1st I.F. Transformer . . . . .
T2	3-117	2nd I.F. Transformer . . . . .
T3	2-40	Output transformer . . . . .
X1	15-96	Socket, Loop (4 contacts) . . . . .
X2	15-87	" Phono-Pick-up . . . . .
X4	15-118	" Phono-Motor (2-#25-87 Pins) . . . . .
	15-168	" Tube Minature Molded (12AT7) . . . . .
	15-167	" " " " (6C4) . . . . .
	15-81	" " Octal . . . . .
	117-114	Dial Scale Glass . . . . .
	117-109	" " Blackground . . . . .
	129-65	" " Mtg. Clip (6 REQ'D) . . . . .
	135-36	Dial Pointer . . . . .
	S-1892	Cord & Eyelet Ass'y (37½" of #134-7) . . . . .
	115-67	Cabinet, Chairside Combination (Aero Cut-Out) Mahogany . . . . . Blond . . . . .
	21-36	Record changer (Aero Black) . . . . .
	101-494	" " Mtg. screw (3 REQ'D) . . . . .
	122-56	Escutcheon Plate . . . . .
	128-63	Knob (Tuning) . . . . .
	128-101	" (Off-Tone) (Gold) . . . . .
	128-69	" (Volume) . . . . .
	128-100	" (Band SW-Phono) (Gold) . . . . .
	129-60	Compression Spring, Knob (2 REQ'D) . . . . .
	123-44	Cabinet Back (Less Loop) . . . . .
	S-2102	Cabinet Dipole Ass'y. . . . .

©John F. Rider

MODELS 7FM877, 7FM888;
Ch. 7C11D

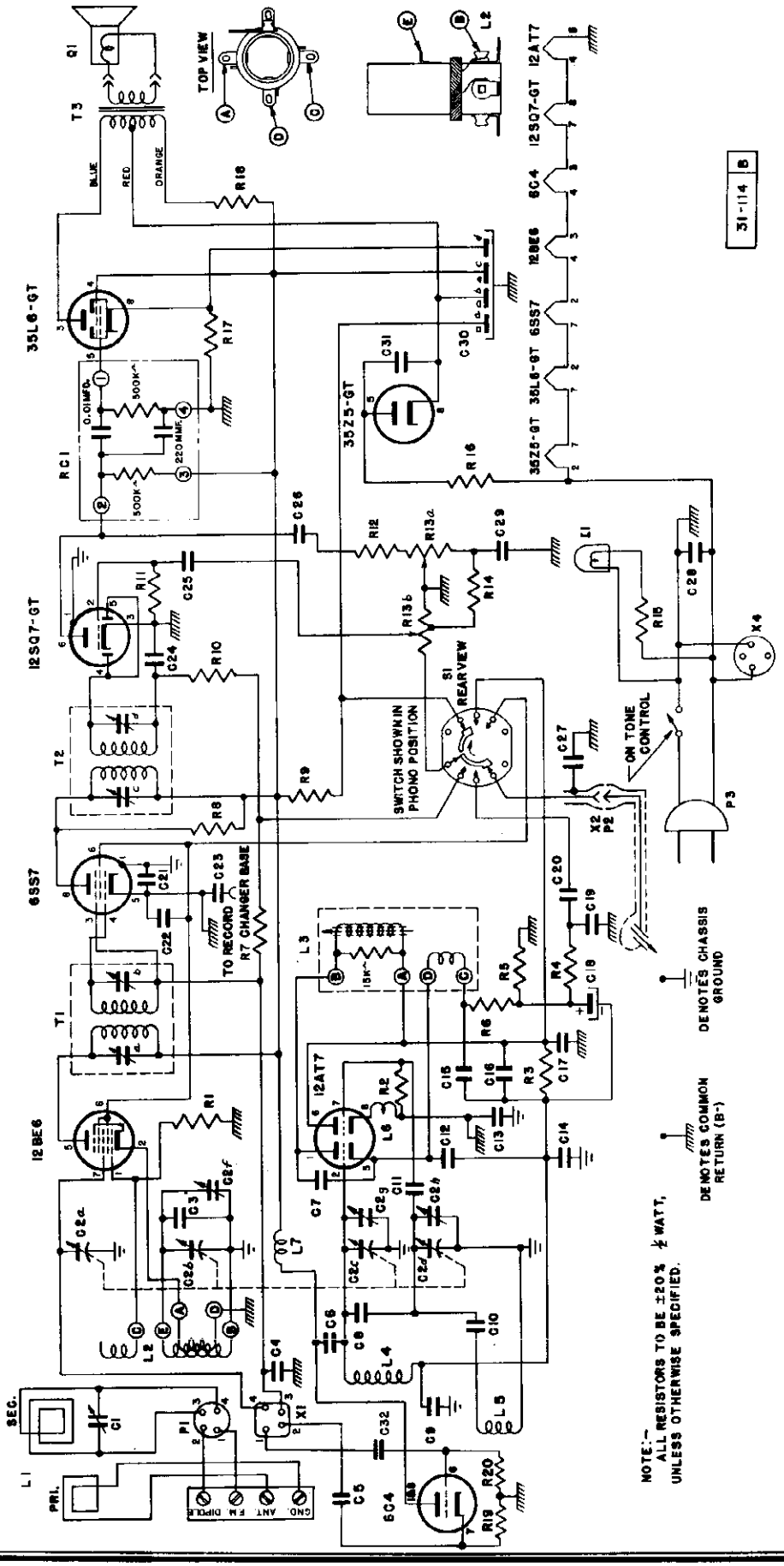

© John F. Rider

MODELS 7FM877, 7FM888;
Ch. 7C11D

ALIGNMENT

Before aligning, set the dial pointer as follows: close the tuning gang condenser (plates fully closed). Set pointer in line with the last mark at the low frequency end of the dial scale. Set volume control on full, keep the signal output as low as possible to prevent AVC action and false readings.

STEP DUMMY ANT. TEST OSC.

STEP	DUMMY ANT.	TEST OSC. CONNECTION	TEST OSC. FREQUENCY	RECEIVER DIAL	ADJUST	REMARKS
1	.01 mf.	Ant.	455KC Modulated	Any quiet spot	D-C-B-A for max. output	Repeat in reverse order
2	--	*Loop	1500KC Modulated	150	C2F for max. output	--
3	--	*Loop	1500KC Modulated	150	C1 for max. output	Rock Gang while tuning
4	300 ohms.	*FM terminals	19M.C. Unmodulated	Any quiet spot	L3 for min. output	Min. noise in speaker
5	300 ohms	FM terminals	104M.C. Unmodulated	104	C2h for min. output	Min. noise in speaker
6	300 ohms	FM terminals	104M.C. Unmodulated	104	C2g for min. output	Rock Gang while tuning

*All Steps: Connect output meter across speaker.
Step 2 & 3: Make a 2 turn loop & connect to signal generator. Loosely couple the 2 turn loop to receiver loop.
Step 4: Disconnect lug if present from FM dipole terminal. Connect hot side of generator through 300 ohm resistor to dipole terminal where lug was connected.

VOLTAGE TABLE
D. C. VOLTAGES MEASURED TO COMMON GROUND

TUBE	ELEMENT	PIN	VOLTS
12BE6 Converter	Plate	5	87
	Cathode	2	0
	Screen Grid	6	78
	Control Grid	1&7	.8
6SS7 I.F.Amplifier	Plate	8	87
	Cathode	5	0
	Screen Grid	6	78
	Control Grid	4	.8
12SQ7 Det-AVC 1st Audio Amplifier	Plate	6	56
	Cathode	3	0
	Control Grid	2	.9
	Diodes	4&5	.6 - .8
35L6 Output	Plate	3	105
	Cathode	8	5.3
	Screen	4	87
	Control Grid	5	0
35Z5 Rectifier	Cathode	8	112
FM 12AT7 Det. Section	Plate	1	99
	Cathode	3	37
	Grid	2	34
FM 12AT7 OSC. Section	Plate	6	99
	Cathode	8	0
	Grid	7	.4
6C4 F.M. R.F.	Plate	1&5	AM.87 F.M 100
	Cathode	7	1.5
	Grid	6	0

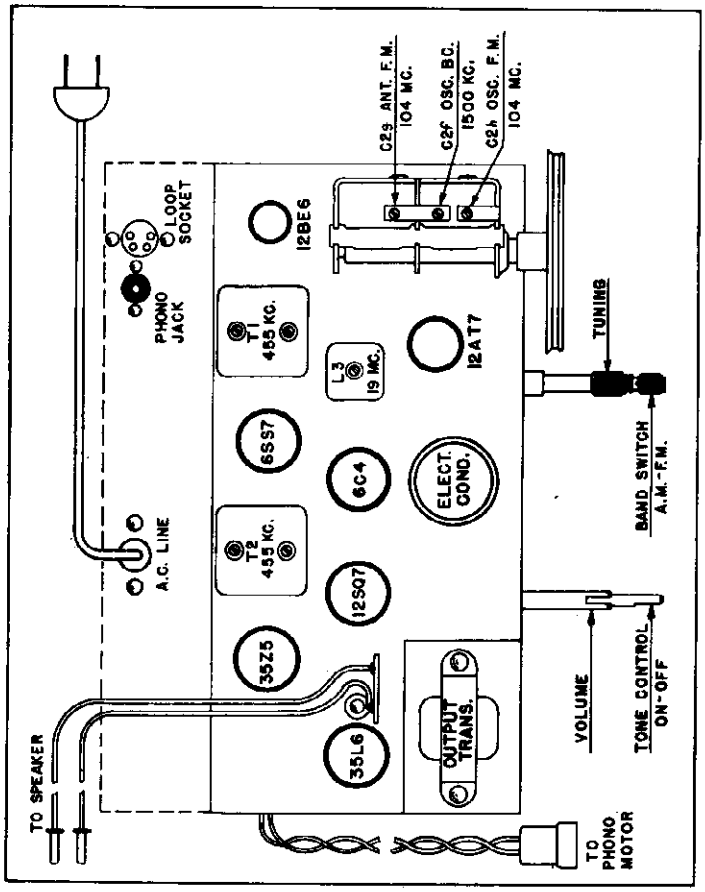

All Measurements made with line voltage at 117 A.C., volume control at minimum, no signal, using a vacuum tube volt meter.

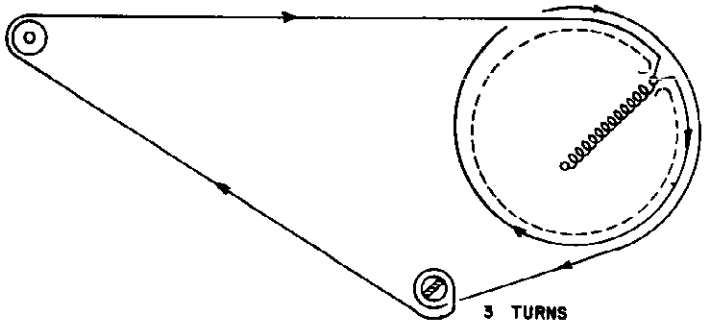

©John F. Rider

MODELS 7FM877, 7FM888;
Ch. 7C11D

PARTS LIST

Symbol Desig.	Part No.	Description
C1	8-59	Condenser Trimmer 2-30uuf.
C2a, b, c, d, f, g&h	7-33	" Variable gang tuning
C3	6-88	" Ceramic 15uuf. 500V
C4, 23, 27	015-8	" Paper .05uuf. 200v
C5, 14, 19, 22, 31, 32	4-6	" Ceramic 1000uuf. 500v 20%
C6	4-36	" " 5uuf 500v ± .5uuf
C7, 11, 12	4-5	" " 30uuf 500v ± 20%
C8	6-134	" Bakelite 2.2uf 500v
C9, 13	020-67	" Mica 470uuf 500v
C10	4-8	" Ceramic 68uuf 500v 5%
C15	021-38	" Mica 3300uuf 500v
C16	4-4	" Ceramic 5000uuf 500v 20%
C17	6-228	" Mica 700uuf 500v
C18	19-58	" Electrolytic 10uf 25v
C20	015-6	" Paper .02uf 200v
C21	5-51	" " .2uf 200v
C24	020-53	" Mica 220uuf 500v
C25	016-5	" Paper .01uf 400v
C26	017-4	" " .005uf 600v
C28	016-8	" " .05uf 400v
C29	015-5	" " .01uf 200v
C30a, b, c, d (1st. run)	19-59	" Electrolytic ab&c 40uf 150v d 100 uf 10v.
	19-32	(In addition to above (b) section condenser electrolytic 20uf 150v to be parallel across b)
C30a, b, c, d (2nd. run)	19-61	Condenser, electrolytic (a) 40uf (b) 100uf (c) 40uf 150v (d) 100uf 10v.
		(Unless specified all Resistors to be 20%)
R1, 5, 10	02-143	Resistor 22,000 ohm ½ watt
R2	02-150	" 33,000 ohm ½ "
R3	02-178	" 150,000 " ½ "
R4, 8	02-171	" 100,000 " ½ "
R6	02-94	" 1,500 " ½ "
R7	02-234	" 3.3 Megohm " ½ "
R19, 18	03-90	" 1,200 " 1 " ± 10%
R11	02-255	" 10 Megohm ½ "
R12 (1st run)	02-118	" 5,600 " ½ "
R12 (2nd run)	02-160	" 56,000 " ½ "
R13a, b	13-30	(a) Tone control 2 Megohm (b) Volume Control 500,000 ohm
R14	02-132	Resistor 12,000 ohm ½ watt 10%
R15	04-69	" 390 " 2 " 10%
R16	02-17	" 22 " 1 watt
R17	02-52	" 150 " ½ "
R19, 20	02-58	" 220 " ½ "
I1	26-21	Pilot Lite, 110 volt baynet base
L1	S-1686	Loop Antenna assembly (less back)
L2	S-1684	Oscillator coil assembly
L3	S-1678	S.R. Coil Assembly
L4	3-209	F.M. Antenna Coil
L5	3-208	Coil, F.M. Oscillator
L6&7	S-1928	Choke, Coil Ass'y.

©John F. Rider

MODELS 7FM877, 7FM888;
Ch. 7C11D

Parts List (Cont'd.)

Symbol Desig.	Part No.	Description
P1	18-32	Plug, 4 prong (Ant.)
P2	18-47/140-6	Plug, Phono Pick-up
P3	27-201	AC Line Cord & Plug (8')
Q1	22-61	Speaker, 10" PM.
RC-1	37-1	Printed Plaque (Audio Coupling)
S1	11-81	Band switch, (Phono & Band)
T1	3-116	1st I.F. Transformer
T2	3-117	2nd I.F. Transformer
T3	2-40	Output transformer
X1	15-96	Socket, Loop (4 contacts)
X2	15-87	" Phono-Pick-up
X4	15-118	" Phono-Motor (2-#25-87 Pins)
	15-163	" Tube Minature Molded (12AT7)
	15-167	" " " (6C4)
	15-81	" " Octal.
	117-110	Dial Scale Glass
	117-109	" " Background
	129-65	" " Mtg. Clip (6 REQ'D)
	135-34 (1st RUN)	Dial Pointer
	135-36 (2nd RUN)	Dial Pointer
	S-1892	Cord & Eyelet Ass'y (37½" of #134-7)
	115-60	Cabinet, Console (Model 7FM877) (Aero Cut-Out) Mahogany / Blond
	115-54	Cabinet, Console (Model 7FM888) (Aero Cut-Out) Mahogany / Blond
	21-36	Record changer (Aero Black)
	101-494	" " Mtg. screw (3 REQ'D)
	22-61	Speaker 10" PM
	122-56	Escutcheon Plate
	128-63	Knob (Tuning)
	128-68	" (Off-Tone)
	128-69	" (Volume)
	128-80	" (Band SW-Phono)
	129-60	Compression Spring, Knob (2 REQ'D)
	123-44	Cabinet Back (Less Loop)
	S-2020	Cabinet Dipole Ass'y.

©John F. Rider

MODEL 8FM889,
Ch. 8C07D

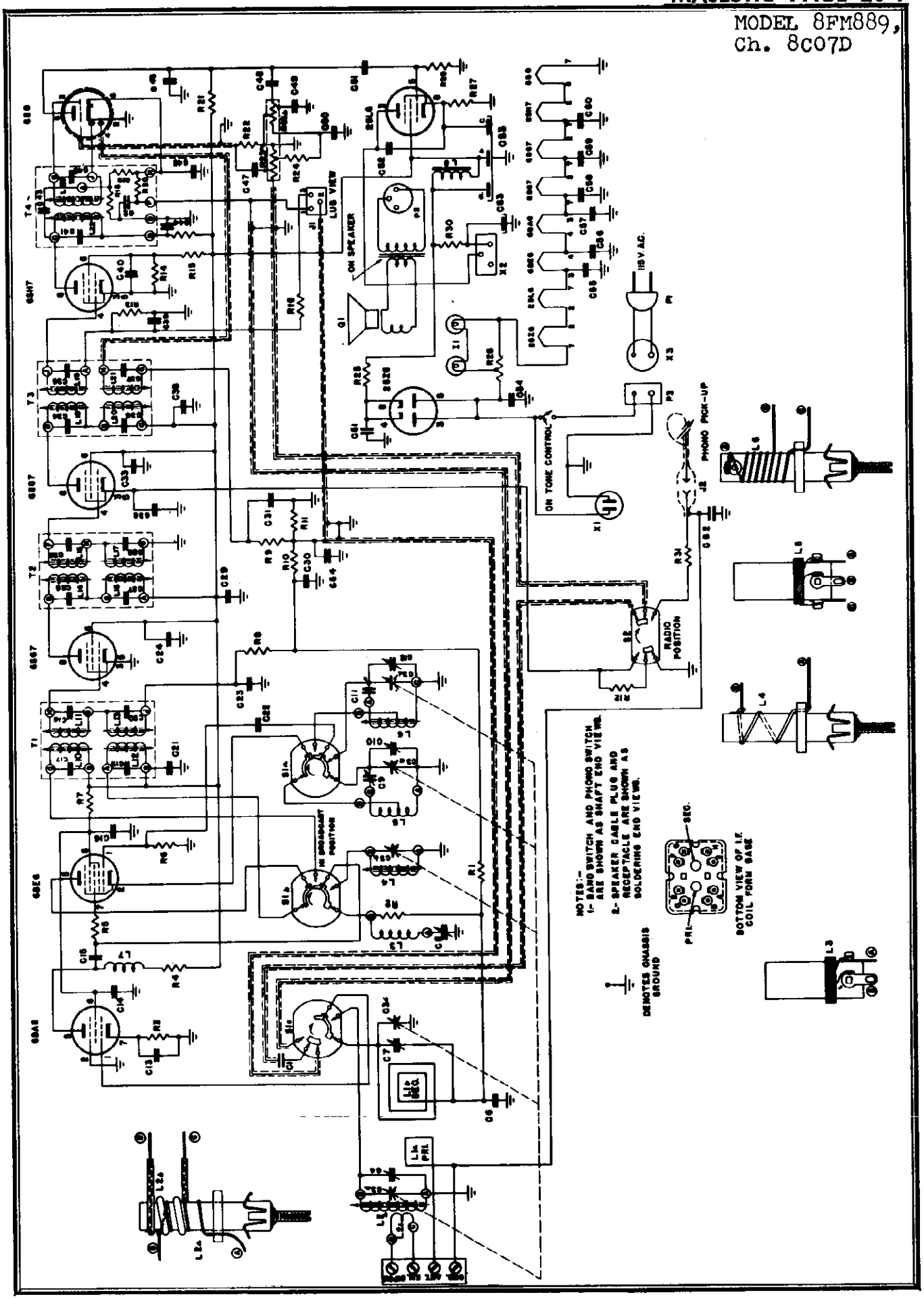

©John F. Rider

MODEL 8FM889,
Ch. 8C07D

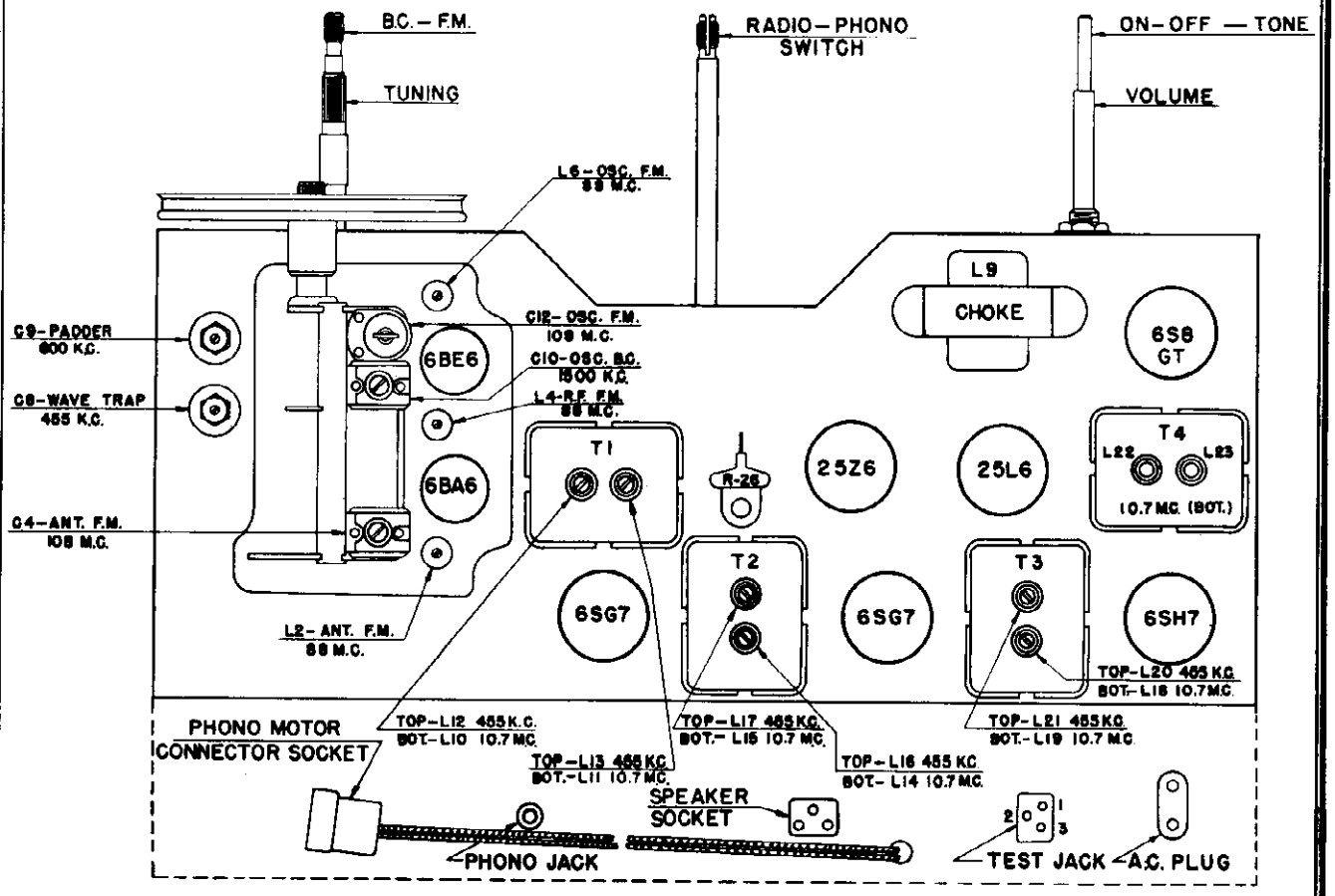

TUBE LAYOUT

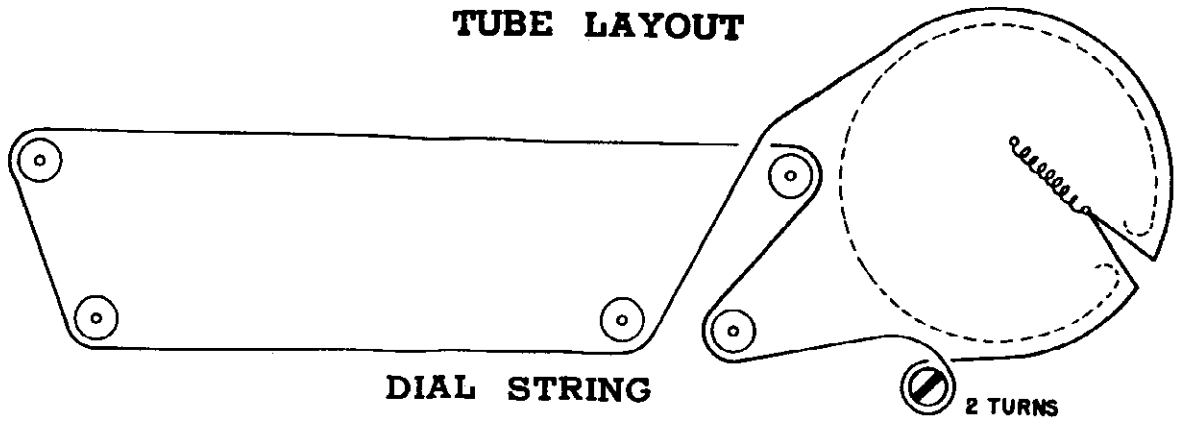

DIAL STRING

2 TURNS

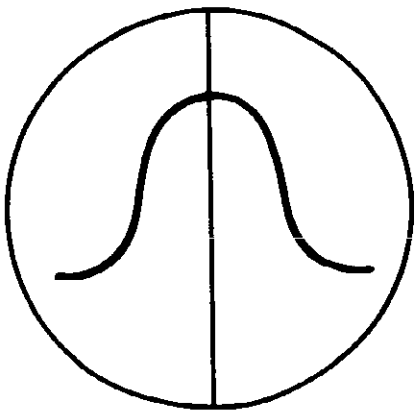

FIGURE 1

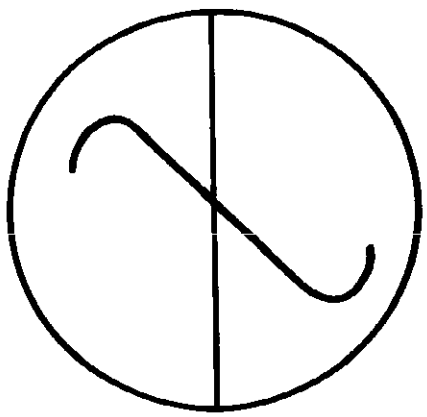

FIGURE 2

©John F. Rider

©John F. Rider

ALIGNMENT

OPERATION	CONNECT TEST OSCILLATOR TO	DUMMY ANTENNA	INPUT SIGNAL FREQUENCY	BAND	SET DIAL TO	ADJUST TRIMMERS	PURPOSE
1	Stator Plates of C3d	.05mfd.	455 KC	BC	600 KC	L12, L13, L16, L17, L20, L21	Align if channel for maximum output.
2	Stator Plates of C3d	.05mfd.	455 KC Modulated	BC	600 KC	C8	Adjust wave trap for maximum output.
3	2 TURNS 8" DIAMETER COUPLED LOOSELY TO LOOP ANTENNA	------	1500 KC Modulated	BC	1500 KC	C10	Set oscillator to dial scale.
4		------	1500 KC Modulated	BC	1500 KC	C7	Align antenna for maximum output.
5		------	600 KC Modulated	BC	600 KC	C9	Rock gang to track BC padder
6(a)	Pin 4 (Grid) on 6SH7 Limiter Socket	.05mfd.	10.7 MC Unmodulated	FM	------	L22 Coil Slug Primary Discriminator	Align Primary of discriminator for maximum reading.
7(b)	Pin 4 (Grid) on 6SH7 Limiter Socket	.05mfd.	10.7 MC Unmodulated	FM	------	L23 Coil Slug Secondary Discriminator	Adjust secondary of discriminator for zero reading.
8(c)	Pin 4 (Grid) on 6SG7 2nd IF Socket	.05mfd.	10.7 MC Unmodulated	FM	------	L18 and L19, Pri. and Sec. 3rd IF Coil	Align 3rd IF Transformer for maximum reading.
9(c)	Pin 4 (Grid) on 6SG7 1st IF Socket	.05mfd.	10.7 MC Unmodulated	FM	------	L14 and L15 Pri. and Sec. 2nd IF Coil	Align 2nd IF Transformer for maximum reading.
10(c)	Lug "B" on Coil L4	.05mfd.	10.7 MC Unmodulated	FM	------	L10 and L11 Pri. and Sec. 1st IF Coil	Align 1st IF Transformer for maximum reading.
11(c)	Antenna Terminals	300ohm Resistorr	106 MC Unmodulated	FM	106 MC	C12 Oscillator Trimmer	Set oscillator to dial scale.
12(c)	Antenna Terminals	300ohm Resistor	106 MC Unmodulated	FM	106 MC	C4 Antenna Trimmer	Align antenna stage for maximum reading.
13(c)	Antenna Terminals	300ohm Resistor	88 MC Unmodulated	FM	88 MC	L6 Oscillator Slug	Set Oscillator to dial scale.
14(c)	Antenna Terminals	300ohm Resistor	88 MC Unmodulated	FM	88 MC	L4, L2 Slugs	Align Antenna and RF stages for maximum reading.
15(c)	Antenna Terminals	Repeat steps 11, 12, 13, and 14 until tracking is perfect at 88 and 106 MC.					

IMPORTANT: Alignment of this chassis will in most cases be unnecessary unless an IF or RF transformer is replaced or the adjustment has been tampered with. A vacuum tube voltmeter must be used for FM alignment. An AC output meter connected across the primary or secondary of the output transformer will be satisfactory for all AM adjustments. The signal generator output should be kept just high enough to get an indication on the meter.

NOTES: (a) Vacuum tube voltmeter pin "A" on discriminator transformer to chassis (half discriminator load).
(b) Vacuum tube voltmeter pin 1 of test jack to chassis (full discriminator load).
(c) Vacuum tube voltmeter pin 3 of test jack to chassis (limiter grid load).

A much more satisfactory IF and discriminator alignment may be obtained by using a 10.7 MC signal generator, frequency modulated at an audio frequency and swept approximately 600 KC (±300 KC). An oscilloscope should be connected to test jack pin 3 and all IF slugs adjusted for a symetrical pattern of highest amptitude. See Fig. 1. For discriminator alignment, connect oscilloscope to test jack pin 1 and adjust T4 for highest linear symetrical pattern. See Fig. 2.

MODEL 8FM889,
Ch. 8C07D

VOLTAGE TABLE

TUBE	FUNCTION	PLATE	CATHODE	SCREEN	GRID
6BA6	RF Amplifier	80	0.5	78	----
6BE6	Converter	100	0	78	----
6SG7	1st IF Amplifier	100	0	100	-0.6
6SG7	2nd IF Amplifier	100	.7	100	----
6SH7	Limiter Amplifier	70	0	21	-0.4
6S8GT	Discriminator, Det., AVC	50	0	---	----
25L6	Power Amplifier	105	7	100	----
2525	Rectifier	117AC	105	---	----

PARTS LIST

ITEM	PART NO.	DESCRIPTION
C1,C48	017-4	.005 mfd, 600V
C2,C14,C16,C55, C56,C57	6-230	1000 mmf, 300V Ceramic
C3,a,b,c,d,e	7-25	Gang Tuning Condenser FM-AM.
C4,C10	8-35	Trimmer, 2.5 - 30 mmf.
C6,C62	015-8	.05 mfd, 200V.
C7	8-59	Trimmer, 2-30 mmf.
C8	8-63	Trimmer, 1.5-115 mmf
C9	8-65	200 - 600 mmf Padder
C11	6-218	1000 mmf. 500V, Mica
C12	8-38	Trimmer, 3-13 mmf.
C13,C15,C22	6-159	47 mmf, 500V Ceramic
C17,C41	6-247	24 mmf, Ceramic Special.
C18,C25,C26,C34,C35 C19,C20,C27,C28,C36 C37	6-246	33 mmf, Ceramic Special.
	6-250	750 mmf Mica Special
C21,C29,C38,C44,C51	016-5	.01 mfd, 400V.
C23,C30,C32,C49,C50	015-5	.01 mfd, 200V.
C24,C33,C40,C58,C59, C60	6-259	.005 mfd minimum, disc-type Ceramic
C31,C46,C61,C64	020-53	220 mmf, 500V Mica
C39,C45	020-39	100 mmf, 500V Mica
C42	6-249	62 mmf, Ceramic, Special
C43	6-248	15 mmf, Ceramic, Special
C47	017-2	.002 mfd, 600V
C52	017-5	.01 mfd. 600V.
C53,a,b,c	19-37	(a) 100 mfd—,150V, (b) 20 mfd - 150V, (c) 200 mfd - 10V. Electrolytic
C54	016-8	.05 mfd, 400V
C63	19-32	20 mfd 150V Electrolytic
R1,R8,R11,R16 R21,R28	01-199	470K ohm, 1/4 watt
R2,R13,R17,R20	01-157	47K ohm, 1/4 watt.
R3,R12	01-37	68 ohm, 1/4 watt
R4,R14	02-108	3300 ohm, 1/2 watt
R5	01-3	10 ohm, 1/4 watt
R6,R9	01-143	22K ohm, 1/4 watt.
R7	01-101	2200 ohm, 1/4 watt
R10,R31	01-227	2.2 meg ohm, 1/4 watt.
R15	02-132	12K ohm, 1/2 watt.
R18,R19	01-174	120K ohm, 1/4 watt
R22	01-255	10 meg ohm, 1/4 watt

(Continued on next page)

©John F. Rider

MODEL 8FM889,
Ch. 8C07D

ITEM	PART NO.	DESCRIPTION
R23 a & b	13-32	(a) Volume - (b) Tone Control with switch.
R24	01-132	12K ohm, 1/4 watt.
R25	02-20	27 ohm, 1/2 watt
R26	9-332	100 ohm candohm.
R27	02-52	150 ohm, 1/2 watt.
R30	01-45	100 ohms, 1/4 watt
L1	S-1400	Loop Antenna Assembly.
L2	S-1407	FM Antenna Coil.
L3	S-1410	Wave Trap Coil
L4	S-1408	FM RF Coil
L5	S-1411	AM Oscillator Coil
L6	S-1409	FM Oscillator Coil
L7	S-1384	R.F. Plate Choke
L8	2-32	Filter Choke
T1	S-1389	1st. I.F. Transformer.
T2	S-1390	2nd. I.F. Transformer.
T3	S-1391	3rd. I.F. Transformer.
T4	S-1392	Discriminator Transformer.
Q1	22-62	Speaker 12" PM (Incl. Transformer)
I1	26-2	Dial Lamp, #47 Brown Bead (2 req'd.)
J1	15-91	Test Jack.
J2	15-87	Phono jack
S1	11-71	Switch Shaft
S1a	11-71-1	Switch Wafer, Section 1.
S1b	11-71-2	Switch Wafer, Section 2.
S1c	11-71-3	Switch Wafer, Section 3.
S2	11-72	Phono Switch
P1	27-201	Plug & Line cord (8 ft.)
X1	15-123	A.C. Receptacle (Phono).
X2	15-91	Speaker Receptacle
P3	18-50	Plug, power connector.
X3	15-137	Socket, power connector.
	18-81	Tube, Socket, Octal.
	15-114	Socket, miniature tube
	16-34	Miniature tube shield.
	16-39	Tube Shield, 6S8 tube.
	34-20	I.F. Iron Core
	38-5	Insulator, Phono Pickup Socket
	38-8	Insulator, Shaft
	38-9	Insulator, Plug.
	38-14	Insulator, Cabinet Chassis
	117-106	Dial Scale & Glass
	129-21	Dial Cord Spring
	S-1524	Dial Cord Ass'y.
	135-21R	Dial Pointer (White)
	115-55-1	Cabinet, Console Comb.
		(State Color) Mahogany
		Blond
	S-2027	Back, Cabinet back & line cord ass'y.
	21-24	Record Changer, Oak.
	122-55	Escutcheon
	128-91	Knob (Volume).
	128-92	Knob (Tuning).
	128-93	Knob (Phono-Radio)
	128-94	Knob (On-Off Tone)
	128-95	Knob (Band Switch)
	129-60	Ring, (For Plain Knobs)

©John F. Rider

MODEL 10FM891,
Ch. 10C23E

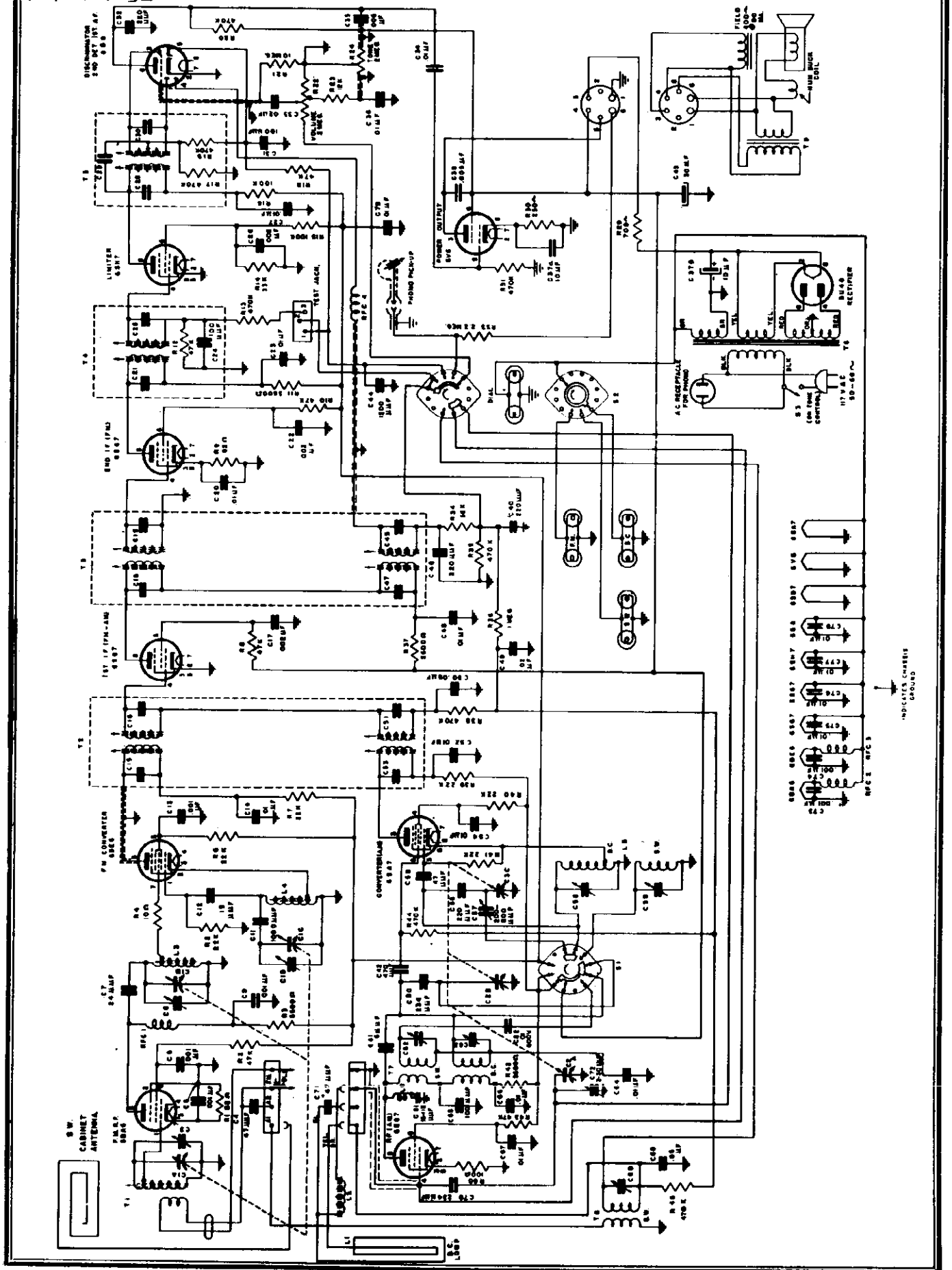

© John F. Rider

MODEL 10FM891,
Ch. 10C23E

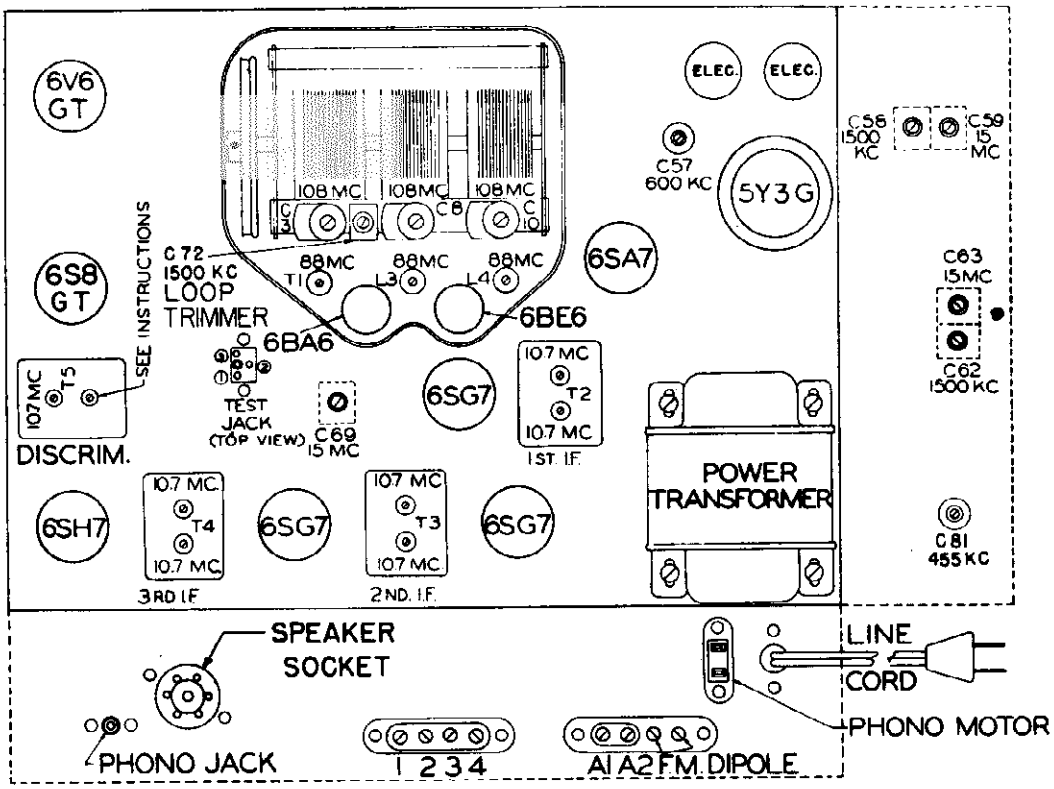

TUBE LAYOUT

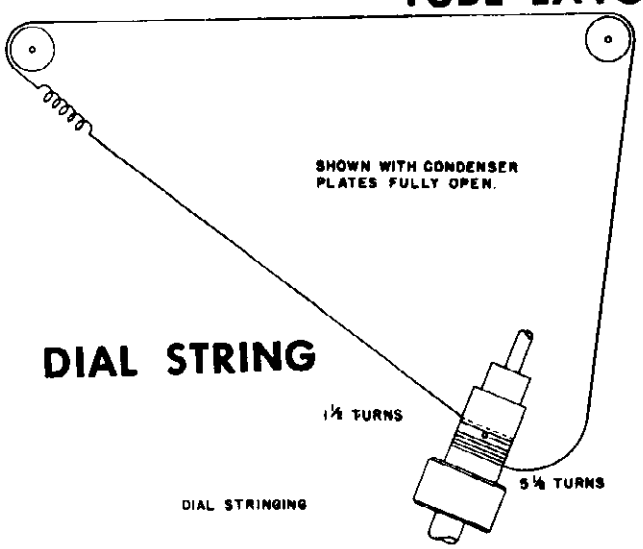

FIGURE 1

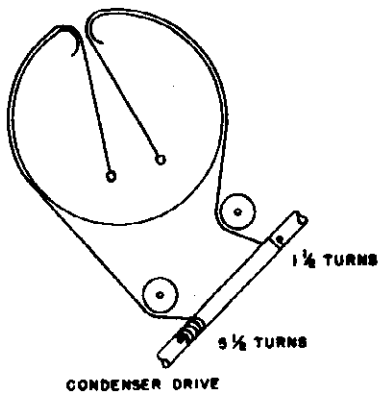

FIGURE 2

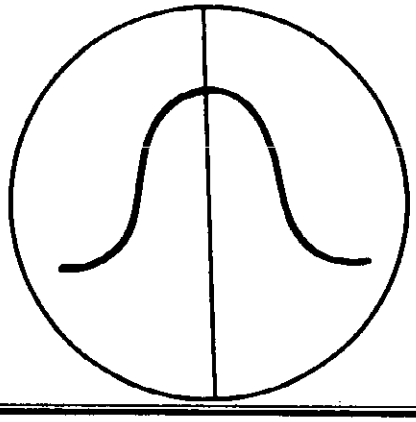

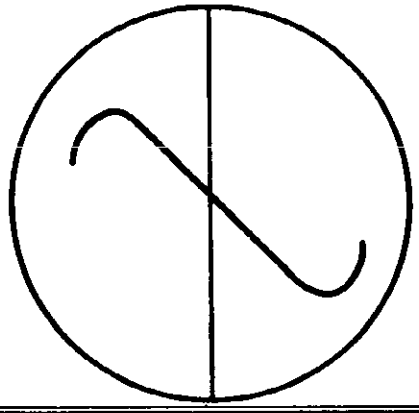

© John F. Rider

ALIGNMENT

OPERATION	CONNECT OSCILLATOR TO	DUMMY ANTENNA	INPUT SIGNAL FREQUENCY	BAND	SET DIAL AT	TRIMMERS	PURPOSE
1	Conv. Grid	.01mfd	455 KC	BC	600 KC	T2,T3 Bottom	Align I.F.'s
2	ONE TURN LOOP MADE WITH GENERATOR LEADS		455 KC	BC	600KKC	C81	I.F. trap adjustment for minimum I.F. signal
3			1500 KC	BC	1500 KC	C58	Set BC osc. to scale at 1500 KC
4			1500 KC	BC	1500 KC	C62,C72	Align BC RF. and Loop
5			600 KC	BC	600 KC	C57	Rock Gang to track BC padder
6	Al-Gnd.	400ohn	15 MC	SW	15 MC	C59	Scale osc. at 15 MC
7	Al-Gnd.	400ohn	15 MC	SW	15 MC	C63,C69	Align SW RF and Ant.
8	6SG7 2nd I.F. Grid	.01mfd.	10.7 MC	FM	88 MC	T4 top	Align for max. voltage at test jack pin 3 Rock gen. over 10.7 MC to check for symmetrical I.F.. response.
9	6SG7 1st. I.F. Grid	.01mfd.	10.7 MC	FM	88 MC	T3 top	Align for max. voltage at test jack pin 3 Rock gen. over 10.7 MC to check for symmetrical I.F. response.
10	Converter	.01mfd.	10.7 MC	FM	88 MC	T2 top	Align for max. voltage at text jack pin 3 Rock gen. over 10.7 MC to check for symmetrical I.F. response. Re-check peaking of T4, and T3.
11	Converter grid 6BE6	.01mfd.	10.7 MC	FM	88 MC	T5 primary	Align for max. voltage across ½ discriminator Load (un-used Lug bottom of T5 to ground)
12	Converter grid 6B6E	.01mfd.	10.7 MC	FM	88 MC	T5 secondary	Align for zero voltage across full discriminator load (Test jack pin 1 to ground)
13	FM ant.term.	direct	108 MC	FM	108 MC	C10	Scale OSC at 108 MC (max. voltage Test jack pin 3.
14	FM ant.term.	direct	108 MC	FM	108 MC	C8,C3	Align FM RF and Ant. (max. voltage Test jack pin 3.
15	FM ant.term.	direct	88 MC	FM	88 MC	L4	Scale osc. at 88 MC.
16	FM ant.term.	direct	88 MC	FM	88 MC	L3,T1	Align RF and Ant. at 88 MC repeat steps 13, 14, 15, 16 as necessary.

NOTE: 1. A much more satisfactory IF and discriminator alignment may be obtained by using a 10.7 MC Signal generator frequency modulated at an audio frequency and swept approximately 600 KC (±300 KC). An oscilloscope should be connected to Test jack pin 3 and all IF screws adjusted for a symmetrical pattern of highest amptitude. See Fig. 1. For discriminator alignment, connect scope to Test jack pin 1 and adjust T5 for highest symmetrical pattern. See Fig. 2.

NOTE: 2. In all FM alignment calling for a voltage measurement at Test jack pin 3 (limiter grid resistor) keep signal generator output to such a value as will result in approximately 2 volts measured with a vacuum Tube voltmeter such as the Voltohmyst, Vomax or equiv.

©John F. Rider

MODEL 10FM891
Ch. 10C23E

VOLTAGE CHART

Measurements made at 117 volts line; volume control at minimum; zero signal input. Measurements made to chassis ground with vacuum tube voltmeter.

TUBE	ELEMENT	PIN NO.	VOLTAGE
6BA6 R.F. AMP.(F.M.)	plate screen grid cathode control grid	5 6 7 1	175 83 .95 0
6BE6 CONVERTER (F.M.)	plate screen grid cathode control grid osc. injector grid	5 6 2 7 1	180 97 0 0 * 3.2 to 3.5
6SG7 R.F. AMP.(A.M.)	plate screen grid cathode control grid	8 6 5 & 3 4	240 195 .7 -.7
6SA7 CONVERTER (A.M.)	plate screen grid cathode control grid osc. injector grid	3 4 6 8 5	215 90 0 -1.0 * -13 to +3.6
6SG7 1st I.F. AMP.	plate screen grid cathode control grid	8 6 5 & 3 4	215 130 0 -1.3
6SG7 2nd I.F. AMP.	plate screen grid cathode control grid	8 6 5 & 3 4	190 105 1.2 0
6SH7 LIMITER	plate screen grid cathode control grid	8 6 5 & 3 4	27 40 0 0
6S8 DISC. -AM DET. 1st I.F. AMP.	plate cathode control grid	6 2 top cap	84 0 -0.8
6V6 OUTPUT	plate screen grid cathode control grid	3 4 8 5	230 270 13 0
5Y3/5U4	plate plate filament	4 6 8/2	350-A.C. 350-A.C. 325-350 D.C.

80 MA -'B Drain.

* The Following chart is reference oscillator grid; Oscillator voltage varies with frequency.

Band sw.	Tube	Frequency	Voltage
A.M.	6SA7	600 KC	-11
		1000 KC	-12.5
		1500 KC	-13
S.W.	6SA7	10 MC	4.2
		15 MC	3.6
F.M.	6BE6	88 MC	3.2
		103 MC	3.4
		108 MC	3.5

PARTS LIST

ITEM NO	PART NO.	DESCRIPTION
C1a,b,c, C2a,b,C3c.	7-17	Ganged Tuning Condenser A.M. & F.M.
C3,C8,C10.	8-38	Trimmer 3-13 mmf (Gang trimmers).
C4,C55,C71	6-159	47 mmf., 500 V ceramic 20% Condenser.
C5,C6,C9,C13,C73,C74.	6-230	.001 mfd 400 V ceramic 10% Condenser.
C7	6-143	24 mmf 500 V ceramic 10% Condenser.
C11	021-15	1000 mmf 500 V mica 5% Condenser.
C12	6-199	15 mmf 500 V ceramic 5% Condenser
C14,C20,C28,C27,C34, C36,C48,C52,C54,C64, C66,C67,C79,C82.	017-5	.01 mfd 600 V paper Condenser
C15,C16,C51,C53.	.....	Part of T2, 1st I.F. transformer.
C17,C22,C26	6-231	.002 mfd 400 V ceramic 10% Condenser
C18,C19,C45,C47.	.....	Part of T3, 2nd I.F. transformer.
C21,C24,C25	.....	Part of T4, 3rd I.F. transformer.
C28,C29,C30	.....	Part of T5, Discriminator transformer
C31	020-39	100 mmf 500 V mica 20% Condenser.
C32,C40,C46	020-53	220 mmf 500 V mica 20% Condenser.
C33,C49	016-6	.02 mfd 400 V paper Condenser
C35	5-69	.006 mfd 600 V paper Condenser.
C37a,b	19-34	10-10 mfd 450 V electrolytic Condenser.
C38	017-4	.005 mfd 600 V paper Condenser.

© John F. Rider

MODEL 10FM891,
Ch. 10C23E

ITEM NO.	PART NO.	DESCRIPTION
C42	020-67	470 mmf 500 V mica 20% Condenser.
C43	19-35	30 mfd 450 V electrolytic Condenser
C44	021-20	1200 mmf 500 V mica Condenser
C50, C68	016-8	.05 mfd 500 V paper Condenser
C56	6-207	220 mmf 500 V ceramic condenser
C57	8-65	200-600 mmf padder condenser.
C58, C59	.....	Part of L5 coil assembly.
C60, C70	6-208	234 mmf 500 V mica condenser.
C61, C62, C63, C65	.....	Part of T7 coil assembly.
C69	.....	Part of T8 coil assembly.
C71	.....	Part of L1 coil assembly (47 mmf.).
C72	8-35	2½-30 mmf ceramic trimmer
C75, C76, C77, C78	021-74	.01 mfd 500 V mica 20% condenser.
C81	8-63	15-115 mmf trimmer (wave trap).
L1	20-27	Broadcast loop assembly (less cover #20-28)
L2	.....	Loading coil (part of 20-27 loop)
L3	3-184	F.M. B.F. coil.
L4	3-189	F.M. oscillator coil.
L5	3-171	A.M. oscillator coil.
L6	S-1468	Wave trap coil.
R1	02-37	68 ohms ½ watt 10% resistor
R2	03-157	47,000 ohms 1 watt 20% resistor
R3, R11, R37, R42	03-118	5600 ohms 1 watt 10% resistor
R4	01-2	10 ohms ½ watt 10% resistor
R5, R41	01-143	22,000 ohms ½ watt 20% resistor
R6, R40	04-143	22,000 ohms 2 watt 20% resistor
R7, R39	02-143	22,000 ohms ½ watt 20% resistor
R8, R10, R43	02-156	47,000 ohms ½ watt 10% resistor
R9	02-41	82 ohms ½ watt 10% resistor
R12	.....	Part of T4 assembly (47,000 ohms ½ w 10%)
R13, R20, R31, R35, R38, R44, R45	02-199	470,000 ohms ½ watt 20% resistor.
R14	02-149	33,000 ohms ½ watt 10% resistor
R15, R16	02-170	100,000 ohms ½ watt 10% resistor.
R17, R19	.....	Part of T5 assembly (470,000 ohms ½ w 10%).
R18	02-157	47,000 ohms ½ watt 20% resistor
R21	02-255	10 megohm ½ watt 20% resistor
R22	13-25	Volume control, 2 megohm with tap
R23	02-132	12,000 ohm ½ watt 10% resistor.
R24	14-7	Tone control 2 megohm, with switch.
R36	02-213	1 megohm ½ watt 20% resistor.
R30	9-290	250 ohm 5 watt 10% wire wound resistor.
R33	02-226	2.2 megohm ½ watt 10% resistor.
R34	01-160	56,000 ohm ½ watt 10% resistor.
R50	02-44	100 ohm ½ watt 10% resistor
RFC-1	3-187	6BA6 plate choke.
RFC-2, RFC-3	3-188	Filament choke.
RFC-4	3-104	Diode plate choke
S1	11-58	Band switch (R.F.).
S2	11-59	Band switch (pilot lites & audio)
S3	.....	Part of Tone control assembly, A.C. switch.
T1	3-183	F.M. antenna transformer.
T2	3-173	1st I.F. transformer.
T3	3-174	2nd I.F. transformer.
T4	3-175	3rd I.F. transformer.
T5	3-176	Discriminator transformer
T6	2-9	Power Transformer (1st. run).
T6	2-19	Power Transformer (2nd. run).
T7	3-186	B.C.-S.W. R.F. transformer.
T8	3-185	S.W. antenna transformer.
T9	52-58	Output transformer (part of speaker ass'y.)
	15-81	Tube socket (octal)
	15-87	Phono pick-up socket.
	15-135	Phono A.C. receptacle socket.
	26-2	Dial lite (#47 brown bead).
	26-7	Dial lite (#44 blue bead)
	16-34	Tube shield for 6BA6 & 6BE6 tubes
	135-35	Dial pointer ass'y.
	138-15	Dial scale separater.
	129-56	Dial cord tension spring.
	S1329	Dial cord, 62 inches long (#134-7).
	S1328	Dial cord (for condenser gang).
	S1863	R.F. shelf & tuning condenser ass'y.
	117-63	Dial scale F.M.
	117-90	Dial scale B.C.
	117-91	Dial scale S.W.
	**22-58	Speaker, 12" complete with output transformer
	115-62	Cabinet, combination console (Specify color) Walnut / Mahogany / Blond
	S-1610	Cabinet dipole antenna ass'y.
	21-15	Record changer VM-400 (1st. run).
	21-37	Record changer VM-402 (2nd. run).
	122-53	Dial escutcheon clamp
	122-54	Escutcheon glass (large).
	117-103	Dial Masking plate.
	128-89	Knob, (tone, tuning, volume).
	128-90	Knob, Band switch).
	129-46	Spring, for band switch knob.

** Speakers marked with a BLUE X have a change of wiring; ref; speaker plug and chassis socket, pin #2 interchanged with pin #5. Change refers to EARLY RUN SETS ONLY.

©John F. Rider

MODEL 12FM895,
Ch. 12C22E

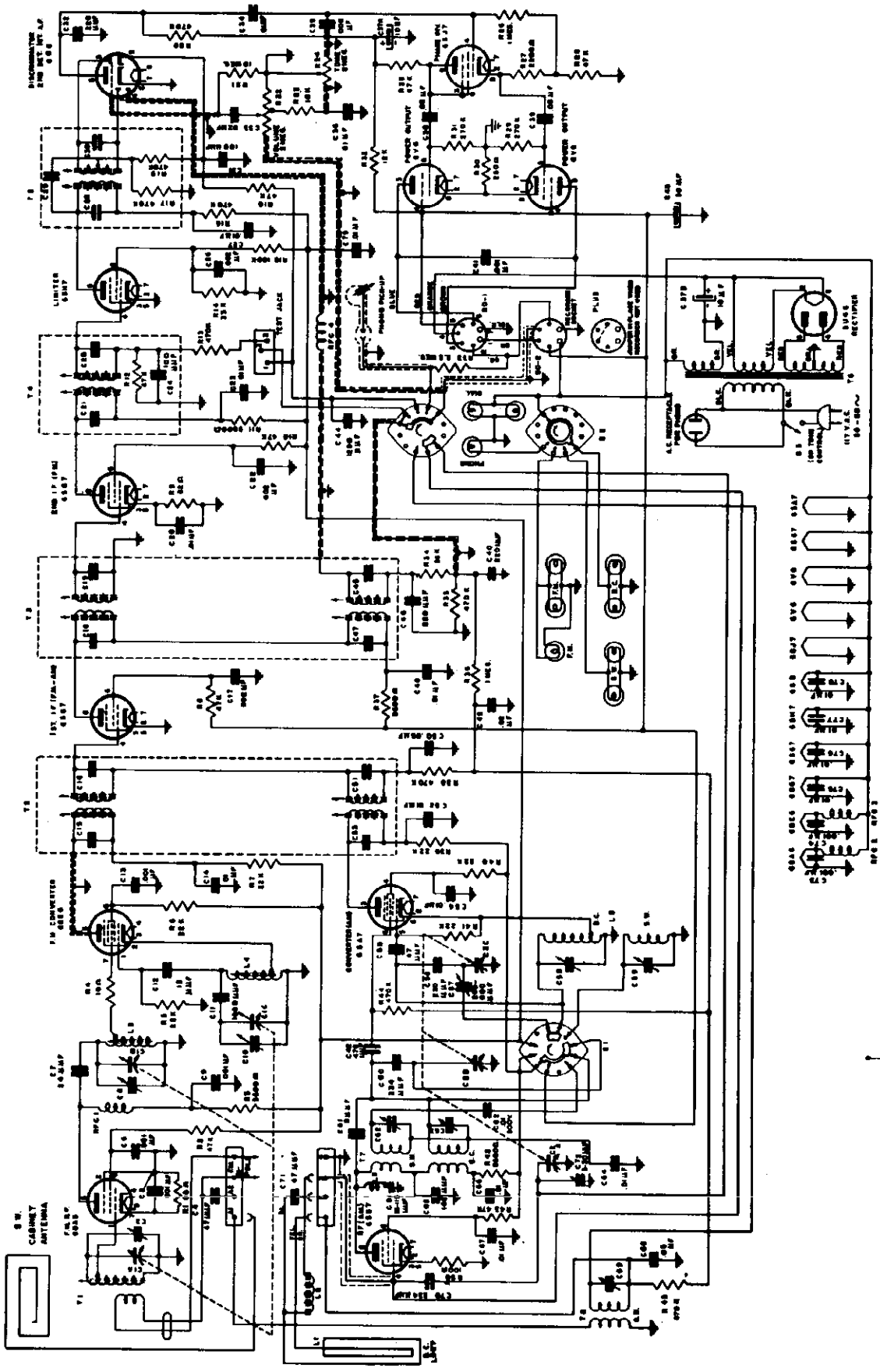

RECORD CHANGER: See V-M Model 400, Page RCD.CH. 15-1 through RCD.CH. 15-3

©John F. Rider

MODEL 12FM895,
Ch. 12C22E

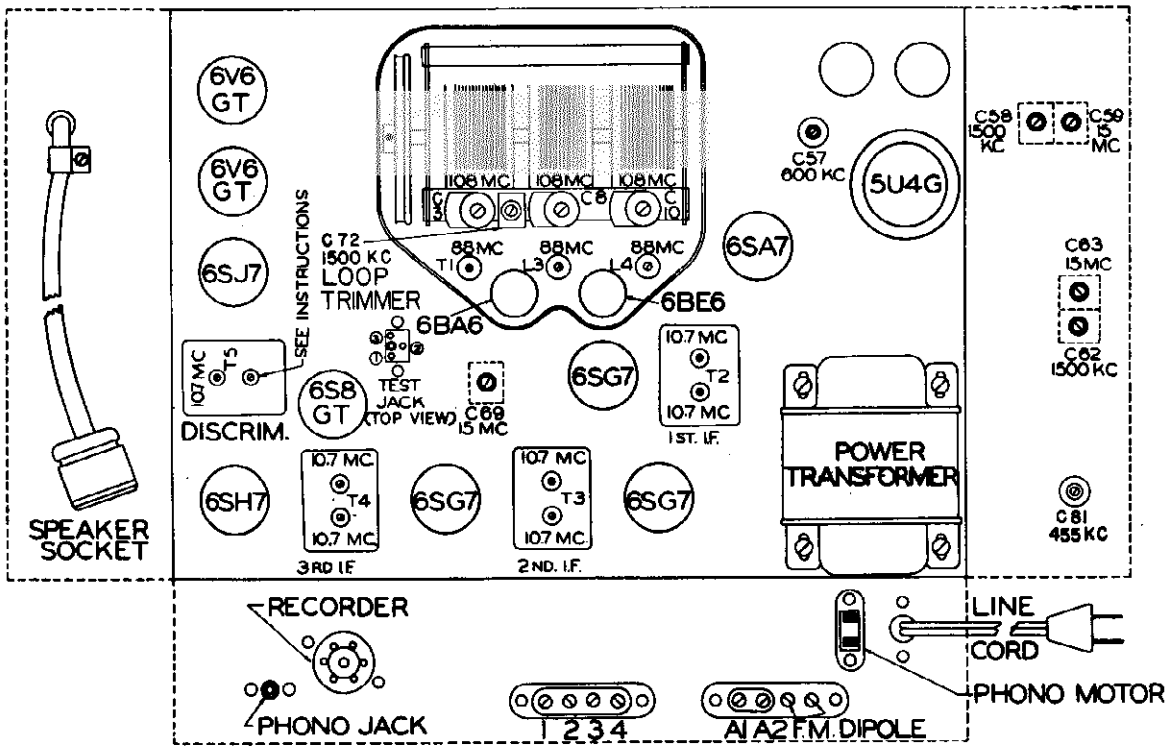

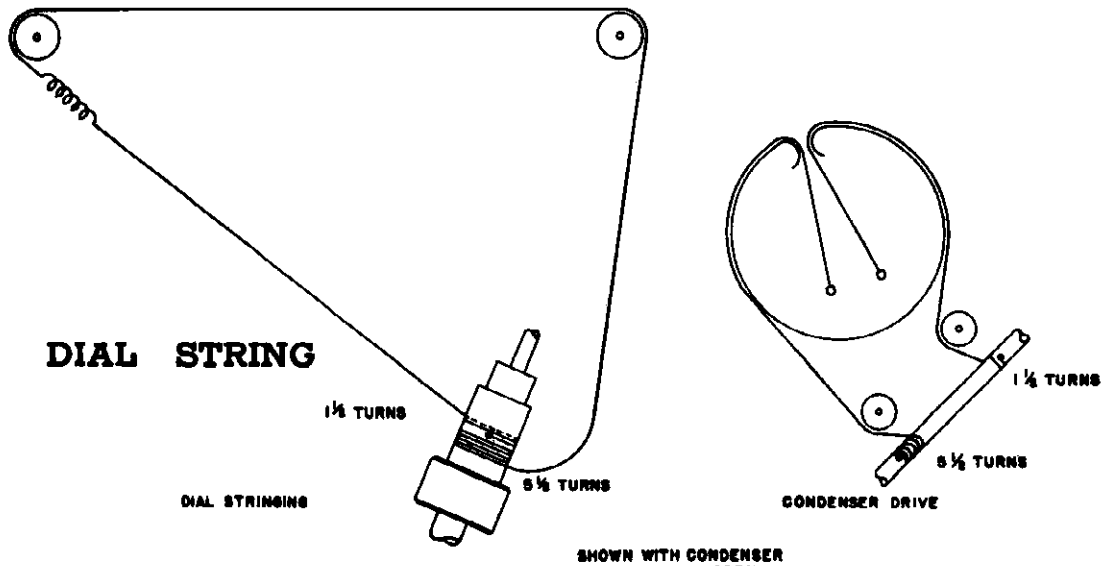

SHOWN WITH CONDENSER PLATES FULLY OPEN.

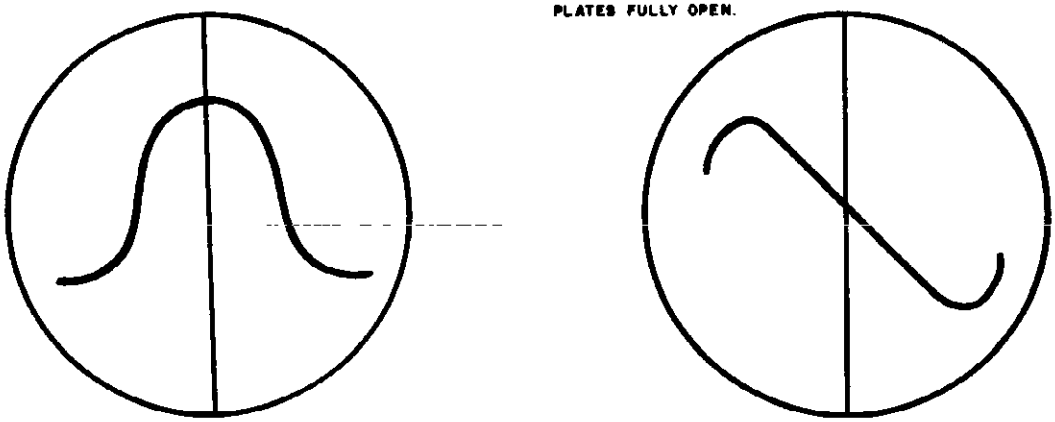

FIGURE 1

FIGURE 2

©John F. Rider

©John F. Rider

ALIGNMENT

OPERATION	CONNECT OSCILLATOR TO	DUMMY ANTENNA	INPUT SIGNAL FREQUENCY	BAND	SET DIAL AT	TRIMMERS	PURPOSE
1	Conv. Grid	.01mfd	455 KC	BC	600 KC	T2,T3 Bottom	Align I.F.'s
2	ONE TURN LOOP MADE WITH GENERATOR LEADS		455 KC	BC	600KKC	C81	I.F. trap adjustment for minimum I.F. signal
3			1500 KC	BC	1500 KC	C58	Set BC osc. to scale at 1500 KC
4			1500 KC	BC	1500 KC	C62, C72	Align BC RF. and Loop
5			600 KC	BC	600 KC	C57	Rock Gang to track BC padder
6	A1-Gnd.	400ohn	15 MC	SW	15 MC	C59	Scale osc. at 15 MC
7	A1-Gnd.	400ohn	15 MC	SW	15 MC	C63, C69	Align SW RF and Ant.
8	6BG7 2nd I.F. Grid	.01mfd.	10.7 MC	FM	88 MC	T4 top	Align for max. voltage at test jack pin 3 Rock gen. over 10.7 MC to check for symmetrical I.F. response.
9	6BG7 1st. I.F. Grid	.01mfd.	10.7 MC	FM	88 MC	T3 top	Align for max. voltage at test jack pin 3 Rock gen. over 10.7 MC to check for symmetrical I.F. response.
10	Converter	.01mfd.	10.7 MC	FM	88 MC	T2 top	Align for max. voltage at text jack pin 3 Rock gen. over 10.7 MC to check for symmetrical I.F. response. Re-check peaking of T4, and T3.
11	Converter grid 6BE6	.01mfd.	10.7 MC	FM	88 MC	T5 primary	Align for max. voltage across ½ discriminator Load (un-used Lug bottom of T5 to ground)
12	Converter grid 6B6E	.01mfd.	10.7 MC	FM	88 MC	T5 secondary	Align for zero voltage across full discriminator load (Test jack pin 1 to ground)
13	FM ant.term.	direct	108 MC	FM	108 MC	C10	Scale OSC at 108 MC (max. voltage Test jack pin 3.
14	FM ant.term.	direct	108 MC	FM	108 MC	C8,C3	Align FM RF and Ant. (max. voltage Test jack pin 3.
15	FM ant.term.	direct	88 MC	FM	88 MC	L4	Scale osc. at 88 MC.
16	FM ant.term.	direct	88 MC	FM	88 MC	L3,T1	Align RF and Ant. at 88 MC repeat steps 13, 14, 15, 16 as necessary.

NOTE: 1. A much more satisfactory IF and discriminator alignment may be obtained by using a 10.7 MC Signal generator frequency modulated at an audio frequency and swept approximately 600 KC (±300 KC). An oscilloscope should be connected to Test jack pin 3 and all IF screws adjusted for a symmetrical pattern of highest amptitude. See Fig. 1. For discriminator alignment, connect scope to Test jack pin 1 and adjust T5 for highest symmetrical pattern. See Fig. 2.

NOTE: 2. In all FM alignment calling for a voltage measurement at Test jack pin 3 (limiter grid resistor) keep signal generator output to such a value as will result in approximately 2 volts measured with a vacuum Tube voltmeter such as the Voltohmyst, Vomax or equiv.

MODEL 12FM895,
Ch. 12C22E

VOLTAGE TABLE

Measurements made at 117 volts line; volume control at minimum; zero signal input. Measurements made to chassis ground with vacuum tube voltmeter.

FUNCTION	TYPE	E_F	E_P	E_S	E_K	E_G
FM RF AMP.	6BA6	6.3	210	90	1	0
FM CONVERTER	6BE6	6.3	210	100	0	0
AM RF AMP.	6SG7	6.3	260	180	1	-1
AM CONVERTER	6SA7	6.3	250	90	0	----
1ST IF AMP.	6SG7	6.3	240	125	0	-1
2ND IF AMP.	6SG7	6.3	240	125	1	0
LIMITER	6SH7	6.3	3	60	0	-.6
DISC.; 2ND AM DET: AUDIO	6S8GT	6.3	80	---	0	-.8
PHASE INVERTER	6SJ7	6.3	160	---	80	0
POWER AMP.	6V6GT	6.3	260	270	15	
POWER AMP.	6V6GT	6.3	260	270	15	
RECTIFIER	5V4G	5	---	---	300	

TOTAL B CURRENT FROM RECTIFIER 120 MA.

PARTS LIST

ITEM NO.	PART NO.	DESCRIPTION
C1a,b,c.		
C2a,b,C3c.	7-17	Ganged Tuning Condenser A.M. & F.M.
C3,C8,C10	8-38	Trimmer 3-13 mmf (Gang trimmers).
C4,C55,C71	6-159	47 mmf., 500 V ceramic 20% Condenser.
C5,C6,C9,C13,C73,C74.	6-230	.001 mfd., 400 V ceramic 10% Condenser
C7	6-143	24 mmf 500 V ceramic 10% Condenser
C11	021-15	1000 mmf 500 V mica 5% Condenser.
C12	6-199	15 mmf 500 V ceramic 5% Condenser
C14,C20,C23,C27,C34, C36,C48,C52,C54,C64, C66,C67,C79,C82.	017-5	.01 mfd 600 V paper Condenser
C15,C16,C51,C53.	.....	Part of T2,1st I.F. transformer
C17,C22,C26	6-231	.002 mfd 400 V ceramic 10% Condenser.
C18,C19,C45,C47	.....	Part of T3, 2nd I.F. transformer.
C21,C24,C25	.....	Part of T4, 3rd I.F. transformer.
C28,C29,C30	.....	Part of T5, Discriminator transformer
C31	020-39	100 mmf 500 V mica 20% Condenser.
C32,C40,C46	020-53	220 mmf 500 V mica 20% Condenser.
C33,C49	016-6	.02 mfd 400 V paper Condenser
C35	5-69	.006 mfd 600 V paper Condenser.
C37 a, b	19-34	10-10 mfd 450 V electrolytic Condenser.
C38,C39	017-8	.05 mfd 600 V paper Condenser
C41	5-84	.001 mfd 1600 V paper Condenser
C42	020-67	470 mmf 500 V mica 20% Condenser.
C43	19-35	30 mfd 450 V electrolytic Condenser
C44	021-20	1200 mmf 500 V mica Condenser
C50,C68	016-8	.05 mfd 500 V paper Condenser
C56	6-207	220 mmf 500 V ceramic cnndenser
C57	8-65	200-600 mmf padder condenser.
C58,C59	.....	Part of L5 coil assembly.
C60,C70	6-208	234 mmf 500 V mica condenser.
C61,C62,C63,C65	.....	Part of T7 coil assembly.
C69	.....	Part of T8 coil assembly.
C71	.....	Part of L1 coil assembly (47 mmf)
C72	8-35	2½-30 mmf ceramic trimmer
C75,C76,C77,C78	021-74	.01 mfd 500 V mica 20% condenser.
C81	8-63	15-115 mmf trimmer (wave trap).
L1	20-27	Broadcast loop assembly (less cover #20-28)
L2	.....	Loading coil (part of 20-27 loop)
L3	3-184	F.M. R.F. coil.
L4	3-189	F.M. oscillator coil.
L5	3-171	A.M. oscillator coil.
L6	S-1468	Wave trap coil.
R1	02-37	68 ohms ½ watt 10% resistor
R2	03-157	47,000 ohms 1 watt 20% resistor
R3,R11,R37,R42	03-118	5600 ohms 1 watt 10% resistor
R4	01-2	10 ohms ½ watt 10% resistor
R5,R41	01-143	22,000 ohms ½ watt 20% resistor

(Continued on next page.)

©John F. Rider

MODEL 12FM895,
Ch. 12C22E

PARTS LIST--Continued

ITEM	PART NO.	DESCRIPTION
R6,R40	04-143	22,000 ohms 2 watt 20% resistor
R7,R39	02-143	22,000 ohms ½ watt 20% resistor
R8, R10, R25, R28,R43	02-156	47,000 ohms ½ watt 10% resistor
R9	02-41	82 ohms ½ watt 10% resistor
R12		Part of T4 assembly (47,000 ohms ½ w 10%)
R13,R16,R20,R35, R38,R44,R45	02-199	470,000 ohms ½ watt 20% resistor
R14	02-149	33,000 ohms ½ watt 10% resistor
R15	02-170	100,000 ohms ½ watt 10% resistor
R17, R19		Part of T5 assembly (470,000 ohms ½ w 10%)
R18	02-157	47,000 ohms ½ watt 20% resistor
R21	02-255	10 megohm ½ watt 20% resistor
R22	13-25	Volume control, 2 megohm with tap
R23	01-139	18,000 ohm ½ watt 10% resistor
R24	14-7	Tone control 2 megohm, with switch
R26,R36	02-213	1 megohm ½ watt 20% resistor
R27	02-100	2200 ohms ½ watt 10% resistor
R29, R31	01-188	270,00 ohms ½ watt 10% resistor
R30	9-290	250 ohm 5 watt 10% wire wound resistor
R32	02-132	12,000 ohms ½ watt
R33	02-226	2.2 megohm ½ watt 10% resistor
R34	01-160	56,000 ohm ½ watt 10% resistor
R50	02-44	100 ohm ½ watt 10% resistor
RFC-1	3-187	6BA6 plate choke
RFC-2,RFC-3	3-188	Filament choke
RFC-4	3-104	Diode plate choke
S1	11-58	Band switch (R.F.)
S2	11-59	Band switch (pilot lites & audio)
S3		Part of Tone control assembly, A.C. switch
T1	3-183	F.M. antenna transformer
T2	3-173	1st I.F. transformer
T3	3-174	2nd I.F. transformer
T4	3-175	3rd I.F. transformer
T5	3-176	Discriminator transformer
T6	2-19	Power transformer
T7	3-186	B.C.-S.W. R.F. transformer
T8	3-185	S.W. antenna transformer
T9	52-43	Output transformer (part of speaker ass'y)
	15-81	Tube socket, octal.
	15-87	Socket, phono, pick-up
	15-98/135	Receptacle, AC phono
	26-7	Pilot lite #44 Blue Bead
	26-2	Pilot lite #47 Brown Bead
	129-56	Spring, dial cord tension
	134-7	Dial cord, silk (62 inches)
	S-1329	Cord, dial (require 62" of #134-7)
	135-35	Dial pointer
	117-63	Dial scale FM
	117-90	Dial scale BC
	117-91	Dial scale SW
	22-43	Speaker 12" Electro-dynamic inc'l cable
	115-58-1	Cabinet-walnut VM cut-out
		Cabinet-mahogany-VM cut-out
		Cabinet-blond-VM cut-out
	122-53	Escutcheon glass clamp
	122-54	Escutcheon glass (large)
	21-15	Record changer, VM400
	117-103	Dial masking plate
	128-89	Knob (tone, tuning, volume)
	128-90	Knob (band switch)
	129-46	Spring, for band switch knob
	S-1610	Cabinet dipole antenna ass'y.

©John F. Rider

MODEL 801

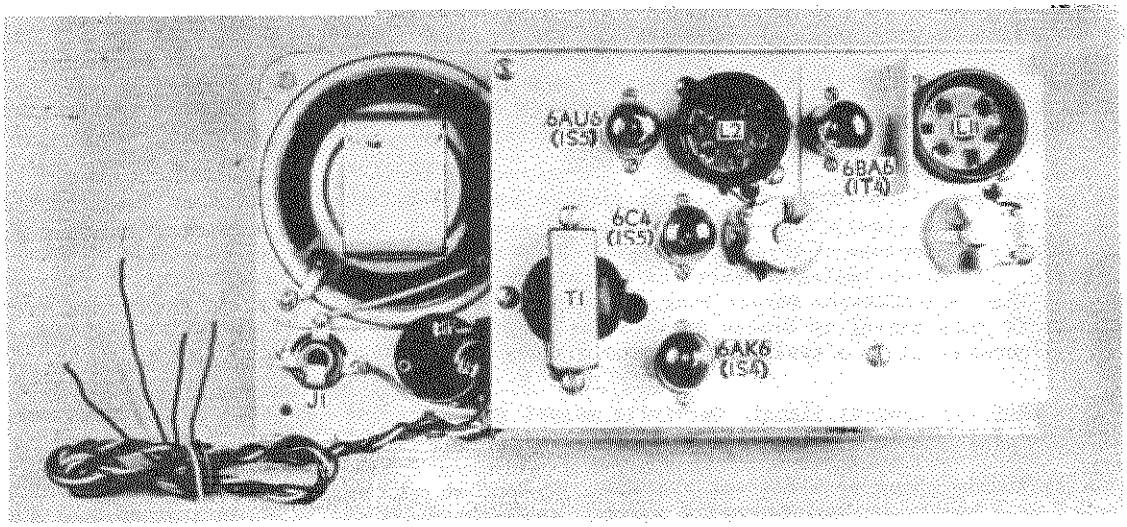

DESCRIPTION: Model 801 Receivers hew rigorously to the line of maximum sensitivity and general utility for the minimum of tubes, circuits and power consumption. They differ only in power requirements and frequency range. Model 801 employs new miniature 6.3 volt heater tubes for operation from batteries or a.c. power supply.

The two circuit diagrams show the basic similarity of the two models. Each consists of a high-gain pentode r.f. amplifier stage tuned by L1 and C1, the latter controlled by the ANT. knob. On short waves the tuning of this r.f. stage is not particularly critical, and the ANT. knob may be regarded as a trimmer rather than as a second tuning control. Following the r.f. amplifier is a pentode regenerative detector. It's tuned circuit is L2, C1a. At and around critical regeneration, detector tuning is very sharp. C1a is controlled by the main dial marked TUNE upon the panel. Connected to C1a through 16:1 preloaded gears, the main dial makes eight revolutions for each tuning range to yield 800 well-spaced dial divisions per band. Revolutions of this dial are counted by a secondary dial numbered 0 through 8, with the number of dial turns in use indicated by the figure visible through the panel window at the upper left of the dial. Logging of stations received is effected by noting down the numbers of the coils in use at L1 and L2; the setting of the ANT. knob and the window-visible number followed by the TUNE dial setting. Setting of the REG. knob may also be recorded, since it affects TUNE dial setting slightly.

Detector regeneration is controlled by varying screen voltage by means of P1. Regenerative tickler is in detector plate circuit, with a.f. load R5 isolated from r.f. by two-section filter C3, R2, C3A. This method of control gives extremely smooth variation of regeneration just below, at and immediately beyond critical regeneration. Stickiness, drag and fringe-howl are pleasingly absent.

The detector is followed by a.f. VOLume control P2 and two stages of high-gain pentode audio amplification. The 2nd (power output) stage feeds the self-contained loud-speaker: unless a 2-circuit phone plug is inserted in the PHONES jack when the speaker is muted and output fed through the plug to headphones.

ACCESSORIES REQUIRED: Accessories required, but not supplied, to put either receiver into operation are as follows:

MODEL 801: Antenna and ground - antenna may be a single wire about 50 ft. long plus 20 to 30 ft. of leadin, and well up in the air. Ground connection should be to a cold water pipe scraped bare at point of connection.

1 each 6BA6, 6AU6, 6C4 and 6AK6 tubes

1 a.c. power supply furnishing 6.3 volts at .9 amperes and 180 volts at 35 ma. filtered d.c. —or storage or dry batteries (4 Burgess #4FA, or equal, 1½ volt batteries connected in series to provide 6 volts for tube heaters and 4 Burgess #5308, or equal, 45 volt "B" batteries in series to provide 180 volts).

INSTALLATION: Insert tubes in sockets as indicated in rear-view illustration. Erect antenna using #14 to #18 bare, enameled or insulated wire as high and clear of surrounding objects as practicable. If a single wire is used, fasten far end to glass or ceramic insulator fastened to tree, pole or building with rope. Thread leadin end of antenna wire through second insulator, twist back on itself, and carry free end of wire down to receiver (antenna and leadin one piece of wire). Fasten second insulator to tree, pole or building as convenient with rope. Keep antenna and leadin free and clear of nearby objects. Connect leadin to wire projecting from receiver and terminated at #2 contact of L1 socket (upper left, as seen from front).

Insert coils for desired frequency range in L1 and L2 sockets. NOTE that while the two coils for each range are identical, small electrical differences will affect dial logging if they are interchanged. Therefore, scratch identifying marks, such as "L1", "L2" upon each coil of each pair so as to be sure to get the same coil in the same socket every time.

©John F. Rider

MODEL 801

Connect batteries to MODEL 801 receiver (a.c. power supply to MODEL 801 only) by means of color-coded twisted cable projecting from receiver cabinet. Follow wire colors and connection legend found at bottom of appropriate circuit diagram. Connect ground lead to BLACK receiver cable wire at battery or a.c. power supply connection point. ON-OFF switch in YELLOW wire opens filament circuit of Model 801B; switch in RED wire of Model 801 opens B+ circuit when REG. knob is turned to OFF.

OPERATION: Set ANT. knob to about 50, TUNE dial to about 4-0, set VOL. knob to about 10. Advance REG. knob slowly from OFF toward 10, listening carefully for the beginning of a faint rushing sound in the speaker. Advance REG. knob to just beyond the point where this rushing noise is just heard, and which indicates that the detector has passed the point of critical regeneration and has gone into oscillation. Rotate TUNE dial slowly until a squeal is heard evidencing reception of a signal. If this squeal is broken up into dots and dashes it is a CW telegraph station: if the squeal is continuous, it is a broadcast or phone station.

Adjust ANT. knob for loudest signal. Carefully adjust TUNE dial and REG. knob for loudest telegraph signal. Adjust VOL. knob for desired loudness of signal.

To initially locate phone or broadcast stations, proceed as above (REG. knob advanced so signal is first heard as a continuous uninterrupted squeal). Once the signal is so found, retard REG. knob together with the slight adjustment of TUNE dial required to "hold" the signal until the detector stops oscillating, the squeal disappears, and voice or music is heard.

Greatest sensitivity and selectivity obtains when the REG. knob is advanced to just above the point at which a signal is heard as a squeal when it is a CW telegraph signal. Greatest sensitivity and selectivity for phone, broadcast and modulated telegraph reception obtains when REG. knob is set to just below the point where such signals turn into squeals. The range of mechanical movement of the REG. knob is much greater than its useful electrical range. Its useful operating range is from just below to just above the point where signals are heard as squeals. This point will move about upon the REG. scale for different coils and different frequencies. ALWAYS operate with REG. knob just below signal-squeal point for phone, just above for CW telegraph reception. DO NOT control volume with REG. knob — control volume with VOL. knob.

As with all t.r.f.-regenerative detector receivers, selectivity is a function of REGeneration setting, is greatest for weak signals and at critical regeneration. For the regular broadcast band selectivity is adequate to separate weak distant from strong local stations only when using a very short antenna—maybe 10 to 15 ft. long. The 50 ft. antenna may be electrically shortened by disconnecting it metalically from the receiver antenna lead, then twisting the leadin about the insulated receiver antenna wire for a couple of turns — just enough to give maximum selectivity without serious loss of sensitivity. On short waves this problem is not particularly serious, and good selectivity will usually obtain with a 50 ft. antenna. Good reception can be had with a shorter antenna in most cases, however.

PHONES jack is for private listening — does not yield more volume than loud speaker. If more volume on headphones is desired the receiver output circuit may be altered upon addition of a 10,000 ohm, 1 watt resistor and a .1 mfd., 400 volt tubular condenser. To make such alteration disconnect lead of T1 going to long spring of J1: disconnect short spring of J1 from speaker voice-coil lug. Connect freed lead of T1 directly to speaker voice-coil lug, leaving both lugs of J1 momentarily unconnected. Disconnect lead of T1 going to plate of 6AK6 (or 1S4) tube socket and connect this lead to short spring of J1. Connect long spring of J1 to one lead of .1 mfd. condenser: other lead of condenser to plate lug of 6AK6 (or 1S4) socket. Connect 10,000 ohm resistor between plate lug of 6AK6 (or 1S4) socket and receiver B+ circuit (to B+ 180 V. for Model 801; to B+ 90 V. for Model 801B).

NOTE: At and around critical REGeneration the detector circuit is extremely sharp in tuning. Upon loud signals from the loud speaker mechanical vibration feedback between speaker and C1a may occur. This may cause howling, with howl masking signal. Do not turn VOL. knob up so signal becomes loud enough to cause such feedback — or use headphones for reception.

ALTERNATE ANTENNA: If it is desired to use a 1/2-wave doublet, or other antenna having a two-wire leadin, disconnect contact#1 from contact #3 on L1 socket. Connect two-wire leadin to L1 socket contacts #1 and #2. Use or omit ground connection to water-pipe ground as results dictate.

PARTS LIST

(Exact values subject to change)

C1, C1a - 6/106 mmfd. air capacitor
C2 - 58 mmfd. mica capacitor ±20%
C3, C3a, C3b, C3c - 1000 mmfd. mica capacitor ±20%
C4 - 2500 mmfd. mica capacitor ±20%
C5, C5a - .01 mfd., 400 V. paper capacitor ±20%
C6, C6a, C6b - 8 mfd., 350 V. electrolytic capacitor ±20%

©John F. Rider

R1, R1a - 510 Ω, ½ watt resistor ±20%
R2, R2a - 25 KΩ, ½ watt resistor ±20%
R3 - 110 Ω, ½ watt resistor ±20%
R4 - 3500 Ω, ½ watt resistor ±20%
R5, R5a - 50 KΩ, ½ watt resistor ±20%
R6 - 150 KΩ, ½ watt resistor ±20%
R7, R7a - 750 KΩ, ½ watt resistor ±20%
R8 - 3 megΩ, ½ watt resistor ±20%
P1 - 3 megΩ potentiometer
P2 - 750 KΩ potentiometer

COIL RANGES: Nominal coil tuning ranges are as follows:

MODEL 801: Type 125-B1, 430-830 kc.
" 125-B2, 750-1700 kc.
" 125-B3, 3.2-7 mc.
" 125-B4, 6.2-12.8 mc.
" 125-B5, 11.5-23.8 mc.
" 125-B6, 19-36 mc.
" 125-B7, 35-63 mc.

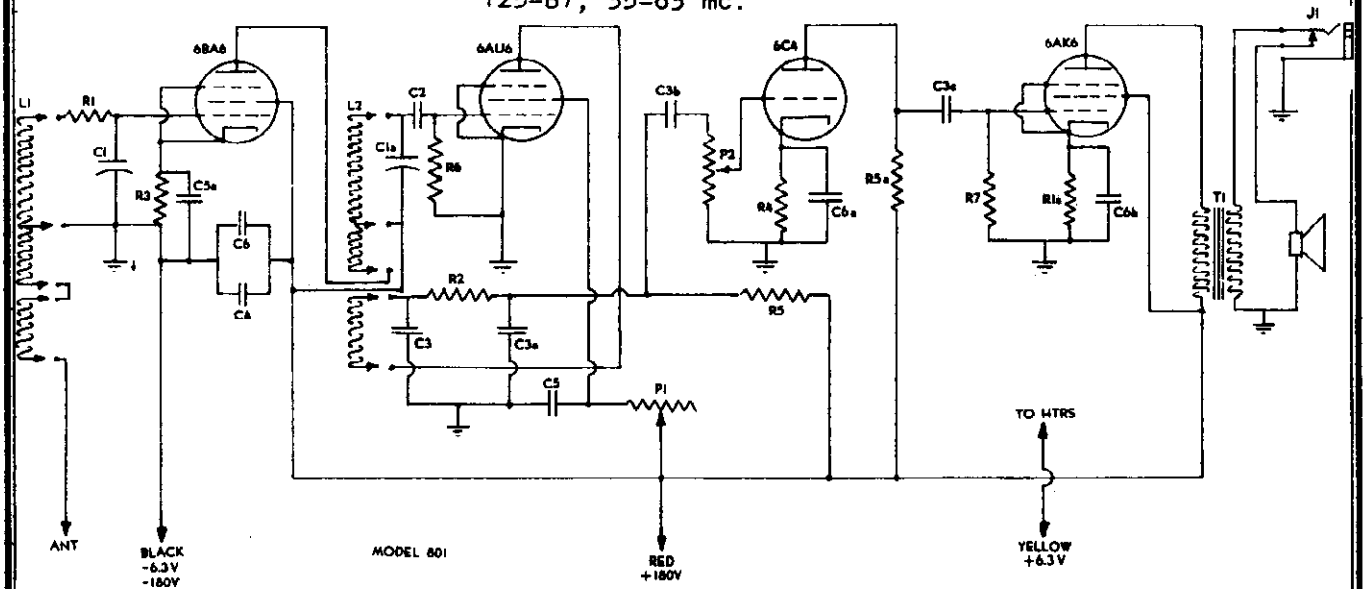

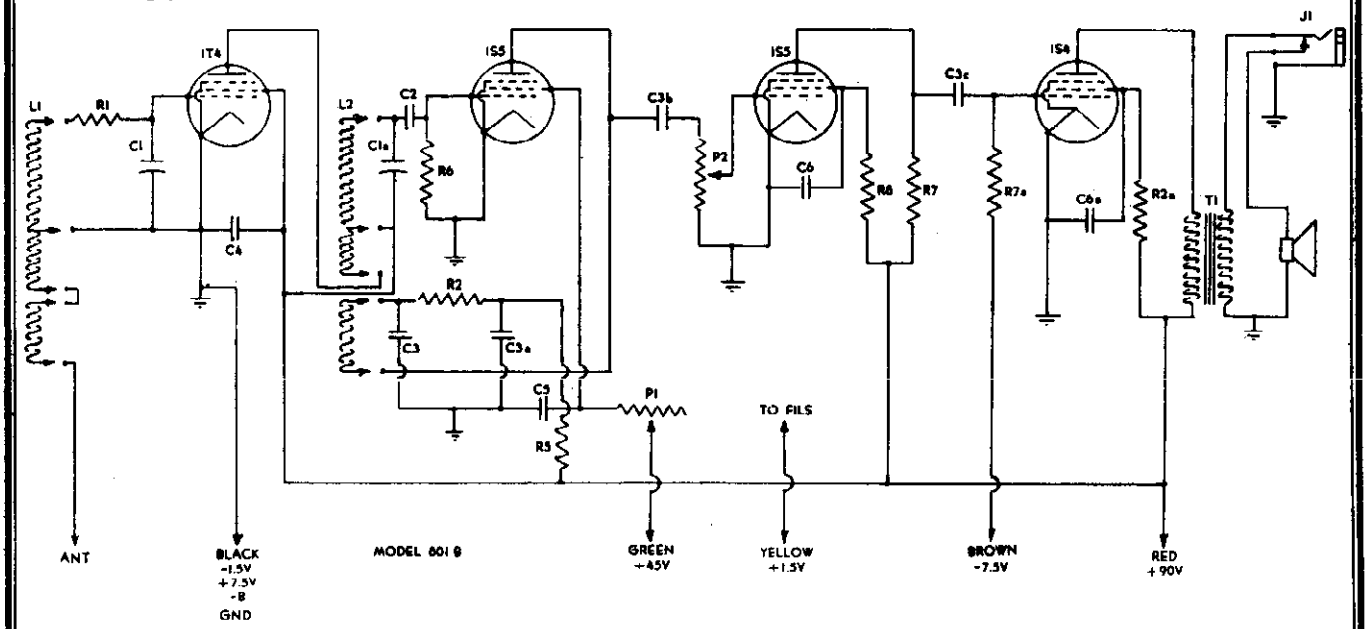

© John F. Rider

MODEL 802

DESCRIPTION: Model 802 receiver is designed to cover the 80, 40, 20, 16, 11/10 and 6 meter amateur bands only. Following A.R.R.L. Handbook teachings thru employment of controllable regeneration in its 735 kc. i.f. amplifier to provide extreme and variable selectivity, its excellence in this respect is equalled by the extreme of band-spread it provides upon each amateur band. Five new miniature u.h.f. tubes, three of them dual-function, yield effective 8-tube complement. Each amateur band occupies the major portion of the eight-revolution, 0/100 division 3½" diameter main tuning dial, which with the secondary "turn-counting" dial visible thru the panel window gives 88" of effective dial length. A series-valve noise-limiter is effective in reducing ignition and other noise interference. Noise control, P3, is accessible upon the interior channel upon lifting cabinet lid.

The circuit consists basically of a 6BE6 pentagrid converter having antenna input circuit L1 inductively tuned by the relatively non-critical ANT. knob, and local heterodyne oscillator with inductive tuning of L2 by the main TUNE dial. A single stage of dual-air-tuned i.f. amplification employs a 6BA6 tube, with regeneration controlled by REG. knob P1, (which also carries an on-off switch for control of external power supply). A 6J6 dual triode functions as non-loading infinite impedance second detector and series-valve noise-limiter. This is followed by a second 6J6 functioning as first a.f. amplifier and beat-oscillator, pitch of which may be adjusted for single-signal CW reception by internal air capacitor C5d. A.f. power amplifier is a 6AK6, with VOLume controlled by P2. A PM dynamic speaker and output transformer T1 are built into Model 802, together with headphone jack J1. Band change is effected by inserting appropriate plug-in coils in sockets accessible upon lifting cabinet lid. Coils are individually adjusted for each particular receiver, and are shipped with it.

ACCESSORIES REQUIRED: Accessories required, but not supplied as a part of Model 802, to put the receiver into operation are as follows:

Antenna and ground — antenna may be a single wire 20 to 70 ft. long, including leadin (or may be a suitable doublet), erected as high in the air and clear of surrounding objects as practicable. Ground may be a connection to a well-scrapped cold water pipe.

1 each 6BE6, 6BA6, 6AK6 tubes
2 — 6J6 tubes
1 pair of 2,000 ohm headphones (if desired)
1 Power supply to provide 100/105 volts at 35 ma. d.c., 180 to 250 volts d.c. at 18 ma.p and 6.3 volts a.c. or d.c. at 1.65 amperes. Power supply may be a well-filtered a.c. unit assembled from standard broadcast receiver replacement parts, a 6-volt storage battery and suitable Vibropack or dry B batteries, or entirely dry batteries in emergency.

INSTALLATION: Insert vacuum tubes in their sockets as indicated in Fig. 1. Make sure each is fully seated in its socket, and that shield body encloses 6BA6 i.f. amplifier. Erect suitable antenna and connect its leadin to one of two wires projecting from L1 socket thru hole in rear of cabinet. Connect ground lead to the second of these two wires and to BLACK wire (B-, A-). Connect power supply to twisted colored leads projecting from receiver cabinet, being careful to follow exactly color indications upon Fig. 2 for each wire. On-off switch upon REG. control is not wired into receiver circuit, but is brought out thru the two BLUE wires of power cable. It may be connected as desired to control the power supply, as in the 115 volt primary circuit of an a.c. power supply, etc.

Insert coils for desired amateur band in sockets. Coil marked "ANT" must go into upper left socket; coil marked "OSC" must go into center socket. Seat coils fully in sockets, not at an angle. Take care in inserting or removing coils NOT TO BEND THE COPPER VANES controlled by ANT. and TUNE knobs. Tuning range and relogging calibration will be shifted if vanes are bent, and unless coils are inserted in sockets exactly the same way each time they are changed. Coils can be most easily removed by inserting a knife-blade or screw-driver tip between socket and coil base, then prying coil form back sufficiently to free it for easy finger removal. BEFORE CHANGING COILS BE SURE ANT. AND TUNE KNOBS ARE SO TURNED THAT THEIR COPPER VANES ARE OUT OF THE WAY AND DO NOT IMPEDE COIL REMOVAL OR INSERTION.

OPERATION: With tubes and coils for desired band in place, power supply connected and power turned on, antenna and ground connected, proceed as follows: Set B.F.O. switch OFF, N.L. switch OFF, VOL. to 10. Advance REG. knob from 0 toward 10 until a rushing noise is heard from the speaker indicating that the i.f. amplifier is regenerating, possibly even oscillating. Turn REG. knob up just enough so stations may be tuned in on the main TUNE dial as a squeal. Set ANT. knob for greatest volume, retarding VOL. knob if volume is so great as to cause microphonic howling from speaker.

Greatest sensitivity — and selectivity — is with REG. knob set just below the point where signals are heard as squeals. KEEP IT BELOW THIS POINT OF OSCILLATION. While CW signals can be received with B.F.O. OFF by pushing REG. knob up to oscillating point of i.f. amplifier, this does not give best results. Use REG. knob to control sensitivity and selectivity — always set it below point of i.f. oscillation, else when B.F.O. is turned ON more squeals and "birdies" will be heard than signals.

©John F. Rider

Having operated Model 802 for possibly half an hour to find out how it works and controls, (using oscillating i.f. as above in this initial test only to make CW signals audible, or to locate weak phone stations by their carrier squeals), set REG. about ½ division below point of oscillation and turn B.F.O. ON. Tune in CW signals as on any receiver; locate weak phone stations by tuning to their squeal, then turn B.F.O. OFF to make speech audible and clear. Note the extreme selectivity possible -- the muffling of speech quality as REG. knob is advanced toward i.f. oscillation. This is side-band cutting due to the extraordinary selectivity possible to a regenerative i.f. system.

It is this extreme sensitivity that gives Model 802 the advantages of "single-signal" CW telegraph reception -- which mutes one of the two audio beats found on each side of carrier resonance. B.F.O. may be set by adjustment of C5d, either to exact i.f. resonance for locating weak phone stations, or preferably about 1,000 cycles to one side of resonance for "single-signal" CW. When so set, if REG. knob is operated just below i.f. oscillation, one of the two audio beats associated with each CW signal will be muted almost to inaudibility -- giving crystal selectivity without the annoying "pinging" quality associated with crystal filters. To set B.F.O. for single-signal reception, tune in a weak phone station, or a telegraph station which can be heard as key-clicks or "thumps", with B.F.O. off and REG. set just below squeal point.

Turn ON B.F.O. and rotate rotor of C5d using the eraser on the end of a lead pencil to turn same, until the audible beat note is at about 1,000 cycles. Now tune thru the signal, and note that the second audio beat note is practically inaudible -- much weaker than the other. This condition can obtain for two settings of C5d; use the one with the rotor of C5d turned furthest in.

It is desirable to read the section of the A.R.R.L. Handbook describing operation of series-valve noise limiters to gain understanding thereof. The series-valve noise limiter of Model 802 Receiver (right hand triode of center 6J6, Fig. 2) may be thought of as a "gate", which may be opened, partially closed or fully closed by adjustment of P3. Full open, the gate passes both signals and noise; closed it will cut off both; partially closed it can cut out noise louder than a desired signal to improve signal readability.

To use the noise limiter, set NOISE switch S1 to ON after tuning in a weak signal markedly "down" in local noise interference. Slowly rotate P3 until signal volume is neither reduced nor signal quality distorted but noise is reduced to a point where it is no louder than signal. Advancing P3 further will reduce both noise and signal volume together. Operate with P3 set to reduce noise as much as possible without impairing signal. Adjust P3 for each signal received. Set NOISE switch S1 OFF in tuning for signals, switching noise limiter into circuit only when required. Leaving NOISE switch ON when tuning will result in distortion of signals louder than the one for which it was set.

MAINTENANCE: Model 802 is so basically simple that, outside of customary long-time tube deterioration, there is little to go wrong with it. Its relatively high 735 kc. i.f. frequency results in good image rejection without an r.f. stage. When operated near powerful local broadcast stations operating on 730 or 740 kc., interference therefrom may sometimes be experienced. This may be eliminated by tuning the i.f. amplifiers (adjust capacitors C5, C5a, C5b, C5c and C5d) to a new i.f. frequency just sufficiently away from 735 kc. to cut out such interference.

Care must be taken NOT TO BEND the copper tuning vanes actuated by ANT and TUNE knobs. Each affects the field of the coil (L1, L2) with which it is associated. If vanes are bent, or coils are not seated fully and identically in their sockets each time they are changed, logging of stations tuned in previously will not repeat exactly upon TUNE dial. Accidental bending of vanes can shift tuning range so it will no longer be as originally established. Should this occur, vanes may be repositioned by gently bending them to or away from coil ends. Do this ONLY if they are accidentally bent, and then to bring tuning back correctly upon ANT and TUNE scales for stations first at high, then at low, frequency ends of each coil tuning range.

©John F. Rider

MODEL 802

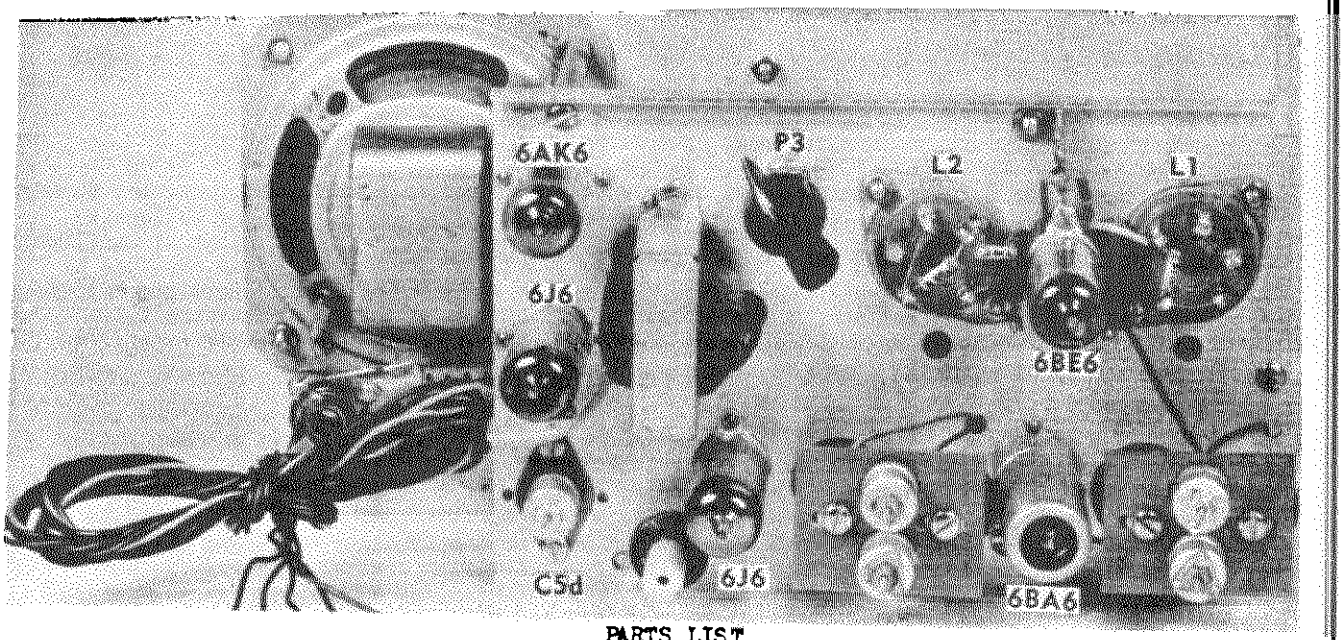

PARTS LIST

C1 — 50 mmfd. ceramic
C2 — 50 mmfd. ceramic
C3 — 50 mmfd. mica or ceramic
C4, C4a, C4b, C4c — 100 mmfd. mica or ceramic
C5, C5a, C5b, C5c, C5d — Silver #619, 30/30 mmfd. air condenser
C6, C6a, C6b — 8 mfd., 350 V electrolytic
C7, C7a, C7b, C7c — .02 mfd. tubular paper
C8 — .0039 mfd. mica
C9 — 17 mmfd. mica or ceramic
C10 — 400 mmfd. mica or ceramic
C11 — 820 mmfd. mica or ceramic
C12 — In #125-C1, 125-C2, 125-C3 ANT.
C13 — In #125-C1, 125-C2, 125-C3 OSC.

R1, R1a, R1b — 21 kΩ, 1/2 watt
R2, R2a — 150 kΩ, 1/2 watt
R3 — 10 kΩ, 1/2 watt
R4 — 250 Ω, 1/2 watt
R5 — 250 Ω, 1 watt
R6, R6a, R6b, R6c, R6d — 47 kΩ, 1/2 watt
R7 — 1500 Ω, 1/2 watt
R 8, R8a — 100 kΩ, 1/2 watt
R9 — 1 megΩ, 1/2 watt
P1 — 5000 Ω, w/w, with switch
P2 — 500 kΩ, audio volume control
P3 — 100 kΩ, noise limiter
S1, S1a — S.P.D.T. slide switch

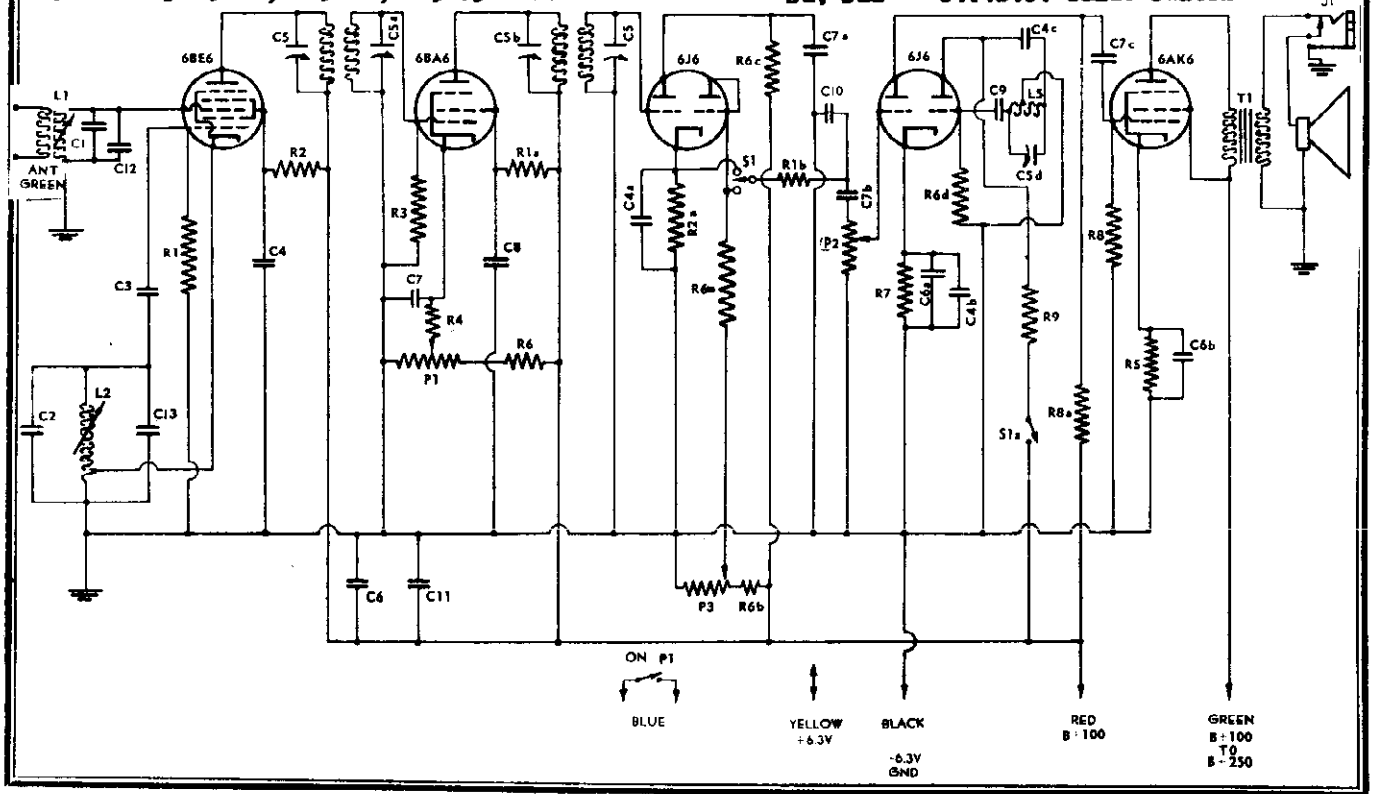

© John F. Rider

MODELS EC-720, ED-721, Ch. 5A9;
MODEL EV-760; MODELS 4B7, 4F8

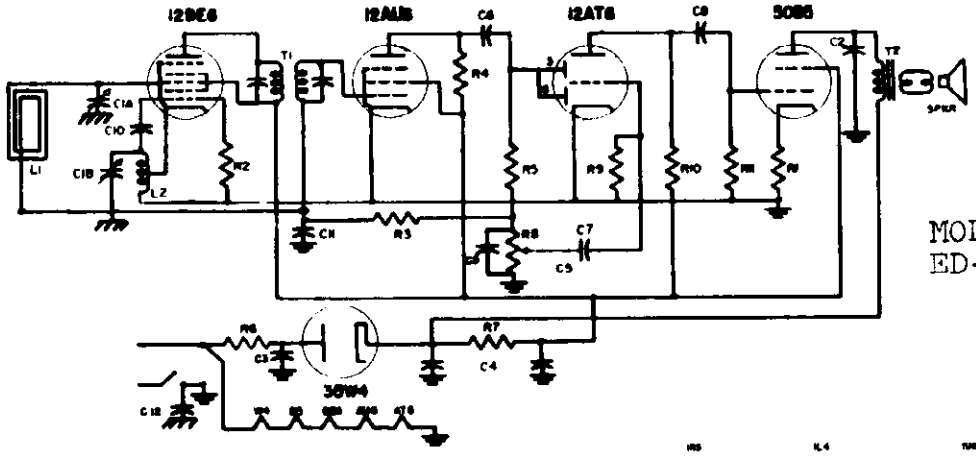

MODELS EC-720,
ED-721; Ch. 5A9

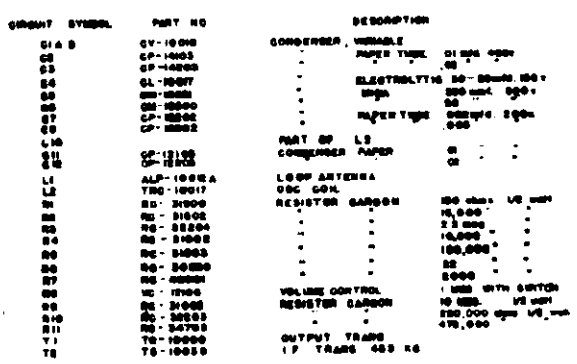

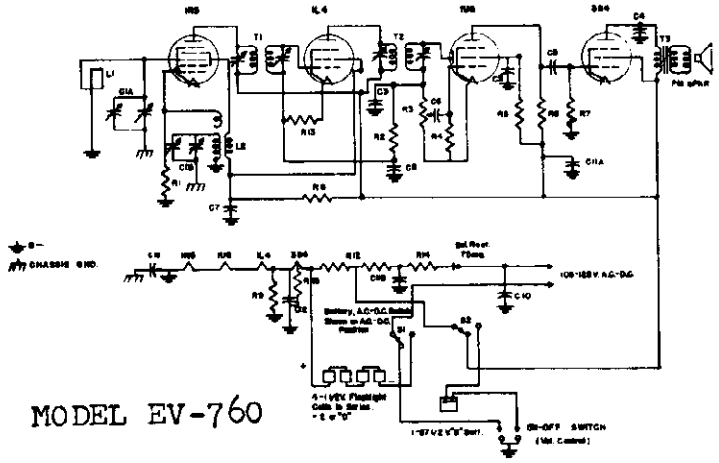

MODEL EV-760

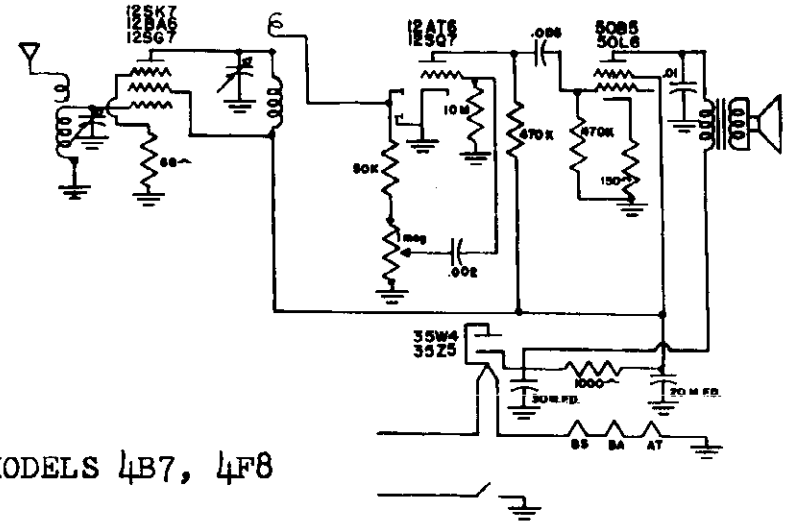

MODELS 4B7, 4F8

©John F. Rider

©John F. Rider

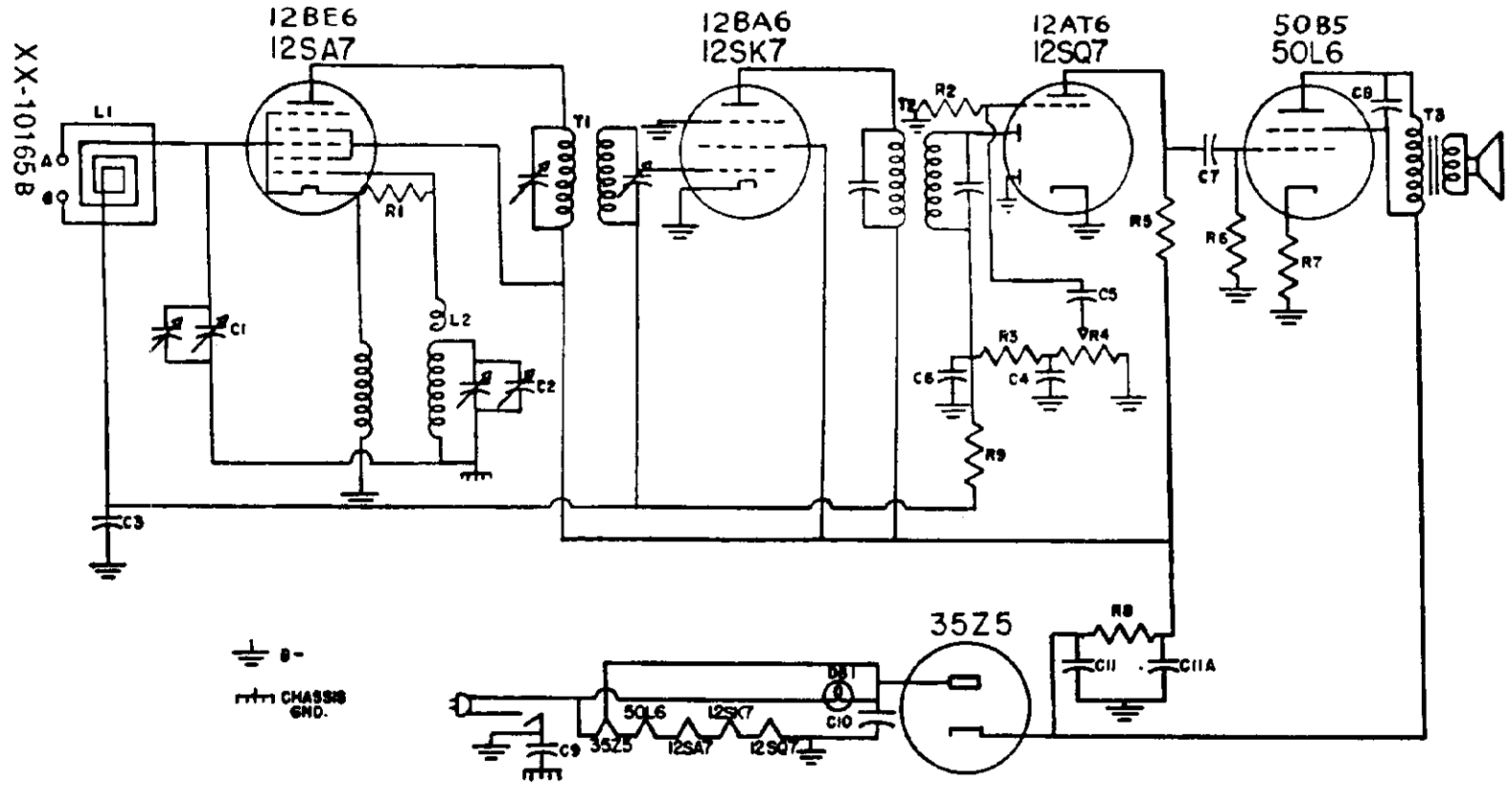

TECHNICAL INFORMATION FOR SERVICE

ALIGNMENT PROCEDURE

1. Connect a suitable signal generator to the R.F. section of the tuning condenser. Connect the ground side of the generator to the frame of the condenser. Use a .05 condenser to isolate the generator from the R.F. section.
2. Connect a suitable output meter to the voice coil leads of the speaker.
3. With the variable condenser open, apply a 455 Kc. signal. Use the lowest level consistent with good output indication.
4. Adjust trimmers A, B, C, and D for maximum response, reducing the input signal as required to keep the output meter on scale.
5. Connect the generator to terminals A & G through a 400 ohm dummy antenna. Apply a 1720 Kc. signal and adjust trimmer E to maximum.
6. Set the signal generator to 1400 Kc. Tune the receiver dial to maximum response, then adjust trimmer F to maximum response. This completes the alignment.

TUBE LOCATION CHART

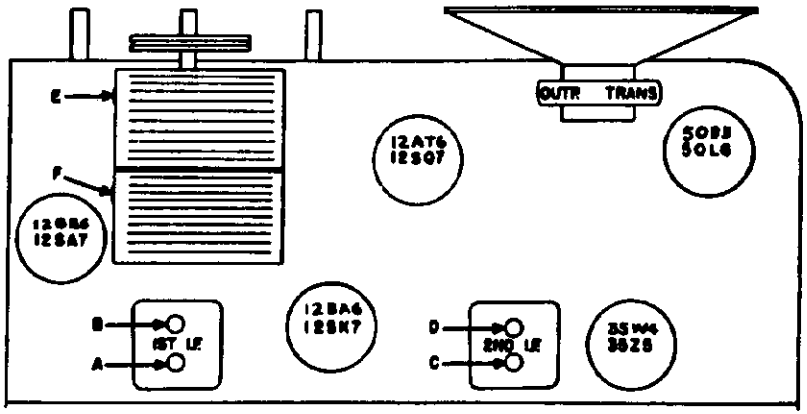

©John F. Rider

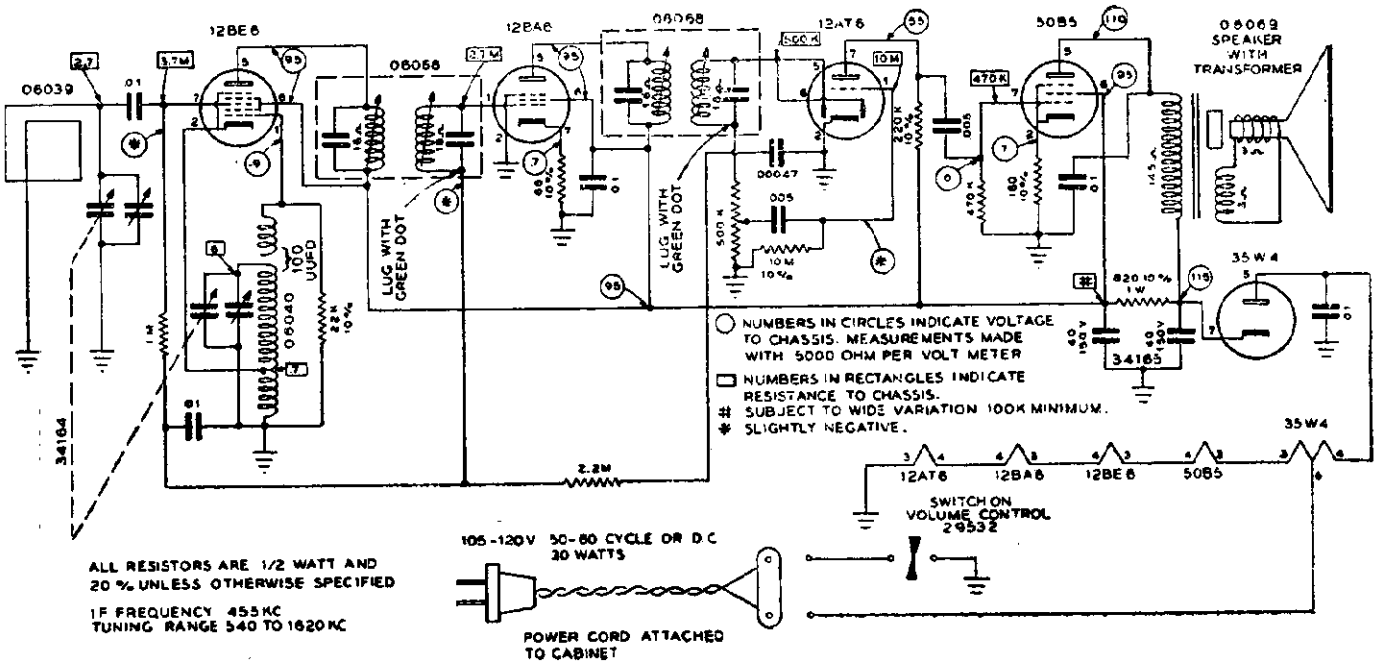

Power Supply: 105-120 volts 50-60 cycles AC, or
105-120 volts DC.

DC Operation: When using DC supply if receiver does not operate, reverse the line cord plug in the power outlet.

Antenna: An unusually efficient built-in antenna is used in this receiver, making an outisde antenna unnecessary. For this reason no provision is made for connecting an outisde antenna.

Ground: Do not attempt to connect a ground to this receiver.

CAUTION: One side of the power line is connected to chassis in this receiver. Do not attempt to operate the receiver out of its cabinet.

MEISSNER FM RECEPTOR
MODEL 8C, 8CK Rev.

ANTENNAS

This receptor has been designed to use a 300 ohm antenna, either indoor or outdoor type.

The indoor antenna (Fig. 1) is for compact installation and is recommended only for local station receoption. Such an antenna may be purchased or may be built according to Figure 1. This indoor antenna is a folded dipole omnidirectional antenna intended for operation in a horizontal plane. The drawing shows the bottom view. Cut off a 5 foot length of 300 ohm transmission line and secure it to the mounting board, following dimensions shown in Figure 1. Measure 2" from each end of the transmission line and remove the dielectric material back to this point. Twist the bared wires together and solder. Locate the center point. Cut the outside strand of the two wire line. Remove the insulating material from the wires, leaving approximately 1/2" bare lead, to which the lead-in line is attached and soldered.

In some locations an indoor antenna is unsatisfactory, particularly in building having steel in their construction or in areas where large masses of metal are present. In the installation of an outdoor antenna, it should be remembered that radio waves of the frequencies used for FM transmission travel in straight lines, and for best reception, the antenna should be located above all obstructions which might block or alter the path of incoming signals. A high quality 300 ohm transmission line should be used to connect the antenna to the receptor. If low loss line is used, there will be no appreciable loss of signal in the line if the line itself is kept reasonably short and direct to the antenna.

An outdoor antenna may be purchased from your dealer or may be constructed as shown in Figure 2. This outdoor antenna is a 300 ohm folded dipole which will show some directional characteristic. Four conduit clamps are used to secure the 11/16" conduit to the support post. Each wire in the 300 ohm lead-in line is connected to an end of the antenna element. This may be done by carefully soldering each wire to the conduit and leaving a small amount of slack before securing the lead-in line to the support post.

AC OUTLET

The Meissner Model 8C FM receptor has a power outlet on the rear skirt of the chassis into which the associated power amplifier may be plugged. Power to this outlet is controlled by the 8C power switch and the associated amplifier may thus be switched "on" or "off" coincidental with the receptor.

CAUTION: Power drawn from this receptacle should not exceed 2.5 amperes at 115 volts.

CONNECTIONS TO AN AC RECEIVER

Although the receptor will operate with any radio receiver, large or small, that has terminals for a phonograph pickup, the audio quality inherent in the frequency modulation system will be more apparent when it is used with a regular type radio receiver having a large speaker and baffle as well as a good audio amplifier. The receptor may also be connected directly to power amplifiers which have high impedance inputs and which will give full output with 3 volts RMS input. The receptor should not be connected to a microphone input. The shielded rubber-covered lead from the receptor carries the audio output of the unit and is to be connected to the phonograph input terminals of the radio receiver or to the high impedance high level input of the power amplifier.

©John F. Rider

It is not recommended that the receptor be connected to an input designed for the new magnetic type pickups. These pickups have an output many times below that of the receptor and are fed into a preamplifier having a very high gain and usually some bass compensation which might not complement the receptor. Should the receptor be fed into such a preamplifier, the receptor output would need to be reduced to a very low level in order to prevent overloading and under this condition the hum and extraneous noises coming from the receptor and being picked up by the connecting cable might become objectionable.

The audio output of the receptor with maximum volume control setting is approximately 3 volts RMS with minimum usable signal input. For greater signal inputs, output voltages as high as 15 volts RMS may be obtained with negligible distortion. OUTPUT is high impedance and should be worked into a load of from 100,000 to 500,000 ohms. This data should be borne in mind when connecting the receptor to a radio receiver or power amplifier.

Various input arrangements will be encountered in radio receivers and amplifiers of different manufacture, such as jacks of various types, terminal strips and binding posts. Your dealer will be able to supply an appropriate plug to make connections to your receiver or amplifier. For instance, if the unit with which it is to be used is provided with a phonograph "jack", the corresponding type "plug" should be connected to the shielded lead, the outside metal shielding being connected to the frame or ground side of the plug and the inside insulated wire being connected to the high (tip) side of the plug. With the receptor placed conveniently close to the associated receiver or amplifier, the phonograph plug may be inserted and the receptor is ready for use. (See PHONO FEED THROUGH below.) When terminal strips or binding posts are used, the shielded lead from the receptor connects directly to these points without additional parts. In all cases, the outside shielding connects to the terminal which connects directly (or through a coupling capacitor) to the chassis.

If the receiver has no "Phone" or "Television Sound" terminals, the additional switch and terminals can be installed by any competent radio service man.

CONNECTIONS TO AN AC-DC RECEIVER

This receptor is not recommended for use with AC-DC receivers or amplifiers of the "hot chassis" type because of the shock and fire hazards involved. It may, however, be used with AC-DC receivers or amplifiers of the type in which the power line is isolated from the chassis. Connection to such a receiver or amplifier should be made only with the approval of a competent service man. In using the receptor with such a receiver or amplifier, the line cord plug should be reversed in the power outlet to find the position which causes least hum. In some instances it may be found that operation from power lines which are not properly grounded will not be satisfactory.

PHONO FEED THROUGH

To eliminate the necessity of installing additional switches or the bother of disconnecting the receptor when it is desired to use the phonograph, the Meissner Model 8C FM Receptor now has a phono feed-through switch. A standard phono input jack will be found on the rear skirt of the receptor chassis and the phonograph may be plugged directly into this jack. A single pole double throw switch with click filter is actuated by a cam on the shaft of the combination volume on-off switch of the receptor. When the receptor is turned 'off' the switch is so thrown that the phono output simply goes through the receptor and comes out the audio out-

©John F. Rider

put cable of the receptor which is connected to the receiver or amplifier. When the receptor is turned 'on' the phono output is disconnected and normal operation of the receptor is obtained.

No attempt should be made to feed the output of the new magnetic pickups through the receptor. The additional length of shielded cable and the unshielded switch contacts and connecting wires may result in excessive hum and extraneous noises. Furthermore, it was pointed out that the receptor should not be operated into a preamplifier of the type used in conjunction with these magnetic pickups.

OPERATING THE RECEPTOR

Turn the left hand control knob clockwise until the click is heard and the dial scale is illuminated. The radio receiver or amplifier to which the receptor is connected must also be turned on and its selector switch set to the appropriate position, that is, to "Phonograph" in case the receptor is connected to the phono input. Allow period of about 30 seconds warm-up time. Now with the receptor volume control turned counter-clockwise, advance the volume control of the receiver or amplifier until the hum level is objectionable; then back up the control until the hum level reaches an acceptable level. This is the correct operating point for the receiver or amplifier volume control and it should be returned to approximately this setting whenever the receptor is used. If the above procedure is not used for determining the correct setting of the receiver or amplifier volume control, then unsatisfactory reception may be the result due to the overload and distortion in the receptor. Stations are selected by the right hand or tuning knob. Proper tuning will be accomplished when maximum volume level and maximum noise reduction have been attained. Although these points are very nearly coincident, tuning should always be accomplished by tuning for the "no noise" point after the maximum volume point has been located.

It is characteristic of FM receptors using the "ratio detector" system to show three points of tuning, located very close together on the dial, for each station. Only the center point of these three points will give best noise reduction, and this is the one that should always be chosen.

ALIGNMENT

The equipment required for proper alignment of this receptor is an unmodulated RF signal generator which will cover 10.7 megacycles and a range of 88 to 108 megacycles, and a DC voltmeter having a low range of 1 to 5 volts DC.

Connect the positive lead of the DC voltmeter to pin #5 of the 6AL5 detector tube, and the negative lead to pin #7 of the 6AL5. Apply an unmodulated 10.7 megacycle signal to the grid of the second 6BA6 IF amplifier tube, through an .05 microfarad coupling condenser. Tune the bottom adjustment screw of the detector coil for maximum indication on the DC voltmeter. This completes this part of the adjustment.

Next, locate the 220 ohm resistor which is connected to the center lug of three lugs of the detector coil (on the side next to the 6AL5 socket). Connect the negative lead of the DC voltmeter to the junction of this 220 ohm resistor and the lug on the support post. Connect the positive lead of the voltmeter to the receptor chassis. With the 10.7 megacycle signal still applied to the grid of the second 6BA6, tune the top adjustment screw of the detector coil for a point of zero voltage. If more than a half turn adjustment was necessary in either of the preceding steps, then both of the adjustments should be repeated.

I F ALIGNMENT

Without changing the signal generator frequency, introduce the 10.7

©John F. Rider

megacycle signal at a relatively high level into the antenna terminals. Connect the DC voltmeter between pins #5 and #7 of the 6AL5 detector tube. Rotate the tuning knob slightly to determine that the receptor is not receiving a harmonic of the signal generator, and is receiving the 10.7 megacycle signal. Adjust both top and bottom screws of the two IF transformers for maximum DC indication on the meter, keeping the signal level from the generator low enough so that this DC voltage does not exceed 5 volts.

R F ALIGNMENT

The RF section contains a double converter system in which the oscillator operates at one half signal frequency, minus 5.35 megacycles. The image frequency is so far away from the signal frequency that it is normally not necessary to locate or pay any particular attention to the image during the alignment procedure. The DC voltmeter should be connected to pins #5 and #7 of the 6AL5 as it was during the alignment of the IF. Since the chassis must be removed from the cabinet and away from the dial scale for any alignment work, index points have been stamped on the dial backing plate to facilitate alignment. Rotate the tuning knob until the gang condenser is in the fully meshed position. and index the pointer with the calibration marker line farthest from the dial drum. Now rotate the gang condenser until the pointer is indexed with the marker line nearest the dial drum. The receptor should now be tuned to 108 megacycles. If the signal generator indicates that it is not tuned to 108 megacycles, rotate the oscillator trimmer (nearest the dial drum) a small amount until the signal is tuned in with the maximum voltage indication on the meter. The receptor is now properly calibrated to the dial markers and the antenna trimmer (farthest from the dial drum) and the converter trimmer (center) should be adjusted for maximum voltage indication on the DC voltmeter. The converter trimmer has a slight effect on the oscillator circuit and the tuning knob should be rocked back and forth slightly during the alignment of the converter trimmer in order to locate the point of maximum output. This completes the alignment of the receptor. The sensitivity should be checked over the band and normally should not vary more than approximately 6 db.

SERVICE DATA

Power consumption - 35 watts (at normal Line)
Intermediate Frequency - 10.7 megacycles
Tuning range - 88 to 108 megacycles

Voltage Chart - The voltages tabulated in the table below are the correct voltages which should be measured between the socket terminal and chassis with nominal line voltage and no signal. All voltages measured with a high impedance voltmeter. Allowance should be made for loading if a low impedance voltmeter is used for checking.
*Electronic type meters may indicate a slightly negative voltage at this terminal.

VOLTAGE CHART

Terminal Number	1	2	3	4	5	6	7	8
6AG5 1st Converter	0	2.5	6.3AC	0	100	100	2.5	
6AG5 2nd Converter	0	1.8	6.3AC	0	110	110	1.8	
6C4 Oscillator	98	---	6.3AC	0	98	---	0	
6BA6 1st IF Amp.	0	0	6.3AC	0	77	77	0.7	
6BA6 2nd IF Amp.	0	0.8	6.3AC	0	80	80	0.8	
6AL5 Detector	0	0	4.7AC	0	Slightly plus	0	Slightly plus	
6X5GT Rectifier	0	0	170AC	Tie point	170AC	114	6.3AC	187
6C4 Audio	55	0	6.3AC	0	AC line 55	0*	2.0	

©John F. Rider

MODELS 8C, 8CK, Rev.

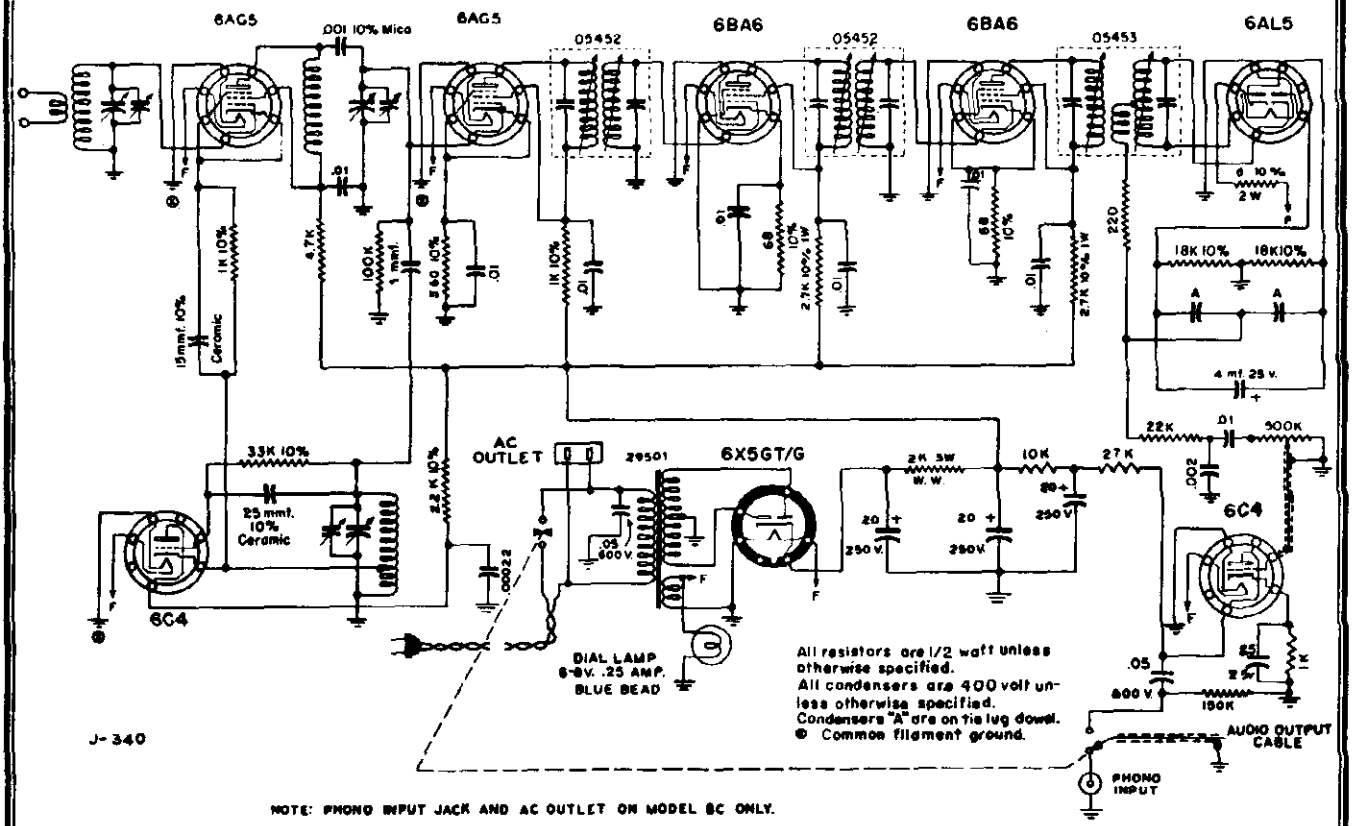

NOTE: PHONO INPUT JACK AND AC OUTLET ON MODEL 8C ONLY.

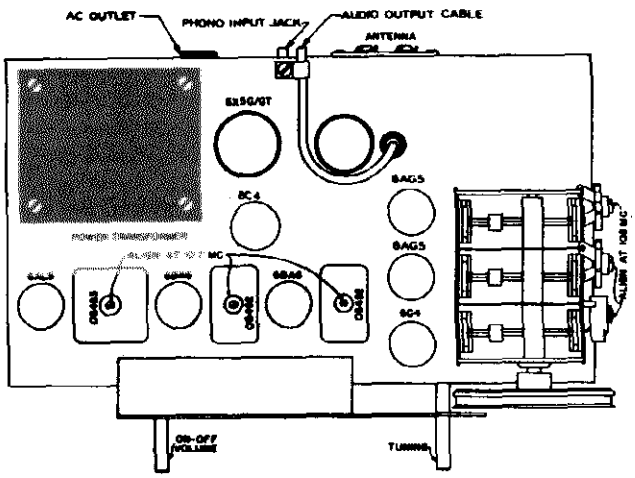

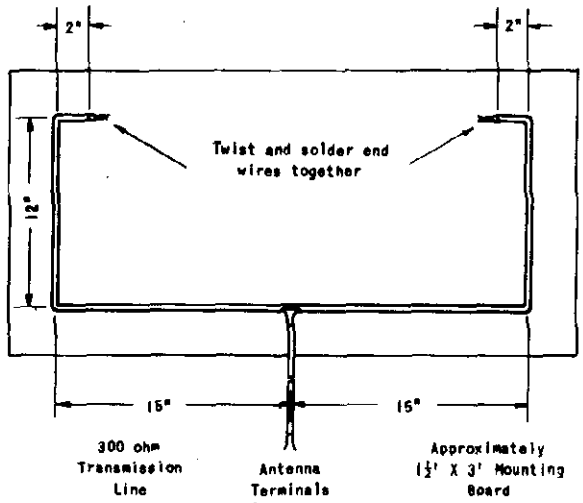

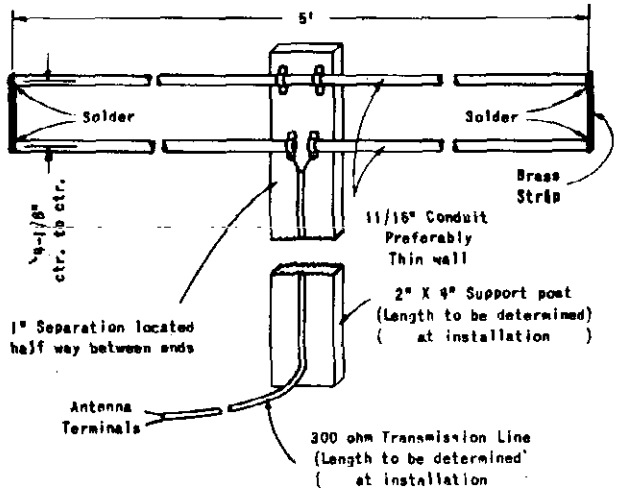

MEISSNER AM-FM RADIO-PHONOGRAPH
MODEL 16A

Installation-Operation Instructions

Specifications

Power Supply: 105-120 volts, 50-60 cycles.
CAUTION: DO NOT ATTEMPT TO OPERATE ON OTHER SUPPLY.
Power Consumption: 130 watts.
Type of Circuit: Superheterodyne.
Intermediate Frequencies: AM 455 kc.
FM 10.7 mc.
Pointer Travel: 9".
Tuning Knob Ratio: 18:1.
Antenna Impedance: Broadcast - Standard
F M - 300 ohms

Nominal Performance

Sensitivity: 5 microvolts AM.
Approximately 10 microvolts for 30 db quieting on FM.
Audio Fidelity: Flat within ±2 db from 100 to 10,000 cycles, tone controls clockwise.
Band Width at 1000 kc - 7 kc at 2X down.
Output: 8 watts at 5% distortion.
Tone Control Action:
Bass boost at 40 cycles plus 18 db.
Treble suppression at 8,000 cycles - 13 db.
Hum: 58 db below full output, full bass boost (on phono).

Antenna - Ground

There is a 5 terminal strip near the back of the chassis for connection to the FM antenna, AM antenna, and ground. the FM antenna may be indoors or outdoors, preferably of the folded dipole type. The two left-hand terminals marked FM are for connection of the twin lead 300 ohm transmission line from the FM antenna.

A separate AM antenna may be used by connecting to the AM antenna terminal at the right, or the FM antenna and transmission line may be used as the AM antenna. This is done by connecting a jumper wire between terminal X and the AM antenna terminal.

A heavy ground connection, as short as possible, should be connected to the ground terminal at the center. Cold water pipes or a galvanized rod driven several feet into the ground make good grounds, but the use of hot water, steam pipes, or metal conduit should be avoided. The use of a good ground connection will do much to minimize the pickup of electrical interference carried into the tuner by way of the power line.

Tone Controls

Bass: 18 db control at 40 cycles, 12 db at 100 cycles.
Treble: 10 db control at 6000 cycles, 15 db at 10,000 cycles.

©John F. Rider

RESISTANCE READINGS in ohms

Pins to Chassis

Sw. Pos.	Tube	Pin 1	Pin 2	Pin 3	Pin 4	Pin 5	Pin 6	Pin 7	Pin 8	Pin 9
AM	6BA6 R F	2.2 Meg.	0	--	0	5.1K	5.1K	68		
AM	6BE6 Conv.	22K	0.5	--	0	5.1K	5.1K	2.2 Meg.		
AM	6BA6 1st IF	2.2 Meg.	470	--	0	5.1K	52K	470		
AM	6BA6 2nd IF	680K	470	--	0	6.1K	52K	470		
AM	6AL5 Det.	0	1.1 Meg.	--	0	470	Inf.	130K		
AM	12AY7	35K	500K Vol.Cont.	1K	--	--	21K	470K	1K	0
FM	6AG5 R F	0	120	--	0	14.4K	14.4K	120		
FM	12AT7 Conv.	14.4K	470K	2.2K	---	--	14.4K	10K	0	0
FM	6BA6 1st IF	1.0 Approx.	0	--	0	16.1K	16.1K	68		
FM	6BA6 2nd IF	1.0 Approx.	0	--	0	16.1K	16.1K	68		
FM	6AL5 Det.	Inf.	Inf.	2.0 Approx.	0	6.8K	Inf.	6.8K		
FM	12AY7	40K	500K Vol.Cont.	1K	--	--	24K	470K	1K	0
PHONO	12AY7	40K	500K	1K	--	--	24K	470K	1K	0

Power Amplifier

		Pin 1	Pin 2	Pin 3	Pin 4	Pin 5	Pin 6	Pin 7	Pin 8
FM	6J5	0	--	84.6K	Tie Lug 40K	1 Meg.	Tie Lug 47K	0	50.kK
FM	6SN7	470K	116K	3.3K	470K	116K	3.3K	0	--
FM	6V6GT #1	0	*	16.1K	15.6K	220K	0	*	AVE 290
FM	6V6GT #2	0	*	16.1K	15.6K	220K	Inf.	*	AVE 290
FM	5V4G	Inf.	16.2K	Inf.	70	Inf.	70	Inf.	16.2K

* Pins 2 and 7 are not returned to chassis.

©John F. Rider

© John F. Rider

VOLTAGE CHART

AC with 1,000 ohms/volt
DC with 20,000 ohms/volt

117 V AC Line

Tube	Pin 1	Pin 2	Pin 3	Pin 4	Pin 5	Pin 6	Pin 7	Pin 8	Pin 9
			A.M.	No Signal					
6BA6 R F	Slightly negative	0	6.3AC	0	88	88	1.0		
6BE6 Conv.	Slightly negative	0	6.3AC	0	88	88	Slightly negative		
6BA6 1st IF	Slightly negative	1.6	6.3AC	0	88	47	1.6		
6BA6 2nd IF	Slightly negative	1.5	6.3AC	0	1.5 1.5	45	1.5		
6AL5 Det.	0	Slightly negative	6.3AC	0	1.5	0	Slightly negative		
12AY7 Aud.	80	0	1.7	6.3AC	6.3AC	55	0	0.85	0
				F.M.					
6AG5 R F	0	1.0	6.3AC	0	92	92	1.0		
12AT7 Conv.	100	0	2.4	6.3AC	6.3AC	97	Slightly negative	0	0
6BA6 1st IF	0	0	6.3AC	0	73	73	0.7		
6BA6 2nd IF	0	0	6.3AC	0	73	73	0.7		
6AL5 Det.	Slightly negative	Slightly positive	4.6AC	0	Slightly positive	0	Slightly negative		
12AY7	87	0	1.9	6.3AC	6.3AC	60	0	0.92	0
				PHONO					
12AY7	160	0	3.4	6.3AC	6.3AC	108	0	1.6	0
				P.A. with Set on A.M.					
6J5	0	6.4AC	173	Tie Lug 245	10.5	Tie Lug 72	0	75	
6SN7	0	155	7.1	0	155	7.1	0	6.4VAC	
6V6GT #1	0	*6.4AC	290	270	0	0	*6.4AC	15	
6V6GT #2	0	*6.4AC	290	270	0	0	*6.4AC	14	

*Measured between pins 2 and 7.

MODEL 16A

AM Alignment

I F Alignment

Set selector switch on receiver to AM. Set tuning dial to 1600 kc.
Set signal generator to 455 kc with 30% modulation at 400 c.p.s.
Connect high side of signal generator to pin 7 of 6BE6 through 0.1 mfd. condenser, low side to chassis. Connect output meter to high side of volume control and chassis.
Using as low output from signal generator as possible, adjust top and bottom cores of the three AM I F transformers for maximum output.

R F Alignment

Fully mesh gang condenser and adjust pointer position to match scratch mark at left on dial backing plate.
Set receiver and signal generator to 1400 kc.
Move high side of signal generator to antenna terminal through 200 μμfd. condenser. Adjust antenna and R F trimmers for maximum output.
Adjust oscillator trimmer at top of large front gang section for maximum output. Adjust R F trimmer at top of large middle gang section for maximum output.

FM Alignment

I F Alignment, using FM signal generator and oscilloscope.

Set selector switch on receiver to FM.
Connect high side of FM signal generator through .01 mfd. condenser to pin 1 of 6BA6 2nd I F amplifier. Connect low side to chassis. Connect vertical input of oscilloscope to point A, the ground to chassis. Connect horizontal input of oscilloscope to "Sync" terminal, the ground to ground terminal of signal generator, using a phasing control to compensate for phase shift.
Set deviation to 200 kc at 400 c.p.s. modulation on 10.7 mc. Set output to approximately 0.1 volt. Set horizontal sweep selector of oscilloscope to horizontal amplifier. Adjust both cores of ratio detector coil, bottom slug for maximum amplitude and top slug for symmetrical pattern with a linear center portion.
Move high side of signal generator to pin 1 of 6BA6 1st I F amplifier, using same dummy. Set deviation to 150 kc. Adjust both cores of 2nd I F transformer for maximum amplitude and symmetry of pattern.
Move high side of signal generator to pin 2 of 12AT7 converter tube, using same dummy. Adjust both cores of 1st I F transformer for maximum amplitude and symmetry of pattern.
With same signal generator connection, check adjustment of cores of 2nd I F transformer. Ordinarily, readjustment of the ratio detector cores is unnecessary. If the pattern is not symmetrical with a linear center portion, the entire alignment procedure must be repeated.

I F Alignment, using AM signal generator and V T V M.

Set selector switch on receiver to FM.
Connect high side of signal generator to pin 1 of 6BA6 2nd IF amplifier through .01 mfd. condenser. Connect low side to chassis. Set generator to 10.7 mc. with no modulation and set output to about 0.1 volt. Connect d.c. probe of VTVM to pin 7 of 6AL5 ratio detector and connect common to chassis. Adjust bottom core of ratio detector coil for maximum negative reading.
Connect d.c. probe to point "A" and adjust top core for zero reading. Repeat these two steps.
Connect d.c. probe to pin 7 of 6AL5. Connect high side of signal generator to pin 1 of 6BA6 1st IF amplifier, using same dummy. Adjust top and bottom cores of 2nd IF transformer for maximum negative reading.

©John F. Rider

Connect signal generator to pin 2 of 12AT7 converter, using same dummy. Adjust top and bottom cores of 1st IF transformer for maximum negative reading.

With same signal generator connections, re-check core adjustments of 2nd IF transformer for maximum negative reading.

Connect d.c. probe to point "A" and re-check for zero reading. Little or no further adjustment of the top core of the ratio detector coil should be necessary. If the reading is much off from zero, the entire alignment procedure should be repeated.

R F Alignment

Set selector switch on receiver to FM.

Connect high side of FM signal generator through .01 mfd. condenser to pin 2 of 12AT7 converter. Connect low side to chassis.

Set signal generator and receiver to 108 mc. Set deviation to 75 mc at 400 c.p.s. modulation.

Connect output meter to point "A" and chassis.

Carefully adjust oscillator trimmer, at top of small front gang section, for maximum output, starting at minimum trimmer capacity and selecting the first response reached. Use as low output from signal generator as is practical.

Set signal generator and receiver to 88 mc. Squeeze or spread oscillator coil to obtain maximum output.

Repeat the above two steps until no further improvement results.

Connect high side of signal generator to pin 1 of 6AG5 RF amplifier, using same dummy. Set signal generator and receiver to 108 mc. Adjust RF trimmer at top of small center gang section, for maximum output, rocking tuning dial slightly to compensate for oscillator pulling. Reset oscillator trimmer to match pointer to 108 mc. dial scale mark.

Set signal generator and receiver to 88 mc. Squeeze or spread RF coil to obtain maximum output, rocking tuning dial. Repeat RF trimmer adjustment at 108 mc. and coil adjustment at 88 mc. until no further improvement results, resetting oscillator trimmer if necessary.

Connect terminals of signal generator to antenna terminals, using a 150 ohm carbon (non-inductive) resistor in series with each terminal.

Set signal generator and receiver to 108 mc. Adjust antenna trimmer, at top of small rear gang section for maximum output.

Set signal generator and receiver to 88 mc. Squeeze or spread antenna coil secondary for maximum output. Repeat last two steps until no further improvement results.

Operation

AM reception is obtained by turning the selector switch counter-clockwise to the AM position. The tuning knob is rotated to select stations. Proper tuning is indicated by maximum closing of the tuning eye.

FM reception is obtained by turning the selector switch to the FM position. Tuning is accomplished as for AM, normally, three points of reception close together will be observed on FM stations. The correct point for reception is the center one, as indicated by the tuning eye.

Phonograph operation is obtained by turning the selector switch clockwise to the phono position and operating the automatic record-changer according to instructions.

Bass boost is obtained by rotating the bass control counterclockwise. Treble suppression is obtained by rotating the treble control counter-clockwise.

©John F. Rider

MODEL 16A

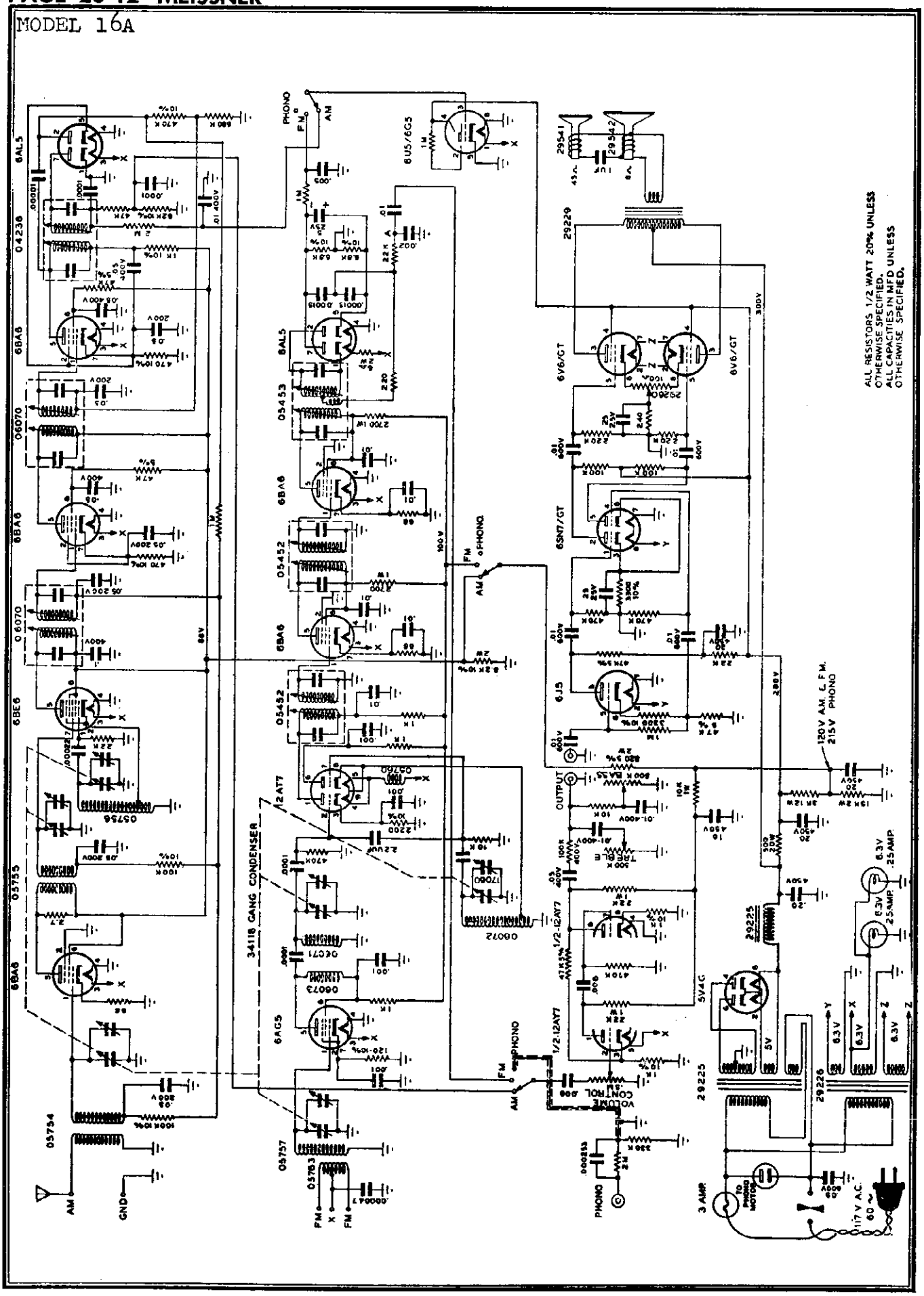

©John F. Rider

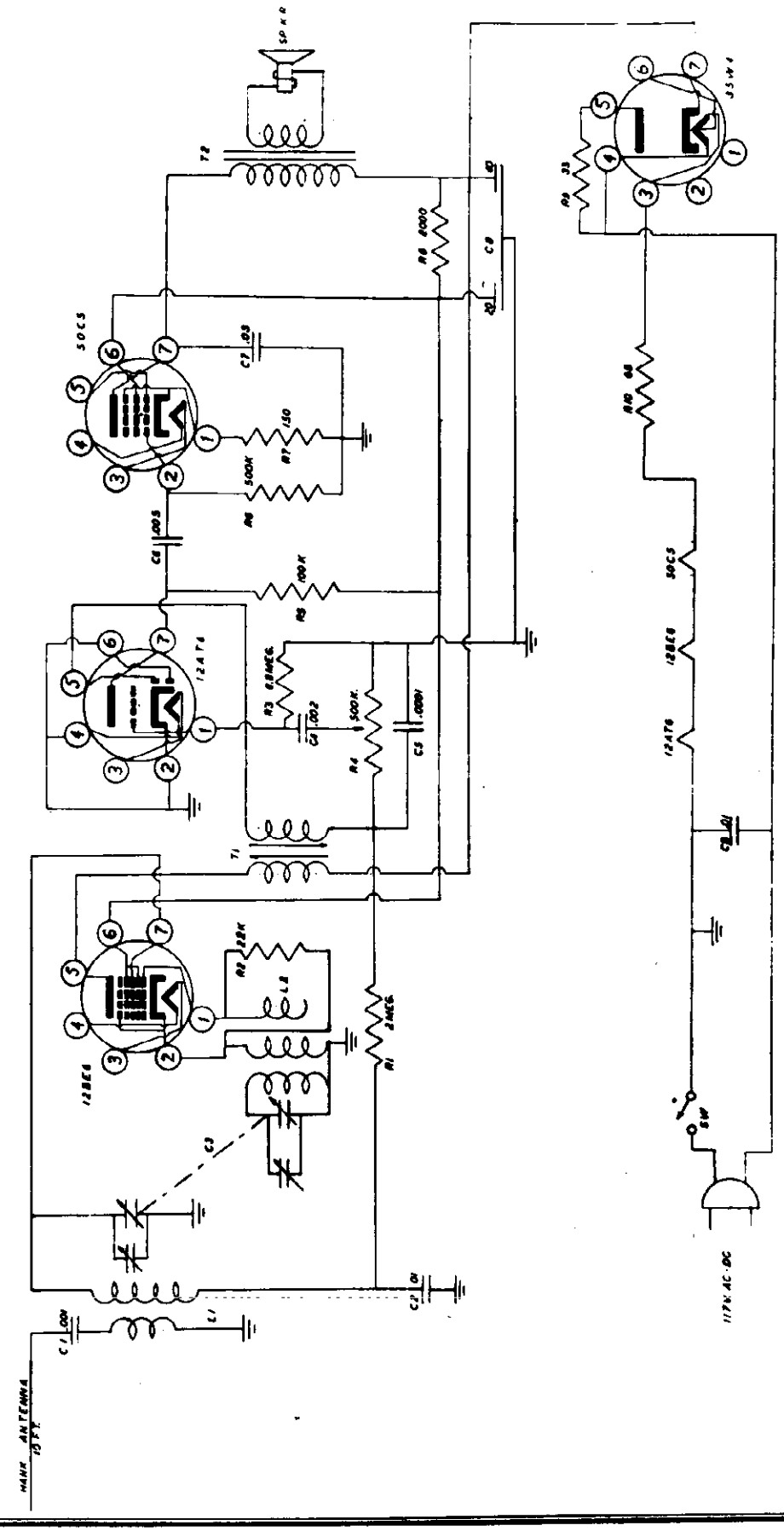

©John F. Rider

MODEL 1010

	ANTENNA	GEN. COUPLING	GEN. FREQ.	RADIO DIAL	OUTPUT METER	ADJUST
1.	.02mfd	Hi side to front section of tuning condenser	455 kcs	closed max. cap.	across V.C.	T1 bottom slug first for max. output T1 top slug for max. output.
2.	50mmf	Ant. coil Ant. input Remove hank	545 kcs	closed max. cap.	across V.C.	adjust osc. trimmer (front section tuning condenser) for max. output
3.	50mmf	same as No. 2	1500 kcs.	1500 kcs.	across V.C.	adjust rear section tuning condenser trimmer for uniform output between 545kc and 1500 kc

Circuit Location	Part No.	Description
C1		Condenser, paper tubular, .001mfd., 400v
C3	29A002	Condenser, variable 2 gang
C2		Condenser, paper tubular, .01 mfd., 400v
C4		Condenser, paper tubular, .002mfd., 400v
C5		Condenser, mica, .0001mfd., 600v
C6		Condenser, paper tubular, .005 mfd., 400v
C7		Condenser, paper tubular, .03 mfd., 400v
C8	31E003	Condenser, tubular cardboard, 40X20mfd, 150v
C9		Condenser, paper tubular, .01 mfd., 400v
R1		Resistor, composition, 2 meg., ½ watt
R2		Resistor, composition, 22k., ½ watt
R3		Resistor, composition, 6.8 meg., ½ watt
R4	26G008	Resistor, variable, 500k ohms
R5		Resistor, composition, 100k., ½ watt
R6		Resistor, composition, 500k., ½ watt
R7		Resistor, composition, 150 ohms, 1 watt
R8		Resistor, composition, 2k., 1 watt
R9		Resistor, composition, 33 ohms, ½ watt
R10		Resistor, wire wound, 65 ohms, 5 watts
L1	35D004	Coil, antenna
L2	35C002	Coil, oscillator
T1	18A005	Transformer, I.F. 455 KCS.
T2	15D001	Transformer, audio output
SP'K'R	19H100	Speaker, 4" P. M.
12BE6		Tube, 12BE6
12AT6		Tube, 12AT6
50C5		Tube, 50C5
35W4		Tube, 35W4
	5D004	Knob, pointer, walnut, split spline
	5D005	Knob, pointer, ivory, split spline
	5D006	Knob, walnut, split spline
	5D007	Knob, ivory, split spline
	11G007	Cover, back, chipboard
	40B011	Cabinet, model 1010 walnut
	40B010	Cabinet, model 1010 ivory

©John F. Rider

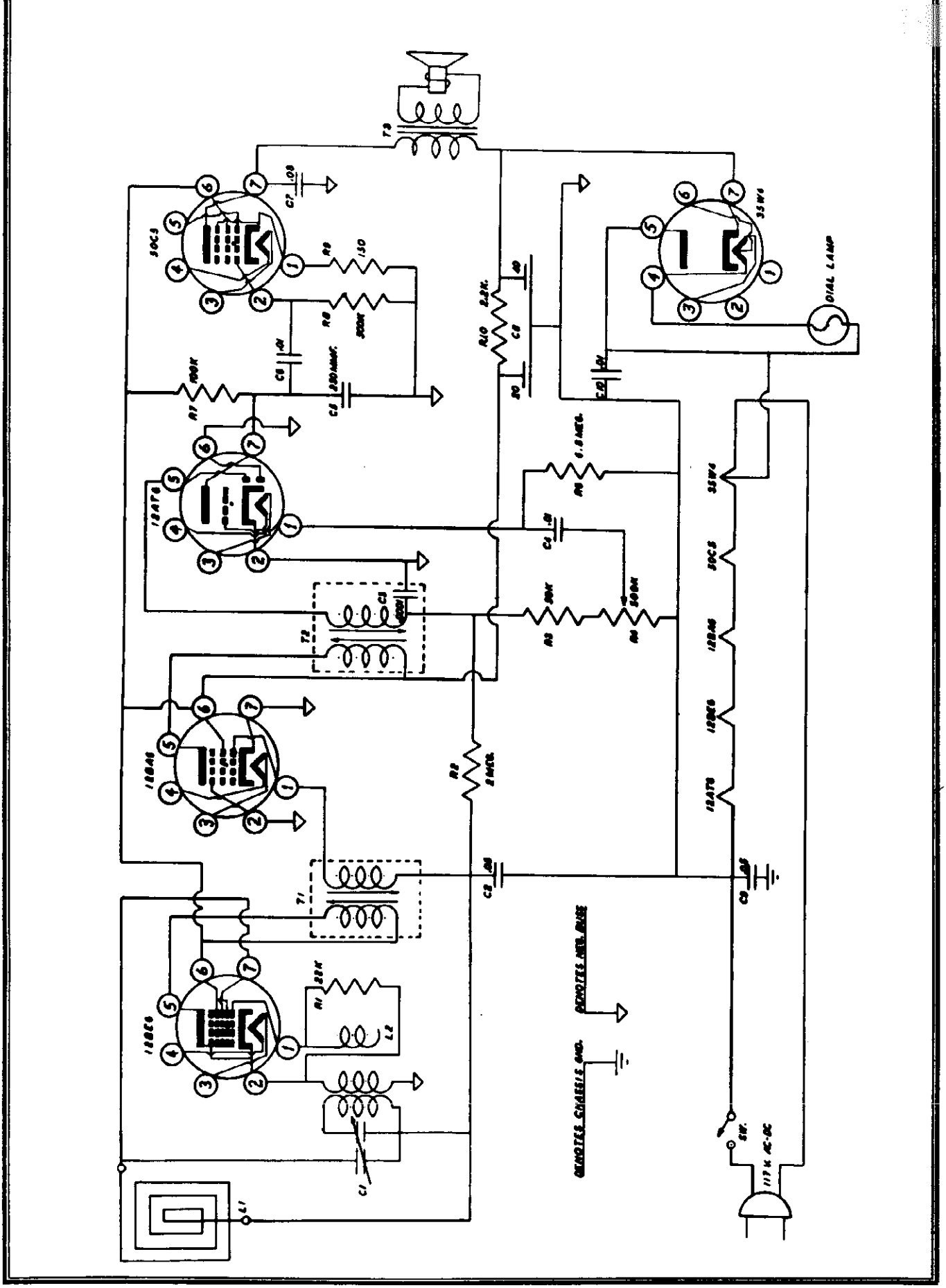

©John F. Rider

MODEL 1020

	ANTENNA	GEN. COUPLING	GEN. FREQ.	RADIO DIAL	OUTPUT METER	ADJUST
1.	.02mfd.	Connect gen. hi side to osc. section of tuning condenser. Connect gen. gnd. to radio neg. buss.	455 kcs.	open min. cap.	across V.C.	Adjust T2 top & bottom slug for max output. Adjust T1 top and bottom slugs for max. output
2.	50mmf	Connect gen. Hi side to antenna lead. (rear section tuning condenser) Connect gen. gnd. to radio neg. buss.	1400 kcs.	1400 kcs.	across V.C.	Tune osc. trimmer for max output.
3.	50mmf	same as No. 2.	600 kcs.	600 kcs.	across V.C.	adjust for uniform output between 1400 kc and 600 kc.

Circuit Location	Part No.	Description
R1		Resistor, composition, 22k, ½ w.
R2		Resistor, composition, 2 meg., ½ w.
R3		Resistor, composition, 50k, ½ w.
R4	26G009	Resistor, variable, 500k, w/switch
R6) C4)	40L103	Caprister, 6.8 meg., ½w. .01 mfd, 400v
R7&C5	40L101	Caprister, 100k, ½ w., 250mmf., 400v.
R8&C6	40L102	Caprister, 500k, ½w., .01 mfd., 400v.
C1	29A003	Condenser, variable 2 gang
R9		Resistor, 150 ohms, 1 watt
R10		Resistor, composition, 2.2k., 1 watt
C5-C9		Condenser, paper tubular, .05mfd., 400v.
C3		Condenser, ceramic, 100mmf., 400v., (inT2)
C7		Condenser, paper tubular, .03mfd., 400v.
C8	31E003	Condenser, electrolytic, 40X20mfd, 150v.
C10		Condenser, paper tubular, .01mfd., 400v.
L1	35D003	Loop, antenna
L2	35C001	Coil, oscillator, with capacity winding 50mmf
T1	18A005	Transformer, I.F. 455 kc.
T2	18A006	Transformer, I.F. 455 kc. with 100mmf. diode filter
T3	15D001	Transformer, audio output
SPKR	19H101	Speaker, 4" P.M.
Dial Lamp		Lamp, dial. miniature bayonet No. 47
Sw.		Switch, off-on, on vol. cotrol R4
	40B008	Cabnet, plastic, walnut
	40B009	Cabinet, plastic, ivory
	2R100	Pointer, dial
	2Q103	Glass, dial plate with calibration
	5D008	Knob, push on, split knurl
12BE6		12BE6
12BA6		12BA6
12AT6		12AT6
50C5		50C5
35W4		35W4
	11G006	Cover, back, chipboard

©John F. Rider

MODEL Micro
Pocket Radio

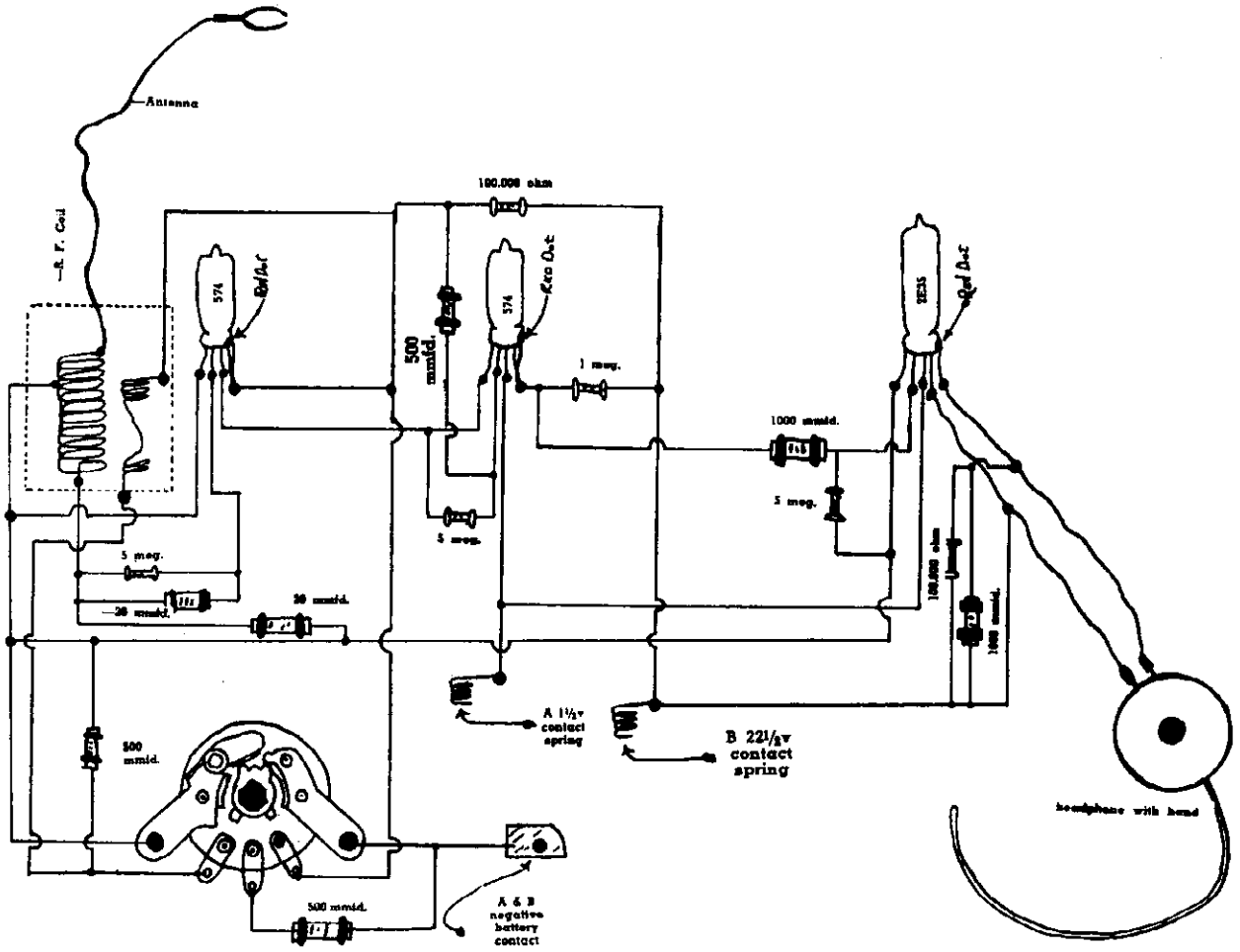

Your Micro Radio kit contains all the necessary parts for building the complete set.

You will also need solder, soldering iron, and a screw driver.

The pictorial schematic diagram and photographs of both sides of the chassis show correct placement of parts.

To construct your set—

1. Solder in wires that compose the circuit.
2. Install condensers.
3. Install resistors.
4. Install tubes—IMPORTANT! The plate lead on these tubes are color coded with a red dot on the side of the glass tube envelope. This will be referred to as No. 5 lead. The leads of each tube are:
   - No. 5—Plate.
   - No. 4—Screen .
   - No. 3—Filament positive.
   - No. 2—Control grid.
   - No. 1—Filament negative.
5. Attach RF coil to the chassis as shown in photo.
   This coil must be attached in such a manner that it misses the large screw hole on the bottom of the chassis, to allow the radio to be cased without damage to the coil.
6. Solder the headphone leads to the screen and plate of the output tube.
7. Attach the two contact springs for battery positive contacts.
8. Solder in antenna.
10. Attach clip to the other end of antenna wire.

The instrument is now ready to be tested. Place the chassis in the bottom half of the case, and insert the four self-tapping screws through the case and the chassis. This will allow the chassis to be held firmly in place, and thus enable you to insert the batteries to make contact with the negative and positive contacts.

Attach the metal clip on the antenna to an aerial connection—such as the metal portion of a

©John F. Rider

MODEL Micro
Pocket Radio

telephone, lamp, outside antenna, or similar object. Now insert the batteries, making certain that the metal plate on the bottom of the case slide touches the bottom of both batteries, and the small metal plate on the chassis below coil. Now put the iron core (slug) halfway in the RF coil. It is wise to attach the small plastic button temporarily on the bent screw in the iron core for easier tuning.

Turn the switch on, and slide the slug slowly back and forth in the coil until you hear a whistle, which is the signal of a radio station. (If this whistle is not heard, you probably have the connections to the tickler winding reversed).

After you hear the whistle, back the volume control down until the whistle disappears, then retune by moving the iron core back and forth just a trifle until the station is properly tuned in.

If your radio brings in stations, it is now ready to be cased. Remove the batteries, then place the spring over the bent brass screw of the slug, and the brass washer on top of this spring. Now put the top half of the case in place, in such a manner that hte end of the brass screw in the slug will come through the slot provided for tuning.

Tighten the four screws in the case. Cut off the brass screw so that it does not extend beyond the outside of the case more than 1/16". Screw the plastic tuning knob to the threaded portion of the brass screw.

After this is done, place the batteries back in the instrument in the proper manner, making sure that the metal portion of the bottom of the slide makes contact with the bottom of the A battery, the bottom of the B battery, and the metal plate—and your Micro Radio is complete.

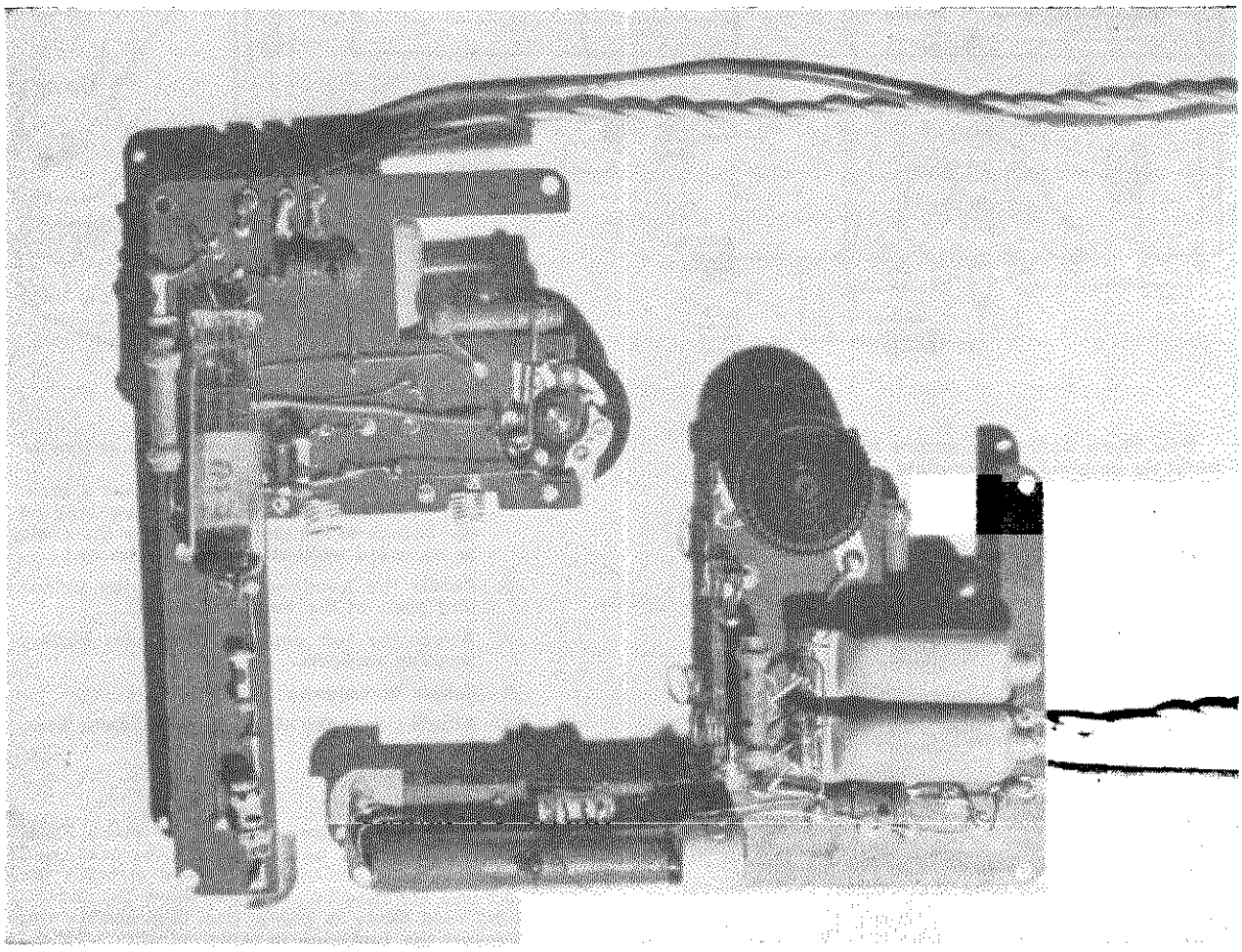

©John F. Rider

©John F. Rider

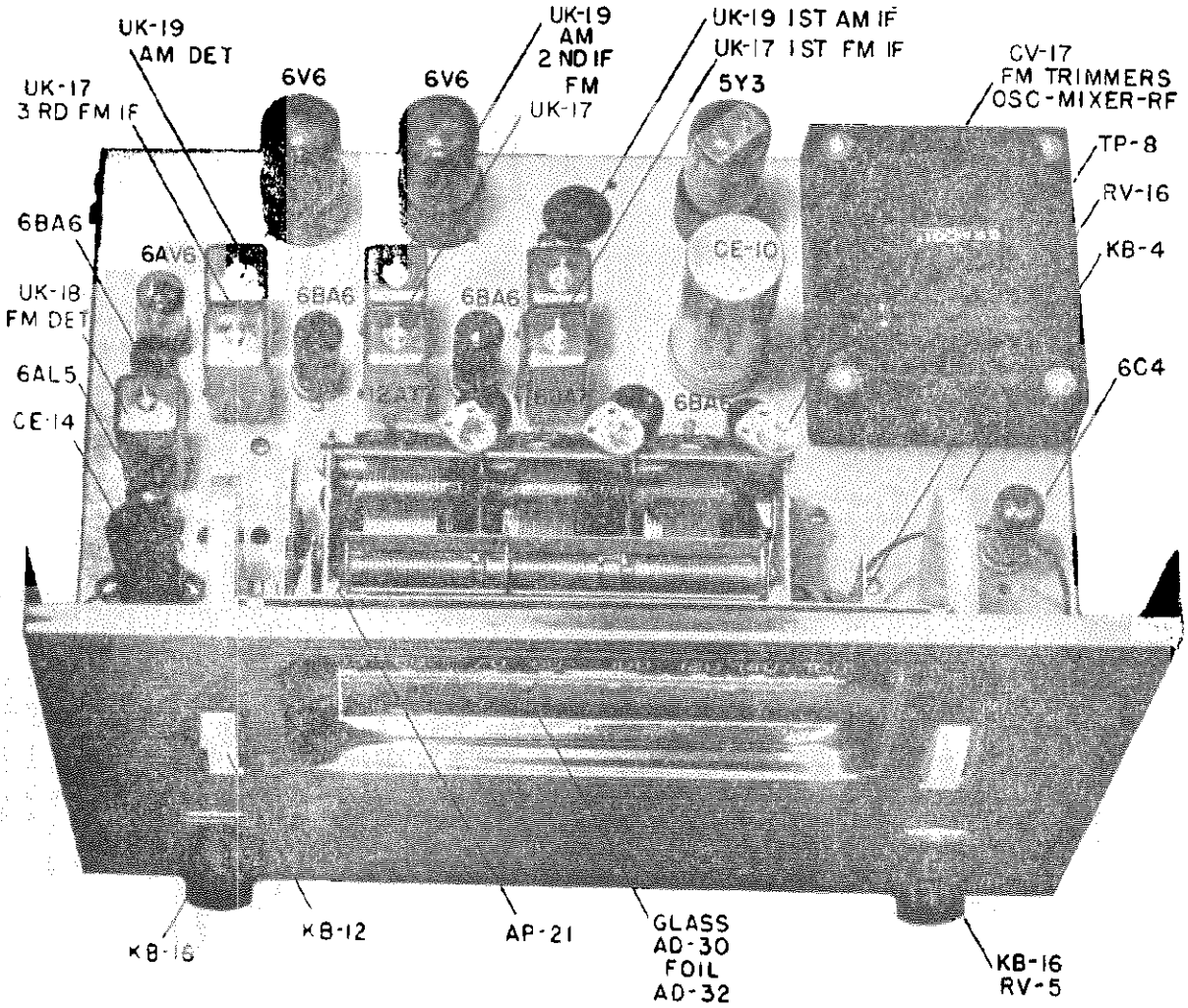

INSTALLATION

The Midwest Radio & Television receivers have built-in antennae for satisfactory reception of signals on the broadcast band, short wave and FM bands where the location is not unfavorable. In homes or apartments where steel is used extensively, such as for beams and concrete reinforcements or lath, or in rural areas distant from the broadcasting stations an FM doublet must be installed. The straight doublet antenna is directional only on the FM broadcast band so that it need be oriented only with respect to the FM transmitter location. The Midwest Model **DP** di-pole is a special design which is not directional and we recommend it for use with Midwest receivers for FM, broadcast and short wave reception.

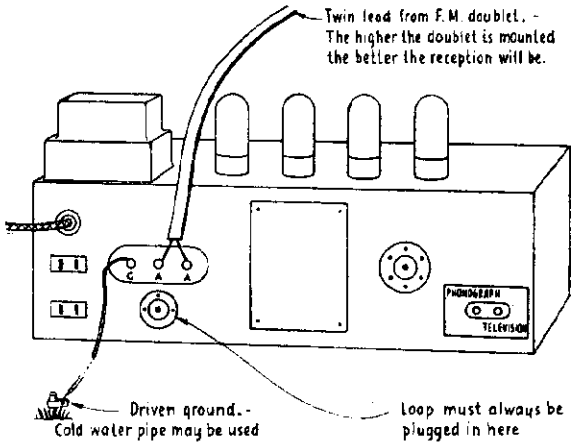

PRECAUTIONS. Be sure that the speaker and Magna Tenna Loop are plugged in, also the flexible dipole leads must be connected to screw strip at "A–A". A ground wire may be connected to "G" but it is usually not needed.

SPECIFICATIONS

Power Requirement: 120 volts, 50 to 60 cycles, 110 watts.
Frequency Coverage:
AM Band–540 to 1600 KC
FM Band–88 to 108 MC
Audio Sensitivity: .05 volts for ½ watt output.
Maximum Undistorted Audio: 10 watts.
AM Sensitivity: 2 to 4 microvolts.
FM Sensitivity: 100 microvolts, quieting signal.
10 microvolts, minimum signal.

Tube Complement:

RF	6BA6	FM Detector	6AL5
Mixer	6BA7	1st AF & AM Det.	6AV6
Oscillator & AFC	12AT7	Phase Inv.	6C4
1st IF	6BA6	AF output	6V6GT
2nd IF	6BA6	AF output	6V6GT
3rd IF, FM	6BA6	Rectifier	5Y3GT

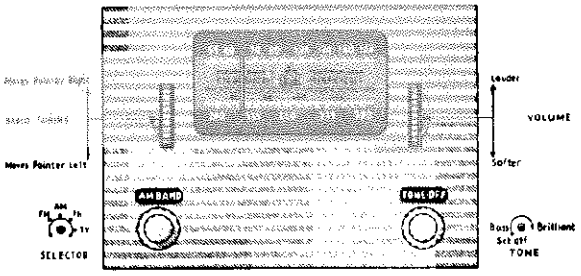

Noise and interference is usually due to causes external to the receiver and requires diagnosis and correction by the local service technician.

Trouble may be diagnosed for this receiver as a standard superheterodyne. The block diagram is printed here.

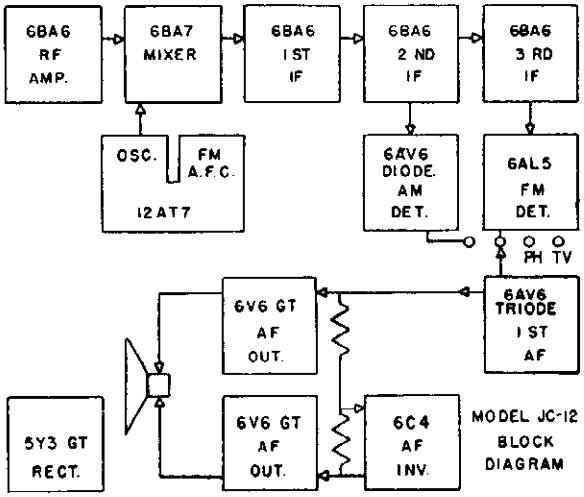

ALIGNMENT

The alignment points are shown on the top and bottom views of the chassis as well as certain parts numbers.

AM IF should be aligned at 456 KC. There are three transformers and six adjustments; the transformers are coupled with less than critical coupling and there is only one peak. Couple the generator into the mixer grid and use either AVC or audio for the output meter.

FM IF should be aligned at 10.7 MC. There are four transformers and eight adjustments, the transformers are over-coupled and must be aligned with a scope and sweep generator.

1. Connect generator to 3rd IF grid and vertical output of scope to the audio of the receiver at any point where sufficient signal is available and phasing can be properly adjusted.
2. Adjust the top screw for greatest length of straight line. This is the secondary winding, the bottom screw should give improvement in signal level.

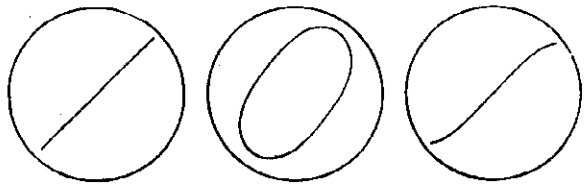

A B C

A does not have the hook indicating that the sweep generator has a greater deviation than the detector capability.

B shows improper phasing of the horizontal sweep with the audio output of the receiver.

C is preferred because it shows the limits of deviation and you obtain it simply by adjusting the deviation (sweep width) control on the signal generator. Approximately 150 KC is normal.

3. Connect generator to 2nd IF gird and adjust the 2nd IF slugs for maximum signal and band width. This you can be sure of by the amount of hook at the ends of the line on the scope. Repeat this procedure for 1st IF grid and mixer grid. Adjust for greatest signal without appreciable loss of band width.

Alternate Method: The IF response of the 1st, 2nd and 3rd transformer may be observed more directly if you use a crystal detector at the plate of the 3rd IF tube and feed the vertical plates of the scope from that point. Use a CW marker at 10.7 to be sure the double peaked response curve straddles the ratio detector response. Observe each stage separately.

Notice: Do not use AM or CM signal to peak the FM transformers. Regeneration may result and bandwidth and noise rejector will be poor, although signal strength will increase.

FM RF should be trimmed at 105 MC. There should not be any reason to adjust the low end but if this is necessary it can be done by distorting the FM coils on the tuning gang.

AM RF should be peaked at the high end with the trimmer and at the low end by core adjustment.

Notice: Use as low signal input as possible for readable output indication. Feed signal in from FM RF generator through 150 ohms in each lead to "A-A." Use 400 ohms in lead from AM RF generator and connect to either "A" terminal.

A very convenient design is shown here schematically of a Crystal probe for detection of resonant response for display on the oscillograph and your available materials will decide the physical design, most important feature is the ability to change the load resistor, R.

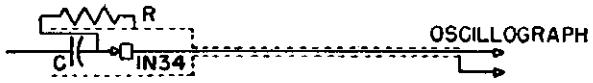

The value for C is limited by the physical size, any capacity greater than 100 mmfd will be satisfactory, the value of R should be 470 ohms when the probe is used in the IF stages to obtain the response of the grid circuit without effects from the tuned plate circuit whereas a value of 470K ohms is alright for general use,

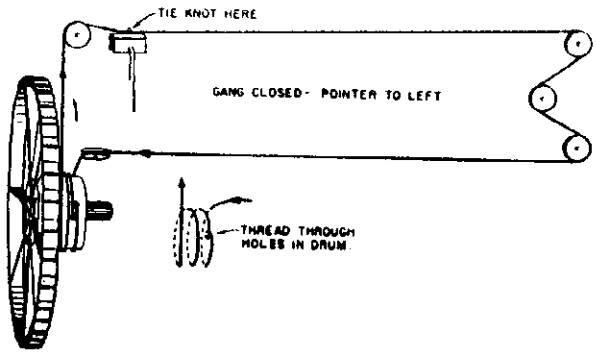

For dial stringing use a light weight dial cord such as Bevin-Wilcox 6-18 Imperial silk cord.

Radio Band	Coil Adj.	Trimmer Adj.
AM	560 KC	1500 KC
FM	.....	105 MC

If replacement parts of identical manufacture and rating are not available for service repairs these should be ordered from Midwest Radio & Television Corporation, giving model number and serial number of the chassis and name of the part.

Repair data for the record changer mechanism is available separately, please specify Model.

The dial calibration for the Band Standard Broadcast, is from 55 to 160, if you add a zero to these numbers they will represent kilocycles. For example 700 kilocycles, WLW, appears on the dial as 70.

Your FM Broadcast band is calibrated in channel numbers, these channel numbers were assigned by the Federal Communications Commission for the convenience of the general public. However, in many parts o fthe country FM stations use a frequency designation so that we repeat the calibration in megacycles on the foil dial.

©John F. Rider

MODELS C-12, RC-12, SK-12; Ch. JC-12

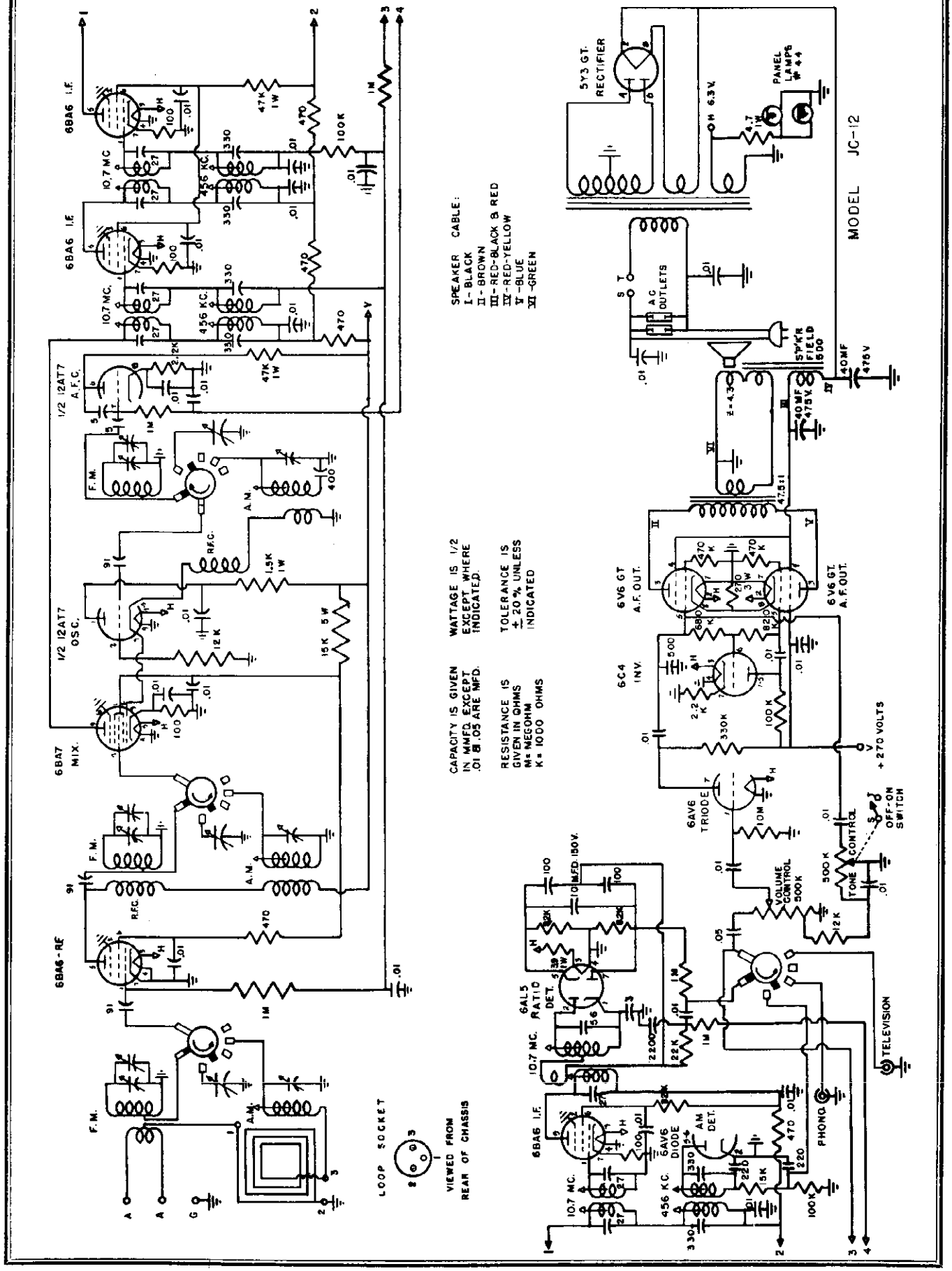

©John F. Rider

MODELS C-16, RC-16,
SK-16; Ch. JC-16

SPECIFICATIONS

Power Requirement: 120 volts, 50 to 60 cycles, 110 watts.
Frequency Coverage:

Band A – 540 to 1600 KC, AM
Band B – 1.6 to 4.7 MC
Band C – 4.7 to 10 MC
Band D – 11 to 22 MC
Band E – 88 to 108 MC, FM

Audio Sensitivity: .05 volts for ½ watt output.

Maximum Undistorted Audio: 10 watts.

AM Sensitivity: 2 to 4 microvolts all bands.

FM Sensitivity: 100 microvolts, quieting signal.
10 microvolts, minimum signal.

Tube Complement:

RF	6BA6	FM Detector	6AL5
Mixer	6BA7	1st AF	6C4
Oscillator	½ 12AT7	2nd AF	6C4
AFC	½ 12AT7	Phase Inv.	6C4
1st IF	6BA6	AF output	6V6GT
2nd IF	6BA6	AF output	6V6GT
AM Detector	6AL5	Rectifiers, two	5Y3GT
3rd IF, FM	6BA6	Tuning Ind.	6U5

INSTALLATION

The Midwest Radio & Television receivers have built-in antennae for satisfactory reception of signals on the broadcast band, short wave and FM bands where the location is not unfavorable. In homes or apartments where steel is used extensively, such as for beams and concrete reinforcements or lath, or in rural areas distant from the broadcasting stations an FM doublet must be installed. The straight doublet antenna is directional only on the FM broadcast band so that it need be oriented only with respect to the FM transmitter location. The Midwest Model **DP** di-pole is a special design which is not directional and we recommend it for use with Midwest receivers for FM, broadcast and short wave reception.

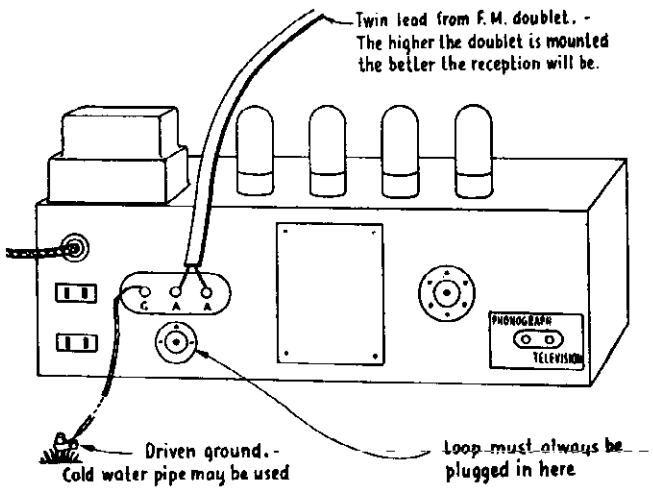

PRECAUTIONS. Be sure that the speaker and Magna Tenna Loop are plugged in, also the flexible dipole leads must be connected to screw strip at "A–A". A ground wire may be connected to "G" but it is usually not needed.

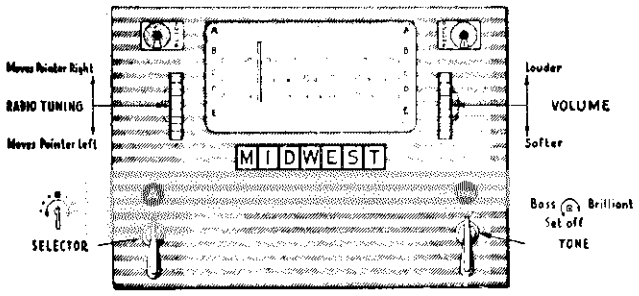

The controls are two wheels whose rims extend through the panel on either side of the dial, and two chrome levers.

Operation is actually simple as ABC if you follow the steps as outlined here.

A. To turn set **ON** rotate the **TONE** lever to the right. Adjust for most pleasing tone after your program is tuned in.

B. Turn **SELECTOR** lever so that desired Radio Band, Phonograph or Television adapter is indicated in the round window above this lever. Note that A is the Standard Broadcast Band.

C. Tune to the desired station by rotating the **TUNING WHEEL** up or down to move the pointer across the dial. For your convenience a **TUNING INDICATOR** is placed above the Tuning Wheel. It may not close entirely or may flicker on noise, the minimum dark area is the point of correct tuning.

D. To increase volume rotate the **VOLUME WHEEL** up. To decrease volume rotate wheel downwards. The **VOLUME INDICATOR** shows a number from 1 to 8 and by noting the number you can set the volume before the set warms up and thus avoid too much or too little volume.

These same steps are described here in greater detail, with suggestions and further information about the use of the controls. Your Midwest receiver provides radio reception, phonograph reproduction and a television adapter position. Radio reception includes the standard American Broadcast band (AM), the FM Broadcast band and three short wave bands where you may receive Amateur, Police, and Commercial stations plus broadcasts on seven International Broadcast bands. These seven International Broadcast bands are indicated in red on the dial.

The automatic record changer will play automatically all records, all speeds and all sizes. After the stack of records is played the changer automatically shuts off. To turn the receiver **ON** rotate the **TONE** control lever clockwise. The **OFF-ON** switch is operated by the first few degrees of rotation of the **TONE** control, after which it serves to change the tone, reducing bass and boosting highs as it is rotated clockwise. Since the best fidelity is obtained when this control is at the intermediate position it is best to leave it in this position until all adjustments are completed. After which it may be returned to the setting most pleasing to you. This will depend somewhat upon the kind of program being received.

© John F. Rider

The next step to select the type of entertainment you wish is to turn the **SELECTOR** lever. The lever has seven positions where the following letters appear in the round window directly above it: **TV, PH, A, B, C, D** and **E**. The letters represent television adaptor, phonograph, and radio bands A–Standard American Broadcast, BCD–short wave bands and E–FM Broadcast.

Having selected one of the radio bands, preferably the American Broadcast band A for first trial, roll the **VOLUME** control wheel up to increase volume until some sound or signal is heard. The position of the volume control is indicated by the numeral in the window above this control.

To tune to any station roll the radio **TUNING** control wheel up or down; upwards motion moves the dial pointer to the right and downwards rotation of the **TUNING** drum moves the pointer to the left.

The dial calibration for the A band, Standard Broadcast, is from 55 to 160; if you add a zero to these numbers they will represent kilocycles. For example 700 kilocycles, WLW, appears on the dial as 70.

Above the tuning control is a rectangular window for the tuning indicator. This feature has been added to assist you in correctly tuning in the station; unless the station is properly "tuned-in" distortion, noise, low volume and poor tone will result. As you tune into a station you will notice that the dark segment closes, as you pass the station the dark segment begins to open again. Proper tuning is indicated when the segment is smallest. You will notice that the indicator will close tighter on the stronger stations or will flicker shut on noise; it is not the amount of closing but the point of minimum dark area that indicates correct tuning for that particular station. Strong stations may cause the tuning indicator to not only close but perhaps even overlap; the correct tuning is then the point of maximum overlap.

The tuning indicator is connected on the FM and Television bands but is not as reliable as on the Standard Broadcast and short wave bands. Many FM and Television signals of acceptable strength will not cause the indicator to close. Stronger signals may produce two points where the tuning indicator begins to close and in this case you should tune between these points; this is quite accurate.

The short wave bands cover completely all frequencies above the Broadcast band to 22 megacycles in three bands. These are all calibrated in megacycles. Amateur, Police and Commercial transmissions will be heard on band B. This type of transmission is usually on intermittently and you may spend considerable time locating stations. Bands C and D provide reception in seven International Broadcast Frequency Bands in addition to government, amateur and commercial stations.

The International Frequency bands are indicated on the dial by solid red areas in the calibration base line; as suggested on the dial, band C will be most active at night and band D most active by day. Because of the great distances involved and effects of weather and solar radiation on high frequency transmissions the reception on these bands is not always uniform but will vary greatly. Foreign reception may be excellent on one International Band and non-existant on another, this condition will change from one hour to the next and also with the time of year.

Your FM Broadcast band is marked E and is calibrated in channel numbers; these channel numbers were assigned by the Federal Communications Commission for the convenience of the general public. However in many parts of the country FM stations use a frequency designation so that we reprint at the end of this Manual a conversion chart to show the relation between channel number and frequency in megacycles.

The push buttons are for your convenience in selecting stations without the bother of making the exact tuning adjustments necessary for best reception. There are seven buttons and each button may be set for a station at any point on the dial. We do not recommend the use of the push buttons for short wave stations. To set the push buttons this exact procedure should be followed. A screwdriver will be needed.



1. Turn on the receiver and allow ten minutes to warm up; more time is desirable.
2. Remove the push button by pulling straight out. A hooked instrument will be of assistance.
3. Loosen the **LOCK SCREW** at least one half turn.
4. Using the screwdriver with the blade in the screw slot, push the mechanism in firmly. Hold in during step 5. The mechanism may bind at first and you must use sufficient force to break it loose so that the push buttom and **TUNING** control wheel are independent, that is, the **TUNING** control does not try to push the button mechanism outward when the pointer is tuned across the dial.
5. Tune the pointer past the desired station, then back to the desired station and make the tuning adjustment as carefully as you know how.
6. Tighten the **LOCK SCREW.**
7. Check the setting of this push button by tuning away from the station manually then push the button down firmly maintaining pressure until the pointer moves to the position it had when the **LOCK SCREW** was tightened. If the station is not tuned in perfectly repeat steps 2 to 6 carefully.
8. Adjust each of the seven buttons, or as many as you need, exactly as outlined above.

Any button can be set for any pointer position, however, you will find it more desirable to select the button nearest the pointer position so that each button may be more easily identified with the station. For example, the "M" button will be set for a station at the left of the dial, the "W" button will be set for a station near the center, etc.

© John F. Rider

MODELS C-16, RC-16, SK-16; Ch. JC-16

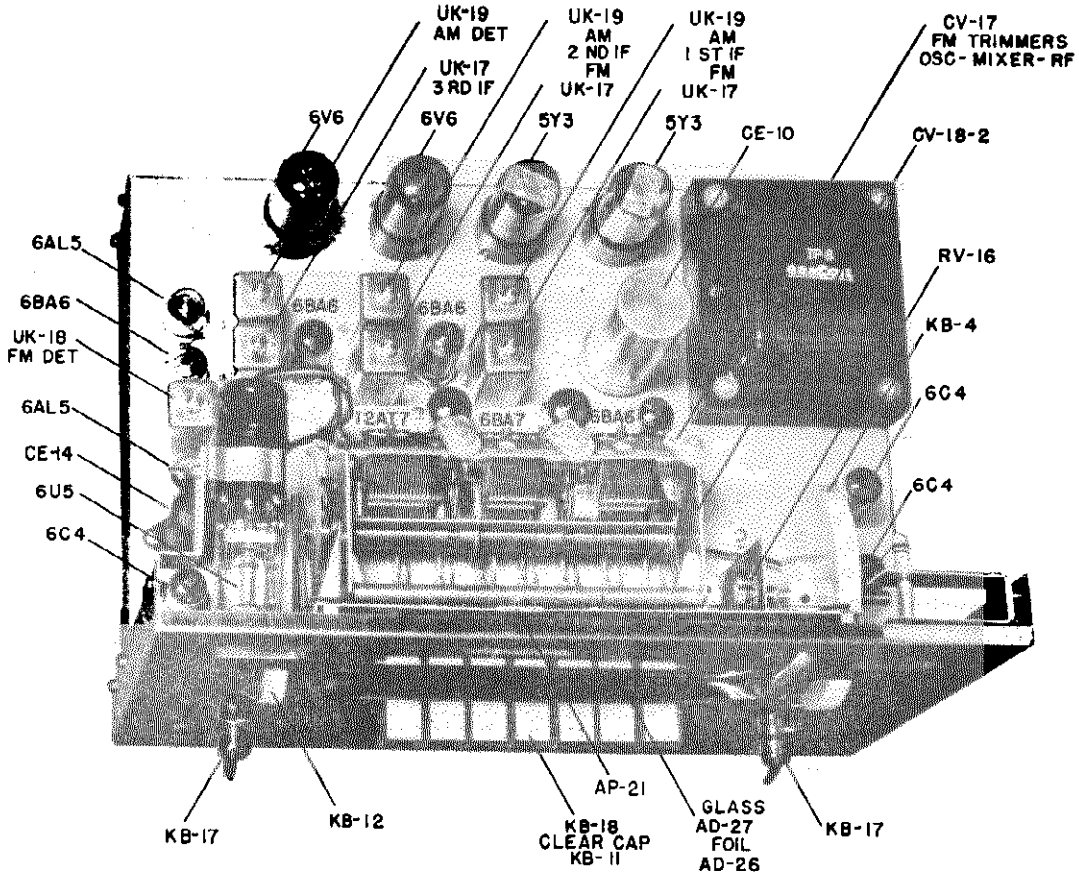

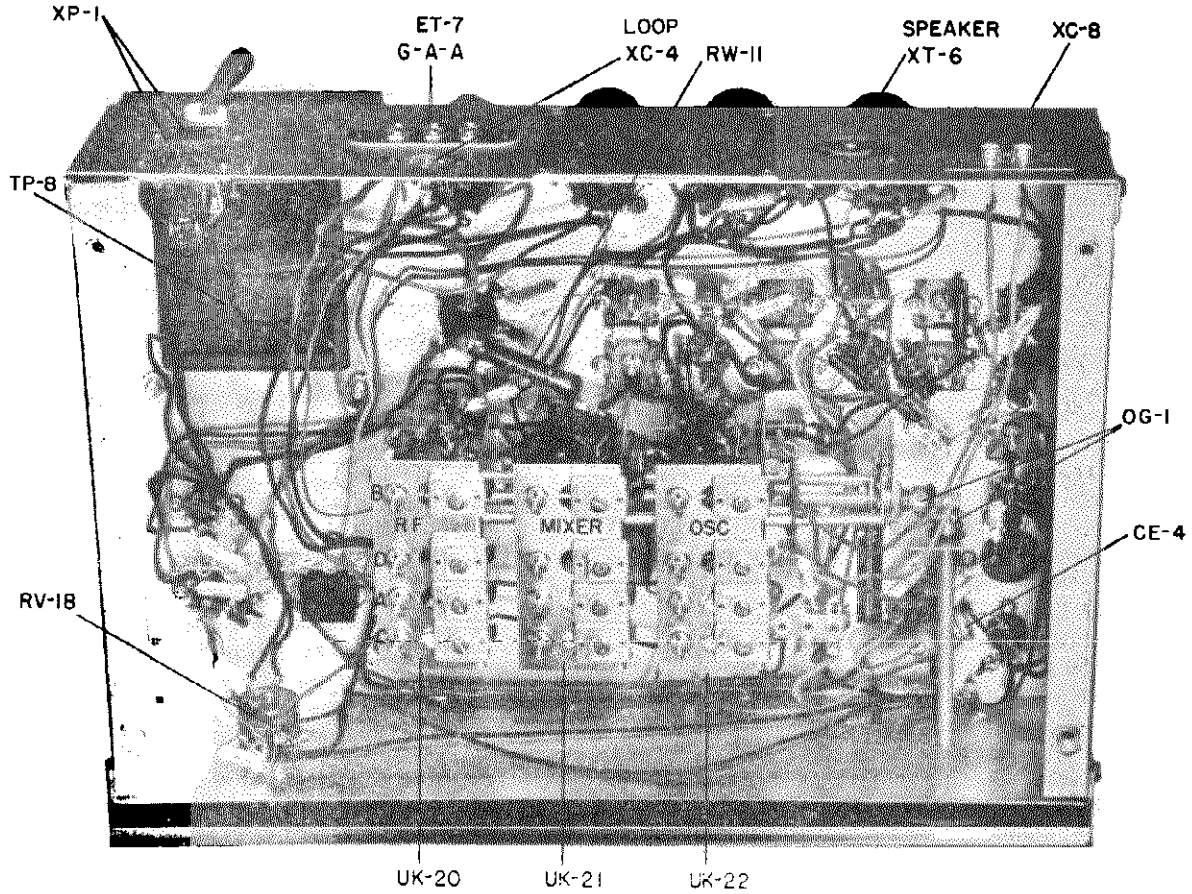

© John F. Rider

©John F. Rider

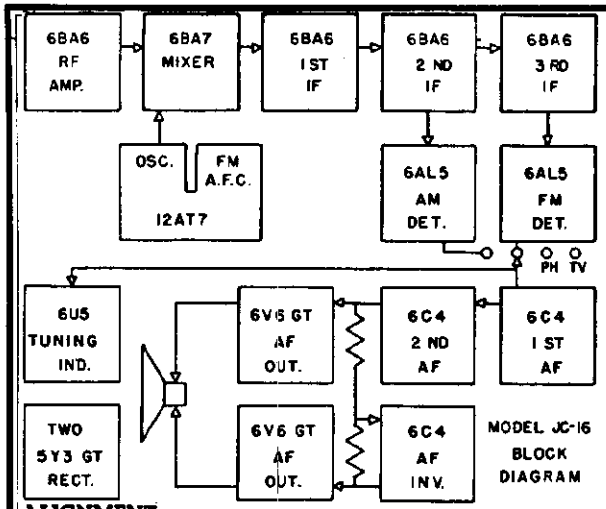

ALIGNMENT

The alignment points are shown on the top and bottom views of the chassis as well as certain parts numbers.

AM IF should be aligned at 456 KC. There are three transformers and six adjustments, the transformers are coupled with less than critical coupling and there is only one peak. Couple the generator into the mixer grid and use either AVC or audio for the output meter.

FM IF should be aligned at 10.7 MC. There are four transformers and eight adjustments, the transformers are over-coupled and must be aligned with a scope and sweep generator.

1. Connect generator to 3rd IF grid and vertical output of scope to the audio of the receiver at any point where sufficient signal is available and phasing can be properly adjusted.
2. Adjust the top screw for greatest length of straight line. This is the secondary winding, the bottom screw should give improvement in signal level.

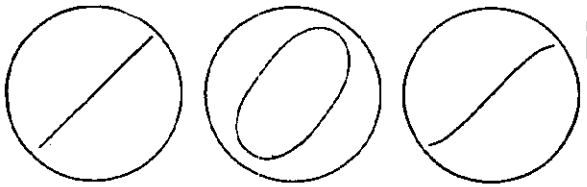

A does not have the hook indicating that the sweep generator has a greater deviation than the detector capability.

B shows improper phasing of the horizontal sweep with the audio output of the receiver.

C is preferred because it shows the limits of deviation and you obtain it simply by adjusting the deviation (sweep width) control on the signal generator. Approximately 150 KC is normal.

3. Connect generator to 2nd IF gird and adjust the 2nd IF slugs for maximum signal **and** band width. This you can be sure of by the amount of hook at the ends of the line on the scope. Repeat this procedure for 1st IF grid and mixer grid. Adjust for greatest signal without appreciable loss of band width.

Alternate Method: The IF response of the 1st, 2nd and 3rd transformer may be observed more directly if you use a crystal detector at the plate of the 3rd IF tube and feed the vertical plates of the scope from that point. Use a CW marker at 10.7 to be sure the double peaked response curve straddles the ratio detector response. Observe each stage separately.

Notice: Do not use AM or CM signal to peak the FM transformers. Regeneration may result and bandwidth and noise rejector will be poor, although signal strength will increase.

FM RF should be trimmed at 105 MC. There should not be any reason to adjust the low end but if this is necessary it can be done by distorting the FM coils on the tuning gang.

AM RF should be peaked at the high end with the trimmer and at the low end by core adjustment.

Notice: Use as low signal input as possible for readable output indication. Feed signal in from FM RF generator through 150 ohms in each lead to "A-A." Use 400 ohms in lead from AM RF generator and connect to either "A" terminal.

A very convenient design is shown here schematically of a Crystal probe for detection of resonant response for display on the oscillograph and your available materials will decide the physical design, most important feature is the ability to change the load resistor, R.

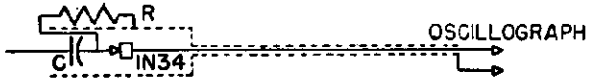

The value for C is limited by the physical size, any capacity greater than 100 mmfd will be satisfactory, the value of R should be 470 ohms when the probe is used in the IF stages to obtain the response of the grid circuit without effects from the tuned plate circuit whereas a value of 470K ohms is alright for general use,

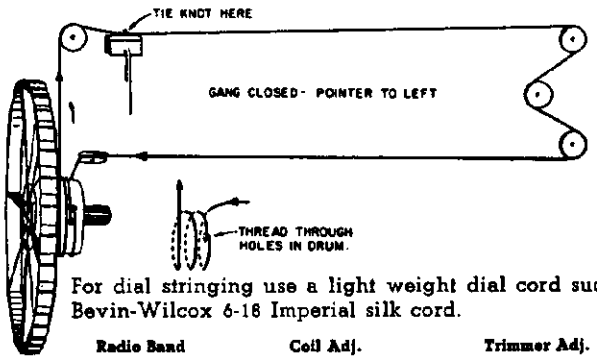

For dial stringing use a light weight dial cord such as Bevin-Wilcox 6-18 Imperial silk cord.

Radio Band	Coil Adj.	Trimmer Adj.
A	560 KC	1500 KC
B	1.6 MC	4.7 MC
C	5 MC	10 MC
D	11.5 MC	22 MC
E	.....	105 MC

If replacement parts of identical manufacture and rating are not available for service repairs these should be ordered from Midwest Radio & Television Corporation, giving model number and serial number of the chassis and name of the part.

Repair data for the record changer mechanism is available separately, please specify Model.

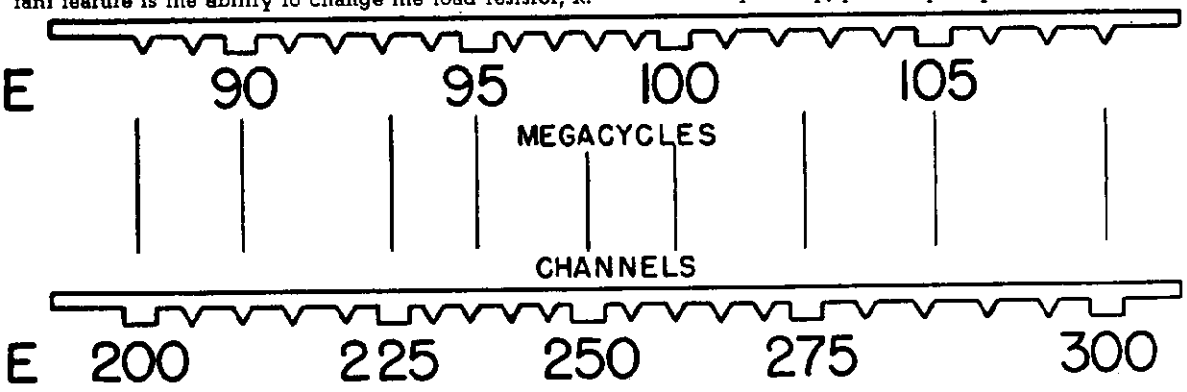

MODELS C-16, RC-16,
SK-16; Ch. JC-16

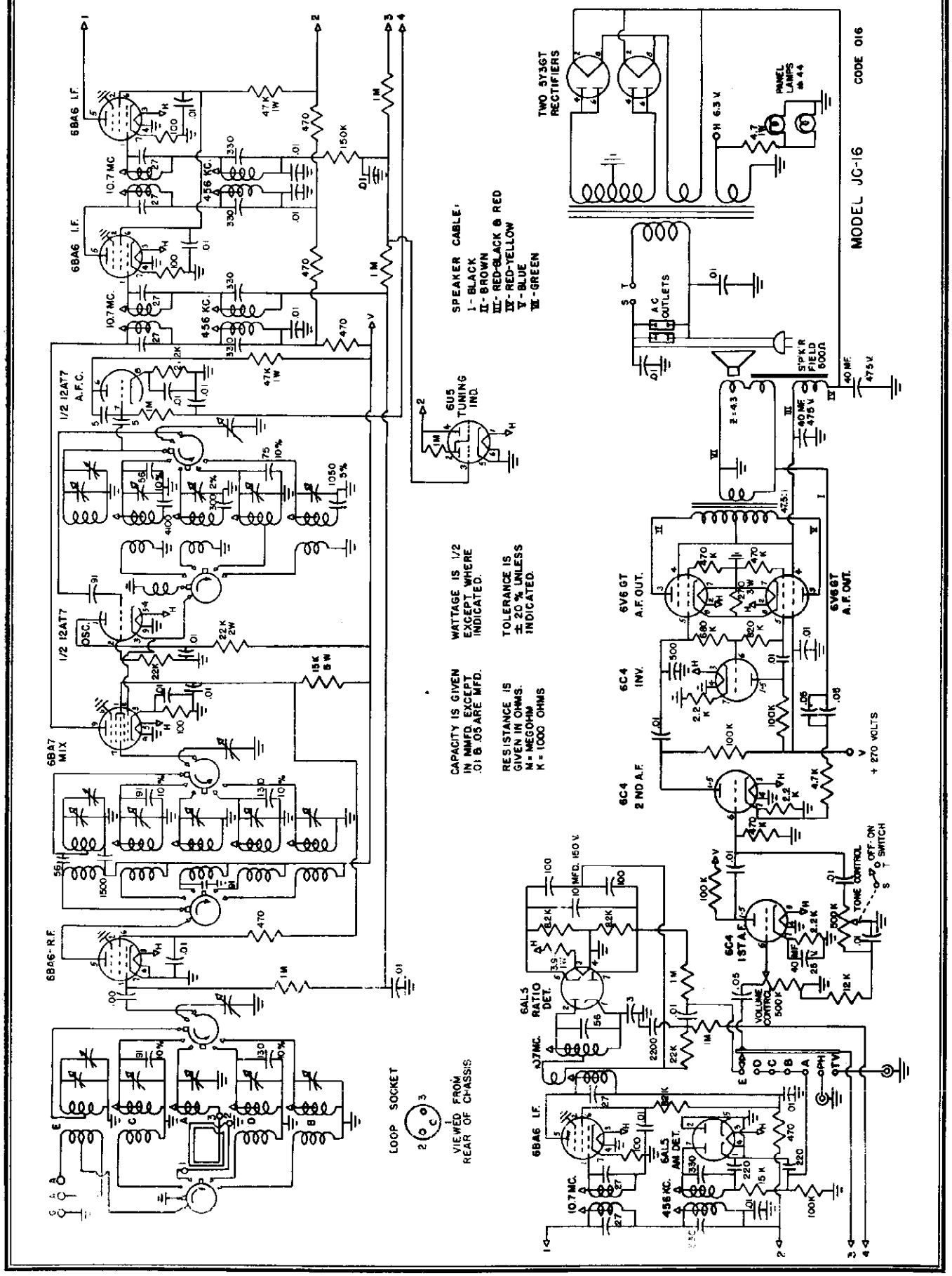

©John F. Rider

CONTROLS AND OPERATION

LAMP SWITCH. The switch located in lamp socket must be turned in a clockwise direction to secure the three intensities of light if a three light bulb is used. If a standard single light bulb is used only one intensity of light will be obtained.

TUNING RANGE

This receiver is designed to operate over the standard broadcast band which extends from 535 to 1720 Kilocycles (KC) (174 to 560 Meters) and includes some police channels.

REPLACEMENT OF TUBES

(See Figure 1)

Remove the shades and lamp bulb to prevent damage. Next loosen screw H and slip off washer G and the dial F. Next unscrew E and the screw next to it. (These screws have red heads). At the top of lamp just below the lamp socket, will be found nut A which must be loosened sufficiently to allow collar B to be moved high enough to allow the two halves of the lamp base to be separated.

If tubes are removed from their sockets for test or replacement purposes, make certain that each tube is placed in its proper socket. (See tube layout diagram in the base of the lamp).

Failure to replace the tubes in their proper sockets may result in damage to the tube, or the receiver, or both

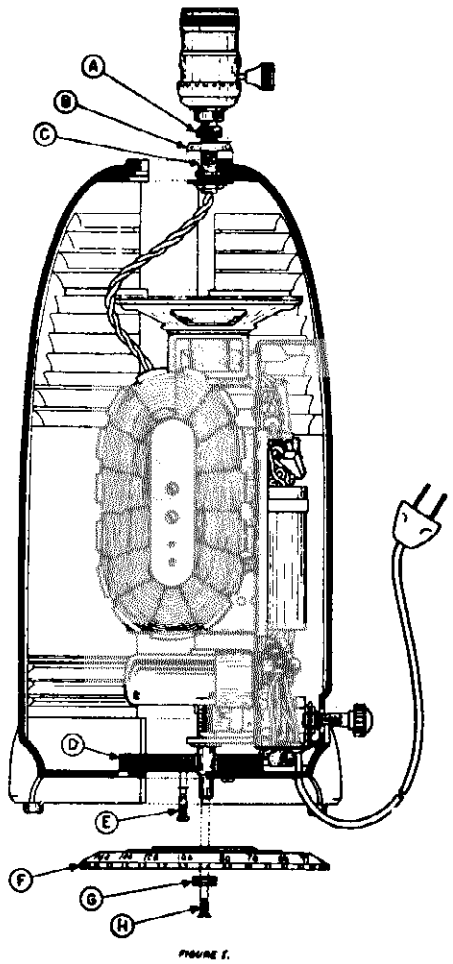

FIGURE 1.

SERVICE DATA

Lack of sensitivity and poor tone quality may be due to any one or a combination of causes such as weak or defective tubes or speaker, open or grounded bias resistor, bypass condenser, etc. Never attempt to realign set until all other possible sources of trouble have been first thoroughly investigated and definitely proved not to be the cause.

NOTE: IT IS ABSOLUTELY NECESSARY THAT AN ACCURATELY CALIBRATED TEST OSCILLATOR WITH SOME TYPE OF OUTPUT MEASURING DEVICE BE USED WHEN ALIGNING THE RECEIVER AND THAT THE PROCEDURE BE CAREFULLY FOLLOWED, OTHERWISE THE RECEIVER WILL BE INSENSITIVE AND THE DIAL CALIBRATION WILL BE INCORRECT. THE TRIMMERS WILL BE REFERRED TO BY THEIR FUNCTION AS INDICATED ON THE PARTS DIAGRAM.

ALIGNMENT PROCEDURE

GENERAL DATA. The alignment of this receiver requires the use of a test oscillator that will cover the frequencies of 455, 600, 1400 and 1720 KC and an output meter to be connected across the primary or secondary of the output transformer. If possible, all alignments should be made with the volume control on maximum and the test oscillator output as low as possible to prevent the AVC from operating and giving false readings.

CORRECT ALIGNMENT PROCEDURE. The intermediate frequency (I.F.) stages should be aligned properly as the first step. After the I.F. transformers have been properly adjusted and peaked, the broadcast band should be adjusted.

I.F. ALIGNMENT. Remove the chassis and loop antenna from the cabinet and set them up on the bench so that they occupy exactly the same respective positions on the bench as they did in the cabinet. Care should be taken to have no iron or other metal near the loop. Do not make this set-up on a metal bench. With the gang condenser set at minimum, adjust the test oscillator to 455 KC and connect the output to the grid of the first detector tube (12SA7) through a .05 or .1 mfd. condenser. The ground on the test oscillator should be connected to the ground buss, indicated on the circuit diagram. Align all three I.F. trimmers to peak or maximum reading on the output meter.

BROADCAST BAND ALIGNMENT. Connect the test oscillator to a dummy loop which can be made by coiling 2 turns of hookup wire about 6" in diameter. Place this dummy loop about a foot from the loop on the receiver and in the same plane as the receiver loop. With the gang condenser set at minimum capacity, set the test oscillator at 1720 KC, and adjust the oscillator (or 1720 KC trimmer) on the gang condenser. Next—set the test oscillator at 1400 KC, and tune in the signal on the gang condenser. Adjust the antenna trimmer (or 1400 KC trimmer) for maximum signal. Next set the test oscillator at 600 KC, and tune in signal on condenser to check alignment of coils.

© John F. Rider

MODEL 1260

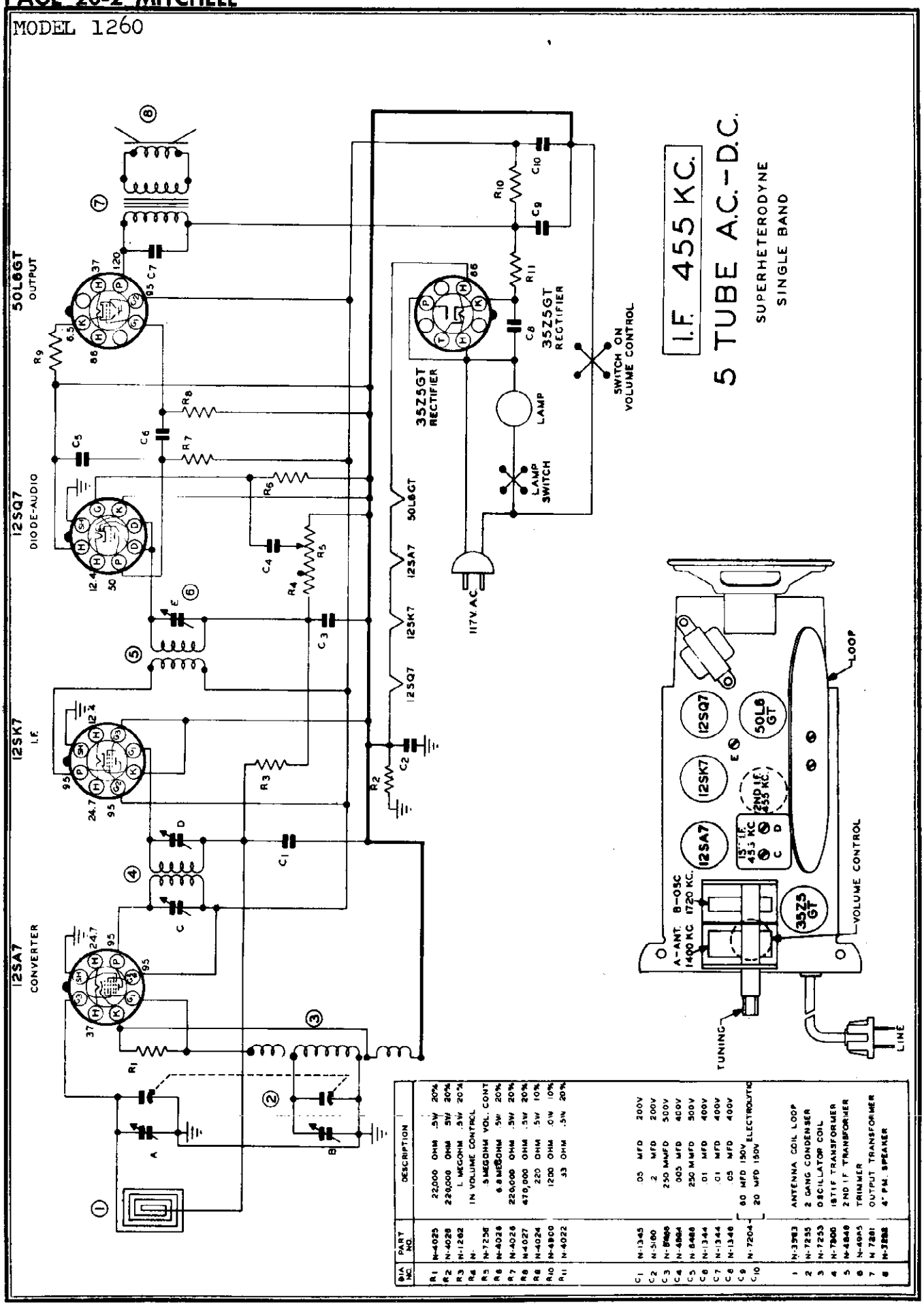

SIA NO.	PART NO.	DESCRIPTION		
R1	N-4025	22,000 OHM	.5W	20%
R2	N-4028	220,000 OHM	.5W	20%
R3	N-1262	1 MEGOHM	.5W	20%
R4	N-	IN VOLUME CONTROL		
R5	N-7238	.5 MEGOHM	VOL. CONT	
R6	N-4026	6.8 MEGOHM	.5W	20%
R7	N-4026	220,000 OHM	.5W	20%
R8	N-4027	470,000 OHM	.5W	20%
R9	N-4024	220 OHM	.5W	10%
R10	N-4800	1200 OHM	.01W	10%
R11	N-4022	33 OHM	.5W	20%
C1	N-1345	.05 MFD	200V	
C2	N-5160	.2 MFD	200V	
C3	N-5969	250 MMFD	500V	
C4	N-4864	.005 MFD	400V	
C5	N-5488	250 MMFD	500V	
C6	N-1344	.01 MFD	400V	
C7	N-1344	.01 MFD	400V	
C8	N-1346	.05 MFD	400V	
C9	N-7204	80 MFD 150V	ELECTROLYTIC	
C10		20 MFD 150V		
1	N-3983	ANTENNA COIL LOOP		
2	N-7235	2 GANG CONDENSER		
3	N-7233	OSCILLATOR COIL		
4	N-7800	1ST I.F. TRANSFORMER		
5	N-4840	2ND I.F. TRANSFORMER		
6	N-4995	TRIMMER		
7	M 7281	OUTPUT TRANSFORMER		
8	N-3288	4" P.M. SPEAKER		

©John F. Rider

MODEL 84BR-2726B

GENERAL DESCRIPTION

This is a 2-band, seven tube (plus rectifier) superheterodyne receiver for the reception of both AM and FM stations. It features the most advanced type of FM ratio detector, permeability tuning of both bands, combination double-frequency I.F. coils and miniature tubes. Built-in antennas are provided for broadcast and FM reception; provision is also made for connection of an external broadcast antenna as well as an FM antenna with a 300 ohm lead-in. Both antennas may be connected to the radio at the same time.

The phonograph is equipped with an automatic changer which plays up to ten 12-inch records or twelve 10-inch records at one loading.

ELECTRICAL SPECIFICATIONS

Power Supply	105 to 125 volts, AC, 60-cycles; Chassis only 75 watts. With phono operation 100 watts.
Frequency Ranges	Broadcast Band—535 to 1620 kc. FM Band— 88 to 108 mc.
Intermediate Freq.	AM-455 kc.; FM-10.7 mc.
Selectivity	AM-42 kc. broad at 1000 times signal, measured at 1000 kc. I.F. FM-200 kc. broad at 2 times down. I.F. FM-400 kc. broad at 10 times down.
AM Sensitivity	(For .5 watt output with external antenna)—5 microvolts average.
FM Sensitivity	(For .5 watt output)—25 microvolts average.
Power Output	2 watts, 10% distortion. 4 watts maximum.
Loud Speaker	12" electrodynamic. Voice coil impedance 3.2 ohms, 400 cycles.
Tube and Lamp Complement	6BA6, FM—AM R.F. stage. 12AT7, FM—AM oscillator and mixer. 6BA6, FM—AM 1st I.F. 6BA6, FM—2nd I.F. 6AL5, FM ratio detector. 6AT6, AM detector. A.F. AMP. and A.V.C. 6AQ5, Audio output. 5Y3, rectifier. T-44 dial lamp (2 used).
Automatic Changer	See Manual 5068A.

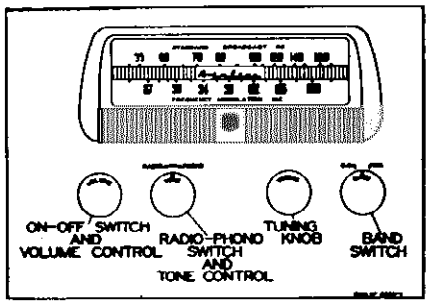

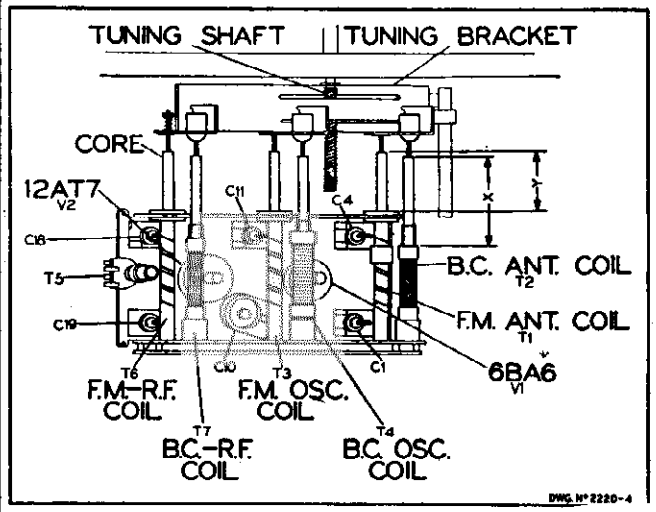

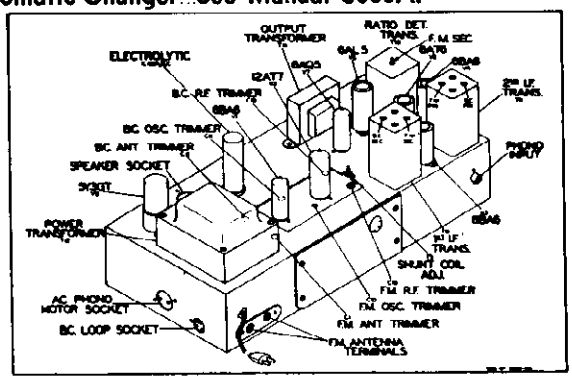

Chassis top view

TUNER ADJUSTMENT

With tuner all the way out, dimension "X" should be 1½ inches. "Y" should be 1-1/16 inches. "X" is from the end of the slug to the edge of the coil winding. Check these dimensions before R.F. alignment is attempted of either the AM or FM band. No slug adjustment should be necessary since the slugs are properly set at the factory.

©John F. Rider

MODEL 84BR-2726B

ALIGNMENT PROCEDURE

Broadcast Band Section I.F. and R.F.

The alignment procedure below includes the sensitivities at the inputs of various stages. All signal input values are based on an output of ½ watt. This may be measured by disconnecting the speaker voice coil and substituting a 3.2-ohm resistor across the secondary winding of the output transformer. A reading of 1.3 volts AC across this resistor will be approximately equivalent to a ½-watt output with the speaker connected. The volume control must be set at maximum. The tone control must be set for maximum treble.

The signal source must be an accurately calibrated signal generator capable of supplying the frequencies designated, modulated 30% with a 400-cycle audio signal. A 400 cycle audio signal is required for the audio measurement. Variations in sensitivities of plus or minus 25% are usually permissible.

AM - I. F. ALIGNMENT

Band Switch in AM Position. Tune Set to 1400 Kc. Dummy Antenna .1 Mfd.

SIGNAL GENERATOR FREQUENCY	CONNECTION TO RADIO	ADJUSTMENTS TO BE MADE	ADJUST FOR
455 Kc. Use 2400 microvolts	Pin No. 1 of 6BA6 No. 2 and ground	Primary and Secondary of T9 AM windings. See top and bottom views	Maximum output Should be ½ watt
455 Kc. Use 70 microvolts	Pin No. 2 of 12AT7 and ground	Primary and Secondary of T8 AM windings. See top and bottom views	Maximum output Should be ½ watt
400 cycles. Use 60 millivolts	Hot end of volume control and ground	None	Maximum output Should be ½ watt

BROADCAST BAND - R. F. ALIGNMENT

Check pointer so that it coincides with the marker to the extreme right when iron cores are all the way out. For adjustment, see dial mechanism illustration.

SIGNAL GENERATOR FREQUENCY	CONNECTION TO RADIO	DUMMY ANTENNA	ADJUST
1620 Kc.	AM Antenna and Ground	200 mmf.	C11 Osc. trimmer for maximum
535 Kc.	AM Antenna and Ground	200 mmf.	T5 for maximum ½ watt
1620 Kc. Use 5 microvolts	AM Antenna and Ground	200 mmf.	C4 and C18 for max. ½ watt. See note

NOTE: Recheck first two adjustments after this adjustment because of inter-locking effects.

Procedure for disassembly and assembly of dial mechanism.

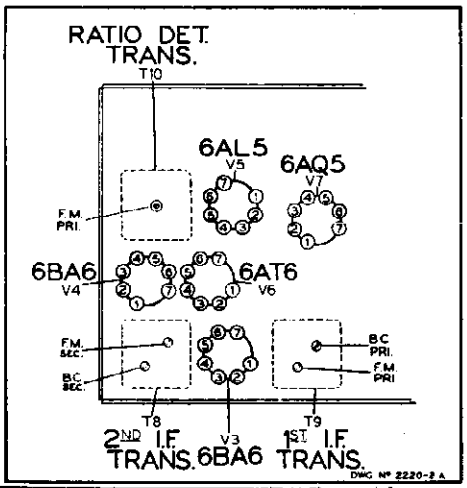

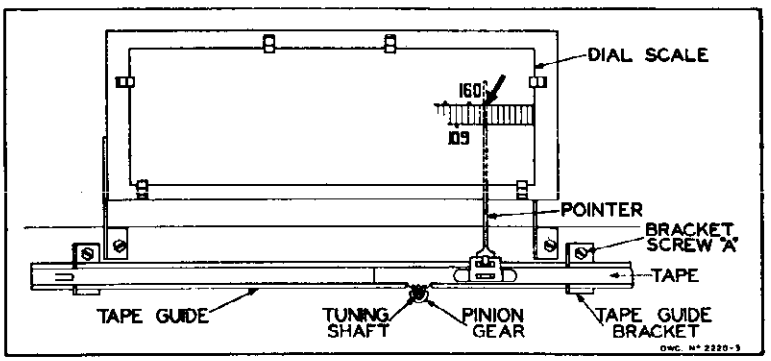

TO ALIGN POINTER— Loosen bracket screw "A". Then tape guide bracket can be moved up to allow proper meshing of tape teeth with pinion gear. Readjust bracket to eliminate backlash.

© John F. Rider

MODEL 84BR-2726B

ALIGNMENT PROCEDURE

FM Band Section. I.F. and R.F.

A non-metallic alignment tool must be used.

IMPORTANT

No alignment of the FM section of this radio should be attempted unless you are positive that the circuits are in need of adjustment and you have the necessary equipment.

All components used in this radio are extremely stable and the tuned circuits should require no adjustment over long periods of time.

NOTE

The following alignment is based on the use of the new Simpson vacuum tube volt-meter which has a "floating ground". In other words, the meter, when used as a vacuum tube volt-meter, can have both the positive and negative sides connected to points above ground and still give true readings.

A standard AM signal generator is required.

FM - I. F. ALIGNMENT

Band Switch in FM Position. Dummy Antenna .1 Mfd.

SIGNAL GENERATOR FREQUENCY	CONNECTION TO RADIO	VACUUM TUBE VOLT METER CONNECTION TO RADIO	ADJUSTMENTS TO BE MADE	ADJUST FOR
10.7 Mc. Use about .1 volt	Pin No. 1 of 6BA6 no. 3 and ground	Pin No. 2 of 6AL5 and ground	Primary of T10	Resonance should be about 3 volts
10.7 Mc. Use about .1 volt	Pin No. 1 of 6BA6 no. 3 and ground	See note "A"	Secondary of T10	Zero. Use zero center scale See note "B"
10.7 Mc. Use about 3300 microvolts	Pin No. 1 of 6BA6 no. 2 and ground	Pin No. 2 of 6AL5 and ground	Primary and Secondary of T9 10.7 m.c. windings See top and bottom views	Resonance should be about 3 volts
10.7 Mc. Use about 200 microvolts	Pin No. 2 of 12AT7 and ground	Pin No. 2 of 6AL5 and ground	Primary and Secondary of 10.7 m.c. windings of T8 See top and bottom views	Resonance should be about 3 volts

NOTE ON FM - I.F. ALIGNMENT

NOTE "A" Connect two resistors, 100K OHMS each, from Pin No. 2 of 6AL5 to ground. These resistors must be matched within 5%. Connect as shown in dotted lines on schematic diagram. Connect vacuum tube volt-meter between the mid-point of the resistors and points zz.

NOTE "B" If T10 has been tampered with, it is possible that no crossover point will be found at first. Careful adjustment of both primary and secondary is necessary.

GENERAL: Input signals should be adjusted to give approximately 3 volts. The ratio detector is operating at a reasonable level at this point and will give the truest indication of correct alignment with the procedure specified.

FM - R. F. ALIGNMENT

Check pointer so that it coincides with the marker to the extreme right when iron cores are all the way out. For adjustment, see dial mechanism illustration.

SIGNAL GENERATOR FREQUENCY	CONNECTION TO RADIO	DUMMY ANTENNA	ADJUST	VACUUM TUBE VOLT METER CONNECTION TO RADIO	ADJUST TO
100 Mc. Use about 25 microvolts	FM Antenna Terminals See note	300 ohms	C10 Osc. C19 R.F. C1 Ant.	Pin No. 2 of 6AL5 and Ground	Resonance about 3 volts

NOTE: If a signal generator with the above fundamental frequency is not available, it is sometimes possible to use harmonics. Use extreme care in picking harmonics. An alternate procedure is to use a local station carrier of known frequency to align the FM Band and to use the vacuum tube volt-meter as above for resonance indication. A weak carrier, however will not produce 3 volts. NOTE: Connect 300 ohms in series with hot side of generator and connect to one screw. Connect cold side of generator to other screw.

© John F. Rider

MODEL 84BR-2726B

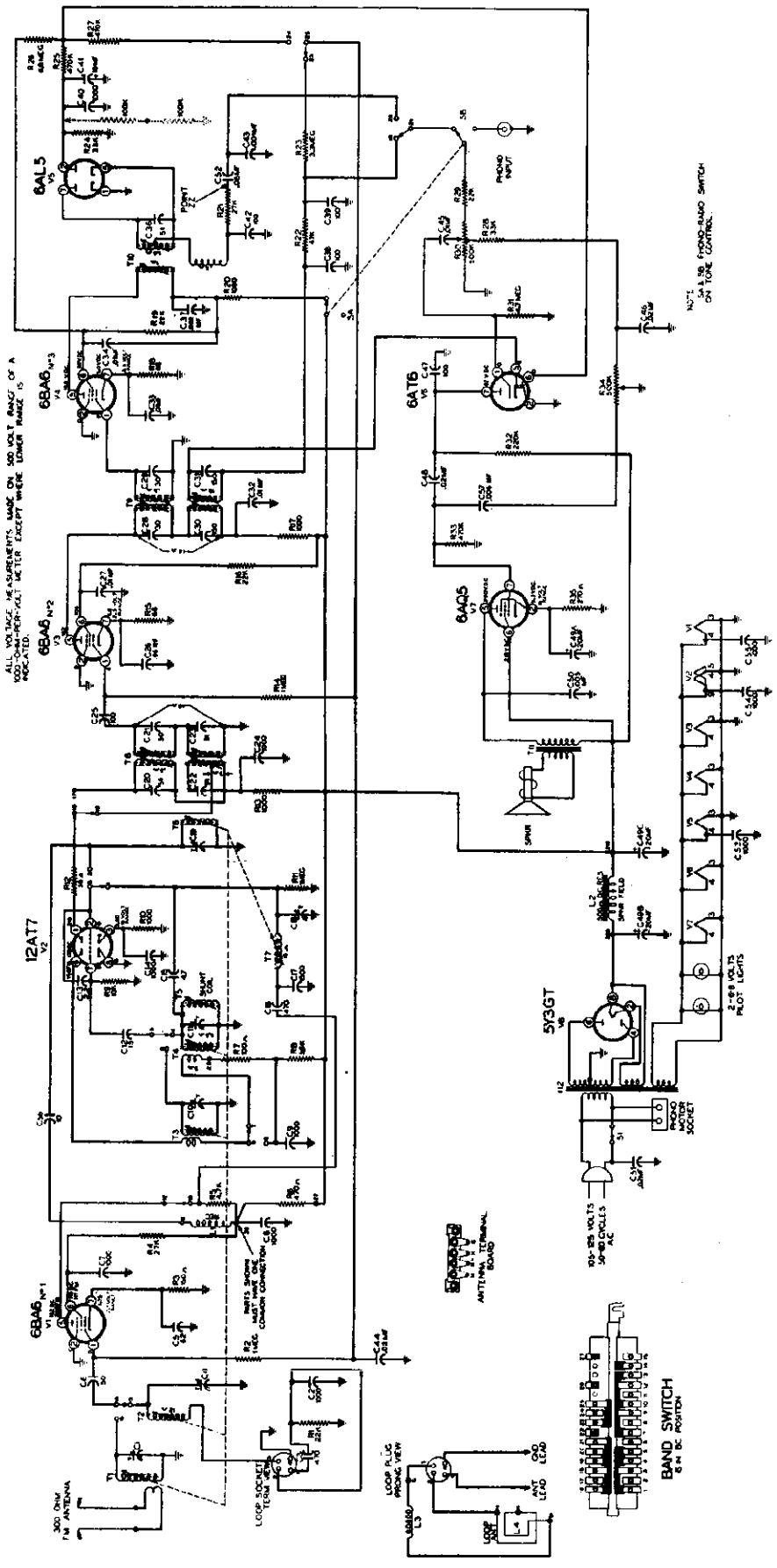

NOTE: The two 100K ohm resistors in series from Pin No. 2 to ground are connected as shown only when aligning the FM I.F. Refer to FM I.F. alignment procedure

RECORD CHANGER: See Webster Model 246, Pages RCD.CH. 20-12

©John F. Rider

MODEL 84BR-2726B

REPLACEMENT PARTS LIST

Ref. No.	Part No.	Description	Qty. Used In Set
		TUNER CHASSIS PARTS	
		CONDENSERS	
C10	A-8E-13575	Trimmer condenser	1
C1, 4, 11, 19, 18	A-2M-12618	Trimmer cond. plate	5
C3, 16	C-8G-11732	470 mmf, ±20%	2
C2	C-8G-13695	1000 mmf, ±20%	1
C8, 7, 9, 14, 54, 55	C-8G-13201	1000 mmf, +20%—10%	6
C5	C-8G-13018	62 mmf, ±10%	1
C17	C-8G-11731	1500 mmf, ±20%	1
C12	C-8G-13017	15 mmf, +10%	1
C6	C-8G-11484	50 mmf, ±10%	1
C56	C-8G-11789	10 mmf, ±10%	1
C15	A-8G-12495-6	4.7 mmf, ±20%	1
C13	A-8G-12495-4	2.2 mmf, ±20%	1
C44	C-8D-11304	.02 mfd, 200 volts, ±20%	1
		RESISTORS	
R4	C-9B2-79	27K ohms, 1 watt, 10%	1
R1	C-9B1-21	22K ohms, 1/2 watt, 20%	1
R3	C-9B1-52	150 ohms, 1/2 watt, 10%	1
R5	C-9B1-17	4700 ohms, 1/2 watt, 20%	1
R6	C-9B1-11	470 ohms, 1/2 watt, 20%	1
R9	C-9B1-19	10K ohms, 1/2 watt, 20%	1
R2, 11	C-9B1-31	1 megohm, 1/2 watt, 20%	2
R10	C-9B1-62	1000 ohms, 1/2 watt, 10%	1
R23	C-9B1-34	3.3 megohms, 1/2 watt, 20%	1
R7	C-9B1-50	100 ohms, 1/2 watt, 10%	1
R12	C-9B1-45	39 ohms, 1/2 watt, 10%	1
		COILS	
T3	B-13D-13027	FM oscillator coil assembly	1
—	B-51B-13056	Core for FM oscillator coil	1
T1	B-13E-13028	FM antenna coil assembly	1
—	B-51A-13058	Core for FM antenna coil	1
T6	B-13C-13029	FM R.F. coil assembly	1
—	B-51A-13057	Core for FM R.F. coil	1
T4	B-13D-13030	AM oscillator coil assembly	1
—	B-51A-12722	Core for B.C. oscillator coil	1
—	B-51A-12723	Core for B.C. ant. and R.F. coil	1
T2	B-13E-13031	AM antenna coil assembly	1
T7	B-13C-13032	AM R.F. coil assembly	1
L1	A-16A-13033	Choke coil assembly	1
T5	B-13D-12974	AM osc. shunt coil assembly	1
		MISCELLANEOUS	
	B-208-13553 or B-201-12967	Band change slide switch	1
	A-15B-12997	7 prong, miniature tube socket	1
	A-15B-13430	9 prong, miniature tube socket	1
	C-2D-14437	Drive bracket assembly	1
	A-25A-13019	Core grommets, for AM Band	3
	A-3M-13020	Insert for core grommet	3
	A-49A-12394	Spiral spring for FM cores	3
	A-2J-11041	Pointer tension spring, "M" shaped	1
	B-2D-12316	Tape guide	1
	B-2J-12922	Rack tape, with teeth and pointer bracket	1
	B-2G-13613	Pointer	1
	A-200-15016	Drive, pinion and lead screw assembly	1
		MAIN CHASSIS PARTS	
		CONDENSERS	
C49B, 49C, 49A	A-8C-13555	Electrolytic, 20—20 x 350 volts; 20 x 25 volts	1
C50	C-8D-10935	.005 mf x 600 volts	1
C27, 32, 33, 34, 37, 45	C-8D-10761	.01 mf x 400 volts, 20%	6
C57	C-8D-10785	.006 mf x 600 volts, 20%	1
C41	A-8C-13132	Electrolytic, 10 mf x 50 volts	1
C43	C-8D-10787	.001 x 600 volts, 20%	1
C52, C26	C-8D-10770	.05 x 200 volts, 20%	2
C51, 46	C-8D-10774	.02 x 400 volts, 20%	2
C48	C-8J-11321	.02 x 600 volts, 20%	1
C25, 47	C-8G-13131	100 mmf, ceramic, 10%	2
C24, 40, 53	C-8G-13016	1000 mmf, ceramic, 20%	3
C42	C-8F3-225	100 mmf, mica, 5%	1
C38, 39	A-8F-13127	.0001 mf, dual mica, 20%	1
C22, 23	C-8G-12160	91 mmf, ceramic, 5%	2
C20	C-8G-13026	51 mmf, ceramic, 5%	1
C30, 31	C-8G-13025	150 mmf, ceramic, 5%	2
C21, 28, 29	C-8G-12159	30 mmf, ceramic, 5%	3
C36	C-8G-11891	51 mmf, ceramic	1
		RESISTORS	
R30, S1	A-10A-13114	Volume control (500K ohms) and switch	1
R34, SA, SB	A-11A-13115	Tone control (500K ohms) and radio-phono switch	1
R32	C-9B1-27	220K ohms, 1/2 watt, 20%	1
R15, 18	C-9B1-48	68 ohms, 1/2 watt, 10%	2
R14	C-9B1-31	1 megohm, 1/2 watt, 20%	1
R19, 16	C-9B2-78	22K ohms, 1 watt, 10 %	2
R24, 28	C-9B1-80	33K ohms, 1/2 watt, 10%	2
R21	C-9B1-79	27K ohms, 1/2 watt, 10%	1
R8	C-9B2-71	5600 ohms, 1 watt, 10%	1
R22	C-9B1-23	47K ohms, 1/2 watt, 20%	1
R29	C-9B1-21	22K ohms, 1/2 watt, 20%	1
R31	C-9B1-35	4.7 megohms, 1/2 watt, 20%	1
R25, 27, 33	C-9B1-29	470K ohms, 1/2 watt, 20%	3
R35	C-9B1-55	270 ohms 1/2 watt, 10%	1
R26	C-9B1-36	6.8 megohms, 1/2 watt, 20%	1
R13, 20, 17	C-9B1-13	1000 ohms, 1/2 watt, 20%	2
		COILS	
T8	B-13A-15473	Input I.F. transformer, combination, 455 kc. and 10.7 mc.	1
T9	B-13B-15474	Second I.F. transformer, combination, 455 kc. and 10.7 mc.	1
T10	B-13M-15475	Ratio det. coil assembly 10.7 mc.	1
L3	A-16A-13243	Loop loading coil	1
L4	A-14MA-11066-1	Loop antenna ribbon	1
		TRANSFORMERS	
T12	B-12A-13120	Power transformer, primary, 50-60 cycles. 105-125 volts A.C.	1
Tf1	B-12C-13556	Output transformer, for speaker	1
		SPEAKER	
L2	B-18B-13585-1	Electrodynamic speaker, 12-inch, less output transformer	1
		MISCELLANEOUS	
	B-30A-13611	Dial scale	1
	B-5B-13744	Knob, mahog. or wal. "Volume"	1
	B-5B-13745	Knob, mahog. or wal. "Tone"	1
	B-5B-13746	Knob, mahog. or wal. "Tuning"	1
	B-5B-13747	Knob, mahog. or wal. "Band switch"	1
	B-2G-13612	Escutcheon, mahog. or walnut	1
	B-14M-11479	Line cord and plug	1
	A-3A-12933-1	Band switch shaft	1
	A-55C-12935	Ball bearing	1
	B-47A-11094-4	Pilot lite and bracket assembly	1
	A-46A-11739	Pilot lite, 6-8 volts, T-44	2
	A-15C-13174	Miniature socket, 7 prong	5
	A-15B-10440	Octal socket, 8 prong	1
	A-19B-12644	Loop antenna socket	1
	B-7B-13050	FM terminal strip	1
	A-15B-11538	Speaker socket	1
	A-19B-12468	Phono motor socket	1
	A-19B-12170	Phono input socket	1
		RECORD CHANGER	
	B-201-16345	246 Changer with cartridge	1
		Webster V42-2 cartridge	1
		NE-214 Tandem point needle	1

©John F. Rider

MODEL 84BR-2733A

GENERAL DESCRIPTION

This is a 2-band, nine tube (plus rectifier) superheterodyne receiver for the reception of both AM and FM stations. It features the most advanced type of FM ratio detector, permeability tuning of both bands, combination double-frequency I.F. coils and miniature tubes. Built-in antennas are provided for broadcast and FM reception; provision is also made for connection of an external broadcast antenna as well as an FM antenna with a 300 ohm lead-in. Both antennas may be connected to the radio at the same time.

The phonograph is equipped with an automatic changer which plays up to ten 12-inch records or twelve 10-inch records at one loading.

ELECTRICAL SPECIFICATIONS

Power Supply	105 to 125 volts, AC, 60-cycles; Chassis only 122 watts. With phono operation 150 watts.
Frequency Ranges	Broadcast Band—535 to 1620 kc. FM Band—88 to 108 mc.
Intermediate Freq.	AM-455 kc.; FM-10.7 mc.
Selectivity	AM-48 kc. broad at 1000 times signal, measured at 1000 kc.
	I.F. FM-180 kc. broad at 2 times down.
	I.F. FM-320 kc. broad at 10 times down.
AM Sensitivity	(For .5 watt output with external antenna)—3 microvolts average
FM Sensitivity	(For .5 watt output—10 microvolts average.
Power Output	8 watts, 10% distortion. 10 watts maximum.
Loud Speaker	12" electrodynamic. Voice coil impedance 3.2 ohms, 400 cycles.
Tube and Lamp Complement	6BA6, FM—AM R.F. stage.
	12AT7, FM—AM oscillator and mixer.
	6BA6, FM—AM 1st I.F.
	6BA6, FM— 2nd I.F.
	6AL5, FM— ratio detector.
	6AT6, AM detector. A. F. AMP. and A.V.C.
	6SN7, Push-pull. Driver and phase-inverter.
	5U4G, rectifier.
	6V6, output.
	6V6, output.
	T-44 dial lamp (2 used).
Automatic Changer	See Manual 5068A.

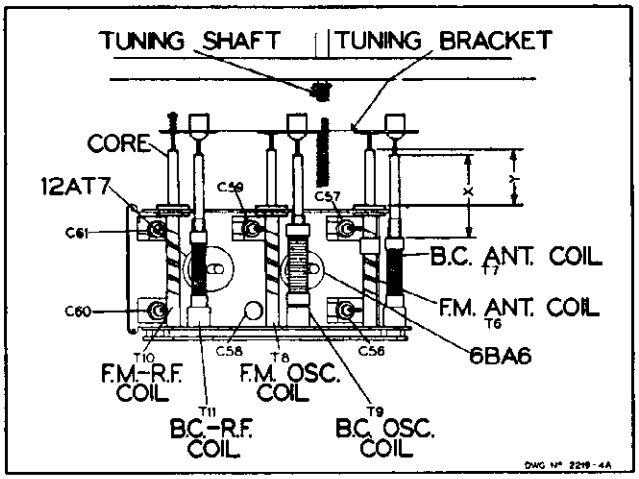

TUNER ADJUSTMENT

With tuner all the way out, dimension "X" should be 1½ inches. "Y" should be 1-1/16 inches. "X" is from the end of the slug to the edge of the coil winding. Check these dimensions before R.F. alignment is attempted of either the AM or FM band. No slug adjustment should be necessary since the slugs are properly set at the factory.

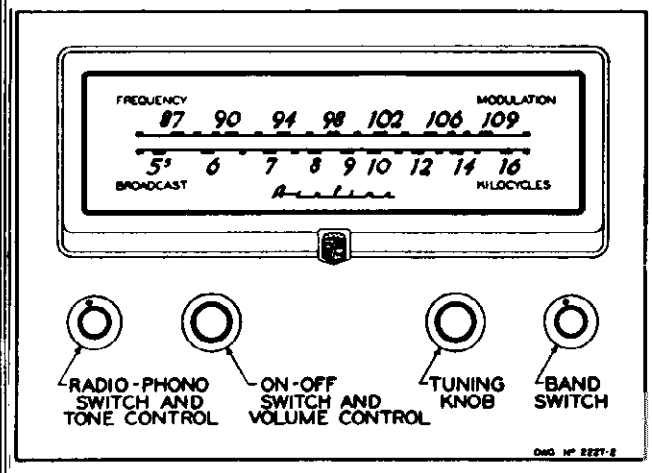

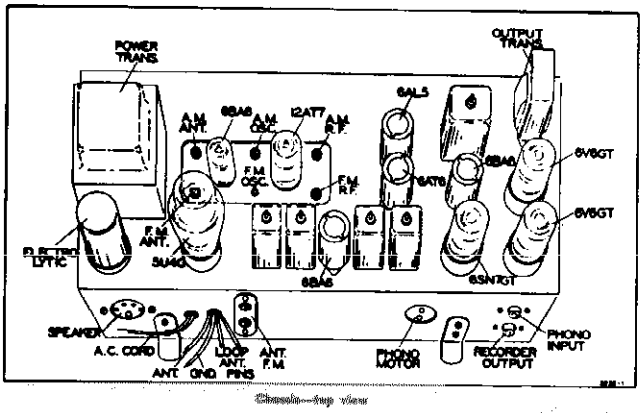

Chassis—top view

©John F. Rider

MODEL 8MBR-2733A

ALIGNMENT PROCEDURE

Broadcast Band Section I.F. and R.F.

The alignment procedure below includes the sensitivities at the inputs of various stages. All signal input values are based on an output of ½ watt. This may be measured by disconnecting the speaker voice coil and substituting a 3.2-ohm resistor across the secondary winding of the output transformer. A reading of 1.3 volts AC across this resistor will be approximately equivalent to a ½-watt output with the speaker connected. The volume control must be set at maximum. The tone control must be set for maximum treble.

The signal source must be an accurately calibrated signal generator capable of supplying the frequencies designated, modulated 30% with a 400-cycle audio signal. A 400 cycle audio signal is required for the audio measurement. Variations in sensitivities of plus or minus 25% are usually permissible.

AM - I. F. ALIGNMENT

Band Switch in AM Position. Tune Set to 1400 Kc. Dummy Antenna .1 Mfd.

SIGNAL GENERATOR FREQUENCY	CONNECTION TO RADIO	ADJUSTMENTS TO BE MADE	ADJUST FOR
455 Kc. Use 1000 microvolts	Pin No. 1 of 6BA6 No. 2 and ground	Primary and Secondary of T4 AM windings. See IF views	Maximum output Should be ½ watt
455 Kc. Use 30 microvolts	Pin No. 2 of 12AT7 and ground	Primary and Secondary of T3 AM windings. See IF views	Maximum output Should be ½ watt
400 cycles. Use 28 millivolts	Hot end of volume control and ground	None	Maximum output Should be ½ watt

BROADCAST BAND - R. F. ALIGNMENT

Check pointer so that the right hand edge of the pointer skirt coincides with the right hand edge of marker to the extreme right when iron cores are all the way out. For adjustment, see dial mechanism illustration.

SIGNAL GENERATOR FREQUENCY	CONNECTION TO RADIO	DUMMY ANTENNA	ADJUST
1620 Kc. Use 3 microvolts	AM Antenna and Ground	200 mmf.	C59, C57, C61 For maximum, ½ watt

Procedure for disassembly and assembly of dial mechanism

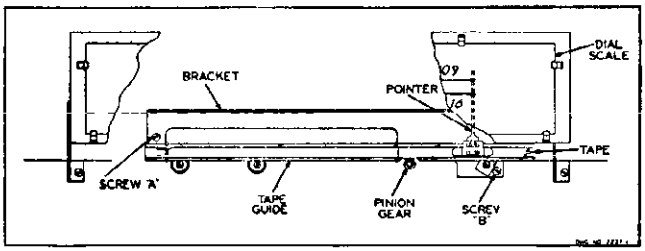

TO ALIGN POINTER—Loosen bracket screw "A". Then tape guide bracket can be moved up to allow proper meshing of tape teeth with pinion gear. Readjust bracket to eliminate backlash.

© John F. Rider

MODEL 843R-2733A

ALIGNMENT PROCEDURE

FM Band Section. I.F. and R.F.

A non-metallic alignment tool must be used.

IMPORTANT

No alignment of the FM section of this radio should be attempted unless you are positive that the circuits are in need of adjustment and you have the necessary equipment.

All components used in this radio are extremely stable and the tuned circuits should require no adjustment over long periods of time.

NOTE

The following alignment is based on the use of the new Simpson vacuum tube volt-meter which has a "floating ground". In other words, the meter, when used as a vacuum tube volt-meter, can have both the positive and negative sides connected to points above ground and still give true readings.

A standard AM signal generator is required.

FM - I. F. ALIGNMENT

Band Switch in FM Position. Dummy Antenna .1 Mfd.

SIGNAL GENERATOR FREQUENCY	CONNECTION TO RADIO	VACUUM TUBE VOLT METER CONNECTION TO RADIO	ADJUSTMENTS TO BE MADE	ADJUST FOR
10.7 Mc. Use about .1 volt	Pin No. 1 of 6BA6 no. 3 and ground	Pin no. 2 of 6AL5 and ground	Primary of T5	Resonance should be about 3 volts
10.7 Mc. Use about .1 volt	Pin No. 1 of 6BA6 no. 3 and ground	See note "A"	Secondary of T5	Zero. Use zero center scale. See note "B"
10.7 Mc. Use about 3300 microvolts	Pin No. 1 of 6BA6 no. 2 and ground	Pin no. 2 of 6AL5 and ground	Primary and Secondary of T4A 10.7 m.c. windings See IF views	Resonance should be about 3 volts
10.7 Mc. Use about 200 microvolts	Pin no. 2 of 12AT7 and ground	Pin no. 2 of 6AL5 and ground	Primary and Secondary of 10.7 m.c. windings of T3A See IF views	Resonance should be about 3 volts

NOTES ON FM—I.F. ALIGNMENT

NOTE "A" Connect two resistors, 100K OHMS each, from Pin No. 2 of 6AL5 to ground. These resistors must be matched within 5%. Connect as shown in dotted lines on schematic diagram. Connect vacuum tube voltmeter between the mid-point of the resistors and point zz.

NOTE "B" If T5 has been tampered with, it is possible that no crossover point will be found at first. Careful adjustment of both primary and secondary is necessary.

GENERAL: Input signals should be adjusted to give approximately 3 volts. The ratio detector is operating at a reasonable level at this point and will give the truest indication of correct alignment with the procedure specified.

FM - R. F. ALIGNMENT

Check pointer so that the right hand edge of the pointer skirt coincides with the right hand edge of marker to the extreme right when iron cores are all the way out. For adjustment, see dial mechanism illustration.

SIGNAL GENERATOR FREQUENCY	CONNECTION TO RADIO	DUMMY ANTENNA	ADJUST	VACUUM TUBE VOLT METER CONNECTION TO RADIO	ADJUST TO
100 Mc. Use about 10 microvolts	FM Antenna Terminals See note	300 ohms	C58 Osc. C60 R.F. C56 Ant.	Pin no. 2 of 6AL5 and Ground	Resonance about 3 volts

NOTE: If a signal generator with the above fundamental frequency is not available, it is sometimes possible to use harmonics. Use extreme care in picking harmonics. An alternate procedure is to use a local station carrier of known frequency to align the FM Band and to use the vacuum tube volt-meter as above for resonance indication. A weak carrier, however will not produce 3 volts.

NOTE: Connect 300 ohms in series with hot side of generator and connect to one screw. Connect cold side of generator to other screw

© John F. Rider

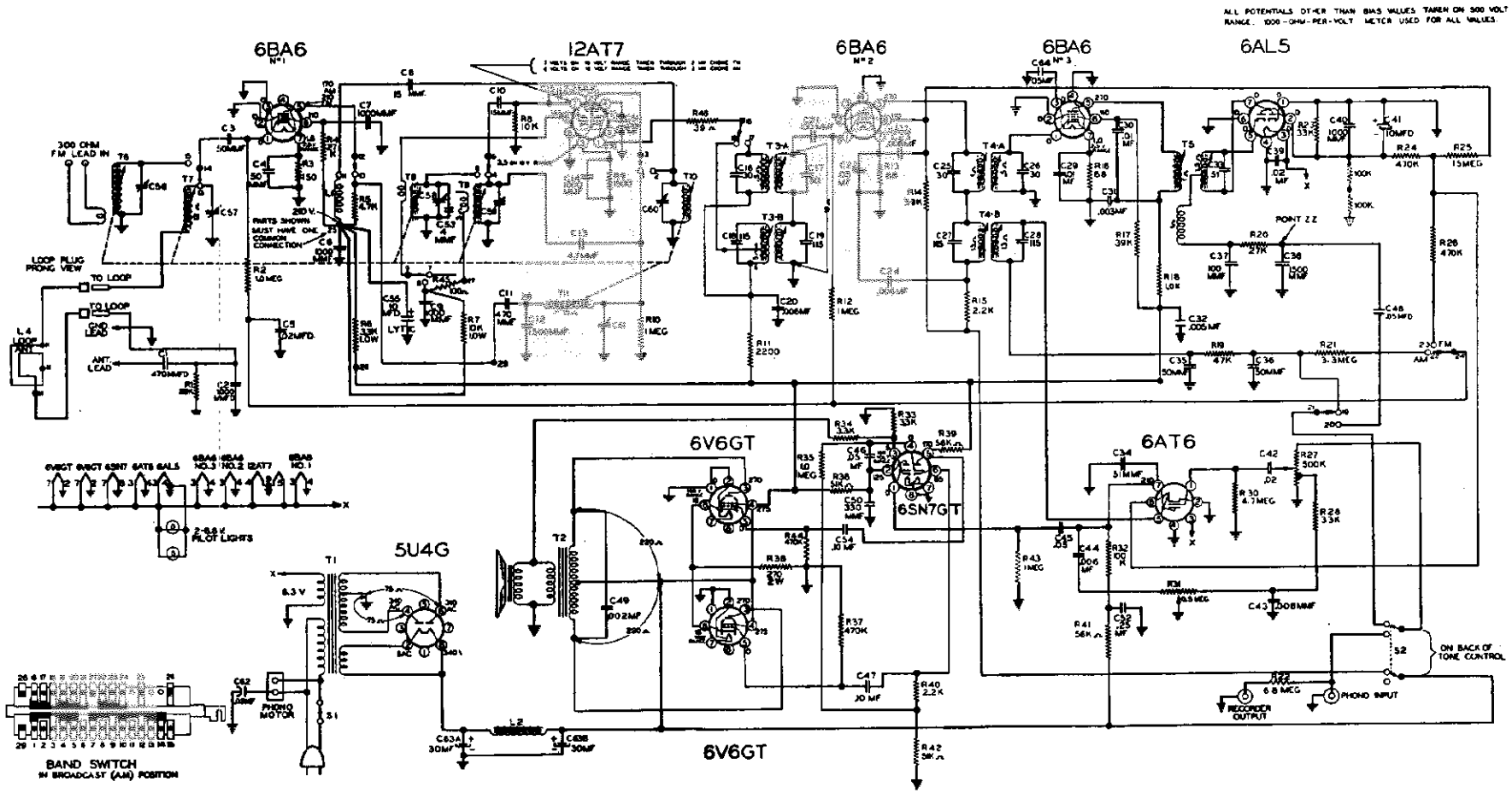

NOTE: Two 100K ohm resistors in series from Pin No. 2 of the 6AL5 to ground are connected as shown only when aligning the FM I. F. Refer to FM I. F. alignment procedure.

NOTE: B.C. Oscillator Coil T9 and number 7 terminal of slide switch should be connected together.

NOTE: Resistor R22 removed; with shielded wire from recorder output jack to radio side of radio-phono switch S2 added.

RECORD CHANGER: See Webster Model 246, Pages
RCD.CH. 20-12

© John F. Rider

Ref. No.	Part No.	Description	Qty. Used In Set
		TUNER PARTS	
		CONDENSERS	
C58	A-8H-15444	Trimmer, FM oscillator	1
C56, 57, 59, 61	A-2M-12618	Trimmer plate, large	4
C60	A-2M-14368	Trimmer plate, small	1
	A-5M-12615	Locator, for trimmer plates	5
C59, C61	B-6M-12616-S-2	Silvered mica film	2
C56, 57, 60	A-6M-12616	Clear mica film	3
	A-3C-12617	Spacer, for trimmer plates	5
C1, C11	C-8G-11732	470 mmf, ceramic	2
C2	C-8G-13695	1000 mmf, ceramic	1
C6, 7, 9, 14 51	C-8G-13201	1000 mmf, ceramic	5
C12	C-8G-11731	1500 mmf, ceramic	1
C10, C8	C-8G-13017	15 mmf, ceramic	2
C3, C4	C-8G-11484	50 mmf, ceramic	2
C13	A-8G-12495-6	4.7 mmf, ceramic	1
C15	A-8G-12495-4	2.2 mmf, ceramic	1
C53	C-8G-15859	4 mmf, ceramic	1
C5	C-8D-11304	.02 x 200 volts, paper	1
		RESISTORS	
R4	C-9B2-79	27K ohms, 1 watt	1
R1	C-9B1-21	22K ohms, 1/2 watt	1
R3	C-9B1-52	150 ohms, 1/2 watt	1
R5	C-9B1-17	4700 ohms, 1/2 watt	1
R8	C-9B1-19	10K ohms, 1/2 watt	1
R2, R10	C-9B1-31	1 megohm, 1/2 watt	2
R21	C-9B1-34	3.3 megohms, 1/2 watt	1
R45	C-9B1-50	100 ohms, 1/2 watt	1
R46	C-9B1-45	39 ohms, 1/2 watt	1
R9	C-9B1-64	1500 ohms, 1/2 watt	1
R6	C-9B2-6	3300 ohms, 1 watt	1
R7	C-9B2-74	10K ohms, 1 watt	1
		COILS	
T8	B-13D-13027-1	FM oscillator coil	1
—	B-51A-13056	Core for FM oscillator coil	1
T6	B-13E-13028	FM antenna coil	1
—	B-51A-13058	Core for FM antenna coil	1
T10	B-13C-13029	FM R.F. coil	1
—	B-51A-13057	Core for FM R.F. coil	1
T9	A-13D-15704	B.C. oscillator coil	1
—	B-51A-12722	Core for B.C. oscillator coil	1
T7	B-13E-13031	B.C. antenna coil	1
T11	B-13C-13032	B.C. R.F. coil	1
—	B-51A-12723	Core for B.C. ant. and R.F. coil	2
		MISCELLANEOUS	
	B-20B-15628	Slide switch	1
	A-15B-12997	7-prong miniature tube socket	1
	A-15B-13430	9-prong miniature, tube socket	1
	B-3A-15415	Lead screw	1
	A-3J-12309	Pinion gear	1
	A-49A-13228	Tension spring	1
	A-49A-12394	Spiral spring for slugs	3
	B-2J-13006	Rack tape with teeth and pointer bracket	1
	B-2D-15416	Guide for rack tape	1
	B-2G-16040	Pointer	1
	C-2D-15062	Yoke and bracket	1
	A-25A-13019	Core grommet, for AM	3
	A-3M-13020	Insert for core grommet	3
		MAIN CHASSIS PARTS	
		CONDENSERS	
C63A, C63B	B-8C-11629	Electrolytic filter condenser, 30—30 x 450 volts	1
C52	C-8D-13439	.25 mfd x 400 volts	1
C54, C47	C-8D-10760	.1 mfd x 400 volts	2
C31	C-8D-11013	.003 x 600 volts	1
C44, 43, 24, 23, 20	C-8D-10785	.006 x 600 volts	5
C29, C30	C-8D-10761	.01 x 400 volts	2
C45, 46	C-8D-10813	.05 x 400 volts	2
C49	C-8D-10789	.002 x 600 volts	1
C48, C22	C-8D-10770	.05 x 200 volts	2
C64	C-8D-15860	.05 x 200 volts	1
C41	A-8C-13132	Electrolytic, 10 mfd x 50 volts	1
C62	C-8J-11321	.02 x 600 volts, molded case	1
C35	A-2G-13962	.005 x 500 volts, ceramic	1
C21	C-8G-11734	100 mmf, ceramic	1
C38	C-8G-13059	1500 mmf, ceramic	1
C34	C-8G-13060	51 mmf, ceramic	1
C40	C-8G-13201	1000 mmf, ceramic	1
C50	C-8G-11741	330 mmf, ceramic	1
C37	C-8F3-225	100 mmf, mica	1
C39, C42	C-8D-11304	.02 x 200 volts, paper	2
C35, C36	A-8F-13047	Mica condenser, 50 mmf, dual	1
C55	A-8C-12154	Electrolytic, 10 mfd, 450 volts	1
		RESISTORS	
R27, S1	A-10A-13114	Volume control and switch, 500K ohms	1
R31, S2	A-11A-15645	Tone control and phono-radio switch	1
R22	C-9B1-36	6.8 megohms, 1/2 watt	1
R32	C-9B1-86	100K ohms, 1/2 watt	1
R44, R37	C-9B1-94	470K ohms, 1/2 watt	2
R41, R39	C-9B1-83	56K ohms, 1/2 watt	2
R33, R34	C-9B1-68	3300 ohms 1/2 watt	2
R30	C-9B1-35	4.7 megohms, 1/2 watt	1
R23, R28	C-9B1-80	33K ohms, 1/2 watt	2
R20	C-9B1-79	27K ohms, 1/2 watt	1
R13, R16	C-9B1-48	68 ohms, 1/2 watt	2
R14, R17	C-9B2-81	39K ohms, 1 watt	2
R24, R26	C-9B1-29	470K ohms, 1/2 watt	2
R25	C-9B1-302	15 megohms, 1/2 watt	1
R19	C-9B1-23	47K ohms, 1/2 watt	1
R12,R43,R35	C-9B1-31	1 megohm, 1/2 watt	3
R40	C-9B1-66	2200 ohms, 1/2 watt	1
R36, R42	C-9B1-200	51K ohms, 1/2 watt	2
R38	C-9B4-55	270 ohms, 2 watts	1
R18	C-9B1-13	1000 ohms, 1/2 watt	1
R11, R15	C-9B2-15	2200 ohms, 1 watt	2
		COILS	
T3B	B-13A-15680	Input I.F. transformer, 455 kc.	1
T4B	B-13B-15681	Output I.F. transformer, 455 kc.	1
T3A	B-13A-15682	Input I.F. transformer, 10.7 megohms	1
T4A	B-13B-15683	Second I.F. transformer, 10.7 megohms	1
T5	B-13M-15684	Ratio detector, 10.7 megohms	1
	C-13E-15687	Loop antenna assembly	1
		TRANSFORMERS	
T1	B-12A-13038-1	Power transformer, 105-125 volts, 50-60 cycles, primary	1
T2	B-12C-13042-1	Output transformer, for speaker	1
		SPEAKER	
	B-18B-13043-1	Electrodynamic speaker, 12" less output transformer	1
		MISCELLANEOUS	
B-30A-15996	[illegible]	Dial scale	1
	B-5B-14153-37	Knob, small, with dot, walnut	2
	B-5B-14153-41	Knob, small, with dot, mahogany	2
	B-5B-13308-37	Knob, large, without dot, walnut	2
	B-5B-13308-41	Knob, large, without dot, mahog.	2
	A-2G-14482	Escutcheon	1
	B-14M-11479	A.C. line cord	1
	A-3A-15630	Switch shaft	1
	A-2D-12313	Detent bracket	1
	A-43D-12934	"U" speed clip	1
	A-55C-12935	Ball bearing	1
	B-47A-11094-5	Pilot lite assembly	1
	A-46A-11739	Pilot lite, 6-8 volts, T-44	2
	A-25G-13448	Rubber chassis mounting cushion	4
	32K10-14306	10 - 32 x 1" Chassis mtg. bolts	4
	A-15C-10717	7 prong, miniature tube socket	4
	A-15B-10440	8 prong, octal socket	4
	A-19B-12644	Antenna socket	1
	A-7B-13050	FM dipole, 2-screw strip	1
	A-15B-11538	Speaker socket	1
	A-19B-12468	Phono motor socket	1
	A-19B-12170	Phono input socket	1
	A-19B-11044	Recorder socket	1
		RECORD CHANGER	
	B-20I-16345	246 Record Changer with cartridge	1
		Webster V42-2 cartridge	1
		NE-214 Tandem point needle	1

MODEL 84HA-2725A

ALIGNMENT PROCEDURE

Removal of the receiver chassis from the cabinet requires the use of other calibration means than the dial glass. Calibration strips mounted on the pointer rails are provided for alignment purposes.

To use these calibration strips, it is necessary to remove the dial plate (brown metal cover) in the following manner:

1. Remove dial pointers. Pull them straight out of their spring clips.
2. Remove the two dial lamp sockets.
3. Remove dial plate fastened to the chassis with seven sheet metal screws.

With the variable condensers fully meshed, the right hand side of the pointer carriage will be indexed to zero on the calibration strips.

The receiver is equipped with AUTOMATIC FREQUENCY CONTROL on the FM band to compensate for mechanical variations in the pushbutton mechanism. The correction factor is approximately 5 times: AFC takes hold 100 kc before the station frequency is reached and releases before tuning 450 kc passed the station frequency when receiving a 0.1 volt signal.

The standard RMA dummy specified in the alignment chart consists of a 200 mmf condenser in series with a 20 uh r-f choke which is shunted by a 400 mmf condenser in series with a 400 ohm carbon resistor.

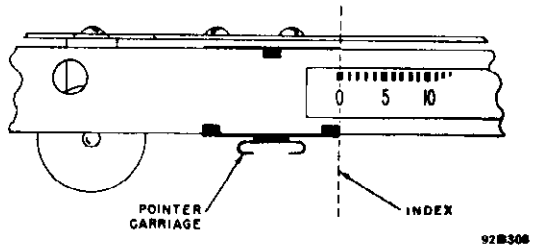

Calibration strip detail.

ALIGNMENT CHART

Step	Dummy Antenna	Signal Generator Coupling	Signal Generator Frequency	Band Switch Pos.	Radio Tuned To	Cal. No.	Adjust	Remarks
1	0.01 mfd. cap.	To stator plates of center section of AM tuning cap.	455 kc	"BC"	1000 kc	55	S3, S6, S2, S5, S1 & S4	Adjust for max. output. TREBLE tone control set at No. 1.
2	0.01 mfd. cap.	To stator plates of center section of FM tuning cap.	10.7 mc (No modulation)	"FM"	Mid-scale	55	S9, S12, S13, S8, S11, S7 & S10	Adjust for max. AVC voltage as measured between pin No. 7 of 6AL5 and ground with a 20,000 ohm per volt meter.
3	0.01 mfd. cap.	To stator plates of center section of FM tuning cap.	10.7 mc (No modulation)	"FM"	Mid-scale	55	S14	Adjust for zero voltage as measured between junction L16 and C34 and ground with a 20,000 ohm per volt meter.
4	Std. RMA dummy	To terminals "A" and "G" on ant. term. strip. TS_3.	1500 kc	"BC"	1500 kc	82	F*, H, and I	Adjust for max. output as in step 1.
			600 kc	"BC"	600 kc	15.5	G*	
5	Std. RMA dummy	To terminals "A" and "G" on ant. term. strip. TS_3.	16 mc	"C"	16 mc	84	E*, R, and S	Adjust for max. output as in step 1.
6	Std. RMA dummy	To terminals "A" and "G" on ant. term. strip. TS_3.	18 mc	"A"	18 mc	94.5	A*, O, and N	Adjust for max. output as in step 1.
			15 mc	"A"	15 mc	7.5	B*, P and Q	
7	Std. RMA dummy	To terminals "A" and "G" on ant. term. strip. TS_3.	12 mc	"B"	12 mc	91.5	C*, J, and K	Adjust for max. output as in step 1.
			9 mc	"B"	9 mc	6.5	D*, L	
8	Two 150 ohm carbon resistors	To terminals "D" and "D" on ant. term. strip; one 150 ohm resistor in each lead.	108 mc	"FM"	108 mc	83.5	T*, U, and V	Adjust for max. limiter grid voltage as measured between pin No. 4 of the 6SH7 and ground with a 100,000 ohm resistor in series with the voltmeter probe.

* Note—Calibration adjustments.

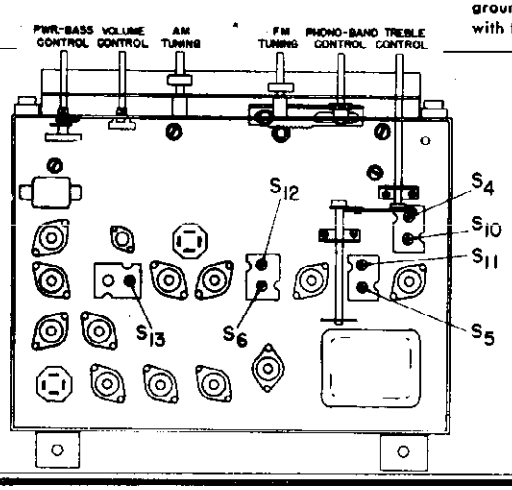

Bottom view showing alignment points.

©John F. Rider

MODEL 84HA-2725A

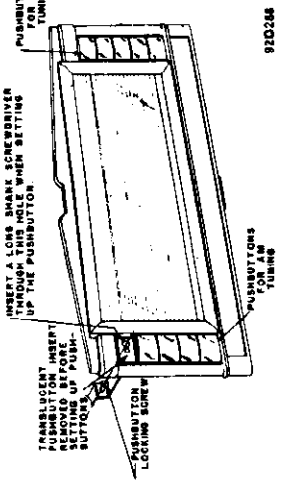

View showing pushbutton setup.

BUTTON SETTING

Insulate the muting switch contacts before setting the left hand group of AM pushbuttons. See Fig. 2. The right hand group of pushbuttons do not require insulation.

1. Select any one pushbutton.
2. Pull translucent insert straight out.
3. Insert screw driver blade through large hole of push-button into slot of locking screw. (See Fig. 1.)
4. Loosen locking screw about one-half turn. (Not more than one full turn.)
5. With pushbutton depressed, carefully tune in desired station with the manual control and tighten the locking screw.
6. Replace the translucent insert with the proper station call letters inserted as shown in Fig. 3.

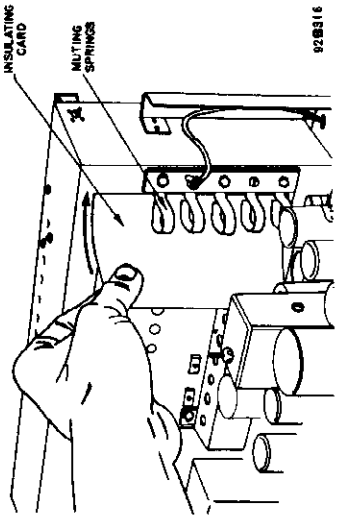

Insulating the muting switch contacts.

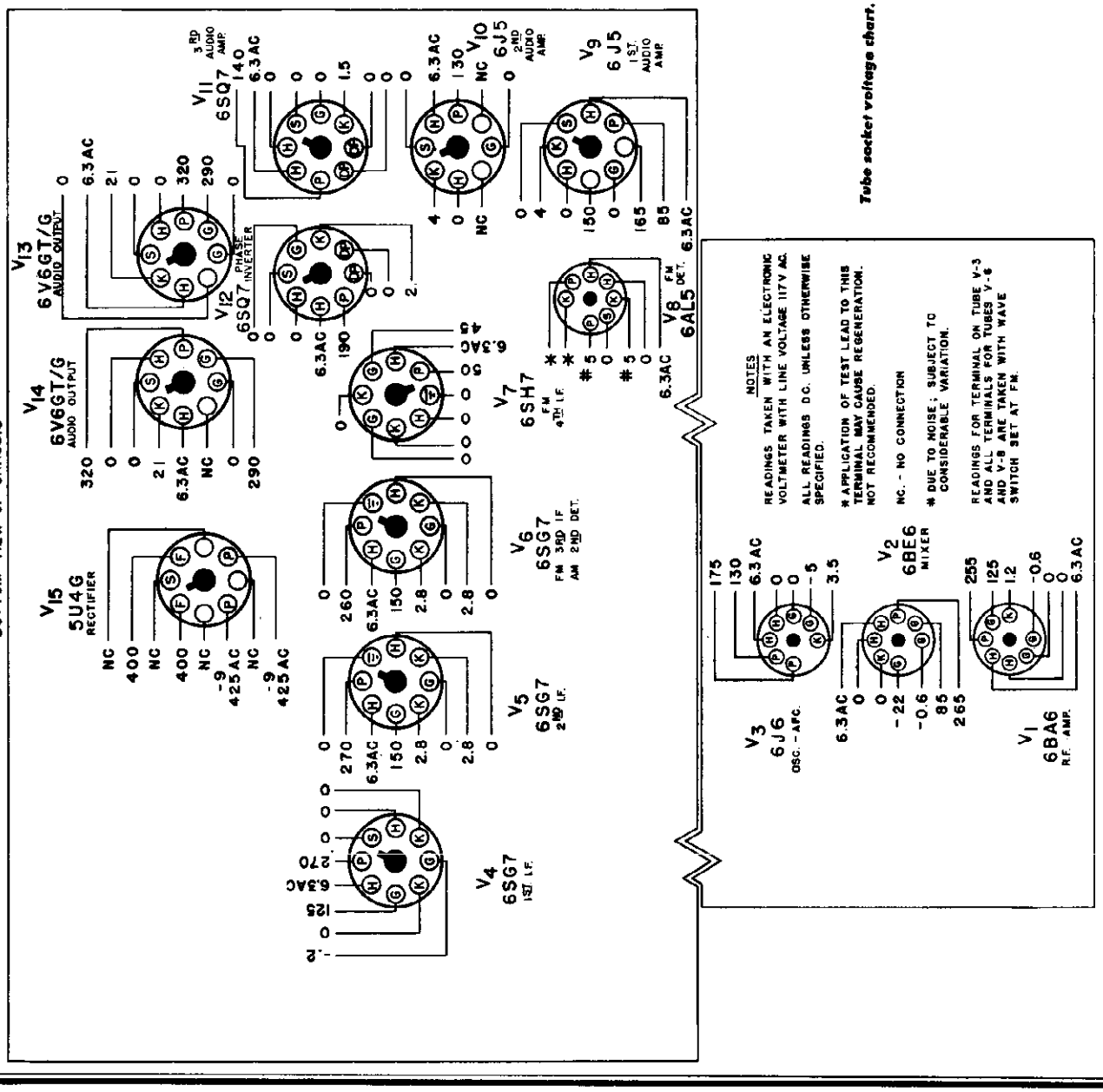

Tube socket voltage chart.

©John F. Rider

MODEL 84HA-2725A

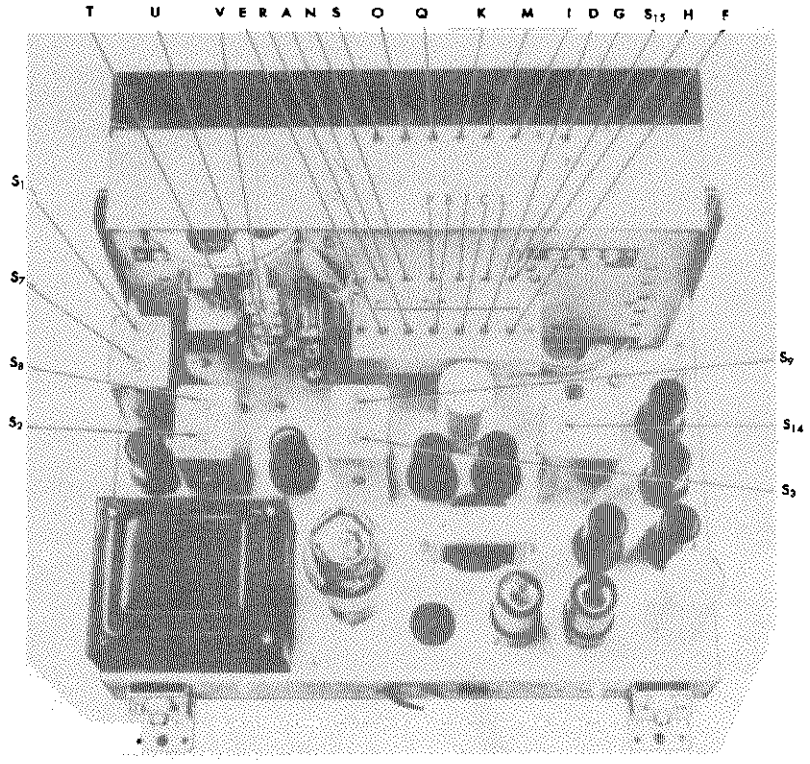

Top view showing alignment points.

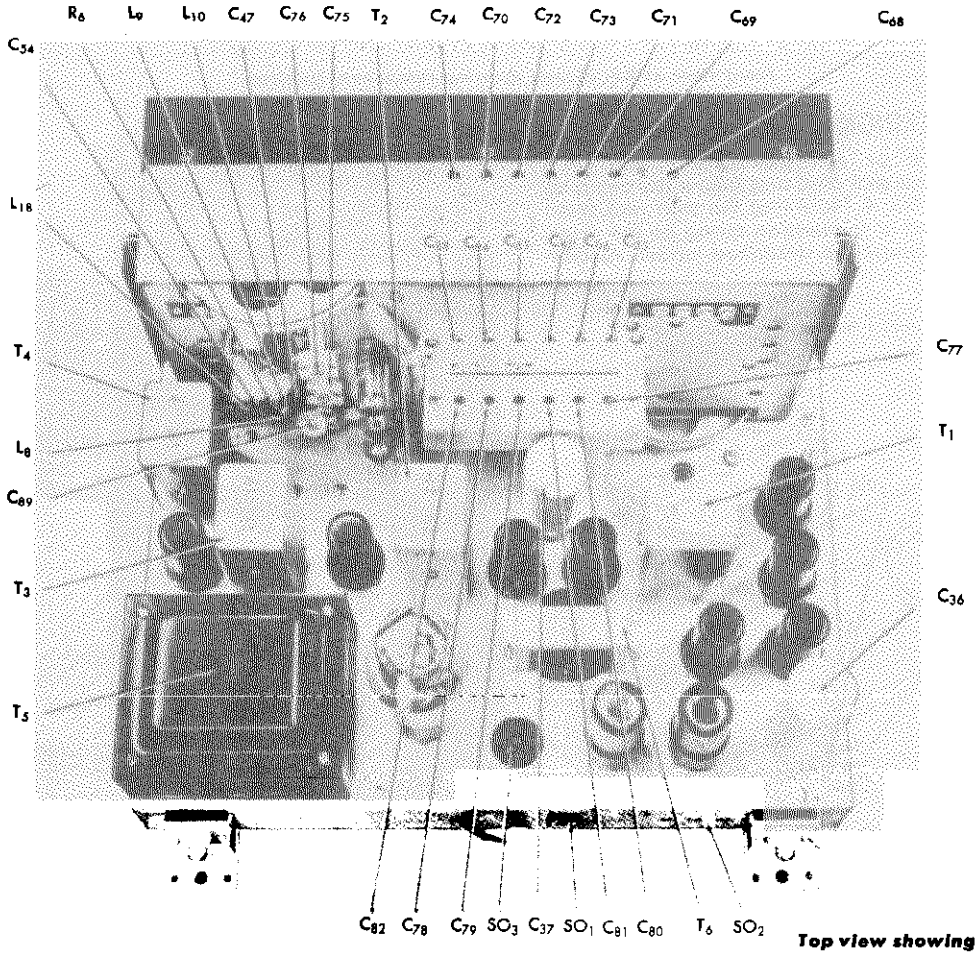

Top view showing component location.

©John F. Rider

MODEL 84HA-2725A

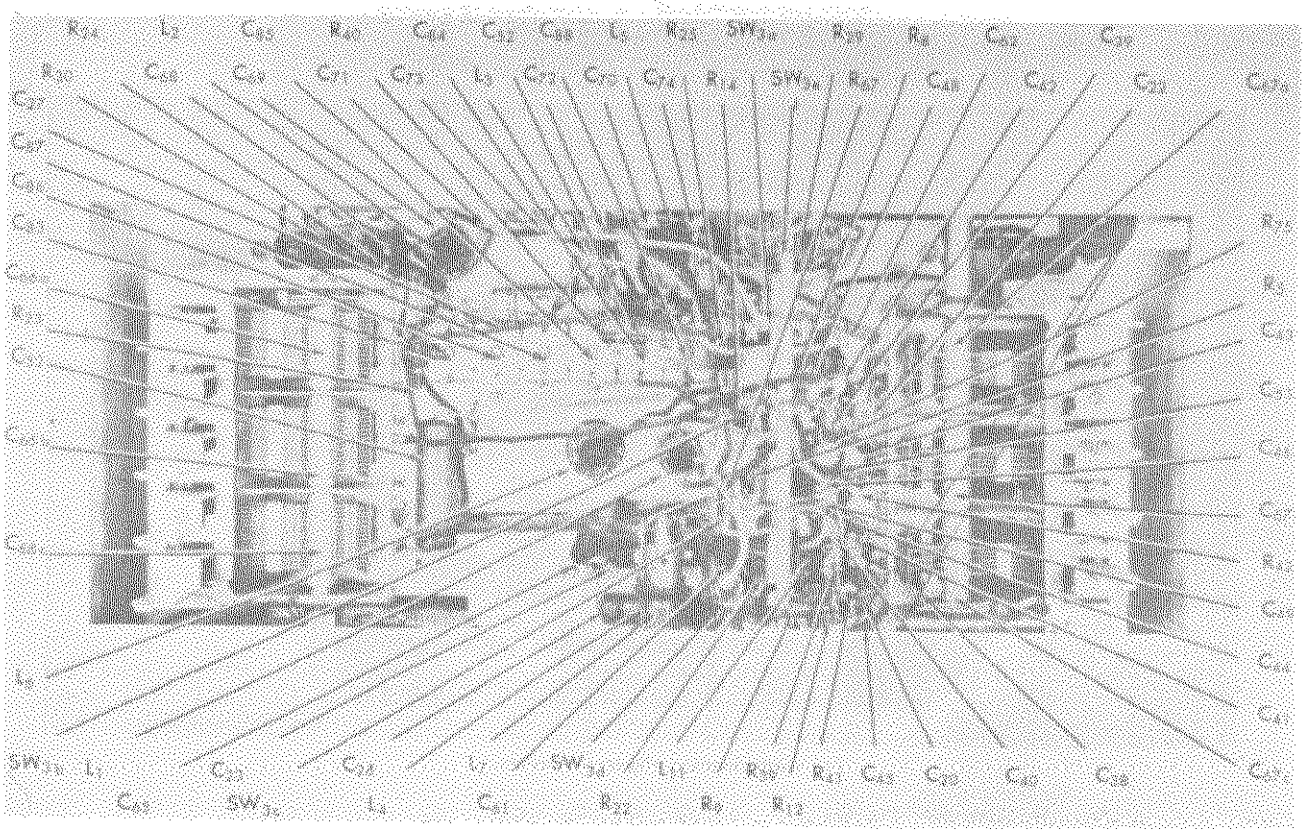

Front view of R.F. chassis showing component location.

DIAL CORD STRINGING INSTRUCTIONS

To restring either the "FM" or "AM" dial drive systems, cut a five foot length of 9 lb. test dial cord and follow the stringing procedure illustrated in Fig. 4. Note that the start and finish of both drives are located at the tension spring on the drum.

Index the pointer carriage as described under ALIGNMENT PROCEDURE.

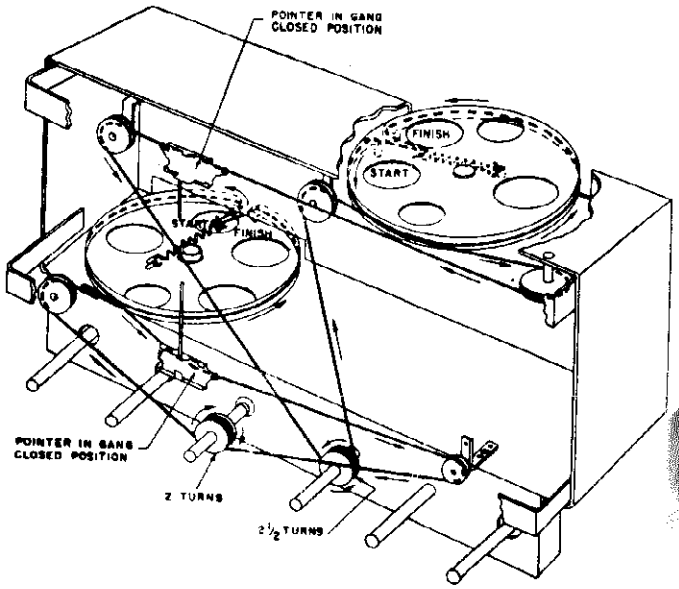

Dial cable stringing procedure.

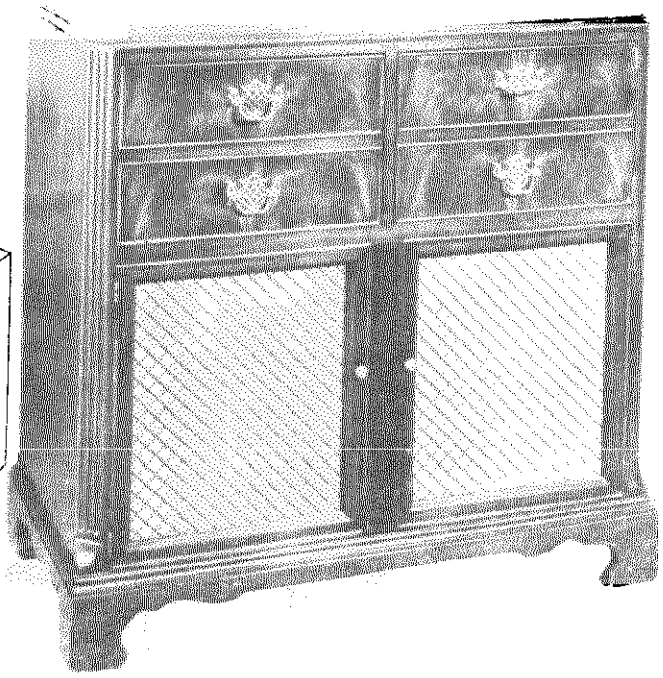

© John F. Rider

MODEL 84HA-2725A



Bottom view of receiver showing component location.

©John F. Rider

MODEL 84HA-2725A

Ref. No.	Part No.	Description
CONDENSERS		
C-1, 3, 4, 5, 6, 8, †9, 12, 13, 14, 15, 16, 17, 18, 20, 21, 22, 23, 24, 35, 90	46AZ103F	.01 mfd. 600 V., tubular paper
†C-7, 11, 31, 32, 50, 51, *93	46AY503F	.05 mfd. 600 V., tubular paper
*C-7, 34	46AZ302J	.003 mfd. 600 V., tubular paper
C-25	46AG103J	.01 mfd. 600 V., molded paper
C-26, 27, 28	46AY203F	.02 mfd. 600 V., tubular paper
†C-30	46AU104H	.1 mfd. 200 V., tubular paper
C-33	46AZ502J	.005 mfd. 600 V., tubular paper
C-36	45B099	60-20 mfd. 450 V., 20 mfd. 30 V., electrolytic
C-37	45B100	40-10 mfd. 450 V., 20 mfd. 30 V., electrolytic
C-38, 39	47A147	500 mmf. 500 V., ceramic
C-40, 42, 43, 44	47A148	1000 mmf. 500 V., ceramic
C-41	47B32103N1	10,000 mmf. 150 V., ceramic
C-45	47A149	10 mmf. 500 V., ceramic
C-46, 47	47A150	47 mmf. 500 V., ceramic
C-48	47A160-3	1.5 mmf. ceramic
C-49	CM20A100K	10 mmf. 500 V., mica
C-52, 64	CM20A101M	100 mmf. 500 V. mica
C-54	CM20A220K	22 mmf. 500 V., mica
C-55	CM20A220M	22 mmf. 500 V., mica
C-56, 57, 58	CM20A221M	220 mmf. 500 V., mica
†C-59	CM20A331M	330 mmf. 500 V., mica
C-60, 61, 62	CM20A470M	47 mmf. 500 V., mica
C-63	CM30A102M	1000 mmf. 500 V., mica
C-65	CM35A392J	3900 mmf. 500 V., mica
C-66	48C176	Tuning condenser, AM
C-67	48C175	Tuning condenser, FM
C-68	44A189	570 mmf. trimmer
C-69, 70, 71, 72, 73, 74	44B190	Trimmer assembly, ant. stage
C-75	44A192	Trimmer, FM, mixer stage
C-76	44A194	Trimmer, FM, ant. stage
C-77, 78, 79, 80, 81, 82	44B195	Trimmer assembly, osc. stage
C-83, 84, 85 86, 87, 88	44B196	Trimmer assembly, mixer stage
C-89	44A218	Trimmer, FM, osc. stage
C-92	CC20SH390M	39 mmf. 500 V., ceramic
RESISTORS		
R-1, 2	24A864	330 ohms 5 watts, WW
R-3	RC65CE470M	47 ohms 4 watts, carbon
R-4	25A571	2 meg-ohms, volume control
R-5	RC20AE100M	10 ohms ½ watt, carbon
R-6, 8	RC20AE101M	100 ohms ½ watt, carbon
†R-7, †49, *79	RC20AE333M	33,000 ohms ½ watt, carbon
R-9, †10, 12, 13, 14, 77	RC20AE102M	1000 ohms ½ watt, carbon
†R-11	RC20AE473M	47,000 ohms ½ watt, carbon
R-15, †16	RC20AE103M	10,000 ohms ½ watt, carbon
*R-16	RC20AE153M	15,000 ohms ½ watt, carbon
R-17, 19, 20, 21, 22, 23, 24	RC20AE104M	100,000 ohms ½ watt, carbon
†R-18, †46	RC20AE330M	33 ohms ½ watt, carbon
R-26, 27, 28, 29, 30, 31, *83	RC20AE105M	1 meg-ohm ½ watt, carbon
R-32	RC20AE151M	150 ohms ½ watt, carbon
R-33, 34	RC20AE104K	100,000 ohms ½ watt, carbon
R-35, 36, 37, 38, 39	RC20AE221M	220 ohms ½ watt, carbon
R-40	RC20AE222M	2200 ohms ½ watt, carbon
R-41, 42, †78	RC20AE223M	22,000 ohms ½ watt, carbon
R-43, 44, 52, 64	RC20AE224M	220,000 ohms ½ watt, carbon
R-45, 50, 51	RC20AE334M	330,000 ohms ½ watt, carbon
*R-46	RC20AE681K	680 ohms ½ watt, carbon
†R-47, 48	RC20AE332M	3300 ohms ½ watt, carbon
*R-47, *49	RC20AE154M	150,000 ohms ½ watt, carbon
R-53	RC20AE392K	3900 ohms ½ watt, carbon
†R-54, 55	RC20AE471M	470 ohms ½ watt, carbon
*R-54	RC20AE822K	8200 ohms ½ watt, carbon
†R-56, *82	RC20AE472M	4700 ohms ½ watt, carbon
†R-57	RC20AE821K	820 ohms ½ watt, carbon
R-58, 59	RC20AE473M	47,000 ohms ½ watt, carbon
R-60, †61	RC20AE683K	68,000 ohms ½ watt, carbon
R-62, 65	RC20AE474M	470,000 ohms ½ watt, carbon
R-63	RC20AE394K	390,000 ohms ½ watt, carbon
R-66	RC30AE104M	100,000 ohms 1 watt, carbon
R-67	RC30AE333M	33,000 ohms 1 watt, carbon
R-68, 69, 70	RC30AE473M	47,000 ohms 1 watt, carbon
R-71	RC40AE223M	22,000 ohms 1 watt, carbon
R-72, 73, 74	RC40AE103M	10,000 ohms 2 watts, carbon
R-75	RC40AE333K	33,000 ohms 2 watts, carbon
R-76	24BG331E	330 ohms 10 watts, WW
*R-80	RC30AE683K	68,000 ohms 1 watt, carbon
R-81	RC30AE068K	6.8 ohms 1 watt, carbon
R-84	RC40AE680M	68 ohms 2 watt, carbon
TRANSFORMERS AND COILS		
T-1	50C208	Transformer, FM detector
T-2, 3	50C209	Transformer, interstage IF
T-4	50C210	Transformer, 1st IF
T-5	52C151	Transformer, power
T-6	55B086	Transformer, audio output
L-1	51B905	Mixer coil, SW band
L-2	51B906	Antenna coil, BC band
L-3	51B907	Loading coil, loop
L-4	51B908	Oscillator coil, SW band
L-5	51B909	Antenna coil, SW band
L-6	51B910	Mixer coil, BC band
L-7	51B911	Oscillator coil, BC band
L-8	51B914	Oscillator coil, FM band
L-9	51B915	Mixer coil, FM band
L-10	51B916	Antenna coil, FM band
L-11	53B008	Plate choke, osc. stage
L-12	53B009	Filament choke
L-13, 14, 15, 16	53A106	RF choke
L-18	53A115	RF choke, antenna stage plate
L-19	57C106	BC loop antenna
L-20	57C108-1	FM folded doublet
†L-21	56B082	Audio choke
SWITCHES		
SW-1	60B265	Power & Bass tone switch ass'y
SW-2	60B264	Treble switch ass'y
SW-3	60C266	Band switch
SW-4	18A092	Muting switch
PLUGS AND SOCKETS		
PL-1	87B1625	Line cord and plug
SO-1	10A015	Receptacle, phono motor
SO-2	36A034	Jack, phono pick-up
SO-3	6A277	Socket, speaker
	6A190	Socket, octal (tube)
	6A296	Socket, octal (6V6GT tubes)
	6B297	Socket, miniature (tube)
	86A046	Socket & bracket, dial light, L.H.
	86A047	Socket & bracket, dial light, R.H.
	86B050-1	Socket, cabinet pilot light
MISCELLANEOUS		
	69A169	Shield, tube base (miniat. tube)
	69A104	Shield, tube (miniature tube)
	75A076	Spring, tube retainer
	69C172	Shield, FM coil section
	86A037	Shield, dial light
	69A197	Shield, pilot light
	69B217	Shield, escutcheon
	67B645	Carriage, pointer
	82B139	Pointer, FM
	82B143	Pointer, AM
	75A132	Spring, pointer
	17B028	Push-button (brown)
	17A027	Insert, push-button, lucite
	17A029	Insert, push-button, metal
	17A025	Call letters
	75A006	Spring, dial drive
	38A017	Cord, dial drive
	7D039	Escutcheon
	22D178	Dial glass, upper
	22B179-1	Dial glass, lower
	76A331	Clips, dial glass
	15B093	Knob (Tuning and vol. controls)
	15A129	Knob & pin ass'y (Bandswitch and tone controls)
TS-1	880277	Terminal strip, antenna
TS-2	88A278	Terminal strip, loop
	85C056-1	Speaker ass'y
	87A1615-1	Transmission line, loop
	86A057	Jewel, pilot lamp
	67A765	Bracket, pilot lamp
	L-230200	Record changer motor (60 cycles)
	P-30S	Pickup cartridge (P-30S)
	115A020	Pickup cartridge needle (P-30S)
	LT	Pickup cartridge (LT)
	115A021	Pickup cartridge needle (LT)

† NOTE—Used only on chassis stamped RUN No. 1.

* NOTE—Used only on chassis stamped RUN No. 2.

Run Numbers are stamped on rear chassis apron.

©John F. Rider

MODEL 84HA-2725A

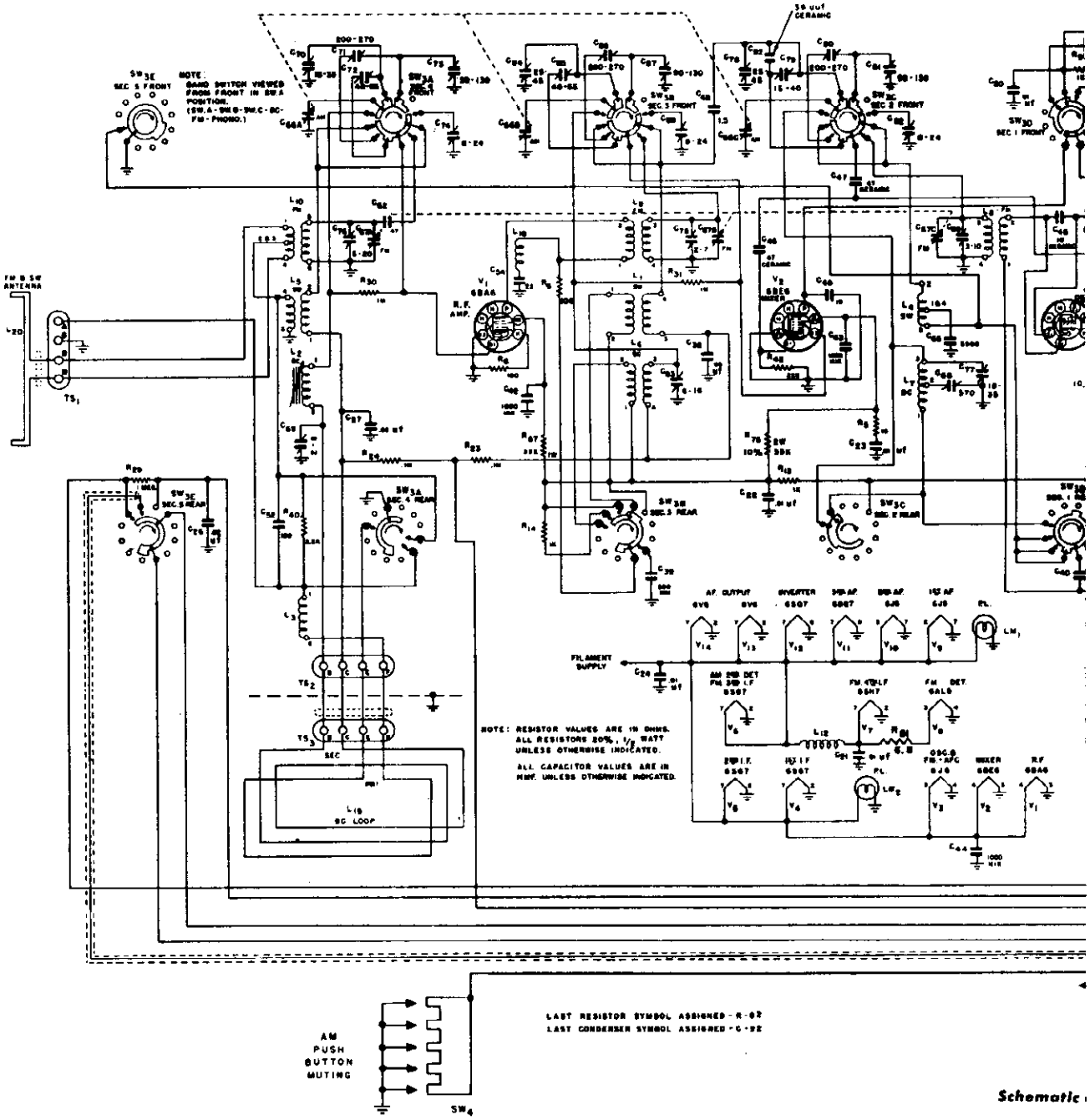

Schematic

GENERAL DESCRIPTION

This model is a 14 tube (plus rectifier tube) superheterodyne console radio with an automatic record changer. A built-in loop provides signal pick-up for the standard (540-1700 kc) broadcast band. A built-in folded doublet type antenna with 300-ohm transmission line serves primarily as the FM antenna and also as a pick-up for the shortwave bands. Separate manual tuning controls are provided for FM and AM (including SW) reception. Two sets of five mechanical pushbuttons are provided for FM and AM automatic tuning. Automatic frequency control is provided for FM reception to compensate for thermal drift and mistuning encountered button control. Separate bass and treble control to provide maximum tone control over the respc audio system. The band switch provides for selec frequency channels and phono operation. The five channels consist of the FM band (88-108 mc), t broadcast band (540-1700 kc) and three SW (bands (15-18 mc) (9-12 mc) and (5.8-18 mc). Th shortwave bands are "spread bands" to provide sirable tuning in the SW broadcast bands.

©John F. Rider

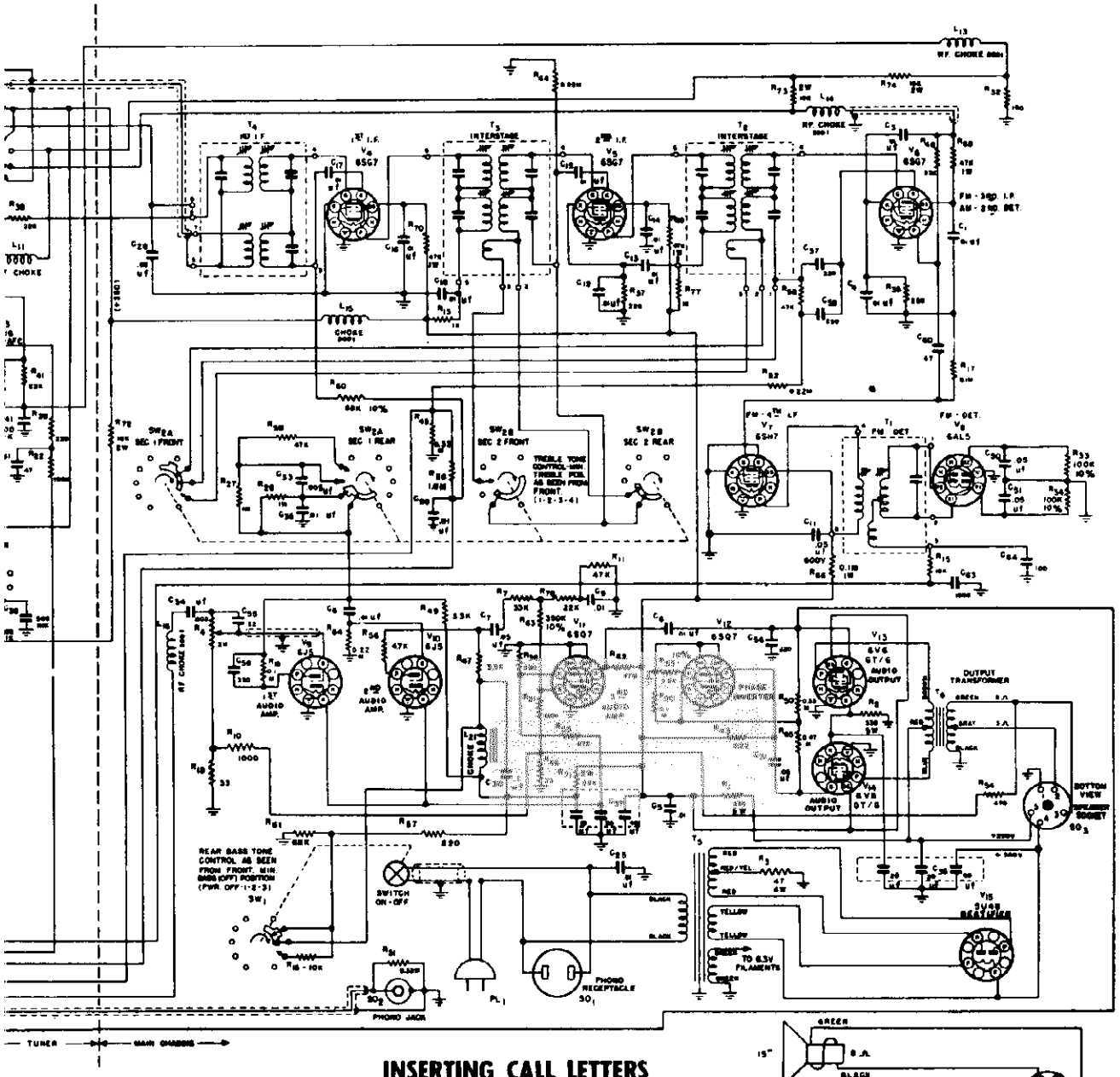

llagram (Run No. 2)

with push-
s are used
nse of the
ion of five
frequency
ne AM or
hortwave)
first two.
more de-

INSERTING CALL LETTERS

1. Slide out metal insert from translucent button assembly. (See Fig. 3.)
2. Insert desired call letter tab.
3. Replace metal insert behind call letter tab.
4. Replace translucent insert assembly into push-button mechanism.

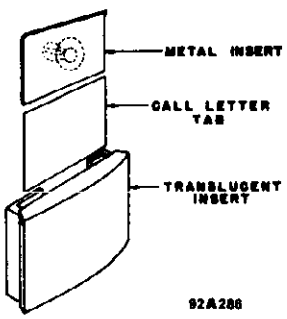

Call letter installation.

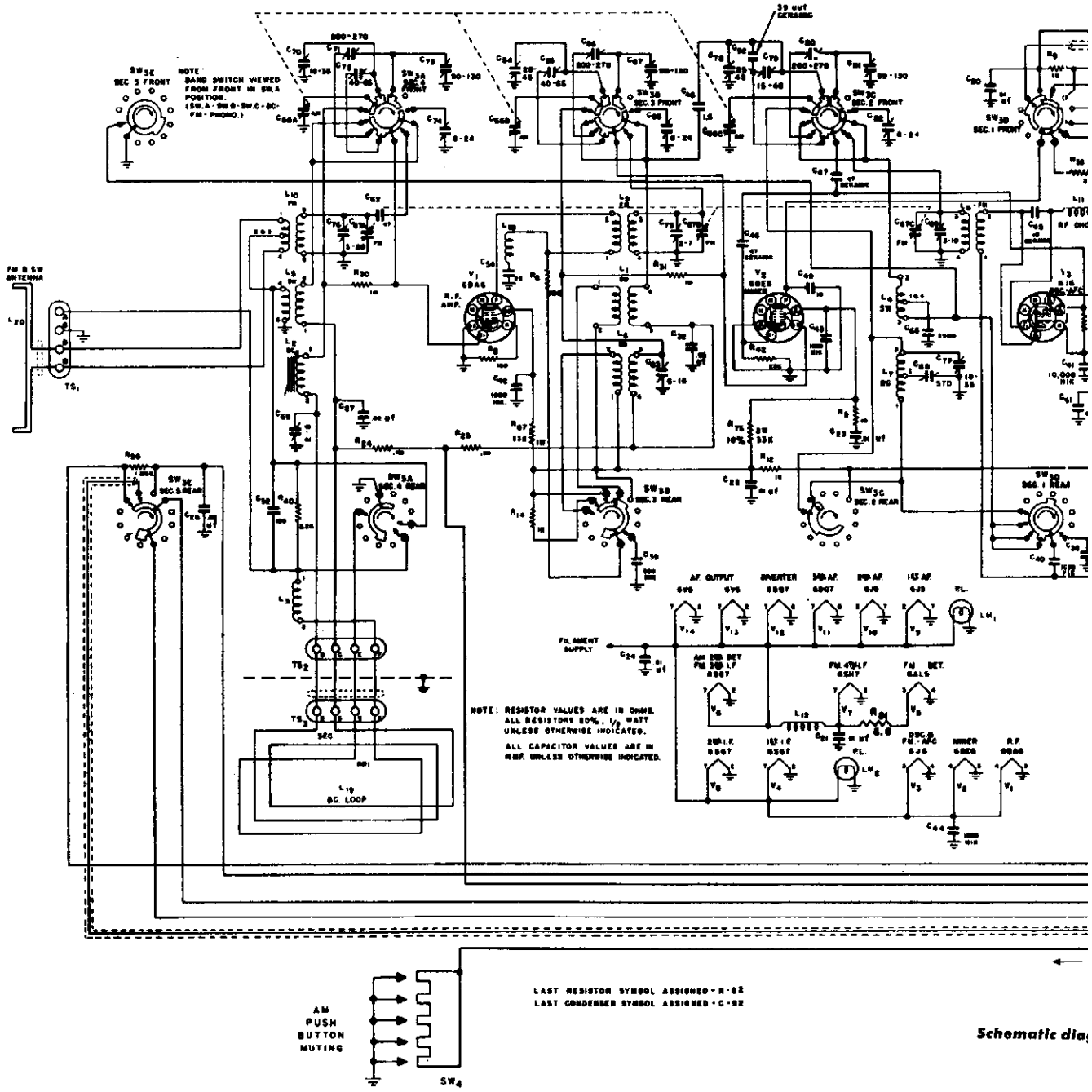

Schematic dia

ELECTRICAL SPECIFICATIONS

Power Supply	105-125 volts AC 60 cycles, 180 watts, 200 watts with record changer
Frequency Ranges	Broadcast 540-1700 KC Frequency Modulation 88-108 MC Short Wave "A" 15-18 MC "B" 9-12 MC "C" 5.8-18 MC
Intermediate Frequency	AM - 455 KC FM - 10.7 MC
Antennas	AM - Built-in Loop FM - Built-in Doublet Provision for external antennas

Power Output	10 watts (Un
Speaker	15-inch P.M.
Voice Coil Impedance	8 ohms
Record Changer	See Manual
Tube and Dial Lamp Complement	6BA6 R.F. Ar 6BE6 Mixer 6J6 Oscillat 6SG7 1st I.F. 6SG7 2nd I. 6SG7 { FM - AM - 6SH7 FM I.F.

©John F. Rider

MODEL 84HA-2725A

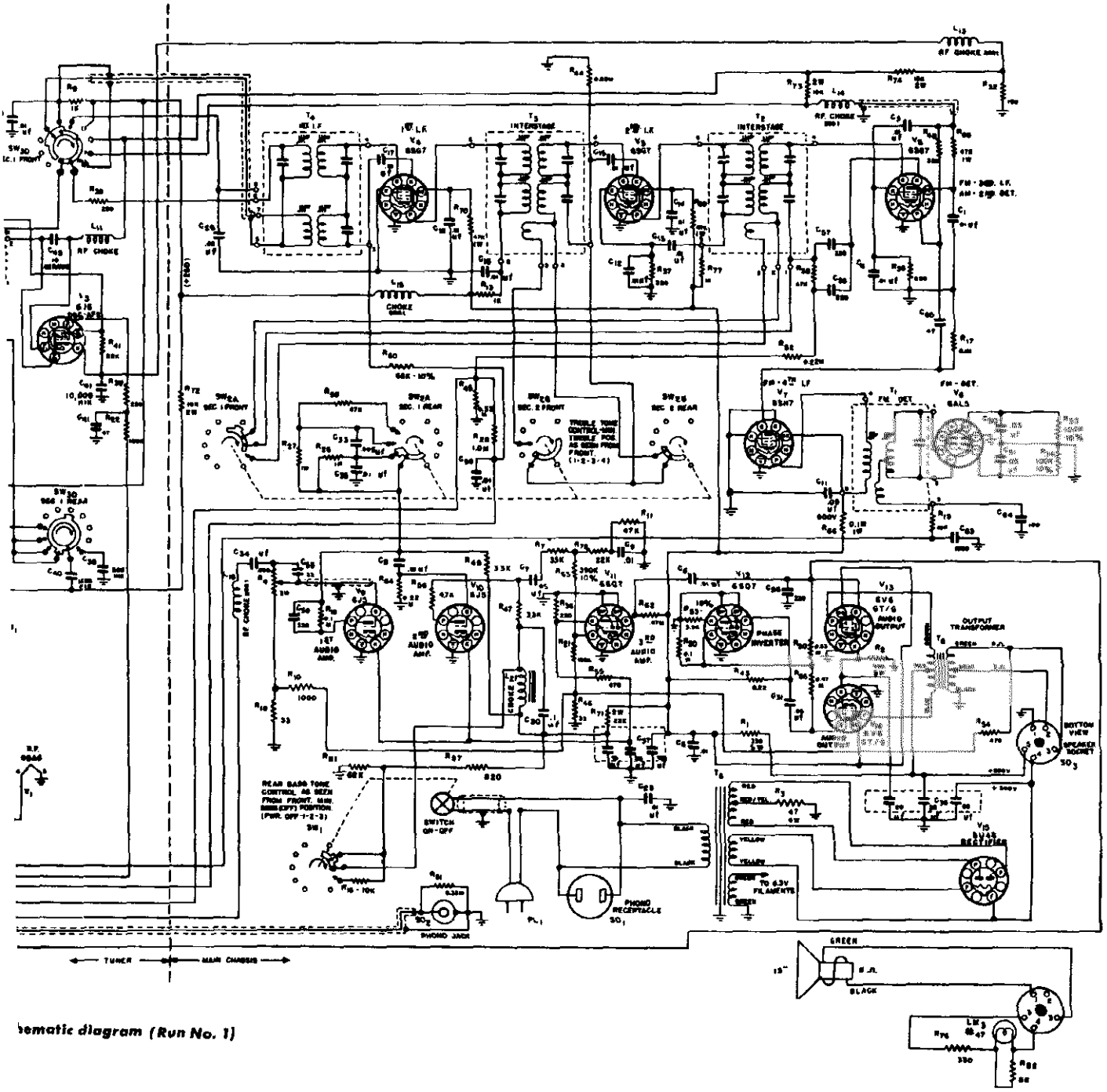

hematic diagram (Run No. 1)

) watts (Undistorted)
5-inch P.M.
ohms
ee Manual No. 5046

3A6 R.F. Amplifier
3E6 Mixer
6 Oscillator/A.F.C.
6G7 1st I.F. Amplifier
6G7 2nd I.F. Amplifier
6G7 { FM - I.F. Amplifier / AM - 2nd Detector
6H7 FM I.F. Amplifier

6AL5 FM Detector
6J5 1st Audio Amplifier
6J5 2nd Audio Amplifier
6SQ7 3rd Audio Amplifier
6SQ7 Phase Inverter
6V6GT/G } Power Amplifier
6V6GT/G }
5U4G Rectifier
Mazda No. 44 Dial Lamps
Mazda No. 47 Pilot Lamp

RECORD CHANGER: See Seeburg Model L, Pages RCD.CH. 15-18 through RCD.CH. 15-38.

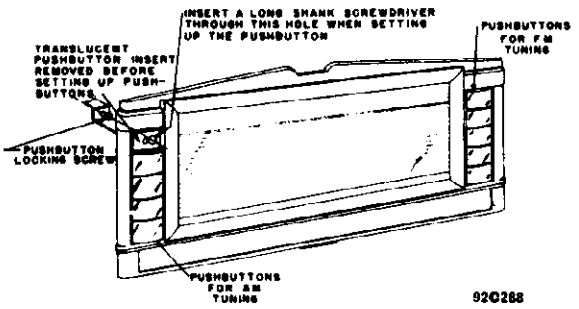

Fig. 1. View showing pushbutton setup.

BUTTON SETTING

Insulate the muting switch contacts before setting the lower group of AM pushbuttons. See Fig. 2. The upper group of pushbuttons do not require insulation.

1. Select any one pushbutton.
2. Pull translucent insert straight out.
3. Insert screw driver blade through large hole of push-button into slot of locking screw. (See Fig. 1.)
4. Loosen locking screw about one-half turn. (Not more than one full turn.)
5. With pushbutton depressed, carefully tune in desired station with the manual control and tighten the locking screw.
6. Replace the translucent insert with the proper station call letters inserted as shown in Fig. 3.

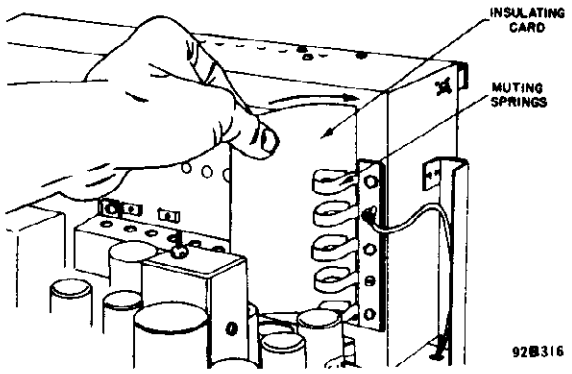

Fig. 2. Insulating the muting switch contracts.

INSERTING CALL LETTERS

1. Slide out metal insert from translucent button assembly. (See Fig. 3.)
2. Insert desired call letter tab.
3. Replace metal insert behind call letter tab.
4. Replace translucent insert assembly into push-button mechanism.

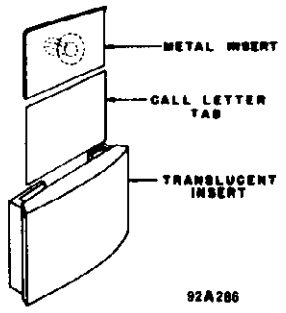

Fig. 3. Call letter installation.

DIAL CORD STRINGING INSTRUCTIONS

To restring either the "FM" or "AM" dial drive systems, cut a five foot length of 9 lb. test dial cord and follow the stringing procedure illustrated in Fig. 4. Note that the start and finish of both drives are located at the tension spring on the drum.

Index the pointer carriage as described under ALIGNMENT PROCEDURE.

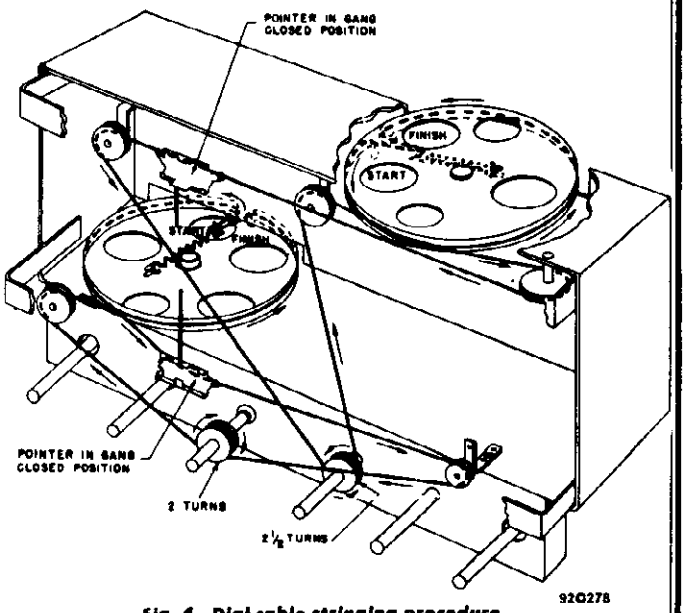

Fig. 4. Dial cable stringing procedure.

ALIGNMENT PROCEDURE

Removal of the receiver chassis from the cabinet requires the use of other calibration means than the dial glass. Calibration strips mounted on the pointer rails are provided for alignment purposes.

To use these calibration strips, it is necessary to remove the dial plate (brown metal cover) in the following manner:

1. Remove dial pointers. Pull them straight out of their spring clips.
2. Remove the two dial lamp sockets.
3. Remove dial plate fastened to the chassis with seven sheet metal screws.

With the variable condensers fully meshed, the right hand side of the pointer carriage will be indexed to zero on the calibration strips. Refer to Fig. 5.

The receiver is equipped with AUTOMATIC FREQUENCY CONTROL on the FM band to compensate for mechanical variations in the pushbutton mechanism. The correction factor is approximately 5 times: AFC takes hold 100 kc before the station frequency is reached and releases before tuning 450 kc passed the station frequency when receiving a 0.1 volt signal.

The standard RMA dummy specified in the alignment chart consists of a 200 mmf condenser in series with a 20 uh r-f choke which is shunted by a 400 mmf condenser in series with a 400 ohm carbon resistor.

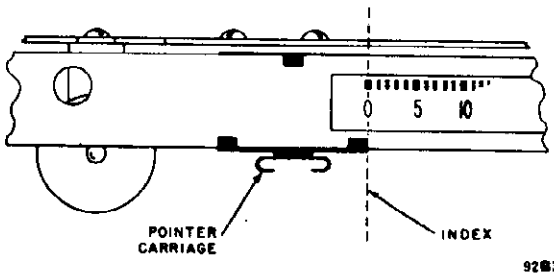

Fig. 5. Calibration strip detail.

© John F. Rider

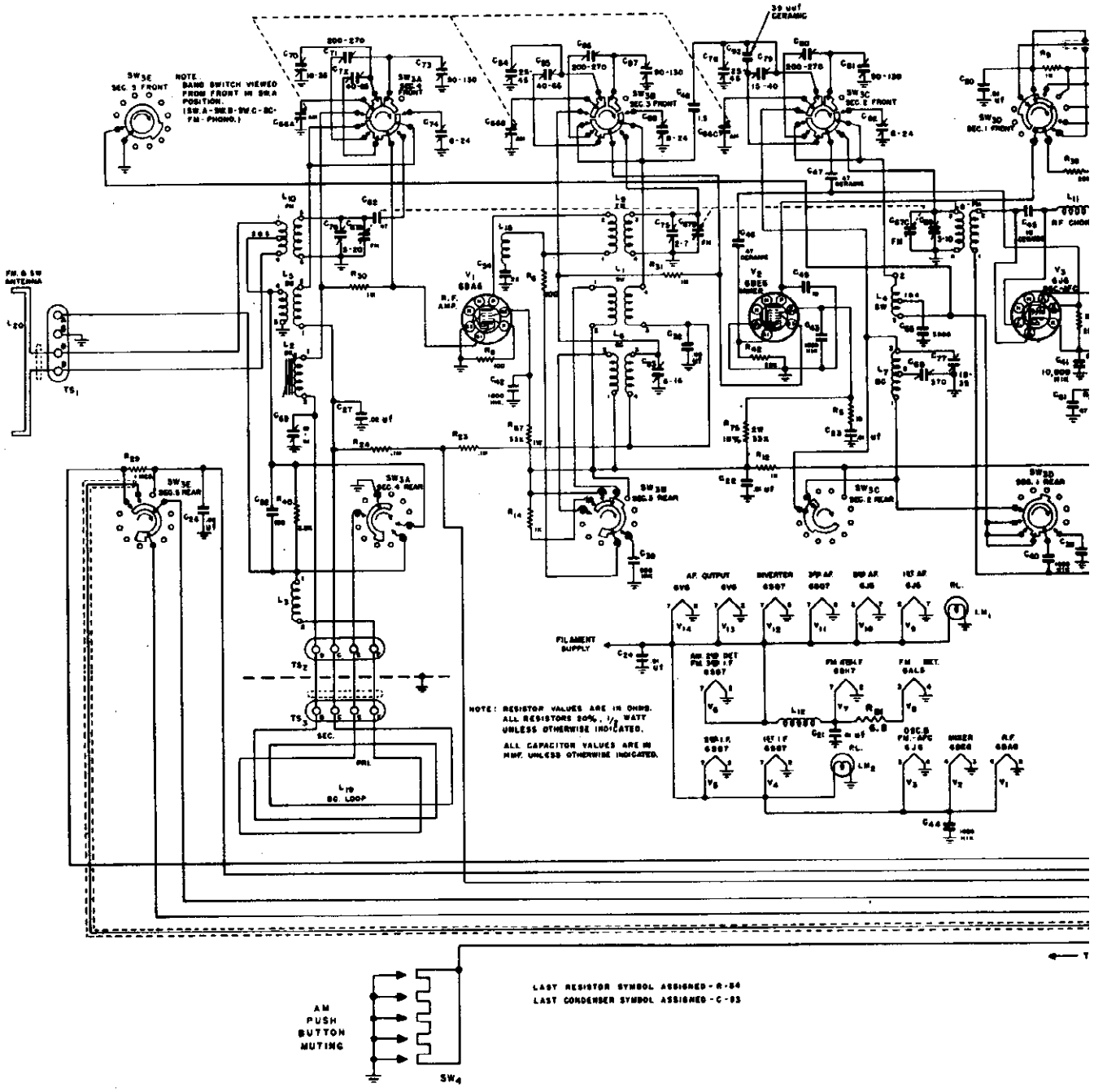

NOTE. BAND SWITCH VIEWED FROM FRONT IN SW.A POSITION. (SW.A-SW.B-SW.C-BC-FM-PHONO.)
FM. & SW ANTENNA
R.F. AMP.
AF. OUTPUT
INVERTER
FILAMENT SUPPLY
NOTE: RESISTOR VALUES ARE IN OHMS. ALL RESISTORS 20%, 1/2 WATT UNLESS OTHERWISE INDICATED.
ALL CAPACITOR VALUES ARE IN MMF. UNLESS OTHERWISE INDICATED.
BC. LOOP
AM PUSH BUTTON MUTING
LAST RESISTOR SYMBOL ASSIGNED - R-84
LAST CONDENSER SYMBOL ASSIGNED - C-93

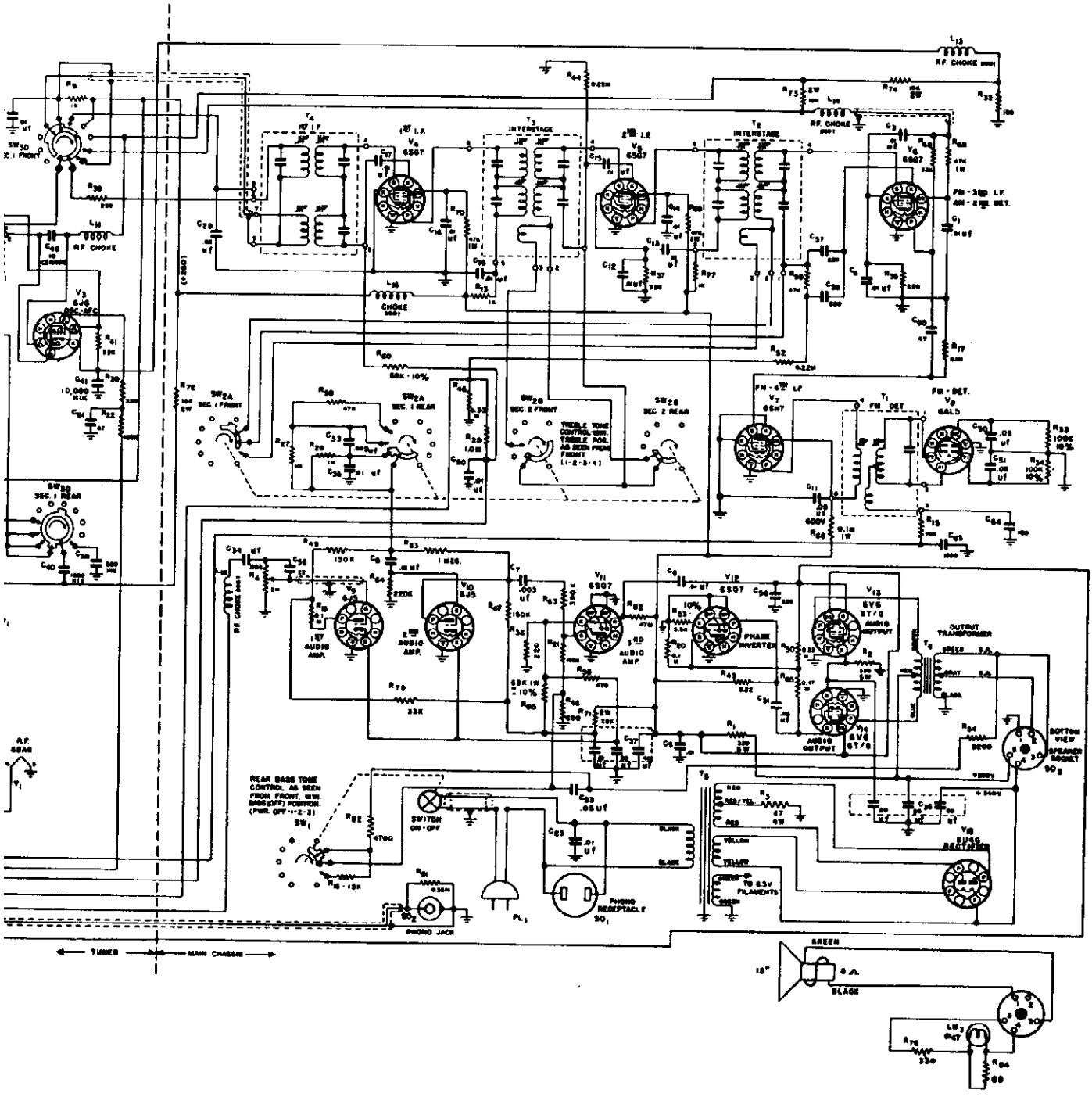
RF CHOKE
INTERSTAGE
CHOKE
SEC. 1 FRONT
SEC. 1 REAR
SEC. 2 FRONT
SEC. 2 REAR
TREBLE TONE CONTROL-MIN. TREBLE POS. AS SEEN FROM FRONT. (1-2-3-4)
FM - DET.
AUDIO AMP.
PHASE INVERTER
AUDIO OUTPUT
OUTPUT TRANSFORMER
BOTTOM VIEW SPEAKER SOCKET
REAR BASS TONE CONTROL AS SEEN FROM FRONT. MIN. BASS (OFF) POSITION. (PWR. OFF-1-2-3)
SWITCH ON-OFF
PHONO RECEPTACLE
PHONO JACK
TO 6.3V FILAMENTS
TUNER
MAIN CHASSIS
GREEN
BLACK

89D254-E

MODEL 84HA-2727A

ALIGNMENT CHART

Step	Dummy Antenna	Signal Generator Coupling	Signal Generator Frequency	Band Switch Pos.	Radio Tuned To	Cal. No.	Adjust	Remarks
1	0.01 mfd. cap.	To stator plates of center section of AM tuning cap.	455 kc	"BC"	1000 kc	55	S3, S6, S2, S5, S1 & S4	Adjust for max. output. TREBLE tone control set at No. 1.
2	0.01 mfd. cap.	To stator plates of center section of FM tuning cap.	10.7 mc (No modulation)	"FM"	Mid-scale	55	S9, S12, S13, S8, S11, S7 & S10	Adjust for max. AVC voltage as measured between pin No. 7 of 6AL5 and ground with a 20,000 ohm per volt meter.
3	0.01 mfd. cap.	To stator plates of center section of FM tuning cap.	10.7 mc (No modulation)	"FM"	Mid-scale	55	S14	Adjust for zero voltage as measured between junction L16 and C34 and ground with a 20,000 ohm per volt meter.
4	Std. RMA dummy	To terminals "A" and "G" on ant. term. strip. TS_1.	1500 kc	"BC"	1500 kc	82	F*, H, and I	Adjust for max. output as in step 1.
			600 kc	"BC"	600 kc	15.5	G*	
5	Std. RMA dummy	To terminals "A" and "G" on ant. term. strip. TS_1.	16 mc	"C"	16 mc	84	E*, R, and S	Adjust for max. output as in step 1.
6	Std. RMA dummy	To terminals "A" and "G" on ant. term. strip. TS_1.	18 mc	"A"	18 mc	94.5	A*, O, and N	Adjust for max. output as in step 1.
			15 mc	"A"	15 mc	7.5	B*, P and Q	
7	Std. RMA dummy	To terminals "A" and "G" on ant. term. strip. TS_1.	12 mc	"B"	12 mc	91.5	C*, J, and K	Adjust for max. output as in step 1.
			9 mc	"B"	9 mc	6.5	D*, L	
8	Two 150 ohm carbon resistors	To terminals "D" and "D" on ant. term. strip; one 150 ohm resistor in each lead.	108 mc	"FM"	108 mc	83.5	T*, U, and V	Adjust for max. limiter grid voltage as measured between pin No. 4 of the 6SH7 and ground with a 100,000 ohm resistor in series with the voltmeter probe.

* Note—Calibration adjustments.

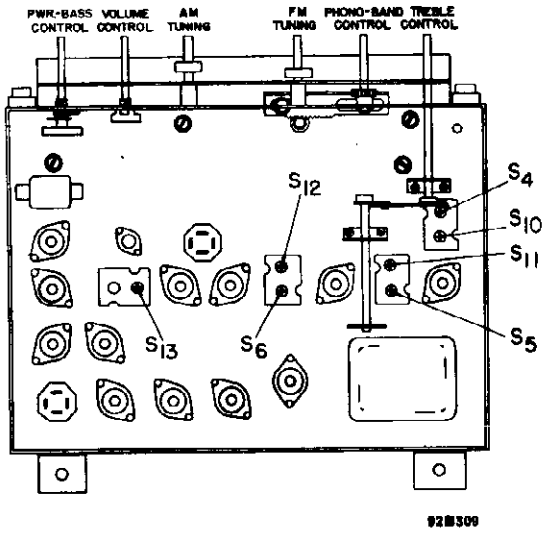

Fig. 7. Bottom view showing alignment points.

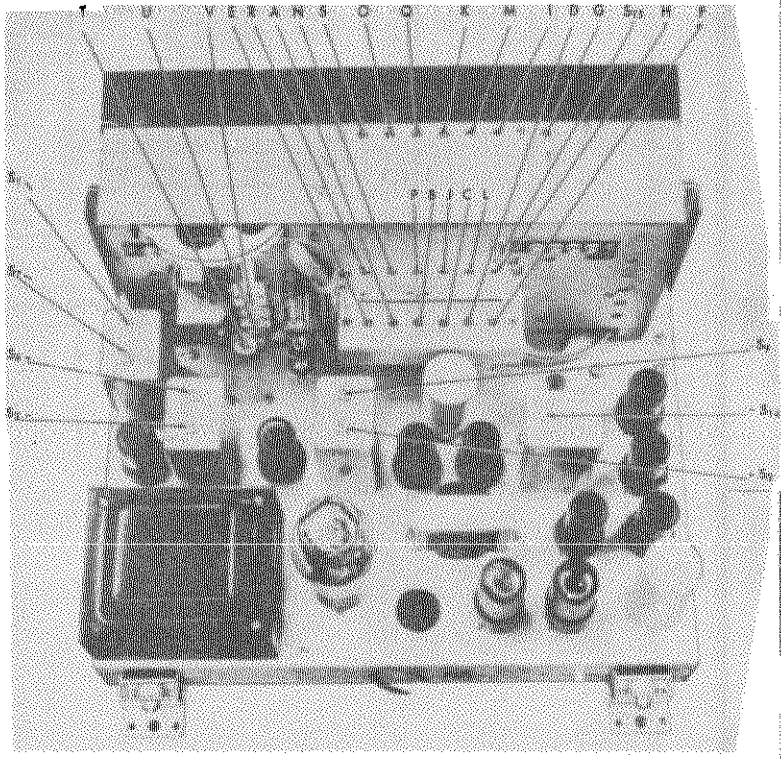

Fig. 6. Top view showing alignment points.

© John F. Rider

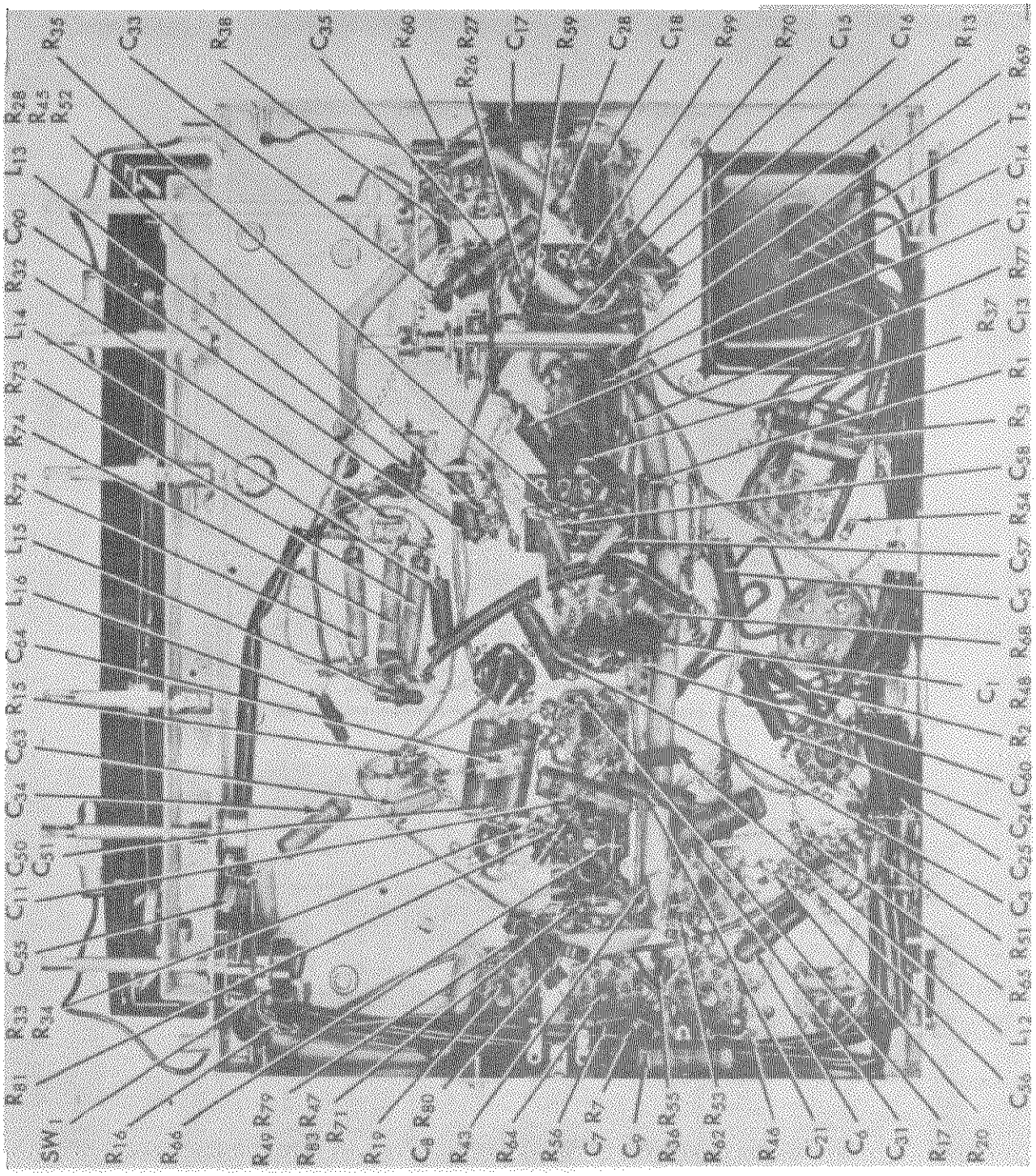

Fig. 8. Bottom view of receiver showing component location.

©John F. Rider

MODEL 84HA-2727A

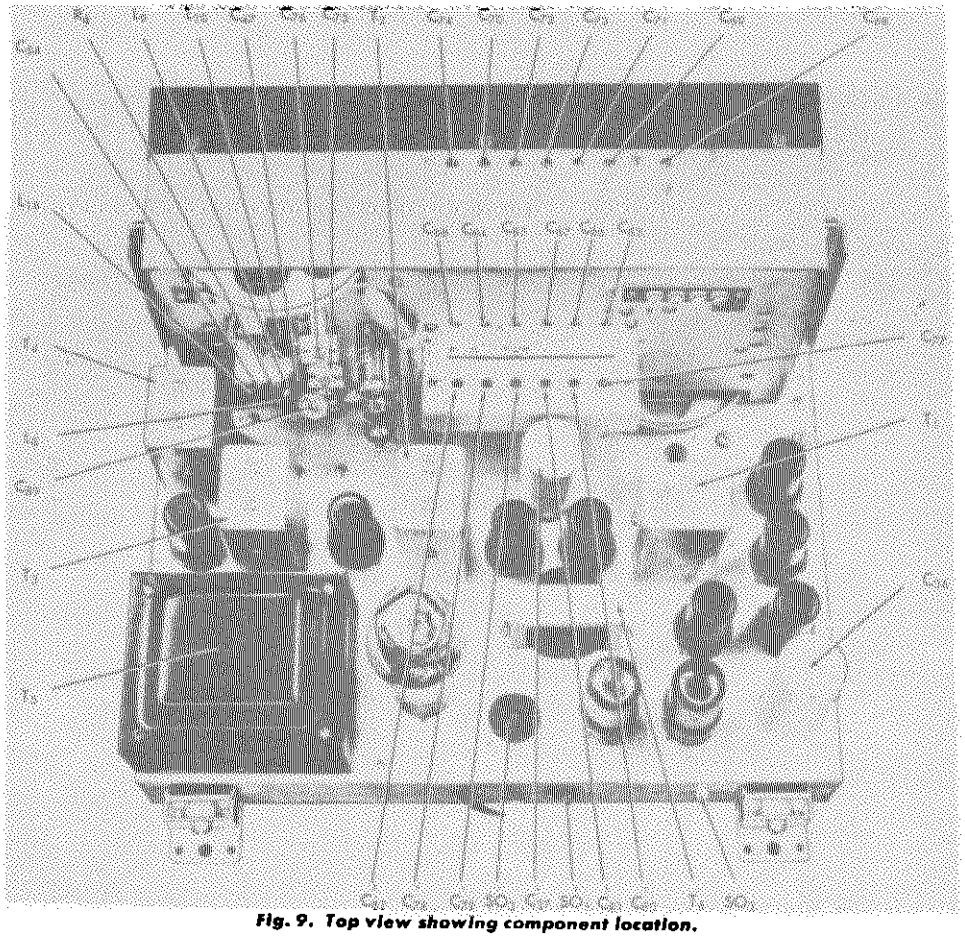

Fig. 9. Top view showing component location.

Fig. 10. Front view of R.F. chassis showing component location.

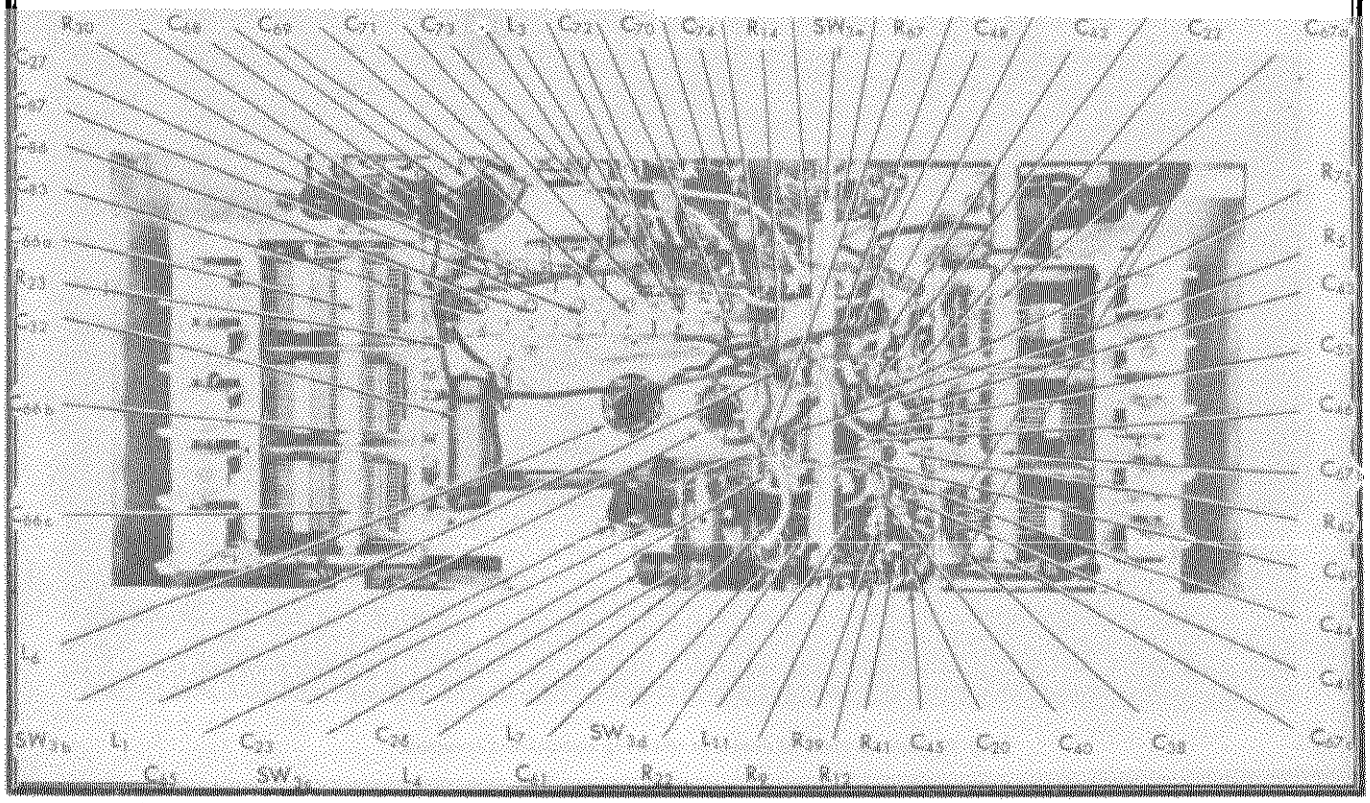

© John F. Rider

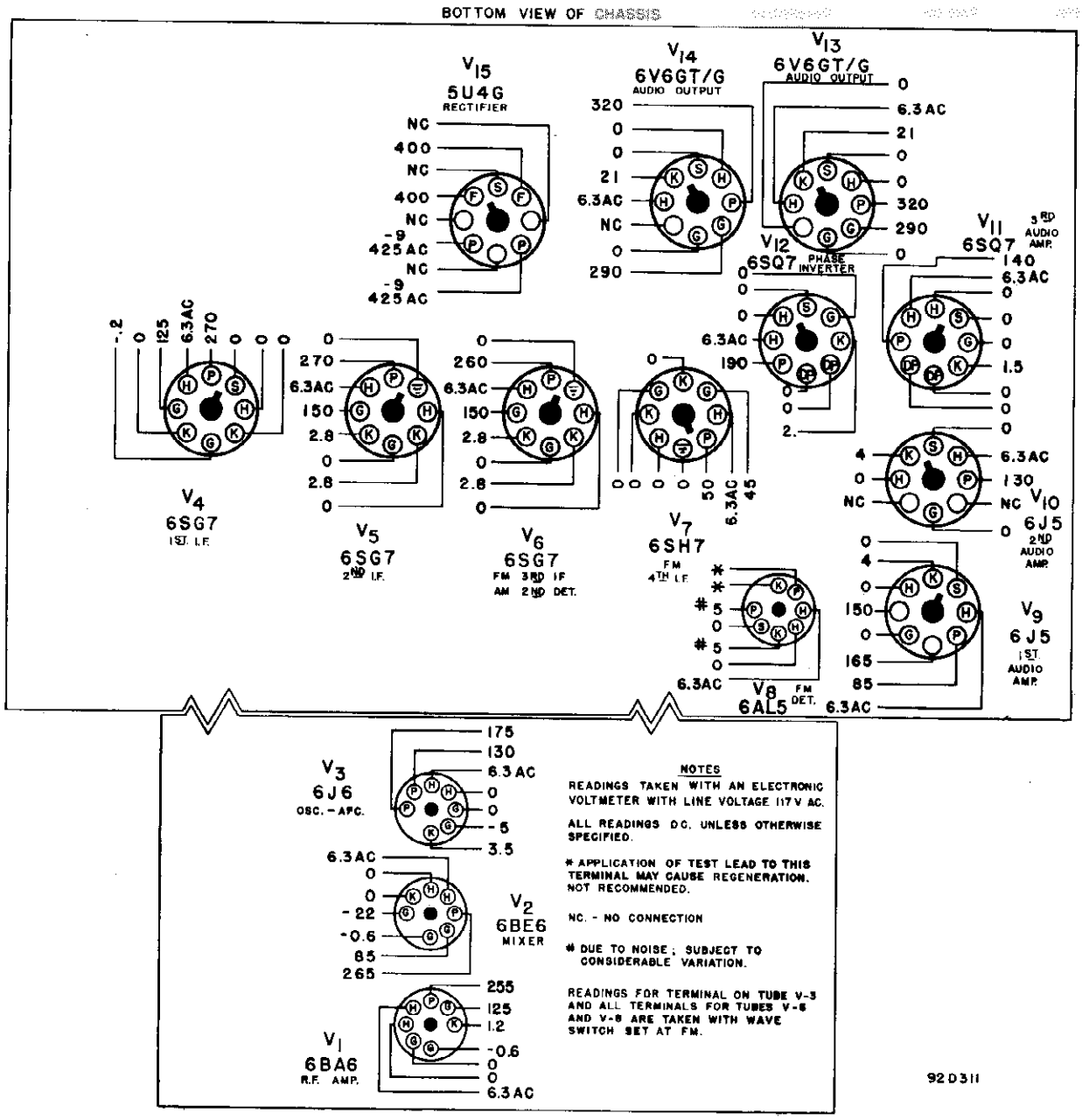

Fig. 11. Tube socket voltage chart.

ELECTRICAL SPECIFICATIONS

Power Supply	105-125 volts AC 60 cycles, 180 watts, 200 watts with record changer
Frequency Ranges	Broadcast 540-1700 KC Frequency Modulation 88-108 MC Short Wave "A" 15-18 MC "B" 9-12 MC "C" 5.8-18 MC
Intermediate Frequency	AM - 455 KC FM - 10.7 MC
Antennas	AM - Built-in Loop FM - Built-in Doublet Provision for external antennas
Power Output	10 watts (Undistorted)
Speaker	15-inch P.M.
Voice Coil Impedance	8 ohms
Record Changer	See Manual No. 5046
Tube and Dial Lamp	

Complement .....
6BA6 R.F. Amplifier
6BE6 Mixer
6J6 Oscillator/A.F.C.
6SG7 1st I.F. Amplifier
6SG7 2nd I.F. Amplifier
6SG7 { FM - I.F. Amplifier / AM - 2nd Detector
6SH7 FM I.F. Amplifier
6AL5 FM Detector
6J5 1st Audio Amplifier
6J5 2nd Audio Amplifier
6SQ7 3rd Audio Amplifier
6SQ7 Phase Inverter
6V6GT/G } 6V6GT/G } Power Amplifier
5U4G Rectifier
Mazda No. 44 Dial Lamps
Mazda No. 47 Pilot Lamp

©John F. Rider

MODEL 84HA-2727A

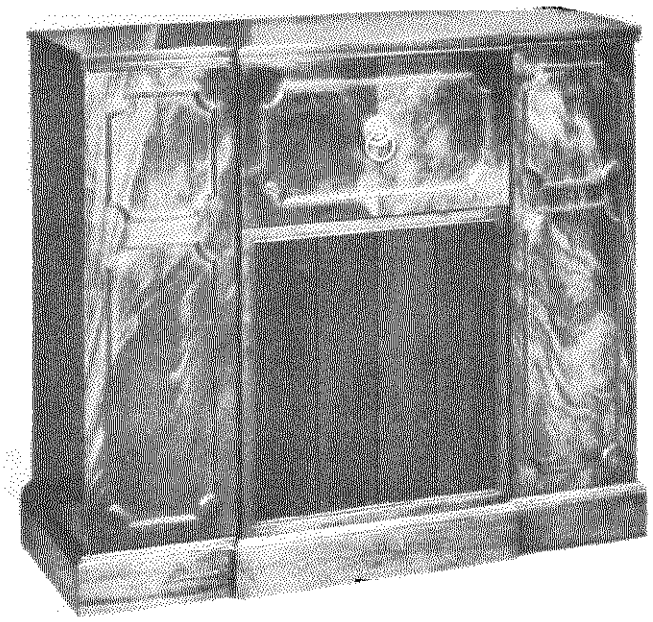

Ref. No.	Part No.	Description
CONDENSERS		
C-1, 3, 4, 5, 6, 8, 12, 13, 14, 15, 16, 17, 18, 20, 21, 22, 23, 24, 35, 90	46AZ103F	.01 mfd. 600 V., tubular paper
C-7, 34	46AZ302J	.003 mfd. 600 V., tubular paper
C-11, 31, 32, 50, 51, 93	46AY503F	.05 mfd. 600 V., tubular paper
C-25	46AG103J	.01 mfd. 600 V., molded paper
C-26, 27, 28	46AY203F	.02 mfd. 600 V., tubular paper
C-33	46AZ502J	.005 mfd. 600 V., tubular paper
C-36	45B099	60-20 mfd. 450 V., 20 mfd. 30 V., electrolytic
C-37	45B100	40-10 mfd. 450 V., 20 mfd. 30 V., electrolytic
C-38, 39	47A147	500 mmf. 500 V., ceramic
C-40, 42, 43, 44	47A148	1000 mmf. 500 V., ceramic
C-41	47B32103N1	10,000 mmf. 150 V., ceramic
C-45	47A149	10 mmf. 500 V., ceramic
C-46, 47	47A150	47 mmf. 500 V., ceramic
C-48	47A160-3	1.5 mmf. ceramic
C-49	CM20A100K	10 mmf. 500 V., mica
C-52, 64	CM20A101M	100 mmf. 500 V. mica
C-54	CM20A220K	22 mmf. 500 V., mica
C-55	CM20A220M	22 mmf. 500 V., mica
C-56, 57, 58	CM20A221M	220 mmf. 500 V., mica
C-60, 61, 62	CM20A470M	47 mmf. 500 V., mica
C-63	CM30A102M	1000 mmf. 500 V., mica
C-65	CM35A392J	3900 mmf. 500 V., mica
C-66	48C176	Tuning condenser, AM
C-67	48C175	Tuning condenser, FM
C-68	44A189	570 mmf. trimmer
C-69, 70, 71, 72, 73, 74	44B190	Trimmer assembly, ant. stage
C-75	44A192	Trimmer, FM, mixer stage
C-76	44A194	Trimmer, FM, ant. stage
C-77, 78, 79, 80, 81, 82	44B195	Trimmer assembly, osc. stage
C-83, 84, 85 86, 87, 88	44B196	Trimmer assembly, mixer stage
C-89	44A218	Trimmer, FM, osc. stage
C-92	CC30SH390M	39 mmf. 500 V., ceramic
RESISTORS		
R-1, 2	24A864	330 ohms 5 watts, WW
R-3	RC65CE470M	47 ohms 4 watts, carbon
R-4	25A571	2 meg-ohms, volume control
R-5	RC20AE100M	10 ohms ½ watt, carbon
R-6, 8	RC20AE101M	100 ohms ½ watt, carbon
R-9, 12, 13, 14, 77	RC20AE102M	1000 ohms ½ watt, carbon
R-15	RC20AE103M	10,000 ohms ½ watt, carbon
R-16	RC20AE153M	15,000 ohms ½ watt, carbon
R-17, 19, 20, 21, 22, 23, 24	RC20AE104M	100,000 ohms ½ watt, carbon
R-26, 27, 28, 29, 30, 31, 83	RC20AE105M	1 meg-ohm ½ watt, carbon
R-32	RC20AE151M	150 ohms ½ watt, carbon
R-33, 34	RC20AE104K	100,000 ohms ½ watt, carbon
R-35, 36, 37, 38, 39	RC20AE221M	220 ohms ½ watt, carbon
R-40	RC20AE222M	2200 ohms ½ watt, carbon
R-41, 42	RC20AE223M	22,000 ohms ½ watt, carbon
R-43, 44, 52, 64	RC20AE224M	220,000 ohms ½ watt, carbon
R-45, 50, 51	RC20AE334M	330,000 ohms ½ watt, carbon
R-46	RC20AE681K	680 ohms ½ watt, carbon
R-47, 49	RC20AE154M	150,000 ohms ½ watt, carbon
R-48	RC20AE332M	3300 ohms ½ watt, carbon
R-53	RC20AE392K	3900 ohms ½ watt, carbon
R-54	RC20AE822K	8200 ohms ½ watt, carbon
R-55	RC20AE471M	470 ohms ½ watt, carbon
R-58, 59	RC20AE473M	47,000 ohms ½ watt, carbon
R-60	RC20AE683K	68,000 ohms ½ watt, carbon
R-62, 65	RC20AE474M	470,000 ohms ½ watt, carbon
R-63	RC20AE394K	390,000 ohms ½ watt, carbon
R-66	RC30AE104M	100,000 ohms 1 watt, carbon
R-67	RC30AE333M	33,000 ohms 1 watt, carbon
R-68, 69, 70	RC30AE473M	47,000 ohms 1 watt, carbon
R-71	RC40AE223M	22,000 ohms 1 watt, carbon
R-72, 73, 74	RC40AE103M	10,000 ohms 2 watts, carbon
R-75	RC40AE333K	33,000 ohms 2 watts, carbon
R-76	24BG331E	330 ohms 10 watts, WW
R-79	RC20AE333M	33,000 ohms ½ watt, carbon
R-80	RC30AE683K	68,000 ohms 1 watt, carbon
R-81	RC30AE068K	6.8 ohms 1 watt, carbon
R-82	RC20AE472M	4700 ohms ½ watt, carbon
R-84	RC40AE680M	68 ohms 2 watt, carbon
TRANSFORMERS AND COILS		
T-1	50C208	Transformer, FM detector
T-2, 3	50C209	Transformer, interstage IF
T-4	50C210	Transformer, 1st IF
T-5	52C151	Transformer, power
T-6	55B086	Transformer, audio output
L-1	51B905	Mixer coil, SW band
L-2	51B906	Antenna coil, BC band
L-3	51B907	Loading coil, loop
L-4	51B908	Oscillator coil, SW band
L-5	51B909	Antenna coil, SW band
L-6	51B910	Mixer coil, BC band
L-7	51B911	Oscillator coil, BC band
L-8	51B914	Oscillator coil, FM band
L-9	51B915	Mixer coil, FM band
L-10	51B916	Antenna coil, FM band
L-11	53B008	Plate choke, osc. stage
L-12	53B009	Filament choke
L-13, 14, 15, 16	53A106	RF choke
L-18	53A115	RF choke, antenna stage plate
L-19	57C106	BC loop antenna
L-20	57C108-1	FM folded doublet
SWITCHES		
SW-1	60B265	Power & Bass tone switch ass'y
SW-2	60B264	Treble switch ass'y
SW-3	60C266	Band switch
SW-4	18A092	Muting switch
PLUGS AND SOCKETS		
PL-1	87B1625	Line cord and plug
SO-1	10A015	Receptacle, phono motor
SO-2	36A034	Jack, phono pick-up
SO-3	6A277	Socket, speaker
	6A190	Socket, octal (tube)
	6A296	Socket, octal (6V6GT tubes)
	6B297	Socket, miniature (tube)
	86A046	Socket & bracket, dial light, L.H.
	86A047	Socket & bracket, dial light, R.H
	86B050-1	Socket, cabinet pilot light
MISCELLANEOUS		
	69A169	Shield, tube base (miniat. tube)
	69A104	Shield, tube (miniature tube)
	75A076	Spring, tube retainer
	69C172	Shield, FM coil section
	86A037	Shield, dial light
	69A197	Shield, pilot light
	69B217	Shield, escutcheon
	67B645	Carriage, pointer
	82B139	Pointer, FM
	82B143	Pointer, AM
	75A132	Spring, pointer
	17B028	Push-button (brown)
	17A027	Insert, push-button, lucite
	17A029	Insert, push-button, metal
	17A026	Call letters
	75A006	Spring, dial drive
	38A017	Cord, dial drive
	7D039	Escutcheon
	22D192-1	Dial glass, calibrated
	22B177	Dial glass, control identification
	76A331	Clips, dial glass
	15B093	Knob (Tuning and vol. controls)
	15A129	Knob & pin ass'y (Bandswitch and tone controls)
TS-1	880277	Terminal strip, antenna
TS-2	88A278	Terminal strip, loop
	85C056-1	Speaker ass'y
	87A1615-1	Transmission line, loop
	86A057	Jewel, pilot lamp
	67A765	Bracket, pilot lamp
	L-230200	Record changer motor (60 cycles)
	P-30S	Pickup cartridge (P-30S)
	115C020	Pickup cartridge needle (P-30S)
	LT	Pickup cartridge (LT)
	115A021	Pickup cartridge needle (LT)

©John F. Rider

A choke has been added to the circuit to eliminate parasitic oscillation on the FM Band.

PARTS LIST ADDITION

Ref. No.	Part No.	Description	Qty. Used
L-5	9A1967	Parasitic Choke	1

The circuit connection of L-5 is shown in the partial schematic below.

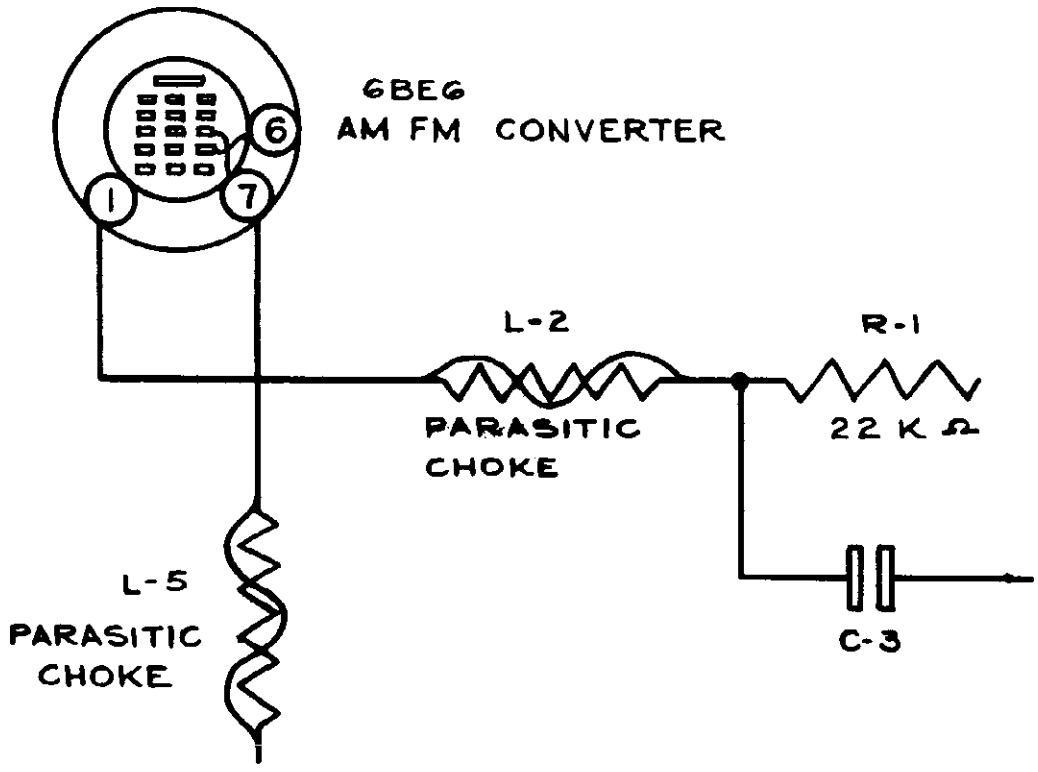

©John F. Rider

MODELS 84WG-2721A, B

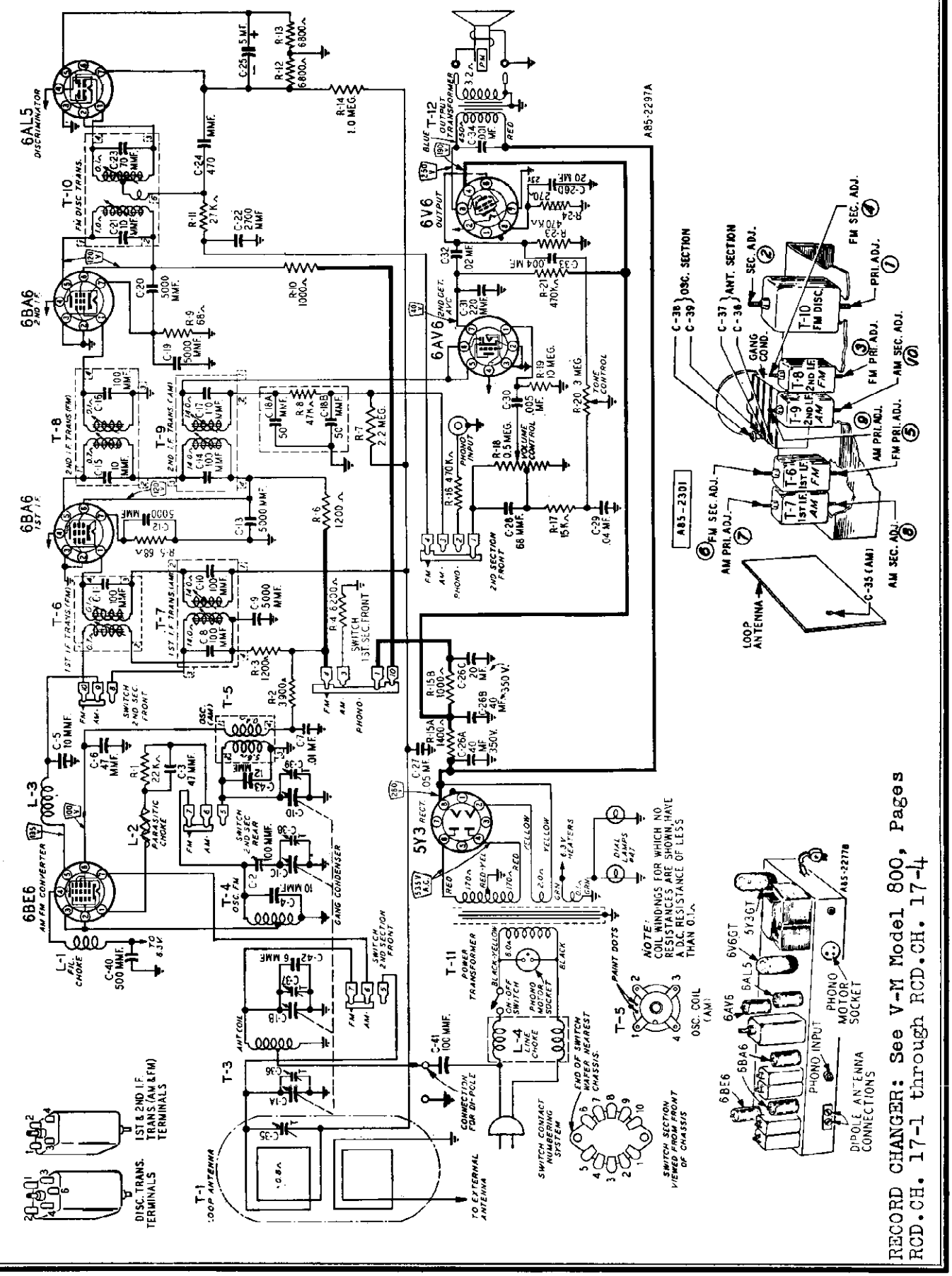

RECORD CHANGER: See V-M Model 800, Pages RCD.CH. 17-1 through RCD.CH. 17-4

©John F. Rider

©John F. Rider

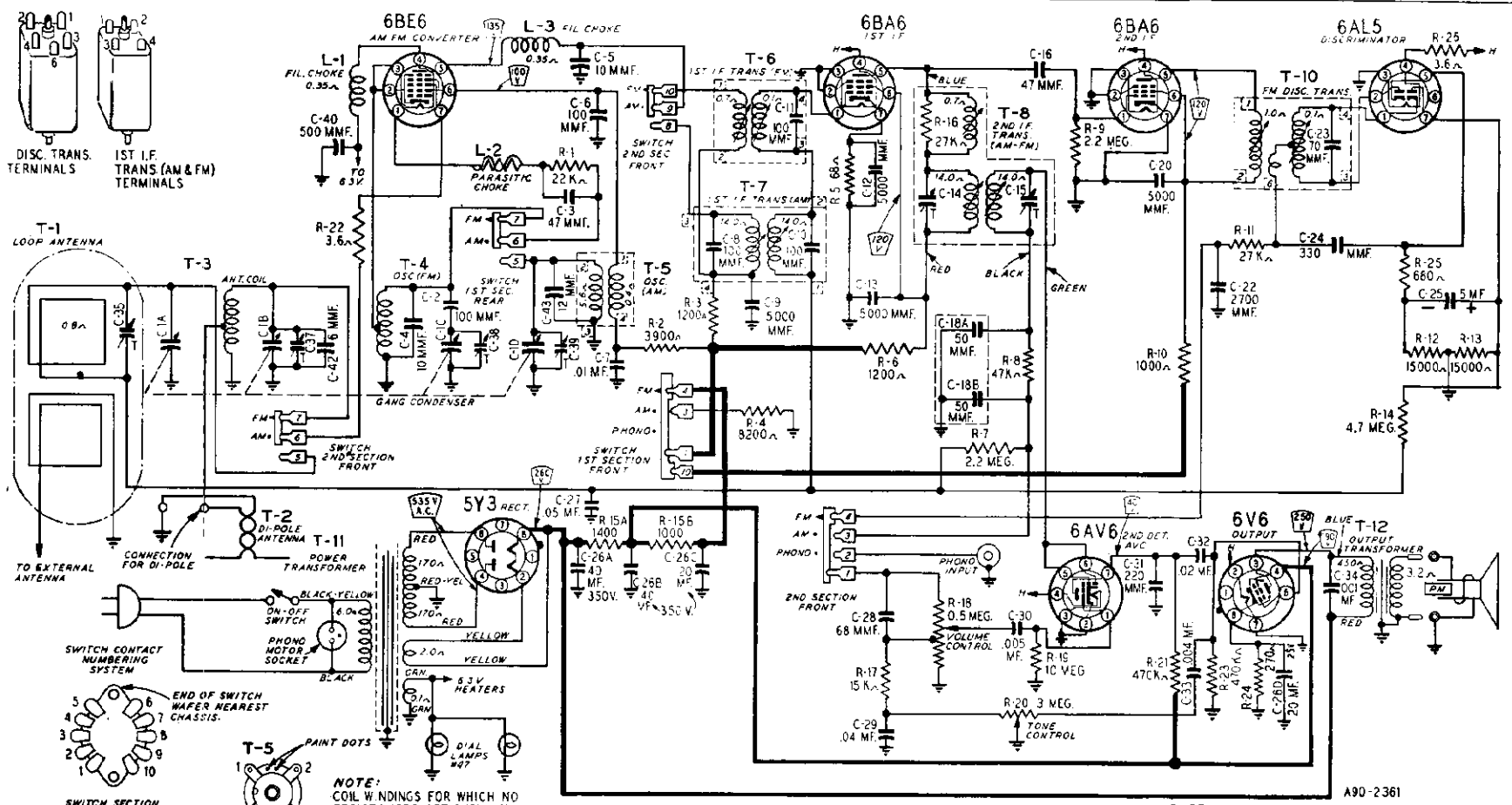

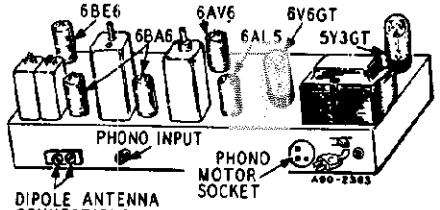

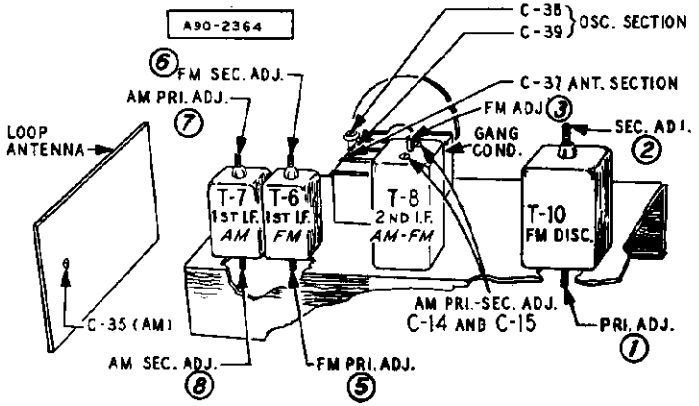

RECORD CHANGER: See V-M Model 800, Pages RCD.CH. 17-1 through RCD. CH. 17-4

MODELS 84WG-2721A, B, C

ALIGNMENT PROCEDURES

AM STAGES

The following is required for aligning:
An All Wave Signal Generator Which Will Provide an Accurately Calibrated Signal at the Test Frequencies as Listed.
Output Indicating Meter, Non-Metallic Screwdriver, Dummy Antennas — .1 mf, and 50mmf.

Volume Control Maximum all Adjustments.
Connect Radio Chassis to Ground Post of Signal Generator with a Short Heavy Lead.
Allow Chassis and Signal Generator to "Heat Up" for Several Minutes.

SIGNAL GENERATOR						
FREQUENCY SETTING	CONNECT GENERATOR OUTPUT TO	THROUGH DUMMY ANTENNA	CONNECT GROUND TO	GANG CONDENSER SETTING	ADJUST	ADJUST FOR
455 KC	Control Grid 1st 6BA6 Pin No. 1	.1 mf	Chassis Base	Rotor Fully Open	2nd I.F. Pri. and Sec. (9) and (10)	Maximum Output
455 KC	Control Grid 6BE6 Pin No. 7 1st Det.	.1 mf	Chassis Base	Rotor Fully Open	1st I.F. Pri. and Sec. (7) and (8)	Maximum Output
1620 KC	Control Grid 6BE6 Pin No. 7	.1 mf	Chassis Base	Rotor Fully Open	Oscillator C-39	Maximum Output
1400 KC	External Antenna Lead	50 mmf	Chassis Base	Turn Rotor to Max. Output. Set Pointer to 1400 KC See Note A	Antenna C-35	Maximum Output

NOTE A—If the pointer is not at 1400 KC on the dial, reset pointer to the 1400 KC mark on the dial scale.

FM STAGES

The following is required for aligning:
An accurately calibrated signal generator providing unmodulated signals at the test frequencies listed below.
Non-metallic screwdriver.
Dummy Antennas and I-F Loading Resistor — .01 mf, 300 ohms and 100K ohms

Zero center scale DC vacuum tube voltmeter having a range of approximately 3 volts.
(If a zero center scale meter is not available, a standard scale vacuum tube voltmeter may be used by reversing the meter connections for negative readings).
Allow chassis and signal generator to "Heat Up" for several minutes.

	SIGNAL GENERATOR		THROUGH DUMMY ANTENNA	BAND SWITCH SETTING	GANG CONDENSER SETTING	ADJUST	ADJUST FOR
	FREQUENCY SETTING	CONNECT GENERATOR OUTPUT TO					
Discriminator	10.7 MC	6BA6 2nd I-F Pin 1 and Chassis	.01 mf	FM	Rotor Fully Open	Disc. Pri. (1) Note A	Maximum Deflection
	10.7 MC	6BA6 2nd I-F Pin 1 and Chassis	.01 mf	FM	Rotor Fully Open	Disc. Sec. (2) Note B	
	10.7 MC	6BA6 2nd I-F Pin 1 and Chassis	.01 mf	FM	Rotor Fully Open	Disc. Pri. (1) Note A	Maximum Deflection
	10.7 MC	6BA6 2nd I-F Pin 1 and Chassis	.01 mf	FM	Rotor Fully Open	Disc. Sec. (2) Note B	
I-F	10.7 MC	6BA6 1st I-F Pin 1 and Chassis	.01 mf	FM	Rotor Fully Open	2nd I-F Pri. (3) 2nd I-F Sec. (4) Note C	Maximum Deflection
	10.7 MC	Unsolder lead from Pin 7 to band switch. Insert 100K ohm resistor between Pin 7 and Ground and feed signal into Pin 7 of 6BE6	.01 mf	FM	Rotor Fully Open	1st I-F Pri. (5) Note C	Maximum Deflection
	10.7 MC	Same as above	.01 mf	FM	Rotor Fully Open	1st I-F Sec. (6) Note C	Maximum Deflection
RECHECK I-F ADJUSTMENTS IN ORDER GIVEN							
Ant. and Osc.	108.5 Note D	Disconnect built-in line antenna and connect generator to dipole terminals with resistor in series	300 ohms	FM	Rotor Fully Open	Osc. C-38	Maximum Deflection
	104.5	Same as above	300 ohms	FM	Tune rotor for max. AVC voltage	Ant. C-37	Maximum Deflection
RECHECK ANTENNA & OSC. ADJUSTMENTS IN ORDER GIVEN							

FM ALIGNMENT NOTES

NOTE A—The zero center scale DC vacuum tube voltmeter is to be connected between chassis ground and the A.V.C. line at the 27 K. ohm resistor (R-11) and its junction with terminal strip. A signal of .1 volt must be fed into the receiver for this adjustment.
Note output voltage on the zero center DC vacuum tube voltmeter.

NOTE B—Disconnect zero center DC vacuum tube voltmeter from A.V.C. and connect it at the audio takeoff point at the 1 megohm resistor (R-14) and its junction with the terminal strip. Adjust for zero voltage indication.

NOTE C—Connect zero center DC vacuum tube voltmeter as in Note A. Adjust input to give same output on the zero center DC vacuum tube voltmeter as in Note A.

NOTE D—Remove the 100 K. ohm load resistor and solder the lead from pin 7 of 6BE6 tube to the band switch before attempting to check the antenna and oscillator adjustments.

RECEIVER STAGE SENSITIVITIES
AM AND AUDIO STAGES

The table below lists the sensitivity at the input of each stage. The receiver should be tuned to 1000 KC for all readings. All measurements are based on an output of .5 watt. This may be measured by disconnecting the speaker voice coil and substituting a 3.2 ohm, 5 watt resistor across the secondary winding of the output transformer. A reading of 1.26 volts across this resistor will be equivalent to a .5 watt output.

The volume control must be set to maximum.

The signal source must be an accurately calibrated signal generator capable of supplying both 1000 KC and 455 KC signals modulated 30% with a 400 cycle audio signal. Variations in sensitivity of Plus or Minus 25% are usually permissible.

SIGNAL GENERATOR				
FREQUENCY	COUPLING CAPACITOR	CONNECTION TO RECEIVER	GROUND CONNECTION	INPUT FOR .5 WATT OUTPUT
1000 KC	200 mmf or RMA Dummy Antenna	External Antenna Lead	Chassis	25 Microvolts
1000 KC	.05 mf	6BE6 Converter Pin 7	Chassis	60 Microvolts
455 KC	.05 mf	6BE6 Converter Pin 7	Chassis	58 Microvolts
455 KC	.05 mf	6BA6 1st I-F Pin 1	Chassis	2400 Microvolts
400 cycles	.05 mf	6AV6 1st A-F Pin 1	Chassis	.07 Volt
400 cycles	.05 mf	6V6GT Output Pin 5	Chassis	3.2 Volts

FM STAGES

The tables below lists the sensitivity for the FM stages of the receiver. The receiver must be tuned to 98 MC for all readings. Measurements are based on a .5 watt output the same as for the AM and Audio stage measurements.

The signal source must be an accurately calibrated signal generator capable of supplying a 98 MC signal modulated by a 400 cycle audio signal. For these measurements the generator must be adjusted for a 22.5 KC deviation. This will correspond to 30% AM modulation.

SIGNAL GENERATOR				
FREQUENCY	COUPLING TO RECEIVER	CONNECTION TO RECEIVER	GROUND CONNECTION	INPUT FOR .5 WATT OUTPUT
98 MC	300 ohms	External Antenna Terminal	Chassis	200 Microvolts
10.7 MC	.01 mf	6BA6 1st I-F Pin 1	Chassis	1,000 Microvolts
10.7 MC	.01 mf	6BA6 2nd I-F Pin 1	Chassis	40,000 Microvolts

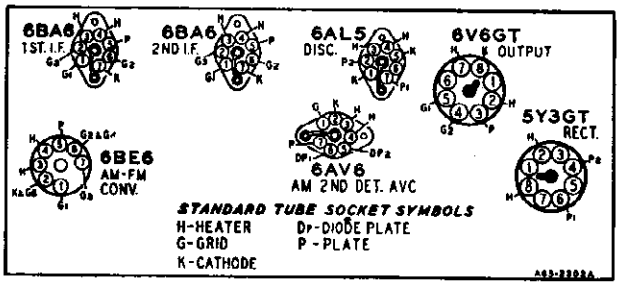

TUBE SOCKET VOLTAGES

Socket voltages are shown on the schematic diagram at the tube socket terminals. All voltages are between the socket terminal and chassis ground. Plate, screen and cathode voltages were taken with a 1000 ohm-per-volt meter with a 300 volt scale used for plate and screen voltages. Audio grid voltages were read with a vacuum tube volt-meter. Conditions of measurement are:

Line voltage.....117 Volts AC
Signal Input.....None

A variation of ±10% is usually permissible.

ELECTRICAL SPECIFICATIONS

Power Supply.....105-125 volts AC 60 cycles, 60 watts, 80 watts with record changer.

Frequency Ranges.....Broadcast 540-1600 KC
Frequency Modulation 88-108 MC

Intermediate Frequency...AM—455KC
FM—10.7 MC

Selectivity.....AM—50 KC broad at 1000 times signal, measured at 1000 KC
I.F. FM—200 KC broad at 2 times down
I.F. FM—800 KC broad at 200 times down

AM Sensitivity.....(For .5 watt output with external antenna) 20 microvolts average

FM Sensitivity.....(For .5 watt output) 200 microvolts average

Power Output.....4.5 watts maximum
2.5 watts 10% distortion

Loud Speaker.....10" PM Dynamic

Voice Coil Impedance.....3.2 ohms 400 cycles

Tube and Dial Lamp Complement

1 6BE6 FM-AM Converter
1 6BA6 1st I-F Amplifier
1 6BA6 2nd I-F Amplifier
1 6AL5 FM Discriminator
1 6AV6 Audio Amplifier, AM 2nd Detector and AVC
1 6V6GT Audio Output
1 5Y3GT Rectifier
2 No. 47 Dial Lamps

©John F. Rider

MODELS 84WG-2721A, B

Ref. No.	Part No.	Description	Qty. Used in Set
C-36, C-37, C-39		Part of C-1 Gang Condenser	
C-38	26A489	1-8 mmf Trimmer	1
C-40	47X508	500 mmf Ceramic	1
C-41	47X476	100 mmf Molded	1
C-42	47X521	6 mmf Ceramic	1
C-43	47X522	12 mmf Ceramic	1

RESISTORS

Ref. No.	Part No.	Ohms	Watts		Qty. Used in Set
R-1	B84223	22 K	0.5	Carbon	1
R-2	B83392	3900	0.5	Carbon	1
R-3, R-6	B84122	1200	0.5	Carbon	2
R-4	B84822	8200	2.0	Carbon	1
R-5, R-9	B83680	68	0.5	Carbon	2
R-7	B85225	2.2 meg.	0.5	Carbon	1
R-8		47 K	(Part of 76X1 Resistor-Capacitor Combination)		
R-10	B84102	1000	0.5	Carbon	1
R-11	B84273	27 K	0.5	Carbon	1
R-12, R-13	B84682	6800	0.5	Carbon	2
R-14	B85105	1 meg.	0.5	Carbon	1
R-15A, R-15B	43X224	1400 1000	6.0 4.0	Wire Wound	1
R-16, R-21, R-23	B85474	470 K	0.5	Carbon	3
R-17	B84153	15 K	0.5	Carbon	1
R-18	36X372	.5 meg.		Volume control and switch	1
R-19	B85106	10 meg.	0.5	Carbon	1
R-20	40X285	3 meg.		Tone Control	1
R-24	B84271	270	0.5	Carbon	1

TRANSFORMERS AND COILS

Ref. No.	Part No.	Description	Qty. Used in Set
L-1, L-3	9A1882	Filament Choke	2
L-2	9A1940	Parasitic Choke	1
L-4	9A1930	Line Choke	1
T-1	26A478	"B" Range Loop Antenna Assembly	1
T-3	9A1956	Antenna Coil Assembly	1
T-4	9A1938	Oscillator Coil (FM)	1
T-5	9A1929	Oscillator Coil Assembly (AM)	1
T-6	9A1932	1st I.F. Transformer (FM)	1

CAPACITORS

Ref. No.	Part No.			Description	Qty. Used in Set
C-1A, C-1B, C-1C, C-1D	14A204			Gang Condenser & Pulley	1
C-2	47X511	100 mmf		Ceramic	1
C-3	47X517	47 mmf		Ceramic	1
C-4	47X523*	10 mmf		Ceramic	1
C-5	47X512	10 mmf		Ceramic	1
C-6	47X463	47 mmf		Ceramic	1
C-7	D66103	.01 mf	400 V	Tubular	1
C-8, C-10		Part of T-7 (1st I.F. Trans.—AM)			
C-11		Part of T-6 (1st I.F. Trans.—FM)			
C-9, C-12, C-13, C-19, C-20	47X507	5000 mmf		Silvered Ceramic	5
C-14, C-17		Part of T-9 (2nd I.F. Trans.—AM)			
C-15, C-16		Part of T-8 (2nd I.F. Trans.—FM)			
C-18A, C-18B		50-50 mmf (Part of 76X1 Resistor-Capacitor Combination)			
C-21, C-23		Part of T-10 (Discriminator Trans.)			
C-22	47X492	2700 mmf		Molded Mica	1
C-24	47X510	470 mmf		Silvered Mica	1
C-25	45X361	5 mf	100 V	Dry Electrolytic	1
C-26A, C-26B, C-26C, C-26D	45X359	40 mf 40 mf 20 mf 20 mf	350 V 350 V 350 V 25 V	Dry Electrolytic	1
C-27	B66503	.05 mf	200 V	Tubular	1
C-28	47X471	68 mmf		Molded Mica	1
C-29	B66403	.04 mf	200 V	Tubular	1
C-30	D66502	.005 mf	400 V	Tubular	1
C-31	47X468	220 mmf		Ceramic	1
C-32	D66203	.02 mf	400 V	Tubular	1
C-33	B66402	.004 mf	200 V	Tubular	1
C-34	H66102	.001 mf	800 V	Tubular	1
C-35	17A235	2-24 mmf		Trimmer	1

Model "B" receivers differ from the Model "A" receivers by the change in value of resistors R-12 and R-13. The new part number and description follows:

Ref. No.	Part No.	Description	Qyy. Used
R-12 R-13	B84153	15,000 ohms 0.5 W Carbon	2

©John F. Rider

84WG-2721A, B, C

Ref. No.	Part No.	Description	Qty. Used in Set
		TRANSFORMERS AND COILS (Cont.)	
T-7	9A1934	1st I.F. Transformer (AM)	1
T-8	9A1933	2nd I.F. Transformer (FM)	1
T-9	9A1935	2nd I.F. Transformer (AM)	1
T-10	9A1936	Discriminator Coil Assembly	1
T-11	53X290	Power Transformer	1
T-12	51X134	Output Transformer	1
		MISCELLANEOUS	
	76X1	Resistor-Capacitor Combination	1
	12A480	10" P.M. Speaker	1
	3A303	Tube Socket—Octal (8 prong) Molded	2
	3A426	Tube Socket—Miniature	4
	3A427	Tube Socket—Miniature (for AM-FM Converter Tube)	1
	3A304	Phono Motor Socket	1
	3A305	Phono Socket—Single Pin Tip	1
	2A375	Band Change Switch	1
	13X546	Line Cord and Plug Assembly	1
	10A651	Knob (Tuning)	1
	10A652	Knob (Volume Control and Switch)	1
	10A654	Knob (Tone)	1
	10A655	Knob (Phono—BC—FM)	1
	4X999	Escutcheon	1

Ref. No.	Part No.	Description	Qty. Used in Set
		DIAL AND DRIVE ASSEMBLY	
	58X699	Dial Glass	1
	24X446	Idler Pulley	2
	15X241	Pointer	1
	25X1569	Dial Bracket	1
	7A103	No. 47 Pilot Light Bulb	2
	7A202	Pilot Light Socket Assembly	1
	26X486	Drive Shaft	1
	41X26	Reflector, Dial Light	2
	28X113	Drive Cord Tension Spring	1
	10X66	Drive Cord Assembly	1
	19X192	"C" Washer (Mtg. drive shaft)	2
	6X21	Rubber Grommet (Mtg. gang cond.)	3
	20X260	Condenser Cushion Stud (Mtg. gang condenser)	3
	58X702	Dial background	1
		TYPE V-28A139 RECORD CHANGER PARTS	
	V-961-B	Motor Assembly, 60 cycles, 115-120 V	1
	Shure P30-1	Crystal Cartridge and Semi-Permanent Needle Assembly	1
		Semi-Permanent Needle	1
		(Specify part number and letters stamped on crystal)	

84WG-2721A, B, C

GENERAL DESCRIPTION

This is a two band, six tube (plus rectifier tube) receiver with automatic record changer, for the reception of both AM and FM stations. The I-F stages use the latest type high gain miniature type tubes and built-in Air Wave Aerials are provided for the FM and Broadcast bands. Features include, compensator circuits to prevent oscillator drift, automatic volume control, beam power output stage, PM dynamic loud speaker and an electrostatic shield in the power transformer to reduce power line noise.

The receiver and record changer are housed in a console combination cabinet with controls provided for tuning, volume, tone and band or phono selection.

DRIVE CORD REPLACEMENT

DIAL POINTER CORD

Use a new 10X66 drive cord assembly or a new length of cord 46 inches long for the installation. Install the cord as shown in the illustration, winding three turns clockwise around the drive shaft with the turns progressing away from the chassis. After completing the installation rotate the drive shaft a few turns to take up the slack in the cord.

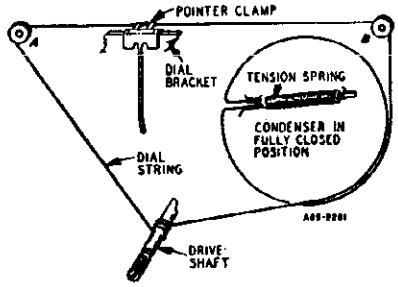

©John F. Rider

CAPACITORS

Ref. No.	Part No.	Description	Qty. Used in Set
C-1A, C-1B, C-1C, C-1D	14A204	Gang Condenser & Pulley	1
C-2	47X511	100 mmf Ceramic	1
C-3	47X517	47 mmf Ceramic	1
C-4	47X523	10 mmf Ceramic	1
C-5	47X512	10 mmf Ceramic	1
C-6	47X476	100 mmf Molded Mica	1
C-7	D66103	.01 mf 400 V Tubular	1
C-8, C-10		Part of T-7 (1st I.F. Trans.—AM)	
C-11		Part of T-6 (1st I.F. Trans.—FM)	
C-9, C-12, C-13, C-20	47X507	5000 mmf Silvered Ceramic	4
C-14, C-15		Part of T-8 (2nd I.F. Trans.—AM-FM)	
C-16	47X463	47 mmf Ceramic	1
C-18A, C-18B	47X112	50-50 mmf Dual Mica	1
C-22	47X492	2700 mmf Molded Mica	1
C-23		Part of T-10 (Discriminator Trans.)	
C-24	47X529	330 mmf Silvered Mica	1
C-25	45X361	5 mf 100 V Dry Electrolytic	1
C-26A	45X359	40 mf 350 V Dry Electrolytic	1
C-26B		40 mf 350 V	
C-26C		20 mf 350 V	
C-26D		20 mf 25 V	
C-27	B66503	.05 mf 200 V Tubular	1
C-28	47X471	68 mmf Molded Mica	1
C-29	B66403	.04 mf 200 V Tubular	1
C-30	D66502	.005 mf 400 V Tubular	1
C-31	47X468	220 mmf Ceramic	1
C-32	D66203	.02 mf 400 V Tubular	1
C-33	B66402	.004 mf 200 V Tubular	1
C-34	H66102	.001 mf 800 V Tubular	1
C-35	17A235	2-24 mmf Trimmer	1
C-37, C-39		Part of C-1 Gang Condenser	
C-38	26A489	1-8 mmf Trimmer	1
C-40	47X508	500 mmf Ceramic	1
C-42	47X521	6 mmf Ceramic	1
C-43	47X522	12 mmf Ceramic	1

RESISTORS

Ref. No.	Part No.	Ohms	Watts		Qty. Used in Set
R-1	B84223	22 K	0.5	Carbon	1
R-2	B83392	3900	0.5	Carbon	1
R-3, R-6	B84122	1200	0.5	Carbon	2
R-4	D84822	8200	2.0	Carbon	1
R-5	B83680	68	0.5	Carbon	1
R-7, R-9	B85225	2.2 meg.	0.5	Carbon	2
R-8	B85473	47 K	0.5	Carbon	1
R-10	B84102	1000	0.5	Carbon	1
R-11	B84273	27 K	0.5	Carbon	1
R-12, R-13, R-17	B84153	15 K	0.5	Carbon	3
R-14	B85475	4.7 meg.	0.5	Carbon	1
R-15A	43X224	1400	6.0	Wire Wound	1
R-15B		1000	4.0		
R-16		Part of T-8 (2nd I.F. Transformer AM—FM)			
R-21, R-23	B85474	470 K	0.5	Carbon	2
R-18	36X372	.5 meg.		Volume control and switch	1
R-19	B85106	10 meg.	0.5	Carbon	1
R-20	40X285	3 meg.		Tone Control	1
R-22, R-26	43X233	3.6	0.5	Wire Wound	2
R-24	B84271	270	0.5	Carbon	1
R-25	B85681	680	0.5	Carbon	1

TRANSFORMERS AND COILS

Ref. No.	Part No.	Description	Qty. Used in Set
L-1, L-3	9A1882	Filament Choke	2
L-2	9A1940	Parasitic Choke	1
T-1	9A1972	"B" Range Loop Antenna Assembly	1
T-2	9A1900	Dipole Antenna Assembly	1
T-3	9A1956	Antenna Coil Assembly	1
T-4	9A1938	Oscillator Coil (FM)	1
T-5	9A1929	Oscillator Coil Assembly (AM)	1
T-6	9A1932	1st I.F. Transformer (FM)	1
T-7	9A1934	1st I.F. Transformer (AM)	1
T-8	9A1973	2nd I.F. Transformer (AM—FM)	1
T-10	9A1970	Discriminator Coil Assembly	1
T-11	53X290	Power Transformer	1
T-12	51X134	Output Transformer	1

MISCELLANEOUS

Ref. No.	Part No.	Description	Qty. Used in Set
	12A480	10" P.M. Speaker	1
	3A303	Tube Socket—Octal (8 prong) Molded	2
	3A426	Tube Socket—Miniature	4
	3A427	Tube Socket—Miniature (for AM-FM Converter Tube)	1
	3A304	Phono Motor Socket	1
	3A305	Phono Socket—Single Pin Tip	1
	2A375	Band Change Switch	1
	13X546	Line Cord and Plug Assembly	1
	10A695	Knob (Tuning)	1
	10A696	Knob (Volume Control and Switch)	1
	10A697	Knob (Tone)	1
	10A698	Knob (Phono—BC—FM)	1
	4X1020	Escutcheon	1

DIAL AND DRIVE ASSEMBLY

Ref. No.	Part No.	Description	Qty. Used in Set
	58X699	Dial Glass	1
	24X446	Idler Pulley	2
	15X241	Pointer	1
	25X1569	Dial Bracket	1
	7A103	No. 47 Pilot Light Bulb	2
	7A202	Pilot Light Socket Assembly	1
	26X486	Drive Shaft	1
	41X26	Reflector, Dial Light	2
	28X113	Drive Cord Tension Spring	1
	10X66	Drive Cord Assembly	1
	19X192	"C" Washer (Mtg. drive shaft)	2
	6X21	Rubber Grommet (Mtg. gang cond.)	3
	20X260	Condenser Cushion Stud (Mtg. gang condenser)	3

TYPE V-28A139 RECORD CHANGER PARTS

V-961-B	Motor Assembly, 60 cycles, 115-120 V	1
Shure P30-1	Crystal Cartridge and Semi-Permanent Needle Assembly	1
	Semi-Permanent Needle	1
	(Specify part number and letters stamped on crystal)	

MODEL 84WG-2721D

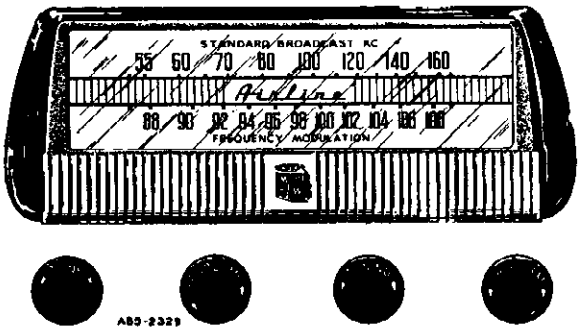

GENERAL DESCRIPTION

This is a two band, six tube (plus rectifier tube) receiver with automatic record changer for the reception of both AM and FM stations. The I-F stages use the latest type high gain miniature type tubes and built-in Air Wave Aerials are provided for the FM and Broadcast bands. Features include, compensator circuits to prevent oscillator drift, automatic volume control, beam power output stage, PM dynamic loud speaker and an electrostatic shield in the power transformer to reduce power line noise.

The receiver and record changer are housed in a console combination cabinet with controls provided for tuning, volume, tone and band or phono selection.

ELECTRICAL SPECIFICATIONS

Power Supply	105-125 volts AC 60 cycles, 60 watts. 80 watts with record changer
Frequency Ranges	Broadcast 540-1600 KC Frequency Modulation 88-108 MC
Intermediate Frequency	AM—455KC FM—10.7 MC
Selectivity	AM—45 KC broad at 1000 times signal, measured at 1000 KC I.F. FM—200 KC broad at 2 times down I.F. FM—950 KC broad at 200 times down
AM Sensitivity	(For .5 watt output with external antenna) 10 microvolts average
FM Sensitivity	(For .5 watt output) 100 microvolts average
Power Output	4.5 watts maximum 2.5 watts 10% distortion
Loud Speaker	10" PM Dynamic
Voice Coil Impedance	3.2 ohms 400 cycles
Record Changer	See Manual No. 5050A
Tube and Dial Lamp Complement	1 6BA7 FM-AM Converter 1 6BA6 1st I-F Amplifier 1 6BA6 2nd I-F Amplifier 1 6AL5 FM Discriminator 1 6AV6 Audio Amplifier, AM 2nd Detector and AVC 1 6V6GT Audio Output 1 5Y3GT Rectifier 2 No. 47 Dial Lamps

DRIVE CORD REPLACEMENT

DIAL POINTER CORD

Use a new 10X66 drive cord assembly or a new length of cord 46 inches long for the installation. Install the cord as shown in the illustration, winding three turns clockwise around the drive shaft with the turns progressing away from the chassis. After completing the installation rotate the drive shaft a few turns to take up the slack in the cord.

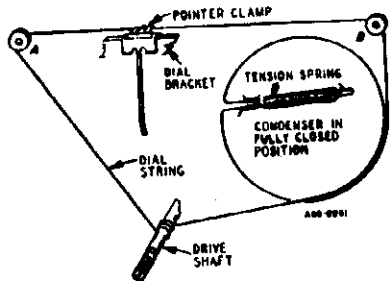

MISCELLANEOUS

12A480	10" P.M. Speaker	1
3A303	Tube Socket—Octal (8 prong) Molded	2
3A426	Tube Socket—Miniature	4
3A443	Tube Socket—Miniature (for AM- M Converter Tube)	1
3A304	Phono Motor Socket	1
3A305	Phono Socket—Single Pin Tip	1
2A384	Band Change Switch	1
13X546	Line Cord and Plug Assembly	1
10A695	Knob (Tuning)	1
10A696	Knob (Volume Control & Switch)	1
10A697	Knob (Tone)	1
10A698	Knob (Phono—BC—FM)	1
4X1020	Escutcheon	1

© John F. Rider

MODEL 84WG-2721D

RECEIVER STAGE SENSITIVITIES

AM AND AUDIO STAGES

The table below lists the sensitivity at the input of each stage. The receiver should be tuned to 1000 KC for all readings. All measurements are based on an output of .5 watt. This may be measured by disconnecting the speaker voice coil and substituting a 3.2 ohm, 5 watt resistor across the secondary winding of the output transformer. A reading of 1.26 volts across this resistor will be equivalent to a .5 watt output.

The volume control must be set to maximum.

The signal source must be an accurately calibrated signal generator capable of supplying both 1000 KC and 455 KC signals modulated 30% with a 400 cycle audio signal. Variations in sensitivity of Plus or Minus 25% are usually permissible.

SIGNAL GENERATOR				
FREQUENCY	COUPLING CAPACITOR	CONNECTION TO RECEIVER	GROUND CONNECTION	INPUT FOR .5 WATT OUTPUT
1000 KC	200 mmf or RMA Dummy Antenna	External Antenna Lead	Chassis	10 Microvolts
1000 KC	.01 mf	6BA7 Converter Pin 7	Chassis	40 Microvolts
455 KC	.01 mf	6BA7 Converter Pin 7	Chassis	35 Microvolts
455 KC	.01 mf	6BA6 1st I-F Pin 1	Chassis	2000 Microvolts
400 cycles	.01 mf	6AV6 1st A-F Pin 1	Chassis	.07 Volt
400 cycles	.01 mf	6V6GT Output Pin 5	Chassis	3.2 Volts

FM STAGES

The table below lists the sensitivity for the FM stages of the receiver. The receiver must be tuned to 98 MC for all readings. Measurements are based on a .5 watt output the same as for the AM and Audio stage measurements.

The signal source must be an accurately calibrated signal generator capable of supplying a 98 MC signal modulated by a 400 cycle audio signal. For these measurements the generator must be adjusted for a 22.5 KC deviation. This will correspond to 30% AM modulation.

SIGNAL GENERATOR				
FREQUENCY	COUPLING TO RECEIVER	CONNECTION TO RECEIVER	GROUND CONNECTION	INPUT FOR .5 WATT OUTPUT
98 MC	300 ohms	External Antenna Terminal	Chassis	100 Microvolts
10.7 MC	.01 mf	6BA6 1st I-F Pin 1	Chassis	600 Microvolts
10.7 MC	2500 mmf	6BA6 2nd I-F Pin 1	Chassis	23,000 Microvolts

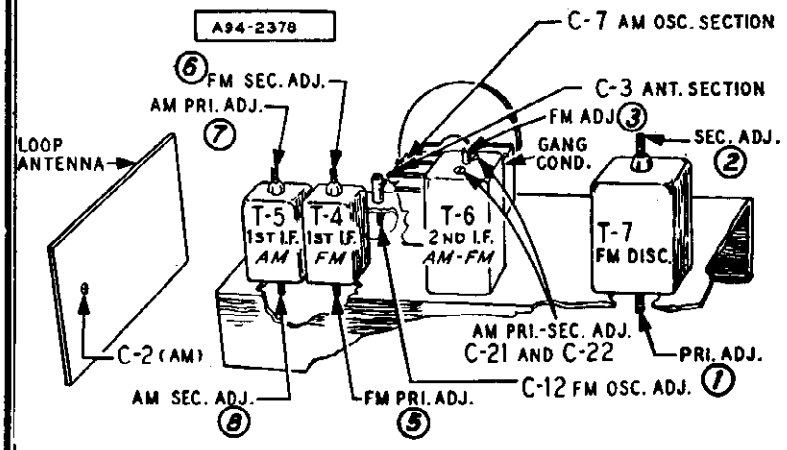

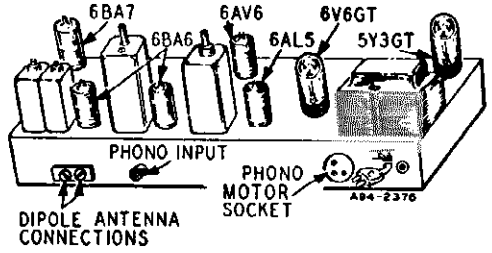

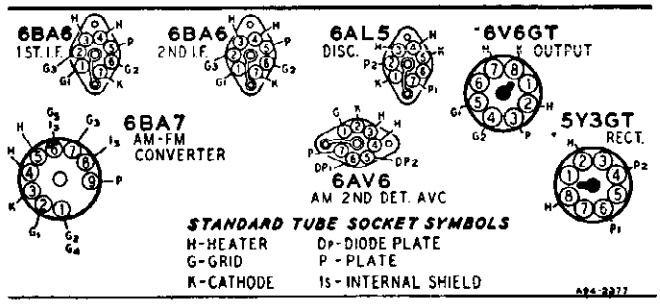

TUBE SOCKET VOLTAGES

Socket voltages are shown on the schematic diagram at the tube socket terminals. All voltages are between the socket terminal and chassis ground. Plate, screen and cathode voltages were taken with a 1000 ohm-per-volt meter with a 300 volt scale used for plate and screen voltages. Audio grid voltages were read with a vacuum tube volt-meter. Conditions of measurement are:

Line voltage.....117 Volts AC

Signal Input.....None

A variation of ±10% is usually permissible.

© John F. Rider

MODEL 84WG-2721D

ALIGNMENT PROCEDURES

AM STAGES

The following is required for aligning:
An All Wave Signal Generator Which Will Provide an Accurately Calibrated Signal at the Test Frequencies as Listed.
Output Indicating Meter, Non-Metallic Screwdriver, Dummy Antennas — .1 mf, and 50mmf.

Volume Control Maximum all Adjustments.
Connect Radio Chassis to Ground Post of Signal Generator with a Short Heavy Lead.
Allow Chassis and Signal Generator to "Heat Up" for Several Minutes.

SIGNAL GENERATOR						
FREQUENCY SETTING	CONNECT GENERATOR OUTPUT TO	THROUGH DUMMY ANTENNA	CONNECT GROUND TO	GANG CONDENSER SETTING	ADJUST	ADJUST FOR
455 KC	Control Grid 1st 6BA6 Pin No. 1	.1 mf	Chassis Base	Rotor Fully Open	2nd I.F. C-21 and C-22	Maximum Output
455 KC	Control Grid 6BA7 Pin No. 7 1st Det.	.1 mf	Chassis Base	Rotor Fully Open	1st I.F. Pri. and Sec. (7) and (8)	Maximum Output
1620 KC	Control Grid 6BA7 Pin No. 7	.1 mf	Chassis Base	Rotor Fully Open	Oscillator C-7	Maximum Output
1400 KC	External Antenna Lead	50 mmf	Chassis Base	Turn Rotor to Max. Output. Set Pointer to 1400 KC See Note A	Antenna C-2	Maximum Output

NOTE A—If the pointer is not at 1400 KC on the dial, reset pointer to the 1400 KC mark on the dial scale.

FM STAGES

The following is required for aligning:
An accurately calibrated signal generator providing unmodulated signals at the test frequencies listed below.
Non-metallic screwdriver.
Dummy Antennas and I-F Loading Resistor—2500 mmf, 300 ohms and a 3300 ohm .5 watt resistor with short leads.

Zero center scale DC vacuum tube voltmeter having a range of approximately 3 volts.
(If a zero center scale meter is not available, a standard scale vacuum tube voltmeter may be used by reversing the meter connections for negative readings).
Allow chassis and signal generator to "Heat Up" for several minutes.

	SIGNAL GENERATOR						
	FREQUENCY SETTING	CONNECT GENERATOR OUTPUT TO	THROUGH DUMMY ANTENNA	BAND SWITCH SETTING	GANG CONDENSER SETTING	ADJUST	ADJUST FOR
Discriminator	10.7 MC	6BA6 2nd I-F Pin 1 and Chassis	2500 mmf	FM	Rotor Fully Open	Disc. Pri. (1) Note A	Maximum Deflection
	10.7 MC	6BA6 2nd I-F Pin 1 and Chassis	2500 mmf	FM	Rotor Fully Open	Disc. Sec. (2) Note B	
	10.7 MC	6BA6 2nd I-F Pin 1 and Chassis	2500 mmf	FM	Rotor Fully Open	Disc. Pri. (1) Note A	Maximum Deflection
	10.7 MC	6BA6 2nd I-F Pin 1 and Chassis	2500 mmf	FM	Rotor Fully Open	Disc. Sec. (2) Note B	
I-F	10.7 MC Note E	6BA6 1st I-F Pin 1 and Chassis	2500 mmf	FM	Rotor Fully Open	2nd I-F (3) Note C	Maximum Deflection
Discriminator	10.7 MC	6BA6 2nd I-F Pin 1 and Chassis	2500 mmf	FM	Rotor Fully Open	Disc. Pri. (1) Note A	Maximum Deflection
I-F	10.7 MC	Antenna and Chassis	2500 mmf	FM	Rotor Fully Open	1st. I-F Pri. and Sec. (5) and (6) Note C	Maximum Deflection
	10.7 MC	Antenna and Chassis Solder a 3300 ohm resistor across terminals 3 and 4 of 1st. I-F trans.	2500 mmf	FM	Rotor Fully Open	1st. I-F Pri. (5) Note C	Maximum Deflection
	10.7 MC	Antenna and Chassis Note D	2500 mmf	FM	Rotor Fully Open	1st. I-F Sec. (6) Note C	Maximum Deflection
RECHECK I-F ADJUSTMENTS IN ORDER GIVEN							
Oscillator	108.4 Note F	Disconnect built-in dipole antenna and connect generator to dipole terminals with resistor in series	300 ohms	FM	Rotor Fully Open	Osc. C-12	Maximum Deflection
Antenna	104.5	Same as above	300 ohms	FM	Tune rotor for max. AVC voltage	Ant. C-3	Maximum Deflection
RECHECK ANTENNA & OSC. ADJUSTMENTS IN ORDER GIVEN							

FM ALIGNMENT NOTES

NOTE A—The zero center scale DC vacuum tube voltmeter is to be connected between chassis ground and the AVC line. A signal of .1 volt must be fed into the receiver for this adjustment.
Note output voltage on the zero center DC vacuum tube voltmeter

NOTE B—Disconnect zero center DC vacuum tube voltmeter from AVC and connect it at the audio takeoff point at the 27 K ohm resistor (R-11) and its junction with the terminal strip. Adjust for zero voltage indication.

NOTE C—Connect zero center DC vacuum tube voltmeter as in Note A. Adjust input to give same output on the zero center DC vacuum tube voltmeter as in Note A.

NOTE D—Unsolder 3300 ohm resistor from terminals 3 and 4 of 1st I-F transformer and resolder across terminals 1 and 2.

NOTE E—2nd I-F trimmers (AM) must be aligned before attempting to adjust 2nd I-F (FM) tuning slug.

NOTE F—Remove the 3300 ohm load resistor before attempting to check the antenna and oscillator adjustments.

© John F. Rider

MODEL 84WG-2721D

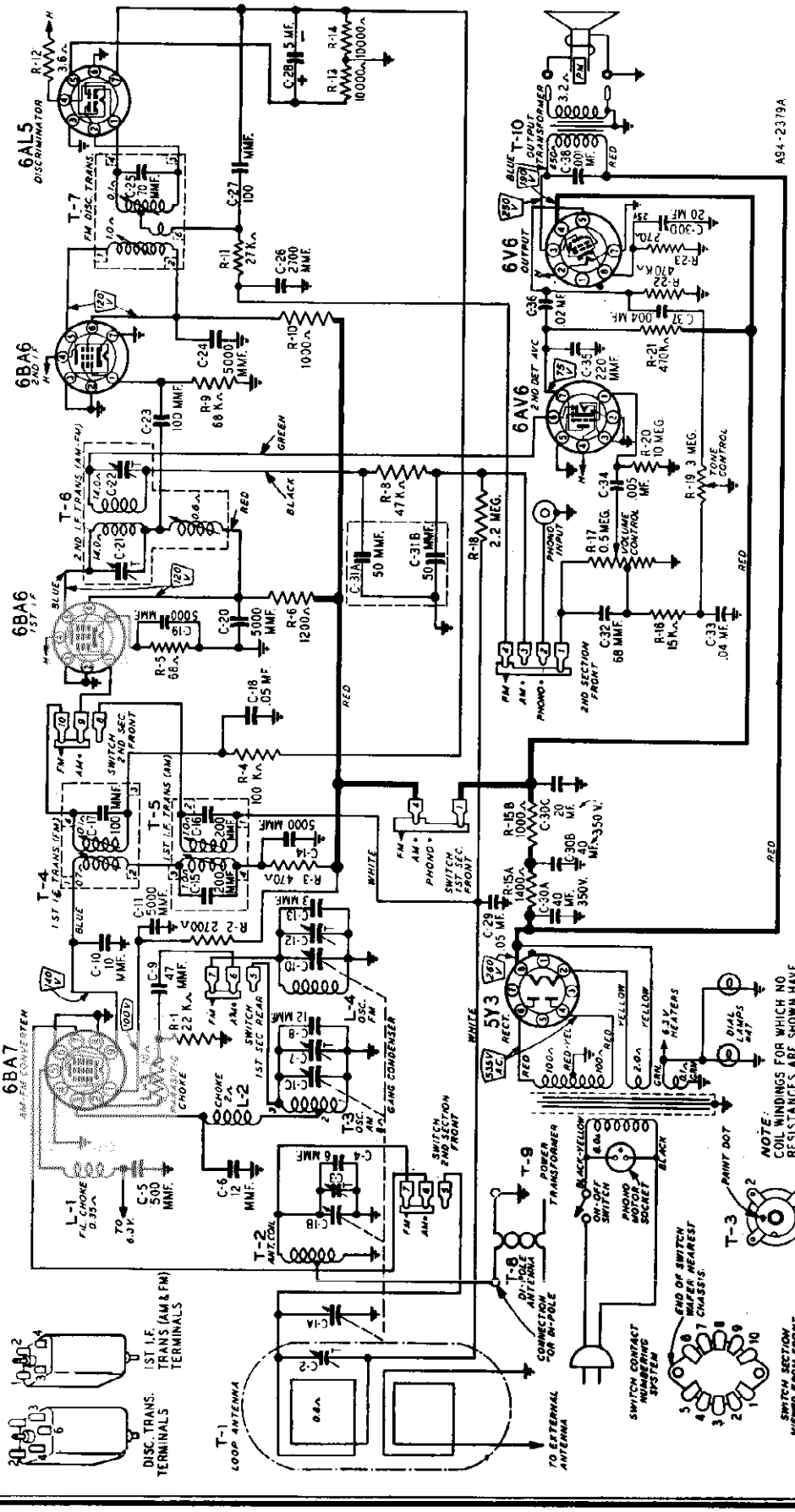

©John F. Rider

© John F. Rider

RESISTORS

		Ohms	Watts		
R-1	B84223	22 K	0.5	Carbon	1
R-2	B83272	2700	0.5	Carbon	1
R-3	B84471	470	0.5	Carbon	1
R-4	B85104	100 K	0.5	Carbon	1
R-5	B83680	68	0.5	Carbon	1
R-6	B84122	1200	0.5	Carbon	1
R-8	B85473	47 K	0.5	Carbon	1
R-9	B85683	68 K	0.5	Carbon	1
R-10	B84102	1000	0.5	Carbon	1
R-11	B84273	27 K	0.5	Carbon	1
R-12	43X233	3.6	0.5	Wire Wound	1
R-13, R-14	B84103	10 K	0.5	Carbon	2
R-15A	43X224	1400	6.0	Wire Wound	1
R-15B		1000	4.0		
R-16	B84153	15 K	0.5	Carbon	1
R-17	36X372	.5 meg.		Volume Control	1
R-18	B85225	2.2 meg.	0.5	Carbon	1
R-19	40X285	3 meg.		Tone Control	1
R-20	B85106	10 meg.	0.5	Carbon	1
R-21, R-22	B85474	470 K	0.5	Carbon	2
R-23	B84271	270	0.5	Carbon	1

TRANSFORMERS AND COILS

L-1	9A1882	Filament Choke Assembly	1
L-2	35A1	Insulated Choke	1
L-3	9A1940	Parasitic Choke Assembly	1
L-4	9A2021	Oscillator Coil Assembly (FM)	1
T-1	9A1972	"B" Range Loop Antenna Assem.	1
T-2	9A1956	Antenna Coil Assembly	1
T-3	9A1997	Oscillator Coil Assembly (AM)	1
T-4	9A1932	1st I.F. Trans. (FM)	1
T-5	9A1998	1st I.F. Trans. (AM)	1
T-6	9A1999	2nd I.F. Trans. (AM-FM)	1
T-7	9A1970	Discriminator Coil Assembly	1
T-8	9A2004	Dipole Antenna	1
T-9	53X290	Power Transformer	1
T-10	51X134	Output Transformer	1

CAPACITORS

C-1A, C-1B, C-1C, C-1D	14A204	Gang Condenser Assembly			1
C-2	17A235	2-24 mmf		Trimmer	1
C-3, C-7	Part of Gang Condenser				
C-4	47X521	6 mmf		Ceramic	1
C-5	47X508	500 mmf		Ceramic	1
C-6, C-8	47X522	12 mmf		Ceramic	2
C-9	47X517	47 mmf		Ceramic	1
C-10	47X512	10 mmf		Ceramic	1
C-11, C-14, C-19, C-20, C-24	47X507	5000 mmf		Silvered Ceramic	5
C-12	17A255	1-8 mmf		Trimmer	1
C-13	47X547	3 mmf		Ceramic	1
C-15, C-16	Part of T-5 (1st I.F. Trans.—AM)				
C-17	Part of T-4 (1st I.F. Trans.—FM)				
C-18, C-29	B66503	.05 mf	200 V	Tubular	2
C-21, C-22	Part of T-6 (2nd I.F. Trans.—AM-FM)				
C-23	47X497	100 mmf		Ceramic	1
C-25	Part of T-7 (Discriminator Trans.)				
C-26	47X492	2700 mmf		Molded Mica	1
C-27	47X526	100 mmf		Molded Mica	1
C-28	45X361	5 mf	100 V	Dry Electrolytic	1
C-30A	45X359	40 mf	350 V	Dry Electrolytic	1
C-30B		40 mf	350 V		
C-30C		20 mf	350 V		
C-30D		20 mf	25 V		
C-31A, C-31B	47X112	50-50 mmf		Dual Mica	1
C-32	47X471	68 mmf		Molded Mica	1
C-33	B66403	.04 mf	200 V	Tubular	1
C-34	D66502	.005 mf	400 V	Tubular	1
C-35	47X468	220 mmf		Ceramic	1
C-36	D66203	.02 mf	400 V	Tubular	1
C-37	B66402	.004 mf	200 V	Tubular	1
C-38	H66102	.001 mf	800 V	Tubular	1

DIAL AND DRIVE ASSEMBLY

58X715	Dial Glass	1
24X446	Idler Pulley	2
15X241	Pointer	1
25X1559	Dial Bracket	1
7A103	No. 47 Pilot Light Bulb	2
7A202	Pilot Light Socket Assembly	1
26X486	Drive Shaft	1
41X26	Reflector, Dial Light	2
28X113	Drive Cord Tension Spring	1
10X66	Drive Cord Assembly	1
19X192	"C" Washer (Mtg. drive shaft)	2
6X21	Rubber Grommet (Mtg. gang cond.)	3
20X260	Condenser Cushion Stud (Mtg. gang condenser)	3

TYPE V-28A139 RECORD CHANGER PARTS

V-961-B	Motor Assembly, 60-cycles, 115-120 V	1
Shure P30-1	Crystal Cartridge and Semi-Permanent Needle Assembly	1
	Semi-Permanent Needle	1
	(Specify part number and letters stamped on crystal)	

MODELS 84WG-2728A,
84WG-2734A

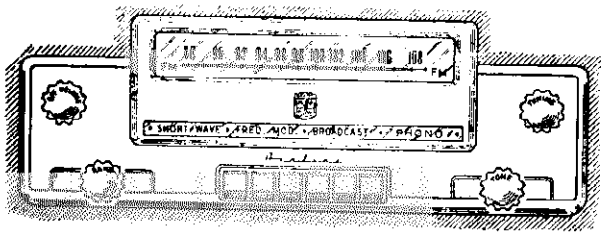

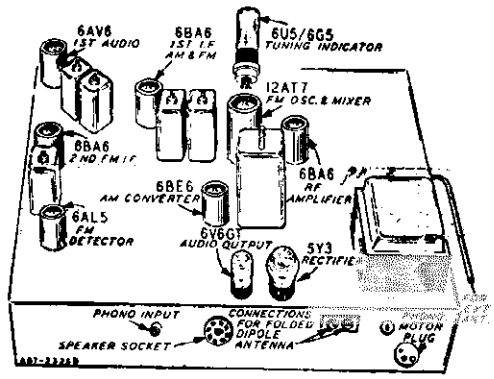

ELECTRICAL SPECIFICATIONS

Power Supply	105-125 volts AC 60 cycles, 80 watts, 100 watts with record changer
Frequency Ranges	Broadcast 540-1600 KC Frequency Modulation 88-108 MC Short Wave 5.8-18 MC
Intermediate Frequency	AM—455 KC FM—10.7 MC
Selectivity	AM—37 KC broad at 1000 times signal, measured at 1000 KC I.F. FM—200 KC broad at 2 times down I.F. FM—700 KC broad at 200 times down
AM Sensitivity	(For .5 watt output with external antenna) Broadcast, 2 microvolts average Short Wave, 4 microvolts average
FM Sensitivity	(For .5 watt output) 25 microvolts average
Power Output	6.5 watts maximum 3.5 watts 10% distortion
Loud Speaker	12" Electro Dynamic
Voice Coil Impedance	3.2 ohms 400 cycles
Record Changer	See Manual No. 5072A

Tube and Dial Lamp Complement

1 6BA6 AM-FM R-F Amplifier
1 12AT7 FM Osc. & Mixer
1 6BE6 AM Converter
1 6BA6 FM-AM 1st I-F Amplifier
1 6BA6 FM 2nd I-F Amplifier
1 6AL5 FM Detector
1 6AV6 Audio Amplifier, AM 2nd Detector and AVC
1 6V6GT Audio Output
1 6U5/6G5 Tuning Indicator
1 5Y3 Rectifier
6 No. 47 Dial Lamps

DRIVE CORD REPLACEMENT

DIAL POINTER CORD

Use a new 10X66 drive cord assembly or a new length of cord 50 inches long for the installation. Install the cord as shown in the illustration, winding three turns counterclockwise around the drive shaft spool with the turns progressing towards the front end of the drive shaft. After completing the installation rotate the drive shaft a few turns to take up the slack in the cord.

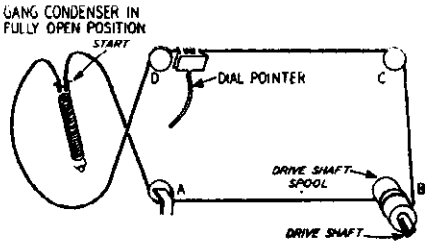

DIAL ROTATION CORD

Use a new 10X60 drive cord assembly or a new length of cord 20 inches long for the installation. Both the dial pulley and the band switch pulley must be turned to the short wave band position as shown in the illustration. Install the new cord exactly as shown then change the position of the band switch several times and note the movement of the dial.

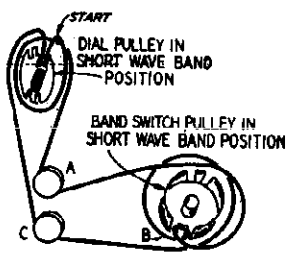

©John F. Rider

MODELS 84WG-2728A, 84WG-2734A

RECEIVER STAGE SENSITIVITIES

AM AND AUDIO STAGES

The table below lists the sensitivity at the input of each stage. The receiver should be tuned to 1000 KC for all readings. All measurements are based on an output of .5 watt. This may be measured by disconnecting the speaker voice coil and substituting an 8 ohm, 10 watt resistor across the secondary winding of the output transformer. A reading of 2 volts across this resistor will be equivalent to a .5 watt output. The volume control must be set to maximum.

The signal source must be an accurately calibrated signal generator capable of supplying both 1000 KC and 455 KC signals modulated 30% with a 400 cycle audio signal. Variations in sensitivity of Plus or Minus 25% are usually permissible.

SIGNAL GENERATOR				INPUT FOR .5 WATT OUTPUT
FREQUENCY	COUPLING CAPACITOR	CONNECTION TO RECEIVER	GROUND CONNECTION	
1000 KC	200 mmf or RMA Dummy Antenna	External Antenna Lead	Chassis	2 Microvolts
1000 KC	.05 mf	6BA6 Interstage Pin 1	Chassis	8 Microvolts
1000 KC	.05 mf	6BE6 Converter Pin 7	Chassis	65 Microvolts
455 KC	.05 mf	6BE6 Converter Pin 7	Chassis	55 Microvolts
455 KC	.05 mf	6BA6 1st I-F Pin 1	Chassis	2500 Microvolts
400 cycles	.05 mf	6AV6 1st A-F Pin 1	Chassis	.05 Volt
400 cycles	.05 mf	6V6GT Output Pin 5	Chassis	2.8 Volts

FM STAGES

The table below lists the sensitivity for the FM stages of the receiver. The receiver must be tuned to 98 MC for all readings. Measurements are based on a .5 watt output the same as for the AM and Audio stage measurements.

The signal source must be an accurately calibrated signal generator capable of supplying a 98 MC signal modulated by a 400 cycle audio signal. For these measurements the generator must be adjusted for a 22.5 KC deviation. This will correspond to 30% AM modulation.

SIGNAL GENERATOR				INPUT FOR .5 WATT OUTPUT
FREQUENCY	COUPLING TO RECEIVER	CONNECTION TO RECEIVER	GROUND CONNECTION	
98 Mc	300 ohms	External Antenna Terminal	External Ant. Terminal	25 Microvolts
10.7 MC	.01 mf	6BA6 1st I-F Pin 1	Chassis	2200 Microvolts
10.7 MC	.01 mf	6BA6 2nd I-F Pin 1	Chassis	50,000 Microvolts

ALIGNMENT PROCEDURE

AM BROADCAST AND SHORT WAVE BAND

The following is required for aligning:
An All Wave Signal Generator Which Will Provide an Accurately Calibrated Signal at the Test Frequencies as Listed.
Output Indicating Meter, Non-Metallic Screwdriver, Dummy Antennas — .1 mf, 200 mmf and 400 ohms.

Volume Control—Maximum all Adjustments.
Connect Radio Chassis to Ground Post of Signal Generator with a Short Heavy Lead.
Allow Chassis and Signal Generator to "Heat Up" for Several Minutes.

	SIGNAL GENERATOR		THROUGH DUMMY ANTENNA	BAND SWITCH SETTING	GANG CONDENSER SETTING	ADJUST	ADJUST FOR
	FREQUENCY SETTING	CONNECT GENERATOR OUTPUT TO					
I-F	455 kc	6BE6 Pin 7 and Chassis	.1 mf	Broadcast	Rotor Fully Open	1st I-F Pri. & Sec. (3) & (4) 2nd I.-F. Pri. & Sec. (1) & (2)	Maximum Output
Broadcast	1620 kc	External ant. lead	200 mmf	Broadcast	Rotor Fully Open	Broadcast Oscillator C-70B	
	1400 kc	External ant. lead	200 mmf	Broadcast	Turn Rotor to Max. Output Set pointer to 1400 kc See Note A	Broadcast Interstage C-38B	
	1400 kc	External ant. lead	200 mmf	Broadcast		Loop Antenna C-33	
	600 kc	External ant. lead	200 mmf	Broadcast	Turn Rotor to Max. Output and Rock See Note B	600 kc padder C-56	
Repeat above oscillator adjustments at 1620 and 600 KC until readjusting the oscillator Range B Trimmer C-70B causes no further improvement in output.							
Short Wave	18.3 MC	External ant. lead	400 ohm	Short Wave	Rotor Fully Open	SW Oscillator C-70A	Maximum Output
	17 MC	External ant. lead	400 ohm	Short Wave	Turn Rotor to Max. Output	SW Interstage C-38A · "D" Antenna C-31	
Reassemble chassis in cabinet							
Broadcast	1400 kc	External ant. lead	200 mmf	Broadcast	Turn Rotor to Max. Output	Loop Antenna C-33	

After each range is completed, repeat the procedure as a final check.
Note A—If the pointer is not at 1400 KC on the dial, reset pointer at the 1400 KC mark on the dial scale.

Note B—Turn the rotor back and forth and adjust the trimmer until the peak of greatest intensity is obtained.

© John F. Rider

MODELS 84WG-2728A, 84WG-2734A

ALIGNMENT PROCEDURE

The following equipment is required for aligning:

An accurately calibrated signal generator providing unmodulated signals at the test frequencies listed below.

Non-metallic screwdriver.

Dummy Antennas and I-F Loading Resistor—.01 mf, 300 ohms and 5000 ohms.

FM STAGES

Zero center scale DC vacuum tube voltmeter having a range of approximately 3 volts.

(If a zero center scale meter is not available, a standard scale vacuum tube voltmeter may be used by reversing the meter connections for negative readings.

Allow chassis and signal generator to warm up for several minutes.

	SIGNAL GENERATOR		THROUGH DUMMY ANTENNA	BAND SWITCH SETTING	GANG CONDENSER SETTING	ADJUST	ADJUST FOR
	FREQUENCY SETTING	CONNECT GENERATOR OUTPUT TO					
Discriminator	10.7 MC Note B	6BA6 2nd I-F Pin 1 and Chassis	.01 mf	FM	Rotor Fully Open	Disc. Pri. (5) Note A	Maximum Deflection
	10.7 MC Note B	6BA6 2nd I-F Pin 1 and Chassis	.01 mf	FM	Rotor Fully Open	Disc. Sec. (6) Note C	Zero Center
	10.7 MC Note B	6BA6 2nd I-F Pin 1 and Chassis	.01 mf	FM	Rotor Fully Open	Disc. Pri. (5) Note A	Maximum Deflection
	10.7 MC Note B	6BA6 2nd I-F Pin 1 and Chassis	.01 mf	FM	Rotor Fully Open	Disc. Sec. (6) Note C	Zero Center
I-F	10.7 MC Note F	6BA6 1st I-F, Pin 1 and Chassis	.01 mf	FM	Rotor Fully Open	2nd I-F Pri. Note A and D (7) 2nd I-F Sec. Note A and E (8)	Maximum Deflection
	10.7 MC Note F	FM-RF Gang Condenser terminal on top of chassis	.01 mf	FM	Rotor Fully Open	1st I-F Pri. (9) 1st I-F Sec. (10) Note A	Maximum Deflection
Recheck I-F Adjustments in order given							
R-F & Osc.	108.4	Disconnect dipole and connect generator to dipole terminals with resistor in series	300 ohms	FM	Rotor Fully Open	Oscillator C-9 Note G	Maximum Deflection
	104.5	Disconnect dipole and connect generator to dipole terminals with resistor in series	300 ohms	FM	Tune Rotor for Max. AVC voltage	RF. C-5	Maximum Deflection
	104.5	Disconnect dipole and connect generator to dipole terminals with resistor in series	300 ohms	FM	Tune Rotor for Max. AVC voltage	Ant. C-2	Maximum Deflection
Recheck R-F and Osc. Adjustments in order given							

NOTE A—Test Equipment connections are as given in the table. The zero center scale DC vacuum tube voltmeter is to be connected between chassis ground and the AVC line at the 1 megohm resistor R-40 and the band switch terminal for all adjustments except the discriminator secondary adjustment, for which see Note C.

NOTE B—A signal of .1 volt must be fed into the receiver for this adjustment.

NOTE C—Disconnect zero center DC vacuum tube voltmeter from AVC and reconnect to junction of R-11, C-51 and C-52. Adjust for zero voltage indication.

NOTE D—Before adjusting Pri. core connect 5000 ohm load resistor across the 2nd I.F. secondary terminals.

NOTE E—Disconnect 5000 ohm load resistor from secondary terminals and reconnect across the 2nd I.F. primary terminals.

NOTE F—Input can be reduced to 10,000 microvolts.

NOTE G—Oscillator frequency below signal frequency.

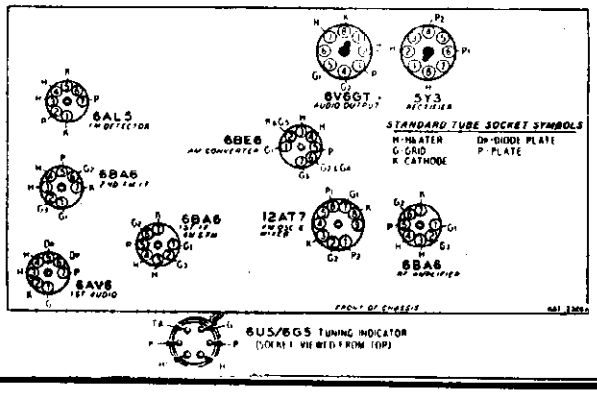

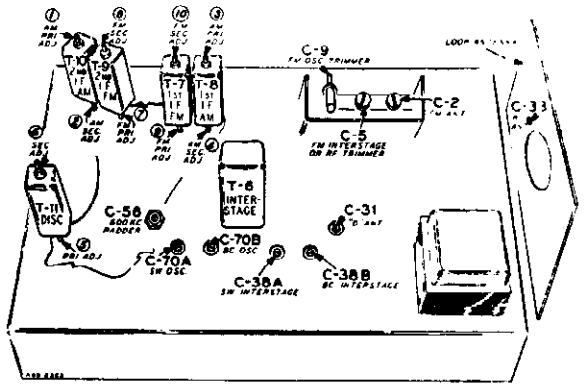

TUBE SOCKET VOLTAGES

Socket voltages are shown on the schematic diagram at the tube socket terminals. All voltages are between the socket terminal and chassis ground. Plate, screen and cathode voltages were taken with a 1000 ohm-per-volt meter with a 300 volt scale used for plate and screen voltages. Audio grid voltages were read with a vacuum tube volt-meter. Conditions of measurement are:

Line voltage.....117 Volts AC

Signal Input.....None

A variation of ±10% is usually permissible.

© John F. Rider

MODELS 84WG-2728A,
84WG-2734A

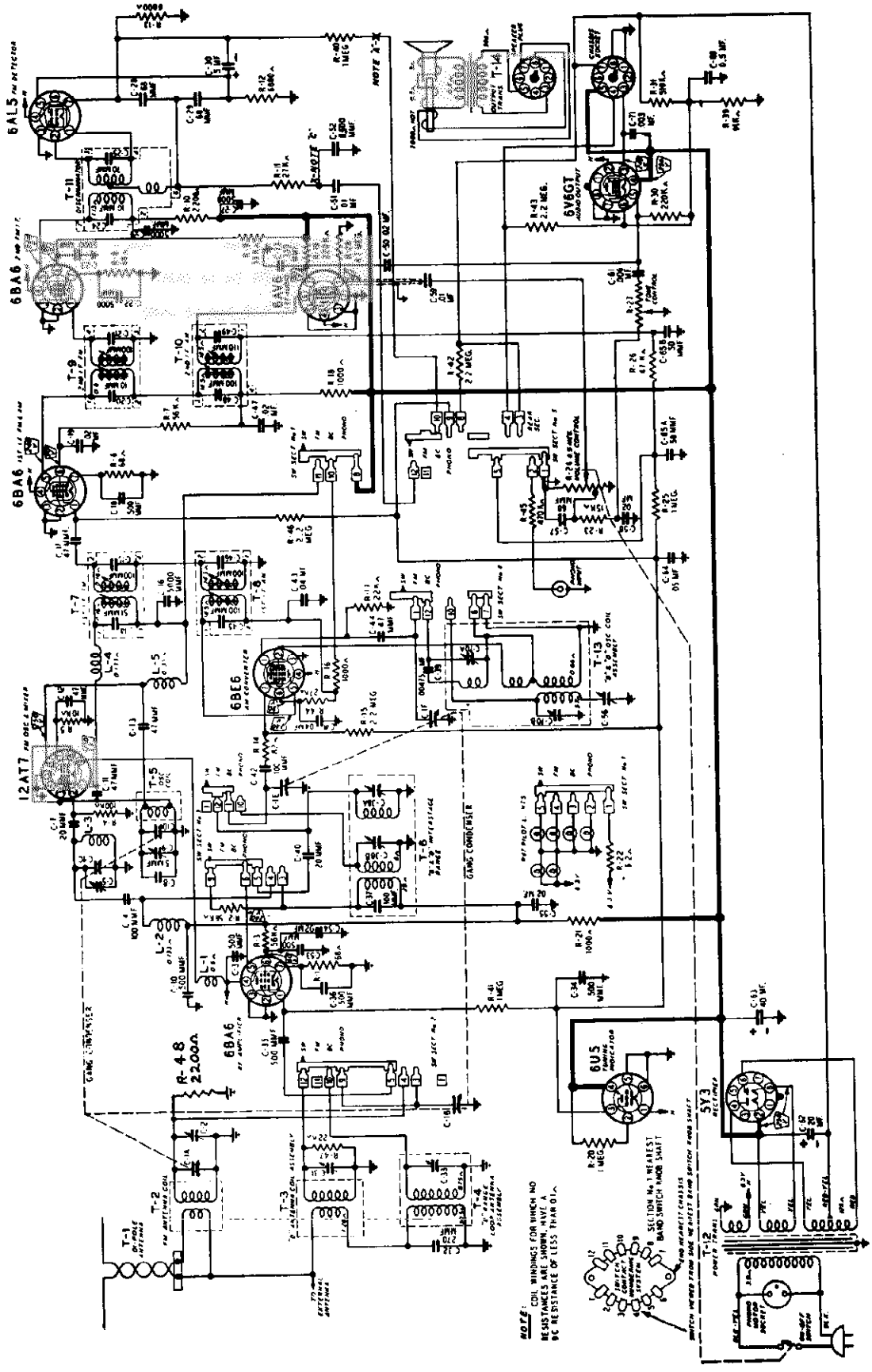

©John F. Rider

MODELS 84WG-2728A, 84WG-2734A

REPLACEMENT PARTS LIST (continued)

Ref. No.	Part No.	Description			Qty. Used in Set
		Ohms	Watts		
R-17, R-47	B84223	22K	0.5	Carbon	2
R-19, R-30	B85224	220K	0.5	Carbon	2
R-20	Part of 13X549 Cable and Socket Assembly				
R-22	43X217	6.2	0.5	Wire Wound	1
R-23	B85153	15K	0.5	Carbon	1
R-24	36X363	.5 meg.		Volume Control	1
R-25, R-40, R-41	B85105	1 meg.	0.5	Carbon	3
R-26	B85473	47 K	0.5	Carbon	1
R-27	40X286	3 meg.	Tone Control		1
R-28	B85475	4.7 meg.	0.5	Carbon	1
R-31	B83514	510K	0.5	Carbon	1
R-39	B83913	91 K	0.5	Carbon	1
R-43	B84225	2.2 meg.	0.5	Carbon	1
R-44	C84273	27K	1.0	Carbon	1
R-45	B85474	470K	0.5	Carbon	1
R-48	B84222	2200	0.5	Carbon	1

TRANSFORMERS AND COILS

L-1	9A1881	Filament Choke Assembly	1
L-2, L-4	9A1880	FM R-F Plate Choke	2
L-3	9A1946	FM R-F Coil	1
L-5	9A1882	FM Oscillator Plate Choke	1
T-1	9A2000	Di-Pole Antenna Assembly	1
T-2	9A1966	FM Antenna Coil	1
T-3	9A1957	"D" Antenna Coil Assembly	1
T-4	26A436	Loop Antenna Assembly	1
T-5	9A1948	Oscillator Coil (FM)	1
T-6	9A1947	Interstage "B" & "D" Range Coil Assembly	1
T-7	9A1950	1st I-F Transformer (FM)	1
T-8	9A1934	1st I-F Transformer (AM)	1
T-9	9A1933	2nd I-F Transformer (FM)	1
T-10	9A1935	2nd I-F Transformer (AM)	1
T-11	9A1936	Discriminator Coil	1
T-12	53X286	Power Transformer	1
T-13	9A1988	"B" & "D" Oscillator Coil Assembly	1
T-14		Output Transformer (See Miscellaneous)	1

MISCELLANEOUS

12A482	12" E.D. Speaker complete with output transformer	1
3A425	Tube socket (miniature)	5
3A303	Tube socket—octal (8 prong) molded	3
32X386	Tube shield (miniature)	6
32X388	Tube Shield (For 12AT7)	1
3A436	Tube socket (For 12AT7)	1
3A427	Tube socket (R-F Amp)	1
3A304	Phono Motor Socket	1
3A305	Phono socket—single pin	1
2A377	Band Switch	1

Ref. No.	Part No.	Description		Qty. Used in Set
	13X328	Line Cord and Plug Assembly		1
	26A486	Escutcheon and Crystal Assy. (Walnut)		1
	26A487	Escutcheon and Crystal Assy. (Blond)		1
	10A509	Tuner Buttons (Walnut)		6
	10A674	Tuner Buttons (Blond)		6
	28X320	Springs (Tuner Button)		6
	4X870	Escutcheon Eye (Walnut)		1
	4X1015	Escutcheon Eye (Blond)		1
	10A662	Knob, Band	Walnut	1
	10A667	Knob, Tuning	Walnut	1
	10A668	Knob, On-Off, Volume	Walnut	1
	10A669	Knob, Tone	Walnut	1
	10A670	Knob, Tuning	Blond	1
	10A671	Knob, Tone	Blond	1
	10A672	Knob, Band	Blond	1
	10A673	Knob, On-Off, Volume	Blond	1
	25X498	Tuning Eye Clamp		1
	25X1396	Tuning Eye Bracket		1
	13X549	Cable and Socket Assembly—Tuning Indicator		1
	6X21	Rubber Grommets	Mtg. Gang Cond.	4
	20X329	Condenser Cushion Stud	Mtg. Gang Cond.	4

DIAL AND DRIVE ASSEMBLY

26A435	Dial Bracket Assembly	1
26A484	Dial and Drum Assembly Complete with Dial Background, Collar, Dial Drum and Dial Scale	1
15X221	Pointer	1
26X500	Dial Drum Shaft	1
26A440	Pulley and Collar Assembly (For dial drum shaft)	1
26A437	Band Switch Pulley Assembly	1
26X468	Band Switch Shaft	1
26A441	Crown Gear Assembly (For Mtg. to Band Switch)	2
26A434	Idler Bracket Assembly	1
25X1389	Drive Shaft Bracket	1
26A494	Drive Shaft & Spool Assembly	1
10X60	Drive Cord Assembly (Band Change)	1
28X524	Tension Spring (Band Change)	1
10X66	Drive Cord and Clip Assembly (Dial Drive)	1
28X530	Tension Spring (Dial Drive)	1
41X72	Light Shield (Band Indicator)	4
41X35	Light Shield (Dial)	2
7A103	No. 47 Pilot Light	6
7A187	Pilot Light Socket Assembly (Dual)	1
7A209	Indicator Light Socket Assembly	4

TYPE W-28A152 RECORD CHANGER PARTS

W-15X097-1	Motor Assembly, 60 cycles 115-120 V.	1
W-21P247	Crystal Cartridge	1
W-21P515	Semi-Permanent Twin Point Needle Assembly	1
W-11X368	Rubber Drive Wheel (33-1/3 R.P.M.)	1
W-11X366	Rubber Drive Wheel (78 R.P.M.)	1

©John F. Rider

MODELS 84WG-2732A,
84WG-2732B

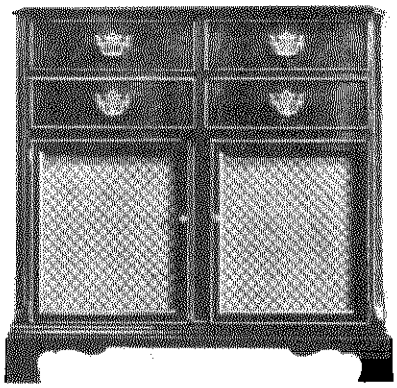

ELECTRICAL SPECIFICATIONS

Power Supply	105-125 volts AC 60 cycles, 110 watts, 130 watts with record changer
Frequency Ranges	Broadcast 540-1600 KC Frequency Modulation 88-108 MC Short Wave 5.8-18 MC
Intermediate Frequency	AM—455 KC FM—10.7 MC
Selectivity	AM—37 KC broad at 1000 times signal, measured at 1000 KC I.F. FM—200 KC broad at 2 times down I.F. FM—700 KC broad at 200 times down
AM Sensitivity	(For .5 watt output with external antenna) Broadcast, 2 microvolts average Short Wave, 4 microvolts average
FM Sensitivity	(For .5 watt output) 25 microvolts average
Power Output	12.0 watts maximum 9.0 watts 10% distortion
Loud Speaker	12" Electro Dynamic
Voice Coil Impedance	8.0 ohms 400 cycles
Record Changer	See Manual No. 5073A

Tube and Dial Lamp Complement

1 6BA6 AM-FM R-F Amplifier
1 12AT7 FM Osc. & Mixer
1 6BE6 AM Converter
1 6BA6 FM-AM 1st I-F Amplifier
1 6BA6 FM 2nd I-F Amplifier
1 6AL5 FM Detector
1 6AV6 Audio Amplifier, AM 2nd Detector and AVC
2 6V6GT Audio Output
1 6U5/6G5 Tuning Indicator
1 5U4 Rectifier
1 6AV6 Phase Inverter
6 No. 47 Dial Lamps

DRIVE CORD REPLACEMENT

DIAL POINTER CORD

Use a new 10X66 drive cord assembly or a new length of cord 50 inches long for the installation. Install the cord as shown in the illustration, winding three turns counterclockwise around the drive shaft spool with the turns progressing towards the front end of the drive shaft. After completing the installation rotate the drive shaft a few turns to take up the slack in the cord.

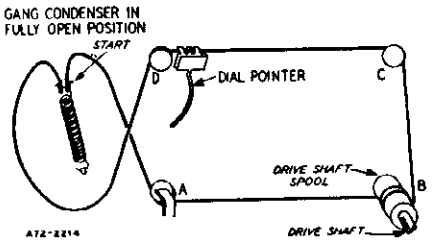

DIAL ROTATION CORD

Use a new 10X45 drive cord assembly or a new length of cord 20 inches long for the installation. Both the dial pulley and the band switch pulley must be turned to the short wave band position as shown in the illustration. Install the new cord exactly as shown then change the position of the band switch several times and note the movement of the dial.

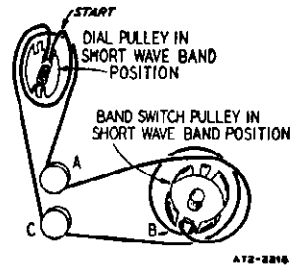

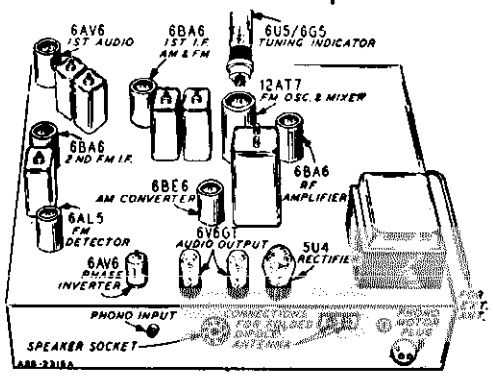

©John F. Rider

MODELS 84WG-2732A, 84WG-2732B

RECEIVER STAGE SENSITIVITIES

AM AND AUDIO STAGES

The table below lists the sensitivity at the input of each stage. The receiver should be tuned to 1000 KC for all readings. All measurements are based on an output of .5 watt. This may be measured by disconnecting the speaker voice coil and substituting an 8 ohm, 10 watt resistor across the secondary winding of the output transformer. A reading of 2 volts across this resistor will be equivalent to a .5 watt output. The volume control must be set to maximum.

The signal source must be an accurately calibrated signal generator capable of supplying both 1000 KC and 455 KC signals modulated 30% with a 400 cycle audio signal. Variations in sensitivity of Plus or Minus 25% are usually permissible.

SIGNAL GENERATOR				INPUT FOR .5 WATT OUTPUT
FREQUENCY	COUPLING CAPACITOR	CONNECTION TO RECEIVER	GROUND CONNECTION	
1000 KC	200 mmf or RMA Dummy Antenna	External Antenna Lead	Chassis	2 Microvolts
1000 KC	.05 mf	6BA6 Interstage Pin 1	Chassis	8 Microvolts
1000 KC	.05 mf	6BE6 Converter Pin 7	Chassis	65 Microvolts
455 KC	.05 mf	6BE6 Converter Pin 7	Chassis	55 Microvolts
455 KC	.05 mf	6BA6 1st I-F Pin 1	Chassis	3500 Microvolts
400 cycles	.05 mf	6AV6 1st A-F Pin 1	Chassis	.045 Volt
400 cycles	.05 mf	6V6GT Output Pin 5	Chassis	1.65 Volts

FM STAGES

The table below lists the sensitivity for the FM stages of the receiver. The receiver must be tuned to 98 MC for all readings. Measurements are based on a .5 watt output the same as for the AM and Audio stage measurements.

The signal source must be an accurately calibrated signal generator capable of supplying a 98 MC signal modulated by a 400 cycle audio signal. For these measurements the generator must be adjusted for a 22.5 KC deviation. This will correspond to 30% AM modulation.

SIGNAL GENERATOR				INPUT FOR .5 WATT OUTPUT
FREQUENCY	COUPLING TO RECEIVER	CONNECTION TO RECEIVER	GROUND CONNECTION	
98 Mc	300 ohms	External Antenna Terminal	External Ant. Terminal	25 Microvolts
10.7 MC	.01 mf	6BA6 1st I-F Pin 1	Chassis	2200 Microvolts
10.7 MC	.01 mf	6BA6 2nd I-F Pin 1	Chassis	50,000 Microvolts

ALIGNMENT PROCEDURE

AM BROADCAST AND SHORT WAVE BAND

The following is required for aligning:

An All Wave Signal Generator Which Will Provide an Accurately Calibrated Signal at the Test Frequencies as Listed.

Output Indicating Meter, Non-Metallic Screwdriver, Dummy Antennas — .1 mf, 200 mmf and 400 ohms.

Volume Control—Maximum all Adjustments.

Connect Radio Chassis to Ground Post of Signal Generator with a Short Heavy Lead.

Allow Chassis and Signal Generator to "Heat Up" for Several Minutes.

	SIGNAL GENERATOR		THROUGH DUMMY ANTENNA	BAND SWITCH SETTING	GANG CONDENSER SETTING	ADJUST	ADJUST FOR
	FREQUENCY SETTING	CONNECT GENERATOR OUTPUT TO					
I-F	455 kc	6BE6 Pin 7 and Chassis	.1 mf	Broadcast	Rotor Fully Open	1st I-F Pri. & Sec. (3) & (4) 2nd I.-F. Pri. & Sec. (1) & (2)	Maximum Output
Broadcast	1620 kc	External ant. lead	200 mmf	Broadcast	Rotor Fully Open	Broadcast Oscillator C-70B	
	1400 kc	External ant. lead	200 mmf	Broadcast	Turn Rotor to Max. Output Set pointer to 1400 kc See Note A	Broadcast Interstage C-38B	
	1400 kc	External ant. lead	200 mmf	Broadcast		Loop Antenna C-33	
	600 kc	External ant. lead	200 mmf	Broadcast	Turn Rotor to Max. Output and Rock See Note B	600 kc padder C-56	

Repeat above oscillator adjustments at 1620 and 600 KC until readjusting the oscillator Range B Trimmer C-70B causes no further improvement in output.

Short Wave	18.3 MC	External ant. lead	400 ohm	Short Wave	Rotor Fully Open	SW Oscillator C-70A	Maximum Output
	17 MC	External ant. lead	400 ohm	Short Wave	Turn Rotor to Max. Output	SW Interstage C-38A "D" Antenna C-31	
	Reassemble chassis in cabinet						
Broadcast	1400 kc	External ant. lead	200 mmf	Broadcast	Turn Rotor to Max. Output	Loop Antenna C-33	

After each range is completed, repeat the procedure as a final check.

Note A—If the pointer is not at 1400 KC on the dial, reset pointer at the 1400 KC mark on the dial scale.

Note B—*Turn the rotor back and forth and adjust the trimmer until the peak of greatest intensity is obtained.*

©John F. Rider

MODELS 84WG-2732A,
84WG-2732B

ALIGNMENT PROCEDURE

FM STAGES

The following equipment is required for aligning:

An accurately calibrated signal generator providing unmodulated signals at the test frequencies listed below.

Non-metallic screwdriver.

Dummy Antennas and I-F Loading Resistor—.01 mf, 300 ohms and 5000 ohms.

Zero center scale DC vacuum tube voltmeter having a range of approximately 3 volts.

(If a zero center scale meter is not available, a standard scale vacuum tube voltmeter may be used by reversing the meter connections for negative readings.

Allow chassis and signal generator to warm up for several minutes.

	SIGNAL GENERATOR		THROUGH DUMMY ANTENNA	BAND SWITCH SETTING	GANG CONDENSER SETTING	ADJUST	ADJUST FOR
	FREQUENCY SETTING	CONNECT GENERATOR OUTPUT TO					
Discriminator	10.7 MC Note B	6BA6 2nd I-F Pin 1 and Chassis	.01 mf	FM	Rotor Fully Open	Disc. Pri. (5) Note A	Maximum Deflection
	10.7 MC Note B	6BA6 2nd I-F Pin 1 and Chassis	01 mf	FM	Rotor Fully Open	Disc. Sec. (6) Note C	Zero Cente
	10.7 MC Note B	6BA6 2nd I-F Pin 1 and Chassis	.01 mf	FM	Rotor Fully Open	Disc. Pri. (5) Note A	Maximum Deflection
	10.7 MC Note B	6BA6 2nd I-F Pin 1 and Chassis	.01 mf	FM	Rotor Fully Open	Disc. Sec. (6) Note C	Zero Cente
I-F	10.7 MC Note F	6BA6 1st I-F, Pin 1 and Chassis	.01 mf	FM	Rotor Fully Open	2nd I-F Pri. Note A and D (7) 2nd I-F Sec Note A and E (8)	Maximus Deflectio
	10.7 MC Note F	FM-RF Gang Condenser terminal on top of chassis	.01 mf	FM	Rotor Fully Open	1st I-F Pri. (9) 1st I-F Sec. (10) Note A	Maximum Deflection
	Recheck I-F Adjustments in order given						
R-F & Osc.	108.4	Disconnect dipole and connect generator to dipole terminals with resistor in series	300 ohms	FM	Rotor Fully Open	Oscillator C-9 Note G	Maximum Deflection
	104.5	Disconnect dipole and connect generator to dipole terminals with resistor in series	300 ohms	FM	Tune Rotor for Max. AVC voltage	RF. C-5	Maximum Deflection
	104.5	Disconnect dipole and connect generator to dipole terminals with resistor in series	300 ohms	FM	Tune Rotor for Max. AVC voltage	Ant. C-2	Maximum Deflection
	Recheck R-F and Osc. Adjustments in order given						

NOTE A—Test Equipment connections are as given in the table. The zero center scale DC vacuum tube voltmeter is to be connected between chassis ground and the AVC line at the 1 megohm resistor R-40 and the band switch terminal for all adjustments except the discriminator secondary adjustment, for which see Note C.

NOTE B—A signal of .1 volt must be fed into the receiver for this adjustment.

NOTE C—Disconnect zero center DC vacuum tube voltmeter from AVC and reconnect to junction of R-11, C-51 and C-52. Adjust for zero voltage indication.

NOTE D—Before adjusting Pri. core connect 5000 ohm load resistor across the 2nd I.F. secondary terminals.

NOTE E—Disconnect 5000 ohm load resistor from secondary terminals and reconnect across the 2nd I.F. primary terminals.

NOTE F—Input can be reduced to 10,000 microvolts.

NOTE G—Oscillator frequency below signal frequency.

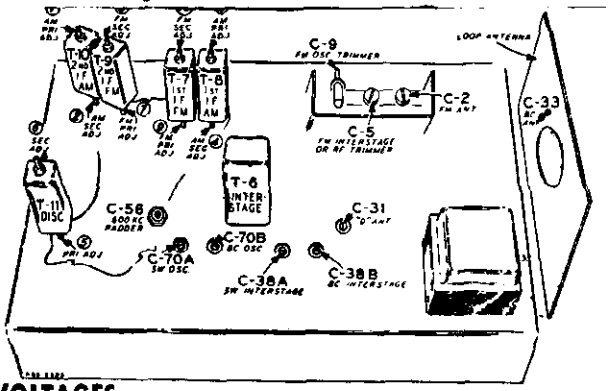

TUBE SOCKET VOLTAGES

Socket voltages are shown on the schematic diagram at the tube socket terminals. All voltages are between the socket terminal and chassis ground. Plate, screen and cathode voltages were taken with a 1000 ohm-per-volt meter with a 300 volt scale used for plate and screen voltages. Audio grid voltages were read with a vacuum tube volt-meter. Conditions of measurement are:

Line voltage.....117 Volts AC

Signal Input.....None

A variation of ±10% is usually permissible.

©John F. Rider

MODELS 84WG-2732A,
84WG-2732B

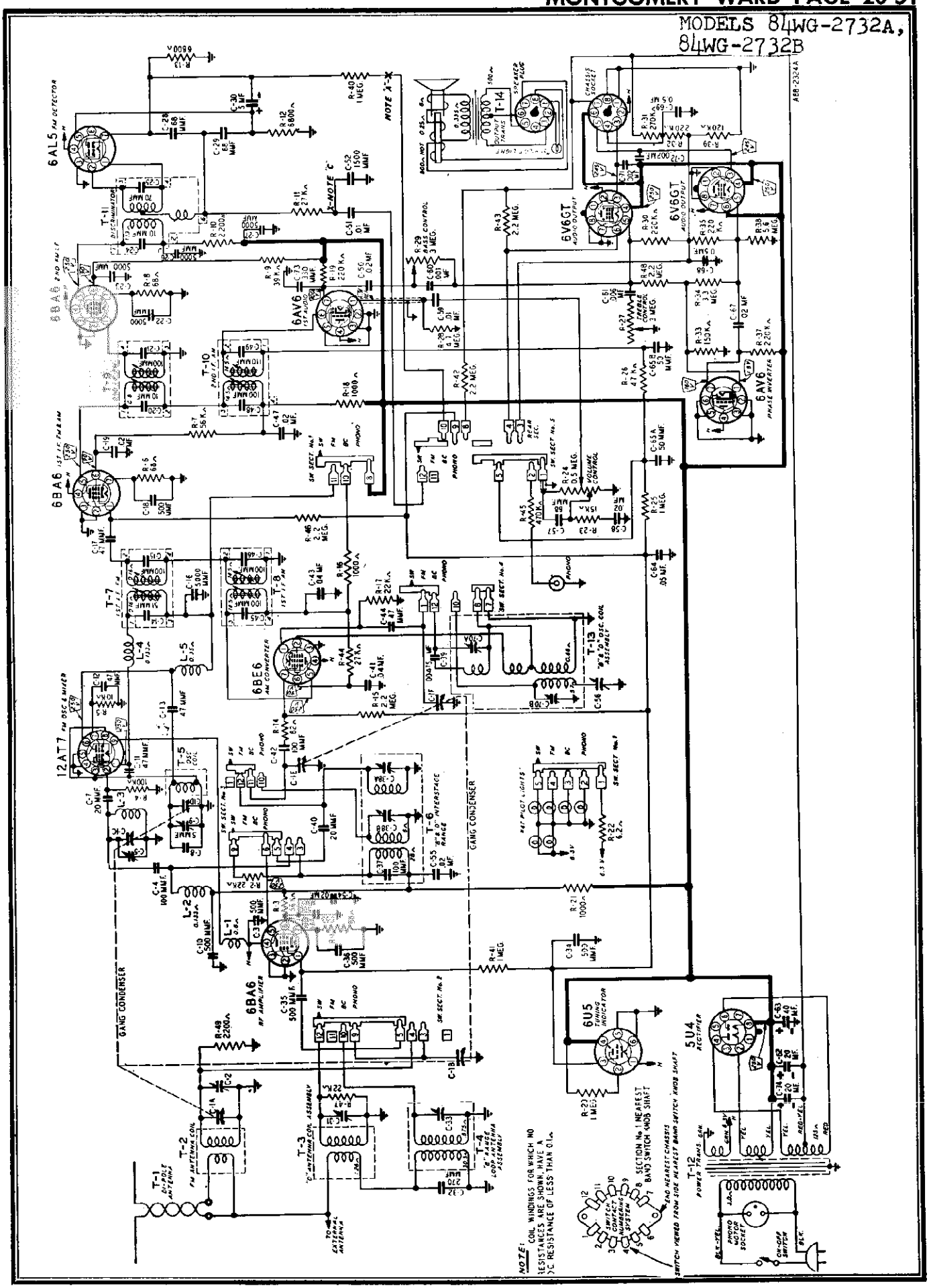

© John F. Rider

MODELS 84WG-2732A,
84WG-2732B

Ref. No.	Part No.	Description			Qty. Used in Set
		CAPACITORS			
C-1	26A483	Tuner and Gang Assembly			1
C-2, C-5	17A247	3.0-12 mmf		Trimmer	2
C-3, C-10, C-18, C-34, C-35, C-36, C-53	47X496	500 mmf		Ceramic	7
C-4, C-42	47X497	100 mmf		Ceramic	2
C-7, C-40	47X516	20mmf		Ceramic	2
C-8	47X500	5 mmf		Ceramic	1
C-9	17A255	1-8 mmf		Trimmer	1
C-11	47X499	47 mmf		Ceramic	1
C-12, C-13, C-44	47X498	47 mmf		Ceramic	3
C-14, C-15	Part of T-7 1st I-F (FM)				
C-16, C-22, C-23, C-26, C-27	47X507	5000 mmf		Ceramic	5
C-17	47X495	47 mmf		Ceramic	1
C-19, C-47, C-50, C-54, C-55, C-67	F66203	.02 mf	600 V	Tubular	6
C-20, C-21	Part of T-9 2nd I-F (FM)				
C-24, C-25	Part of T-11 Discriminator				
C-28, C-29, C-57	47X501	68 mmf		Ceramic	3
C-30	45X361	5 mf	100 V	Dry Electrolytic	1
C-31	17A253	5-50 mmf		Trimmer	1
C-32	47X445	270 mmf		Molded	1
C-33	17A123	1.5-12 mmf		Trimmer	1
C-37	47X57	100 mmf		Molded	1
C-38A, C-38B	17A252	1.3-12 mmf		Dual Trimmer	1
C-39	46X289	.00475 mf	180 V	Tubular	1
C-41, C-43	D66403	.04 mf	400 V	Tubular	2
C-45, C-46	Part of T-8 1st I-F (AM)				
C-48, C-49	Part of T-10 2nd I-F (AM)				
C-51, C-59	B66103	.01 mf	200 V	Tubular	2
C-52	47X528	1500 mmf		Molded	1
C-56	17A241	300-475 mmf		Trimmer	1
C-58	B66203	.02 mf	200 V	Tubular	1
C-60	D66102	.001 mf	400 V	Tubular	1
C-61	D66602	.006 mf	400 V	Tubular	1
C-62	45X351	20 mf	450 V	Dry Electrolytic	1
C-63	45X302	40 mf	450 V	Dry Electrolytic	1
C-64	B66503	.05 mf	200 V	Tubular	1
C-65A, C-65B	47X112	50-50 mmf		Dual Mica	1
C-68, C-69	A66504	.5 mf	100 V	Tubular	2
C-70A, C-70B	17A246	3.2-35 mmf		Dual Trimmer	1
C-71, C-72	D66202	.002 mf	400 V	Tubular	2
C-73	47X470	330 mmf		Molded	1
C-74	45X373	20 mf	450 V	Dry Electrolytic	1

Ref. No.	Part No.	Ohms	Watts		
		RESISTORS			
R-1, R-6, R-8	B83680	68	0.5	Carbon	3
R-2	C85223	22K	1.0	Carbon	1
R-3	B85563	56K	0.5	Carbon	1
R-4	B84104	100K	0.5	Carbon	1
R-5	B84103	10K	0.5	Carbon	1
R-7	C84563	56K	1.0	Carbon	1
R-9	C84393	39K	1.0	Carbon	1
R-10	B85222	2200	0.5	Carbon	1
R-11	B84273	27K	0.5	Carbon	1
R-12, R-13	B83682	6800	0.5	Carbon	2
R-14	B84820	82	0.5	Carbon	1
R-15, R-42, R-46, R-48	B85225	2.2 meg.	0.5	Carbon	4
R-16, R-18, R-21	B85102	1000	0.5	Carbon	3

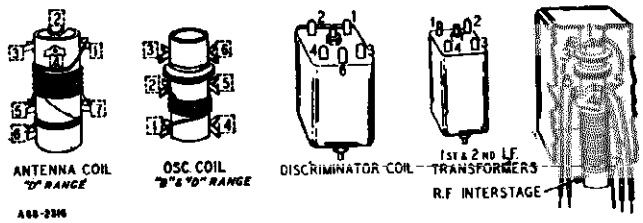

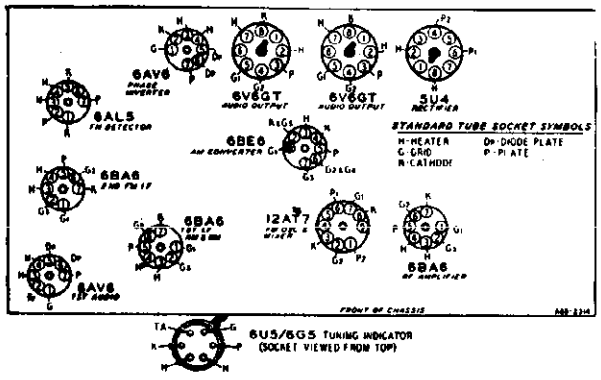

©John F. Rider

MODELS 84WG-2732A, 84WG-2732B

REPLACEMENT PARTS LIST (continued)

Ref. No.	Part No.	Description			Qty. Used in Set
		Ohms	Watts		
R-17, R-47	B84223	22K	0.5	Carbon	2
R-19, R-30, R-35, R-37	B85224	220K	0.5	Carbon	4
R-20	Part of 13X549 Cable and Socket Assembly				
R-22	43X217	6.2	0.5	Wire Wound	1
R-23	B85153	15K	0.5	Carbon	1
R-24	36X374	.5 meg.		Volume Control	1
R-25, R-40, R-41	B85105	1 meg.	0.5	Carbon	3
R-26	B85473	47 K	0.5	Carbon	1
R-27, R-29	40X286	3 meg.	Tone Control (Bass & Treble)		2
R-28	B85475	4.7 meg.	0.5	Carbon	1
R-31	B83274	270 K	0.5	Carbon	1
R-32	B83224	220 K	0.5	Carbon	1
R-33	B84154	150 K	0.5	Carbon	1
R-34	B85335	3.3 meg.	0.5	Carbon	1
R-38	B85565	5.6 meg.	0.5	Carbon	1
R-39	B83124	120 K	0.5	Carbon	1
R-43	B84225	2.2 meg.	0.5	Carbon	1
R-44	C84273	27K	1.0	Carbon	1
R-45	B85474	470K	0.5	Carbon	1
R-49	B84222	2200	0.5	Carbon	1

TRANSFORMERS AND COILS

L-1	9A1881	Filament Choke Assembly	1
L-2, L-4	9A1880	FM R-F Plate Choke	2
L-3	9A1946	FM R-F Coil	1
L-5	9A1882	FM Oscillator Plate Choke	1
T-1	9A2002	Di-Pole Antenna Assembly	1
T-2	9A1966	FM Antenna Coil	1
T-3	9A1957	"D" Antenna Coil Assembly	1
T-4	26A436	Loop Antenna Assembly	1
T-5	9A1948	Oscillator Coil (FM)	1
T-6	9A1947	Interstage "B" & "D" Ronge Coil Assembly	1
T-7	9A1950	1st I-F Transformer (FM)	1
T-8	9A1934	1st I-F Transformer (AM)	1
T-9	9A1933	2nd I-F Transformer (FM)	1
T-10	9A1935	2nd I-F Transformer (AM)	1
T-11	9A1936	Discriminator Coil	1
T-12	53X293	Power Transformer	1
T-13	9A1988	"B" & "D" Oscillator Coil Assembly	1
T-14		Output Transformer (See Miscellaneous)	1

MISCELLANEOUS

12A481	12" E.D. Speaker complete with output transformer	1
3A425	Tube socket (miniature)	6
3A303	Tube socket—octal (8 prong) molded	4
32X386	Tube shield (miniature)	6
32X388	Tube Shield (For 12AT7)	1
3A436	Tube socket (For 12AT7)	1
3A427	Tube socket (R-F Amp)	1
3A304	Phono Motor Socket	1
3A305	Phono socket—single pin	1
2A377	Band Switch	1
2A376	Rotary Snap Switch	1
13X328	Line Cord and Plug Assembly	1
26A485	Escutcheon and Crystal Assy.	1
10A509	Tuner Buttons	6
28X320	Springs (Tuner Button)	6
4X870	Escutcheon Eye	1
10A662	Knob, Band	1
10A667	Knob, Tuning	1
10A663	Knob, On-Off	1
10A664	Knob, Volume	1
10A665	Knob, Treble	1
10A666	Knob, Bass	1
25X498	Tuning Eye Clamp	1
25X1396	Tuning Eye Bracket	1
13X549	Cable and Socket Assembly—Tuning Indicator	1
6X21	Rubber Grommets (Mtg. Gang Cond.)	4
20X329	Condenser Cushion Stud (Mtg. Gang Cond.)	4
7A32	No. 51 Pilot Light (Jewel)	1
7A222	Jewel	1

DIAL AND DRIVE ASSEMBLY

26A435	Dial Bracket Assembly	1
26A484	Dial and Drum Assembly Complete with Dial Background, Collar, Dial Drum and Dial Scale	1
15X221	Pointer	1
26X500	Dial Drum Shaft	1
26A440	Pulley and Collar Assembly (For dial drum shaft)	1
26A437	Band Switch Pulley Assembly	1
26X468	Band Switch Shaft	1
26A441	Crown Gear Assembly (For Mtg. to Band Switch)	2
26A434	Idler Bracket Assembly	1
25X1389	Drive Shaft Bracket	1
26A494	Drive Shaft & Spool Assembly	1
10X45	Drive Cord Assembly (Band Change)	1
28X524	Tension Spring (Band Change)	1
10X66	Drive Cord and Clip Assembly (Dial Drive)	1
28X530	Tension Spring (Dial Drive)	1
41X72	Light Shield (Band Indicator)	4
41X35	Light Shield (Dial)	2
7A103	No. 47 Pilot Light	6
7A187	Pilot Light Socket Assembly (Dual)	1
7A209	Indicator Light Socket Assembly	4

TYPE W-28A-153 RECORD CHANGER PARTS

W-15X097-1	Motor Assembly, 60 cycles 115-120 V.	1
W-21P247	Crystal Cartridge	1
W-21P515	Semi-Permanent Twin Point Needle Assembly	1
W-11X368	Rubber Drive Wheel (33-1/3 R.P.M.)	1
W-11X366	Rubber Drive Wheel (78 R.P.M.)	1

©John F. Rider

MODEL 94BR-1535A

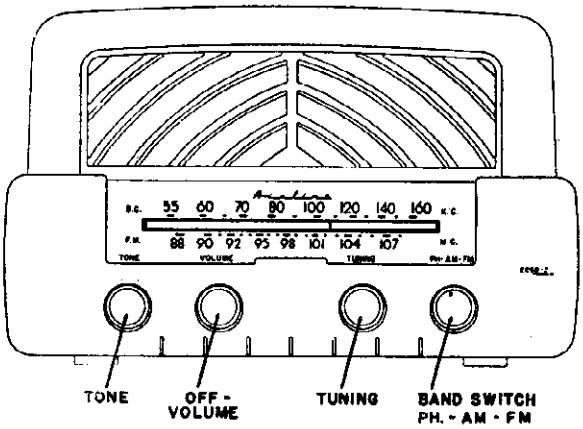

OPERATION OF THE RADIO

BROADCAST BAND—This is the tuning band in which the standard broadcast stations operate. The upper scale on the dial covers the broadcast range of 535-1620 Kc., and is calibrated in channel numbers. To obtain the kilocycle reading, multiply the number on the dial by 10; thus 80 on the dial corresponds to 800 kilocycles.

FM BAND—The FM tuning range covers the newly allocated frequency-modulation band of 88 to 108 megacycles into which all FM stations are required to move. Check with your local newspaper to determine the frequency of your local FM stations.

ON-OFF SWITCH AND VOLUME CONTROL—The knob second from the left is both the on-off switch and the volume control. When this control is turned all the way to the left the set is off. A slight rotation to the right will click the switch and turn the set on. The knob may then be used to regulate the volume. Be sure your set is turned completely off when not in use; otherwise the tubes will wear out unnecessarily.

TONE CONTROL—Rotating the extreme left hand knob gives a full variation of the tonal response from a deep bass to a brilliant treble.

TUNING KNOB—The knob second from the right is the tuning knob; rotation of this knob moves the indicator along the dial scales. When selecting a station turn the knob back and forth until the tone is clearest and loudest. Do not use the tuning knob to regulate volume; the volume control should be used for that purpose after the station has been tuned in properly. It is particularly important in FM reception to tune the station accurately; otherwise the tone is distorted and the background noise not eliminated.

BAND SWITCH—The knob on the extreme right is used to select FM BAND, BROADCAST BAND, or PHONO. When this knob is turned fully clockwise FM programs can be tuned in. In the center position STANDARD BROADCASTS can be heard.

PHONOGRAPH—To PLAY RECORDS through this radio, connect the "pickup lead" wire from record player to the "PHONO INPUT" on the cabinet back. Turn Bandswitch to PHONO and adjust volume as required.

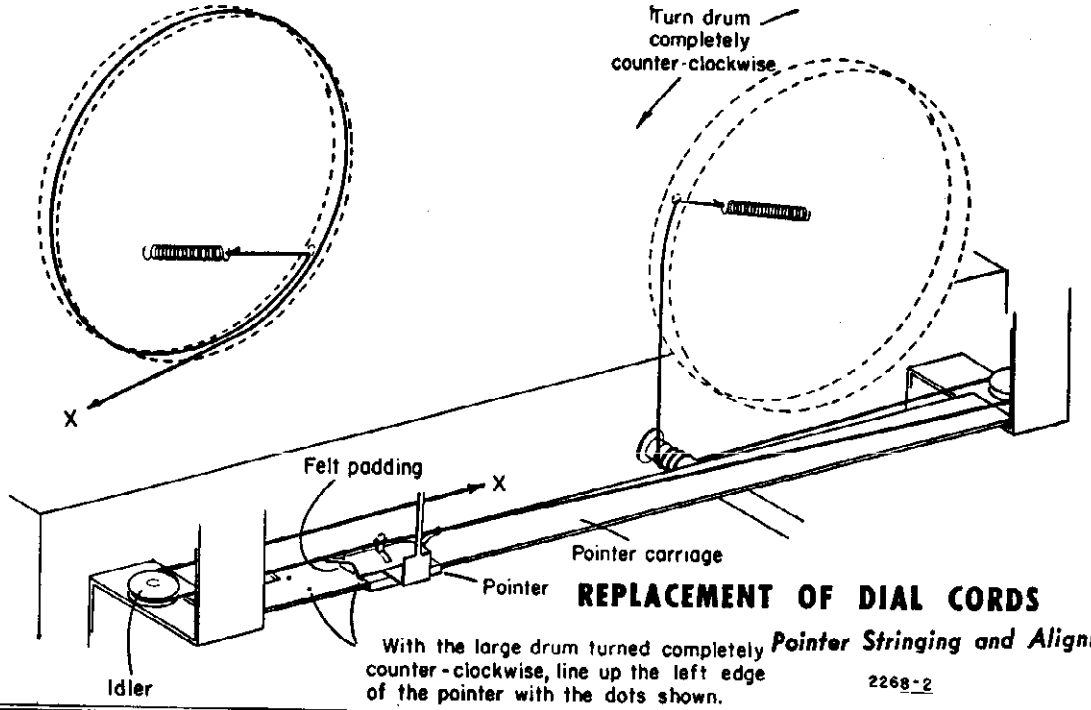

REPLACEMENT OF DIAL CORDS

With the large drum turned completely counter-clockwise, line up the left edge of the pointer with the dots shown.

Pointer Stringing and Alignment

2268-2

© John F. Rider

MODEL 94BR-1535A

ALIGNMENT PROCEDURE

Broadcast Band Section I. F. and R. F.

The alignment procedure below includes the sensitivities at the inputs of various stages. All signal input values are based on an output of 500 milliwatts. This may be measured by disconnecting the speaker voice coil and substituting a 3.2-ohm resistor across the secondary winding of the output transformer. A reading of 1.27 volts AC across this resistor will be approximately equivalent to 500 milliwatt output with the speaker connected. The volume control must be set at maximum. The tone control must be set for maximum treble.

The signal source must be an accurately calibrated signal generator capable of supplying the frequencies designated, modulated 30% with a 400-cycle audio signal. A 400 cycle audio signal is required for the audio measurement. Variations in sensitivities of plus or minus 25% are usually permissable.

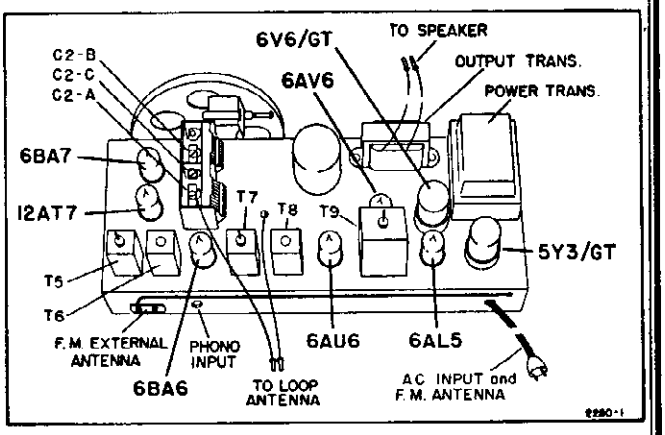

Chassis View

AM—I. F. ALIGNMENT

Band Switch in AM Position, Gang Open, Dummy Antenna .1 Mfd.

SIGNAL GENERATOR FREQUENCY	CONNECTION TO RADIO	ADJUSTMENTS TO BE MADE	ADJUST FOR
400 cycles. Use 65 millivolts	High Side of Volume Control and chassis	None	Maximum output Should be 500 Milliwatts
455 Kc. Use 3300 microvolts	Pin 1 of 6BA6 I.F. Amp. and chassis	Primary and Secondary of T8. See chassis view.	Maximum output Should be 500 Milliwatts
455 Kc. Use 55 microvolts	Pin 7 of 6BA7 Converter and chassis	Primary and Secondary of T6. See chassis view.	Maximum output Should be 500 Milliwatts

BROADCAST BAND—R. F. ALIGNMENT

Check pointer so that the right hand edge of the pointer skirt coincides with the right hand edge of dial marker at the extreme left when gang is closed.
For adjustment, see dial mechanism illustration.

SIGNAL GENERATOR FREQUENCY	SET POINTER AT	CONNECT TO RADIO	ADJUST
1620 Kc.	Extreme Right Calibration Marker	RADIATION COUPLING Use six turn loop across generator output. Place close to cabinet back.	Oscillator trimmer C2-B for maximum
1400 Kc.	Third Calibration from Right		Antenna Trimmer C2-A for maximum

Check tracking at 1000 Kc, 600 Kc, and 535 Kc to be sure oscillator is set correctly.

ELECTRICAL SPECIFICATIONS

Power Supply ..... 105 to 125 volts, AC, 60-cycles; Chassis only 75 watts.
Frequency Ranges ..... Broadcast Band—535 to 1620 kc. FM Band—88 to 108 mc.
Intermediate Freq. ..... AM-455 kc.; FM-10.7 mc.
Selectivity ..... AM-47 kc. broad at 1000 times signal, measured at 1000 kc.
I.F. FM-230 kc. broad at 2 times down.
I.F. FM-470 kc. broad at 10 times down.
AM Sensitivity ..... (For .5 watt output)—200 microvolts per meter average.
FM Sensitivity ..... (For .5 watt output)—30 microvolts average.
Power Output ..... 1.5 watts. 10% distortion. 3.0 watts maximum.
Loud Speaker ..... 5"x 7" PM. Voice coil impedance 3.2 ohms, 400 cycles.
Tube Complement .....
12AT7, FM-RF amp. mixer; 6BA7, AM converter, FM oscillator; 6BA7, IF amplifier; 6AU6, FM driver; 6AL5, FM detector; 6AV6, AM detector; 6V6 output; 5Y3, rectifier.

© John F. Rider

MODEL 94BR-1535A

ALIGNMENT PROCEDURE

FM Band Section I. F. and R. F.

A non-metallic alignment tool must be used.

IMPORTANT

No alignment of the FM section of this radio should be attempted unless you are positive that the circuits are in need of adjustment and you have the necessary equipment.

All components used in this radio are extremely stable and the tuned circuits should require no adjustment over a long period of time.

NOTE

The following alignment is based on the use of the new Simpson vacuum tube voltmeter which has a "floating ground". In other words, the meter, when used as a vacuum tube voltmeter, can have both the positive and negative sides connected to points above ground and still give true readings. (See note "C" below.)

A standard AM signal generator is required.

FM —I. F. ALIGNMENT

Band Switch in FM Position. Dummy Antenna .1 Mfd

SIGNAL GENERATOR FREQUENCY	CONNECTION TO RADIO	VACUUM TUBE VOLT METER CONNECTION TO RADIO	ADJUSTMENTS TO BE MADE	ADJUST FOR
10.7 Mc. Use about .05 volt	Pin No. 1 of 6AU6	Pin No. 7 of 6AL5 and chassis	Bottom Core Primary of T9 Ratio Detector	Resonance should be about 3 volts
10.7 Mc. Use about .05 volt	Pin No. 1 of 6AU6	See note "A"	Top Core Secondary of T9 Ratio Detector	Zero. Use zero center scale See note "B"
10.7 Mc. Use about 1800 microvolts	Pin No. 1 of 6BA6	Pin No. 7 of 6AL5 and chassis	Primary and Secondary of T7. FM Driver IF See chassis view	Resonance should be about 3 volts
10.7 Mc. Use about 400 microvolts	Top end of C2-C	Pin No. 7 of 6AL5 and chassis	Primary and Secondary of T5. FM Input IF See chassis view	Resonance should be about 3 volts

NOTES ON FM — I. F. ALIGNMENT

NOTE "A"—Connect two resistors in series, 100K OHMS each, from Pin No. 7 of 6AL5 to chassis (Pin No. 5). These resitors must be matched within 5%. Connect vacuum tube voltmeter between the midpoint of the resistors and point zz.

NOTE "B"—If T9 has been tampered with, it is possible that no crossover point will be found at first. Careful adjustment of both primary and secondary is necesary.

NOTE "C"—To use a VTVM which does not have the "floating ground" feature, in step 2 above, connect "ground" side of VTVM to midpoint of resistors (Note "A") and "high" side to point zz.

GENERAL—Input signals should be adjusted to give approximately 3 volts. The ratio detector is operating at a reasonable level at this point and will give the truest indication of correct alignment with the procedure specified.

FM—R. F. ALIGNMENT

Check pointer so that the right hand edge of the pointer skirt coincides with the right hand edge of dial marker at the extreme left when gang is closed.

For adjustment, see dial mechanism illustration.

SIGNAL GENERATOR FREQUENCY	POINTER	CONNECTION TO RADIO	ADJUST	V T V M CONNECTIONS
108 mc.	108 mc. Marker	FM antenna terminals	FM Osc. C3 for maximum	Pin No. 7 of 6AL5 to chassis.
98 mc.	Tune in Gen. Signal	See Note "B" below	FM Mixer C2-C for maximum	

NOTE "A"—If a signal generator with the above fundamental frequency is not available, it is sometimes possible to use harmonics. An alternate procedure is to use a local station carrier of known frequency to align the FM Band and to use the vacuum tube voltmeter as above for resonance indication. A weak carrier, however, will not produce 3 volts.

NOTE "B"—Connect 300 ohms in series with "hot" side of generator and connect to left hand screw of external FM Antenna Terminals. Connect cold side of generator to right hand screw.

© John F. Rider

MODEL 94BR-1535A

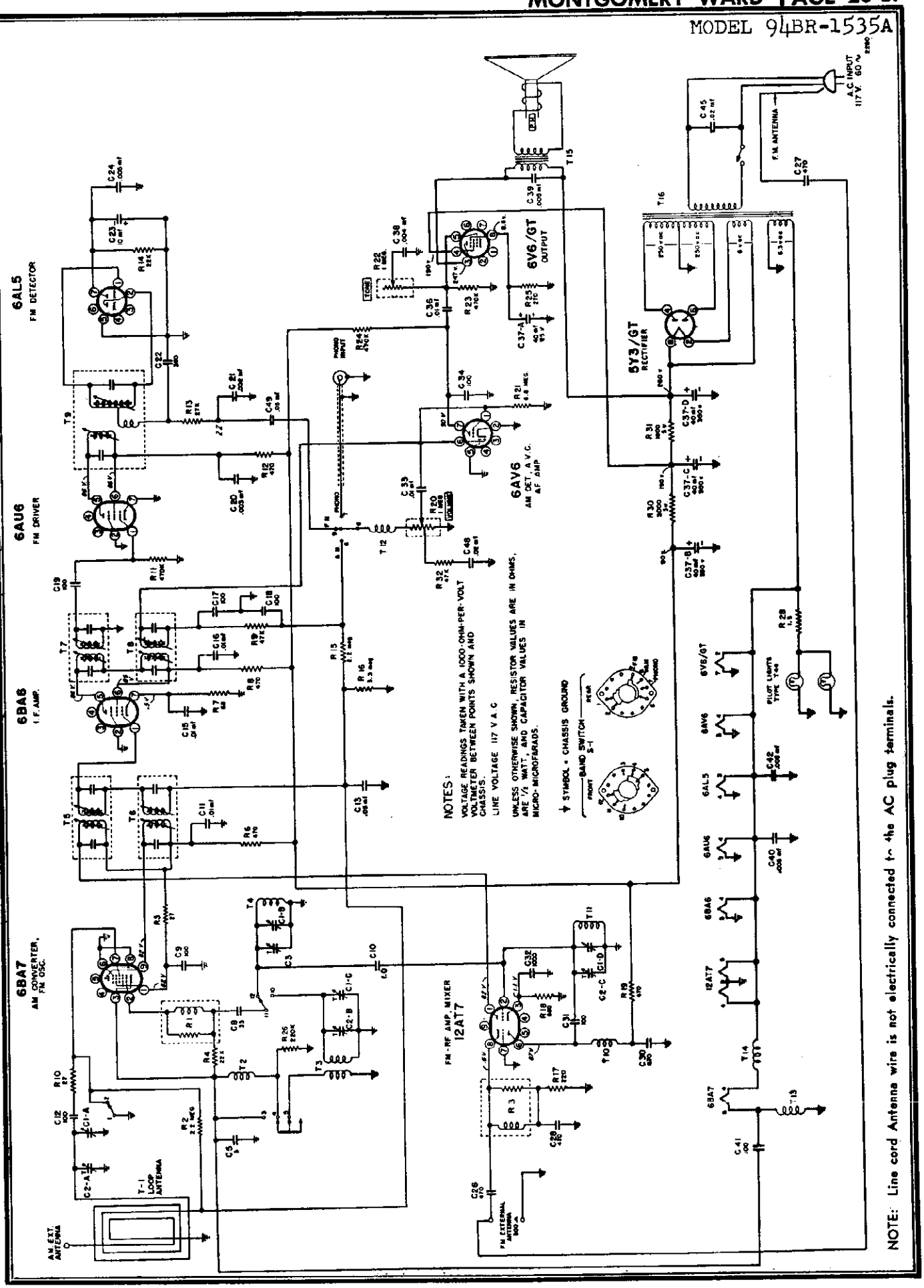

© John F. Rider

MODEL 94BR-1535A

REPLACEMENT PARTS LIST

Ref. No.	Part No.	Description	Qty.
		CAPACITORS	
C1A,B,C,D	B-8A-17673	Gang tuning condenser	1
C2A,B,C,		Trimmers on gang	3
C3	A-201-15142	Trimmer condenser	1
C5	C-8G-12166	5 mmf, ceramic, 10%	1
C8	C-8G-14172	33 mmf, ceramic, 10%	1
C9-31-41	C-8G-12759	100 mmf, ceramic, 10%	3
C10		1.8 mmf, ceramic, 20%	1
C11-16-36	C-8D-10761	.01 mfd, 400 volts, 20%	3
C12	C-8G-13131	100 mmf, ceramic, 10%	1
C13-49	C-8D-10770	.05 mfd, 200 volts, 20%	2
C15-33	C-8D-11738	.01 mfd, 200 volts, 20%	2
C17-18	A-8F-13127	.0001 mfd-dual mica, +30% —20%	1
C19-34	C-8G-11734	100 mmf, ceramic, 10%	2
C20	C-8D-11013	.003 mfd, 600 volts, 10%	1
C21	C-8G-16049	2000 mmf, ceramic, 10%	1
C22	C-8F3-120	390 mmf, mica, 10%	1
C23	A-8C-18128	10 mfd, 50 volts	1
C24-40-42	A-8G-13962	.005 mfd, ceramic	3
C26-27-28-30	C-8G-11732	470 mmf, ceramic, 20%	4
C32	C-8G-13201	1000 mmf, ceramic	1
C37-A-B-C-D	A-8C-18125	40-40-40 mfd x 350 volts, 40 mfd x 25 volts	1
C38	C-8D-10788	.004 mfd, 600 volts, 20%	1
C39	C-8D-10935	.005 mfd, 600 volts, +40% —15%	1
C45	C-8J-11321	.02 mfd, 600 volts, 20%	1
C48	C-8D-11304	.02 mfd, 200 volts, 20%	1
		RESISTORS	
R1	A-16B-16615	Suppressor	1
R2-15	C-9B1-33	2.2 megohms, ½ watt, 20%	2
R3	A-16B-16616	Suppressor	1
R4-14	C-9B1-78	22K ohms, ½ watt, 10%	2
R5-10	C-9B1-43	27 ohms, ½ watt, 10%	1
R6-8-12-19	C-9B1-58	470 ohms, ½ watt, 10%	4
R7	C-9B1-48	68 ohms, ½ watt, 10%	1
R9-32	C-9B1-82	47K ohms, ½ watt, 10%	2
R11-23-24	C-9B1-94	470K ohms, ½ watt, 10%	3
R13	C-9B1-79	27K ohms, ½ watt, 10%	1
R16	C-9B1-34	3.3 megohms, ½ watt, 20%	1
R17	C-9B1-54	220 ohms, ½ watt, 10%	1
R18	C-9B1-60	680 ohms, ½ watt, 10%	1
R20	A-10A-18117	1 megohm, (volume control and switch)	1
R21	C-9B1-36	6.8 megohms, ½ watt, 20%	1
R22	A-11B-15852	1 megohm, (tone control)	1
R25	C-9B1-55	270 ohms, ½ watt, 10%	1
R26	C-9B1-27	220K ohms, ½ watt, 20%	1
R28	C-9C2-1065	1.5 ohms, 1 watt, 10%	1
R30	C-9C12-2059	3000 ohms, 5 watts, 5%	1
R31	C-9C12-1102	1800 ohms, 5 watts, 10%	1

Ref. No.	Part No.	Description	Qty.
		COILS, TRANSFORMERS, CHOKES	
T1	C-13E-18179	Loop antenna assembly	1
T2-T13-T14	A-16B-16023	RF choke coil assembly	3
T3	B-13D-16611	Oscillator coil (AM)	1
T4	A-13D-16617	Oscillator coil (FM)	1
T5	B-13A-16612	Input IF transformer (FM)	1
T6	B-13A-16662	Input IF transformer (AM)	1
T7	B-13B-16000	Output IF transformer (FM)	1
T8	B-13A-16662	Output IF transformer (AM)	1
T9	B-13M-16001	Ratio detector transformer	1
T10	A-16B-16613	RF choke coil	1
T11	A-13E-16618	RF coil (FM)	1
T12	A-16A-16637	RF choke coil	1
T15	B-12C-18143	Output transformer	1
T16	B-12A-18137	Power transformer	1
		MISCELLANEOUS	
	A-15B-13430	9-prong, miniature tube socket	2
	A-15B-10440	8-prong, octal socket	2
	A-15C-16007	7-prong, miniature tube socket	4
	B-20A-18118	Band change switch	1
	B-14M-18147	AC line cord and plug	1
	A-23A-16328	Line cord lock	1
	A-19B-12170	Phono pick-up socket	1
	A-7B-13050	Dipole socket	1
	A-3A-18116	Tuning shaft	1
	A-2D-10033	Tuning shaft bracket	1
	B-47A-18150	Pilot light assembly	1
	A-46A-11739	Pilot light bulb, T-44	2
	B-18A-17637	5"x7" PM speaker	1
		DIAL PARTS	
	C-6D-17737	Dial scale	1
	A-2M-16034	Dial mounting bracket	2
	B-6M-17622	Background diffuser	1
	B-2M-16656	Pointer bar	1
	A-2D-17627	Pointer bar bracket	1
	A-3M-10299	Pulley	2
	B-27A-10102	Shoulder rivet	2
	A-53A-10989	Dial strings	60" yd.
	B-2G-18119	Dial pointer	1
	A-50A-16434	Felt strip for pointer	1
	A-49A-11324	Tension spring	2
		CABINET PARTS	
	R-5C-18159-36	Bakelite cabinet	1
	B-24M-17623	Baffle board	1
	A-23C-15453	M/W Crest	1
	B-5B-1131-41	Knob	3
	B-5B-16057-41	Knob (with dot)	1

©John F. Rider

MODEL 94WG-1059A

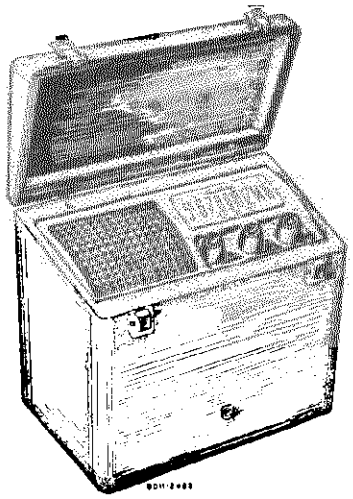

ELECTRICAL SPECIFICATIONS

Power Supply	"A" Battery Supply—9 Volts, 50 Ma. "B" Battery Supply—90 Volts, 11 Ma. or 105-125 volts AC, 25-60 cycles, 12 watts or 105-125 volts DC
Battery Pack	Ward's Battery Pack No. 62-35
Frequency Range	540-1600 KC
Intermediate Frequency	455 KC
Selectivity	At 1000 KC, 45 KC wide at 1000 times signal
Sensitivity	(for .05 watt output with external antenna) 10 microvolts average
Power Output	0.3 watt maximum 0.125 watt 10% distortion
Loud Speaker	5¼" PM dynamic
Voice Coil Impedance	3.2 ohms at 400 cycles

Tube Complement

1 1R5 1st Detector
1 1U4 I-F Amplifier
1 1T4 R-F Amplifier
1 1U5 2nd Detector, AVC and 1st A-F Amplifier
1 3V4 Power Output

GENERAL DESCRIPTION

This model is a five tube AC-DC or battery operated portable radio. Controls are provided for tuning, volume and AC-DC or Battery selection. Other features include a built-in Air Wave Loop Aerial, automatic volume control, tuned R-F stage, PM dynamic speaker and a selenium rectifier for AC operation. The dial scale is calibrated to cover frequencies between 540 and 1600 kilocycles.

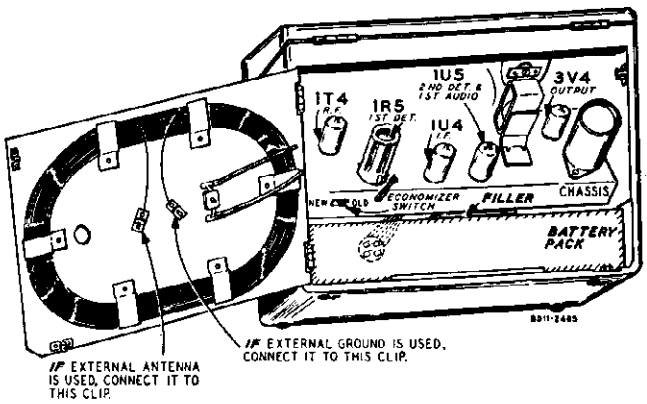

DRIVE CORD REPLACEMENT

Turn the gang condenser to the fully closed position. Use a new 10X52 Drive Cord Assembly and fasten one end to the tension spring. Fasten the other end of the tension spring to the hook on the drive pulley. Pass the cord through the slot in the drive pulley rim and continue around pulley rim ¼ turn clockwise. Pass cord around pulleys A, B, and C as shown in the illustration. Wind three turns clockwise (viewed from rear of chassis) around tuning control shaft. The turns must progress toward rear of chassis. Pass cord around pulley D and continue ¾ turn clockwise around large drive pulley. Pass cord through the slot in the pulley rim then stretch the tension spring and fasten free end of cord to it.

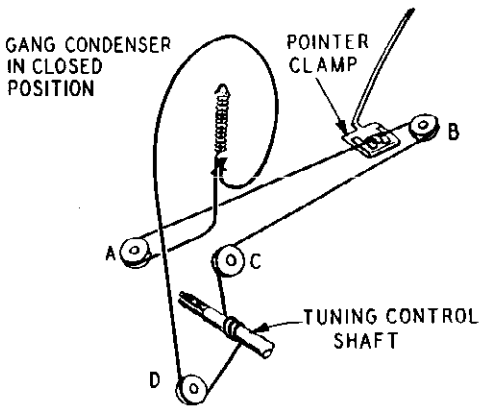

REMOVAL OF CHASSIS FROM CABINET

Pull off the three control knobs and disconnect the battery plug. Remove the two wood screws holding the safety switch in place. Remove the four screws that fasten the chassis to the cabinet (2 on the outside at each end of the cabinet). Withdraw the chassis from the cabinet.

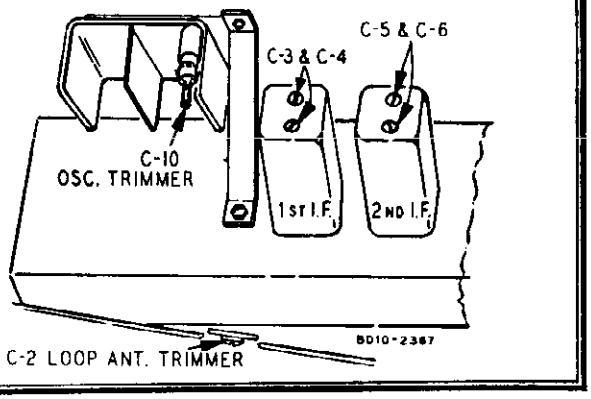

©John F. Rider

MODEL 94WG-1059A

RECEIVER STAGE SENSITIVITIES

The table below lists the sensitivity at the input of each stage. The receiver should be tuned to 1000 KC for all readings. All measurements are based on an output of 50 milliwatts. This may be measured by disconnecting the speaker voice coil and substituting a 3.2 ohm 5 watt resistor across the secondary winding of the output transformer. A reading of .4 volt AC across this resistor will be equivalent to a 50 milliwatt output with the speaker connected. The volume control must be set to maximum.
The signal source must be an accurately calibrated signal generator capable of supplying both 1000 KC and 455 KC signals modulated 30% with a 400 cycle audio signal. Output variations of Plus or Minus 25% are usually permissible.

SIGNAL GENERATOR				INPUT FOR 50 MILLIWATT OUTPUT
Frequency	Coupling Capacitor	Connection to Receiver	Ground Connection	
1000 kc	200 mmf or RMA Dummy Antenna	Loop Antenna—External antenna clip	Ext. Gnd. Clip	4.0 microvolts
1000 kc	.1 mf.	1T4 R-F—Pin 6	"X" Point	25 microvolts
455 kc	.1 mf.	1R5 1st Detector—Pin 6	"X" Point	90 microvolts
455 kc	.1 mf.	1U4 I-F—Pin 6	"X" Point	3500 microvolts
400 cycles	.1 mf.	1U5 1st A-F—Pin 6	"X" Point	.022 volt
400 cycles	.1 mf.	3V4 Output—Pin 3	"X" Point	1.8 volts

ALIGNMENT PROCEDURE

Volume Control—Maximum All Adjustments.
Allow Chassis and Signal Generator to "Heat Up" for several Minutes.
The equipment in column at right is required for aligning:

Signal Generator which will provide an accurately calibrated signal at the test frequencies as listed.
Output Indicating Meter; Non-Metallic Screwdriver.
Dummy Antenna—.1 mf., 50 mmf.

SIGNAL GENERATOR				CONDENSER SETTING	ADJUST TRIMMERS TO MAXIMUM See Trimmer Illustration
Frequency Setting	Coupling Capacitor	Connection to Radio	Ground Connection		
455 kc	.1 mf	Control Grid 1U4 I-F Pin 6	"X" Point	Turn Rotor To Full Open	2nd I-F (C-5) & (C-6)
455 kc	.1 mf	Control Grid 1R5 1st Det. Pin 6	"X" Point	Turn Rotor To Full Open	1st I-F (C-3) & (C-4)
1620 kc	.1 mf	Control Grid 1T4 R-F Pin 6	"X" Point	Turn Rotor To Full Open	Oscillator (C-10)
1400 kc	50 mmf	External Antenna Clip On Loop See Note A	External Ground clip on loop	Turn Rotor To Max. Output. Set Indicator to 1400 KC See Note B	Antenna (C-2)

NOTE A—Re-assemble chassis in cabinet and close the cabinet back before making adjustment.

NOTE B—Tune in a 1400 KC signal. If pointer is not at the 1400 KC mark on the dial scale, move the pointer on the string to the 1400 KC mark.

©John F. Rider

MODEL 94WG-1059A

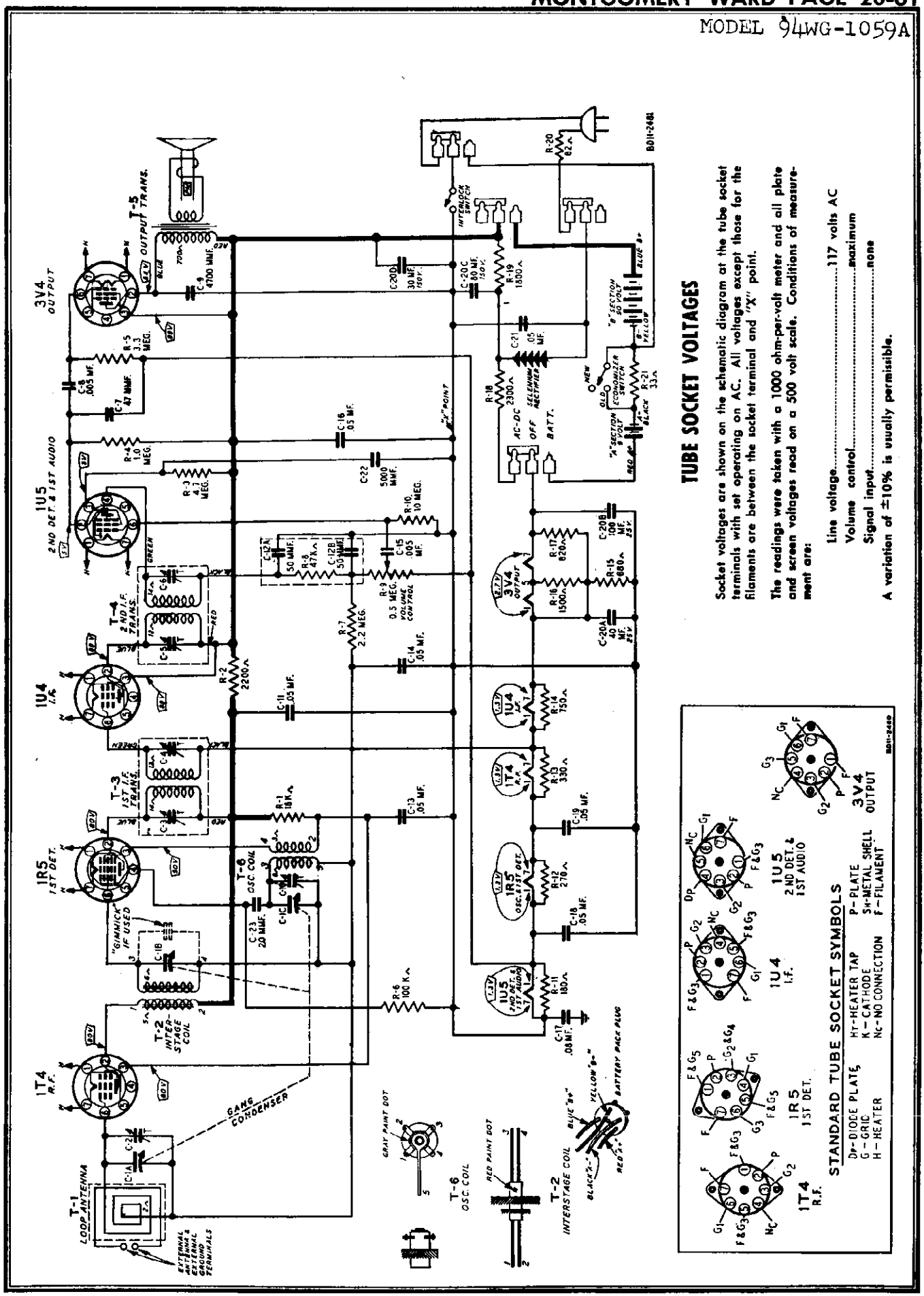

TUBE SOCKET VOLTAGES

Socket voltages are shown on the schematic diagram at the tube socket terminals with set operating on AC. All voltages except those for the filaments are between the socket terminal and "X" point.

The readings were taken with a 1000 ohm-per-volt meter and all plate and screen voltages read on a 500 volt scale. Conditions of measurement are:

Line voltage.....117 volts AC
Volume control.....maximum
Signal input.....none

A variation of ±10% is usually permissible.

©John F. Rider

©John F. Rider

REPLACEMENT PARTS LIST

TRANSFORMERS AND COILS

Ref. No.	Part No.	Description	Qty. Used in Set
T-1	9A2039	"B" Range Loop Antenna	1
T-2	9A1989	Interstage Coil Assembly	1
T-3	9A1991	1st I-F Transformer and Can Assembly	1
T-4	9A1992	2nd I-F Transformer and Can Assembly	1
T-5	51X143	Output Transformer	1
T-6	9A1990	Oscillator Coil Assembly	1

MISCELLANEOUS

12A492	5¼" P.M. Speaker	1
3A426	Tube Socket (Miniature)	5
32X386	Tube Shield (1R5-1U5)	2
2A175	Battery Saver Switch	1
2A390	AC-DC-Off-Batt. Switch	1
2A389	On-Off Switch	1
13X429	Battery Cable and Plug Assembly	1
10A733	Knob, Switch	1
10A732	Knob, Tuning & Volume	2
13X546	Line Cord and Plug Assembly	1
11X117	Shield, Volume Control and Switch (Paper)	1
32X368	Shield, Volume Control and Switch (Metal)	1
66X7	Selenium Rectifier	1
76X1	Resistor Capacitor Combination	1

DIAL AND DRIVE ASSEMBLY

25X1504	Dial Brace Bracket	1
58X722	Dial Scale	1
17X97	Celluloid Crystal	1
15X248	Pointer	1
25X832	Gang Condenser Mounting Bracket	1
6X67	Grommet	3
20X329	Cond. Cushion Stud (Mtg. Gang Condenser)	3
28X95	Drive Cord Tension Spring	1
10X52	Drive Cord Assembly	1
4X1048	Escutcheon	1
26X511	Drive Shaft	1
19X192	"C" Washer for Drive Shaft	2

RESISTORS

		Ohms	Watts		
R-1	B84183	18K	.5	Carbon	1
R-2	B84222	2200	.5	Carbon	1
R-3	B85475	4.7 meg.	.5	Carbon	1
R-4	B84105	1 meg.	.5	Carbon	1
R-5	B85335	3.3 meg.	.5	Carbon	1
R-6	B84104	100K	.5	Carbon	1
R-7	B85225	2.2 meg.	.5	Carbon	1
R-8	Part of 76X1 Resistor Capacitor Combination				
R-9	36X382	.5 meg.		Volume Control	1
R-10	B85106	10 meg.	.5	Carbon	1
R-11	B84181	180	.5	Carbon	1
R-12	B84271	270	.5	Carbon	1
R-13	B84331	330	.5	Carbon	1
R-14	B84751	750	.5	Carbon	1
R-15	B84681	680	.5	Carbon	1
R-16	B84152	1500	.5	Carbon	1
R-17	B84821	820	.5	Carbon	1
R-18	43X237	2300	12.0	Wire Wound	1
R-19	B84182	1800	.5	Carbon	1
R-20	D84820	82	2.0	Carbon	1
R-21	B85330	33	.5	Carbon	1

CAPACITORS

C-1A, C-1B, C-1C	14A205	Gang Condenser & Drive Pulley			1
C-2	17A256	2—24 mmf		Trimmer	1
C-3, C-4	Part of T-3 (1st I.F. Transformer)				
C-5, C-6	Part of T-4 (2nd I.F. Transformer)				
C-7	47X463	47 mmf		Ceramic	1
C-8, C-15	B66502	.005 mf	200 V	Tubular	2
C-9	47X491	4700 mmf		Molded Mica	1
C-10	26A489	1-8 mmf		Trimmer Assy.	1
C-11, C-13, C-14, C-16, C-18, C-19	B66503	.05 mf	200 V	Tubular	6
C-12A, C-12B	Part of 76X1 Resistor Capacitor Combination				
C-17	B66803	.08	200 V	Tubular	1
C-20A	45X356	40 mf	25 V	Dry Electrolytic	1
C-20B		100 mf	25 V		
C-20C		80 mf	150 V		
C-20D		30 mf	150 V		
C-21	D66503	.05	400 V	Tubular	1
C-22	47X507	5000 mmf		Ceramic	1
C-23	47X516	20 mmf		Ceramic	1

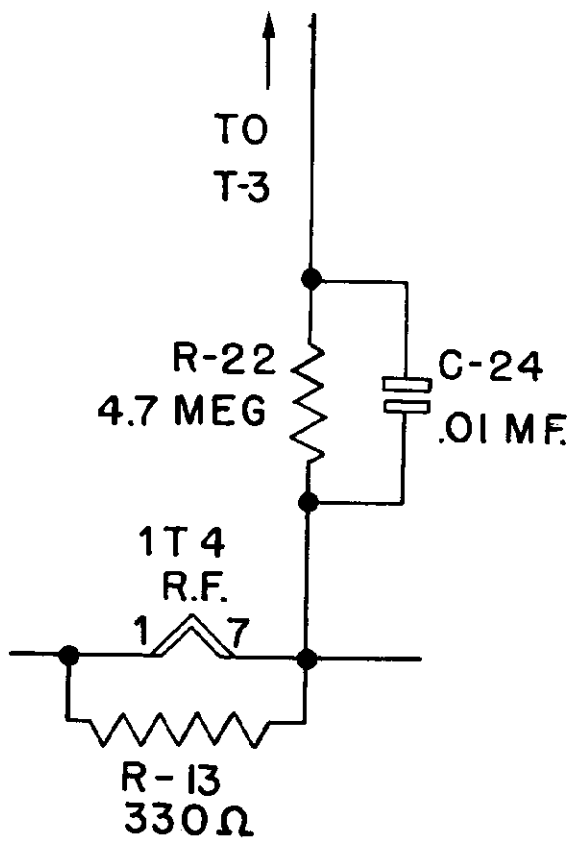

PARTS LIST ADDITION

The description of the new parts follows:

REF.NO.	PART NO.	DESCRIPTION
C-24	B66103	.01 MF 200 V.- Tubular
R-22	B85475	4.7 Meg. .5 W.- Carbon

MODEL 94WG-1804D

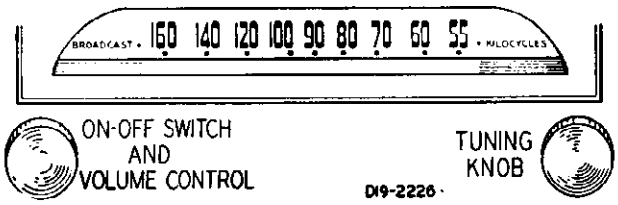

GENERAL DESCRIPTION

This model is a five tube (plus rectifier tube) AC-DC receiver housed in a wooden cabinet.

Controls are provided for tuning and volume. Other features include the built-in Air Wave Loop Aerial, automatic volume control, beam power audio output stage and a permanent magnet dynamic speaker. The dial scale is calibrated to cover frequencies between 540 and 1600 KC.

ELECTRICAL SPECIFICATIONS

Power Supply.....105-125 volts AC, 25-60 cycles, 35 watts or 105-125 volts DC
Frequency Range.....540-1600 KC
Intermediate Frequency.455 KC
Selectivity.....At 1000 KC, 50 KC wide at 1000 times signal
Sensitivity.....(for .05 watt output with external antenna) 15 microvolts average
Power Output.....1.3 watts maximum
.75 watt 10% distortion
Loud Speaker.....5" PM Dynamic
Voice Coil Impedance...3.2 ohms at 400 cycles

Tube and Dial Light Complement

1 12SK7 R-F Amplifier
1 12SA7 Mixer
1 12SF7 I-F and 2nd Detector
1 12SJ7 1st A-F
1 35L6GT Power Output
1 35Z5GT Rectifier
1 47 Dial Lamp

RECEIVER STAGE SENSITIVITIES

The table below lists the sensitivity at the input of each stage. The receiver should be tuned to 1000 KC for all readings. All measurements are based on an output of 50 milliwatts. This may be measured by disconnecting the speaker voice coil and substituting a 3.2 ohm 5 watt resistor across the secondary winding of the output transformer. A reading of .4 volt AC across this resistor will be equivalent to a 50 milliwatt output. The volume control must be set to maximum.
The signal source must be an accurately calibrated signal generator capable of supplying both 1000 KC and 455 KC signals modulated 30% with a 400 cycle audio signal. Variations in sensitivity of Plus or Minus 25% are usually permissible.

SIGNAL GENERATOR				INPUT FOR 50 MILLIWATT OUTPUT
Frequency	Coupling Capacitor	Connection to Receiver	Ground Connection	
1000 kc	200 mmf or RMA Dummy Antenna	Loop Antenna—External antenna clip	Chassis	19.5 microvolts
1000 kc	.05 mf.	12SA7 Mixer—Pin 8	Point "X" (12SK7 Pin 3)	150 microvolts
455 kc	.05 mf	12SA7 Mixer—Pin 8	Same as above	100 microvolts
455 kc	.05 mf	12SF7 I-F—Pin 2	Same as above	3500 microvolts
400 cycles	.05 mf	12SJ7 1st A-F—Pin 4	Same as above	.042 volt
400 cycles	.05 mf	35L6GT Output—Pin 5	Same as above	1 volt

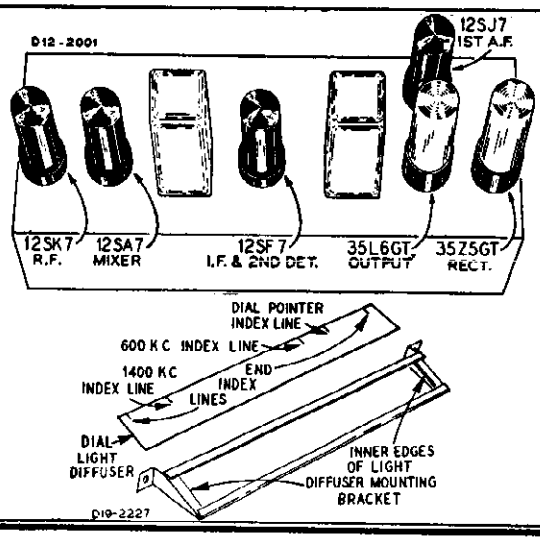

DIAL CALIBRATION

In order to align the receiver, the dial pointer must be positioned on the dial string correctly with reference to the dial. Index lines are provided on the dial light diffuser for this purpose.

Before aligning the receiver (or when replacing the dial light diffuser) check the position of the diffuser strip, making certain that the two end index lines are aligned with the inner edges of the diffuser mounting bracket opening. The bracket should be crimped at one point to prevent movement of the diffuser strip. To position the dial pointer, turn the gang condenser to the fully closed position. The dial pointer should be directly over the dial pointer index line. (See illustration)

The 1400 KC index line is for use when aligning the receiver.

© John F. Rider

MODEL 94WG-1804D

DRIVE CORD REPLACEMENT

Turn the gang condenser to the fully closed position. Use a new 10X44 drive cord assembly and fasten one end to the tension spring. Hook the other end of the tension spring over the tab on the drive pulley. Pass the cord through the slot on the drive pulley rim, under stud A and wind two turns clockwise (from front of chassis) around the tuning shaft. Turns must progress away from chassis. Pass cord over pulley B and stud C under stud D. Pass cord under drive pulley and wind 4 turns counterclockwise around drive pulley Stretch tension spring and fasten free end of cord to spring.

Attach the dial pointer to the cord and position as instructed in paragraph DIAL CALIBRATION.

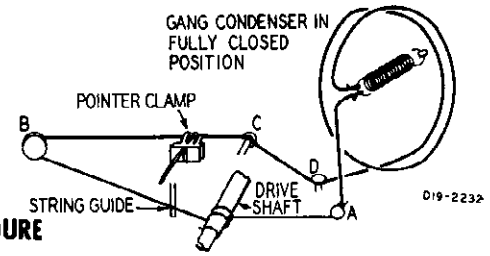

ALIGNMENT PROCEDURE

Check dial pointer position, see Dial Calibration paragraph.

Volume Control—Maximum All Adjustments.

Allow Chassis and Signal Generator to "Heat Up" for several Minutes.

The equipment in column at right is required for aligning:

Signal Generator which will provide an accurately calibrated signal at the test frequencies as listed.

Output Indicating Meter; Non-Metallic Screwdriver.

Dummy Antennas—.1 mf., 50 mmf.

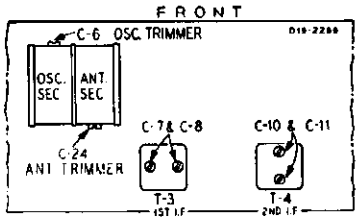

NOTE A:—Index line is on dial light diffuser strip. See DIAL CALIBRATION paragraph.

SIGNAL GENERATOR			Coupling Capacitor	DIAL SETTING	ADJUST TRIMMERS TO MAXIMUM OUTPUT IN ORDER SHOWN (See Trimmer Illustration)
Frequency Setting	Connection to Receiver	Ground Connection			
455 kc	Control Grid 12SF7—I-F (Prong No. 2)	Point "X" 12SK7—R-F (Prong No. 3)	.1 mf	Turn Rotor to full open	2nd I-F (C10) & (C11)
455 kc	Control Grid 12SA7—1st Det. (Prong No. 8)	Same as above	.1 mf	Turn Rotor to full open	1st I-F (C7) & (C8)
1620 kc	Control Grid 12SA7—1st Det. (Prong No. 8)	Same as above	.1 mf	Turn Rotor to fully open position	Oscillator (C6)
1400 kc	External Antenna Clip on Loop	Chassis	50 mmf	Turn Rotor to 1400 kc Index Line. See Note A	Antenna (C24)

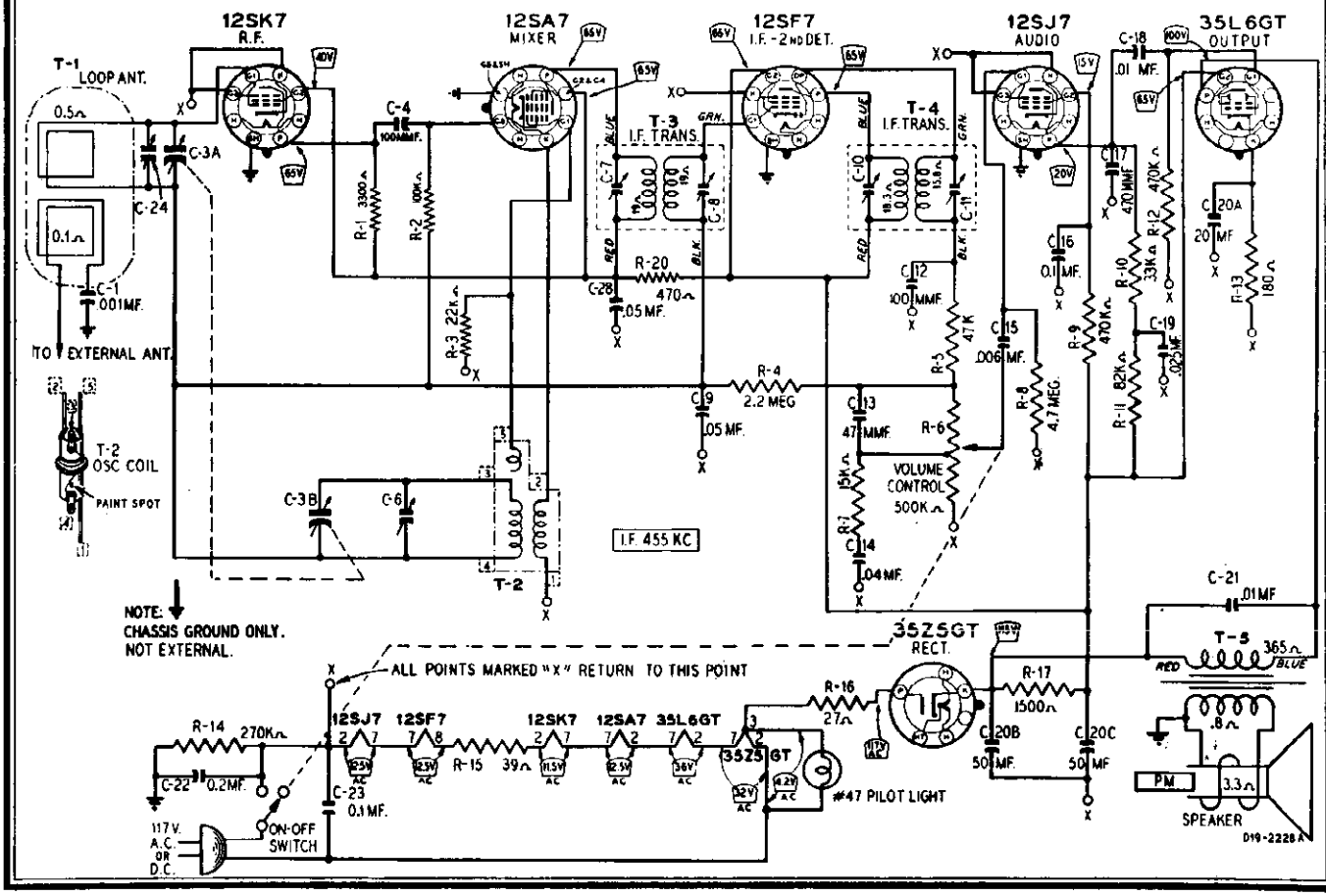

©John F. Rider

MODEL 94WG-1804D

REPLACEMENT PARTS LIST

Ref. No.	Part No.	Description	Qty. Used in Set
CAPACITORS			
C-1	D67102	.001 mf 400 V Tubular	1
C-3A, C-3B	14A194	Gang condenser and pulley assembly	1
C-4, C-12	47X476	100 mmf Molded	2
C-6		Part of C-3	
C-7, C-8		Part of T-3, 1st I-F Transformer	
C-9	B66503	.05 mf 200 V Tubular	1
C-10, C-11		Part of T-4, 2nd I-F Transformer	
C-13	47X463	47 mmf Molded	1
C-14	B67403	.04 mf 200 V Tubular	1
C-15	B67602	.006 mf 200 V Tubular	1
C-16	B66104	.1 mf 200 V Tubular	1
C-17	47X467	470 mmf Molded	1
C-18, C-21	B66103	.01 mf 200 V Tubular	2
C-19	B67253	.025 mf 200 V Tubular	1
C-20A	45X344	20 mf 25 V Dry electrolytic	1
C-20B		50 mf 150 V Condenser	
C-20C		50 mf 150 V	
C 22	B67204	0.2 mf. 200 V Tubular	1
C-23	D67104	.1 mf 400 V Tubular	1
C-24		Part of C-3	
C-28	B67503	.05 mf 200 V Tubular	1
RESISTORS			
		Ohms Watts	
R-1	B84332	3300 0.5 Carbon	1
R-2	B85104	100,000 0.5 Carbon	1
R-3	B85223	22,000 0.5 Carbon	1
R-4	B85225	2.2 meg. 0.5 Carbon	1
R-5	B85473	47,000 0.5 Carbon	1
R-6	36X347	500,000 Volume control and switch	1
R-7	B84153	15,000 0.5 Carbon	1
R-8	B85475	4.7 meg. 0.5 Carbon	1
R-9	B84474	470,000 0.5 Carbon	1
R-10	B84333	33,000 0.5 Carbon	1
R-11	B84823	82,000 0.5 Carbon	1
R-12	B85474	470,000 0.5 Carbon	1
R-13	B83181	180 0.5 Carbon	1
R-14	B84274	270,000 0.5 Carbon	1
R-15	D84390	39 2.0 Carbon	1
R-16	B84270	27 0.5 Carbon	1
R-17	C84152	1500 1.0 Carbon	1
R-20	B85471	470 0.5 Carbon	1

Ref. No.	Part No.	Description	Qty. Used in Set
TRANSFORMERS AND COILS			
T-1	9A1944	"B" Range loop antenna	1
T-2	9A1911	Oscillator coil assembly	1
T-3	9A1775	1st I-F Transformer and can assembly	1
T-4	9A1776	2nd I-F Transformer and can assembly	1
T-5	51X116	Output transformer	1
DIAL AND DRIVE ASSEMBLY			
6X21		Rubber grommet } Gang cond. mtg.	3
20X329		Cond. cushion stud }	3
58X667		Dial	1
25X1461		Dial bracket	1
26A446		Pointer bracket assembly	1
15X217		Pointer	1
25X1398		Pilot light bracket	1
7A192		Pilot light socket assembly	1
7A103		Pilot light No. 47	1
10X44		Drive cord assembly	1
28X95		Drive cord tension spring	1
26X464		Drive shaft	1
19X192		"C" washer (for drive shaft)	2
41X81		Dial light diffuser	1
4X884		Escutcheon (for Walnut Cabinet)	1
25X1460		Escutcheon mounting bracket	2
MISCELLANEOUS			
12A496		5" PM speaker with mtg. bracket	1
3A303		Tube socket—octal (8 prong) molded	5
3A421		Tube socket with shield	1
10A297		Knob (walnut) on-off switch, volume control and tuning	2
10A712		Knob (Mahogany)	2
28X292		Snap button (mtg. loop to cabinet)	2
		6 x ¼" slotted hex head P-K type "Z" screw mounting loop to chassis)	2
13X328		Line cord and plug assembly	1

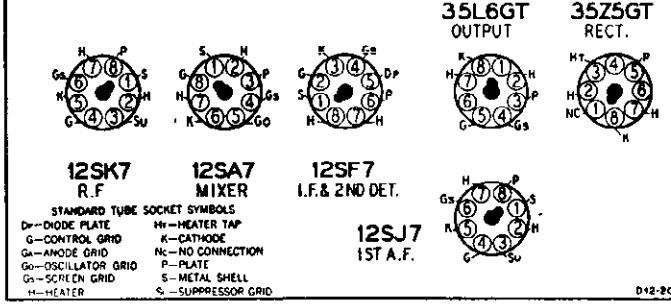

TUBE SOCKET VOLTAGES

Socket voltages are shown on the schematic diagram at the tube socket terminals. All voltages except those for the heater and dial lamp are between the socket terminal and "X" point.

The readings were taken with a 1000 ohm-per-volt meter and all plate and screen voltages read on a 500 volt scale. Conditions of measurement are:

Line voltage.....117 volts AC
Volume control.....maximum
Signal input.....none

A variation of ±10% is usually permissible.

© John F. Rider

MODEL 94WG-2742A

RECEIVER STAGE SENSITIVITIES

AM AND AUDIO STAGES

The table below lists the sensitivity at the input of each stage. The receiver should be tuned to 1000 KC for all readings. All measurements are based on an output of .5 watt. This may be measured by disconnecting the speaker voice coil and substituting a 3.2 ohm, 5 watt resistor across the secondary winding of the output transformer. A reading of 1.26 volts across this resistor will be equivalent to a .5 watt output.

The volume control must be set to maximum.

The signal source must be an accurately calibrated signal generator capable of supplying both 1000 KC and 455 KC signals modulated 30% with a 400 cycle audio signal. Variations in sensitivity of Plus or Minus 25% are usually permissible.

SIGNAL GENERATOR				INPUT FOR .5 WATT OUTPUT
FREQUENCY	COUPLING CAPACITOR	CONNECTION TO RECEIVER	GROUND CONNECTION	
1000 KC	200 mmf or RMA Dummy Antenna	External Antenna Lead	Chassis	10 Microvolts
1000 KC	.01 mf	6BA7 Converter Pin 7	Chassis	40 Microvolts
455 KC	.01 mf	6BA7 Converter Pin 7	Chassis	35 Microvolts
455 KC	.01 mf	6BA6 1st I-F Pin 1	Chassis	2000 Microvolts
400 cycles	.01 mf	6AV6 1st A-F Pin 1	Chassis	.07 Volt
400 cycles	.01 mf	6V6GT Output Pin 5	Chassis	3.2 Volts

FM STAGES

The table below lists the sensitivity for the FM stages of the receiver. The receiver must be tuned to 98 MC for all readings. Measurements are based on a .5 watt output the same as for the AM and Audio stage measurements.

The signal source must be an accurately calibrated signal generator capable of supplying a 98 MC signal modulated by a 400 cycle audio signal. For these measurements the generator must be adjusted for a 22.5 KC deviation. This will correspond to 30% AM modulation.

SIGNAL GENERATOR				INPUT FOR .5 WATT OUTPUT
FREQUENCY	COUPLING TO RECEIVER	CONNECTION TO RECEIVER	GROUND CONNECTION	
98 MC	300 ohms	External Antenna Terminal	Chassis	100 Microvolts
10.7 MC	.01 mf	6BA6 1st I-F Pin 1	Chassis	600 Microvolts
10.7 MC	2500 mmf	6BA6 2nd I-F Pin 1	Chassis	23,000 Microvolts

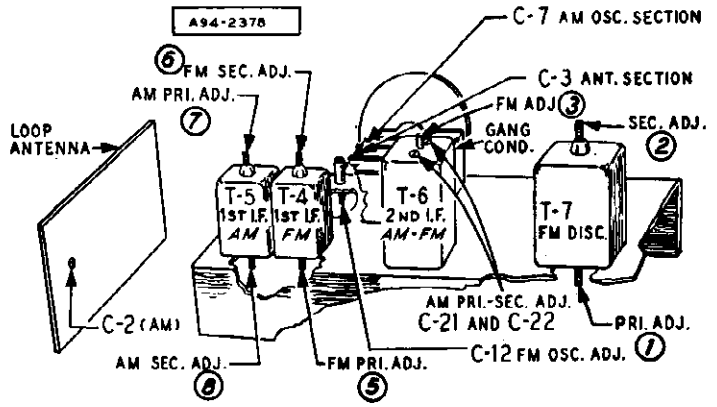

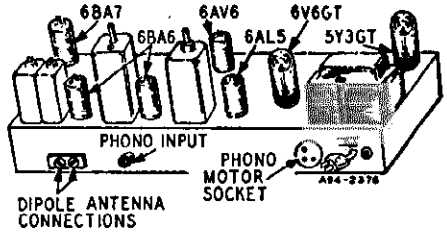

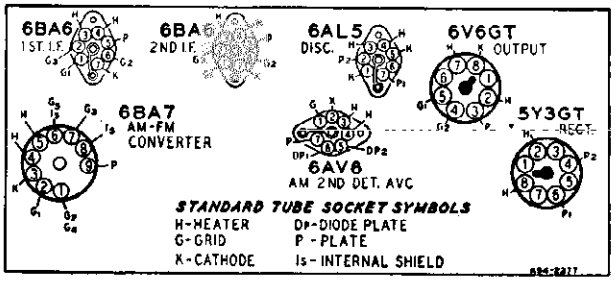

TUBE SOCKET VOLTAGES

Socket voltages are shown on the schematic diagram at the tube socket terminals. All voltages are between the socket terminal and chassis ground. Plate, screen and cathode voltages were taken with a 1000 ohm-per-volt meter with a 300 volt scale used for plate and screen voltages. Audio grid voltages were read with a vacuum tube volt-meter. Conditions of measurement are:

Line voltage.....117 Volts AC
Signal Input.....None

A variation of ±10% is usually permissible.

©John F. Rider

MODEL 9 WG-2712A

ALIGNMENT PROCEDURES

AM STAGES

The following is required for aligning:
An All Wave Signal Generator Which Will Provide an Accurately Calibrated Signal at the Test Frequencies as Listed.
Output Indicating Meter, Non-Metallic Screwdriver, Dummy Antennas — .1 mf, and 50mmf.

Volume Control Maximum all Adjustments.
Connect Radio Chassis to Ground Post of Signal Generator with a Short Heavy Lead.
Allow Chassis and Signal Generator to "Heat Up" for Several Minutes.

SIGNAL GENERATOR						
FREQUENCY SETTING	CONNECT GENERATOR OUTPUT TO	THROUGH DUMMY ANTENNA	CONNECT GROUND TO	GANG CONDENSER SETTING	ADJUST	ADJUST FOR
455 KC	Control Grid 1st 6BA6 Pin No. 1	.1 mf	Chassis Base	Rotor Fully Open	2nd I.F. C-21 and C-22	Maximum Output
455 KC	Control Grid 6BA7 Pin No. 7 1st Det.	.1 mf	Chassis Base	Rotor Fully Open	1st I.F. Pri. and Sec. (7) and (8)	Maximum Output
1620 KC	Control Grid 6BA7 Pin No. 7	.1 mf	Chassis Base	Rotor Fully Open	Oscillator C-7	Maximum Output
1400 KC	External Antenna Lead	50 mmf	Chassis Base	Turn Rotor to Max. Output. Set Pointer to 1400 KC See Note A	Antenna C-2	Maximum Output

NOTE A—If the pointer is not at 1400 KC on the dial, reset pointer to the 1400 KC mark on the dial scale.

FM STAGES

The following is required for aligning:
An accurately calibrated signal generator providing unmodulated signals at the test frequencies listed below.
Non-metallic screwdriver.
Dummy Antennas and I-F Loading Resistor—2500 mmf, 300 ohms and a 3300 ohm .5 watt resistor with short leads.

Zero center scale DC vacuum tube voltmeter having a range of approximately 3 volts.
(If a zero center scale meter is not available, a standard scale vacuum tube voltmeter may be used by reversing the meter connections for negative readings).
Allow chassis and signal generator to "Heat Up" for several minutes.

	SIGNAL GENERATOR						
	FREQUENCY SETTING	CONNECT GENERATOR OUTPUT TO	THROUGH DUMMY ANTENNA	BAND SWITCH SETTING	GANG CONDENSER SETTING	ADJUST	ADJUST FOR
Discriminator	10.7 MC	6BA6 2nd I-F Pin 1 and Chassis	2500 mmf	FM	Rotor Fully Open	Disc. Pri. (1) Note A	Maximum Deflection
	10.7 MC	6BA6 2nd I-F Pin 1 and Chassis	2500 mmf	FM	Rotor Fully Open	Disc. Sec. (2) Note B	
	10.7 MC	6BA6 2nd I-F Pin 1 and Chassis	2500 mmf	FM	Rotor Fully Open	Disc. Pri. (1) Note A	Maximum Deflection
	10.7 MC	6BA6 2nd I-F Pin 1 and Chassis	2500 mmf	FM	Rotor Fully Open	Disc. Sec. (2) Note B	
I-F	10.7 MC Note E	6BA6 1st I-F Pin 1 and Chassis	2500 mmf	FM	Rotor Fully Open	2nd I-F (3) Note C	Maximum Deflection
Discriminator	10.7 MC	6BA6 2nd I-F Pin 1 and Chassis	2500 mmf	FM	Rotor Fully Open	Disc. Pri. (1) Note A	Maximum Deflection
I-F	10.7 MC	Antenna and Chassis	2500 mmf	FM	Rotor Fully Open	1st. I-F Pri. and Sec. (5) and (6) Note C	Maximum Deflection
	10.7 MC	Antenna and Chassis Solder a 3300 ohm resistor across terminals 3 and 4 of 1st. I-F trans.	2500 mmf	FM	Rotor Fully Open	1st. I-F Pri. (5) Note C	Maximum Deflection
	10.7 MC	Antenna and Chassis Note D	2500 mmf	FM	Rotor Fully Open	1st. I-F Sec. (6) Note C	Maximum Deflection
RECHECK I-F ADJUSTMENTS IN ORDER GIVEN							
Oscillator	108.4 Note F	Disconnect built-in dipole antenna and connect generator to dipole terminals with resistor in series	300 ohms	FM	Rotor Fully Open	Osc. C-12	Maximum Deflection
Antenna	104.5	Same as above	300 ohms	FM	Tune rotor for max. AVC voltage	Ant. C-3	Maximum Deflection
RECHECK ANTENNA & OSC. ADJUSTMENTS IN ORDER GIVEN							

FM ALIGNMENT NOTES

NOTE A—The zero center scale DC vacuum tube voltmeter is to be connected between chassis ground and the AVC line. A signal of .1 volt must be fed into the receiver for this adjustment.
Note output voltage on the zero center DC vacuum tube voltmeter.

NOTE B—Disconnect zero center DC vacuum tube voltmeter from AVC and connect it at the audio takeoff point at the 27 K ohm resistor (R-11) and its junction with the terminal strip. Adjust for zero voltage indication.

NOTE C—Connect zero center DC vacuum tube voltmeter as in Note A. Adjust input to give same output on the zero center DC vacuum tube voltmeter as in Note A.

NOTE D—Unsolder 3300 ohm resistor from terminals 3 and 4 of 1st I-F transformer and resolder across terminals 1 and 2.

NOTE E—2nd I-F trimmers (AM) must be aligned before attempting to adjust 2nd I-F (FM) tuning slug.

NOTE F—Remove the 3300 ohm load resistor before attempting to check the antenna and oscillator adjustments.

© John F. Rider

MODEL 94WG-2742A

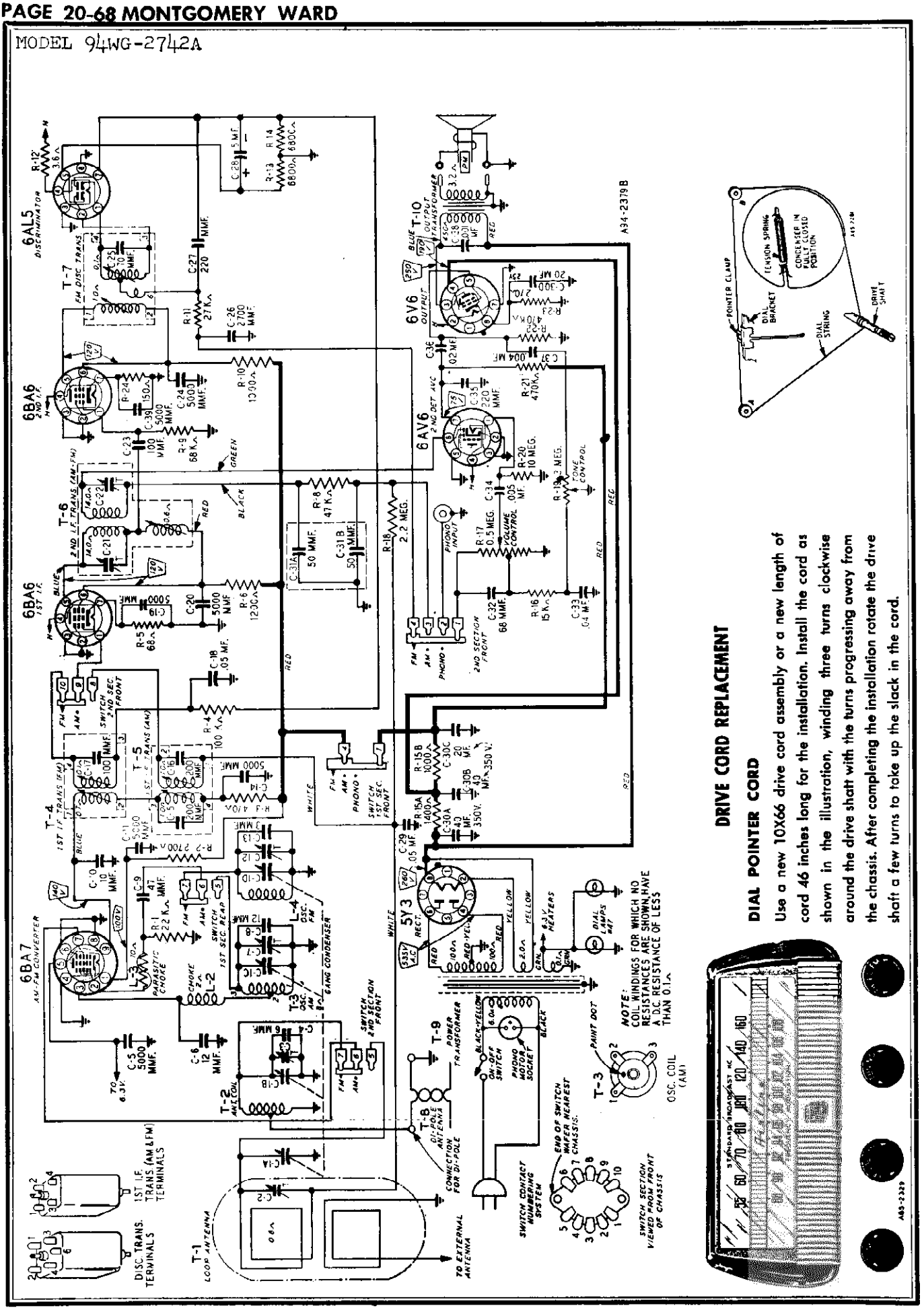

DRIVE CORD REPLACEMENT

DIAL POINTER CORD

Use a new 10X66 drive cord assembly or a new length of cord 46 inches long for the installation. Install the cord as shown in the illustration, winding three turns clockwise around the drive shaft with the turns progressing away from the chassis. After completing the installation rotate the drive shaft a few turns to take up the slack in the cord.

©John F. Rider

MODEL 94WG-2742A

ELECTRICAL SPECIFICATIONS

Power Supply.....105-125 volts AC 60 cycles, 60 watts. 80 watts with record changer

Frequency Ranges.....Broadcast 540-1600 KC
Frequency Modulation 88-108 MC

Intermediate Frequency...AM—455KC
FM—10.7 MC

Selectivity.....AM—45 KC broad at 1000 times signal, measured at 1000 KC
I.F. FM—200 KC broad at 2 times down
I.F. FM—950 KC broad at 200 times down

AM Sensitivity.....(For .5 watt output with external antenna) 10 microvolts average

FM Sensitivity.....(For .5 watt output)
100 microvolts average

Power Output.....4.5 watts maximum
2.5 watts 10% distortion

Loud Speaker.....10" PM Dynamic

Voice Coil Impedance..3.2 ohms 400 cycles

Tube and Dial Lamp Complement
1 6BA7 FM-AM Converter
1 6BA6 1st I-F Amplifier
1 6BA6 2nd I-F Amplifier
1 6AL5 FM Discriminator
1 6AV6 Audio Amplifier, AM 2nd Detector and AVC
1 6V6GT Audio Output
1 5Y3GT Rectifier
2 No. 47 Dial Lamps

RESISTORS

Ref. No.	Part No.	Ohms	Watts		Qty. Used in Set
R-1	884223	22 K	0.5	Carbon	1
R-2	883272	2700	0.5	Carbon	1
R-3	884471	470	0.5	Carbon	1
R-4	885104	100 K	0.5	Carbon	1
R-5	883680	68	0.5	Carbon	1
R-6	884122	1200	0.5	Carbon	1
R-8	885473	47 K	0.5	Carbon	1
R-9	885683	68 K	0.5	Carbon	1
R-10	884102	1000	0.5	Carbon	1
R-11	884273	27 K	0.5	Carbon	1
R-12	43X233	3.6	0.5	Wire Wound	1
R-13 / R-14	884682	6800	0.5	Carbon	2
R-15A / R-15B	43X224	1400 1000	6.0 4.0	Wire Wound	1
R-16	884153	15 K	0.5	Carbon	1
R-17	36X372	.5 meg.		Volume Control	1
R-18	885225	2.2 meg.	0.5	Carbon	1
R-19	40X285	3 meg.		Tone Control	1
R-20	885106	10 meg.	0.5	Carbon	1
R-21 / R-22	885474	470 K	0.5	Carbon	2
R-23	884271	270	0.5	Carbon	1
R-24	884151	150	0.5	Carbon	1

TRANSFORMERS AND COILS

L-1	9A1882	Filament Choke Assembly	1
L-2	35A1	Insulated Choke	1
L-3	9A1960	Parasitic Choke Assembly	1
L-4	9A2021	Oscillator Coil Assembly (FM)	1
T-1	9A1972	"B" Range Loop Antenna Assem.	1
T-2	9A1956	Antenna Coil Assembly	1
T-3	9A1997	Oscillator Coil Assembly (AM)	1
T-4	9A2037	1st I.F. Trans. (FM)	1
T-5	9A2038	1st I.F. Trans. (AM)	1
T-6	9A1999	2nd I.F. Trans. (AM-FM)	1
T-7	9A2036	Discriminator Coil Assembly	1
T-8	9A2004	Dipole Antenna	1
T-9	53X290	Power Transformer	1
T-10	51X134	Output Transformer	1

CAPACITORS

Ref. No.	Part No.				Qty. Used in Set
C-1A, C-1B, C-1C, C-1D	14A204	Gang Condenser Assembly			1
C-2	17A235	2-24 mmf		Trimmer	1
C-3, C-7		Part of Gang Condenser			
C-4	47X521	6 mmf		Ceramic	1
C-5, C-11, C-14, C-19, C-20, C-24, C-39	47X507	5000 mmf		Silvered Ceramic	7
C-6, C-8	47X522	12 mmf		Ceramic	2
C-9	47X517	47 mmf		Ceramic	1
C-10	47X512	10 mmf		Ceramic	1
C-12	17A255	1-8 mmf		Trimmer	1
C-13	47X547	3 mmf		Ceramic	1
C-15, C-16		Part of T-5 (1st I.F. Trans.—AM)			
C-17		Part of T-4 (1st I.F. Trans.—FM)			
C-18, C-29	866503	.05 mf	200 V	Tubular	2
C-21, C-22		Part of T-6 (2nd I.F. Trans.—AM-FM)			
C-23	47X497	100 mmf		Ceramic	1
C-25		Part of T-7 (Discriminator Trans.)			
C-26	47X492	2700 mmf		Molded Mica	1
C-27, C-35	47X468	220 mmf		Ceramic	2
C-28	45X361	5 mf	100 V	Dry Electrolytic	1
C-30A	45X359	40 mf	350 V	Dry Electrolytic	1
C-30B		40 mf	350 V		
C-30C		20 mf	350 V		
C-30D		20 mf	25 V		
C-31A, C-31B	47X112	30-50 mmf		Dual Mica	1
C-32	47X471	68 mmf		Molded Mica	1
C-33	866403	.04 mf	200 V	Tubular	1
C-34	D66502	.005 mf	400 V	Tubular	1
C-36	D66203	.02 mf	400 V	Tubular	1
C-37	866402	.004 mf	200 V	Tubular	1
C-38	H66102	.001 mf	500 V	Tubular	1

MISCELLANEOUS

Ref. No.	Part No.	Description	Qty. Used in Set
	12A480	10" P.M. Speaker	1
	3A303	Tube Socket—Octal 8 prong) Molded	2
	3A426	Tube Socket - Miniature	4
	3A443	Tube Socket—Miniature for AM-FM Converter Tube	1
	3A304	Phono Motor Socket	1
	3A305	Phono Socket—Single Pin Tip	1
	2A384	Band Change Switch	1
	13X546	Line Cord and Plug Assembly	1
	10A695	Knob (Tuning)	1
	10A696	Knob (Volume Control & Switch)	1
	10A697	Knob (Tone)	1
	10A698	Knob (Phono - BC—FM)	1
	4X1020	Escutcheon	1

DIAL AND DRIVE ASSEMBLY

	58X715	Dial Glass	1
	24X446	Idler Pulley	2
	15X241	Pointer	1
	25X1569	Dial Bracket	1
	7A103	No. 47 Pilot Light Bulb	2
	7A202	Pilot Light Socket Assembly	1
	26X486	Drive Shaft	1
	41X26	Reflector, Dial Light	2
	28X113	Drive Cord Tension Spring	1
	10X66	Drive Cord Assembly	1
	19X192	"C" Washer (Mtg. drive shaft)	2
	6X21	Rubber Grommet (Mtg. gang cond.)	3
	20X260	Condenser Cushion Stud (Mtg. gang condenser)	3

TYPE V-28A159 RECORD CHANGER PARTS

V-2727	Motor Assembly, 60 Cycles 105-125 Volts AC	1
V-2749	Spindle Adapter (45 RPM)	1
Shure P-77	Crystal Cartridge	1
	Needle, Microgroove (Red)	1
	Needle, Regular	1

(When ordering needles, specify part number and letter stamped on cartridge.)

©John F. Rider

©John F. Rider

ELECTRICAL SPECIFICATIONS

Power Supply	105-125 volts AC 60 cycles, 60 watts. 80 watts with record changer
Frequency Ranges	Broadcast 540-1600 KC Frequency Modulation 88-108 MC
Intermediate Frequency	AM—455KC FM—10.7 MC
Selectivity	AM—45 KC broad at 1000 times signal, measured at 1000 KC I.F. FM—200 KC broad at 2 times down I.F. FM—950 KC broad at 200 times down
AM Sensitivity	(For .5 watt output with external antenna) 10 microvolts average
FM Sensitivity	(For .5 watt output) 100 microvolts average
Power Output	4.5 watts maximum 2.5 watts 10% distortion
Loud Speaker	10" PM Dynamic
Voice Coil Impedance	3.2 ohms 400 cycles
Record Changer	See Manual 5081A
Tube and Dial Lamp Complement	1 6BA7 FM-AM Converter 1 6BA6 1st I-F Amplifier 1 6BA6 2nd I-F Amplifier 1 6AL5 FM Discriminator 1 6AV6 Audio Amplifier, AM 2nd Detector and AVC 1 6V6GT Audio Output 1 5Y3GT Rectifier 2 No. 47 Dial Lamps

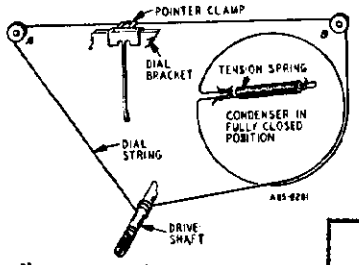

DRIVE CORD REPLACEMENT

DIAL POINTER CORD

Use a new 10X66 drive cord assembly or a new length of cord 46 inches long for the installation. Install the cord as shown in the illustration, winding three turns clockwise around the drive shaft with the turns progressing away from the chassis. After completing the installation rotate the drive shaft a few turns to take up the slack in the cord.

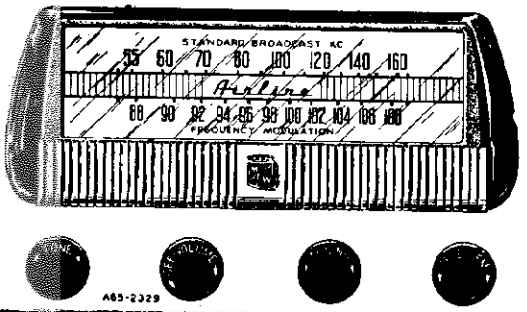

Issue "D" chassis differ from the issue "C" chassis by a change in value of Condenser C-6 from 12 uuf to 15 uuf, the addition of Condenser C-40 and chokes L-5 and L-6.

REMOVE FROM PARTS LIST AND SCHEMATIC

C-6 47X522 12MMF Ceramic Condenser

ADD TO PARTS LIST AND SCHEMATIC

C-6	47X552	15 MMF Ceramic Condenser
C-40	47X509	47 MMF Ceramic Condenser
L-5) L-6)	9A2044	Oscillator Filament Choke

The circuit connections of the condensers and chokes are shown in the partial schematic

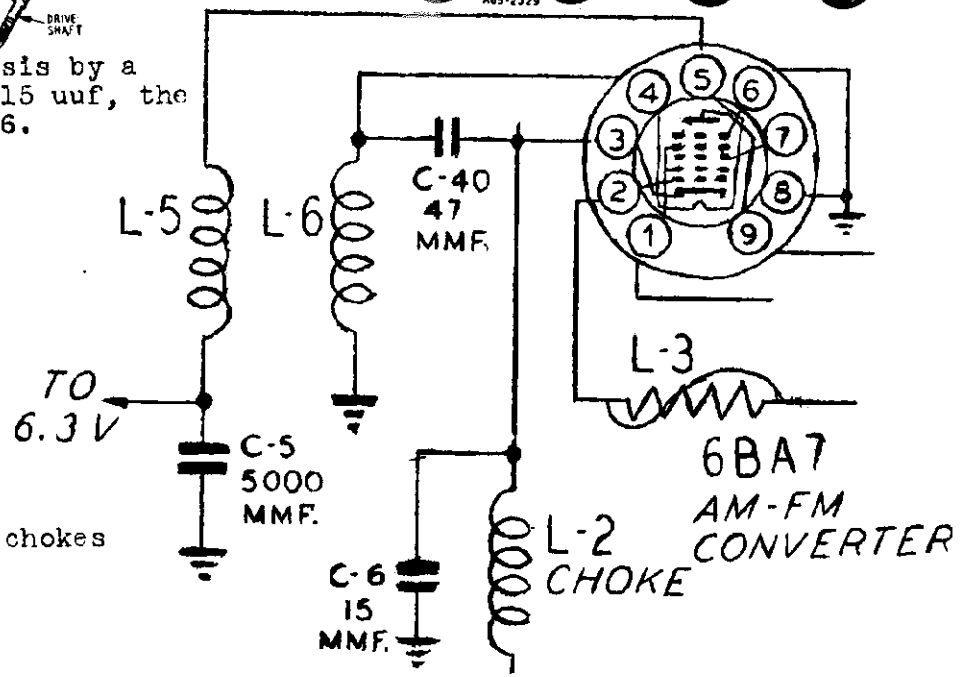

MODELS 94WG-2742C, 94WG-2742D

RECEIVER STAGE SENSITIVITIES

AM AND AUDIO STAGES

The table below lists the sensitivity at the input of each stage. The receiver should be tuned to 1000 KC for all readings. All measurements are based on an output of .5 watt. This may be measured by disconnecting the speaker voice coil and substituting a 3.2 ohm, 5 watt resistor across the secondary winding of the output transformer. A reading of 1.26 volts across this resistor will be equivalent to a .5 watt output.

The volume control must be set to maximum.

The signal source must be an accurately calibrated signal generator capable of supplying both 1000 KC and 455 KC signals modulated 30% with a 400 cycle audio signal. Variations in sensitivity of Plus or Minus 25% are usually permissible.

SIGNAL GENERATOR				INPUT FOR .5 WATT OUTPUT
FREQUENCY	COUPLING CAPACITOR	CONNECTION TO RECEIVER	GROUND CONNECTION	
1000 KC	200 mmf or RMA Dummy Antenna	External Antenna Lead	Chassis	10 Microvolts
1000 KC	.01 mf	6BA7 Converter Pin 7	Chassis	40 Microvolts
455 KC	.01 mf	6BA7 Converter Pin 7	Chassis	35 Microvolts
455 KC	.01 mf	6BA6 1st I-F Pin 1	Chassis	2000 Microvolts
400 cycles	.01 mf	6AV6 1st A-F Pin 1	Chassis	.07 Volt
400 cycles	.01 mf	6V6GT Output Pin 5	Chassis	3.2 Volts

FM STAGES

The table below lists the sensitivity for the FM stages of the receiver. The receiver must be tuned to 98 MC for all readings. Measurements are based on a .5 watt output the same as for the AM and Audio stage measurements.

The signal source must be an accurately calibrated signal generator capable of supplying a 98 MC signal modulated by a 400 cycle audio signal. For these measurements the generator must be adjusted for a 22.5 KC deviation. This will correspond to 30% AM modulation.

SIGNAL GENERATOR				INPUT FOR .5 WATT OUTPUT
FREQUENCY	COUPLING TO RECEIVER	CONNECTION TO RECEIVER	GROUND CONNECTION	
98 MC	300 ohms	External Antenna Terminal	Chassis	100 Microvolts
10.7 MC	.01 mf	6BA6 1st I-F Pin 1	Chassis	600 Microvolts
10.7 MC	2500 mmf	6BA6 2nd I-F Pin 1	Chassis	23,000 Microvolts

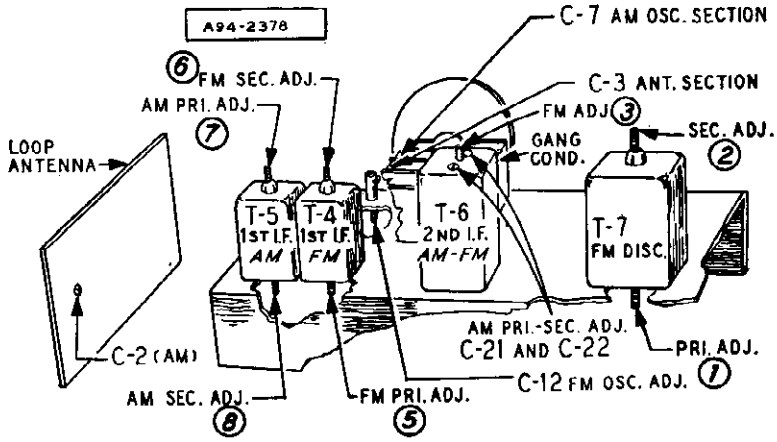

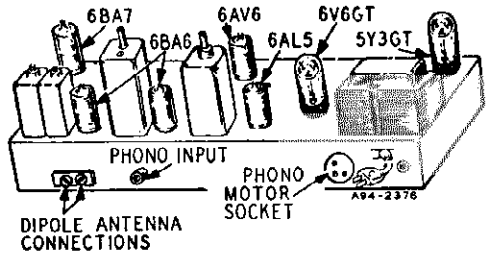

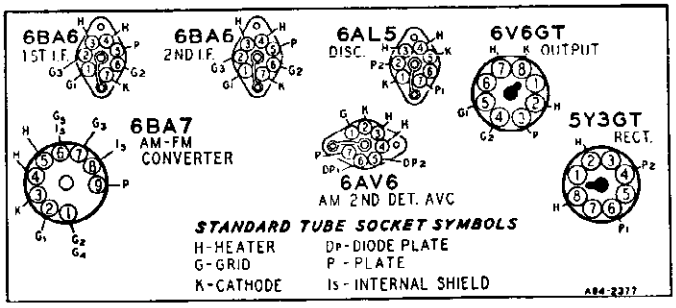

TUBE SOCKET VOLTAGES

Socket voltages are shown on the schematic diagram at the tube socket terminals. All voltages are between the socket terminal and chassis ground. Plate, screen and cathode voltages were taken with a 1000 ohm-per-volt meter with a 300 volt scale used for plate and screen voltages. Audio grid voltages were read with a vacuum tube volt-meter. Conditions of measurement are:

Line voltage.....117 Volts AC

Signal Input.....None

A variation of ±10% is usually permissible.

© John F. Rider

MODELS 94WG-2742C, 94WG-2742D

ALIGNMENT PROCEDURES

AM STAGES

The following is required for aligning:
An All Wave Signal Generator Which Will Provide an Accurately Calibrated Signal at the Test Frequencies as Listed.
Output Indicating Meter, Non-Metallic Screwdriver, Dummy Antennas — .1 mf, and 50mmf.

Volume Control Maximum all Adjustments.
Connect Radio Chassis to Ground Post of Signal Generator with a Short Heavy Lead.
Allow Chassis and Signal Generator to "Heat Up" for Several Minutes.

SIGNAL GENERATOR						
FREQUENCY SETTING	CONNECT GENERATOR OUTPUT TO	THROUGH DUMMY ANTENNA	CONNECT GROUND TO	GANG CONDENSER SETTING	ADJUST	ADJUST FOR
455 KC	Control Grid 1st 6BA6 Pin No. 1	.1 mf	Chassis Base	Rotor Fully Open	2nd I.F. C-21 and C-22	Maximum Output
455 KC	Control Grid 6BA7 Pin No. 7 1st Det.	.1 mf	Chassis Base	Rotor Fully Open	1st I.F. Pri. and Sec. (7) and (8)	Maximum Output
1620 KC	Control Grid 6BA7 Pin No. 7	.1 mf	Chassis Base	Rotor Fully Open	Oscillator C-7	Maximum Output
1400 KC	External Antenna Lead	50 mmf	Chassis Base	Turn Rotor to Max. Output. Set Pointer to 1400 KC See Note A	Antenna C-2	Maximum Output

NOTE A—If the pointer is not at 1400 KC on the dial, reset pointer to the 1400 KC mark on the dial scale.

FM STAGES

The following is required for aligning:
An accurately calibrated signal generator providing unmodulated signals at the test frequencies listed below.
Non-metallic screwdriver.
Dummy Antennas and I-F Loading Resistor—2500 mmf, 300 ohms and a 3300 ohm .5 watt resistor with short leads.

Zero center scale DC vacuum tube voltmeter having a range of approximately 3 volts.
(If a zero center scale meter is not available, a standard scale vacuum tube voltmeter may be used by reversing the meter connections for negative readings).
Allow chassis and signal generator to "Heat Up" for several minutes.

	SIGNAL GENERATOR						
	FREQUENCY SETTING	CONNECT GENERATOR OUTPUT TO	THROUGH DUMMY ANTENNA	BAND SWITCH SETTING	GANG CONDENSER SETTING	ADJUST	ADJUST FOR
Discriminator	10.7 MC	6BA6 2nd I-F Pin 1 and Chassis	2500 mmf	FM	Rotor Fully Open	Disc. Pri. (1) Note A	Maximum Deflection
	10.7 MC	6BA6 2nd I-F Pin 1 and Chassis	2500 mmf	FM	Rotor Fully Open	Disc. Sec. (2) Note B	
	10.7 MC	6BA6 2nd I-F Pin 1 and Chassis	2500 mmf	FM	Rotor Fully Open	Disc. Pri. (1) Note A	Maximum Deflection
	10.7 MC	6BA6 2nd I-F Pin 1 and Chassis	2500 mmf	FM	Rotor Fully Open	Disc. Sec. (2) Note B	
I-F	10.7 MC Note E	6BA6 1st I-F Pin 1 and Chassis	2500 mmf	FM	Rotor Fully Open	2nd I-F (3) Note C	Maximum Deflection
Discriminator	10.7 MC	6BA6 2nd I-F Pin 1 and Chassis	2500 mmf	FM	Rotor Fully Open	Disc. Pri. (1) Note A	Maximum Deflection
I-F	10.7 MC	Antenna and Chassis	2500 mmf	FM	Rotor Fully Open	1st. I-F Pri. and Sec. (5) and (6) Note C	Maximum Deflection
	10.7 MC	Antenna and Chassis Solder a 3300 ohm resistor across terminals 3 and 4 of 1st. I-F trans.	2500 mmf	FM	Rotor Fully Open	1st. I-F Pri. (5) Note C	Maximum Deflection
	10.7 MC	Antenna and Chassis Note D	2500 mmf	FM	Rotor Fully Open	1st. I-F Sec. (6) Note C	Maximum Deflection
RECHECK I-F ADJUSTMENTS IN ORDER GIVEN							
Oscillator	108.4 Note F	Disconnect built-in dipole antenna and connect generator to dipole terminals with resistor in series	300 ohms	FM	Rotor Fully Open	Osc. C-12	Maximum Deflection
Antenna	104.5	Same as above	300 ohms	FM	Tune rotor for max. AVC voltage	Ant. C-3	Maximum Deflection
RECHECK ANTENNA & OSC. ADJUSTMENTS IN ORDER GIVEN							

FM ALIGNMENT NOTES

NOTE A—The zero center scale DC vacuum tube voltmeter is to be connected between chassis ground and the AVC line. A signal of .1 volt must be fed into the receiver for this adjustment.
Note output voltage on the zero center DC vacuum tube voltmeter

NOTE B—Disconnect zero center DC vacuum tube voltmeter from AVC and connect it at the audio takeoff point at the 27 K ohm resistor (R-11) and its junction with the terminal strip. Adjust for zero voltage indication.

NOTE C—Connect zero center DC vacuum tube voltmeter as in Note A. Adjust input to give same output on the zero center DC vacuum tube voltmeter as in Note A.

NOTE D—Unsolder 3300 ohm resistor from terminals 3 and 4 of 1st I-F transformer and resolder across terminals 1 and 2.

NOTE E—2nd I-F trimmers (AM) must be aligned before attempting to adjust 2nd I-F (FM) tuning slug.

NOTE F—Remove the 3300 ohm load resistor before attempting to check the antenna and oscillator adjustments.

© John F. Rider

© Tahn F Rider

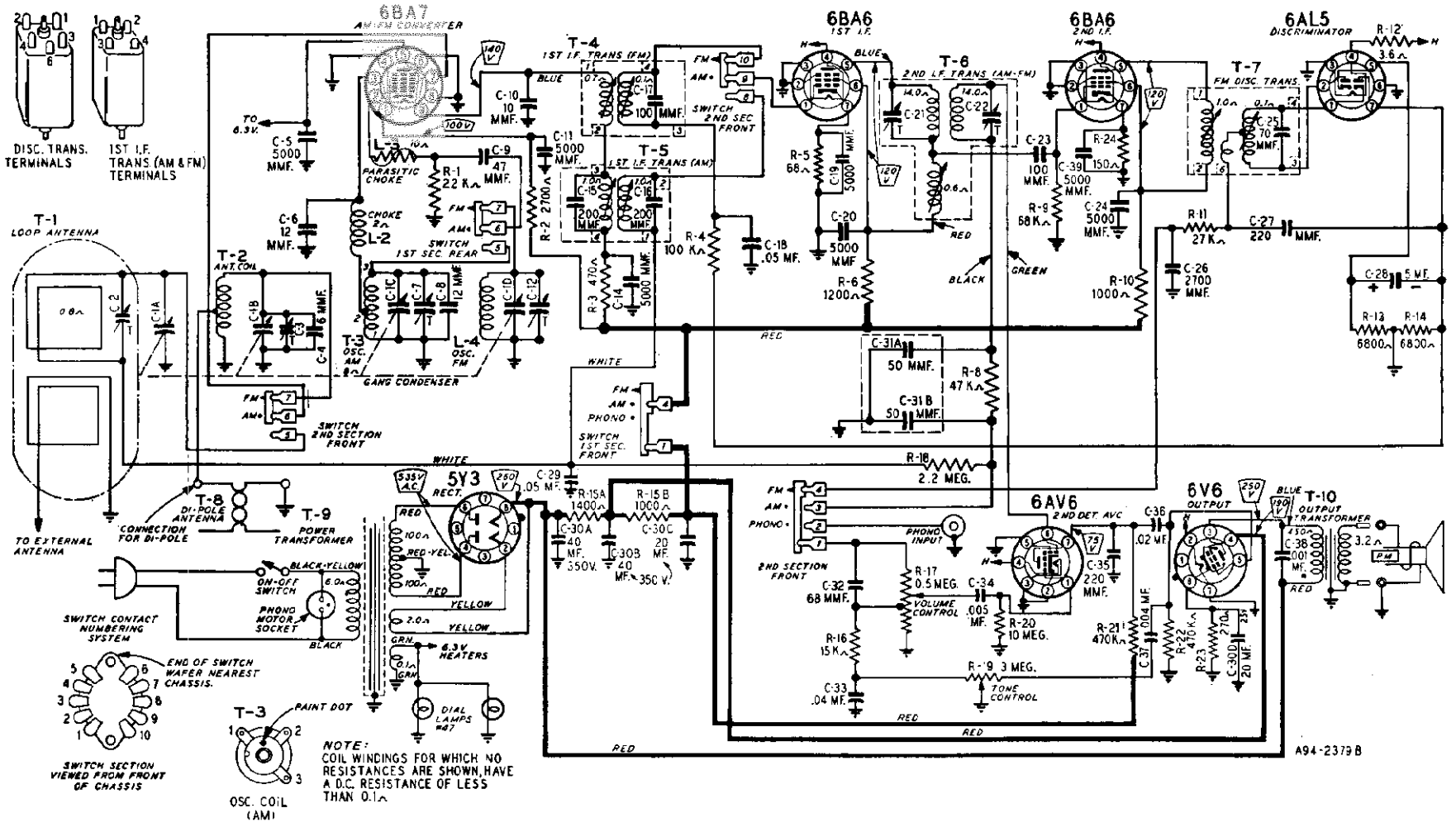

NOTE: COIL WINDINGS FOR WHICH NO RESISTANCES ARE SHOWN, HAVE A D.C. RESISTANCE OF LESS THAN 0.1Ω

DIAL AND DRIVE ASSEMBLY

58X715	Dial Glass	1
24X446	Idler Pulley	2
15X241	Pointer	1
25X1369	Dial Bracket	1
7A103	No. 47 Pilot Light Bulb	2
7A202	Pilot Light Socket Assembly	1
26X486	Drive Shaft	1
41X26	Reflector, Dial Light	2
28X113	Drive Cord Tension Spring	1
10X66	Drive Cord Assembly	1
19X192	"C" Washer (Mtg. drive shaft)	2
6X21	Rubber Grommet (Mtg. gang cond.)	3
20X260	Condenser Cushion Stud (Mtg. gang condenser)	3

TYPE V-28A164 RECORD CHANGER PARTS

V-2727B	Motor Assembly, 60 Cycles 105-125 Volts AC	1
Shure P-77	Crystal Cartridge	1
	Needle, Microgroove (Red)	1
	Needle, Regular	1

(When ordering needles, specify part number and letter stamped on cartridge.)

MODELS 94WG-2742C, 94WG-2742D

© John F. Rider

MODELS 94WG-2712C, 94WG-2712D

REPLACEMENT PARTS LIST

Use only genuine factory tested parts to insure service jobs you can depend on and to obtain original set performance

CAPACITORS

Ref. No.	Part No.	Description	Qty. Used In Set
C-1A, C-1B, C-1C, C-1D	14A204	Gang Condenser Assembly	1
C-2	17A235	2-24 mmf Trimmer	1
C-3, C-7		Part of Gang Condenser	
C-4	47X521	6 mmf Ceramic	1
C-5, C-11, C-14, C-19, C-20, C-24, C-39	47X507	5000 mmf Silvered Ceramic	7
C-6, C-8	47X522	12 mmf Ceramic	2
C-9	47X517	47 mmf Ceramic	1
C-10	47X512	10 mmf Ceramic	1
C-12	17A255	1-8 mmf Trimmer	1
C-15, C-16		Part of T-5 (1st I.F. Trans.—AM)	
C-17		Part of T-4 (1st I.F. Trans.—FM)	
C-18, C-29	B66503	.05 mf 200 V Tubular	2
C-21, C-22		Part of T-6 (2nd I.F. Trans.—AM-FM)	
C-23	47X497	100 mmf Ceramic	1
C-25		Part of T-7 (Discriminator Trans.)	
C-26	47X492	2700 mmf Molded Mica	1
C-27, C-35	47X468	220 mmf Ceramic	2
C-28	45X361	5 mf 100 V Dry Electrolytic	1
C-30A	45X359	40 mf 350 V Dry Electrolytic	1
C-30B		40 mf 350 V	
C-30C		20 mf 350 V	
C-30D		20 mf 25 V	
C-31A, C-31B	47X112	50-50 mmf Dual Mica	1
C-32	47X471	68 mmf Molded Mica	1
C-33	B66403	.04 mf 200 V Tubular	1
C-34	D66502	.005 mf 400 V Tubular	1
C-36	D66203	.02 mf 400 V Tubular	1
C-37	B66402	.004 mf 200 V Tubular	1
C-38	H66102	.001 mf 800 V Tubular	1

RESISTORS

Ref. No.	Part No.	Ohms	Watts		Qty. Used In Set
R-1	B84223	22 K	0.5	Carbon	1
R-2	B83272	2700	0.5	Carbon	1
R-3	B84471	470	0.5	Carbon	1
R-4	B85104	100 K	0.5	Carbon	1
R-5	B83680	68	0.5	Carbon	1
R-6	B84122	1200	0.5	Carbon	1
R-8	B85473	47 K	0.5	Carbon	1
R-9	B85683	68 K	0.5	Carbon	1
R-10	B84102	1000	0.5	Carbon	1
R-11	B84273	27 K	0.5	Carbon	1
R-12	43X233	3.6	0.5	Wire Wound	1
R-13, R-14	B84682	6800	0.5	Carbon	2
R-15A	43X224	1400	6.0	Wire Wound	1
R-15B		1000	4.0		
R-16	B84153	15 K	0.5	Carbon	1
R-17	36X372	.5 meg.		Volume Control	1
R-18	B85225	2.2 meg.	0.5	Carbon	1
R-19	40X285	3 meg.		Tone Control	1
R-20	B85106	10 meg.	0.5	Carbon	1
R-21, R-22	B85474	470 K	0.5	Carbon	2
R-23	B84271	270	0.5	Carbon	1
R-24	B84151	150	0.5	Carbon	1

TRANSFORMERS AND COILS

Ref. No.	Part No.	Description	Qty. Used In Set
L-1	9A1882	Filament Choke Assembly	1
L-2	35A1	Insulated Choke	1
L-3	9A1940	Parasitic Choke Assembly	1
L-4	9A2021	Oscillator Coil Assembly (FM)	1
T-1	9A1972	"B" Range Loop Antenna Assem.	1
T-2	9A1956	Antenna Coil Assembly	1
T-3	9A1997	Oscillator Coil Assembly (AM)	1
T-4	9A2037	1st I.F. Trans. (FM)	1
T-5	9A2038	1st I.F. Trans. (AM)	1
T-6	9A1999	2nd I.F. Trans. (AM-FM)	1
T-7	9A2036	Discriminator Coil Assembly	1
T-8	9A2004	Dipole Antenna	1
T-9	53X290	Power Transformer	1
T-10	51X134	Output Transformer	1

MISCELLANEOUS

Part No.	Description	Qty. Used In Set
12A480	10" P.M. Speaker	1
3A303	Tube Socket—Octal (8 prong) Molded	2
3A426	Tube Socket—Miniature	4
3A443	Tube Socket—Miniature (for AM-FM Converter Tube)	1
3A304	Phono Motor Socket	1
3A305	Phono Socket—Single Pin Tip	1
2A384	Band Change Switch	1
13X546	Line Cord and Plug Assembly	1
10A695	Knob (Tuning)	1
10A696	Knob (Volume Control & Switch)	1
10A697	Knob (Tone)	1
10A698	Knob (Phono—BC—FM)	1
4X1020	Escutcheon	1

MODEL 94WG-2745A

GENERAL DESCRIPTION

This is a two band, nine tube (plus rectifier tube) AM and FM receiver with automatic record changer. The I-F stages use high gain miniature type tubes. Built-in Air Wave Aerials are provided for the FM and Broadcast bands. Features include, compensator circuits to prevent oscillator drift, automatic volume control, push-pull pentode power output stage, PM dynamic loud speaker and an electrostatic shield in the power transformer to reduce power line noise.

The receiver and record changer are housed in a console combination cabinet with controls provided for tuning, volume, tone and band or phono selection.

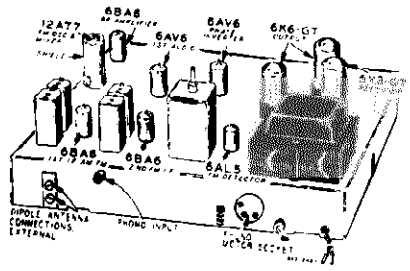

ELECTRICAL SPECIFICATIONS

Power Supply	105-125 volts AC 60 cycles, 80 watts, 100 watts with record changer
Frequency Ranges	Broadcast 540-1600 KC Frequency Modulation 88-108 MC
Intermediate Frequency	AM—455 KC FM—10.7 MC
Selectivity	AM—43 KC broad at 1000 times signal, measured at 1000 KC I.F. FM—200 KC broad at 2 times down I.F. FM—760 KC broad at 200 times down
AM Sensitivity	(For .5 watt output with external antenna) 10 microvolts average
FM Sensitivity	(For .5 watt output) 30 microvolts average
Power Output	8.5 watts maximum 6.0 watts 10% distortion
Loud Speaker	12" PM Dynamic
Voice Coil Impedance	3.2 ohms 400 cycles
Record Changer	See Manual No. 5081A

1. Condenser C-12 (5000 MMF) not used.

2. The 5000 MMF condenser C-13 is connected to ground instead of as shown in the circuit diagram.

3. The circuit connections of transformers T-1 (1st FM I-F) and T-4 (2nd AM I-F) are shown erroneously in the circuit diagram. The corrected circuit connections are shown below.

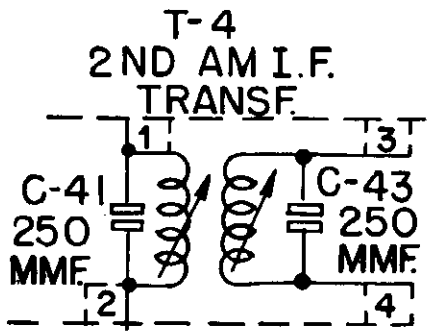

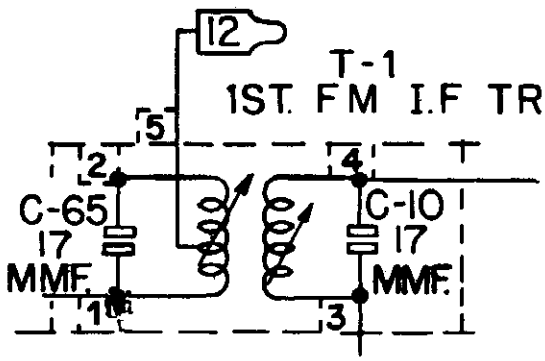

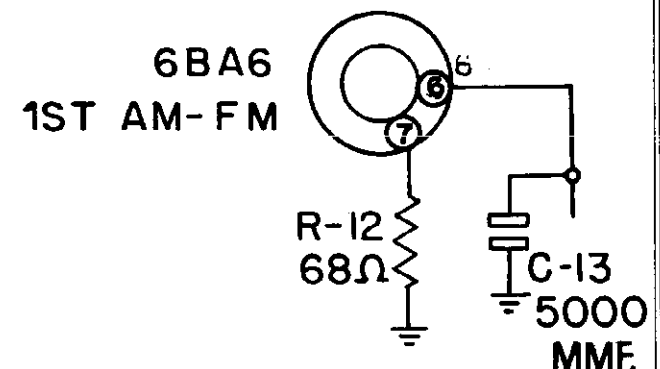

©John F. Rider

MODEL 94WG-2745A

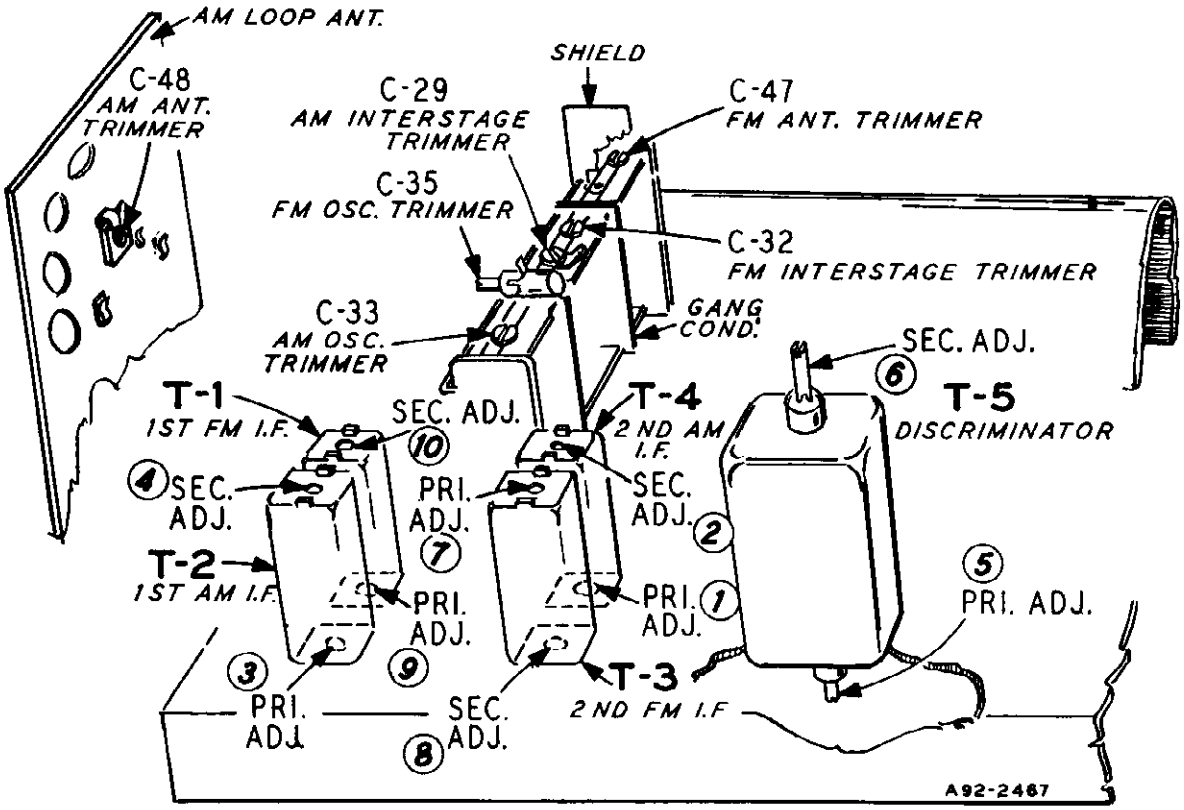

TUBE SOCKET VOLTAGES

Socket voltages are shown on the Schematic diagram at the tube socket terminals. All voltages are between the socket terminal and chassis ground. Plate, screen and cathode voltages were taken with a 1000 ohm-per-volt meter with a 300 volt scale used for plate and screen voltages. Audio grid voltages were read with a vacuum tube volt-meter. Conditions of measurement are:

Line voltage ..... 117 Volts AC
Signal Input ..... None
A variation of ±10% is usually permissible.

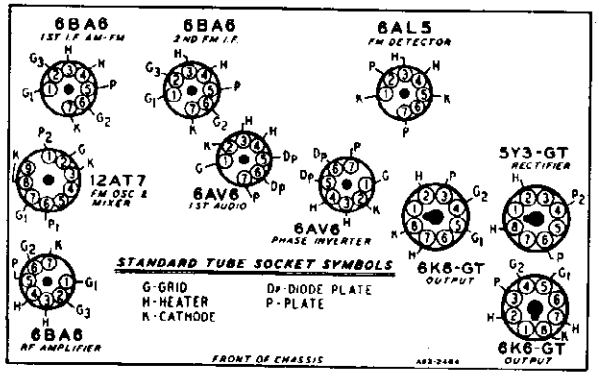

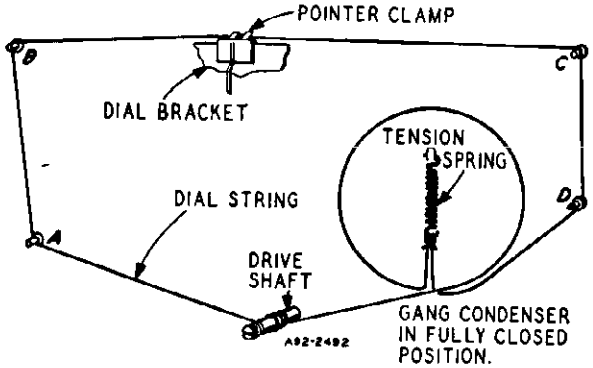

DRIVE CORD REPLACEMENT

Use a new 10X54 drive cord assembly or a new length of cord 48 inches long for the installation, winding three turns clockwise around the drive shaft with the turns progressing away from the chassis. After completing the installation, rotate the drive shaft a few turns to take up the slack in the cord.

©John F. Rider

MODEL 94WG-2745A

ALIGNMENT PROCEDURE

AM STAGES

The following is required for aligning:
An All Wave Signal Generator Which Will Provide an Accurately Calibrated Signal at the Test Frequencies as Listed.
Output Indicating Meter, Non-Metallic Screwdriver, Dummy Antennas —.1 mf, 200 mmf.
Volume Control—Maximum all Adjustments
Connect Radio Chassis to Ground Post of Signal Generator with a Short Heavy Lead.
Allow Chassis and Signal Generator to "Heat Up" for Several Minutes.

SIGNAL GENERATOR							
	FREQUENCY SETTING	CONNECT GENERATOR OUTPUT TO	THROUGH DUMMY ANTENNA	BAND SWITCH SETTING	GANG CONDENSER SETTING	ADJUST	ADJUST FOR
I-F	455 kc	12AT7 Pin 7 and Chassis	.1 mf	Broadcast	Rotor Fully Open	2nd I-F Pri. & Sec. (1) & (2) 1st I-F Pri. & Sec. (3) & (4)	Maximum Output
Broadcast	1620 kc	External ant. lead	200 mmf	Broadcast	Rotor Fully Open	Broadcast Oscillator C-33	
	1400 kc	External ant. lead	200 mmf	Broadcast	Turn Rotor to Max. Output	Broadcast Interstage C-29	
	1400 kc	External ant. lead	200 mmf	Broadcast	Set pointer to 1400 kc See Note A	Loop Antenna C-48	

Note A—If the pointer is not at 1400 KC on dial, reset pointer at the 1400 KC mark on the dial scale.

FM STAGES

The following equipment is required for aligning:
An accurately calibrated signal generator providing unmodulated signals at the test frequencies listed below.
Non-metallic screwdriver.
Dummy Antennas and I-F Loading Resistor—.01 mf, 300 ohms and 1000 ohms.
Zero center scale DC vacuum tube voltmeter having a range of approximately 3 volts.
(If a zero center scale meter is not available, a standard scale vacuum tube voltmeter may be used by reversing the meter connections for negative readings.)
Allow chassis and signal generator to warm up for several minutes.

	SIGNAL GENERATOR						
	FREQUENCY SETTING	CONNECT GENERATOR OUTPUT TO	THROUGH DUMMY ANTENNA	BAND SWITCH SETTING	GANG CONDENSER SETTING	ADJUST	ADJUST FOR
Discriminator	10.7 MC Note B	6BA6 2nd I-F Pin 1 and Chassis	.01 mf	FM	Rotor Fully Open	Disc. Pri. (5) Note A	Maximum Deflection
	10.7 MC Note B	6BA6 2nd I-F Pin 1 and Chassis	.01 mf	FM	Rotor Fully Open	Disc. Sec. (6) Note C	Zero Center
I-F	10.7 MC Note F	6BA6 1st I-F Pin 1 and Chassis	.01 mf	FM	Rotor Fully Open	2nd I-F Pri. Note A and D (7) 2nd I-F Sec. Note A and E (8)	Maximum Deflection
Discriminator	10.7 MC Note F	6BA6 1st I-F Pin 1 and Chassis	.01 mf	FM	Rotor Fully Open	Disc. Pri. (5) Note A	Maximum Deflection
	10.7 MC Note F	6BA6 1st I-F Pin 1 and Chassis	.01 mf	FM	Rotor Fully Open	Disc. Sec. (6) Note C	Zero Center
	10.7 MC Note F	FM-RF Gang Condenser terminal	.01 mf	FM	Rotor Fully Open	1st I-F Pri. (9) 1st I-F Sec. (10) Notes A, D & E	Maximum Deflection
			Recheck I-F Adjustments in order given				
R-F & Osc.	108.4 Note H	Disconnect dipole and connect generator to dipole terminals with resistor in series	300 ohms	FM	Rotor Fully Open	Oscillator C-35 Note G	Maximum Deflection
	104.5	Disconnect dipole and connect generator to dipole terminals with resistor in series	300 ohms	FM	Tune Rotor for Max. AVC voltage	FM Interstage C-32	Maximum Deflection
	104.5	Disconnect dipole and connect generator to dipole terminals with resistor in series	300 ohms	FM	Tune Rotor for Max. AVC voltage	Ant. C-47	Maximum Deflection

NOTE A—Test Equipment connections are as given in the table. The zero center scale DC vacuum tube voltmeter is to be connected between chassis ground and the AVC line at the junction of resistor R-22 and condenser C-18 for all adjustments except the discriminator secondary adjustment, for which See Note C.

NOTE B—A signal of .1 volt must be fed into the receiver for this adjustment.

NOTE C—Disconnect zero center DC vacuum tube voltmeter from AVC and connect to junction of R-18 and C-62. Adjust for zero voltage indication.

NOTE D—Before adjusting Pri. core connect 1000 ohm load resistor across the 2nd I.F. secondary terminals. Input may have to be increased to .1 volt if receiver is *badly* mis-aligned.

NOTE E—Disconnect 1000 ohm load resistor from secondary terminals and connect across the 2nd I.F. primary terminals. Input may have to be increased to .1 volt if receiver is *badly* mis-aligned.

NOTE F—Input can be reduced to 10,000 microvolts.

NOTE G—Oscillator frequency above signal frequency.

NOTE H—Remove the 1000 ohm load resistor before attempting to check the R-F and oscillator adjustments.

©John F. Rider

MODEL 94WG-2745A

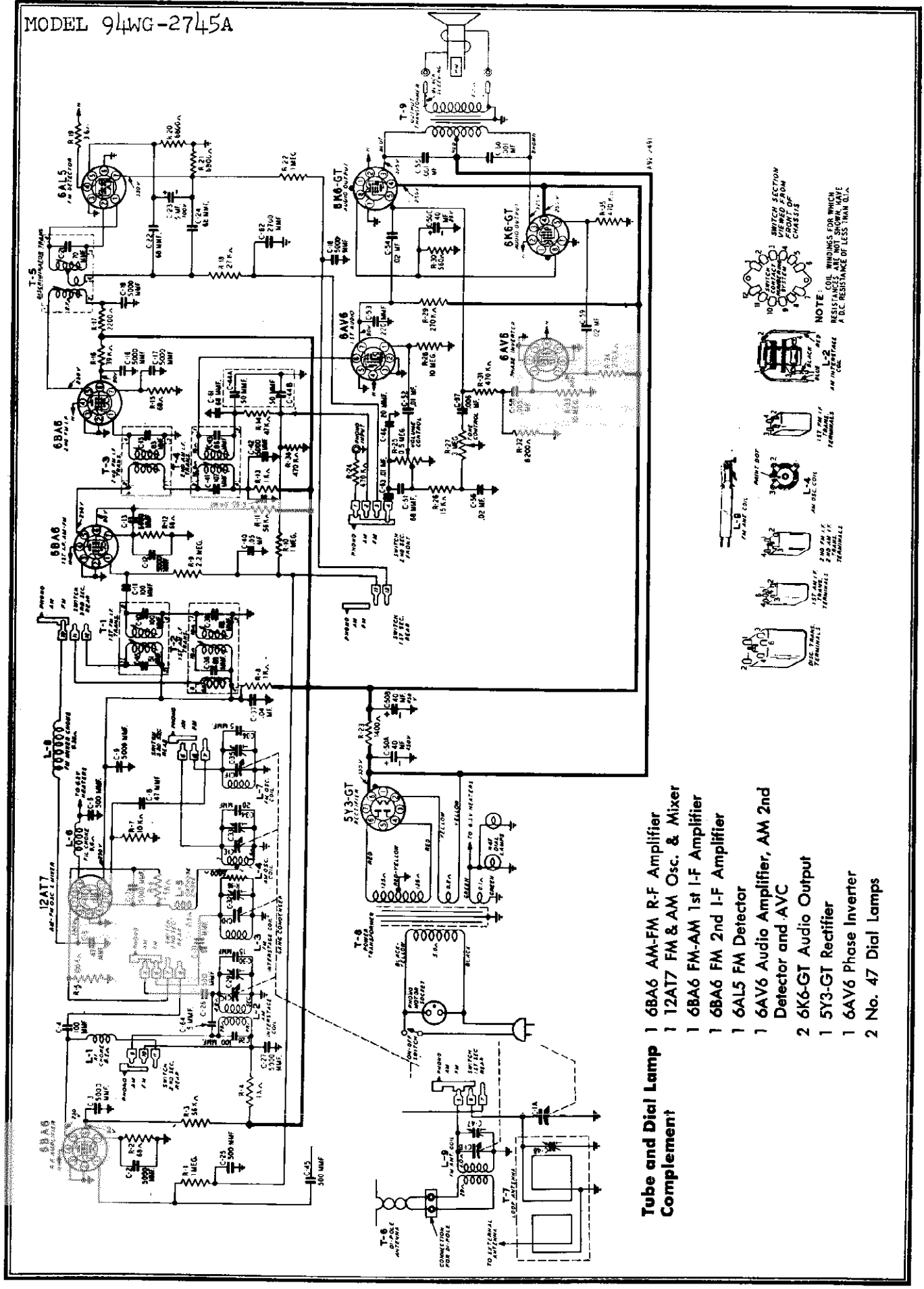

Tube and Dial Lamp Complement

- 1 6BA6 AM-FM R-F Amplifier
- 1 12AT7 FM & AM Osc. & Mixer
- 1 6BA6 FM-AM 1st I-F Amplifier
- 1 6BA6 FM 2nd I-F Amplifier
- 1 6AL5 FM Detector
- 1 6AV6 Audio Amplifier, AM 2nd Detector and AVC
- 2 6K6-GT Audio Output
- 1 5Y3-GT Rectifier
- 1 6AV6 Phase Inverter
- 2 No. 47 Dial Lamps

©John F. Rider

©John F. Rider

REPLACEMENT PARTS LIST

CAPACITORS

Ref. No.	Part No.	Description	Qty. Used in Set
C-1	14A207	Gang Condenser	1
C-2, C-3, C-7, C-9, C-12, C-13, C-16, C-17, C-18, C-19, C-27, C-42	47X507	5000 mmf Ceramic	12
C-4	47X497	100 mmf Ceramic	1
C-5	47X499	47 mmf Ceramic	1
C-6, C-25, C-26, C-45	47X496	500 mmf Ceramic	4
C-8	47X498	47 mmf Ceramic	1
C-10, C-65	Part of T-1 1st I-F (FM)		
C-11, C-28	47X550	100 mmf Ceramic	2
C-15	Part of T-3 2nd I-F (FM)		
C-21	Part of T-5 Discriminator		
C-22, C-24, C-31, C-51	47X501	68 mmf Ceramic	4
C-23	45X361	5 mf 100 V Dry Electrolytic	1
C-29, C-32, C-33, C-47	Part of Gang Condenser		
C-30	47X552	15 mmf Ceramic	1
C-34, C-46	47X516	20 mmf Ceramic	2
C-35	26A489	1-8 mmf Trimmer	1
C-36, C-64	47X549	5 mmf Ceramic	2
C-37, C-65	F66403	.04 mf 600 V Tubular	2
C-38, C-39	Part of T-2 1st I-F (AM)		
C-40	B66503	.05 mf 200 V Tubular	1
C-41, C-43	Part of T-4 2nd I-F (AM)		
C-44A, C-44B	47X112	50-50 mmf Dual Mica	1
C-48	Part of T-7 (Loop Antenna)		
C-50A, C-50B, C-50C	45X374	40 mf 450 V, 40 mf 450 V, 40 mf 25 V Dry Electrolytic	1
C-52	F66103	.01 mf 600 V Tubular	1
C-53	47X468	220 mmf Ceramic	1
C-54, C-59	F66203	.02 mf 600 V Tubular	2
C-55, C-60	F66102	.001 mf 600 V Tubular	2
C-56	B66203	.02 mf 200 V Tubular	1
C-57	F66602	.006 mf 600 V Tubular	1
C-58	B66502	.005 mf 200 V Tubular	1
C-61	47X471	68 mmf Ceramic	1
C-62	47X492	2700 mmf Molded Mica	1
C-63	46X328	.01 mf 120 V Tubular	1

RESISTORS

		Ohms	Watts		
R-1, R-10, R-22	B85105	1 meg.	0.5	Carbon	3
R-2, R-12, R-15	B83680	68	0.5	Carbon	3
R-3, R-11	B84563	56K	0.5	Carbon	2
R-4, R-6, R-8, R-13	B84102	1000	0.5	Carbon	4
R-5	B85104	100K	0.5	Carbon	1
R-7	B84103	10K	0.5	Carbon	1
R-9	B85225	2.2 meg.	0.5	Carbon	1
R-14	B85473	47K	0.5	Carbon	1
R-16	C84393	39K	1.0	Carbon	1
R-17	B85222	2200	0.5	Carbon	1
R-18	B84273	27K	0.5	Carbon	1
R-19	43X233	3.6	0.5	Wire wound	1
R-20, R-21	B83682	6800	0.5	Carbon	2
R-23	43X242	1400	5.0	Wire wound	1
R-24, R-31, R-35, R-38	B85474	470K	0.5	Carbon	4
R-25	36X383	0.5 meg.		Volume Control	1
R-26	B85153	15K	0.5	Carbon	1
R-27	40X285	3 meg.		Tone Control	1
R-28, R-33	B85106	10 meg.	0.5	Carbon	2
R-29, R-34	B85274	270K	0.5	Carbon	2
R-30	D83561	560	2.0	Carbon	1
R-32	B84822	8200	0.5	Carbon	1
R-36	B84682	6800	0.5	Carbon	1

TRANSFORMERS AND COILS

L-1, L-5	35A5	Insulated Choke	2
L-2	9A2025	Interstage Coil (AM)	1
L-3	9A2024	Interstage Coil (FM)	1
L-4	9A2022	Oscillator Coil (AM)	1
L-6	9A1881	Filament Choke	1
L-7	9A2023	Oscillator Coil (FM)	1
L-8	35A7	Mixer Choke (FM)	1
L-9	9A2027	Antenna Coil (FM)	1
T-1	9A2043	1st I-F Trans. (FM)	1
T-2	9A2029	1st I-F Trans. (AM)	1
T-3	9A2030	2nd I-F Trans. (FM)	1
T-4	9A2042	2nd I-F Trans. (AM)	1
T-5	9A1970	Discriminator Coil	1
T-6	9A2004	Dipole Antenna	1
T-7	9A2041	"B" Range Loop Antenna	1
T-8	53X286	Power Transformer	1
T-9	51X142	Output Transformer	1

TYPE V-28A163 RECORD CHANGER PARTS

V-2727B	Motor Assembly, 60 Cycles 105-125 Volts AC	1
Shure P-77	Crystal Cartridge	1
	Needle, Microgroove (Red)	1
	Needle, Regular	1

(When ordering needles, specify part number and letter stamped on cartridge)

DIAL AND DRIVE ASSEMBLY

58X723	Dial Glass	1
25X1634	Dial Bracket	1
41X87	Dial Light Reflector	2
15X246	Pointer	1
10X54	Drive Cord Assembly	1
28X113	Drive Cord Spring	1
7A103	No. 47 Pilot Light	2
7A199	Pilot Light Socket Assembly	1
19X192	"C" Washer (mtg. Drive Shaft)	2
26X512	Drive Shaft	1
6X67	Rubber Grommet	4

MISCELLANEOUS

12A490	Speaker 12" P.M.	1
3A304	Phono Motor Socket	1
3A305	Phono Socket—Single Pin Tip	1
3A435	Tube Socket—Octal (8 prong) Molded	3
3A436	Tube Socket—Noval (miniature)	1
32X388	Tube Shield Noval	1
32X390	Tube Shield (miniature)	1
3A439	Tube Socket (miniature)	6
2A391	Band Change Switch	1
13X546	Line Cord & Plug Assembly	1
10A713	Knobs	4
4X1049	Escutcheon	1

MODEL 94WG-2746A,
94WG-2746B

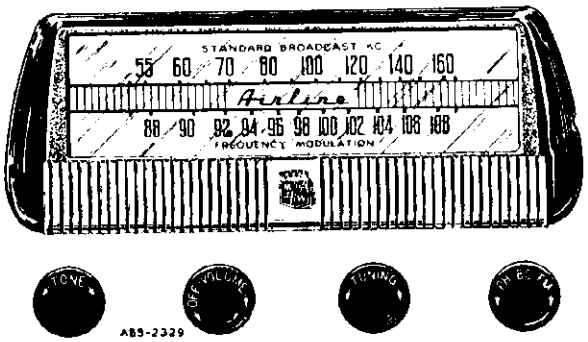

GENERAL DESCRIPTION

This is a two band, six tube (plus rectifier tube) AM and FM receiver with automatic record changer. The I-F stages use high gain miniature type tubes. Built-in Air Wave Aerials are provided for the FM and Broadcast bands. Features include, compensator circuits to prevent oscillator drift, automatic volume control, beam power output stage, PM dynamic loud speaker and an electrostatic shield in the power transformer to reduce power line noise.

The receiver and record changer are housed in a console combination cabinet with controls provided for tuning, volume, tone and band or phono selection.

ELECTRICAL SPECIFICATIONS

Power Supply	105-125 volts AC 60 cycles, 60 watts. 70 watts with record changer
Frequency Ranges	Broadcast 540-1600 KC Frequency Modulation 88-108 MC
Intermediate Frequency	AM—455KC FM—10.7 MC
Selectivity	AM—45 KC broad at 1000 times signal, measured at 1000 KC I.F. FM—200 KC broad at 2 times down I.F. FM—950 KC broad at 200 times down
AM Sensitivity	(For .5 watt output with external antenna) 10 microvolts average
FM Sensitivity	(For .5 watt output) 100 microvolts average
Power Output	4.5 watts maximum 2.5 watts 10% distortion
Loud Speaker	8" PM Dynamic
Voice Coil Impedance	3.2 ohms 400 cycles
Record Changer	See Manual No. 5077A
Tube and Dial Lamp Complement	1 6BA7 FM-AM Converter 1 6BA6 1st I-F Amplifier 1 6BA6 2nd I-F Amplifier 1 6AL5 FM Discriminator 1 6AV6 Audio Amplifier, AM 2nd Detector and AVC 1 6V6GT Audio Output 1 5Y3GT Rectifier 2 No. 47 Dial Lamps

Issue "B" chassis differ from the issue "A" chassis by a change in value of Condenser C-6 from 12 MMF to 15 MMF, the addition of Condenser C-40 and Oscillator Filament Chokes L-5 and L-6.

REMOVE FROM PARTS LIST AND SCHEMATIC

C-6	47X522	12 MMF	Ceramic Condenser

ADD TO PARTS LIST AND SCHEMATIC

C-6	47X552	15 MMF	Ceramic Condenser
C-40	47X509	47 MMF	Ceramic Condenser
L-5) L-6)	9A2044		Oscillator Filament Choke

The circuit connections of the condenser and chokes are shown in the partial schematic below.

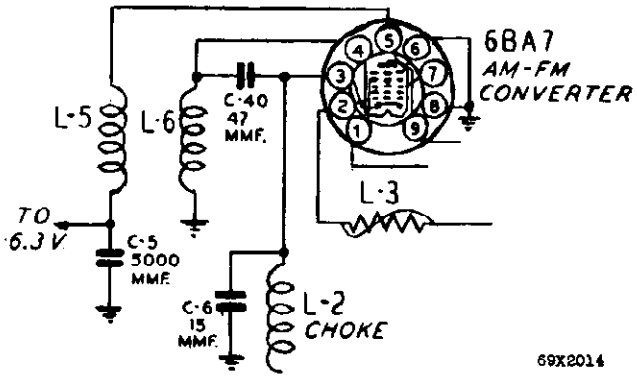

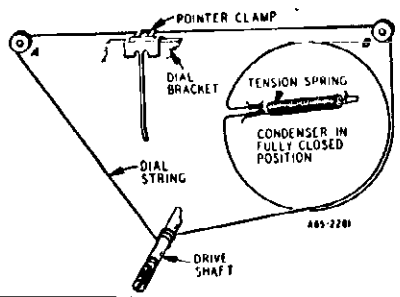

DRIVE CORD REPLACEMENT

DIAL POINTER CORD

Use a new 10X66 drive cord assembly or a new length of cord 46 inches long for the installation. Install the cord as shown in the illustration, winding three turns clockwise around the drive shaft with the turns progressing away from the chassis. After completing the installation rotate the drive shaft a few turns to take up the slack in the cord.

©John F. Rider

MODEL 94WG-2746A,
94WG-2746B

RECEIVER STAGE SENSITIVITIES

AM AND AUDIO STAGES

The table below lists the sensitivity at the input of each stage. The receiver should be tuned to 1000 KC for all readings. All measurements are based on an output of .5 watt. This may be measured by disconnecting the speaker voice coil and substituting a 3.2 ohm, 5 watt resistor across the secondary winding of the output transformer. A reading of 1.26 volts across this resistor will be equivalent to a .5 watt output.

The volume control must be set to maximum.

The signal source must be an accurately calibrated signal generator capable of supplying both 1000 KC and 455 KC signals modulated 30% with a 400 cycle audio signal. Variations in sensitivity of Plus or Minus 25% are usually permissible.

SIGNAL GENERATOR				INPUT FOR .5 WATT OUTPUT
FREQUENCY	COUPLING CAPACITOR	CONNECTION TO RECEIVER	GROUND CONNECTION	
1000 KC	200 mmf or RMA Dummy Antenna	External Antenna Clip	Chassis	10 Microvolts
1000 KC	.01 mf	6BA7 Converter Pin 7	Chassis	40 Microvolts
455 KC	.01 mf	6BA7 Converter Pin 7	Chassis	35 Microvolts
455 KC	.01 mf	6BA6 1st I-F Pin 1	Chassis	2000 Microvolts
400 cycles	.01 mf	6AV6 1st A-F Pin 1	Chassis	.07 Volt
400 cycles	.01 mf	6V6GT Output Pin 5	Chassis	3.2 Volts

FM STAGES

The table below lists the sensitivity for the FM stages of the receiver. The receiver must be tuned to 98 MC for all readings. Measurements are based on a .5 watt output the same as for the AM and Audio stage measurements.

The signal source must be an accurately calibrated signal generator capable of supplying a 98 MC signal modulated by a 400 cycle audio signal. For these measurements the generator must be adjusted for a 22.5 KC deviation. This will correspond to 30% AM modulation.

SIGNAL GENERATOR				INPUT FOR .5 WATT OUTPUT
FREQUENCY	COUPLING TO RECEIVER	CONNECTION TO RECEIVER	GROUND CONNECTION	
98 MC	300 ohms	External Antenna Terminal	Chassis	100 Microvolts
10.7 MC	.01 mf	6BA6 1st I-F Pin 1	Chassis	600 Microvolts
10.7 MC	2500 mmf	6BA6 2nd I-F Pin 1	Chassis	23,000 Microvolts

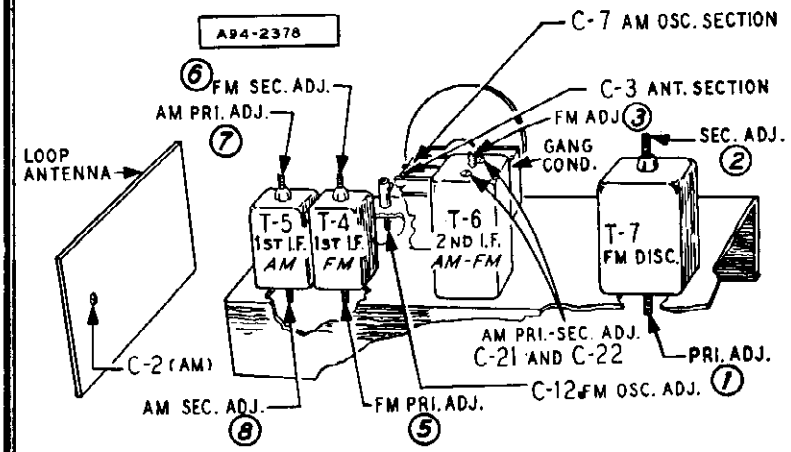

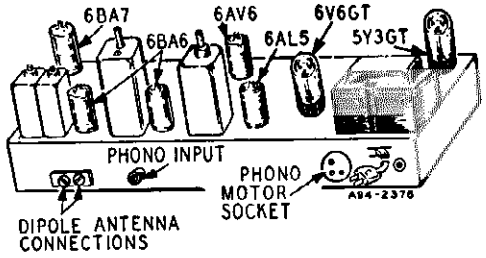

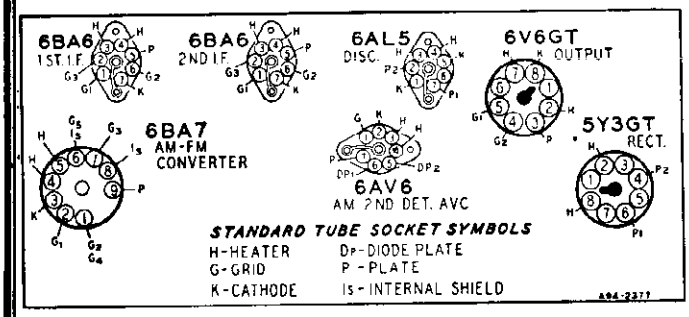

TUBE SOCKET VOLTAGES

Socket voltages are shown on the schematic diagram at the tube socket terminals. All voltages are between the socket terminal and chassis ground. Plate, screen and cathode voltages were taken with a 1000 ohm-per-volt meter with a 300 volt scale used for plate and screen voltages. Audio grid voltages were read with a vacuum tube volt-meter. Conditions of measurement are:

Line voltage.....117 Volts AC
Signal Input..... None

A variation of ±10% is usually permissible.

© John F. Rider

MODEL 94WG-2746A,
94WG-2746B

ALIGNMENT PROCEDURES

AM STAGES

The following is required for aligning:
An All Wave Signal Generator Which Will Provide an Accurately Calibrated Signal at the Test Frequencies as Listed.
Output Indicating Meter, Non-Metallic Screwdriver, Dummy Antennas — .1 mf, and 50mmf.

Volume Control Maximum all Adjustments.
Connect Radio Chassis to Ground Post of Signal Generator with a Short Heavy Lead.
Allow Chassis and Signal Generator to "Heat Up" for Several Minutes.

SIGNAL GENERATOR						
FREQUENCY SETTING	CONNECT GENERATOR OUTPUT TO	THROUGH DUMMY ANTENNA	CONNECT GROUND TO	GANG CONDENSER SETTING	ADJUST	ADJUST FOR
455 KC	Control Grid 1st 6BA6 Pin No. 1	.1 mf	Chassis Base	Rotor Fully Open	2nd I.F. C-21 and C-22	Maximum Output
455 KC	Control Grid 6BA7 Pin No. 7 1st Det.	.1 mf	Chassis Base	Rotor Fully Open	1st I.F. Pri. and Sec. (7) and (8)	Maximum Output
1620 KC	Control Grid 6BA7 Pin No. 7	.1 mf	Chassis Base	Rotor Fully Open	Oscillator C-7	Maximum Output
1400 KC	External Antenna Clip	50 mmf	Chassis Base	Turn Rotor to Max. Output. Set Pointer to 1400 KC See Note A	Antenna C-2	Maximum Output

NOTE A—If the pointer is not at 1400 KC on the dial, reset pointer to the 1400 KC mark on the dial scale.

FM STAGES

The following is required for aligning:
An accurately calibrated signal generator providing unmodulated signals at the test frequencies listed below.
Non-metallic screwdriver.
Dummy Antennas and I-F Loading Resistor—2500 mmf, 300 ohms and a 3300 ohm .5 watt resistor with short leads.

Zero center scale DC vacuum tube voltmeter having a range of approximately 3 volts.
(If a zero center scale meter is not available, a standard scale vacuum tube voltmeter may be used by reversing the meter connections for negative readings).
Allow chassis and signal generator to "Heat Up" for several minutes.

	SIGNAL GENERATOR		THROUGH DUMMY ANTENNA	BAND SWITCH SETTING	GANG CONDENSER SETTING	ADJUST	ADJUST FOR
	FREQUENCY SETTING	CONNECT GENERATOR OUTPUT TO					
Discriminator	10.7 MC	6BA6 2nd I-F Pin 1 and Chassis	2500 mmf	FM	Rotor Fully Open	Disc. Pri. (1) Note A	Maximum Deflection
	10.7 MC	6BA6 2nd I-F Pin 1 and Chassis	2500 mmf	FM	Rotor Fully Open	Disc. Sec. (2) Note B	
	10.7 MC	6BA6 2nd I-F Pin 1 and Chassis	2500 mmf	FM	Rotor Fully Open	Disc. Pri. (1) Note A	Maximum Deflection
	10.7 MC	6BA6 2nd I-F Pin 1 and Chassis	2500 mmf	FM	Rotor Fully Open	Disc. Sec. (2) Note B	
I-F	10.7 MC Note E	6BA6 1st I-F Pin 1 and Chassis	2500 mmf	FM	Rotor Fully Open	2nd I-F (3) Note C	Maximum Deflection
Discriminator	10.7 MC	6BA6 2nd I-F Pin 1 and Chassis	2500 mmf	FM	Rotor Fully Open	Disc. Pri. (1) Note A	Maximum Deflection
I-F	10.7 MC	Antenna and Chassis	2500 mmf	FM	Rotor Fully Open	1st. I-F Pri. and Sec. (5) and (6) Note C	Maximum Deflection
	10.7 MC	Antenna and Chassis Solder a 3300 ohm resistor across terminals 3 and 4 of 1st. I-F trans.	2500 mmf	FM	Rotor Fully Open	1st. I-F Pri. (5) Note C	Maximum Deflection
	10.7 MC	Antenna and Chassis Note D	2500 mmf	FM	Rotor Fully Open	1st. I-F Sec. (6) Note C	Maximum Deflection
RECHECK I-F ADJUSTMENTS IN ORDER GIVEN							
Oscillator	108.4 Note F	Disconnect built-in dipole antenna and connect generator to dipole terminals with resistor in series	300 ohms	FM	Rotor Fully Open	Osc. C-12	Maximum Deflection
Antenna	104.5	Same as above	300 ohms	FM	Tune rotor for max. AVC voltage	Ant. C-3	Maximum Deflection
RECHECK ANTENNA & OSC. ADJUSTMENTS IN ORDER GIVEN							

FM ALIGNMENT NOTES

NOTE A—The zero center scale DC vacuum tube voltmeter is to be connected between chassis ground and the AVC line. A signal of .1 volt must be fed into the receiver for this adjustment.
Note output voltage on the zero center DC vacuum tube voltmeter

NOTE B—Disconnect zero center DC vacuum tube voltmeter from AVC and connect it at the audio takeoff point at the 27 K ohm resistor (R-11) and its junction with the terminal strip. Adjust for zero voltage indication.

NOTE C—Connect zero center DC vacuum tube voltmeter as in Note A. Adjust input to give same output on the zero center DC vacuum tube voltmeter as in Note A.

NOTE D—Unsolder 3300 ohm resistor from terminals 3 and 4 of 1st I-F transformer and resolder across terminals 1 and 2.

NOTE E—2nd I F trimmers (AM) must be aligned before attempting to adjust 2nd I-F (FM) tuning slug.

NOTE F—Remove the 3300 ohm load resistor before attempting to check the antenna and oscillator adjustments.

© John F. Rider

MODEL 94WG-2746A,
94WG-2746B

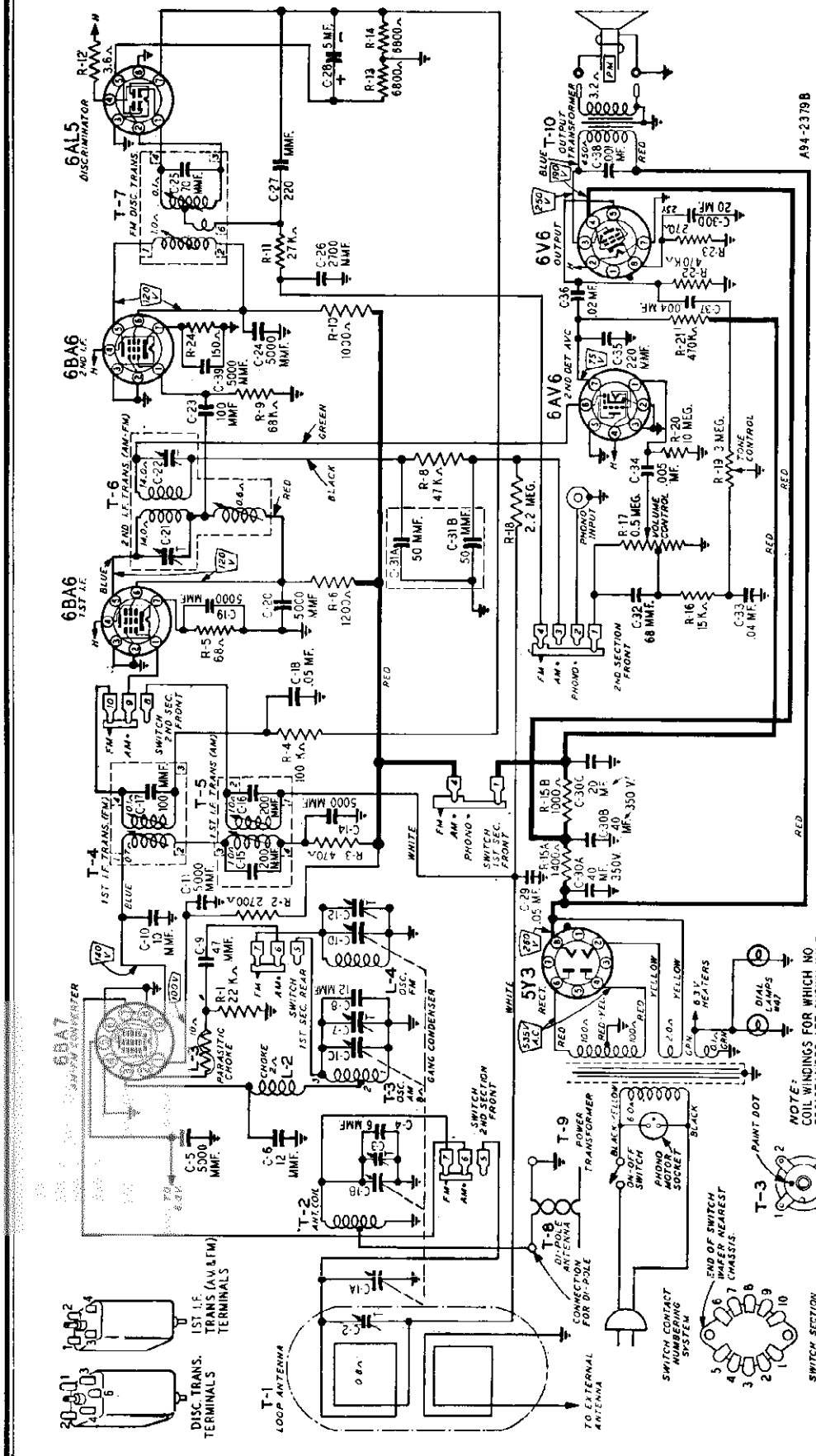

REPLACEMENT PARTS LIST

DIAL AND DRIVE ASSEMBLY

58X715	Dial Glass	1
24X446	Idler Pulley	2
15X241	Pointer	1
25X1559	Dial Bracket	1
7A103	No. 47 Pilot Light Bulb	2
7A202	Pilot Light Socket Assembly	1
26X486	Drive Shaft	1
41X26	Reflector, Dial Light	2
28X113	Drive Cord Tension Spring	1
10X66	Drive Cord Assembly	1
19X192	"C" Washer (Mtg. drive shaft)	2
6X21	Rubber Grommet (Mtg. gang cond.)	3
20X260	Condenser Cushion Stud (Mtg. gang condenser)	3

TYPE C-28A162 RECORD CHANGER PARTS

C-7R3	Motor Assembly, 60 Cycles 105-125 Volts AC	1
C-8R4-2	Crystal Cartridge	1
	Needle	1
	(When ordering needles, specify part number and letter stamped on cartridge)	

© John F. Rider

REPLACEMENT PARTS LIST

Use only genuine factory tested parts to insure service jobs you can depend on and to obtain original set performance

CAPACITORS

Ref. No.	Part No.	Description	Qty. Used in Set
C-1A, C-1B, C-1C, C-1D	14A204	Gang Condenser Assembly	1
C-2	17A256	2-24 mmf Trimmer	1
C-3, C-7		Part of Gang Condenser	
C-4	47X521	6 mmf Ceramic	1
C-5, C-11, C-14, C-19, C-20, C-24, C-39	47X507	5000 mmf Silvered Ceramic	7
C-6, C-8	47X522	12 mmf Ceramic	2
C-9	47X517	47 mmf Ceramic	1
C-10	47X512	10 mmf Ceramic	1
C-12	17A255	1-8 mmf Trimmer	1
C-15, C-16		Part of T-5 (1st I.F. Trans.—AM)	
C-17		Part of T-4 (1st I.F. Trans.—FM)	
C-18, C-29	B66503	.05 mf 200 V Tubular	2
C-21, C-22		Part of T-6 (2nd I.F. Trans.—AM-FM)	
C-23	47X497	100 mmf Ceramic	1
C-25		Part of T-7 (Discriminator Trans.)	
C-26	47X492	2700 mmf Molded Mica	1
C-27, C-35	47X468	220 mmf Ceramic	2
C-28	45X361	5 mf 100 V Dry Electrolytic	1
C-30A	45X359	40 mf 350 V	
C-30B		40 mf 350 V	
C-30C		20 mf 350 V Dry Electrolytic	1
C-30D		20 mf 25 V	
C-31A, C-31B	47X112	50-50 mmf Dual Mica	1
C-32	47X471	68 mmf Molded Mica	1
C-33	B66403	.04 mf 200 V Tubular	1
C-34	D66502	.005 mf 400 V Tubular	1
C-36	D66203	.02 mf 400 V Tubular	1
C-37	B66402	.004 mf 200 V Tubular	1
C-38	H66102	.001 mf 800 V Tubular	1

RESISTORS

Ref. No.	Part No.	Ohms	Watts		Qty. Used in Set
R-1	B84223	22 K	0.5	Carbon	1
R-2	B83272	2700	0.5	Carbon	1
R-3	B84471	470	0.5	Carbon	1
R-4	B85104	100 K	0.5	Carbon	1
R-5	B83680	68	0.5	Carbon	1
R-6	B84122	1200	0.5	Carbon	1
R-8	B85473	47 K	0.5	Carbon	1
R-9	B85683	68 K	0.5	Carbon	1
R-10	B84102	1000	0.5	Carbon	1
R-11	B84273	27 K	0.5	Carbon	1
R-12	43X233	3.6	0.5	Wire Wound	1
R-13, R-14	B84682	6800	0.5	Carbon	2
R-15A	43X224	1400	6.0	Wire Wound	1
R-15B		1000	4.0		
R-16	B84153	15 K	0.5	Carbon	1
R-17	36X372	.5 meg.		Volume Control	1
R-18	B85225	2.2 meg.	0.5	Carbon	1
R-19	40X285	3 meg.		Tone Control	1
R-20	B85106	10 meg.	0.5	Carbon	1
R-21, R-22	B85474	470 K	0.5	Carbon	2
R-23	B84271	270	0.5	Carbon	1
R-24	B84151	150	0.5	Carbon	1

TRANSFORMERS AND COILS

Ref. No.	Part No.	Description	Qty. Used in Set
L-2	35A5	Insulated Choke	1
L-3	9A1940	Parasitic Choke Assembly	1
L-4	9A2021	Oscillator Coil Assembly (FM)	1
T-1	9A2047	"B" Range Loop Antenna Assem.	1
T-2	9A1956	Antenna Coil Assembly	1
T-3	9A1997	Oscillator Coil Assembly (AM)	1
T-4	9A2037	1st I.F. Trans. (FM)	1
T-5	9A2038	1st I.F. Trans. (AM)	1
T-6	9A1999	2nd I.F. Trans. (AM-FM)	1
T-7	9A2036	Discriminator Coil Assembly	1
T-8	9A2004	Dipole Antenna	1
T-9	53X290	Power Transformer	1
T-10	51X134	Output Transformer	1

MISCELLANEOUS

Part No.	Description	Qty. Used in Set
12A477	8" P.M. Speaker	1
3A303	Tube Socket—Octal (8 prong) Molded	2
3A426	Tube Socket—Miniature	4
3A443	Tube Socket—Miniature (for AM-FM Converter Tube)	1
3A304	Phono Motor Socket	1
3A305	Phono Socket—Single Pin Tip	1
2A384	Band Change Switch	1
13X546	Line Cord and Plug Assembly	1
10A695	Knob (Tuning)	1
10A696	Knob (Volume Control & Switch)	1
10A697	Knob (Tone)	1
10A698	Knob (Phono—BC—FM)	1
4X1020	Escutcheon	1

©John F. Rider

MODEL 94WG-2747A

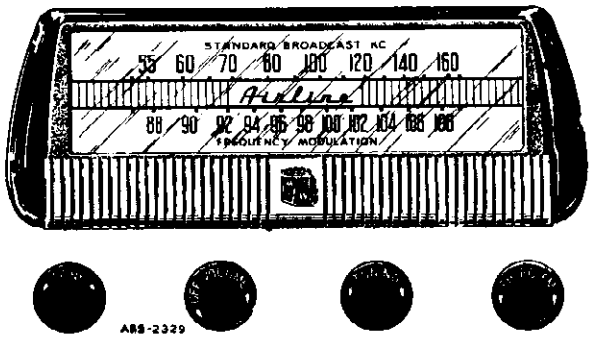

ELECTRICAL SPECIFICATIONS

Power Supply.....105-125 volts AC 60 cycles, 60 watts. 80 watts with record changer

Frequency Ranges.....Broadcast 540-1600 KC
Frequency Modulation 88-108 MC

Intermediate Frequency....AM—455KC
FM—10.7 MC

Selectivity.....AM—45 KC broad at 1000 times signal, measured at 1000 KC
I.F. FM—200 KC broad at 2 times down
I.F. FM—950 KC broad at 200 times down

AM Sensitivity.....(For .5 watt output with external antenna) 10 microvolts average

FM Sensitivity.....(For .5 watt output)
100 microvolts average

Power Output.....4.5 watts maximum
2.5 watts 10% distortion

Loud Speaker.....8" PM Dynamic

Voice Coil Impedance.....3.2 ohms 400 cycles

DRIVE CORD REPLACEMENT

DIAL POINTER CORD

Use a new 10X66 drive cord assembly or a new length of cord 46 inches long for the installation. Install the cord as shown in the illustration, winding three turns clockwise around the drive shaft with the turns progressing away from the chassis. After completing the installation rotate the drive shaft a few turns to take up the slack in the cord.

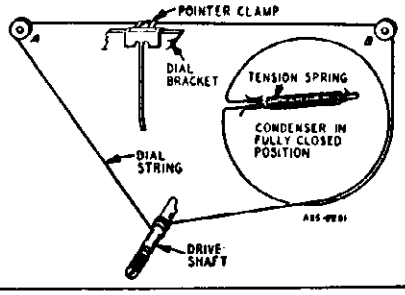

Ref. No.	Part No.	Description	Qty. Used in Set
		CAPACITORS	
C-1A, C-1B, C-1C, C-1D	14A204	Gang Condenser Assembly	1
C-2	17A256	2-24 mmf Trimmer	1
C-3, C-7		Part of Gang Condenser	
C-4	47X521	6 mmf Ceramic	1
C-5, C-11, C-14, C-19, C-20, C-24, C-39	47X507	5000 mmf Silvered Ceramic	7
C-6	47X552	15 mmf Ceramic	1
C-8	47X522	12 mmf Ceramic	1
C-9	47X517	47 mmf Ceramic	1
C-10	47X512	10 mmf Ceramic	1
C-12	17A255	1-8 mmf Trimmer	1
C-15, C-16		Part of T-5 (1st I.F. Trans.—AM)	
C-17		Part of T-4 (1st I.F. Trans.—FM)	
C-18, C-29	B66503	.05 mf 200 V Tubular	2
C-21, C-22		Part of T-6 (2nd I.F. Trans.—AM-FM)	
C-23	47X497	100 mmf Ceramic	1
C-25		Part of T-7 (Discriminator Trans.)	
C-26	47X492	2700 mmf Molded Mica	1
C-27, C-35	47X468	220 mmf Ceramic	2
C-28	45X361	5 mf 100 V Dry Electrolytic	1
C-30A, C-30B, C-30C, C-30D	45X359	40 mf 350 V, 40 mf 350 V, 20 mf 350 V, 20 mf 25 V Dry Electrolytic	1
C-31A, C-31B	47X112	50-50 mmf Dual Mica	1
C-32	47X471	68 mmf Molded Mica	1
C-33	B66403	.04 mf 200 V Tubular	1
C-34	D66502	.005 mf 400 V Tubular	1
C-36	D66203	.02 mf 400 V Tubular	1
C-37	B66402	.004 mf 200 V Tubular	1
C-38	H66102	.001 mf 800 V Tubular	1
C-40	47X509	47 mmf Ceramic	1

©John F. Rider

MODEL 94WG-2747A

REPLACEMENT PARTS LIST (continued)

Ref. No.	Part No.	Description	Qty. Used in Set

RESISTORS

Ref. No.	Part No.	Ohms	Watts	Description	Qty. Used in Set
R-1	B84223	22 K	0.5	Carbon	1
R-2	B83272	2700	0.5	Carbon	1
R-3	B84471	470	0.5	Carbon	1
R-4	B85104	100 K	0.5	Carbon	1
R 5	B83680	68	0.5	Carbon	1
R 6	B84122	1200	0.5	Carbon	1
R-8	B85473	47 K	0.5	Carbon	1
R-9	B85683	68 K	0.5	Carbon	1
R 10	B84102	1000	0.5	Carbon	1
R-11	B84273	27 K	0.5	Carbon	1
R-12	43X233	3.6	0.5	Wire Wound	1
R-13, R-14	B84682	6800	0.5	Carbon	2
R-15A	43X224	1400	6.0	Wire Wound	1
R-15B		1000	4.0		
R-16	B84153	15 K	0.5	Carbon	1
R-17	36X372	.5 meg.		Volume Control	1
R-18	B85225	2.2 meg.	0.5	Carbon	1
R-19	40X285	3 meg.		Tone Control	1
R-20	B85106	10 meg.	0.5	Carbon	1
R-21, R-22	B85474	470 K	0.5	Carbon	2
R-23	B84271	270	0.5	Carbon	1
R-24	B84151	150	0.5	Carbon	1

TRANSFORMERS AND COILS

L-2	35A5	Insulated Choke	1
L-3	9A1940	Parasitic Choke Assembly	1
L-4	9A2021	Oscillator Coil Assembly (FM)	1
L-5, L-6	9A2044	Oscillator Filament Choke	2
T-1	9A2047	"B" Range Loop Antenna Assem.	1
T-2	9A1956	Antenna Coil Assembly	1
T-3	9A1997	Oscillator Coil Assembly (AM)	1
T-4	9A2037	1st I.F. Trans. (FM)	1
T-5	9A2038	1st I.F. Trans. (AM)	1
T-6	9A1999	2nd I.F. Trans. (AM-FM)	1
T-7	9A2036	Discriminator Coil Assembly	1
T-8	9A2004	Dipole Antenna	1
T-9	53X290	Power Transformer	1
T-10	51X134	Output Transformer	1

MISCELLANEOUS

12A477	8" P.M. Speaker	1
3A303	Tube Socket—Octal (8 prong) Molded	2
3A426	Tube Socket—Miniature	4
3A443	Tube Socket—Miniature (for AM-FM Converter Tube)	1
3A304	Phono Motor Socket	1
3A305	Phono Socket—Single Pin Tip	1
2A384	Band Change Switch	1
13X546	Line Cord and Plug Assembly	1
10A695	Knob (Tuning)	1
10A696	Knob (Volume Control & Switch)	1
10A697	Knob (Tone)	1
10A698	Knob (Phono—BC—FM)	1
4X1020	Escutcheon	1

DIAL AND DRIVE ASSEMBLY

58X715	Dial Glass	1
24X446	Idler Pulley	2
15X241	Pointer	1
25X1569	Dial Bracket	1
7A103	No. 47 Pilot Light Bulb	2
7A202	Pilot Light Socket Assembly	1
26X486	Drive Shaft	1
41X26	Reflector, Dial Light	2
28X113	Drive Cord Tension Spring	1
10X66	Drive Cord Assembly	1
19X192	"C" Washer (Mtg. drive shaft)	2
6X21	Rubber Grommet (Mtg. gang cond.)	3
20X260	Condenser Cushion Stud (Mtg. gang condenser)	3

TYPE V-28A163 RECORD CHANGER PARTS

V-2727B	Motor Assembly, 60 Cycles 105-125 Volts AC	1
Shure P-77	Crystal Cartridge	1
	Needle, Microgroove (Red)	1
	Needle, Regular	1

(When ordering needles, specify part number and letter stamped on cartridge.)

©John F. Rider

MODEL 94WG-2747A

RECEIVER STAGE SENSITIVITIES

AM AND AUDIO STAGES

The table below lists the sensitivity at the input of each stage. The receiver should be tuned to 1000 KC for all readings. All measurements are based on an output of .5 watt. This may be measured by disconnecting the speaker voice coil and substituting a 3.2 ohm, 5 watt resistor across the secondary winding of the output transformer. A reading of 1.26 volts across this resistor will be equivalent to a .5 watt output.

The volume control must be set to maximum.

The signal source must be an accurately calibrated signal generator capable of supplying both 1000 KC and 455 KC signals modulated 30% with a 400 cycle audio signal. Variations in sensitivity of Plus or Minus 25% are usually permissible.

SIGNAL GENERATOR				INPUT FOR .5 WATT OUTPUT
FREQUENCY	COUPLING CAPACITOR	CONNECTION TO RECEIVER	GROUND CONNECTION	
1000 KC	200 mmf or RMA Dummy Antenna	External Antenna Clip	Chassis	10 Microvolts
1000 KC	.01 mf	6BA7 Converter Pin 7	Chassis	40 Microvolts
455 KC	.01 mf	6BA7 Converter Pin 7	Chassis	35 Microvolts
455 KC	.01 mf	6BA6 1st I-F Pin 1	Chassis	2000 Microvolts
400 cycles	.01 mf	6AV6 1st A-F Pin 1	Chassis	.07 Volt
400 cycles	.01 mf	6V6GT Output Pin 5	Chassis	3.2 Volts

FM STAGES

The table below lists the sensitivity for the FM stages of the receiver. The receiver must be tuned to 98 MC for all readings. Measurements are based on a .5 watt output the same as for the AM and Audio stage measurements.

The signal source must be an accurately calibrated signal generator capable of supplying a 98 MC signal modulated by a 400 cycle audio signal. For these measurements the generator must be adjusted for a 22.5 KC deviation. This will correspond to 30% AM modulation.

SIGNAL GENERATOR				INPUT FOR .5 WATT OUTPUT
FREQUENCY	COUPLING TO RECEIVER	CONNECTION TO RECEIVER	GROUND CONNECTION	
98 MC	300 ohms	External Antenna Terminal	Chassis	100 Microvolts
10.7 MC	.01 mf	6BA6 1st I-F Pin 1	Chassis	600 Microvolts
10.7 MC	2500 mmf	6BA6 2nd I-F Pin 1	Chassis	23,000 Microvolts

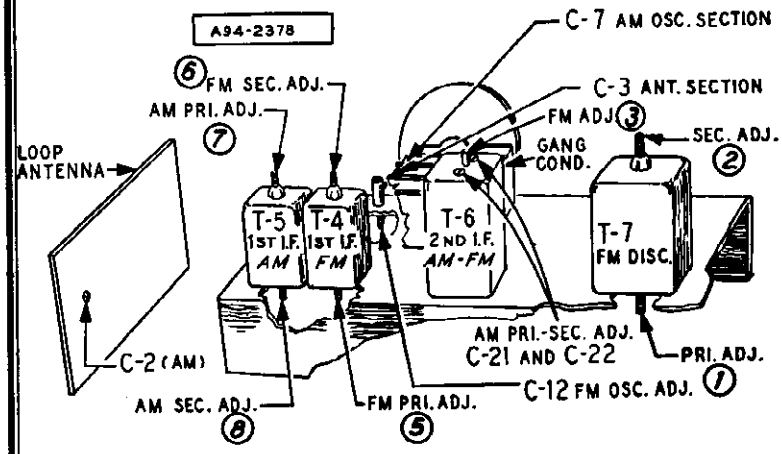

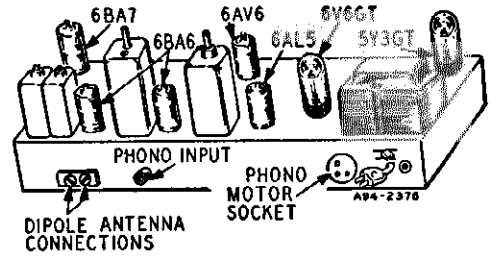

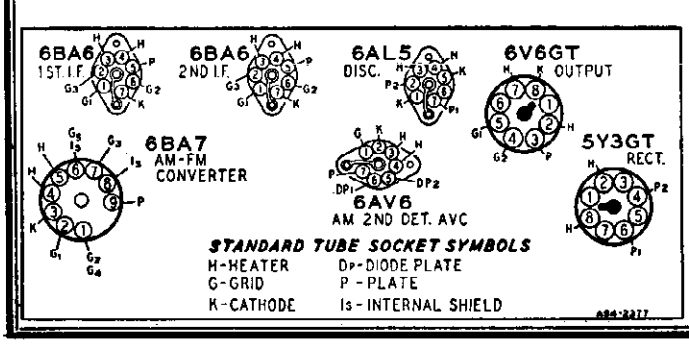

TUBE SOCKET VOLTAGES

Socket voltages are shown on the schematic diagram at the tube socket terminals. All voltages are between the socket terminal and chassis ground. Plate, screen and cathode voltages were taken with a 1000 ohm-per-volt meter with a 300 volt scale used for plate and screen voltages. Audio grid voltages were read with a vacuum tube volt-meter. Conditions of measurement are:

Line voltage.....117 Volts AC

Signal Input.....None

A variation of ±10% is usually permissible.

© John F. Rider

MODEL 94WG-2747A

ALIGNMENT PROCEDURES

AM STAGES

The following is required for aligning:
An All Wave Signal Generator Which Will Provide an Accurately Calibrated Signal at the Test Frequencies as Listed.
Output Indicating Meter, Non-Metallic Screwdriver, Dummy Antennas — .1 mf, and 50mmf.

Volume Control Maximum all Adjustments.
Connect Radio Chassis to Ground Post of Signal Generator with a Short Heavy Lead.
Allow Chassis and Signal Generator to "Heat Up" for Several Minutes.

SIGNAL GENERATOR						
FREQUENCY SETTING	CONNECT GENERATOR OUTPUT TO	THROUGH DUMMY ANTENNA	CONNECT GROUND TO	GANG CONDENSER SETTING	ADJUST	ADJUST FOR
455 KC	Control Grid 1st 6BA6 Pin No. 1	.1 mf	Chassis Base	Rotor Fully Open	2nd I.F. C-21 and C-22	Maximum Output
455 KC	Control Grid 6BA7 Pin No. 7 1st Det.	.1 mf	Chassis Base	Rotor Fully Open	1st I.F. Pri. and Sec. (7) and (8)	Maximum Output
1620 KC	Control Grid 6BA7 Pin No. 7	.1 mf	Chassis Base	Rotor Fully Open	Oscillator C-7	Maximum Output
1400 KC	External Antenna Clip	50 mmf	Chassis Base	Turn Rotor to Max. Output. Set Pointer to 1400 KC See Note A	Antenna C-2	Maximum Output

NOTE A—If the pointer is not at 1400 KC on the dial, reset pointer to the 1400 KC mark on the dial scale.

FM STAGES

The following is required for aligning:
An accurately calibrated signal generator providing unmodulated signals at the test frequencies listed below.
Non-metallic screwdriver.
Dummy Antennas and I-F Loading Resistor—2500 mmf, 300 ohms and a 3300 ohm .5 watt resistor with short leads.

Zero center scale DC vacuum tube voltmeter having a range of approximately 3 volts.
(If a zero center scale meter is not available, a standard scale vacuum tube voltmeter may be used by reversing the meter connections for negative readings).
Allow chassis and signal generator to "Heat Up" for several minutes.

SIGNAL GENERATOR			THROUGH DUMMY ANTENNA	BAND SWITCH SETTING	GANG CONDENSER SETTING	ADJUST	ADJUST FOR
	FREQUENCY SETTING	CONNECT GENERATOR OUTPUT TO					
Discriminator	10.7 MC	6BA6 2nd I-F Pin 1 and Chassis	2500 mmf	FM	Rotor Fully Open	Disc. Pri. (1) Note A	Maximum Deflection
	10.7 MC	6BA6 2nd I-F Pin 1 and Chassis	2500 mmf	FM	Rotor Fully Open	Disc. Sec. (2) Note B	
	10.7 MC	6BA6 2nd I-F Pin 1 and Chassis	2500 mmf	FM	Rotor Fully Open	Disc. Pri. (1) Note A	Maximum Deflection
	10.7 MC	6BA6 2nd I-F Pin 1 and Chassis	2500 mmf	FM	Rotor Fully Open	Disc. Sec. (2) Note B	
I-F	10.7 MC Note E	6BA6 1st I-F Pin 1 and Chassis	2500 mmf	FM	Rotor Fully Open	2nd I-F (3) Note C	Maximum Deflection
Discriminator	10.7 MC	6BA6 2nd I-F Pin 1 and Chassis	2500 mmf	FM	Rotor Fully Open	Disc. Pri. (1) Note A	Maximum Deflection
I-F	10.7 MC	Antenna and Chassis	2500 mmf	FM	Rotor Fully Open	1st. I-F Pri. and Sec. (5) and (6) Note C	Maximum Deflection
	10.7 MC	Antenna and Chassis Solder a 3300 ohm resistor across terminals 3 and 4 of 1st. I-F trans.	2500 mmf	FM	Rotor Fully Open	1st. I-F Pri. (5) Note C	Maximum Deflection
	10.7 MC	Antenna and Chassis Note D	2500 mmf	FM	Rotor Fully Open	1st. I-F Sec. (6) Note C	Maximum Deflection
RECHECK I-F ADJUSTMENTS IN ORDER GIVEN							
Oscillator	108.4 Note F	Disconnect built-in dipole antenna and connect generator to dipole terminals with resistor in series.	300 ohms	FM	Rotor Fully Open	Osc. C-12	Maximum Deflection
Antenna	104.5	Same as above	300 ohms	FM	Tune rotor for max. AVC voltage	Ant. C-3	Maximum Deflection
RECHECK ANTENNA & OSC. ADJUSTMENTS IN ORDER GIVEN							

FM ALIGNMENT NOTES

NOTE A—The zero center scale DC vacuum tube voltmeter is to be connected between chassis ground and the AVC line. A signal of .1 volt must be fed into the receiver for this adjustment.
Note output voltage on the zero center DC vacuum tube voltmeter

NOTE B—Disconnect zero center DC vacuum tube voltmeter from AVC and connect it at the audio takeoff point at the 27 K ohm resistor (R-11) and its junction with the terminal strip. Adjust for zero voltage indication.

NOTE C—Connect zero center DC vacuum tube voltmeter as in Note A. Adjust input to give same output on the zero center DC vacuum tube voltmeter as in Note A.

NOTE D—Unsolder 3300 ohm resistor from terminals 3 and 4 of 1st I-F transformer and resolder across terminals 1 and 2.

NOTE E—2nd I-F trimmers (AM) must be aligned before attempting to adjust 2nd I-F (FM) tuning slug.

NOTE F—Remove the 3300 ohm load resistor before attempting to check the antenna and oscillator adjustments.

© John F. Rider

MODEL 94WG-2747A

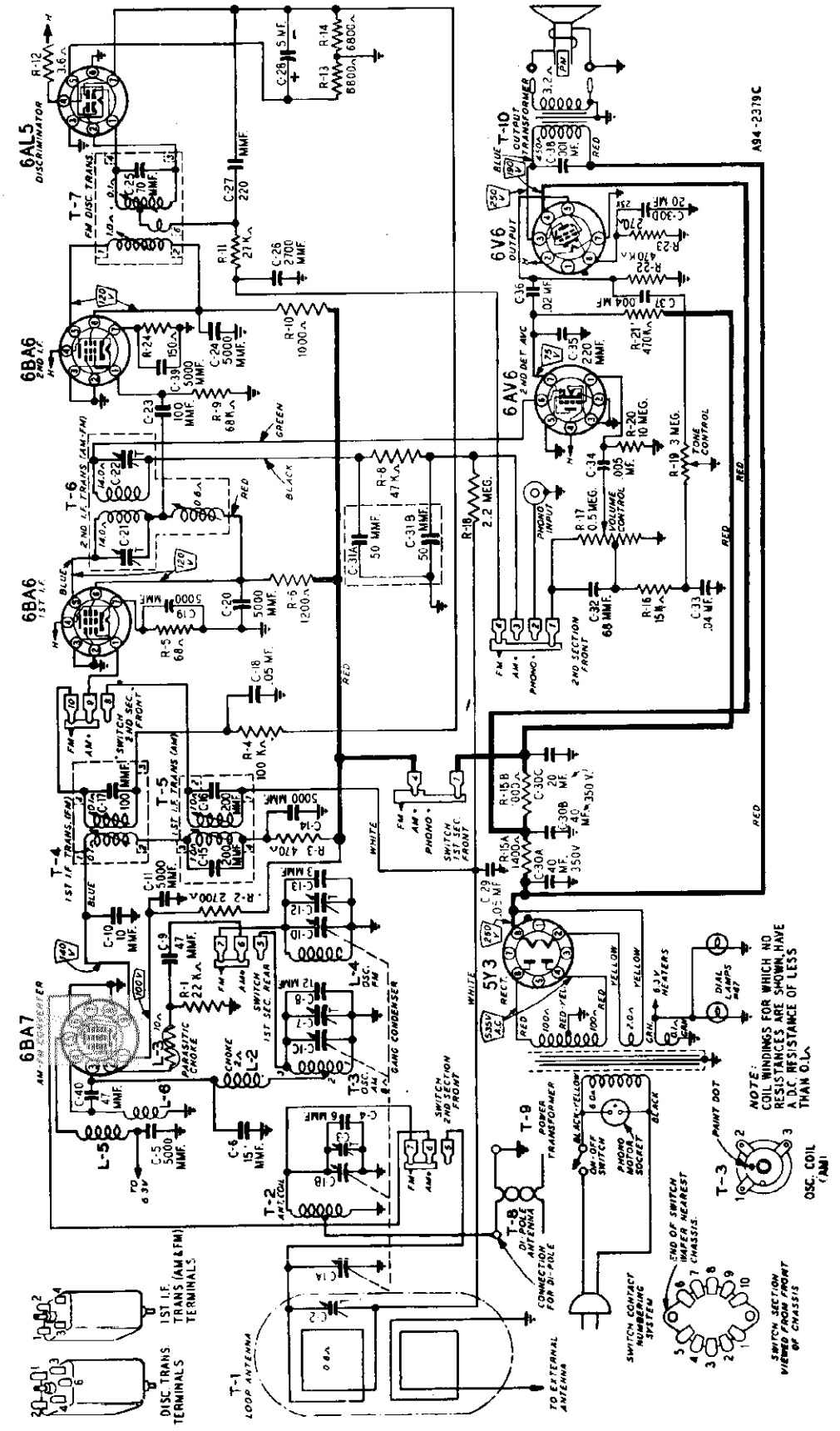

©John F. Rider

MODELS 94WG-2748A,
94WG-2748B

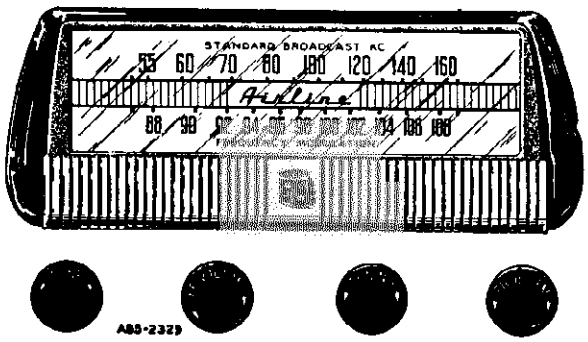

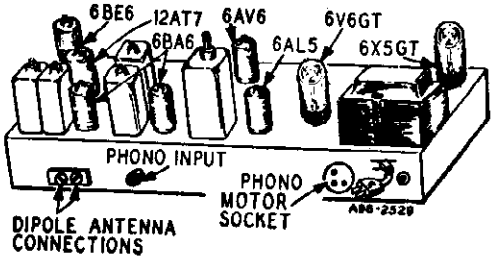

GENERAL DESCRIPTION

This is a two band, seven tube (plus rectifier tube) AM and FM receiver with automatic record changer. The I-F stages use high gain miniature type tubes. Built-in Air Wave Aerials are provided for the FM and Broadcast bands. Features include, a grounded grid R-F amplifier stage on the FM band, compensator circuits to prevent oscillator drift, automatic volume control, beam power output stage, PM dynamic loud speaker and an electrostatic shield in the power transformer to reduce power line noise.

The receiver and record changer are housed in a console combination cabinet with controls provided for tuning, volume, tone and band or phono selection.

ELECTRICAL SPECIFICATIONS

Power Supply.....105-125 volts AC 60 cycles, 40 watts. 60 watts with record changer

Frequency Ranges.....Broadcast 540-1600 KC
Frequency Modulation 88-108 MC

Intermediate Frequency....AM—455KC
FM—10.7 MC

Selectivity.....AM—45 KC broad at 1000 times signal, measured at 1000 KC
I.F. FM—200 KC broad at 2 times down
I.F. FM—950 KC broad at 200 times down

AM Sensitivity.....(For .5 watt output with external antenna) 20 microvolts average

FM Sensitivity.....(For .5 watt output)
25 microvolts average

Power Output.....1.9 watts maximum
.8 watts 10% distortion

Loud Speaker.....10" PM Dynamic

Voice Coil Impedance.....3.2 ohms 400 cycles

Record Changer .....See Manual No. 5087A

Tube and Dial Lamp Complement
1 6BE6 AM Converter & FM Osc.
1 6BA6 1st I-F Amplifier
1 6BA6 2nd I-F Amplifier
1 6AL5 FM Discriminator
1 6AV6 Audio Amplifier, AM 2nd Detector and AVC
1 6V6GT Audio Output
1 6X5GT Rectifier
1 12AT7 R-F Amplifier & Mixer
2 No. 47 Dial Lamps

©John F. Rider

MODEL 94WG-2748A

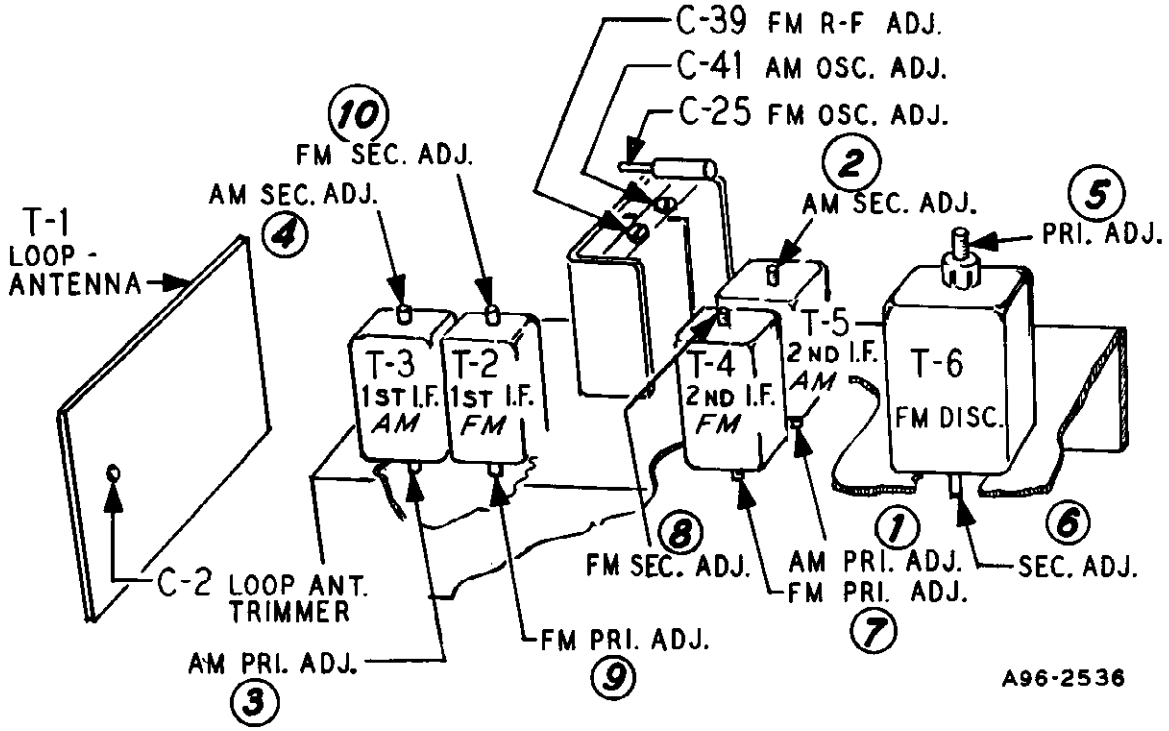

DRIVE CORD REPLACEMENT

DIAL POINTER CORD

Use a new 10X56 drive cord assembly or a new length of cord 46 inches long for the installation. Install the cord as shown in the illustration, winding three turns clockwise around the drive shaft with the turns progressing away from the chassis. After completing the installation rotate the drive shaft a few turns to take up the slack in the cord.

TUBE SOCKET VOLTAGES

Socket voltages are shown on the schematic diagram at the tube socket terminals. All voltages are between the socket terminal and chassis ground. Plate, screen and cathode voltages were taken with a 1000 ohm-per-volt meter with a 300 volt scale used for plate and screen voltages. Audio grid voltages were read with a vacuum tube volt-meter. Conditions of measurement are:

Line voltage.....117 Volts AC
Signal Input.....None

A variation of ±10% is usually permissible.

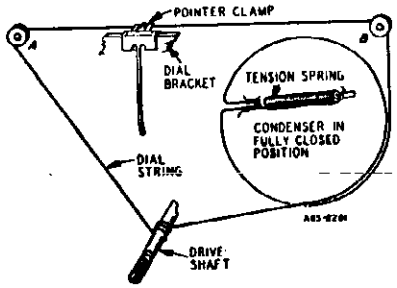

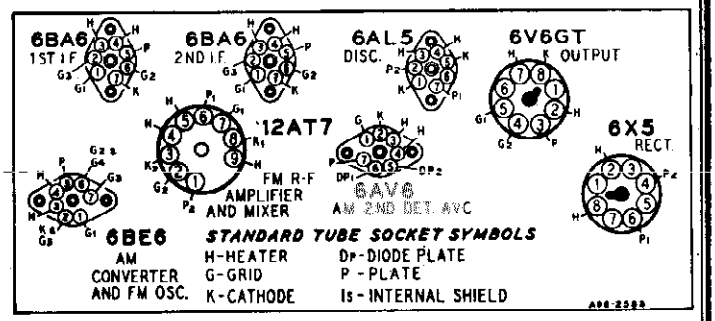

©John F. Rider

MODEL 94WG-2748A

ALIGNMENT PROCEDURES

AM STAGES

The following is required for aligning:
An All Wave Signal Generator Which Will Provide an Accurately Calibrated Signal at the Test Frequencies as Listed.
Output Indicating Meter, Non-Metallic Screwdriver, Dummy Antennas — .1 mf, and 50mmf.

Volume Control Maximum all Adjustments.
Connect Radio Chassis to Ground Post of Signal Generator with a Short Heavy Lead.
Allow Chassis and Signal Generator to "Heat Up" for Several Minutes.

SIGNAL GENERATOR						
FREQUENCY SETTING	CONNECT GENERATOR OUTPUT TO	THROUGH DUMMY ANTENNA	CONNECT GROUND TO	GANG CONDENSER SETTING	ADJUST	ADJUST FOR
455 KC	Control Grid 1st 6BA6 Pin No. 1	.1 mf	Chassis Base	Rotor Fully Open	2nd I.F. Pri. (1) and Sec. (2)	Maximum Output
455 KC	Control Grid 6BE6 Pin No. 7 1st Det.	.1 mf	Chassis Base	Rotor Fully Open	1st I.F. Pri. (3) and Sec. (4)	Maximum Output
455 KC	Control Grid 6BE6 Pin No. 7	.1 mf	Chassis Base	Rotor Fully Open	2nd I-F Pri. (1) and Sec. (2)	Maximum Output
1620 KC	Control Grid 6BE6 Pin No. 7	.1 mf	Chassis Base	Rotor Fully Open	Oscillator C-41	Maximum Output
1400 KC	External Antenna Clip	50 mmf	Chassis Base	Turn Rotor to Max. Output. Set Pointer to 1400 KC See Note A	Antenna C-2	Maximum Output

NOTE A—If the pointer is not at 1400 KC on the dial, reset pointer to the 1400 KC mark on the dial scale.

FM STAGES

The following is required for aligning:

An accurately calibrated signal generator providing unmodulated signals at the test frequencies listed below.

Non-metallic screwdriver.

Dummy Antennas and I-F Loading Resistor—2500 mmf, 300 ohms

Zero center scale DC vacuum tube voltmeter having a range of approximately 3 volts.
(If a zero center scale meter is not available, a standard scale vacuum tube voltmeter may be used by reversing the meter connections for negative readings).
Allow chassis and signal generator to "Heat Up" for several minutes.

	SIGNAL GENERATOR		THROUGH DUMMY ANTENNA	BAND SWITCH SETTING	GANG CONDENSER SETTING	ADJUST	ADJUST FOR
	FREQUENCY SETTING	CONNECT GENERATOR OUTPUT TO					
Discriminator	10.7 MC	6BA6 2nd I-F Pin 1 and Chassis	2500 mmf	FM	Rotor Fully Open	Disc. Pri. (5) Note A	Maximum Deflection
	10.7 MC	6BA6 2nd I-F Pin 1 and Chassis	2500 mmf	FM	Rotor Fully Open	Disc. Sec. (6) Note B	
I-F	10.7 MC Note C	6BA6 1st I-F Pin 1 and Chassis	2500 mmf	FM	Rotor Fully Open	2nd I-F Pri. (7) Sec. (8) Note D	Maximum Deflection
Discriminator	10.7 MC	6BA6 1st I-F Pin 1 and Chassis	2500 mmf	FM	Rotor Fully Open	Disc. Pri. (5) Note D	Maximum Deflection
I-F	10.7 MC	Junction C-32A & B (Dual 100 mmf cond.) And chassis	2500 mmf	FM	Rotor Fully Open	1st I-F Pri. (9) & Sec. (10) 2nd I-F Pri. (7) & Sec. (8) Disc. Pri. (5) In Order Shown Note D	Maximum Deflection
	10.7 MC	Same as above	2500 mmf	FM	Rotor Fully Open	Disc. Sec. (6) Note B	Maximum Deflection
RECHECK I-F ADJUSTMENTS IN ORDER GIVEN							
Oscillator	108.5	Disconnect built-in dipole antenna and connect generator to dipole terminals with resistor in series.	300 ohms	FM	Rotor Fully Open	Osc. C-25	Maximum Deflection
Antenna	104.5	Same as above	300 ohms	FM	Tune rotor for max. AVC voltage	Ant. C-39	Maximum Deflection
RECHECK ANTENNA & OSC. ADJUSTMENTS IN ORDER GIVEN							

FM ALIGNMENT NOTES

NOTE A—The zero center scale DC vacuum tube voltmeter is to be connected between chassis ground and the AVC line. A signal of .1 volt must be fed into the receiver for this adjustment.
Note output voltage on the zero center DC vacuum tube voltmeter

NOTE B—Disconnect zero center DC vacuum tube voltmeter from AVC and connect it at the audio takeoff point at the 27 K ohm resistor (R-10) and its junction with the terminal strip. Adjust for zero voltage indication.

NOTE C—AM I-F coils must be aligned before attempting to align the FM I-F coils.

NOTE D—Connect zero center DC vacuum tube voltmeter as in Note A. Adjust input to give same output on the zero center DC vacuum tube voltmeter as in Note A.

© John F. Rider

MODEL 94WG-2748A

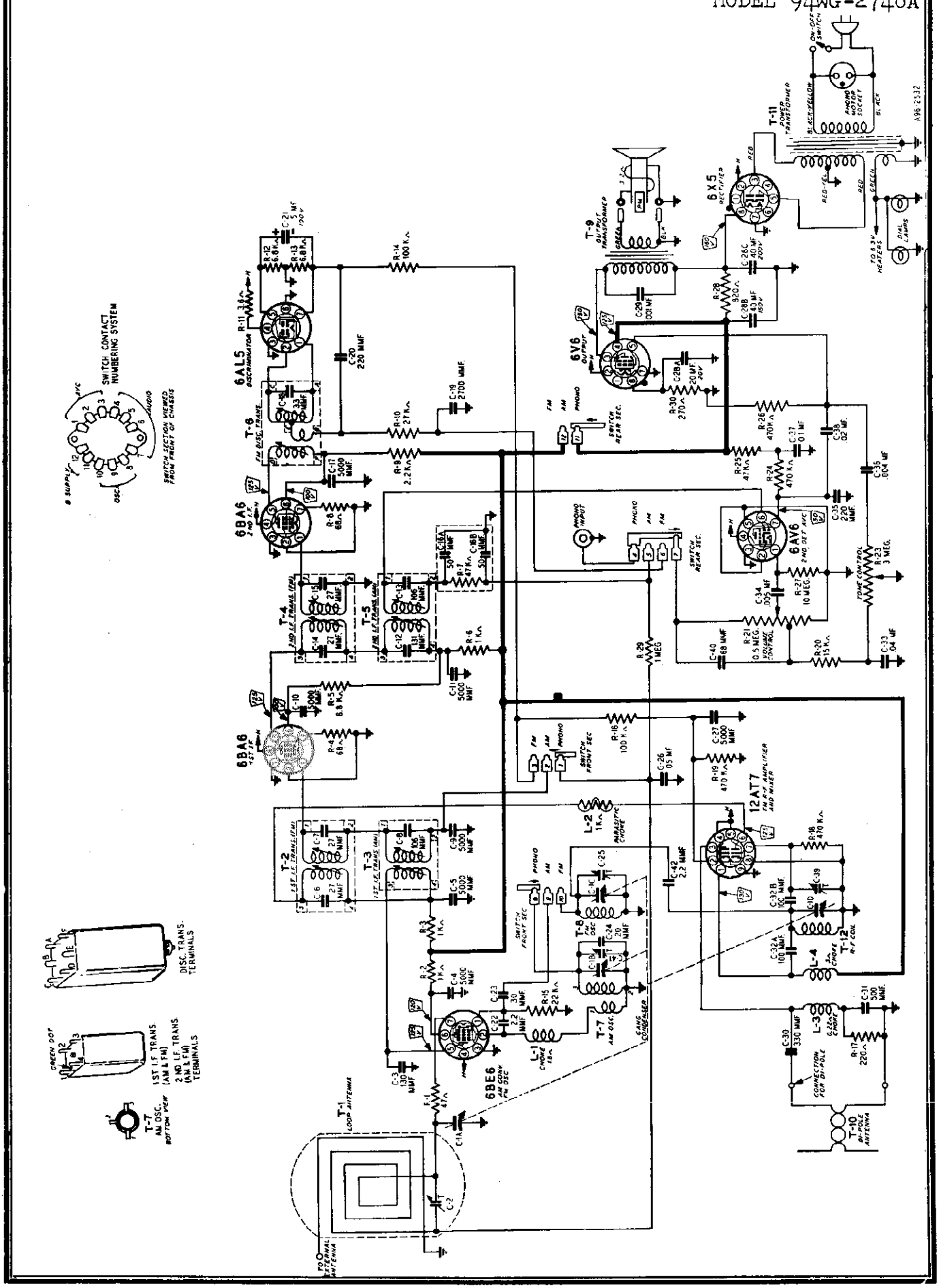

© John F. Rider

MODEL 94WG-2748A

REPLACEMENT PARTS LIST

Ref. No.	Part No.	Description	Qty. Used in Set
		CAPACITORS	
C-1	14A209	Gang Condenser Assembly	1
C-2	17A256	2-24 mmf Trimmer	1
C-3	47X559	130 mmf Ceramic	1
C-4, C-5, C-9, C-10, C-11, C-17, C-27	47X507	5000 mmf Ceramic	7
C-6, C-7		Part of T-2 (1st I-F Trans. FM)	
C-8		Part of T-3 (1st I-F Trans. AM)	
C-12, C-13		Part of T-5 (2nd I-F Trans. AM)	
C-14, C-15		Part of T-4 (2nd I-F Trans. FM)	
C-16A, C-16B	47X112	50-50 mmf Dual Mica	1
C-18		Part of T-6 (Discriminator Trans.)	
C-19	47X492	2700 mmf Molded Mica	1
C-20, C-35	47X468	220 mmf Ceramic	2
C-21	45X361	5 mf 100 V Dry Electrolytic	1
C-22, C-42	47X557	2.2 mmf Ceramic	2
C-23	47X558	30 mmf Ceramic	1
C-24	47X516	20 mmf Ceramic	1
C-25	17A255	1-8 mmf Trimmer	1
C-26	B66503	.05 mf 200 V Tubular	1
C-28A C-28B C-28C	45X360	20 mf 20 V 40 mf 150 V 40 mf 200 V	Dry Electrolytic 1
C-29	H66102	.001 mf 800 V Tubular	1
C-30	47X470	330 mmf Molded Mica	1
C-31	47X508	500 mmf Ceramic	1
C-32A, C-32B	76X4	100 mmf Dual Ceramic	1
C-33	B66403	.04 mf 200 V Tubular	1
C-34	D66502	.005 mf 400 V Tubular	1
C-36	B66402	.004 mf 200 V Tubular	1
C-37	D66104	.1 mf 400 V Tubular	1
C-38	D66203	.02 mf 400 V Tubular	1
C-39, C-41		Part of C-1 (Gang Condenser)	
C-40	47X471	68 mmf Ceramic	1

Ref. No.	Part No.	Ohms	Watts	Description	Qty. Used in Set
				RESISTORS	
R-1	B85470	47	0.5	Carbon	1
R-2, R-3, R-6	B85102	1000	0.5	Carbon	3
R-4, R-8	B84680	68	0.5	Carbon	2
R-5, R-12, R-13	B84682	6800	0.5	Carbon	3
R-7, R-25	B85473	47 K	0.5	Carbon	2
R-9	B85222	2200	0.5	Carbon	1
R-10	B85273	27 K	0.5	Carbon	1
R-11	43X233	3.6	0.5	Wirewound	1
R-14, R-16	B85104	100 K	0.5	Carbon	2
R-15	B85223	22 K	0.5	Carbon	1
R-17	B84221	220	0.5	Carbon	1
R-18, R-19, R-24, R-26	B85474	470 K	0.5	Carbon	1
R-20	B85153	15 K	0.5	Carbon	1
R-21	36X372	.5 meg.		Volume Control & Switch	1
R-23	40X285	3 meg.		Tone Control	1
R-27	B85106	10 meg.	0.5	Carbon	1
R-28	D84821	820	2.0	Carbon	1
R-29	B85105	1 meg.	0.5	Carbon	1
R-30	B84271	270	0.5	Carbon	1

		TRANSFORMERS AND COILS	
L-1	35A5	Insulated Choke	1
L-2	9A2068	Parasitic Choke Assembly	1
L-3	35A9	Insulated Choke	1
L-4	35A8	Insulated Choke	1
T-1	9A2070	"B" Range Loop Antenna	1
T-2	9A2060	1st I-F Trans. (FM)	1
T-3	9A2062	1st I-F Trans. (AM)	1
T-4	9A2061	2nd I-F Trans. (FM)	1
T-5	9A2063	2nd I-F Trans. (AM)	1
T-6	9A2064	Discriminator Transformer	1
T-7	9A2065	Oscillator Coil (AM)	1
T-8	9A2067	Oscillator Coil (FM)	1
T-9	51X134	Output Transformer	1
T-10	9A2004	Dipole Antenna	1
T-11	53X291	Power Transformer	1
T-12	9A2066	Antenna Coil (FM)	1

©John F. Rider

MODELS 94WG-2748A, 94WG-2748B

REPLACEMENT PARTS LIST (continued)

MODEL 94WG-2748A

Ref. No.	Part No.	Description	Qty. Used in Set
		MISCELLANEOUS	
	12A480	10" P.M. Speaker	1
	3A303	Tube Socket—Octal (8 prong) Molded	2
	3A426	Tube Socket—Miniature	4
	3A427	Tube Socket (12AT7)	1
	3A443	Tube Socket (6BE6)	1
	3A304	Phono Motor Socket	1
	3A305	Phono Socket—Single Pin Tip	1
	2A395	Band Change Switch	1
	13X546	Line Cord and Plug Assembly	1
	10A695	Knob (Tuning)	1
	10A696	Knob (Volume Control & Switch)	1
	10A697	Knob (Tone)	1
	10A698	Knob (Phono—BC—FM)	1
	4X1020	Escutcheon	1

Ref. No.	Part No.	Description	Qty. Used in Set
		DIAL AND DRIVE ASSEMBLY	
	58X727	Dial Glass	1
	24X446	Idler Pulley	2
	15X241	Pointer	1
	25X1569	Dial Bracket	1
	7A103	No. 47 Pilot Light Bulb	2
	7A202	Pilot Light Socket Assembly	1
	26X486	Drive Shaft	1
	41X26	Reflector, Dial Light	2
	28X113	Drive Cord Tension Spring	1
	10X56	Drive Cord Assembly	1
	19X192	"C" Washer (Mtg. drive shaft)	2
	6X66	Rubber Grommet (Mtg. gang cond.)	3
		TYPE V-28A166 RECORD CHANGER PARTS	
V-2727B		Motor Assembly, 60 cycles 105-125 Volts AC	1
Shure P-81		Crystal Cartridge	1
		Semi-Permanent Needle	1
		(When ordering needles, specify part number and letter stamped on cartridge.)	

WARD'S AIRLINE RADIO
Model 94WG-2748B

Issue "B" receivers of this model differ from the issue "A" receivers by the addition of a 2.2 megohm resistor and a 5000 MMF ceramic condenser to the circuit.

PARTS LIST ADDITION

The description of the new parts follows:

REF.NO.	PART NO.	DESCRIPTION	QTY.USED
R-31	B85225	2.2 Meg. .5 W Carbon	1
C-43	47X507	5000 MMF Ceramic	8

The circuit connection of Resistor R-31 is shown in the partial schematic below. Condenser C-43 is connected to the filament (pin 4) of the 6BA6 2nd I-F and ground.

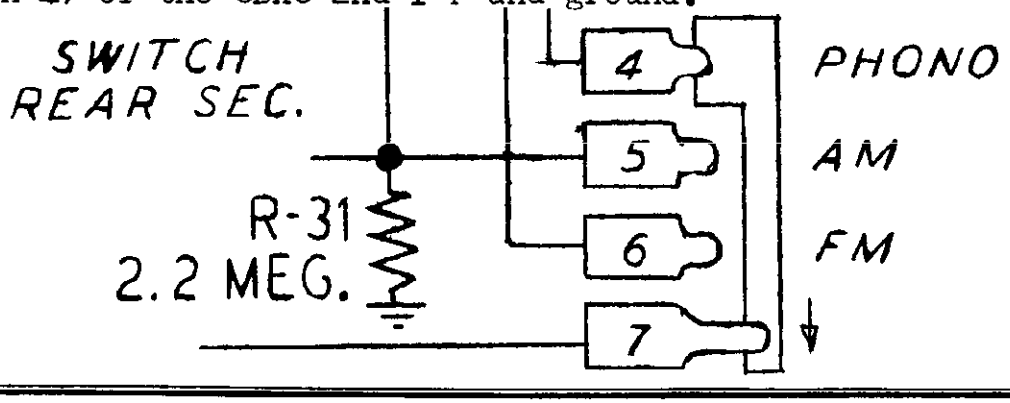

©John F. Rider

MODEL 94WG-2749A

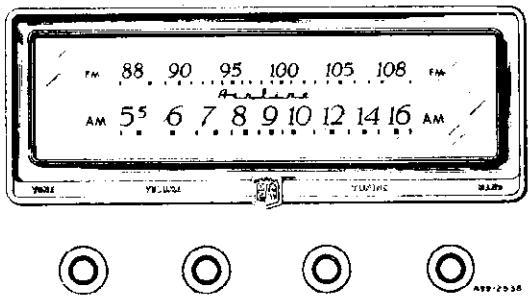

GENERAL DESCRIPTION

This is a two band, seven tube (plus rectifier tube) AM and FM receiver with automatic record changer. The I-F stages use high gain miniature type tubes. Built-in Air Wave Aerials are provided for the FM and Broadcast bands. Features include, a grounded grid R-F amplifier stage on the FM band, compensator circuits to prevent oscillator drift, automatic volume control, beam power output stage, PM dynamic loud speaker and an electrostatic shield in the power transformer to reduce power line noise.

The receiver and record changer are housed in a console combination cabinet with controls provided for tuning, volume, tone and band or phono selection.

ELECTRICAL SPECIFICATIONS

Power Supply	105-125 volts AC 60 cycles, 60 watts. 80 watts with record changer
Frequency Ranges	Broadcast 540-1600 KC Frequency Modulation 88-108 MC
Intermediate Frequency	AM—455KC FM—10.7 MC
Selectivity	AM—45 KC broad at 1000 times signal, measured at 1000 KC I.F. FM—200 KC broad at 2 times down I.F. FM—950 KC broad at 200 times down
AM Sensitivity	(For .5 watt output with external antenna) 10 microvolts average
FM Sensitivity	(For .5 watt output) 25 microvolts average
Power Output	4.5 watts maximum 2.5 watts 10% distortion
Loud Speaker	12" PM Dynamic
Voice Coil Impedance	3.2 ohms 400 cycles
Record Changer	See Manual No. 5081A

Tube and Dial Lamp Complement

1 6BE6 AM Converter & FM Osc.
1 6BA6 1st I-F Amplifier
1 6BA6 2nd I-F Amplifier
1 6AL5 FM Discriminator
1 6AV6 Audio Amplifier, AM 2nd Detector and AVC
1 6V6GT Audio Output
1 5Y3GT Rectifier
1 12AT7 R-F Amplifier & Mixer
2 No. 47 Dial Lamps

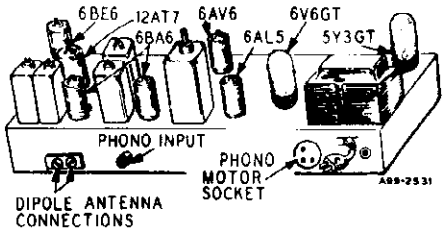

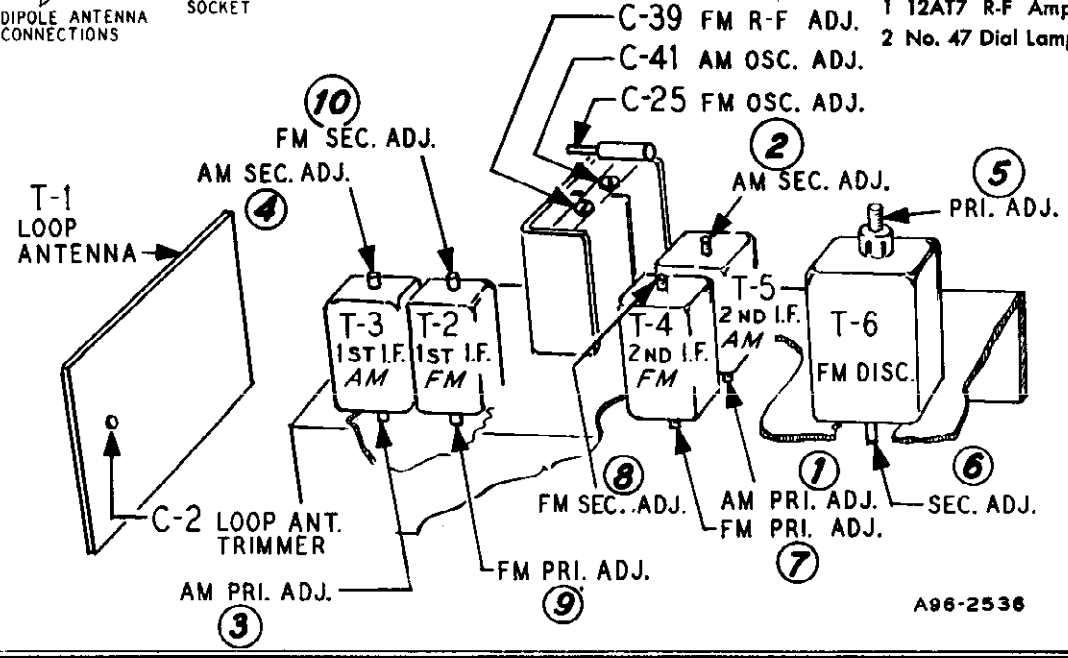

©John F. Rider

MODEL 94WG-2749A

ALIGNMENT PROCEDURES

AM STAGES

The following is required for aligning:

An All Wave Signal Generator Which Will Provide an Accurately Calibrated Signal at the Test Frequencies as Listed.

Output Indicating Meter, Non-Metallic Screwdriver, Dummy Antennas — .1 mf, and 50mmf.

Volume Control Maximum all Adjustments.

Connect Radio Chassis to Ground Post of Signal Generator with a Short Heavy Lead.

Allow Chassis and Signal Generator to "Heat Up" for Several Minutes.

SIGNAL GENERATOR						
FREQUENCY SETTING	CONNECT GENERATOR OUTPUT TO	THROUGH DUMMY ANTENNA	CONNECT GROUND TO	GANG CONDENSER SETTING	ADJUST	ADJUST FOR
455 KC	Control Grid 1st 6BA6 Pin No. 1	.1 mf	Chassis Base	Rotor Fully Open	2nd I.F. Pri. (1) and Sec. (2)	Maximum Output
455 KC	Control Grid 6BE6 Pin No. 7 1st Det.	.1 mf	Chassis Base	Rotor Fully Open	1st I.F. Pri. (3) and Sec. (4)	Maximum Output
455 KC	Control Grid 6BE6 Pin No. 7	.1 mf	Chassis Base	Rotor Fully Open	2nd I-F Pri. (1) and Sec. (2)	Maximum Output
1620 KC	Control Grid 6BE6 Pin No. 7	.1 mf	Chassis Base	Rotor Fully Open	Oscillator C-41	Maximum Output
1400 KC	External Antenna Lead	50 mmf	Chassis Base	Turn Rotor to Max. Output. Set Pointer to 1400 KC See Note A	Antenna C-2	Maximum Output

NOTE A—If the pointer is not at 1400 KC on the dial, reset pointer to the 1400 KC mark on the dial scale.

FM STAGES

The following is required for aligning:

An accurately calibrated signal generator providing unmodulated signals at the test frequencies listed below.

Non-metallic screwdriver.

Dummy Antennas and I-F Loading Resistor—2500 mmf, 300 ohms

Zero center scale DC vacuum tube voltmeter having a range of approximately 3 volts.

(If a zero center scale meter is not available, a standard scale vacuum tube voltmeter may be used by reversing the meter connections for negative readings).

Allow chassis and signal generator to "Heat Up" for several minutes.

SIGNAL GENERATOR								
	FREQUENCY SETTING	CONNECT GENERATOR OUTPUT TO	THROUGH DUMMY ANTENNA	BAND SWITCH SETTING	GANG CONDENSER SETTING	ADJUST	ADJUST FOR
Discriminator	10.7 MC	6BA6 2nd I-F Pin 1 and Chassis	2500 mmf	FM	Rotor Fully Open	Disc. Pri. (5) Note A	Maximum Deflection
	10.7 MC	6BA6 2nd I-F Pin 1 and Chassis	2500 mmf	FM	Rotor Fully Open	Disc. Sec. (6) Note B	
I-F	10.7 MC Note C	6BA6 1st I-F Pin 1 and Chassis	2500 mmf	FM	Rotor Fully Open	2nd I-F Pri. (7) Sec. (8) Note D	Maximum Deflection
Discriminator	10.7 MC	6BA6 1st I-F Pin 1 and Chassis	2500 mmf	FM	Rotor Fully Open	Disc. Pri. (5) Note D	Maximum Deflection
I-F	10.7 MC	Junction C-32A & B (Dual 100 mmf cond.) And chassis	2500 mmf	FM	Rotor Fully Open	1st I-F Pri. (9) & Sec. (10) 2nd I-F Pri. (7) & Sec. (8) Disc. Pri. (5) In Order Shown Note D	Maximum Deflection
	10 7 MC	Same as above	2500 mmf	FM	Rotor Fully Open	Disc. Sec. (6) Note B	Maximum Deflection
RECHECK I-F ADJUSTMENTS IN ORDER GIVEN							
Oscillator	108.5	Disconnect built-in dipole antenna and connect generator to dipole terminals with resistor in series.	300 ohms	FM	Rotor Fully Open	Osc. C-25	Maximum Deflection
Antenna	104.5	Same as above	300 ohms	FM	Tune rotor for max. AVC voltage	Ant. C-39	Maximum Deflection
RECHECK ANTENNA & OSC ADJUSTMENTS IN ORDER GIVEN							

FM ALIGNMENT NOTES

NOTE A—The zero center scale DC vacuum tube voltmeter is to be connected between chassis ground and the AVC line. A signal of .1 volt must be fed into the receiver for this adjustment.
Note output voltage on the zero center DC vacuum tube voltmeter

NOTE B—Disconnect zero center DC vacuum tube voltmeter from AVC and connect it at the audio takeoff point at the 27 K ohm resistor (R-10) and its junction with the terminal strip. Adjust for zero voltage indication.

NOTE C—AM I-F coils must be aligned before attempting to align the FM I-F coils.

NOTE D—Connect zero center DC vacuum tube voltmeter as in Note A. Adjust input to give same output on the zero center DC vacuum tube voltmeter as in Note A.

© John F. Rider

MODEL 94WG-2749A

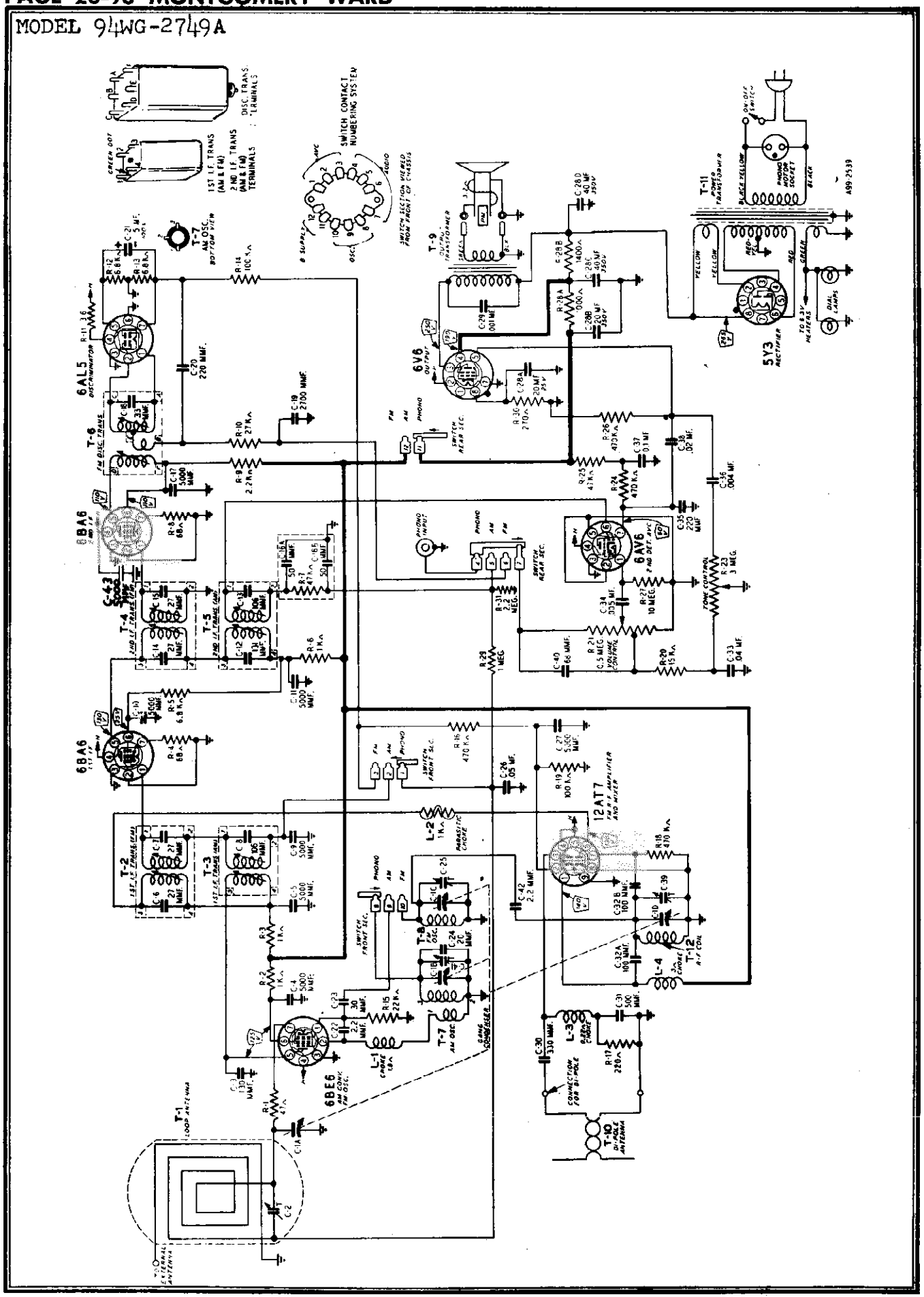

©John F. Rider

MODEL 94WG-2749A

DRIVE CORD REPLACEMENT

DIAL POINTER CORD

Use a new 10X38 drive cord assembly or a new length of cord 48 inches long for the installation. Install the cord as shown in the illustration, winding three turns clockwise around the drive shaft with the turns progressing away from the chassis. After completing the installation rotate the drive shaft a few turns to take up the slack in the cord.

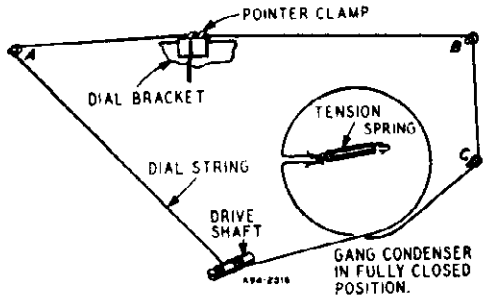

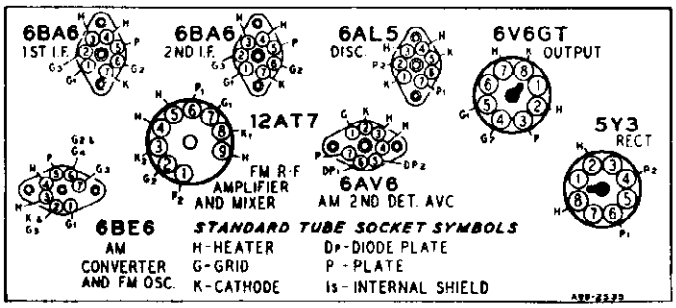

TUBE SOCKET VOLTAGES

Socket voltages are shown on the schematic diagram at the tube socket terminals. All voltages are between the socket terminal and chassis ground. Plate, screen and cathode voltages were taken with a 1000 ohm-per-volt meter with a 300 volt scale used for plate and screen voltages. Audio grid voltages were read with a vacuum tube volt-meter. Conditions of measurement are:

Line voltage.....117 Volts AC
Signal Input.....None

A variation of ±10% is usually permissible.

REPLACEMENT PARTS LIST

HOW TO ORDER PARTS—Should it be necessary to write us or to order any repair parts, it is important that the complete model number which appears on the label attached to the rear of the chassis be specified. Repair parts should be ordered from your nearest Wards Retail Store, Catalog Order office or Mail Order House.

Ref. No.	Part No.	Description	Qty. Used In Set
		CAPACITORS	
C-1	14A209	Gang Condenser Assembly	1
C-2	17A256	2-24 mmf Trimmer	1
C-3	47X559	130 mmf Ceramic	1
C-4, C-5, C-9, C-10, C-11, C-17, C-27, C-43	47X507	5000 mmf Ceramic	8
C-6, C-7		Part of T-2 (1st I-F Trans. FM)	
C-8		Part of T-3 (1st I-F Trans. AM)	
C-12, C-13		Part of T-5 (2nd I-F Trans. AM)	
C-14, C-15		Part of T-4 (2nd I-F Trans. FM)	
C-16A, C-16B	47X112	50-50 mmf Dual Mica	1
C-18		Part of T-6 (Discriminator Trans.)	
C-19	47X492	2700 mmf Molded Mica	1
C-20, C-35	47X468	220 mmf Ceramic	2
C-21	45X361	5 mf 100 V Dry Electrolytic	1
C-22, C-42	47X557	2.2 mmf Ceramic	2
C-23	47X558	30 mmf Ceramic	1
C-24	47X516	20 mmf Ceramic	1
C-25	17A255	1-8 mmf Trimmer	1
C-26	B66503	.05 mf 200 V Tubular	1
C-28A, C-28B, C-28C, C-28D	45X359	20 mf 25 V, 20 mf 350 V, 40 mf 350 V, 40 mf 350 V Dry Electrolytic	1
C-29	H66102	.001 mf 800 V Tubular	1
C-30	47X470	330 mmf Molded Mica	1
C-31	47X508	500 mmf Ceramic	1
C-32A, C-32B	76X4	100 mmf Dual Ceramic	1
C-33	B66403	.04 mf 200 V Tubular	1
C-34	D66502	.005 mf 400 V Tubular	1
C-36	B66402	.004 mf 200 V Tubular	1
C-37	D66104	.1 mf 400 V Tubular	1
C-38	D66203	.02 mf 400 V Tubular	1
C-39, C-41		Part of C-1 (Gang Condenser)	
C-40	47X471	68 mmf Ceramic	1

© John F. Rider

MODEL 94WG-2749A

REPLACEMENT PARTS LIST (continued)

Ref. No.	Part No.	Description	Qty. Used in Set
RESISTORS			
R-1	B85470	47 Ohms 0.5 Watts Carbon	1
R-2, R-3, R-6	B85102	1000 Ohms 0.5 Watts Carbon	3
R-4, R-8	B84680	68 Ohms 0.5 Watts Carbon	2
R-5, R-12, R-13	B84682	6800 Ohms 0.5 Watts Carbon	3
R-7, R-25	B85473	47 K Ohms 0.5 Watts Carbon	2
R-9	B85222	2200 Ohms 0.5 Watts Carbon	1
R-10	B85273	27 K Ohms 0.5 Watts Carbon	1
R-11	43X233	3.6 Ohms 0.5 Watts Wirewound	1
R-14, R-16	B85104	100 K Ohms 0.5 Watts Carbon	2
R-15	B85223	22 K Ohms 0.5 Watts Carbon	1
R-17	B84221	220 Ohms 0.5 Watts Carbon	1
R-18, R-19, R-24, R-26	B85474	470 K Ohms 0.5 Watts Carbon	4
R 20	B85153	15 K Ohms 0.5 Watts Carbon	1
R-21	36X372	.5 meg. Volume Control & Switch	1
R-23	40X285	3 meg. Tone Control	1
R-27	B85106	10 meg. 0.5 Watts Carbon	1
R-28A	43X224	1000 Ohms 4.0 Watts Wirewound	1
R-28B		1400 Ohms 6.0 Watts	
R-29	B85105	1 meg. 0.5 Watts Carbon	1
R-30	B84271	270 Ohms 0.5 Watts Carbon	1
R-31	B85225	2.2 meg. 0.5 Watts Carbon	1
TRANSFORMERS AND COILS			
L-1	35A5	Insulated Choke	1
L-2	9A2068	Parasitic Choke Assembly	1
L-3	35A9	Insulated Choke	1
L-4	35A8	Insulated Choke	1
T-1	9A1972	"B" Range Loop Antenna	1
T-2	9A2060	1st I-F Trans. (FM)	1
T-3	9A2062	1st I-F Trans. (AM)	1
T-4	9A2061	2nd I-F Trans. (FM)	1
T-5	9A2063	2nd I-F Trans. (AM)	1
T-6	9A2064	Discriminator Transformer	1
T-7	9A2065	Oscillator Coil (AM)	1
T-8	9A2067	Oscillator Coil (FM)	1
T-9	51X134	Output Transformer	1
T-10	9A2004	Dipole Antenna	1
T-11	53X290	Power Transformer	1
T-12	9A2066	Antenna Coil (FM)	1

Ref. No.	Part No.	Description	Qty. Used in Set
MISCELLANEOUS			
	12A490	12" P.M. Speaker	1
	3A303	Tube Socket—Octal (8 prong) Molded	2
	3A426	Tube Socket—Miniature	4
	3A427	Tube Socket (12AT7)	1
	3A443	Tube Socket (6BE6)	1
	3A304	Phono Motor Socket	1
	3A305	Phono Socket—Single Pin Tip	1
	2A393	Band Change Switch	1
	13X546	Line Cord and Plug Assembly	1
	10A735	Knob	4
	4X1049	Escutcheon	1
DIAL AND DRIVE ASSEMBLY			
	58X729	Dial Glass	1
	24X446	Idler Pulley	2
	15X251	Pointer	1
	25X1616	Dial Bracket	1
	7A103	No. 47 Pilot Light Bulb	2
	7A199	Pilot Light Socket Assembly	1
	26X486	Drive Shaft	1
	41X26	Reflector, Dial Light	2
	28X113	Drive Cord Tension Spring	1
	10X38	Drive Cord Assembly	1
	19X192	"C" Washer (Mtg. drive shaft)	2
	6X66	Rubber Grommet (Mtg. gang cond.)	3
TYPE V-28A167 RECORD CHANGER PARTS			
V-2727B		Motor Assembly, 60 cycles 105-125 Volts AC	1
Shure P-77		Crystal Cartridge	1
		Needle, Microgroove (Red)	1
		Needle, Regular	1
		(When ordering needles, specify part number and letter stamped on cartridge.)	

©John F. Rider

MODEL CT9, 1949
Chevrolet

GENERAL INFORMATION

TYPE - Automotive type superheterodyne receiver specifically designed to fit 1949 Chevrolet. Receiver consists of two units; the RF tuner and the Power & Audio Unit.

TUNING RANGE - 535 to 1600 Kc

IF - 455 Kc

TUBE COMPLEMENT - 6BA6 - RF Amplifier
6BE6 - Oscillator-Modulator
6BA6 - IF Amplifier
6AT6 - Diode detector, AVC & 1st AF Amplifier
6V6GT - Power Amplifier
6X4 - Rectifier

POWER INPUT - 6.8 amps at 6.3V DC

POWER OUTPUT - 3 watts (max)

PUSH BUTTON TUNER - Automatic Tuner AT-71.

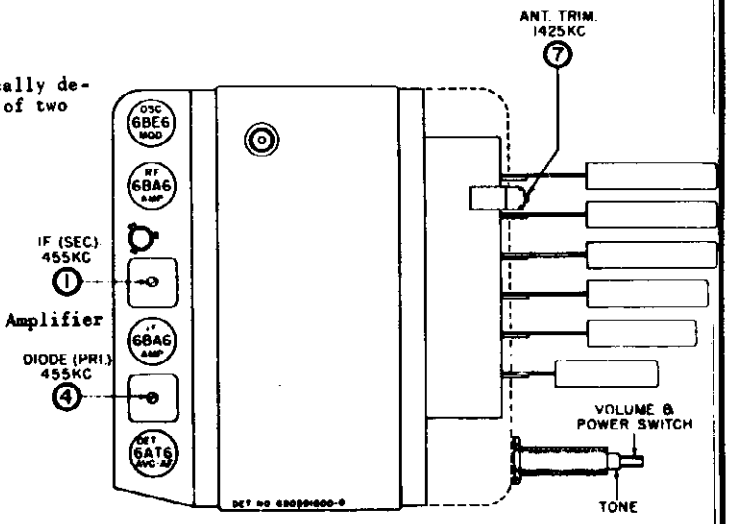

TO SET THE PUSH BUTTONS

1. Turn the radio ON and allow it to warm up for a few minutes.

2. Push the top button in as far as it will go and HOLD IT THAT WAY.

3. With the tuning knob, tune in the station you desire to set up. Tune carefully until you are exactly on the station; tuning to either side of it will result in poor tone quality. Release button and knob after tuning-in the station.

4. Follow above steps 2 and 3 for the remaining four buttons.

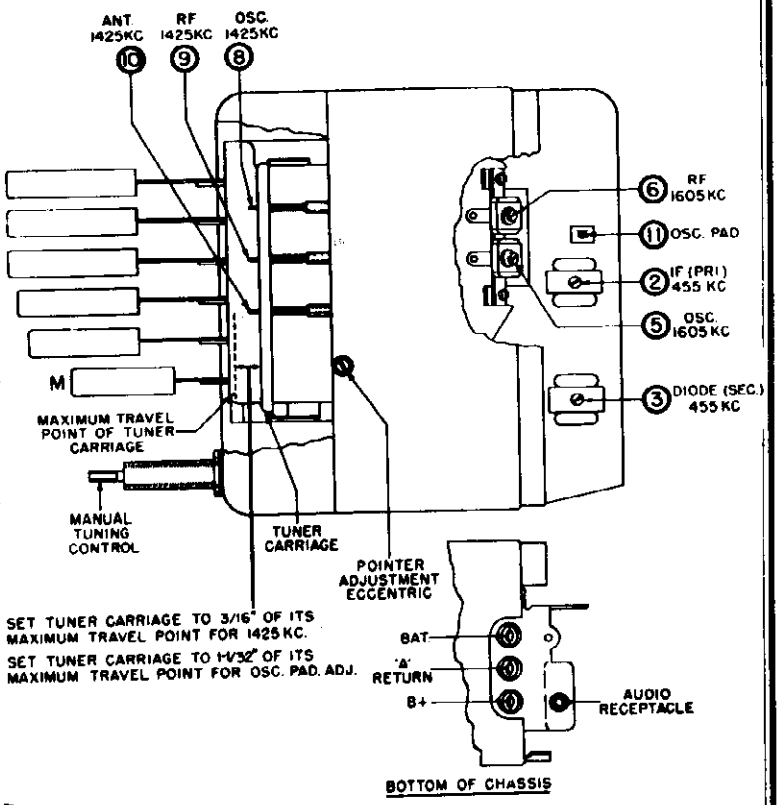

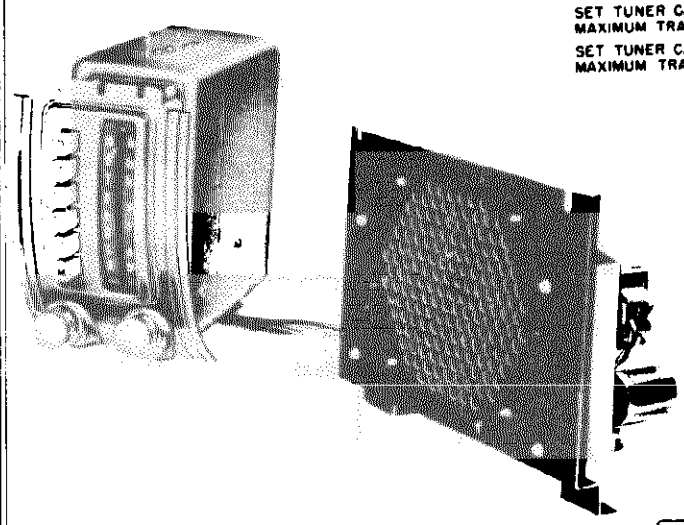

FIGURE 1. TUBE & TRIMMER LOCATION

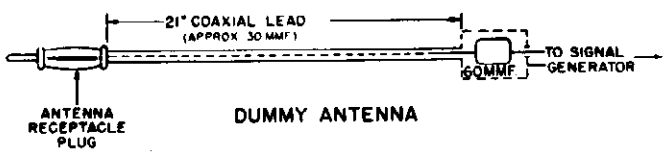

©John F. Rider

MODEL CT9, 1949
Chevrolet

ALIGNMENT

EQUIPMENT REQUIRED

1. A special tool for adjusting the tuner cores. Use Alignment Tool, Motorola Part No. 66A76278.

2. A small screwdriver for IF & RF alignment.

3. An accurately calibrated AM modulated signal generator.

4. A low range output meter.

5. A special dummy antenna for RF alignment. Construct dummy antenna as shown in Figure 1. The 21" coaxial lead needed in its construction is the same type as used for lead-in on Motorola car antennas.

PROCEDURE

1. Expose the alignment screws as follows: remove escutcheon, dial background and rear cover.

2. Connect the power & audio unit to the tuner unit and connect the output meter across the voice coil.

3. Connect a 6 volt storage battery to the power & audio unit chassis and 'A' lead. Turn on the receiver and allow it to warm up a few minutes. Set the receiver volume control at maximum and the tone control on 'high'.

4. For greatest accuracy, keep the output of the receiver at approximately 1 watt (1 watt = 1.79 volts on output meter) throughout alignment by reducing generator output (not receiver volume control) as stages are brought into alignment.

5. IF & RF ALIGNMENT - See Alignment Chart & Fig. 1
IMPORTANT: Do not push in on the alignment tool when adjusting the tuner cores. The slightest inward pressure on the alignment tool may move the tuner carriage and result in inaccurate alignment.

6. ANTENNA TRIMMER ADJUSTMENT. Once alignment has been satisfactorily performed, no further adjustment of any alignment screws should be made except to align the antenna trimmer (7) to the antenna after receiver is installed in car. This adjustment should be made with the antenna fully extended and receiver set to approximately 1400 Kc. Peak the trimmer for maximum volume of a weak station or background noise between stations. Trimmer can be reached from front by removing the top push button.

7. POINTER ADJUSTMENT. The pointer can be moved slightly for calibration correction by turning the eccentric adjustment rivet. This rivet has a slotted head and is exposed only when tuner is tuned to high frequency end. See Figure 1 for its location.

ALIGNMENT CHART

STEP	TUNER SET TO	DUMMY ANTENNA	SIGNAL GENERATOR CONNECTED TO	SIGNAL GENERATOR FREQUENCY	ADJUST	REMARKS
1.	High frequency end (cores out)	.1 mf	Hi side -6BE6 grid (pin #7) Lo side -chassis.	455 Kc	1, 2, 3 & 4	Peak for maximum in order indicated. Check by repeating procedure.
2.	High frequency end; Core screws should project 5/16" from core adjustment clip	Special -See Fig. 1	Ant. receptacle through special dummy.	1605 Kc	5, 6, & 7	Peak for maximum in order indicated.
3.	Using manual knob, set tuner to extreme HF position, then move carriage inward 3/16" (see 'Measurements', Fig. 1)	Special -See Fig. 1	Ant. receptacle through special dummy.	1425 Kc	8, 9 & 10	Peak for max. in order indicated.
4.	Move carriage 1-1/32" inward from point of maximum travel	Special -See Fig. 1	Ant. receptacle through special dummy.	Turn generator power off.	11	Peak oscillator padder for maximum noise. See*
5.	Approx. 1400 Kc	-	-	-	7	With set installed in car, peak antenna trimmer for maximum noise or volume of a weak station. Car antenna should be fully extended.

* If padder core (11) must be moved more than 1/2 turn from its original position, repeat steps 2, 3 & 4 until it is necessary to move the padder core less than 1/2 turn in this step.

© John F. Rider

MODEL CT9, 1949
Chevrolet

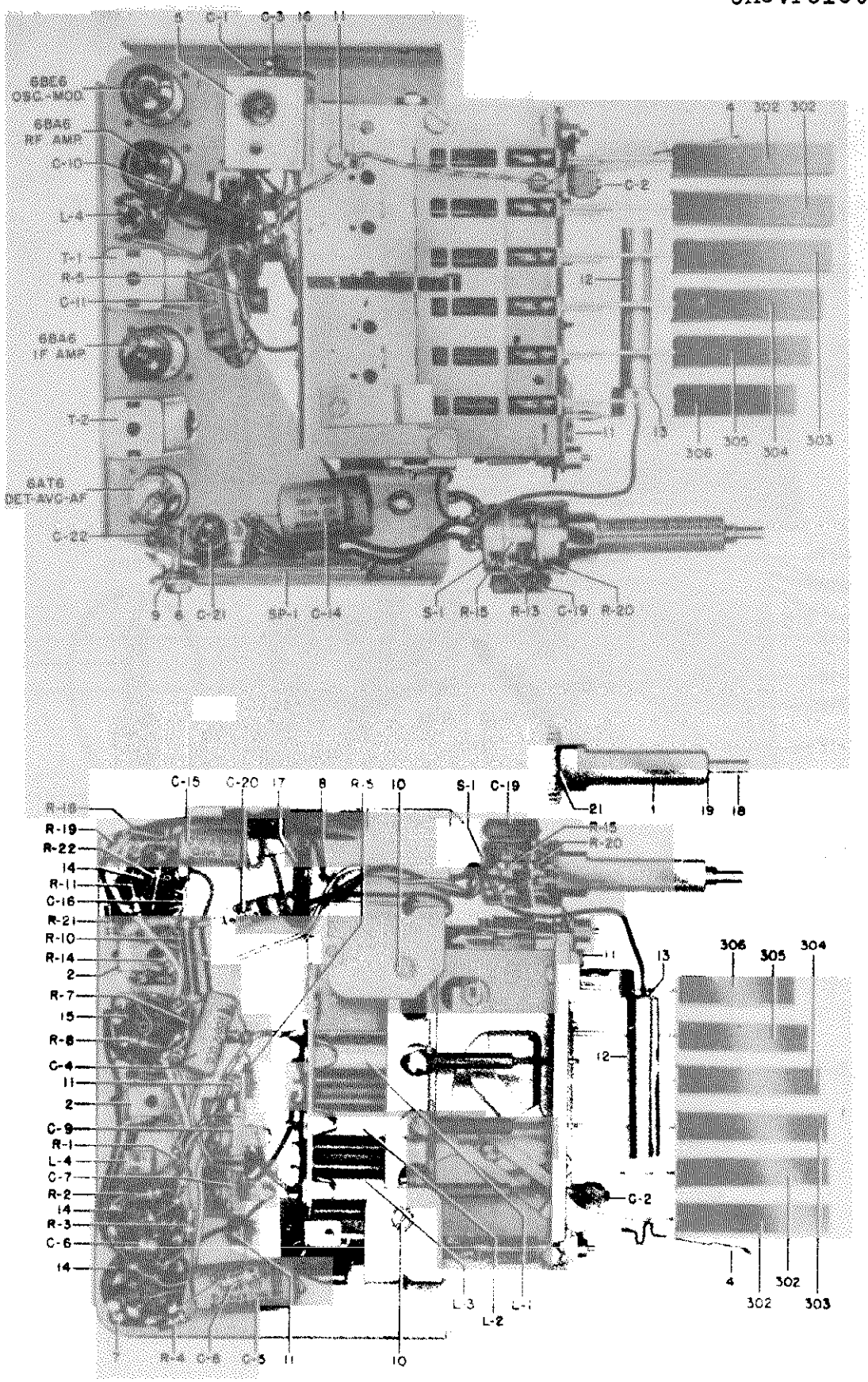

FIGURE 2. PARTS LOCATION - TUNER UNIT

©John F. Rider

MODEL CT9, 1949
Chevrolet

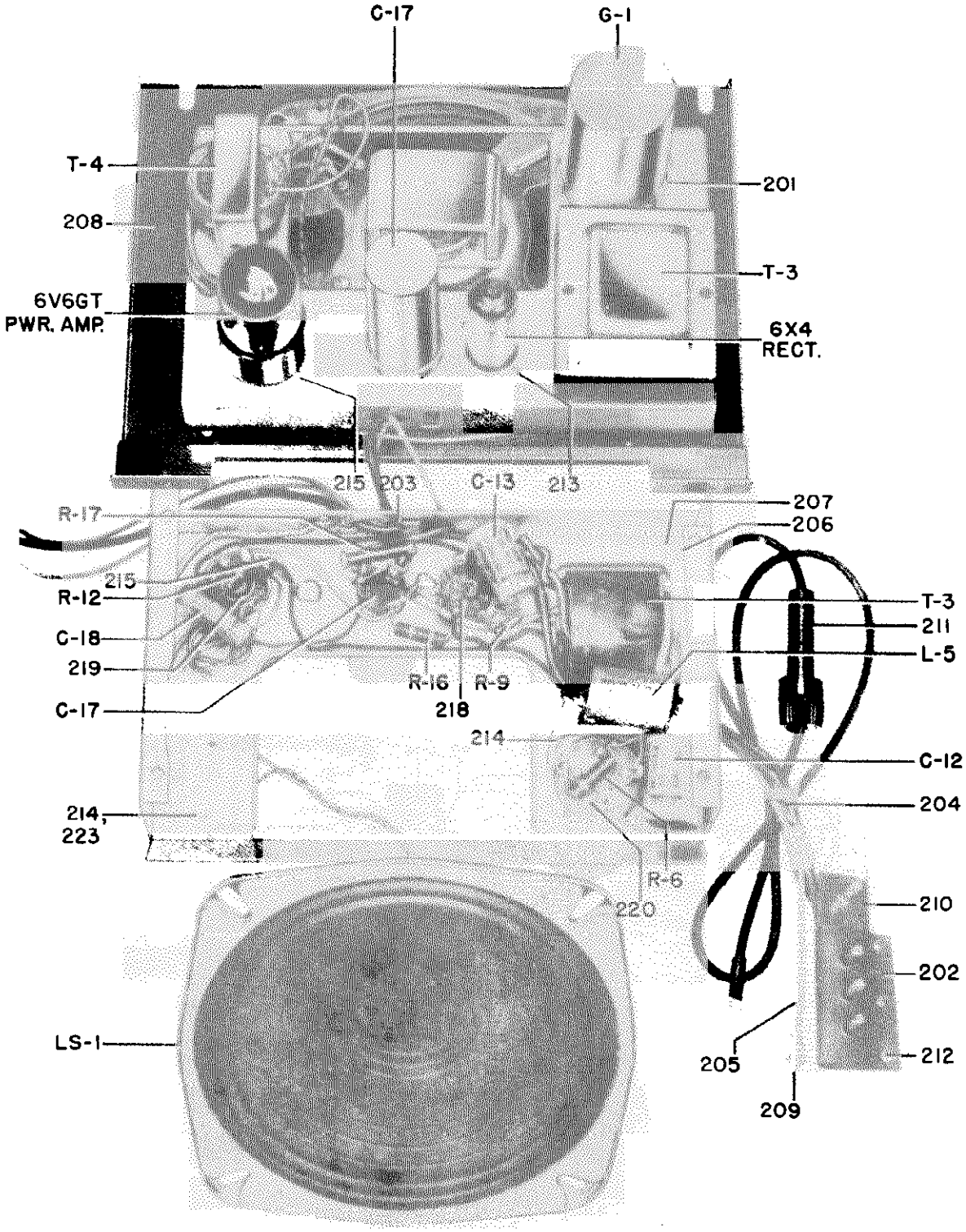

FIGURE 3. PARTS LOCATION - POWER & AUDIO UNIT

©John F. Rider

MODEL CT9, 1949
Chevrolet

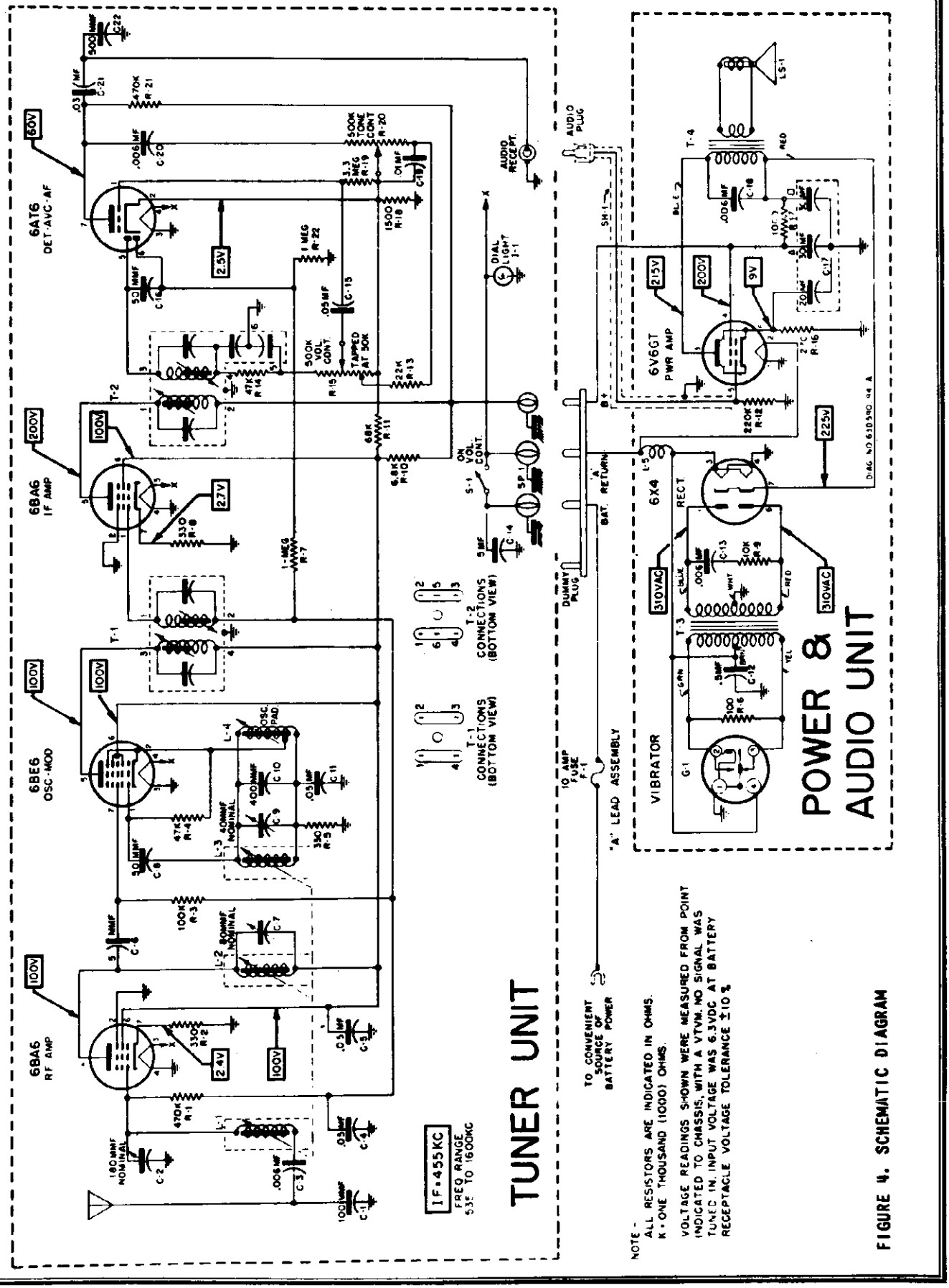

FIGURE 4. SCHEMATIC DIAGRAM

©John F. Rider

MODEL CT9, 1949
Chevrolet

REPLACEMENT PARTS LIST

REF. NO.	PART NO.	DESCRIPTION
TUNER UNIT - ELECTRICAL PARTS		
CAPACITORS		
C-1	21B77562	Ceramic: 100 mmf 500V .....
C-2	20A590629	Trimmer, variable mica: 50-220 mmf; with bracket .....
C-3	8C4529	Paper: .006 mf 100V .....
C-4	8K13514	Paper: .05 mf 100V .....
C-5	8K14791	Paper: .05 mf 400V .....
C-6	21K70720	Ceramic: 5 mmf 500V .....
C-7	20A590639	Trimmer, variable mica: 20-180 mmf; includes C-9 and brkt....
C-8	21K74661	Ceramic: 50 mmf 300V .....
or	21R6513	Mica: 50 mmf 300V .....
C-9	20A590639	Trimmer, variable mica: 5-80 mmf; includes C-7 & brkt .....
C-10	21A71872	Ceramic: 400 mmf 5% 500V .....
C-11	8K13514	Paper: .05 mf 100V .....
C-14	8K17028	Paper: .5 mf 100V .....
C-15	8K13514	Paper: .05 mf 100V .....
C-16	21K74661	Ceramic: 50 mmf 300V .....
C-19	8R472754	Paper: .01 mf 100V .....
C-20	8C4529	Paper: .006 mf 100V .....
C-21	8K71911	Paper: .03 mf 400V .....
C-22	21K481377	Ceramic: 500 mmf 500V .....
DIAL LIGHT		
I-1	65X10867	Bulb: 6.3V; .25A; bayonet base; clear #44.....
COILS		
L-1	24B71881*	RF & Antenna coil (specify color of paint dot on old coil when ordering) .....
L-2	24B71881*	RF & Antenna coil (specify color of paint dot on old coil when ordering) .....
L-3	24B71879*	Oscillator coil (specify color of paint dot on old coil when ordering) .....
L-4	24A70227	Oscillator padder coil: complete with iron tuning core .....
RESISTORS		
Note: All resistors are insulated carbon type, unless otherwise specified.		
R-1	6R6032	470,000 20% 1/2W .....
R-2	6R6010	330 20% 1/2W .....
R-3	6R6075	100,000 20% 1/2W .....
R-4	6R6056	47,000 20% 1/2W .....
R-5	6R6010	330 20% 1/2W .....
R-7	6R6004	1 meg 20% 1/2W .....
R-8	6R6010	330 20% 1/2W .....
R-10	6R6287	6800 20% 1W N.I. .....
R-11	6R6001	68,000 20% 1/2W .....
R-13	6R6028	22,000 20% 1/2W .....
R-14	6R6056	47,000 20% 1/2W .....
R-15	18B590604	Volume Control: 500,000 ohms; tapped at 50,000 ohms (includes tone control R-20 and switch S-1) .....
R-18	6R6161	1500 20% 1/2W .....
R-19	6R2118	3.3 meg 20% 1/2W .....
R-20		500,000 ohm tone control (part of vol cont) .....
R-21	6R6032	470,000 20% 1/2W .....
R-22	6R6004	1 meg 20% 1/2W .....
SWITCH		
S-1		Switch (Part of Volume Control)
SPARK PLATE		
SP-1	1A590637	Spark Plate Assembly .....
TRANSFORMERS		
T-1	24B485553	IF, 455 Kc: complete with padding capacitors and tuning cores...
T-2	24K485555	Diode, 455 Kc: complete with padding capacitors and tuning core
TUNER		
	1X590784	AT-71 Automatic Tuner .....
TUNER UNIT - CHASSIS MECHANICAL PARTS		
1	43A590605	Bushing, tuning shaft .....
2	42A485548	Clip, coil can mounting (T-1 & T-2) .....
3	2S8397	Nut, hex: 1/2-28 x 5/8 stl; cad pl (volume control and tuning control bushings mtg).....
4	1X590785	Pointer and Sleeve Assembly ...
5	1X590794	Receptacle, antenna input: includes bracket and terminal strip
6	9A54664	Receptacle, 1-pin (audio input)
7	5S7771	Rivet: .088 x 3/16; stl; nkl pl (tube socket mtg) .....
8	5S7706	Rivet: .122 x 1/8 stl; pol nkl (terminal strip mtg) .....
9	5S7701	Rivet: .122 x 3/16; stl; pol nkl (audio receptacle mtg).....
10	3S7205	Screw, machine: 8-32 x 1/4; slotted hex head; locking type; stl; cad pl (automatic tuner mtg).....
11	3S7454	Screw, sheet metal: #8 x 1/4 PKZ plain hex head; stl; cad pl (variable cap brkt, antenna receptacle brkt, and pilot lamp brkt mtg).....
12	26A473011	Shield, light .....
13	9A472905	Socket, pilot light & brkt ....
14	9A472534	Socket, tube: miniature; 7-prong
15	9K580218	Socket, tube: miniature; 8-prong
16	31K490141	Strip, terminal: 1 ins lug, #2 mtg (part of antenna receptacle brkt) .....
17	31K490143	Strip, terminal: 2 ins lugs, #2 mtg
18	1K590623	Tuning Shaft and Gear Assembly.
19	4A21577	Washer, 'C' (tuning shaft mtg).
20	4S490351	Washer, flat: 11/16 x .515 x .033 thick; stl; cad pl (tuning shaft bushing and volume control mtg) .....
21	4A580282	Washer, spring (tuning shaft mtg) .....
TUNER UNIT HOUSING PARTS		
101	7B590696	Background, dial .....
102	1X590783	Cover, front: includes gear mounting stud .....
103	15D590615	Cover, rear .....
104	13K590702	Escutcheon, dial .....
105	7B590693	Frame, dial retaining .....
106	44B472872	Gear, idler (mounted on front cover)
107	2S8397	Nut, hex: 1/2-28 x 5/8 stl; cad pl (tuner bushing mtg) .....
108	34C590802	Scale, dial .....
109	3S7156	Screw, machine: 6-32 x 3/16 slotted binderhead; stl; cad pl (dial retaining frame mtg)....
110	3S7205	Screw, machine: 8-32 x 1/4 slotted hex head; stl; cad pl (shell housing) .....do.
111	3S7475	Screw, sheet metal: #8 x 1/4 plain acorn head; stl; cad pl (front cover and rear cover mtg).....
112	3S7454	Screw, sheet metal: #8 x 1/4 PKZ plain hex head; stl; cad pl (front cover mtg) .....
113	15D590600	Shell, housing .....

* Part of Tuner AT-71

©John F. Rider

MODEL CT9, 1949
Chevrolet

REF. NO.	PART NO.	DESCRIPTION
114	46A590602	Stud, idler gear mtg .....
115	4K73809	Washer, 'C' (idler gear mtg)...
116	4S490351	Washer: 11/16 x .515 x .033 thick; stl; cad pl (tuner bushing mtg)

POWER & AUDIO UNIT - ELECTRICAL PARTS

C-12	8K17028	Paper: .5 mf 100V .....
C-13	8K12840	Paper: .006 mf 1600V .....
C-17	23A473015	Electrolytic: 30-30-20 mf/350-300-25V .....
C-18	8K71910	Paper: .006 mf 400V .....
FUSE		
F-1	65A10266	Fuse, 10 amp: type 3AG .....
VIBRATOR		
G-1	48B3333	Vibrator, non-sync: 4-pin .....
COILS		
L-5	24A472535	Choke, hash .....
SPEAKER		
LS-1	50K590681	Speaker: 6" PM; 3.2 ohm VC ....
RESISTORS		
		Note: All resistors are insulated carbon type unless otherwise specified.
R-6	6R6415	100 10% 1 watt .....
R-9	6R6054	10,000 20% 1/2W .....
R-12	6R6015	220,000 20% 1/2W .....
R-16	6R6336	270 10% 1 watt .....
R-17	6R6184	1000 20% 1 watt N.I. .....
TRANSFORMERS		
T-3	25K590650	Power transformer .....
T-4	25B590648	Output transformer .....

POWER & AUDIO UNIT - CHASSIS MECHANICAL PARTS

201	42A4215	Clip, vibrator grounding .....
202	14A590633	Insulator, armite (used on 4-pin connector) .....
203	14K590653	Insulator, armite (cable insulator) .....
204	1X590689	Lead Assembly, 'A': includes fuse & fuse receptacle, 4-pin connector and insulator .....
205	1X590691	Lead Assembly, audio: includes plug .....
206	4S7666	Lockwasher, ext: #6; stl; cad pl (power trans mtg).....
207	2S7005	Nut, hex: 6-32 x 1/4; stl; cad pl (power trans mtg) .....
208	64C590641	Plate, speaker mtg .....
209	28K71775	Plug, 1-pin (audio plug) .....
210	28A590611	Plug, 4-pin ('A' lead connector)
211	9B591314	Receptacle, fuse (complete)...
212	5S7769	Rivet: .088 x 3/32 stl; pol nkl (connector plug insulator mtg) .....
213	5S7771	Rivet: .088 x 3/16; stl; pol nkl (miniature socket mtg) .....
214	5S7701	Rivet: .122 x 3/16; stl; pol nkl (vibrator socket and output trans mtg) .....
215	5S7707	Rivet: .122 x 5/32; stl; pol nkl (octal socket and terminal strip mtg) .....
216	3S7475	Screw, sheet metal: #8 x 1/4 PKZ slotted acorn head; stl; cad pl (spkr plate mtg) .....
217	3S8176	Screw, sheet metal: #10 x 3/8 PKZ plain hex head; stl; cad pl (speaker mtg) .....
218	9A472534	Socket, tube: miniature; 7-prong
219	9A6788	Socket, tube: octal .....
220	9A70208	Socket, tube: 4-prong (for vibrator)
221	31K490143	Strip, terminal: 2 ins lugs, #2 mtg
222	4S1706	Washer, flat: 3/8 x .203 x .033 thick; stl; cad pl (spkr mtg).
223	4S7555	Washer, flat: 1/4 x .128 x .033 thick; stl; cad pl (output transformer mtg) .....

MOUNTING PARTS & ACCESSORIES

301	7B590609	Bracket, tuning unit mtg .....
302	1X590563	Button, push: includes clip: 2-3/32" long .....
303	1X590656	Button, push: includes clip: 2-3/64" long .....
304	1X590661	Button, push: includes clip: 1-15/16" long .....
305	1X590662	Button, push: includes clip: 1-25/32" long .....
306	1X590663	Button, push: includes clip: 'M'
307	43A590621	Bushing, spacer: chrome pl (large)
308	43A590603	Bushing, spacer (small) .....
309	8A4491	Capacitor, generator .....
310	32C590643	Gasket, speaker: rubber .....
311	36K472939	Knob, reset: chrome pl (tone control)
312	36K590638	Knob, volume and tuning control
313	4S7693	Lockwasher, split: 1/4 stl; cad pl (tuner unit mtg) .....
314	2S7022	Nut, hex: 1/4-20 x 7/16; stl; cad pl (tuner unit mtg).....
315	2S8397	Nut, hex: 1/2-28 x 5/8; stl; cad pl (tuner unit mtg to instrument panel) .....
316	64A13637	Plate, serrated (tuner unit mtg)
317	64D590704	Plate, trim: chrome pl .....
318	2S490342	Speednut: 10-24 blued (power & audio unit mtg) .....
319	46A590644	Stud, threaded shoulder (power & audio unit mtg) .....
320	6A4141	Suppressor, distributor .....
321	4K590606	Washer, cup: chrome pl .....
322	4K489323	Washer, felt (reset knob) .....

©John F. Rider

MODELS 5A9B, 5A9M, 5A9S,
Ch.HS-62A; 5A9UB, 5A9UM, Ch. HS-165

GENERAL INFORMATION

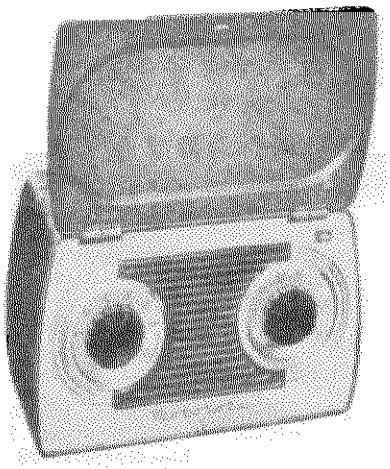

TYPE - Three-power (AC/DC-Battery) portable radio receiver of the personal type. Four miniature type tubes and a selenium rectifier are used in a superheterodyne circuit.

Model 5A9B - black crackle finish; uses chassis HS-62A
Model 5A9M - maroon crackle finish; uses chassis HS-62A
Model 5A9S - black crackle finish; uses chassis HS-62A
Model 5A9UB - black crackle finish; uses chassis HS-165
Model 5A9UM - maroon crackle finish; uses chassis HS-165

TUNING RANGE - 535 to 1620 Kc IF - 455 Kc

TUBE COMPLEMENT - 1R5 - Oscillator-Modulator
1U4 - IF Amplifier
1S5 - Detector, AVC & 1st AF Amplifier
3S4 - Power Amplifier
Rectifier - Selenium type - for AC/DC operation

POWER SUPPLY - Operates from 117V AC/DC (15 watts) or from the following batteries:

2 - 1-1/2V flashlight cells (Eveready #950 or equivalent)
1 - 67-1/2 "B" battery (Eveready #467 or equivalent)

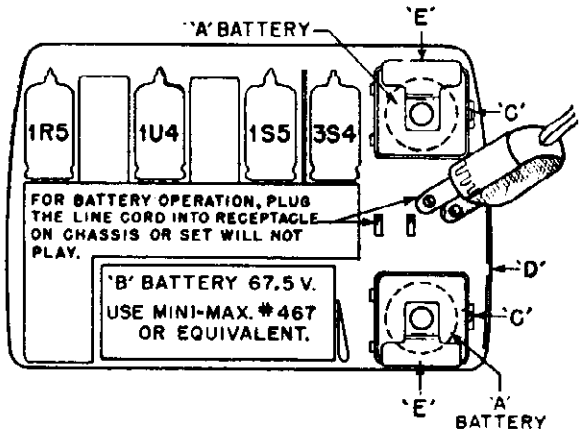

'A' Batteries: 1½ V. flashlight cells. Use Eveready No. 950 or equiv. Install with Center Terminal facing back of set. 2 used.

To open 'A' Battery Compartments push Catches 'C' to the right.

When playing from house current, pass Line Cord through Slot 'D' in cabinet.

When line cord is not in use, wind it around Cord Clamps 'E'.

FIGURE 1. BATTERY INSTALLATION DETAIL

ALIGNMENT

It is recommended that receiver be operated from battery during alignment.

If AC power is used, place an isolation transformer between power line and receiver. Connect low side of generator to B-.

A low range output meter should be connected to the speaker voice coil terminal and receiver chassis. Set receiver volume control to maximum. For greatest accuracy, keep output of receiver at approximately .05 watt (.05 watt = .40 volt on output meter) throughout alignment by reducing generator output (not receiver volume control) as stages are brought into alignment.

STEP	DUMMY ANTENNA	GENERATOR CONNECTION	GENERATOR FREQUENCY	GANG SET TO	ADJUST	REMARKS
IF ALIGNMENT						
1.	.1 mf	See Fig. 2.	455 Kc	Gang opened	1, 2 & 3	Adjust for maximum.
RF ALIGNMENT						
2.	.1 mf	See Fig. 2.	1620 Kc	Gang opened	4	This sets oscillator to dial scale.
3.	-	-	-	-	-	Install chassis in cabinet, leaving output meter connected to speaker.
4.	-	Radiation loop*	1400 Kc	Tune for maximum	5	Adjust for maximum. Trimmer is reached through hole under plug button on side of cabinet.

© John F. Rider

MODELS 5A9B, 5A9M, 5A9S,
Ch. HS-62A; 5A9UB, 5A9UM,
Ch. HS-165

* Connect generator output to .5" diameter 3 turn loop and couple to receiver loop. Keep loops at least 12" apart.

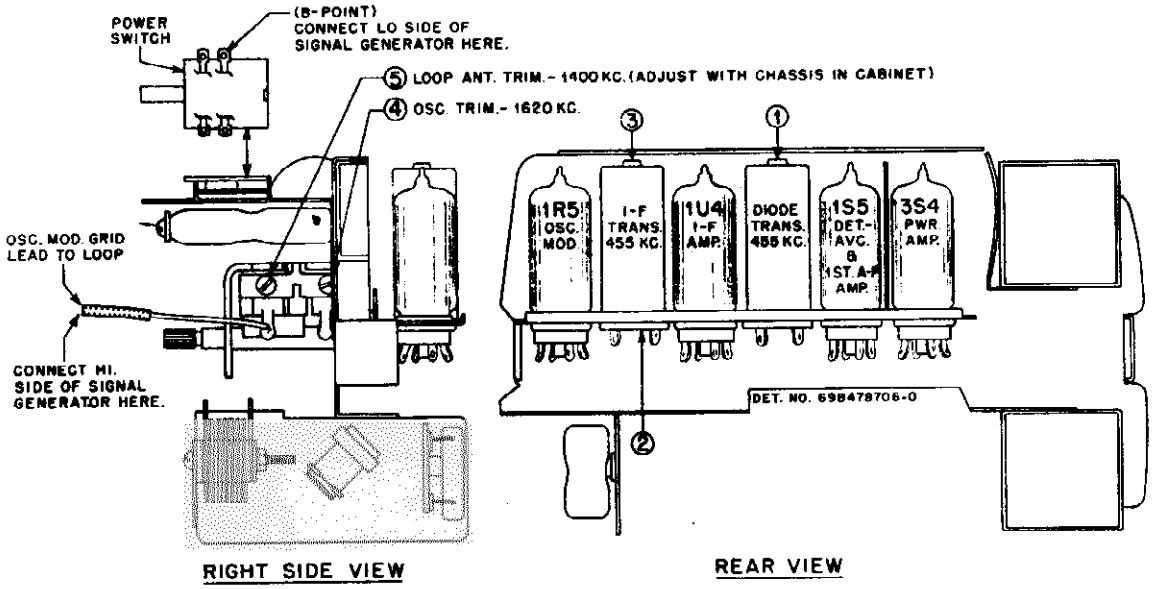

FIGURE 2. TUBE & TRIMMER LOCATIONS

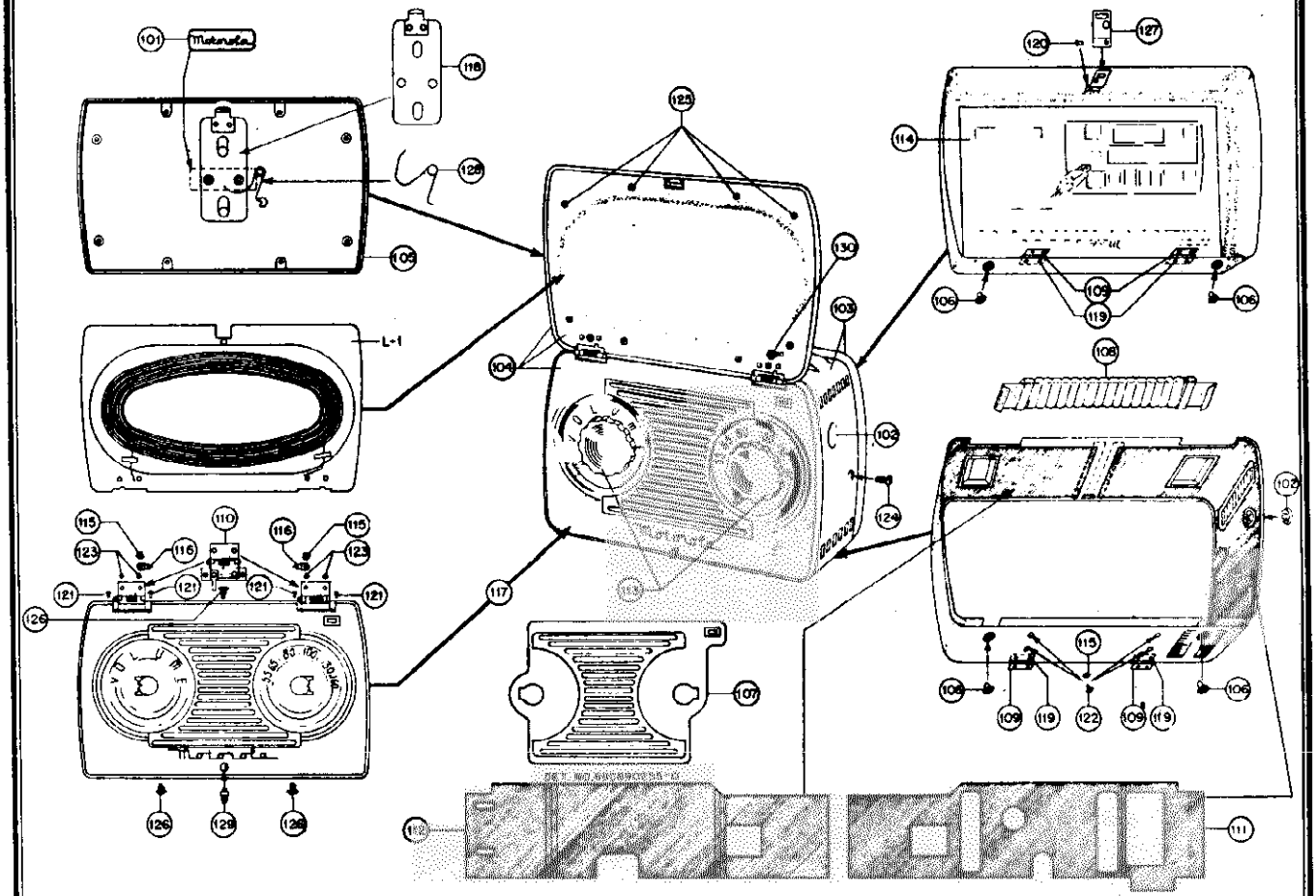

FIGURE 3. CABINET PARTS LOCATION

©John F. Rider

MODELS 5A9B, 5A9M, 5A9S,
Ch. HS-62A; 5A9UB, 5A9UM, Ch. HS-165

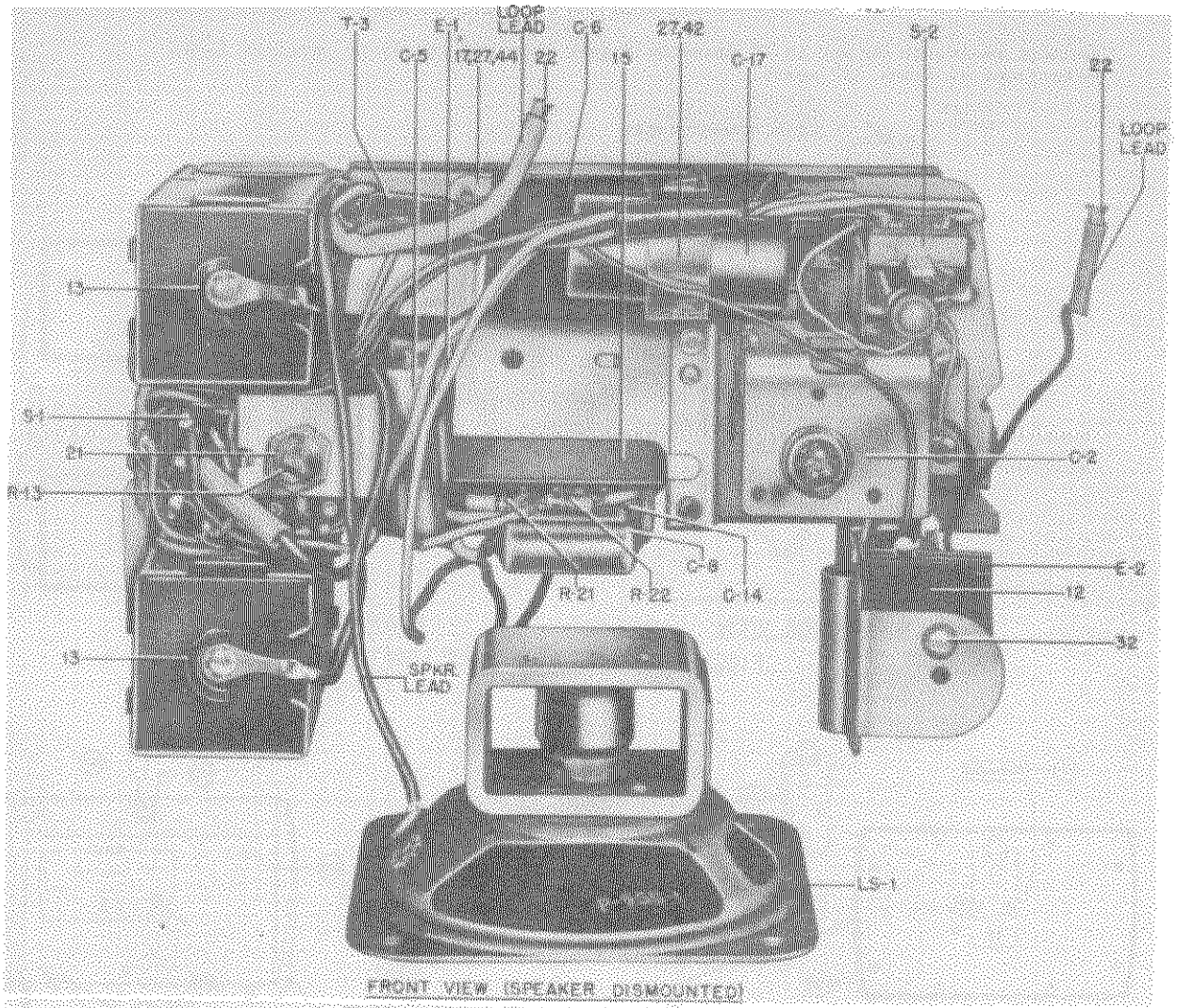

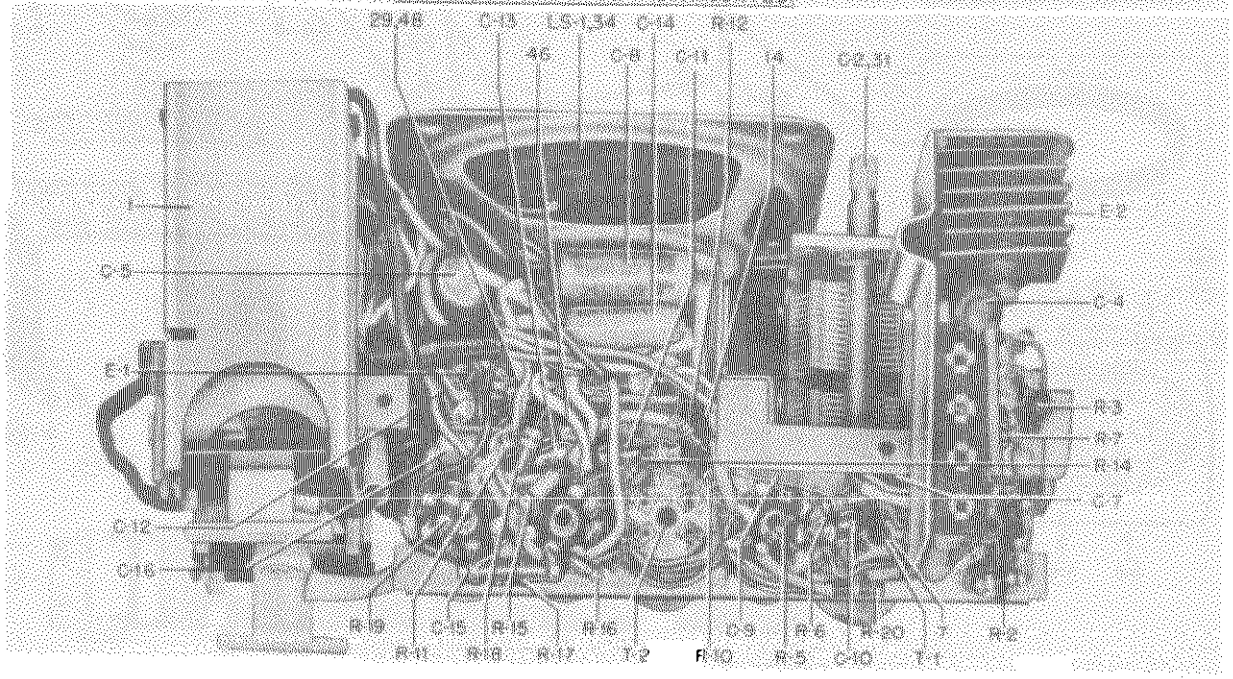

BOTTOM VIEW

FIGURE 4. CHASSIS PARTS LOCATIONS - FRONT & BOTTOM VIEWS

©John F. Rider

MODELS 5A9B, 5A9M, 5A9S,
Ch. HS-62A; 5A9UB, 5A9UM,
Ch. HS-165

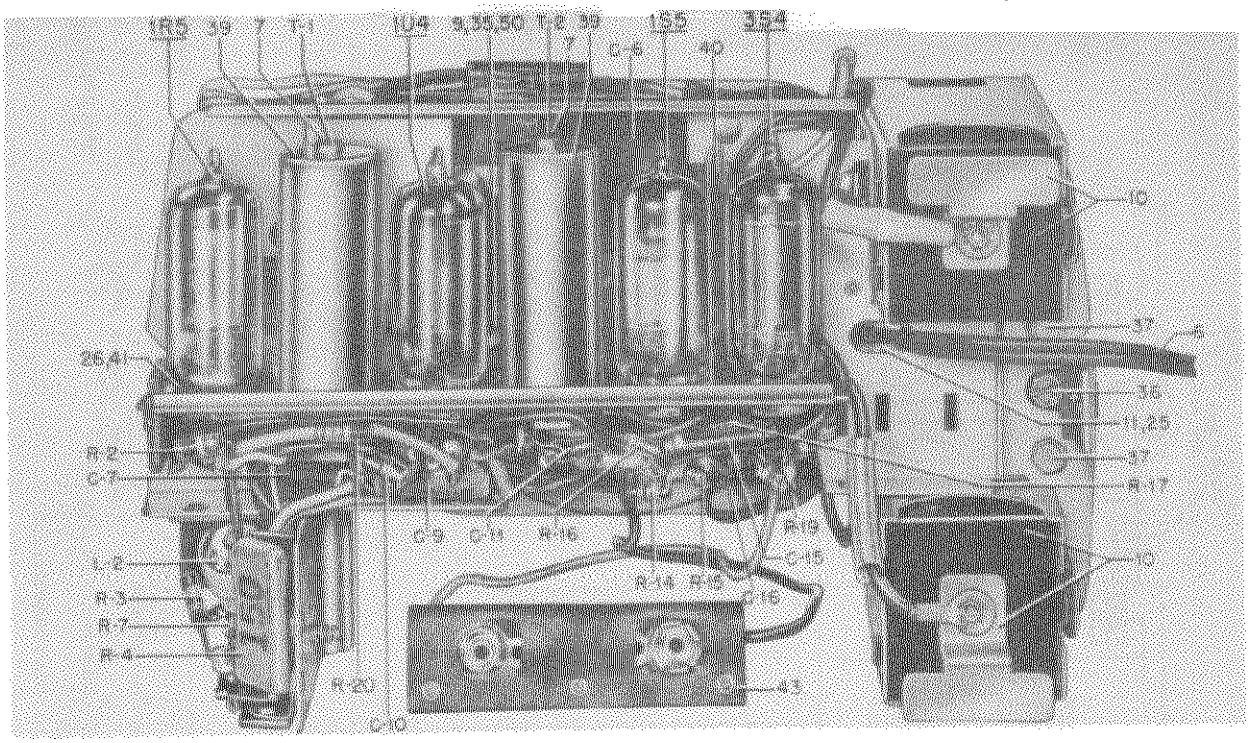

REAR VIEW

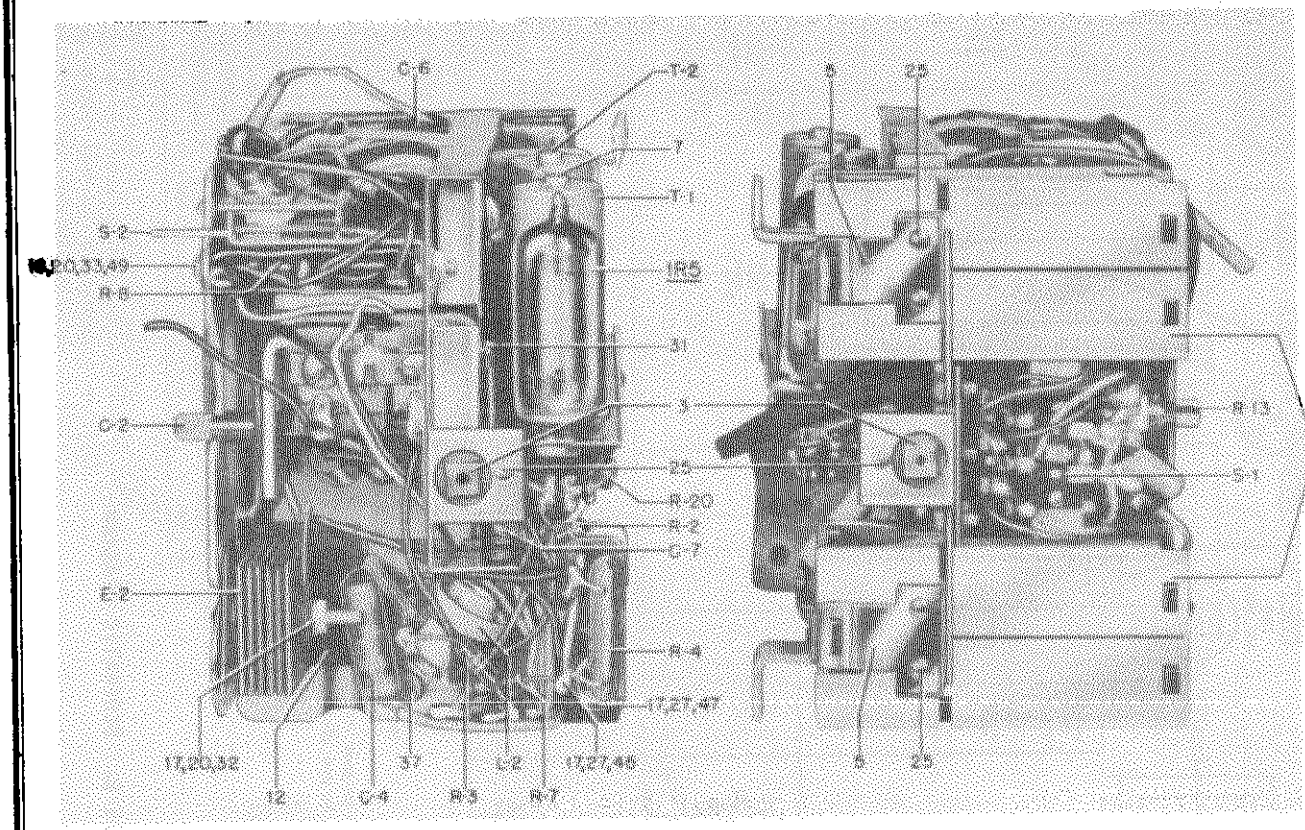

RIGHT SIDE VIEW

LEFT SIDE VIEW

FIGURE 5. CHASSIS PARTS LOCATIONS - REAR & END VIEWS

© John F. Rider

MODELS 5A9B, 5A9M, 5A9S, Ch. HS-62A;
5A9UB, 5A9UM, Ch. HS-165

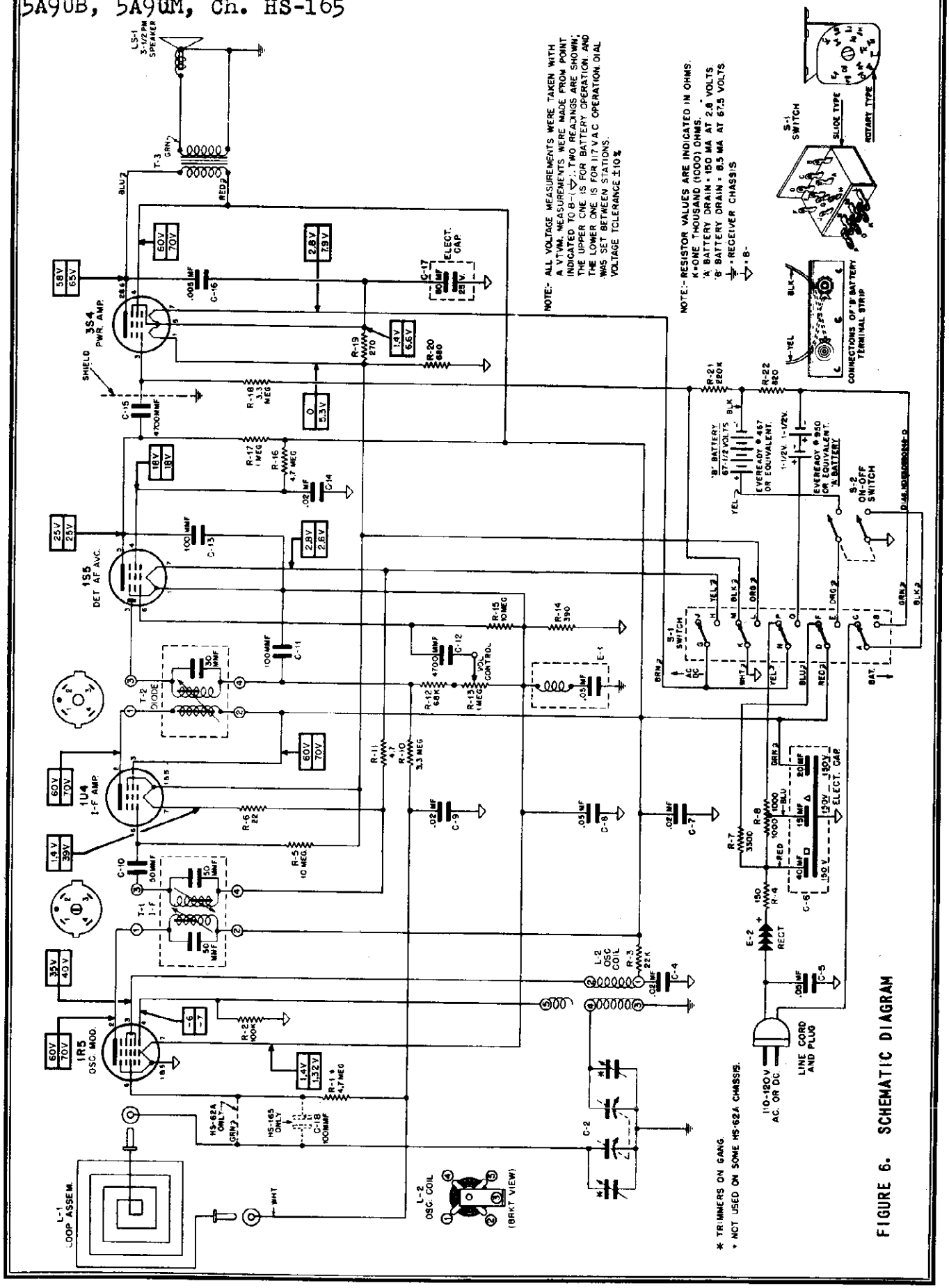

FIGURE 6. SCHEMATIC DIAGRAM

©John F. Rider

©John F. Rider

MODELS 5A9B, 5A9M, 5A9S,
Ch. HS-62A; 5A9UB, 5A9UM,
Ch. HS-165

REPLACEMENT PARTS LIST

REF. NO.	PART NO.	DESCRIPTION
CHASSIS PARTS - ELECTRICAL		
CAPACITORS		
C-2	19B478016	Variable, 2 gang: cut oscillator plates
C-4	8K471628	Paper: .02 mf 100V
C-5	8A470606	Paper: .05 mf 400V
C-6	23B470692	Electrolytic: 40-20-15 mf/150V
C-7	8K471628	Paper: .02 mf 100V
C-8	8A71213	Paper: .05 mf 100V
C-9	8K471628	Paper: .02 mf 100V
C-10	21K77373	Ceramic: 50 mmf 500V
C-11	21B77286	Ceramic: 100 mmf 500V
C-12	21B470567	Ceramic: 4700 mmf 500V
C-13	21B77286	Ceramic: 100 mmf 500V
C-14	8K471628	Paper: .02 mf 100V
C-15	21B470567	Ceramic: 4700 mmf 500V
C-16	8A24966	Paper: .005 mf 100V
C-17	23B470693	Electrolytic: 80 mf 25V
C-18	21B77286	Ceramic: 100 mmf 500V(HS-165 only)
CHOKE & CAPACITOR		
E-1	24A470628	Choke & Tubular Capacitor (.05 mf 200V capacitor)
RECTIFIER		
E-2	48B478111	Selenium Rectifier: half-wave
COILS		
L-1	24K690049	Loop Antenna & Panel Assembly:blk finish (5A9B, 5A9S & 5A9UB)
or	24K478008	Loop Antenna & Panel Assembly: maroon finish (5A9M & 5A9UM)
L-2	24A478022	Oscillator
SPEAKER		
LS-1	50E470620	Speaker: 3-1/2" PM; 3.2 ohm VC
or	50E478023	Speaker: 3-1/2" PM; 3.2 ohm VC
RESISTORS		
Note:		All resistors are insulated carbon type, unless otherwise specified.
R-1	6R2122	4.7 meg (HS-62A only)
R-2	6R6031	100,000
R-3	6R6397	22,000 10%
R-4	17A76986	Wirewound: 150 10% 2-1/2W
R-5	6R2109	10 meg
R-6	6R6406	22 10%
R-7	6R6036	3300
R-8	17A470618	Wirewound: 2,000 10% 5W center tapped
R-10	6R2118	3.3 meg
R-11	17K77629	Wirewound: 4.7 10% 1/2W
R-12	6R6001	68,000
R-13	18A471705	Volume Control: 1 megohm
R-14	6R5554	390 10%
R-15	6R2109	10 meg
R-16	6R2122	4.7 meg
R-17	6R6004	1 meg
R-18	6R2118	3.3 meg
R-19	6R6432	270 10%
R-20	6R6040	680 10%
R-21	6R6015	220,000
R-22	6R6269	820 10%
SWITCHES		
S-1	40A470619	Slide switch: 5PDT (AC-DC/Battery selector-interchangeable with 40B471927)
or	40B471927	Rotary Change-over Switch: 5PDT (AC-DC Battery Selector - interchangeable with 40A470619)
S-2	40A470937	Slide Switch (on-off)
TRANSFORMERS		
T-1	24B480042 or 24B690840	IF, 455 Kc: complete with padding capacitors and tuning cores; less shield
T-2	24B480040	Diode, 455 Kc: complete with padding capacitor and tuning core; less shield
T-3	25B470622	Output
CHASSIS PARTS - MECHANICAL		
1	1X470935	Battery Box and Bracket Assembly: two complete 'A' battery boxes assembled together; includes negative contacts and positive contact insulator catches only
2	7A478012	Bracket, speaker mounting (used only with 50B478023 speaker)
3	1X470835	Bushing and Insulator Assembly (chassis insulated mtg)
4	43K13458	Bushing, plain: brass (used inside sub-chassis shock mtg grommets)
5	55A470913	Catch, battery insulator: phosphor bronze
6	30B470621	Cord, line and plug: 2-conductor, 6 ft lg (HS-62A)
or	30K680022	Cord, line and plug: 2-conductor; 5 ft lg (HS-165)
7	46K680318	Core, iron: threaded (IF & diode trans tuning)
8	15C470942	Cover, chassis (bottom chassis cover)
9	5K470916	Grommet, insulating: rubber (sub-chassis shock mtg)
10	1X470933	Insulator, Lead and Lug Assembly, includes cord clamp ('A' battery box positive contact)
11	14A470614	Insulator, line cord lock: fibre
12	14A478112	Insulator, rectifier: armite
13	1X477026	Insulator, Spring, Lead and Lug Assembly ('A' battery box negative contact)
14	14A470617	Insulator, terminal strip: armite; small
15	14A470615	Insulator, terminal strip: armite large
16	4S7666	Lockwasher, ext: #6 (resistor mtg)
17	4S7650	Lockwasher, int: #6 (term strip and rectifier mtg)
18	29R5235	Lug, soldering: #6
19	29R5239	Lug, soldering: #8 (HS-165 only)
20	2S7005	Nut, hex: 6-32 x 1/4; stl; cad pl (resistor and rectifier mtg)
21	2S7018	Nut, hex: 3/8-32 x 1/2; stl; cad pl (vol cont mtg)
22	9A470980	Receptacle, loop lead
23	5S8497	Rivet: .088 x 1/8; stl; nkl pl (line cord lock mtg and bushing & insulator assembly mtg)
24	5S7769	Rivet: .088 x 3/32; stl; nkl pl (term strip mtg)
25	5S7770	Rivet: .088 x 5/32; stl; nkl pl (line cord lock, battery insulator catch and chassis insulator mtg)
26	5S7771	Rivet: .088 x 3/16; stl; nkl pl (tube socket mtg)
27	5S7706	Rivet: .122 x 1/8; stl; nkl pl (electrolytic strap, ON-OFF switch, terminal strip and battery box & brkt assembly mtg)
28	5S7707	Rivet: .122 x 5/32; stl; nkl pl (spkr screen mtg-HS-165)
29	5S7701	Rivet: .122 x 3/4; stl; nkl pl (term strip mtg)
30	64A680021	Screen, speaker (HS-165)
31	3S7247	Screw, machine: 6-32 x 3/16; slotted hex head locking type; stl; cad pl (gang mtg)
32	3S9663	Screw, machine: 6-32 x 1-1/8; slotted round head; stl; cad pl (rectifier mtg)
33	3S1451	Screw, machine: 6-32 x 2"; slotted round head; stl; cad pl (resistor mtg -HS-62A)
or	3S488195	Screw, machine: 6-32 x 2"; plain round head; stl; cad pl (resistor mtg -HS-165)
34	3S7205	Screw, machine: 8-32 x 1/4 slotted hex head locking type; stl cad pl (spkr mtg)
35	3S2681	Screw, sheet metal: #4 x 3/8; Phillips fillister head thread cutting screw; stl; cad pl (sub-chassis mtg)
36	3S7462	Screw, sheet metal: #6 x 3/16; slotted hex head thread cutting; stl; cad pl (AC/DC Battery sw mtg-center)
37	3S7506	Screw, sheet metal: #6 x 1/4; PKZ plain hex head; stl; cad pl (osc coil and battery box mtg)
38	3S7471	Screw, sheet metal: #6 x 1/4 thread cutting; plain hex head; stl; cad pl (chassis cover mtg-HS-62A)
or	3S7460	Screw, sheet metal: #6 x 1/4; slotted binderhead thread cutting screw; stl; cad pl (chassis cover mtg-HS-165)
39	1K480037	Shield and Sleeve Assembly (for T-1 & T-2)
40	26A470908	Shield, tube
41	9A690129	Socket, tube: miniature; 7-prong
42	42A470607	Strap, electrolytic retainer
43	31K470880	Strip, 'B' battery terminal
44	31A84794	Strip, terminal: 1 insulated lug, end mtg
45	31K86126	Strip, terminal: 2 insulated lugs, #2 mtg (3/8 spacing)
46	31A38311	Strip, terminal: 2 insulated lugs, #2 mtg (1/4" spacing)
47	31A71196	Strip, terminal: 3 insulated lugs, #1 mtg
48	31A470612	Strip, terminal: 5 insulated lugs, hole mtg

49	4A51143	Washer, fibre: 3/8" (resistor mtg)	
50	3S7554	Washer, flat: 3/8 x 1/8 x .033 thick; stl; cad pl (sub-chassis mtg)	
51	4S7555	Washer, flat: 1/4 x .128 x 033 thick; stl; cad pl (spkr screen mtg-HS-165)	
CABINET PARTS			
101	36K690047	Button, loop cover: blk plastic (5A9B, 5A9S and 5A9UB)	
	or 36K690473	Button, loop cover: maroon plastic (5A9M & 5A9UM)	
102	38K690080	Button, plug: wrinkle blk finish (cover for loop ant. trim hole -5A9B, 5A9S and 5A9UB)	
	or 38K690472	Button, plug: wrinkle maroon finish (cover for loop ant. trim hole -5A9M and 5A9UM)	
103	1X690061	Cabinet: complete; blk crackle finish; includes housing, rear cover with catch, felt feet and armite housing insulators; does not include carrying handle or front cover and loop (5A9B and 5A9S)	
	or 1X690476	Cabinet: same as above except with maroon crackle finish (5A9M)	
	or 1X690126	Cabinet: same as above except with blk crackle finish (5A9UB)	
	or 1X690482	Cabinet: same as above except with maroon crackle finish (5A9UM)	
104	1X690084	Cover, Loop and Front Panel Assembly: includes satin finished chrome front panel, latch retainer stud, two insulated hinges, blk molded speaker grille, blk loop ant and loop cover with latch (5A9B, 5A9S & 5A9UB)	
	or 1X690477	Cover, Loop and Front Panel Assembly: same as above except maroon finish (5A9M and 5A9UM)	
105	1X690087	Cover and Latch Assembly: blk; loop ant cover with complete latch assembly (5A9B, 5A9S and 5A9UB)	
	or 1X690479	Cover and Latch Assembly: maroon; loop ant cover with complete latch assembly (5A9M & 5A9UM)	
106	55A27113	Foot, felt	
107	13K690051	Grille, speaker: blk plastic (5A9B, 5A9S and 5A9UB)	
	or 13C470873	Grille, speaker: maroon plastic (5A9M and 5A9UM)	
108	55B690068	Handle, carrying: blk; complete (5A9B, 5A9S and 5A9UB)	
	or 55K690113	Handle, carrying: maroon; complete (5A9M and 5A9UM)	
109	55K30198	Hinge, back cover	
110	1X690086	Hinge and Insulator Assembly (front cover hinge)	
111	14D478014	Insulator, inner housing: right-hand; armite	
112	14K478079	Insulator, inner housing: left-hand; armite	
113	36K690050	Knob, control: blk plastic (5A9B, 5A9S and 5A9UB)	
	or 36K690474	Knob, control: maroon plastic (5A9M and 5A9UM)	
114	54B690229	Label, composite: operating instructions & cover insulator (5A9S)	
	or 54B690204	Label, composite: operating instructions & cover insulator (5A9B)	
	or 54B690213	Label, composite: operating instructions & cover insulator (5A9M)	
	or 54B690214	Label, composite: operating instructions & cover insulator (5A9UB)	
	or 54B690215	Label, composite: operating instructions & cover insulator (5A9UM)	
115	4S8406	Lockwasher, int: #2; stl; cad p' (housing ins and loop lug mtg	
116	29R5399	Lug, soldering: #3	
117	15K690052	Panel, front: metal; satin chrome finish (5A9B, 5A9S & 5A9UB)	
	or 15K690471	Panel, front: metal; satin chrome finish (5A9M and 5A9UM)	
118	1X690088	Plate and Latch Assembly	
119	5S7769	Rivet: .088 x 3/32; stl; nkl pl (rear cover hinge mtg)	
120	5S8487	Rivet: .088 x 3/32; stl; blk nkl finish (rear cover catch mtg 5A9B, 5A9S and 5A9UB)	
	or 5S2831	Rivet: .088 x 3/32; stl; statuary bronze finish (rear cover catch mtg -5A9M and 5A9UM)	
121	5S2847	Rivet: .088 x 1/4; stl; blk nkl finish (mounts hinge to front panel-5A9B, 5A9S & 5A9UB)	
	or 5S2829	Rivet: .088 x 1/4; stl; statuary bronze finish (mounts hinge to front panel - 5A9M and 5A9UM)	
122	5S8490	Rivet: .088 x 5/32; stl; blk nkl finish (housing insulator mtg)	
123	5S8490	Rivet: .088 x 5/32; stl; blk nkl finish (mounts hinge to loop panel-5A9B, 5A9S and 5A9UB)	
	or 5S2827	Rivet: .088 x 5/32; stl; statuary bronze finish (mounts hinge to loop panel-5A9M and 5A9UM)	
124	3S490017	Screw, machine: 4-40 x 1/4; Phillips binderhead; blk nkl finish (chassis to cabinet mtg 5A9B, 5A9S and 5A9UB)	
	or 3S476038	Screw, machine: 4-40 x 1/4; Phillips binderhead; statuary bronze finish (chassis to cabinet mtg-5A9M and 5A9UM)	
125	3S490018	Screw, sheet metal: #2 x 1/4; PKZ Phillips flat head; blk nkl finish (mounts loop to loop cover-5A9B, 5A9S & 5A9UB)	
	or 3S3389	Screw, sheet metal: #2 x 1/4; PKZ Phillips flat head; statuary bronze finish (mounts loop to loop cover- 5A9M and 5A9UM)	
126	3S490019	Screw, sheet metal: #4 x 3/16; PKA Phillips stove head; blk nkl finish (mounts front panel to housing-5A9B, 5A9S and 5A9UB)	
	or 3S3390	Screw, sheet metal: #4 x 3/16; PKA Phillips stove head; statuary bronze finish (mounts front panel to housing-5A9M and 5A9UM)	
127	1X690083	Spring and Button Assembly (rear cover catch)	
128	41A470909	Spring, loop door catch	
129	46K690046	Stud, latch retainer	
130	46K690079	Stud, trimount: blk nkl finish(on loop panel for actuating on-off switch-5A9B, 5A9S and 5A9UB)	

SERVICE NOTES

To remove the chassis from the cabinet, remove the two 4-40 screws (one on each side of the cabinet), pull off the tuning knobs, remove the front panel, disconnect the two loop leads from the pin receptacles, and slide the chassis out of the cabinet.

To remove the chassis cover plate, remove the two slotted screws holding the plate to the edge of the large chassis, and with the set lying with speaker cone down, lift the plate up from the chassis.

To remove the gang capacitor, the screws holding the small chassis to the large chassis should be removed. This makes it possible to pull the small chassis strip out of the way so that access can be had to the screws holding the gang.

For access to some of the wiring, the 'A' battery boxes may have to be removed. To do this, remove the two hex-headed screws over the slide switch, leaving the center screw in place. The two boxes and the connecting bracket may now be separated from the chassis. The bottom plates of the battery boxes are wired to the set, but the plates may be removed by bending the ears on the boxes outward.

Placement of the four tubes (1R5, 1U4, 1S5 and 3S4) is such that they may be easily removed for servicing by opening the back cover of the set. To reduce microphonic howl, rubber shock mounting is provided for the small chassis holding the tubes and coils. A thin piece of braid serves to bond the two chassis. This braid, as well as all leads connecting the small chassis wiring to the large chassis, should be carefully dressed and free in movement to insure a good floating action of the small chassis.

Insulation between the cabinet (front, back and wrap-around) and chassis is provided for by the bakelite bushing mountings on the sides and by a wrap of armite riveted to the inside of the cabinet. The speaker is held in place by one screw located in the back of the 1S5 tube and a locating ear under the diode coil can. To replace the speaker, remove the 8-32 hex-headed screw, unsolder the voice coil lead receptacle on the speaker and pull the speaker out from the front of the set.

Turning the set "on" or "off" is accomplished by opening or closing the front cover which actuates a push rod connected to a switch. Overthrow has been provided in the switch so that the switch is open circuited before the cover is completely closed. This prevents tolerance between the cover and front panel from causing switch failure. Inserting the line cord plug into the two slots between the battery boxes operates a slide switch which changes the circuit wiring to battery operation. The oscillator coil and tuning capacitor leads should be dressed close to the chassis. This will minimize shifting of oscillator frequency when chassis is installed in its cabinet.

o John F. Rider

MODELS 49L11Q, 49L13Q;
Ch. HS-183

GENERAL INFORMATION

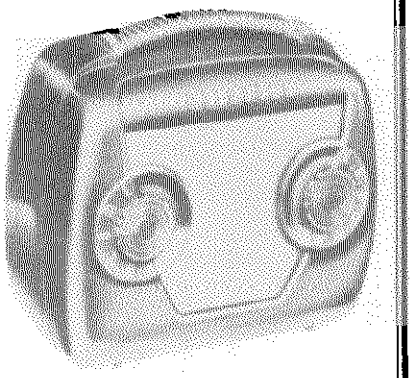

TYPE - A battery-operated portable receiver. Four miniature type tubes are used in a superheterodyne circuit.

TUNING RANGE - 535 to 1620 Kc IF - 455 Kc

TUBE COMPLEMENT - 1R5 - Converter
1U4 - IF Amplifier
1U5 - Detector, AVC & 1st AF Amplifier
3S4 - Power Amplifier

POWER SUPPLY - Operates from the following batteries:

Two 1-1/2V flashlight cells (Eveready #950 or equivalent)
One 67-1/2V 'B' battery (Eveready #467 or equivalent)

INSTALLATION & OPERATING INSTRUCTIONS

CONTROLS. The power switch is combined and operated with the volume (left-hand) knob.

BATTERY OPERATION. Open the rear cover and install the batteries. The rear cover is opened by inserting the fingertips into the slots under the handle and pulling back. See Figure 1 for complete battery installation instructions.

When low volume or fuzzy tone is noticed, replace the flashlight cells. Normally, the 67-1/2 volt 'B' battery will last for 3 or 4 changes of flashlight cells.

If the receiver is to be placed in storage, remove the batteries and store them in a cool place; this will prevent battery leakage and possible damage to the receiver. Replace or remove run-down batteries immediately, or they will leak and damage receiver.

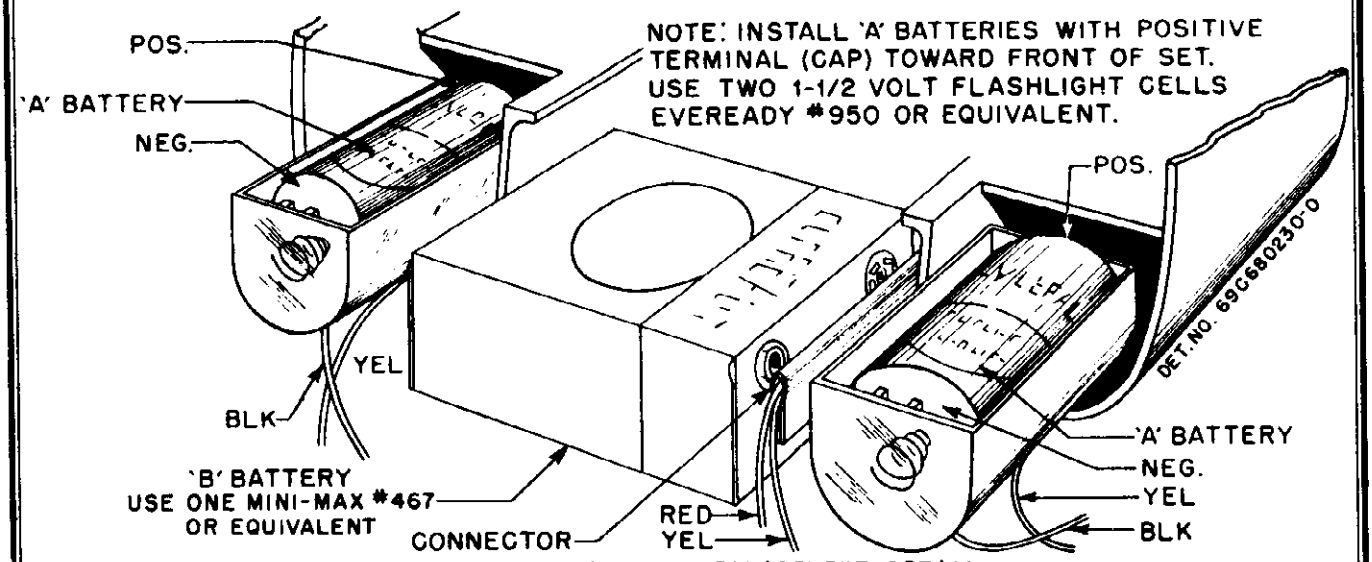

FIGURE 1. BATTERY REPLACEMENT DETAIL

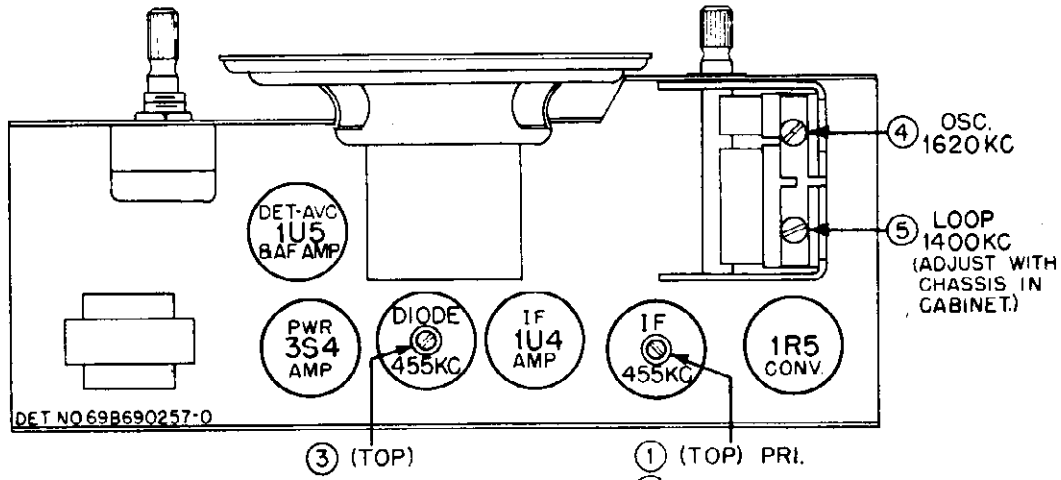

FIGURE 2. TUBE & TRIMMER LOCATIONS

© John F. Rider

©John F. Rider

SERVICE NOTES

Tubes can be replaced without removing the chassis from the cabinet; open the back cover and remove the chassis insulator to expose the tubes. Two plug buttons hold the chassis insulator in position.

To remove the chassis from the cabinet:

1. Remove the control knobs.
2. Open the back cover and remove the chassis insulator.
3. Disconnect the two loop leads from the pin receptacles.
4. Remove the two Phillips head screws on each end of the chassis and slide the chassis out of the cabinet.

ALIGNMENT

Connect a low range output meter across the speaker voice coil terminal and receiver chassis. Set the receiver volume control to maximum. For greatest accuracy keep the output of the receiver at approximately .05 watt (.05 watt = .40 volts on output meter) throughout alignment by reducing generator output as stages are brought into alignment. Use a small fibre screwdriver for aligning the IF and diode transformers.

Loop antenna should be connected to chassis during alignment.

STEP	DUMMY ANTENNA	GENERATOR CONNECTION	GENERATOR FREQUENCY	DIAL SET TO	ADJUST	REMARKS
IF ALIGNMENT						
1.	.1 mf	Rear stator of tuning capacitor.	455 Kc	Gang opened	1, 2 & 3	Adjust for maximum.
RF ALIGNMENT						
2.	.1 mf	"	1620 Kc	"	4	Adjust for maximum.
3.	-	-	-	-	-	**Install chassis in cabinet, leaving output meter connected to speaker.
4.	-	Radiation loop*	1400 Kc	Tune for maximum	5	Adjust for maximum. Trimmer is reached through hole under left-hand battery holder.

* Connect generator output to a 5" diameter 3 turn loop and couple to receiver loop. Keep loops at least 12" apart.

** As an alternate method, the output meter may be disconnected at this point and the set installed in the cabinet. Tune in a weak station near 1400 Kc and adjust trimmer #5 through the hole in the bottom of the cabinet for maximum signal output.

MODELS 49L11Q, 49L13Q;
Ch. HS-183

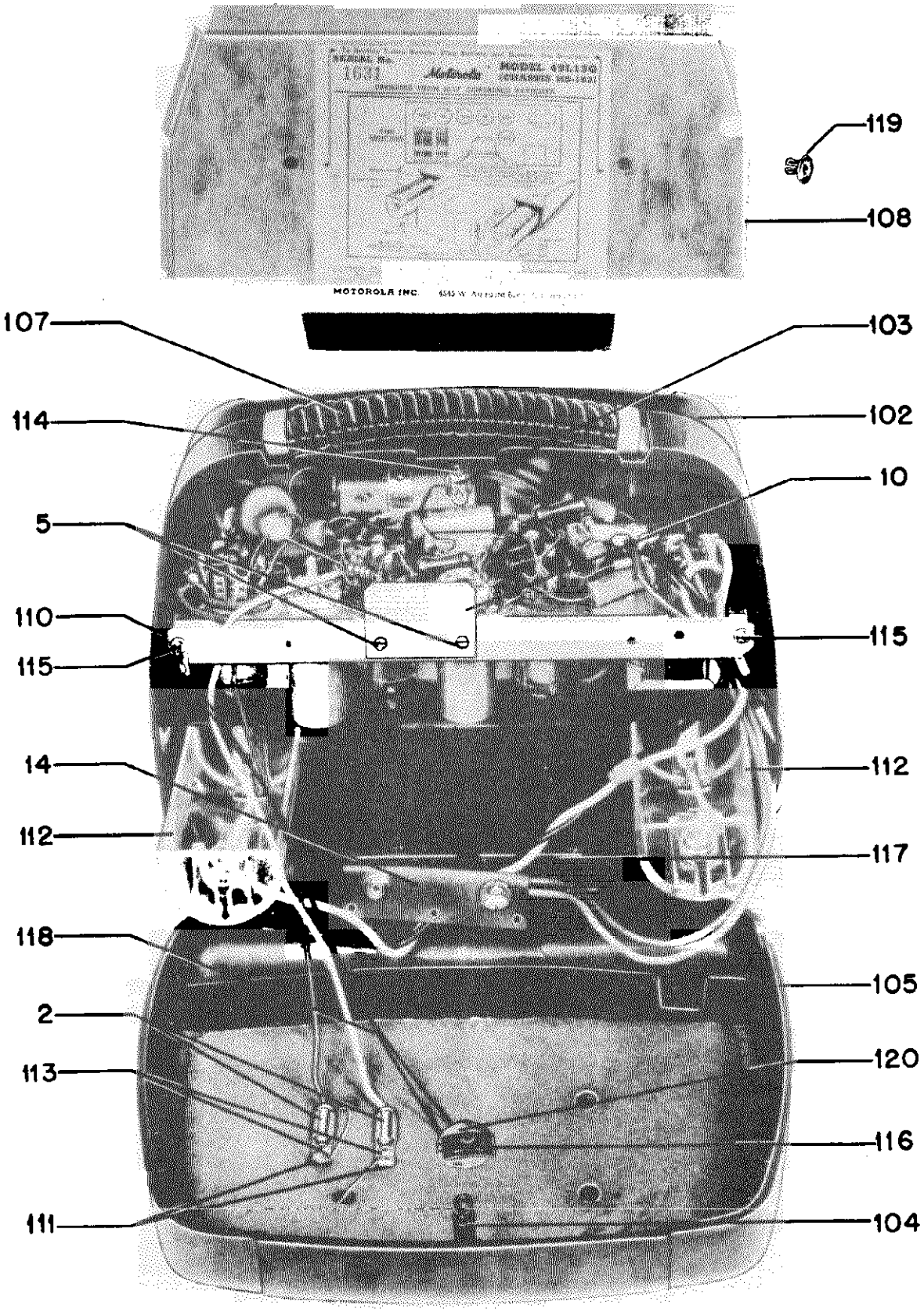

FIGURE 3. PARTS LOCATION - CABINET REAR VIEW

©John F. Rider

MODELS 49L11Q, 49L13Q;
Ch. HS-183

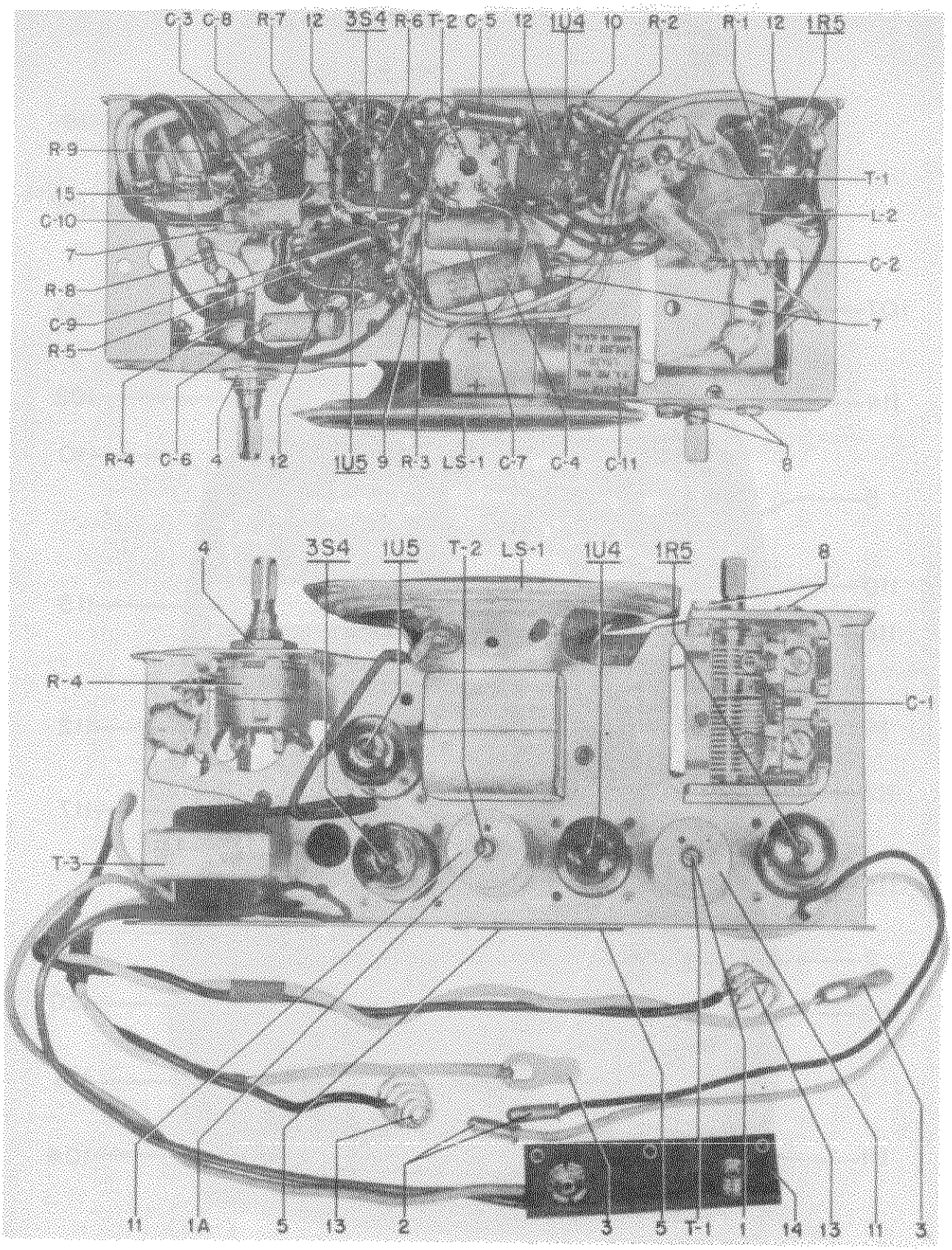

FIGURE 4. PARTS LOCATION - CHASSIS TOP & BOTTOM

© John F. Rider

MODELS 49L11Q, 49L13Q;
Ch. HS-183

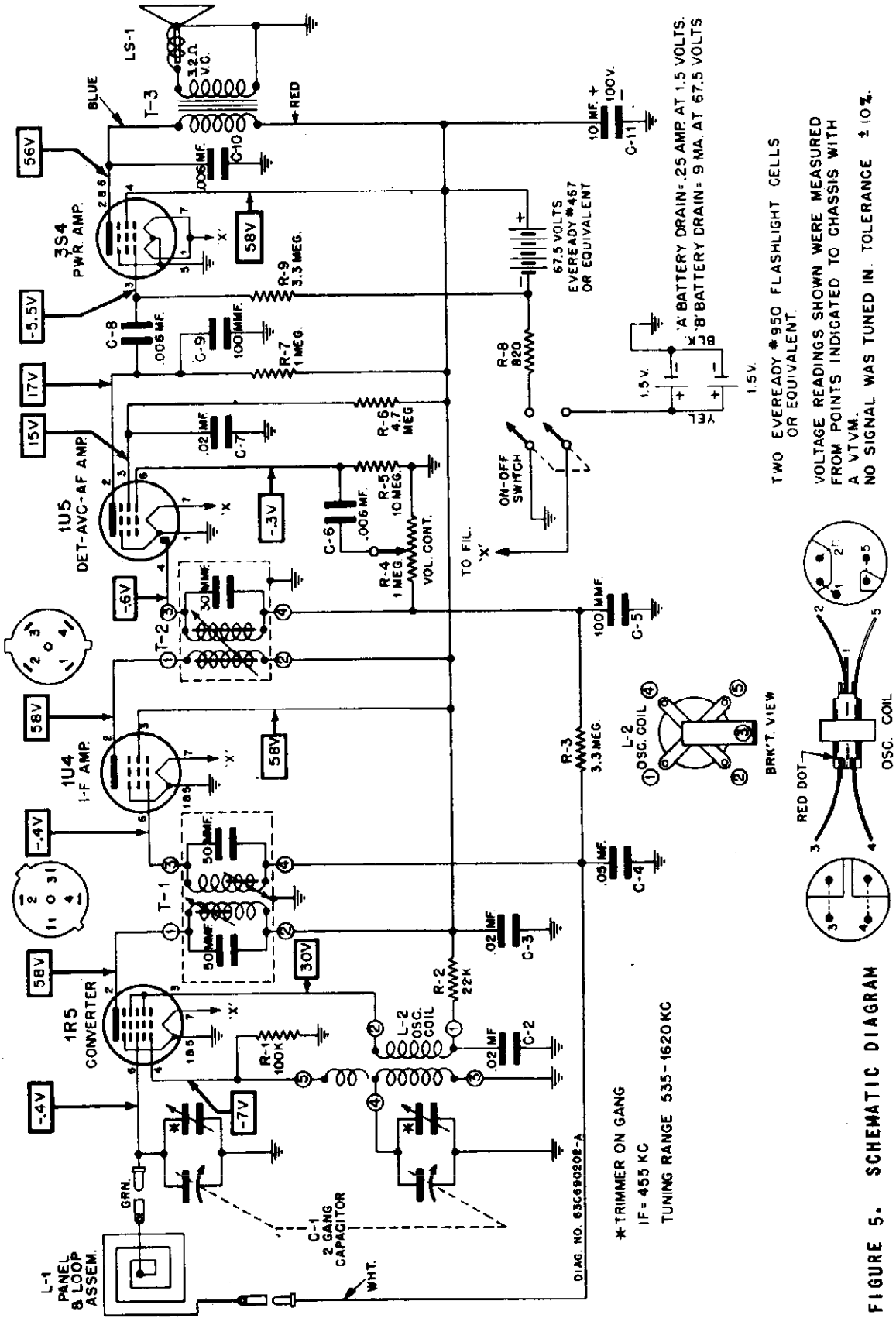

FIGURE 5. SCHEMATIC DIAGRAM

©John F. Rider

MODELS 49L11Q, 49L13Q;
Ch. HS-183

REPLACEMENT PARTS LIST

REF. NO.	PART NO.	DESCRIPTION
CHASSIS PARTS - ELECTRICAL		
CAPACITORS		
C-1	19K680360	Variable: 2 gang .....
C-2	8K471628	Paper: .02 mf 100V .....
C-3	8K471628	Paper: .02 mf 100V .....
C-4	8A71213	Paper: .05 mf 100V .....
C-5	21B77286	Ceramic: 100 mmf 500V .....
C-6	8C4529	Paper: .006 mf 100V .....
C-7	8K471628	Paper: .02 mf 100V .....
C-8	8C4529	Paper: .006 mf 100V .....
C-9	21B77286	Ceramic: 100 mmf 500V .....
C-10	8C4529	Paper: .006 mf 100V .....
C-11	23A75235	Electrolytic: 10 mf 100V .....
COILS		
L-1	24B480092	Panel and Loop Assembly .....
L-2	24A485989	Oscillator coil .....
RESISTORS		
Note:		All resistors are carbon, insulated type unless otherwise specified.
R-1	6R6031	100,000 10% 1/2W .....
R-2	6R6397	22,000 10% 1/2W .....
R-3	6R2118	3.3 meg 20% 1/2W .....
R-4	18K480039	Volume control: 1 meg; with DPST switch .....
R-5	6R2109	10 meg 20% 1/2W .....
R-6	6R2122	4.7 meg 20% 1/2W .....
R-7	6R6004	1 meg 20% 1/2W .....
R-8	6R6269	820 10% 1/2W .....
R-9	6R2118	3.3 meg 20% 1/2W .....
SPEAKER		
LS-1	50B480048	
or	50B482759	Speaker: 3-1/2" PM; 3.2 ohm VC.
TRANSFORMERS		
T-1	24B480042	
or	24B690840	IF transformer: 455 Kc; complete with tuning cores and padding capacitors, but less shield...
T-2	24B480040	Diode transformer: 455 Kc: complete with tuning cores and padding capacitors, but less shield .....
T-3	25B470622	Output transformer .....
CHASSIS PARTS - MECHANICAL		
1	46K680318	Core, iron: threaded (T-1) ....
1A	46A470885	Core, iron: threaded (T-2)
2	5S7855	Eyelet: .156 x .484 (loop lead tips) .....
3	29R3020	Lug, soldering (battery contact) .....
4	2S7051	Nut, hex: 3/8-32 x 9/16; stl cad pl (vol control mtg)...
5	5S7769	Rivet: .088 x 3/32; stl; nkl pl (shield mtg) .....
6	5S7771	Rivet: .088 x 3/16; stl; nkl pl (tube socket mtg) .....
7	5S7706	Rivet: .122 x 1/8; stl; nkl pl (electrolytic and terminal strip mtg) .....
8	3S7247	Screw, machine: 6-32 x 3/16; slotted locking hex head; stl: cad pl (tuning capacitor mounting) .....
9	3S7205	Screw, machine: 8-32 x 1/4: slotted locking hex head; stl; cad pl (spkr mtg)....
10	26A480034	Shield, circuit .....
11	1K480037	Shield & Sleeve Assembly (for T-1, part no. 24B480042 & T-2)
or	26K480038	Shield, coil (for T-1, part no. 24B690840) .....
12	9A472534	Socket, tube: 7-prong miniature; wafer type .....
13	41K680029	Spring, battery contact ....
14	31A480032	Strip, terminal ('B' battery connector) .....
15	31K51511	Strip, terminal: 3 insulated lugs, #3 gnd; 3/8 spacing ..
CABINET PARTS		
101	35B690002	Baffle, speaker: cardboard ....
102	1X690081	Cabinet Assembly: tan; complete with handle, grille and back cover catch; less back cover and hinge spring (49L11Q).....
or	1X690491	Cabinet Assembly: green; complete with handle, grille and back cover catch; less back cover and hinge spring (49L13Q)
103	42A480079	Clip, fuse (cover catch) ...
104	42A480078	Clip, speed (on back cover catch stud) .....
105	16K690076	Cover, cabinet back: tan (49L11Q)
or	16K690141	Cover, cabinet back: green (49L13Q) .....
106	13C690005	Grille, speaker .....
107	55K690069	Handle, carrying (49L11Q) ....
or	55K690112	Handle, carrying (49L13Q) .....
108	14C480095	Insulator, chassis: gray fibre.
109	36K690072	Knob, control: tan (49L11Q) ...
or	36K690148	Knob, control: green (49L13Q) ..
110	29A690089	Lug, clinch (connects cover stop cord to chassis) .....
111	9A481743	Receptacle, 1 pin (on loop).
112	15B481896	Retainer, 'A' battery: plastic.
113	5S7720	Rivet: .083 x 1/8 stl; nkl pl (loop receptacle mtg).....
114	3S488008	Screw, machine: #4 x 1/4; Phillips round head; thread cutting type; stl; cad pl (cover catch mtg) .....
115	3S490390	Screw, sheet metal: #4 x 3/8 Phillips round head; thread cutting type; stl; cad pl (chassis mtg) .....
116	2S7089	Speednut: .187 round; 3/8 x 5/8; blk parkerized finish (loop and grille retainer)..
117	41A480094	Spring, hinge (back cover)...
118	30A690007	Stop Assembly, cover: includes cord and lug .....
119	46B480108	Stud, trimount (chassis insulator mtg) .....
120	4K19943	Washer, paper: 11/16 x 17/64 x 1/32 thick (cover stop cord guard) .....

©John F. Rider

©John F. Rider

GENERAL INFORMATION

TYPE - AC-DC table model superheterodyne with loop antenna.

TUNING RANGE - 535 to 1620 Kc

IF FREQUENCY - 455 Kc

TUBE COMPLEMENT - 12BE6 - Converter
12BA6 - IF Amplifier
12AT6 - Detector, AVC & 1st AF Amp
50C5 - Power Amplifier
35W4 - Rectifier

POWER SUPPLY - 105-125V AC or DC, 30 watts

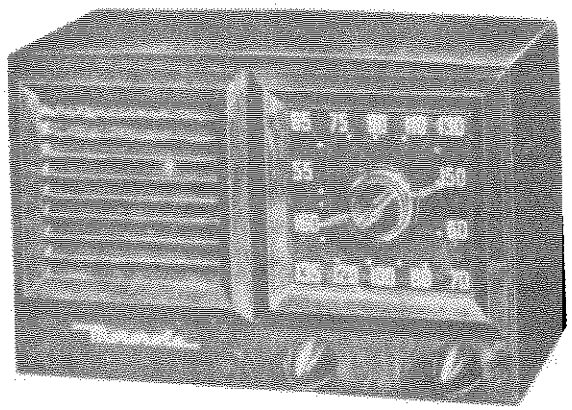

58G11 Walnut Cabinet 58G12 Ivory Cabinet

CAUTION: Never connect antenna or chassis to water pipe, radiator or other ground. The chassis of this receiver is connected directly to the power line. When operating chassis outside of its cabinet (from an AC power line) use an isolating transformer between power line and receiver to reduce possibility of electrical shock.

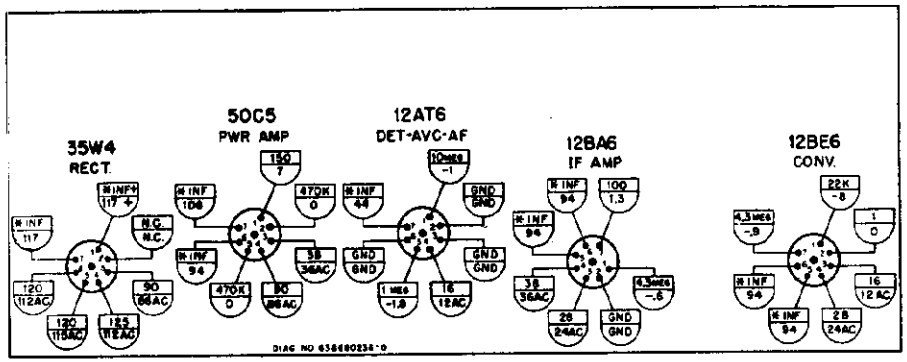

NOTE: ▭ = RESISTANCE MEASUREMENTS.
◡ = VOLTAGE MEASUREMENTS.
\+ = TIE POINT.
GND = GROUND TO CHASSIS.
N.C. = NO CONNECTION.
K = 1000 (ONE THOUSAND) OHMS.
* = MEASUREMENTS MAY VARY DEPENDING ON CONDITION OF ELECTROLYTIC CAPACITOR.

RESISTANCE MEASUREMENTS ±20%
VOLTAGE MEASUREMENTS ± 10%
MEASUREMENTS TAKEN WITH A V.T.V.M.
MEASUREMENTS MADE FROM TUBE BASE PIN TERMINAL TO CHASSIS.
VOLTAGE MEASUREMENTS TAKEN WITH 117 V.A.C. INPUT.
ALL VOLTAGE MEASUREMENTS D.C. UNLESS OTHERWISE SPECIFIED.
VOLUME CONTROL AT MINIMUM NO STATION TUNED IN.

FIGURE 1. VOLTAGE AND RESISTANCE DIAGRAM

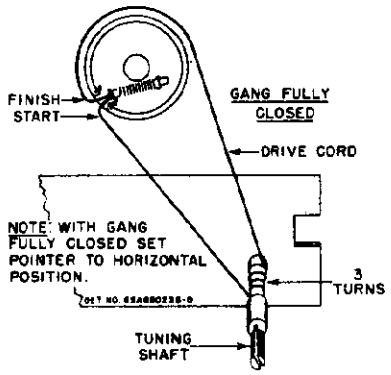

FIGURE 2. DIAL RESTRINGING DETAIL

MODELS 58G11,
58G12; Ch. HS-160

ALIGNMENT

Maximum performance can only be obtained if extreme care is exercised during alignment. Follow the procedure carefully.

A low range output meter should be connected to the speaker voice coil terminal and receiver chassis. Set receiver volume control to maximum. For greatest accuracy, keep output of receiver at .05 watt (.05 watt = .40 volt on output meter) throughout alignment by reducing generator output (not receiver volume control) as stages are brought into alignment.

To adjust the IF and diode transformers, use a small fibre screwdriver and do not use undue pressure as damage to the core or coil form may result.

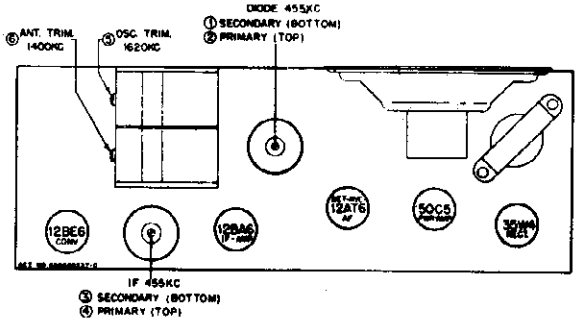

FIGURE 3. TUBE & TRIMMER LOCATIONS

STEP	DIAL SET TO	DUMMY	SIGNAL GENERATOR CONNECTED TO	SIGNAL GENERATOR SET AT	ADJUST TRIMMER OR CORE	REMARKS
IF ALIGNMENT						
1.	Gang fully opened	.1 mf	Converter Grid & chassis*	455 Kc	1,2,3 & 4	Adjust for maximum.
RF ALIGNMENT						
2.	Gang fully opened	.1 mf	Converter Grid & chassis*	1620 Kc	5	This sets oscillator to dial scale.
3.	1400 Kc	None	Radiation loop**	1400 Kc	6	Tune signal in on receiver, then adjust ant. trimmer (6) for maximum.

* A convenient point for this connection is the stator lug of the loop section of the tuning capacitor.

** Connect output of signal generator to a 5" diameter, 3 turn loop and bring loop close enough to receiver loop to obtain output of 50 milliwatts (.40) on output meter. Vary distance between loops to maintain this output during alignment. Minimum distance between loops should never be less than 12".

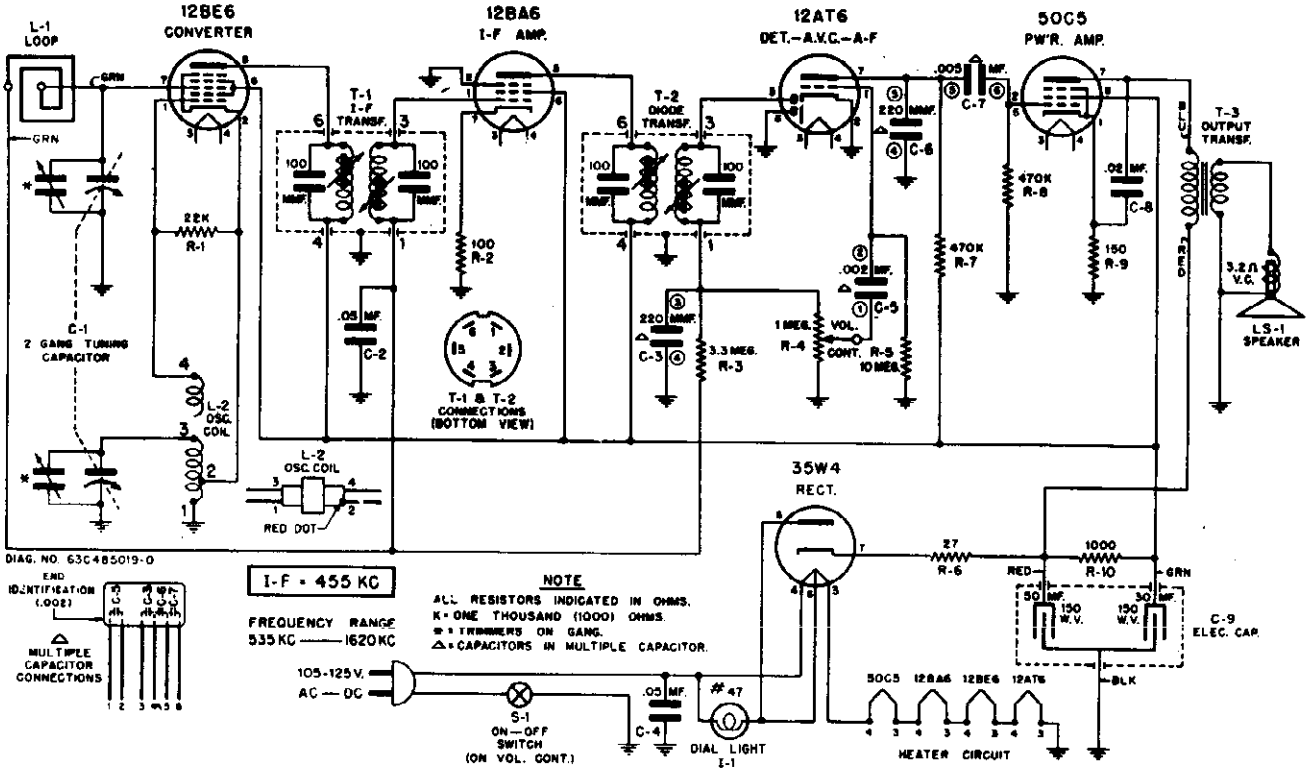

FIGURE 4. SCHEMATIC DIAGRAM

©John F. Rider

MODELS 58G11, 58G12;
Ch. HS-160

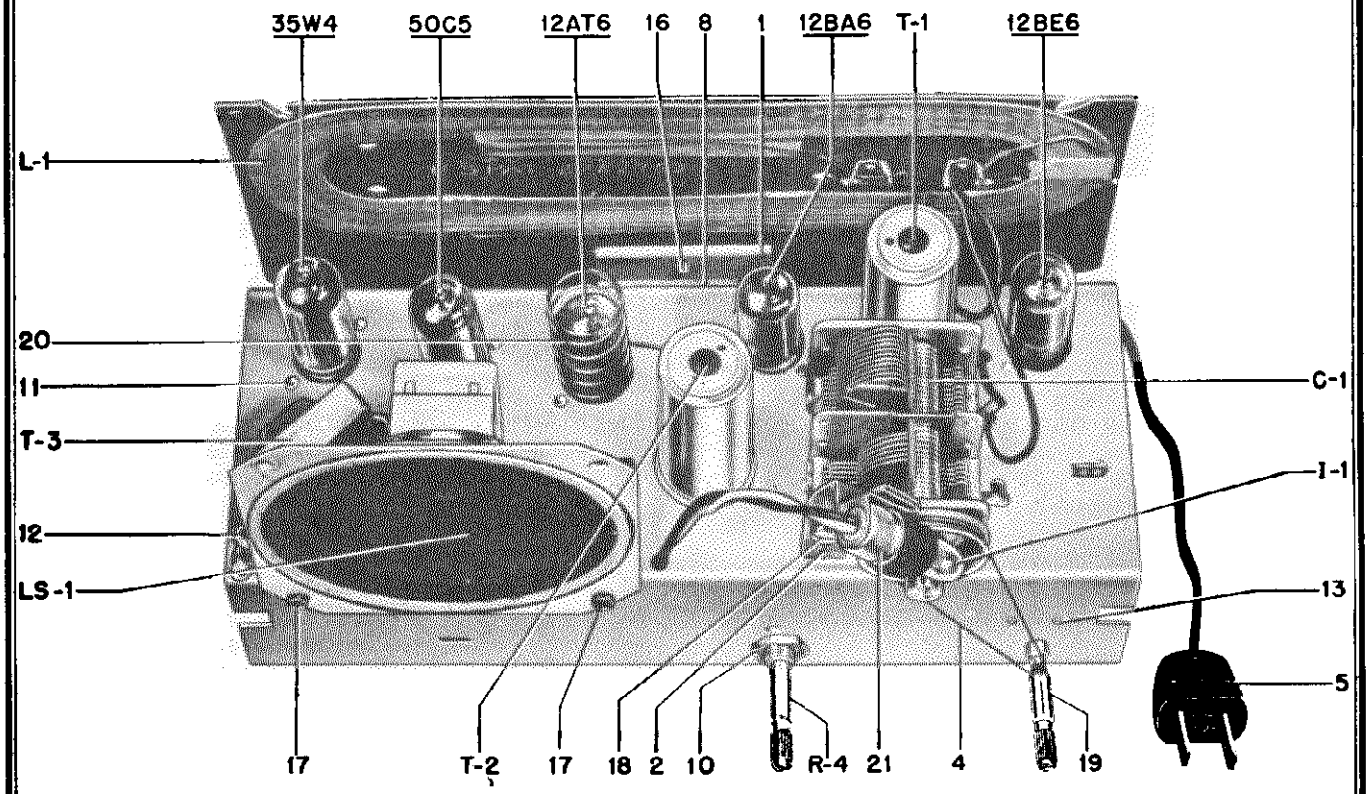

FIGURE 5. CHASSIS PARTS LOCATION - TOP VIEW

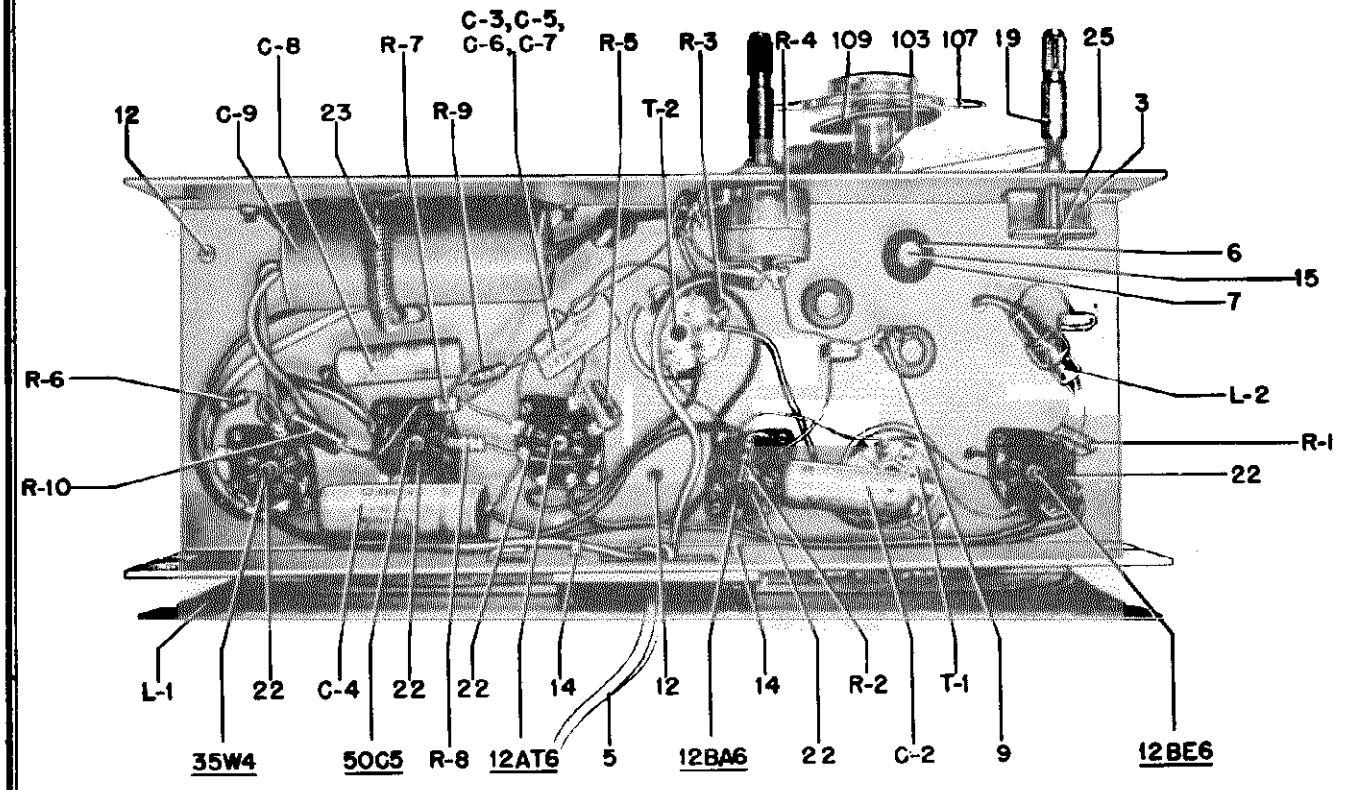

FIGURE 6. CHASSIS PARTS LOCATION - BOTTOM VIEW

© John F. Rider

MODELS 58G11, 58G12; Ch. HS-160

REPLACEMENT PARTS LIST

REF. NO.	PART NO.	DESCRIPTION
CHASSIS PARTS - ELECTRICAL		
CAPACITORS		
C-1	1X485960	Variable: 2 gang; with pulley
C-2	8S9821	Paper: .05 mf 200V .....
C-3,5 6,7	21B482847	Ceramic, multiple: includes 220 mmf (C-3), .002 mf (C-5), 220 mmf (C-6) & .005 mf (C-7) .....
C-4	8S9816	Paper: .05 mf 400V .....
C-8	8S9802	Paper: .02 mf 400V .....
C-9	23K482857	Electrolytic: 50-30 mf/150V.
DIAL LIGHT		
I-1	65X11854	Bulb: 6.3V - .15 Amp; tubular, clear, #47 .....
COILS		
L-1	24C485970	Loop Antenna: includes back panel
L-2	24K482855	BC Oscillator Coil .....
SPEAKER		
LS-1	50C478138	Speaker: 4" PM; 3.2 ohm VC..each exch.
RESISTORS		
Note;	All resistors are insulated carbon type, 20%, unless otherwise specified.	
R-1	6R6028	22,000 1/2W .....doz.
R-2	6R6018	100 1/2 watt .....doz.
R-3	6R2118	3.3 meg 1/2 watt .....doz.
R-4	18A70032	Volume Control: 1 meg with SPST switch .....
R-5	6R2109	10 meg 1/2 watt .....doz.
R-6	6R5683	27 10% 1/2 watt .....doz.
R-7	6R6032	470,000 1/2 watt .....doz.
R-8	6R6032	470,000 1/2 watt .....doz.
R-9	6R3992	150 1/2 watt .....doz.
R-10	6R3953	1,000 1 watt .....each doz.
TRANSFORMERS		
T-1	24B482863	IF, 455 Kc: complete .....
T-2	24B482865	Diode, 455 Kc: complete ....
T-3	25K485973	Output Transformer .....
CHASSIS PARTS - MECHANICAL		
1	7K485971	Bracket, loop mtg .....
2	7A485965	Bracket, pilot light mtg ...doz.
3	7A77337	Bracket, tuning shaft .....
4	11M8944	Cord, dial: #18; black .....yd.
5	30A470651	Cord, line and plug: 6 ft long
6	5A19658	Eyelet, spacer (gang mtg) ..doz.
7	5A70404	Grommet, rubber (gang mtg) .doz.
8	14A482844	Insulator, cord outlet .....doz.
9	29R3010	Lug, soldering: #6 hot-tinned .....doz.
10	2S7051	Nut, palnut: 3/8-32 x 9/16 hex; stl; cad pl (volume control mounting) .....doz.
11	5S7771	Rivet: .088 x 3/16 stl; nkl pl (tube socket mtg) .....per/c
12	5S7707	Rivet: .122 x 5/32 stl; nkl pl (tube shield mtg and transformer mtg) .....per/c
13	5S7701	Rivet: .122 x 3/16 stl; nkl pl (tuning shaft bracket mtg) per/c
14	3S3398	Screw, sheet metal: #6 x 3/8 PKZ plain hex head; stl; cad pl (antenna bracket mounting) .....per/c
15	3S2294	Screw, machine: 6-32 x 1/2 plain hex head locking type; stl; cad pl (gang mtg) .....doz.
16	3S7455	Screw, sheet metal: #8 x 3/8 PKA slotted acorn head; antique copper finish (antenna mtg) .....doz.
17	3S7454	Screw, sheet metal: #8 x 1/4 PKZ plain hex head; stl; cad pl (speaker mtg) .....per/c
18	3S7205	Screw, machine: 8-32 x 1/4 slotted hex head stl; cad pl (pilot light bracket mtg)doz
19	47A482845	Shaft, tuning .....
20	26A481521	Shield, spring tube .....doz.
21	9A485979	Socket, pilot light: includes leads .....
22	9A472534	Socket, tube: miniature ....
23	41A73996	Spring, tension (electrolytic mtg) .....
24	41A14244	Spring, tension coil(drive cord) .....doz.
25	4A70015	Washer, 'C'(tuning shaft retainer) .....per/c
26	4K482859	Washer, insulated shoulder (antenna bracket mtg) .....doz.
27	4S7633	Washer, flat: .9/16-11/64 x .033 thick; stl; cad pl(antenna mtg) .....doz.
CABINET PARTS		
101	16E485975	Cabinet, table model: molded; walnut (58G11) .....
102	16K485977	Cabinet, table model: molded; ivory (58G12) .....
103	42A485984	Clip, pointer retainer .....doz.
104	36A485968	Knob, control: walnut (58G11)
105	36K485969	Knob, control: ivory (58G12)
106	38A25507	Plug, split (back mtg) .....doz.
107	52B485985	Pointer, dial .....
108	3S7374	Screw, machine: 8-32 x 5/16; slotted hex head; stl; cad pl (chassis mtg) .....per/c
109	4K485986	Washer, felt .....doz.

©John F. Rider

MODELS 58R11A, 58R12A, 58R13A,
58R14A, 58R15A, 58R16A; Ch. HS-184

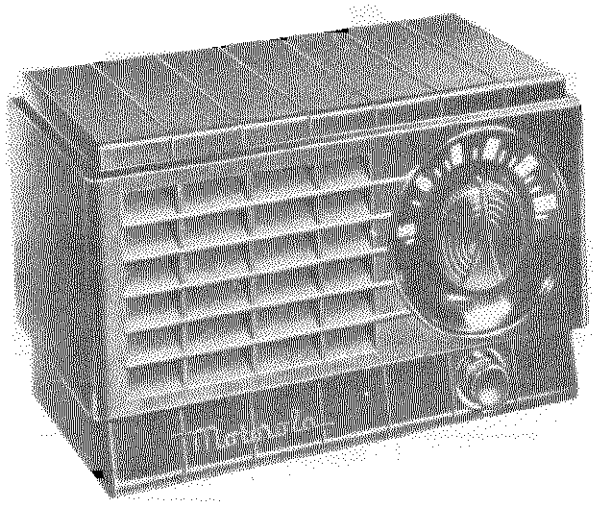

58R11A Brown Plastic Cabinet
58R12A White Plastic Cabinet
58R13A Red Plastic Cabinet
58R14A Grey Plastic Cabinet
58R15A Green Plastic Cabinet
58R16A Yellow Plastic Cabinet

GENERAL INFORMATION

TYPE -AC-DC table model superheterodyne with loop antenna.

TUNING RANGE - 535 to 1620 Kc IF - 455 Kc

TUBE COMPLEMENT - 12BE6 Converter
12BA6 IF Amp
12AT6 Det. AVC & AF Amp
50C5 Power Amp
35W4 Rectifier

POWER SUPPLY - Operates from 117 volts AC or DC, 50 to 60 cycles, 35 watts

POWER SWITCH & VOLUME CONTROL. Operated with small lower knob. NOTE: Reverse the line plug in the electrical outlet if the radio does not operate from DC. When operating from AC, reversing the line cord plug in wall outlet may sometimes improve reception and reduce hum.

TUNING. Tune in station with large upper knob.

ANTENNA. A loop antenna is built into this receiver, eliminating the need for an external antenna. Reception from some stations may be improved by rotating the whole receiver; this is due to the slight directional characteristic of the loop antenna. In extremely noisy locations, rotate the entire receiver till minimum noise and maximum signal pickup are obtained. For additional pickup, an external antenna may be connected by winding lead-in wire in slots on radio back panel.

GROUND. Never connect antenna or chassis to water pipe, radiator or other ground.

©John F. Rider

MODELS 58R11A, 58R12A, 58R13A,
58R14A, 58R15A, 58R16A; Ch. HS-184

ALIGNMENT

If AC power is used, use an isolation transformer between power line and receiver. If isolation transformer is not available, connect low side of signal generator to B- through .1 mf capacitor.

Connect low range output meter across speaker voice coil and set volume control at maximum. For greatest accuracy, keep output of receiver at approximately .05 watt (.05 watt = .40 volt on output meter) throughout alignment by reducing signal generator output as stages are brought into alignment. Use a small fibre screwdriver for aligning IF & diode transformers.

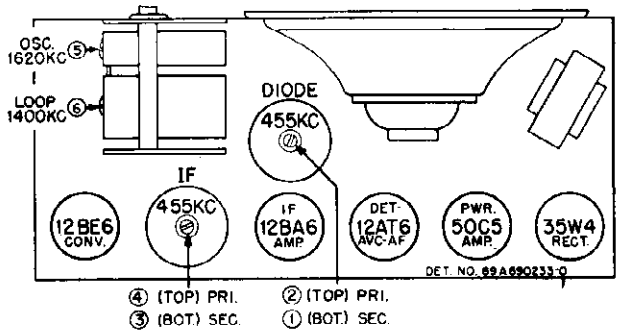

FIGURE 1. TUBE & TRIMMER LOCATION

STEP	DUMMY ANTENNA	GENERATOR CONNECTION	GENERATOR FREQUENCY	POINTER SET TO	ADJUST	REMARKS
IF ALIGNMENT						
1.	.1 mf	Rear stator of tuning cap	455 Kc	Gang opened	1, 2, 3 & 4	Adjust for maximum.
RF ALIGNMENT						
2.	"	"	1620 Kc	"	5	Adjust for maximum.
3.	None	Radiation loop*	1400 Kc	Tune for maximum	6	Adjust for maximum.

* Connect generator output to 5" diameter, 3 turn loop & couple to receiver loop. Keep loops at least 12" apart.

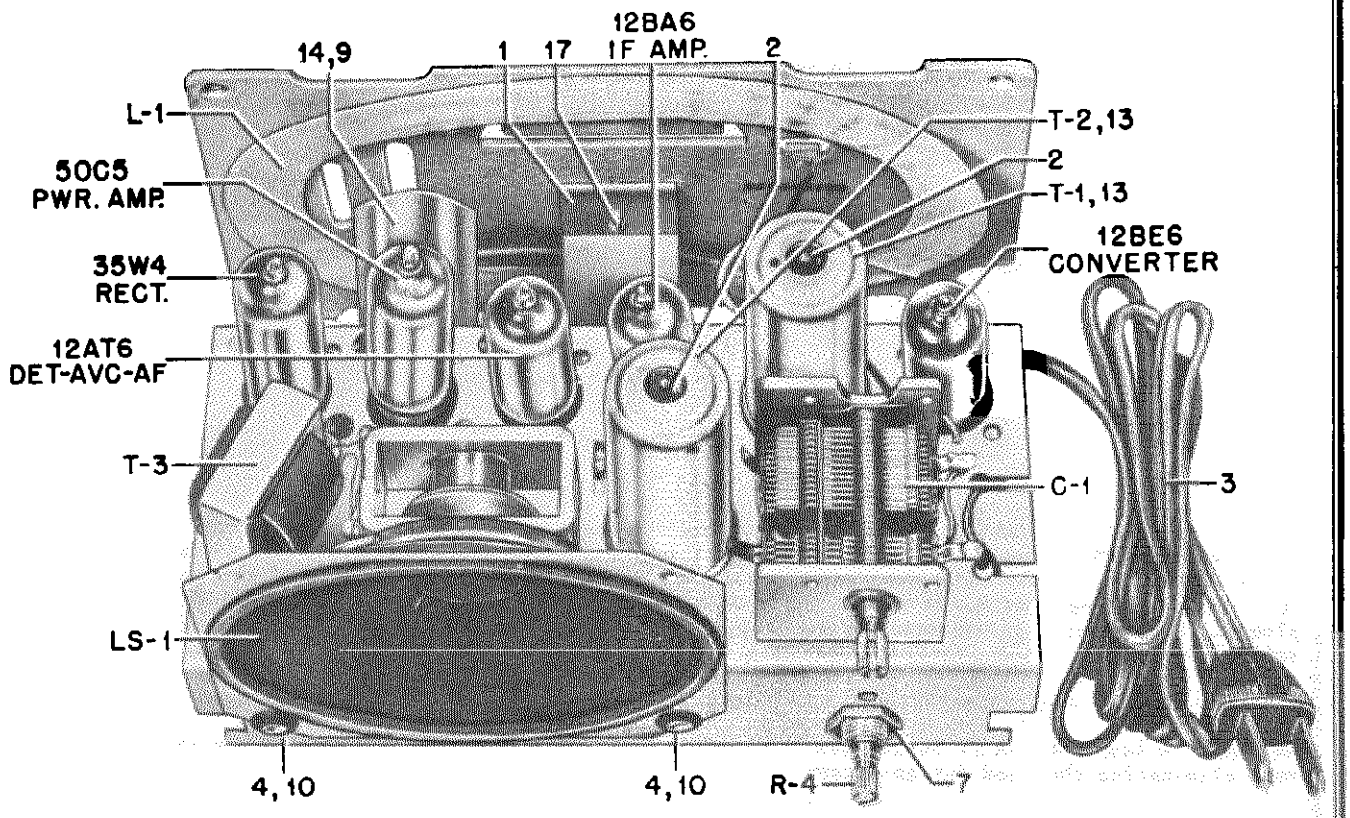

FIGURE 2. PARTS LOCATION - CHASSIS TOP VIEW

© John F. Rider

MODELS 58R11A, 58R12A, 58R13A,
58R14A, 58R15A, 58R16A; Ch. HS-184

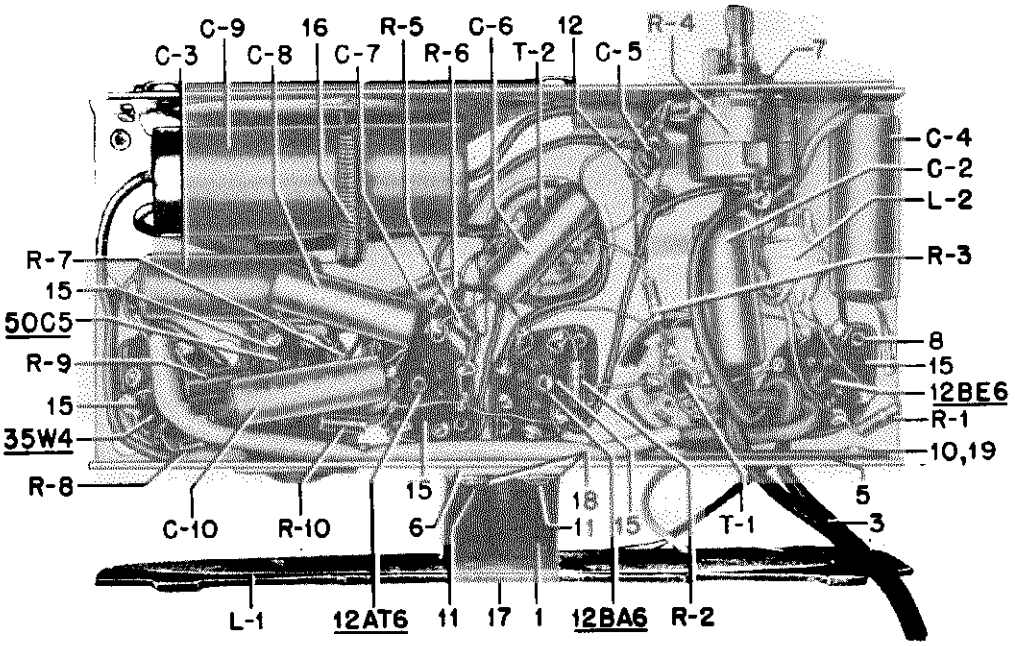

FIGURE 3. PARTS LOCATION - CHASSIS BOTTOM VIEW

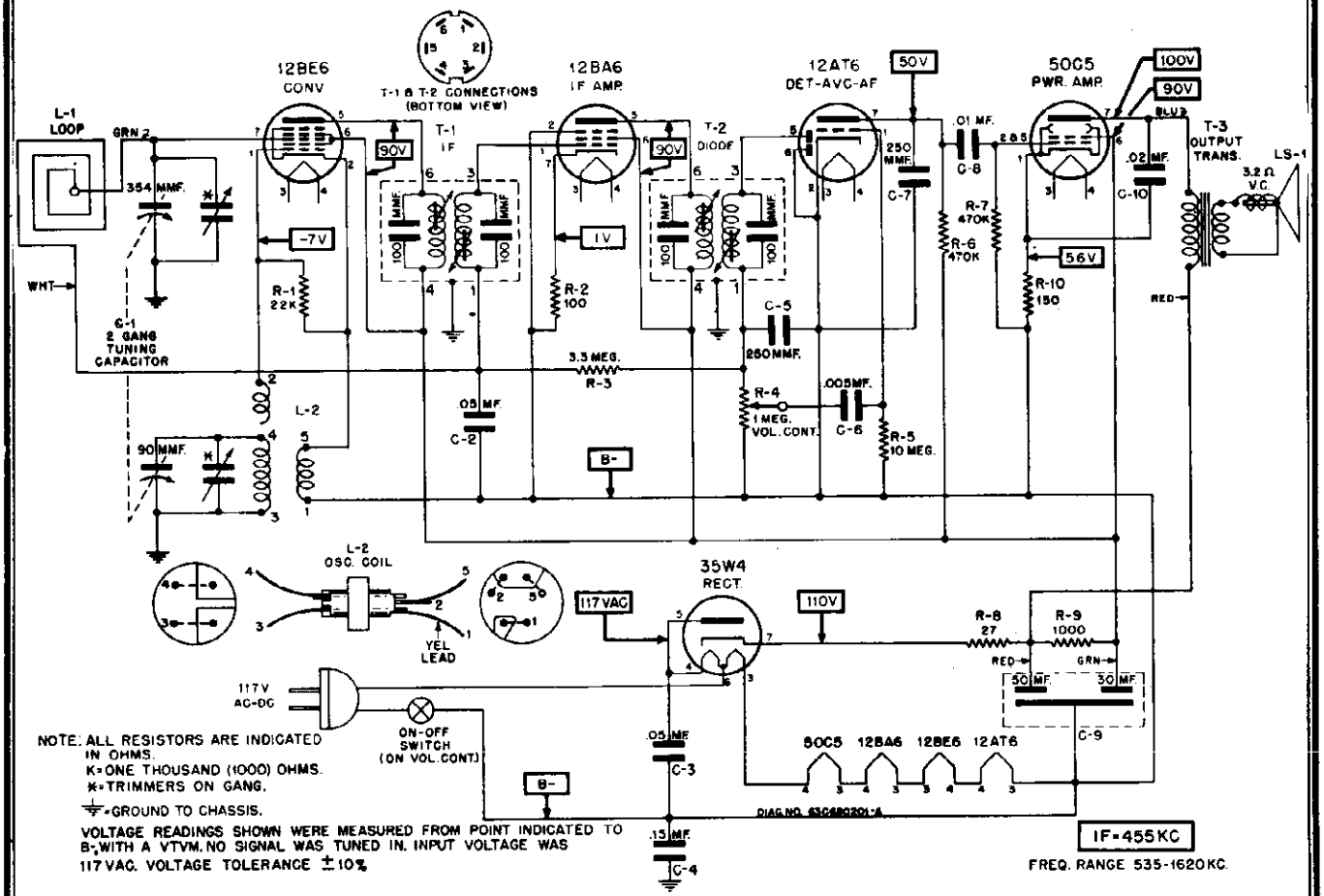

NOTE: ALL RESISTORS ARE INDICATED IN OHMS.
K=ONE THOUSAND (1000) OHMS.
*=TRIMMERS ON GANG.
⏚=GROUND TO CHASSIS.
VOLTAGE READINGS SHOWN WERE MEASURED FROM POINT INDICATED TO B-, WITH A VTVM. NO SIGNAL WAS TUNED IN. INPUT VOLTAGE WAS 117 VAC. VOLTAGE TOLERANCE ±10%

FIGURE 4. SCHEMATIC DIAGRAM

© John F. Rider

MODELS 58R11A, 58R12A, 58R13A,
58R14A, 58R15A, 58R16A; Ch. HS-184

REPLACEMENT PARTS LIST

REF. NO.	PART NO.	DESCRIPTION
CHASSIS PARTS - ELECTRICAL		
CAPACITORS		
C-1	19B478128	Variable: 2 gang .....
C-2	8S9821	Paper: .05 mf 200V .....
C-3	8S9816	Paper: .05 mf 400V .....
C-4	8A72686	Paper: .15 mf 200V .....
C-5	21K77375	Ceramic: 250 mmf .....
C-6	8S9813	Paper: .005 mf 600V .....
C-7	21K77375	Ceramic: 250 mmf .....
C-8	8S9809	Paper: .01 mf 400V .....
C-9	23K482857	Electrolytic: 50-30 mf 150V..
C-10	8S9802	Paper: .02 mf 400V .....
COILS		
L-1	24B680353	Loop Antenna: includes panel.
L-2	24A680364	BC Oscillator .....
SPEAKER		
LS-1	50C478138	Speaker: 4" PM: 3.2 ohm VC...
TRANSFORMERS		
T-1	24B482863	IF, 455 Kc: complete with tuning cores but less shield .....
T-2	24B482865	Diode, 455 Kc: complete with tuning cores but less shield
T-3	25K680345	Output transformer .....
RESISTORS		
Note: All resistors are insulated carbon type, unless otherwise specified.		
R-1	6R6028	22,000 20% 1/2W .....
R-2	6R6018	100 20% 1/2W .....
R-3	6R2118	3.3 meg 20% 1/2W .....
R-4	18A478122	Volume control: 1 meg; with SPST switch .....
R-5	6R2109	10 meg 20% 1/2W .....
R-6	6R6032	470,000 20% 1/2W .....
R-7	6R6032	470,000 20% 1/2W .....
R-8	6R5683	27 10% 1/2W .....
R-9	6R3953	1000 20% 1 watt .....
R-10	6R3992	150 20% 1/2W .....
CHASSIS PARTS - MECHANICAL		
1	7A478118	Bracket, loop mtg .....
2	46A470885	Core, iron: threaded (for T-1 & T-2) .....
3	30K680352	Cord, line, and plug: 6 ft long
4	5A484268	Grommet, speaker mtg: rubber.
5	14A482844	Insulator, cord outlet .....
6	14A478119	Insulator, loop mtg .....
7	2S7051	Nut, hex: 3/8-32 x 9/16; stl; cad pl; Palnut (vol cont mtg
8	5S7771	Rivet: .088 x 3/16; stl; nkl pl (tube socket mtg) .....
9	5S7707	Rivet: .122 x 5/32; stl; nkl pl (electrostatic shield and output transformer mtg).....
10	5S7701	Rivet: .122 x 3/16; stl; nkl pl (cord insulator mtg, spkr mtg) .....
11	5S7703	Rivet: .122 x 7/32; stl; nkl pl (antenna brkt mtg) .....
12	3S7247	Screw, machine: 6-32 x 3/16; slotted hex head; lockscrew; stl; cad pl (gang mtg).....
13	26K485936	Shield, coil: for IF and diode transformers .....
14	26A478117	Shield, electrostatic .....
15	8A472534	Socket, tube: miniature .....
16	41A73996	Spring, tension (electrolytic mtg) .....
17	46A478145	Stud, tri-mount (antenna mtg)
18	14A11493	Washer, fibre: insulating (antenna brkt mtg) .....
19	4S7625	Washer, flat: 1/4 x .128 x .018 thick; stl; cad pl (cord insulator mtg) .....
CABINET PARTS		
101	16D478088	Cabinet, plastic: brown (58R11A)
102	16K484338	Cabinet, plastic: white (58R12A)
103	16K484340	Cabinet, plastic: red (58R13A)
104	16K485161	Cabinet, plastic: gray (58R14A)
105	16K485162	Cabinet, plastic: green (58R15A)
106	16K485163	Cabinet, plastic: yellow (58R16A)
107	36B478147	Knob, tuning(58R11A) .....
108	36A478148	Knob, volume control (58R11A)
109	36K485157	Knob, tuning: gold (58R12A, 58R13A, 58R14A, 58R15A & 58R16A)
110	36K485156	Knob, volume control: gold (58R12A, 58R13A, 58R14A, 58R15A & 58R16A) .....
111	38A25507	Plug, split: copper oxide finish (mounts loop panel to cabinet) .....
112	3S476083	Screw, machine: 6-32 x 5/16 slotted hex head; lockscrew; stl; cad pl (chassis mtg)...
113	11M488253	Tape, aluminum foil: 2-1/2" wide (7" used) (heat shield)

©John F. Rider

MODELS 58X11Q,
58X12Q; Ch. HS-140

GENERAL INFORMATION

TYPE - AC-DC table model superheterodyne receiver with loop antenna.

TUNING RANGE - 535 to 1620 kc IF- 455 Kc

TUBE COMPLEMENT - 12BE6 Converter
12BA6 IF Amplifier
12AT6 Detector, AVC & 1st AF Amp.
50B5 Power Amplifier
35W4 Rectifier

POWER SUPPLY - 105 to 125 volts AC or DC, 35 watts

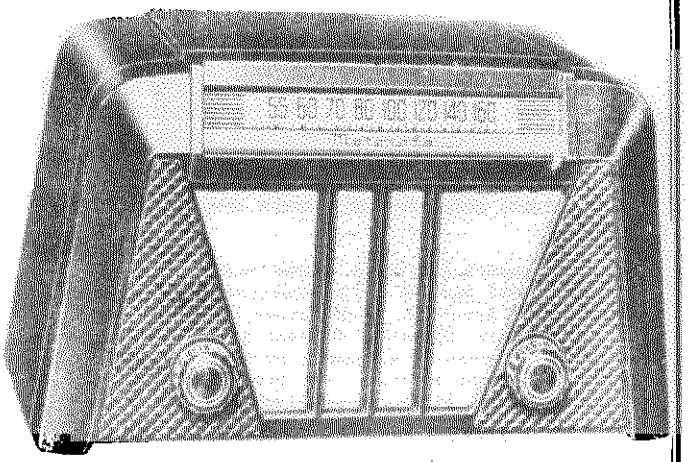

MODEL 58X11Q (Walnut Plastic Cabinet) MODEL 58X12Q (Ivory Plastic Cabinet)

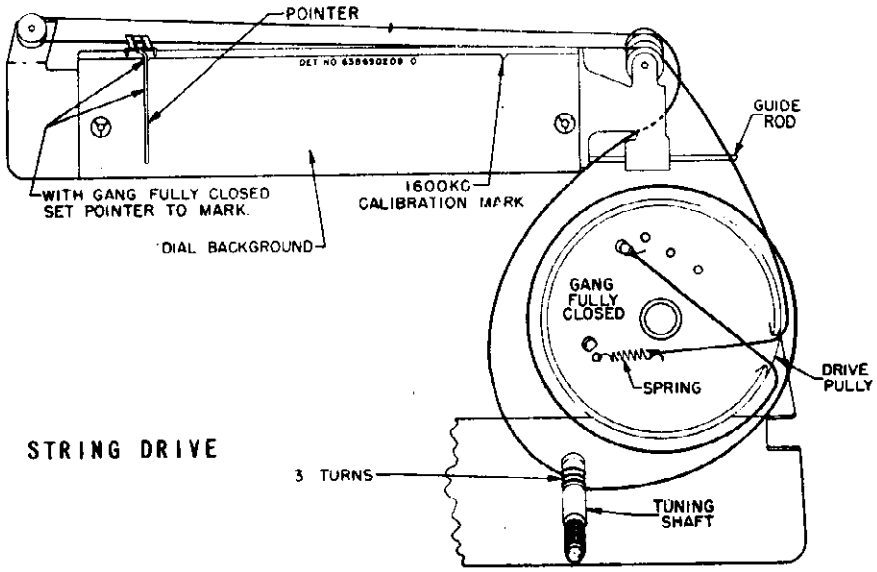

FIGURE 1. STRING DRIVE

INSTALLATION & OPERATING INSTRUCTIONS

POWER SWITCH AND VOLUME CONTROL. Operated with the left-hand knob. NOTE: Reverse the line cord plug in the wall outlet if radio does not operate from DC. When operating from AC, reversing the line cord plug in the wall outlet may sometimes improve reception and reduce hum.

TUNING. Tune stations with right-hand knob.

ANTENNA. A loop antenna is built into this receiver, eliminating the need for an external antenna. Reception from some stations may be improved by rotating the whole receiver; this is due to the slight directional characteristic of the loop antenna. In extremely noisy locations, rotate the entire receiver till minimum noise and maximum signal pickup are obtained. For additional pickup, an external antenna may be connected by winding lead-in wire in slots on radio back panel.

GROUND. Never connect antenna or chassis to water pipe, radiator or other ground, as one side of the power line is connected directly to chassis.

©John F. Rider

MODELS 58X11Q,
58X12Q; Ch. HS-140

ALIGNMENT

If AC power is used, use an isolation transformer between power line and receiver. If isolation transformer is not available, connect low side of signal generator to chassis through .1 mf capacitor.

Connect low range output meter across speaker voice coil and set volume control at maximum. For greatest accuracy, keep output of receiver at approximately .05 watt (.05 watt = .40 volt on output meter) throughout alignment by reducing signal generator output as stages are brought into alignment. Use a small fibre screwdriver for aligning IF & diode transformers. Set pointer to calibration mark on left-hand side of dial background when gang is fully closed before starting alignment.

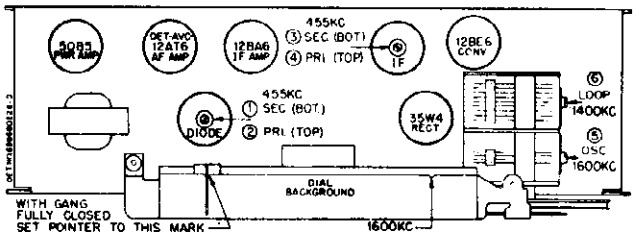

FIGURE 2. TUBE & TRIMMER LOCATIONS

STEP	DUMMY ANTENNA	GENERATOR CONNECTION	GENERATOR FREQUENCY	POINTER SET TO	ADJUST	REMARKS
IF ALIGNMENT						
1.	.1 mf	Rear stator of tuning capacitor	455 Kc	Gang opened	1, 2, 3 & 4	Adjust for maximum.
RF ALIGNMENT						
2.	-	Radiation loop*	1600 Kc	1600 Kc	5	Adjust for maximum.
3.	-	Radiation loop*	1400 Kc	Tune for maximum	6	Adjust for maximum.

* Connect generator output to 5" diameter, 3 turn loop and couple to receiver loop. Keep loops at least 12" apart.

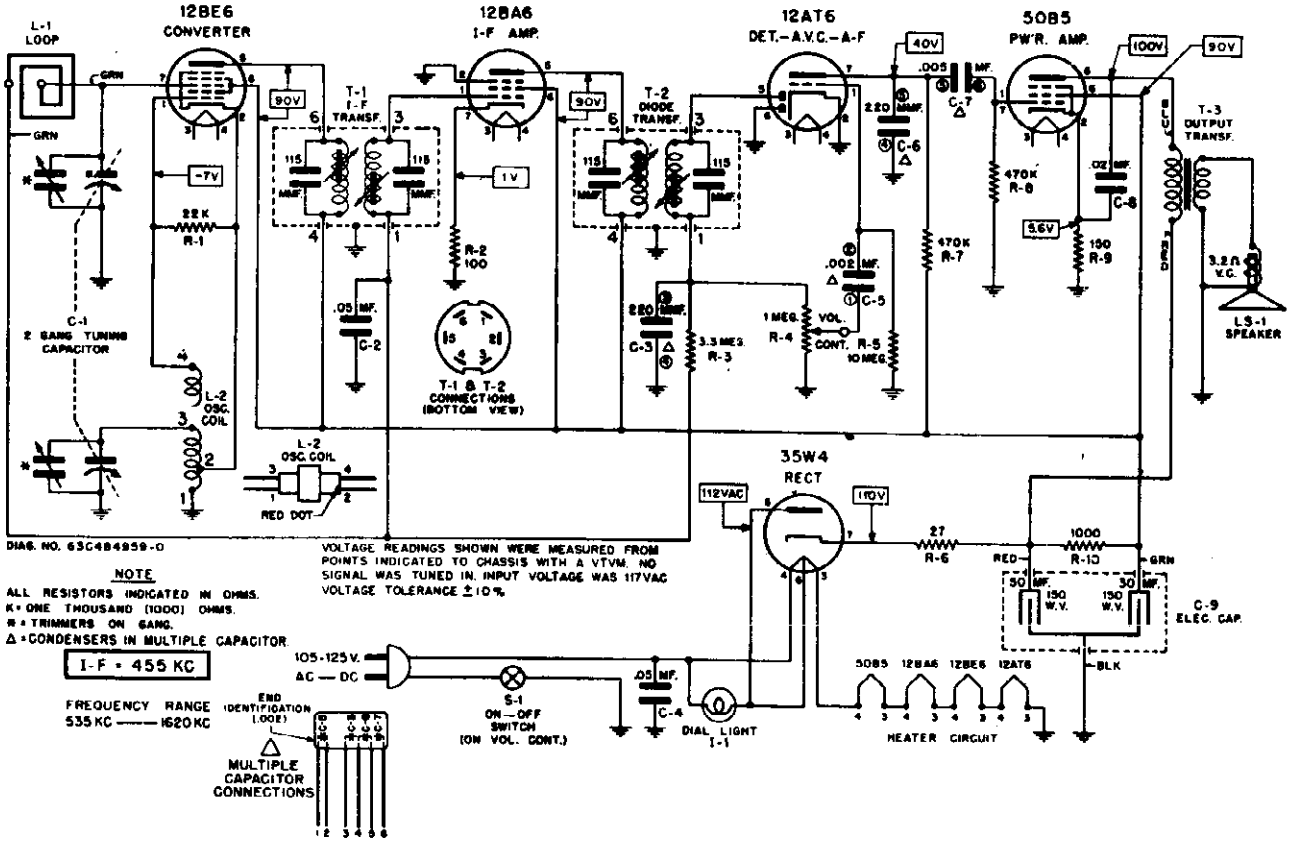

FIGURE 3. SCHEMATIC DIAGRAM

©John F. Rider

MODELS 58X11Q,
58X12Q; Ch. HS-140

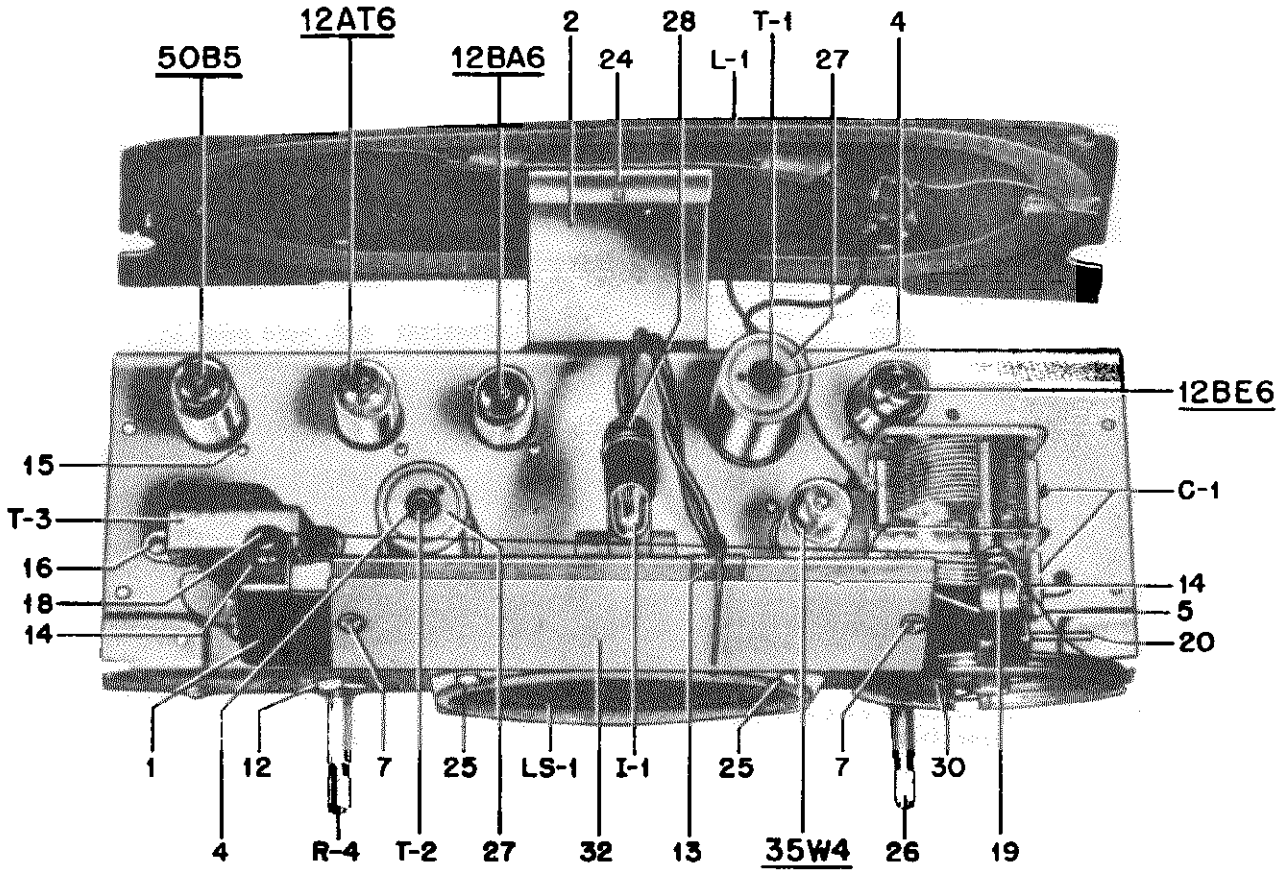

FIGURE 4. PARTS LOCATIONS

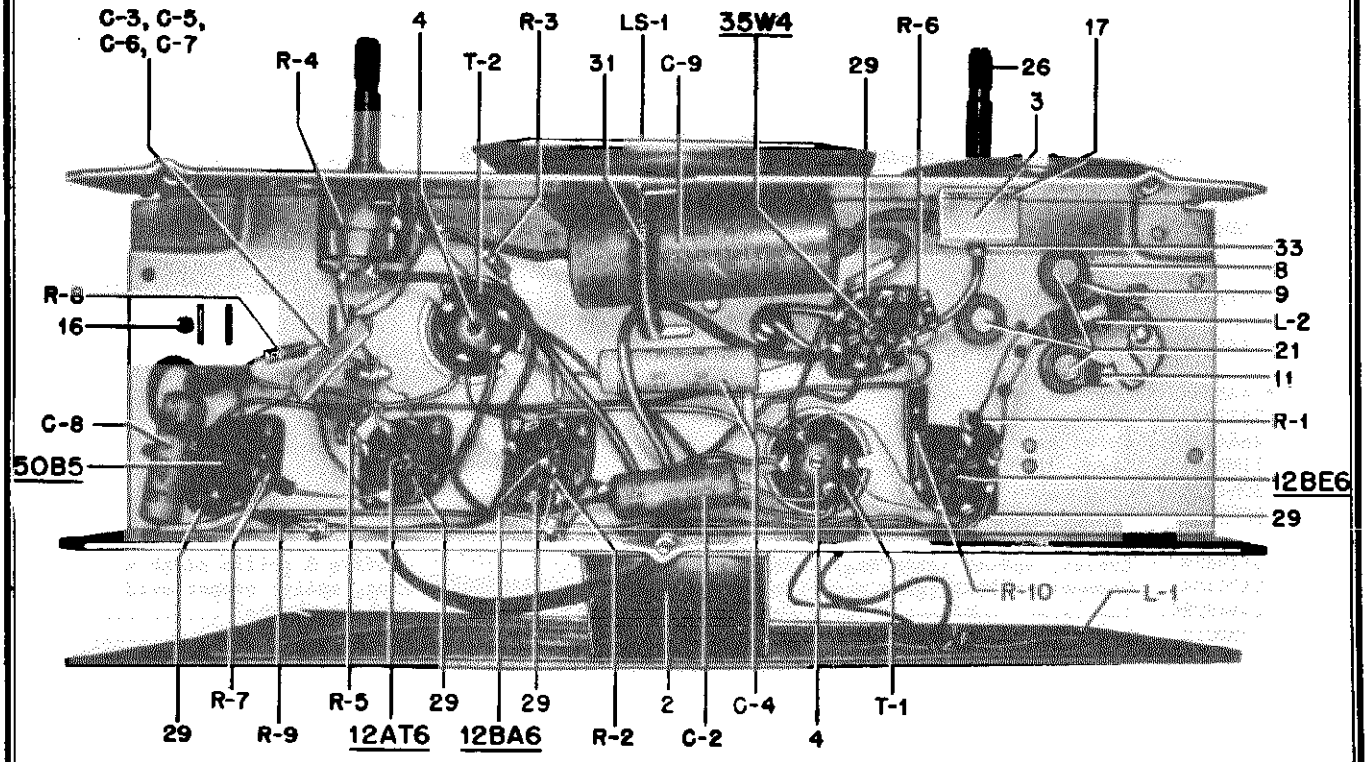

© John F. Rider

MODELS 58X11Q,
58X12Q; Ch. HS-140

REPLACEMENT PARTS LIST

REF. NO.	PART NO.	DESCRIPTION
CHASSIS PARTS - ELECTRICAL		
CAPACITORS		
C-1	1X482878	Variable: 2 gang; with pulley
C-2	8S9821	Paper: .05 mf 200V .....
C-3,5, 6,7	21B482847	Ceramic, multiple: includes 220 mmf (C-3), .002 mf (C-5), 220 mmf (C-6) & .005 mf (C-7)
C-4	8S9816	Paper: .05 mf 400V .....
C-8	8S9802	Paper: .02 mf 400V .....
C-9	23K482857	Electrolytic: 50-30 mf 150V.
PILOT LIGHT		
I-1	65X11854	Bulb: 6.3V-.15 amp; tubular, clear, #47 .....
COILS		
L-1	24C482849	Loop Antenna: includes back panel
L-2	24K482855	BC Oscillator Coil .....
SPEAKER		
LS-1	50C482851	Speaker: 4" PM; 3.2 ohm voice coil .....each exchange
RESISTORS		
Note:		All resistors are insulated carbon type, 20%, unless otherwise specified.
R-1	6R6028	22,000 1/2 watt .....doz.
R-2	6R6018	100 1/2 watt .....doz.
R-3	6R2118	3.3 meg 1/2 watt .....doz.
R-4	18A70032	Volume Control: 1 meg with SPST switch .....
R-5	6R2109	10 meg 1/2 watt .....doz.
R-6	6R5683	27 10% 1/2 watt .....doz.
R-7	6R6032	470,000 1/2 watt .....doz.
R-8	6R6032	470,000 1/2 watt .....doz.
R-9	6R3992	150 1/2 watt .....doz.
R-10	6R3953	1,000 1 watt .....each doz.
TRANSFORMERS		
T-1	24B482863	IF, 455 Kc: complete with tuning cores & padding capacitors but less shield ....
T-2	24B482865	Diode, 455 Kc: complete with tuning cores & padding capacitors but less shield ....
T-3	25B482858	Output Transformer .....
CHASSIS PARTS - MECHANICAL		
1	1X481466	Background Bracket and Pulleys Assembly .....
2	7A482843	Bracket, loop mtg .....
3	7A77337	Bracket, tuning shaft .....
4	46A470885	Core, iron: for T-1 & T-2 ..
5	11M8944	Cord, dial: 18# black .....yard
6	30K482856	Cord, line & plug: 6 ft lg .
7	5S7805	Eyelet, snap-in (dial. background mtg) .....doz.
8	5A19658	Eyelet, spacer (gang mtg) ..doz.
9	5A70404	Grommet, rubber (gang mtg) .doz.
10	14A482844	Insulator, cord outlet .....doz.
11	29R3010	Lug, soldering: #6 hot-tinned .....doz.
12	2S7051	Nut, hex: 3/8-32 x 9/16; stl; cad pl; Palnut (volume control mtg) .....doz.
13	52A481378	Pointer and Slider .....
14	49A23960	Pulley, cord: 1/4 groove ...doz.
15	5S7771	Rivet: .088 x 3/16; stl; nkl pl (tube socket mtg) .....per/c
16	5S7707	Rivet: .122 x 5/32; stl; nkl pl (output trans. mtg) ....per/c
17	5S7701	Rivet: .122 x 3/16 stl; nkl pl (tuning shaft brkt mtg).per/c
18	5K74560	Rivet, shoulder: .132 shoulder .....per/c
19	5A12814	Rivet, shoulder: .156 shoulder .....doz.
20	47A481382	Rod, cord guide .....doz.
21	3S2294	Screw, machine: 6-32 x 1/2 plain hex head locking type; stl; cad pl (gang mtg) ....doz.
22	3S7205	Screw, machine: 8-32 x 1/4 slotted hex head locking type; stl; cad pl (speaker mtg) .doz.
23	3S3360	Screw, sheet metal: #6 x 1/2 PKZ plain hex head; stl; cad pl (cord insulator & loop assembly brkt mtg) ...doz.
24	3S7455	Screw, sheet metal: #8 x 3/8 PKZ slotted acorn head; copper oxide finish (loop panel assembly mtg) .....doz.
25	3S2695	Screw, sheet metal: #6 x 3/16 PKZ plain hex head; stl; cad pl (background brkt & pulley assembly mtg) .....per/c
26	47A482845	Shaft, tuning .....
27	26K485936	Shield, coil .....
28	9A482746	Socket, pilot light .....
29	9A472534	Socket, tube: miniature ....
30	41A14244	Spring, pointer cord tension .....doz.
31	41A73996	Spring, tension (electrolytic mtg) .....
32	35A481384	Strip, dial background .....
33	4A70015	Washer, 'C' (tuning shaft retainer) .....per/c
34	4S7614	Washer, flat: 11/16 x 11/64 x .036 thick; stl; cad pl (loop panel assembly mtg) .doz.
35	4K482859	Washer (cord insulator mtg).doz.
CABINET PARTS		
101	35K481468	Baffle and Grille Cloth Assembly .....
102	37A27142	Band, rubber (dial scale mounting) .....per/c
103	16K482771	Cabinet, table model; molded; ivory (58X12Q) .....
104	16K482770	Cabinet, table model: molded; walnut (58X11Q) .....
105	36K77214	Knob, control: ivory (58X12Q)
106	36B77213	Knob, control: walnut (58X11Q)
107	2A481437	Nut, speednut: black parkerized finish (dial scale mounting) .....doz.
108	2S7089	Nut, speednut: for .187 round, black parkerized (spkr baffle & grille cloth mtg).doz.
109	38A25507	Plug, split: copper oxide finish (back mtg) .....doz.
110	34B481438	Scale, dial: glass .....
111	3S488098	Screw, sheet metal: #8 x 3/8 type 25 plain hex head stl; cad pl (chassis mtg) .....doz.
112	4K19943	Washer, paper: 11/16 x 17/64 x 1/32 thick (used behind control knob-58X12Q) .....per/c

© John F. Rider

MODEL 59F11,
Ch. HS-188

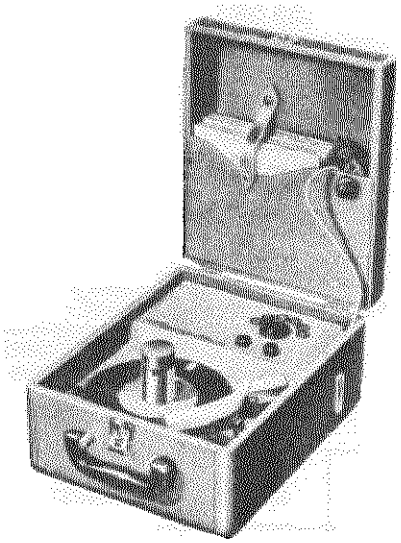

GENERAL INFORMATION

TYPE - AC operated, portable radio phonograph combination with loop antenna.

TUNING RANGE - 535 to 1620 Kc IF - 455 Kc

TUBE COMPLEMENT - 12BE6 Converter
12BA6 IF Amplifier
12AT6 Detector-AVC-AF Amplifier
50C5 Power Amplifier
35W4 Rectifier

POWER SUPPLY - 117V AC only, 60 cycles, 40 watts

RECORD CHANGER - Model C2RC for playing small diameter, fine groove (45 RPM) records. For complete record changer information, see Motorola Service Manual Part No. 54P690245.

RADIO OPERATION

ANTENNA. No outside antenna or ground is required for radio reception. A loop antenna for radio reception is built into this receiver.

VOLUME CONTROL. The volume control and power switch for both radio and phonograph operation are combined and operated with the small left-hand knob.

RADIO PHONO SWITCH. Rotate the small right-hand knob to the left for radio operation; to the right is phonograph playing position.

SERVICE NOTES

TO SERVICE TUBES

The tubes are accessible by removing the rear ventilating grille; 6 wood screws hold the grille in place.

NEEDLE REPLACEMENT

1. To remove the needle from the cartridge, merely pull the needle 'out' from the cartridge using pliers or with your fingers.
2. The replacement needle is partly encased in a small guard to protect the needle point; push the needle into its position in the cartridge and remove the guard. Friction will hold the needle in position. Use Motorola needle, Part No. 47R690971

TO REMOVE CHASSIS & ANTENNA

1. Remove the control knobs.
2. Remove the front grille assembly; 16 Phillips head wood screws hold it in place. Also remove the front grille patch plate; 2 Phillips head wood screws hold it in place.
3. Remove the 2 chassis mounting screws and washers and disconnect the antenna. The chassis may now be removed from the cabinet.
4. The antenna is secured to the cabinet with staples.

TO REMOVE RECORD CHANGER

1. Remove the control knobs from radio.
2. Remove the front grille assembly; 16 Phillips head wood screws hold it in place. Also remove the front grille patch plate; 2 Phillips head wood screws hold it in place.
3. Remove the 3 screws and fibre washers that secure the changer to the cabinet.
4. Disconnect the leads and lift the changer from the cabinet.

©John F. Rider

MODEL 59F11,
Ch. HS-188

ALIGNMENT

Use an isolation transformer between power line and receiver. If isolation transformer is not available, connect low side of signal generator to B- through .1 mf capacitor.

Connect low range output meter across speaker voice coil and set volume control at maximum. For greatest accuracy, keep output of receiver at approximately .05 watt (.05 watt = .40 volt on output meter) throughout alignment by reducing signal generator output as stages are brought into alignment. Use a small fibre screwdriver for aligning IF & diode transformers.

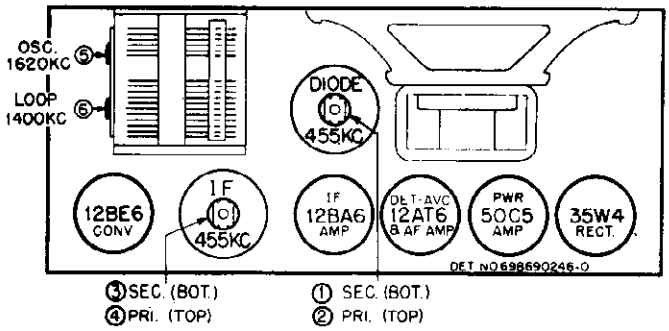

FIGURE 2. TUBE & TRIMMER LOCATION

STEP	DUMMY ANTENNA	GENERATOR CONNECTION	GENERATOR FREQUENCY	GANG SET TO	ADJUST	REMARKS
IF ALIGNMENT						
1.	.1 mf	Rear stator of tuning capacitor	455 Kc	Gang opened	1, 2, 3 & 4	Adjust for maximum.
RF ALIGNMENT						
2.	"	"	1620 Kc	"	5	Adjust for maximum.
3.	None	Radiation loop*	1400 Kc	Tune for maximum	6	Adjust for maximum.

* Connect generator output to 5" diameter, 3 turn loop and couple to receiver loop. Keep loops at least 12" apart.

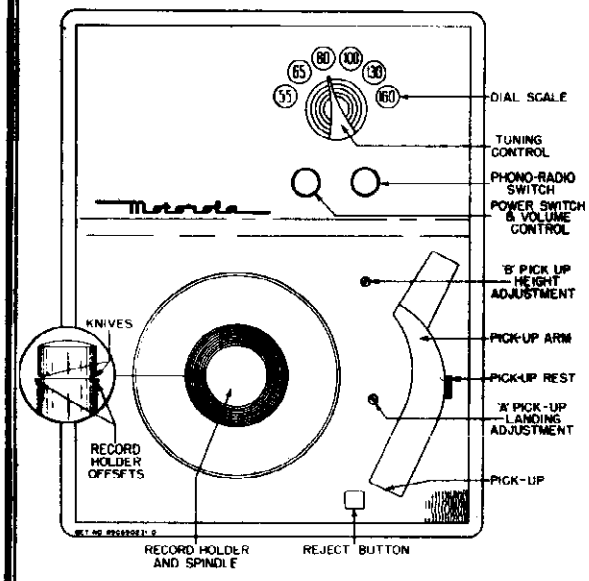

FIGURE 1. OPERATING CONTROLS

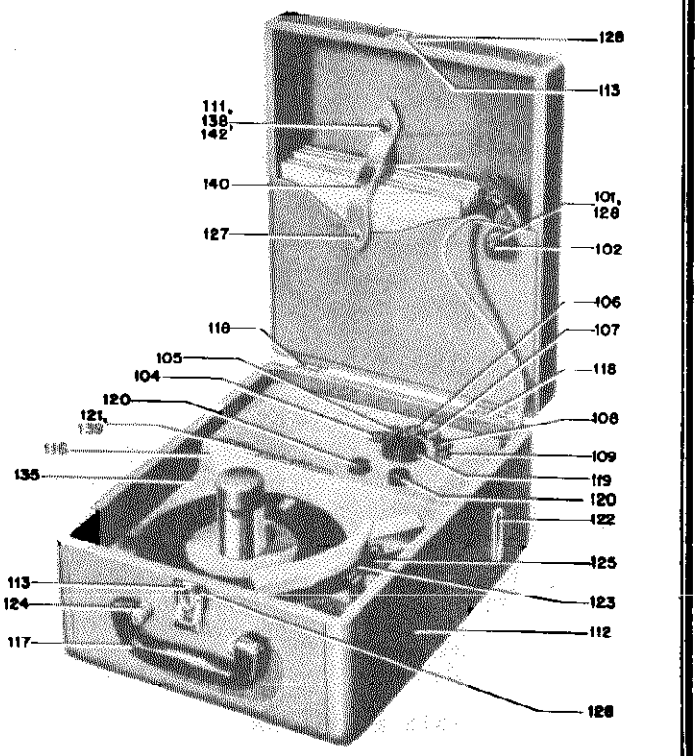

FIGURE 3. PARTS LOCATION - CABINET

© John F. Rider

MODEL 59F11,
Ch. HS-188

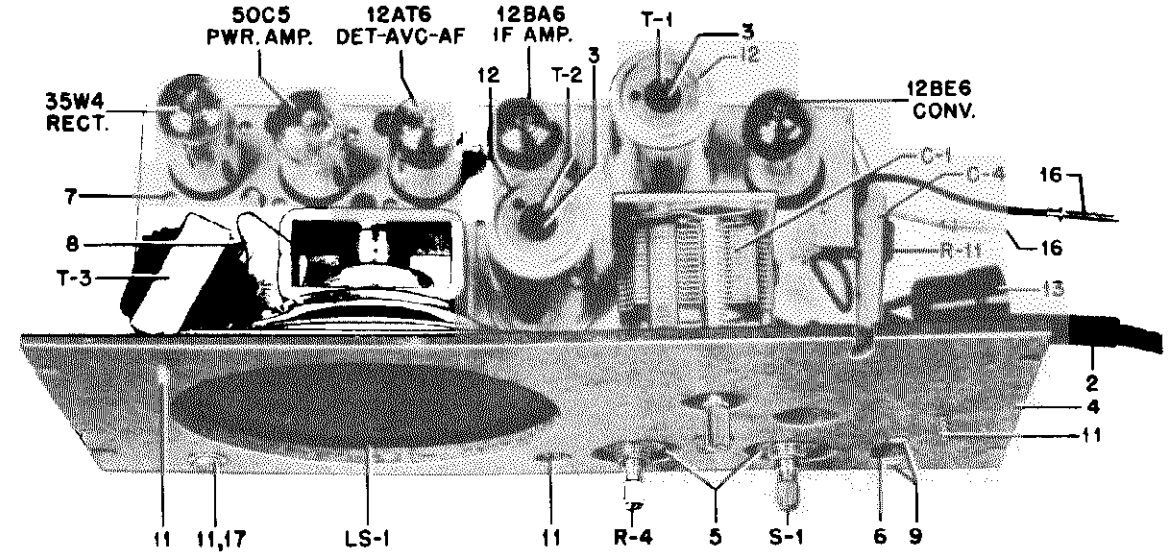

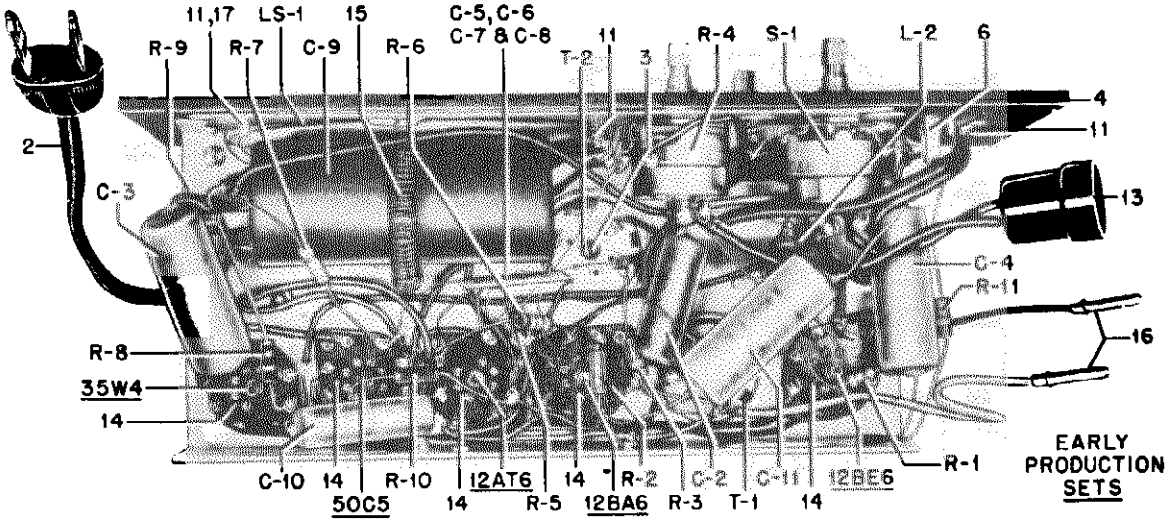

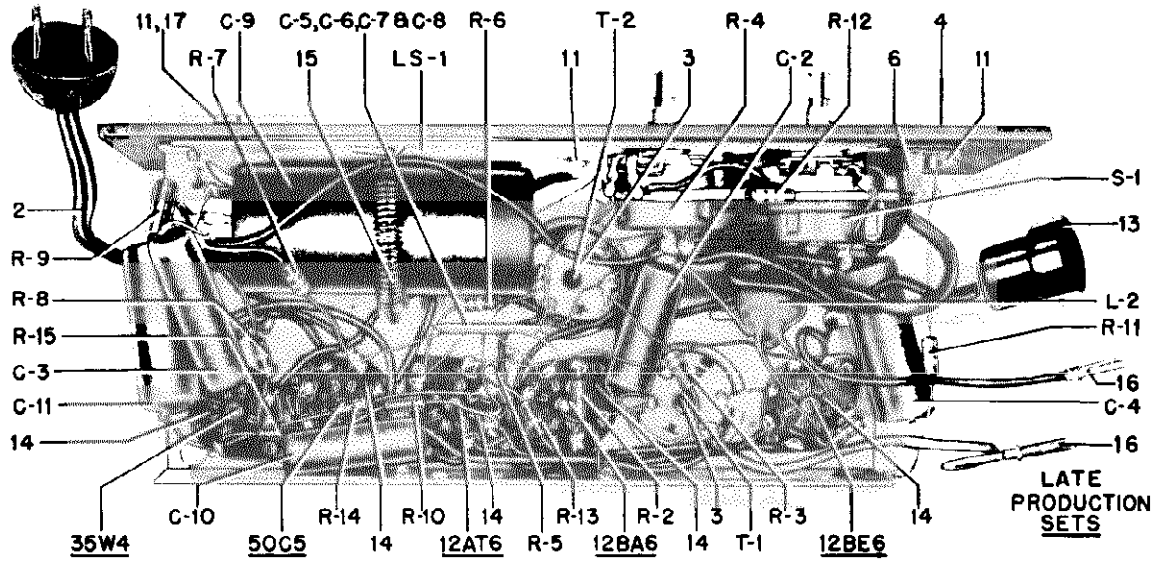

FIGURE 4. PARTS LOCATION - CHASSIS

©John F. Rider

MODEL 59F11,
Ch. HS-188

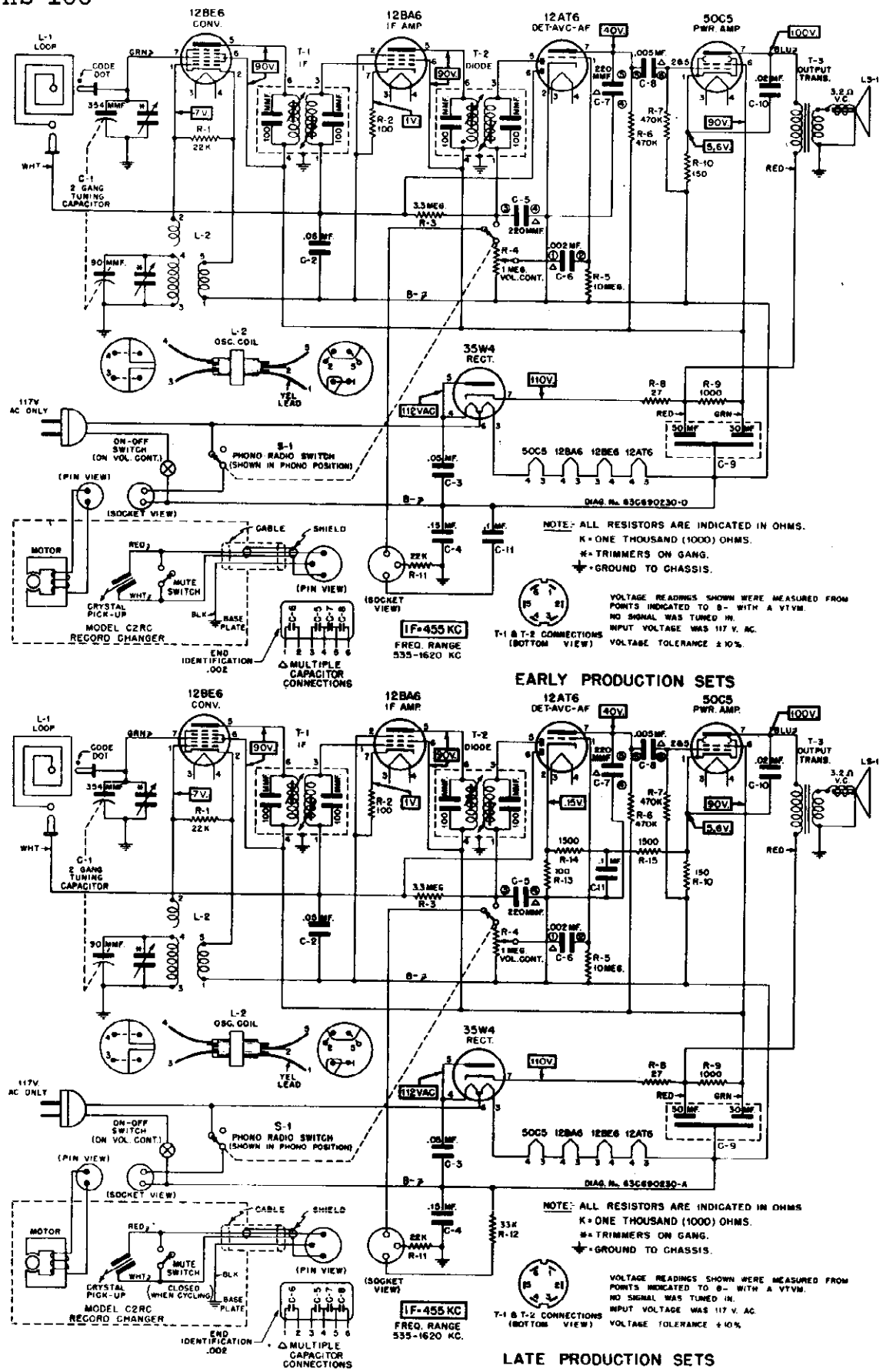

FIGURE 5. SCHEMATIC DIAGRAMS

©John F. Rider

©John F. Rider

REPLACEMENT PARTS LIST

REF. NO.	PART NO.	DESCRIPTION
CHASSIS PARTS - ELECTRICAL		
CAPACITORS		
C-1	19B478128	Variable, 2-gang .....
C-2	8S9821	Paper: .05 mf 200V .....
C-3	8S9816	Paper: .05 mf 400V .....
C-4	8A72686	Paper: .15 mf 200V .....
C-5,6 7,8	21B482847	Ceramic, multiple: 220 mmf, .002 mf, 220 mmf & .005 mf 400V
C-9	23B690166	Electrolytic: 50-30 mf/150V..
C-10	8S9802	Paper: .02 mf 400V .....
C-11	8S9807	Paper: .1 mf 400V .....
COILS		
L-1	24B690176	Loop Antenna & Panel .....
L-2	24A680364	BC Oscillator .....
SPEAKER		
LS-1	50B690661	Speaker: 4"; PM: 3.2 ohm VC.. Exch
RESISTORS		
Note:		All resistors are insulated carbon type unless otherwise specified.
R-1	6R6028	22,000 20% 1/2W .....
R-2	6R6018	10[illegible] 20% 1/2W .....
R-3	6R2118	3.3 meg 20% 1/2W .....
R-4	18A478122	Volume Control: 1 meg; includes on-off switch .....
R-5	6R2109	10 meg 20% 1/2W .....
R-6	6R6032	470,000 20% 1/2W .....
R-7	6R6032	470,000 20% 1/2W .....
R-8	6R5683	27 10% 1/2W .....
R-9	6R3953	1000 20% 1W .....
R-10	6R3992	150 20% 1/2W .....
R-11	6R6028	22,000 20% 1/2W .....
R-12	6R6012	33,000 20% 1/2W .....
R-13	6R6326	100 20% 1/2W .....
R-14	6R6038	1500 10% 1/2W .....
R-15	6R6038	1500 10% 1/2W .....
SWITCH		
S-1	40A690168	Switch, phono-radio .....
TRANSFORMERS		
T-1	24B482863	IF, 455 Kc: complete with tuning cores and padding capacitors but less shield .....
T-2	24B482865	Diode, 455 Kc: complete with tuning cores and padding capacitors but less shield .....
T-3	25K680345	Output Transformer .....
CHASSIS PARTS - MECHANICAL		
1	42A16152	Clamp, line cord .....
2	30A470651	Cord, line: with plug; 6 ft long
3	46A470885	Core, iron: threaded (for T-1 & T-2) .....
4	1X690421	Front Panel Assembly: includes 3-prong receptacle .....
5	2S7051	Nut, hex: 3/8-32 x 9/16; Pal-nut; stl; cad pl (volume control and phono-radio switch mtg) .....
6	9A690170	Receptacle, 3-prong (phono input) .....
7	5S7771	Rivet: .088 x 3/16; stl; nkl pl (tube socket mtg).....
8	5S7707	Rivet: .122 x 5/32; stl; nkl pl (transformer mtg) .....
9	5S7708	Rivet: .122 x 9/32; stl; nkl pl (phono input receptacle mtg) .....
10	3S7247	Screw, machine: 6/32 x 3/16; slotted hex head; lockscrew stl; cad pl (gang mtg) ....
11	3S3398	Screw, sheet metal: #6 x 3/8 PKZ plain hex head; stl; cad pl (speaker, front panel assembly & cable clamp mtg)
12	26K485936	Shield, coil (for T-1 & T-2)
13	9A690169	Socket Assembly, phono-motor.
14	9A472534	Socket, tube: miniature .....
15	41A73996	Spring, tension (electrolytic mtg) .....
16	29A5400	Terminal, plain pin (antenna input) .....
17	4S7566	Washer, flat: 3/8-5/32 x .033 thick; stl; cad pl (front panel assembly mtg) .....
CABINET PARTS		
101	35K690791	Bumper, rubber recess .....
102	35K690792	Bumper, rubber (cemented to recess bumper) .....
103	35A780453	Bumper, rubber (cabinet feet)
104	38B690160	Button, calibration (55) ....
105	38B690161	Button, calibration (65) ....
106	38B690162	Button, calibration (80) ....
107	38B690163	Button, calibration (100) ...
108	38B690164	Button, calibration (130) ...
109	38B690165	Button, calibration (160) ..
110	1X690302	Button, push (reject) .....
111	38K690782	Button, strap .....
112	16F690128	Cabinet, portable: radio-phono combination .....
113	55K690783	Catch Assembly .....
114	42A16152	Clamp, cable .....
115	13B690180	Grille, ventilating (rear) ..
116	1X690452	Grille Assembly, front: includes calibration buttons, logotype, and pickup resting post ....
117	55K690785	Handle, cabinet: plastic ....
118	55K690784	Hinge, lid: brass pl .....
119	36K690167	Knob, tuning .....
120	36K690171	Knob, volume and phono-radio.
121	62K690406	Logotype, Motorola: black ..
122	5A780439	Louvre, air vent: brass pl ..
123	64A690178	Plate, patch (part of front grille-used under pick-up)..
124	55K690786	Post, handle mtg: brass .....
125	46A690432	Post, pick-up resting .....
126	1X690451	Reject Actuating Assembly: includes bracket and arm .....
127	5K690789	Rivet, bifurcated: 1/4 lg; pol brass (strap mtg) .....
128	5K690788	Rivet, bifurcated: 1/2 lg; pol brass (hinge, recess bumper and lid catch mtg) .....
129	5A13261	Rivet, shoulder; stl; cad pl (actuating arm mtg) ....
130	3S7339	Screw, machine: 6-32 x 5/8 plain hex head; stl; cad pl (chassis mtg) .....
131	3K690787	Screw, machine: 6-32 x 1/2 washer head; (handle post mtg) .....
132	3S7506	Screw, sheet metal: #6 x 1/4 PKZ plain hex head; stl; cad pl (pick-up resting post mtg) .....
133	3S7509	Screw, sheet metal: #6 x 5/8 PKA slotted acorn head; antique copper finish (record changer mtg) .....
134	3S7454	Screw, sheet metal: #8 x 1/4 PKZ plain hex head; stl; cad pl (reject actuating assembly mtg) .....
135	3S490108	Screw, wood: #2 x 3/8 Phillips round head; brass pl (front grille mtg) .....
136	3S490107	Screw, wood: #4 x 3/16 slotted oven head; brass pl (ventilating grille mtg) .....
137	26A690595	Shield, protective: armite paper (line cord insulator) .....
138	9K690778	Socket, strap .....
139	2S7095	Speednut: black; PKZ (logotype mtg) .....
140	35K690793	Strap Assembly: includes strap, button & socket .....
141	35A690594	Strip, wood (line cord guard
142	9K690779	Stud, strap .....
143	2K690790	Tee nut: 6-32 (chassis mtg).
144	4S7566	Washer, flat: 3/8 x 5/32 x .033 thick; stl; cad pl (chassis mtg) .....
145	4S1706	Washer, flat: 3/8 x .203 x .033 thick; stl; cad pl (on reject actuating arm) .....
146	4A690158	Washer, shoulder: fibre (record changer mtg) .....

MODELS 59L11Q, 59L12Q, 59L14Q; Ch. HS-187

GENERAL INFORMATION

TYPE - A three-power (AC/DC Battery) portable receiver of the personal type. Four miniature type tubes and a selenium rectifier are used in a superheterodyne circuit. Loop antenna is housed inside rear cover.

TUNING RANGE - 535 to 1620 Kc IF - 455 Kc

TUBE COMPLEMENT - 1R5 - Converter
1U4 - IF Amplifier
1U5 - Detector, AVC & 1st AF Amplifier
3S4 - Power Amplifier
Rectifier - Selenium type (for AC/DC operation)

POWER SUPPLY - Operates from 117 volts AC/DC (15 watts) or from the following self-contained batteries:

Two 1-1/2V flashlight cells (Eveready #950 or equivalent)
One 67-1/2V "B" battery (Eveready #467 or equivalent)

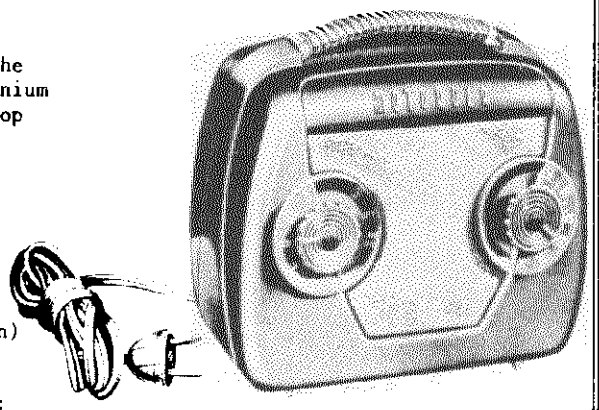

INSTALLATION & OPERATING INSTRUCTIONS

CONTROLS. The power switch is operated by a three-position switch lever located under the volume (left-hand) knob. When the switch lever is in "BAT" position, the receiver will operate from its internal batteries; in "AC-DC" position, the receiver will operate from 117 volt house current. Move the lever to "OFF" position when the receiver is not in use.

Stations are tuned in with the right-hand knob. The markings around the tuning knob may be read in kilocycles by adding one zero to the figures.

HOUSE CURRENT OPERATION. Open the rear cover and remove the power cord from inside of the cabinet; pass the cord through the slot in the cover before closing. Connect the power plug to any 117 volt AC or DC outlet. Reverse the power plug in the power outlet if the receiver does not operate from DC power.

If the receiver is to be operated for long periods of time on AC or DC, or is to be placed in storage, remove the batteries and store them in a cool place; this will prevent battery leakage and possible damage to receiver.

BATTERY OPERATION. Open the rear cover and install the batteries. The rear cover is opened by inserting the fingertips into the slots under the handle and pulling back. Complete battery installation instructions will be found on the label inside the receiver or see Figure 1.

When low volume or fuzzy tone is noticed, replace the flashlight cells. Normally, the 67-1/2 volt "B" battery will last for 3 or 4 changes of the flashlight cells. Run-down batteries should not be left inside receiver, as they may leak and cause damage.

The condition of the batteries will not affect the operation of the receiver from AC or DC house current.

SERVICE NOTES

The chassis of this receiver is connected directly to the power line. When operating the set with the chassis outside of its cabinet (from AC power line), use an isolating transformer between power line and receiver to reduce possibility of electrical shock.

Tubes can be replaced without removing the chassis from the cabinet; open the back cover and remove the chassis insulator to expose the tubes. Two plug buttons hold the chassis insulator in position.

To remove the chassis from the cabinet:

1. Remove the control knobs and switch lever.
2. Open the back cover and remove the chassis insulator.
3. Disconnect the two loop leads from the pin receptacles.
4. Remove the two Phillips head screws on each end of the chassis and slide chassis from the cabinet.

©John F. Rider

MODELS 59L11Q, 59L12Q, 59L14Q; Ch. HS-187

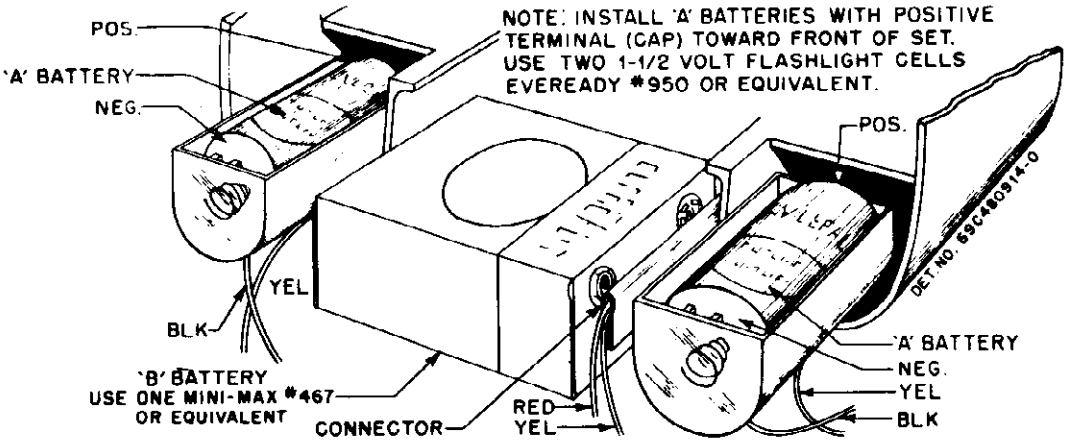

FIGURE 1. BATTERY REPLACEMENT DETAIL

ALIGNMENT

It is recommended that the receiver be operated from battery power during alignment. If the receiver is operated from AC power during alignment, use an isolation transformer between the power line and receiver. If an isolation transformer is not available, connect the low side of the signal generator to chassis through a .1 mf capacitor.

Connect a low range output meter across the speaker voice coil and set the volume control at maximum. For greatest accuracy, keep the output of the receiver at approximately .05 watts (.05 watts = .40 volts on output meter) throughout alignment by reducing the signal generator output as stages are brought into alignment. Use a small fibre screwdriver for aligning the IF and diode transformers.

The loop antenna should be connected to the chassis during alignment.

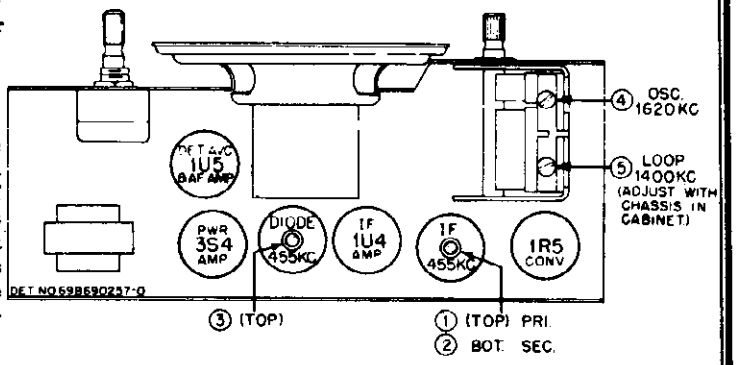

FIGURE 2. TUBE & TRIMMER LOCATIONS

STEP	DUMMY ANTENNA	GENERATOR CONNECTION	GENERATOR FREQUENCY	DIAL SET TO	ADJUST	REMARKS
IF ALIGNMENT						
1.	.1 mf	Stator lug of tuning capacitor	455 Kc	Gang opened	1, 2 & 3	Adjust for maximum
RF ALIGNMENT						
2.	.1 mf	"	1620 Kc	"	4	Adjust for maximum
3.	-	-	-	-	-	**Install chassis in cabinet, leaving output meter connected to speaker.
4.	-	Radiation loop*	1400 Kc	Tune for maximum	5	Adjust for maximum. Trimmer is reached through hole under left-hand battery holder.

* Connect generator output to 5" diameter 3 turn loop and couple to receiver loop. Keep loops at least 12" apart.

** As an alternate method, the output meter may be disconnected at this point and the set installed in the cabinet. Tune in a weak station near 1400 Kc and adjust trimmer #5 through the hole in the bottom of the cabinet for maximum signal output.

© John F. Rider

MODELS 59L11Q, 59L12Q,
59L14Q; Ch. HS-187

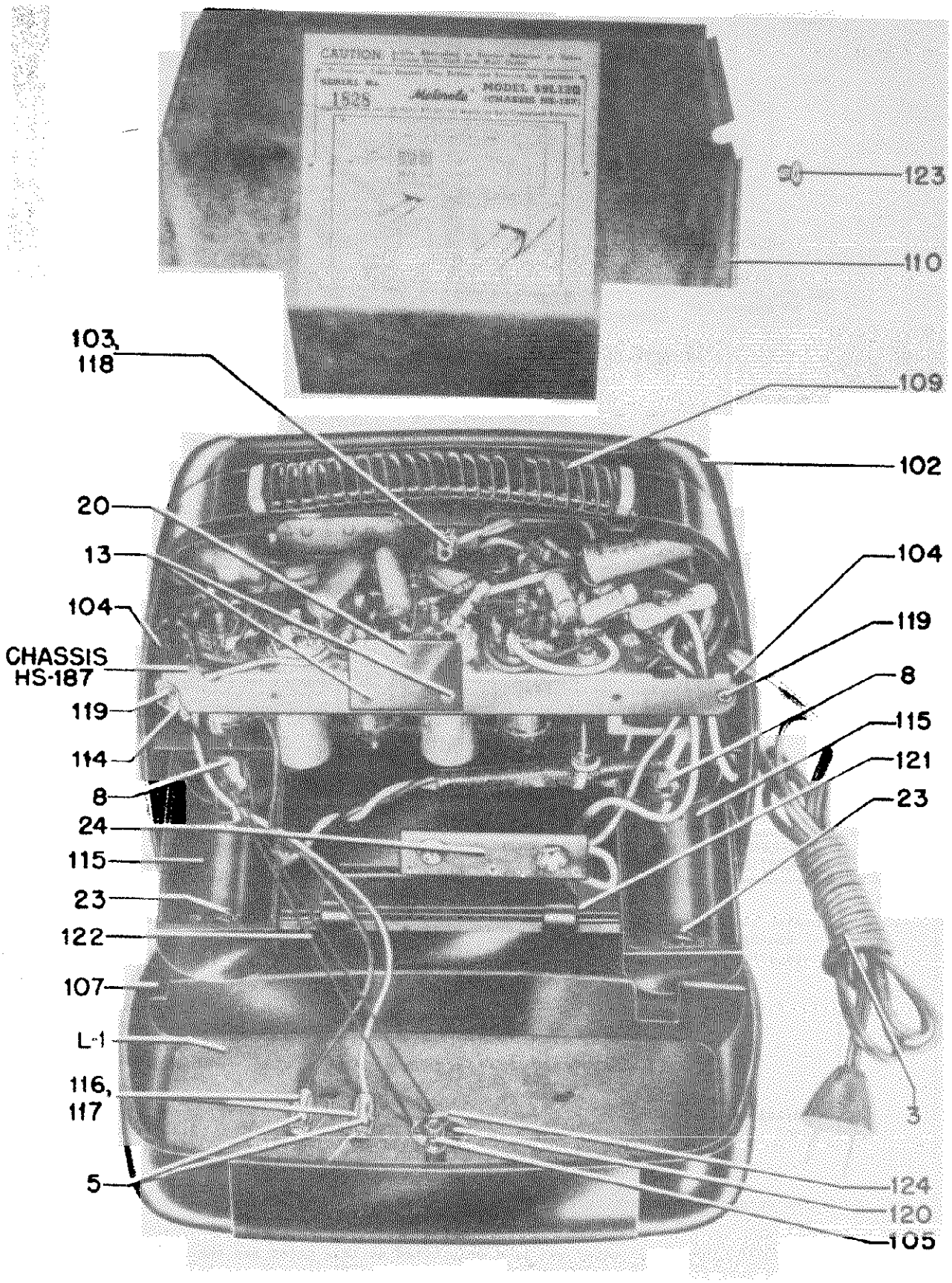

FIGURE 3. PARTS LOCATION - REAR VIEW

©John F. Rider

MODELS 59L11Q, 59L12Q, 59L14Q; Ch. HS-187

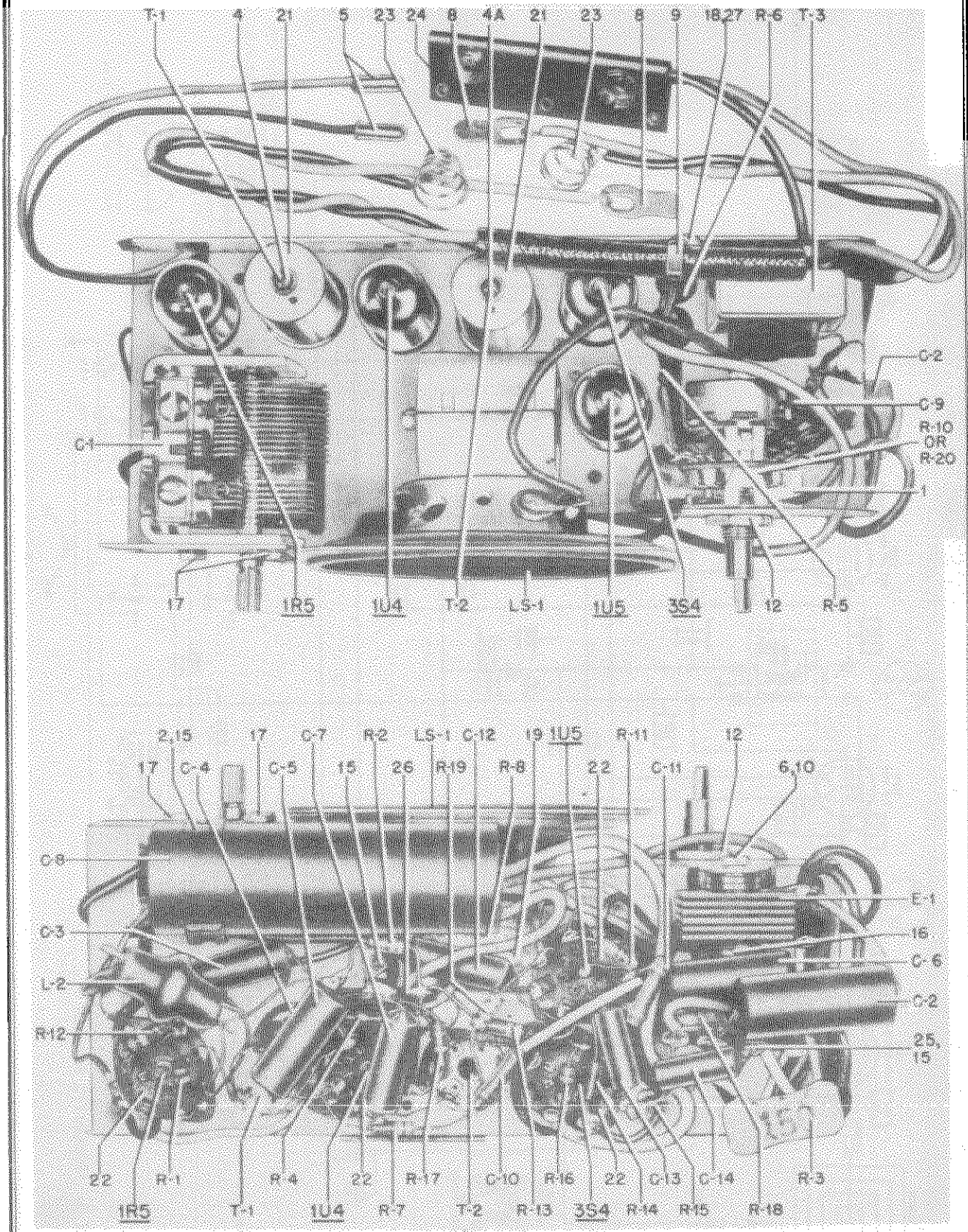

FIGURE 4. PARTS LOCATION - CHASSIS TOP & BOTTOM

©John F. Rider

MODELS 59L11Q, 59L12Q,
59L14Q; Ch. HS-187

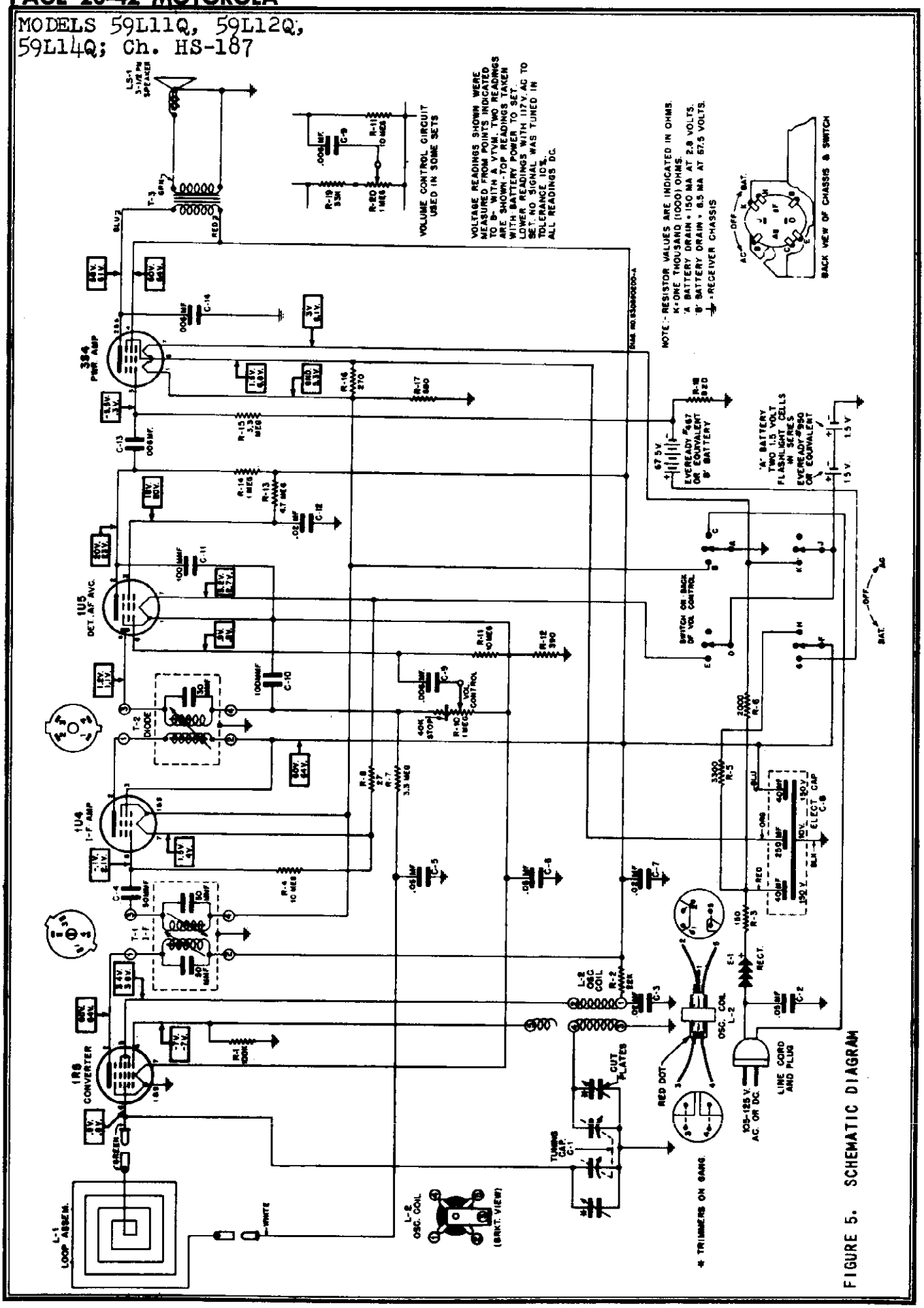

FIGURE 5. SCHEMATIC DIAGRAM

©John F. Rider

©John F. Rider

REPLACEMENT PARTS LIST

CHASSIS PARTS - ELECTRICAL

REF. NO.	PART NO.	DESCRIPTION
CAPACITORS		
C-1	19K680360	Variable: 2 gang
C-2	8K14791	Paper: .05 mf 400V
C-3	8K471628	Paper: .02 mf 100V
C-4	21K77373	Ceramic: 50 mmf 500V
C-5	8A71213	Paper: .05 mf 100V
C-6	8A71213	Paper: .05 mf 100V
C-7	8K471628	Paper: .02 mf 100V
C-8	23A680014	Electrolytic: 40-40 mf/150V, 250 mf/10V
C-9	8C4529	Paper: .006 mf 100V
C-10	21B77286	Ceramic: 100 mmf 500V
C-11	21B77286	Ceramic: 100 mmf 500V
C-12	8K471628	Paper: .02 mf 100V
C-13	8C4529	Paper: .006 mf 100V
C-14	8C4529	Paper: .006 mf 100V
RECTIFIER		
E-1	48B478111	Selenium Rectifier: half-wave
COILS		
L-1	24B480092	Loop and Panel Assembly
L-2	24A485989	Oscillator coil
SPEAKER		
LS-1	50B480048	
or	50B482759	Speaker: 3-1/2" PM
TRANSFORMERS		
T-1	24B690840	
or	24B480042	IF, 455 Kc: complete with tuning cores and padding capacitors, but less shield
T-2	24B480040	Diode, 455 Kc: complete with tuning core and padding capacitors, but less shield
T-3	25B470622	Output transformer
RESISTORS		
Note:		All resistors are carbon, insulated type unless otherwise specified
R-1	6R6031	100,000 10% 1/2W
R-2	6R6397	22,000 10% 1/2W
R-3	17A76986	Wirewound: 150 10% 2-1/2W
R-4	6R2109	10 meg 20% 1/2W
R-5	6R5581	3300 10% 1/2W
R-6	17K680015	Wirewound: 2000 10% 5W; center tapped
R-7	6R2118	3.3 meg 20% 1/2W
R-8	6R5683	27 10% 1/2W
R-10	18K680375	Volume control: 1 meg; with switch.
R-11	6R2109	10 meg 20% 1/2W
R-12	6R5554	390 10% 1/2W
R-13	6R2122	4.7 meg 20% 1/2W
R-14	6R6004	1 meg 20% 1/2W
R-15	6R2118	3.3 meg 20% 1/2W
R-16	6R6432	270 10% 1/2W
R-17	6R6040	680 10% 1/2W
R-18	6R6269	820 10% 1/2W
R-19	6R6410	33,000 10% 1/2W (used only with R-20)
R-20	18A480049	Volume control: 1 meg; with switch (used in some models)

CHASSIS PARTS - MECHANICAL

1	15A481339	Baffle, switch: metal plate
2	42A75825	Clip, electrolytic mtg
3	30K680008	Cord, line & plug: 6 ft long
4	46K680318	Core, iron: threaded (T-1)
4A	46A470885	Core, iron: threaded (T-2)
5	5S7855	Eyelet: .156 x .484 (loop lead tip)
6	4S7695	Lockwasher, int: #5; stl; cad pl (rectifier mtg)
7	29R3019	Lug, soldering (line cord anchor)
8	29R3020	Lug, soldering (battery contact
9	29R5294	Lug, soldering (cable retainer on R-6)
10	2S7010	Nut, hex: 5-40 x 1/4; stl; cad pl (rect mtg)
11	2S7005	Nut, hex: 6-32 x 1/4; stl; cad pl (resistor mtg)
12	2S7051	Nut, hex: 3/8-32 x 9/16; stl; cad pl (vol cont mtg)
13	5S7769	Rivet: .088 x 3/32; stl; nkl pl (circuit shield mtg)
14	5S7771	Rivet: .088 x 3/16; stl; nkl pl (socket mtg)
15	5S7706	Rivet: .122 x 1/8; stl; nkl pl (electrolytic clip, term strip and lug mtg)
16	3S7311	Screw, machine: 5-40 x 7/8 slotted hex head; stl; cad pl (rectifier mtg)
17	3S7247	Screw, machine: 6-32 x 3/16 slotted locking hex head; stl; cad pl (gang mtg)
18	3S1451	Screw, machine: 6-32 x 2; slotted round head; stl; cad pl (resistor mtg)
19	3S7205	Screw, machine: 8-32 x 1/4; slotted locking type hex head; stl; cad pl (spkr mtg)
20	26A480034	Shield, circuit
21	1K480037	Shield and Sleeve Assembly (for T-1, part number 24B480042 and T-2)
or	26K480038	Shield, coil (for T-1, part number 24B690840)
22	9A472534	Socket, tube: 7-prong miniature; wafer type
23	41K680029	Spring, battery contact
24	31A480032	Strip, terminal ('B' battery connector)
25	31K51511	Strip, terminal: 3 ins lugs, #3 gnd; 3/8" spacing
26	31K90044	Strip, terminal: 2 ins lugs, #2 gnd; 3/8" spacing
27	9K470939	Washer, insulating: 3/8 x .136 x .062 thick; armite (R-6 insulating)

CABINET PARTS

101	35B690002	Baffle, speaker
102	1X690082	Cabinet Assembly: tan; complete with handle grille and back cover catch; less back cover and hinge spring (59L11Q)
or	1X690484	Cabinet Assembly: same as above, but black finish (59L12Q)
or	1X690151	Cabinet Assembly: same as above but maroon finish (59L14Q)
103	42A480079	Clip, fuse (cover catch)
104	42A680016	Clip, reinforcing
105	42A480078	Clip, speed (on back cover catch stud)
106	42K482797	Clip, speed (on volume knob)
107	16K690076	Cover, cabinet back: tan (59L11Q).
or	16K690140	Cover, cabinet back: black (59L12Q)
or	16K690142	Cover, cabinet back: maroon (59L14Q)
108	13K690005	Grille, speaker
109	55K690069	Handle, carrying (59L11Q)
or	55B690068	Handle, carrying (59L12Q)
or	55K690113	Handle, carrying (59L14Q)
110	14C480095	Insulator, chassis: gray fibre
111	36K690072	Knob, tuning: tan (59L11Q)
or	36K690147	Knob, tuning: black (59L12Q)
or	36K690149	Knob, tuning: maroon (59L14Q)
112	36K690070	Knob, volume: tan; includes clip (59L11Q)
or	36K690134	Knob, volume: black; includes clip (59L12Q)
or	36K690138	Knob, volume: maroon; includes clip (59L14Q)
113	36K690074	Lever, switch: tan (Batt-Off-AC/DC switch lever, 59L11Q)
or	36K690143	Lever, switch: black (Batt-Off-AC/DC switch lever, 59L12Q)
or	36B480086	Lever, switch: maroon (Batt-Off-AC/DC switch lever, 59L14Q)
114	29A690089	Lug, clinch (connects cover stop cord to chassis)
115	15B481896	Retainer, 'A' battery: plastic.
116	9A481743	Receptacle, 1-pin (on loop)
117	5S7720	Rivet: .083 x 1/8 steel; nkl pl (loop receptacle mtg)
118	3S488008	Screw, sheet metal: #4 x 1/4 Phil lips round head; thread cutting type; stl; cad pl (cover catch mtg)
119	3S490390	Screw, sheet metal: #4 x 3/8 Phil lips round head; thread cutting type; stl; cad pl (chassis mtg)
120	2S7089	Speednut: for .187 round; 3/8 x 5/8; blk parkerized finish (loop and grille retainer)
121	41A480094	Spring, hinge (back cover)
122	30A690007	Stop Assembly, cover: includes cord and lug
123	46B480108	Stud, trimount (chassis insulator mtg)
124	4K19943	Washer, paper: 11/16 x 17/64 x 1/32 thick (cover stop cord guard)
125	4K481587	Washer, felt (inside switch lever)

MODELS 68F11, 68F12, 68F14,
68F14B, 68F14M; Ch. HS-124

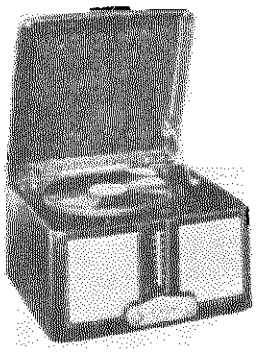

Model
68F11

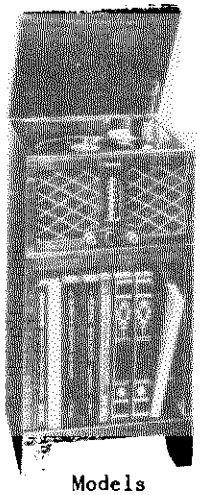

Models
68F14, 68F14M & 68F14B

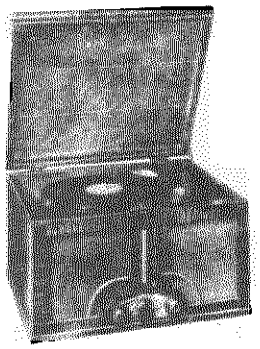

Model
68F12

GENERAL INFORMATION

TYPE - 68F11 - Table model, plastic-walnut cabinet
68F12 - Table model, wood-mahogany cabinet
68F14 - Petite Console model, wood, brown mahogany cabinet
68F14M- Petite Console model, wood, red mahogany cabinet
68F14B- Petite Console model, wood, blonde mahogany cabinet

The above models are of the radio-phonograph combination type, receiving only the standard broadcast band (AM). A built-in loop antenna is used. Chassis HS-124 is used in all five models.

TUNING RANGE - 535 to 1620 Kc. IF FREQUENCY - 455 Kc.

TUBE COMPLEMENT - (six)
12AU6 Mixer
6C4 Oscillator
12BA6 IF Amplifier
6AQ6 Detector, AVC & 1st AF Amplifier
50B5 Power Amplifier
35W4 Rectifier

POWER SUPPLY - 105-125V, 60 cycles, 55 watts (with record changer).

RECORD CHANGER - Models 68F11, 68F14, 68F14M & 68F14B use Record Changer RC-34; Model 68F12 uses Record Changer RC-30A. For complete record changer information refer to Service Manual, Part No. 54P484953.

INSTALLATION & OPERATING INSTRUCTIONS

Refer to Figure 1 for operating control locations.

POWER SWITCH AND VOLUME CONTROL. The power switch and volume control are combined and operated with the left-hand knob. Turn radio ON by rotating volume knob to the right until a 'click' is heard. Continued rotation of this control to the right will increase volume. Turn receiver OFF by rotating volume knob to the left until a 'click' is heard.

ANTENNA. A loop antenna is built into this receiver, eliminating the need for an external antenna. Reception from some stations may be improved by rotating the receiver; this is due to the slight directional characteristic of the loop antenna. For additional pick-up on Models 68F11 & 12, an external antenna may be connected to the wire on back of set, or to Models 68F14, M & B, by passing external antenna lead-in through hole in cabinet back and connecting to loose lead taped to inside of cabinet.

CAUTION: Never connect antenna or chassis to water pipe, radiator, or other ground.

TUNING. The calibrated dial scale is read in kilocycles by adding one '0' to the figures. Tune carefully until you are exactly on the station; tuning to either side of it will result in noisy reception and poor tone quality. Do not regulate volume by detuning the station; always tune exactly 'on' the station, then adjust volume control as desired.

©John F. Rider

MODELS 68F11, 68F12, 68F14, 68F14B, 68F14M; Ch. HS-124

PHONO SWITCH. The radio will not play unless the PHONO button is out (flush with REJECT button). Alternate pushes will lock the button 'in' for phono operation and 'out' for radio reception.

TONE SWITCH. Alternate pushes on TONE button will change the tone to bass or treble. Bass position is with button 'in'.

MOTOR SWITCH. Push the MOTOR button 'in' to allow the turntable to revolve; the button will lock in position. To stop the turntable, again push the button 'in' and release; the button will snap back to the 'off' position.

REJECT SWITCH. Momentarily push 'in' the REJECT button to begin the playing of the records. The button may be pushed 'in' to reject a record before it has been completely played.

RECORD CHANGER. Refer to Record Changer Service Manual 54P484953 for record changer operation.

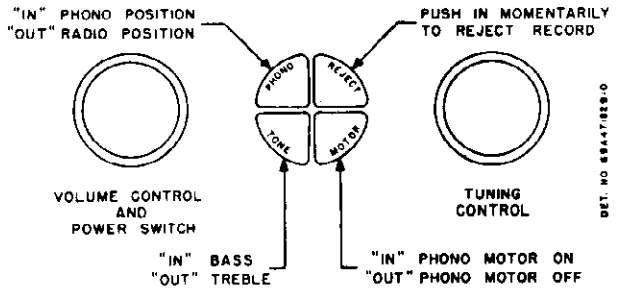

FIGURE 1. CONTROLS

SERVICE NOTES

HOW TO REPLACE PHONOGRAPH NEEDLE

This record player is equipped with a permanent point long-life needle which is good for several thousand plays unless damaged by mishandling. To replace a phonograph needle, loosen the small knurled nut that holds the needle in place. The nut is accessible from the bottom of pick-up arm. Use a pair of long nose pliers or tweezers to avoid damaging the crystal cartridge. Recommended replacement needle is Motorola Part No. 47K471596. CAUTION: Standard type needles will not work.

IF & DIODE REPLACEMENT

NOTE: Two types of IF & Diode transformers are being used. One type has iron cores that are tuned by means of slotted brass screws. These transformers must be used with shields having an internal iron core sleeve.

The other type of transformers have threaded cores moving inside of a threaded coil form. Plain shields must be used with these transformers.

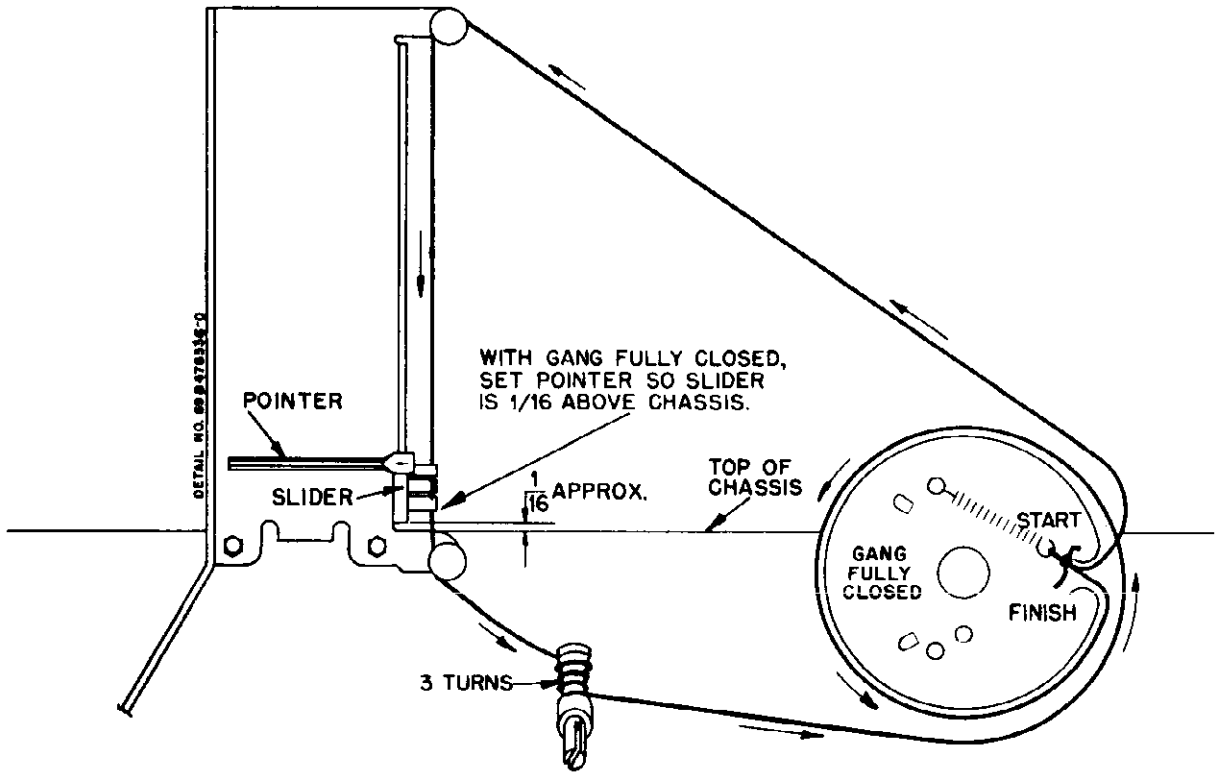

FIGURE 2. CHASSIS HS-124 STRING DRIVE DETAIL

© John F. Rider

MODELS 68F11, 12, 68F14, 68F14B, 68F14M; Ch. HS-124

ALIGNMENT

Maximum performance can only be obtained if extreme care is exercised during alignment. Follow the procedure carefully.

It is suggested that an isolating transformer be used between receiver and power line during alignment. If no isolation transformer is used and hum is encountered during alignment, connect the ground side of the signal generator through a .1 mf capacitor to B- instead of the receiver chassis.

A low range output meter should be connected across the speaker voice coil. Set receiver volume control to maximum. For greatest accuracy, keep output of receiver at approximately .05 watt (.05 watt = .40 volt on output meter) throughout alignment by reducing signal generator output (not receiver volume control) as stages are brought into alignment.

NOTE: Two types of IF & diode transformers are used in this chassis. One type has cores with slotted brass adjustment screws; the other type has threaded cores that move inside a threaded coil form. To adjust the latter type, use a small fiber screwdriver and do not use undue pressure as damage to the core or coil form may result.

STEP	DIAL SET TO	DUMMY	SIGNAL GENERATOR CONNECTED TO	SIGNAL GENERATOR SET AT	ADJUST TRIMMER OR CORE	REMARKS
IF ALIGNMENT						
1.	Gang fully opened	.1 mf	Mixer Grid (pin #1)	455 Kc	1,2,3 & 4	Adjust for maximum.
RF ALIGNMENT						
2.	Gang fully opened	.1 mf	Mixer Grid (pin #1)	1620 Kc	5	This sets oscillator to dial scale. (Check pointer calibration by referring to Figure 2.)
3.	1400 Kc	None	Radiation loop*	1400 Kc	6	Tune signal in on receiver, then adjust trimmer (6) for maximum. After set is assembled in cabinet, repeak this trimmer.

* Connect output of signal generator to a 5" diameter, 3 turn loop and bring loop close enough to receiver loop to obtain output of 50 milliwatts (.40V) on output meter. Vary distance between loops to maintain this output during alignment. Minimum distance between loops should never be less than 12".

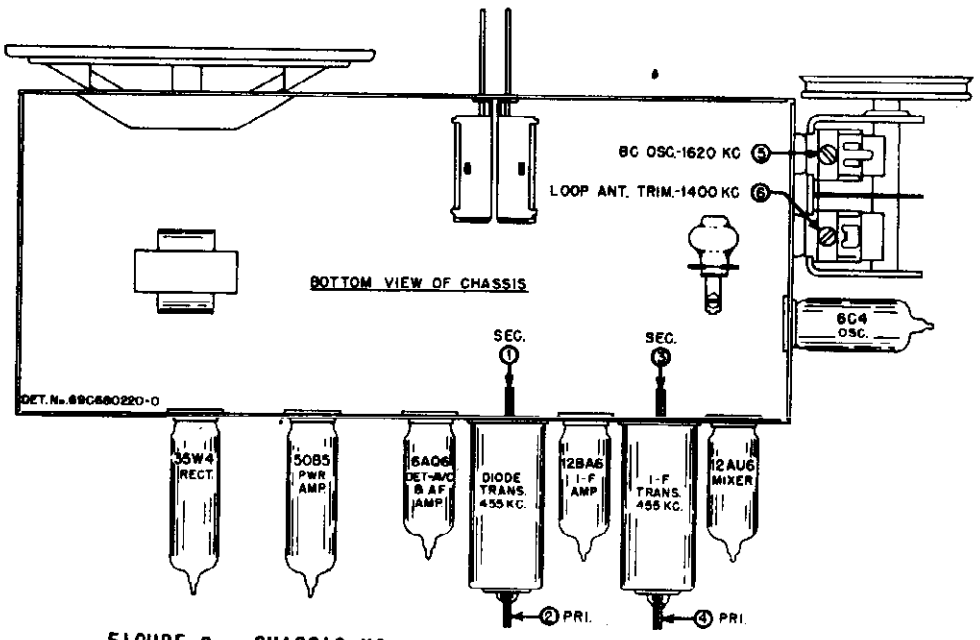

FIGURE 3. CHASSIS HS-124 TUBE & TRIMMER LOCATIONS

© John F. Rider

MODELS 68F11, 68F12, 68F14, 68F14B, 68F14M; Ch. HS-124

FRONT OF CHASSIS

▭ = RESISTANCE MEASUREMENTS.
⌓ = VOLTAGE MEASUREMENTS.
T.P. = TIE POINT.
* = MEASUREMENTS WILL VARY DEPENDING ON CONDITION OF ELECTROLYTIC CAPACITOR IN CIRCUIT.
N.C. = NO CONNECTION.
K = 1000 (ONE THOUSAND) OHMS.
I.C. = INTERNAL CONNECTION TO PIN
MEASUREMENTS TAKEN WITH VTVM.
MEASUREMENTS TAKEN FROM TUBE BASE TERMINAL TO B-(⏚)
VOLTAGE MEASUREMENTS ±10%.
RESISTANCE MEASUREMENTS ±20%.
VOLUME CONTROL ON FULL.

6C4
OSCILLATOR

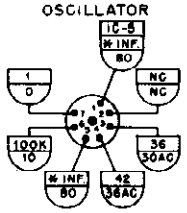

BOTTOM VIEW OF CHASSIS

35W4 RECTIFIER | 50B5 POWER AMP. | 6AQ6 DET-AVG-AF AMP. | 12BA6 I-F AMP. | 12AU6 MIXER

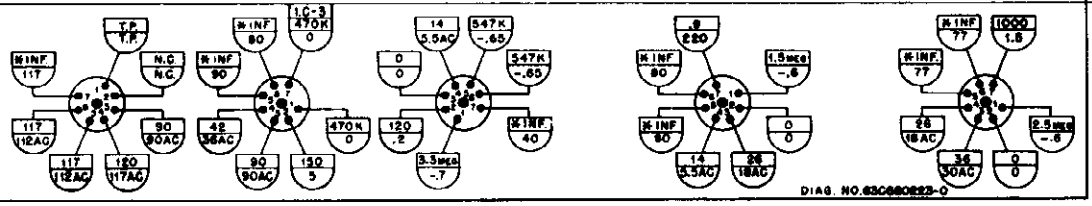

FIGURE 4. CHASSIS HS-124 VOLTAGE & RESISTANCE DIAGRAM

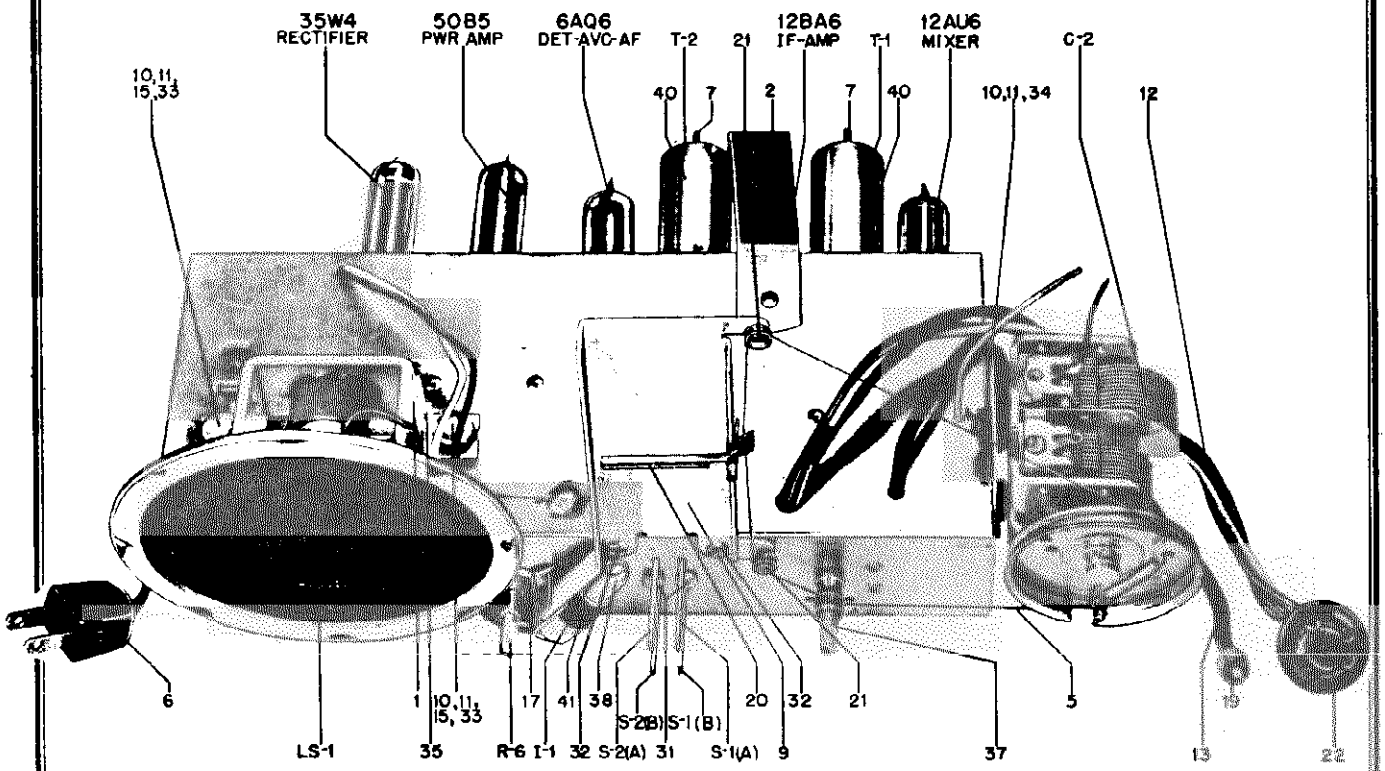

FIGURE 5. CHASSIS HS-124 PARTS LOCATION - TOP VIEW

©John F. Rider

MODELS 68F11, 68F12, 68F14,
68F14B, 68F14M; Ch. HS-124

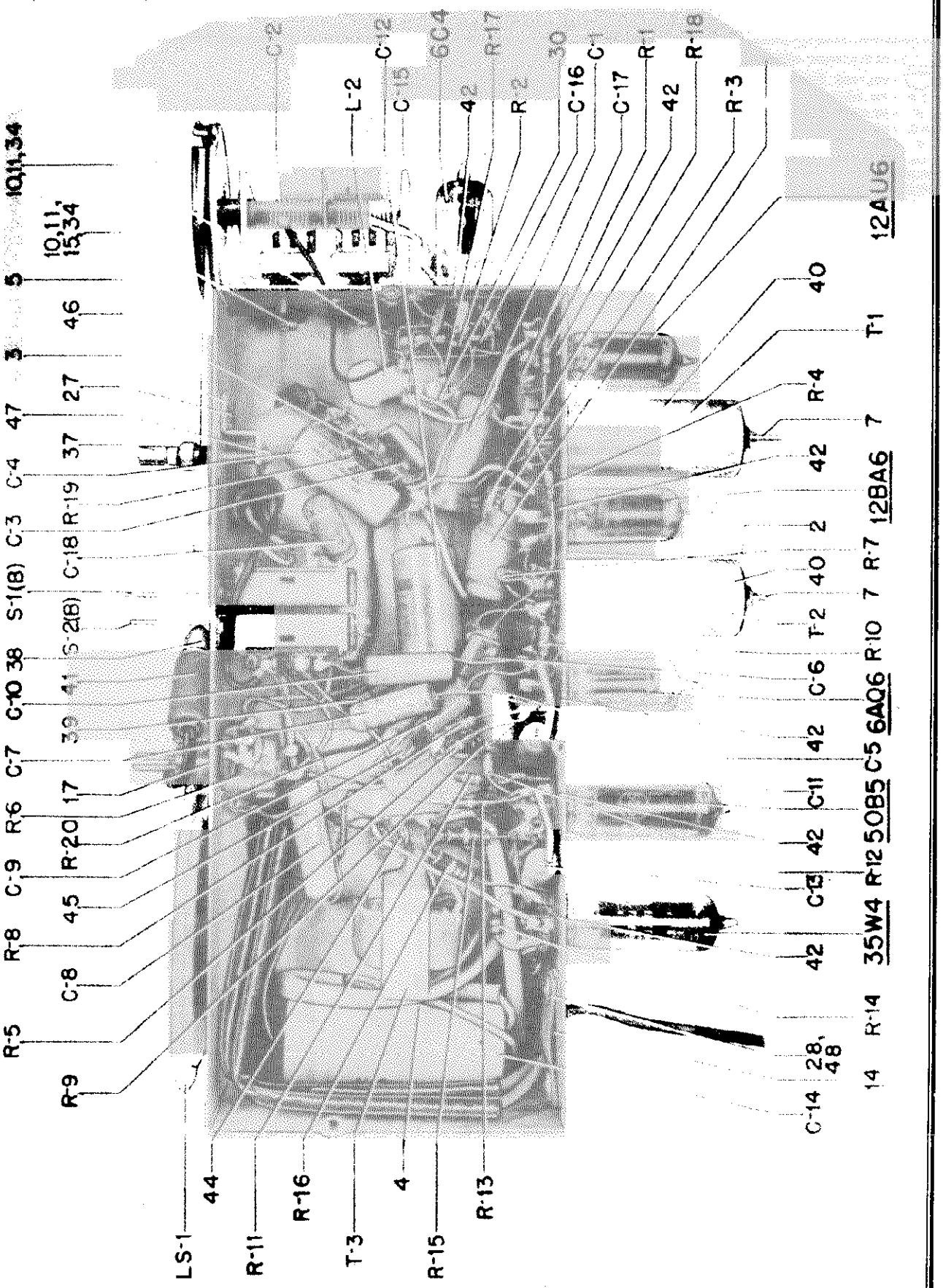

FIGURE 6. CHASSIS HS-124 PARTS LOCATION - BOTTOM VIEW

©John F. Rider

MODELS 68F11, 68F12, 68F14, 68F14B, 68F14M; Ch. HS-124

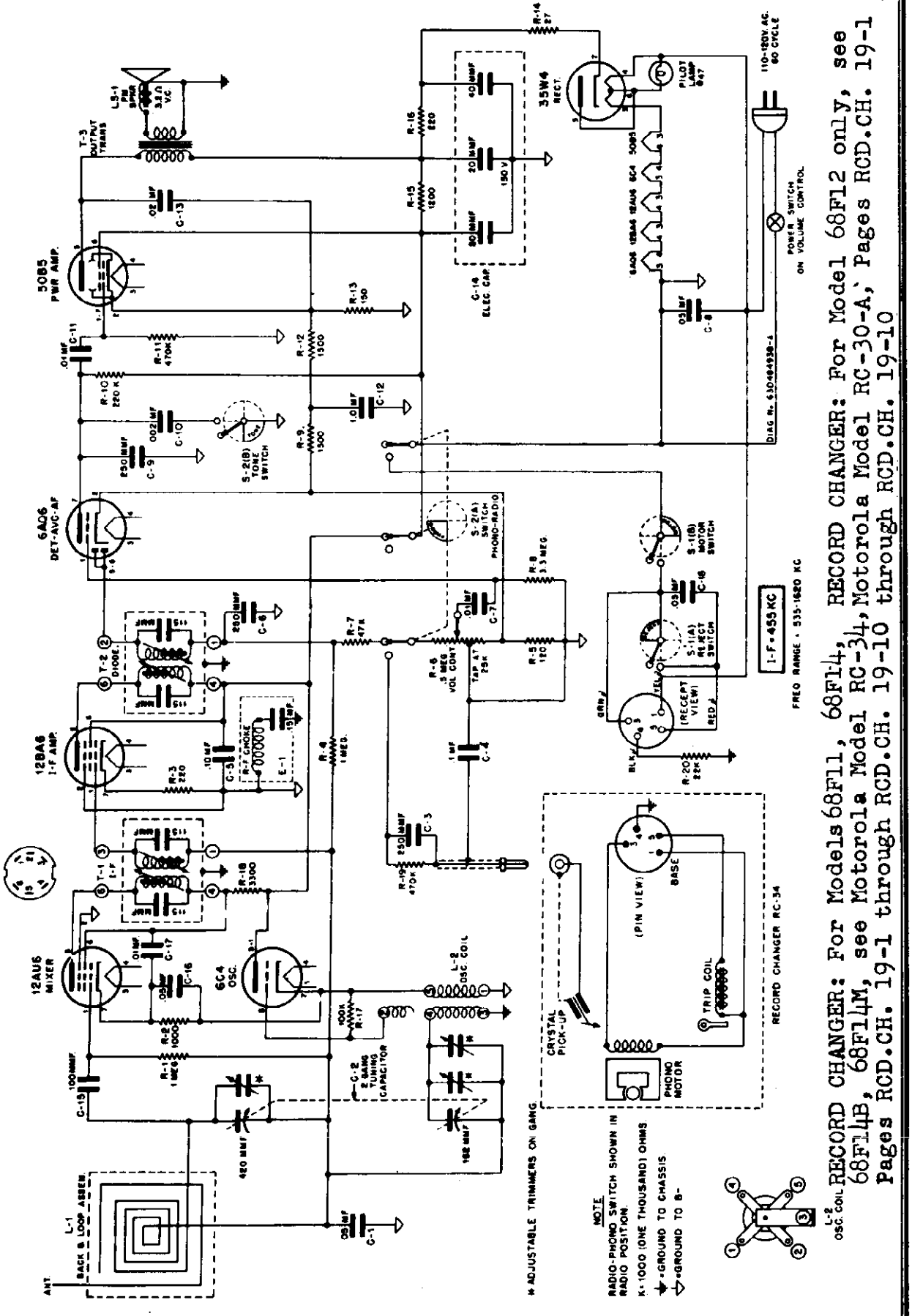

©John F. Rider

MODELS 68F11, 68F12, 68F14, 68F14B, 68F14M; Ch. HS-124

REPLACEMENT PARTS LIST

Ref. No.	Part No.	Description
CHASSIS PARTS - ELECTRICAL		
CAPACITORS		
C-1	8S9816	Paper: .05 mf 400V .....
C-2	1X470181	Variable, 2 gang: includes pulley .....
C-3	21R6648	Mica: 250 mmf 500V .....
C-4	8S9807	Paper: .1 mf 400V .....
C-5	8S9806	Paper: .1 mf 200V .....
C-6	21R6648	Mica: 250 mmf 500V .....
C-7	8S9809	Paper: .01 mf 400V .....
C-8	8S9816	Paper: .05 mf 400V .....
C-9	21R6648	Mica: 250 mmf 500V .....
C-10	8S9824	Paper: .002 mf 400V .....
C-11	8S9809	Paper: .01 mf 400V .....
C-12	8S9839	Paper: 1.0 mf 100V .....
C-13	8S9802	Paper: .02 mf 400V .....
C-14	23B75808	Electrolytic: 40-20-20/150V.
C-15	21R6641	Mica: 100 mmf 500V .....
C-16	8S9821	Paper: .05 mf 200V .....
C-17	8S9809	Paper: .01 mf 400V .....
C-18	8K471635	Paper: .05 mf 400V .....
CHOKE		
E-1	1A77283	Capacitor and Choke Assembly (includes .15 mf 200V paper capacitor and coil) .....
DIAL LIGHT		
I-1	65X11854	Bulb: 6.3V .15A; tubular; bayonet base; clear; #47 ..
COILS		
L-1	24C470214	Loop & Panel Assembly: with lug terminals (68F11 & 68F12)..
or	24K482757	Loop & Panel Assembly: with pin terminals (68F14, 68F14M & 68F14B) .....
L-2	24A74616	Oscillator .....
SPEAKER		
LS-1	50B470034	PM: 5"; 3.2 ohm VC ..... Exchange
RESISTORS		
Note: All resistors are insulated carbon type, 20% watt unless otherwise specified.		
R-1	6R6004	1 meg .....
R-2	6R6301	1000 .....
R-3	6R3933	220 .....
R-4	6R6004	1 meg .....
R-5	6R5551	120 10% .....
R-6	18K470033	Volume Control: .5 meg, tapped at 25,000 ohms; includes power switch .....
R-7	6R6056	47,000 .....
R-8	6R2118	3.3 meg .....
R-9	6R6038	1500 10% .....
R-10	6R6015	220,000 .....
R-11	6R6032	470,000 .....
R-12	6R6038	1500 10% .....
R-13	6R6373	150 10% .....
R-14	6R5683	27 10% .....
R-15	6R5770	1200 10% 1W .....
R-16	6R6389	220 10% 1W .....
R-17	6R6075	100,000 .....
R-18	6R6036	3,300 .....
R-19	6R6032	470,000 .....
R-20	6R6028	22,000 .....

Ref. No.	Part No.	Description
SWITCHES		
S-1A, B,	40A470510	Dual Push Switch: reject & motor
S-2A, B,	40A470511	Dual Push Switch: phono & tone
TRANSFORMERS		
T-1	24B470038	IF, 455 Kc: includes padding capacitors, but less shield (used with shield & sleeve 1A71049)
or	24B482863	IF, 455 Kc: includes padding capacitor but less shield (use with shield 24K485936) .....
T-2	24B75487	Diode, 455 Kc: includes padding capacitors but less shield (use with shield & sleeve 1A71049)
or	24B482865	Diode, 455 Kc: includes padding capacitors but less shield (use with shield 24K485936) ....
T-3	25B76117	Output transformer .....
CHASSIS PARTS - MECHANICAL		
1	7K470005	Bracket, speaker mtg .....
2	7A482736	Bracket, tube guard .....
3	7A77337	Bracket, tuning shaft mtg ..
4	42K75826	Clip, electrolytic mtg .....
5	11M8944	Cord, dial: 18# black .....
6	30K21859	Cord, line: 9 ft long; with plug .....
7	46A70023	Core, iron & screw: for T-1 & T-2 (use with trans. 24B470038 & 24B75487 only) .....
or	46A470885	Core, iron: threaded; for T-1 & T-2 (use with trans. 24B482863 & 24B482865 only) .....
8	1X470184	Cover, chassis bottom: includes grounding wiper .....
9	1X470183	Dial Bracket and Pulley Assembly
10	5A70098	Eyelet, spacer (tuning gang and speaker mounting) .....
11	5A70404	Grommet, rubber (tuning gang and speaker mounting) .....
12	1X470177	Lead Assembly, phono motor & control: four conductors, includes four prong receptacle
13	1X470178	Lead Assembly, phono pick-up: single conductor; includes single pin plug .....
14	32A24815	Lock, line cord: fibre .....
15	4S7666	Lockwasher, external: #6 cadmium plated (tuning gang mtg and tube guard mtg) ....
16	29R5227	Lug, soldering: 6L; hot-tinned .....
17	2S7051	Nut, hex: 3/8-32 x 9/16; Palnut; cad pl (vol. cont.mtg)
18	64A470009	Plate, tuning gang mtg .....
19	28K71775	Plug, single-pin (on phono pick-up lead) .....
20	52A470003	Pointer, dial .....
21	49A12646	Pulley, cord guide .....
22	9K470402	Receptacle, 4 prong .....
23	9A470980	Receptacle, loop lead (68F14, 14M & 14B only) .....
24	5S7770	Rivet: .088 x 5/32; stl; nkl pl (tube socket mtg) .....
25	5S7706	Rivet: .122 x 1/8; stl; nkl pl (grounding wiper mtg)..
26	5S7707	Rivet: .122 x 5/32; stl; nkl

© John F. Rider

MODELS 68F11, 68F12, 68F14, 68F14B, 68F14M; Ch. HS-124

Ref. No.	Part No.	Description
		pl (terminal strip mtg) ...
27	5S7701	Rivet: .122 x 3/16; stl; nkl pl (tuning shaft bracket mtg) .....
28	5S7708	Rivet: .122 x 9/32; stl; nkl pl (line cord lock mtg) ...
29	5A71246	Rivet, shoulder (cord pulley mounting) .....
30	3S2683	Screw, sheet metal: #6 x 3/16 PKZ plain hex head; stl; cad pl (oscillator coil mtg) .....
31	3S7247	Screw, machine: 6-32 x 3/16 slotted hex head locking type; stl; cad pl (switch mtg) ..
32	3S7506	Screw, sheet metal: #6 x 1/4 PKZ plain hex head; stl; cad pl; (tuning gang plate mtg & dial bracket assembly mtg)
33	3S7512	Screw, sheet metal: #8 x 1/2 PKZ plain hex head; stl; cad pl (speaker mtg) .....
34	3S7339	Screw, machine: 6-32 x 5/8 slotted hex head; stl; cad pl; (tuning gang mtg) .....
35	3S7205	Screw, machine: 8-32 x 1/4 slotted hex head locking type; stl; cad pl; (spkr brkt mtg)doz
36	3S8153	Screw, sheet metal: #8 x 3/8 PKA plain hex head; stl; cad pl; (mounts chassis bottom cover to chassis) .....
37	1X470172	Shaft and Pulley Assembly, tuning
38	26A470013	Shield, dial light .....
39	30K14144	Shield, spiral: 3-1/4" lg ..
40	1A71049	Shield and Sleeve Assembly (for IF -Part No. 24B470038 and Diode -Part No. 24B75487 transformers only) .....
	or 26K485936	Shield, coil (for IF-Part No. 24B482863 and Diode -Part No. 24B482865 transformers only)
41	9A470015	Socket, pilot light and leads; with mtg clip .....
42	9A472534	Socket, tube: miniature; 7 prong; molded .....
43	41A14244	Spring, tension coil .....
44	31K90044	Strip, terminal: 2 insulated lugs #2 ground .....
45	31A27184	Strip, terminal: 3 insulated lugs #3 mtg .....
46	31A470012	Strip, terminal: 4 insulated lugs #3 ground .....
47	4A70015	Washer 'C' (tuning shaft retainer) .....
48	4S1719	Washer, flat: 3/8 x .140 x .030; stl; cad pl (line cord lock mtg) .....
49	39K470032	Wiper, grounding: two section (used on chassis bottom cover) .....

CABINET PARTS - MODEL 68F11

101	1X470286	Baffle Board and Nut Assembly: left side; with spkr hole ..
102	1X470287	Baffle Board and Nut Assembly: right side .....
103	37K470185	Band, rubber: 4" (used on dial scale) .....
104	7A470195	Bracket, dial scale retainer.
105	35A470192	Bumper, rubber (lid cushion).
106	38K482819	Button, plug: 1/4"; mahogany (for concealing shipping screw holes in record changer base) .....
107	38B470202	Button, push: PHONO; walnut plastic; with insert spring
108	38K470203	Button, push: MOTOR; walnut plastic; with insert spring
109	38K470204	Button, push: TONE; walnut plastic; with insert spring
110	38K470205	Button, push: REJECT; walnut plastic; with insert spring
111	1X470201	Cabinet Assembly: walnut plastic; complete with all hardware, dial scale, escutcheon and grille .....
	16E77697	Cabinet: walnut plastic; less all hardware, dial scale, escutcheon, grille & lid .....
112	42A471546	Clip 'C' (loop lead retainer)
113	13K485953	Cloth, grille (left side) ...
114	13K485952	Cloth, grille (right side) ..
115	13K470513	Escutcheon, knob and push button: brushed brass finish ..
116	37A12748	Foot, cabinet: rubber; includes steel washer .....
117	13C470516	Grille, cabinet: metal (left side) .....
118	13K470517	Grille, cabinet: metal (right side) .....
119	55A470193	Hinge, lid: statuary bronze finish .....
120	36K77661	Knob, control: walnut plastic
121	16E77698	Lid, cabinet: walnut plastic.
122	29A470186	Lug, soldering: bent (on loop panel) .....
123	34K480001	Scale, dial .....
124	3S2992	Screw, machine: 4-40 x 5/16 slotted flat head; stl; cad pl (dial scale mounting) ...
125	3S2994	Screw, machine: 6-32 x 3/16 slotted binderhead; statuary bronze finish (hinge mtg) ..
126	3S476039	Screw, machine: 6-32 x 3/8 Phillips binderhead; brass (escutcheon mtg) .....
127	3S2993	Screw, machine: 6-32 x 3/8 Phillips binderhead; black nkl plated (baffle board mtg and lid support mtg) ...
128	3S3385	Screw, sheet metal: #6 x 3/8 PKZ plain hex head; statuary bronze finish (loop panel mounting) .....
129	3A470198	Screw, special: 6-32 internal thread; statuary bronze finish (hinge mtg) .....
130	2S7374	Screw, machine: 8-32 x 5/16 slotted hex head; stl; cad pl (chassis mtg and tube heat shield mtg) .....
131	3S2958	Screw, machine: 8-32 x 7/16 slotted hex head; stl, cad pl (cabinet foot mtg) .....
132	26C470067	Shield, tube heat (Note: Some receivers had tube retainer springs on this shield; these are no longer used or required)
133	41A12993	Spring, push button insert ..
134	55B470209	Support, lid: statuary bronze finish .....
135	4S7562	Washer, flat: 7/16 x .187 x .033 thick; stl, cad pl (chassis mtg) .....
136	4A470645	Washer, spacer (loop panel mounting)

© John F. Rider

MODELS 68F11, 68F12, 68F14, 68F14B, 68F14M; Ch. HS-124

FIGURE 8. CABINET PARTS LOCATION - FRONT VIEW

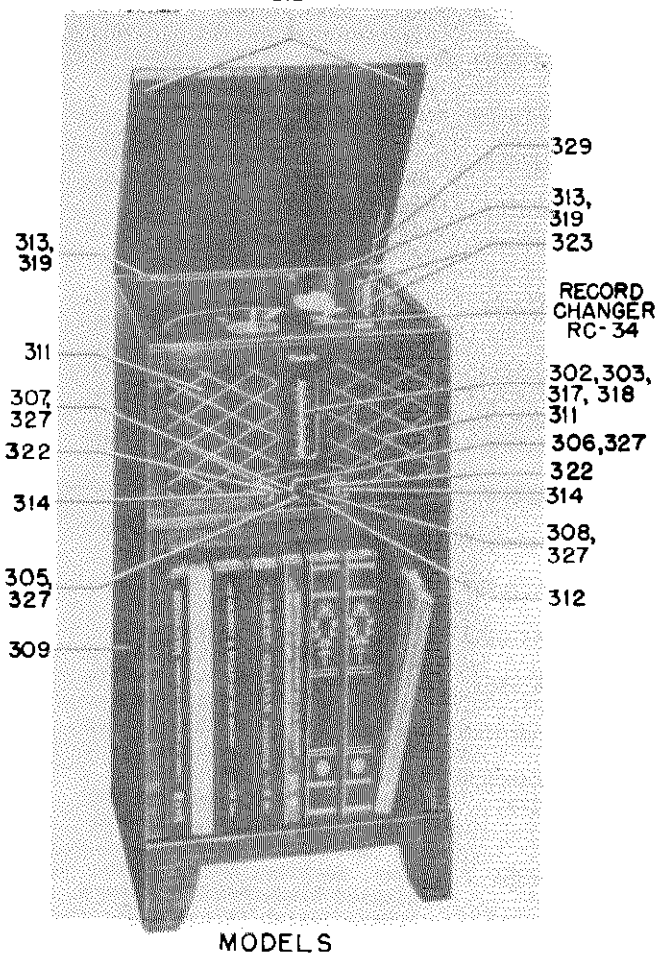

MODELS
68F14, 68F14M & 68F14B

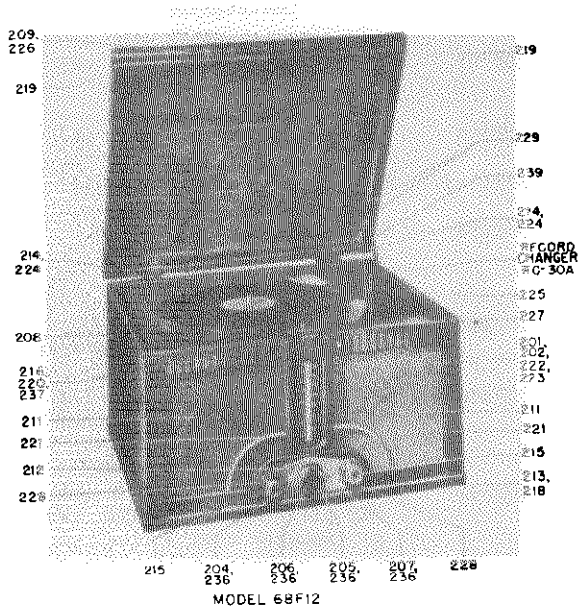

MODEL 68F12

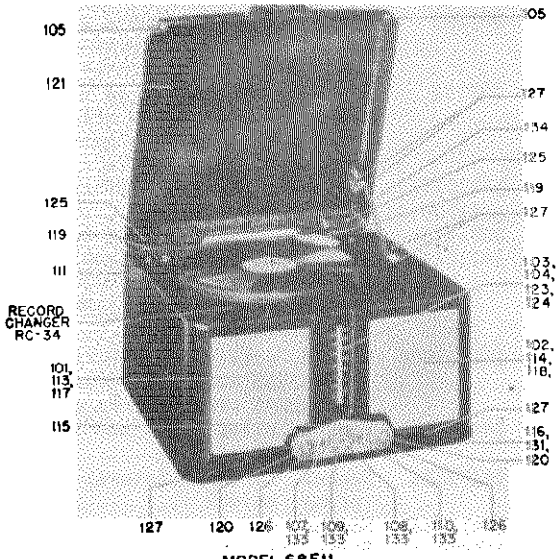

MODEL 68F11

Ref. No.	Part No.	Description
318	3S7431	Screw, wood: #2 x 1/4 Phillips round head; antique copper finish (dial scale mtg) ...
319	3S1338	Screw, wood: #4 x 1/2 slotted flat head; statuary bronze fin (hinge mtg-68F14 & 14M)....
or	3S1340	Screw, wood: #6 x 1/2 slotted flat head; statuary bronze finish (hinge mtg-68F14B)..
320	3S1348	Screw, wood: #6 x 3/8 Phillips round head; antique copper finish (perforated plate mounting) .....
321	3S7536	Screw, sheet metal: #6 x 3/8 PKA slotted acorn head; antique copper finish (antenna mounting) .....
322	3S488089	Screw, wood: #6 x 3/8 Phillips oval head; statuary bronze finish (escutcheon mtg - 68F14 & 68F14M) .....
or	3S1341	Screw, wood: #6 x 3/8 Phillips oval head; brass (escutcheon mtg -68F14B) .....
323	3S7436	Screw, wood: #6 x 1/2 slotted round head; antique copper finish (lid support mounting-68F14 & 68F14M) .....
or	3S476061	Screw, wood: #6 x 1/2 slotted round head; brass (lid support mtg -68F14B) .....
324	3S7455	Screw, sheet metal: #8 x 3/8 PKA slotted acorn head; antique copper finish (cable clamp mtg) .....
325	3S476007	Screw, machine: 8-32 x 7/8 slotted hex head; stl; cad pl (chassis mtg and tube heat shield mtg) .....
326	26C470067	Shield, tube heat .....
327	41A12993	Spring, push button insert .
328	22S7905	Staple, insulated .....
329	55B482803	Support, lid: brass (68F14B).
or	55B481750	Support, lid: statuary bronze finish (68F14 & 68F14M) ...
330	2A470641	Teenut, pronged: slabbed type .....
331	4S7562	Washer, flat: 7/16-.187-.033 thick; stl; cad pl (chassis mtg)

©John F. Rider

MODELS 68F11, 68F12, 68F14, 68F14B, 68F14M; Ch. HS-124

Ref. No.	Part No.	Description
CABINET PARTS - MODEL 67F12		
201	37K70069	Band, rubber: 1" (on dial scale)
202	7A470642	Bracket, dial scale retainer
203	38K470830	Button, plug: 1/4", green (for concealing shipping screw holes in record changer base)
204	38K480059	Button, push: PHONO; plastic
205	38K480060	Button, push: MOTOR; plastic
206	38K480061	Button, push: TONE; plastic
207	38K480062	Button, push: REJECT; plastic
208	16K480058	Cabinet, table model: wood, mahogany finish
209	55K482753	Catch, lid: English antique finish
210	42A470832	Clamp, cable
211	13K480182	Cloth, grille: 7 x 6-1/2
212	13K470513	Escutcheon, knob and push button: brushed brass finish
213	37K15841	Foot, cabinet: rubber
214	55K470656	Hinge, lid: statuary bronze finish
215	36K478402	Knob, control: plastic
216	1X482756	Latch Arm, Stud and Bracket Assembly
217	29A470186	Lug, soldering: bent (on loop panel)
218	22S7953	Nail: .080 x 5/8 (cabinet foot mounting)
219	35K484249	Pad, felt: 1/8" thick (lid cushion)
220	35A482755	Pad, latch mtg: fishpaper
221	47A470640	Rod, ornamental: brass
222	34K480001	Scale, dial: glass
223	3S7431	Screw, wood: #2 x 1/4 Phillips round head; antique copper finish (dial scale mtg)
224	3S1338	Screw, wood: #4 x 1/2 slotted flat head; statuary bronze finish (hinge mounting)
225	3S2993	Screw, machine: 6-32 x 3/8 Phillips oval head; copper oxide finish(mounts lid support to cabinet)
226	3S1348	Screw, wood: #6 x 3/8 Phillips round head; antique copper finish (perforated plate mtg & catch mtg)
227	3S488089	Screw, wood: #6 x 3/8 Phillips oval head; statuary bronze finish (latch arm, stud and bracket assembly mtg)
228	3S1341	Screw, wood: #6 x 3/8 Phillips oven head; brass (escutcheon mounting)
229	3S7436	Screw, wood: #6 x 1/2 slotted round head; antique copper finish (mounts lid support to lid)
230	3S3387	Screw, sheet metal: #6 x 1/2 PKA slotted hex head; statuary bronze finish (loop panel mounting)
231	4S476007	Screw, machine: 8-32 x 7/8 slotted hex head; stl, cad pl (chassis and tube heat shield mtg)
232	3S7396	Screw, machine: 10-32 x 2 slotted hex head; copper plated (record changer mtg)
233	26C470067	Shield, tube heat
234	41A28190	Spring, cushion top (record changer mounting)
235	41A21807	Spring, cushion: bottom (record changer mounting)
236	41A12993	Spring, push button-insert
237	41A74880	Spring, tension
238	22S7905	Staple, insulated: (loop lead anchor)
239	55K470636	Support, lid: statuary bronze finish
240	2A470641	Teenut, pronged: 8-32; slabbed type
241	4A470645	Washer, paper spacer (loop panel spacer)
242	4S7562	Washer, flat: 7/16 x .187 x .033 thick; stl, cad pl; (chassis mtg)
243	4S7611	Washer, flat: 1/2 x 7/32 x .048 thick; antique copper finish (record changer mtg)
CABINET PARTS - MODELS 68F14, 68F14M & 68F14B		
301	64B480157	Back, cabinet rear: brown mahogany (68F14)
or	64K484256	Back, cabinet rear: red mahogany (68F14M)
or	64K485179	Back, cabinet rear: blonde (68F14B)
302	37K70069	Band, rubber: 1" (on dial scale)
303	7A470642	Bracket, dial scale retainer
304	38K482819	Button, plug
305	38K470203	Button, push: motor (67F14)
or	38K480060	Button, push: motor (67F14M)
or	38K471645	Button, push: motor (67F14B)
306	38B470202	Button, push: phono (67F14)
or	38K480059	Button, push: phono (67F14M)
or	38K471644	Button, push: phono (67F14B)
307	38K470205	Button, push: reject (67F14)
or	38K480062	Button, push: reject (67F14M)
or	38K471647	Button, push: reject (67F14B)
308	38K470204	Button, push: tone (67F14)
or	38K480061	Button, push: tone (67F14M)
or	38K471646	Button, push: tone (67F14B)
309	16K482780	Cabinet, petite console: wood; brown mahogany (68F14)
or	16F480155	Cabinet, petite console: wood; red mahogany (68F14M)
or	16K482781	Cabinet, petite console: wood; blonde mahogany (68F14B)
310	42A470832	Clamp, cable
311	13K480156	Cloth, grille (68F14)
or	13K482760	Cloth, grille (68F14M)
or	13K77256	Cloth, grille (68F14B)
312	13K470513	Escutcheon, knob and push button: brushed brass finish (68F14B)
or	13B470512	Escutcheon, knob and push button: statuary bronze finish (68F14 & 68F14M)
313	55A72558	Hinge, butt: statuary bronze finish (68F14B)
or	55K470656	Hinge, lid: statuary bronze finish (68F14 & 68F14M)
314	36K470646	Knob, control: walnut (68F14)
or	36K478402	Knob, control: mahogany (68F14M)
or	36K471643	Knob, control: tan (68F14B)
315	35K470657	Pad, felt (lid cushion)
316	64K484302	Plate, perforated: painted
317	34B470208	Scale, dial: glass; brown (68F14)
or	34K480001	Scale, dial: glass; maroon(68F14M)
or	34K471642	Scale, dial: glass; light tan (68F14B)

© John F. Rider

MODELS 68X11, 68X11A, 68X12, 68X12A; Ch. HS-127, HS-127A

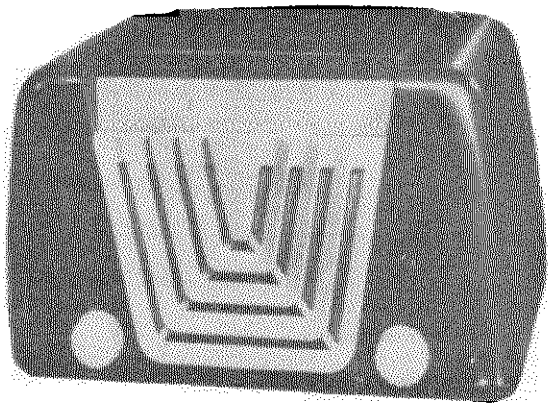

Models 68X11 & 68X11A
Maroon Plastic Cabinet

Models 68X12 & 68X12A
Brown Plastic Cabinet

GENERAL INFORMATION

TYPE-AC-DC operated, table model, superheterodyne receiver with loop antenna.

TUNING RANGE- 535 to 1620 Kc

IF FREQUENCY - 455 Kc

TUBE COMPLEMENT - 14C7 - RF Amplifier
14Q7 - Oscillator-Modulator
12B7
or 14A7 - IF Amplifier
14B6 - Detector-AVC-1st AF Amplifier
35A5 - Power Amplifier
35Y4 - Rectifier

POWER SUPPLY - 105-125 volts, AC or DC, 30 watts

INSTALLATION & OPERATING INSTRUCTIONS

POWER SWITCH AND VOLUME CONTROL. The power switch and volume controls are combined and operated with with the left-hand knob.

NOTE: If the receiver does not operate from a direct current (DC) line after being turned ON for a few minutes, reverse the line cord plug in the wall outlet. When operating from an AC line, reversing the line cord plug in the wall outlet may sometimes improve reception and reduce hum.

TUNING. Tune stations with the right-hand knob. The calibrated dial scale is read in kilocycles by adding one "0" to the figures.

ANTENNA. A loop antenna is built into this receiver, eliminating the need for an external antenna. Reception from some stations may be improved by rotating the whole receiver; this is due to the slight directional characteristic of the loop antenna. In extremely noisy locations, rotate the entire receiver till minimum noise and maximum signal pickup are obtained. For additional pickup, an external antenna may be connected as shown on back of receiver.

CAUTION: Never connect antenna or chassis to water pipe, radiator or other ground.

SERVICE NOTE

IF & DIODE TRANSFORMER REPLACEMENT

Two types of IF & Diode transformers are being used. One type has iron cores that are tuned by means of slotted brass screws. These transformers must be used with shields having an internal iron core sleeve.

The other type of transformers have threaded cores moving inside of a threaded coil form. Plain shields must be used with these transformers.

©John F. Rider

MODELS 68X11, 68X11A, 68X12, 68X12A; Ch. HS-127, HS-127A

ALIGNMENT

Maximum performance can only be obtained if extreme care is exercised during alignment. Follow the procedure carefully.

If receiver is operated from AC line during alignment, it is suggested that an isolating transformer be used between receiver and power line during alignment. If no isolation transformer is used and hum is encountered during alignment, connect the ground side of the signal generator through a .1 mf capacitor to B- instead of the receiver chassis.

A low range output meter should be connected across the speaker voice coil. Set receiver volume control to maximum. For greatest accuracy, keep output of receiver at approximately .05 watt (.05 watt = .40 volt on output meter) throughout alignment by reducing signal generator output (not receiver volume control) as stages are brought into alignment.

NOTE: Two types of IF & diode transformers are used. One type has cores with slotted brass adjustment screws; the other type has threaded cores that move inside a threaded coil form. To adjust the latter type, use a small fiber screwdriver and do not use undue pressure, as damage to the core or coil form may result.

ALIGNMENT PROCEDURE

STEP	DIAL SET TO	DUMMY	SIGNAL GENERATOR CONNECTED TO	SIGNAL GENERATOR SET TO	ADJUST TRIMMER OR CORE	REMARKS
IF ALIGNMENT						
1.	Gang fully opened	.1 mf	RF Amp grid*	455 Kc	1, 2, 3 & 4	Adjust for maximum
WAVETRAP						
2.	Gang fully opened	.1 mf	RF Amp grid*	455 Kc	5	Adjust for minimum
RF ALIGNMENT						
3.	1620 Kc**	.1 mf	RF Amp grid*	1620 Kc	6	This sets oscillator to dial scale
4.	1400 Kc	None	Radiation loop***	1400 Kc	7	Tune signal in on receiver, then peak trimmer 7

* A convenient point is the stator of the RF section of the tuning capacitor.

** First close gang fully and set pointer to calibration mark at left-hand side of dial background, then set pointer to 1620 Kc calibration mark (by means of tuning knob) on right-hand side of dial background. See Figure 6.

*** Connect output of signal generator to a 5" diameter, 3 turn loop and bring loop close enough to receiver loop to obtain output of 50 milliwatts (.40V) on output meter. Vary distance between loops to maintain this output during alignment. Minimum distance between loops should never be less than 12".

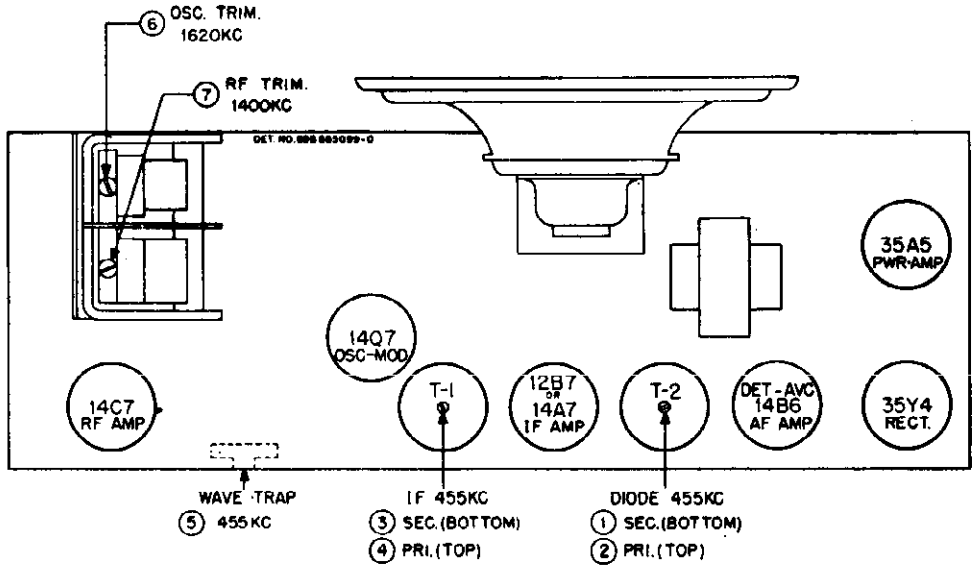

CHASSIS HS-127 & HS-127A TUBE & TRIMMER LOCATIONS

© John F. Rider

MODELS 68X11, 68X11A, 68X12, 68X12A; Ch. HS-127, HS-127A

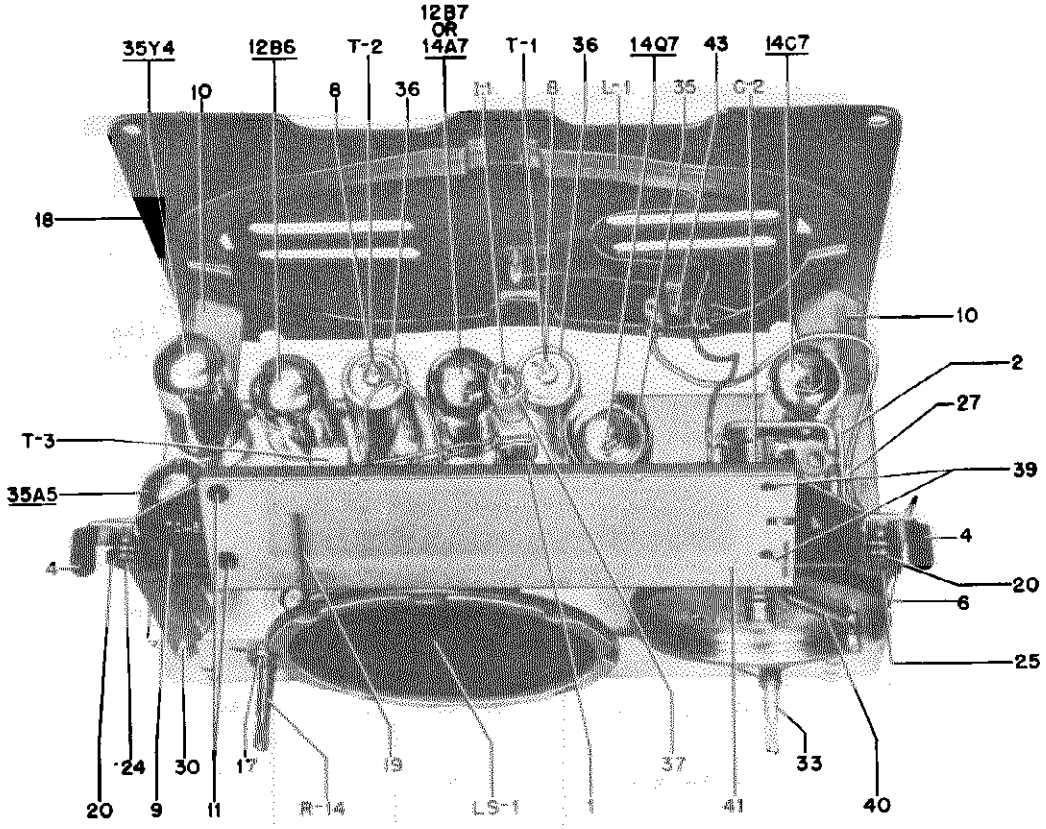

CHASSIS HS-127 & HS-127A PARTS LOCATION - TOP VIEW

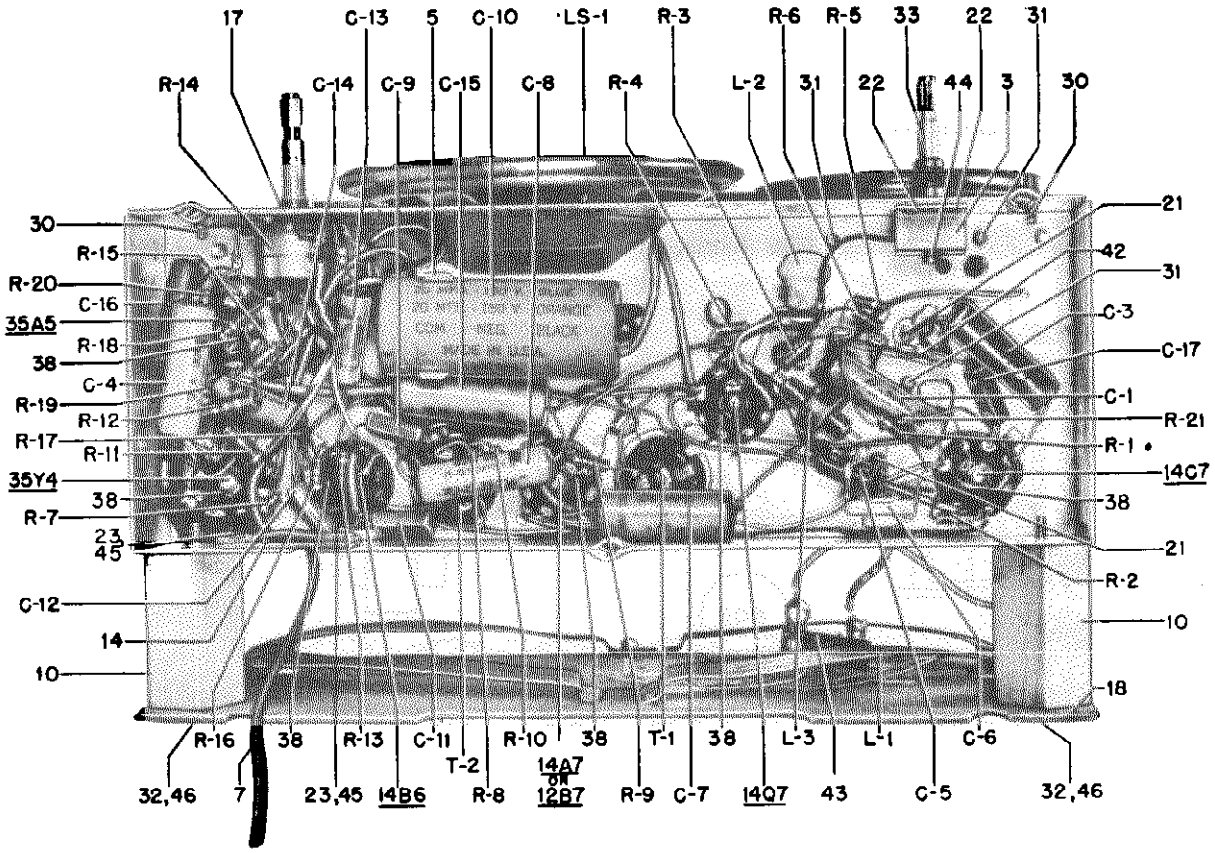

CHASSIS HS-127 & HS-127A PARTS LOCATION - BOTTOM VIEW

©John F. Rider

MODELS 68X11, 68X11A, 68X12, 68X12A; Ch. HS-127, HS-127A

BOTTOM VIEW OF CHASSIS

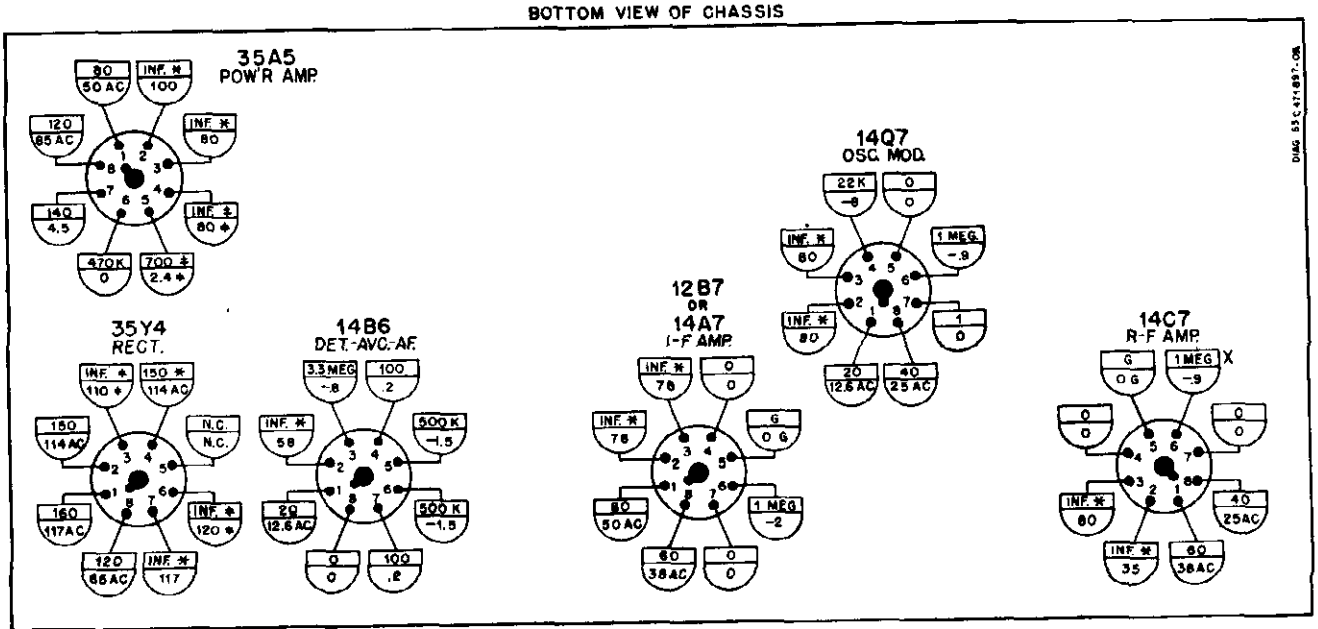

▭ = RESISTANCE READINGS.

▱ = VOLTAGE READINGS.

G = GROUND TO CHASSIS.
N.C. = NO CONNECTION.
* = MAY VARY, DEPENDING ON CONDITION OF ELECTROLYTIC CAPACITORS
⊕ = TIE POINT.
X = 2 MEG ON HS-127A

NOTE: A VTVM WAS USED TO MAKE VOLTAGE MEASUREMENTS.
VOLUME CONTROL SET AT MINIMUM AND NO SIGNAL TUNED IN.
MEASUREMENTS TAKEN FROM TUBE SOCKET TERMINALS INDICATED TO B−(▽).
ALL VOLTAGE MEASUREMENTS TAKEN WITH 117 V. AC INPUT TO SET.
ALL VOLTAGE MEASUREMENTS D.C UNLESS OTHERWISE SPECIFIED.
ALL MEASUREMENTS ±10%.

CHASSIS HS-127 & HS-127A VOLTAGE & RESISTANCE DIAGRAM

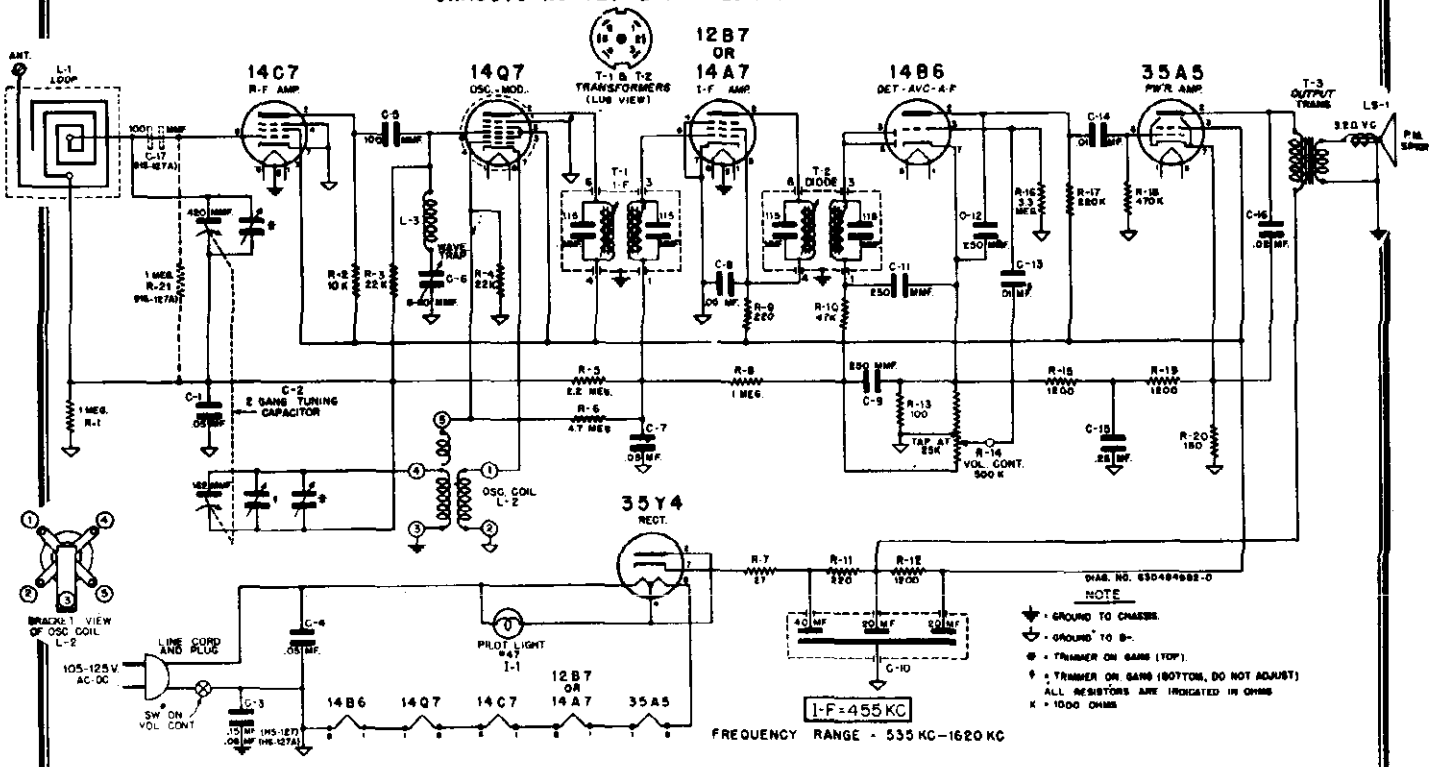

CHASSIS HS-127 & HS-127A SCHEMATIC DIAGRAM

©John F. Rider

MODELS 68X11, 68X11A, 68X12, 68X12A; Ch. HS-127, HS-127A

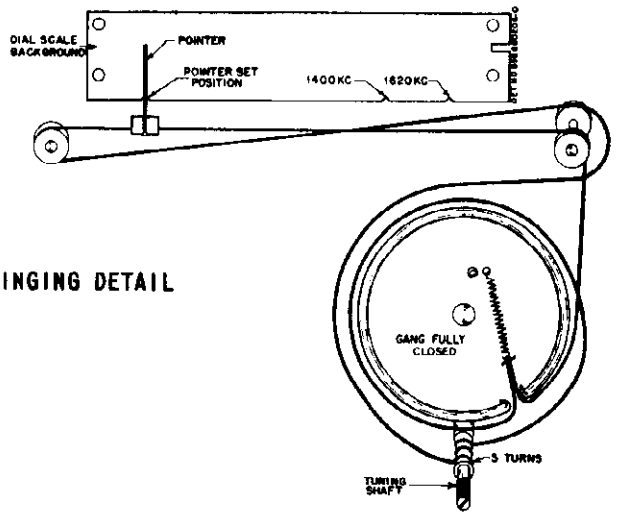

CHASSIS HS-127 & HS-127A DIAL CORD RESTRINGING DETAIL

REPLACEMENT PARTS LIST

REF. NO.	PART NO.	DESCRIPTION
		CHASSIS PARTS - ELECTRICAL
		CAPACITORS
C-1	8S9816	Paper: .05 mf 400V .....
C-2	1X77339	Variable: 2 gang; includes pulley
C-3	8A72686	Paper: .15 mf 200V (HS-127).
	8A485135	Paper: .08 mf 200V (HS-127-A)
C-4	8S9816	Paper: .05 mf 400V .....
C-5	21R6641	Mica: 100 mmf 500V .....
C-6	20A26941	Variable, mica: 6-60 mmf; includes 'L' mounting bracket
C-7	8S9816	Paper: .05 mf 400V .....
C-8	8S9816	Paper: .05 mf 400V .....
C-9	21R6648	Mica: 250 mmf 500V .....
C-10	23B75808	Electrolytic: 40-20-20 mf 150V
C-11	21R6648	Mica: 250 mmf 500V .....
C-12	21R6648	Mica: 250 mmf 500V .....
C-13	8S9809	Paper: .01 mf 400V .....
C-14	8S9809	Paper: .01 mf 400V .....
C-15	8S9810	Paper: .25 mf 100V .....
C-16	8S9802	Paper: .02 mf 400V .....
C-17	21R6641	Mica: 100 mmf 500V (HS-127A only)
		PILOT LIGHT
I-1	65X11854	Bulb: 6.3 volts .15 Amp, clear
		COILS
L-1	24K77323	Loop Antenna: winding only .
L-2	24A76192	BC Oscillator .....
L-3	24A77336	Wave Trap .....
		SPEAKER
LS-1	50B76196	5" PM ..... Exchange
		RESISTORS
		Note: All resistors are insulated carbon type, unless otherwise specified.
R-1	6R6004	1 meg 20% 1/2W .....
R-2	6R6054	10,000 20% 1/2W .....
R-3	6R6028	22,000 20% 1/2W .....
R-4	6R6028	22,000 20% 1/2W .....
R-5	6R3927	2.2 meg 20% 1/2W .....
R-6	6R2122	4.7 meg 20% 1/2W .....
R-7	6R5683	27 10% 1/2W .....
R-8	6R6004	1 meg 20% 1/2W .....
R-9	6R3933	220 20% 1/2W .....
R-10	6R6056	47,000 20% 1/2W .....
R-11	6R6389	220 10% 1W .....
R-12	6R5770	1200 10% 1W .....
R-13	6R6326	100 10% 1/2W .....
R-14	18A76191	Volume Control: 500K; tapped at 25,000 ohms with SPST switch
R-15	6R6393	1200 10% 1/2W .....
R-16	6R2118	3.3 meg 20% 1/2W .....
R-17	6R6015	220,000 20% 1/2W .....
R-18	6R6032	470,000 20% 1/2W .....
R-19	6R6393	1200 10% 1/2W .....
R-20	6R6373	150 10% 1/2W .....
R-21	6R6004	1 meg 20% 1/2W (HS-127A only)
		TRANSFORMERS
T-1	24B470038	IF, 455 Kc: complete with tuning cores and padding capacitors, but less shield (use with shield & sleeve 1A71049)...
	or 24B482863	IF, 455 Kc: complete with tuning cores and padding capacitors, but less shield (use with shield 24K485936) .....
T-2	24B75487	Diode, 455 Kc: complete with tuning cores and padding capacitors, but less shield (use with shield & sleeve 1A71049)
	or 24B482865	Diode, 455 Kc: complete with tuning cores and padding capacitors but less shield (use with shield 24K485936) ....
T-3	25B76117	Output .....
		CHASSIS PARTS - MECHANICAL
1	7A77303	Bracket, dial light mtg ....
2	7B18748	Bracket, gang mtg .....
3	7A77337	Bracket, tuning shaft mtg ..
4	35A481328	Bumper, rubber .....
5	42K75826	Clip, electrolytic mtg .....
6	11M8944	Cord, dial: 18# black .....
7	30A470651	Cord, line & plug: 6 ft lg .
8	46A70023	Core, iron & screw: for T-1 & T-2 (use with transformers 24B470038 & 24B75487 only)

©John F. Rider

MODELS 68X11, 68X11A, 68X12, 68X12A; Ch. HS-127, HS-127A

REF. NO.	PART NO.	DESCRIPTION
	or46A470885	Core, iron: threaded; for T-1 & T-2 (use with transformers 24B482863 & 24B482865 only)
9	1X481358	Dial Background Support, Brackets & Pulleys Assembly
10	57K77085	Dowel, rear panel mtg .....
11	5S7805	Eyelet, snap-in (dial background mtg) .....
12	5A19658	Eyelet, spacer (gang bracket mounting) .....
13	37A12691	Grommet, rubber(gang bracket mounting) .....
14	32A24815	Lock, line cord: fibre .....
15	4S7666	Lockwasher, external: #6; stl; cad pl (BC oscillator coil mtg and terminal strip mtg)
16	29R5227	Lug, soldering: #6L; hot-tinned .....
17	2S7051	Nut, hex: 3/8-32 x 9/16; Pal-nut; stl; cad pl (volume control mtg) .....
18	1X481363	Panel Assembly, loop: less loop winding .....
19	52A481329	Pointer, dial .....
20	49A21552	Pulley, cord (cord guide) ...
21	5S7707	Rivet: .122 x 5/32; stl; nkl pl (dial light bracket, wave trap capacitor and terminal strip mtg) .....
22	5S7701	Rivet: .122 x 3/16; stl; nkl pl (tuning shaft bracket mounting) .....
23	5S7708	Rivet: .122 x 9/32; stl; nkl pl (line cord lock mtg) ..
24	5A11072	Rivet, shoulder: .235" lg (cord pulley mtg) .....
25	5A481770	Rivet, shoulder: .484" lg (cord pulley mtg) .....
26	3S7152	Screw, machine: 6-32 x 1/4 plain hex head; stl; cad pl (soldering lug mtg) .....
27	3S7350	Screw, machine: 6-32 x 1/4 slotted hex head; locking type; stl; cad pl(gang mtg)
28	3S7506	Screw, sheet metal: #6 x 1/4 PKZ plain hex head; stl; cad pl (BC oscillator coil mtg)
29	3S7205	Screw, machine: 8-32 x 1/4 slotted hex head; stl; cad pl (speaker mtg) .....
30	3S7454	Screw, sheet metal:#8 x 1/4 PKZ plain hex head; stl; cad pl (dial background support & bracket assembly mounting) .....
31	3S7507	Screw, sheet metal: #8 x 5/8 PKZ plain hex head; stl; cad pl (gang bracket mtg) .....
32	3S3384	Screw, sheet metal: #8 x 2-1/4 PKZ plain hex head; stl; cad pl (loop panel mtg) .....
33	1B77363	Shaft, tuning .....
34	26A470013	Shield, dial light .....
35	26A72635	Shield, tube .....
36	1A71049	Shield and Sleeve Assembly (for IF part number 24B470038 and Diode-part number 24B75487 transformers only) .....
	or 24K485936	Shield, coil (for IF-part number 24B482863 and diode-part number 24B482865 transformers only)
37	9A77306	Socket, dial light: includes bracket .....
38	9A76185	Socket, tube:loctal .....
	or 9A72549	Socket, tube: loctal; mounts with rivets (to replace 9A76185 when mounting lugs on chassis break off) .....
39	41A481325	Spring, dial background mtg
40	41A14244	Spring, tension coil (drive cord) .....
41	35B481323	Strip, dial background .....
42	31K471564	Strip, terminal: 3 insulated lugs, #2 ground;3/8 spacing
43	31K86126	Strip, terminal: 2 insulated lugs, #2 mtg; 3/8 spacing (on rear panel) .....
44	4A70015	Washer, 'C' (tuning shaft retainer) .....
45	4S1719	Washer, flat: 3/8 x .140 x .030 thick; stl; nkl pl (line cord lock mtg) .....
46	4S7563	Washer, flat: 5/8 x .203 x .033 thick; stl; cad pl (loop panel mtg) .....

CABINET PARTS

1	35K478186	Baffle & Grille Cloth Assembly (68X11, 68X11A & 68X12A).....
2	35K478185	Baffle & Grille Cloth Assembly (68X12) .....
3	37A27142	Band, rubber (dial scale mounting) .....
4	7A25706	Bracket, dial scale mtg: right-hand (LF end) .....
5	7A25707	Bracket, dial scale mtg: left-hand (HF end) .....
6	16E471984	Cabinet, table model: maroon plastic (68X11 & 68X11A) ....
7	16K478107	Cabinet, table model: brown plastic (68X12 & 68X12A) ..
8	15B481331	Cover, chassis bottom .....
9	16D471985	Grille,speaker: plastic; light beige (68X11, 68X11A & 68X12A) .....
10	16K478099	Grille, speaker: plastic; dark beige (68X12) .....
11	36K481332	Knob, control: light gray (68X11, 68X11A & 68X12A)...
12	36K481333	Knob, control: dark gray (68X12) .....
13	2S476112	Nut, speed (grille mtg) ....
14	38A25507	Plug, split (loop panel mtg)
15	34B481324	Scale, dial: glass (68X11, 68X11A & 68X12A).....
16	34K481857	Scale, dial: glass (68X12)
17	3S2695	Screw, sheet metal: #6 x 3/16 PKZ slotted hex head; stl; cad plt (bottom cover mtg) .....
18	3S488012	Screw, sheet metal: #6 x 1/4 type #25; hex; stl; cad pl (dial scale bracket mtg) ...
19	3S3365	Screw, sheet metal: #8 x 1 PKA plain hex head; black parkerized finish (chassis mtg)
20	4S7633	Washer, flat: 9/16 x 11/64 x .033 thick; stl; cad pl (chassis mtg)

©John F. Rider

MODELS 68X11Q, 68X12Q, 68X13Q; Ch. HS-148

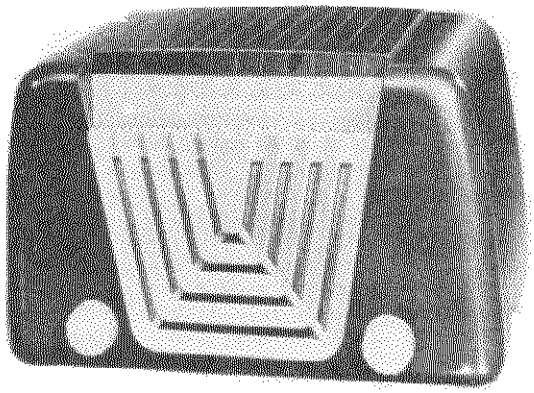

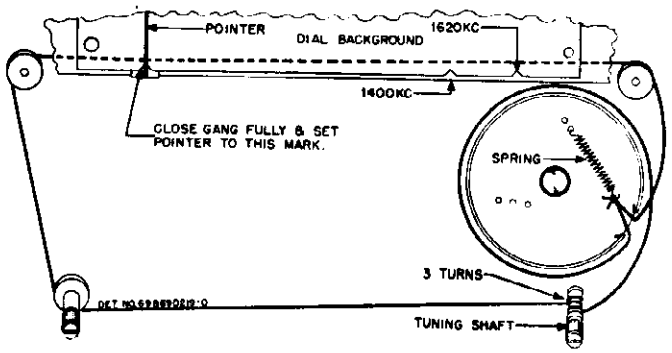

FIGURE 1.
DIAL CORD RESTRINGING DETAIL

Model 68X11Q Maroon Plastic Cabinet
Model 68X12Q Brown Plastic Cabinet
Model 68X13Q Ivory Plastic Cabinet

GENERAL INFORMATION

TYPE - AC-DC operated table model superheterodyne receiver with loop antenna.

TUNING RANGE - 535 to 1620 Kc IF - 455 Kc

TUBE COMPLEMENT - 12BA6 RF Amplifier 12AT6 Detector, AVC & 1st AF Amplifier
12BE6 Converter 35B5 Power Amplifier
12BA6 IF Amplifier 35W4 Rectifier

POWER SUPPLY - 105 to 125 volts AC or DC, 35 watts

ALIGNMENT

If AC power is used, use an isolation transformer between power line and receiver. If isolation transformer is not available, connect low side of signal generator to chassis through .1 mf capacitor.

Connect low range output meter across speaker voice coil and set volume control at maximum. For greatest accuracy, keep output of receiver at approximately .05 watt (.05 watt = .40 volt on output meter) throughout alignment by reducing signal generator output as stages are brought into alignment. Use a small fibre screwdriver for aligning IF & diode transformers. Set pointer to calibration mark on left-hand side of dial background when gang is fully closed before starting alignment.

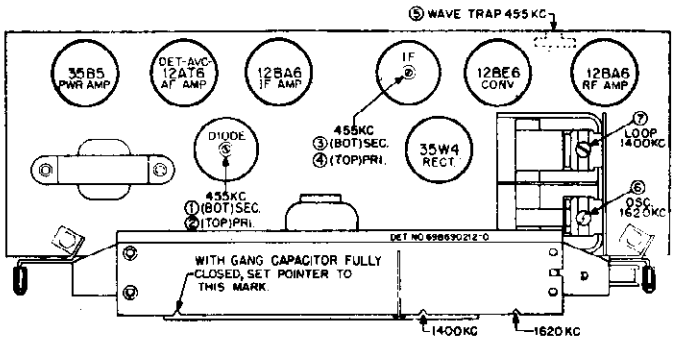

FIGURE 2. TUBE & TRIMMER LOCATIONS

STEP	DUMMY ANTENNA	GENERATOR CONNECTION	GENERATOR FREQUENCY	POINTER SET TO	ADJUST	REMARKS
IF ALIGNMENT						
1.	.1 mf	Rear stator of tuning capacitor	455 Kc	Gang opened	1, 2, 3 & 4	Adjust for maximum.
WAVETRAP						
2.	"	"	"	"	5	Adjust for minimum.
RF ALIGNMENT						
3.	"	"	1620 Kc	1620 Kc	6	Adjust for maximum.
4.	None	Radiation loop*	1400 Kc	Tune for maximum	7	Adjust for maximum.

* Connect generator output to 5" diameter, 3 turn loop and couple to receiver loop. Keep loops at least 12" apart.

© John F. Rider

MODELS 68X11Q, 68X12Q, 68X13Q; Ch. HS-148

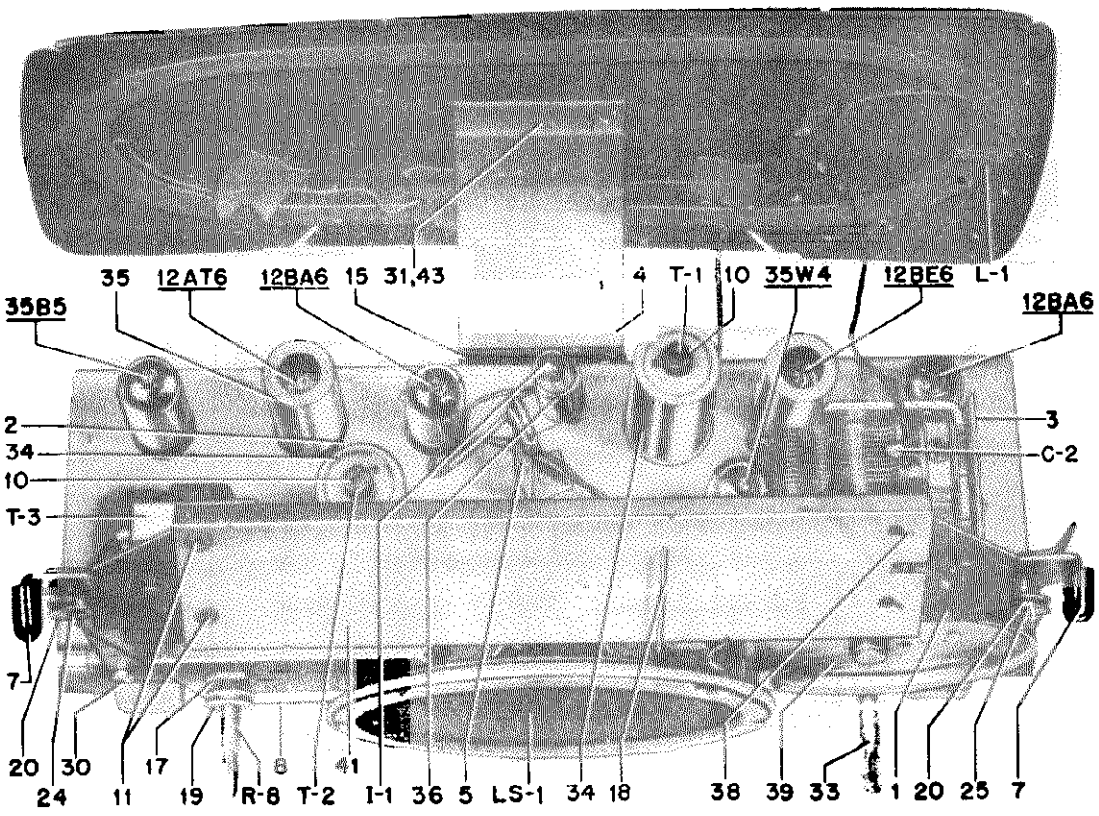

FIGURE 3. PARTS LOCATION - TOP VIEW

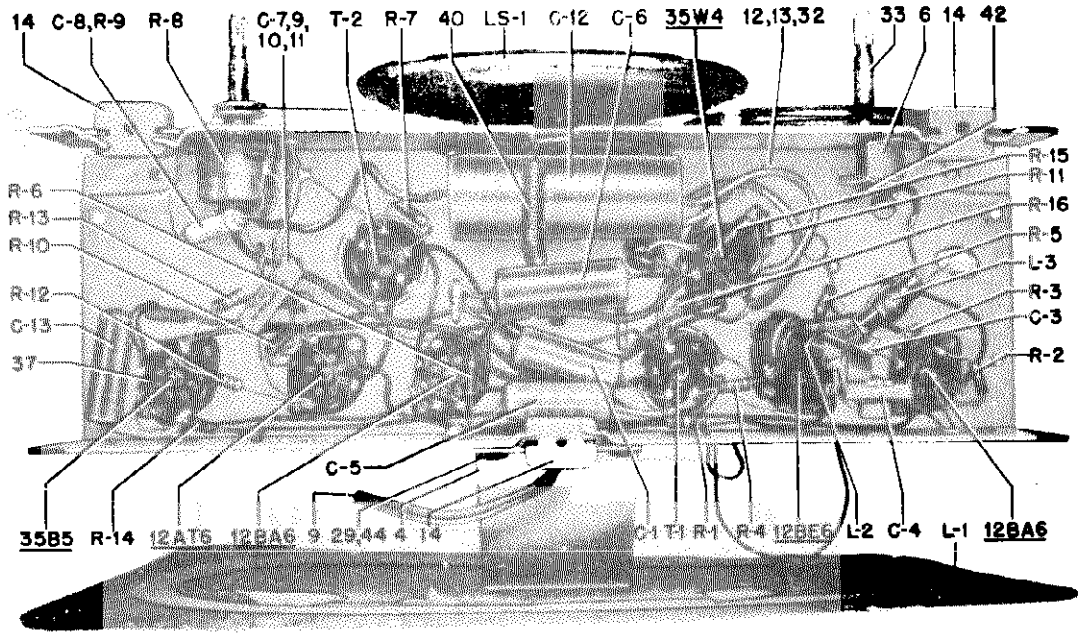

FIGURE 4. PARTS LOCATION - BOTTOM VIEW

©John F. Rider

MODELS 68X11Q, 68X12Q,
68X13Q; Ch. HS-148

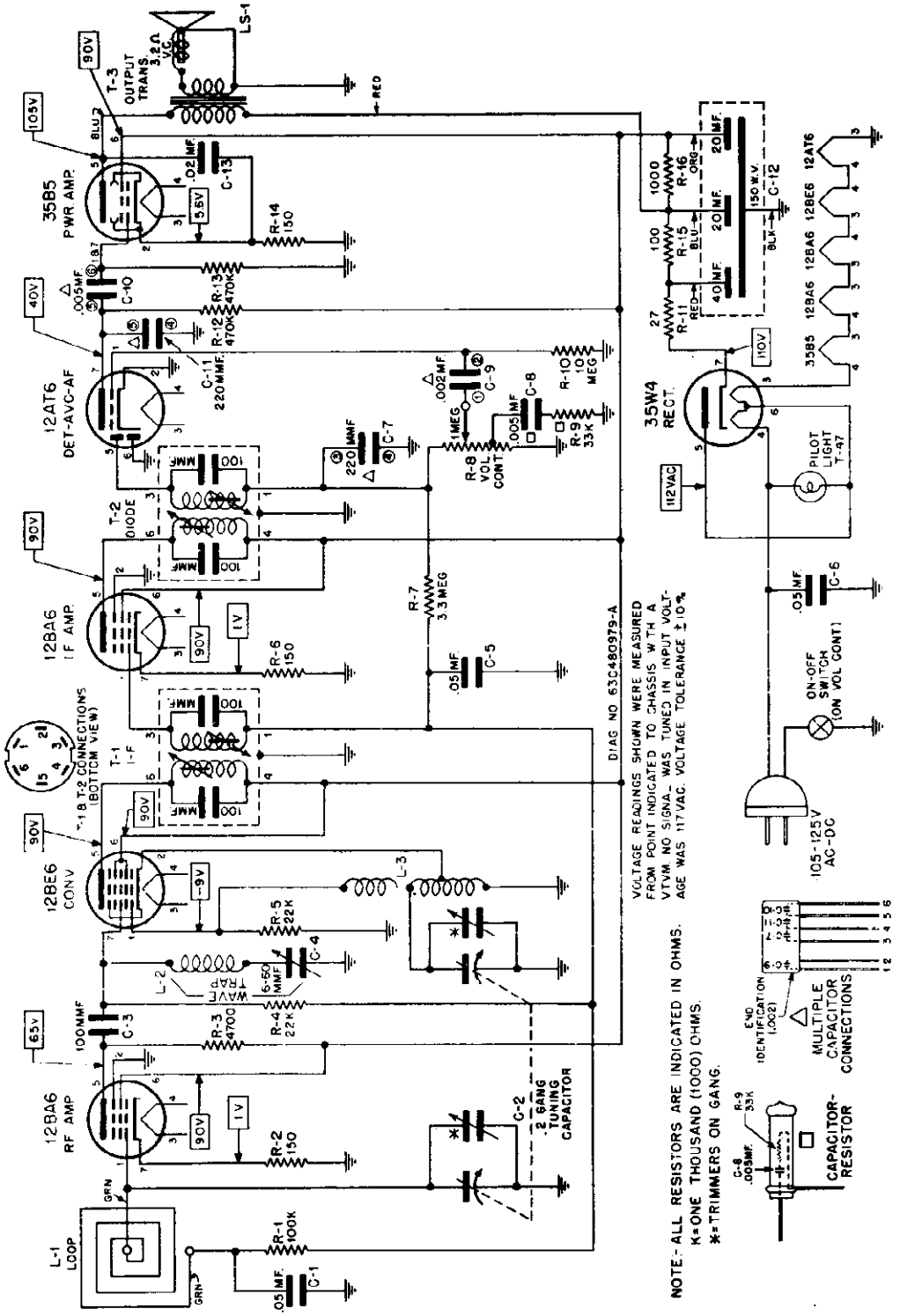

FIGURE 5. CHASSIS HS-148 SCHEMATIC DIAGRAM

©John F. Rider

MODELS 68X11Q, 68X12Q, 68X13Q; Ch. HS-148

REPLACEMENT PARTS LIST

REF. NO.	PART NO.	DESCRIPTION
CHASSIS PARTS - ELECTRICAL		
CAPACITORS		
C-1	8S9821	Paper: .05 mf 200V .....
C-2	1X484398	Variable, 2 gang: includes pulley
C-3	21R6641	Mica: 100 mmf 500V .....
C-4	20A26941	Variable mica: 6-60 mmf, includes 'L' type mtg brkt ..
C-5	8S9821	Paper: .05 mf 200V .....
C-6	8S9816	Paper: .05 mf 400V .....
C-7	21B482847	Ceramic: 220 mmf; (together with C-9, C-10, & C-11) ...
C-8	21B484227	Capacitor-Resistor: .005 mf (includes R-9) .....
C-9	21B482847	Ceramic: .002 mf (together with C-7, 10, 11) .....
C-10	21B482847	Ceramic: .005 mf (together with C-7, 9, 11) .....
C-11	21B482847	Ceramic: 220 mmf (together with C-7, 9, 10) .....
C-12	23K484234	Electrolytic: 40-20-20 mf 150V
C-13	8S9802	Paper: .02 mf 400V .....
PILOT LIGHT		
I-1	65X11854	Bulb: 6.3 volts .15 amp; #47
COILS		
L-1	24C484228	Loop Antenna: includes panel
L-2	24A77336	Wavetrap coil .....
L-3	24K482855	BC Oscillator coil .....
SPEAKER		
LS-1	50B76196	Speaker: 5" PM; 3.2 ohm voice coil .....
RESISTORS		
Note: All resistors are insulated carbon type, unless otherwise specified.		
R-1	6R6075	100,000 20% 1/2W .....doz.
R-2	6R3992	150 20% 1/2W .....doz.
R-3	6R6039	4700 20% 1/2W .....doz.
R-4	6R6028	22,000 20% 1/2W .....doz.
R-5	6R6028	22,000 20% 1/2W .....doz.
R-6	6R3992	150 20% 1/2W .....doz.
R-7	6R2118	3.3 meg 20% 1/2W .....doz.
R-8	18K484226	Volume control: 1 meg; tapped at 300,000 ohms; with SPST sw.
R-9	21B484227	33,000 (together with C-8) .
R-10	6R2109	10 meg 20% 1/2W .....doz.
R-11	6R5683	27 10% 1/2W .....doz.
R-12	6R6032	470,000 20% 1/2W .....doz.
R-13	6R6032	470,000 20% 1/2W .....doz.
R-14	6R3992	150 20% 1/2W .....doz.
R-15	6R488025	100 20% 1W .....each doz.
TRANSFORMERS		
T-1	24B482863	IF, 455 Kc: complete with tuning cores and padding capacitors, but less shield
T-2	24B482865	Diode, 455 Kc: complete with tuning cores and padding capacitors, but less shield
T-3	25B482858	Output Transformer .....
CHASSIS PARTS - MECHANICAL		
1	1X485923	Background Support and Pulley Assembly: less dial background strip .....
2	26A473002	Base, shield mtg .....
3	7R18748	Bracket, gang mtg .....
4	7K484233	Bracket, loop mtg .....
5	7A77302	Bracket, pilot light mtg ...doz.
6	7A77337	Bracket, tuning shaft mtg ..
7	35A481328	Bumper, rubber .....doz.
8	11M8944	Cord, dial: 18 lb; black....yd.
9	30K482856	Cord, line & plug: 6 ft lg..
10	46A470885	Core, iron: threaded; for T-1 & T-2 .....
11	5S7805	Eyelet, snap-in tri-mount (dial background mtg) .....doz.
12	5A19658	Eyelet, spacer (gang mtg) ..doz.
13	37A12691	Grommet, rubber (gang mtg)..doz.
14	14A484225	Insulator, chassis mtg .....
15	14A482844	Insulator, cord outlet & loop bracket .....doz.
16	29R5227	Lug, soldering: #6L; hot-tinned (on gang brkt) .....per/c
17	2S7051	Nut, palnut: 3/8 - 32 x 9/16; stl; cad pl (volume control mtg)doz.
18	52A481329	Pointer, dial .....
19	49K484341	Pulley, cord: 1/2" groove; .252 diam. hole .....doz.
20	49A2[illegible]52	Pulley, cord: 1/2" groove; .126 diam. hole .....doz.
21	5S7771	Rivet: .088 x 3/16 stl; nkl pl (shield mtg) .....per/c
22	5S7707	Rivet: .122 x 5/32 stl; nkl pl (output transformer mtg, variable capacitor mtg and pilot light brkt mtg).....per/c
23	5S7701	Rivet: .122 x 3/16 stl; nkl pl (tuning shaft brkt mtg)....per/c
24	5A481770	Rivet, shoulder: .235 lg (pulley cord guide) .....doz.
25	5A11072	Rivet, shoulder: .484 lg (pulley cord guide) .....doz.
1	3S7152	Screw, machine: 6-32 x 1/4 slotted hex head; stl; cad pl (gang mtg) .....per/c
27	3S7350	Screw, machine: 6-32 x 1/4 slotted hex head; locking type; stl; cad pl (gang mtg) .....doz.
28	3S7205	Screw, machine: 8-32 x 1/4 slotted hex head; locking type; stl; cad pl (speaker mtg)..doz.
29	3S3360	Screw, sheet metal: #6 x 1/2 PKZ plain hex head; stl; cad pl (loop bracket mtg).....doz.
30	3S7454	Screw, sheet metal: #8 x 1/4 PKZ plain hex head; stl; cad pl (dial background support & pulley assem. mtg).....per/c
31	3S7455	Screw, sheet metal: #8 x 3/8 PKA slotted acorn head; nnt copper finish (loop mtg) ..doz.
32	3S7507	Screw, sheet metal: #8 x 5/8 PKZ plain hex head; stl; cad pl (gang bracket mtg) .....per/c
33	47A482845	Shaft, tuning .....
34	26K485936	Shield, coil .....
35	26A90301	Shield, tube .....
36	9A77306	Socket, dial light: includes brkt
37	9A472534	Socket, tube: miniature; 7-prong
38	41A481325	Spring, dial background mtg
39	41A14244	Spring, tension coil (drive cord) .....doz.
40	41A73996	Spring, tension (electrolytic mtg)
41	35B481323	Strip, dial background: tan plastic .....
42	4A70015	Washer, 'C' (tuning shaft retainer) .....per/c
43	4S7614	Washer, flat: 11/16 x 11/64 x .036 thick; stl; cad pl (loop panel mtg) .....doz.
44	4K482859	Washer, insulated: shoulder (loop mtg brkt mtg) .....doz.
CABINET PARTS		
101	35K484231	Baffle and Grille Cloth Assembly (68X11Q & 68X12Q).....
102	35K690078	Baffle and Grille Cloth Assembly (68X13Q) .....
103	37K27142	Band, rubber (on dial scale)per/c
104	7A25707	Bracket, dial scale mtg (high freq. end) .....
105	7A25706	Bracket, dial scale mtg (low freq. end) .....
106	16E471984	Cabinet, table model: maroon plastic (68X11Q) .....
107	16K478107	Cabinet, table model: brown plastic (68X12Q) .....
108	16K690029	Cabinet, table model: ivory plastic (68X13Q) .....
109	16D471985	Grille, speaker: light beige; plastic (68X11Q & 68X12Q)..
110	16K690030	Grille, speaker: ivory; plastic (68X13Q) .....
111	36K481332	Knob, control: light gray; plastic (68X11Q) .....
112	36K481333	Knob, control: dark gray; plastic (68X12Q) .....
113	36K690077	Knob, control: ivory (68X13Q)
114	2S476112	Nut, speed: .156 round; (speaker baffle & grille cloth mtg) .....per/c
115	38A25507	Plug, split (back mtg) .....doz.
116	34B481324	Scale, dial: glass (68X11Q & 68X12Q) .....
117	34K690059	Scale, dial: glass (68X13Q).
118	3S488012	Screw, sheet metal: #6 x 1/4 plain hex head; cad pl (dial scale brkt mtg) .....doz.
119	3S8153	Screw, sheet metal: #8 x 3/4 PKA plain hex head; stl; cad pl (chassis mtg) .....doz.
120	4S7633	Washer, flat: 9/16 x 11/64 x .033 thick; stl; cad pl (chassis mtg) .....doz.

©John F. Rider

MODEL 69L11,
Ch. HS-175

GENERAL INFORMATION



TYPE - Five-tube, three-power (AC/DC Battery) portable, with a selenium rectifier. A loop antenna is housed in the back cover.

TUNING RANGE - 535 to 1620 Kc IF - 455 Kc

TUBE COMPLEMENT - 1U4 - RF Amplifier
1R5 - Oscillator-Modulator
1U4 - IF Amplifier
1S5 - Detector, AVC & 1st AF Amplifier
3V4 - Power Amplifier
Rectifier - Selenium type

POWER SUPPLY - Operates from 117 volts AC or DC (15 watts), or self-contained battery pack. Use Eveready #753 or General #60A-6F6-5.

INSTALLATION & OPERATING INSTRUCTIONS

CONTROLS. The volume control and power switch are combined and are operated with the left-hand knob. Select stations with the right-hand knob. The dial scale is read in kilocycles by adding one zero to the figures.

TO OPEN BACK COVER. Press down on the latch, (directly below handle) simultaneously pulling the cover open. To close, merely snap together. **CAUTION:** When closing the cover, be careful not to pinch the line cord or other leads between the cover and cabinet.

HOUSE CURRENT OPERATION. The power cord is located inside the cabinet and can be reached by opening the back cover; pass the cord through the slot before closing the cover. Plug the power plug into any 117 volt AC or DC outlet. Reverse the line cord plug in power outlet if the receiver does not operate from DC power.

BATTERY OPERATION. Open the back cover and install the battery pack following the instructions on the label located on the inside of the receiver back cover. Plug the line cord plug into the receptacle on the receiver chassis or the receiver will not operate from its battery. If the receiver is to be operated for a long period of time from AC or DC, or is to be placed in storage, remove the battery and store it in a cool place. Replace the battery when low volume or fuzzy tone is noticed. The condition of the battery will not affect the operation of the receiver when operating from AC or DC.

ALIGNMENT

It is recommended that the receiver be operated from battery during alignment. If AC power is used when aligning the receiver, use an isolation transformer between the power line and receiver. If an isolation transformer is not available, connect the low side of the signal generator to B- through .1 mf capacitor.

Connect a low range output meter across the speaker voice coil and set the volume control at maximum. For greatest accuracy, keep the output of the receiver at approximately .05 watts (.05 watts = .40 volts on output meter) throughout alignment by reducing the signal generator output as stages are brought into alignment. Use a small

©John F. Rider

MODEL 69L11,
Ch. HS-175

fibre screwdriver for aligning the IF & diode transformers.

Normally, RF alignment can be made with trimmers 5, 6 & 7. However, if the range of these trimmers is insufficient to obtain a peak, adjust trimmers 5A & 6A.

The inductance of the RF coil (T-1) is set by the manufacturer by adjusting the iron core. No resetting of this core should be made unless it has been tampered with. Readjustment can be made by proceeding as follows:

Tune in a 600 Kc signal and peak padder (8). Next tune in a 1400 Kc signal and peak trimmer (6). Repeat both adjustments until maximum response is obtained at both ends; the last adjustment should be trimmer (6).

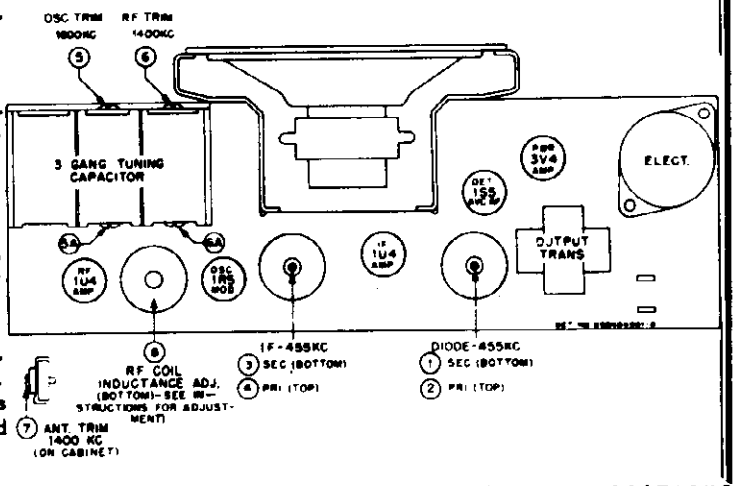

FIGURE 1. TUBE & TRIMMER ADJUSTMENT LOCATIONS

STEP	DUMMY ANTENNA	GENERATOR CONNECTION	GENERATOR FREQUENCY	POINTER SET TO	ADJUST	REMARKS
IF ALIGNMENT						
1.	.1 mfd	Stator of tuning gang	455 Kc	Gang opened	1, 2, 3 & 4	Adjust for maximum
RF ALIGNMENT						
2.	-	Radiation loop**	1600 Kc	1600 Kc*	5	Adjust for maximum
3.	-	"	1400 Kc	Tune for maximum	6 & 7	Adjust for maximum
4.	-	"	"	"	7	With chassis assembled into cabinet, adjust for maximum

* First close gang and set mark on dial scale to calibration line (See Figure 2). Then set to 1600 Kc.

** Connect generator output to 5" diameter 5 turn loop and couple to receiver loop. Keep loops at least 12" apart.

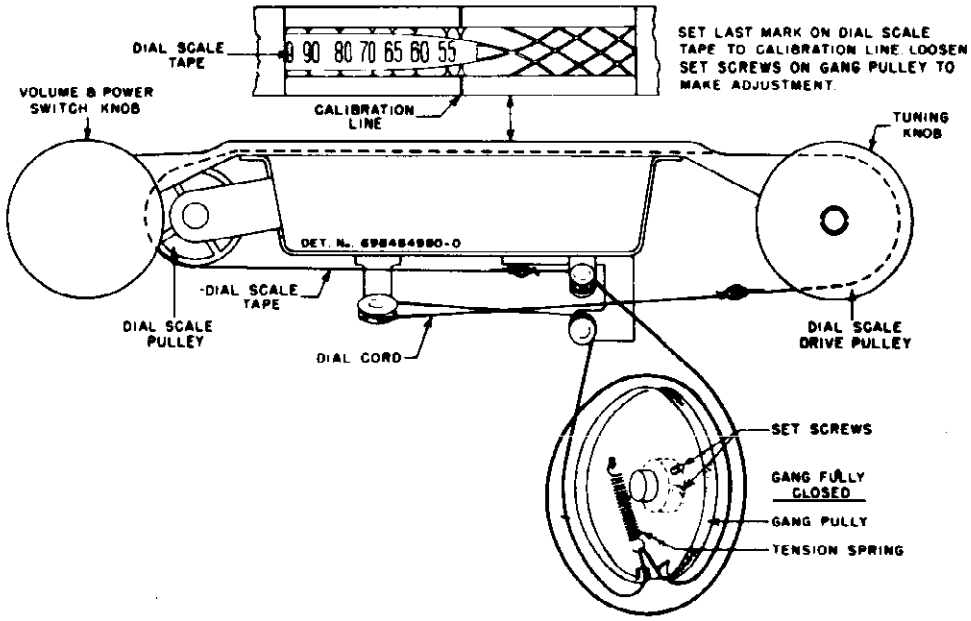

FIGURE 2. DIAL CORD RESTRINGING DETAIL

© John F. Rider

MODEL 69L11,
Ch. HS-175

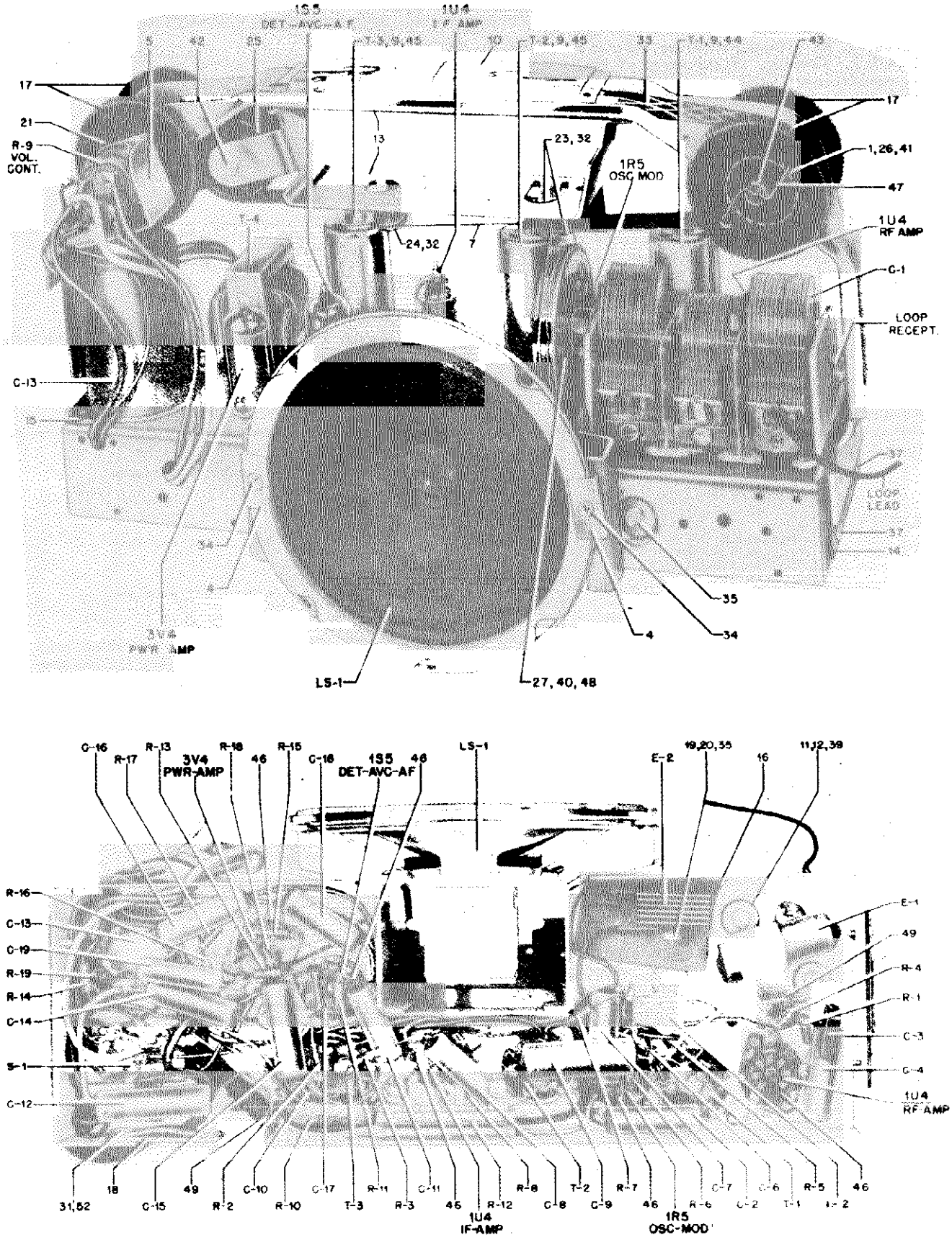

FIGURE 3. PARTS LOCATIONS - CHASSIS TOP & BOTTOM

© John F. Rider

MODEL 69LT11,
Ch. HS-175

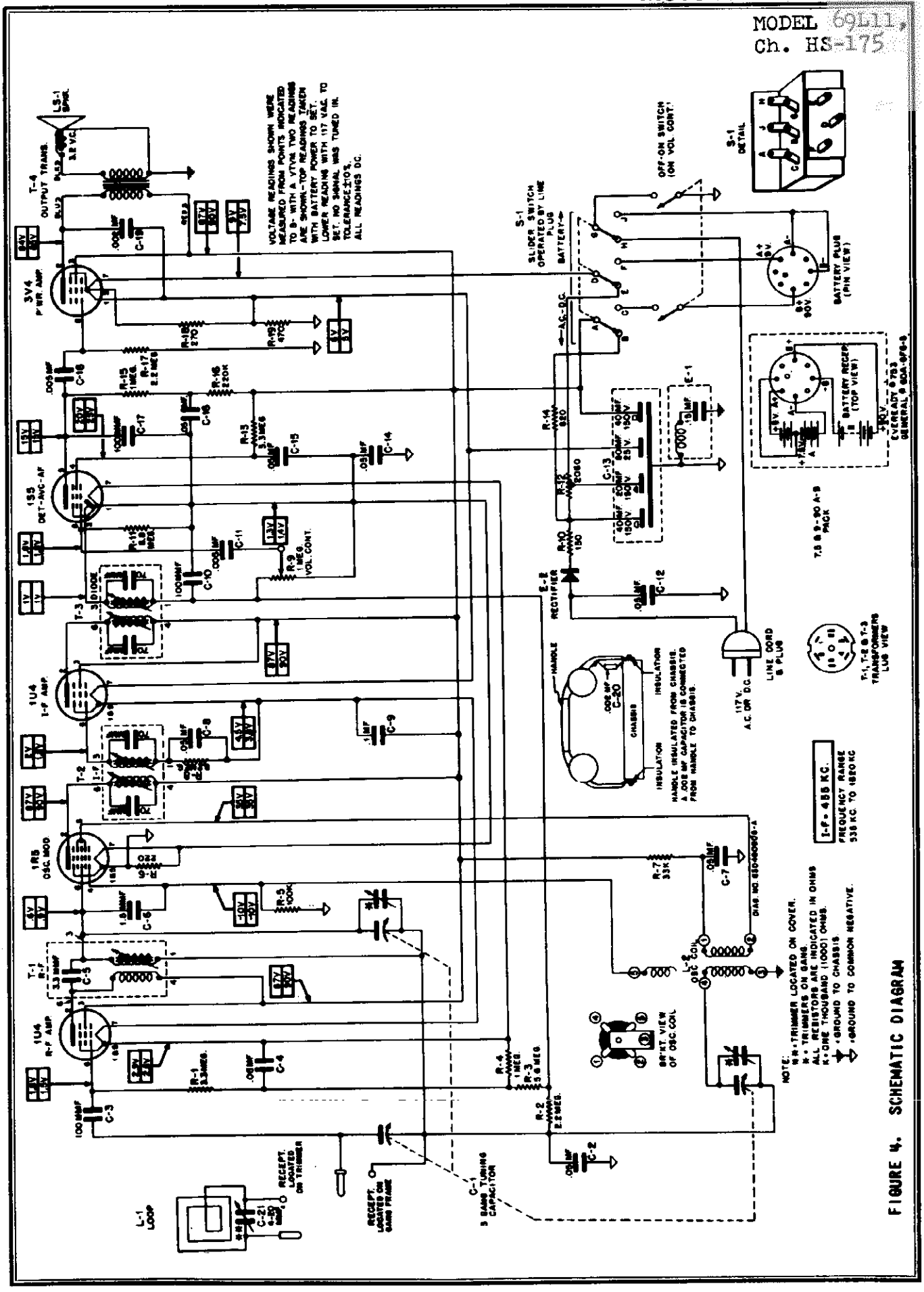

FIGURE 4. SCHEMATIC DIAGRAM

©John F. Rider

MODEL 69L11;
Ch. HS-175

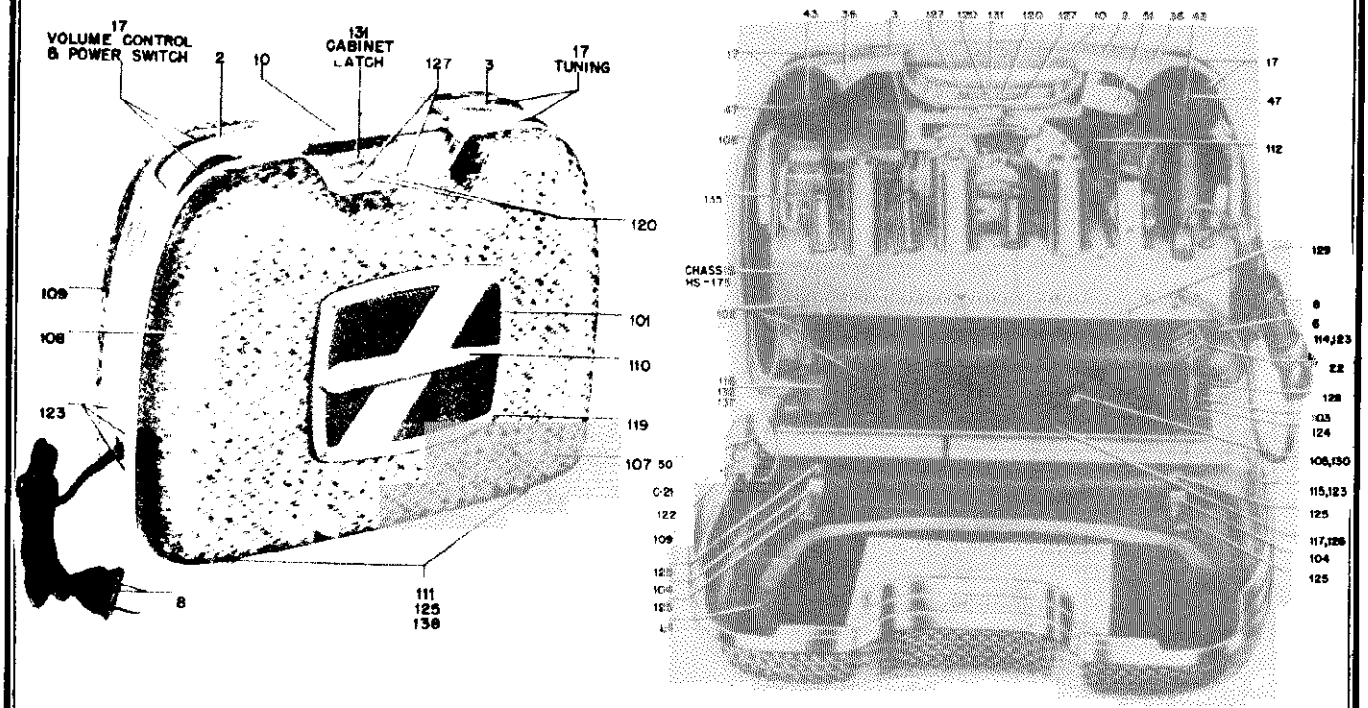

FIGURE 5. PARTS LOCATIONS - CABINET

REPLACEMENT PARTS LIST

REF. NO.	PART NO.	DESCRIPTION
CHASSIS PARTS - ELECTRICAL		
CAPACITORS		
C-1	19B480125	Variable: 3 gang .....
C-2	8S9805	Paper: .05 mf 100V .....
C-3	21R6641	Mica: 100 mmf 500V .....
C-4	8S9805	Paper: .05 mf 100V .....
C-5	21K77268	Mica: 3.3 mmf; part of T-1 .....
C-6	21B77267	Molded: 1.5 mmf .....
C-7	8S9805	Paper: .05 mf 100V .....
C-8	8S9805	Paper: .05 mf 100V .....
C-9	8S9806	Paper: .1 mf 200V .....
C-10	21B77286	Ceramic: 100 mmf 500V .....
C-11	8S9813	Paper: .005 mf 600V .....
C-12	8S9816	Paper: .05 mf 400V .....
C-13	23K76985	Electrolytic: 40-40-20-80 mf/150-150-150-25V includes cover .....
C-14	8S9805	Paper: .05 mf 100V .....
C-15	8S9805	Paper: .05 mf 100V .....
C-16	8S9805	Paper: .05 mf 100V .....
C-17	21B77286	Ceramic: 100 mmf 500V .....
C-18	8S9813	Paper: .005 mf 600V .....
C-19	8S9824	Paper: .002 mf 400V .....
C-20	8S9824	Paper: .002 mf 400V .....
C-21	20A480185	Trimmer, mica: 4 mmf to 20 mmf .....
CAPACITOR-CHOKE		
E-1	1A77283	Capacitor and Choke Assembly: includes .15 mf 200V paper capacitor & coil .....

REF. NO.	PART NO.	DESCRIPTION
RECTIFIER		
E-2	48B478111	Selenium Rectifier: half-wave ....
COILS		
L-1	24C690839	Loop Antenna Assembly: includes panel
L-2	24A76943	Oscillator coil .....
SPEAKER		
LS-1	50K480198	Speaker: 5" PM .....
or	50C76953	Speaker: 5" PM (used in early sets)
RESISTORS		
Note:		All resistors are 1/2W, carbon, insulated type unless otherwise specified.
R-1	6R2118	3.3 meg 20% 1/2W .....
R-2	6R3927	2.2 meg 20% 1/2W .....
R-3	6R3988	5.6 meg 10% 1/2W .....
R-4	6R6004	1 meg 20% 1/2W .....
R-5	6R6075	100,000 20% 1/2W .....
R-6	6R3933	220 20% 1/2W .....
R-7	6R6012	33,000 20% 1/2W .....
R-8	6R5585	8.2 meg 10% 1/2W .....
R-9	18A480103	Volume control: 1 meg; with power sw
R-10	17A76986	150 10% 2-1/2W; wirewound; coated
R-11	6R3987	6.8 meg 20% 1/2W .....
R-12	17K75249	2060 5% 5W wirewound .....
R-13	6R2118	3.3 meg 20% 1/2W .....

© John F. Rider

REF. NO.	PART NO.	DESCRIPTION
R-14	6R6269	820 10% 1/2W
R-15	6R6004	1 meg 20% 1/2W
R-16	6R6015	220,000 20% 1/2W
R-17	6R3927	2.2 meg 20% 1/2W
R-18	6R6432	270 10% 1/2W
R-19	6R6090	470 10% 1/2W
SWITCH		
S-1	40A27114	Slider switch: 3 PDT
TRANSFORMERS		
T-1	24B76988	RF Broadcast: includes coupling capacitor (C-5) but less shield
T-2	24B76990	IF, 455 Kc: includes padding capacitors but less shield
T-3	24B77264	Diode, 455 Kc: includes padding capacitors but less shield
T-4	24B76952	Output Transformer
CHASSIS PARTS - MECHANICAL		
1	37K480147	Band, rubber (on scale tape drive pulley)
2	7B480132	Bracket, knob shaft: left side; marked 'ON'
3	7K690094	Bracket, knob shaft: right side; marked 'TUNING'
4	7A76939	Bracket, speaker mtg
5	7A480117	Bracket, volume control mtg
6	1X480178	Cable Assembly (battery): includes 9-pin plug
7	11M8944	Cord, dial: 18# black
8	30B20329	Cord, line: with plug; 6 ft long.
9	46A70023	Core, iron & screw (T-1, T-2, T-3 tuning)
10	61B480126	Crystal, dial
11	5A70098	Eyelet, spacer (gang mtg)
12	5A70404	Grommet, rubber (gang mtg)
13	1X480179	Handle and Idler Pulley Bracket Assembly: does not include dial, crystal, scale tape pullies, shafts or volume control mtg brkt; includes cord pullies & chassis insulators
14	14A482729	Insulator, bracket mtg
15	9A22056	Insulator, electrolytic mtg
16	14A470428	Insulator, rectifier: armite paper
17	36B480128	Knob, control
18	32A24815	Lock, line cord: fibre
19	4S7695	Lockwasher, int: #5; stl; cad pl (rectifier mtg)
20	2S7010	Nut, hex: 5-40 x 1/4; stl; cad pl (rect. mtg)
21	2S7051	Nut, hex: 3/8-32 x 9/16; Palnut; stl; cad pl (volume control mtg)
22	28K77272	Plug, 9-pin (battery connector).
23	49A12646	Pulley, cord: 7/32 groove
24	49A21741	Pulley, cord: 3/8 groove
25	49K480116	Pulley, scale tape: plain
26	49K480115	Pulley, scale tape: tapped for setscrew
27	1X480174	Pulley and Pushing Assembly: less setscrews (gang drive)
28	5S7771	Rivet: .088 x 3/16; stl; nkl pl (tube socket mtg)
29	5S7707	Rivet: .122 x 5/32; stl; nkl pl (terminal strip and resistor mtg)
30	5S7701	Rivet: .122 x 3/16; stl; nkl pl (electrolytic insulator mtg and insulator brkt mtg)
31	5S7708	Rivet: .122 x 9/32; stl; nkl pl (line cord lock mtg)
32	5A71246	Rivet, shoulder: .187" long; stl; nkl pl
33	34R480127	Scale, dial: flexible tape
34	3S2974	Screw, machine: 4-40 x 5/16; Phillips head; stl; cad pl (speaker mtg)
35	3S7311	Screw, machine: 5-40 x 7/8; slotted hex head; stl; cad pl (rectifier mtg)
36	3S2695	Screw, sheet metal: #6 x 3/16; PKZ plain hex head; stl; cad pl (slider switch mtg and knob shaft brkt mtg)
37	4S3376	Screw, sheet metal: #6 x 1/4; PKZ slotted hex head; stl; cad pl (handle assembly mtg & volume control brkt mtg)
38	3S7506	Screw, sheet metal: #6 x 1/4; PKZ plain hex head; stl; cad pl (osc coil mtg)
39	3S2294	Screw, machine: 6-32 x 1/2 plain hex head locking type; stl; cad pl (gang mtg)
40	3S7113	Setscrew: 8-32 x 1/4; slab head; stl; cad pl (gang pulley mtg)
41	3S2654	Setscrew: 8-32 x 3/8; Allenhead; stl; cad pl (scale tape pulley retainer)
42	47A480113	Shaft, idler pulley
43	47A480124	Shaft, volume and tuning
44	26K485936	Shield, coil (for T-1)
45	1A71049	Shield and Sleeve Assembly (for T-2 & T-3)
46	9A472534	Socket, tube: miniature; 7-prong.
47	41A480151	Spring, knob retainer
48	41A14244	Spring, tension coil (dial drive)
49	31A84795	Strip, terminal: 2 insulated lugs, #1 mtg
50	29K5419	Terminal, plain pin: small
51	4K24124	Washer 'C': shaft retainer
52	4S1719	Washer, flat: 3/8 x .140 x .030 thick (line cord lock mtg)
CABINET PARTS		
101	16K690105	Baffle and Grille Cloth Assembly
102	1X480192	Bottom Cover, Brackets and Strap Assembly
103	7A680301	Bracket, support (on fibre panel)
104	7A690856	Bracket, loop & panel assembly mounting
105	38A480111	Button, battery strap
106	38K480170	Button, plug
107	16K690103	Cabinet, portable: complete
108	1X690863	Cabinet, front section: includes baffle, hinges, escutcheon, gasket and bottom panel
109	1X690865	Cabinet, rear section: includes antenna panel assembly and loop trimmer
110	13C690093	Escutcheon, cabinet
111	37K480189	Foot, rubber
112	32B484259	Gasket, speaker
113	55A690532	Hinge, cabinet
114	14A482140	Insulator, cord outlet (on cabinet front)
115	14A482141	Insulator, cord retainer (on cabinet rear)
116	29R5235	Lug, soldering (strap mtg)
117	1X690864	Panel and Brackets Assembly, cabinet bottom: includes fibre panel and two brackets
118	5S7771	Rivet: .088 x 3/16; stl; nkl pl (strap and stud mtg)
119	5S490416	Rivet: .088 x 11/32; brass; cad pl (escutcheon mtg)
120	5S490417	Rivet: .098 x 5/32; brass; cad pl (latch spring mtg)
121	5S7707	Rivet: .122 x 5/32; stl; nkl pl (brkt mtg to chassis bottom cover)
122	5S490335	Rivet: .122 x 3/16; brass; cad pl (trimmer mtg)
123	5S2849	Rivet: .140 x 7/32; brass; cad pl (cord insulator, hinge and cord retainer mtg)
124	5S490322	Rivet: .140 x 1/4; brass; cad pl (bracket to bottom panel and bracket to loop panel mtg)
125	5S490320	Rivet: .140 x 9/32; brass; cad pl (foot, antenna loop and loop bracket to cabinet mtg)
126	5S490330	Rivet: .140 x 3/8; brass; cad pl (panel & brkts assembly mtg)
127	3S488125	Screw, machine: 6-32 x 3/8; Phillips flat head; stl; cad pl (chassis mtg)
128	3S7326	Screw, machine: 8-32 x 3/16; plain hex head; lockscrew; stl; cad pl (bottom cover assembly to bottom panel assembly mtg)
129	3S2695	Screw, sheet metal: #6 x 3/16; PKZ plain hex head; stl; cad pl (bottom cover mtg)
130	9A480110	Socket, battery strap
131	41A480158	Spring, cabinet latch
132	35K480112	Strap and Button Assembly
133	35A690861	Strip, loop panel retainer
134	46A480109	Stud, strap (strap catch)
135	29A5400	Terminal, plain pin
136	4A21771	Washer, flat: 3/16 x .095 x .030 thk; stl; cad pl (escutcheon mtg)
137	4S7551	Washer, flat: 9/32 x .120 x .025 thick; brass (strap mtg)
138	4S7566	Washer, flat: 3/8 x 5/32 x .033 thick; stl; cad pl (foot mtg).

MODELS 78FM21, 78FM21M,
78FM22M; Ch. HS-128, HS-132

Model 78FM21
Brown Mahogany Cabinet
Chassis HS-132

Model 78FM21M
Red Mahogany Cabinet
Chassis HS-132

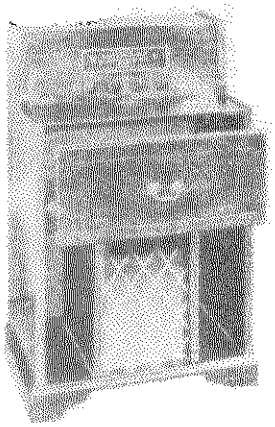



Model 78FM22M
Red Mahogany Cabinet
Chassis HS-128

GENERAL INFORMATION

TYPE- FM-BC radio-phonograph combination. A loop antenna is used for broadcast (AM) reception; for FM reception, a line cord antenna is used. A selenium type rectifier is used in the power supply.

Chassis HS-128 & HS-132 are identical except for dial arrangements and phono connecting cord lead lengths.

TUNING RANGE - BC - 535 to 1620 Kc
FM - 88 to 108 Mc

AM IF Frequency - 455 Kc
FM IF Frequency - 4.3 Mc

TUBE COMPLEMENT -
12AT7 - 1st & 2nd FM Converter
12BE6 - 1st 4.3 Mc IF Amplifier & AM Converter
12BA6 - 2nd 4.3 Mc IF Amplifier & 455 Kc IF Amplifier
12BA6 - 3rd 4.3 Mc IF Amplifier
19T8 - FM Ratio Detector, AM Detector, AVC & 1st AF Amplifier
50B5 - Power Output Amplifier
Rectifier- Selenium type

POWER SUPPLY - 105-125 volts, AC, 60 cycles, 85 watts

RECORD CHANGER -Motorola Model RC-34. Refer to Motorola Service Manual, Part No. 54P484953 for record changer service information and operating instructions.

FM-BC TUNER - Refer to PT-19 Service Manual, Motorola Part No. 54P485033, for tuner information.

INSTALLATION & OPERATING INSTRUCTIONS

ANTENNAS. No outside antenna or ground is normally required for broadcast reception. An 'Aero-Vane' loop antenna for broadcast reception is located at the rear of the cabinet. In locations where additional pick-up is desired, an external antenna may be connected to the screw on the rear of the set marked 'BC'. See Figure 1.

An FM antenna, built into the power cord, eliminates the need for an external FM antenna when the receiver is used in normal FM service areas such as are found in and for a few miles around metropolitan areas being served by FM stations. In 'fringe' or weak FM signal areas, improved FM re-

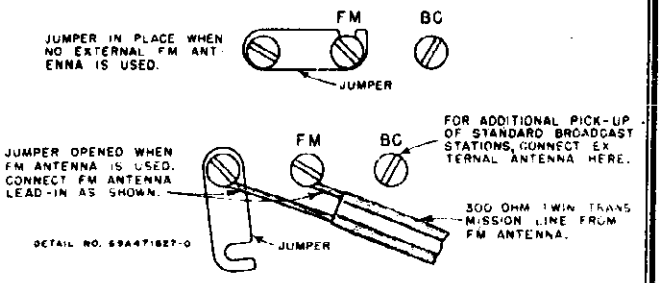

FIGURE 1. EXTERNAL ANTENNA CONNECTIONS

©John F. Rider

ception can be obtained by using a dipole antenna mounted as high as possible. The dipole antenna should be connected through a 300 ohm twin transmission line to the two screws on the rear of the set as shown in Figure 1. The jumper between the two terminals should be opened as shown. Orient the dipole antenna so maximum volume of FM station or stations is obtained.

CONTROLS. Refer to Figure 2 for instructions pertaining to use of the controls located on the receiver front panel.

The standard broadcast dial scale is read in kilocycles by adding one '0' to figures. The FM band dial scale is read in megacycles (88 to 108).

NOTE: When tuning, tune carefully until you are exactly ON the station. Tuning to either side of it will result in poor tone quality and excessive noise. Tuning of FM stations should be done very carefully, as 3 peaks are present; the center peak is the correct one; distortion and low volume are characteristic of the other two peaks.

RECORD CHANGER OPERATION. Refer to Motorola Model RC-34 Record Changer Service Manual, Part Number 54P484953 of operating instructions.

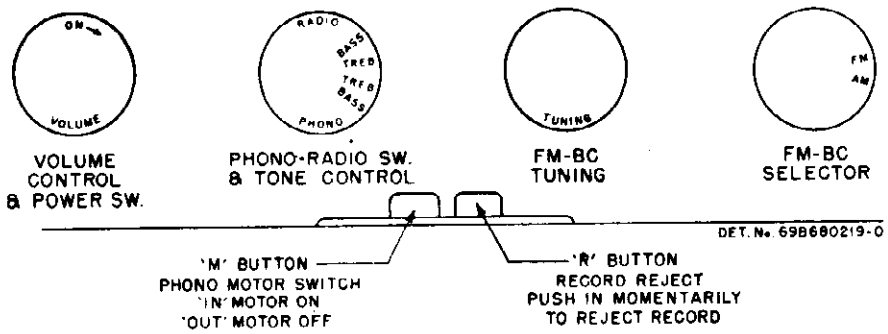

FIGURE 2. OPERATING CONTROLS

ALIGNMENT

Maximum performance can only be obtained if extreme care is exercised during alignment.

It is suggested that an isolation transformer be used between receiver and power line. If no isolation transformer is used and hum is encountered during alignment, connect the ground side of the signal generator output through a .1 mf capacitor to receiver common negative (see schematic diagram) instead of the receiver chassis.

If set oscillates when aligning the broadcast band, connect receiver common negative to receiver chassis.

CAUTION: Don't forget to disconnect common negative from receiver chassis after alignment.

Use an insulated wrench when aligning the FM tuner cores and trimmers. Order Motorola FM Alignment Wrench, Part No. 66A471864.

Some chassis use AM IF & diode transformers having cores that are threaded and screw into threaded coil forms. These cores are slotted for a small diameter fiber screwdriver. Do not press hard on these cores during alignment or the threads on the core or coil form may strip.

The FM oscillator trimmer (adjustment 21 in Figure 2) will not be found on all tuners used in these chassis. Complete instructions for aligning tuners with or without this trimmer will be found in alignment charts.

Check setting of dial pointer before starting alignment. With gang fully closed, pointer should be in line with last mark on extreme left-hand side of dial scale. If necessary, reset pointer on string.

Refer to Figure 3 for location of all alignment trimmers and cores.

COMPLETE ALIGNMENT PROCEDURE USING AM SIGNAL GENERATOR

An AM (30% amplitude modulated) signal generator covering the frequencies shown in Alignment Chart 1, is used to align the broadcast and FM bands. A low range output meter, connected across the speaker voice coil, is used as an output indicator.

The broadcast alignment is conventional; instructions are given in the following alignment chart.

The FM band alignment can be satisfactorily performed by following the instructions in the chart. When properly aligned, the ratio detector does not respond to amplitude modulation and since an AM type signal generator is used for aligning the FM circuits, it is necessary to detune the ratio detector transformer secondary and leave it that way until all of the FM circuits have been aligned. After completing the alignment of FM circuits, proceed to align the ratio detector transformer secondary by applying a 4.3 Mc AM signal to the control grid (pin #7) of the 2nd FM converter tube and adjusting the ratio detector transformer secondary core for minimum audio output. No adjustment of the FM circuits should be attempted with AM after the ratio detector transformer secondary has been properly aligned.

Keep output of signal generator low so as not to overload stages and obtain false output indications. Keep receiver volume control at maximum; reduce generator output, as stages are brought into alignment, so output meter never reads more than .40 volt (.05 watt).

© John F. Rider

MODELS 78FM21, 78FM21M,
78FM22M; Ch. HS-128, HS-132

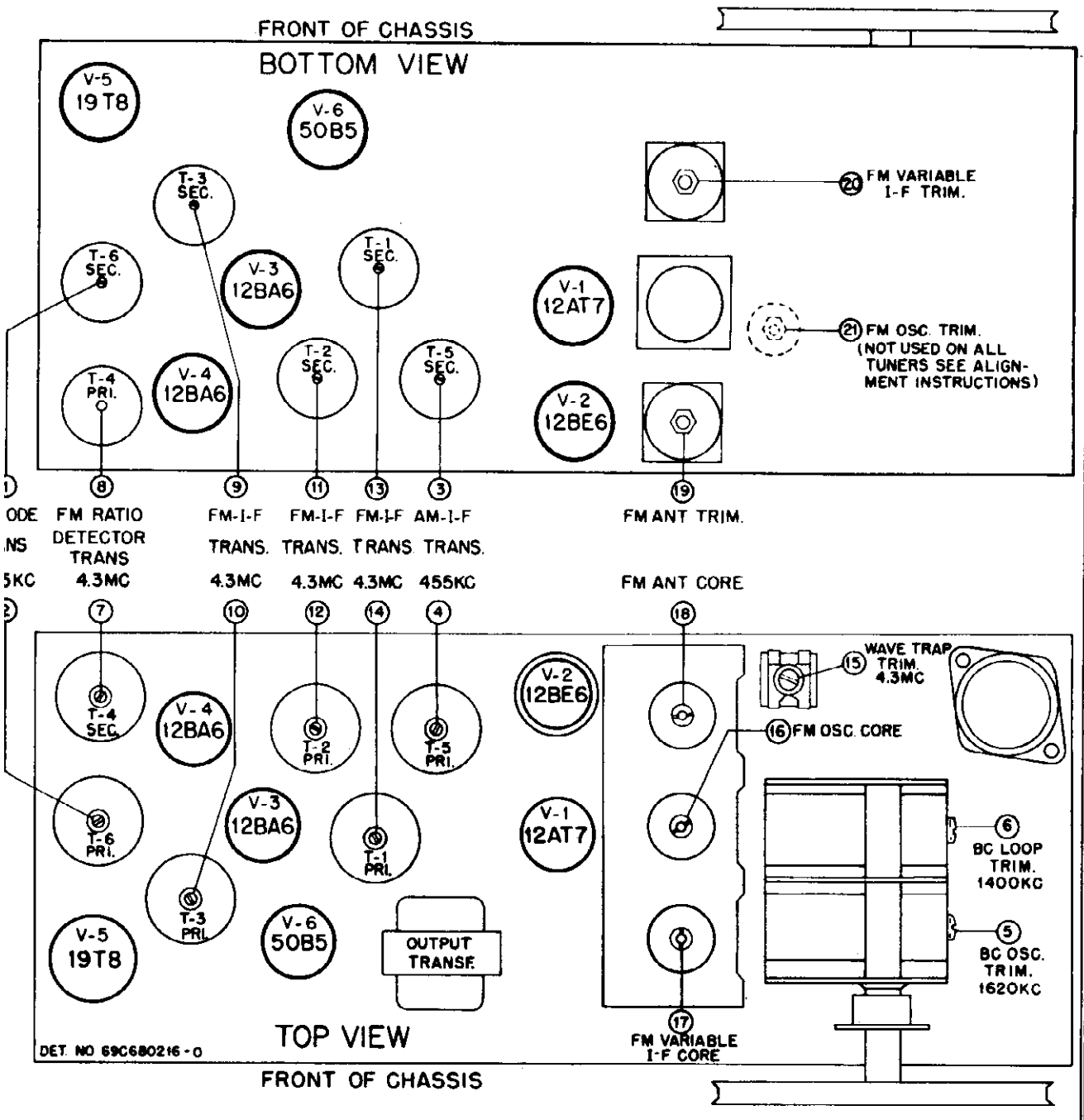

FIGURE 3. CHASSIS HS-128 & HS-132 TUBE & TRIMMER LOCATIONS

MODELS 78FM21, 78FM21M,
78FM22M; Ch. HS-128, HS-132

CHART I. ALIGNMENT PROCEDURE WHEN USING AM MODULATED SIGNAL GENERATOR AND STANDARD OUTPUT METER FOR COMPLETE RECEIVER ALIGNMENT

STEP	DIAL SET TO	BAND SW SET TO	DUMMY	SIGNAL GENERATOR CONNECTED TO	SIGNAL GENERATOR SET AT	ADJUST TRIMMER OR CORE	REMARKS
455 KC IF CHANNEL ALIGNMENT							
1.	High freq. end.	BC	.1 mf	12BE6 (V-2) HC Conv Grid (Pin #7)	455 Kc	1,2,3 & 4	Adjust for maximum output.
BROADCAST BAND ALIGNMENT							
2.	1620 Kc (gang fully opened)	BC	.1 mf	"	1620 Kc	5	Adjust for maximum output. This sets oscillator to dial scale.
3.	1400 Kc	BC	None	Radiation loop*	1400 Kc	6	Tune in signal with receiver tuning knob, then peak trimmer 6.
4.3 MC IF CHANNEL ALIGNMENT & WAVETRAP ADJUSTMENT							
4.	-	-	-	-	-	7	Detune ratio detector transformer secondary by screwing core (7) out as far as it will go.
5.	(extreme high frequency end)	FM	.001 mf	12AT7 (V-1) 2nd FM Converter Grid (Pin #7)	4.3 Mc	8,9,10, 11, 12, 13 & 14	Adjust for maximum output.
6.	-	FM	300 ohms	FM Ant terminal (center screw on back)	4.3 Mc	15	Adjust for minimum output (wavetrap)
FM BAND ALIGNMENT							
Note:	If tuner does not have FM oscillator trimmer (21), perform step 7 & disregard steps 7A, B & C. If tuner has FM oscillator trimmer (21), then disregard step 7 and perform steps 7A, B & C in its place.						
7.	105 Mc	FM	300 ohms	FM Ant terminal (center screw on back)	105 Mc	16	Adjust for maximum output. This sets oscillator to dial scale.
7A.	90 Mc	FM	300 ohms	"	90 Mc	21	Adjust for maximum output.
7B.	105 Mc	FM	300 ohms	"	105 Mc	16	Adjust for maximum output.
7C.	-	-	-	-	-	-	Repeat steps 7A & 7B until oscillator tracks with dial calibration.
8.	90 Mc	FM	300 ohms	FM Ant terminal (center screw on back)	90 Mc	19 & 20	Tune in signal with receiver tuning knob, then adjust 19 & 20 for maximum output.
9.	105 Mc	FM	300 ohms	"	105 Mc	17 & 18	Tune in signal with receiver tuning knob, then adjust 17 & 18 for maximum output.
10.	-	-	-	-	-	-	Repeat steps 8 & 9 several times until further adjustment does not increase the output.
11.	105 Mc	FM	None	Radiate signal (or use weak station after performing step 12)	105 Mc	19	Adjust for maximum output with FM Ant link on back closed.

* Connect output of signal generator to a 5" diameter, 3 turn loop and radiate signal into receiver loop. Minimum distance between loops should never be less than 12".

MODELS 78FM21, 78FM21M,
78FM22M; Ch. HS-128, HS-132

(C) Set FM signal generator to 90 Mc (22-1/2 Kc deviation). Tune in signal with receiver tuning knob and then adjust FM variable IF and FM antenna trimmers (19 & 20) for maximum output.

(D) Set FM signal generator to 105 Mc (22-1/2 Kc deviation). Tune in signal with receiver tuning knob and then adjust FM variable IF and FM antenna tuning cores (17 & 18) for maximum output.

(E) Repeat steps 4(C) and 4(D) until cores (17 & 18) and trimmers (19 & 20) reach their peak.

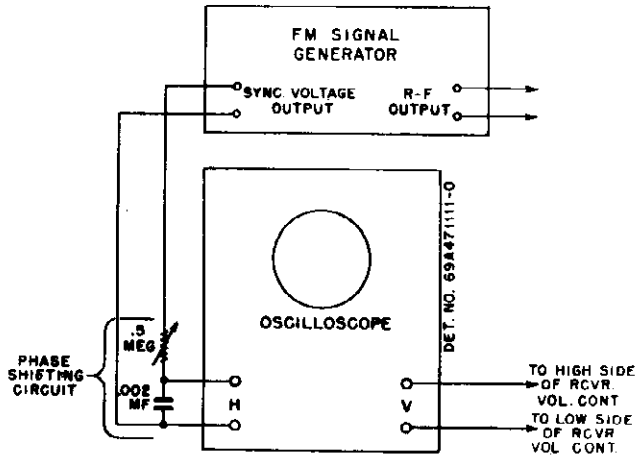

FIGURE 4. SIGNAL GENERATOR & OSCILLOSCOPE HOOK-UP

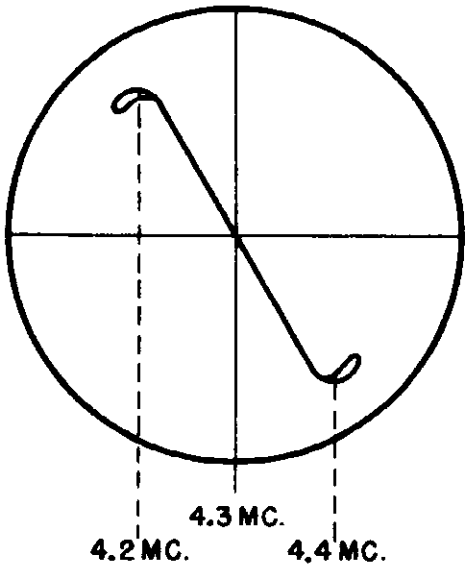

FIGURE 5. OSCILLOSCOPE PATTERN

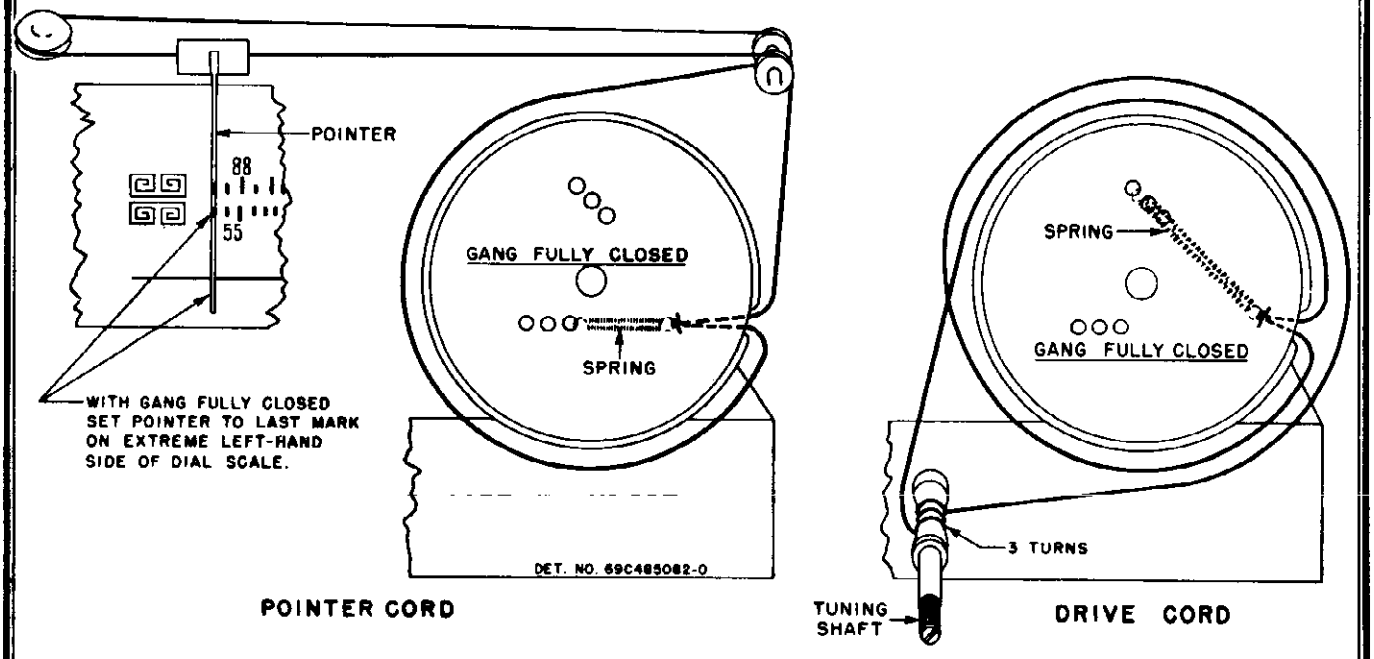

FIGURE 6. CHASSIS HS-128 & HS-132 STRING DRIVE DETAIL

MODELS 78FM21, 78FM21M,
78FM22M; Ch. HS-128, HS-132

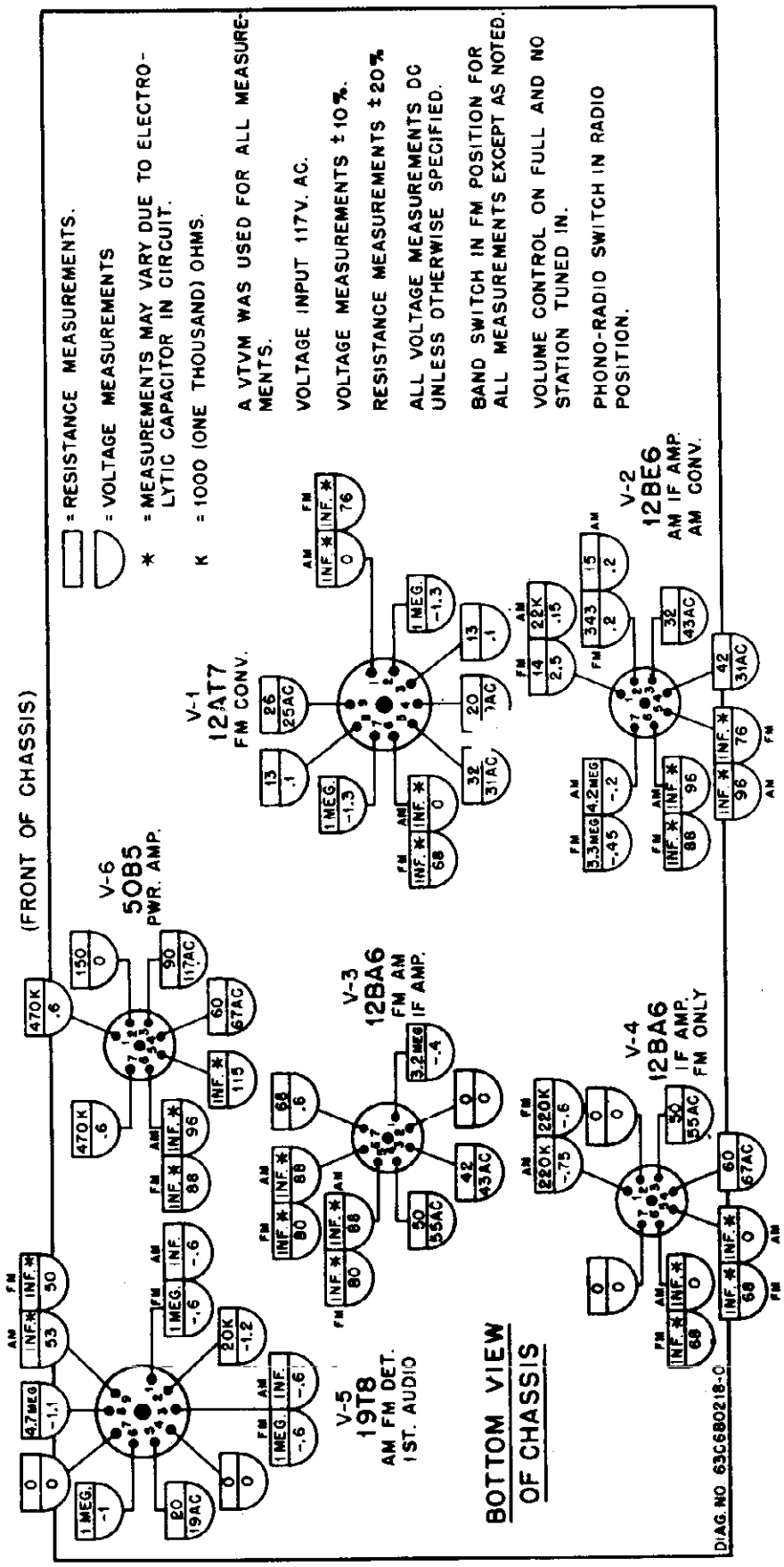

FIGURE 7. CHASSIS HS-128 & HS-132 VOLTAGE & RESISTANCE DIAGRAM

MODELS 78FM21, 78FM21M,
78FM22M; Ch. HS-128, HS-132

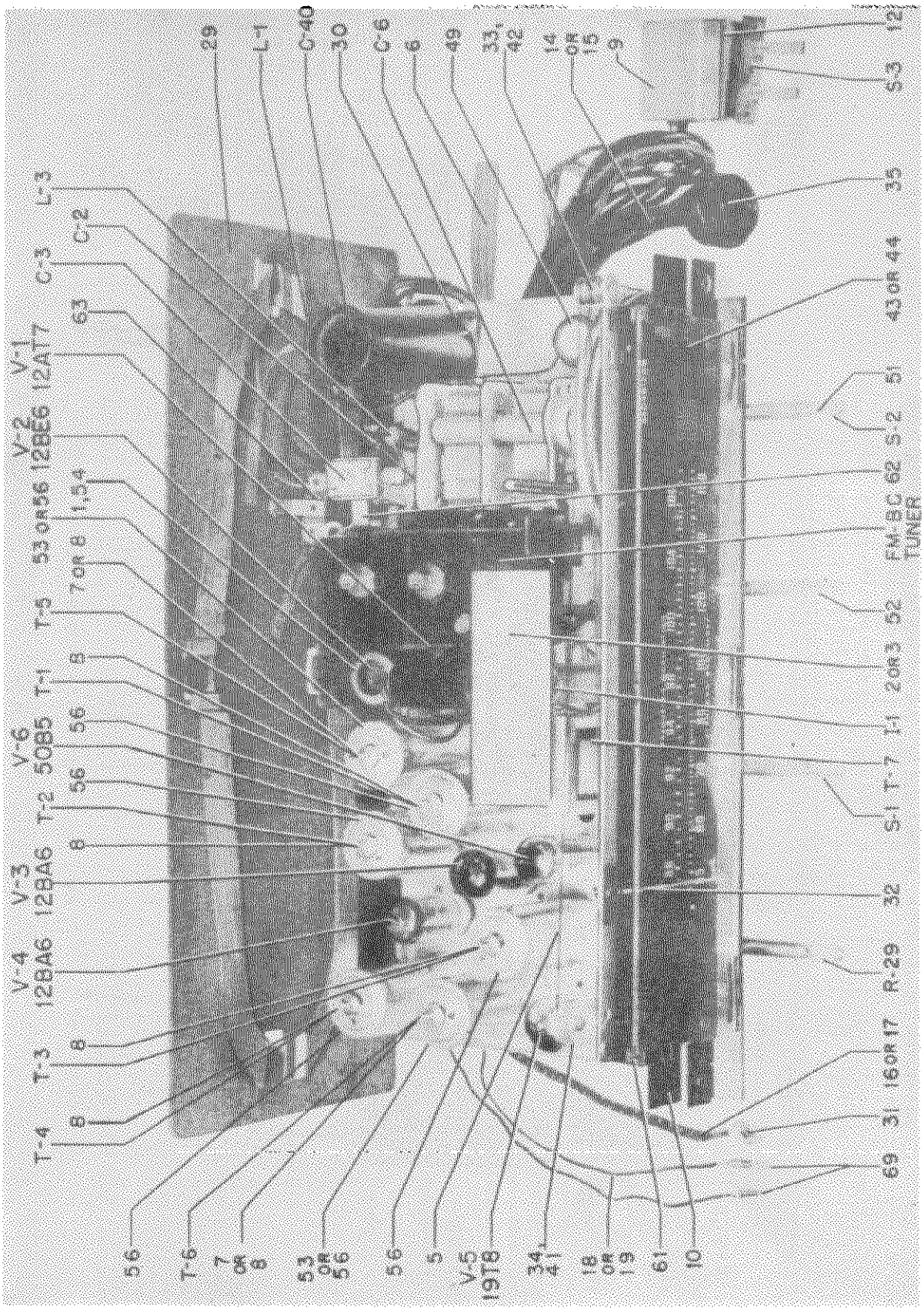

FIGURE 9. CHASSIS HS-128 & HS-132 CHASSIS PARTS LOCATION -TOP VIEW

MODELS 78FM21, 78FM21M,
78FM22M; Ch. HS-128, HS-132

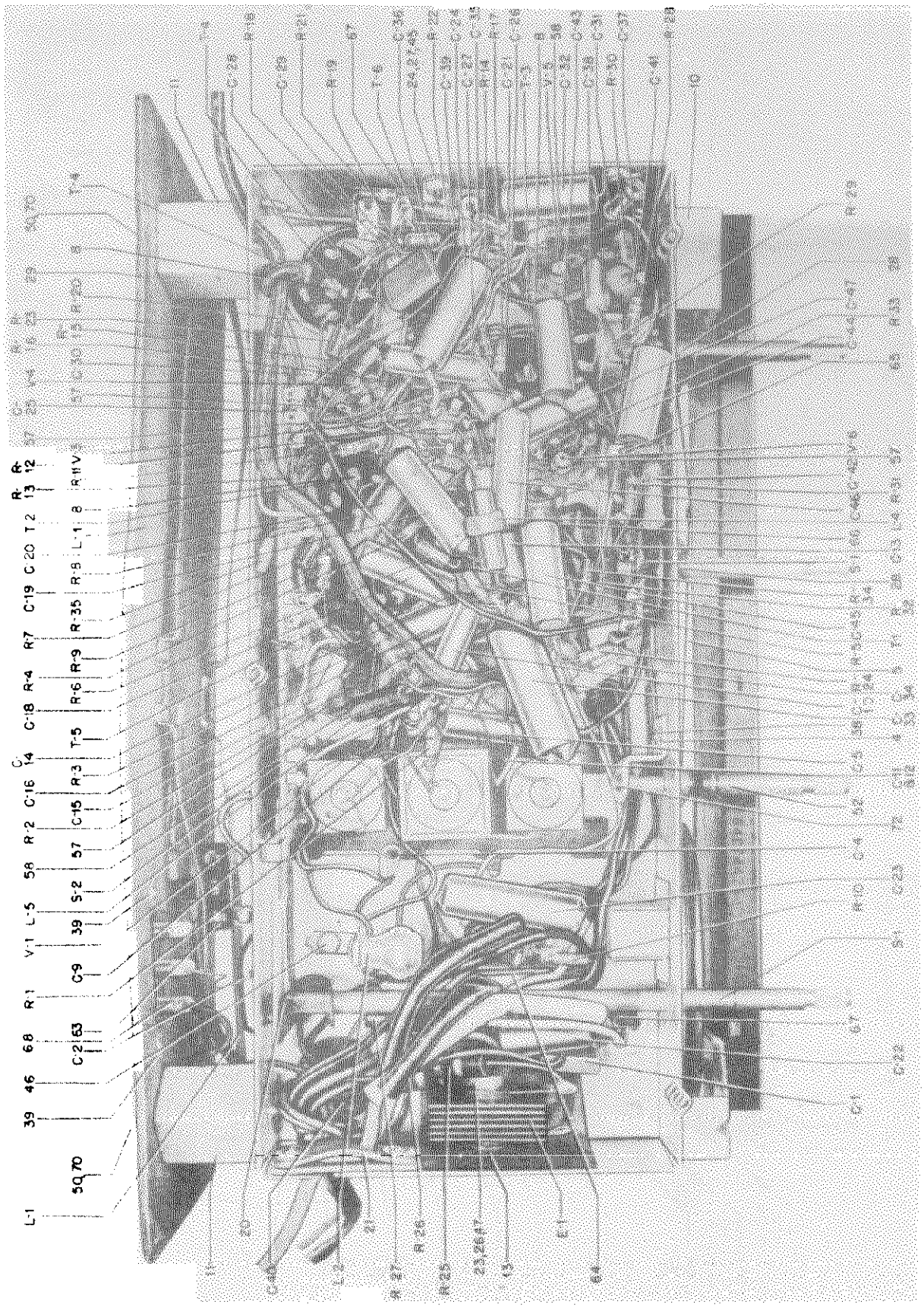

FIGURE 10. CHASSIS HS-128 & HS-132 CHASSIS PARTS LOCATION - BOTTOM VIEW

MODELS 78FM21, 78FM21M,
78FM22M; Ch. HS-128, HS-132

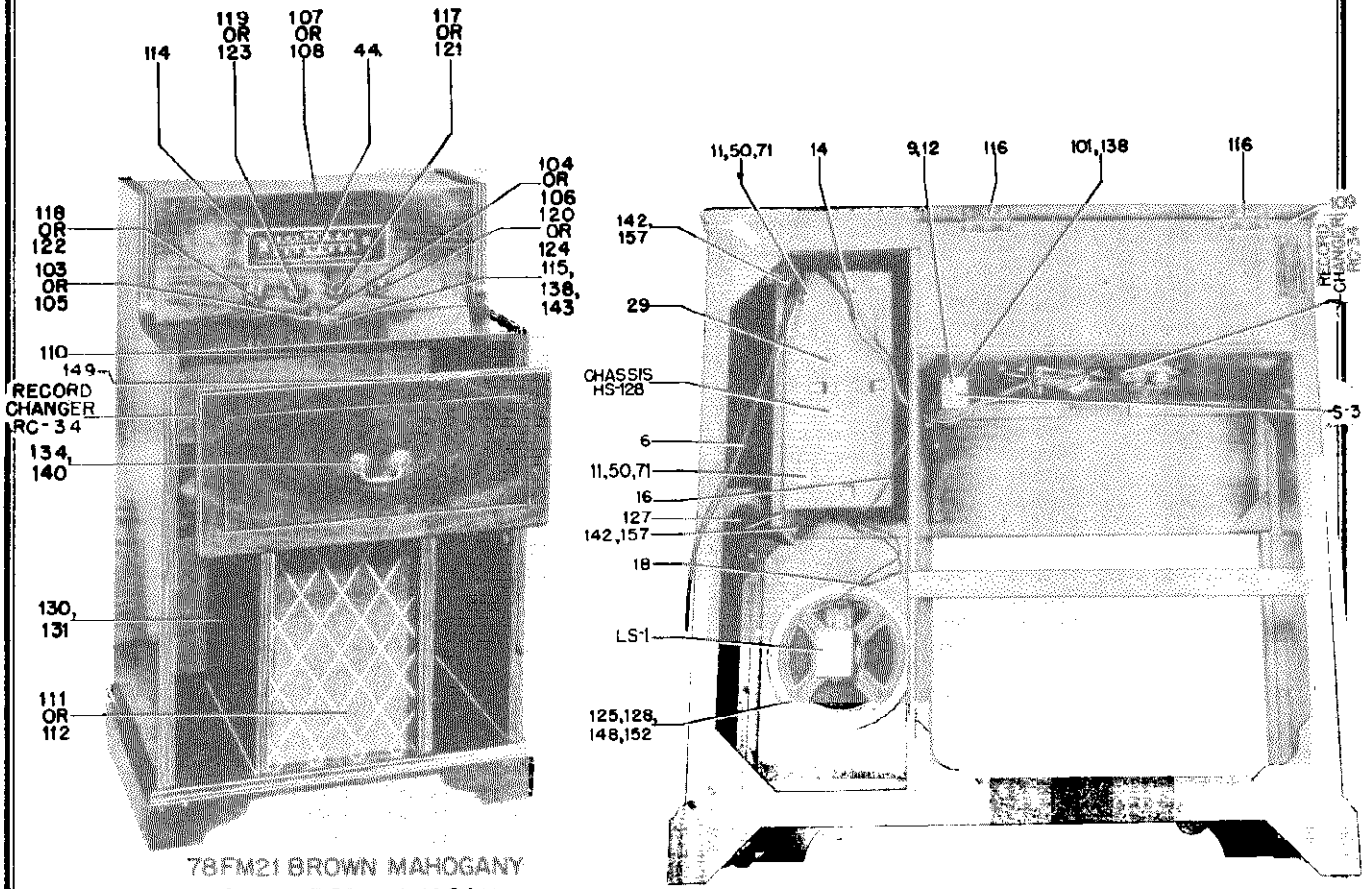

78FM21 BROWN MAHOGANY

78FM21M RED MAHOGANY

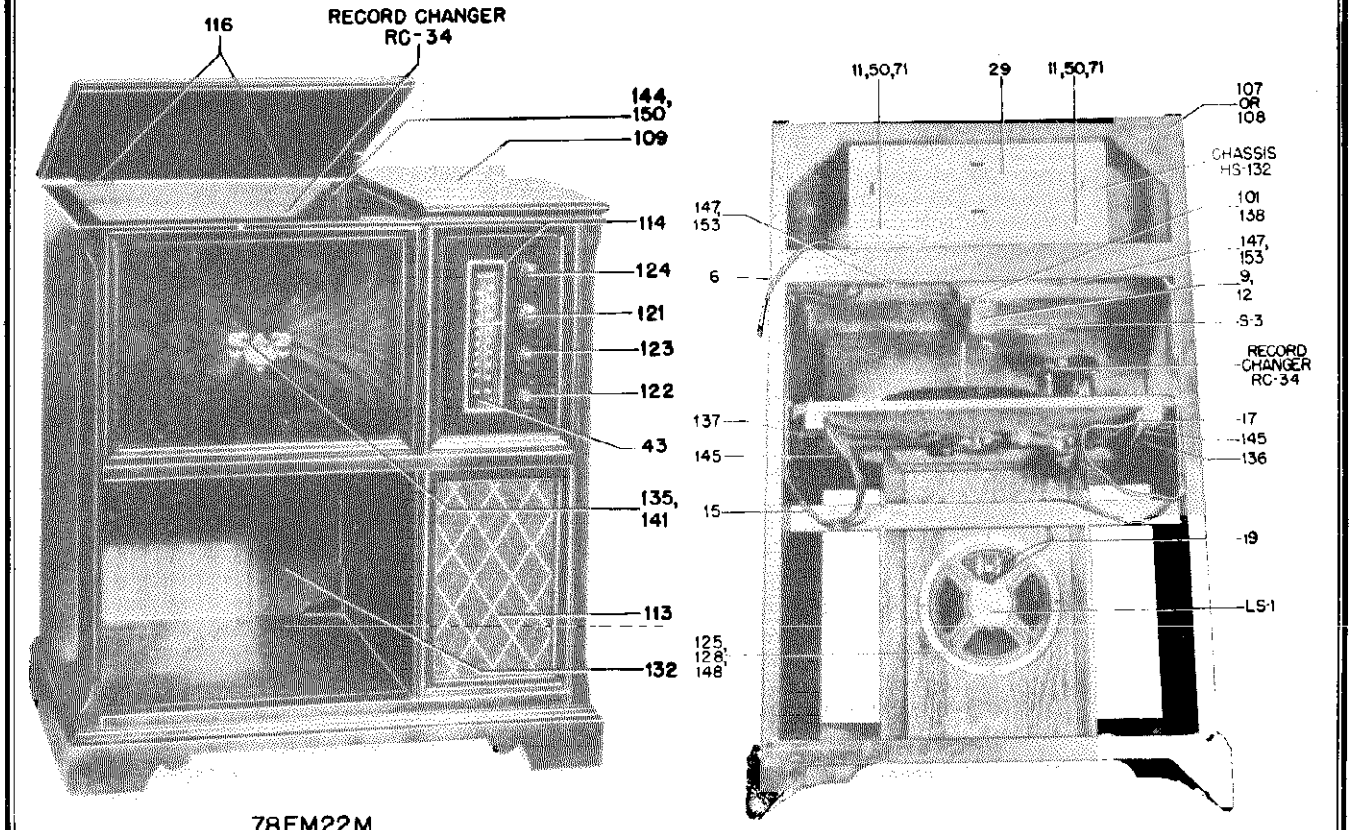

78FM22M

FIGURE 11. CABINET PARTS LOCATION - FRONT & REAR VIEWS

©John F. Rider

MODELS 78FM21, 78FM21M,
78FM22M; Ch. HS-128, HS-132

REPLACEMENT PARTS LIST

REF. NO.	PART NO.	DESCRIPTION
CHASSIS PARTS - ELECTRICAL		
CAPACITORS		
C-1	21K77373	Ceramic: 50 mmf 500V .....
C-2	21K484347	Molded: 7 mmf .....
C-3	20A71125	Trimmer: 10-80 mmf; with mtg bracket .....
C-4	21K484347	Molded: 7 mmf .....
C-5	8A471019	Paper: .02 mf 400V .....
C-6A, 6B	19K75415	Variable, 2 gang: cut oscillator plates; with trimmers C-7 and C-17 .....
C-7	-	Trimmer: Part of gang capacitor C-6 .....
C-9	21K478410	Ceramic: 1000 mmf 500V .....
C-10	8A24966	Paper: .005 mf 100V .....
C-11, 12	21B484337	Ceramic: dual 250 mmf .....
C-13	8S9825	Paper: .01 mf 200V .....
C-14	21K77373	Ceramic: 50 mmf 500V .....
C-15	21R6639	Mica: 500 mmf 500V .....
C-16	8K471636	Paper: .1 mf 200V .....
C-17	-	Trimmer: Part of gang capacitor C-6 .....
C-18	8S9801	Paper: .01 mf 100V .....
C-19	8S9825	Paper: .01 mf 200V .....
C-20	8S9801	Paper: .01 mf 100V .....
C-21	8K471635	Paper: .05 mf 400V .....
C-22	8k471635	Paper: .05 mf 400V .....
C-23	8S9816	Paper: .05 mf 400V .....
C-24	8S9825	Paper: .01 mf 200V .....
C-25	21B77286	Ceramic: 100 mmf 500V .....
C-26	21B77286	Ceramic: 100 mmf 500V .....
C-27	8S9801	Paper: .01 mf 100V .....
C-28	8S9825	Paper: .01 mf 200V .....
C-29	21B77286	Ceramic: 100 mmf 500V .....
C-30	21K478410	Ceramic: 1000 mmf 500V .....
C-31	21B470567	Ceramic: 4700 mmf 500V ....
C-32	8K471635	Paper: .05 mf 400V .....
C-33	8S9807	Paper: .1 mf 400V .....
C-34	21K77375	Ceramic: 250 mmf 500V .....
C-35	21K478410	Ceramic: 1000 mmf 500V ....
C-36	21K478410	Ceramic: 1000 mmf 500V .....
C-37	21K77375	Ceramic: 250 mmf 500V .....
C-38	8A24966	Paper: .005 mf 100V .....
C-39	23A481316	Electrolytic: 8 mf 50V .....
C-40	23B470429	Electrolytic: 40-20-20 mf 200-150-150V .....
C-41	8A24966	Paper: .005 mf 100V .....
C-42	21B470567	Ceramic: 4700 mmf 500V .....
C-43	8S9809	Paper: .01 mf 400V .....
C-44	8K471636	Paper: .1 mf 200V .....
C-45	23A481316	Electrolytic: 8 mf 50V .....
C-46	8S9802	Paper: .02 mf 400V . .....
C-47	8K471635	Paper: .05 mf 400V .....
DIAL LIGHT		
I-1	65A470930	Lamp, incandescent: 117V, 10 watt; clear .....
RECTIFIER		
E-1	48B90140	Selenium type: half-wave ...
COILS		
L-1	24K481708	BC Loop Antenna: winding only
L-2	24A470556	BC Oscillator .....
L-3	24A77240	Wavetrap .....
L-4	24A470505	RF Choke .....
L-5	24A74989	Filament choke .....

REF. NO.	PART NO.	DESCRIPTION
SPEAKER		
LS-1	50C481495	Speaker: 8" PM; 3.2 ohm VC..
RESISTORS		
NOTE: All resistors are 20%, carbon type, unless otherwise specified.		
R-1	6R6004	1 meg 1/2W .....
R-2	6R6004	1 meg 1/2W .....
R-3	6R5610	8200 10% 1W .....
R-4	6R6028	22,000 1/2W .....
R-5	6R6028	22,000 1/2W .....
R-6	6R6378	56,000 10% 1/2W .....
R-7	6R6004	1 meg 1/2W .....
R-8	6R6301	1000 1/2W .....
R-9	6R6022	330 10% 1/2W .....
R-10	6R6028	22,000 1/2W .....
R-11	6R6012	33,000 1/2W .....
R-12	6R2039	68 10% 1/2W .....
R-13	6R3927	2.2 meg 1/2W .....
R-14	6R6301	1,000 1/2W .....
R-15	6R6056	47,000 1/2W .....
R-16	6R6015	220,000 1/2W .....
R-17	6R6012	33,000 1/2W .....
R-18	6R6301	1,000 1/2W .....
R-19	6R3949	470 1/2W .....
R-20	6R6028	22,000 1/2W ... .
R-21	6R2119	15,000 1/2W .....
R-22	6R6039	4700 1/2W .....
R-23	6R6004	1 meg 1/2W .....
R-24	6R6032	470,000 1/2W .....
R-25	6R3994	27 10% 2W .....
R-26	6R3968	180 10% 2W .....
R-27	6R476004	1,000 2W .....
R-28	6R6012	33,000 1/2W .....
R-29	18K471518	Volume control: 1 meg; includes on-off switch .....
R-30	6R2122	4.7 meg 1/2W .....
R-31	6R6075	100,000 1/2W .....
R-32	6R6032	470,000 1/2W .....
R-33	6R6075	100,000 1/2W .....
R-34	6R3992	150 1/2W .....
R-35	6R6182	150,000 1/2W .....
SWITCHES		
S-1	40K471508	Phono-Radio & Tone Switch ..
S-2	40B470432	Change-over Switch (BC-FM)..
S-3A & B	40K471447	Pushswitch: dual (phono ON-OFF & phono reject) .....
TRANSFORMERS		
T-1	24B481391	1st IF, 4.3 Mc: complete with iron cores and padding capacitors, but less shield ...
T-2	24B471670	2nd IF, 4.3 Mc: complete with iron cores and padding capacitors, but less shield ...
T-3	24B471672	3rd IF, 4.3 Mc: complete with iron cores and padding capacitors, but less shield ...
T-4	24B481393	Ratio Detector Transformer, 4.3 Mc: complete with iron cores and padding capacitor, but less shield .....
T-5	24B75487	IF, 455 Kc: complete with iron cores and padding capacitors, but less shield (use with

©John F. Rider

MODELS 78FM21, 78FM21M, 78FM22M; Ch. HS-128, HS-132

REF. NO.	PART NO.	DESCRIPTION
		shield having iron core sleeve)
	or 24B482863	IF, 455 Kc: complete with iron cores and padding capacitors, but less shield (use with plain shield) .....
T-6	24B471666	Diode, 455 Kc: complete with iron cores and padding capacitors, but less shield (use with shield having iron core sleeve) .....
	or 24B482865	Diode, 455 Kc: complete with iron cores and padding capacitors, but less shield (use with plain shield) .....
T-7	25K481726	Output Transformer .....

CHASSIS PARTS - MECHANICAL

1	26A24869	Base, tube shield .....
2	1X481733	Bracket, dial light: includes shield (HS-132) .....
3	1X485931	Bracket & Shield Assembly, dial light (HS-128) .....
4	7A77337	Bracket, tuning shaft .....
5	11M8944	Cord, dial: 18 lb; black ...
6	30K31258	Cord, line & plug: 3-conductor
7	46A470885	Core, iron: threaded (use with transformers 24B482863 and 24B482865 only) .....
8	46A70023	Core, iron and screw (for 4.3 Mc IF trans., and 455 Kc IF & diode trans., part no. 24B75487 and 24B471666) ...
9	15A471444	Cover, push switch .....
10	1X471776	Dial Plate, Brackets and Pullies Assembly: less dial scale .....
11	57K470568	Dowel, back mtg: wood .....
12	14A471446	Insulator, pushswitch cover: armite .....
13	14A470428	Insulator, rectifier: fibre.
14	1X481765	Lead Assembly, phono: with 4-pin receptacle & dual pushswitch (for HS-128 chassis) .....
15	1X481730	Lead Assembly, phono: with 4-pin receptacle & dual pushswitch (for HS-132 chassis) .....
16	1X481766	Lead Assembly, phono pick-up: includes plug (HS-128 only) .....
17	1X481731	Lead Assembly, phono pick-up: includes plug (HS-132 only) .....
18	1X481767	Lead Assembly, speaker (HS-128 only) .....
19	1X481732	Lead Assembly, speaker (HS-132 only) .....
20	1X470545	Lever and Rivet Assembly (on bandswitch shaft) .....
21	32K31259	Lock, line cord: fibre .....
22	4S7695	Lockwasher, internal: #5 (terminal strip mtg) .....
23	4S7650	Lockwasher, internal: #6; cad pl (rectifier mtg and trimmer bracket mtg) .....
24	4S7666	Lockwasher, external: #6 (terminal strip mtg) .....
25	2S7005	Nut, hex: 6-32 x 1/4; cad pl; (trimmer bracket mtg) .....
26	2S7002	Nut, hex: 6-32 x 5/16; cad pl; (rectifier mtg) .....
27	2S7010	Nut, hex: 5-40 x 1/4; cad pl; (terminal strip mtg) .....
28	2S7051	Nut, hex: 3/8-32 x 9/16 Palnut; steel; cad pl (volume control and phono-radio switch mtg) .....
29	24C481707	Panel Assembly, rear: includes antenna winding ....
30	9A12705	Plate, electrolytic mtg: bakelite .....
31	28K71775	Plug, single-pin (phono pick-up lead) .....
32	52B481704	Pointer, dial .....
33	49A23960	Pulley, cord: 1/4 groove ...
34	49A21552	Pulley, cord: 1/2" groove..
35	9K470402	Receptacle, phono-motor ....
36	5S7774	Rivet: .088 x 1/4; steel; nkl pl (tube socket mtg) ..
37	5S7707	Rivet: .122 x 5/32; steel; nkl pl (terminal strip & dial light shield mtg) ....
38	5S7701	Rivet: .122 x 3/16; steel; nkl pl (tuning shaft brkt & electrolytic plate mtg) ...
39	5S7700	Rivet: .122 x 1/4; stl; nkl pl (3 screw terminal mtg).
40	5S7708	Rivet: .122 x 9/32; steel; nkl pl (line cord lock mtg) ...
41	5A71246	Rivet, shoulder: .187 long (cord pulley mtg) .....
42	5A71735	Rivet, shoulder: 1/2" long (cord pulley mtg) .....
43	34C481737	Scale, dial: glass (HS-128).
44	34K485921	Scale, dial: glass (HS-132).
45	3S6912	Screw, machine: 5-40 x 1/4 slotted round head; cad pl (terminal strip mtg) .....
46	3S7506	Screw, sheet metal: #6 x 1/4 PKZ plain hex head; cad pl; steel; (oscillator coil mtg)
47	3S2927	Screw, machine: 6-32 x 7/8 slotted hex head; cad pl (rectifier mtg) .....
48	3S7454	Screw, sheet metal: #8 x 1/4 PKZ plain hex head; cad pl (dial light shield & brkt assembly mtg and dial plate & brkts assembly mtg) .....
49	3S7507	Screw, sheet metal: #8 x 5/8 PKZ plain hex head; cad pl (tuner mtg) .....
50	3S7530	Screw, sheet metal: #8 x 1-1/2 PKZ slotted hex head; cad pl (back mtg) .....
51	47A470405	Shaft, bandswitch .....
52	1K471779	Shaft and Pulley Assembly (tuning shaft) .....
53	1A71049	Shield and Iron Core Sleeve Assembly (for T-5, 24B75487 IF & T-6, 24B471666 diode transformers only) .....
54	26A24970	Shield, tube .....
55	26A485918	Shield, dial and escutcheon (HS-128 only-prevents light from shining through the dial & escutcheon) .....
56	26K485936	Shield, coil (for T-1, T-2, T-3, T-4 & T-5 IF 24B482863

©John F. Rider

REF. NO.	PART NO.	DESCRIPTION
		& T-F diode 24B482865 transformers only) .....
57	9A6778	Socket, tube: min. 7 prong .
58	9A481376	Socket, tube: 9 prong(noval)
59	9K481727	Socket, dial light: includes bracket .....
60	41A14244	Spring, tension coil (on drive and pointer cords)...
61	37K21114	Strip, channel: rubber; 1" long (dial scale mtg) .....
62	31K37504	Strip, terminal: 1 insulated lug; #1 mtg; 3/8" spacing
63	31K15026	Strip, terminal: 2 insulated lugs; #2 mtg; 3/8" spacing
64	31K471564	Strip, terminal: 3 insulated lugs; #2 gnd; 3/8" spacing
65	31K14655	Strip, terminal: 3 insulated lugs; #3 mtg; 3/8" spacing .....
66	31K470747	Strip, terminal: 5 insulated lugs; #3 mtg; 3/8" spacing
67	31K471562	Strip, terminal: 5 insulated lugs; #4 mtg; 3/8" spacing
68	31A470403	Strip, terminal: 3 screws (on loop back) .....
69	29A5400	Terminal, plain pin (speaker lead) .....
70	4S1719	Washer, flat: 3/8 x .140 x .030 thick; stl; cad pl (line cord lock mtg) .....
71	4S7613	Washer, flat: 3/4 x 13/64 x .027 thick; stl; antique copper finish (back mtg) ..
72	4A70015	Washer, 'C' (tuning shaft and bandswitch shaft retainer) .....

CABINET PARTS

101	7A481713	Bracket, push switch mtg ...
102	36K482819	Button, plug: 1/4"; red mahogany finish (for concealing shipping screw holes in record changer)...
103	1X485913	Button, push: 'M'; walnut (78FM21) .....
104	1X485914	Button, push: 'R'; walnut (78FM21) .....
105	1X485915	Button, push: 'M'; mahogany (78FM21M & 78FM22M) .....
106	1X485916	Button, push: 'R'; mahogany (78FM21M & 78FM22M) .....
107	16K482779	Cabinet, spinet combination; brown mahogany (78FM21) ...
108	16F481718	Cabinet, spinet combination; red mahogany (78FM21M) ....
109	16F481758	Cabinet, console combination; red mahogany (78FM22M) ....
110	55B72307	Catch, bullet .....
111	13K482798	Cloth, grille: brown mahogany (78FM21) .....
112	13K481719	Cloth, grille: red mahogany (78FM21M) .....
113	13K481763	Cloth, grille: red mahogany (78FM22M) .....
114	13K482138	Escutcheon, dial: antique brass finish .....
115	13A471458	Escutcheon, push button; statuary bronze finish ....
116	55A471394	Hinge, lid mtg (78FM22M) ...
117	36K484526	Knob, control: walnut plastic; 'TUNING' (78FM21) .....
118	36K484528	Knob, control: walnut plastic; 'ON-VOLUME' (78FM21) .....
119	36K484536	Knob, control: walnut plastic; 'RADIO-PHONO' (78FM21) ....
120	36K484537	Knob, control: walnut plastic; 'AM-FM' (78FM21) .....
121	36K484522	Knob, control: mahogany plastic; 'TUNING' (78FM21M and 78FM22M) .....
122	36K484524	Knob, control: mahogany plastic; 'ON-VOLUME' (78FM21M and 78FM22M) .....
123	36K484534	Knob, control: mahogany plastic; 'RADIO-PHONO' (78FM21M and 78FM22M) .....
124	36K484535	Knob, control: mahogany plastic; 'AM-FM' (78FM21M and 78FM22M) .....
125	4S7657	Lockwasher, external: #8; cad pl (speaker mtg) .....
126	22S1647	Nail, furniture: #42; antique brass; (rear panel mtg)....
127	2A72610	Nut, tee: 8-32 thread (on cabinet-chassis mounting) .
128	2S7003	Nut, hex: 8-32 x 5/16; steel cad pl (speaker mtg) .....
129	35K470657	Pad, felt .....
130	64K484557	Panel, cabinet rear; walnut (78FM21) .....
131	64K481724	Panel, cabinet rear: mahogany (78FM21M) .....
132	64K481725	Panel, cabinet rear: mahogany (78FM22M) .....
133	64C482829	Panel, record changer cover (78FM21 and 78FM21M) .....
134	55A481715	Pull, drawer: English antique finish (78FM21 and 78FM21M)
135	55A481759	Pull, drawer: dummy (78FM22M)
136	55C74786	Rail, support: right-hand ..
137	55K74787	Rail, support: left-hand ...
138	3S7156	Screw, machine: 6-32 x 3/16 slotted binder head; steel; cad pl (push switch mtg) ..
139	3S7455	Screw, sheet metal: #8 x 3/8 PKA slotted acorn head; steel; cad pl (record changer cover mtg) .....
140	3K481722	Screw, machine: 8-30 x 7/8 washerhead; antique copper finish (drawer pull mtg - 78FM21 and 78FM21M) .....
141	3K481761	Screw, machine: 8-32 x 1/4 washerhead; statuary bronze (drawer pull mtg -78FM22M)..
142	3S2963	Screw, machine: 8-32 x 1-3/4; slotted hex head; steel; cad pl (chassis mounting - 78FM22M) .....
143	3S488129	Screw, machine: #4 x 5/8 Phillips oval head; statuary bronze finish (push button escutcheon mtg) ....
144	3S7436	Screw, wood: #6 x 1/2 slotted round head screw; antique copper finish (lid support mtg - 78FM22M) .....
145	3S1314	Screw, wood: #6 x 3/4 slotted round head; statuary bronze finish (support rail mtg)
146	3S476106	Screw, sheet metal: #8 x 1 PKA slotted hex head; steel; cad pl (chassis mtg - 78FM22M) .....
147	3S3396	Screw, sheet metal: #8 x 1-1/4 PKA plain hex head; steel; cad pl (chassis mounting - 78FM21 & 78FM21M) .....
148	3K653	Screw, speaker mounting ....
149	55K72308	Strike, bullet: includes nail
150	55B482802	Support, lid: statuary bronze finish (78FM22M) .....
151	4K485917	Washer, felt: used behind control knobs .....
152	4S7630	Washer, flat: 1/2 x 7/32 x .033 thick; steel; cad pl (chassis mtg 78FM22M and speaker mounting).....
153	4S8214	Washer, flat: 7/8 x .203 x .067 thick; steel; cad pl (chassis mtg) .....

© John F. Rider

MODEL 68FM21,
Ch. HS-133

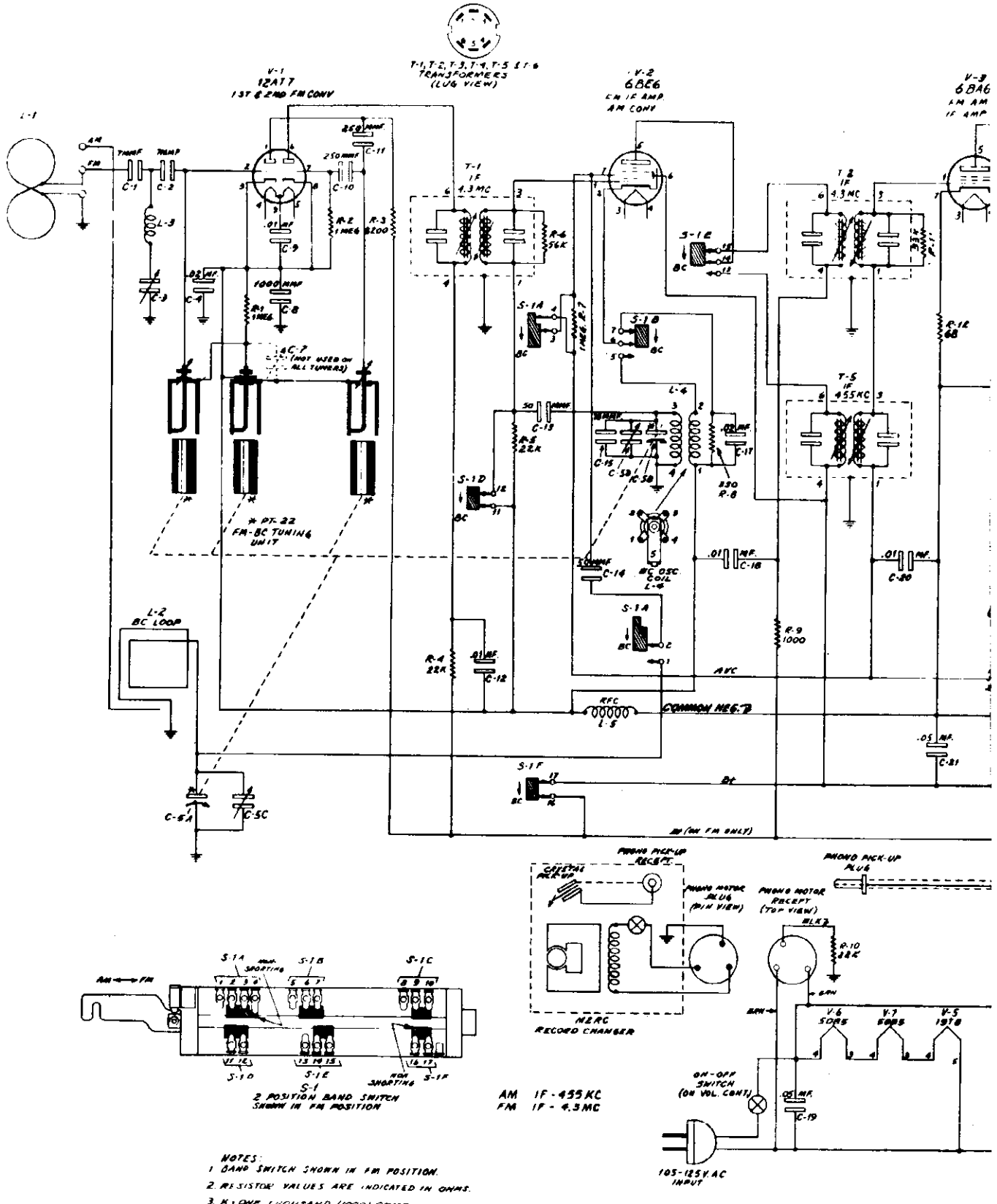

FIGURE 7. CHASSIS HS-1

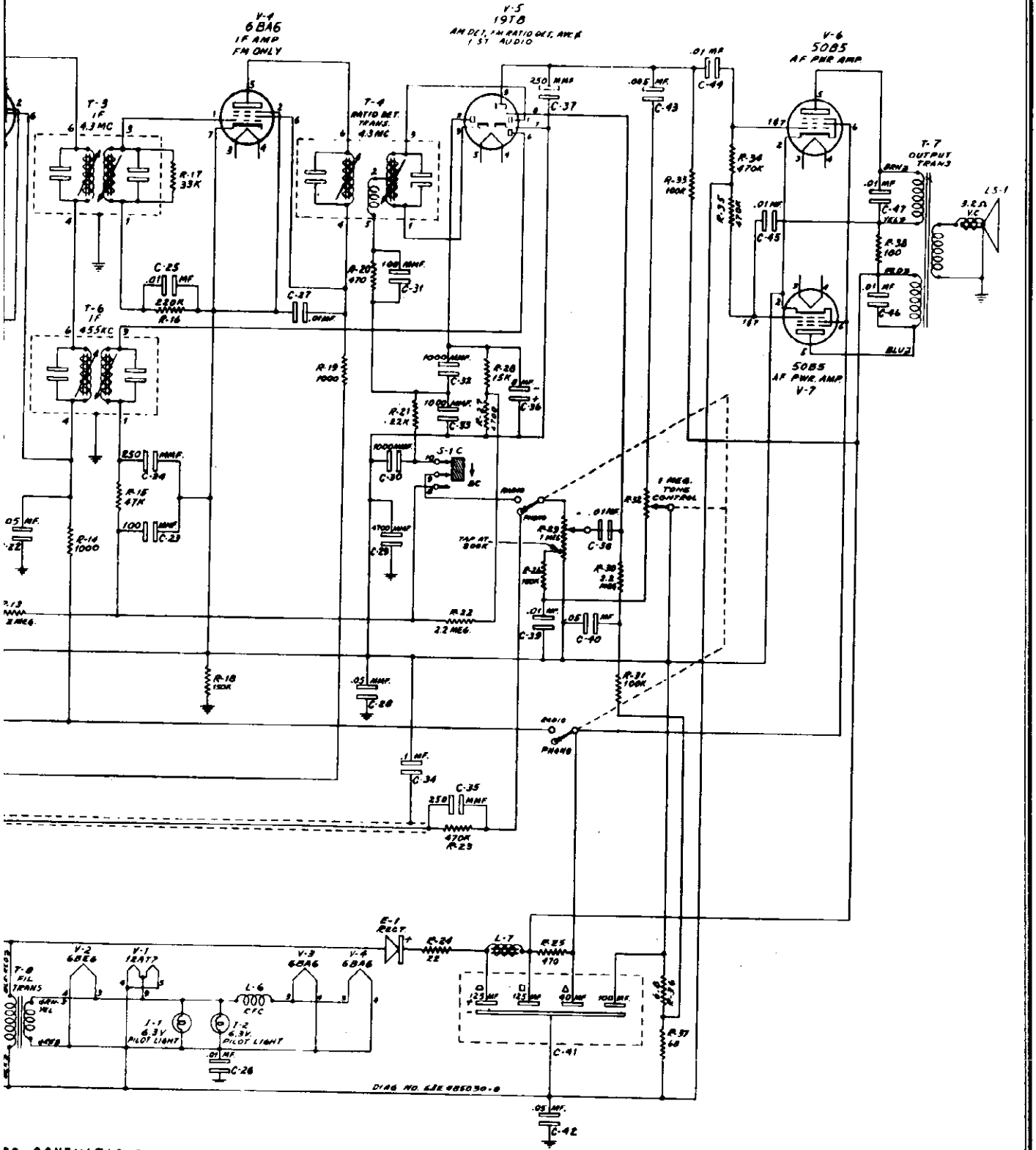

33 SCHEMATIC DIAGRAM

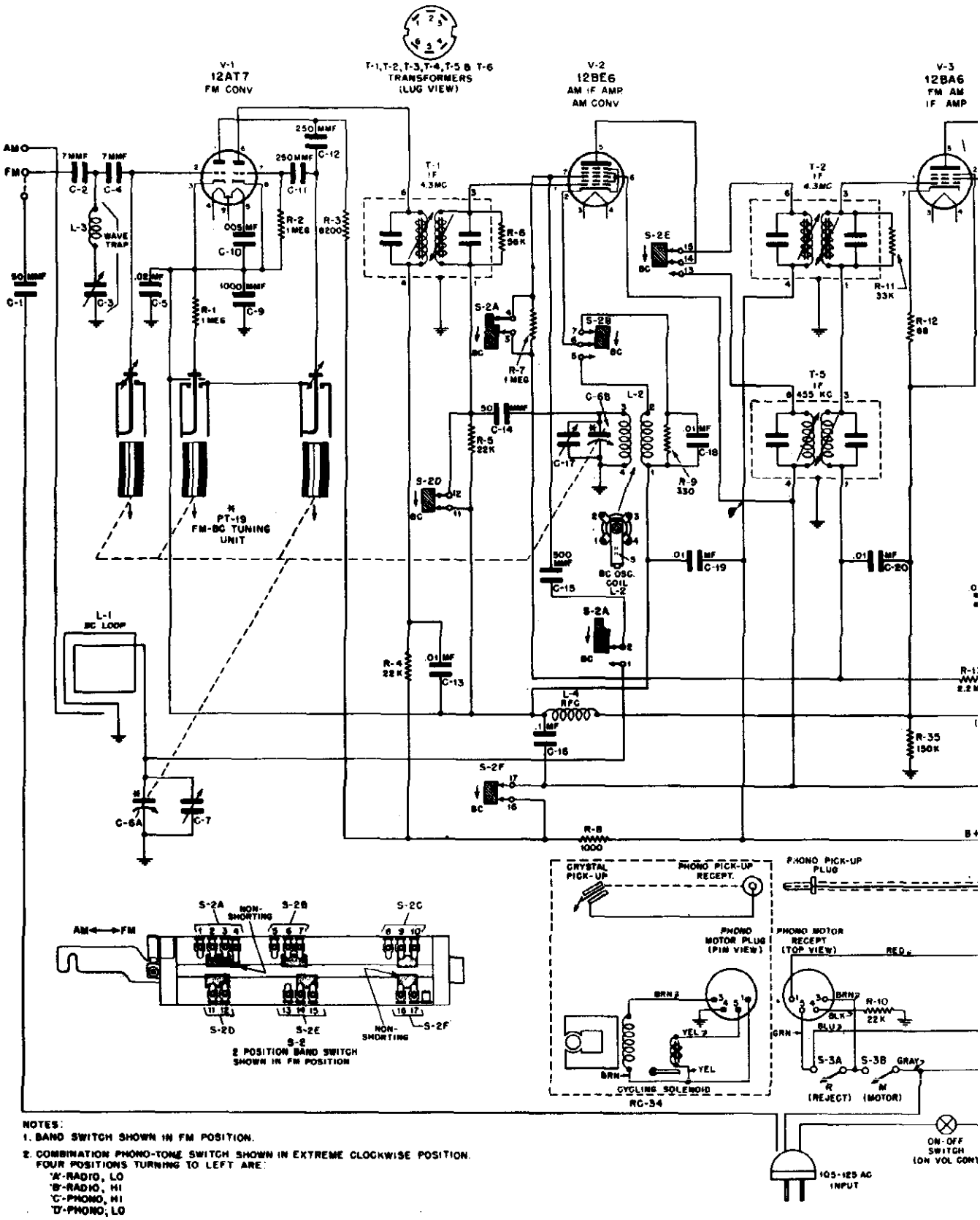

NOTES:

1. BAND SWITCH SHOWN IN FM POSITION.
2. COMBINATION PHONO-TONE SWITCH SHOWN IN EXTREME CLOCKWISE POSITION. FOUR POSITIONS TURNING TO LEFT ARE:
   'A'-RADIO, LO
   'B'-RADIO, HI
   'C'-PHONO, HI
   'D'-PHONO, LO
3. ALL RESISTOR VALUES ARE IN OHMS.
   K=1000 (ONE THOUSAND) OHMS.

MODELS 78FM21, 78FM21M,
78FM22M; Ch. HS-128, HS-132

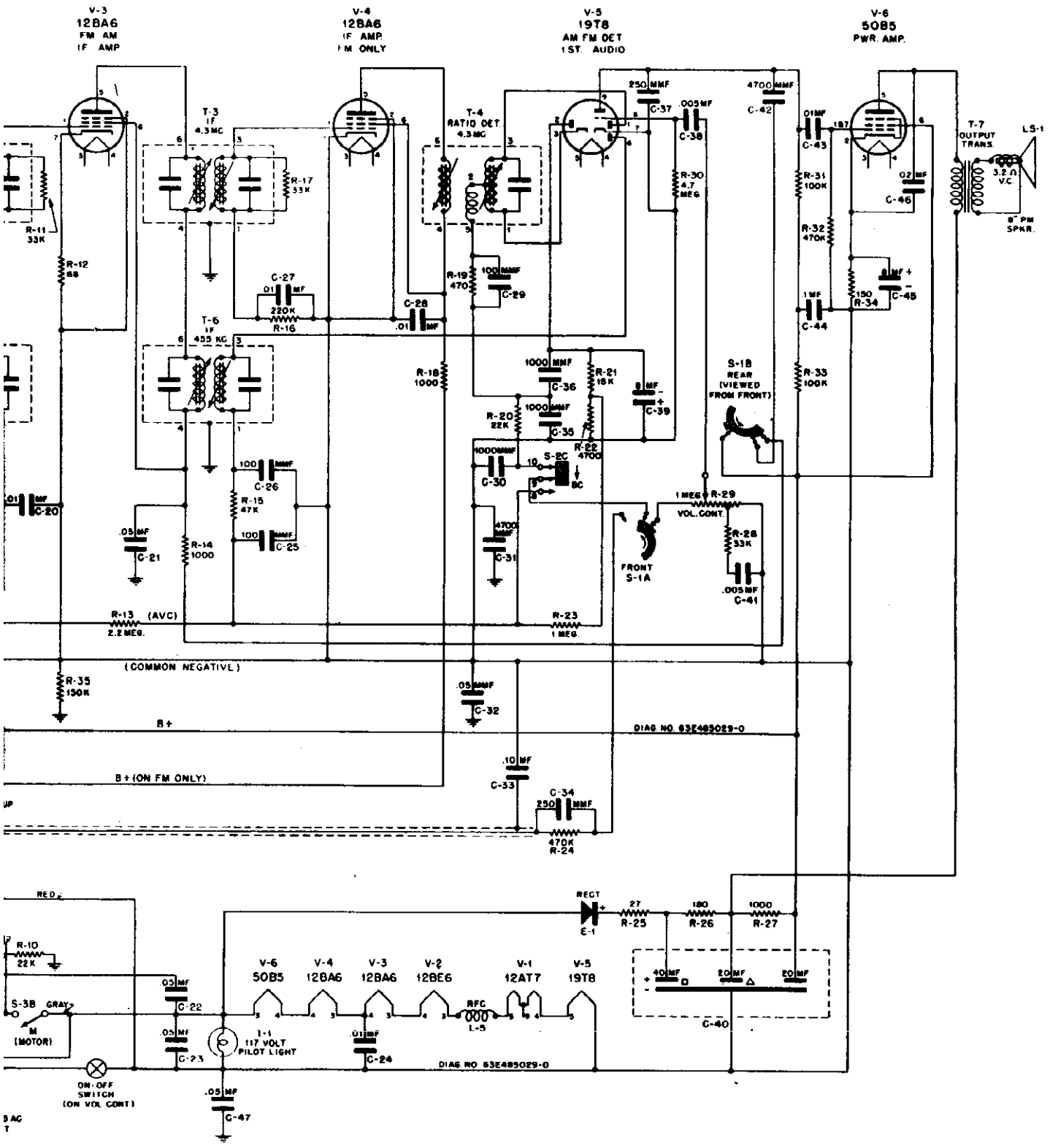

RECORD CHANGER: Motorola Model RC-34,
Pages RCD.CH. 19-1 to RCD.CH. 19-10.

©John F. Rider

POWER SUPPLY - 105-125 volts AC, 60 cycles, 75 watts

TUNING RANGE - BC - 535 to 1620 Kc
FM - 88 to 108 Mc

ALIGNMENT

Maximum performance can only be obtained if extreme care is exercised during alignment.

It is suggested that an isolation transformer be used between receiver and power line. If no isolation transformer is used and hum is encountered during alignment, connect the ground side of the signal generator output through a .1 mf capacitor to receiver common negative (see schematic diagram) instead of the receiver chassis.

If set oscillates when aligning the broadcast band, connect receiver common negative to receiver chassis.

CAUTION: Don't forget to disconnect common negative from receiver chassis after alignment.

Use an insulated wrench when aligning the FM tuner cores and trimmers. Order Motorola FM Alignment Wrench, Part No. 66A471864.

The AM IF & diode transformer cores are threaded and screw into the threaded coil forms. These cores are slotted for a small diameter fiber screwdriver. Do not press hard on these cores during alignment or the threads on the core or coil form may strip.

The FM oscillator trimmer (adjustment 21 in Figure 2) will not be found on all tuners used in Chassis HS-133. Complete instructions for aligning tuners with or without this trimmer will be found in alignment charts.

Check setting of dial pointer before starting alignment. With gang fully closed, pointer should be in line with last mark on extreme left-hand side of dial scale. If necessary, reset pointer on string.

Refer to Figure 2 for location of all alignment trimmers and cores.

COMPLETE ALIGNMENT PROCEDURE USING AM SIGNAL GENERATOR

An AM (30% amplitude modulated) signal generator covering the frequencies shown in Alignment Chart I, is used to align the broadcast and FM bands A low range output meter, connected across the speaker voice coil, is used as an output indicator.

The broadcast alignment is conventional; instructions are given in the following alignment chart.

The FM band alignment can be satisfactorily performed by following the instructions in the chart When properly aligned, the ratio detector does not respond to amplitude modulation and since an AM type signal generator is used for aligning the FM circuits, it is necessary to detune the ratio detector transformer secondary and leave it that way until all of the FM circuits have been aligned. After completing the alignment of FM circuits, proceed to align the ratio detector transformer secondary by applying a 4.3 Mc AM signal to the control grid (pin #7) of the 2nd FM converter tube and adjusting the ratio detector transformer secondary core for minimum audio output. No adjustment of the FM circuits should be attempted with AM after the ratio detector transformer secondary has been properly aligned.

Keep output of signal generator low so as not to overload stages and obtain false output indications. Keep receiver volume control at maximum; reduce generator output, as stages are brought into alignment, so output meter never reads more than .40 volt (.05 watt).

MODEL 88FM21,
Ch. HS-133

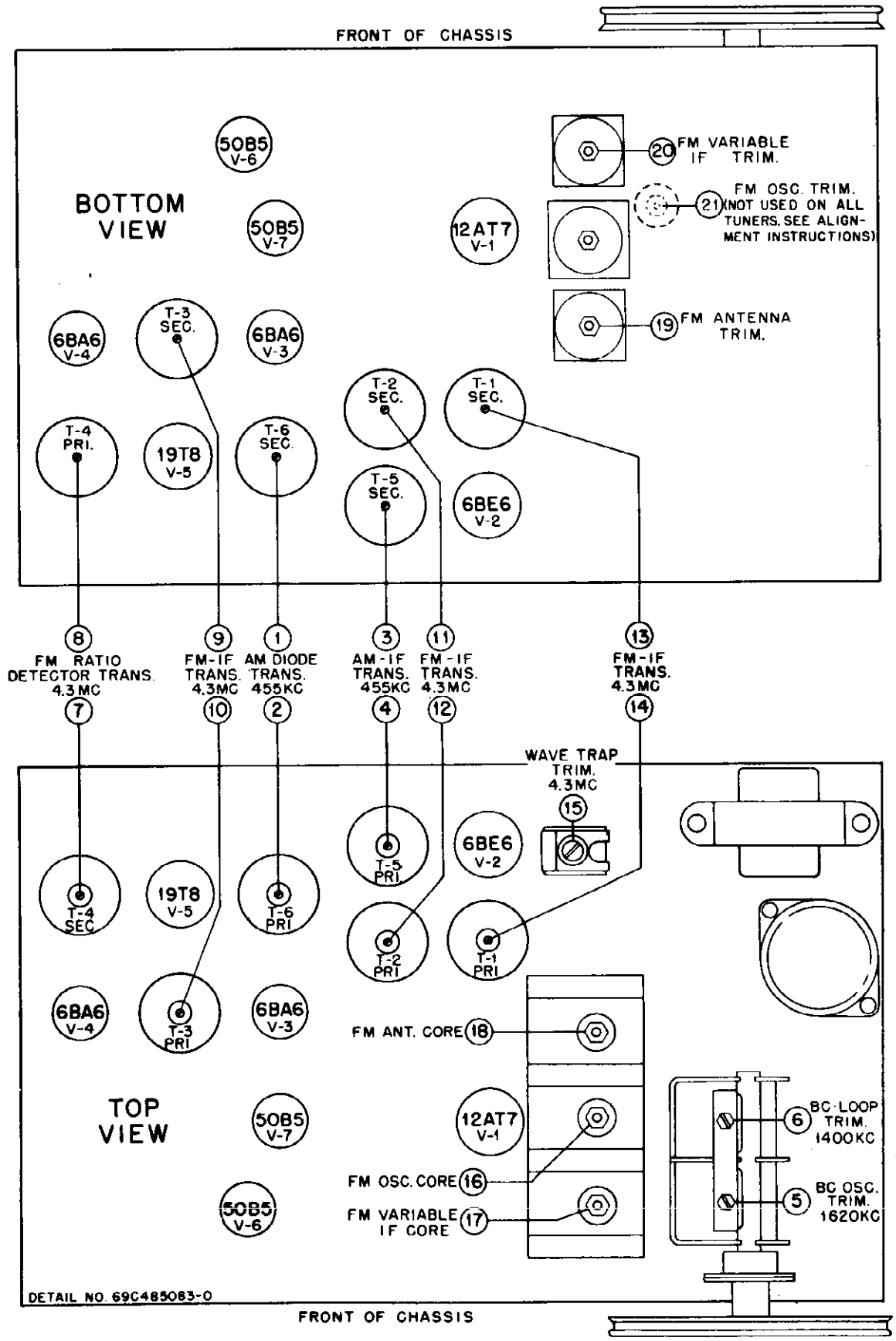

FIGURE 2. CHASSIS HS-133 TUBE & TRIMMER LOCATIONS

©John F. Rider

MODEL 88FM21,
Ch. HS-133

CHART I. ALIGNMENT PROCEDURE WHEN USING AM MODULATED SIGNAL GENERATOR AND STANDARD OUTPUT METER FOR COMPLETE RECEIVER ALIGNMENT

STEP	DIAL SET TO	BAND SW. SET TO	DUMMY	SIGNAL GENERATOR CONNECTED TO	SIGNAL GENERATOR SET AT	ADJUST TRIMMER OR CORE	REMARKS
455 KC IF CHANNEL ALIGNMENT							
1.	High freq. end.	BC	.1 mf	6BE6 (V-2) BC Conv Grid (Pin #7)	455 Kc	1,2,3 & 4	Adjust for maximum output.
BROADCAST BAND ALIGNMENT							
2.	1620 Kc (gang fully opened)	BC	.1 mf	6BE6 (V-2) BC Conv Grid (Pin #7)	1620 Kc	5	Adjust for maximum output. This sets oscillator to dial scale.
3.	1400 Kc	BC	None	Radiation loop*	1400 Kc	6	Tune in signal with receiver tuning knob, then peak trimmer 6.
4.3 MC IF CHANNEL ALIGNMENT & WAVETRAP ADJUSTMENT							
4.	-	-	-	-	-	7	Detune ratio detector transformer secondary by screwing core (7) out as far as it will go.
5.	(extreme high frequency end)	FM	.001 mf	12AT7 (V-1) 2nd FM Converter Grid (Pin #7)	4.3 Mc	8,9,10, 11, 12, 13 & 14	Adjust for maximum output.
6.	-	FM	300 ohms	FM Ant terminal (center clip on back)	4.3 Mc	15	Adjust for minimum output (wavetrap)
FM BAND ALIGNMENT							
Note: If tuner does not have FM oscillator trimmer (21), perform step 7 & disregard steps 7A, B & C. If tuner has FM oscillator trimmer (21), then disregard step 7 and perform steps 7A, B & C in its place.							
7.	105 Mc	FM	300 ohms	FM Ant terminal (center clip on back)	105 Mc	16	Adjust for maximum output. This sets oscillator to dial scale.
7A.	90 Mc	FM	300 ohms	FM Ant terminal (center clip on back)	90 Mc	21	Adjust for maximum output.
7B.	105 Mc	FM	300 ohms	FM Ant terminal (center clip on back)	105 Mc	16	Adjust for maximum output.
7C.	-	-	-	-	-	-	Repeat steps 7A & 7B until oscillator tracks with dial calibration.
8.	90 Mc	FM	300 ohms	FM Ant terminal (center clip on back)	90 Mc	19 & 20	Tune in signal with receiver tuning knob, then adjust 19 & 20 for maximum output.
9.	105 Mc	FM	300 ohms	FM Ant terminal (center clip on back)	105 Mc	17 & 18	Tune in signal with receiver tuning knob, then adjust 17 & 18 for maximum output.

*Connect output of signal generator to a 5" diameter, 3 turn loop and radiate signal into receiver loop. Minimum distance between loops should never be less than 12".

© John F. Rider

MODEL 88FM21,
Ch. HS-133

(CHART I. ALIGNMENT CONT'D)

STEP	DIAL SET TO	BAND SW. SET TO	DUMMY	SIGNAL GENERATOR CONNECTED TO	SIGNAL GENERATOR SET AT	ADJUST TRIMMER OR CORE	REMARKS
10.	-	-	-	-	-	-	Repeat steps 8 & 9 several times until further adjustment does not increase the output.
11.	105 Mc	FM	None	Radiate signal (or use weak station after performing Step 12)	105 Mc	19	Adjust for maximum output with FM figure 8 antenna connected.
ALIGN RATIO DETECTOR TRANSFORMER SECONDARY							
12.	-	FM	.001 mf	12AT7 (V-1) 2nd FM Converter Grid (Pin #7)	4.3 Mc	7	Adjust ratio detector transformer secondary for minimum response. The correct adjustment is sharply defined minimum response point between the two peaks.

CHART II. ALIGNMENT PROCEDURE WHEN USING FM SIGNAL GENERATOR AND OSCILLOSCOPE

STEP — OPERATION

455 Kc IF Channel Alignment

1. Same as Step 1 in Chart I (Use AM signal generator).

Broadcast Band Alignment

2. Same as Steps 2 & 3 in Chart I (Use AM signal generator).

4.3 Mc IF Channel Alignment (Use FM Signal Generator & Oscilloscope)

3. (A) Ratio Detector

1. Connect the input terminals of the oscilloscope vertical amplifier to the high side of the receiver volume control and common negative.

2. Connect the FM generator synchronizing voltage output terminals to a phase shifting network, consisting of a variable 1/2 megohm resistor in series with a .002 mf capacitor. The input to the oscilloscope horizontal amplifier is connected across the .002 mf capacitor. See Figure 3 . (This phase shifting network may not work with every oscilloscope. Different values of R & C may be required).

3. Apply an FM 4.3 Mc signal (125 Kc deviation) through a .001 mf capacitor to the control grid (pin #1) of tube V-4 (6BA6) in the third FM IF Amplifier stage.

4. Back out ratio detector transformer secondary core (7) several turns and then adjust ratio detector transformer primary (8) for maximum amplitude. The phase shifting network resistor is adjusted to give only one trace.

5. Adjust ratio detector transformer secondary (7) until a symmetrical pattern is obtained, with peaks occurring at about 100 Kc above and below 4.3 Mc and is substantially linear between peaks. The trace should pass through the intersection of the vertical and horizontal axis. The phase shifting network should be adjusted to give only a single pattern at all times. See Figure 4 . It will be necessary to go over ratio detector transformer primary (8) and secondary (7) adjustments several times before a pattern of maximum amplitude and correct symmetry is obtained.

(B) 4.3 Mc IF Amplifiers & Wavetrap

1. Apply an FM 4.3 Mc signal (100 Kc deviation) to the control grid (pin #1) of tube V-3 (6BA6) in the

© John F. Rider

(CHART II. ALIGNMENT CONT'D)

OPERATION

2nd FM IF amplifier stage, through a .001 mf capacitor and adjust both primary and secondary cores (9 & 10) to get a symmetrical pattern as before, with peaks occurring at a slightly lower deviation.

2. Move signal generator lead from tube V-3 to control grid (pin #1) of tube V-2 (6BE6) in the first FM IF amplifier stage, and adjust both primary and secondary cores (11 & 12) until a symmetrical pattern substantially linear between peaks is obtained.

3. Move signal generator lead from tube V-2 to FM antenna terminal (center clip on back). Turn 4.3 Mc wavetrap trimmer (15) off resonance and adjust both primary and secondary cores (13 & 14) until a symmetrical pattern substantially linear between peaks is obtained.

4. Leave signal generator connected to FM antenna terminal. Adjust 4.3 Mc wavetrap trimmer (15) for minimum output.

4. FM Band Alignment (Use FM Signal Generator & Output Meter)

(A) Connect generator output through a 300 ohm resistor to the receiver FM antenna terminal (center clip on back.)

(B) If tuner does not have oscillator trimmer (21) then set oscillator to dial scale as follows: Set receiver pointer to 105 Mc. Also set FM signal generator to 105 Mc (22-1/2 Kc deviation). Adjust FM oscillator core (16) for maximum output; this sets oscillator to dial scale.

If tuner does have oscillator trimmer (21) then set oscillator to dial scale as follows: Set receiver pointer to 90 Mc. Also set FM signal generator to 90 Mc (22-1/2 Kc deviation). Adjust FM oscillator trimmer (21) for maximum output. Next set receiver pointer and FM generator to 105 Mc and adjust FM oscillator core (16) for maximum output. Repeat oscillator adjustments at 90 Mc and 105 Mc until oscillator tracks with dial scale.

(C) Set FM signal generator to 90 Mc (22-1/2 Kc deviation). Tune in signal with receiver tuning knob and then adjust FM variable IF and FM antenna trimmers (19 & 20) for maximum output.

(D) Set FM signal generator to 105 Mc (22-1/2 Kc deviation). Tune in signal with receiver tuning knot and then adjust FM variable IF and FM antenna tuning cores (17 & 18) for maximum output.

(E) Repeat steps 4(C) and 4(D) until cores (17 & 18) and trimmers (19 & 20) reach their peak.

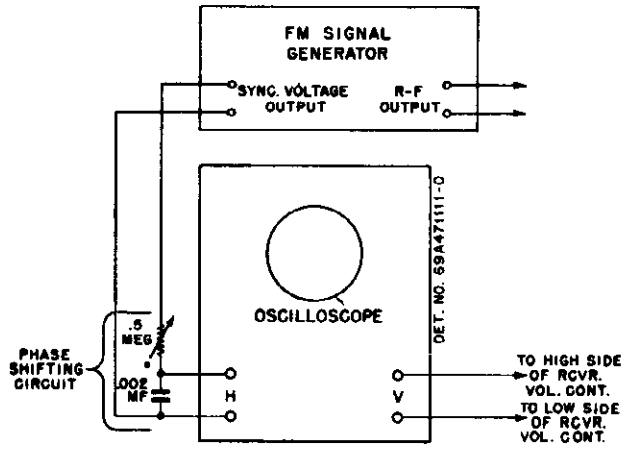

FIGURE 3. SIGNAL GENERATOR & OSCILLOSCOPE HOOKUP

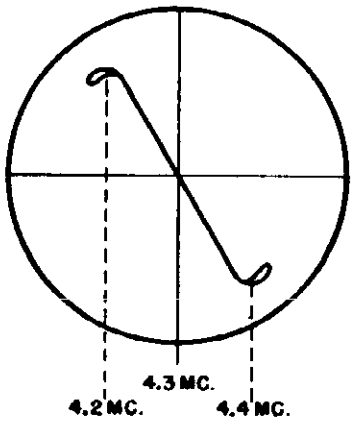

FIGURE 4. OSCILLOSCOPE PATTERN

© John F. Rider

MODEL 88FM21,
Ch. HS-133

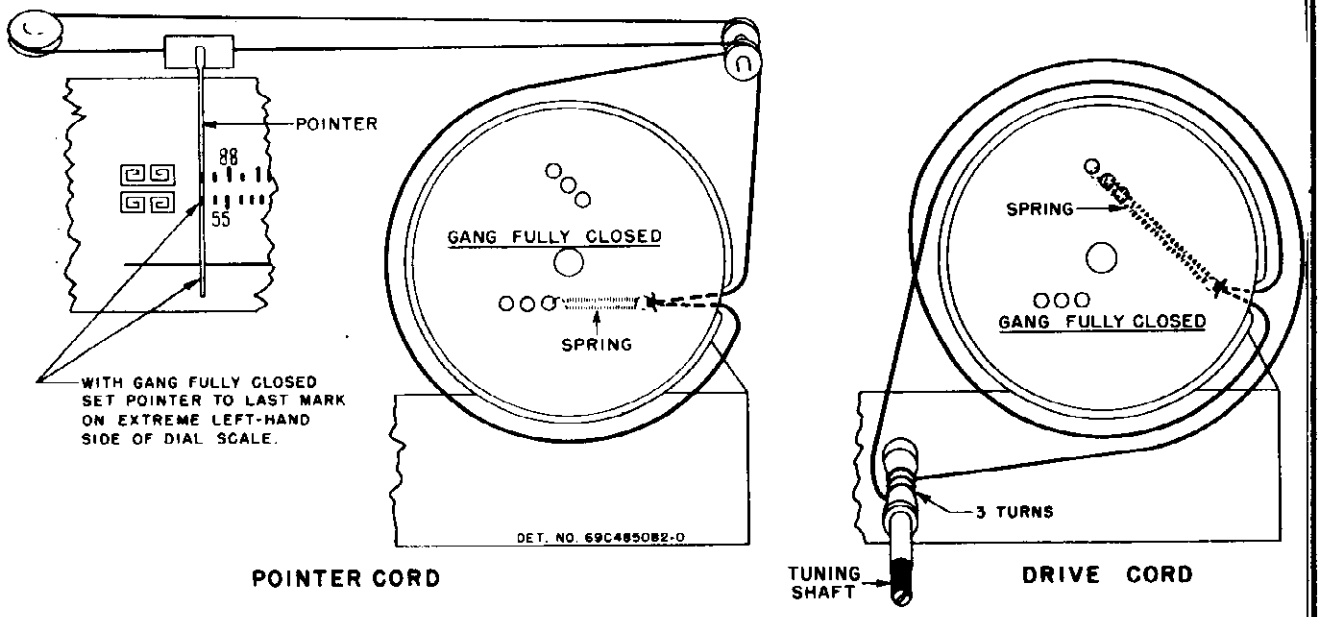

FIGURE 5. CHASSIS HS-133 STRING DRIVE DETAIL

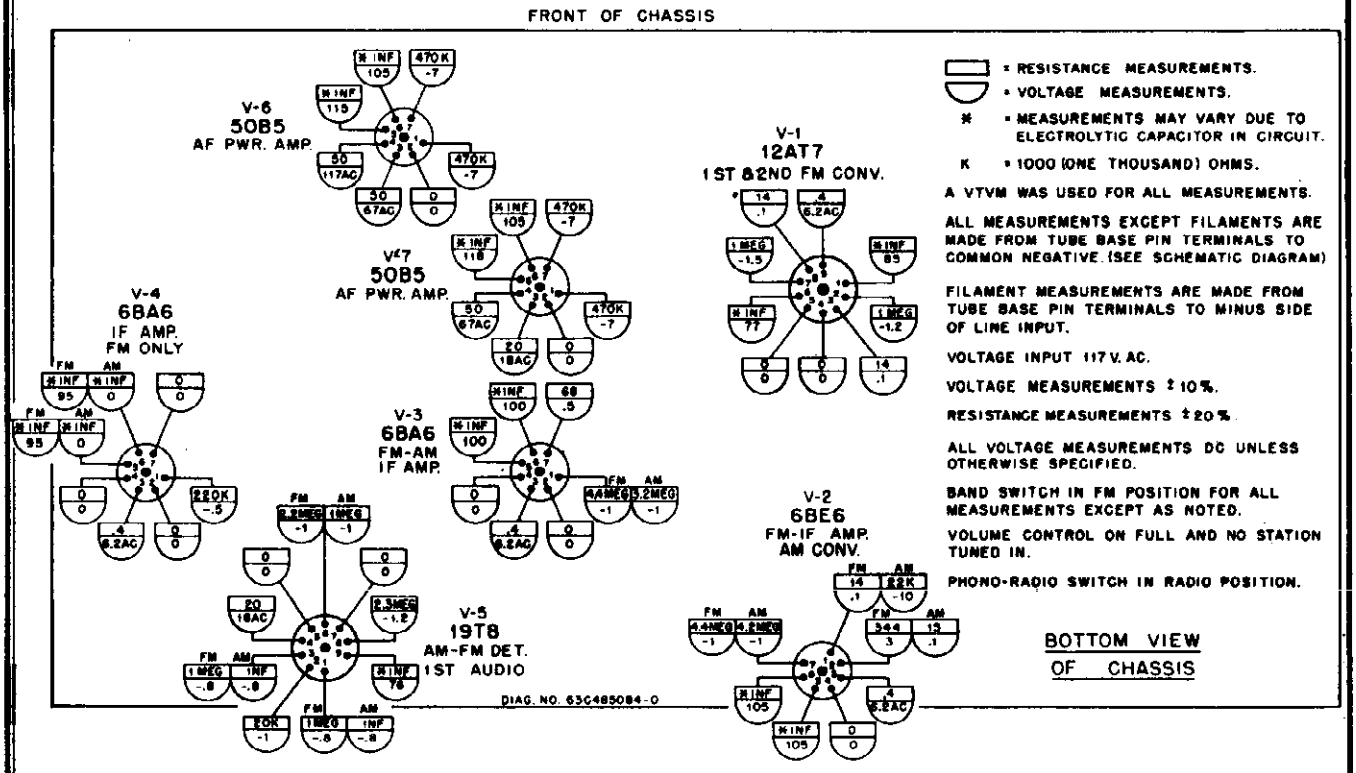

FIGURE 6. CHASSIS HS-133 VOLTAGE & RESISTANCE DIAGRAM

©John F. Rider

MODEL 88FM21,
Ch. HS-133

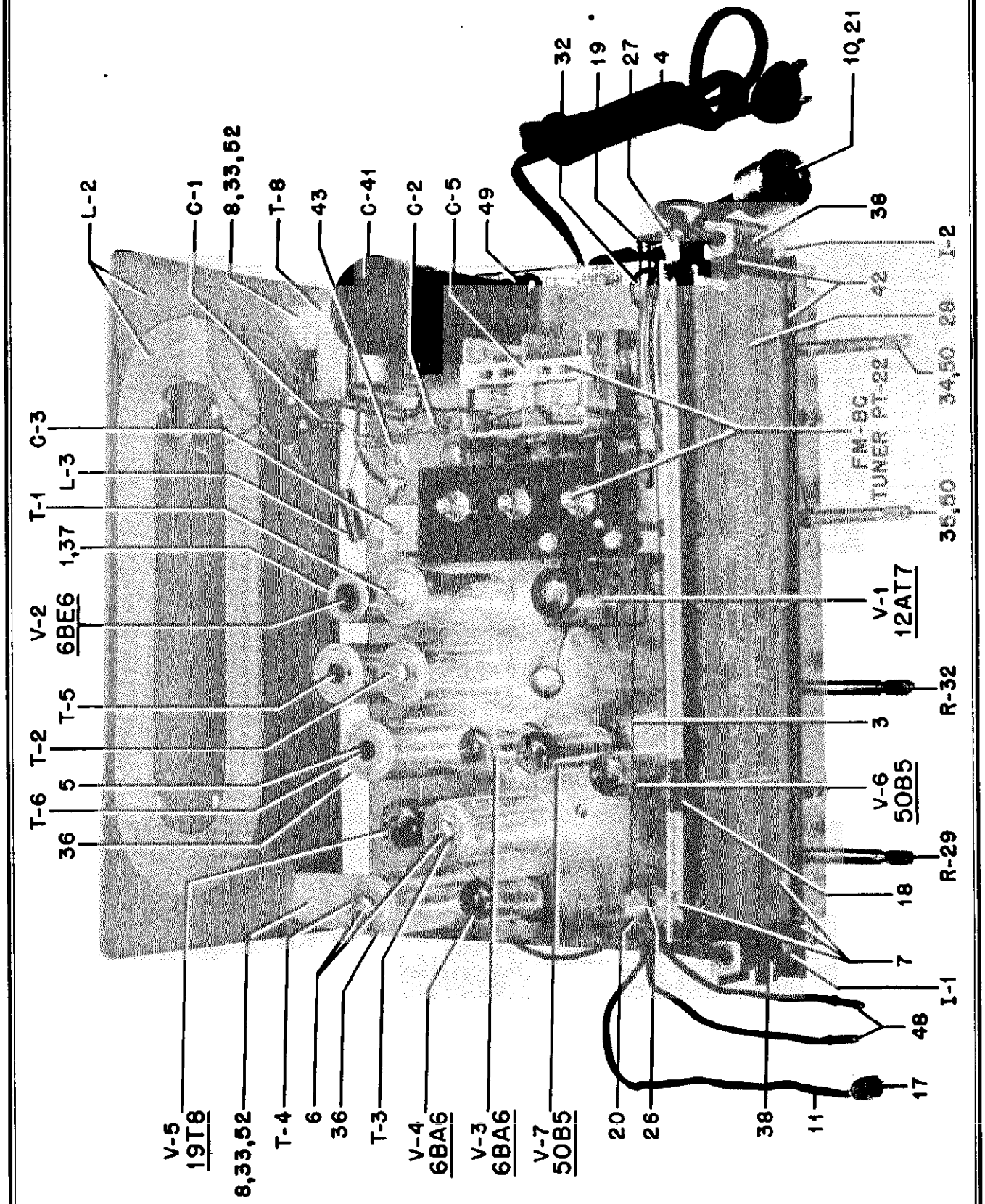

FIGURE 8. CHASSIS HS-133 PARTS LOCATIONS - TOP VIEW

©John F. Rider

MODEL 88FM21,
Ch. HS-133

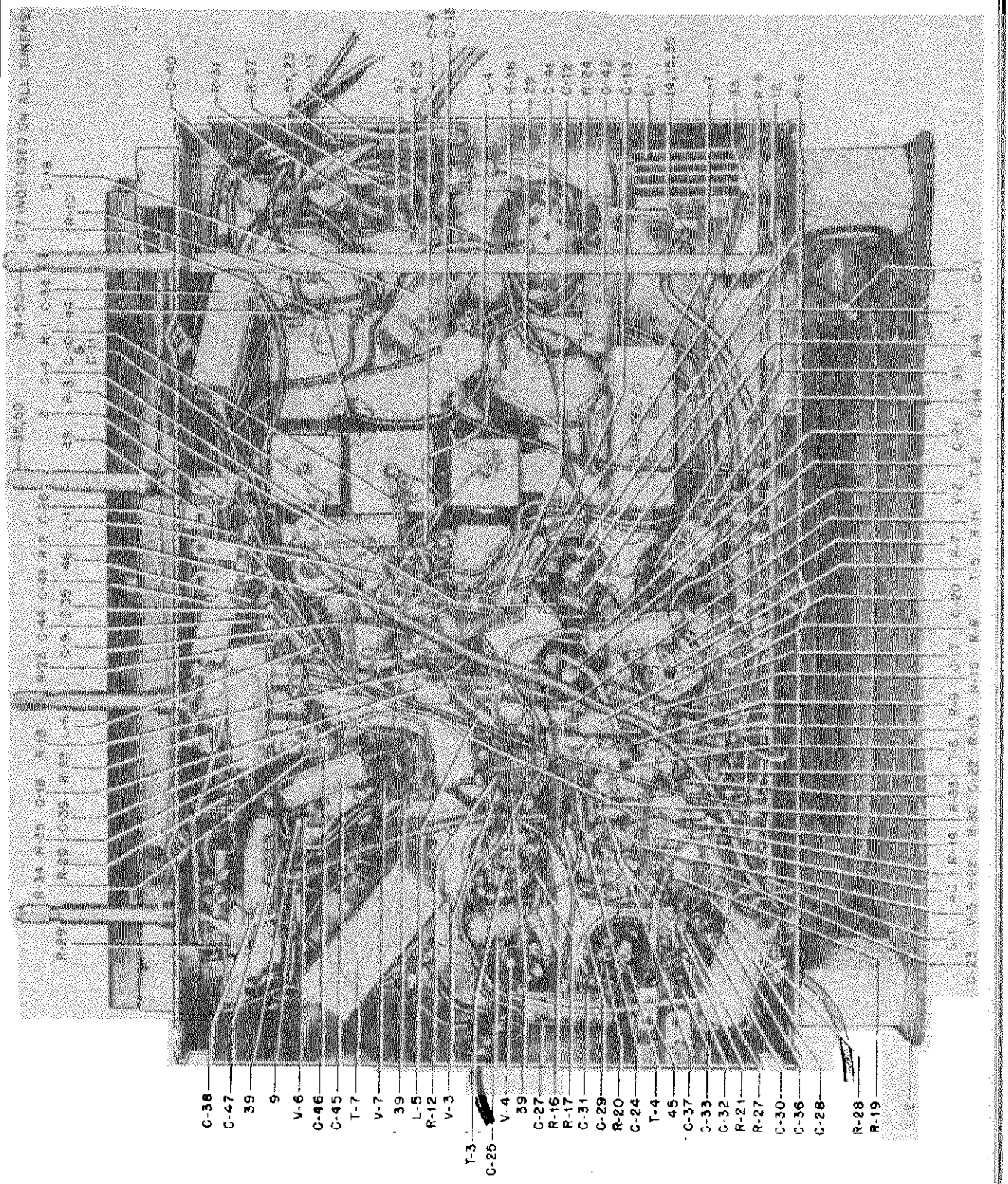

FIGURE 9. CHASSIS HS-133 PARTS LOCATIONS - BOTTOM VIEW

©John F. Rider

MODEL 88FM21,
Ch. HS-133

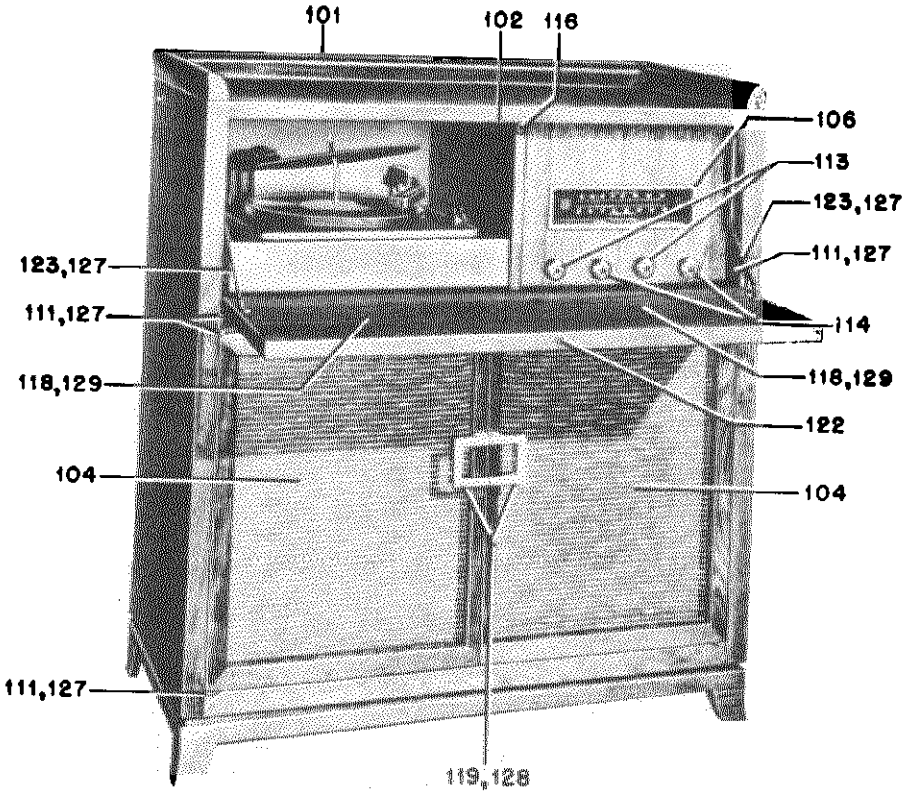

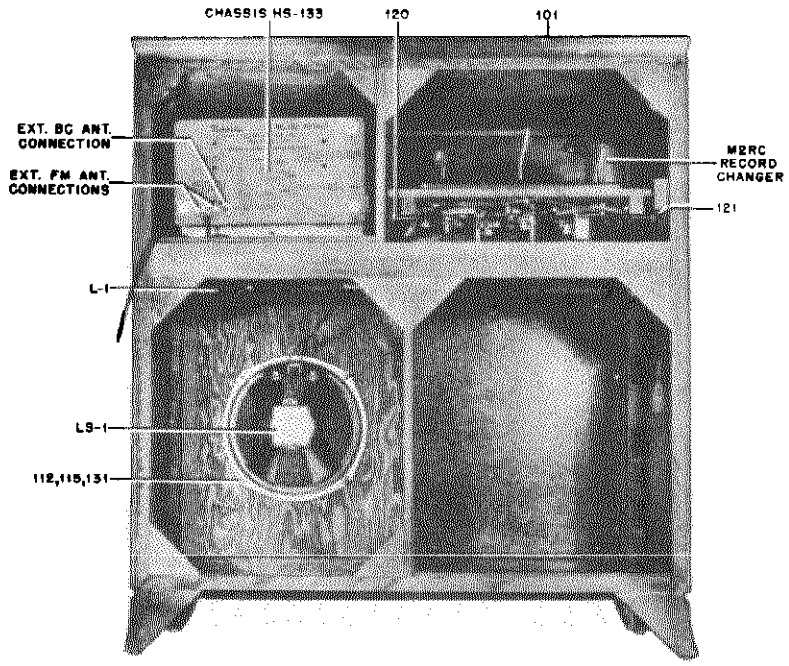

FIGURE 10. MODEL 88FM21 CABINET PARTS LOCATIONS - FRONT & REAR VIEWS

©John F. Rider

REF. NO.	PART NO.	DESCRIPTION
		CAPACITORS
C-1	21K484347	Molded: 7 mmf 500V
C-2	21K484347	Molded: 7 mmf 500V
C-3	20A75234	Trimmer, mica: 10-80 mmf with mtg brkt (part of wavetrap)
C-4	8S9802	Paper: .02 mf 400V
C-5A,B, C&D	19K482832	Variable, two-gang: includes trimmers 5C & 5D
C-7	19A470426	Variable air: 2.5 to 30 mmf (not used in all tuners)
C-8	21K478410	Ceramic: 1000 mmf 500V
C-9	8S9809	Paper: .01 mf 400V
C-10,& 11	21B484337	Ceramic: 250 mmf 450V; dual
C-12	8S9809	Paper: .01 mf 400V
C-13	21K77373	Ceramic: 50 mmf 500V
C-14	21R6642	Mica: 50 mmf 500V
C-15	21K31493	Ceramic: 25 mmf
C-17	8K471628	Paper: .02 mf 100V
C-18	8S9809	Paper: .01 mf 400V
C-19	8S9816	Paper: .05 mf 400V
C-20	8S9825	Paper: .01 mf 200V
C-21	8K471635	Paper: .05 mf 400V
C-22	8S9816	Paper: .05 mf 400V
C-23	21B77286	Ceramic: 100 mmf 500V
C-24	21K77375	Ceramic: 250 mmf 500V
C-25	8S9809	Paper: .01 mf 400V
C-26	8S9809	Paper: .01 mf 400V
C-27	8S9809	Paper: .01 mf 400V
C-28	8S9816	Paper: .05 mf 400V
C-29	21B470567	Ceramic: 4700 mmf 500V
C-30	21K478410	Ceramic: 1000 mmf 500V
C-31	21B77286	Ceramic: 100 mmf 500V
C-32	21K478410	Ceramic: 1000 mmf 500V
C-33	21K478410	Ceramic: 1000 mmf 500V
C-34	8S9807	Paper: .1 mf 400V
C-35	21K77375	Ceramic: 250 mmf 500V
C-36	23A481316	Electrolytic: 8 mf 50V
C-37	21K77375	Ceramic: 250 mmf 500V
C-38	8S9809	Paper: .01 mf 400V
C-39	8S9809	Paper: .01 mf 400V
C-40	8S9805	Paper: .05 mf 100V
C-41	23B482811	Electrolytic: 125-125-40-100 mf/150-150-150-25V
C-42	8S9816	Paper: .05 mf 100V
C-43	8S9813	Paper: .005 mf 600V
C-44	8S9809	Paper: .01 mf 400V (Note: .02 mf used in some sets)
or	8S9802	Paper: .02 mf 400V
C-45	8S9809	Paper: .01 mf 400V
C-46	8S9809	Paper: .01 mf 400V
C-47	8S9809	Paper: .01 mf 400V
		RECTIFIER
E-1	48B482807	Selenium type: half-wave; 150 ma
		DIAL LIGHT
I-1,2	65X11854	Bulb: 6-8V .15A tubular bayonet base; clear, #47
		COILS
L-1	24C482890	FM loop, panel & leads assembly
L-2	24C482833	BC loop & panel assembly
L-3	24A77240	Wavetrap coil
L-4	24A484336	BC oscillator coil
L-5	24A470505	RF choke
L-6	24A74989	Filament choke
L-7	25B482809	Power filter choke
		SPEAKER
LS-1	50C484255	Speaker: 10" PM; 3.2 ohm voice coil
		RESISTORS
		Note: All resistors are insulated, carbon type, 20% unless otherwise specified.
R-1	6R6004	1 meg 1/2W
R-2	6R6004	1 meg 1/2W
R-3	6R5610	8200 10% 1W
R-4	6R6028	22,000 1/2
R-5	6R6028	22,000 1/2W
R-6	6R6378	56,000 10% 1/2W
R-7	6R6004	1 meg 1/2W
R-8	6R6022	330 10% 1/2W
R-9	6R6301	1000 1/2W
R-10	6R6028	22,000 1/2W
R-11	6R6012	33,000 1/2W

© John F. Rider

R-12	6R6007	68 1/2W
R-13	6R3927	2.2 meg 1/2W
R-14	6R6301	1000 1/2W
R-15	6R6056	47,000 1/2W
R-16	6R6015	220,000 1/2W
R-17	6R6012	33,000 1/2W
R-18	6R6182	150,000 1/2W
R-19	6R6301	1000 1/2W
R-20	6R6090	470 10% 1/2W
R-21	6R6028	22,000 1/2W
R-22	6R3927	2.2 meg 1/2W
R-23	6R6032	470,000 1/2W
R-24	6R488111	22 10% 2W
R-25	6R488110	470 1W
R-26	6R6075	100,000 1/2W
R-27	6R6039	4700 1/2W
R-28	6R2119	15,000 1/2W
R-29	18K471518	Volume Control: 1 meg; tapped at 300,000 ohms, includes power swtich
R-30	6R3927	2.2 meg 1/2W
R-31	6R6075	100,000 1/2W
R-32	18K482815	Tone Control: 1 meg; includes phono-radio switch
R-33	6R6075	100,000 1/2W
R-34	6R6032	470,000 1/2W
R-35	6R6032	470,000 1/2W
R-36	17K484269	6.8 10% 1/2W molded; wirewound
R-37	17A470492	68 5% 2W molded; wirewound
R-38	6R6390	180 10% 1W

SWITCH

S-1	40B470432	Bandswitch

TRANSFORMERS

T-1	24B481391	1st IF, 4.3 Mc: complete with iron cores and padding capacitors but less shield.
T-2	24B471670	2nd IF, 4.3 Mc: complete with iron cores and padding capacitors but less shield.
T-3	24B471672	3rd IF, 4.3 Mc: complete with iron cores and padding capacitors but less shield.
T-4	24B481393	Ratio Detector Transformer, 4.3 Mc: complete with iron cores and padding capacitors but less shield
T-5	24B482863	IF, 455 Kc: complete with iron cores and padding capacitors but less shield
T-6	24B482865	Diode, 455 Kc: complete with iron cores and padding capacitors but less shield.
T-7	25B482808	Output Transformer
T-8	25B482810	Filament Transformer

CHASSIS PARTS - MECHANICAL

1	26A473002	Base, shield mtg (for V-2)
2	7A77337	Bracket, tuning shaft
3	11M8944	Cord, dial: 18 lb; black
4	30K21859	Cord, line and plug: 9 ft long
5	46A470885	Core, iron: threaded (for T-5 & 6 pri & sec)
6	46A70023	Core, iron & screw (for T-1, 2, 3 & 4 pri & sec)
7	1X471776	Dial Plate, Brackets, Pullies & Dial Scale Assembly
8	57A77084	Dowel, back mtg: wood
9	1X484277	Lead Assembly: single conductor; shielded; 9-1/2" long
10	1X484276	Lead Assembly, phono motor: includes receptacle
11	1X484278	Lead & Plug Assembly (phono pickup connector)
12	1X470545	Lever and Rivet Assembly
13	32A24815	Lock, line cord: fiber
14	4S7650	Lockwasher: #6 internal; steel; cad pl (rectifier mtg)
15	2S7002	Nut: 6-32 x 5/16 hex; steel; cad pl (rectifier mtg)
16	2S7051	Nut: 3/8-32 x 9/16; cad pl; Palnut (volume and tone control mtg)
17	28K71775	Plug, insulated (phono pick-up)
18	52B481704	Pointer, dial
19	49A23960	Pulley, cord: 1/4" groove
20	49A21552	Pulley, cord: 1/2" groove
21	9A50680	Receptacle: 3 prong; includes shell (phono-motor)
22	5S7771	Rivet: .088 x 3/16; steel; nkl pl (tube socket mtg)
23	5S7707	Rivet: .122 x 5/32; steel; nkl pl (trimmer & bracket mtg, terminal strip mtg and filament trans mtg)
24	5S7701	Rivet: .122 x 3/16; steel; nkl pl (wafer mtg & tuning shaft brkt mtg)
25	5S7708	Rivet: .122 x 9/32; steel; nkl pl (line cord lock mtg)
26	5A71246	Rivet, shoulder: .187" long
27	5A71735	Rivet, shoulder: 1/2" long
28	34C482834	Scale, dial: glass

© John F. Rider

29	3S7506	Screw: #6 x 1/4 PKZ plain hex head sheet metal screw; steel; cad pl (BC oscillator mounting) .....
30	3S2977	Screw: 6-32 x 1-1/8 plain hex head machine screw; steel; cad pl (rectifier mtg) ..
31	3S7454	Screw: #8 x 1/4 PKZ plain hex head sheet metal screw (dial mtg) .....
32	3S7507	Screw: #8 x 5/8 PKZ plain hex head sheet metal screw; steel; cad pl (tuner mtg).
33	3S3363	Screw: #8 x 2" PKZ plain hex head sheet metal screw; cad pl (back mtg) .....
34	47B482812	Shaft, band switch .....
35	1K471779	Shaft and Pulley Assembly (tuning shaft)
36	26K485936	Shield, coil (for T-1, 2, 3, 4, 5 & 6) .
37	26A90301	Shield, tube .....
38	9A482869	Socket, dial light & bracket .....
39	9A472534	Socket, tube: miniature; 7 prong .....
40	9A481376	Socket, tube: noval; 9 prong; wafer (for V-5)
41	41A14244	Spring, tension coil (on drive & pointer cords) .....
42	37K21114	Strip, channel: rubber; 1" long (dial scale mtg) .....
43	31K85348	Strip, terminal: 1 insulated lug, #2 mtg
44	31K471564	Strip, terminal: 3 insulated lugs, #2 gnd
45	31K470746	Strip, terminal: 3 insulated lugs, #2 mtg
46	31K75232	Strip, terminal: 4 insulated lugs, #3 mtg
47	31K471562	Strip, terminal: 5 insulated lugs, #4 mtg
48	29A5400	Terminal, plain pin (on spkr leads) ....
49	9A22056	Wafer, electrolytic mtg: 4 holes .....
50	4A70015	Washer "C" (tuning and band switch shaft retainer) .....
51	4S1719	Washer: 3/8 x .140 x .030 thick; steel; cad pl (line cord lock mtg) .....
52	4S7563	Washer: 5/8 x .203 x .033 thick; steel; cad pl (back mtg) .....
CABINET PARTS		
101	16F482827	Cabinet, console: brown mahogany .....
102	55K482159	Catch, bullet: statuary bronze finish ..
103	42A75825	Clip, mtg (supports phono power connector) .....
104	13K484218	Cloth, grille .....
105	15C482814	Cover, chassis bottom .....
106	13K482138	Escutcheon, dial .....
107	5A70098	Eyelet (on chassis retainer screws).....
108	5A71081	Eyelet, chassis (on each corner of chassis) .....
109	5K485954	Grommet, chassis mtg (chassis cushions-on each corner of chassis) .....
110	5K485955	Grommet, chassis retainer (on chassis retainer screws) .....
111	55A480240	Hinge, door: statuary bronze finish ....
112	4S7657	Lockwasher: #8 external; steel; cad pl (spkr mtg) .....
113	36K471545	Knob, control: plain (volume and tuning)
114	36K471324	Knob, control: with dot (phono-radio and bandswitch) .....
115	2S7003	Nut: 8-32 x 5/16 hex; steel; cad pl (spkr mtg) .....
116	35K470657	Pad, felt (drop leaf cushion) .....
117	64K471459	Panel, cabinet rear .....
118	55A482892	Pull, drawer: brushed brass finish (for drop leaf panel) .....
119	55A482893	Pull, drawer: brushed brass finish (for record compartment and dummy panel) ...
120	55K74787	Rail, support: left-hand .....
121	55C74786	Rail, support: right-hand .....
122	55K482160	Strike, bullet: statuary bronze finish .
123	55B471529	Support, fall: statuary bronze finish ..
124	3S3367	Screw: #5 x 3/8 PKA plain hex head sheet metal screw; black parkerized finish (mounts phono power connector support clip) .....
125	3S2695	Screw: #6 x 3/16 PKZ plain hex head sheet metal screw; steel; cad pl (chassis cover mtg) .....
126	3S3369	Screw: #8 x 3/8 PKA plain hex head sheet metal screw; copper oxide finish (FM loop mtg) .....
127	3S1344	Screw: #6 x 5/8 slotted flat head wood screw; statuary bronze finish (fall support mtg, hinge mtg, etc.) .....
128	3S488103	Screw: 8-32 x 1 slotted flat head machine screw; statuary bronze finish (record comp pull mtg) .....
131	3K27913	Screw, speaker mtg .....
132	4S7562	Washer: 7/16 x 3/16 x .033 thick, steel; cad pl (FM loop mtg) .....
133	4S7629	Washer: 1/2 x 3/16 x .048 thick; steel; cad pl (speaker mtg) .....
134	4S7589	Washer: 7/8 x 9/32 x .027 thick; steel; cad pl (on chassis retaining screws) .
129	3S488105	Screw: 8-32 x 1-1/8 slotted flat head machine screw; statuary bronze finish (drop leaf pull mtg) .....
130	3S7534	Screw: #8 x 1-3/8 PKA plain hex head sheet metal screw; steel; cad pl (chassis retaining screws) .....

© John F. Rider

MODELS 79XM21,
79XM22; Ch. HS-168

GENERAL INFORMATION

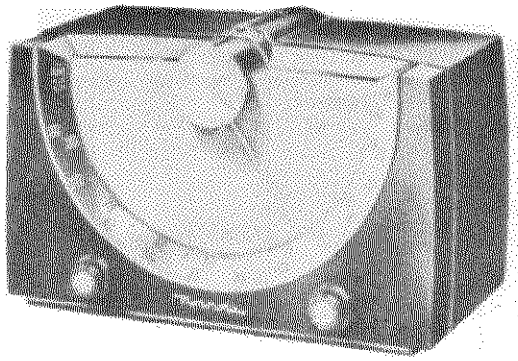

TYPE - FM-AM table model receiver

TUNING RANGE - AM 535 to 1620 Kc IF - 455 Kc
FM 88 to 108 Mc IF - 10.7 Mc

TUBE COMPLEMENT - 12BA6 - FM-AM RF Amplifier
12BA7 - FM-AM Converter
12BA6 - FM-AM IF Amplifier
12BA6 - FM IF Amplifier
19T8 - FM Ratio Detector, AM Detector & 1st Audio Amplifier
50C5 - Power Amplifier
Rectifier - Selenium type

POWER SUPPLY - 117V AC or DC, 40 watts

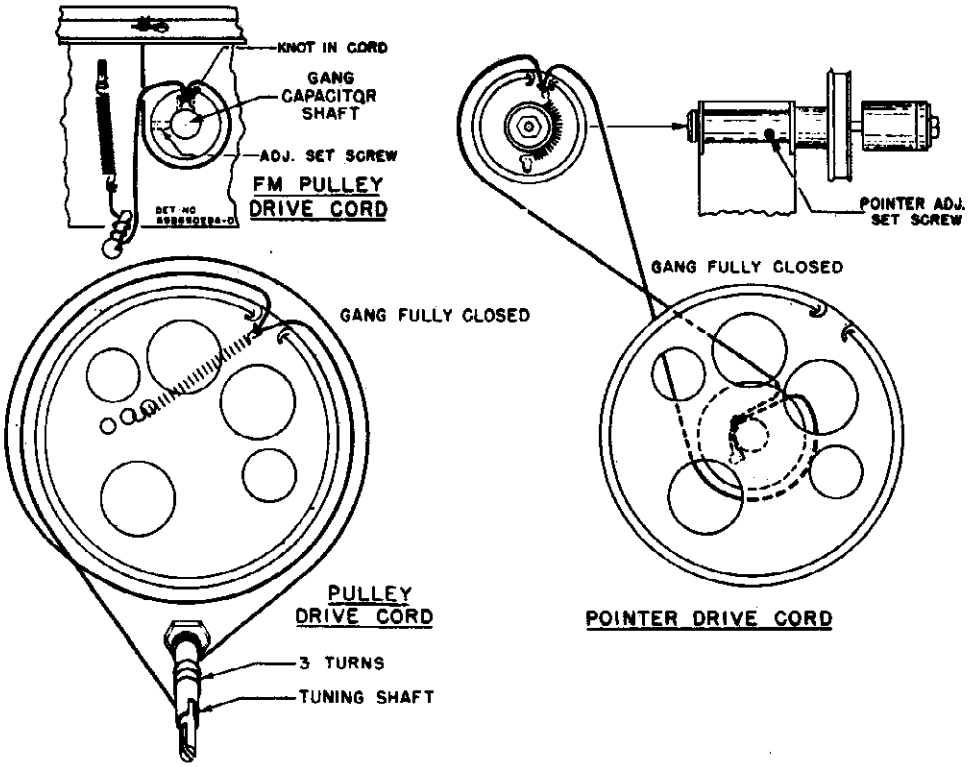

FIGURE 1. STRING DRIVE DETAIL

ALIGNMENT

Maximum performance can only be obtained if extreme care is exercised during alignment.

It is suggested that an isolation transformer be used between receiver and power line. If no isolation transformer is used and hum is encountered during alignment, connect the ground side of the signal generator output through a .1 mf capacitor to receiver chassis.

Refer to Figure 2 for location of all alignment trimmers and cores.

COMPLETE ALIGNMENT PROCEDURE USING AM SIGNAL GENERATOR

An AM (30% amplitude modulated) signal generator covering the frequencies shown in Alignment Chart I, is used to align the broadcast and FM bands. A low range output meter, connected across the speaker voice coil, is used as an output indicator.

The FM band alignment can be satisfactorily performed by following the instructions in the chart. When properly aligned, the ratio detector does not respond to amplitude modulation and since an AM type signal generator is used for aligning the FM circuits, it is necessary to detune the ratio detector transformer secondary before aligning the FM circuits. After completing the alignment of FM circuits, proceed to align the radio detector transformer secondary by applying a 10.7 Mc AM signal to the control grid (pin 7) of the FM converter tube (V-2) and adjust the ratio detector transformer secondary core for minimum audio output. No adjustment of the FM circuits should be attempted with AM after the ratio detector transformer secondary has been properly aligned.

Keep output of signal generator low so as not to overload stages and obtain false output indications. Keep receiver volume control at maximum; reduce generator output, as stages are brought into alignment, so output meter never reads more than .40 volts (.05 watts).

© John F. Rider

MODELS 79XM21, 79XM22; Ch. HS-168

CHART I. ALIGNMENT PROCEDURE WHEN USING AN AM MODULATED SIGNAL GENERATOR AND STANDARD OUTPUT METER

STEP	BAND	DUMMY ANTENNA	GENERATOR CONNECTION	GENERATOR FREQUENCY	TUNER SET TO	ADJUST	REMARKS
455 Kc AM IF Alignment							
1.	AM	.1 mf	12BA7 (V-2) Conv Grid Pin #7	455 Kc	Gang opened	1, 2, 3 & 4	Adjust for maximum
AM RF Alignment							
2.	AM	.1 mf	12BA7 (V-2) Conv Grid Pin #7	1620 Kc	Gang fully opened	5	Adjust for maximum
3.	AM	.1 mf	12BA7 (V-2) Conv Grid Pin #7	538 Kc	Gang fully closed	7	Adjust for maximum
4.	-	-	-	-	-	-	Repeat steps 2 & 3 several times since one adj affects the other slightly; the osc trimmer (7) should be the last adj made. Steps 2 & 3 set osc range and calibrate osc to dial scale.
5.	AM	-	Radiation loop*	1400 Kc	Tune in signal	6	Adjust for maximum
10.7 Mc FM IF Alignment							
6.	-	-	-	-		8	Detune ratio detector transformer secondary core by screwing core (8) out several turns.
7.	FM	.001 mf	12BA7 (V-2) Conv Grid Pin #7	10.7 Mc	Extreme high freq end	9, 10 11,12 & 13	Adjust for maximum
FM RF Alignment							
8.	AM	-	Radiation loop*	1320 Kc	Tune in signal	-	This is for FM calibration purposes. Leave gang in this position for step 9.
9.	FM	300 ohms	12BA7 (V-2) Conv Grid Pin #7	105 Mc	Leave gang at same setting as in step 8.	14	Adjust osc core adjustment nut (14) until maximum signal output is obtained.
10.	-	-	-	-	-	15	Close gang fully and turn RF core adjustment nut (15) counterclockwise until core is at bottom of pipe, then turn nut (15) four turns clockwise.
11.	FM	300 ohms	FM Ant terminal #2 on loop back (open jumper between terminals)	90 Mc	Tune in signal	16	Adjust for maximum.
12.	FM	300 ohms	FM Ant terminal #2 on loop back (open jumper between terminals)	105 Mc	Tune in signal	15	Adjust for maximum.
13.	-	-	-	-	-	-	Repeat steps 11 & 12 until no further gain can be obtained. Make tuning plug (16) the last adjustment.
Ratio Detector Secondary Alignment							
14.	FM	.001 mf	12BA7 (V-2) Conv Grid Pin #7	10.7 Mc	High freq end	8	Adjust for minimum response between two peaks

*Connect generator output to a 5" diameter 3 turn loop and couple to receiver loop. Keep loops at least 12" apart.

SERVICE NOTES

The chassis of this receiver is connected directly to the power line. When operating the chassis (from AC line) outside of its cabinet, use an isolation transformer between power line and receiver to reduce the possibility of electrical shock. If an isolation transformer is not available, check the AC voltage between chassis and bench ground, if there is any indication of voltage, reverse line plug before handling the set.

©John F. Rider

MODELS 79XM21, 79XM22; Ch. HS-168

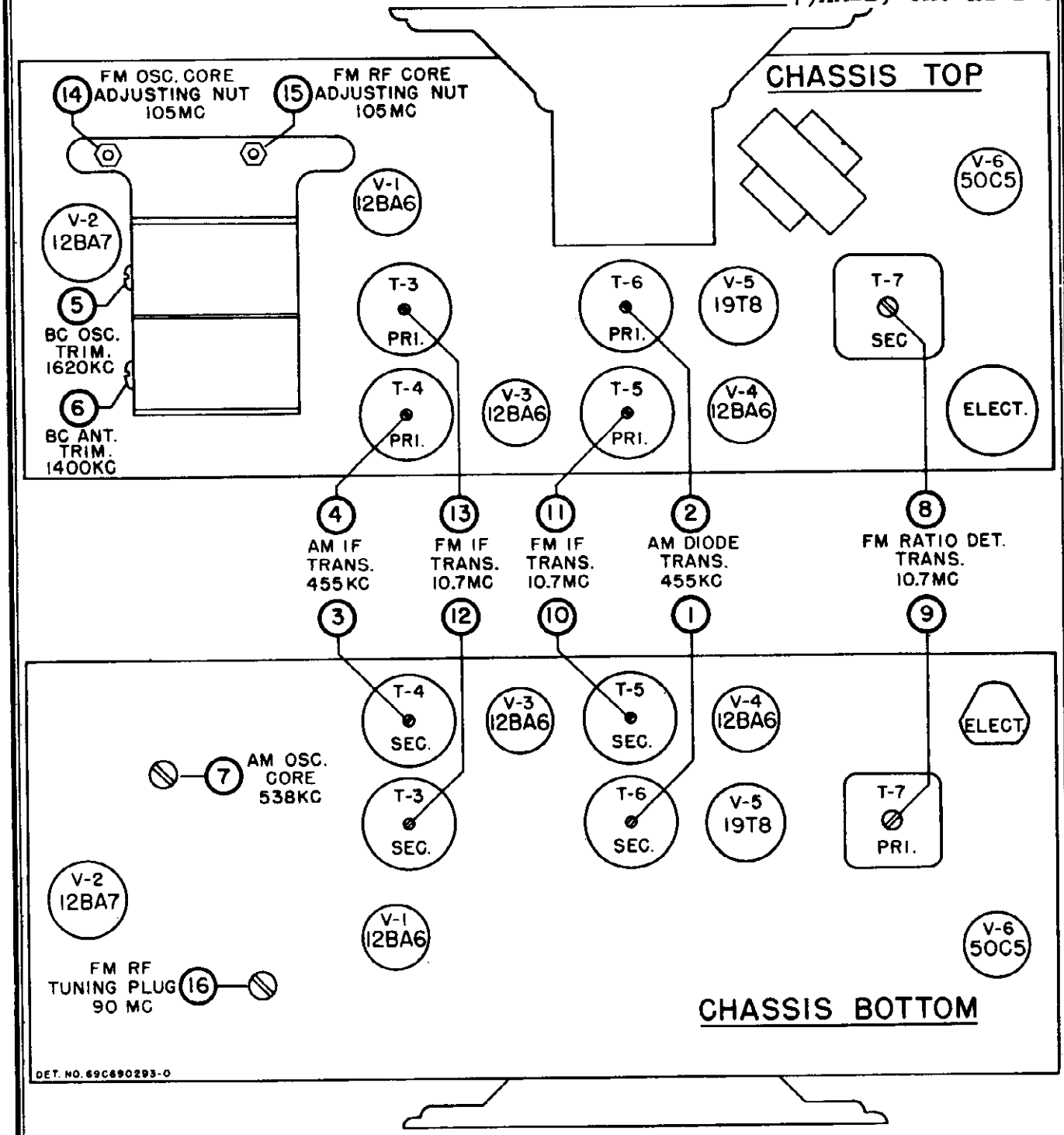

FIGURE 2. TUBE AND TRIMMER LOCATIONS

TO REMOVE CHASSIS FROM CABINET

1. Remove the pointer by setting it to either end of the dial scale and then lift the tip slightly above top of the cabinet. Now grasp the pointer tip with the fingers and screw it out of the pointer shaft (similar to removing a screw).

2. Remove the control knobs; they pull off.

3. Remove the four screws and washers that hold the back cover to the cabinet and remove the back cover.

4. Remove the two screws that hold the chassis to cabinet and slide the chassis from the cabinet.

© John F. Rider

MODELS 79XM21, 79XM22; Ch. HS-168

CHART II. FM ALIGNMENT PROCEDURE WHEN USING FM SIGNAL GENERATOR AND OSCILLOSCOPE

1. 10.7 Mc FM IF Channel Alignment (Use FM Signal Generator & Oscilloscope)

(A) Ratio Detector Alignment

1. Connect the input terminals of the oscilloscope vertical amplifier to the high side of the receiver volume control and chassis.
2. Connect the FM generator synchronizing voltage output terminals to a phase shifting network consisting of a variable 1/2 megohm resistor in series with a .002 mf capacitor. The input to the oscilloscope horizontal amplifier is connected across the .002 mf capacitor. See Figure 3. (This phase shifting network may not work with every oscilloscope. Different values of R & C may be required).
3. Apply an FM 10.7 Mc signal (200 Kc deviation) through a .001 mf capacitor to the control grid (pin 1) of the tube V-4 (12BA6) in the second FM IF amplifier stage
4. Back out ratio detector transformer secondary core (8) several turns and then adjust ratio detector transformer primary (9) for maximum amplitude. The phase shifting network resistor is adjusted to give only one trace.
5. Adjust ratio detector transformer secondary (8) until a symmetrical pattern is obtained, with peaks occurring at about 190 Kc above and below 10.7 Mc and is substantially linear between peaks. The trace should pass through the intersection of the vertical and horizontal axis. The phase shifting network should be adjusted to give only a single pattern at all times. See Figure 4. It will be necessary to go over ratio detector transformer primary (9) and secondary (8) adjustments several times before a pattern of maximum amplitude and correct symmetry is obtained.

(B) 10.7 Mc IF Alignment

1. Apply an FM 10.7 Mc signal (160 Kc deviation) to the control grid (pin 7) of tube V-3 (12BA6) in the first FM IF amplifier stage, through a .001 mf capacitor and adjust both primary and secondary cores (10 & 11) to get a symmetrical pattern as before, with peaks occurring at a slightly lower deviation.
2. Move signal generator lead from tube V-3 to control grid (pin 7) of tube V-2 (12BA7) in the converter stage, and adjust both primary and secondary cores (12 & 13) until a symmetrical pattern substantially linear between peaks is obtained.

2. RF Alignment (Use FM Signal Generator & Output Meter)

The FM signal generator may now be used to align the FM RF and oscillator channels. Merely follow steps 8 through 13, inclusive, in Chart I.

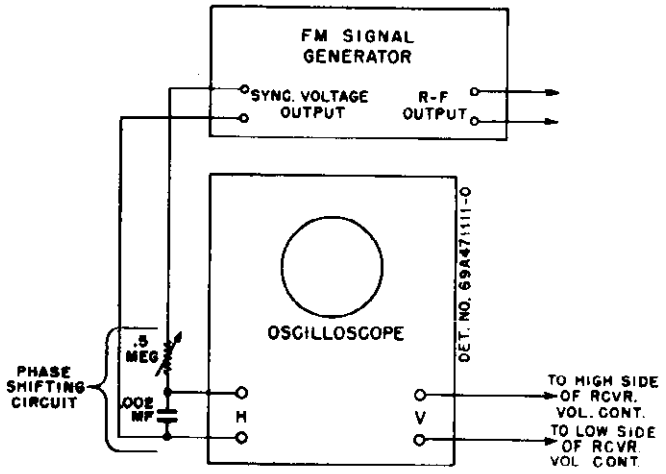

FIGURE 3. SIGNAL GENERATOR & OSCILLOSCOPE HOOKUP

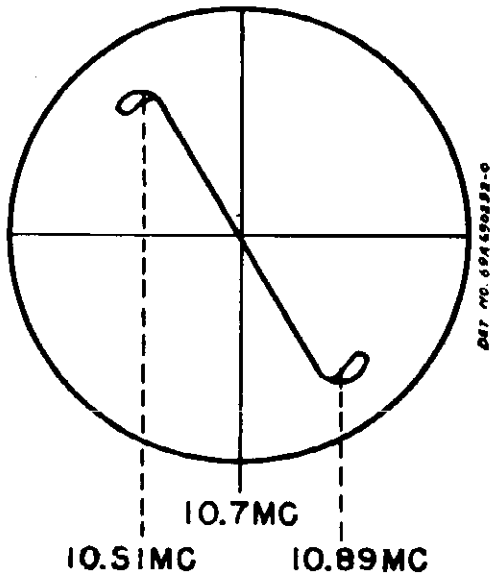

FIGURE 4. OSCILLOSCOPE PATTERN

© John F. Rider

MODELS 79XM21,
79XM22; Ch. HS-168

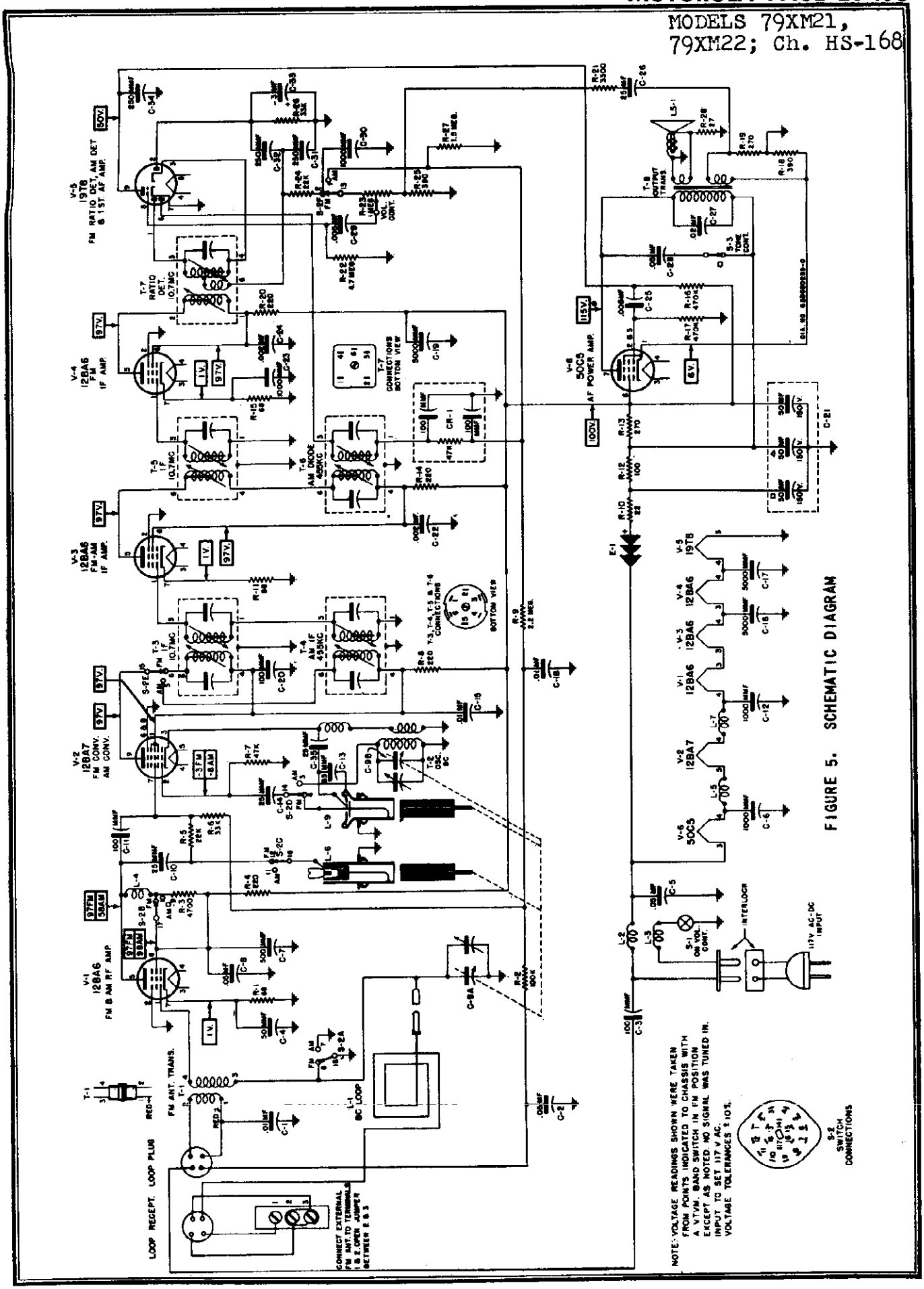

FIGURE 5. SCHEMATIC DIAGRAM

©John F. Rider

MODELS 79XM21, 79XM22; Ch. HS-168

REPLACEMENT PARTS LIST

Ref. No.	Part Number	Description
CHASSIS PARTS - ELECTRICAL		
Capacitors		
C-1	8S9809	Paper: .01 mf 400V
C-2	8A470606	Paper: .05 mf 400V
C-3	21B77286	Ceramic: 100 mmf 500V
C-4	21K77373	Ceramic: 50 mmf 500V
C-5	8K471635	Paper: .05 mf 400V
C-6	21K478410	Ceramic: 1000 mmf 500V
C-7	21K481377	Ceramic: 500 mmf 500V
C-8	8S9821	Paper: .05 mf 200V
C-9	19B690747	Variable: 2 gang
C-10	21K28816	Ceramic: 25 mmf 100V
C-11	21B77286	Ceramic: 100 mmf 500V
C-12	21K478410	Ceramic: 1000 mmf 500V
C-13	21B690688	Ceramic: 85 mmf 5% 350V
C-14	21K28816	Ceramic: 25 mmf 100V
C-15	8S9809	Paper: .01 mf 400V
C-16	21A470789	Ceramic, disc: 5000 mmf
C-17	21A470789	Ceramic, disc: 5000 mmf
C-18	8S9801	Paper: .01 mf 100V
C-19	21A470789	Ceramic, disc: 5000 mmf 450V
C-20	21B77286	Ceramic: 100 mmf 500V
C-21	23B690539	Electrolytic: 50-50-50 mf/150V
C-22	8S9824	Paper: .002 mf 400V
C-23	21K471761	Ceramic: 1000 mmf 350V
C-24	8S9824	Paper: .002 mf 400V
C-25	8A24966	Paper: .005 mf 100V
C-26	8S9810	Paper: .25 mf 100V
C-27	8S9802	Paper: .02 mf 400V
C-28	8S9821	Paper: .05 mf 200V
C-29	8A24966	Paper: .005 mf 100V
C-30	21K478410	Ceramic: 1000 mmf 500V
C-31	21K77375	Ceramic: 250 mmf 500V
C-32	21K77375	Ceramic: 250 mmf 500V
C-33	21K690543	Electrolytic: 3 mf/50V
C-34	21K77375	Ceramic: 250 mmf 500V
C-35	21K28816	Ceramic: 25 mmf 100V
Capacitor-Resistor		
CR-1	21A473040	Capacitor-Resistor: two 100 mmf capacitors & one 47,000 resistor in one unit
Rectifier		
E-1	48B482807	Rectifier, selenium
Coils		
L-1	1X690709	Loop Antenna Assembly, BC: complete including line cord, power and antenna input plugs
L-2	24B580540	Choke, RF
L-3	24B580540	Choke, RF
L-4	24A90064	Choke, RF
L-5	24K780128	Choke, RF
L-6	24C690584	Inductor and Capacitor Assembly, FM RF
L-7	24K780128	Choke, RF
L-8	24K780128	Choke, RF
L-9	24C690580	Inductor and Capacitor Assembly, FM oscillator
Speaker		
LS-1	50B690537	Speaker, PM: 5"
Resistors		Note: All resistors are insulated carbon type unless otherwise specified.
R-1	6R2039	68 10% 1/2W
R-2	6R6075	100,000 20% 1/2W
R-3	6R6039	4700 20% 1/2W
R-4	6R3933	220 20% 1/2W
R-5	6R6028	22,000 20% 1/2W
R-6	6R6075	100,000 20% 1/2W
R-7	6R6056	47,000 20% 1/2W
R-8	6R3933	220 20% 1/2W
R-9	6R3927	2.2 meg 20% 1/2W
R-10	17A690578	Wirewound: 22 10% 1.5W
R-11	6R2039	68 10% 1/2W
R-12	6R3963	100 10% 2W
or	6R490401	100 10% 1W N.I.
R-13	6R476116	270 10% 2W
or	6R6035	270 10% 1W N.I.
R-14	6R3933	220 20% 1/2W
R-15	6R2039	68 10% 1/2W
R-16	6R6032	470,000 20% 1/2W
R-17	6R6032	470,000 20% 1/2W
R-18	6R5554	390 10% 1/2W
R-19	6R6432	270 10% 1/2W
R-20	6R3933	220 20% 1/2W
R-21	6R6036	3300 20% 1/2W
R-22	6R2122	4.7 meg 20% 1/2W
R-23	18A690549	Volume Control: 1 meg; includes ON-OFF switch
R-24	6R6028	22,000 20% 1/2W
R-25	6R5554	390 10% 1/2W
R-26	6R6012	33,000 20% 1/2W
R-27	6R3966	1.5 meg 20% 1/2W
R-28	6R5683	27 10% 1/2W
Switch		
S-1	-	ON-OFF: part of volume control
S-2	40B690538	Bandswitch
S-3	40A690546	Tone Control
Transformers		
T-1	24A690544	FM Antenna input
T-2	24B690563	BC Oscillator coil
T-3	24B690540	1st IF, 10.7 Mc: complete; including padding capacitors and tuning cores but less shield
T-4	24B482863	IF, 455 Kc: complete; including padding capacitors and tuning cores but less shield
T-5	24B690541	2nd IF, 10.7 Mc: complete; including padding capacitors and tuning cores but less shield
T-6	24B482865	Diode, 455 Kc: complete; including padding capacitors and tuning cores but less shield
T-7	24B690542	Discriminator, 10.7 Mc: complete; including padding capacitors, tuning cores and shield
T-8	25B690536	Output Transformer
CHASSIS PARTS - MECHANICAL		
	43A4326	Ball, steel: 1/8" diameter
	1X691198	Brackets Assembly, pointer mtg: includes small and large bracket
	1X690717	Bracket Assembly, tuning core mtg: includes shoulder rivet and anti-rattle clip
	7C690567	Bracket, tuner mtg
	42A690560	Clip, anti-backlash: double
	42K690561	Clip, anti-backlash: single
	43A690730	Collar, pointer detent
	11M88137	Cord, dial: core drive
	11M8944	Cord dial: pointer drive
	46A690127	Core, iron and screw (for L-6 and L-9)
	46K680318	Core, iron: threaded (for T-4 and T-6)
	5A70098	Eyelet (speaker mtg)
	5S7866	Eyelet: .125 x .091; brass; nkl pl (core drive cord retainer)
	5A70404	Grommet, rubber (speaker mtg)
	14A690545	Insulator, armite (pointer bracket mtg)

©John F. Rider

MODELS 79XM21, 79XM22; Ch. HS-168

Part Number	Description
14A690534	Insulator, armite (tone switch mtg)
14A690535	Insulator, armite (volume control and bandswitch mtgL
14A690548	Insulator, bakelite (volume control and bandswitch mtg)
4S9751	Lockwasher, int-ext: #8; stl; cad pl (pulley assembly mtg)
2S7005	Nut, hex: 6-32 x 1/4; stl; nkl pl (L-6 and L-9 core mtg and pointer detent)
2S7051	Nut, hex: 3/8-32 x 9/16; Palnut; stl; cad pl (volume control and bandswitch mtg)
28A690552	Plug, 2-prong (power input)
28A690615	Plug, 4-pin (antenna input)
1X691184	Pulley Assembly, pointer drive; includes large and small pulley spot-welded together
49A690562	Pulley, cord drive: brass
9A470980	Receptacle, loop lead
5S8497	Rivet: .088 x 1/8; stl; nkl pl (single anti-rattle clip mtg).
5S7771	Rivet: .088 x 3/16; stl; nkl pl (7-prong tube socket mtg)
5S7774	Rivet: .088 x 1/4 stl; nkl pl (9-prong tube socket mtg)
5S7701	Rivet: .122 x 3/16 stl; nkl pl (tone switch insulator, antenna input receptacle and power input receptacle mounting)
5S7707	Rivet: .122 x 5/32; stl; nkl pl (terminal strip and tube shield mtg)
5K13896	Rivet, shoulder
3S7205	Screw, machine: 8-32 x 1/4 slotted hex head; locking type; stl; cad pl (gang mtg)
3S7163	Screw, machine: 8-32 x 1/4 plain hex head; stl; cad pl (pulley assembly mtg)
3S488011	Screw, machine: 8-32 x 5/8 slotted hex head; locking type; stl; cad pl (speaker mtg)
3S2695	Screw, sheet metal: #6 x 3/16 PKZ plain hex head; stl; cad pl (tuner bracket mtg)
3S3398	Screw, sheet metal: #6 x 3/8 PKZ plain hex head; stl; cad pl (pointer brackets assembly mtg)
3S490325	Screw, sheet metal: #6 x 1-1/8 PKZ plain hex head; stl; cad pl (rectifier mtg)
3S9700	Setscrew: 6-32 x 3/16 Allenhead; stl; cad pl (core drive pulley mtg)
3S7103	Setscrew: 8-32 x 1/8 Allenhead; stl; cad pl (pointer shaft adj)
1X690722	Shaft and Arm Assembly, tone control.
1X690739	Shaft and Pulley Assembly, pointer drive
1A690738	Shaft and Sleeve Assembly, pointer detent
47K690573	Shaft, tuning
26K485936	Shield, coil (for T-3, T-4, T-5 & T-6)
26A481521	Shield, tube: spring
9K484167	Socket, tube: 7-prong
9A485495	Socket, tube: 9-prong

Ref. No.	Part Number	Description
	41A690598	Spring, coil (L-6 and L-9 core mtg)
	41A690732	Spring, compression (pointer detent)
	41A14244	Spring, tension (core drive, cord tension and cord compression)
	31K85348	Strip, terminal: 1 insulated lug, #2 mtg
	31K86126	Strip, terminal: 2 insulated lugs, #2 mtg
	31K470746	Strip, terminal: 3 insulated lugs, #2 mtg
	31K470747	Strip, terminal: 5 insulated lugs, #3 mtg
	4A21941	Washer, "C" (shaft and pulley assembly retainer)
	4A73639	Washer, "C" (tuning shaft and tone control shaft & arm retainer).
	4A691006	Washer, double "D": copper pl (pulley assembly mtg)
	4S7578	Washer, flat: 5/16 x .130 x .025 thick; brass (pointer brkt mtg)
	4S1765	Washer, flat: 1/2 x .147 x .015 thick; stl; cad pl (pointer detent)
	4K690572	Washer, shoulder: fibre (pointer bracket mtg)
	2K690571	Washer, shoulder: fibre (volume control & bandswitch mtg)
	4A690729	Washer, spring: phosphor bronze (pointer detent)
CABINET PARTS		
	16E690503	Cabinet, table model: molded; green (79XM21)
or	16K691189	Cabinet, table model: molded; walnut-mahogany (79XM22)
	13C690581	Cloth, grille
	30K21859	Cord, line & plug: 9 ft long
	15A690556	Cover, power receptacle
	34D690590	Escutcheon and dial scale
	36K690586	Knob, tone and tuning control: green (79XM21)
or	36K691190	Knob, tone and tuning control: walnut-mahogany (79XM22)
	36K690585	Knob, on-off and band selector: green and brass (79XM21)
or	36K690668	Knob, on-off and band selector: walnut-mahogany (79XM22)
	52A690553	Pointer, dial
	9A15907	Receptacle, 2-prong (power input)
	9K690618	Receptacle, 4-pin (antenna input)
	5S7703	Rivet: .122 x 7/32; stl; nkl pl (cover mtg)
	3S3375	Screw, sheet metal: #6 x 5/16 PKZ plain hex head; stl; cad pl (power receptacle mtg)
	3S488098	Screw, sheet metal: #8 x 3/8; type 25; plain hex head; stl; cad pl (chassis and back mtg)
	15A690616	Shell, antenna receptacle and insulator
	2A580844	Speednut: 1/8" diameter (escutcheon mtg)
	31A470403	Strip, terminal: 3 screw; with shorting bar
	4S1771	Washer, flat: 5/16 x .203 x .016 thick; stl; cad pl (back mtg)

©John F. Rider

MODEL 309

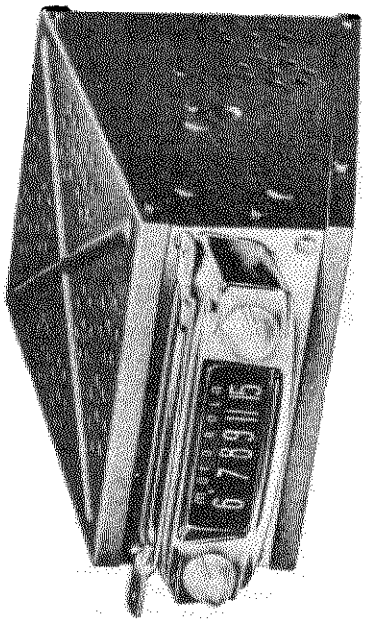

GENERAL INFORMATION

TYPE - Universal automotive type superheterodyne receiver with self-contained speaker. Designed for under-dash mounting.

TUNING RANGE - 540 to 1600 Kc IF - 455 Kc

TUBE COMPLEMENT - 6SK7GT - RF Amplifier
6SA7GT - Oscillator-Modulator
6SK7GT - IF Amplifier
6SQ7GT - Detector-AVC-AF Amplifier
6V6GT - Power Amplifier
6X5GT - Rectifier

POWER INPUT - 6.3 volts DC at 6 amperes

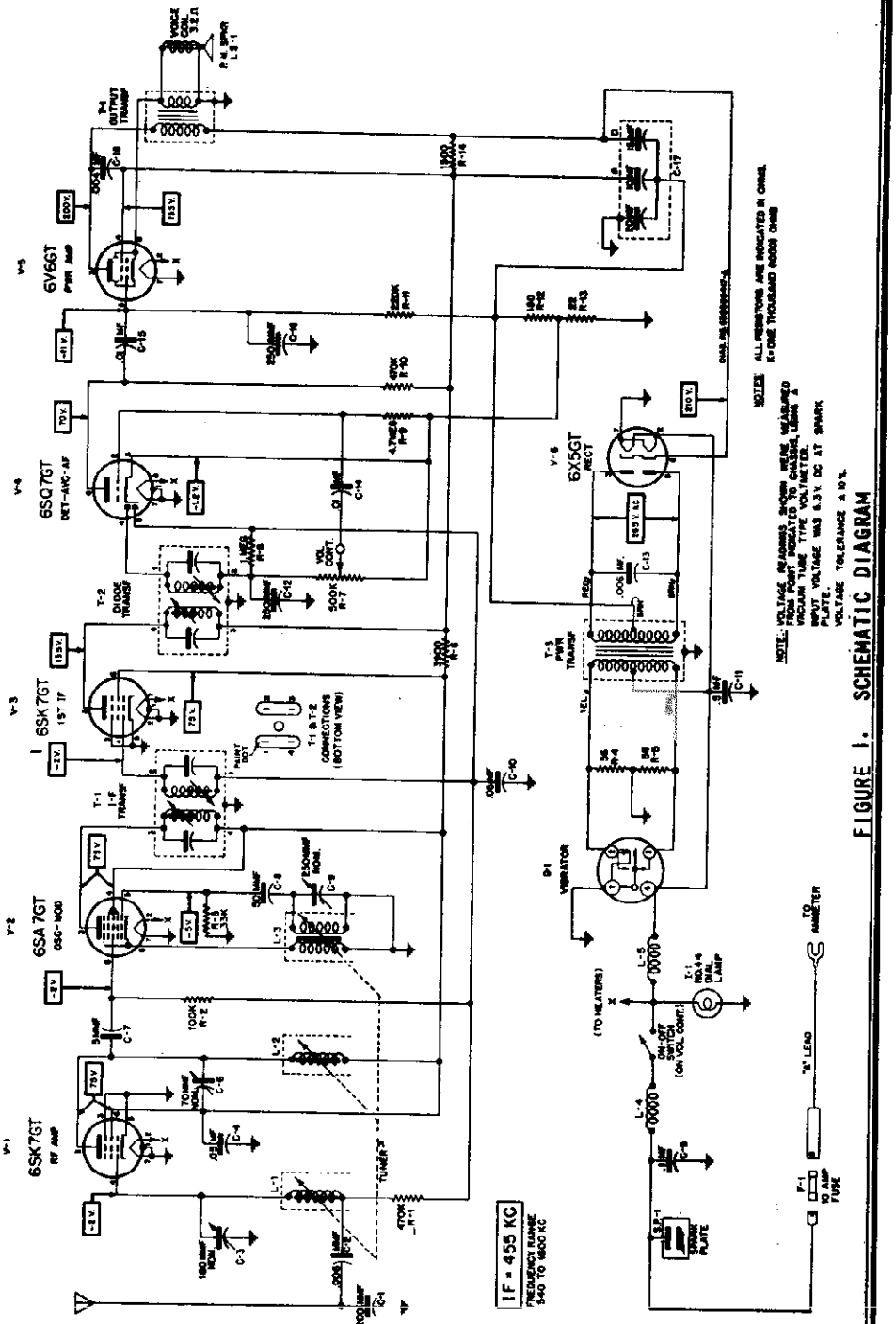

FIGURE 1. SCHEMATIC DIAGRAM

© John F. Rider

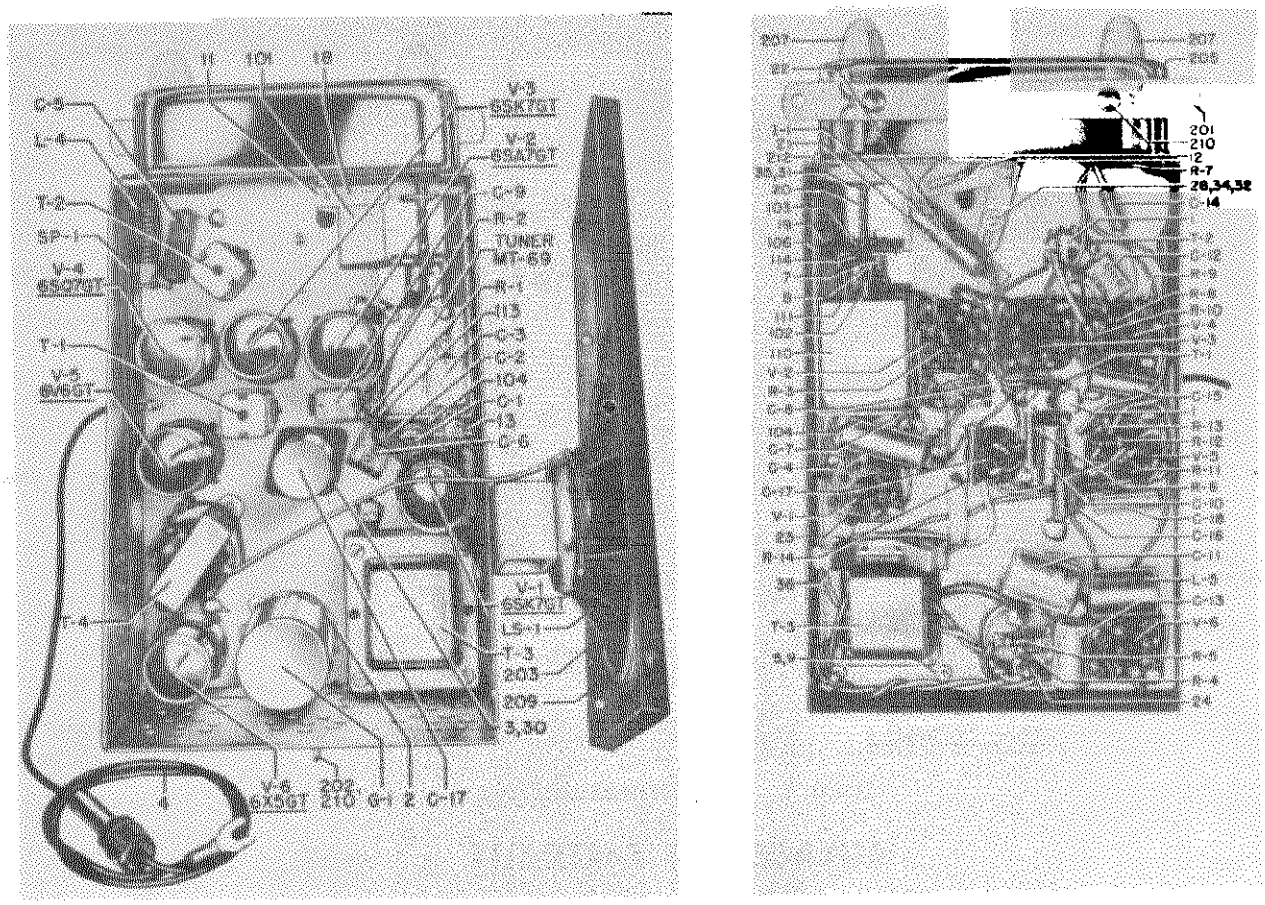

FIGURE 2. PARTS LOCATIONS

ALIGNMENT

Connect a low range output meter across speaker voice coil and set volume control at maximum. For greatest accuracy, keep output of receiver at approximately 1 watt (1 watt = 1.79 volts on output meter) throughout alignment by reducing signal generator output as stages are brought into alignment. Use a small fibre screwdriver when aligning IF and diode transformers. A special tool, Motorola Part No. 66A76278, is required for adjusting the tuner cores. IMPORTANT: Do not push in on the alignment tool when adjusting the tuner cores; the slightest inward pressure may move tuner carriage and result in inaccurate alignment. Remove receiver top and bottom covers and the escutcheon and dial scale assembly to expose all adjustments.

STEP	DUMMY ANTENNA	GENERATOR CONNECTION	GENERATOR FREQUENCY	TUNER SET TO	ADJUST	REMARKS
IF ALIGNMENT						
1.	.1 mf	6SA7 Grid (pin #8)	455 Kc	High frequency end (cores out)	1, 2 & 4	Peak for maximum in order indicated. Check by repeating procedure.
RF ALIGNMENT						
2.	See Fig. 3	Antenna receptacle through dummy.	1605 Kc	High frequency end; cores should project 1-1/4" from cans. (Screw out)	5, 6 & 7	Peak for maximum in order indicated.
3.	"	"	1300 Kc	1300 Kc per Fig. 4	8, 9 & 10	"
POINTER ADJUSTMENT						
4.	"	"	600 Kc	Tune for maximum.	-	Replace dial scale & set pointer to 600 Kc by means of pointer adjustment screw.

5. With receiver installed in car, the antenna fully extended and dial set to approximately 1400 kc, adjust antenna trimmer (7) for maximum volume of a weak station or noise between stations.

©John F. Rider

MODEL 309

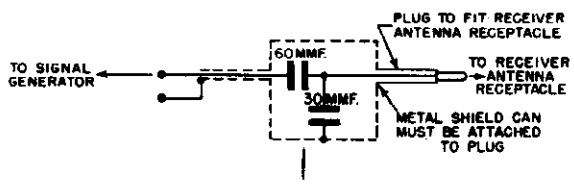

FIGURE 3. DUMMY ANTENNA

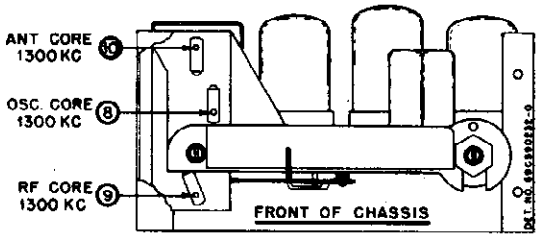

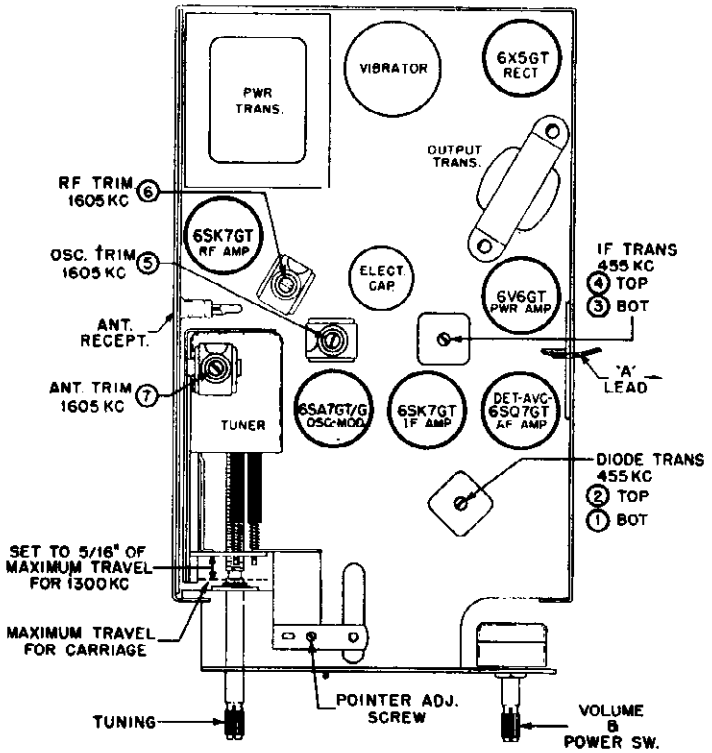

FIGURE 4. TUBE & TRIMMER LOCATIONS

REPLACEMENT PARTS LIST

REF. NO.	PART NO.	DESCRIPTION
CHASSIS PARTS - ELECTRICAL		
CAPACITORS		
C-1	21K87136	Ceramic: 200 mmf 500V .....
C-2	8C4529	Paper: .006 mf 100V .....
C-3	20A485652	Trimmer, mica: 50 to 280 mmf 500V .....
C-4	8K14791	Paper: .05 mf 400V .....
C-5	8K472035	Paper: .1 mf 100V .....
C-6	20A481526	Trimmer, mica: 20 to 180 mmf 500V .....
C-7	21K70720	Molded: 5 mmf 500V .....
C-8	21K74661	Ceramic: 50 mmf 300V .....
C-9	20A580113	Trimmer, mica: 240 to 300 mmf 500V .....
C-10	8K13514	Paper: .05 mf 100V .....
C-11	8K17028	Paper: .5 mf 100V .....
C-12	21R6543	Mica: 250 mmf 500V .....
C-13	8K12840	Paper: .006 mf 1600V .....
C-14	8K472754	Paper: .01 mf 100V .....
C-15	8K23690	Paper: .01 mf 400V .....
C-16	21R6543	Mica: 250 mmf 500V .....
C-17	23A485677	Electrolytic: 15-10-20 mfd/ 350-350-25V .....
C-18	8K71909	Paper: .004 mf 400V .....
FUSE		
F-1	65A10266	Fuse: 10 amp .....
VIBRATOR		
G-1	48B3333	Vibrator: 4-pin; non-sync..
DIAL LIGHT		
I-1	65X10867	Bulb: 6.3V; .25A; tubular; bayonet base; #44 .....
COILS		
L-1	24B580570	Coil, antenna .....
L-2	24K580571	Coil, RF .....
L-3	24B580569	Coil, oscillator .....
L-4	24K580706	Choke, RF .....
L-5	24A472535	Choke, hash .....

REF. NO.	PART NO.	DESCRIPTION
SPEAKER		
LS-1	50B580759 or 50B590079	Speaker: PM; 5-1/4"; 3.2 ohm voice coil ..... Exch.
RESISTORS		
		Note: All resistors are carbon insulated type unless otherwise specified.
R-1	6R6032	470,000 20% 1/2W .....doz.
R-2	6R6075	100,000 20% 1/2W .....doz.
R-3	6R6012	33,000 20% 1/2W .....doz.
R-4	6R5614	56 10% 1/2W .....doz.
R-5	6R5614	56 10% 1/2W .....doz.
R-6	6R476012	3,900 10% 2W .....
R-7	18A485612	Volume Control: .5 meg; includes on-off switch .....
R-8	6R6004	1 meg 20% 1/2W .....doz.
R-9	6R6122	4.7 meg 20% 1/2W .....doz.
R-10	6R6032	470,000 20% 1/2W .....doz.
R-11	6R6015	220,000 20% 1/2W .....doz.
R-12	6R6390	180 10% 1W .....each doz.
R-13	6R6406	22 10% 1/2W .....doz.
R-14	6R2005	1500 10% 2W .....
SPARK PLATE		
SP-1	1A485606	Spark Plate Assembly .....
TRANSFORMERS		
T-1,2	24B485553	IF and Diode: 455 Kc; complete
T-3	25C485630	Power Transformer .....
T-4	25B70171	Output Transformer .....
CHASSIS PARTS - MECHANICAL		
1	42A485548	Clip, coil can mtg (T-1 & T-2 mtg) .....doz.
2	42A4215	Clip, vibrator grounding ..doz.
3	9K14906	Insulator, electrolytic mtg: armite .....doz.

© John F. Rider

REF. NO.	PART NO.	DESCRIPTION
4	9K580705	Lead, fuse: complete with 10 amp fuse .....
5	4S7666	Lockwasher, ext: #6; stl; cad pl (power trans mtg) .per/c
6	4S7650	Lockwasher, int: #6; stl; cad pl (dial light mtg)...per/c
7	2A78005	Nut, floating: with ear (on tuning shaft) .....
8	2A77596	Nut, floating: without ear (on tuning shaft) .....
9	2S7005	Nut, hex: 6-32 x 1/4; stl; cad pl (power trans mtg)..per/c
10	2S7051	Nut, hex: 3/8-32 x 9/16; stl; cad pl (vol.cont mtg) ...doz.
11	1X580165	Plate and Stud Assembly (pointer adj plate) .....
12	1X580163	Pointer and Drive Plate Assembly .....
13	9A472148	Receptacle, antenna contact
14	5S7706	Rivet: .122 x 1/8; stl; nkl pl (dial light mtg) .....per/c
15	5S7707	Rivet: .122 x 5/32; stl; nkl pl (tube socket mtg) .....per/c
16	5S7701	Rivet: .122 x 3/16; stl; nkl pl (vibrator socket, output trans and spark plate assem mtg) .....per/c
17	5S7703	Rivet: .122 x 7/32; stl; nkl pl (electrolytic wafer mtg) .....per/c
18	3S1921	Screw, machine: 2-56 x 1/8; slotted binder head; stl; cad pl (pointer plate mtg and pointer adjustment screw) .....per/c
19	3S7454	Screw, sheet metal: #8 x 1/4; plain hex head; stl; cad pl (tuner mtg) .....per/c
20	47A485650	Shaft, drive (tuning shaft)
21	60K25753	Shield, light .....
22	9K580609	Socket, dial light: includes mtg bracket .....
23	9A6788	Socket, tube: octal .....
24	9A70208	Socket, tube: 4 prong (for vibrator) .....
25	41A77592	Spring, compression (tuning shaft) .....doz.
26	41A472659	Spring, torsion (pointer assembly) .....
27	46A485622	Stud, drive plate mtg .....doz.
28	46A580076	Stud, pointer mtg .....doz.
30	9A12705	Wafer, electrolytic mtg: bakelite .....doz.
31	4K24124	Washer, 'C'(drive shaft retainer) .....doz.
32	4K70015	Washer, 'C' (pointer mtg and carriage plate stop) .....per/c
33	4S488235	Washer, flat: 3/8 x 3/32 x .010 thick; stl; cad pl (pointer plate mtg) .....doz.
34	4S1719	Washer, flat: 3/8 x 9/64 x .030 thick; stl; cad pl (pointer mtg) .....per/c
35	4K580572	Washer, spring (drive shaft play takeup) .....doz.
36	39A26068	Wiper, grounding: spring brass (grounds chassis to top cover) .....doz.

TUNER PARTS - MECHANICAL

Note: Coils and trimmers are includes in the Electrical Chassis Parts list. Drive shaft parts are included in the Mechanical Chassis Parts List.

REF. NO.	PART NO.	DESCRIPTION
101	1X580162	Carriage Plate Assembly: includes bakelite core insulator & slider spring ....
102	46K489214	Core, iron and screw (specify color coding on old core when ordering) .....
103	42A70184	Clip, core adjustment .....doz.
104	5K580503	Grommet, rubber (ant & RF coil mtg) .....doz.
105	5K580504	Grommet, rubber(oscillator coil mtg) .....doz.
106	14A485602	Insulator, core: bakelite; 2-11/16 x 1-1/8 .....
107	5S8497	Rivet: .088 x 1/8; stl; nkl pl (terminal strip and slider mtg) .....per/c
108	5S7770	Rivet: .088 x 5/32; stl; nkl pl (core insulator mtg)per/c
109	5S6819	Rivet: .122 x 1/8; stl; nkl pl (shield mtg) .....per/c
110	26A580546	Shield, coil .....
111	41A485649	Spring, core .....per/c
112	41A580079	Spring, slider .....doz.
113	31A485605	Strip, terminal: 2 insulated lugs, #2 mtg .....
114	4A70956	Washer, core insulator: 1/4 dia; bakelite .....per/c

HOUSING PARTS

201	7A485608	Bracket, receiver mtg (on escutcheon) .....
202	7A72256	Bracket, receiver mtg (on rear of housing shell)....
203	15K485664	Cover, bottom: less speaker
204	15K485663	Cover, top .....
205	1X580019	Escutcheon & Bracket Assembly
206	7A485674	Frame, dial scale retainer.
207	36K580548	Knob, control .....
208	2S7988	Speednut (dial scale mtg) .doz.
209	2S490009	Speednut (speaker mtg) ....per/c
210	5S7765	Rivet: .187 x 7/32; stl; nkl pl (receiver rear bracket mtg) .....doz.
211	34B485628	Scale, dial: glass .....
212	3S8114	Screw, sheet metal: #8 x 1/4; slotted acorn head; antique copper finish (housing screws and escutcheon mtg) .....doz.

MOUNTING PARTS AND ACCESSORIES

301	7A484424	Bracket and Stud Assembly (receiver mtg) .....
302	8A4491	Capacitor, noise suppression (generator cap) .....
303	4S7688	Lockwasher, int-ext: 1/4; stl; cad pl (receiver mtg)doz.
304	2S7022	Nut, hex: 1/4-20 x 7/16; stl; cad pl (receiver mtg) ....doz.
305	3S8109	Screw, sheet metal: #8 x 3/8; PKZ; slotted acorn head; stl; cad pl (receiver mtg to instrument panel) .....doz.
306	3S7295	Screw, machine: 1/4-20 x 3/4; plain hex head; stl; cad pl (receiver mtg to receiver mtg strap) .....doz.
307	3S9694	Screw, machine: 1/4-20 x 1-1/2; plain hex head; stl; cad pl (receiver mtg to car firewall) doz.
308	42A485718	Strap, receiver mtg .....
309	6A4141	Suppressor, noise (distributor)

©John F. Rider

©John F. Rider

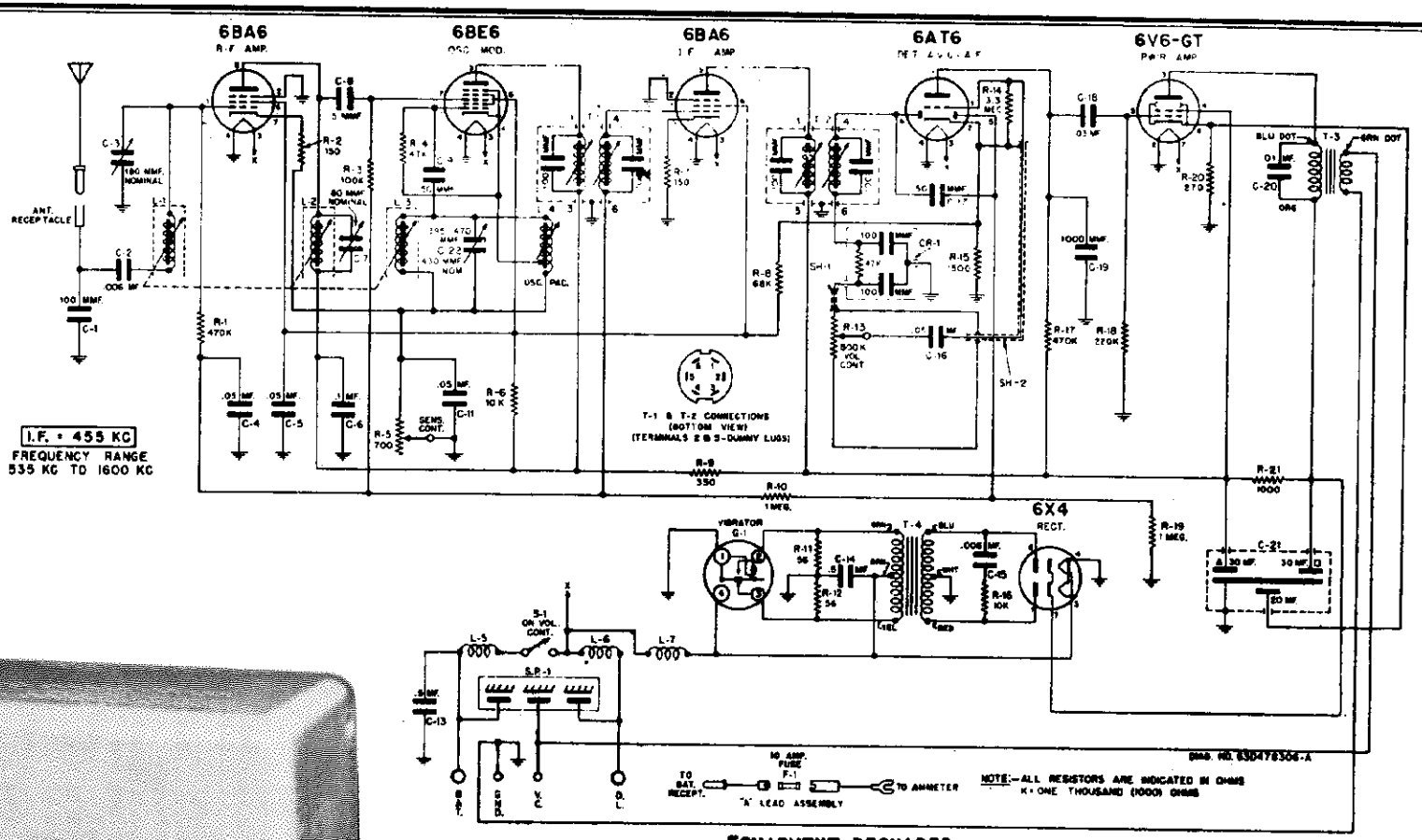

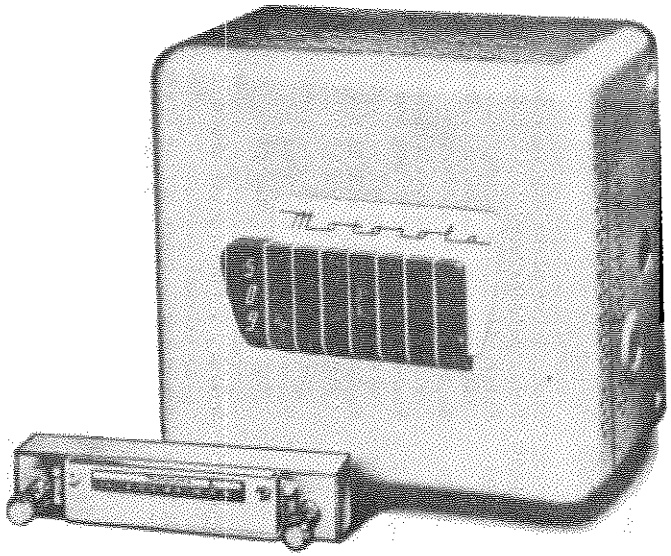

ALIGNMENT

EQUIPMENT REQUIRED

1. A special tool for adjusting the tuner cores. Use Alignment Tool, Motorola Part No. 66A76278.
2. A small screwdriver for IF & RF alignment.
3. An accurately calibrated AM modulated signal generator.
4. A low range output meter.
5. A special dummy antenna for RF alignment. Construct dummy antenna as shown in Figure 1. The 21" coaxial lead needed in its construction is the same type as used for lead-in on Motorola car antennas.

PROCEDURE

1. Remove the front and rear housings. All adjustments are now exposed.
2. Connect a PM speaker (3.2 ohm VC) to VC and GND. terminals and connect the output meter across the voice coil.

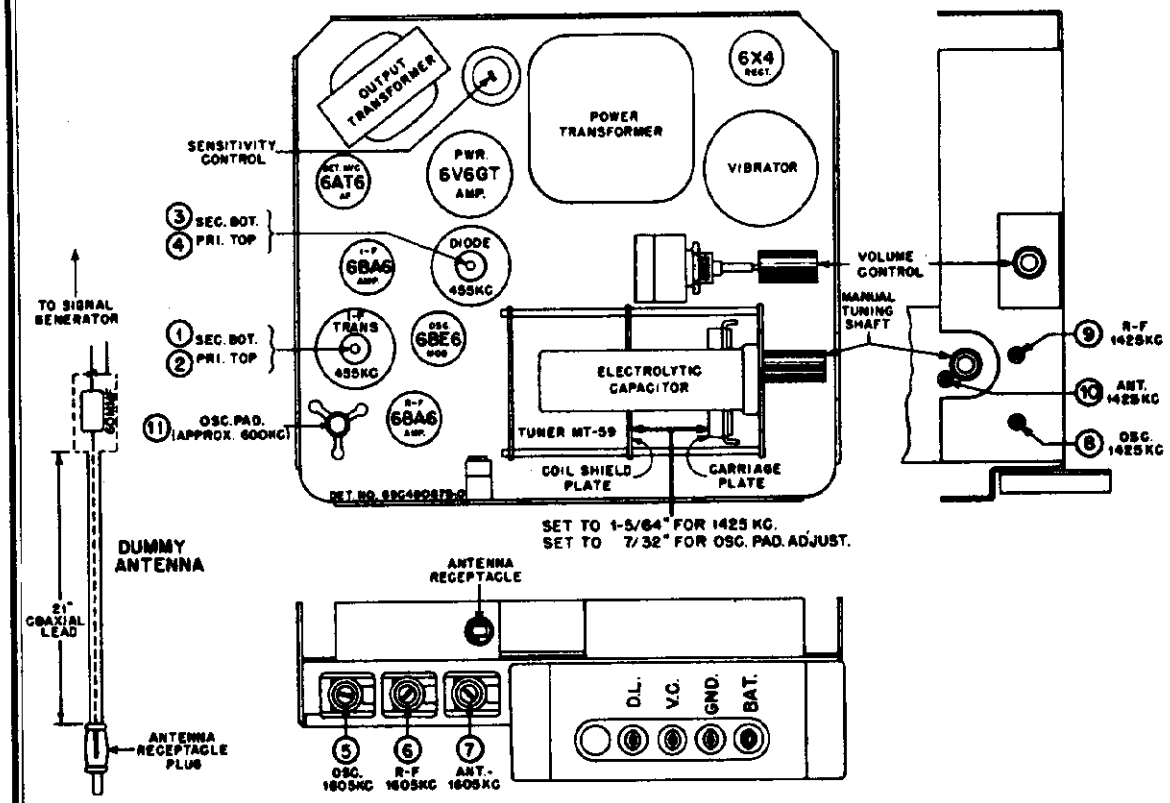

FIGURE 1. TUBE & TRIMMER LOCATIONS

PART NO.	DESCRIPTION
3S3397	Screw, sheet metal: #8 x 5/16 PKZ plain hex head; cad pl (power transformer mtg) .....
1A71049	Shield and Sleeve Assembly (for T-1 & T-2) .....
9A70208	Socket, tube: 4-pin; with grounding lug (vibrator socket) .....
9A472534	Socket, tube: miniature; 7-prong .....
9A6788	Socket, tube: octal .....
31C4079	Strip, terminal: 1 insulated lug, end mtg .....
31A472573	Strip, terminal: 2 insulated lugs, #2 mtg .....
31K16330	Strip, terminal: 3 insulated lugs, #3 mtg .....

HOUSING PARTS

42A472033	Clip, chassis retainer ....
13D580531	Escutcheon, complete .....
1X580832	Housing and Bushing Assembly, rear .....
15K580526	Housing, front: less escutcheon
3S7454	Screw, sheet metal: #8 x 1/4 PKZ plain hex head; cad pl. (escutcheon mounting) ....

9. ANTENNA TRIMMER ADJUSTMENT. Once steps 7A, B, C, D & 8 have been satisfactorily performed, no further adjustment of any alignment screws should be made except to align the antenna trimmer (7) to car antenna after receiver is installed in car. This adjustment should be made with antenna fully extended and receiver set to approximately 1400 Kc. Peak the trimmer for maximum volume of a weak station or background noise between stations.

3. Connect a 6 volt storage battery to GND. and BAT. terminals of receiver; turn receiver on and allow it to warm up for a few minutes. Set receiver volume control at maximum.

4. Sensitivity Control. This control must be set to provide 2 ± 1/2 volts bias on the RF tubes before alignment is started. Measure this voltage between sensitivity control terminal and chassis.

5. For greatest accuracy, keep output of receiver at approximately 1 watt (1 watt = 1.79 volts on output meter) throughout alignment by reducing generator output (not receiver volume control) as stages are brought into alignment.

6. IF ALIGNMENT

A. Connect high side of signal generator through .1 mf capacitor to 6BE6 grid (pin #7) and the low side to chassis. Set generator to 455 Kc and peak adjustments (1, 2, 3 & 4), in this order, for maximum output.

B. Check alignment by repeating procedure.

7. RF ALIGNMENT

A. Connect signal generator to antenna receptacle through special dummy antenna (60 mmf capacitor in series with 21" coax lead).

B. Move carriage plate (by turning manual tuning shaft) to extreme high frequency position and screw coil cores out so that at least 1-1/8" of all three cores shall be outside of the coil shield can. Set signal generator to 1605 Kc and peak trimmers (5, 6 and 7), in this order.

C. Move the carriage plate (by turning manual tuning shaft) so carriage plate is spaced exactly 1-5/64" from coil shield plate. Set signal generator to 1425 Kc and adjust coil cores (8, 9 & 10), in this order, for maximum output.

D. Move carriage plate (by turning manual tuning shaft) so carriage plate is spaced approximately 7/32" from coil shield plate. Leave signal generator connected but turn signal generator power off. Peak oscillator padder core (11) for maximum noise. If the padder core must be moved more than 1/2 turn from its original position, the carriage plate should be moved to extreme high frequency position, the coil cores (8, 9 & 10) should be screwed out so that 1-1/8" of each core is exposed and steps 7A, B, C & D repeated until it is necessary to move the padder core less than 1/2 turn in this step.

IMPORTANT: Do not push in on the alignment tool when adjusting the tuner cores. The slightest inward pressure on the alignment tool may move the tuner carriage and result in inaccurate alignment.

8. SETTING THE SENSITIVITY CONTROL. After alignment is completed, set signal generator to 600 Kc and adjust its output to 1.3 microvolts. Adjust the sensitivity control to provide 1 watt output (1 watt = 1.79 volts on output meter).

REPLACEMENT PARTS LIST

REF. NO.	PART NO.	DESCRIPTION
CHASSIS PARTS - ELECTRICAL		
CAPACITORS		
C-1	21B77562	Ceramic: 100 mmf 500V .....
C-2	8A4529	Paper: .006 mf 100V .....
C-3	20K485812	Trimmer, variable: 50 to 180 mmf; on same bracket as C-7 and C-22 (sold only as assembly)
C-4	8A13514	Paper: .05 mf 100V .....
C-5	8A14791	Paper: .05 mf 400V .....
C-6	8K13166	Paper: .1 mf 400V .....
C-7	20K485812	Trimmer, variable: 50 to 180 mmf; on same bracket as C-2 and C-22 (sold only as assembly)
C-8	21K70720	Molded: 5 mmf 500V .....
C-9	21R6513	Mica: 50 mmf 300V .....
or	21K74661	Ceramic: 50 mmf 300V .....
C-11	8A13514	Paper: .05 mf 100V .....
C-13	8A17028	Paper: .5 mf 100V .....
C-14	8A17028	Paper: .5 mf 100V .....
C-15	8A12840	Paper: .006 mf 1600V .....
C-16	8A13514	Paper: .05 mf 100V .....
C-17	21R6513	Mica: 50 mmf 300V .....
or	21K74661	Ceramic: 50 mmf 300V .....
C-18	8A71911	Paper: .03 mf 400V .....
C-19	21K478410	Ceramic: 1000 mmf 500V .....
C-20	8K23690	Paper: .01 mf 400V .....
C-21	23A473015	Electrolytic: 30-30-20 mf/ 350-300-25V .....
C-22	20K485812	Trimmer, variable: 395 to 470 mmf; on same bracket as C-2 and C-7 (sold only as assembly) .....
CAPACITOR-RESISTOR		
CR-1	21A472571	Capacitor-Resistor: 100 mmf-47,000 ohms 100 mmf .....
FUSE		
F-1	65A10266	10 Amp (3AG) .....
VIBRATOR		
G-1	48B3333	Non-sync: 4-pin .....
COILS		
*L-1,2	24B71881	RF & Antenna Coil (specify color of paint dots on old coil when ordering) .....
*L-3	24B71879	Oscillator Coil (specify color of paint dots on old coil when ordering) .....
L-4	24B70227	Oscillator Padder Coil: complete with iron tuning core
L-5,6	24K78026	Choke .....
L-7	24A472535	Choke, hash .....

REF. NO.	PART NO.	DESCRIPTION
RESISTORS		
NOTE: All resistors are 1/2W 20% carbon insulated type unless otherwise specified.		
R-1	6R6032	470,000 .....
R-2	6R3992	150 .....
R-3	6R6075	100,000 .....
R-4	6R6056	47,000 .....
R-5	18K77552	Sensitivity control: 700 ohms
R-6	6R476060	10,000 2W .....
R-7	6R3992	150 .....
*Part of Tuner MT-59		
R-8	6R6001	68,000 .....
R-9	6R6010	330 .....
R-10	6R6004	1 meg .....
R-11	6R5614	56 10% .....
R-12	6R5614	56 10% .....
R-13	1A472531	Volume Control: 500,000 ohms; includes SPST switch .....
R-14	6R2118	3.3 meg .....
R-15	6R6161	1,500 .....
R-16	6R6054	10,000 .....
R-17	6R6032	470,000 .....
R-18	6R6015	220,000 .....
R-19	6R6004	1 meg .....
R-20	6R6336	270 10% 1W .....
R-21	6R476004	1,000 2W .....
SWITCHES		
S-1		Power (part of volume control)
SHIELD		
SH-1	30A77553	Cable, shield: 5" long .....
SH-2	30K472991	Cable, shield: 10" long ....
SPARK PLATE		
SP-1	1X78041	Spark Plate Assembly: mtg. brkt included .....
TRANSFORMERS		
T-1 & T-2	24B76553	Diode or IF, 455 Kc: complete with padding capacitors and tuning iron cores, but less shield .....
T-3	25B70171	Output Transformer .....
T-4	25B472533	Power Transformer .....
TUNER		
	1X472702	Manual Tuner MT-59 .....

REF. NO.	PART NO.	DESCRIPTION
	3S7456	Screw, sheet metal: #8 x 1/4 PKA slotted scorn head; antique copper finish (housing screws) .....
ACCESSORIES		
	65X4151	Bulb, pilot light: 6-8V; clear; bayonet base .....
	8A4491	Capacitor, generator .....
	9B473111	Lead Assembly, fuse: complete with 10 amp fuse .....
	1X74340	Lead Assembly, dial light: complete with bulb .....
	1X76859	Lead Assembly, speaker: 2-conductor, 36" long, with pin terminals on one end
	4S7653	Lockwasher: 5/16 int-ext; cad pl (receiver mtg) .....
	2S2863	Nut, hex: 5/16-18 x 9/16; cad pl (receiver mtg) .....
	1K75148	Shaft, flexible: with housing; 24" long .....
	50B473118	or
	50B473119	or
	50B473696	or
	50B473697	or
	50B473783	Speaker: 6" PM; 3.2 ohm VC; less speaker lead .....
	3A77542	Stud, receiver mtg .....
	6X4141	Suppressor, distributor ...
CHASSIS PARTS - MECHANICAL		
	42A13177	Clip, center post grounding.
	42A4215	Clip, vibrator grounding ..
	1X70646	Receptacle, antenna .....
	5S7771	Rivet: .088 x 3/16 steel; nkl pl (tube socket mtg)..
	5S7706	Rivet: .122 x 1/8 steel; nkl pl (terminal strip mtg, sensitivity control and center post ground clip mtg).....
	5S7707	Rivet: .122 x 5/32 steel; nkl pl (tube socket mtg)..
	5S7701	Rivet: .122 x 3/16 steel; nkl pl (vibrator grounding clip and output transformer mtg) .....
	3S8140	Screw, sheet metal: #8 x 3/16 PKZ plain hex head; cad pl (tuner, capacitor bracket assembly and spark plate mtg) .....

©John F. Rider

©John F. Rider

ALIGNMENT

EQUIPMENT REQUIRED

1. A special tool for adjusting the tuner cores. Use Alignment Tool, Motorola Part No. 66A76278.
2. A small screwdriver for IF & RF alignment.
3. An accurately calibrated AM modulated signal generator.
4. A low range output meter.
5. A special dummy antenna for RF alignment. Construct dummy antenna as shown in Figure 1. The 21" coaxial lead needed in its construction is the same type as used for lead-in on Motorola car antennas.

PROCEDURE

1. Remove the front and rear housings. Also remove the shield from the tuner. All adjustments are now exposed.
2. Connect a PM speaker (3.2 ohm VC) to VC and GND. terminals and connect the output meter across the voice coil.

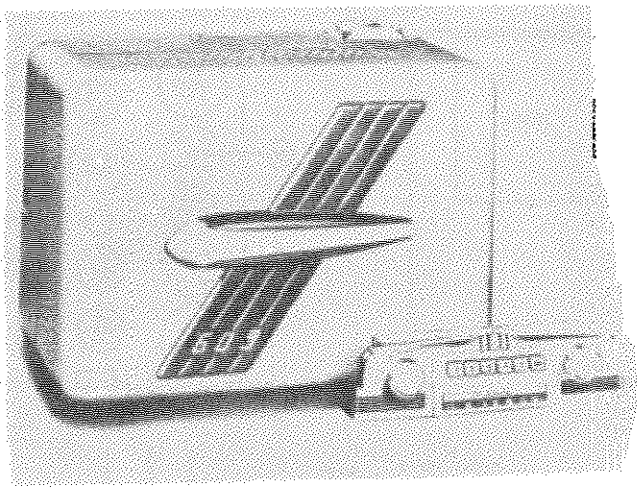

3. Connect a 6 volt storage battery to chassis and BATT. terminal of receiver; turn receiver on and allow it to warm up for a few minutes. Press control head 'M' button to place tuner in manual position. (If a control head is not available, move tuner carriage plate by hand till tuner is in manual position). Set receiver volume control at maximum and tone control to treble (high) position.
4. Sensitivity Control. This control must be set to provide 2 ± 1/2 volts bias on the RF tubes before alignment is started. Measure this voltage between sensitivity control terminal and chassis.
5. For greatest accuracy, keep output of receiver at approximately 1 watt (1 watt = 1.79 volts on output meter) throughout alignment by reducing generator output (not receiver volume control) as stages are brought into alignment.
6. IF ALIGNMENT

A. Connect high side of signal generator through .1 mf capacitor to 6BE6 grid (pin #7) and the low side to chassis. Set generator to 455 Kc and peak adjustments (1, 2, 3 & 4), in this order, for maximum output.

B. Check alignment by repeating procedure.

7. RF ALIGNMENT

A. Connect signal generator to antenna receptacle through special dummy antenna (60 mmf capacitor in series with 21" coax lead).

B. Move carriage plate (by turning manual tuning shaft) to extreme high frequency position and screw coil cores out so that at least 1-1/8" of all three cores shall be outside of the coil shield can. Set signal generator to 1605 Kc and peak trimmers (5, 6 and 7), in this order.

C. Move the carriage plate (by turning manual tuning shaft) so carriage plate is spaced exactly 1-43/64" from coil shield plate. Set signal generator to 1425 Kc and adjust coil cores (8, 9 & 10) in this order, for maximum output.

D. Move carriage plate (by turning manual tuning shaft) so carriage plate is spaced approximately 27/32" from coil shield plate. Leave signal generator connected but turn signal generator power off. Peak oscillator padder core (11) for maximum noise. If the padder core must be moved more than 1/2 turn from its original position, the carriage plate should be moved to extreme high frequency position, the coil cores (8, 9 & 10) should be screwed out so that 1-1/8" of each core is exposed and steps 7A, B, C & D repeated until it is necessary to move the padder core less than 1/2 turn in this step.

IMPORTANT: Do not push in on the alignment tool when adjusting the tuner cores. The slightest inward pressure on the alignment tool may move the tuner carriage and result in inaccurate alignment.

8. SETTING THE SENSITIVITY CONTROL. After alignment is completed, set signal generator to 600 Kc and adjust its output to 1.3 microvolts. Adjust the sensitivity control to provide 1 watt output (1 watt = 1.79 volts on output meter).

9. ANTENNA TRIMMER ADJUSTMENT. Once steps 7A, B, C, D & 8 have been satisfactorily performed, no further adjustment of any alignment screws should be made except to align the antenna trimmer (7) to car antenna after receiver is installed in car. This adjustment should be made with antenna fully extended and receiver set to approximately 1400 Kc. Peak the trimmer for maximum volume of a weak station or background noise between stations.

REF. NO.	PART NO.	DESCRIPTION
	9A70208	Socket, tube: 4 prong (for vibrator)
	9A472534	Socket, tube: miniature 7 prong
	9A6788	Socket, tube: octal
	31A472573	Strip, terminal: 2 insulated lugs, #2 mtg
	31K14655	Strip, terminal: 3 insulated lugs, #3 mtg
	7A472576	Support, volume cont. shaft alignment
	5S7555	Washer, flat: 1/4 x .128 x .033 thick; cad pl (output trans. mtg)
		HOUSING PARTS
	13D580541	Escutcheon (complete)
	15K580612	Housing, front: includes 2 grounding wipers; less escutcheon
	15K580692	Housing, rear
	38A71874	Knob (automatic tuner station set-up); plastic; with clamp spring
	5S7730	Rivet: .122 x 1/8 steel; antique copper finish (grounding wiper mtg)
	3S7454	Screw, sheet metal #8 x 1/4 PKZ plain hex head; cad pl (escutcheon mtg)
	3S7456	Screw, sheet metal: #8 x 1/4 PKA slotted acorn head; ant. cop finish (housing screws)
	39K470032	Wiper, grounding
		ACCESSORIES
	3A51494	Bolt, 'J' (receiver mtg)
	8A4491	Capacitor, generator
	9K473161	Lead Assembly, fuse: comp. with 20 Amp fuse
	1X76859	Lead Assembly, speaker; 2 conductor; 36" lg; with pin terminals on one end
	4S7653	Lockwasher: 5/16 int-ext; cad pl (receiver mtg)
	2S2863	Nut, hex: 5/16-18 x 9/16; cad pl (receiver mtg)
	1K75148	Shaft, flexible: with hsng; 24" long
	50B473783 or 50B473696 or 50B473697 or 50B473118 or 50B473119	Speaker: 6" PM; 3.2 ohm VC; less spkr lead
		Exchange
	6X4141	Suppressor, distributor

MODEL 609

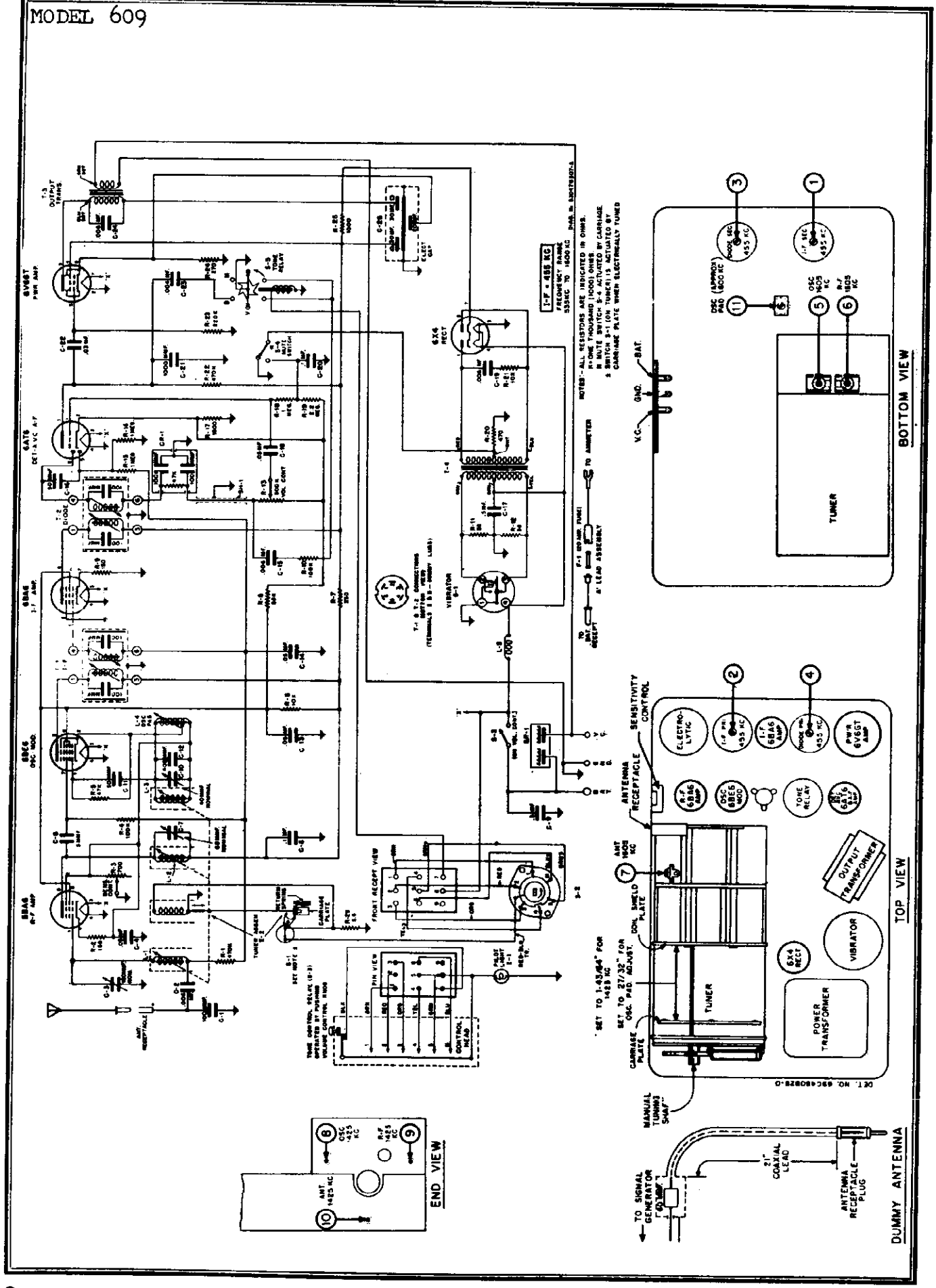

©John F. Rider

REPLACEMENT PARTS LIST

REF. NO.	PART NO.	DESCRIPTION
CHASSIS PARTS - ELECTRICAL		
CAPACITORS		
C-1	21B77562	Ceramic: 100 mmf 500V .....
C-2	8A4529	Paper: .006 mf 100V .....
C-3*	20K472613	Trimmer, variable mica: range 50 to 180 mmf; with bracket
C-4	8A13514	Paper: .05 mf 100V .....
C-6	21K70720	Molded: 5 mmf 500V .....
C-7*	20K472613	Trimmer, variable mica: range 50-180 mmf; with bracket ..
C-8	8K13166	Paper: .1 mf 400V .....
C-9	8A17028	Paper: .5 mf 100V .....
C-10*	20K472612	Trimmer, variable mica: range 30 to 60 mmf; with bracket.
C-11	21R6513	Mica: 50 mmf 300V .....
C-12	21A71872	Ceramic: 400 mmf 5% 500V ...
C-13	8A14791	Paper: .05 mf 400V .....
C-14	8A13514	Paper: .05 mf 100V .....
C-15	8A71910	Paper: .006 mf 400V .....
C-16	21R6513	Mica: 50 mmf 300V .....
C-17	8A19133	Paper: .5 mf 100V .....
C-18	8A13514	Paper: .05 mf 100V .....
C-19	8A12840	Paper: .006 mf 1600V .....
C-20	8A472035	Paper: .1 mf 100V .....
C-21	21K478410	Ceramic: 1000 mmf 500V .....
C-22	8A71911	Paper: .03 mf 400V .....
C-23	8A71909	Paper: .004 mf 400V .....
C-24	8A71910	Paper: .006 mf 400V .....
C-25	23A473015	Electrolytic: 30-30-20 mf/ 350-300-25V .....
CAPACITOR-RESISTOR		
CR-1	21A472571	Capacitor-Resistor: 100 mmf-47,000 ohms-100 mmf .....
FUSE		
F-1	65K4637	Fuse: 20 Amp (3AG) .....
VIBRATOR		
G-1	48B3333	Vibrator, non-sync: 4-pin ..
COILS		
L-1 & L-2*	24B71881	RF & Antenna coil (specify color of paint dots on old coil when ordering) .....
L-3*	24B71879	Oscillator Coil (specify color of paint dots on old coil when ordering) .....
L-4	24B70227	Osc. padder coil: complete with iron tuning core .....
L-5	24A472535	Choke, hash .....
RESISTORS		
Note: All resistors are 1/2 watt, 20% insulated, carbon type unless otherwise specified.		
R-1	6R6032	470,000 .....doz.
R-2	6R3992	150 .....doz.
R-3	18K77552	Control, sensitivity: 700 ohm
R-4	6R6075	100,000 .....doz.
R-5	6R6056	47,000 .....doz.
R-6	6R476060	10,000 2W .....
R-7	6R6010	330 .....doz.
R-8	6R6001	68,000 .....doz.
R-9	6R3992	150 .....doz.
R-10	6R6075	100,000 .....doz.
	3S7454	Screw, sheet metal: #8 x 1/4 PKZ plain hex head; cad pl (tuner mtg) .....
	3S3397	Screw, sheet metal: #8 x 5/16 PKZ plain hex head; cad pl (pwr. trans. mtg).....
	47B480768	Shaft & Coupling Assembly (for vol. cont) .....
	1A71049	Shield & Sleeve Assembly (for T-1 & T-2) .....

REF. NO.	PART NO.	DESCRIPTION
R-11	6R5614	56 10% .....
R-12	6R5614	56 10% .....
R-13	18A480773	Volume Control: 500,000; with SPST switch .....
R-15	6R6004	1 meg .....
R-16	6R6004	1 meg .....
R-17	6R6161	1500 .....
R-18	6R6004	1 meg .....
R-19	6R3927	2.2 meg .....
R-20	6R3949	470 .....
R-21	6R6054	10,000 .....
R-22	6R6032	470,000 .....
R-23	6R6015	220,000 .....
R-24	6R6336	270 10% 1W .....
R-25	6R476004	1,000 2W ....
R-29	17K484497	5.6 10% 1W: wirewound ....
SWITCHES		
S-1*	1B70944	Solenoid Switch: with mtg plate
S-2*	40B70952	Selector Switch .....
S-3	-	Power Switch (part of volume control) .....
S-4*	40A472644	Mute Switch .....
S-5	1X78040	Type MR6 Tone Relay .....
SHIELD		
SH-1	30K472998	Cable, volume control: 5" lg; single conductor .....
SPARK PLATE		
SP-1	1X472624	Spark Plate Assembly .....
TRANSFORMERS		
T-1 & T-2	24B76553	Diode or IF, 455 Kc: complete with padding capacitors and tuning iron cores, but less shield .....
T-3	25B70171	Output .....
T-4	25B472553	Power .....
TUNER		
	1X472634	Tuner: ST-60 ..... Exchange
CHASSIS PARTS - MECHANICAL		
	42A4215	Clip, vibrator grounding ...
	58A480774	Coupling, tinnerman shaft (on volume control) .....
	14A76883	Insulator, contact: fibre...
	4S7650	Lockwasher: #6 internal; cad pl .....
	4S7657	Lockwasher: #8 external; cad pl (tone relay mtg) ...
	2S7007	Nut, hex: 8-32 x 1/4; cad pl
	2S7051	Nut, hex: 3/8-32 x 9/16; cad pl (volume cont. mtg) .....
	1X70646	Receptacle, antenna lead-in.
	5S7771	Rivet: .088 x 3/16 steel; nkl pl (miniature tube socket mounting) .....
	5S7706	Rivet: .122 x 1/8 steel; nkl pl .....
	5S7707	Rivet: .122 x 5/32 steel; nkl pl .....

*Part of Tuner ST-60

	5S7701	Rivet: .122 x 3/16 steel; nkl pl (vib. socket mtg)
	3S8140	Screw, sheet metal: #8 x 3/16 PKZ plain hex head; cad pl (tuner mtg & on vol. control shaft coupling set-screw) .....

© John F. Rider

© John F. Rider

ALIGNMENT

EQUIPMENT REQUIRED

1. A special tool for adjusting the tuner cores. Use Alignment Tool, Motorola Part No. 66A76278.
2. A small screwdriver for IF & RF alignment.
3. An accurately calibrated AM modulated signal generator.
4. A low range output meter.
5. A special dummy antenna for RF alignment. Construct dummy antenna as shown in Figure 1. The 21" coaxial lead needed in its construction is the same type as used for lead-in on Motorola car antennas.

PROCEDURE

1. Remove the front and rear housings. Also remove the shield from the tuner. All adjustments are now exposed.
2. Connect a PM speaker (3.2 ohm VC) to VC and GND. terminals and connect the output meter across the voice coil.
3. Connect a 6 volt storage battery to chassis and BATT. terminal of receiver; turn receiver on and allow it to warm up for a few minutes. Press control head 'M' button to place tuner in manual position. (If a control head is not available, move tuner carriage plate by hand till tuner is in manual position). Set receiver volume control at maximum and tone control to treble (high) position.
4. Sensitivity Control. This control must be set to provide 2 ± 1/2 volts bias on the RF tubes before alignment is started. Measure this voltage between sensitivity control terminal and chassis.
5. For greatest accuracy, keep output of receiver at approximately 1 watt (1 watt = 1.79 volts on output meter) throughout alignment by reducing generator output (not receiver volume control) as stages are brought into alignment.
6. IF ALIGNMENT
   A. Connect high side of signal generator through .1 mf capacitor to 6BE6 grid (pin #7) and the low side to chassis. Set generator to 455 Kc and peak adjustments (1, 2, 3 & 4), in this order, for maximum output.
   B. Check alignment by repeating procedure.
7. RF ALIGNMENT
   A. Connect signal generator to antenna receptacle through special dummy antenna (60 mmf capacitor in series with 21" coax lead.)
   B. Move carriage plate (by turning manual tuning shaft) to extreme high frequency position and screw coil cores out so that at least 1-1/8" of all three cores shall be outside of the coil shield can. Set signal generator to 1605 Kc and peak trimmers (5, 6 and 7), in this order.
   C. Move the carriage plate (by turning manual tuning shaft) so carriage plate is spaced exactly 1-43/64" from coil shield plate. Set signal generator to 1425 kc and adjust coil cores (8, 9 & 10), in this order, for maximum output.
   D. Move carriage plate (by turning manual tuning shaft) so carriage plate is spaced approximately 27/32" from coil shield plate. Leave signal generator connected but turn signal generator power off. Peak oscillator padder core (11) for maximum noise. If the padder core must be moved more than 1/2 turn from its original position, the carriage plate should be moved to extreme high frequency position, the coil cores (8, 9 & 10) should be screwed out so that 1-1/8" of each core is exposed and steps 7A, B, C & D repeated until it is necessary to move the padder core less than 1/2 turn in this step.
   IMPORTANT: Do not push in on the alignment tool when adjusting the tuner cores. The slightest inward pressure on the alignment tool may move the tuner carriage and result in inaccurate alignment.
8. SETTING THE SENSITIVITY CONTROL. After alignment is completed, set signal generator to 600 Kc and adjust its output to 1.3 microvolts. Adjust the sensitivity control to provide 1 watt output (1 watt = 1.79 volts on output meter).
9. ANTENNA TRIMMER ADJUSTMENT. Once steps 7A, B, C, D & 8 have been satisfactorily performed, no further adjustment of any alignment screws should be made except to align the antenna trimmer (7) to car antenna after receiver is installed in car. This adjustment should be made with antenna fully extended and receiver set to approximately 1400 Kc. Peak the trimmer for maximum volume of a weak station or background noise between stations.

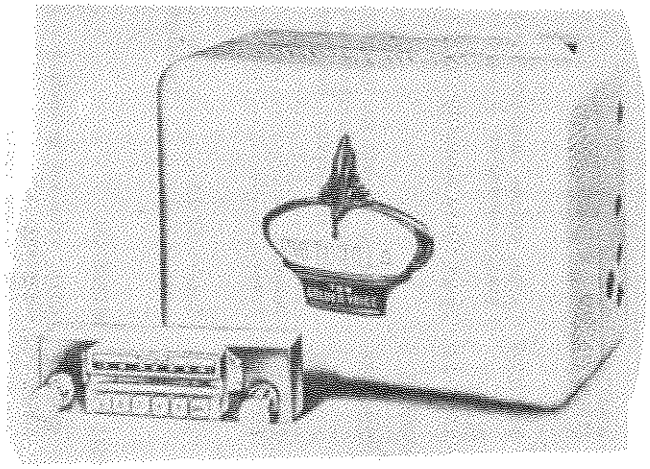

REF. NO.	PART NO.	DESCRIPTION
HOUSING PARTS		
	13D580534	Escutcheon .....
	15D580580	Housing, front: includes 2 grounding wipers; less escutcheon .....
	15K580697	Housing, rear .....
	38A71874	Knob (automatic tuner station set-up): plastic; with clamp spring .....
	5S7730	Rivet: .122 x 1/8 steel; antique cop. finish .....
	3S7454	Screw, sheet metal: #8 x 1/4 PKZ plain hex head; cad pl (escutcheon mtg) .....
	3S7456	Screw, sheet metal: #8 x 1/4 PKA slotted acorn head; antique copper finish (housing screws)
	39K470032	Wiper, grounding .....
ACCESSORIES		
	3A51494	Bolt, 'J' (receiver mtg) ...
	8A4491	Capacitor, generator .....
	9K473161	Lead Assembly, fuse: complete with 20 Amp fuse .....
	1X76859	Lead Assembly, speaker: 2 conductor; 36" long; with pin terminals on one end .....
	4S7653	Lockwasher: 5/16 int-ext; cad pl (receiver mtg) .....
	2S2863	Nut, hex: 5/16-18 x 9/16; cad pl (receiver mtg) .....
	1K75148	Shaft, flexible: with housing; 24" long .....
	50B473118 or 50B473696 or 50B473697 or 50B473783	Speaker: 6" PM; 3.2 ohm VC; less spkr lead ..... Exchange
	6X4141	Suppressor, distributor ....
TRANSFORMERS		
T-1 & T-2	24B76553	Diode or IF, 455 Kc: complete with padding capacitors and tuning iron cores, but less shield .....
T-3	25B472558	Output .....
T-4	25C472586	Power .....
TUNER		
	1X472634	Solenoid Tuner ST-60 .....

MODEL 709

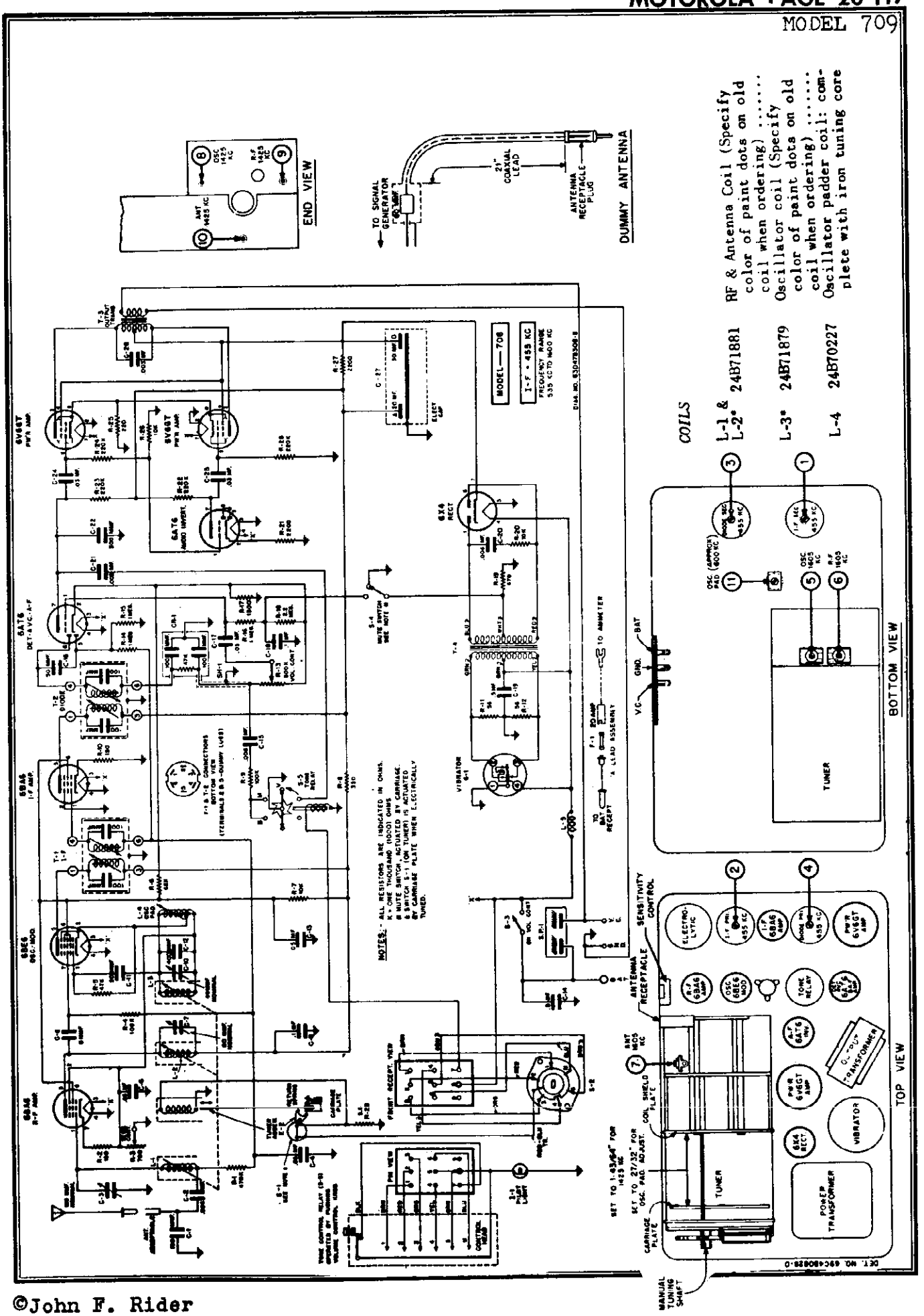

©John F. Rider

REPLACEMENT PARTS LIST

CHASSIS PARTS - ELECTRICAL

CAPACITORS

REF. NO.	PART NO.	DESCRIPTION
C-1	21B77562	Ceramic: 100 mmf 500V
C-2*	8A4529	Paper: .006 mf 100V
C-3*	20K472613	Trimmer, variable mica: 50 to 180 mmf; includes mounting bracket
C-4	8A13514	Paper: .05 mf 100V
C-6	8A13514	Paper: .05 mf 100V
C-7*	20K472613	Trimmer, variable: mica; 50 to 180 mmf; includes mounting bracket
C-8	21K70720	Molded: 5 mmf 500V
C-9	8K13166	Paper: .1 mf 400V
C-10*	20K472612	Trimmer, variable mica: 30 to 60 mmf; includes mounting bracket
C-11	21R6513 or 21K74661	Mica: 50 mmf 300V Ceramic: 50 mmf 300V
C-12	21A71872	Ceramic: 400 mmf 5% 500V
C-13	8A14791	Paper: .05 mf 400V
C-14	8A17028	Paper: .5 mf 100V
C-15	8A4529	Paper: .006 mf 100V
C-16	21R6513 or 21K74661	Mica: 50 mmf 300V Ceramic: 50 mmf 300V
C-17	8A13514	Paper: .05 mf 100V
C-18	8A472035	Paper: .1 mf 100V
C-19	8A19133	Paper: .5 mf 100V
C-20	8A12840	Paper: .006 mf 1600V
C-21	8A4736	Paper: .002 mf 400V
C-22	21R6639	Mica: 500 mmf 500V
C-24	8K71911	Paper: .03 mf 400V
C-25	8K71911	Paper: .03 mf 400V
C-26	8K13165	Paper: .003 mf 1000V
C-27	23A472570	Electrolytic: 30-20 mf/ 400-350V

CAPACITOR-RESISTOR

CR-1	21A472571	Capacitor-Resistor: 100 mmf -47,000 ohms 100 mmf

FUSE

F-1	65K4637	Fuse: 20 Amp (3AG)

VIBRATOR

G-1	48B3333	Vibrator, non-sync: 4-pin

PILOT LIGHT

I-1	65X4151	Bulb: 6-8V; bayonet base; type #51
L-5	24C473954	Choke, hash

RESISTORS

Note: All resistors are 1/2 watt, 20%, insulated carbon type, unless otherwise specified.

R-1	6R6032	470,000 ....doz.
R-2	6R3992	150 ....doz.
R-3	18K77552	Sensitivity Control: 700 ohms
R-4	6R6075	100,000 ....doz.
R-5	6R6056	47,000 ....doz.
R-6	6R6001	68,000 ....doz.
R-7	6R476060	10,000 2W
R-8	6R6010	330 ....doz.
R-9	6R6075	100,000 ....doz.
R-10	6R3992	150 ....doz.
R-11	6R5614	56 10% ....doz.
R-12	6R5614	56 10% ....doz.
R-13	18A480773	Volume Control: 500,000 ohms; with SPST Sw
R-14	6R6004	1 Meg ....doz.
R-15	6R6004	1 Meg ....doz.
R-16	6R6004	1 Meg ....doz.
R-17	6R6161	1500 ....doz.
R-18	6R3927	2.2 Meg ....doz.
R-19	6R3949	470 ....doz.
R-20	6R6054	10,000 ....doz.
R-21	6R6069	2,200 10% ....doz.
R-22	6R6015	220,000 ....doz.
R-23	6R6015	220,000 ....doz.
R-24	6R6015	220,000 ....doz.
R-25	6R6389	220 10% 1W ....each doz.
R-26	6R6320	10,000 10% ....doz.
R-27	6R476130	2,200 2W
R-28	6R6015	220,000 ....doz.
R-29	17K484497	5.6 10% 1W: wirewound ....each doz.

SWITCHES

S-1*	1B70944	Solenoid Switch
S-2*	40B70952	Selector Switch
S-3	-	Power Switch (part of volume cont)
S-4*	40A472644	Mute Switch
S-5	1X78040	Type MR6 Tone Relay

SHIELD

SH-1	30K472998	Cable, volume control: 5"long; single cond.

SPARK PLATE

SP-1	1X472624	Spark Plate Assembly

*Part of Tuner ST-60

CHASSIS PARTS - MECHANICAL

REF. NO.	PART NO.	DESCRIPTION
	42A4215	Clip, vibrator grounding
	58A480774	Coupling, tinnerman shaft (on volume cont)
	14A76883	Insulator, contact: fibre
	4S7650	Lockwasher: #6 internal; cad pl (terminal strip mtg)
	4S7657	Lockwasher: #8 external; cad pl (tone relay mtg)
	2S7007	Nut, hex: 8-32 x 1/4; cad pl (tone relay mtg)
	2S7051	Nut, hex: 3/8-32 x 9/16; cad pl (volume control mtg)
	1X70646	Receptacle, antenna lead-in.
	5S7771	Rivet: .088 x 3/16; steel; nkl pl (tube socket mtg)
	5S7706	Rivet: .122 x 1/8; nkl pl (sensitivity control mtg)
	5S7707	Rivet: .122 x 5/32; steel; nkl pl (tube socket mtg, terminal strip mtg)
	5S7701	Rivet: .122 x 3/16; steel; nkl pl (tube socket mtg, output trans. mtg)
	3S8140	Screw, sheet metal: #8 x 3/16 PKZ plain hex head; cad pl (tuner mtg & vol. control shaft coupling setscrew)
	3S7454	Screw, sheet metal: #8 x 1/4 PKZ plain hex head; cad pl (tuner mtg)
	3S3397	Screw, sheet metal: #8 x 5/16 PKZ plain hex head; cad pl (power trans mtg)
	47B480768	Shaft & Coupling Assembly (for volume control)
	1A71049	Shield and Sleeve Assembly (for T-1 & T-2)
	9A70208	Socket, tube: 4-prong (for vibrator)
	9A472534	Socket, tube: miniature: 7 prong
	9A6788	Socket, tube: octal
	31K86126	Strip, terminal: 2 insulated lugs, #2 mtg
	31A472573	Strip, terminal: 2 insulated lugs, #2 mtg
	7A472576	Support, volume control shaft alignment
	4S7555	Washer, flat: 1/4 x .128 x .033; cad pl (output trans.mtg)

©John F. Rider

©John F. Rider

MODELS 253T, 254T, 255T, 256T; Ch. RE-252

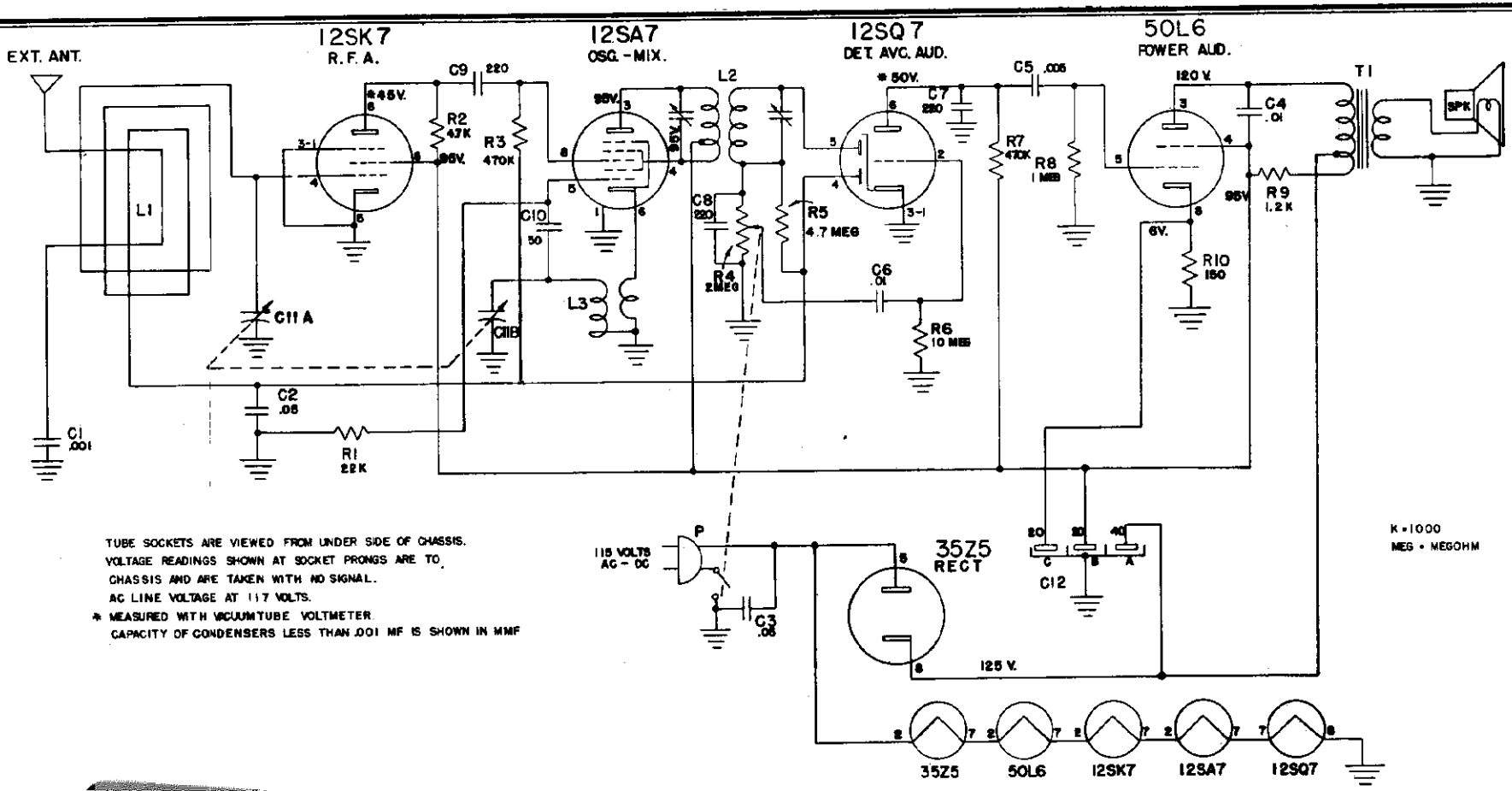

TUBE SOCKETS ARE VIEWED FROM UNDER SIDE OF CHASSIS.
VOLTAGE READINGS SHOWN AT SOCKET PRONGS ARE TO CHASSIS AND ARE TAKEN WITH NO SIGNAL.
AC LINE VOLTAGE AT 117 VOLTS.
* MEASURED WITH VACUUMTUBE VOLTMETER.
CAPACITY OF CONDENSERS LESS THAN .001 MF IS SHOWN IN MMF

K = 1000
MEG = MEGOHM

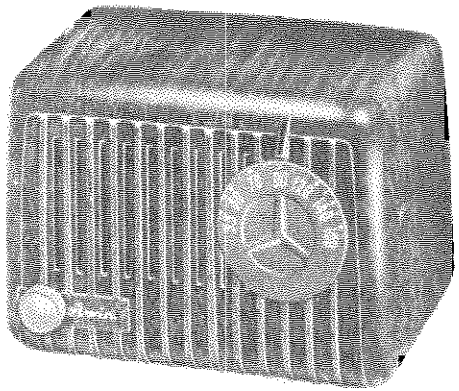

SPECIFICATIONS

FREQUENCY RANGE
Broadcast ..... 540-1600 kc
IF ..... 455 kc

POWER OUTPUT
Undistorted ..... 1.2 Watts
Maximum ..... 3 Watts
Plate load ..... 2000 Ohms

LOUD SPEAKER
Type: Permanent magnet
Size: 4 Inch
Voice coil impedance ..... 3.2 Ohms

POWER SUPPLY
105-125 Volts, AC-DC, 35 Watts

All Models are identical except for Colors, See Chart under Parts list.

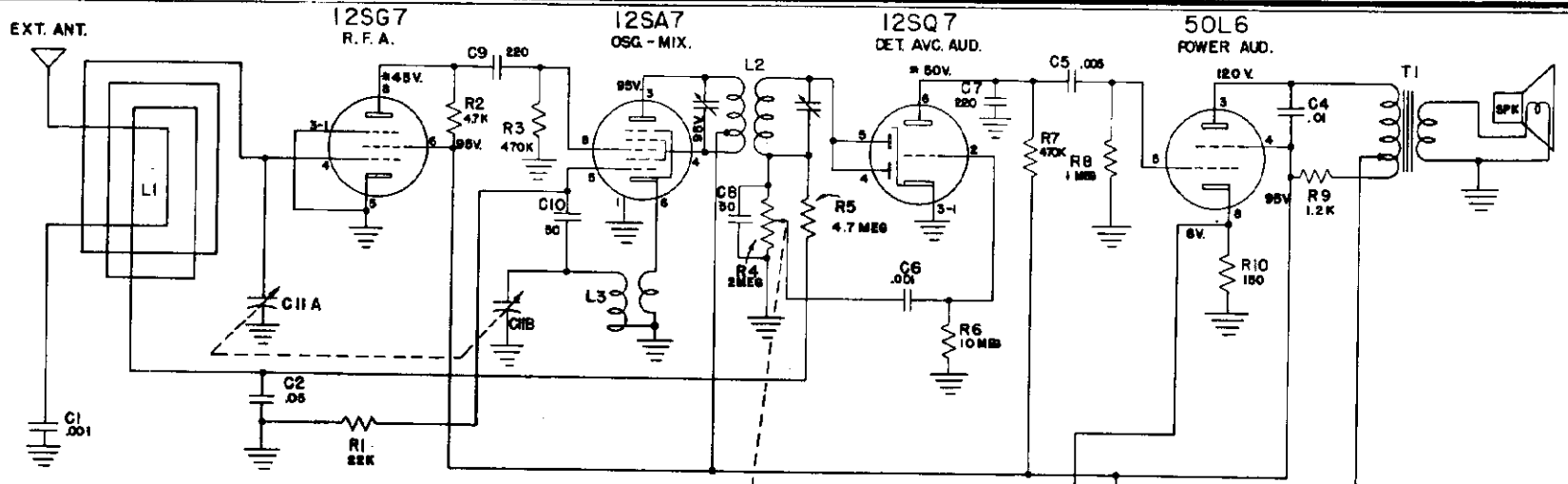

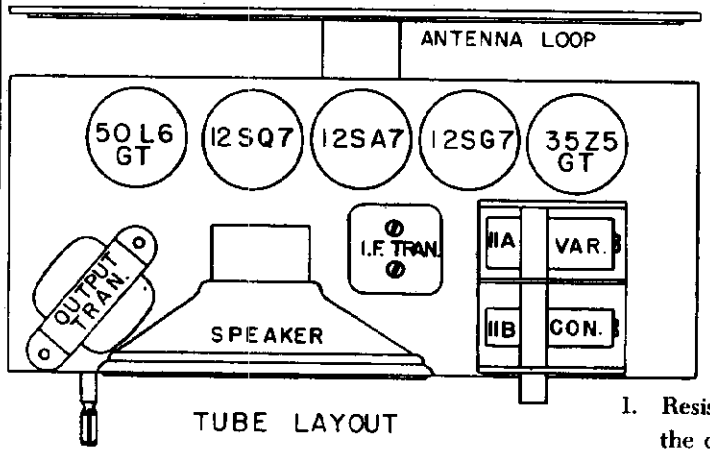

TUBE LAYOUT

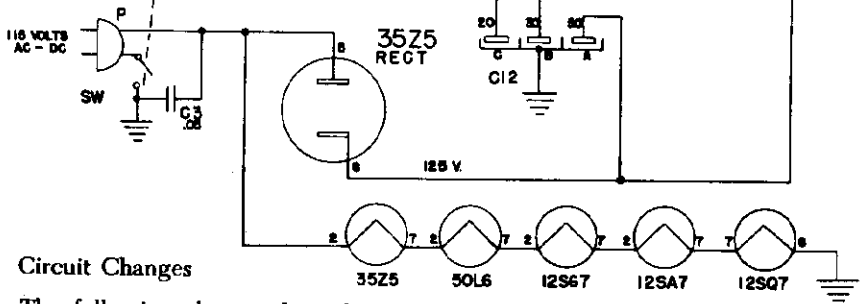

K = 1000
MEG = MEGOHM

TUBE SOCKETS ARE VIEWED FROM UNDER SIDE OF CHASSIS.
VOLTAGE READINGS SHOWN AT SOCKET PRONGS ARE TO CHASSIS AND ARE TAKEN WITH NO SIGNAL.
AC LINE VOLTAGE AT 117 VOLTS.
* MEASURED WITH VACUUM TUBE VOLTMETER.
CAPACITY OF CONDENSERS LESS THAN .001 MF IS SHOWN IN MMF

Circuit Changes

The following changes have been made in the circuit of Chassis RE-252 since the original service bulletin was printed:

1. Resistor R3 is connected from the grid of the 12SA7 tube to chassis. On the schematic diagram of the original bulletin, this was shown connected from the grid to A. V. C.
2. The Electrolytic Condenser C12, Part No. A22015, has been changed from 40-20 mfd., 150 V., 20 mfd., 25 V., to 50-30 mfd., 150 V., 20 mfd., 25 V. Some sets were built with a 20 mfd., 150 V. condenser connected across the B section of the original condenser. When excessive hum or hum modulation is encountered on sets which have the original 40-20 mfd., 150 V., 20 mfd., 25 V. condenser, adding the extra 20 mfd., 150. condenser across the B section will usually correct it.
3. The RF Plate Resistor R2 is changed from ¼ Watt, C20060-472 to 1 Watt, C20103-472.
4. The two diodes in the 12SQ7 tube, socket lugs 4 and 5, are tied together; lug No. 4 was originally connected to A. V. C.
5. The RF tube was changed from 12SK7 to 12SG7 to increase the gain.

© John F. Rider

MODELS 253T, 254T,
255T, 256T; Ch. RE-252

ALIGNMENT PROCEDURE

A. Connect to 117 V., AC line and turn set on with volume control at full volume.

B. Connect signal generator high side through .05 uf or larger condenser to 12SA7 grid. Connect low side of signal generator to Chassis. Connect output meter across speaker voice coil.

C. Open variable condenser.

D. With signal generator set at 455 Kc, increase output of generator until output is heard in speaker. Adjust IF trimmers until maximum output meter reading is obtained, reducing signal generator output as adjustment progresses so that final adjustment is made with lowest input consistent with good signal to noise ratio.

E. With signal generator connected to a radiating loop and set to 1620 Kc, adjust oscillator trimmer (C11B) on variable condenser until output is maximum. Variable Condenser is to be fully opened during this adjustment.

F. Set signal generator to 1400 Kc and rotate variable condenser until output is maximum. Adjust R. F. trimmer (C11A) on variable, condenser until output increases to a new maximum. Rotate variable condenser slightly to obtain another maximum output. Re-adjust trimmers until output is again a maximum. Repeat this cycle until no further increase in output can be obtained. Final adjustment to be made with a signal generator output at lowest level consistent with good signal to noise ratio.

G. Set signal generator to 1000 Kc and tune radio to maximum output. Adiust variable condenser plates for maximum output.

H. Set signal generator to 600 Kc and proceed as in G above.

I. Set signal generator to 540 Kc and make sure that radio will tune to maximum output slightly before variable condenser is fully closed.

J. Recheck alignment and calibration at 1400, 1000, and 600 Kc, making any necessary readjustments.

K. Tune the variable condenser through its entire range to make sure it is not shorted at any point.

TUBE LAYOUT

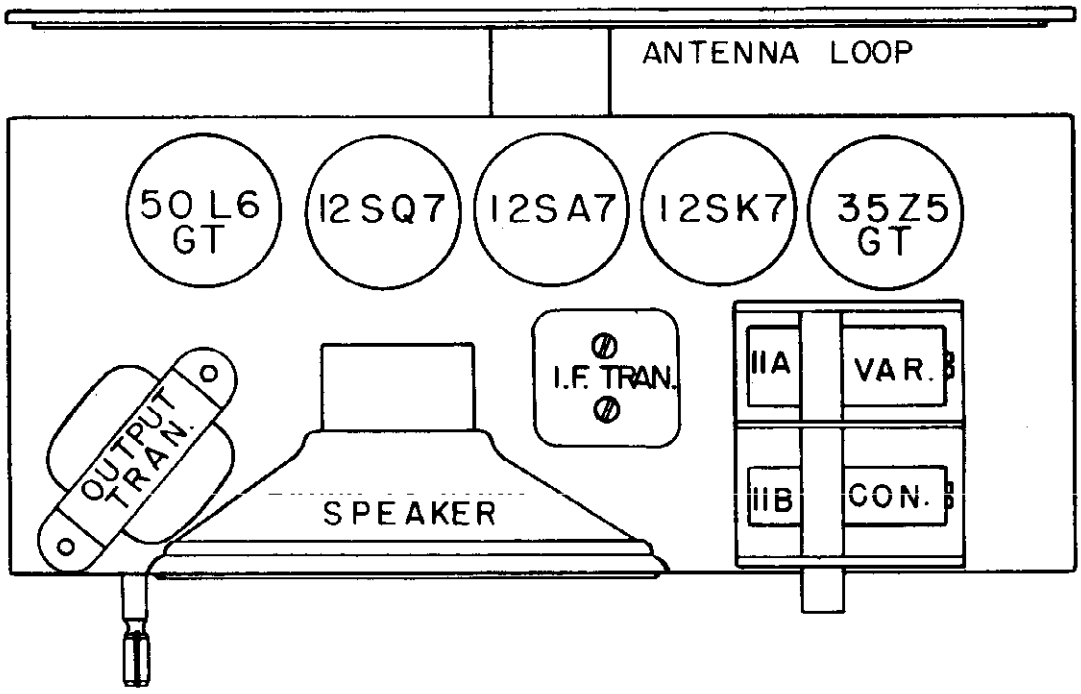

©John F. Rider

MODELS 253T, 254T,
255T, 256T; Ch. RE-252

PARTS LIST

Sch. Loc.	Part No.	Description
R1	C20060-223	Resistor, 22,000 ohms, ½ W
R2	C20060-472	Resistor, 4700 ohms, ¼ W
R3, R7	C20060-474	Resistor, 470,000 ohms, ¼ W
R4	C21947	Volume control & switch, 2 megohms
R5	C20060-475	Resistor, 4.7 megohms, ¼ W
R6	C20060-106	Resistor, 10 megohms, ¼ W
R8	C20060-105	Resistor, 1 megohm, ¼ W
R9	C20070-122	Resistor, 1200 ohms, 1 W
R10	C20060-151	Resistor, 150 ohms, ½ W
C1	C20226-102	Condenser, .001 uf., 350 V., Ceramic
C2	C20067-503	Condenser, .05 uf., 200 V., P. T.
C3	C20068-503	Condenser, .05 uf., 400 V., P. T.
C4	C20068-103	Condenser, .01 uf., 400 V., P. T
C5	C20069-502	Condenser, .005 uf., 600 V., P. T.
C6	C20067-103	Condenser, .01 uf., 200 V., P. T.
C7, C8,		
C9	C20226-221	Condenser, .00022 uf., 350 V., Ceramic
C10	A21643	Condenser, .00005 uf., 350 V., molded
C11A, B	C21948	Condenser, variable
C12A, B, C	A22015	Condenser, electrolytic, 20-40 uf., 150 V., 20 uf, 25 V.
L1	AC21998-1	Antenna loop and rear cover assembly
L2	AC21999-1	I. F. coil assembly
L3	AC22024	Oscillator coil assembly
T1	AC22014-1	Output transformer assembly
Spk.	C21946	Speaker, 4"
	A20077-3	Grommet, rubber, variable condenser mtg.
	A20258-1	Socket, tube, molded, plain
	*A21993-1( )	Knob, volume
	A22016	Carton, complete with fillers
	*AA22114-1 & 4	Cabinet assembly, walnut and black
	*AA22114-2 & 3	Cabinet assembly, ivory and green
	*AA22115-1 ( )	Knob, tuning
	A19138-1	Spacer eyelet, variable condenser mounting
	B20254-1	Line Cord & Plug assembly

*Be sure to use the proper dash number as outlined in the chart below when ordering colored parts:

MODEL	CABINET	VOLUME KNOB	TUNING KNOB
254-T Walnut	AA22114-1 Walnut	A21993-1 Rust	A22115-1 Rust
255-T Ivory	AA22114-2 Ivory	A21993-2 Old Rose	A22115-2 Old Rose
256-T Green	AA22114-3 Green	A21993-3 Cream	A22115-3 Cream
253-T Black	AA22114-4 Black	A21993-4 Fern Green	A22115-4 Fern Green

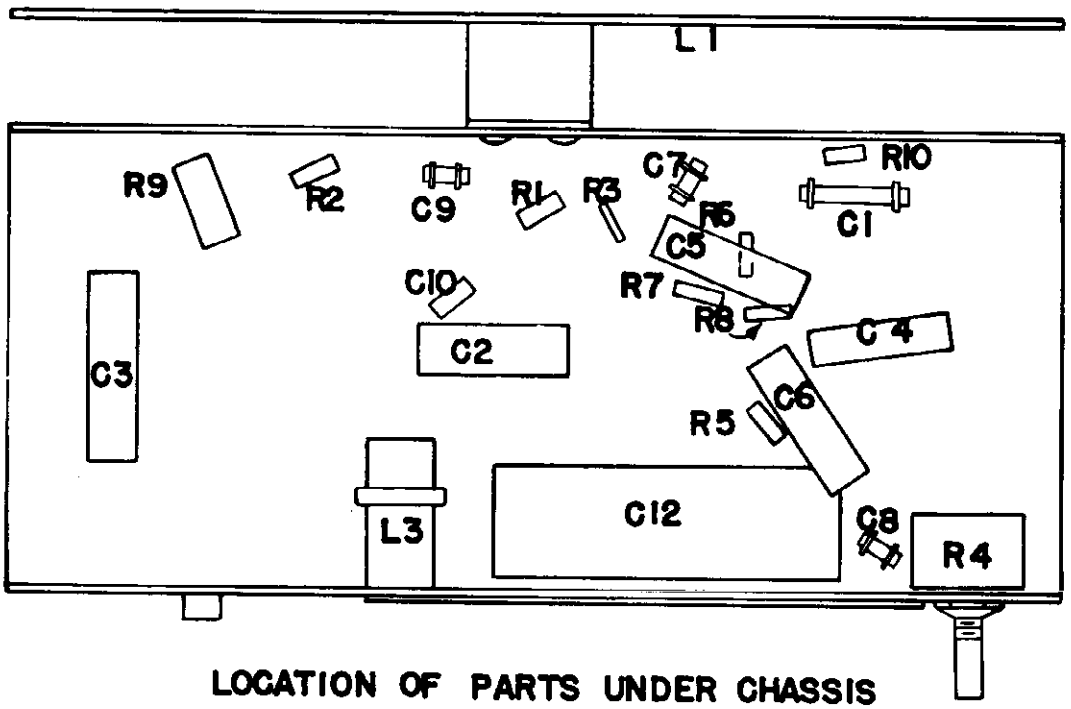

LOCATION OF PARTS UNDER CHASSIS

©John F. Rider

MODEL 341T,
Ch. RE-274

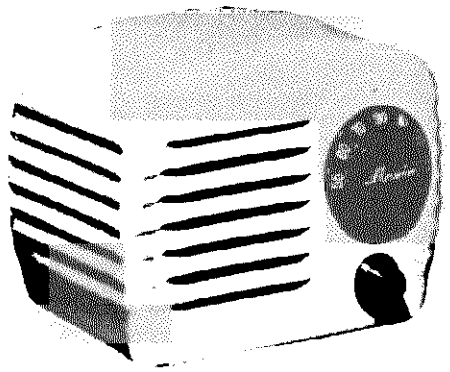

ELECTRICAL AND MECHANICAL SPECIFICATIONS

FREQUENCY RANGE

Broadcast	540-1600 kc
IF	455 kc

TUBES AND FUNCTIONS

12SA7	Mixer-oscillator
12SQ7	Detector-AVC-AF
50L6GT	Output
35Z5GT	Rectifier

POWER SUPPLY

105-125 Volts AC-DC, 35 Watts

POWER OUTPUT

Type: Beam tube

Undistorted	.8 Watts
Maximum	2.5 Watts
Plate load	2000 ohms

LOUD SPEAKER

Type: Permanent magnet
Size: 4 inch

Voice coil impedance	3.2 ohms

CHASSIS FEATURES

Automatic Volume Control
Underwriters Listed

OPERATING CONTROLS

1. Upper knob — Tuning
   Tuning ratio — 1:1
2. Lower knob — ON-OFF & Volume

PHYSICAL DIMENSIONS

Length	6½ inches
Width	5 inches
Depth	4⅝ inches

HOW TO ORDER PARTS

Replacement parts should be ordered by Arvin part number, description and model number of receiver from your Arvin Distributor. The Distributor will order direct from the factory, except in the case of tubes, which should be obtained through regular tube distribution channels.

PARTS LIST

REF. NO.	PART NO.	DESCRIPTION
R1	C20060-475	Resistor, 4.7 Megohms ¼ watt
R2	Part of (A21642 Capristor)	Resistor, 1 Megohm
R3	C20060-151	Resistor, 150 ohms, ¼ watt
R4	C20060-223	Resistor, 22,000 ohms ¼ watt
R5	C20060-334	Resistor, 330,000 ohms, ¼ watt
R6	C20060-156	Resistor, 15 megohms ¼ watt
R7	B18587	Volume Control & Sw. 2 megohms
R8	C20060-474	Resistor, 470,000 ohms ¼ watt
R9	A19177	Resistor, 47 ohms 1 watt
R10	C20070-222	Resistor, 2,200 ohms 1 watt
R11	C20060-150	Resistor, 15 ohms ¼ watt
CR-1	A21642	Capristor, .002 uf. condenser & 1 megohm resistor
C1, C2	C22047	Condenser, variable
C3,	C20067-503	Condenser, .05 uf, 200 Volt
C4	C20068-503	Condenser, .05 uf 400 Volt
C6	A21643	Condenser, .00005 uf
C7	A21645	Condenser, .0001 uf
C8	C20068-202	Condenser, .002 uf 400 Volt
C9	C20203-103	Condenser, .01 uf 350 Volt Ceramic
C10	A19176	Condenser, 40 uf 150 Volt
C11		Condenser, 20 uf 150 Volt
C12		Condenser, 20 uf 25 Volt
T1	AC18255-1	Coil Antenna
T2	AC18256-1	Coil Oscillator
T3	AC18257-1	Coil IF
T4	AC18258-1	Output Transformer
	D16511-4	Cabinet, Sandel wood
	C22028-8	Knob Tuning
	A18262-8	Knob Volume
Spk.	C21626	Speaker
	A22058	Carton with fillers
	B20257-1	Line Cord & Plug Ass'y.
	A21992	Compression Spring on Tuning Knob

©John F. Rider

MODEL 341T,
Ch. RE-274

ALIGNMENT PROCEDURE

PRELIMINARY:

Output meter connection ..... Across loudspeaker voice coil
Output meter reading to indicate 200 milliwatts (standard output) ..... 0.8 volts
Dummy antenna to be in series with signal generator output ..... See chart below
Connection of generator ground lead ..... Floating ground
Generator modulation ..... 30% 400 cycles
Position of Volume Control ..... Fully clockwise
Position of pointer with variable fully closed ..... 54 on dial

Position of Variable	Generator Frequency	Dummy Antenna	Generator Output Connection	Trimmers Adjuster	Trimmer Function	Approximate Sensitivity
Open	455 Kc	.05 uf	12SA7 Grid (Stator of C-1)	2 trimmers on top of T-3	IF	3000 uv
1400 Kc	1400 Kc	.00005 uf	Antenna lug with Ant. Removed	**C-2	Oscillator	360 uv

**Since the antenna section of the variable has no trimmer, the rotor of the variable should be rocked back and forth on both sides of 1400 Kc while adjusting the oscillator trimmer for maximum output. This is to obtain the combination of rotor and trimmer setting to give perfect tracking of the two sections of the variable condenser and consequently give maximum output.

Check sensitivity at 600 Kc. If weak, adjust antenna section plates for maximum output at 600 Kc. Tracking of the condenser at points other than 1400 Kc is accomplished by bending the outside plates on the variable condenser rotor, which are cut for this purpose. When bending plates to track the condenser at any given frequency, keep in mind the fact that this will affect the tracking at all frequencies below the point where the plates are bent. A tuning wand is very helpful in checking the tracking of this condenser, to indicate whether more or less capacity is needed.

The alignment procedure should be repeated stage by stage in the original order for greatest accuracy.

Always keep the output from the test oscillator at its lowest possible value to make the AVC action of the receiver ineffective.

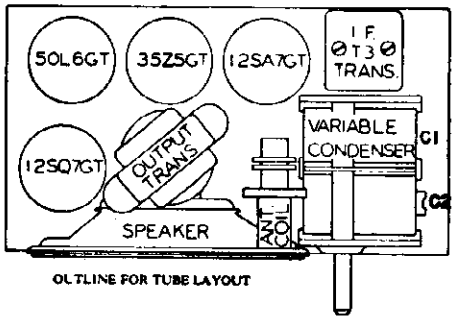

OUTLINE FOR TUBE LAYOUT

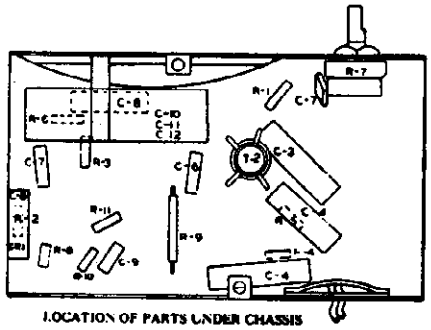
LOCATION OF PARTS UNDER CHASSIS

SCHEMATIC CIRCUIT DIAGRAM

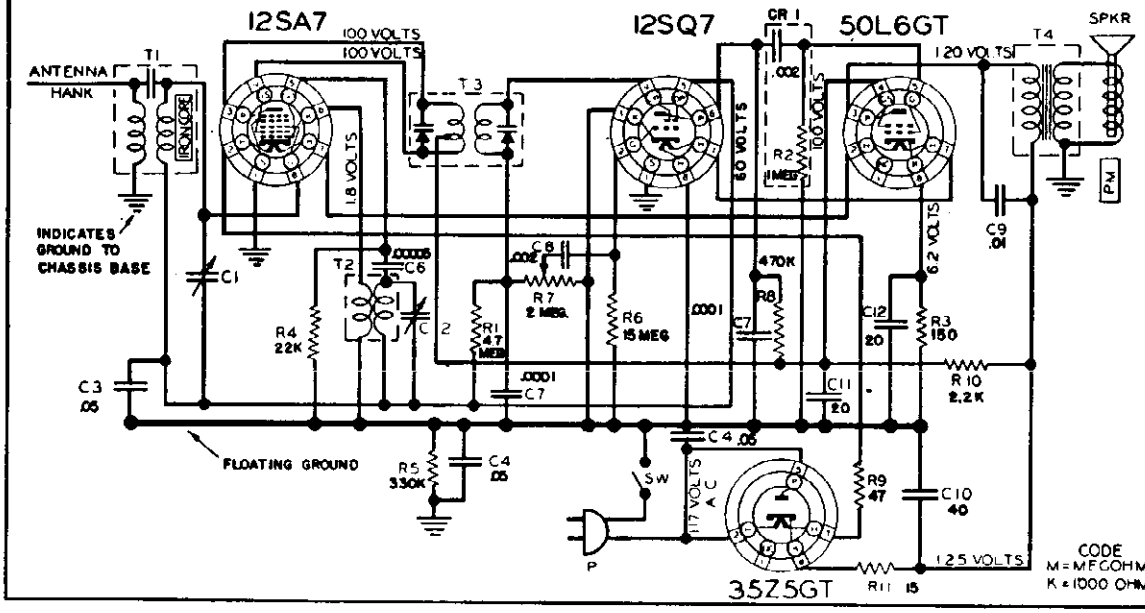

©John F. Rider

MODELS 350P, 351P; Ch. RE-267

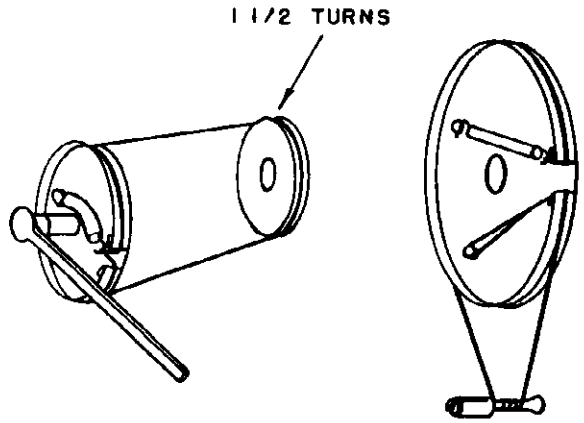

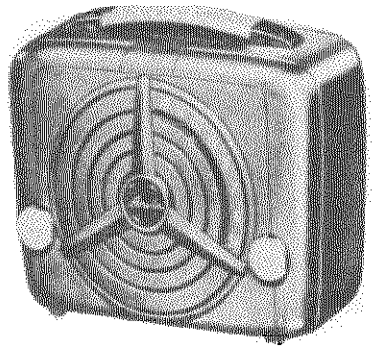

DIAL STRINGING ARRANGEMENT

SPECIFICATIONS

FREQUENCY RANGE
- Broadcast ---------- 540-1600 kc
- IF ---------- 455 kc

TUBES AND FUNCTIONS
- 1U4 ---------- RF Amp.
- 1R5 ---------- Mixer-oscillator
- 1U4 ---------- IF Amp.
- 1U5 ---------- DET-AVC AF Amp.
- 3V4 ---------- Output

POWER SUPPLY
1. 90 V. B Battery, Eveready Minimax, No. 490 or Equal.
6. 1½ V. C Size Flashlight Cells, 9 Volts total

Or 115 Volts AC or DC, 16 Watts

POWER OUTPUT
- Undistorted ---------- .2 Watt
- Maximum ---------- .3 Watt
- Plate Load ---------- 10,000 ohms

LOUD SPEAKER
- Type: Permanent magnet
- Size: 4 Inch
- Voice coil impedance ---------- 3.2 Ohms

CHASSIS FEATURES
- Automatic Volume Control
- Built-in Loop
- Underwriters listed.

OPERATING CONTROLS
1. Left knob ---------- On-Off Sw & Volume
2. Right knob ---------- Tuning

PHYSICAL DIMENSIONS
- Length ---------- 9½ inches
- Height ---------- 7½ inches
- Depth ---------- 4¾ inches

Models 350P & 351P are identical except for the Color of the Cabinet and Dial Backing plate. Model 350P is Blue Green, Model 351P is Jade Green.

ALIGNMENT PROCEDURE

A. Connect to 117 V. AC line and turn set on with volume control at full volume.

B. Connect output meter across speaker voice coil. (Output meter reading to indicate 50 MW, standard output is .4 volt).

C. With variable condenser closed set pointer to end mark, (bottom hole) on dial back.

D. Connect signal generator high side through .05 uf or larger condenser to high side of loop or variable condenser. Connect signal generator low side to floating ground of the receiver.

E. Open variable condenser.

F. With signal generator set at 455 Kc., increase output of generator until output is heard in speaker. Adjust I. F. trimmers A1, A2, A3 and A4 until maximum output meter reading is obtained, reducing signal generator output as adjustment progresses so that final adjustment is made with lowest input consistent with good signal to noise ratio. NOTE: If no signal can be heard with signal generator connected at at D above, connect high side to terminal 6 of 1R5 tube, through condenser as at D, and proceed as before.

G. With signal generator at 455 Kc and connected as in D above, adjust R. F. transformer coupling condenser A5 until output meter reading is a minimum. Final adjustment is to be made with high signal input so that an accurate adjustment can be made.

H. With signal generator connected to radiating loop and set to 1620 Kc adjust oscillator trimmer A6 on variable condenser until output is maximum. Variable condenser is to be fully opened during this adjustment.

I. Set signal generator to 1400 Kc and rotate variable condenser until output is maximum. Adjust R. F. trimmer A7 on variable condenser until output increases to a new maximum. Rotate variable condenser slightly to obtain another maximum output. Re-adjust trimmer until output is again a maximum. Repeat this cycle until no further increase in output can be obtained.

NOTE: When adjusting A7 R. F. Trimmer, make sure the set loop is the same distance from and in the same position with respect to the chassis and batteries as it would be when the set is mounted in the cabinet with the back closed.

J. The alignment procedure should be repeated in the original order for greatest accuracy. Always keep the output from the signal generator at its lowest possible value to make the AVC action of the receiver ineffecctive.
The sensitivity of this set should be approximately 180 uv/meter with 400 cycle 30% modulation and 50 milliwatt (.4 volt) output.

© John F. Rider

PARTS PRICE LIST FOR 350-P, 351-P

SCHEMATIC LOCATION	PART NO.	DESCRIPTION
R1	C20271-153	Resistor, 15,000 ohm, 1/3 w, 20%
R2	C20271-104	Resistor, 100K, 1/3 w, 20%
R3	C20271-223	Resistor, 22K ohm, 1/3 w, 20%
R4	C20271-681	Resistor, 680 ohm, 1/3 w, 20%
R5	C20271-106	Resistor, 10 meg., 1/3 w, 20%
R6	C20271-335	Resistor, 3.3 meg., 1/3 w, 20%
R7	C20271-473	Resistor, 47K, 1/3 w, 20%
R8	C20060-332	Resistor, 3300 ohm, 1/4 w, 20%
R9	A21816	Resistor, 1850 ohms, 10 w, 10%
R10	C22336-820	Resistor, 82 ohm, 2 w, 20%
R11	C20070-182	Resistor, 1800 ohm, 1 w, 20%
R12	C20271-102	Resistor, 1,000 ohm, 1/3 w, 20%
R13	C20271-475	Resistor, 4.7 meg., 1/3 w, 20%
R14, R15, R16		
C14, C15, C16	A22257	Audio Coupling Unit
VC	C22253	Volume Control & Switch, 2 meg.
C1	AC22277-1	Variable Condenser Assembly
C2	A20275	Trimmer, 8-75 uuf,
C3	C20273-104	Condenser, P. T., .1 uf, 400 v
C4, C12	C20065-500	Condenser, Mica, 50 uuf., 500 v
C5, C7, C9		
C13, C17	C20272-503	Condenser, P. T., .05 uf., 200 v
C6	C20068-503	Condenser, P. T., .05 uf., 400 v
C8	A22295	Disc Ceramic Capacitor, .01 uf.
C10	C20065-330	Condenser, Mica 33 uuf, 500 v.
C11	C20272-103	Condenser, P. T., .01 uf., 200 v

SCHEMATIC LOCATION	PART NO.	DESCRIPTION
C18A, B, C	A21815	Condenser, Electrolytic, 40-20 mfd., 150 v. 100 mfd., 10 v.
C19	C20273-602	Condenser, P. T., .006 uf., 400 v.
L1	AD22258-1	Antenna Loop & Cabinet Back Assembly, Blue-Green
L1	AD22258-2	Antenna Loop & Cabinet Back Assembly, Jade-Green
L2, L3	AC22256-1	R. F. Transformer Assembly
L4, L5	AC22255-1	Oscillator Coil Assembly
T1	C21797-2	I. F. Transformer, First
T2	C21797-5	I. F. Transformer, Second
T3	AC22254-1	Output Transformer Assembly
	C20207-2	Selenium Rectifier, 75 m. a.
P	B20246-2	Line Cord & Plug
	A21051	Slide Switch
AP	A21861	"A" Battery Cable & Terminal Strip
Spk	C22241	Speaker with Transformer Bracket
BP	A22269	"B" Battery Cable & Terminal Strip
	A19361	Hair Pin Clip
	A20243-1	Socket, Unshielded
	A20243-3	Socket, Shielded
	A21277	Dial Pointer Pulley
	C21767-1	Spring Latch
	D21786	Chassis Bottom Cover
	A21792	Spring Clip Mtg. I. F.'s)
	A21801	Line Cord Hook (2 req.)
	A21802	Spring Hinge (Set of 2)

PART NO.	DESCRIPTION
A21838	Carton Complete with Fillers
A21852	Electrolytic, Mtg. Wafer
A22245	Dial Pointer Shaft Bracket
A22246	Dial Pointer Shaft
A22247	Tuning Shaft & Trimmer Bracket
C22248	Rectifier Mt. Bracket
C22249	Rectifier Bracket Cover
A22250	Tuning Shaft
C22252	Antenna Loop Shield
C22264	Dial Scale Backing Plate
C22267	Pointer
AC22268-1	Battery Clip Assembly
AC22270-1	Handle Assembly
A22286-1	Knob, (2 req.)
A22297	Battery Tube (3 req.)
AA22380-1	Cabinet Assembly, Blue-Green
AA22380-2	Cabinet Assembly, Jade-Green

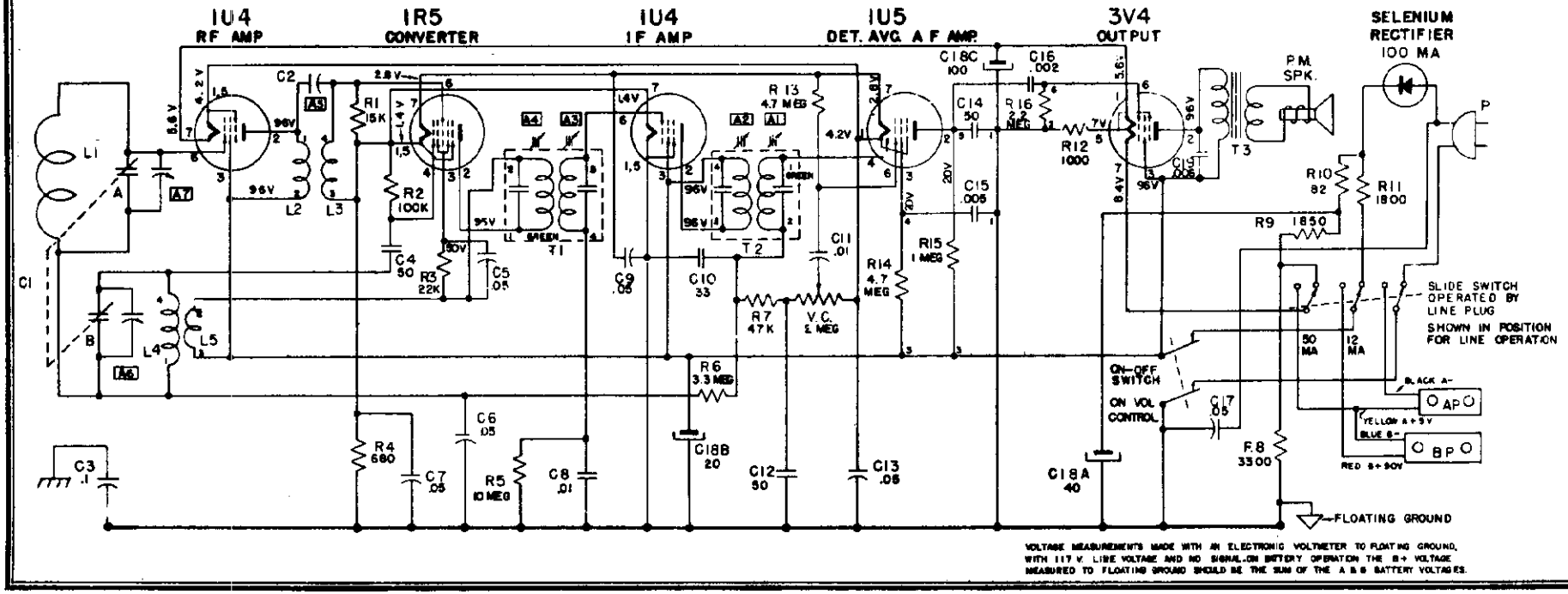

VOLTAGE MEASUREMENTS MADE WITH AN ELECTRONIC VOLTMETER TO FLOATING GROUND, WITH 117 V. LINE VOLTAGE AND NO SIGNAL. ON BATTERY OPERATION THE B+ VOLTAGE MEASURED TO FLOATING GROUND SHOULD BE THE SUM OF THE A & B BATTERY VOLTAGES.

©John F. Rider

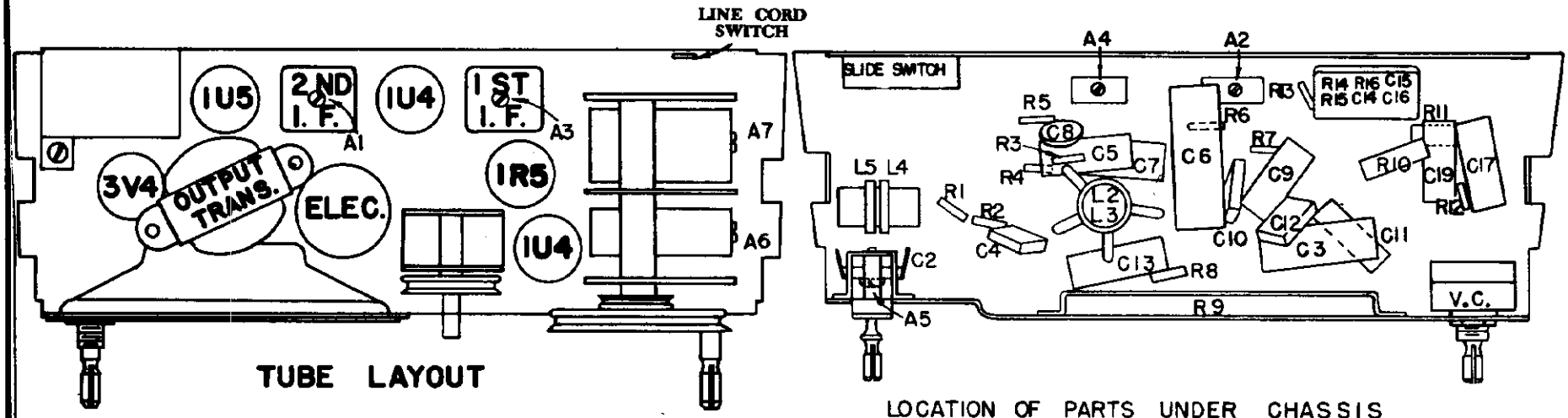

SCHEMATIC CIRCUIT DIAGRAM MODELS 350-UP & 351-UP CHASSIS RE 267

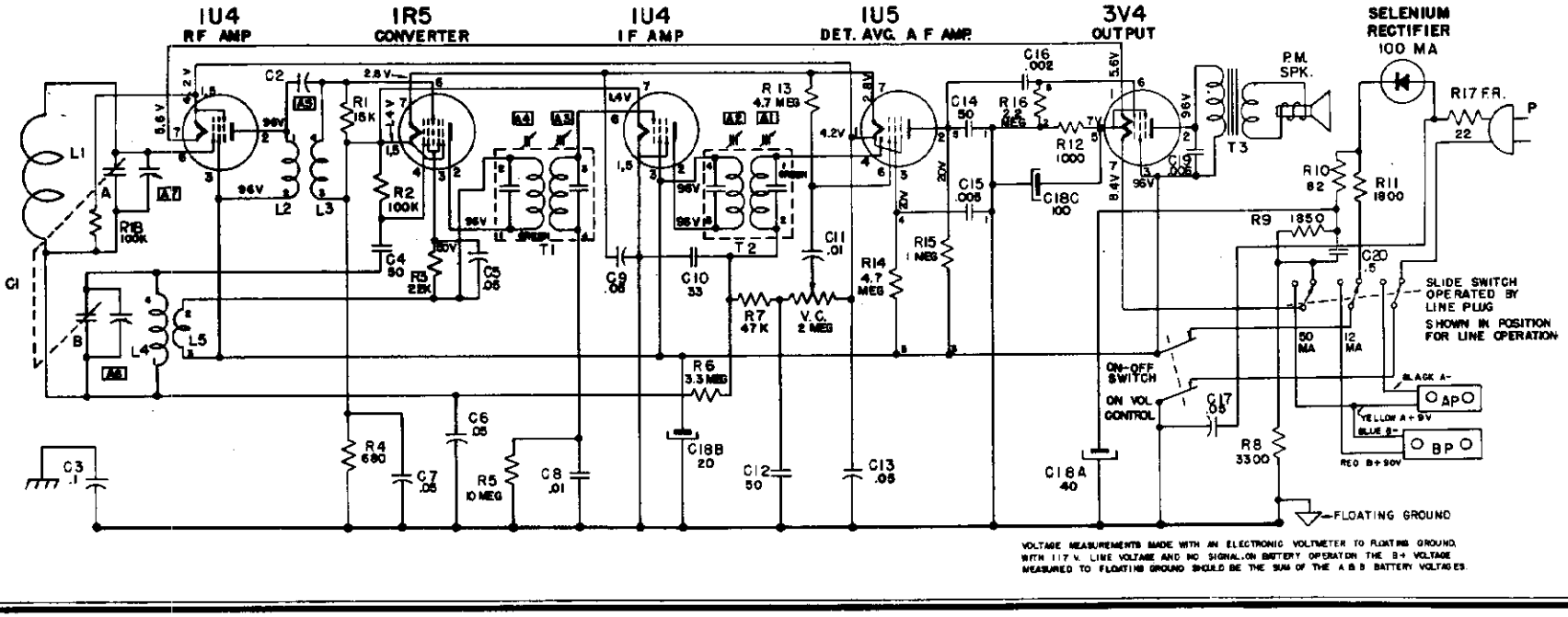

VOLTAGE MEASUREMENTS MADE WITH AN ELECTRONIC VOLTMETER TO FLOATING GROUND WITH 117 V. LINE VOLTAGE AND NO SIGNAL. ON BATTERY OPERATION THE B+ VOLTAGE MEASURED TO FLOATING GROUND SHOULD BE THE SUM OF THE A & B BATTERY VOLTAGES.

MODELS 350P, 351P, 350-UP, 351-UP; Ch. RE 267,

MODELS 350-UP, 351-UP;
Ch. RE 267,

SUBJECT: Circuit and Model Number Changes.

Change covered in this supplement.

1. Circuit change to reduce hum, prevent oscillation and improve reception.
2. Model number changes (350-UP and 351-UP) to comply with Underwriters' Lab requirements.

The following changes were made in production and can be used as repair measures on sets of earlier production now in the field.

Hum Reduction.

The 100 mfd. 10 V. section of the Electrolytic Condenser was changed from the end of the 3V4 filament (Pin #1) to the center tap of the 3V4 filament (Pin #5) and a .5 mfd, 200 V. Condenser (Part #A22388) was added across the 1850 ohm metal clad 10 watt Resistor, R9. This Resistor is mounted on the front chassis flange.

To make this change in the field, remove the two yellow wires from the 100 mfd. 10V. lug on the Electrolytic Condenser (C18C). Connect these two wires together, placing the joint so that it can not touch anything. Then connect a piece of wire from this condenser lug to #5 pin of the 3V4 socket. Connect .5 mfd. 200 V. Condenser (Part #A22338, chosen for its small size due to space limitations) to the two lugs on the metal clad resistor.

Oscillation Prevention.

The AVC characteristics were modified to prevent oscillation and improve reception, by adding a 100,000 ohm, 1/3 watt Resistor, R18 (Part #C20271-104) connected from Pin #1 of 1U4 R.F. amplifier to the lug on the variable condenser mounting screw (AVC).

Model Number Changes.

A 22 ohm fusing resistor was added in series in the high side of the AC line to the Selenium Rectifier, to comply with Underwriters' Lab. requirements. All sets having this change will be designated as Model 350-UP or 351-UP.

Precautions which should be taken to prevent excessive hum and audio feed back.

1. See that the AC lead along back chassis flange is dressed along the edge of the chasis flange, as far away from the bottom end of the I. F. transformer and associated leads as possible.
2. See that the audio coupling condenser connected to center lug on the volume control is separated as much as possible from the output transformer leads, and the black molded 2 watt, 82 ohm resistor, R10.
3. See that the output transformer leads are not behind the speaker near the 1U5 tube.

©John F. Rider

MODELS 356T, 357T;
Ch. RE-273

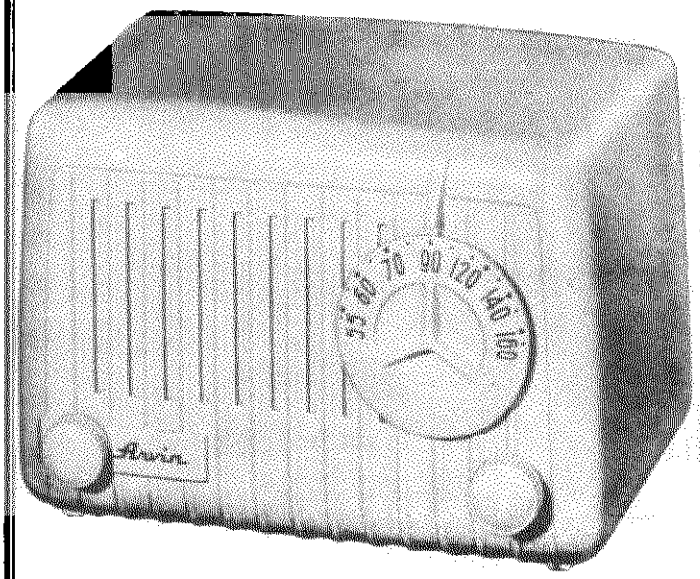

SPECIFICATIONS

FREQUENCY RANGE

Broadcast	540-1600 kc
IF	455 kc

TUBES AND FUNCTIONS

12SA7	Mixer-oscillator
12SK7	IF amp.
12SQ7	DET-AVC AF Amp.
50L6GT/G	Output
35Z5GT/G	Rectifier

LOUD SPEAKER

Type: Permanent magnet
Size: 4 Inch
Voice coil impedance ..... 3.2 Ohms

CHASSIS FEATURES

Automatic Volume Control
Built-in Loop

OPERATING CONTROLS

1. Left knob ..... ON-OFF Sw and Volume
2. Right knob ..... Tuning

PHYSICAL DIMENSIONS

Length	8¾ inches
Height	6 inches
Depth	5¾ inches

POWER SUPPLY

105-125 Volts, AC-DC, 35 Watts

POWER OUTPUT

Undistorted	1.2 Watts
Maximum	3 Watts
Plate load	2000 Ohms

Models 356T & 357T are identical except for Color, 356T is Sandalwood, 357T is Willow Green.

POSITION OF POWER CORD PLUG

On AC, the power cord plug should be tried in both its possible positions in the receptacle, and left in the position that gives least hum. On DC, the receiver will work in only one position of the plug in its receptacle.

THE ANTENNA

This receiver has a built-in loop which gives satisfactory reception in most locations. If the receiver is located some distance from a broadcasting station, or where the electrical interference is high, an outside antenna connected to the pickup lead on the loop, will improve reception.

This receiver is designed to operate without a ground connection and no attempt should be made to use one.

ALIGNMENT PROCEDURE

A. Connect to 117 V., AC line and turn set on with volume control at full volume.

B. Connect signal generator high side through .05 uf or larger condenser to 12SA7 grid. Connect low side of signal generator to Chassis. Connect output meter across speaker voice coil.

C. Open variable condenser.

D. With signal generator set at 455 Kc, increase output of generator until output is heard in speaker. Adjust IF trimmers A1, A2 & A3 until maximum output meter reading is obtained, reducing signal generator output as adjustment progresses so that final adjustment is made with lowest input consistent with good signal to noise ratio.

E. With signal generator connected to a radiating loop and set to 1620 Kc, adjust oscillator trimmer A4 on variable condenser until output is maximum. Variable Condenser is to be fully opened during this adjustment.

F. Set signal generator to 1400 Kc and rotate variable condenser until output is maximum. Adjust R. F. trimmer A5 on variable, condenser until output increases to a new maximum. Rotate variable oondenser slightly to obtain another maximum output. Re-adjust trimmers until output is again a maximum. Repeat this cycle until no further increase in output can be obtained. Final adjustment to be made with the signal generator output at lowest level consistent with good signal to noise ratio.

G. Set signal generator to 1000 Kc and tune radio to maximum output. Adjust variable condenser plates for maximum output.

H. Set signal generator to 600 Kc and proceed as in G above.

I. Set signal generator to 540 Kc and make sure that radio will tune to maximum output slightly before variable condenser is fully closed.

J. Recheck alignment and calibration at 1400, 1000, and 600 Kc, making any necessary readjustments.

K. Tune the variable condenser through its entire range to make sure it is not shorted at any point.

©John F. Rider

MODELS 356T, 357T;
Ch. RE-273

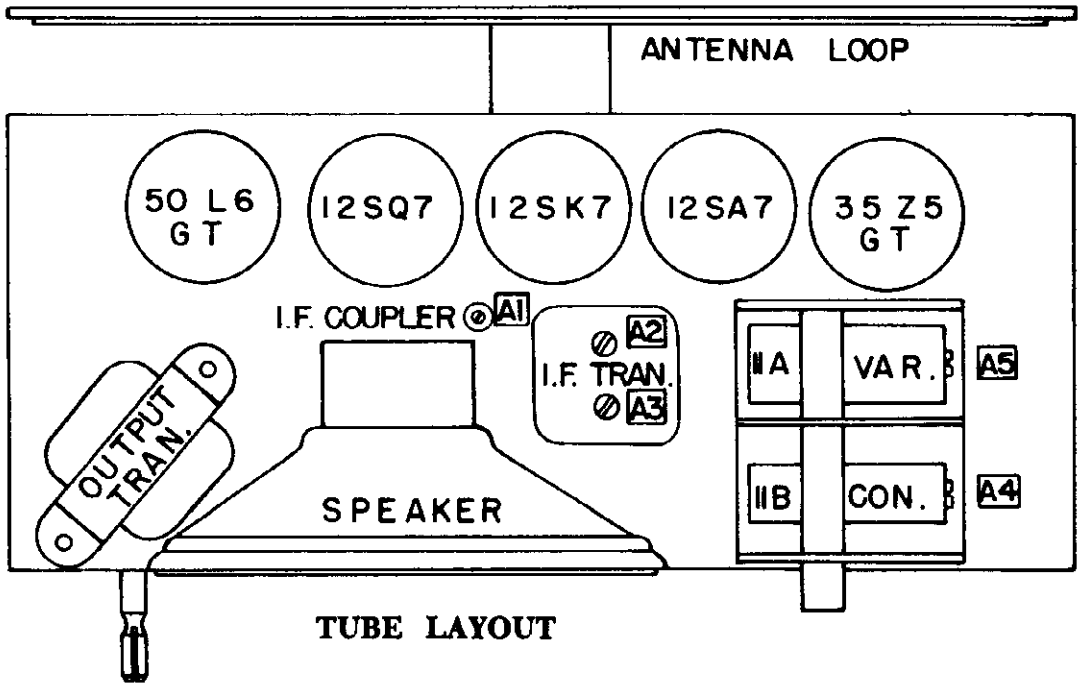

TUBE LAYOUT

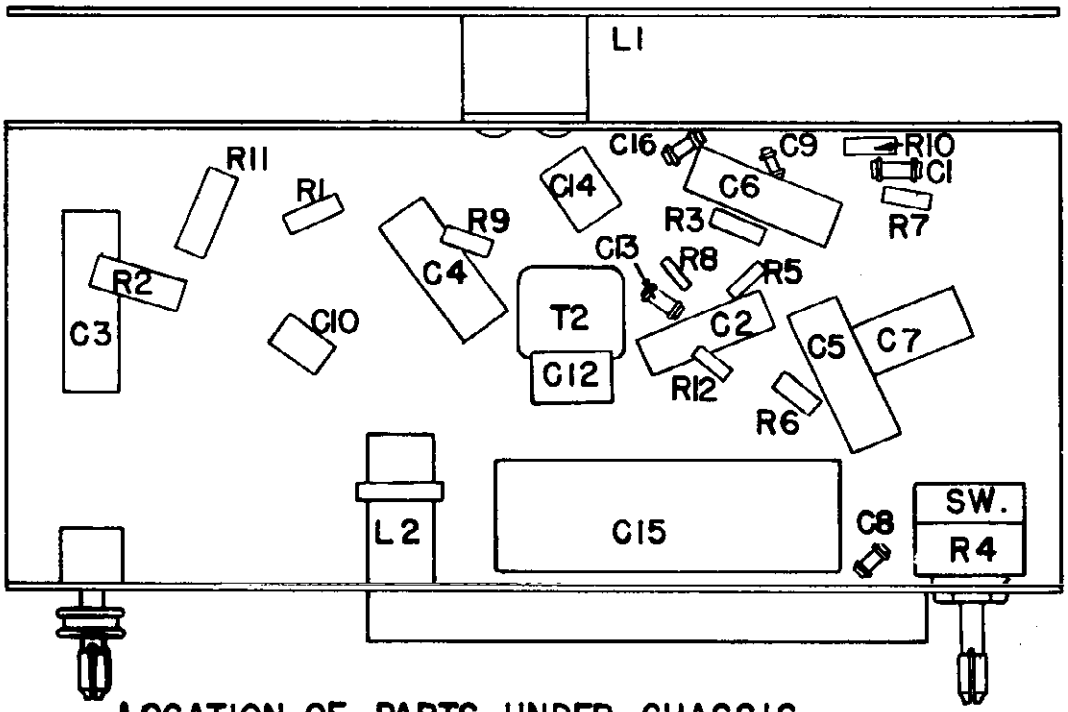

LOCATION OF PARTS UNDER CHASSIS

©John F. Rider

PARTS LIST FOR 356-T AND 357-T

Sch. Loc.	Part No.	Description
R1	C20060-223	Resistor, 22,000 ohms, ⅛ watt
R2	C20070-220	Resistor, 22 ohms, 1 watt
R3, R7	C20060-474	Resistor, 470,000 ohms, ⅛ watt
R4	C21947	Volume Control and Switch, 2 meg.
R5	C20060-475	Resistor, 4.7 megohms, ⅛ watt
R6	C20060-225	Resistor, 2.2 megohms, ⅛ watt
R8	C20060-104	Resistor, 100,000 ohms, ⅛ watt
R9	C20060-102	Resistor, 1,000 ohms, ⅛ watt
R10	C20060-151	Resistor, 150 ohms, ⅛ watt
R11	C20070-122	Resistor, 1,200 ohms, 1 watt
R12	C20060-473	Resistor, 47,000 ohms, ⅛ watt
C1	C20226-102	Condenser, .001 uf, 350 V., Ceramic
C2	C20067-503	Condenser, .05 uf, 200 V., P.T.
C3	C20068-503	Condenser, .05 uf, 400 V., P.T.
C4, C5, C7	C20068-103	Condenser, .01 uf, 400 V., P.T.
C6	C20069-502	Condenser, .005 uf, 600 V., P.T.
C8, C9, C18, C16	C20226-221	Condenser, .00022 uf, 350 V., Ceramic
C10	A21643	Condenser, .00005 uf, 350 V., Molded
C11A, C11B	AC22694-1	Variable Condenser Assembly
C12	C20325-251	Condenser, .00025 uf, 500 V.
C14	C20065-500	Condenser, .00005 uf, 500 V.
C15A, C15B, C15C	C22015	Condenser, Electrolytic, 50-30 uf, 150 V. 20 uf, 25 V
L1	AC21998-1	Antenna Loop and Rear Cover Assy..
L2	AC22024	Oscillator Coil Assembly
T1	AC22695-1	1st I-f Transformer Assembly
T2	A22616	I-f Coupler
T3	AC22134-1	Output Transformer Assembly

Loc. Sch.	Part No.	Description
Spk.	C21946	Speaker, 4" P.M.
	A22164	Speaker Baffle-Ring (Rubber)
	AA22668-1	Tuning Shaft Assembly
	A20077-3	Grommet, Rubber, Variable Condenser Mtg.
	A20258-1	Socket, Tube, Molded, Plain
	A19138-1	Spacer Eyelet, Variable Condenser Mtg.
	B20254-1	Line Cord and Plug Assembly
	A21993-5	Knob, Volume and Tuning
	AA22115-5	Knob, Dial for 356-T
	AA22115-6	Knob, Dial for 357-T
	AA22114-5	Cabinet Assembly, Sandalwood for 356-T
	AA22114-6	Cabinet Assembly, Willow Green for 357-T
	A22016	Carton Complete with fillers

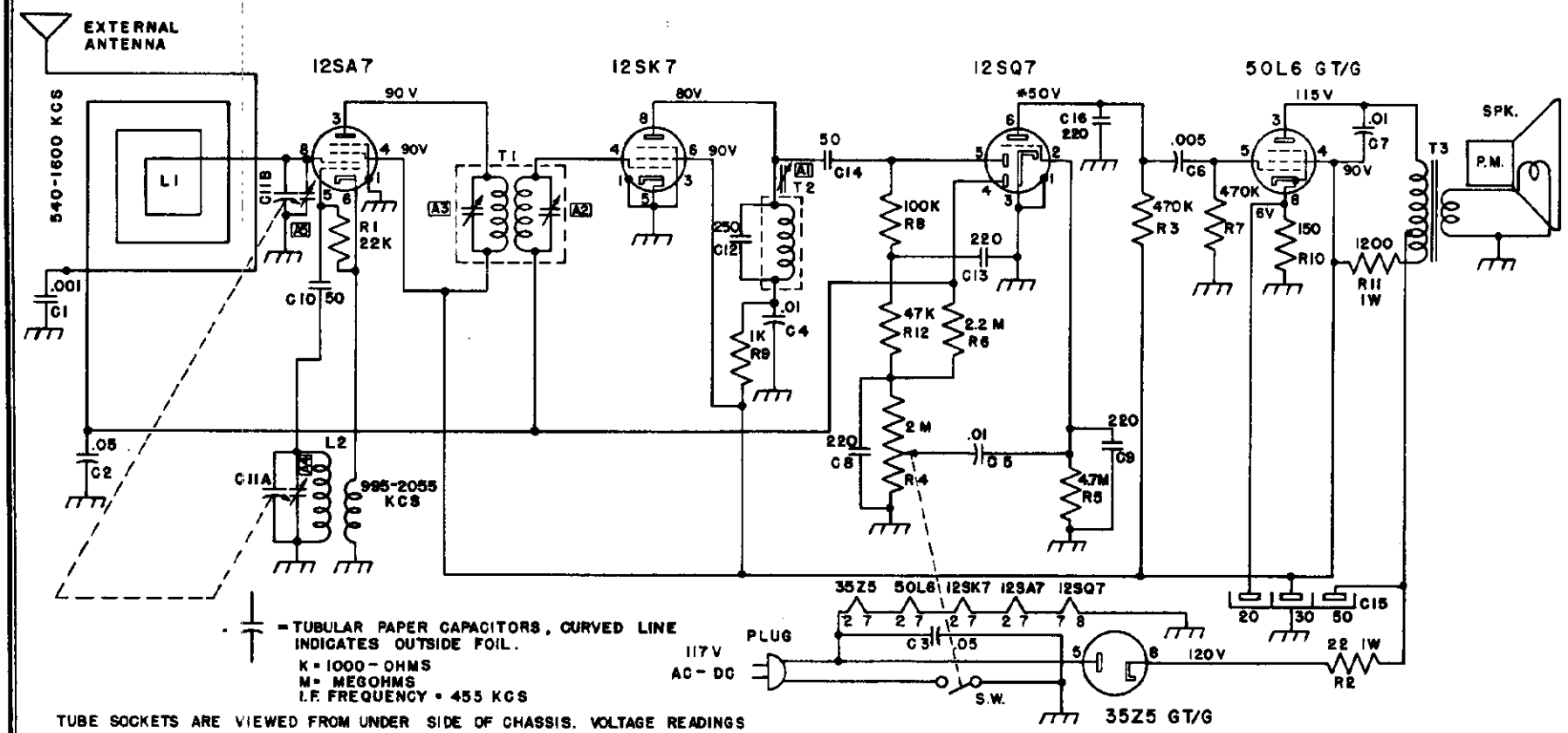

= TUBULAR PAPER CAPACITORS, CURVED LINE INDICATES OUTSIDE FOIL.

K = 1000 - OHMS
M = MEGOHMS
I.F. FREQUENCY = 455 KCS

TUBE SOCKETS ARE VIEWED FROM UNDER SIDE OF CHASSIS. VOLTAGE READINGS SHOWN AT SOCKET PRONGS ARE TO CHASSIS AND ARE TAKEN WITH NO SIGNAL. AC LINE VOLTAGE AT 117 VOLTS.

* MEASURED WITH VACUUM TUBE VOLTMETER. CAPACITY OF CONDENSERS LESS THAN .001 MF IS SHOWN IN MMF.

MODELS 356T, 357T
Ch. RE-273

©John F Rider

MODELS 360TFM, 361TFM;
Ch. RE-260

SPECIFICATIONS

FREQUENCY RANGE
- Broadcast (AM) ..... 540-1600 kc
- IF ..... 455 kc
- FM ..... 88-108 mc
- IF ..... 10.7 mc

TUBES AND FUNCTIONS
- 12AT7 ..... FM Converter
- 12BE6 ..... AM Converter
- 12BA6 ..... FM-IF Amp.
- 12BA6 ..... AM-FM, IF Amp.
- 19T8 ..... FM-AM DET, 1ST Audio AVC
- 50L6 ..... Output

POWER OUTPUT
- Undistorted ..... 2.5 Watts
- Maximum ..... 3 Watts
- Plate load ..... 2000 Ohms

LOUD SPEAKER
- Type: Permanent magnet, 1.47 oz. Alnico 5
- Size: 5 Inch
- Voice coil impedance ..... 3.2 Ohms

CHASSIS FEATURES
- Automatic Colume Cotrol
- Built-in Loop
- Underwriters' Listed
- Bass Boost Circuit

OPERATING CONTROLS
1. Left knob ..... ON-OFF Sw and Volume
2. Right knob ..... Tuning
3. Center knob ..... Band Sw

PHYSICAL DIMENSIONS
- Length ..... 12 11/16 inches
- Height ..... 7 1/8 inches
- Depth ..... 7 11/16 inches

Models 360TFM is in a walnut cabinet. Model 361TFM is in a Willow Green cabinet. The Chassis is the same in both models.

ALIGNMENT PROCEDURE

AM

1. Plug set into 117 V. power source, turn volume control full on and band switch to AM, (left).
2. Connect output meter across speaker voice coil.
3. Connect signal generator high side through .05 mfd. condenser to converter grid and generator ground lead to receiver floating ground. Open tuning condenser. ator to test loop. Set signal generator to 1650 Kc. Tune trimmer A5 on oscillator section of tuning condenser for maximum output.
4. Close tuning condenser and set pointer at end mark of dial. Open tuning condenser. Connect signal generator to 1650 Kc. Tune trimmer A5 on oscillator section of tuning condenser for maximum output.
5. Set signal generator to 1400 Kc. Adjust tuning shaft until maximum output is obtained. Tune antenna trimmer A6 on tuning condenser for greatest output. Reset tuning shaft until output is again a maximum. Retune antenna trimmer. Repeat this cycle of operations at 1400 Kc until no further increase of output can be obtained. Keep generator output at a low value to prevent detuning by A. V. C. action.
6. Set signal generator to 600 Kc. Adjust tuning shaft for maximum output. Adjust tuning condenser plates for maximum output.
7. Check sensitivity at 1000 Kc. If sensitivity is too low, tuning condenser plates can be adjusted for tracking at this frequency. If this adjustment is made, tracking at 600 Kc must be readjusted.
8. Check coverage and calibration after alignment. Coverage should include 535 and 1650 Kc. Calibration should be such that pointer covers some part of calibration mark. If coverage and/or calibration are not correct, plates of tuning condenser can be adjusted. Calibration check points are 1400, 1000 600 and 540 Kc. If oscillator plates are adjusted, tracking of antenna section must be rechecked and corrected if necessary.
9. Check setting of trimmers on tuning condenser. Trimmer adjustments must not be extremely tight nor so loose as to be noisy or vibrate.
10. After alignment, check for noise due to condenser plates touching or pointer touching dial as tuning shaft is turned through the full tuning range.
11. The sensitivity of this set should be approximately 500 uv/m with 400 cycles, 30% modulation and 200 milliwatts, (.8 volt output.

FM

1. Turn band switch to FM, (right).
2. Connect (FM) I.F. generator to the second 12BA6 I.F. amp. grid, (lug #1) through the .01 uf mica dummy. Connect oscilloscope across volume control. With 150 Kc deviation 10.7 on the I. F. generator and the same audio voltage used as horizontal sweep on the scope, adjust the ratio detector transformer slugs A7-A8 for the characteristic "S" curve (See Fig. 1), with maximum vertical height on the scope. After this adjustment the top slug of the ratio detector should not be moved during the rest of the alignment.
3. Connect I.F. generator to mixer grid through .01 mica dummy. Using 23 Kc deviation 10.7 Mc adjust 10.7 Mc I. F. transformer slugs A9, A10, A11 and A12 for maximum output. Maximum output may be indicated by maximum vertical height on the scope or maximum voltage on a standard output meter across the voice coil of the receiver. After the two I.F. transformers have been aligned the bottom slug A8 of the ratio detector should also be peaked.
   The characteristic "S" curve of the complete I.F. channel should be checked by applying a 10.7 Mc signal with 150 Kc deviation to the mixer grid and observing the "S" curve on the scoke. It should not be very much different from that observed in step 2.
4. Connect R.F. (FM) generator (88 to 108 Mc) to the antenna terminals through the standard 300 ohm dummy (150 ohm in each side of generator leads). Use R.F.generator with 23 Kc deviation. With the variable condenser completely open and S.G. tuned to 108.5 Mc adjust oscillator trimmer A13 small ceramic trimmer) for maximum reading on output meter.
   Then tune receiver to low end of band (variable completely closed) and S.G. to 87.5 Mc. If the receiver does not tune to this frequency the FM oscillator coil L4 will either have to be squeezed together or lengthened to cover the band, (squeezing lowers and lengthening raises the frequency). Any change in the coil will have to be compensated by the trimmer at the high end of the band.
5. With the same S.G. connections as per paragraph 4 tune S.G. and set to 105 Mc. Tune R.F. trimmer A14 for maximum output at the same time rock variable back and forth through the frequency. (Rocking is necessary because slight oscillator pulling causes erroneous maximum readings).
   Tune S.G. and set the 90 Mc. Adjust R.F. coil L3 length for maximum output by squeezing or lengthening. Any change in the coil will have to be compensated at 105 Mc by the R.F. trimmer A14.
6. After steps 4 and 5 are finished check calibration and band coverage. Steps 4 and 5 may have to be repeated if set is off calibration. Band coverage should be 87.5 Mc to 108.5 Mc. Sensitivity should be approximately 200 uv at 105 Mc, 98 Mc and 90 Mc.

©John F. Rider

©John F. Rider

PARTS LIST FOR 360-361 TFM

SCHEMATIC LOCATION	PART NO.	DESCRIPTION
R1	C20060-470	Resistor, 47 ohms, 1/4 w, 20%
R2, 4, 13	C20060-223	Resistor, 22 K ohms, 1/4 w, 20%
R3	C20060-150	Resistor, 15 ohms, 1/4 w, 20%
R5, 16, 17	C20060-474	Resistor, 470 K, 1/4 w, 20%
R6, 7	C20060-102	Resistor, 1,000 ohms, 1/4 w, 20%
R8, 11, 12	C20060-105	Resistor, 1 meg., 1/4 w, 20%
R9, 15	C20060-104	Resistor, 100 K ohms, 1/4 w, 20%
R10	C20060-221	Resistor, 220 ohms, 1/4 w, 20%
R14	C20060-475	Resistor, 4.7 meg., 1/4 w, 20%
R18	C20060-151	Resistor, 150 ohms, 1/4 w, 20%
R19	C22336-561	Resistor, Wire-Wound, 560 ohms, 2 w, 10%
R20	C20060-222	Resistor, 2200 ohms 1/4 w, 20%
R21	C20060-471	Resistor, 470 ohms, 1/4 w, 20%
R22	C20103-220	Resistor, 22 ohms, 1 w, 20%
R23, 25	C20060-334	Resistor, 330 K ohms, 1/4 w, 20%
R24	C21554	Volume Control & Switch, 500 K
R26	C22336-101	Resistor, Wire-Wound, 100 ohms, 2 watts, 10%
C1, 2	C20203-500	Condenser, Ceramic, 50 uuf, 350 v.
C3	A20238-4	Condenser, 2.2 uuf.
C4, C27	C20067-503	Condeaser, P. T., .05 uf., 200 v.
C5	C20065-500	Condenser, Mica, 50 uuf, 500 v.
C6	C20205-5	Condenser, N750, 50 uuf, 500 v.
C7, 8, 11, C13, 14, 15, C16, 17	A21674	Disc Ceramic Capacitor, .005 uf.
C9	A22307	Condenser, N500, 5-20 uuf.
C10, 21, 22, 37	C20203-221	Condenser, Ceramic, 220 uf., 350 v.
C12, 35, 36	A22295	Disc Ceramic Capacitor, .01 uf.
C18, 29, 30	C20068-503	Condenser, P. T., .05 uf., 400 v.
C19, C43	C20203-101	Condenser, Ceramic, 100 uuf., 350 v.
C20	C20067-302	Condenser, P. T., .003 uf., 200 v.
C23	A22388	Condenser, P. T., .5 uf., 200 v, + 30%, — 10%
C24, 26	C20068-103	Condenser, P. T., .01 uf., 400 v.
C25	C20068-502	Condenser, P. T., .005 uf., 400 v.
C28	C20203-501	Condenser, Ceramic, 500 uuf., 350 v.
C31	A22308	Condenser, Electrolytic, 50-80 uf., 150 v.
C32, 33, 34	A20281-1	Condenser, Herlic Dual, .004 uf
C38	AD22324-1	Condenser, Variable, Assy.
C39	C20203-102	Condenser, .001 uf, 350 V.
C40, 41	A20238-3	Condenser, 1.5 uuf.
C42	A21675	Condenser, Electrolytic, 30 uf., 150 v.
L1	AD22316-1	Antenna Loop Assy.
L2	AC22329-1	Oscillator Coil Assy. AM
L5, 6, 7 L8, 9, 10, 11, 12	A21673	R. F. Choke, 14 u. h., Iron Core
	AA21444-1	High Frequency Choke
T1, 2	C22353	I. F. Transformer, F. M., 10.7 Mc
T3	AD22319-1	F. M. Ratio Detector Transformer
T4, 5	C22352	I. F. Transformer, A. M., 455 Kc
T6	AC22320-1	Output Transformer Assy.
SR	C20207-3	Selenium Rectifier, 150 M. A.
BS	C22311	Band Switch
Spk	C22323	Speaker, 5" P. M., 3.2 ohm Voice Coil
PS1	AA22345-1	F. M. Parasitic Supprescor
PS2	AA22334-1	A. M. Parasitic Suppressor
	A18254-1	Socket, Wafer Plain
	A19361	Hair Pin Clip
	B20138-14	Line Cord & Plug
	A20243-3	Socket, Min. Wafer, 7 prong
	A20274-1	Socket, Min. Wafer, 9 prong
	A21330	Name Plate with Speed Nuts
	D21546	Dial Mtg. Bracket, Left
	D21547	Dial Mtg. Bracket, Right
	E21536-1	Cabinet, Walnut
	E21536-3	Cabinet, Willow Greeen
	C21559	Dial Crystal
	A21677	Socket, Min. Low Loss, 9 prong
	A21852	Electrolytic Mtg. Wafer
	A22117	Carton with Fillers
	A22300	Rectifier Can
	A22301	Tuning Shaft Bracket
	A22302	Selenium Rectifier Bracket
	A22303	Condenser Mtg. Bracket
	D22304	Dial Scale
	AC22312-1	Dial Pointer
	A22330-2	Grille Cloth & Speaker Baffle Assy., Willow Green
	A22330-1	Grille Cloth & Speaker Baffle Assy., Walnut
	A22332-1	Knob, Mahogany
	A22332-2	Knob, Ivory
	D22335-2	Cabinet, Rear Cover
	A22346	Tuning Shaft

APPROXIMATE VOLTAGE AND RESISTANCE MEASUREMENTS
TUBE SOCKET LUGS TO FLOATING GROUND

			VOLTAGE									RESISTANCE								
TUBE	FUNCTION	BAND SW. POSITION	1	2	3	4	5	6	7	8	9	1	2	3	4	5	6	7	8	9
12AT7	FM Converter	FM	96	-1*	0	0	AC 12	96	-2	0	AC 6	-	680K	0	0	30	-	22K	.2	20
		AM	**	**	0	0	AC 12	**	**	0	AC 6	Inf.	1 meg.	0	0	30	Inf.	22K	.2	20
12BE6	AM Converter	FM	**	0	AC 43	AC 31	**	**	**			22K	.5	50	36	Inf.	Inf.	100K		
		AM	-9	0	AC 43	AC 31	109	109	-1			22K	.5	50	36	†	†	785K		
12BA6	1st I-f Amp. (FM)	FM	-.8	0	AC 55	AC 43	96	96	0			410K	0	60	50	†	†	0		
		AM	**	0	AC 55	AC 43	**	**	0			522K	0	60	50	Inf.	Inf.	0		
12BA6	2nd I-f Amp. (AM-FM)	FM	-.5	0	AC 67	AC 55	94	94	0			100K	0	70	60	†	†	0		
		AM	-.8	0	AC 67	AC 55	104	104	0			785K	0	70	60	†	†	0		
19T8	AM-FM Det. 1st Audio,AVC	FM	-.8	-1.6	-.8	AC 31	AC 12	**	0	-.9*	38*	522K	100K	522K	36	30	Inf.	0	4.7 meg.	†
		AM	**	**	**	AC 31	AC 12	-1.1	0	-.9*	40*	Inf.	100K	Inf.	36	30	420K	0	4.7 meg.	†
50L6	Output	FM	0	AC 67	118	98	0	0	AC 117	7		Inf.	70	†	†	470K	Inf.	120	150	
		AM	0	AC 67	120	110	0	0	AC 117	7.8		Inf.	70	†	†	470K	Inf.	120	150	

All voltage readings not indicated otherwise are +DC.
*Measure with vacuum tube voltmeter.
**These lugs are not used in this position of the band switch. The voltage should be zero or silghtly negative, and will vary on different sets and with different types of meters.
Inf - Infinite resistance or open circuit.
† Resistance readings at these points will vary greatly depending on the condition of the electrolytic condenser, the type meter used and the range of the meter. They are all B+ lugs and should have a relatively high resistance.

APPROXIMATE DC RESISTANCE OF COILS AND TRANSFORMERS

L1 Loop Antenna .8 ohm. L2 AM oscillator coil, tank 7 ohms, tickler .6 ohm.
L3 through L11, FM antenna coil, FM osc. coil and all R-f chokes are much less than 1 ohm.
T1 and T2 FM, 10.7 mc., I-F trans., pri. .8 ohm, sec. .8 ohm.
T4 and T5 AM, 455 Kc, I-f trans., pri. 10 ohms, sec. 10 ohms.
T3 - FM ratio det. trans., pri. 2 ohms, sec. lugs 3 to 4, .4 ohm. Lugs 4 to 5, .4 ohms. Lugs 3 to 5, .1 ohm.
T6 output transformer pir. 100 ohms. Sec. .3 ohm.

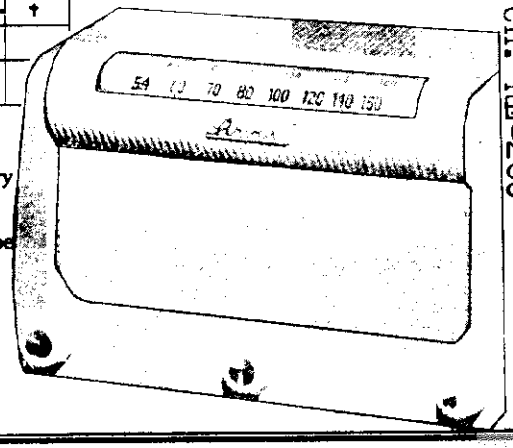

MODELS 360TFM, 361TFM; Ch. RE-260

MODELS 360TFM, 361TFM;
Ch. RE-260

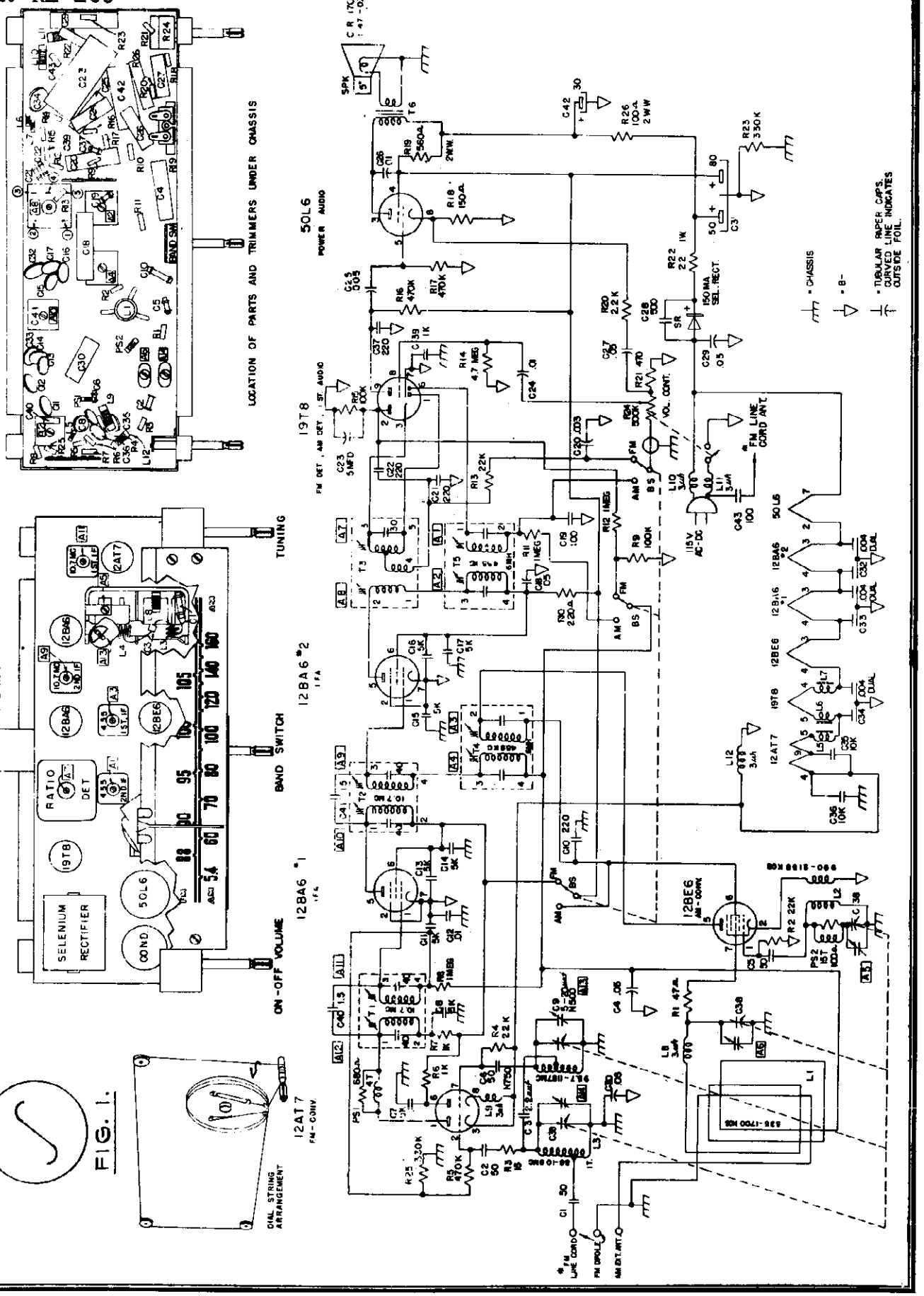

FIG. 1.

©John F. Rider

MODELS 664, 664A;
Ch. RE 206-1

Addition of Suffix -1 to Chassis No.; addition of 12SQ7 tube, and deletion of 14R7 tube; addition of hum bucking circuit in output.

CHANGES COVERED IN THIS SUPPLEMENT

1. Tube Complement.
2. Parts List.
3. Tube Layout Drawing.
4. Location of Parts under Chassis.
5. Schematic Diagram.

TUBES & FUNCTIONS

12SK7	RF Amp.
12SA7	Mixer-oscillator
12SK7	IF Amp.
12SQ7	DET-AVC-AF Amp.
35L6	Output
35Z5GT	Rectifier

NOTE: Some of the RE-206-1 Chassis use the same Tone Control Circuit as the RE-206 (A 20,000 ohm Control and .1 mfd. Condenser in the plate circuit of the output tube, with a 470,000 ohm fixed resistor in the grid circuit). For information on these sets refer to the Schematic & Parts Layout drawings in the original RE-206 Bulletin. The Reference Numbers on the Parts List and all drawings have been rearranged in this supplement, so that each number is used only once on the Schematic drawing. Therefore C-13 and R-13 in this supplement are C-14 & R-14 in the original bulletin. The 470,000 ohm grid resistor is designed as R-11 in both the original bulletin and this supplement.

NOTE: The AC hum on many of the sets now in the field can be decreased by making the above resistor and condenser change.

REF. NO.	PART NO.	DESCRIPTION
R1	C20060-103	Resistor, 10,000 ohm ½ W
R2	C20060-334	Resistor, 330,000 ohm ½ W
R3	C20060-332	Resistor, 6800 ohm ½ W
R4	C20060-223	Resistor, 22,000 ohm ½ W
R5,R8	C20060-685	Resistor, 6.8 megohm ½ W
R6	C20060-225	Resistor, 2.2 megohm ½ W
R7	C20060-473	Resistor, 47,000 ohm ½ W
R9	C19244	Vol. Cont. & Sw., 500,000 ohms
R10,*R11	C20060-474	Resister, 470,000 ohm ½ W
R12	C20070-123	Resistor, 12,000 ohms 1 W
*R13	C19965	Tone Control, 500,000 ohm
	or	
	C19279	Tone Control, 50,000 ohm
R14	C20060-151	Resistor, 150 ohm ½ W
R15	C20060-150	Resistor, 15 ohm ½ W
C1	B18564	
C2	or	**Variable Condenser, 3 gang
C3	C19853	
C4,C10	C20068-103	Cond., .01 uf. 400 V P.T.
C5,C12	C20068-104	Cond., .1 uf. 400 V P.T.
C6	C20065-101	Cond., .0001 uf. 500 V Mica
C7,C9	C20068-503	Cond., .05 uf. 400 V P.T.
C8,C11	C20065-251	Cond., .00025 uf. 500 V Mica
*C13	C20069-202	Cond., .002 uf. 600 V
	or	
	C20067-104	Cond., .1 uf. 200 V P.T.
C14	C20068-203	Cond., .02 uf. 400 V P.T.
C15	A19128	Cond., 14 mmf. 600 V Mica
C16	C20069-502	Cond., .005 uf. 600 V P.T.
C18A	A19239	Cond., Electrolytic 40-20 uf 150 V
C18B		
	A19674	Terminal Strip

REF. NO.	PART NO.	DESCRIPTION
	A19138-1	Spacer Eyelet for Mtg. Var. Cond.
	D18422-1	Cabinet, Walnut (Assy.)
	D18422-2	Cabinet Assy., Ivory
	A18272	Dial Crystal
	A16922	Handle
	A19783-1	Knobs, Walnut
	A19783-2	Knobs, Ivory
	A19240	Grill Cloth
L1	AC18579-1	Antenna Loop Assy.
L2	AC19860-1	R. F. Coil
L3	AC18580-1	Oscillator Coil
L4	AC18583-1	Iron Core Choke
T1	AC21009-1	1st I. F. Coil
T2	AC18578-1	2nd I. F. Coil
T3	AC18582-1	Output Transformer
Spk.	AC19872-1	Speaker Assy. (Spk. with Trans. Mtg. Bracket)
Spk.	C18550	Speaker only
	A19293	Tuning Shaft
	C18432	Dial Scale
	A18578	Dial Pointer
	A19132	Dial Drive Cord
	A18254-1	Socket, tube, wafer type
	A16668	Elect. Mtg. Wafer
	A19234	Antenna Scalmt
	A19134-2	Dial Light Socket
L	A19135	Dial Light Bulb, Mazda C7 Nite Lite, 7W
P	B20064-8	Line Cord and Plug Assy.
	A20077-3	Rubber Grommet for mtg. Var. Cond. B18564 & C19853
	A19528-2	Rubber Grommet for mtg. Var. Cond. C19853 only

Subject:
Revision of the hum bucking circuit to reduce AC hum.

Changes covered in this supplement:

Capacity of C12 condenser connected from B+ to cathode of the 35L6 tube is changed from .1 mfd. to .03 mfd. Resistance of R12 resistor connected from B+ to cathode of the 35L6 tube is changed from 12,000 ohms to 15,000 ohms.

Changes in Parts List:

Delete:

Ref. No.	Part No.	Description
R12	C20070-123	Resistor 12,000 ohms, 1 Watt
C12	C20068-104	Condenser, 1 mfd., 400 V.P.T.

Add:

Ref. No.	Part No.	Description
R12	C20070-153	Resistor, 15,000 ohms, 1 Watt
C12	C20068-303	Condenser, .03 mfd., 400 V.P.T.

©John F. Rider

MODELS 664, 664A;
Ch. RE 206-1

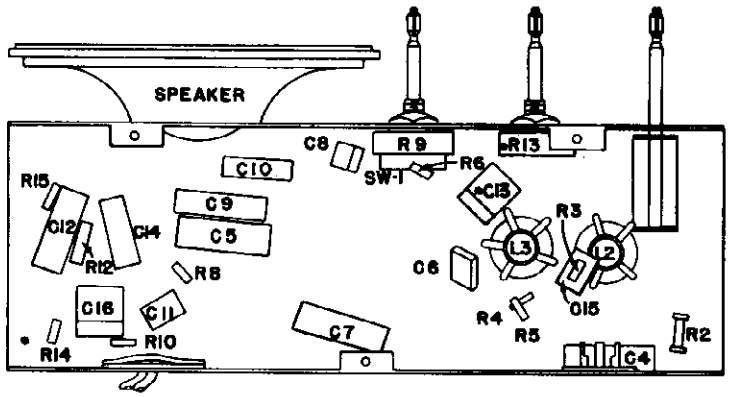

LOCATION OF PARTS UNDER CHASSIS

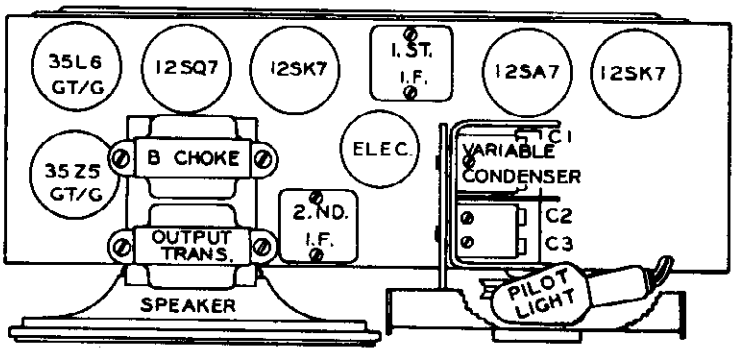

TUBE LAYOUT

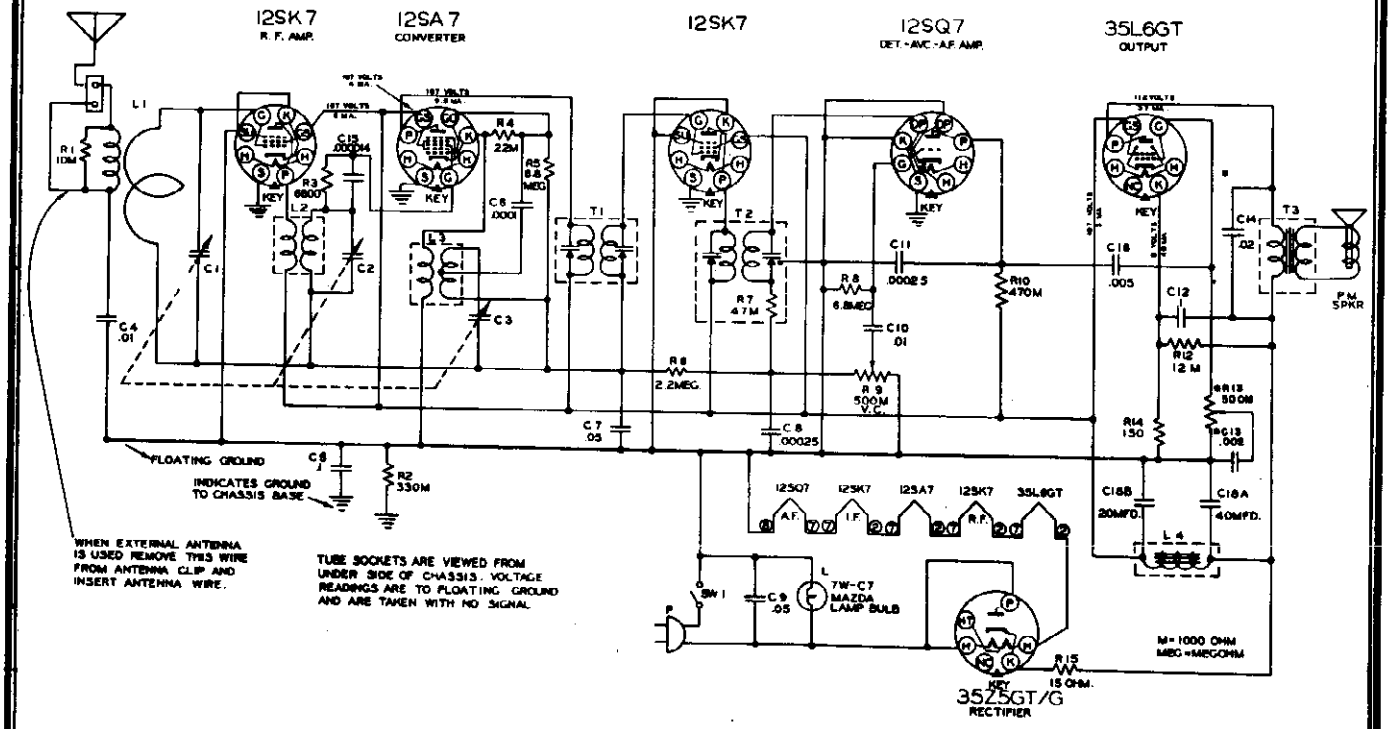

© John F. Rider

MODELS 605, 615, 705, 715

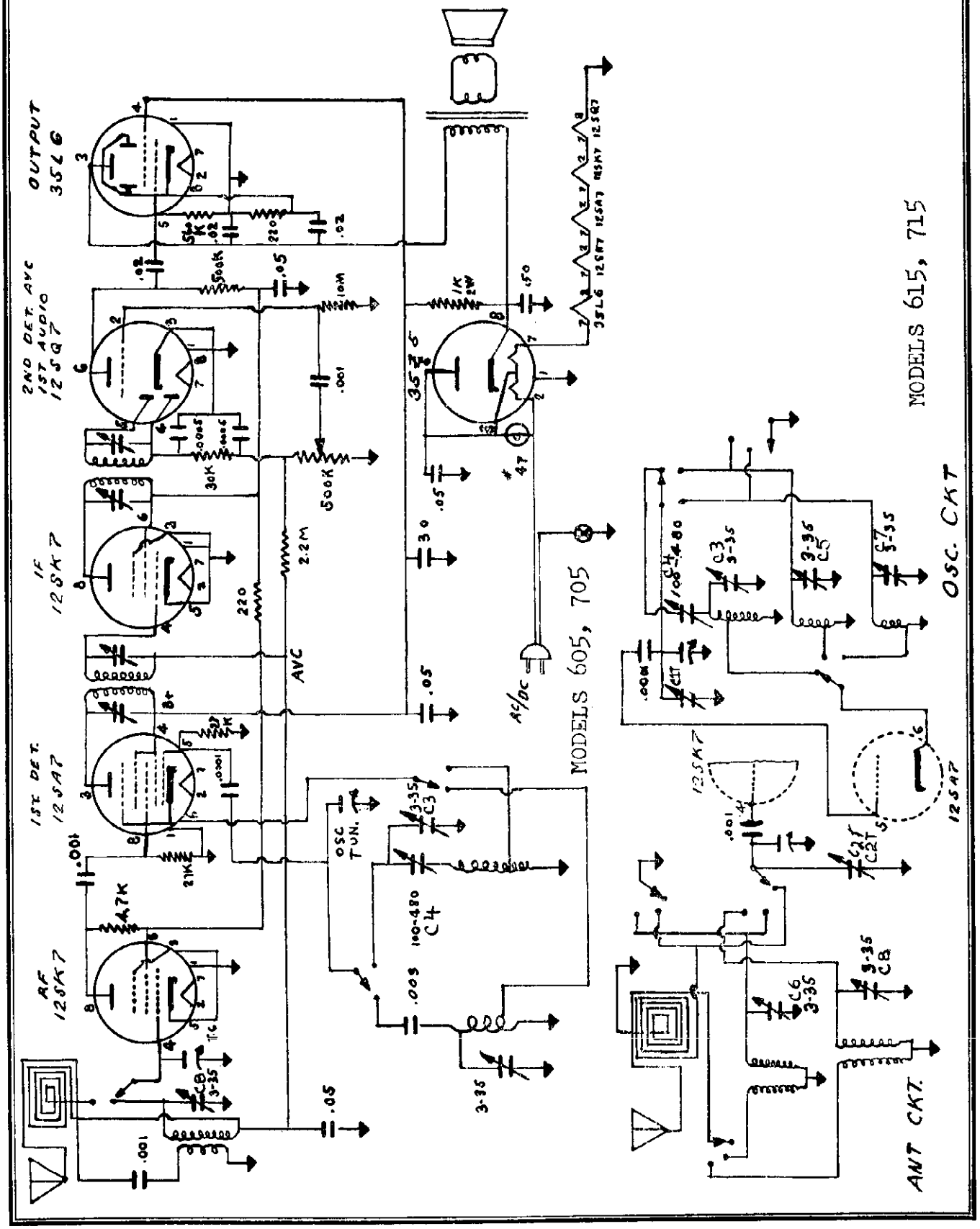

©John F. Rider

MODELS 605, 615,
705, 715

★ALIGNMENT PROCEDURE

Steps	Dummy Ant.	Coupling	Gen. Freq.	Band Switch	Dial Setting	Output Meter	Adjust	Remarks
I.	.05	RF Stator on Variable Condenser.	455 KC	BC	550	Across Voice Coil	Trimmers on input and output IF cans	Adjust for maximum reading.
II.	.05	Radiated signal. A loop of a few turns of wire 15" from chassis.	1600 KC	BC	1660	"	C1t C2t C3 trimmer	C2t should be near min. capacity. Adjust C3 for max. — then C1t for maximum.
III.	.05	"	1000 KC	BC	1000	"	C4	Adjust only if center of dial does not track. Adjust for max. As this adjustment affects setting of C3, it may be necessary to repeat this.
VI.	400 ohms in series with generator.	To antenna on radio.	5 MC	SW1	5MC	"	C5 C6	C5 is SW1 osc. Adjust till 5 MC is heard. Then adjust C6 for max. reading.
V.	"	"	15 MC	SW2	15MC		C7 C8	C7 is Sw2 osc. Adjust till 15MC is heard. Then adjust C8 for max. reading.

* To align Models 605 and 705 use steps I, II, III and V.
* To align Models 615 and 715 use steps I, II, III, IV and V.

C1t Located on variable condenser
C2t Located on variable condenser.
C3 B'cast osc. trimmer.
C4 B'cast padder.
C5 2-6 MC Oscillator trimmer.
C6 2-6 MC Antenna trimmer.
C7 6-18 MC Oscillator trimmer.
C8 6-17 MC Antenna trimmer.

Tube Types: 1-12SK7 R. F. Amplifier.
1-12SA7 Converter.
1-12SK7 I.F. Amplifier.
1-12SQ7 Diode Detector, Audio Amplifier.
1-35L6 Power output.
1-35Z5 Rectifier.

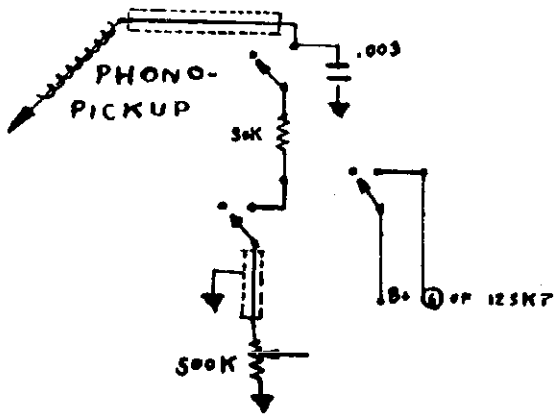

PHONO-RADIO SWITCH FOR CONVERTING 605, 615 TO 705, 715 RESPECTIVELY

Model 605 and 615 Power Supply: 105-125, 220-230, 50/60 cycles AC/DC.
Model 705 and 715 Power Supply: 105-125, 220-230, 50/60 cycles AC only.

©John F. Rider

MODELS 5D8, 100, 581

SPECIFICATIONS

Overall Dimensions:

	581	5D8	100
Height	7⅜"	6"	5¾"
Width	11⅞"	9¼"	9¼"
Depth	6¼"	5"	4⅝"
Weight	7 lbs.	5¾ lbs.	5¼ lbs.

Electrical Rating:
Line Voltage.....110-120 volts AC-DC
Power Consumption....28 watts

Tuning Frequency Range:
540 to 1625 KC

Intermediate Frequency:
455 KC

Electrical Power Output:
Maximum ..... 1.7 watts

Loudspeaker:
Type .....Permanent Magnet
Outside Cone Diameter.....4"
Voice Coil Impedance.....3.2 ohms at 400 cycles
Magnet Rating.....1.0 Oz. Alnico V

Tubes:

Tube	Function
12SA7	Frequency Converter
12SK7	I-F Amplifier
12SQ7	Detector Amplifier
50L6/GT	Power Amplifier
35Z5/GT	Rectifier

GENERAL INFORMATION

Models 5D8, 581 & 100 are superheterodyne receivers employing four tubes plus one rectifier. These models are for operation on AC or DC current. All three models employ a four inch permanent magnet speaker and are virtually identical from an electrical standpoint. The model 100 does not utilize the Stationized Dial. Models 5D8 and 100 are enclosed in a plastic cabinet of ivory or walnut, while the 581 is housed in a wood cabinet of walnut or natural design.

SPECIAL SERVICE INFORMATION

Stage Gain Measurements:
Measurements taken with volume control maximum – AVC shorted out.

Standard Output.....50 milliwatts
Dummy Antenna.....200 Mmf.

Converter Grid to 1st I-F Grid.....71X at 1000 KC
Converter Grid to 1st I-F Grid.....78X at 455 KC
1st I-F Grid to 2nd Detector.....77X at 455 KC
Overall Audio Gain...0.8 volts at Volume Control for 0.5 watts output at 400 cycles.

Oscillator Grid Voltages:
At 117 volts AC line. Measurements made with an AC vacuum tube voltmeter, input loading above 10 megohms.
600 KC.....15 volts AC 1500 KC.....20 volts AC

D.C. Resistance Measurements:

1st I-F Coil	
Primary....17.5 ohms	Secondary.....17.5 ohms
2nd I-F Coil	
Primary....14.5 ohms	Secondary.....14.5 ohms
Oscillator Coil	
Primary.... 1.2 ohms	Secondary..... 4.5 ohms

NOTE: Due to the variation in winding methods, the D.C. resistance on all coils is subject to a 20% tolerance.

ALIGNMENT PROCEDURE

Alignment Procedure consists of the four steps outlined in the Alignment Precedure Chart.

For step No. 1, I-F Alignment, connect the leads of a test oscillator to the mixer grid and ground buss through an .01 Mfd. capacitor (dummy load). Upon completion of this step, "rock" the variable condenser to assure that the I-F's have been aligned to the correct frequency. Output should remain constant at any setting of the variable condenser.

Steps 2 & 3 employ a Hazeltine Standard Test Loop No. 1150 or a reasonable substitute. Connect the test oscillator leads across this loop and place it in a vertical position about two feet from the receiver loop.

IMPORTANT NOTICE: Make certain that each step is done with a minimum input signal.

ALIGNMENT CHART

STEP	CONNECT TEST OSC. TO	TEST OSC. SETTING	POINTER SETTING	ADJUST FOR MAX. OUTPUT
1	Mixer Grid & Grd. (.01 Mfd. Cap)	455 KC	540 KC	Trimmers A, B, C & D
2	Standard Test Loop*	1600 KC	1600 KC	Trimmer E to 1600 KC
3	Standard Test Loop*	1500 KC	1500 KC	Trimmer F
4	Check Stationizing. Adjust pointer if stations are uniformly off in one direction.			

*NOTE: Hazeltine Standard Test Loop No. 1150 or a reasonable Substitute.

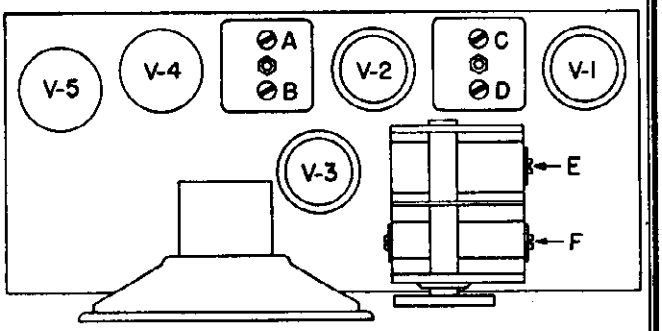

Trimmer Location

Socket Voltages:
All D.C. voltages measured with a vacuum tube voltmeter from socket contacts to ground buss. A.C. voltages measured with a 1000 ohms per volt A.C. meter from socket contacts to ground buss.* Volume Control maximum. No signal. 117 volts A.C. line. All voltages shown are positive D.C. unless otherwise noted.

*NOTE: Filament voltages should be measured across the filament of the tube.

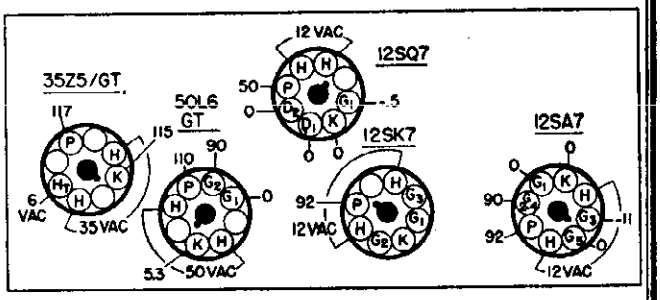

©John F. Rider

MODELS 5D8,
100, 581

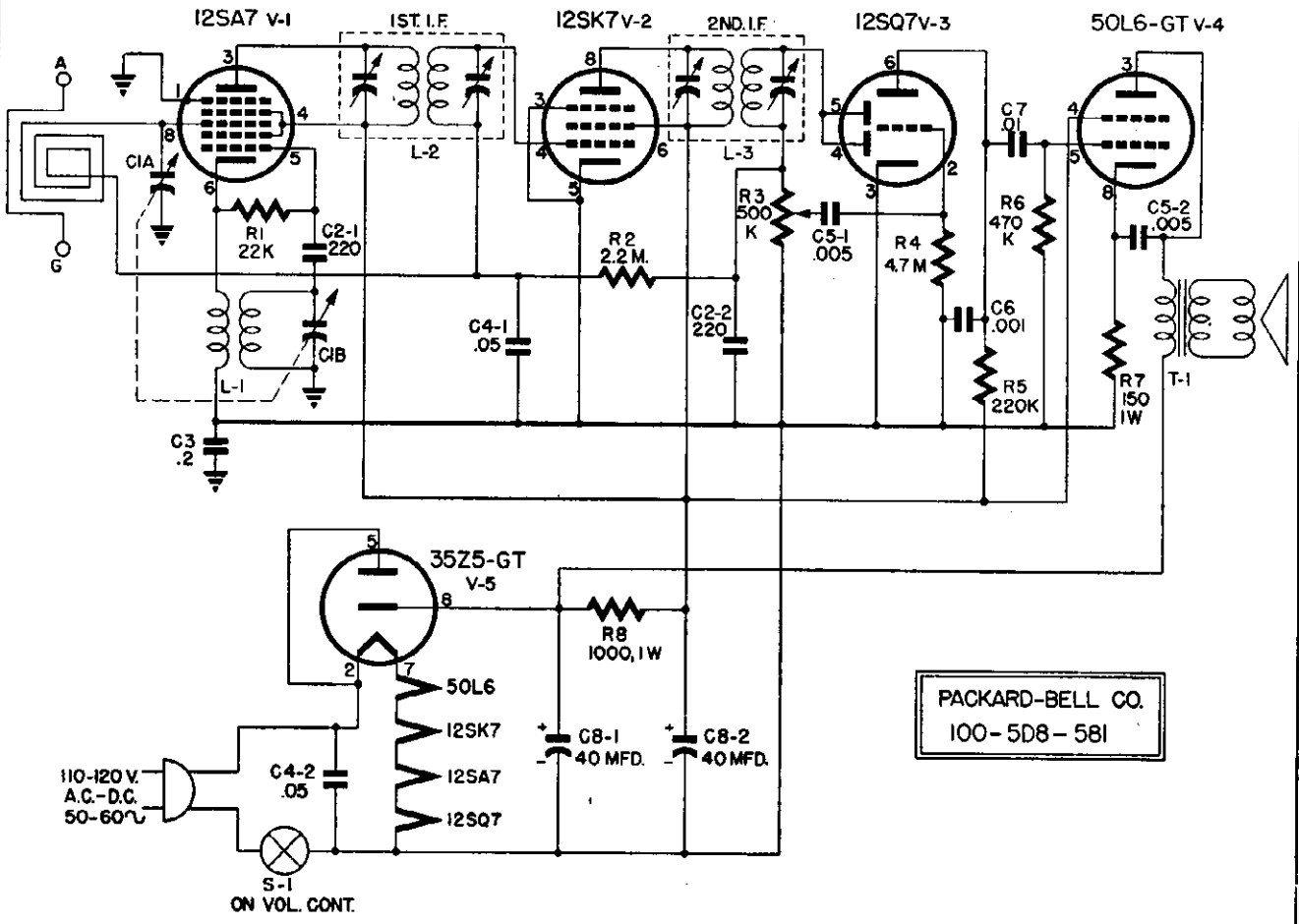

TABLE OF REPLACEABLE PARTS

Part No.	Ref. Symbol	Description
21067-BG		Cabinet, walnut (Model 581)
21067-CW		Cabinet, natural (Model 581)
21004-A-AL		Cabinet, plastic, ivory (Model 5D8)
21004-A-BG		Cabinet, plastic, walnut (Model 5D8)
21071-AL		Cabinet, plastic, ivory (Model 100)
21071-BG		Cabinet, plastic, walnut (Model 100)
23523B	C1A & B	Capacitor, variable
23503	C2-1 to 2	Capacitor, mica, 220 Mmf. 20%
23018	C3	Capacitor, paper, .2 Mfd. 200 V.
23009	C4-1 to 2	Capacitor, paper, .05 Mfd. 400 V.
23004	C5-1 to 2	Capacitor, paper, .005 Mfd. 600 V.
23001	C6	Capacitor, paper, .001 Mfd. 600 V.
23006	C7	Capacitor, paper, .01 Mfd. 600 V.
24011	C8-1 to 2	Capacitor, electrolytic, 40 Mfd. 350 WV.
29211	L1	Coil, oscillator
29014B	L2	Coil, 1st I-F
29024	L3	Coil, 2nd I-F
29308		Loop, Antenna
32007-1		Cord, AC, 6'
34019		Cover, back
38032-1		Dial scale, Stationized (Model 5D8)
38095A		Dial scale, Stationized (Model 581)
38047		Dial scale (Model 100)
40002		Dial drive cord
47018		Grille screen

Part No.	Ref. Symbol	Description
49009-AL		Handle, plastic, ivory (Model 581)
49009-BG		Handle, plastic, walnut (Model 581)
52001A-AL		Knob, ivory
52001A-BG		Knob, walnut
54002		Lamp, dial, T-47, 0.15 Amp.
55015		Crystal, dial
62000D		Panel, loop
67005		Pointer, dial
73041	R1	Resistor, carbon, 22,000 ohm, ½ W, 10%
73055	R2	Resistor, carbon, 2.2 megohms, ½ W, 20%
25014	R3	Control, volume, 500,000 ohm
73057	R4	Resistor, carbon, 4.7 megohms, ½ W, 20%
73049	R5	Resistor, carbon, 220,000 ohm, ½ W, 20%
73051	R6	Resistor, carbon, 470,000 ohm, ½ W, 20%
73081	R7	Resistor, carbon, 150 ohm, 1W, 10%
73071	R8	Resistor, carbon, 1000 ohm, 1W, 10%
77015B		Shaft, dial drive
79002-2		Socket, tube, octal base, 8 prong
79033		Socket, dial lamp
83004		Speaker, 4" P.M.
89417	T1	Transformer, output, 2500 to 3.2 ohms

©John F. Rider

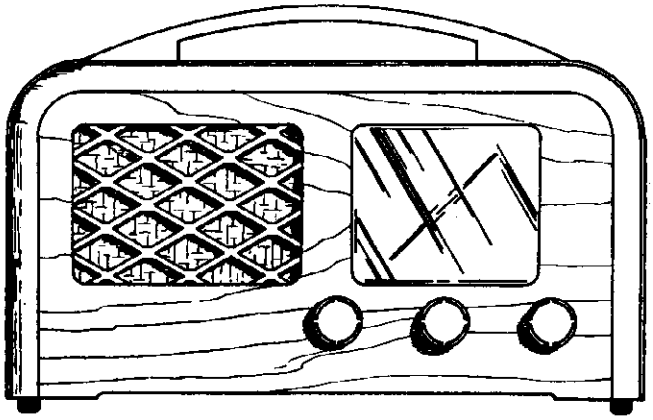

SPECIFICATIONS

Electrical Rating:
Line Voltage . . . . . 110-120 volts, AC-DC
Power Consumption . . . . . 25 watts

Tuning Frequency Range:
540 to 1620 KC

Intermediate Frequency:
455 KC

Loudspeaker:
Type . . . . . Permanent Magnet
Outside Cone Diameter . . . . 4"
Voice Coil Impedance . . . . 3.0 ohms at 400 cycles
Magnet Rating . . . . . 1.0 Oz. Alnico V

Tubes:

Tube	No.	Function
6SS7	V-1	R-F Amplifier
12SA7	V-2	Frequency Converter
6SS7	V-3	I-F Amplifier
12SQ7	V-4	Detector Amplifier
50L6	V-5	Power Amplifier
35Z5	V-6	Rectifier

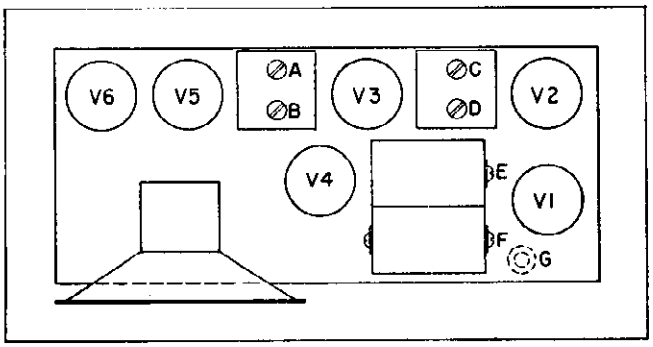

GENERAL INFORMATION

Model 682 is a superheterodyne receiver employing five tubes, plus one rectifier, and a permanent magnet speaker. The receiver is designed for operation on either AC or DC and is housed in a table model wooden cabinet.

SPECIAL SERVICE INFORMATION

Stage Gain Measurements:
Measurements taken with volume and tone controls maximum. AVC shorted out.

Standard Output . . . . . 50 milliwatts
Dummy Antenna . . . . . 200 Mmf.
R-F Grid to Converter Grid . . . 4X at 1000 KC
Converter Grid to 1st I-F Grid . . 71X at 1000 KC
Converter Grid to 1st I-F Grid . . 78X at 455 KC
1st I-F Grid to 2nd Detector . . . 77X at 455 KC
Overall Audio Gain . 0.8 volts at volume control for 0.5 watts output at 400 cycles.

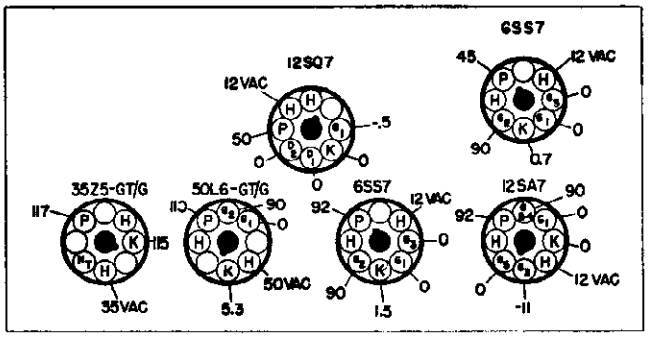

Oscillator Grid Voltages:
Measured at 117 volts AC line voltage, with an AC type V.T.V.M. input loading above 10 megohms.
1500 KC . . . . . 20 volts AC
600 KC . . . . . 15 volts AC

D.C. Resistance Measurements:

1st I-F Coil			
Primary . .	17.5 ohms	Secondary .	17.5 ohms
2nd I-F Coil			
Primary . .	14.5 ohms	Secondary .	14.5 ohms
Oscillator Coil			
Primary . .	1.2 ohms	Secondary .	4.5 ohms

Socket Voltages:
All D.C. voltages measured with a V.T.V.M. from socket contacts to ground buss. A.C. voltages measured with a 1000 ohms per volt A.C. meter from socket contacts to ground buss. Volume and tone controls maximum. No signal. 117 volts A.C. line voltage. All voltages shown are positive D.C. unless otherwise noted.

NOTE: Filament voltages should be measured across the filament of the tube.

ALIGNMENT PROCEDURE:

Alignment procedure consists of the five steps outlined in the Alignment Chart. For step No. 1, I-F Alignment, connect the leads of a test oscillator to the mixer grid and the ground buss through an .01 Mfd. capacitor (dummy load). Upon completion of this step, "Rock" the variable condenser to assure that the I-F's have not been aligned to the signal frequency. Output should remain constant at any setting of the variable condenser.

Steps 3 to 5 employ a Hazeltine Standard Test Loop No. 1150 or a reasonable substitute. Connect the test oscillator leads across this loop and place it in a vertical position about two feet from the receiver loop.

IMPORTANT: Make certain that each step is done with a minimum input signal.

ALIGNMENT CHART

STEP	CONNECT TEST OSC. TO	TEST OSC. SETTING	POINTER SETTING	ADJUST FOR MAX. OUTPUT
1	R-F Grid & Grnd. .01 Mfd. Capac.	455 KC	540 KC	A, B, C, D
2	R-F Grid & Grnd. .01 Mfd. Capac.	455 KC	540 KC	G (I-F Trap) for minimum output
3	Standard Test Loop	1600 KC	1600 KC	Trimmer F to 1600 KC
4	Standard Test Loop	1500 KC	1500 KC	Trimmer E Max. Output

©John F. Rider

MODEL 682

TABLE OF REPLACEABLE PARTS

Part No.	Ref. Symbol	Description
21068-CW		Cabinet—Natural
21068-BG		Cabinet—Walnut
23523B	C1 A, B	Capacitor, Variable
23915	C2-1 to 3	Capacitor, Ceramic 220 mmf.
23017	C3-1 to 2	Capacitor, Tubular .05 mf.—200 V.
23004	C4-1 to 3	Capacitor, Tubular, .005 mf.—600 V.
23001	C5	Capacitor, Tubular .001 mf.—600 V.
23023-1	C6	Capacitor, Tubular .01 mf.—500 V.
23018	C8	Capacitor, Tubular 0.2 mf.—200 V.
29005	L-1	Coil—IF Trap
29211	L-2	Coil—Oscillator
29014B	L-3	Coil—1st IF
29024	L-4	Coil—2nd IF
32012		Cord—AC 6' Brown Rubber
34019		Cover—Back
38095A		Dial
47018		Grille—Screen
49001F-AL		Handle—Plastic Ivory
49001F-BH		Handle—Plastic Walnut
52001A-AL		Knob—Ivory
52001A-BG		Knob—Walnut
54002		Lamp—Dial, T-47, 0.15 Amp.
55015		Crystal—Dial
62000D		Panel—Loop

Part No.	Symbol Ref.	Description
67005		Pointer—Dial
73014	R1	Resistor, 120 ohm, ½ W. 10%
73033	R2	Resistor, 4700 ohm, ½ W. 10%
73053	R3	Resistor, 1 megohm ½ W. 20%
73055	R4	Resistor, 2.2 megohm, ½ W. 20%
73041	R5	Resistor, 22,000 ohm, ½ W. 10%
73017	R6	Resistor, 220 ohm, ½ W. 10%
25014	R7	Control—Colume 500,000 megohm
73057	R8	Resistor, 4.7 megohm, ½ W. 20%
73049	R9	Resistor, 220,000 ohm, ½ W. 20%
25509	R10	Control—Tone 3 megohm
73051	R11	Resistor, 470,000 ohm ½ W. 20%
73015	R12	Resistor, 150 ohm, ½ W. 10%
73077	R13	Resistor, 180 ohm, 1W. 10%
73071	R14	Resistor, 1000 ohm, 1W. 10%
77015B		Shaft—Dial Drive
79002-2		Socket—Tube
79033		Socket—Lamp, (79020 to make)
83005		Speaker—4" P.M.
84003A		Spring—Knob
84002		Spring—Dial
89417	T-1	Transformer—Output, 2500 to 8.2 ohm

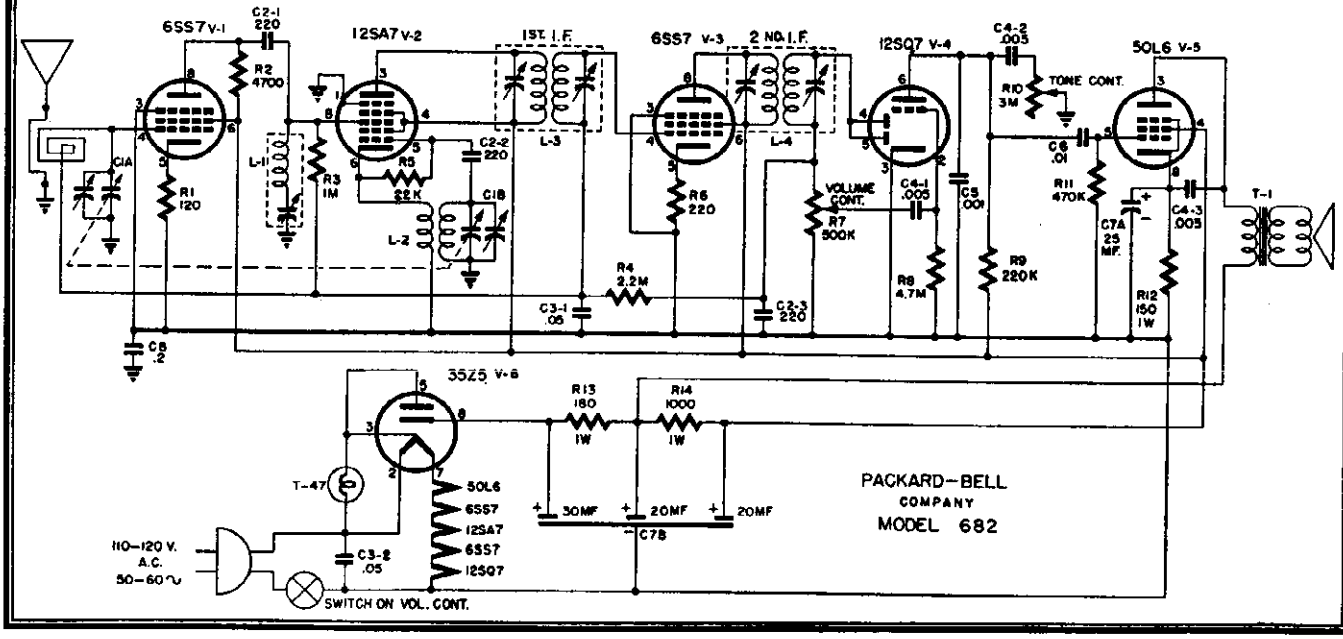

©John F. Rider



FIGURE 1—CABINET

SPECIFICATIONS

Overall Dimensions:

Height	34⅞"	Depth	20¾"
Width	21⅜"	Weight	95 lbs.

Electrical Rating:

Line Voltage . . . . . 110-120 Volts, A.C. 50, 60 C.P.S.
Power Consumption . . 77 watts including phonograph

Tuning Frequency Range:

540 to 1620 KC

Intermediate Frequency:

455 KC

Electrical Power Output:

Undistorted . . . . . 2 watts
Maximum . . . . . 3.5 watts

Loudspeaker:

Type . . . . . Permanent Magnet
Outside Cone Diameter . . . . 10"
Voice Coil Impedance . . . . . 3.2 ohms at 400 C.P.S.
Magnet Rating . . . . . 3.16 Oz. Alnico V

Tubes:

Tube	Function
6SA7	Frequency Converter
6SK7	I-F Amplifier
6SF7	1st Audio Amplifier
6K6-GT/G	Power Amplifier
5Y3-GT/G	Rectifier
6H6	2nd Detector – Compressor Rectifier
6SQ7	Microphone Amplifier

GENERAL INFORMATION

Model 791 is a PhonOcord console employing six tubes plus a rectifier and a ten inch permanent magnet speaker.

Listed below are some of the features incorporated in this model.

1. Standard Broadcast Superheterodyne receiver.
2. Automatic Home Recording with Public Address System.
3. Phonograph with automatic record changer.

To service tubes, remove back. For tube location refer to tube layout diagram.

For service information concerning the automatic record changer and recorder, refer to service instructions, Automatic Record Changer – Recorder Combination (Packard-Bell Part No. 58004-B).

SPECIAL SERVICE INFORMATION

Stage Gain Measurements:

Measurements taken with volume and tone controls maximum. Selector Switch in Radio Receive position. AVC shorted out.

Standard Output . . . . 50 milliwatts
Dummy Antenna . . . . 200 Mmf.

Antenna to Converter Grid	4.25X at 1000 KC
Converter Grid to 1st I-F Grid	62X at 1000 KC
Converter Grid to 1st I-F Grid	71X at 455 KC
1st I-F Grid to 2nd Detector	69X at 455 KC
Overall Audio Gain . 260X at .5 watts 400 cycles	

Oscillator Cathode Voltages:

Measured at 117 volts AC line with AC vacuum tube voltmeter, input loading above 10 megohms.

1600 KC . . . . . 2.15 volts AC
1000 KC . . . . . 2.0 volts AC
600 KC . . . . . 2.2 volts AC

D.C. RESISTANCE MEASUREMENTS

1st and 2nd I-F Coils:

Primary . . . . . 17 ohms
Secondary . . . . . 17 ohms*

*NOTE: To obtain the true reading of the secondary of the 2nd I-F Coil it must be removed from the can. This is because of the 47K resistor inside the can.

Oscillator Coil:

Start to Finish . . . . 8 ohms
Start to Tap . . . . . 7 ohms

NOTE: Due to variation in winding methods, the D. C. resistance on all coils is subject to a 20% tolerance.

HOW TO CHECK COMPRESSION VOLTAGE

Turn the Selector Switch to Radio Record position. Feed a 1 volt (RMS) 1000 cycle signal into the diode return of the 2nd I. F. (brown lead). Connect the leads of a vacuum tube voltmeter to point "A" (see Schematic Diagram) and ground. The voltage at this point should be approximately a minus 2.25 volts.

BRIEF DESCRIPTION OF COMPRESSION CIRCUIT

One diode section of the 6H6 serves as the compressor rectifier. The compressor system is automatic and is in the circuit on both record positions. A portion of the output voltage is rectified by the 6H6 and varies the grid bias of the first audio, 6SF7.

RECORDING HEAD PRESSURE

The proper recording head pressure is 1¼ Oz. Adjustment of this pressure is made by turning the small screw on the top of the recording arm. This adjustment is very critical and should be made in quarter turns. TURN THE SCREW CLOCKWISE TO INCREASE THE CUTTING DEPTH and COUNTERCLOCKWISE TO DECREASE THE CUTTING DEPTH.

This adjustment is made at the factory with an ordinary pocket postal scale, consequently, field adjustments should be made in a like manner.

©John F. Rider

MODEL 791

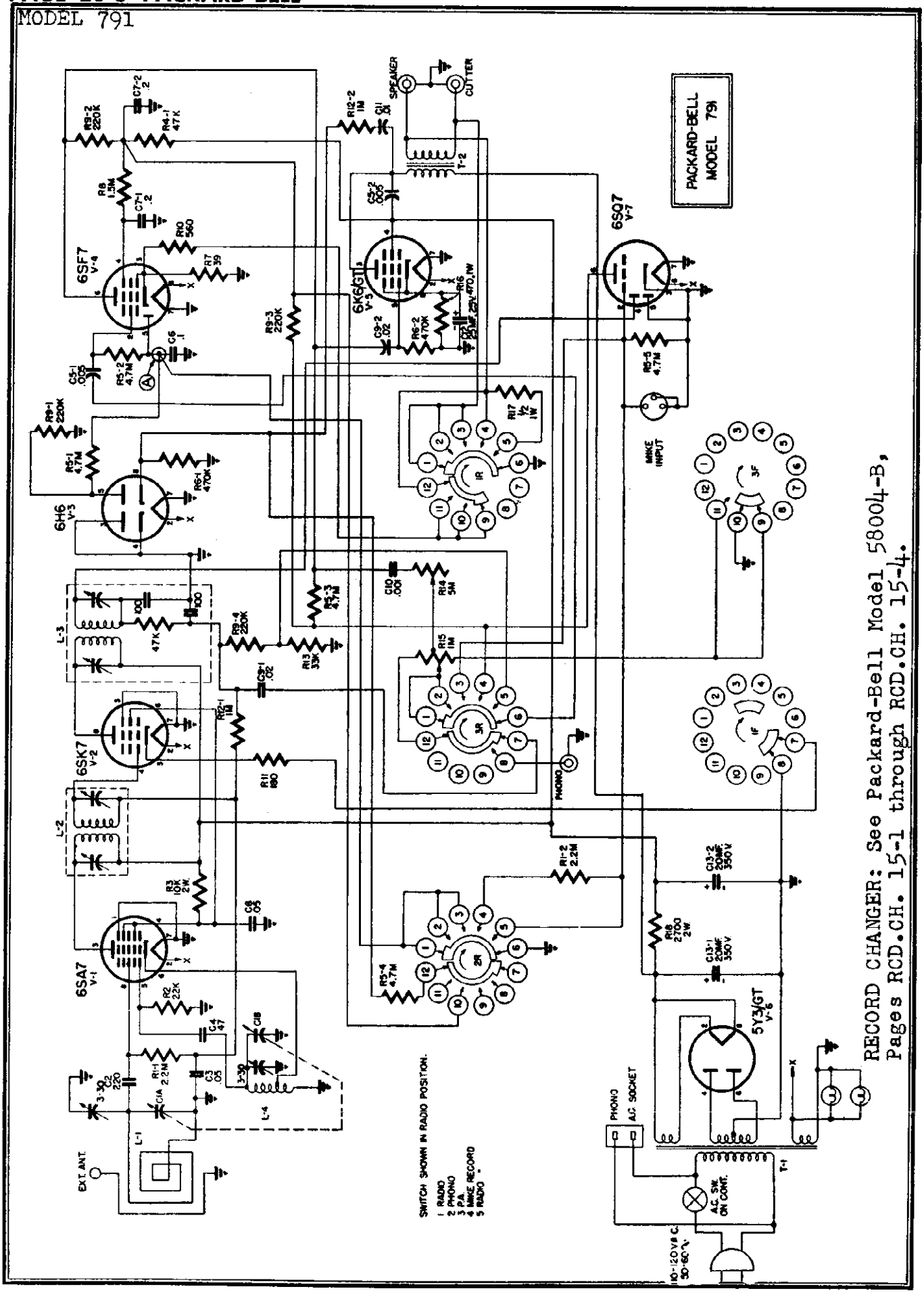

©John F. Rider

ALIGNMENT PROCEDURE

Alignment Procedure consists of the four steps outlined in the Alignment Procedure Chart.

Connect the test oscillator leads to the mixer grid and ground in series with an .01 Mfd. capacitor (dummy load) for step No. 1, I-F Alignment. Upon completion of this step, "Rock" the variable condenser to assure that the I-F's have been aligned to the proper frequency. Output should remain constant for any setting of the variable condenser.

Use the Hazeltine Test Loop No. 1150 or a reasonable substitute for the balance of the alignment. Place the test loop about two feet from the receiver loop in a vertical position.

IMPORTANT NOTICE: Make certain that each alignment step is done with a minimum input signal.

ALIGNMENT CHART

STEP	CONNECT TEST OSC. TO	TEST OSC. SETTING	POINTER SETTING	ADJUST FOR MAX. OUTPUT
1	Mixer Grid & Grd. (.01 Mfd. Cap.)	455 KC	540 KC	Trimmers A, B, C, & D
2	Standard Test Loop*	1620 KC	1620 KC	Trimmer F to 1620 KC
3	Standard Test Loop*	1500 KC	1500 KC	Trimmer E
4	Check stationizing. Slide pointer on string if stations are uniformly off in one direction.			

*NOTE: Hazeltine Test Loop No. 1150 (or a reasonable substitute).

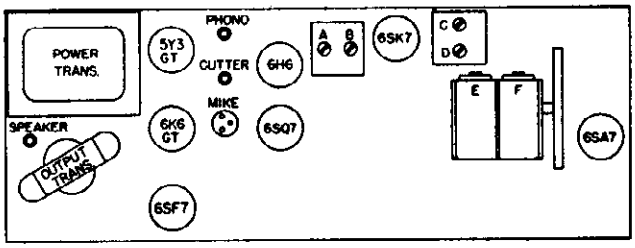

FIGURE 2 – TRIMMER LOCATION

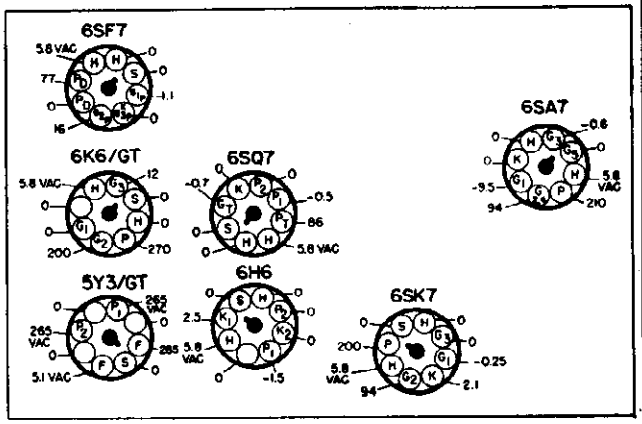

FIGURE 3 – SOCKET VOLTAGES

SOCKET VOLTAGES

All D.C. Voltages measured with a vacuum tube voltmeter from socket contacts to chassis. A.C. Voltages measured with a 1000 ohms per volt A.C. meter from socket contacts to chassis. Volume and tone controls maximum. Switch in Radio position. No signal. 117 volts A.C. line. All voltages shown are positive D.C. unless otherwise noted.

TABLE OF REPLACEABLE PARTS

Part No.	Ref. Symbol	Description
21077		Cabinet
23514	C1A,B	Capacitor, variable
23915	C2	Capacitor, ceramic, 220 Mmf. 20%
23017	C3	Capacitor, tubular, .05 Mf. 200 V.
23912	C4	Capacitor, ceramic, 47 Mmf. 20%
23004	C5-1 to 2	Capacitor, tubular, .005 Mf. 600 V.
23019	C6	Capacitor, tubular, .1 Mf. 200 V.
23020	C7-1 to 2	Capacitor, tubular, .2 Mf. 400 V.
23009	C8	Capacitor, tubular, .05 Mf. 400 V.
23007	C9-1 to 2	Capacitor, tubular, .02 Mf. 600 V.
23001	C10	Capacitor, tubular, .001 Mf. 600 V.
23023	C11	Capacitor, tubular, .01 Mf. 500 V.
24006	C12	Capacitor, electrolytic, 25 Mf. 25 V.
24003	C13-1 to 2	Capacitor, electrolytic, 20 Mf. 350 V.
29325	L-1	Coil, loop
29004	L-2	Coil, 1st. I-F Transformer
29007	L-3	Coil, 2nd I-F Transformer
29202	L-4	Coil, oscillator
32007-1		Cord, A.C. 8'
32011		Cord, A.C. 6'
36024		Cartridge, cutter (magnetic) 3.2ohms
38107		Dial, scale stationized
38108		Dial, Export and East
52037BG		Knob
54001		Lamp, dial, T-44, 0.250 Amp.
57010		Microphone, with cable (crystal)
57010-1		Microphone, base CB
58004E		Changer (RC-130L)
66004		Plug, pin
66013		Plug, mike
67031		Pointer, assembly
68029		Cartridge, phono pick-up (Shure P-30S) crystal
69001		Pulley
69003C		Pulley
69006A		Pulley
73165	R1-1 to 2	Resistor, 2.2 megohm ½W. 20%
73041	R2	Resistor, 22K ohm, ½W. 10%
73437	R3	Resistor, 10,000 ohm, 2W. 10%
73045	R4-1 to 2	Resistor, 47,000 ohm, ½W. 10%
73169	R5-1 to 5	Resistor, 4.7 megohm, ½W. 20%
73157	R6-1 to 2	Resistor, 470,000 ohms, ½W. 20%
73008	R7	Resistor, 39 ohm, ½W. 10%
73163	R8	Resistor, 1.5 megohm, ½W. 20%
73153	R9-1 to 4	Resistor, 220,000 ohm, ½W. 20%
73022	R10	Resistor, 560 ohm, ½W. 10%
73016	R11	Resistor, 180 ohm, ½W. 10%
73161	R12-1 to 2	Resistor, 1 megohm, ½W. 20%
73043	R13	Resistor, 33,000 ohm, ½W. 10%
25506C	R14	Control, tone
25010B	R15	Control, volume (tap @ 20K ohms
73221	R16	Resistor, 470 ohm, 1W. 10%
73601	R17	Resistor, ½ ohm, 1W. W.W.
73430	R18	Resistor, 2,700 ohm, 2W. 10%
77016B		Shaft, dial
78008		Shield, mike plug
79002		Socket, tube
79004		Socket, mike
79005		Socket, pickup
79007		Socket, A.C.
79010B		Socket, lamp
83705		Speaker
86009B		Switch, phono, etc.
89016B	T-1	Transformer, power
89402	T-2	Transformer, output 8000/3.2 ohms

© John F. Rider

MODELS 1181, 1181A

SPECIFICATIONS

Overall Dimensions:

	1181	1181A		1181	1181A
Height	33½"	25¼"	Depth	17"	30¼"
Width	36"	17¾"	Weight	109 lbs.	85 lbs.

Electrical Rating:

Line Voltage . . . . . 110-120 volts, A.C. 50,60 C.P.S.
Power Consumption . . 110 watts including phonograph

Tuning Frequency Range:

Standard Broadcast . . . . 540 to 1620 KC
Frequency Modulation . . . . 87.5 to 108.5 MC

Intermediate Frequency:

AM . . . . . 455 KC
FM . . . . . 10.7 MC

Electrical Output:

Undistorted . . . . . 4.0 watts
Maximum . . . . . 6.0 watts

Loudspeaker:

Type . . . . . Permanent Magnet
Outside Cone Diameter . . . . 10"
Voice Coil Impedance . . . . . 3.2 ohms at 400 C.P.S.
Magnet Rating . . . . . 4.6 Oz. Alnico V

Tubes:

Tube	No.	Function
6BA6	V-1	R-F Amplifier
6BA6	V-2	Mixer
6BA6	V-3	I-F Amplifier
6BA6	V-4	Driver
6AL5	V-5	FM Detector
6H6	V-6	AM Detector–AVC–Compressor
6SQ7	V-7	1st Audio Amplifier
6SK7	V-8	2nd Audio Amplifier
6AU6	V-9	Oscillator
6V6-GT	V-10	Output
5Y3-GT	V-11	Rectifier
6U5-6G5	V-12	Tuning Eye

GENERAL INFORMATION

These Models utilize a 2 band PhonOcord chassis. The Model 1181 is housed in a console cabinet, and the Model 1181A in an Armchair type cabinet. Both Models employ ten tubes plus rectifier and tuning eye and a 10 inch permanent magnet speaker. Listed below are some of the features included in these Models.

1. Standard Broadcast from 540 to 1620 KC.
2. Frequency Modulation from 87.5 to 108.5 MC.
3. Tuning Eye for accurate tuning of stations.
4. Automatic Home Recording combined with Automatic Record Changer.

For information concerning the Home Recording, Automatic Record Changer unit, refer to Service Instructions, Automatic Record Changer–Recorder Combination (Packard-Bell Part No. 58004-B).

RECORDING HEAD PRESSURE

The proper recording head pressure is 1¼ Oz. Adjustment of this pressure is made by turning the small screw on the top of the Recording Arm. This adjustment is very critical and should be made in quarter turns. TURN THE SCREW CLOCKWISE TO INCREASE CUTTING DEPTH, and COUNTER - CLOCKWISE TO DECREASE CUTTING DEPTH.

This adjustment is made at the factory with an ordinary pocket type postal scale, consequently, field adjustments should be made in a like manner.

BRIEF DESCRIPTION OF COMPRESSION CIRCUIT

One diode section of the 6H6 serves as the compressor rectifier. The compression system is automatic, and is in the circuit on both record positions. A portion of the output voltage is rectified by the 6H6 and varies the grid bias of the 2nd Audio, 6SK7.

HOW TO CHECK COMPRESSION VOLTAGE

Turn the Selector Switch to Radio Record position. Feed a 2 volt (RMS) 1000 cycle signal into the diode return of the 2nd I-F (point K, schematic). Connect the leads of a vacuum tube type voltmeter to point L (schematic) and ground. The voltage at this point should be approximately minus 2.5 volts.

SPECIAL SERVICE INFORMATION

Stage Gain Measurements, AM

Measurements taken with volume and tone controls maximum. Band Switch in Standard Broadcast position. AVC shorted out.

Standard Output . . . . 50 milliwatts
Dummy Antenna . . . . 200 Mmf.
Antenna Post to R-F Grid . . . . . 12X at 1000 KC
R-F Grid to Converter Grid . . . . . 9X at 1000 KC
Converter Grid to 1st I-F Grid . . . . 20X at 455 KC
1st I-F Grid to 2nd Detector . . . . . 40X at 455 KC
Overall Audio Gain . 30 millivolts to produce 50 milliwatts at 1000 cycles.

Stage Gain Measurements, FM

Measurements taken with volume and tone controls maximum. Band Switch in Frequency Modulation position. AVC shorted out.

Dummy Antenna . . . . 270 ohms
Dipole Terminal to R-F Grid . . . . . 0.9X at 98 MC
Converter Grid to 1st I-F Grid . . . . 12X at 10.7 MC
1st I-F Grid to Driver Grid . . . . . 45X at 10.7 MC

Oscillator Cathode Voltages

Measured at 117 volts AC line with an AC vacuum tube voltmeter, input loading above 10 megohms.

1620 KC . . . . . 8.5 volts AC
1200 KC . . . . . 8.2 volts AC
800 KC . . . . . 5.5 volts AC
540 KC . . . . . 2.5 volts AC

Oscillator Grid Current, FM

Measured at 117 volts AC line, with a DC microammeter connected in series with ground end of the 22,000 ohm grid resistor.

108 MC . . . . . 190 microamps
98 MC . . . . . 200 microamps
88 MC . . . . . 220 microamps

D.C. RESISTANCE MEASUREMENTS

I-F Coils:

Type	Primary	Secondary
1st AM	7.5	7.5
2nd AM	8.0	8.0
1st FM	0.75	0.75
2nd FM	1.5	0.5
Ratio Detector	1.5	0.1*

*Either side to tertiary, 0.25 ohms

Oscillator Coil:
Primary . . . . . 1 ohm
Secondary . . . . . 6 ohms
Antenna Coil:
Start to Finish . . . . 12.2 ohms
Start to Tap . . . . . 10.5 ohms
R-F Coil:
Primary . . . . . 5.8 ohms
Secondary . . . . . 4.2 ohms

NOTE: Due to the variation in winding methods, the D.C. resistance on all coils is subject to a 20% tolerance.

©John F. Rider

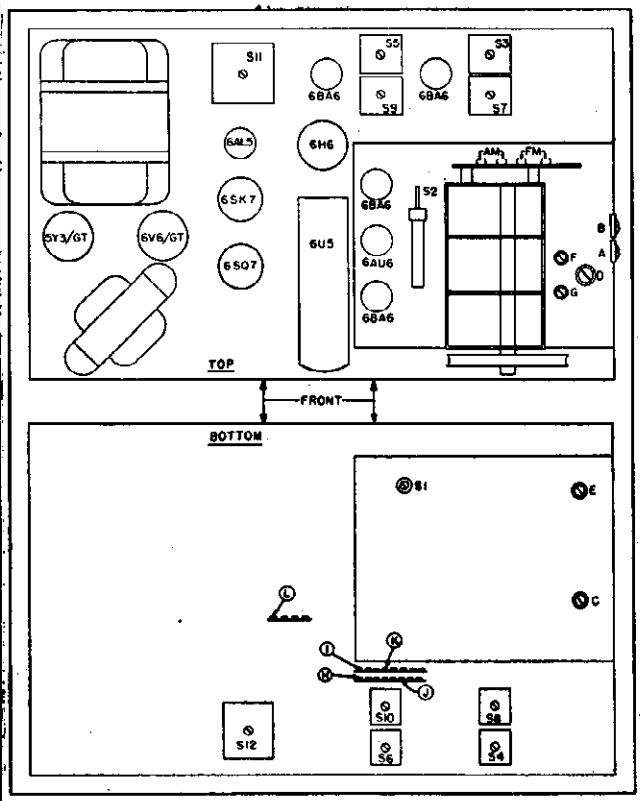

FIG. 1–TRIMMER LOCATION

A–Antenna Trimmer BC (C20A)

B–BC Padder 600 KC (C22)

C–FM R-F Trimmer (C23-2)

D–FM Osc. Trimmer (C21)

E–FM Antenna Trimmer (C23-1)

F–BC Osc. Trimmer (C24)

G–BC R-F Trimmer (C20B)

H–Ratio Detector, Zero Center

I–Ratio Detector, AVC

J–AVC

K–Diode

S1–FM Antenna (Bottom)

S2–FM R-F (Top)

S3–1st FM I-F Secondary (Top)

S4–1st FM I-F Primary (Bottom)

S5–2nd FM I-F Secondary (Top)

S6–2nd FM I-F Primary (Bottom)

S7–1st AM I-F Secondary (Top)

S8–1st AM I-F Primary (Bottom)

S9–2nd AM I-F Secondary (Top)

S10–2nd AM I-F Primary (Bottom)

S11–Ratio Detector Primary (Top)

S12–Ratio Detector Secondary (Bottom)

ALIGNMENT PROCEDURE–AM

Alignment procedure consists of the steps outlined in the Alignment Chart. Make certain that each step is done with a minimum input signal. Connect voltmeter to AVC (point J on schematic).

ALIGNMENT CHART–AM

STEP	CONNECT TEST OSC. TO	TEST OSC. SETTING	POINTER SETTING	ADJUST FOR MAX. OUTPUT
1	Mixer Grid & Ground	455 KC	540 KC	S7, 8, 9, 10
2	R-F Grid & Ground	1500 KC	1500 KC	Trimmers F & G
3	R-F Grid & Ground	600 KC	600 KC	Trimmer B
4	Repeat Step No. 2			
5	Standard Test Loop	1500 KC	1500 KC	Trimmer A
6	Check stationizing. Slide pointer on string if stations are uniformly off in one direction.			

Equipment Required for FM Alignment

1–Signal Generator to cover FM band (88 to 108 MC).

2–Vacuum Tube Type Voltmeter similar to "Voltohmyst" or "Polymeter."

ALIGNMENT CHART – FM

STEP	CONNECT TEST OSC. TO	TEST OSC. SETTING	POINTER SETTING	CONNECT VOLTMETER TO	ADJUST FOR MAX. OUTPUT
1	R-F Grid & Ground	10.7 MC	88 MC	Point I	S12, 6, 5, 4, 3
2	Adjust S11 for zero center			Point H	
3	Repeat Steps 1 and 2.				
4	Doublet Terminals thru 270 ohms	108 MC	108 MC	Point I	Trimmers D, C, E
5	Doublet Terminals thru 270 ohms	88 MC	88 MC	Point I	S1, 2
6	Repeat Step No. 4.				

Note: Rock variable condenser for Step No. 4.

SOCKET VOLTAGES

All D.C. voltages measured with a vacuum tube voltmeter from socket contacts to chassis. A.C. voltage measured with a 1000 ohms per volt A.C. meter from socket contacts to chassis. Volume and tone controls maximum. Switch in Radio position. No signal. 117 volts A.C. line. All voltages shown are positive D.C. unless otherwise noted.

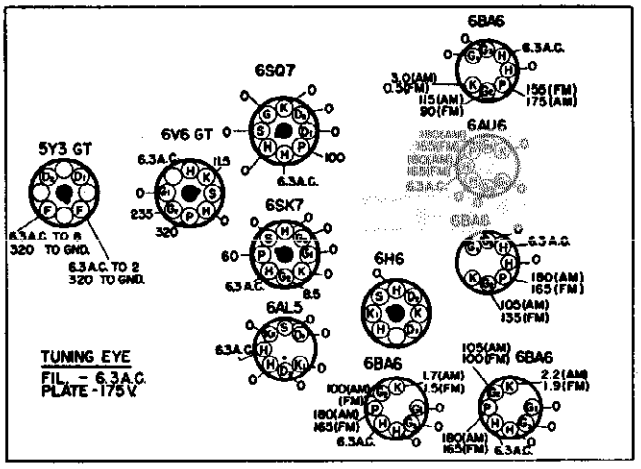

FIG. 2–SOCKET VOLTAGES

© John F. Rider

MODELS 1181, 1181A

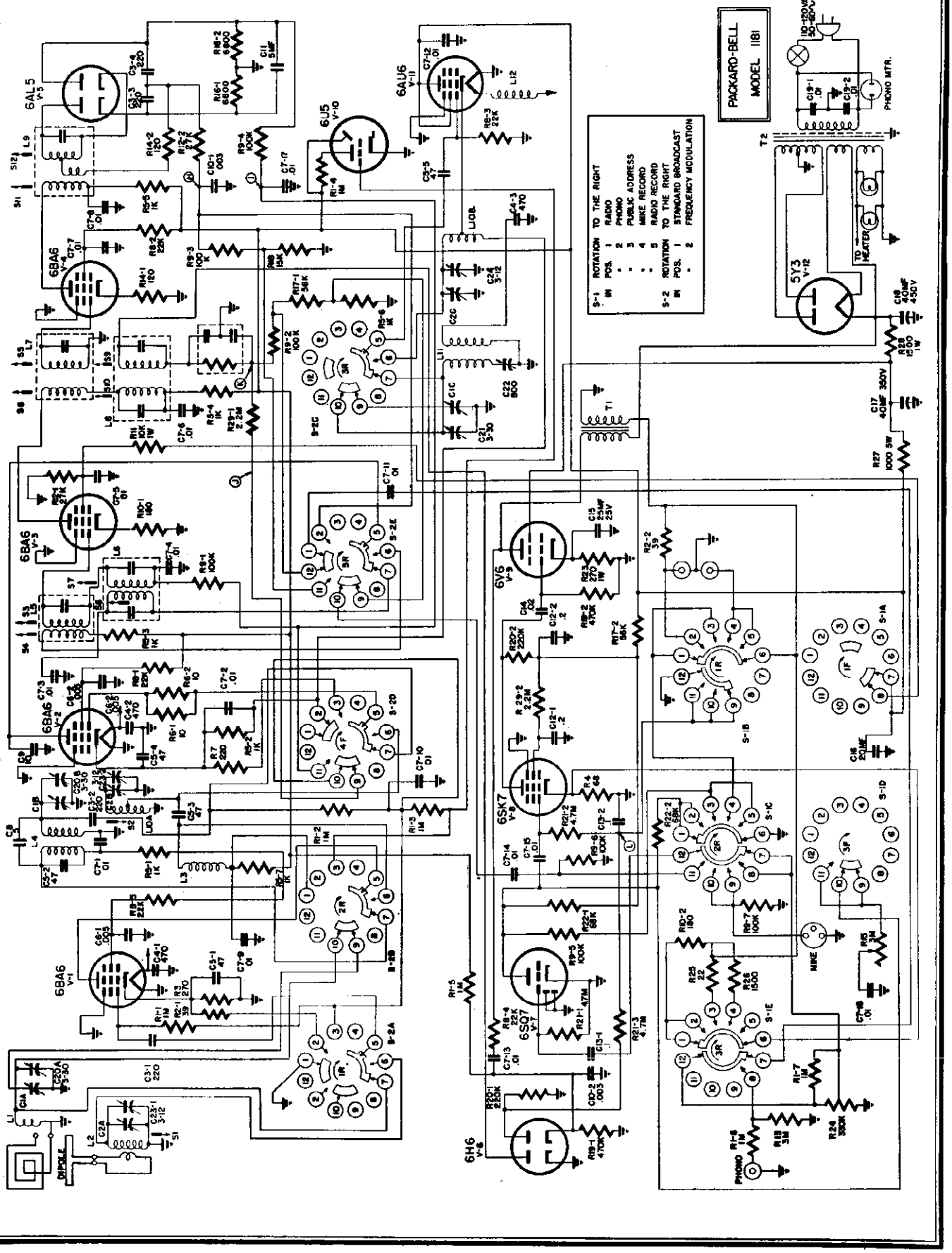

©John F. Rider

REPLACEABLE PARTS LIST

Part No.	Ref. Symbol	Description
21064		Cabinet, 1181A
21065		Cabinet, 1181
23525	C1A,B,C, C2A,B,C,	Capacitor, variable
23915	C3-1 to 4	Capacitor, ceramic, 220 Mmf. 20%
23916	C4-1 to 3	Capacitor, ceramic, 470 Mmf. 20%
23912	C5-1 to 5	Capacitor, ceramic, 47 Mmf. 20%
23931	C6-1 to 2	Capacitor, tubular, .005 Mf.
23023-1	C7-1 to 17	Capacitor, tubular, .01 Mf. 500 V.
23908	C8	Capacitor, ceramic, 5 Mmf.
23923	C9	Capacitor, ceramic, 10 Mmf. 10%
23016	C10-1 to 2	Capacitor, tubular, .003 Mf. 600V.
24038	C11	Capacitor, electrolytic, 5 Mf. 50V.
23020	C12-1 to 2	Capacitor, tubular, .2 Mf. 400 V.
23019	C13-1 to 2	Capacitor, tubular, .1 Mf. 200 V.
23007	C14	Capacitor, tubular, .02 Mf. 600 V.
24006	C15	Capacitor, electrolytic, 25 MF. 25 V.
24012	C16	Capacitor, electrolytic, 20 Mf. 350 V.
24004B-1	C17	Capacitor, electrolytic, 40 Mf. 350 V.
24030	C18	Capacitor, electrolytic, 40 Mf. 450 V.
23932	C19-1 to 2	Capacitor, tubular, .01 Mf. 125 V.
23400	C20A, B	Capacitor, trimmer, 3-30 dual
23406	C21	Capacitor, trimmer, 3-30 single
23402	C22	Capacitor, padder, 800
23408	C23-1 to 2	Capacitor, trimmer, 3-12 single
23412	C24	Capacitor, trimmer, 3-12 single
29400C	L-1	Coil, BC Antenna
29409	L-2	Coil, FM Antenna
29104	L-3	Coil, choke, R-F
29102F	L-4	Coil, BC R-F
29020	L-5	Coil, 1st FM I-F
29021	L-6	Coil, 1st AM I-F
29022A	L-7	Coil, 2nd FM I-F
29023	L-8	Coil, 2nd AM I-F
29018	L-9	Coil, Ratio Detector
29109	L-10A, B	Coil, FM R-F Oscillator
29205C	L-11	Coil, BC Oscillator
32003-1		Cord, A.C.
32012		Cord, A.C.
38073		Dial, stationized
52020-BN		Knob, mahogany
52020-BC		Knob, bleached
54002-1		Lamp, dial
57009		Microphone with cable (Astatic)
57009-1		Microphone base
58004-E		Record changer, Recorder
66001		Plug, pin
66004		Plug, speaker
66013		Plug, mike
67015		Pointer, assembly
69001		Pulley
69013A		Pulley
69006A		Pulley

Part No.	Ref. Symbol	Description
73053	R1-1 to 6	Resistor, carbon, 1 megohm, ½w. 20%
73008	R2-1 to 2	Resistor, carbon, 39 ohm, ½w. 10%
73018	R3	Resistor, carbon, 270 ohm, ½w. 10%
73011	R4	Resistor, carbon, 68 ohm, ½w. 10%
73025	R5-1 to 6	Resistor, carbon, 1000 ohm, ½w. 10%
73001	R6-1 to 2	Resistor, carbon, 10 ohm, ½w. 10%
73017	R7	Resistor, carbon, 220 ohm, ½w. 10%
73041	R8-1 to 5	Resistor, carbon, 22,000 ohm, ½w. 10%
73047	R9-1 to 7	Resistor, carbon, 100,000 ohm, ½w. 10%
73016	R10-1 to 2	Resistor, carbon, 180 ohm, ½w. 10%
73073	R11	Resistor, carbon, 10,000 ohm, 1w. 10%
73042	R12-1 to 2	Resistor, carbon, 27,000 ohm, ½w. 10%
25017A	R13	Control, volume
73014	R14-1 to 2	Resistor, carbon, 120 ohm, ½w. 10%
25509	R15	Control, tone
73035	R16-1 to 2	Resistor, carbon, 6800 ohm, ½w. 10%
73060	R17-1 to 2	Resistor, carbon, 56,000 ohm, ½w. 10%
73903	R18	Resistor, wire wound, 15 ohm, 1w.
73051	R19-1 to 2	Resistor, carbon, 470,000 ohm, ½w. 20%
73049	R20-1 to 2	Resistor, carbon, 220,000 ohm, ½w. 20%
73057	R21-1 to 3	Resistor, carbon, 4.7 megohm, ½w. 20%
73046	R22-1 to 2	Resistor, carbon, 68,000 ohm, ½w. 10%
73074	R23	Resistor, carbon, 270 ohm, 1w. 10%
73050	R24	Resistor, carbon, 330,000 ohm, ½w. 20%
73005	R25	Resistor, carbon, 22 ohm, ½w. 10%
73027	R26	Resistor, carbon, 1500 ohm, ½w. 10%
73915	R27	Resistor, wire wound, 1000 ohm, 5w. 10%
73918	R28	Resistor, wire wound, 1500 ohm, 10w. 10%
73055	R29-1 to 2	Resistor, carbon, 2.2 megohm, ½w. 20%
79002		Socket, tube
79051		Socket, miniature
79004		Socket, microphone
79005		Socket, pickup
79018		Socket, speaker and cutter
79041		Socket, tuning eye
79007		Socket, AC
79010B		Socket, lamp
79056		Socket, lamp
79045		Socket, antenna terminal strip
83703		Speaker, 10" P.M.
86009B	S1A to E	Switch, PhonOcord
86017C	S2A to E	Switch, band
89409	T-1	Transformer, output, 5000 to 3.2 ohms
89024	T-2	Transformer, power

©John F. Rider

Reference Symbol	Description	Service Part No.
WS-1 (R)	Switch-wafer section (homing)	Part of Z100
Z100	Wafer-switch-and-motor assembly	76-3576
Z101	Switch-and-lamp-housing assembly (in control head)	76-2957

SECTION 2
AUDIO CIRCUITS

C200	Condenser, tone compensation, .01 mf. (in control head)	61-0120
C201	Condenser, d-c blocking, .004 mf.	61-0179
C202	Condenser, tone control, .01 mf.	61-0120
C203	Condenser, tone compensation, 100 mmf.	30-1224-18
C204	Condenser, d-c blocking, .01 mf.	61-0120
C205	Condenser, cathode by-pass, 20 mf., 25v	Part of C106
C206	Condenser, tone compensation, .006 mf.	61-0105*
J200	Socket, speaker	55-0438-1
LS200	Speaker, p-m	36-1609-12
R200	Volume control, 350,000 ohms (In control head)	33-5557
R201	Resistor, tone compensation, 15,000 ohms (in control head)	66-3153340*
R202	Tone control (with on-off switch), 5 megohms (in control head)	Part of 33-5557
R203	Resistor, grid return, 10 megohms	66-6103340*
R204	Resistor, plate load, 220,000 ohms	66-4223340*
R205	Resistor, grid return, 470,000 ohms	66-4473340*
R206	Resistor, cathode bias, 220 ohms	66-1223340*
T200	Transformer, output	32-8315

SECTION 3
I-F, DETECTOR, AND A-V-C CIRCUITS

C300A	Condenser, shunt	Part of Z300
C300B	Condenser, shunt	Part of Z300
C301A	Condenser, shunt	Part of Z301
C301B	Condenser, shunt	Part of Z301
C302	Condenser, screen by-pass, .05 mf.	61-0122
C303	Condenser, cathode by-pass, .05 mf.	61-0122
C304	Condenser, a-v-c filter, .05 mf.	61-0122
C305	Condenser, r-f by-pass, 100 mmf.	60-10105407*
R300	Resistor, screen dropping, 15,000 ohms	66-3154340*
R301	Resistor, cathode bias, 820 ohms	66-1823340*
R302	Resistor, diode load, 27,000 ohms	66-3273340*
R303	Resistor, a-v-c filter, 1 megohm	66-5103340*
TC300A	Tuning core, 1st i-f primary	Part of Z300
TC300B	Tuning core, 1st i-f secondary	Part of Z300
TC301A	Tuning core, 2nd i-f primary	Part of Z301
TC301B	Tuning core, 2nd i-f secondary	Part of Z301
Z300	Transformer, 1st i-f	32-4160
Z301	Transformer, 2nd i-f	32-4161

SECTION 4
R-F AND CONVERTER CIRCUITS

C400	Condenser, tuning gang	31-2729
C400A	Condenser, aerial tuning	Part of C400
C400B	Condenser, r-f tuning	Part of C400
C400C	Condenser, osc. tuning	Part of C400
C401	Condenser, trimmer, 3-section	31-6504-1
C401A	Condenser, trimmer, BC aerial	Part of C401
C401B	Condenser, trimmer, SW1, 2 aerial	Part of C401
C401C	Condenser, trimmer, SW3, 4, 5 aerial	Part of C401
C402	Condenser, series tracking, SW5 aerial, 59 mmf.	30-1220-48
C403	Condenser, series tracking, SW4 aerial, 112 mmf.	30-1220-51
C404	Condenser, series tracking, SW3 aerial, 156 mmf.	30-1220-29*
C405	Condenser, series tracking, SW2 aerial, 131 mmf.	30-1220-30
C406	Condenser, series tracking, SW1 aerial, 525 mmf.	30-1220-58
C407	Condenser, d-c blocking, 220 mmf.	60-10205407*
C408	Condenser, cathode by-pass, .05 mf.	61-0122
C409	Condenser, d-c blocking, 220 mmf.	60-10205407*
C410	Condenser, trimmer, 3-section	31-6504
C410A	Condenser, trimmer, BC r.f.	Part of C410
C410B	Condenser, trimmer, SW1, 2 r.f.	Part of C410
C410C	Condenser, trimmer, SW3, 4, 5 r.f.	Part of C410
C411	Condenser, d-c blocking, 220 mmf.	60-10205407*
C412	Condenser, series tracking, SW5 r.f., 65.5 mmf.	30-1220-49
C413	Condenser, series tracking, SW4 r.f., 112 mmf.	30-1220-51
C414	Condenser, series tracking, SW3 r.f., 114 mmf.	30-1220-26*
C415	Condenser, series tracking, SW2 r.f., 131 mmf.	60-10135237*
C416	Condenser, series tracking, SW1 r.f., 525 mmf.	30-1220-18*
C417	Condenser, d-c blocking, 47 mmf.	60-00515307*
C418	Condenser, trimmer, 6-section	31-6505
C418A	Condenser, trimmer, BC osc.	Part of C418
C418B	Condenser, trimmer, SW1 osc.	Part of C418
C418C	Condenser, trimmer, SW2 osc.	Part of C418
C418D	Condenser, trimmer, SW3 osc.	Part of C418
C418E	Condenser, trimmer, SW4 osc.	Part of C418
C418F	Condenser, trimmer, SW5 osc.	Part of C418
C419	Condenser, r-f by-pass, 220 mmf.	60-10205407*
C420	Condenser, series tracking, BC osc., 465 mmf.	30-1220-47
C421	Condenser, series tracking, SW1 osc., 380 mmf.	30-1220-37
C422	Condenser, series tracking, SW2 osc., 117 mmf.	30-1220-28*
C423	Condenser, series tracking, SW3 osc., 160 mmf.	30-1220-54
C424	Condenser, series tracking, SW4 osc., 110 mmf.	30-1220-41
C425	Condenser, series tracking, SW5 osc., 55 mmf.	30-1220-50
C426	Condenser, shunt, 47 mmf.	30-1224-2
J400	Socket, aerial	57-1243FA33
L400	Coil, aerial	32-4268
L400A	Coil, BC aerial	Part of L400
L400B	Coil, SW1, 2 aerial	Part of L400
L401	Coil, SW3, 4, 5 aerial	32-4267
L402	Coil, r.f.	32-4266-1
L402A	Coil, BC r.f.	Part of L402
L402B	Coil, SW1, 2 r.f.	Part of L402
L403	Coil, SW3, 4, 5 r.f.	32-4268
L404	Coil, osc.	32-4270
L404A	Coil, BC osc.	Part of L404
L404B	Coil, SW1, 2 osc.	Part of L404
L405	Coil, SW3, 4, 5 osc.	32-4269
R400	Resistor, grid return, 1 megohm	66-5103340*
R401	Resistor, plate load, 22,000 ohms	66-3223340*
R402	Resistor, grid return, 1 megohm	66-5103340*
R403	Resistor, grid return, 22,000 ohms	66-3223340*
R404	Resistor, cathode bias, 820 ohms	66-1283340*
TC400	Tuning core, BC osc. tracking	Part of L404
WS-2 (F)	Switch-wafer section	Part of Z100
WS-2 (R)	Switch-wafer section	Part of Z100
WS-3 (F)	Switch-wafer section	Part of Z100
WS-3 (R)	Switch-wafer section	Part of Z100
WS-4 (F)	Switch-wafer section	Part of Z100
WS-4 (R)	Switch-wafer section	Part of Z100
WS-5 (F)	Switch-wafer section	Part of Z100
WS-5 (R)	Switch-wafer section	Part of Z100
WS-6 (F)	Switch-wafer section	Part of Z100
WS-6 (R)	Switch-wafer section	Part of Z100
WS-7 (F)	Switch-wafer section	Part of Z100
WS-7 (R)	Switch-wafer section	Part of Z100

MISCELLANEOUS

Description	Service Part No.
"A" lead	41-3187-1
Clip spring, cover grounding	57-1335
Cover, housing, wiring side	56-4421-3FJ20
Cover assembly, housing, tube side	76-3571
Housing assembly	76-2879-3FJ21
Socket, miniature	27-6226
Socket, loktal	27-6138*
Socket, vibrator	27-6153*
Socket, control-head plug	27-6234
Speaker cable	41-3801

CONTROL UNITS

Parts for control units are listed in CONTROL UNITS FOR PHILCO UNIVERSAL (CR-MODEL) AUTO RADIOS, PR-1508, with the following exceptions:

Chrysler

Dial	27-5986
Pointer	56-4362FCP

Ford

Dial	27-5987
Pointer	56-4362FCP

Chevrolet

Dial	54-5004
Pointer	56-4362FCP

Universal

Dial	27-5985
Pointer	56-4362FCP

DIAL CORDS

The details of drive-cord installations are illustrated in CONTROL UNITS FOR PHILCO UNIVERSAL (CR-MODEL) AUTO RADIOS, PR-1508. Use drive cord Part No. 45-8750 (25-ft. spool); lengths and loop sizes are given below.

CONTROL UNIT	CORD LENGTH	LOOP DIAMETER
Underdash	15-3/4"	5/16"
Ford	19"	5/16"
Chevrolet	18"	5/16"
Chrysler	14-3/4"	1/8"

©John F. Rider

TROUBLE SHOOTING

Section 1

POWER SUPPLY

Make the tests for this section with a d-c voltmeter; connect the leads between the chassis, test point C, and the test points indicated in the chart.

The voltage readings given were taken with a 20,000-ohms-per-volt meter at an input voltage of 6.6 volts, d.c.

Set the volume control to minimum, and the tone control fully clockwise. Depress the BC push button.

Follow the steps in the order given. If the "NORMAL INDICATION" is obtained in step 1, proceed with the tests for Section 2 (audio circuits); if not, isolate and correct the trouble in this section.

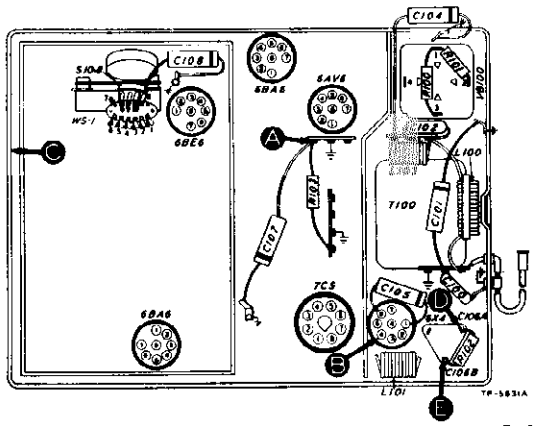

Bottom View, Showing Section 1 Test Points

STEP	TEST POINT	NORMAL INDICATION	ABNORMAL INDICATION	POSSIBLE CAUSE OF ABNORMAL INDICATION
1	A	168v		Trouble in this section. Isolate by the following tests.
2	B	6.6v	No voltage	Open: L100, L103, S100, F100. Shorted: C100, C101, C102, C103, C104.
			Low voltage	Leaky: C100, C101, C102, C103, C104. Defective battery.
3	D	245v	No voltage	Defective: 6X4, VB100. Open: T100. Shorted: C105, C106A. Leaky: C106B, C107.
			Low voltage	Defective: 6X4, VB100. Leaky: C106A. Shorted: C106B, C107.
			High voltage	Open: T200*, R206*.
4	E	230v	No voltage	Open: R102. Shorted: C106B.
			Low voltage	Increased resistance: R102. Leaky: C106B.
			High voltage	Shorted: C206*.
5	A	168v	No voltage	Open: R103. Shorted: C107, C419*.
			Low voltage	Increased resistance: R103. Leaky: C107.
Listening test: Abnormal hum may be caused by open or leaky: C105, C106A, C106B, C107.				

*This part, located in another section, may cause an abnormal indication in this section.

TROUBLE SHOOTING

Section 2

AUDIO CIRCUITS

For the tests in this section, use an audio-frequency signal generator. Connect the generator ground lead to the chassis, test point C; connect the output lead through a .1-mf. condenser to the test points indicated in the chart.

Set the volume control to maximum, and the tone control counterclockwise.

If the "NORMAL INDICATION" is obtained in step 1, proceed with the tests for Section 3 (i-f, detector, and a-v-c circuits); if not, isolate and correct the trouble in this section.

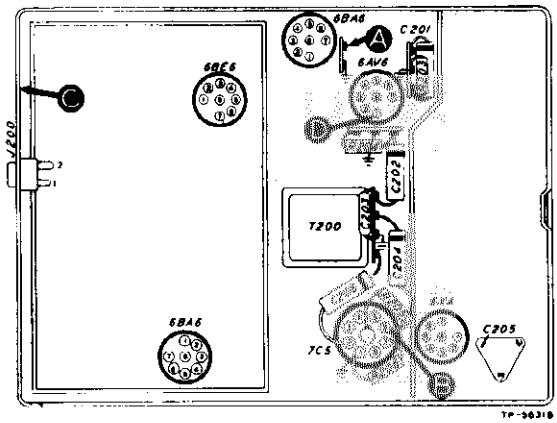

Bottom View, Showing Section 2 Test Points

STEP	TEST POINT	NORMAL INDICATION	POSSIBLE CAUSE OF ABNORMAL INDICATION
1	A	Loud, clear speaker output with moderate generator input.	Trouble in this section. Isolate by the following tests.
2	B	Clear output with strong input.	Defective: 7C5, LS200. Open: R206, R205, T200, C205. Shorted: C204, C205, C206.
3	D	Loud, clear output with moderate input.	Defective: 6AV6. Open: C204, R203, R204. Shorted: C203, C202 (rotate through range), S101*.
4	A	Loud, clear output with moderate input.	Open: R200 (rotate through range), C201. Open or shorted: J100, PL100.
Listening test: Distortion may be caused by leaky C201 or C204.			

*This part, located in another section, may cause an abnormal indication in this section.

TROUBLE SHOOTING

Section 3

I-F, DETECTOR, AND A-V-C CIRCUITS

For the tests in this section, use an r-f signal generator, with modulated output, set at 455 kc. Connect the generator ground lead to the chassis, test point C; connect the output lead through a .1-mf. condenser to the test points indicated in the chart.

Set the volume control to maximum, and the tone control fully counterclockwise. Depress the BC push button, and set the radio tuning to the low-frequency end of the dial.

If the "NORMAL INDICATION" is obtained in step 1, proceed with the tests for Section 4 (r-f and converter circuits); if not, isolate and correct the trouble in this section.

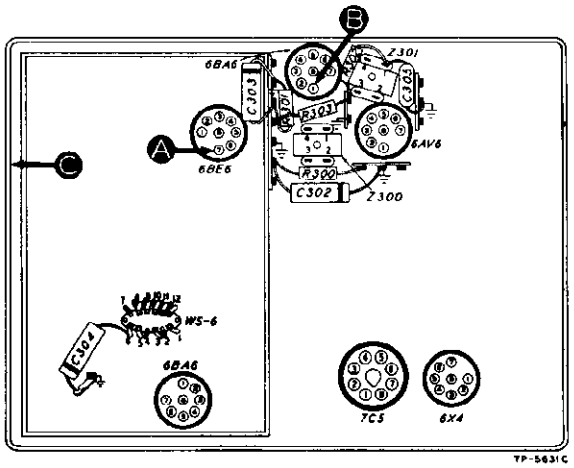

Bottom View, Showing Section 3 Test Points (location of test point A shown in figure 4)

To provide a complete i-f amplifier check, test point A for this section is placed at the grid of the mixer, in Section 4; therefore, the effectiveness of step 1 as a master check is dependent upon the condition of certain parts in Section 4; these parts are listed below under "POSSIBLE CAUSE OF ABNORMAL INDICATION."

STEP	TEST POINT	NORMAL INDICATION	POSSIBLE CAUSE OF ABNORMAL INDICATION
1	A	Loud, clear speaker output with weak generator input.	Trouble in this section. Isolate by the following tests.
2	B	Loud, clear output with moderate input.	Defective: 6BA6. Misaligned: Z301. Open: R300, R301, R302, C301A, C301B, L301A, L301B. Shorted: C300B, C301A, C301B, C302, C303, C305, L300B, L301A, L301B.
3	A	Loud, clear output with weak input.	Defective: 6BE6*. Misaligned: Z300. Open: C300A, C300B, L300A, L300B. Shorted: C300A, L300A, L300B, C411*.

*This part, located in another section, may cause an abnormal indication in this section.

TROUBLE SHOOTING

Section 4

R-F AND CONVERTER CIRCUITS

For the tests in this section, with the exception of the oscillator tests, use an r-f signal generator, with modulated output. Connect the generator ground lead to the chassis, test point C; connect the output lead through a .1-mf. condenser to the test points indicated in the chart.

Set the volume control to maximum, and the tone control fully counterclockwise.

Set the band push-button, tuning control, and signal-generator frequency as indicated in the chart.

OSCILLATOR TESTS: Connect the positive lead of a high-resistance d-c voltmeter to the chassis, test point C; connect the prod end of the negative lead through a 100,000-ohm isolating resistor to the 6BE6 oscillator grid (pin 1), test point B. Use a suitable meter range, such as 0—10 volts. Proper operation of the oscillator is indicated by negative voltages of approximately the values given in the chart (measured with 20,000-ohms-per-volt meter), throughout the tuning range.

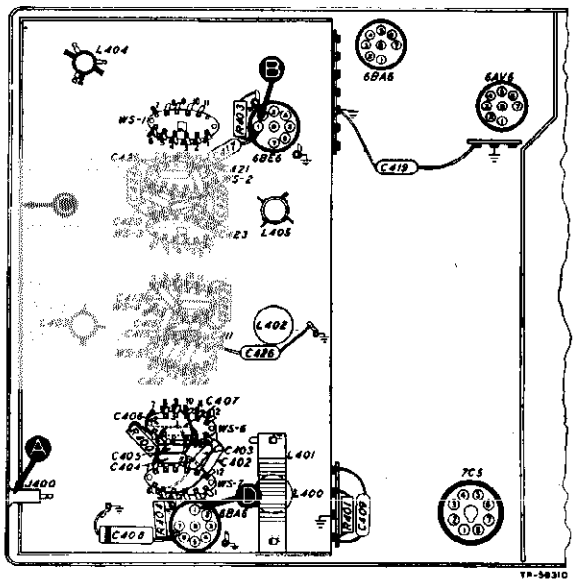

Bottom View, Showing Section 4 Test Points (location of C419 shown in figure 3)

If the "NORMAL INDICATION" is obtained in steps 1, 5, 9, 13, 17, and 21, further tests should be unnecessary; if not, isolate and correct the trouble in this section. If the trouble is not revealed by the tests for this section, check the alignment.

© John F. Rider

Section 4 (Cont.)

BC CIRCUITS

STEP	TEST POINT	SIG. GEN. FREQ.	BAND PUSH BUTTON	RADIO TUNING	NORMAL INDICATION	POSSIBLE CAUSE OF ABNORMAL INDICATION
1	A	1000 kc.	BC	Tune to signal.	Loud, clear output with very low generator input.	Trouble in BC circuits. Isolate by steps 2, 3, and 4.
2	B		BC	Tune through range.	-2.2v to -3.6v	Defective: 6BE6, WS-3 (F), WS-3 (R), WS-2 (F), WS-2 (R). Open: R403, C417, C420. Shorted: C417, L404A, C418A, C420, C400C.
3	D	1000 kc.	BC	Tune to signal.	Same as step 1.	Defective: 6BA6, 6BE6, WS-4 (F), WS-5 (F), WS-5 (R). Open: R404, R401, L402A, R402, C411, C409. Shorted: C409, C400B, C411.
4	A	1000 kc.	BC	Tune to signal.	Same as step 1.	Defective: WS-7 (F), WS-7 (R), WS-6 (F). Open: C401A, L400A, C407, R400, J400. Shorted: C400A, C401A, C407, L400A.

SW1 CIRCUITS

5	A	4.0 mc.	SW1	Tune to signal.	Same as step 1.	Trouble in SW1 circuits. Isolate by steps, 6, 7, and 8.
6	B		SW1	Tune through range.	-2.5v to -3.5v	Defective: WS-3 (F), WS-3 (R), WS-2 (F), WS-2 (R). Open: C418B, L404B, C421. Shorted: C418B, L404B, C421, C418C.
7	D	4.0 mc.	SW1	Tune to signal.	Same as step 1.	Defective: WS-5 (F), WS-5 (R), WS-4 (F), WS-4 (R). Open: L402B, C410B, C416. Shorted: L402B C410B, C416, C426.
8	A	4.0 mc.	SW1	Tune to signal.	Same as step 1.	Defective: WS-7 (F), WS-7 (R), WS-6 (F). Open: L400B, C401B, C406. Shorted: L400B, C401B, C406.

SW2 CIRCUITS

9	A	6.0 mc.	SW2	Tune to signal.	Same as step 1.	Trouble in SW2 circuits. Isolate by steps 10, 11, and 12.
10	B		SW2	Tune through range.	-3.7v to -4.2v	Defective: WS-3 (F), WS-3 (R), WS-2 (F), WS-2 (R). Open: C418C, C422, L404B. Shorted: C418C, C422, L404B.
11	D	6.0 mc.	SW2	Tune to signal.	Same as step 1.	Defective: WS-5 (F), WS-5 (R), WS-4 (F), WS-4 (R). Open: C415, L402B. Shorted: C415, L402B.
12	A_v	6.0 mc.	SW2	Tune to signal.	Same as step 1.	Defective: WS-7 (F), WS-7 (R), WS-6 (F), WS-6 (R). Open: C405, L400B. Shorted: C405, L400B.

SW3 CIRCUITS

13	A	9.0 mc.	SW3	Tune to signal.	Same as step 1.	Trouble in SW3 circuits. Isolate by steps 14, 15, and 16.
14	B		SW3	Tune through range.	-2.7v to -3.1v	Defective: WS-3 (F), WS-3 (R), WS-2 (F), WS-2 (R). Open: C418D, L405, C423, C418F. Shorted: C418F, C418D, L405, C423.
15	D	9.0 mc.	SW3	Tune to signal.	Same as step 1.	Defective: WS-5 (F), WS-5 (R), WS-4 (F), WS-4 (R). Open: L403, C410C, C414. Shorted: L403, C410C, C414.
16	A	9.0 mc.	SW3	Tune to signal.	Same as step 1.	Defective: WS-7 (F), WS-7 (R), WS-6 (F), WS-6 (R). Open: L401, C404, C401C. Shorted: L401, C401C, C404.

SW4 CIRCUITS

STEP	TEST POINT	SIG. GEN. FREQ.	BAND PUSH BUTTON	RADIO TUNING	NORMAL INDICATION	POSSIBLE CAUSE OF ABNORMAL INDICATION
17	A	12.0 mc.	SW4	Tune to signal.	Same as step 1.	Trouble in SW4 circuits. Isolate by steps 18, 19, and 20.
18	B		SW4	Tune through range.	-3.3v to -3.6v	Defective: WS-3 (F), WS-3 (R), WS-2 (F), WS-2 (R). Open: C418E, C424, L405. Shorted: C418E, C424, L405.
19	D	12.0 mc.	SW4	Tune to signal.	Same as step 1.	Defective: WS-5 (F), WS-5 (R), WS-4 (F), WS-4 (R). Open: C413, L403. Shorted: C413, L403.
20	A	12.0 mc.	SW4	Tune to signal.	Same as step 1.	Defective: WS-7 (F), WS-7 (R), WS-6 (F), WS-6 (R). Open: C403, L401. Shorted: C403, L401.

SW5 CIRCUITS

21	A	15.0 mc.	SW5	Tune to signal.	Same as step 1.	Trouble in SW5 circuits. Isolate by steps 22, 23, and 24.
22	B		SW5	Tune through range.	-3.9v to -4.0v	Defective: WS-3 (F), WS-3 (R), WS-2 (F), WS-2 (R). Open: C425, L405. Shorted: C425, L405.
23	D	15.0 mc.	SW5	Tune to signal.	Same as step 1.	Defective: WS-5 (F), WS-5 (R), WS-4 (F), WS-4 (R). Open: C412, L403. Shorted: C412, L403.
24	A	15.0 mc.	SW5	Tune to signal.	Same as step 1.	Defective: WS-7 (F), WS-7 (R), WS-6 (F), WS-6 (R). Open: C402, L401. Shorted: C402, L401.

©John F. Rider

©John F. Rider

ALIGNMENT PROCEDURE

NOTE: THE CONTROL UNIT SHOULD BE PLUGGED INTO THE RADIO

DIAL POINTER: With tuning cable disengaged, set tuning gang to full-mesh position; turn tuning control to low-frequency end until pointer stops, then engage cable.
OUTPUT METER: Connect across voice-coil terminals.
SIGNAL GENERATOR: Connect ground lead to chassis; connect output lead as indicated in chart. Use modulated output.
RADIO CONTROLS: Turn volume control to maximum, and tone control fully counterclockwise. Set dial as indicated in chart.
OUTPUT LEVEL: During alignment, signal generator must be attenuated to hold output-meter indication below 1 volt.

STEP	SIGNAL GENERATOR		RADIO			ADJUST
	CONNECTION TO RADIO	DIAL SETTING	BAND PUSH BUTTON	DIAL SETTING	SPECIAL INSTRUCTIONS	
1	Through .05-mf. condenser to aerial receptacle.	455 kc.	BC	1600 kc.	Adjust, in order given, for maximum output.	TC301B—2nd i-f sec. TC301A—2nd i-f pri. TC300B—1st i-f sec. TC300A—1st i-f pri.
2	Dummy aerial (see note below).	1600 kc.	BC	1600 kc.	Adjust for maximum.	C418A—BC osc. (shunt)
3	Same as step 2.	1520 kc.	BC	1520 kc.	Adjust for maximum.	C410A—BC r.f. C401A—BC aerial
4	Same as step 2.	580 kc.	BC	580 kc.	Adjust for maximum while rocking tuning control.	TC400—BC osc. (padding)
5	Same as step 2.	18.0 mc.	SW5	18.0 mc.	Adjust for maximum.	C418F—SW5 osc.
6	Same as step 2.	17.0 mc.	SW5	17.0 mc.	Adjust for maximum while rocking tuning control.	C410C—SW5 r.f. C401C—SW5 aerial
7	Same as step 2.	13.0 mc.	SW4	13.0 mc.	Adjust for maximum while rocking tuning control.	C418E—SW4 osc.
8	Same as step 2.	9.5 mc.	SW3	9.5 mc.	Adjust for maximum while rocking tuning control.	C418D—SW3 osc.
9	Same as step 2.	7.0 mc.	SW2	7.0 mc.	Adjust for maximum.	C418C—SW2 osc.
10	Same as step 2.	6.0 mc.	SW2	6.0 mc.	Adjust for maximum.	C410B—SW2 r.f. C401B—SW2 aerial
11	Same as step 2.	4.0 mc.	SW1	4.0 mc.	Adjust for maximum while rocking tuning control.	C418B—SW1 osc.

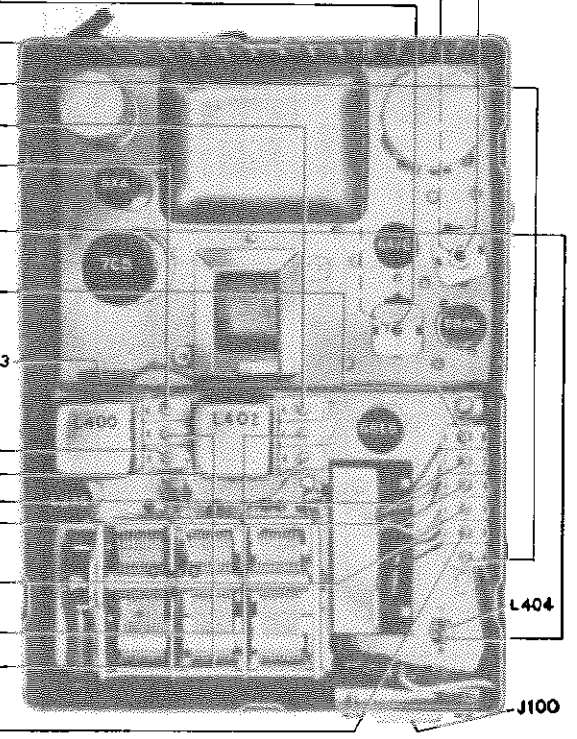

TP-5872

Top View, Showing Trimmer Locations

DUMMY AERIAL: Connect generator output lead through 30-mmf. condenser to aerial receptacle; connect another 30-mmf. condenser from aerial receptacle to chassis.

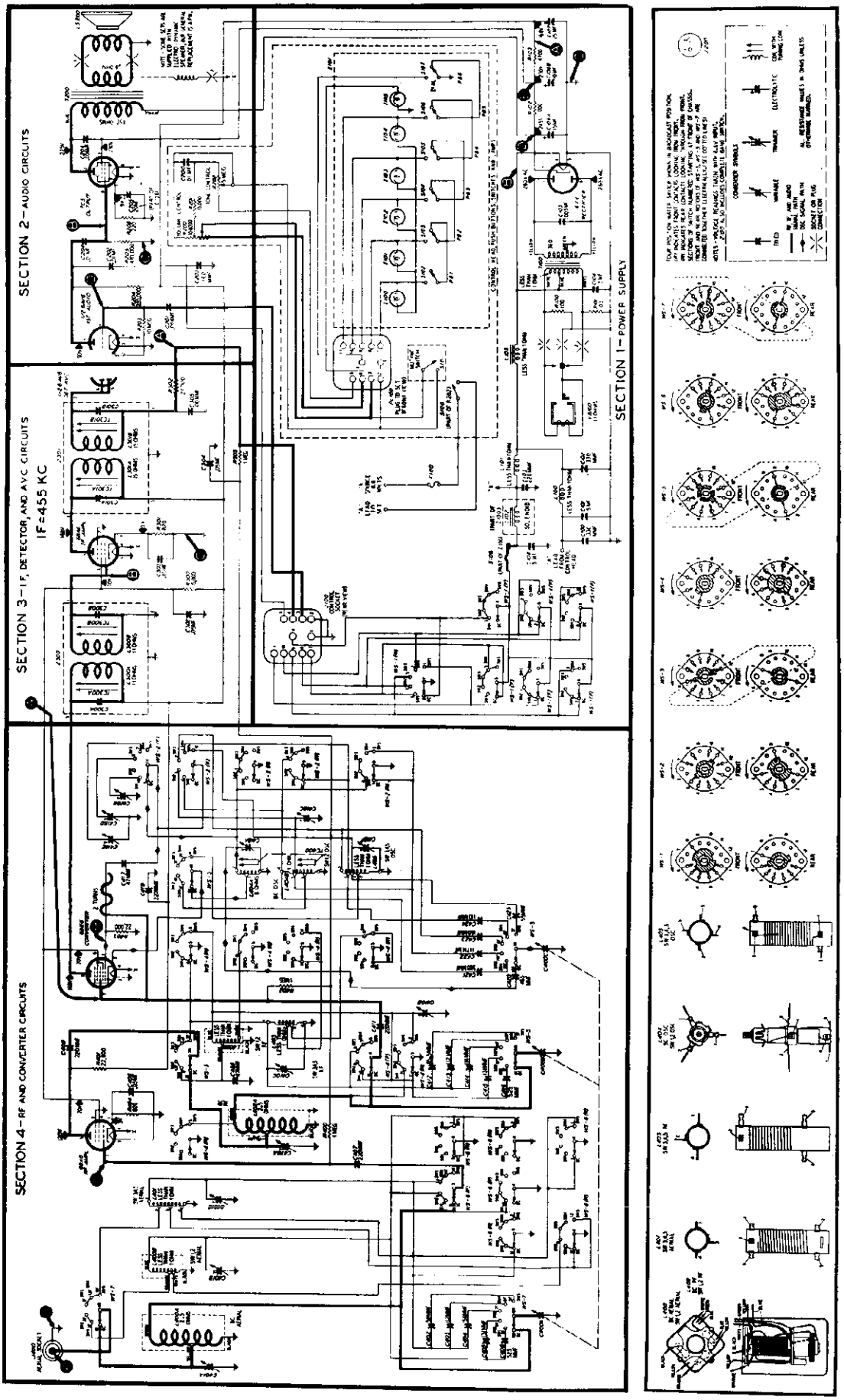

Sectionalized Schematic Diagram, Showing Test Points

©John F. Rider

MODEL CR-12

TROUBLE SHOOTING

Section 1

Make the tests for this section with a d-c voltmeter, connecting the leads between the chassis (test point C) and the test points indicated in the chart. The voltage readings given were taken with a 20,000-ohms-per-volt meter.

Turn on the power and depress the manual-tuning button. Turn the volume control to minimum, and the tone control fully counterclockwise.

If the "NORMAL INDICATION" is obtained in step 1, proceed with the tests for Section 2; if not, isolate and correct the trouble in this section.

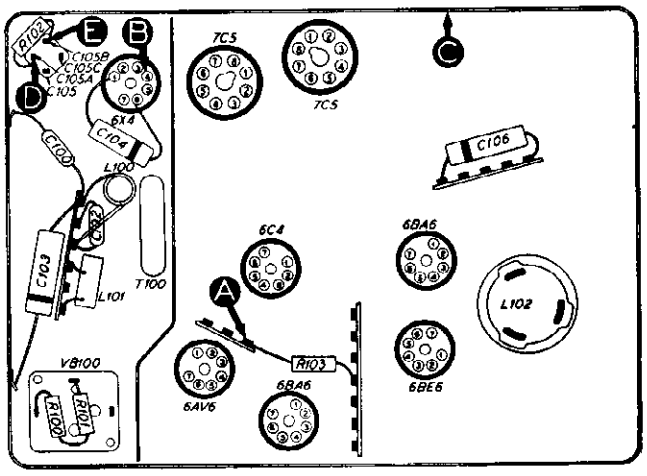

Bottom View, Showing Section 1 Test Points

STEP	TEST POINT	NORMAL INDICATION	ABNORMAL INDICATION	POSSIBLE CAUSE OF ABNORMAL INDICATION
1	A B	192v 6.8v		Trouble in this section. Isolate by the following tests.
2	B	6.8v	No voltage Low voltage	Open: F100, S100, L100, L101. Weak battery. Leaky: C100, C101, C102, C103.
3	D	250v	No voltage Low voltage High voltage	Open: T100. Shorted: T100, C104, C105A. Defective: VB100, 6X4. Leaky: C105A. Defective: 6X4, VB100. Shorted: C105B, T100. Open: C105A, T100. Open: R102, R210*, T200*.
4	E	237v	No voltage Low voltage High voltage	Open: R102. Shorted: C105B. Leaky: C105B. Changed resistance: R102. Shorted: C207*. Open: R103, R210*.
5	A	192v	No voltage Low voltage	Open: R103. Shorted: C105C. Leaky: C105C. Changed resistance: R103.

Listening Test: Abnormal hum or hash may be caused by open C105B or C105C.

* This part, located in another section, may cause abnormal indication in this section.

TROUBLE SHOOTING

Section 2

For the tests in this section, use an audio-frequency signal generator. Connect the generator ground lead to the chassis, test point C; connect the output lead through a .1-mf. condenser to the test points indicated in the chart.

Depress the manual-tuning button. Turn the volume control to maximum, and the tone control fully counterclockwise. Adjust the signal-generator output as required for each step.

If the "NORMAL INDICATION" is obtained in step 1, proceed with the tests for Section 3; if not, isolate and correct the trouble in this section.

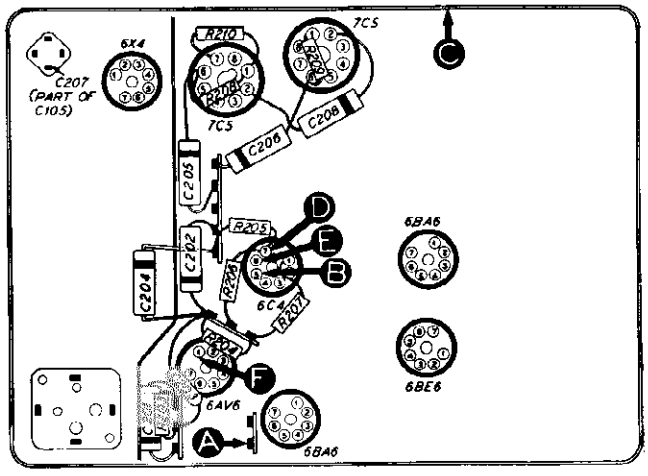

Bottom View, Showing Section 2 Test Points

STEP	TEST POINT	NORMAL INDICATION	POSSIBLE CAUSE OF ABNORMAL INDICATION
1	A	Loud, clear signal with weak signal input.	Trouble in this section. Isolate by the following tests.
2	B (Remove 6C4)	Loud, clear signal with strong signal input.	Defective: 7C5, LS200. Open: L200, R209, R210, T200. Leaky: C206. Shorted: C206, C207.
3	D (6C4 removed)	Same as step 2.	Defective: 7C5. Shorted: C205. Open: C205, R208. Leaky: C205.
4	E (Replace 6C4)	Loud, clear signal with moderate signal input.	Defective: 6C4. Open: R205, R206, R207. Leaky: C204. Shorted: C204, C203, C202 (rotate through range).
5	F	Same as step 1.	Open: R203, R204, C204. Defective: 6AV6.
6	A	Same as step 1.	Open: R200 (rotate through range), C201, R201. Defective: PL100*, J100*, or cable.

Listening Test: Distortion may be caused by leaky or shorted C201, or by open R203.

* This part, located in another section, may cause abnormal indication in this section.

© John F. Rider

TROUBLE SHOOTING

Section 3

For the tests in this section, use an r-f signal generator, with modulated output, set at 455 kc. Connect the generator ground lead to the chassis, test point C; connect the output lead through a .1-mf. condenser to the test points indicated in the chart.

Depress the manual-tuning button. Turn the volume control to maximum, and the tone control fully counterclockwise.

If the "NORMAL INDICATION" is obtained in step 1, proceed with the tests for Section 4; if not, isolate and correct the trouble in this section.

Since the circuit location of test point A for this section is the same as that of test point B for Section 4, the effectiveness of step 1 as a master check is dependent upon the condition of certain parts in Section 4; these parts are listed below under "POSSIBLE CAUSE OF ABNORMAL INDICATION."

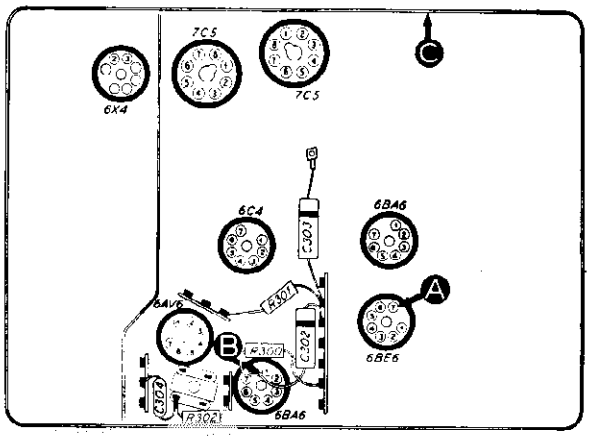

Bottom View, Showing Section 3 Test Points

STEP	TEST POINT	NORMAL INDICATION	POSSIBLE CAUSE OF ABNORMAL INDICATION
1	A	Loud, clear signal with weak signal input.	Trouble in this section. Isolate by the following tests.
2	B	Loud, clear signal with moderate signal input.	Open, shorted, or misaligned: Z301. Defective: 6BA6, 6AV6 (diode section). Open: R300, R301, R302. Shorted: C302, C303, C304.
3	A	Loud, clear signal with weak signal input.	Defective: 6BE6*. Open, shorted, or misaligned: Z300. Open: R403*, L403*.

* This part, located in another section, may cause abnormal indication in this section.

TROUBLE SHOOTING

Section 4

For the tests in this section, with the exception of the oscillator tests, use an r-f signal generator, with modulated output. Connect the generator ground lead to the chassis, test point C; connect the output lead through a .1-mf. condenser to the test points indicated in the chart.

Turn the volume control to maximum, and the tone control fully counterclockwise.

If the "NORMAL INDICATION" is not obtained in step 1(a), isolate and correct the trouble before making the test in step 1(b).

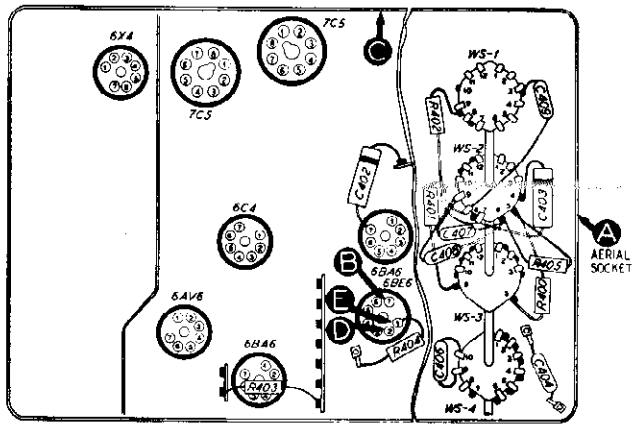

Bottom View, Showing Section 4 Test Points

STEP	TEST POINT	SIG. GEN. FREQ.	RADIO TUNING	NORMAL INDICATION	POSSIBLE CAUSE OF ABNORMAL INDICATION
1(a)	A	1000 kc.	Manual. Tune to signal.	Loud, clear signal with weak signal input.	Trouble in manual-tuning circuits; isolate by steps 2, 3, and 4, and correct trouble before proceeding.
1(b)	A	Tune to frequency of each push button.	Push button. Depress each button.	Loud, clear signal with weak signal input.	Trouble in push-button-tuning circuits; isolate by steps 5, 6, and 7.
			MANUAL-TUNING TESTS		
2	B	1000 kc.	Manual. Tune to signal.	Loud, clear signal with moderate signal input.	Defective: 6BE6. Trouble in oscillator circuit (step 3).
3	E to D (Osc. test: see note, page 5.)		Manual. Tune through range.	Negative 2 to 4 volts	Defective: 6BE6, WS2(F). Open: L403, L402C, C406, C407, C408, R404. Shorted or leaky: C406, C407, C408. Shorted: L403, L402C.
4	A	1000 kc.	Manual. Tune to signal.	Loud, clear signal with weak signal input.	Defective: 6BA6, WS3(R), WS3(F), WS1(F), WS1(R), WS2(R). Open: L404, L402B, L402A, R400, R401, R402, R403, R405, C404, C409. Shorted or leaky: C409, C405, C404, C401.
			PUSH-BUTTON-TUNING TESTS		
5	B	Tune to frequency of each button.	Push button. Depress each button.	Loud, clear signal with moderate signal input.	Defective: WS1(F), WS1(R). Trouble in oscillator circuit (step 6).

©John F. Rider

MODEL CR-12

PUSH-BUTTON-TUNING TESTS

STEP	TEST POINT	SIG. GEN. FREQ.	RADIO TUNING	NORMAL INDICATION	POSSIBLE CAUSE OF ABNORMAL INDICATION
6	E to D (Osc. test: see note below.)		Push button. Depress each button.	Negative 2 to 4 volts.	Open: WS2(F). Open or shorted: L401F, L401G, L401H, L401I, L401J.
7	A	Tune to frequency of each button.	Push button. Depress each button.	Loud, clear signal with weak signal input.	Defective: WS3(R), WS3(F), WS1(F), WS1(R), WS2(R). Open: L401A, L401B, L401C, L401D, L401E. Open or shorted: Z400.

OSCILLATOR TESTS (steps 3 and 6): Connect positive lead of high-resistance voltmeter to test point D (pin 2, cathode of 6BE6); connect prod end of negative lead through 100,000-ohm isolating resistor to test point E (pin 1, oscillator grid, of 6BE6). Use suitable meter range, such as 0—10 volts. Proper operation of oscillator is indicated by negative voltage, 2 to 4 volts (measured with 20,000-ohms-per-volt meter), throughout range of manual tuning, step 3, and of push-button tuning, step 6.

SECTION 1

Reference Symbol	Description	Service Part No.
C100	Condenser, r-f by-pass, 330 mmf.	62-133001001
C101	Condenser, by-pass, .5 mf.	61-0137*
C102	Condenser, by-pass, 330 mmf.	62-133001001
C103	Condenser, by-pass, .5 mf.	61-0137*
C104	Condenser, buffer, .0033 mf.	61-0115
C105	Condenser, electrolytic, 4-section	61-0150
C105A	Condenser, filter, 20 mf., 350 v.	Part of C105
C105B	Condenser, filter, 10 mf., 350 v.	Part of C105
C105C	Condenser, filter, 5 mf., 300 v.	Part of C105
C108	Condenser, by-pass, .5 mf.	61-0137*
I100	Pilot lamp	34-2040
I101	Pilot lamp	34-2040
I102	Pilot lamp	34-2040
I103	Pilot lamp	34-2040
I104	Pilot lamp	34-2040
I105	Pilot lamp	34-2040
J100	Socket, control plug	27-6234
J101	Socket, foot control	27-6186*
L100	Choke, "A"	32-4170
L101	Choke, "A"	32-1374-2
L102	Solenoid	Part of Z100
PB1	Push-button switch	Part of Z101
PB2	Push-button switch	Part of Z101
PB3	Push-button switch	Part of Z101
PB4	Push-button switch	Part of Z101
PB5	Push-button switch	Part of Z101
PB6	Push-button switch	Part of Z101
PL100	Plug, control head	76-3124
R100	Resistor, damping, 100 ohms	66-1104340*
R101	Resistor, damping, 100 ohms	66-1104340*
R102	Resistor, filter, 1000 ohms	66-2104340*
R103	Resistor, filter, 4700 ohms	66-2473340*
S100	Switch, off-on	Part of R200
S101	Switch, muting	Part of Z101
S102	Switch, solenoid interrupter	Part of Z100
T100	Transformer, power	32-8314
VB100	Vibrator	45-6307*
WS4(F)	Wafer section (homing)	Part of Z100
WS4(R)	Wafer section (homing)	Part of Z100
Z100	Solenoid-and-wafer-switch assembly	76-2945
Z101	Switch-and-lamp-housing assembly	76-2957

SECTION 2

C200	Condenser, tone compensation, .01 mf. (in control head)	61-0120*
C201	Condenser, d-c blocking, .004 mf.	61-0179*
C202	Condenser, tone compensation, .01 mf.	61-0120*
C203	Condenser, r-f by-pass, 100 mmf.	30-1224-18
C204	Condenser, d-c blocking, .004 mf.	61-0179*
C205	Condenser, d-c blocking, .01 mf.	61-0120*
C206	Condenser, d-c blocking, .01 mf.	61-0120*
C207	Condenser, by-pass, 10 mf., 25 v.	Part of C105
C208	Condenser, tone compensation, .006 mf.	61-0105*
L200	Speaker field	Part of LS200
LS200	Loud-speaker	36-1609-2
R200	Volume control, 350,000 ohms (in control head)	33-5557
R200	Volume control (Buick special)	33-5557-1
R201	Resistor, tone compensation, 15,000 ohms (in control head)	66-3153340*
R202	Tone control, 5 megohms (in control head)	Part of R200
R203	Resistor, grid return, 10 megohms	66-6103340*
R204	Resistor, plate load, 220,000 ohms	66-4223340*
R205	Resistor, grid return, 10 megohms	66-6103340*
R206	Resistor, cathode load 220,000 ohms	66-4223340*
R207	Resistor, plate load, 220,000 ohms	66-4223340*
R208	Resistor, grid return 470,000 ohms	66-4473340*
R209	Resistor, grid return 470,000 ohms	66-4473340*
R210	Resistor, bias, 330 ohms	66-1333340*
T200	Transformer, output	32-8316

SECTION 3

C300A	Condenser, fixed trimmer, 107 mmf.	Part of Z300
C300B	Condenser, fixed trimmer, 86 mmf.	Part of Z300
C301A	Condenser, fixed trimmer, 131 mmf.	Part of Z301
C301B	Condenser, fixed trimmer, 106 mmf.	Part of Z301
C302	Condenser, cathode by-pass, .05 mf.	61-0122
C303	Condenser, cathode by-pass, .05 mf.	61-0122
C304	Condenser, r-f by-pass, 100 mmf.	30-1224-18
R300	Resistor, cathode by-pass, 2200 ohms	66-2223340*
R301	Resistor, screen dropping, 27,000 ohms	66-3273340*
R302	Resistor, r-f filter, 27,000 ohms	66-3273340*
Z300	Transformer, 1st i-f, including C300A and C300B	32-4160
Z301	Transformer, 2nd i-f, including C301A and C301B	32-4161

SECTION 4

C400A	Condenser, d-c blocking	Part of Z400
C400B	Condenser, fixed padder	Part of Z400
C401	Condenser, aerial padder	63-0055*
C402	Condenser, cathode by-pass, .05 mf.	61-0122
C403	Condenser, a-v-c filter, .05 mf.	61-0122
C404	Condenser, coupling, 180 mmf.	60-10205307*
	Condenser, r-f trimmer	63-0055*
C405	Condenser, d-c blocking, 100 mmf.	30-1224-18
C407	Condenser, shunt, silver mica, 380 mmf.	30-1220-37
C408	Condenser, shunt, 54.5 mmf.	61-0149
C409	Condenser, d-c blocking, 180 mmf.	60-10205307*
L400A	Coil, i-f trap (series)	Part of Z400
L400B	Coil, i-f trap (shunt)	Part of Z400
L401A	Coil, aerial, push button	Part of Z401
L401B	Coil, aerial, push button	Part of Z401
L401C	Coil, aerial, push button	Part of Z401
L401D	Coil, aerial, push button	Part of Z401
L401E	Coil, aerial, push button	Part of Z401
L401F	Coil, osc. tuning, push button	Part of Z401
L401G	Coil, osc. tuning, push button	Part of Z401
L401H	Coil, osc. tuning, push button	Part of Z401
L401I	Coil, osc. tuning, push button	Part of Z401
L401J	Coil, osc. tuning, push button	Part of Z401
L402A	Coil, aerial, manual (Part of Z402)	65-0443-4
L402B	Coil, r-f, manual (Part of Z402)	65-0443-5
L402C	Coil, osc., manual (Part of Z402)	65-0443-6
L403	Coil, oscillator shunt	32-4110
L404	Choke, spark suppressor	65-0437
R400	Resistor, cathode bias, 220 ohms	66-1223340*
R401	Resistor, plate load, 10,000 ohms	66-3103340*
R402	Resistor, grid return, 1 megohm	66-5103340*
R403	Resistor, a-v-c filter, 1 megohm	66-5103340*
R404	Resistor, grid return, 22,000 ohms	66-3223340*
R405	Resistor, cathode bias, 220 ohms	66-1223340*
Z400	Trap assembly, i-f, including C400A, C400B, L400A, and L400B	32-4162
Z401	Coil assembly, push button, including L401A through L401J	76-2715
Z402	Coil assembly, manual tuner, including L402A, L402B, and L402C	76-2919
WS1(F)	Wafer section, r-f	Part of Z100
WS1(R)	Wafer section, r-f	Part of Z100
WS2(F)	Wafer section, osc.	Part of Z100
WS2(R)	Wafer section, osc.	Part of Z100
WS3(F)	Wafer section, aerial	Part of Z100
WS3(R)	Wafer section, aerial	Part of Z100

MISCELLANEOUS

"A"-lead assembly	41-3187-1
Bolt, hook	57-1340FA3
Braid, bonding	95-0073
Cap, lamp-housing	54-4408
Clip, anti-rattle spring	28-2488FA1
Clip, spring, cover grounding	57-1335
Cover, tube side	76-3015FJ21
Cover, wiring side	56-4421FJ21
Driver-and-shaft assembly	76-2716
Housing assembly	76-2879FJ21
Knob, push-button	58-4408
Resistor, distributor	33-1198
Screen, speaker	57-2385
Slider assembly, manual tuner	76-2730

©John F. Rider

ALIGNMENT PR

DIAL POINTER—With tuning cable disengaged, set tuning-core gang to full-mesh position; turn dial of tuning control to low-frequency end until pointer stops, then engage tuning cable.

OUTPUT METER—Connect across voice-coil terminals.

SIGNAL GENERATOR — Connect ground lead to chassis; *connect output lead as indicated in chart. Use* modulated output.

R/
mum
butt

STEP	SIGNAL GENERATOR		RADIO		ADJUST
	CONNECTIONS TO RADIO	FREQUENCY	TUNING	SPECIAL INSTRUCTIONS	
1	Through .05-mf. condenser to aerial receptacle.	455 kc.	Manual. 1600 kc.	Adjust, in order given, for maximum output. (TC301B and TC300B are reached through holes in bottom of i-f transformers.)	TC301B TC301A TC300B TC300A
2	Same as step 1.	455 kc.	Any push button except manual tuning.	*Adjust for minimum output.*	TC400A
3	Dummy aerial (see note below).	580 kc.	Manual. 580 kc.	Adjust for maximum output while rocking tuning control.	TC403A
4	Same as **step 3.**	1500 kc.	Manual. Tune to signal.	Adjust, in order given, for maximum output.	C405 C401
5	Same as **step 3.**	1400 kc.	*Manual.* Tune to signal.	*Re-engage tuning cable for correct calibration.*	
6	Repeat steps 3, 4, and 5 until no further improvement is obtained.				
7	After reinstalling radio in car, adjust C401 (manual tuning only) *for maximum output while tuned to weak station near* 1400 kc. Re-engage tuning control for correct dial calibration.				

DUMMY AERIAL: Connect generator output lead through 30-mmf. condenser to aerial receptacle; connect another 30-mmf. condenser between aerial receptacle and chassis.

SETTING PUSH BUTTONS

Each adjusting rod controls ganged tuning cores for both aerial and oscillator circuits, so that only a single adjustment is required for a given frequency. The ganged tuning cores are adjusted by turning the bakelite knobs, numbered 1, 2, 3, 4, and 5, located on the front of the radio.

1. *Use an r-f signal generator to furnish test signals at the* approximate frequencies of the desired stations. Connect the generator ground lead to the chassis. Connect the output lead through a 30-mmf. condenser to the aerial receptacle; connect another 30-mmf. condenser between the aerial receptacle and the chassis.

2. Turn on the power, set the volume control to maximum, and turn the tone control fully counterclockwise.

3. Starting with the lowest frequency desired, set the signal generator, depress push button No. 1 on the control head, and adjust knob No. 1 on the radio for maximum output. Repeat the procedure for buttons 2, 3, 4, and 5.

4. After the radio is installed in the car, and the aerial connected, allow a fifteen-minute warm-up period, then readjust the tuning for each button while listening to the station for which the adjustment is being made.

TROUBLE - SHOOTING P

For rapid trouble shooting, the radio circ
into four sections, with test points specifi
section; these sections and test points are
the schematic diagram. The trouble-shooti
given for each section includes a simplifi
and a bottom view of the chassis showing
of the test points and the components of th

In each chart, the first step is a master c
termining whether trouble exists in that sec
going through the entire test procedure.

Failure to obtain the "NORMAL INDIC
any given step indicates trouble within the
test.

After isolating the trouble to a single stag
is located by: first, testing the tube; second
tube electrode voltages; third, measuring c
ances; fourth, substituting condensers. The
vealed should be corrected before testing fu

PROCEDURE

RADIO CONTROLS—Turn volume control to maximum, and tone control fully counterclockwise; use push buttons as directed in chart.

OUTPUT LEVEL—During alignment, adjust signal-generator output to maintain output-meter indication below 1 volt.

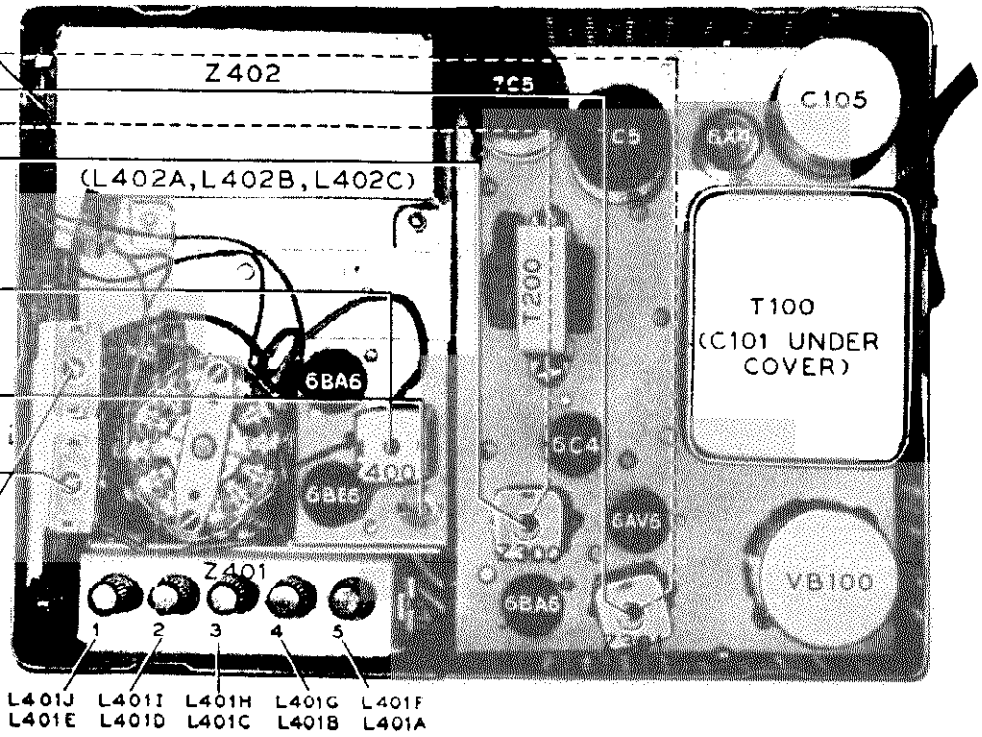

Top View, Showing Trimmer and Tuning-Core Locations

Preliminary Checks

To avoid possible damage to the radio, the following preliminary checks should be made before turning on the power:

1. Inspect both the top and the bottom of the chassis. Make sure that all tubes are secure in the proper sockets, and look for any broken or shorted connections, burned resistors, or other obvious sources of trouble.

2. Measure the resistance between B+ (pin 7 of the 6X4 rectifier) and the radio chassis (test point C), with the ohmmeter polarity such that the highest resistance reading is obtained. If the reading is lower than 5000 ohms, check condensers C105A and C105B for leakage or shorts.

The resistance value above, which is much lower than normal, is not intended as a quality check of these condensers; the value given is the lowest at which the rectifier will operate safely while the voltage tests of Section 1 are performed.

3. If a fuse is blown, check the vibrator before installing a new fuse.

4. If the vibrator is defective, check C104 before installing a new vibrator.

...TING Procedure

...radio circuit is divided ...its specified for each ...oints are indicated in ...ble-shooting procedure ... simplified test chart ... showing the locations ...ents of that section. ... master check for de... ...t that section, without ...cedure. ...L INDICATION" in ...thin the circuit under

...ingle stage, the defect ...e; second, measuring ...asuring circuit resist... ...sers. The trouble re... ...testing further.

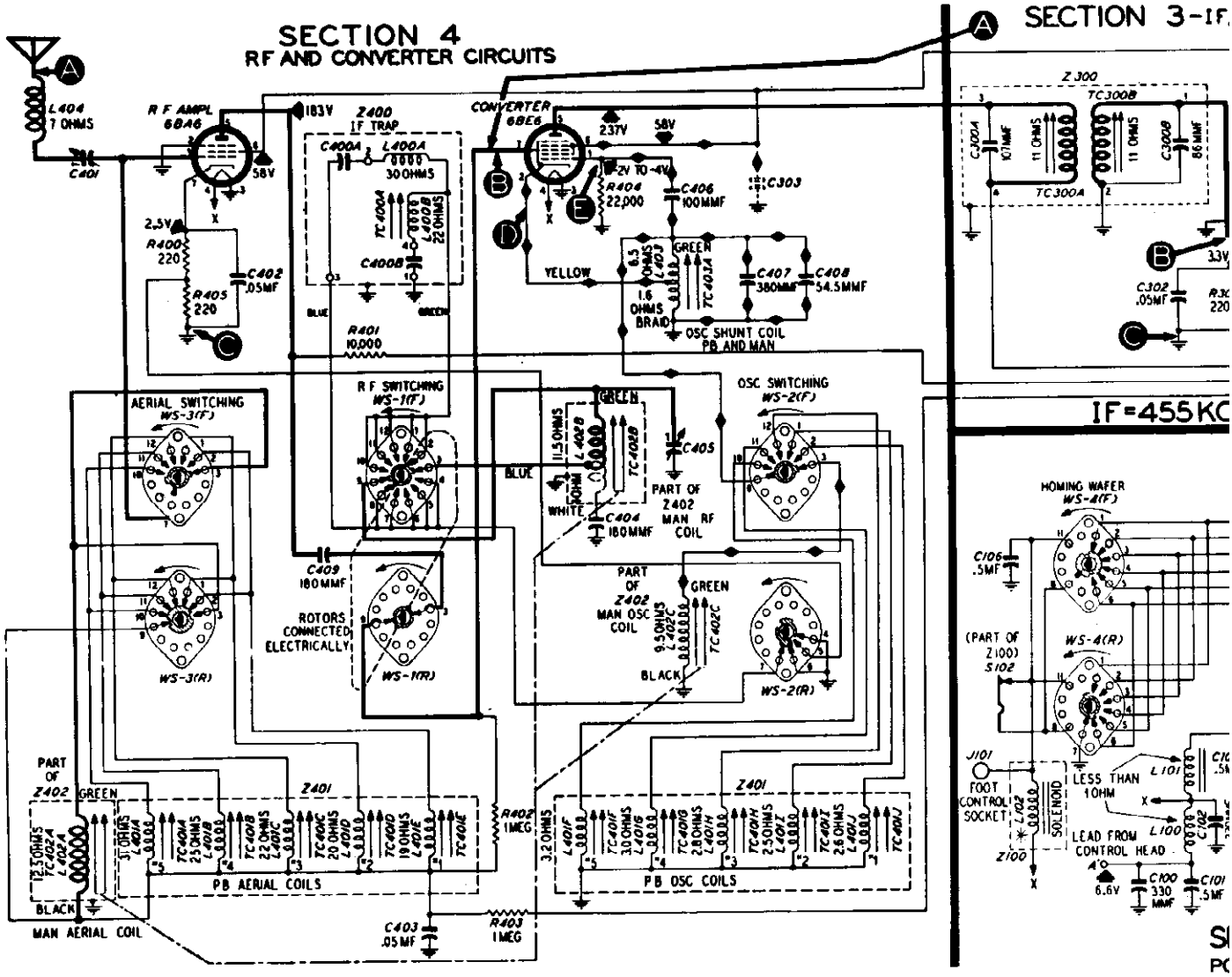

SWITCH WAFERS NUMBERED FROM TOP OF SET

FRONT CONTACTS SHOWN AS VIEWED FROM FRONT

REAR CONTACTS, LOOKING THROUGH FROM FRONT

SWITCH WAFERS SHOWN IN MANUAL POSITION

✳ L102 AND WAFER SWITCH ASSEMBLY ARE PART OF Z100.

✕ DESIGNATES SOCKET OR PLUG CONNECTIONS

NOTE 1:
S101 IS PART OF Z101 AND IS ACTUATED WHENEVER A PUSH-BUTTON IS DEPRESSED

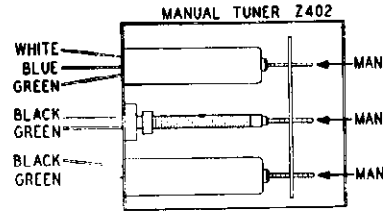

Philco Auto Radio Model CR-12, S

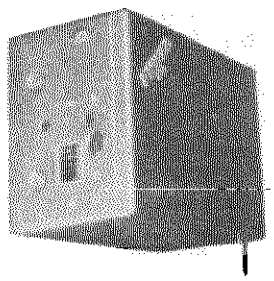

SPECIFICATIONS

CIRCUIT	Eight-tube superheterodyne
FREQUENCY RANGE	535—1600 kc.
INTERMEDIATE FREQUENCY	455 kc.
AUDIO OUTPUT	6 watts
POWER INPUT	8.6 amperes at 6.6 volts, d.c.
PUSH BUTTONS	Six: five station selectors and one manual-tuning selector
AERIAL	Any Philco auto-radio aerial
PHILCO TUBES (8)	6BA6 (2), 6BE6, 6AV6, 6C4, 7C5 (2), 6X4

Circuit Description

Philco Auto Radio Model CR-12 is an eight-tube superheterodyne of the universal-mounting type, designed for separate mounting of the speaker and control head.

The
ductio
Perme
six pu
used
manua
the sw
is so
push b
tion o
A f
Part I
statior
by plu

©John F. Rider

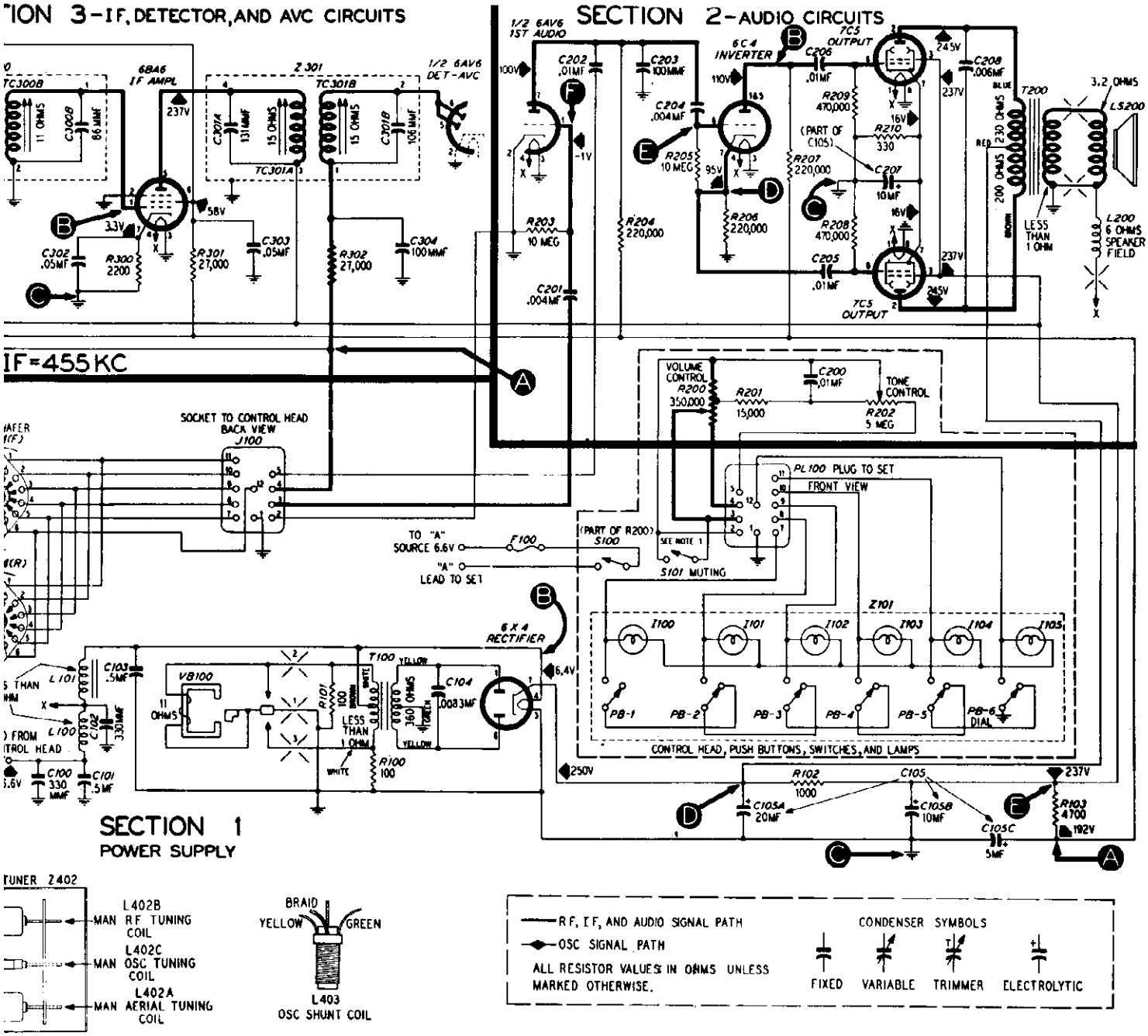

lodel CR-12, Sectionalized Schematic Diagram, Showing Test Points

The aerial input circuit is designed for maximum reduction of interference without loss of signal strength. Permeability tuning is used for all main circuits. Of the six push buttons, located on the control head, five are used for automatic station selection, and one selects manual tuning. The pilot lamps are connected through the switch wafers in a series-parallel circuit; the wiring is so arranged that the lamp which glows above the push button in use is in series with the parallel combination of the other five lamps.

ube
de-
trol

A foot switch and cable assembly (Foot Control Kit, Part No. 45-1545) is available for automatic tuning of stations by foot control; the switch cable is connected by plugging it into pin jack J101.

A tuned-r-f-amplifier stage, incorporating a 6BA6 pentode, provides good sensitivity and selectivity. The 6BE6 converter works into a 6BA6 i-f amplifier, which operates at 455 kc.

The 6AV6 duo-diode, triode tube provides detection and a-v-c voltage in the diode section; the triode section functions as the first audio amplifier. The first-audio stage is coupled to the 6C4 inverter, which drives the two 7C5 output tubes in push-pull. Approximately six watts of audio power is supplied to the electrodynamic speaker.

The power supply includes a non-synchronous vibrator and a type 6X4 rectifier.

MODEL 49-906

AM ALIGNMENT CHART

STEP	SIGNAL GENERATOR		RADIO		ADJUST
	CONNECTION TO RADIO	DIAL SETTING	DIAL SETTING	SPECIAL INSTRUCTIONS	
1	Ground lead to B—, test point B; output lead through .1-mf. condenser to terminal 1 of TB400.	455 kc.	540 kc.	Adjust each trimmer, in order given, for maximum output. Do not repeat adjustments.	TC305B—3rd i-f sec. TC305A—3rd i-f pri. TC303B—2nd i-f sec. TC303A—2nd i-f pri. TC301B—1st i-f sec. TC301A—1st i-f pri.
2	Radiating loop (see note below).	1600 kc.	1600 kc.	Adjust for maximum output.	C401B—BC osc.
3	Same as step 2.	1500 kc.	1500 kc.	Adjust for maximum output.	C401A—BC aerial

RADIATING LOOP: Make up a six-to-eight-turn, 6-inch-diameter loop, using insulated wire; connect to the signal-generator leads and place near the radio loop.

FM ALIGNMENT CHART

STEP	SIGNAL GENERATOR		RADIO		ADJUST
	CONNECTION TO RADIO	DIAL SETTING	DIAL SETTING	SPECIAL INSTRUCTIONS	
1	Through .1-mf. condenser to pin 1 of 6BJ6, 1st i-f amplifier.	9.1 mc.	88 mc.	Adjust for maximum reading on alignment indicator. Attenuate signal generator to maintain reading of approximately 10 volts. Repeat adjustments until no further improvement is noted. After this step, do not disturb any of these trimmers except as directed in step 3.	TC304B—3rd i-f sec. TC304A—3rd i-f pri. TC302B—2nd i-f sec. TC302A—2nd i-f pri.
2	Through .1-mf. condenser to pin 8 of 14F8.	9.1 mc.	88 mc.	Adjust for maximum reading on alignment indicator. Repeat adjustments until no further improvement is noted. Do not disturb these trimmers after this step.	TC300B 1st i-f sec. TC300A—1st i-f pri.
3	Same as step 2.	9.1 mc.	88 mc.	Adjust for minimum reading on output meter. This adjustment is critical; repeat to make sure it is correct.	TC304B—3rd i-f sec.
4	To terminal 1 of J400.	105 mc.	105 mc.	Adjust for maximum reading on alignment indicator.	C400C—FM osc.
5	Same as step 4.	105 mc.	105 mc.	Same as step 4. Rock tuning control.	C400B—FM r-f
6	Same as step 4.	105 mc.	105 mc.	Same as step 4.	C400A—FM aerial
7	Same as step 4.	92 mc.	92 mc.	Same as step 4. See note on page 10.	L403—FM osc. (tracking)
8	Same as step 4.	92 mc.	92 mc.	Same as step 7.	L402—FM r-f (tracking)
9	Same as step 4.	92 mc.	92 mc.	Same as step 7.	L401—FM aerial (tracking)
10	Repeat steps 4 through 9 until no further improvement is obtained.				

LOCA... ON ... UNDE... OF CH...

©John F. Rider

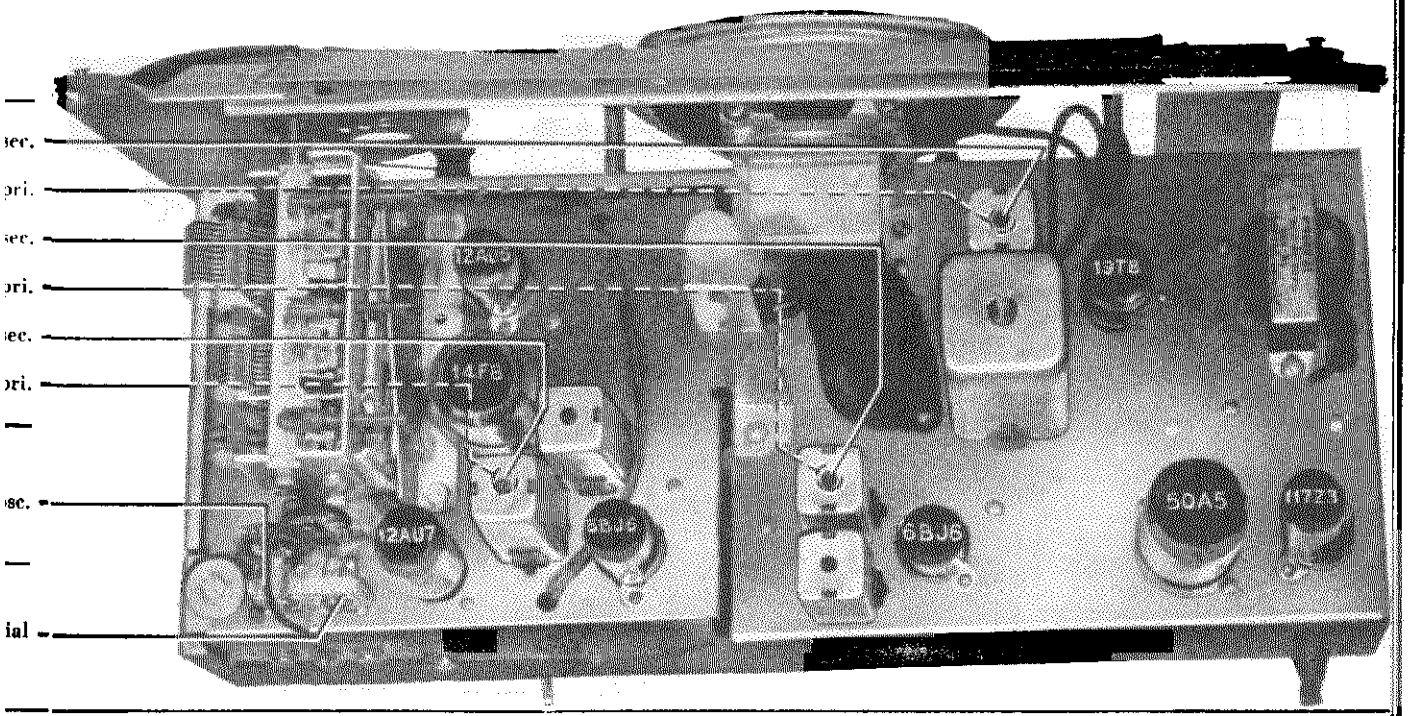

Figure 8. Top View, Showing AM Trimmer Locations

TP-

NOTE: TC305A, TC304B, TC303A, TC302A, TC301A AND TC300A ARE AVAILABLE FROM UNDERSIDE OF CHASSIS.

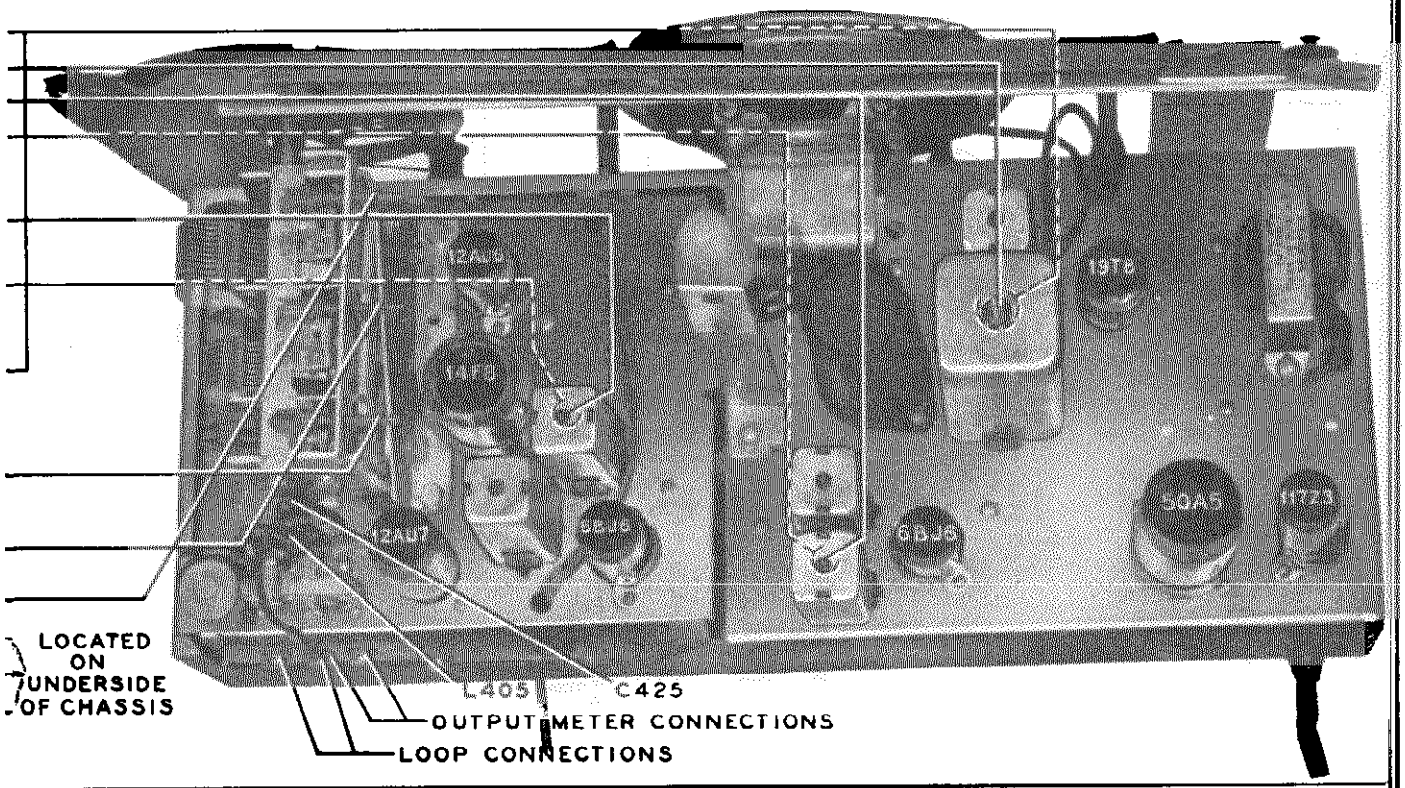

Figure 9. Top View, Showing FM Trimmer Locations

TP-

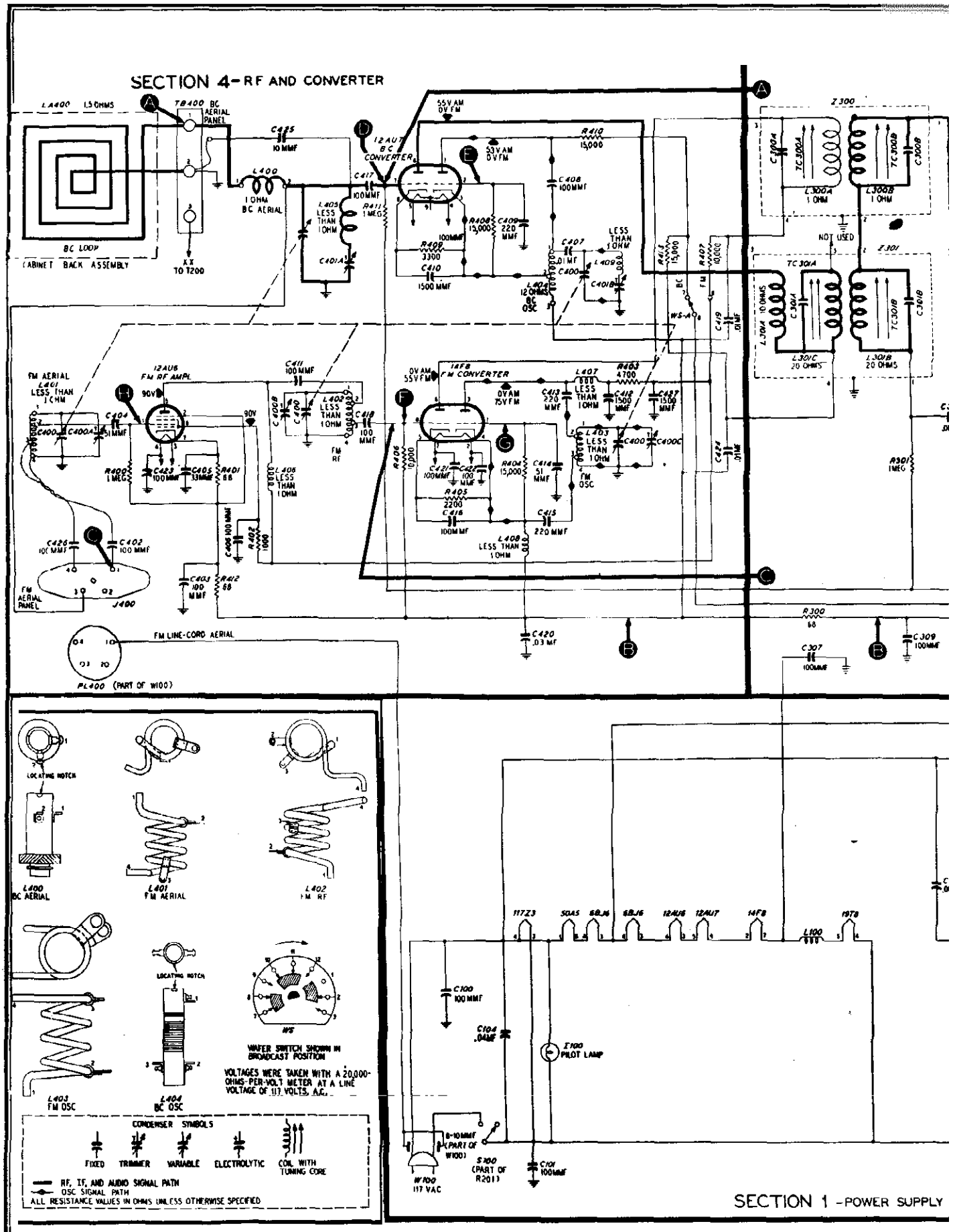

Figure 6. Philco Radio Model 49-906, Sectionali

©John F. Rider

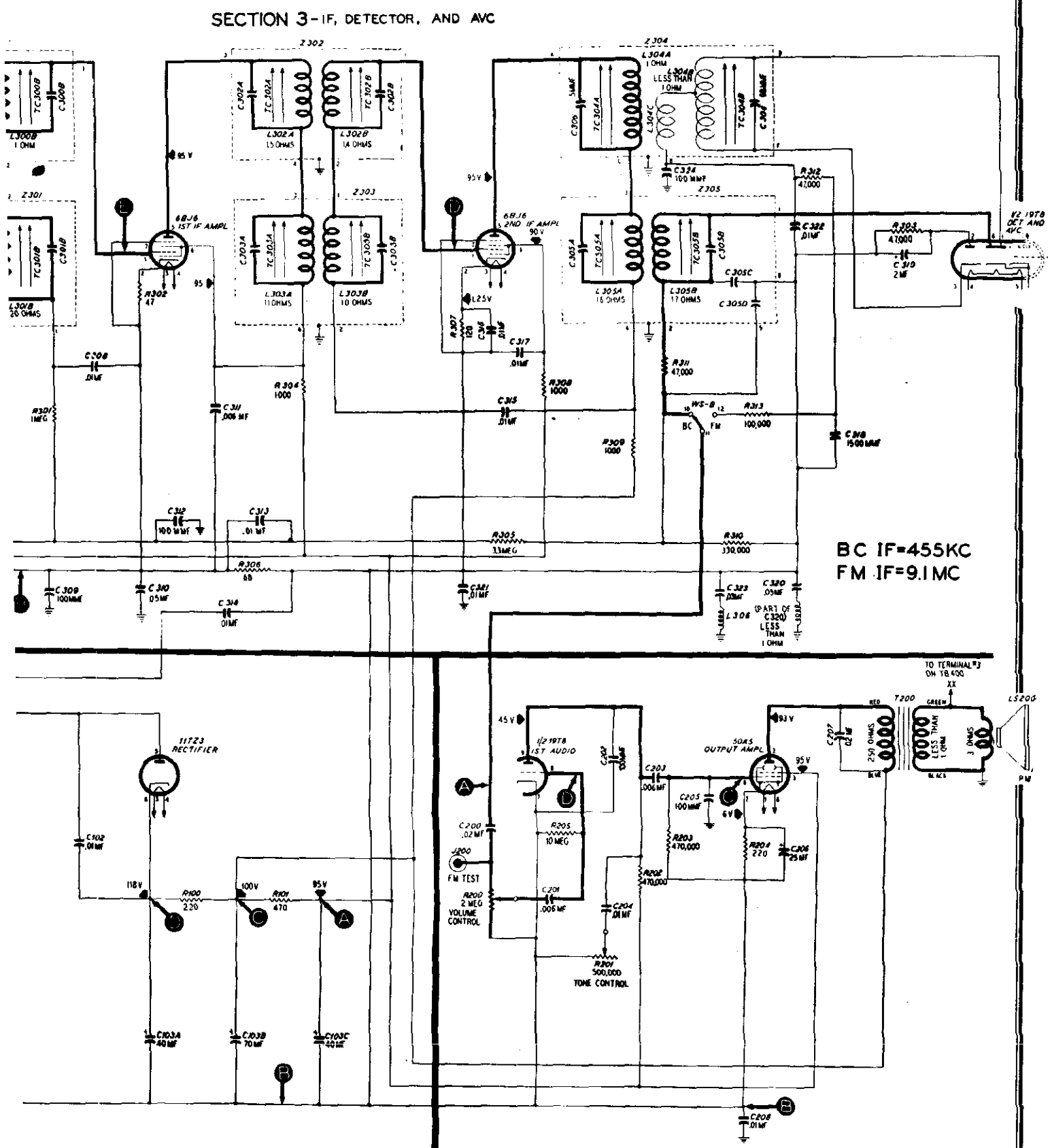

ctionalized Schematic Diagram, Showing Test Points

Circuit Description

Philco Radio Model 49-906 is an eight-tube superheterodyne which provides reception on the standard-broadcast band and on the FM band. A built-in high-impedance loop is used as the aerial on the broadcast band and the line cord is used as the aerial on the FM band. These aerials normally provide adequate signal pickup; if additional pickup is required, Philco Dipole Aerial, Part No. 45-1462, may be used. When connecting the dipole aerial, disconnect the black lead from terminal 2 of TB400, and attach it to pin 1 of the dipole-aerial plug which fits into J400. No additional coupler is required.

To eliminate complicated switching and to provide greater stability and gain on both bands, separate converter tubes are used for broadcast and FM reception. A 12AU6 high-gain pentode is used as a tuned r-f amplifier on the FM band. The output of this stage is fed to a 14F8 dual triode which functions as the converter for the FM signal. A 12AU7 dual triode is used as the converter for the broadcast signal. Band switching is accomplished by means of a single-wafer switch, which connects the B+ voltage to the proper mixer plate.

6BJ6 type tubes are used in the two i-f-amplifier stages. Two sets of i-f transformers are used; one set is tuned to 455 kc. for standard broadcast, and the other set is tuned to 9.1 mc. for FM. The use of two sets of transformers makes better shielding possible, so that undesirable beat signals and interaction between transformers are eliminated.

Two diode sections of the 19T8 triple-diode-triode are used in a ratio detector circuit for detection of FM signals. The other diode section is used in a half-wave rectifier circuit for detection of standard-broadcast signals and to provide a-v-c voltage.

The triode section of the 19T8 is employed as the first audio amplifier, and is resistance-coupled to the 50A5 output tube, which supplies an audio output of approximately one watt to the permanent-magnet dynamic speaker.

Philco TROUBLE-SHOOTING Procedure

For rapid trouble shooting, the radio circuit is divided into four sections, as follows:

Section 1—the power supply
Section 2—the audio circuits
Section 3—the i-f, detector, and a-v-c circuits
Section 4—the r-f and converter circuits

Test points are specified for each section, and are indicated in the sectionalized schematic diagram. The trouble-shooting procedure given for each section includes a simplified test chart and a bottom view of the chassis showing the locations of the test points and the components of that section.

In each chart, the first step is a master check for determining whether trouble exists in that section, without going through the entire chart.

Failure to obtain the "NORMAL INDICATION" in any given step indicates trouble within the circuit under test.

After isolating the trouble to a single stage, the defect is located by: first, testing the tube; second, measuring tube electrode voltages; third, measuring circuit resistances; fourth, substituting condensers. The trouble revealed should be corrected before testing further.

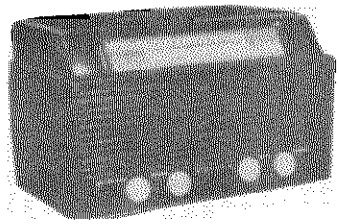

SPECIFICATIONS

CABINET	Plastic
CIRCUIT	Eight-tube superheterodyne
FREQUENCY RANGES	
Broadcast	540—1620 kc.
FM	88—108 mc.
AUDIO OUTPUT	1 watt
OPERATING VOLTAGES	105—120 volts, a.c. or d.c.
POWER CONSUMPTION	40 watts
AERIALS	Built-in loop and FM line cord; provisions for connection of external aerial
INTERMEDIATE FREQUENCIES	
AM	455 kc.
FM	9.1 mc.
PHILCO TUBES (8)	12AU6, 12AU7, 14F8, 6BJ6-(2), 19T8, 50A5, 117Z3

REPLACEMENT PARTS LIST

NOTE: An asterisk (*) indicates a general replacement item. The part numbers of these items may not be identical with those on factory parts; also, the electrical values of some replacement items may differ from the values given in the schematic diagram and parts list. The values substituted in any case are so chosen that the operation of the radio will be either unchanged or improved. When ordering replacements, use only the "Service Part No."

SECTION 1

POWER SUPPLY

Reference Symbol	Description	Service Part No.
C100	Condenser, r-f by-pass, 100 mmf.	62-110009001
C101	Condenser, r-f by-pass, 100 mmf.	62-110009001
C102	Condenser, r-f by-pass, .01 mf.	61-0120*
C103	Condenser, electrolytic, 3-section	30-2568-10
C103A:	Condenser, filter, 40 mf.	Part of C103
C103B:	Condenser, filter, 70 mf.	Part of C103
C103C:	Condenser, filter, 40 mf.	Part of C103
C104	Condenser, line filter, .04 mf.	45-3500-2
I100	Panel lamp, 110v, screw base	34-2605*
L100	Choke, filament, 100 millihenries	32-4143-4
R100	Resistor, filter, 220 ohms	66-1225340*
R101	Resistor, filter, 470 ohms	66-1474340
S100	Switch, power	Part of R201
W100	Line cord and plug (incl. FM line aerial)	41-3755-19*

SECTION 2

AUDIO CIRCUITS

C200	Condenser, d-c blocking, .02 mf.	61-0108*
C201	Condenser, d-c blocking, .006 mf.	45-3500-7*
C202	Condenser, plate by-pass, 100 mmf.	62-110009001
C203	Condenser, d-c blocking, .006 mf.	45-3500-7*
C204	Condenser, tone compensation, .01 mf.	61-0120*
C205	Condenser, r-f by-pass, 100 mmf.	62-110009001
C206	Condenser, electrolytic, cathode by-pass, 25 mf.	45-3001*
C207	Condenser, tone compensation, .02 mf.	61-0108*
C208	Condenser, r-f by-pass, .01 mf.	61-0120*
J200	Socket, FM test	27-6180
LS200	Loud-speaker, PM	36-1615-2
R200	Volume control, 2 megohms	45-5019
R201	Tone control (with a-c switch), 500,000 ohms	45-5009
R202	Resistor, plate load, 470,000 ohms	66-4473340*
R203	Resistor, grid return, 470,000 ohms	66-4473340*
R204	Resistor, cathode bias, 220 ohms	66-1224340*

© John F. Rider

©John F. Rider

REPLACEMENT PARTS LIST (Continued)

SECTION 2 (Continued)

AUDIO CIRCUITS

Reference Symbol	Description	Service Part No.
R205	Resistor, grid return, 10 megohms	66-6103340*
T200	Output transformer	32-8296-4

SECTION 3

I-F, DETECTOR, AND A-V-C CIRCUITS

C300A	Condenser, shunt	Part of Z300
C300B	Condenser, shunt	Part of Z300
C301A	Condenser, shunt	Part of Z301
C301B	Condenser, shunt	Part of Z301
C302A	Condenser, shunt	Part of Z30.
C302B	Condenser, shunt	Part of Z302
C303A	Condenser, shunt	Part of Z303
C303B	Condenser, shunt	Part of Z303
C304	Condenser, shunt, 68 mmf.	Part of Z304
C305A	Condenser, shunt	Part of Z305
C305B	Condenser, shunt	Part of Z305
C305C	Condenser, a-v-c filter	Part of Z305
C305D	Condenser, a-v-c filter	Part of Z305
C306	Condenser, shunt (part of Z304), 5 mmf.	30-1224-5
C307	Condenser, r-f by-pass, 100 mmf.	62-110009001
C308	Condenser, a-v-c by-pass, .01 mf.	61-0120*
C309	Condenser, r-f by-pass, 100 mmf.	62-110009001
C310	Condenser, r-f by-pass, .05 mf.	61-0122*
C311	Condenser, screen by-pass, .006 mf.	45-3500-7*
C312	Condenser, r-f by-pass, 100 mmf.	62-110009001*
C313	Condenser, a-v-c by-pass, .01 mf.	61-0120*
C314	Condenser, r-f by-pass, .01 mf.	61-0120*
C315	Condenser, plate by-pass, .01 mf.	61-0120*
C316	Condenser, cathode by-pass, .01 mf.	61-0120*
C317	Condenser, screen by-pass, .01 mf.	61-0120*
C318	Condenser, decoupling, 1500 mmf.	62-215001011*
C319	Condenser, electrolytic, filter, FM detector, 2 mf.	30-2417-7
C320	Condenser-and-choke assy., by-pass, .05 mf.	38-9851-6
C321	Condenser, r-f by-pass, .01 mf.	61-0120*
C322	Condenser, compensating, .01 mf.	61-0120*
C323	Condenser, i-f by-pass, .03 mf.	30-3500-1*
C324	Condenser, r-f by-pass, 100 mmf.	62-110009001*
L300A	Primary coil, 1st FM i-f trans.	Part of Z300
L300B	Secondary coil, 1st FM i-f trans.	Part of Z300
L301A	Primary coil, 1st AM i-f trans.	Part of Z301
L301B	Secondary coil, 1st AM i-f trans.	Part of Z301
L301C	Tertiary coil, 1st AM i-f trans.	Part of Z301
L302A	Primary coil, 2nd FM i-f trans.	Part of Z302
L302B	Secondary coil, 2nd FM i-f trans	Part of Z302
L303A	Primary coil, 2nd AM i-f trans.	Part of Z303
L303B	Secondary coil, 2nd AM i-f trans	Part of Z303
L304A	Primary coil, 3rd FM i-f trans.	Part of Z304
L304B	Secondary coil, 3rd FM i-f trans.	Part of Z304
L304C	Tertiary coil, 3rd FM i-f trans.	Part of Z304
L305A	Primary coil, 3rd AM i-f trans.	Part of Z305
L305B	Secondary coil, 3rd AM i-f trans	Part of Z305
L306	Coil, r-f choke	32-4061-2
R300	Resistor, decoupling, 68 ohms	66-0683340*
R301	Resistor, grid return, 1 megohm	66-5103340*
R302	Resistor, cathode bias, 47 ohms	66-0473340*
R303	Resistor, FM-detector load, 47,000 ohms	66-3473340*
R304	Resistor, plate decoupling, 1000 ohms.	66-2103340*

SECTION 3 (Continued)

I-F, DETECTOR, AND A-V-C CIRCUITS

Reference Symbol	Description	Service Part No.
R305	Resistor, a-v-c filter, 3.3 megohms	66-5333340*
R306	Resistor, r-f decoupling, 68 ohms	66-0683340*
R307	Resistor, cathode bias, 120 ohms	66-1123340*
R308	Resistor, screen dropping, 1000 ohms	66-2103340*
R309	Resistor, plate decoupling, 1000 ohms	66-2103340*
R310	Resistor, diode load, 330,000 ohms	66-4333340*
R311	Resistor, diode load, 47,000 ohms	66-3473340*
R312	Resistor, decoupling, 47,000 ohms	66-3473340*
R313	Resistor, decoupling, 100,000 ohms	66-4103340*
TC300A	Primary tuning core, 1st FM i-f trans.	Part of Z300
TC300B	Secondary tuning core, 1st FM i-f trans.	Part of Z300
TC301A	Primary tuning core, 1st AM i-f trans.	Part of Z301
TC301B	Secondary tuning core, 1st AM i-f trans.	Part of Z301
TC302A	Primary tuning core, 2nd FM i-f trans.	Part of Z302
TC302B	Secondary tuning core, 2nd FM i-f trans.	Part of Z302
TC303A	Primary tuning core, 2nd AM i-f trans.	Part of Z303
TC303B	Secondary tuning core, 2nd AM i-f trans.	Part of Z303
TC304A	Primary tuning core, 3rd FM i-f trans.	Part of Z304
TC304B	Secondary tuning core, 3rd FM i-f trans.	Part of Z304
TC305A	Primary tuning core, 3rd AM i-f trans.	Part of Z305
TC305B	Secondary tuning core, 3rd AM i-f trans.	Part of Z305
WS-B	Switch-wafer section	Part of 42-1834-1†
Z300	Transformer, 1st FM i-f	32-4257
Z301	Transformer, 1st AM i-f	32-4258
Z302	Transformer, 2nd FM i-f	32-4257-1
Z303	Transformer, 2nd AM i-f	32-4160-3
Z304	Transformer, 3rd FM i-f	32-4261-1
Z305	Transformer, 3rd AM i-f	32-4240-2

SECTION 4

R-F AND CONVERTER CIRCUITS

C400	Condenser, tuning gang	31-2724-2
C400A:	Condenser, trimmer, FM aerial	Part of C400
C400B:	Condenser, trimmer, FM r-f	Part of C400
C400C:	Condenser, trimmer, FM oscillator	Part of C400
C401	Condenser, trimmer, 2-section	31-6476-13
C401A:	Condenser, trimmer, BC aerial	Part of C401
C401B:	Condenser, trimmer, BC oscillator	Part of C401
C402	Condenser, aerial coupling, 100 mmf.	62-110009001
C403	Condenser, r-f by-pass, 100 mmf.	62-110009001
C404	Condenser, blocking, 51 mmf.	62-051009001*
C405	Condenser, cathode by-pass, 33 mmf.	62-033009001*
C406	Condenser, screen by-pass, 100 mmf.	62-110009001
C407	Condenser, isolating, .01 mf.	61-0120*
C408	Condenser, blocking, 100 mmf.	62-110009001
C409	Condenser, r-f by-pass, 220 mmf.	62-122001001
C410	Condenser, cathode by-pass, 1500 mmf.	62-215001011*
C411	Condenser, d-c blocking, 100 mmf.	62-110009001
C412	Condenser, r-f by-pass, 1500 mmf.	62-215001011*
C413	Condenser, d-c blocking, 220 mmf.	62-122001001
C414	Condenser, r-f by-pass, 51 mmf.	62-051009001*
C415	Condenser, d-c blocking, 220 mmf.	62-122001001
C416	Condenser, cathode by-pass, 100 mmf.	62-110009001
C417	Condenser, isolating, 100 mmf.	62-110009001
C418	Condenser, isolating, 100 mmf.	62-110009001
C419	Condenser, plate decoupling, .01 mf.	61-0120*
C420	Condenser, r-f by-pass, .03 mf.	45-3500-1*
C421	Condenser, r-f by-pass, 100 mmf.	62-110009001
C422	Condenser, r-f by-pass, 100 mmf.	62-110009001
C423	Condenser, r-f by-pass, 100 mmf.	62-110009001

SECTION 4 (Continued)

C424	Condenser, plate decoupling, .01 mf.	61-0120*
C425	Condenser, aerial coupling, 10 mmf.	62-010009001
C426	Condenser, aerial coupling, 100 mmf.	62-110009001
C427	Condenser, r-f by-pass, 1500 mmf.	62-215001011*
J400	Aerial socket	27-6214-1
L400	Coil, BC aerial	32-4217-1
L401	Coil, FM aerial	32-4158-1
L402	Coil, FM r-f	32-4159-1
L403	Coil, FM oscillator	32-4018-5
L404	Coil, BC oscillator	32-4221-1
L405	Coil, r-f choke	32-4061-2
L406	Coil, FM r-f plate load	32-4061-2
L407	Coil, FM oscillator plate load	32-4061-2
L408	Coil, r-f choke	32-4061-2
L409	Coil, r-f choke	32-4061-2
LA400	Loop aerial	32-4052-22
PL400	Plug, FM aerial	Part of W100
R400	Resistor, grid return, 1 megohm	66-5103340*
R401	Resistor, cathode bias, 68 ohms	66-0683340*
R402	Resistor, screen dropping, 1000 ohms	66-2103340*
R403	Resistor, plate decoupling, 4700 ohms	66-2473340*
R404	Resistor, grid return, 15,000 ohms	66-3153340*
R405	Resistor, cathode bias, 2200 ohms	66-2223340*
R406	Resistor, grid return, 10,000 ohms	66-3103340*
R407	Resistor, plate decoupling, 10,000 ohms	66-3103340*
R408	Resistor, grid return, 15,000 ohms	66-3153340*
R409	Resistor, cathode bias, 3300 ohms	66-2333340*
R410	Resistor, plate load, 15,000 ohms	66-3153340*
R411	Resistor, grid return, 1 megohm	66-5103340*
R412	Resistor, r-f decoupling, 68 ohms	66-0683340*
R413	Resistor, plate decoupling, 15,000 ohms	66-3153340*
TB400	Aerial terminal panel	38-9942
WS-A	Switch-wafer section	Part of 42-1834-1†

MISCELLANEOUS

Description	Service Part No.
Cabinet (less scale)	10715
Baffle-and-cloth assembly	40-7539
Cabinet back	54-7632
Dial scale	54-5013
Strap, scale mounting (L. H.)	56-5739FCP
Strap, scale mounting (R. H.)	56-5739-1FCP
Dial-Backplate Assembly	
Dial cord (25-ft spool)	45-8750*
Diffusing panel	54-7612
Diffusing-panel spring	56-3841
Pointer	56-5630-1FCP
Spring, pointer	28-8953
Spring, gang	56-2617
Upright assembly	76-4041
Dial drive shaft	76-3982
Bracket-and-clip assembly	76-4043
Bracket, speaker	56-5435FA3
Knob	54-4557-1
Plug-and-wire assembly (FM)	41-3791
Rubber mount, r-f chassis	54-4295
Socket assembly, pilot lamp	27-6233
Socket, electrolytic condenser mtg.	27-9508
Socket, 9-pin miniature	27-6203-5
Socket, 8-pin Loktal	27-6138*
Socket, 7-pin miniature	27-6226
Wave switch	42-1834-1

† 42-1834-1 is WS, wafer switch, single wafer (includes WS-A and WS-B).

Preliminary Checks

To avoid possible damage to the radio, the following preliminary checks should be made before turning on the power:

1. Inspect both the top and the bottom of the chassis. Make sure that all tubes are secure in the proper sockets, and look for any broken or shorted connections, burned resistors, or other obvious indications of trouble.

2. Measure the resistance between B+ (pin 6 of the 117Z3) and B–, test point B. When the ohmmeter leads are connected in the proper polarity, the highest resistance reading will be obtained. If the reading is lower than 1250 ohms, check condensers C102, C103A, C103B, and C103C for leakage or shorts. This resistance value, which is much lower than normal, does not represent a quality check of these condensers; it is the lowest value which will permit the rectifier to operate safely while the voltage checks of Section 1 (power supply) are performed.

3. If the 50A5 tube or the 6BJ6 (2nd i-f amplifier) tube is burned out, check condenser C314 for a short before installing a new tube.

Important!

To avoid altering FM operation, special care should be used in replacing any part. Replacement parts should be placed in the same physical positions as the original parts; connections should be of the same length, and should be soldered to the same points. The placement or length of leads should not be changed.

Section 1 TROUBLE SHOOTING

POWER SUPPLY

Make the tests for this section with a d-c voltmeter. Connect the negative lead to B–, test point B; connect the positive lead to the test points indicated in the chart. The voltage readings given were taken with a 20,000-ohms-per-volt meter, at a line voltage of 117 volts, a-c.

Set the volume control to minimum, turn the tone control fully clockwise, and set the band switch to the broadcast position.

If the "NORMAL INDICATION" is obtained in step 1, proceed with the tests for Section 2 (audio circuits); if not, isolate and correct the trouble in this section.

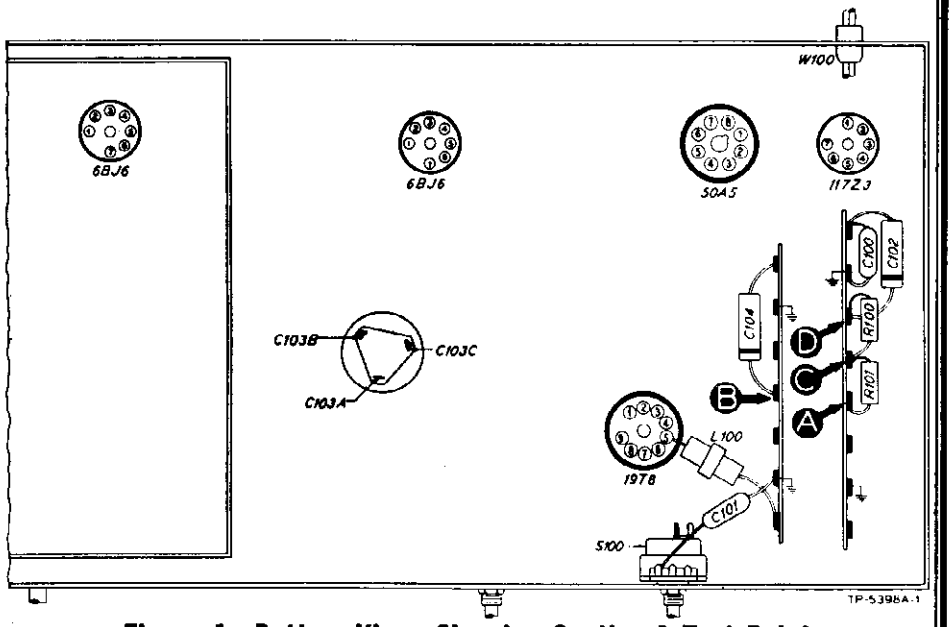

Figure 1. Bottom View, Showing Section 1 Test Points

STEP	TEST POINT	NORMAL INDICATION	ABNORMAL INDICATION	POSSIBLE CAUSE OF ABNORMAL INDICATION
1	A	95 volts		Trouble in this section. Isolate by the following tests.
2	C	100 volts	No voltage	Defective: 117Z3. Open: W100, S100. Shorted: C103A, C103B, C102.
			Low voltage	Defective: 117Z3. Leaky: C103A, C103B, C103C. Shorted: C103C.
			High voltage	Open: R100, R101, T200*, R204*.
3	D	118 volts	No voltage	Open: R100. Shorted: C103B.
			Low voltage	Increased value: R100. Leaky: C103B. Shorted: C103C.
			High voltage	Open: R101, T200*, R204*.
4	A	95 volts	No voltage	Open: R101. Shorted: C103C.
			Low voltage	Leaky: C103C. Increased value: R101. Shorted: C312*, C311*, C317*, C419*, C406*, C315*, C318*, C411*.
Listening Test: Abnormal hum may be caused by open C103A, C103B, or C103C.				

* This part, located in another section, may cause abnormal indication in this section.

MODEL 49-906

Section 2 TROUBLE SHOOTING

AUDIO CIRCUITS

For the tests in this section, use an audio-frequency signal generator. Connect the generator ground lead to B–, test point B; connect the output lead through a .1-mf. condenser to the test points indicated in the chart.

Set the volume control to maximum, and turn the tone control fully counterclockwise.

If the "NORMAL INDICATION" is obtained in step 1, proceed with the tests for Section 3 (i-f, detector, and a-v-c circuits); if not, isolate and correct the trouble in this section.

STEP	TEST POINT	NORMAL INDICATION	POSSIBLE CAUSE OF ABNORMAL INDICATION
1	A	Loud, clear speaker output with moderate generator input.	Trouble in this section. Isolate by the following tests.
2	C	Loud, clear output with strong input.	Defective: 50A5. Shorted: LS200, T200. Open: R203, R204, C205, LS200, T200. Shorted or leaky: C202, C204, C205, C206, C207.
3	D	Loud, clear output with moderate input.	Defective: 19T8. Open: R205, R202, C202. Shorted or leaky: C202, C203 (rotate R201 through range).
4	A	Loud, clear output with moderate input.	Open: R200 (rotate through range), C200, C201. Shorted or leaky: C200, C201.

Listening Test: Distortion may be caused by leaky C200, C201, or C202.

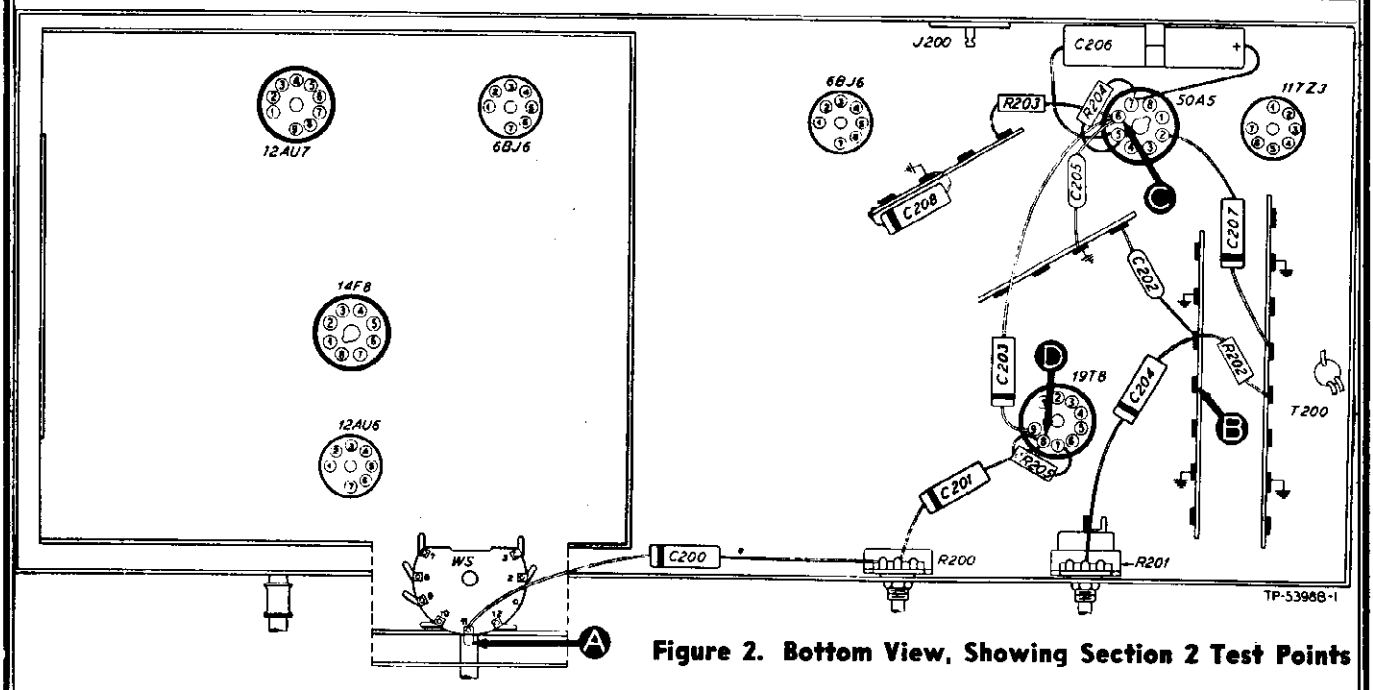

Figure 2. Bottom View, Showing Section 2 Test Points

Section 3 TROUBLE SHOOTING

I-F, DETECTOR, AND A-V-C CIRCUITS

AM Circuits

For the tests of the AM circuits, use an r-f signal generator, with modulated output, set at 455 kc. Connect the generator ground lead to B–, test point B; connect the output lead through a .1-mf. condenser to the test points indicated in the chart.

Set the volume control to maximum, and turn the tone control fully counterclockwise. Set the band switch to the broadcast position, and rotate the tuning control until the tuning gang is fully meshed.

If the "NORMAL INDICATION" is obtained in step 1, proceed with the tests for the FM circuits; if not, isolate and correct the trouble in the AM circuits.

Since test point A for the AM circuits is placed at the grid of the 12AU7 mixer in Section 4, the effectiveness of step 1 as a master check is dependent upon the condition of certain parts in Section 4. These parts are listed below under "POSSIBLE CAUSE OF ABNORMAL INDICATION."

© John F. Rider

Section 3—Cont.

TROUBLE SHOOTING

AM Chart

STEP	TEST POINT	NORMAL INDICATION	POSSIBLE CAUSE OF ABNORMAL INDICATION
1	A	Loud, clear speaker output with weak generator input.	Trouble in AM circuits. Isolate by the following tests.
2	D	Loud, clear output with moderately strong input.	Defective: 19T8, 6BJ6 (2nd i-f amplifier). Open: R307, R308, R309, R311, R312, L305B, C317, L305A, L304A, WS. Shorted or leaky: C316, C317, C315. Shorted: L305A, L305B, WS.
3	E	Loud, clear output with moderate input.	Defective: 6BJ6 (1st i-f amplifier). Open: R301, R302, R304, R305, R306, C311, C313, L302A, L302B, L303A, L303B. Shorted or leaky: C311, C313, C308. Shorted: L303A, L303B.
4	A	Loud, clear output with weak input.	Defective: 12AU7*. Open: R411*, R413*, R409*, L300A, L300B, L301A, L301B, WS. Shorted or leaky: C424*, C410*. Shorted: L301A, L301B, L301C, WS.
Listening Test: Hum and distortion may be caused by shorted or leaky C309, C310, C314, C321, C320, C323, C307, C420*, C421*, C422*, C423*, C100*, C101*.			

* This part, located in another section, may cause abnormal indication in this section.

FM Circuits

For the tests of the FM circuits, use an AM r-f signal generator, set at 9.1 mc. Connect the generator ground lead to B–, test point B; connect the output lead through a .1-mf. condenser to the test points indicated in the chart. Detune the generator frequency to one side or the other until a satisfactory test signal is obtained.

Set the band switch to the FM position; set the other radio controls as directed under AM CIRCUITS.

The parts which were found to be satisfactory for AM operation, with the exception of those indicated in the chart, will usually be satisfactory for FM operation.

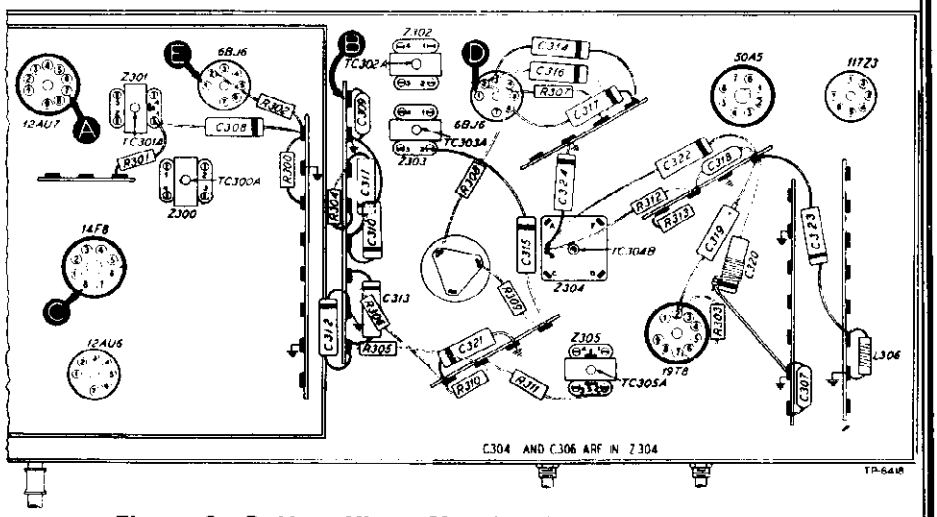

Figure 3. Bottom View, Showing Section 3 Test Points

The best indication of satisfactory FM-detector operation is the ability of this circuit to take the alignment properly (see page 10).

If the "NORMAL INDICATION" is obtained in step 1, proceed with the tests for Section 4 (r-f and converter circuits); if not, isolate and correct the trouble in the FM circuits of this section.

Since test point C for the FM circuits is placed at the grid of the 14F8 mixer in Section 4, the effectiveness of step 1 as a master check is dependent upon the condition of certain parts in Section 4. These parts are listed below under "POSSIBLE CAUSE OF ABNORMAL INDICATION."

FM Chart

STEP	TEST POINT	NORMAL INDICATION	POSSIBLE CAUSE OF ABNORMAL INDICATION
1	C	Loud, clear speaker output with weak generator input.	Trouble in FM circuits. Isolate by the following tests.
2	D	Loud, clear output with strong input.	Defective: 6BJ6 (2nd i-f amplifier), Z304, 19T8, WS. Misaligned: Z304. Open: R312, R313, R314, C320, C319, C318, C304, C306, C323, L306. Shorted or leaky: C319, C320, C304, C306, C323.
3	E	Loud, clear output with moderate input.	Defective: 6BJ6 (1st i-f amplifier). Misaligned: Z302. Shorted: L302A, L302B.
4	C	Loud, clear output with weak input.	Defective: 14F8*. Open: R300, R406*, R407*, R405*, L404*, L300A, WS. Shorted or leaky: C418*, C419*. Shorted: L300A, L300B, WS.

* This part, located in another section, may cause abnormal indication in this section.

© John F. Rider

MODEL 49-906

Section 4

TROUBLE SHOOTING

R-F AND CONVERTER CIRCUITS

AM Circuits

For the tests of the AM circuits, use an r-f signal generator, with modulated output. Connect the generator ground lead to B–, test point B; connect the output lead through a .1-mf. condenser to the test points indicated in the chart.

Set the volume control to maximum, turn the tone control fully counterclockwise, and set the band switch to the broadcast position.

If the "NORMAL INDICATION" is obtained in step 1, proceed with the tests for the FM circuits; if not, isolate and correct the trouble in the AM circuits.

FM Circuits

Before proceeding with the tests for the FM circuits, set the band switch to the FM position.

If the "NORMAL INDICATION" is obtained in step 1, further tests should be unnecessary; if not, isolate and correct the trouble in the FM circuits. If the trouble is not revealed by the tests for the FM circuits, check the alignment.

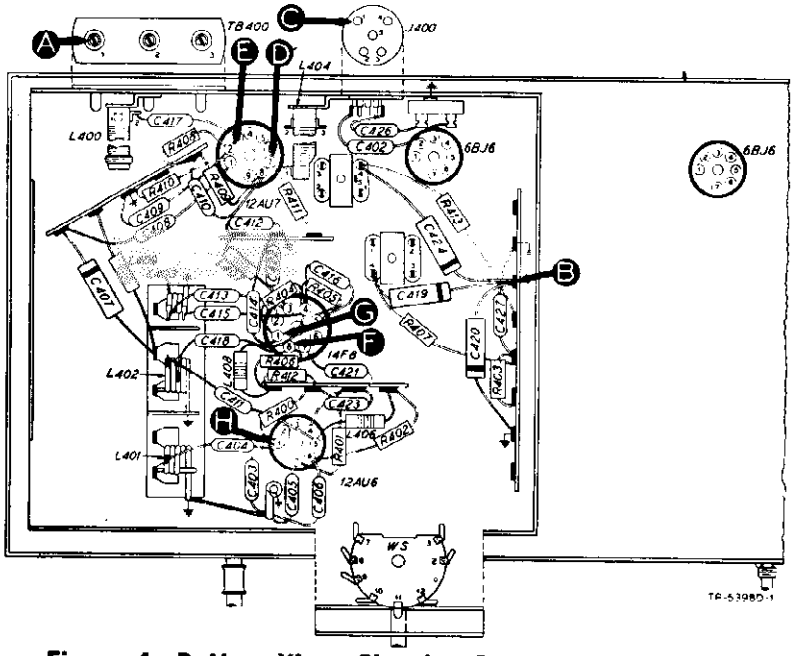

Figure 4. Bottom View, Showing Section 4 Test Points

AM Chart

STEP	TEST POINT	SIG. GEN. FREQUENCY	RADIO TUNING	NORMAL INDICATION	POSSIBLE CAUSE OF ABNORMAL INDICATION
1	A	1000 kc.	1000 kc.	Loud, clear speaker output with weak generator input.	Trouble in AM circuits. Isolate by the following tests.
2	D	1000 kc.	1000 kc.	Loud, clear output with moderate in-	Defective: 12AU7, oscillator circuits. Shorted: C424, C410, WS. Open: R409, R411, R413, WS.
3	E to B (Osc. test; see note below.)		Rotate through range.	Negative 2 to 4 volts.	Defective: 12AU7. Open: R408, L404, C408, R410, C407. Shorted or leaky: C408, C409, C400, C401B.
4	A	1000 kc.	1000 kc.	Same as step 1.	Open: L400, C417, L405. Shorted: C400, C401A, C425.

OSCILLATOR TEST: Connect the positive lead of a high-resistance voltmeter to B—, test point B; connect the prod end of the negative lead through a 100,000-ohm isolating resistor to the oscillator grid (pin 2 of 12AU7), test point E. Use a suitable meter range, such as 0—10 volts. Proper operation of the oscillator is indicated by negative voltage within the range given in the chart (measured with a 20,000-ohms-per-volt meter) throughout the tuning range.

FM Chart

STEP	TEST POINT	SIG. GEN. FREQUENCY	RADIO TUNING	NORMAL INDICATION	POSSIBLE CAUSE OF ABNORMAL INDICATION
1	C	95 mc.	Tune to signal.	Loud, clear speaker output with weak generator input.	Trouble in FM circuits. Isolate by the following tests.
2	F	95 mc.	Tune to signal.	Loud, clear output with moderate input.	Defective: oscillator circuits, 14F8. Open: C418, R406, R407, R405, L408, L402. Shorted: C418, C400, C400B, C419, C416, L402.
3	G to B (Osc. test; see note below.)		Tune through range.	Negative 1 to 2.5 volts.	Defective: 14F8. Open: R404, L408, L407, R403, C413, C415, L403. Shorted: C400, C400C, C413, C415, C414, C412, L403, L407.
4	H	95 mc.	Tune to signal.	Loud, clear output with weak input.	Defective: 12AU6. Open: L406, R402, R401, R400, C411, C406, C418, R412, L402. Shorted: C405, C406, C411, C400, C400B, C404, L402.
5	C	95 mc.	Tune to signal.	Loud, clear output with weak input.	Open: C402, C404, R412, L402. Shorted: C404, C400, C400A, L402.

OSCILLATOR TEST: Connect the positive lead of a high-resistance voltmeter to B—, test point B; connect the prod end of the negative lead through a 100,000-ohm isolating resistor to the oscillator grid (pin 1 of 14F8), test point G. Use a suitable meter range, such as 0 -10 volts. Proper operation of the oscillator is indicated by negative voltage within the range given in the chart (measured with a 20,000-ohms-per-volt meter) throughout the tuning range.

© John F. Rider

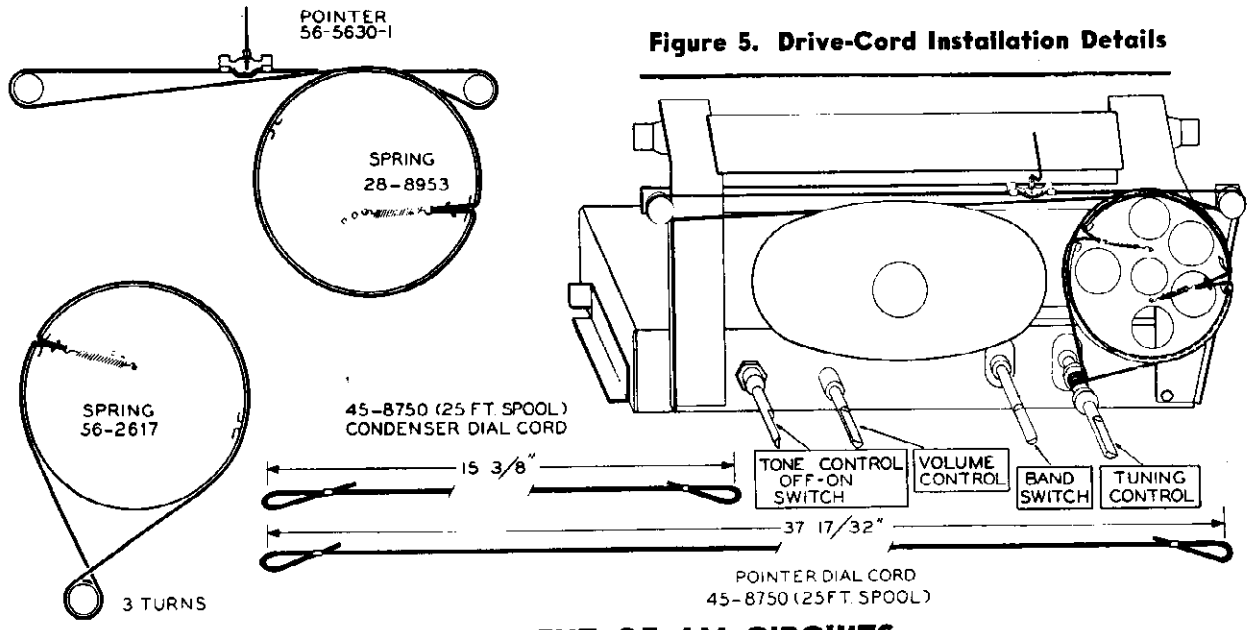

Figure 5. Drive-Cord Installation Details

ALIGNMENT OF AM CIRCUITS

Make alignment with loop aerial connected to radio. The AM alignment should be completed before the FM alignment is made.

DIAL POINTER—With tuning condenser fully meshed, adjust dial pointer to coincide with index mark at low-frequency end of dial. See "CALIBRATING DIAL BACKPLATE" for method of measuring backplate for index and calibration marks.

OUTPUT METER—Connect between terminal 3 (voice-coil connection) of aerial terminal panel TB400 and chassis.

AM SIGNAL GENERATOR—Connect as indicated in chart. Use modulated output.

OUTPUT LEVEL—During alignment, signal-generator output must be attenuated to maintain radio output below 1.25 volts, as read on output meter.

CONTROLS—Set volume control to maximum, turn tone control fully counterclockwise, and set band switch to broadcast position.

ALIGNMENT OF FM CIRCUITS

Align the AM Circuits first

OUTPUT METER—Connect between terminal 3 (voice-coil connection) of aerial terminal panel TB400 and chassis.

ALIGNMENT INDICATOR—Connect negative lead of a 20,000-ohms-per-volt, d-c voltmeter to pin 2 of 19T8 tube; connect positive lead to B−, test point B in Section 2. Use 10-volt range.

AM SIGNAL GENERATOR—Generator must have sufficient output to give a reading of at least 8.5 volts on alignment indicator. Connect generator ground lead to B−, test point B; connect output lead as indicated in chart. Use modulated output.

CONTROLS—Same as for alignment of AM circuits, except set band switch to FM position. Allow radio and signal generator to warm up for at least 15 minutes before making alignment.

NOTE: Check resonance of coils L401, L402, and L403 by inserting each end of a powdered-iron tuning core, such as Philco Part No. 56-6100, in the coils. If the signal strength increases when the iron end is inserted, compress the turns slightly. If the signal strength increases when the threaded brass end is inserted, spread the turns slightly. If the signal strength decreases when either the iron or the brass end is inserted, no further adjustment is necessary. Do not spread or compress turns of coil excessively; only a small change is required at these high frequencies.

CALIBRATING DIAL BACKPLATE

When the radio chassis has been removed from the cabinet, dial calibration and alignment points may be marked on the dial backplate below the pointer.

The method of measuring for these points is illustrated in figure 7. Hold a ruler against the dial backplate, with the start of the ruler at the reference line shown, and mark pencil dots at the proper points for the required frequency settings.

After installation of the chassis in the cabinet, the dial pointer should be moved to coincide with the index mark on the dial. Coincidence of the pointer and index mark should occur with the tuning condenser fully meshed.

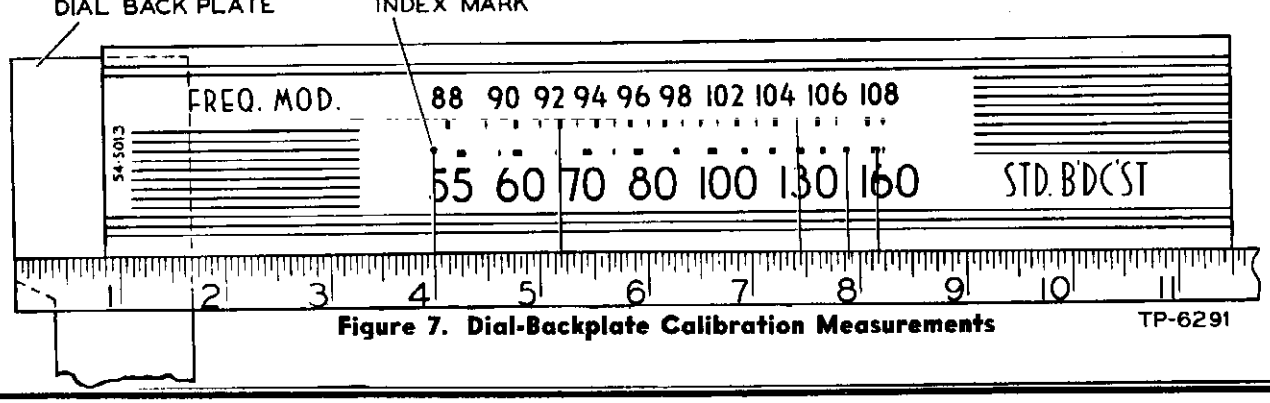

Figure 7. Dial-Backplate Calibration Measurements TP-6291

© John F. Rider

©John F. Rider

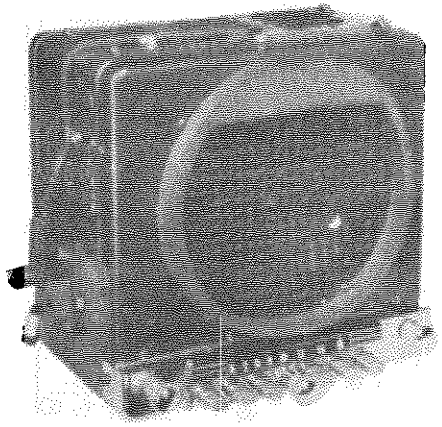

SPECIFICATIONS

CIRCUIT	Eight-tube, superheterodyne
FREQUENCY RANGE	540 to 1600 kc.
INTERMEDIATE FREQUENCY	265 kc.
POWER INPUT	6.3 volts, 8.8 amperes, d.c.
PHILCO TUBES	7A7(2), 7B8, 7B6, 7A4, 7C5(2), 7Y4
AERIAL	Retractable-tip, Philco Part No. 91-0227

IMPORTANT

The aerial and aerial lead-in form part of the r-f tuning circuit. When testing or aligning this receiver on the bench it is important that an aerial dummy load of equal capacity be used.

CIRCUIT DESCRIPTION

The circuit of the P4635 consists of a 7A7 r-f amplifier, a 7B8 converter, a 7A7 i-f amplifier, a 7B6 second detector–first audio, and an audio power amplifier using two 7C5's in push-pull, driven by a 7A4 phase inverter. The power supply is of the six-volt non-synchronous vibrator type, using a 7Y4 rectifier.

The aerial input circuit is designed for maximum interference elimination, without sacrifice of signal strength. Permeability tuning, controlled by a pantograph tuning unit, is used for both the r-f and oscillator stages. This method of tuning assures maximum sensitivity, selectivity, and stability for this type of receiver. A sensitivity control is provided (identified in figure 9, page 6), which consists of a variable resistor in the common cathode circuit of the converter and i-f stages. This should be adjusted for lower sensitivity in areas where most reception is from local stations, in order to minimize noise pickup.

The P4635 uses an intermediate frequency of 265 kc.

Two features of the audio system are the tone control, which is an inverse feed-back circuit built around the first audio amplifier, and the push-pull output stage, which delivers a full five watts of audio power to the dynamic speaker.

TROUBLE-SHOOTING PROCEDURE

This service manual provides a trouble-shooting procedure for the P4635, which will facilitate the isolation of most of the faults that may be encountered. The circuit is divided into four sections, with a schematic and chassis layout, showing test points for each section. The trouble-shooting procedure for each section is outlined in a chart. Tests indicated by a large asterisk (*) provide sectional master checks, making it possible to eliminate each section as a source of trouble without going through its entire test chart.

Wherever trouble is found (indicated by failure to get a "Normal Indication" on any test) it should be isolated by voltage and resistance checks of the parts associated with the point under test, and remedied before testing further.

PRELIMINARY CHECKS

The following preliminary checks are recommended:

1. Carefully inspect both sides of the chassis. Make sure that all the tubes are secure, and look for bad connections, burned resistors, or other mechanical faults.

2. Check the fuse, and connect the receiver to a source of power (6.3 volts, d.c.). Look for unlighted tube filaments, overheated resistors (smoke, sweating, etc.), and listen for the hum of the vibrator.

3. Check the tubes and the vibrator. WARNING: If the 7Y4 is defective, check C107 for shorts before inserting a new tube. If the vibrator is defective, check C106 for a short before inserting a new vibrator.

© John F. Rider

TESTS TO ISOLATE TROUBLE WITHIN SECTION 1

MAKE TEST ✱ FIRST

If the "NORMAL INDICATION" is obtained, proceed to the next section. If not, isolate and remedy the trouble in this section.

Make all measurements for this section with a volt-ohmmeter, using the applicable d-c range. All voltages given in this manual are average, and were taken with a 20,000 ohms-per-volt meter, with 6.3 volts d-c input; the volume control was set at minimum, and the tuning control at 540 kc.

WARNING: If the 7Y4 rectifier is found to be defective, check the main filter condenser, C107, for shorts before inserting a new tube. If the vibrator is found to be defective, check C106 for a short before inserting a new vibrator.

TEST POINTS	NORMAL INDICATION	POSSIBLE CAUSE OF ABNORMAL INDICATION
D to B—	165 volts	Trouble within Section 1. Isolate by following tests.
A to B—	260 volts	Defective 7Y4, VB100, T100, C105, C106, C107A, or C107B.
C to B—	215 volts	Defective R102, C107B or C107C.
D to B—	165 volts	Defective R103, C107C or C407 (see Section 4 for location).

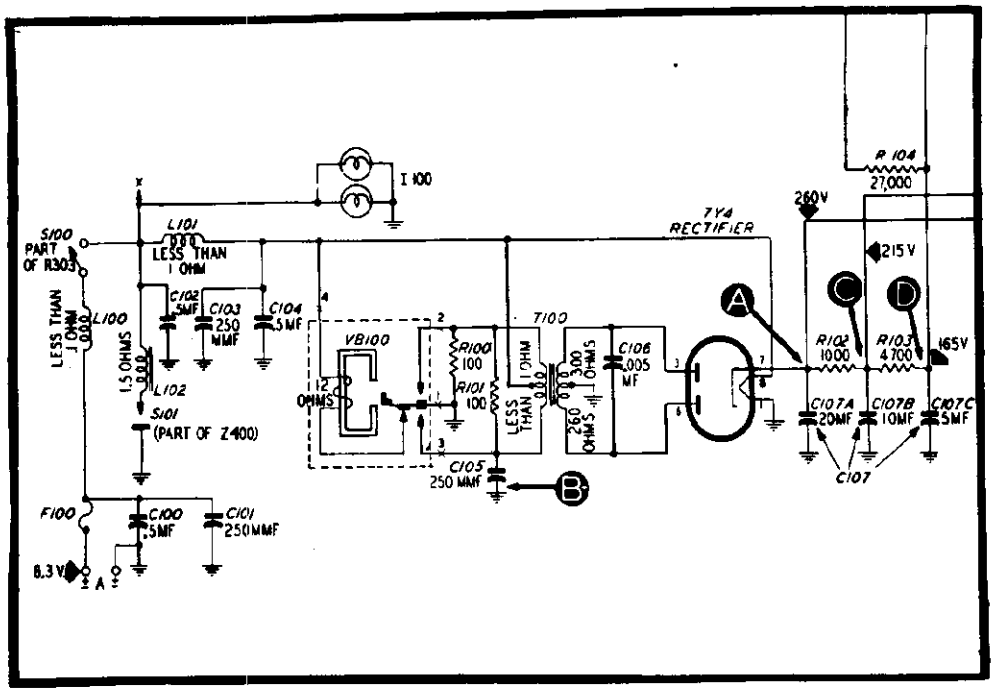

Section 1 schematic. TP462E

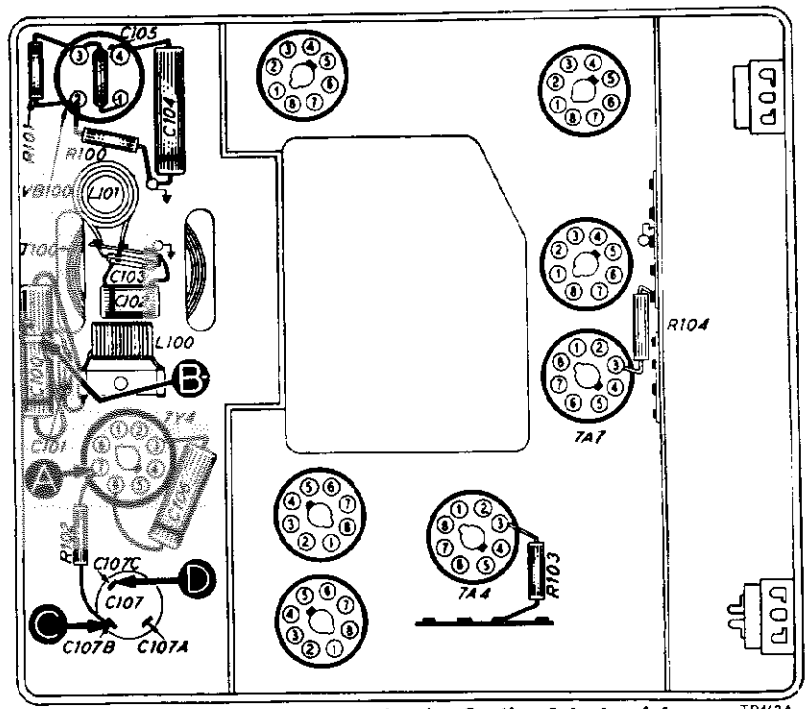

Bottom view, showing Section 1 test points. TP462A

TESTS TO ISOLATE TROUBLE WITHIN SECTION 2

MAKE TEST FIRST

If the "NORMAL INDICATION" is obtained, proceed to the next section. If not, isolate and remedy the trouble in this section.

For all tests in this section, use an audio signal. Connect the generator output lead through a condenser (.01 to .25 mf.) to the test points indicated; connect the ground lead to the receiver chassis (B–).

Set the receiver volume control at maximum, and adjust the signal-generator output for a loud, clear signal.

TEST POINTS	NORMAL INDICATION	POSSIBLE CAUSE OF ABNORMAL INDICATION
H to B–	Loud, clear signal.	Trouble within Section 2. Isolate by following tests.
E to B– (Remove 7A4)	Loud, clear signal.	Defective 7C5, T200, LS200, R203, R205, C201, C203, or C204.
F to B– (7A4 removed)	Loud, clear signal, same as preceding test.	Defective 7C5, T200, R204, or C202.
G to B– (Replace 7A4)	Clear signal, louder than preceding test.	Defective 7A4, R202, R201, R200, or C200.
H to B–	Loud, clear signal, same as preceding test.	Defective C200 or C308 (see Section 3 for location).

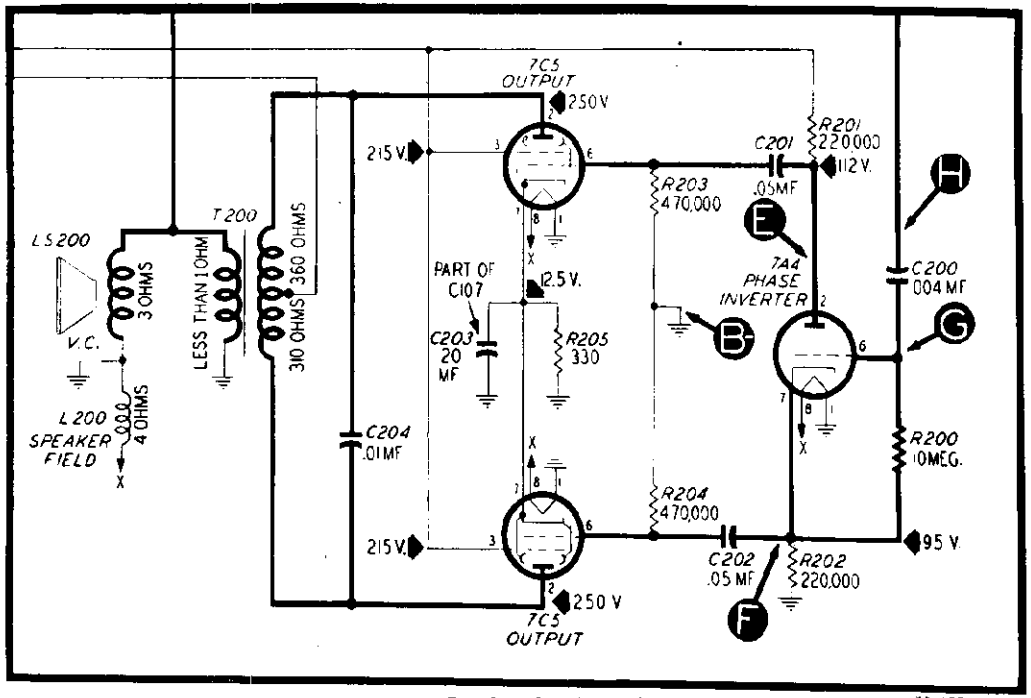

Section 2 schematic.

TP462F

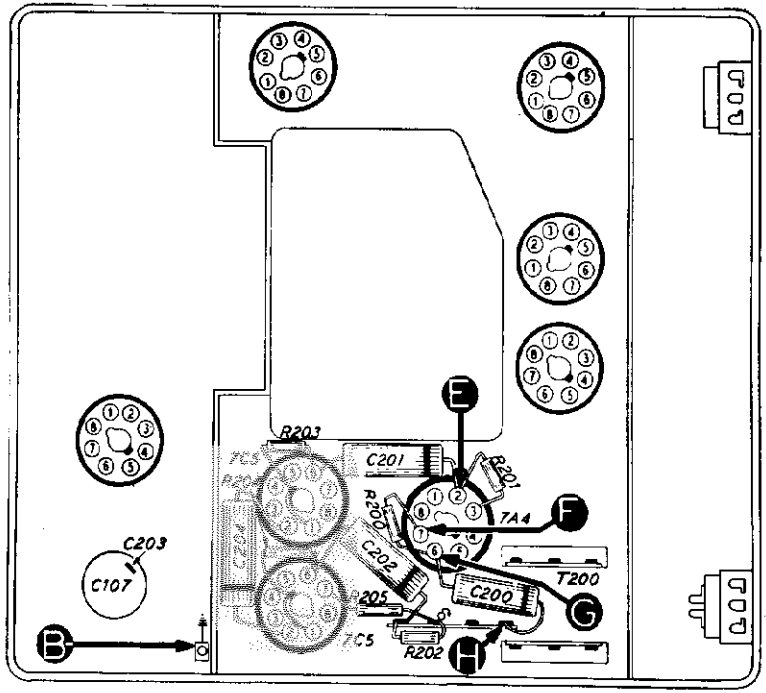

Bottom view, showing Section 2 test points.

© John F. Rider

TESTS TO ISOLATE TROUBLE WITHIN SECTION 3

MAKE TEST ✱ FIRST

If the "NORMAL INDICATION" is obtained, proceed to the next section. If not, isolate and remedy the trouble in this section.

For the second and third tests in the chart for this section, use an audio signal. For the first, and the last two, use a modulated 265-kc. signal. Connect the signal-generator output lead through a condenser (.01 to .25 mf.) to the test points indicated; connect the ground lead to the receiver chassis (B–). Set the receiver volume control and sensitivity control at maximum, and adjust the signal-generator output for a loud, clear signal.

TEST POINTS	NORMAL INDICATION	POSSIBLE CAUSE OF ABNORMAL INDICATION
M to B– (265-kc. signal)	Loud, clear signal.	Trouble within Section 3. Isolate by following tests.
J to B– (audio signal)	Loud, clear signal.	Defective 7B6, R306, R305, R304, C306, C308, or C309.
K to B– (audio signal)	Loud, clear signal.	Defective C305, S300, or R303 (rotate R303 through its entire range for complete check).
L to B– (265-kc. signal)	Loud, clear signal.	Defective 7A7, C303, C304, C406, R104, R300, R404, Z301; shorted C301C or C301D.
M to B– (265-kc. signal)	Loud, clear signal.	Defective R302 or Z300.

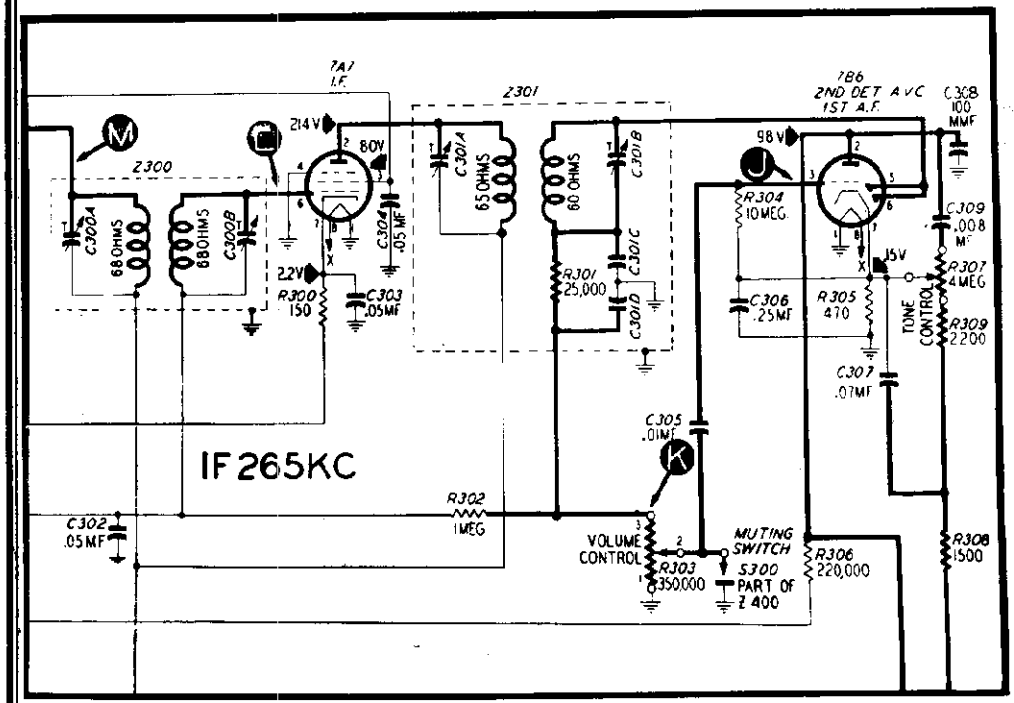

Section 3 schematic.

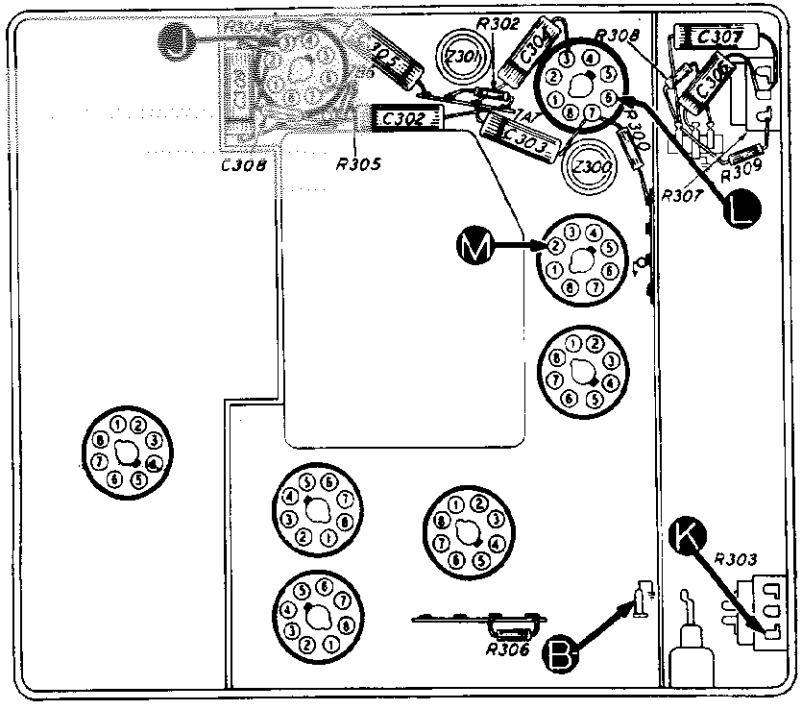

Bottom view, showing Section 3 test points.

© John F. Rider

TESTS TO ISOLATE TROUBLE WITHIN SECTION 4

MAKE TEST ✱ FIRST
If the "NORMAL INDICATION" is not obtained, isolate and remedy the trouble in this section.

1. Attach the positive lead of a 20,000-ohms-per-volt meter (10-volt range) to the receiver chassis, and the prod end of the negative lead through 50,000 ohms to point S. Rotate the tuning control through its entire range; absence of voltage indicates that the oscillator is not functioning. If so, check the components listed in the second test below.

2. Connect the signal-generator output lead through a condenser (.01 to .25 mf.) to the test points indicated; connect the ground lead to the receiver chassis. Set the receiver volume control and sensitivity control at maximum, tune the signal generator and receiver to 1000 kc., and adjust the generator output for a loud, clear signal.

TEST POINTS	NORMAL INDICATION	POSSIBLE CAUSE OF ABNORMAL INDICATION
R to B–	Loud, clear signal.	Trouble within Section 4. Isolate by following tests.
N to B–	Loud, clear signal.	Defective 7B8, L400C, L400D, R404, R405, R406, C408, C409, C410, C411, or C412.
P to B–	Loud, clear signal.	Defective C403, C404, C405, R403, or L400B.
Q to B–	Loud, clear signal.	Defective 7A7, L400A, R400, R402, or C402.
R to B–	Loud, clear signal.	Defective L401, C400, or C401.

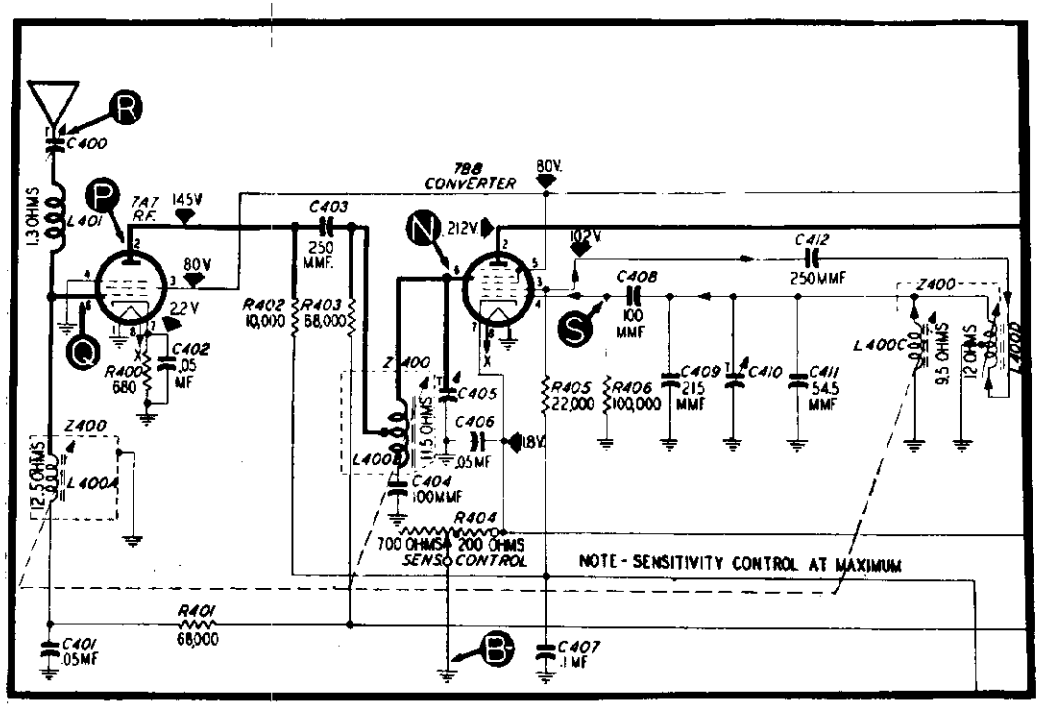

Section 4 schematic.

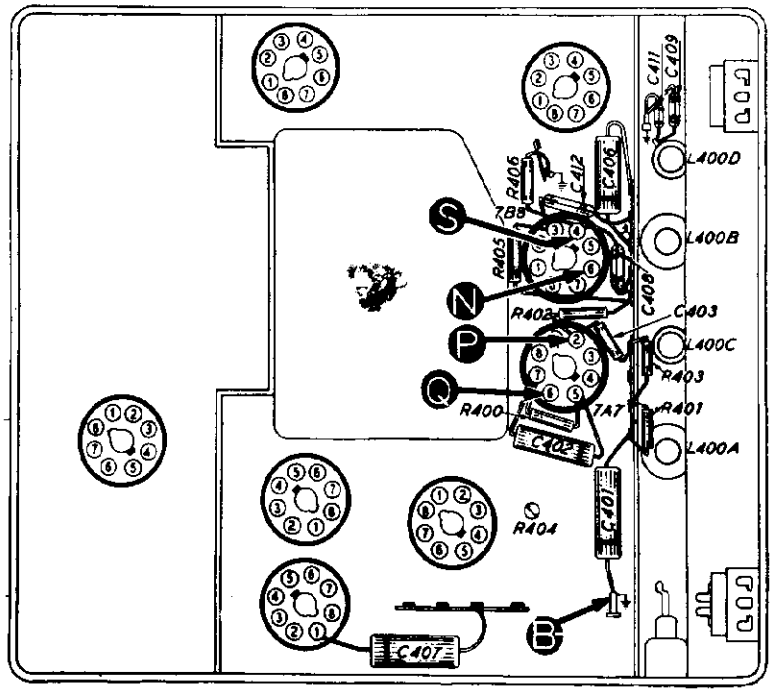

Bottom view, showing Section 4 test points.

MODEL P4635

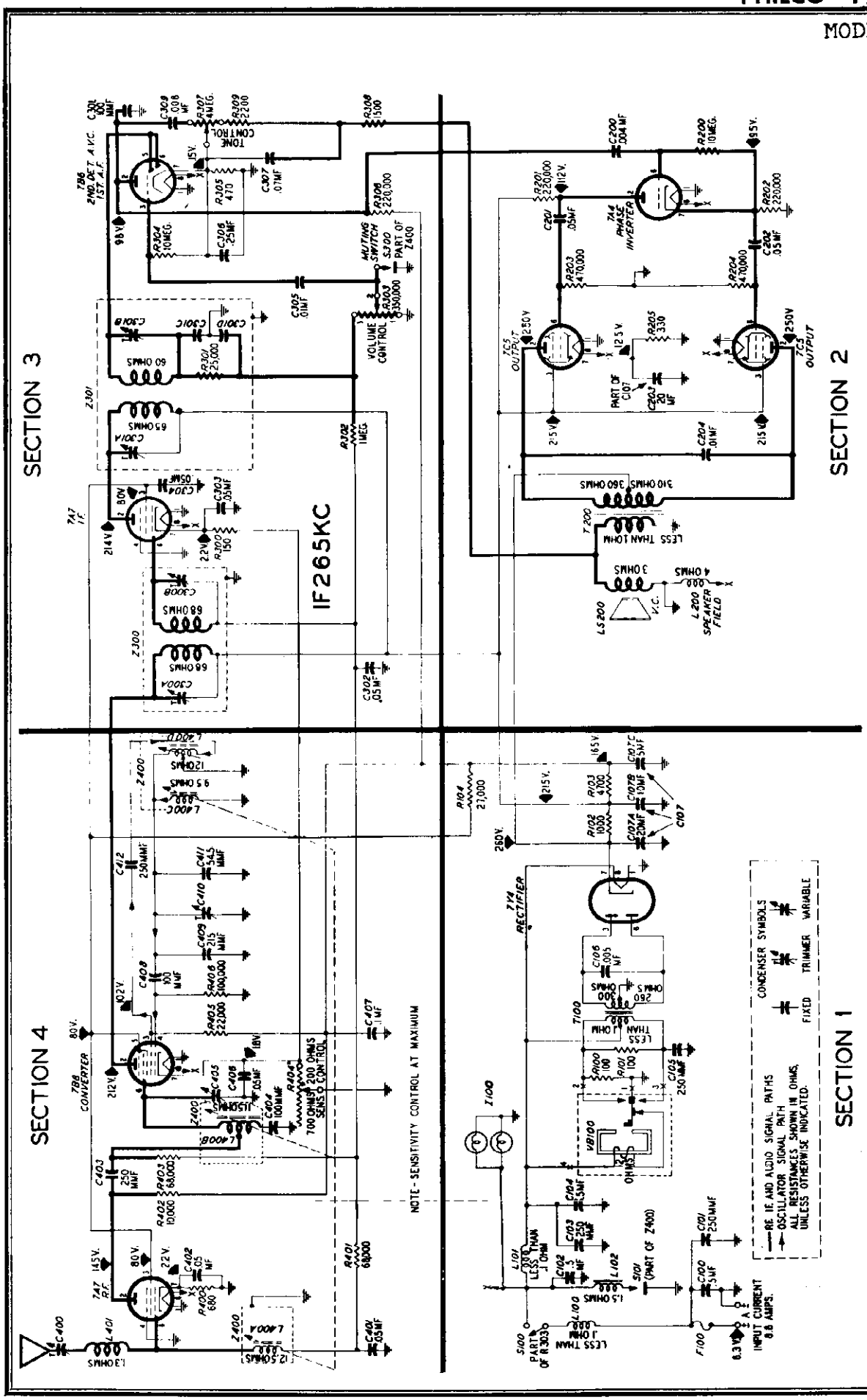

NOTE: All voltage, capacity, and resistance values shown are average. The voltages were measured between the points indicated and the receiver chassis (B–), using a 20,000-ohms-per-volt meter, with 6.3 volts a-c input to the receiver power supply; the volume control was set at minimum, and the tuning control at 540 kc.

©John F. Rider

© John F. Rider

ALIGNMENT PROCEDURE

CONNECT THE SIGNAL-GENERATOR output lead as follows:

For the i-f alignment (the first step in the chart), connect through a .05-mf. condenser to the aerial connector.

For the r-f alignment (all steps after the first), inject the signal through a dummy aerial consisting of a 20-mmf. condenser in series with an aerial lead (Part No. 95-0181) plugged in to the antenna receptacle. If an aerial lead is not available, connect a 30-mmf. condenser from the antenna receptacle to ground, and inject the signal through the 20-mmf. condenser alone. **The foregoing instruction must be carefully followed if the receiver is to give its best performance after being reinstalled in the car.**

CONNECT THE OUTPUT METER between the voice-coil lug on the speaker and the receiver chassis.

ADJUST THE RECEIVER CONTROLS as follows:

Set the volume and sensitivity controls at maximum. Set the tone control for maximum signal output (approximately the center of its range).

ADJUST THE SIGNAL-GENERATOR OUTPUT as alignment progresses to keep the meter needle near center scale, using the lowest range on the output meter.

AFTER REINSTALLING THE RECEIVER in the car and connecting the aerial, make the following adjustments: Set the aerial trimmer for maximum signal strength on a weak station near 1400 kc. Set the sensitivity control for low sensitivity, if the receiver is to be used mainly for local-station reception, or higher sensitivity depending on the degree of distant-station reception desired. The lower the sensitivity can be set, the less will be the noise and interference pickup.

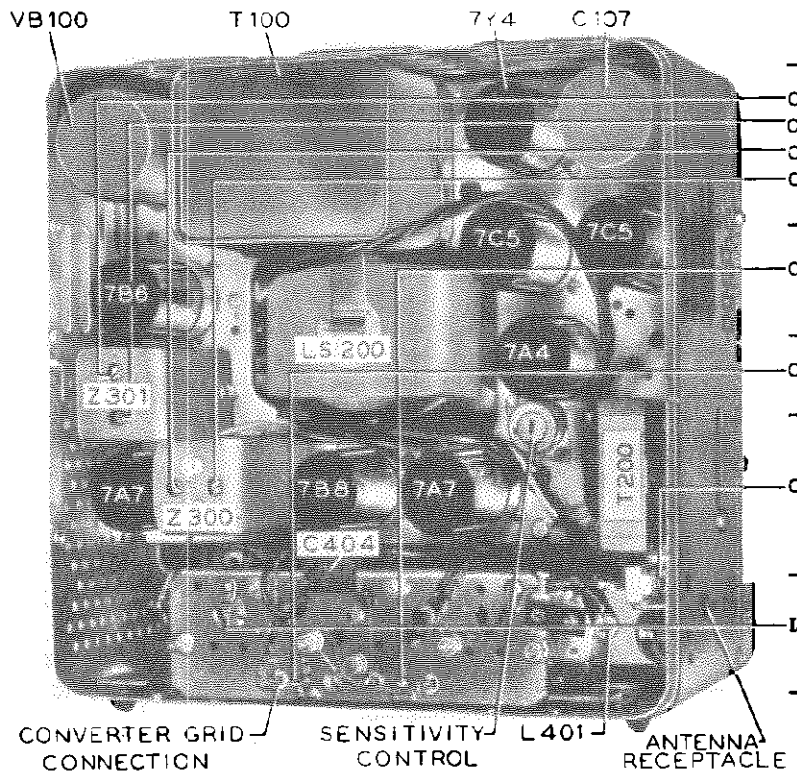

Chassis view, showing trimmer locations.

ADJUST IN ORDER	SPECIAL INSTRUCTIONS	DIAL SETTINGS SIG. GEN.	DIAL SETTINGS RECEIVER
C301B C301A C300B C300A	Ground pin 4 of the 7B8. Adjust for maximum in order as numbered and then repeat procedure.	265 kc.	1600 kc.
C410	Remove the ground from pin 4 of the 7B8. Adjust for maximum.	1600 kc.	1600 kc.
C405	Adjust for maximum.	1400 kc.	1400 kc.
C400	Adjust for maximum. Final adjustment to be made after installation in car, with antenna connected.	1400 kc.	1400 kc.
L400D	Adjust for maximum while rocking tuning control back and forth across signal.	580 kc.	580 kc.
	Repeat all steps after the first.		

MODEL P4635

REPLACEMENT PARTS LIST

NOTE: Parts marked with an asterisk (*) are general replacement items, and the part numbers will not be identical with those used on factory assemblies. Use only the "Service Part No." shown in the parts list when ordering replacements.

SECTION 1

Reference No.	Description	Service Part No.
C100	Condenser, .5 mf.	61-0137*
C101	Condenser, 250 mmf.	60-10245307*
C102	Condenser, .5 mf.	61-0137*
C103	Condenser, 250 mmf.	60-10245307*
C104	Condenser, .5 mf.	61-0137*
C105	Condenser, 250 mmf.	60-10245307*
C106	Condenser, .005 mf.	61-0153*
C107	Condenser, electrolytic	61-0150*
	C107A: condenser, 20 mf.	Part of C107
	C107B: condenser, 10 mf.	Part of C107
	C107C: condenser, 5 mf.	Part of C107
F100	Fuse	45-2559*
I100	Lamp, pilot	34-2064
L100	Choke, "A"	32-1644
L101	Choke, vibrator	65-0151
L102	Coil, solenoid	65-0360
R100	Resistor, 100 ohms	66-1104340*
R101	Resistor, 100 ohms	66-1104340*
R102	Resistor, 1,000 ohms	66-2104340*
R103	Resistor, 4,700 ohms	66-2474340*
R104	Resistor, 27,000 ohms	66-3274340*
S100	Switch, off-on	Part of R303
S101	Switch, solenoid (muter)	Part of Z400
T100	Transformer, power	65-0358*
VB100	Vibrator	83-0026*

SECTION 2

C200	Condenser, .004 mf.	61-0129*
C201	Condenser, .05 mf.	61-0170*
C202	Condenser, .05 mf.	61-0170*
C203	Condenser, 20 mf.	Part of C107
C204	Condenser, .01 mf.	61-0124*
L200	Field, speaker	Part of LS200
LS200	Speaker	73-0066*
R200	Resistor, 10 megs.	66-6103340*
R201	Resistor, 220,000 ohms	66-4223340*
R202	Resistor, 220,000 ohms	66-4223340*
R203	Resistor, 470,000 ohms	66-4473340*
R204	Resistor, 470,000 ohms	66-4473340*
R205	Resistor, 330 ohms	66-1334340*
T200	Transformer, output	65-0409*

SECTION 3

C302	Condenser, .05 mf.	61-0122*
C303	Condenser, .05 mf.	61-0122*
C304	Condenser, .05 mf.	61-0122*
C305	Condenser, .01 mf.	61-0124*
C306	Condenser, .25 mf.	61-012 *
C307	Condenser, .07 mf.	61-0152*
C308	Condenser, 100 mmf.	60-10105407*
C309	Condenser, .008 mf.	61-0174*
R300	Resistor, 150 ohms	66-1153340*
R302	Resistor, 1 meg.	66-5103340*
R303	Control, volume, 350,000 ohms	67-0052*
R304	Resistor, 10 megs.	66-6103340*
R305	Resistor, 470 ohms	66-1473340*
R306	Resistor, 220,000 ohms	66-4223340*
R307	Control, tone, 4 megs.	67-0051*
R308	Resistor, 1,500 ohms	66-2153340*
R309	Resistor, 2,200 ohms	66-2223340*
S300	Switch, muting (solenoid)	Part of Z400
Z300	Transformer, 1st i-f	65-0352
	C300A: condenser, trimmer	Part of Z300
	C300B: condenser, trimmer	Part of Z300
Z301	Transformer, 2nd i-f	65-0410
	C301A: condenser, trimmer	Part of Z301
	C301B: condenser, trimmer	Part of Z301
	C301C: condenser	Part of Z301
	C301D: condenser	Part of Z301
	R301: resistor, 25,000 ohms	Part of Z301

SECTION 4

Reference No.	Description	Service Part No.
C400	Condenser, trimmer	31-6472*
C401	Condenser, .05 mf.	61-0122*
C402	Condenser, .05 mf.	61-0122*
C403	Condenser, 250 mmf.	60-10245307*
C404	Condenser, 100 mmf.	60-10105407*
C405	Condenser, trimmer	Part of Z400*
C406	Condenser, .05 mf.	61-0122*
C407	Condenser, .1 mf.	61-0113*
C408	Condenser, 100 mmf.	60-10105407*
C409	Condenser, 215 mmf. (silver mica)	Part of Z400
C410	Condenser, trimmer	Part of Z400
C411	Condenser, 54.5 mmf. (silver mica)	Part of Z400
C412	Condenser, 250 mmf.	60-10245307*
L401	Choke, antenna	65-0378
R400	Resistor, 680 ohms	66-1683340*
R401	Resistor, 68,000 ohms	66-3683340*
R402	Resistor, 10,000 ohms	66-3103340*
R403	Resistor, 68,000 ohms	66-3683340*
R404	Control, sensitivity	67-0036*
R405	Resistor, 22,000 ohms	66-3223340*
R406	Resistor, 100,000 ohms	66-4103340*
Z400	Pantograph tuning assembly	77-0891
	L400A: coil, r-f grid tuning (Part of Z400)	65-0378
	L400B: coil, converter grid tuning	Part of Z400
	L400C: coil, oscillator grid tuning	Part of Z400
	L400D: coil, oscillator tracking	Part of Z400

MISCELLANEOUS

Bezel assembly	
Bezel	57-2188FA8
Background plate, dial	57-2174FCP
Dial, lucite	55-1350
Felt, dial	55-1063
Nut, dial	1W56913FA1
Disc, tone color	55-1353
Retainer, color disc	57-1639FA3
Washer, color disc	57-1640FA3
"A" lead assembly (fuse-to-set)	77-0623
Bushing	27-4683
Cable and clamp assembly	77-0622
Cap, connector	28-5608
Contact	54-4344
Ferrule	28-5609
Grommet	27-4676
"A" lead assembly (fuse-to-ammeter)	77-0887
Housing, fuse	56-3595
Contact	54-4344
Spring	56-3593
Sleeve, insulating	54-7192
Washer, fibre	54-7191
Housing parts	
Housing and bracket assembly	77-0868FC51
Button, plug	2W15748FA8
Cover, tube side	57-1547FC51
Cover, wiring side	57-1548FC51
Connector, antenna	57-0591FA3
Knob kit	
Knob, volume and tone	77-0909
Manual knob assembly	77-0890
Retainer, manual knob	57-2223
Sleeve, manual knob	57-1623
Spacer, manual knob	57-1669
Spring, manual knob	57-1628FA1
Push-button knob assembly	76-2201
Pilot lamp assembly	
Bracket	27-2193FA3
Screen, color (tone control side)	55-1355
Screen, color (volume control side)	55-1354
Socket assembly	76-2261*
Shield	57-2208FA3
Set mounting kit	
Bolt, hook	57-2176FA3
Nut, gland	28-6558FA8
Nut, wing	1W23992
Socket, tube	27-6138*
Socket, vibrator	27-6153*
Speaker cable assembly	95-0161
Speaker Mounting Parts	
Gasket	55-1351
Nut	1W19988FA3
Screw	W1582FA26
Suppression parts	
Clip, ground	57-0617FA1
Condenser, generator	30-4475*
Condenser, ignition switch	30-4007*
Resistor, distributor	33-1196*

© John F. Rider

MODELS S4624, S4625

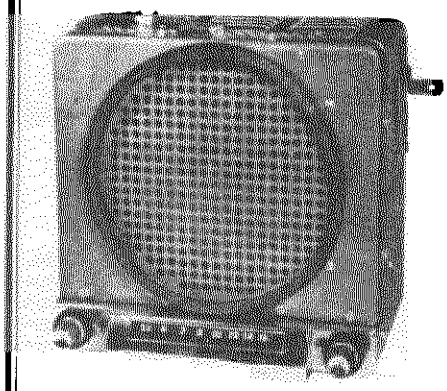

CIRCUIT DESCRIPTION

The circuit of the Model S4624 custom-built auto radio consists of a 7A7 r-f stage, a 7B8 converter, a 7A7 i-f stage, a 7B6 second detector and first audio, and a 7A5 beam-power audio amplifier. The power supply is of the 6-volt non-synchronous vibrator type, using a 7Y4 full-wave rectifier.

A high degree of selectivity, sensitivity, and stability is achieved by the use of permeability tuning in both the r-f and oscillator circuits.

An intermediate frequency of 455 kc. is generated in the converter stage, and is applied via a tuned transformer to the i-f amplifier. A second tuned transformer passes the amplified 455-kc. signal on to the second detector, (the diode section of the 7B6) where it is rectified and the audio-frequency modulation separated from it. Automatic volume control is provided by smoothing and filtering the rectified 455-kc. voltage, and applying it to the grids of the r-f amplifier and converter tubes.

The audio signal from the second detector is applied through the volume control to the first audio amplifier (the triode section of the 7B6). From the plate of the first audio, the signal is applied to the grid of the output power amplifier. The output transformer, which constitutes the plate load of the power amplifier, transmits the signal to the voice coil of the electro-dynamic speaker.

IMPORTANT

The aerial and aerial lead-in form part of the r-f tuning circuit. When testing or aligning this receiver on the bench it is important that an aerial dummy load of equal capacity be used.

TROUBLE-SHOOTING PROCEDURE

This service manual provides a logical trouble-shooting procedure for the S4624, which will facilitate the isolation of most of the faults that may be encountered. The circuit is divided into four sections, with a schematic and chassis layout, showing test points, for each section. The trouble-shooting procedure for each section is outlined in a chart. The first test in each chart is a sectional master check, making it possible to eliminate the section under test as a source of trouble without going through its entire chart procedure. The sections should be tested in their numerical order, as they are arranged in the manual.

The dial scale on the S-4625 is a fluorescent type to match the panel indicators of the 1947 cars. The dial pointer and cam assembly is different thus giving a new part number to the tuning assembly which otherwise is the same. The "A" lead is dressed to the left side of the radio case instead of the right side for convenience to the new position of the ignition switch. A clip is provided on the side of the case to hold the fuse holder and prevent it from rattling against the set. The receiver is mounted in the same position as in the 1946 car, but hook bolts of a new design are provided to fit the installation.

The suppression material is different and complete information on the suppression of ignition interference is given in the installation instructions with the radio.

PRELIMINARY CHECKS

Before starting the trouble-shooting procedure, the following steps are recommended:

1. Carefully inspect both sides of the chassis. Make sure that all tubes are secure, and look for bad connections, burned resistors, or other mechanical faults.

2. Check the fuse, and connect the receiver to a source of power (6.3 volts, d.c.). Look for unlighted tube filaments, over-heated resistors (smoke, sweating, etc.), and listen for the hum of the vibrator.

3. Check the tubes and the vibrator. WARNING: If the 7Y4 is defective, check C105 for shorts before inserting a new tube. If the vibrator is defective, check C104 for a short before inserting a new vibrator.

SPECIFICATIONS

CIRCUIT	Six-tube, superheterodyne
FREQUENCY RANGE	540 to 1600 kc.
INTERMEDIATE FREQUENCY	455 kc.
PHILCO TUBES	7A7(2), 7B8, 7B6, 7A5, 7Y4
POWER INPUT	6.3 volts, 6 amps, d.c.
AERIAL	Retractable-tip, Philco Part No. 91-0230

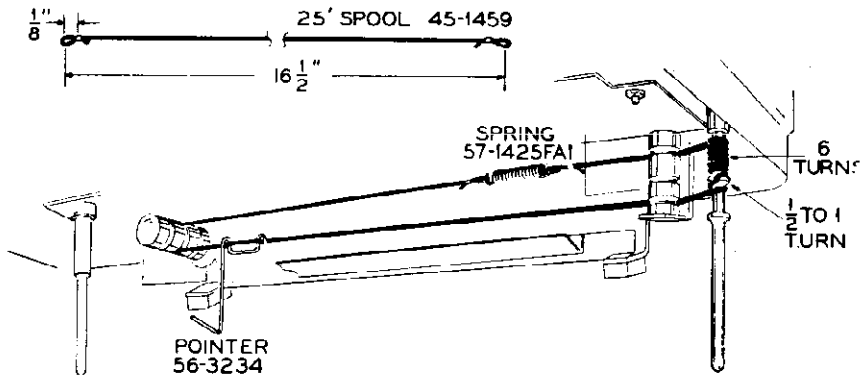

Drive-cord installation details.

NOTE: Parts marked with an asterisk (*) are general replacement items, and the part numbers will not be identical with those used on factory assemblies. Use only the "Service Part No." shown in the parts list when ordering replacements.

©John F. Rider

TESTS TO ISOLATE TROUBLE WITHIN SECTION 1

MAKE TEST NO. 1 FIRST!

If the "NORMAL INDICATION" for this test is obtained, proceed to Test No. 1 in the next section. If not, continue through the chart to isolate and remedy the trouble in this section.

Make all measurements for this section with a volt-ohmmeter, using the applicable d-c range. All voltages given in this manual are average, and were taken with a 20,000 ohms-per-volt meter and with 6.3 volts d-c input; the volume control was set at minimum, and the tuning control at 540 kc.

WARNING: If the 7Y4 rectifier is found to be defective, check the main filter condenser, C105, for shorts before inserting a new tube. If the vibrator is found to be defective, check C104 for a short before inserting a new vibrator.

	TEST POINTS	NORMAL INDICATION	POSSIBLE CAUSE OF ABNORMAL INDICATION
1.	D to B–	45 volts	Trouble within Section 1. Isolate by following tests.
2.	A to B–	165 volts	Defective 7Y4, VB100, T100, C104, or C105A.
3.	C to B–	85 volts	Defective R102, C105B, C105C, or C406 (shown in Section 4).
4.	D to B–	45 volts	Defective R103 or C303 (shown in Section 3).
5.	E to B–	73 volts	Defective R104, C105C, or C406 (shown in Section 4).

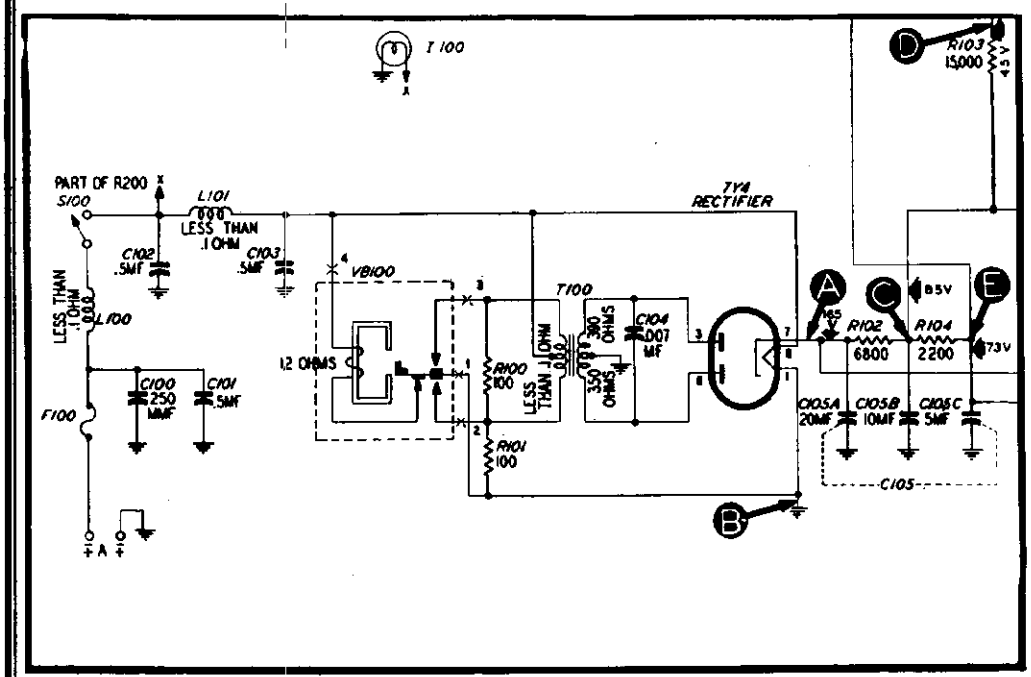

Section 1 schematic.

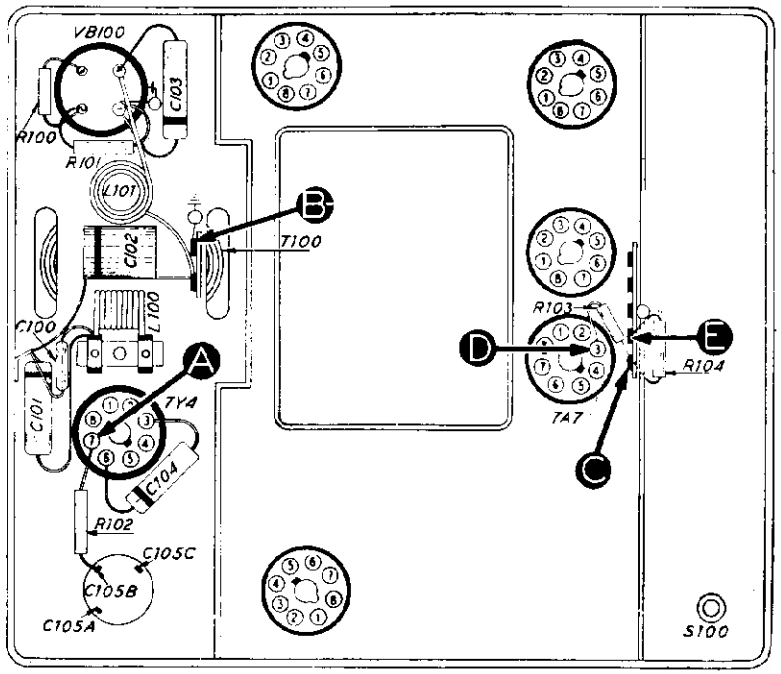

Bottom view, showing Section 1 test points.

© John F. Rider

© John F. Rider

MAKE TEST NO. 1 FIRST !

If the "NORMAL INDICATION" for this test is obtained, proceed to Test No. 1 in the next section. If not, continue through the chart to isolate and remedy the trouble in this section.

TESTS TO ISOLATE TROUBLE WITHIN SECTION 2

For all tests in this section, use an audio signal. Connect the generator output lead through a condenser (.01 to .25 mf.) to the test points indicated; connect the ground lead to the receiver chassis (B–). Set the receiver volume control at maximum, and start with the signal generator adjusted for low output.

	TEST POINTS	NORMAL INDICATION	POSSIBLE CAUSE OF ABNORMAL INDICATION
1.	J to B–	Loud, clear signal.	Trouble within Section 2. Isolate by following tests.
2.	F to B–	Clear signal, using moderate generator output.	Defective 7A5, T200, LS200, R204, R205, C201, C202, or C203.
3.	G to B–	Same as above.	Open C201.
4.	H to B–	Clear signal, much louder than step 3.	Defective 7B6, R202, R203, C105C, or R104 (shown in Section 1).
5.	J to B–	Same as step 4.	Defective C200 or R200 (rotate R200 through its entire range for complete check).

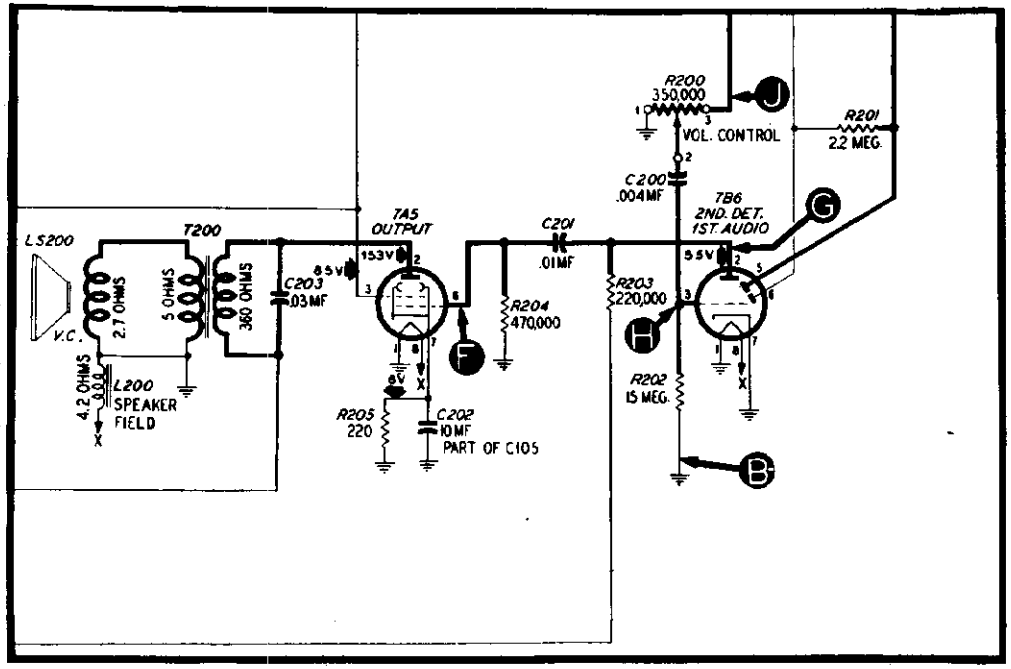

Section 2 schematic.

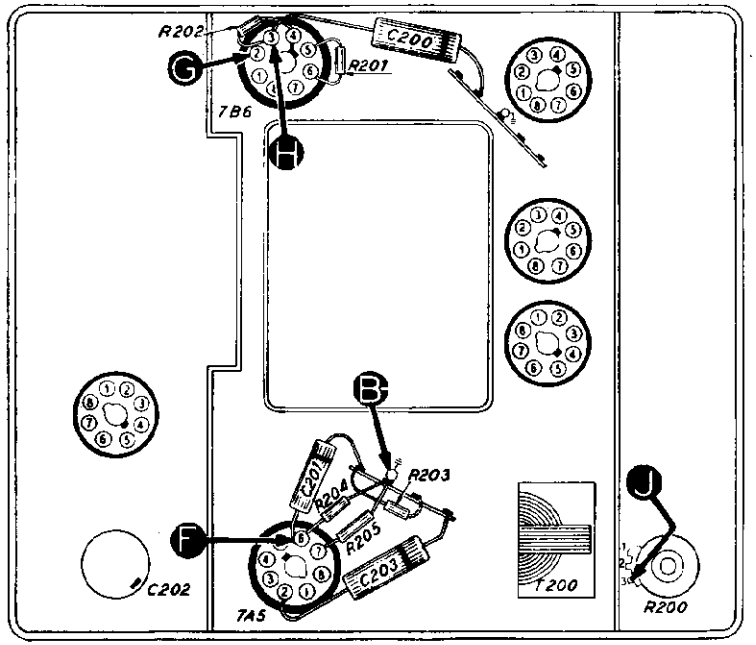

Bottom view, showing Section 2 test points. TP461B

© John F. Rider

MAKE TEST NO. 1 FIRST !

If the "NORMAL INDICATION" for this test is obtained, proceed to Test No. 1 in the next section. If not, continue through the chart to isolate and remedy the trouble in this section.

TESTS TO ISOLATE TROUBLE WITHIN SECTION 3

For all tests in this section, use a modulated 455-kc. signal. Connect the signal-generator output lead through a condenser (.01 to .25 mf.) to the test points indicated; connect the ground lead to the receiver chassis (B–). Set the receiver volume control at maximum, and adjust the signal-generator output for a loud, clear signal.

	TEST POINTS	NORMAL INDICATION	POSSIBLE CAUSE OF ABNORMAL INDICATION
1.	L to B–	Loud, clear signal.	Trouble within Section 3. Isolate by following tests.
2.	K to B–	Loud, clear signal.	Defective 7A7, Z301, R300, C302, or C303.
3.	L to B–	Loud, clear signal.	Defective Z300.

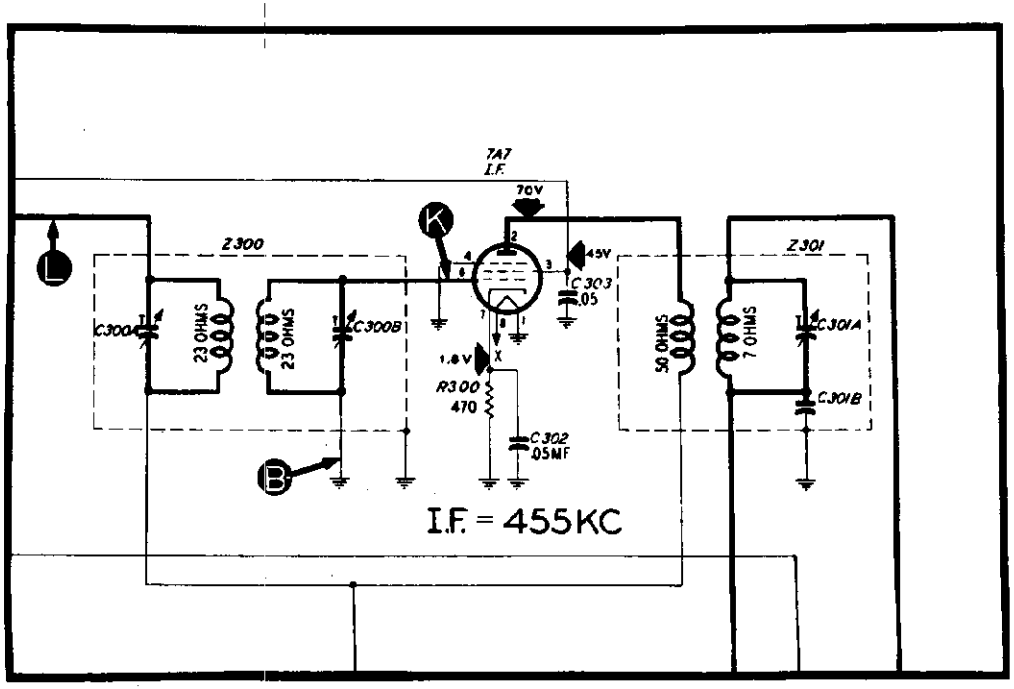

Section 3 schematic.

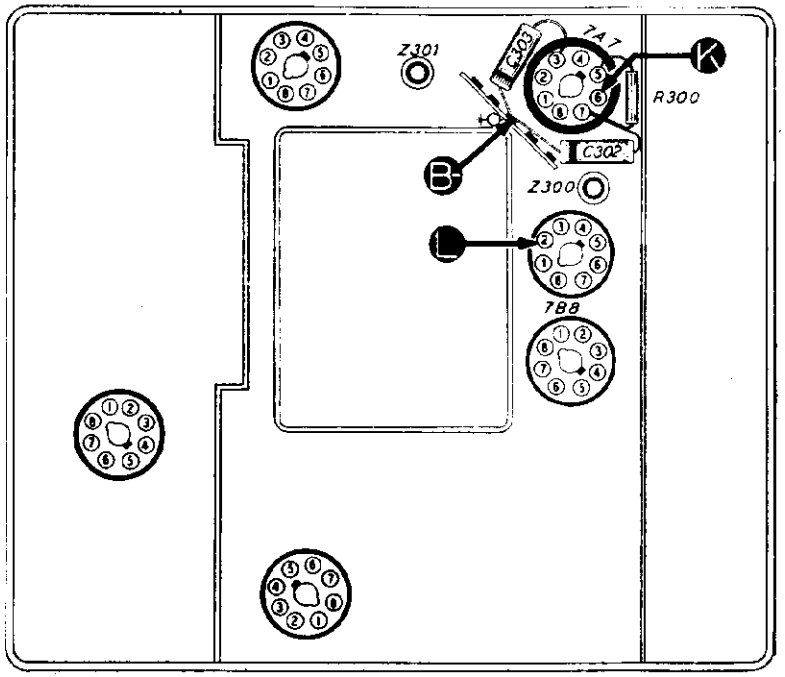

Bottom view, showing Section 3 test points.

© John F. Rider

TESTS TO ISOLATE TROUBLE WITHIN SECTION 4

MAKE TEST NO. 1 FIRST!

If the "NORMAL INDICATION" for this test is not obtained, continue through the chart to isolate and remedy the trouble in this section.

PRELIMINARY OSCILLATOR CHECK:

Attach the positive lead of a 20,000-ohms-per-volt meter (10-volt range) to the receiver chassis, and the prod end of the negative lead through 50,000 ohms to point R. Rotate the tuning control through its entire range; absence of voltage indicates that the oscillator is not functioning. If this is the case, check the components listed in the second test below.

FOR CHART TESTS 1 - 5:

Connect the signal-generator output lead through a condenser (.01 to .25 mf.) to the test points indicated; connect the ground lead to the receiver chassis. Set the receiver volume control at maximum, tune the signal generator and receiver to 1000 kc., and start with the generator adjusted for low output.

	TEST POINTS	NORMAL INDICATION	POSSIBLE CAUSE OF ABNORMAL INDICATION
1.	Q to B–	Loud, clear signal.	Trouble within Section 4. Isolate by following tests.
2.	M to B–	Clear signal, with moderate generator output.	Defective 7B8, C404, C405, C406, C408, C409, R402, R403, R404, R405, L401C, or L402.
3.	N to B–	Same as above.	Open C405.
4.	P to B–	Clear signal, louder than step 3.	Defective 7A7, R400, R401, C401, C402, or C403.
5.	Q to B–	Same as step 4.	Defective L400, C400, L401A, or L401B.

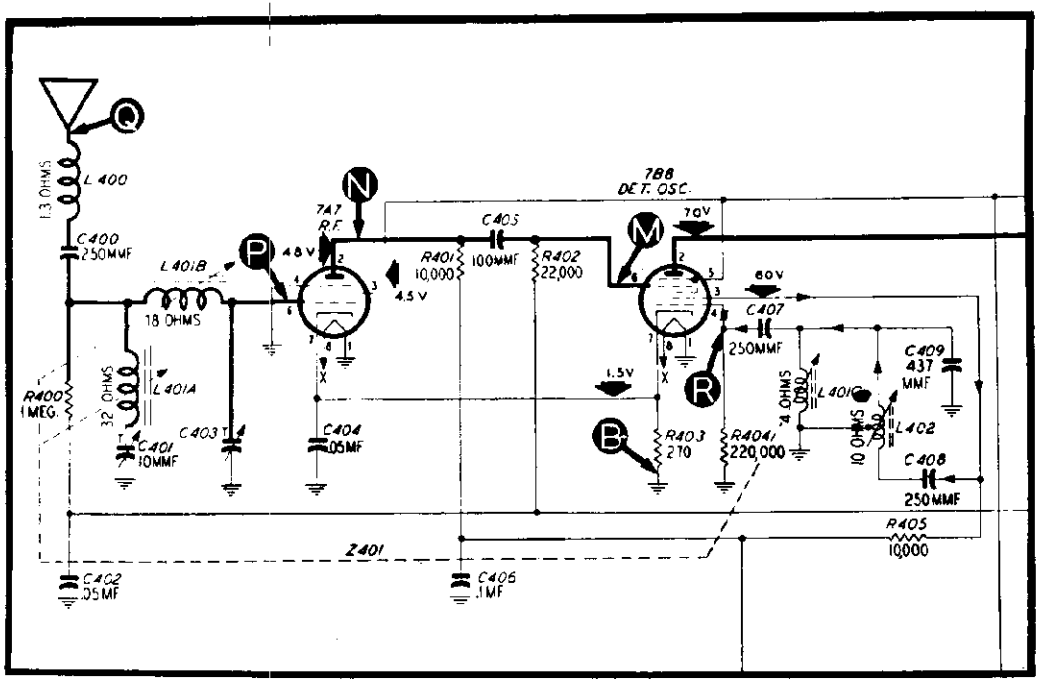

Section 4 schematic.

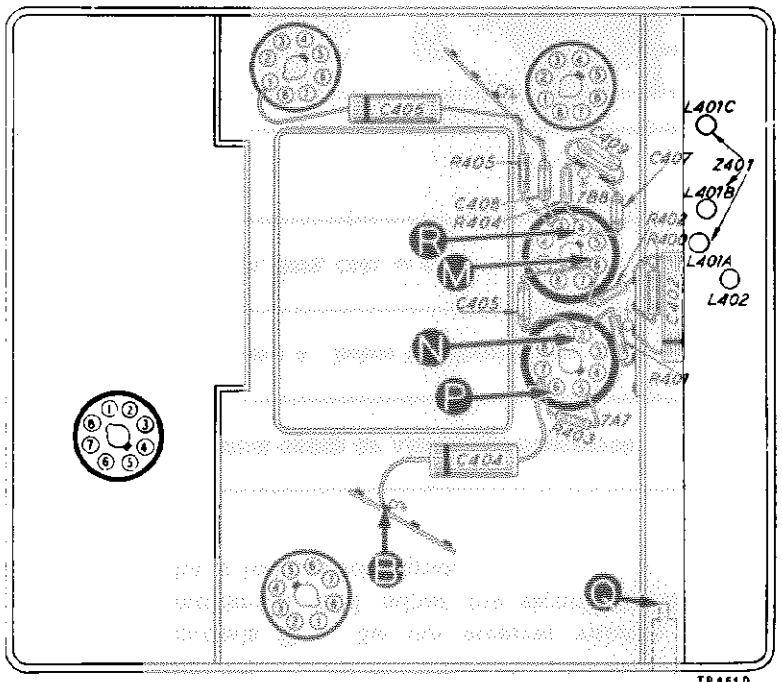

Bottom view, showing Section 4 test points.

MODELS S4624, S4625

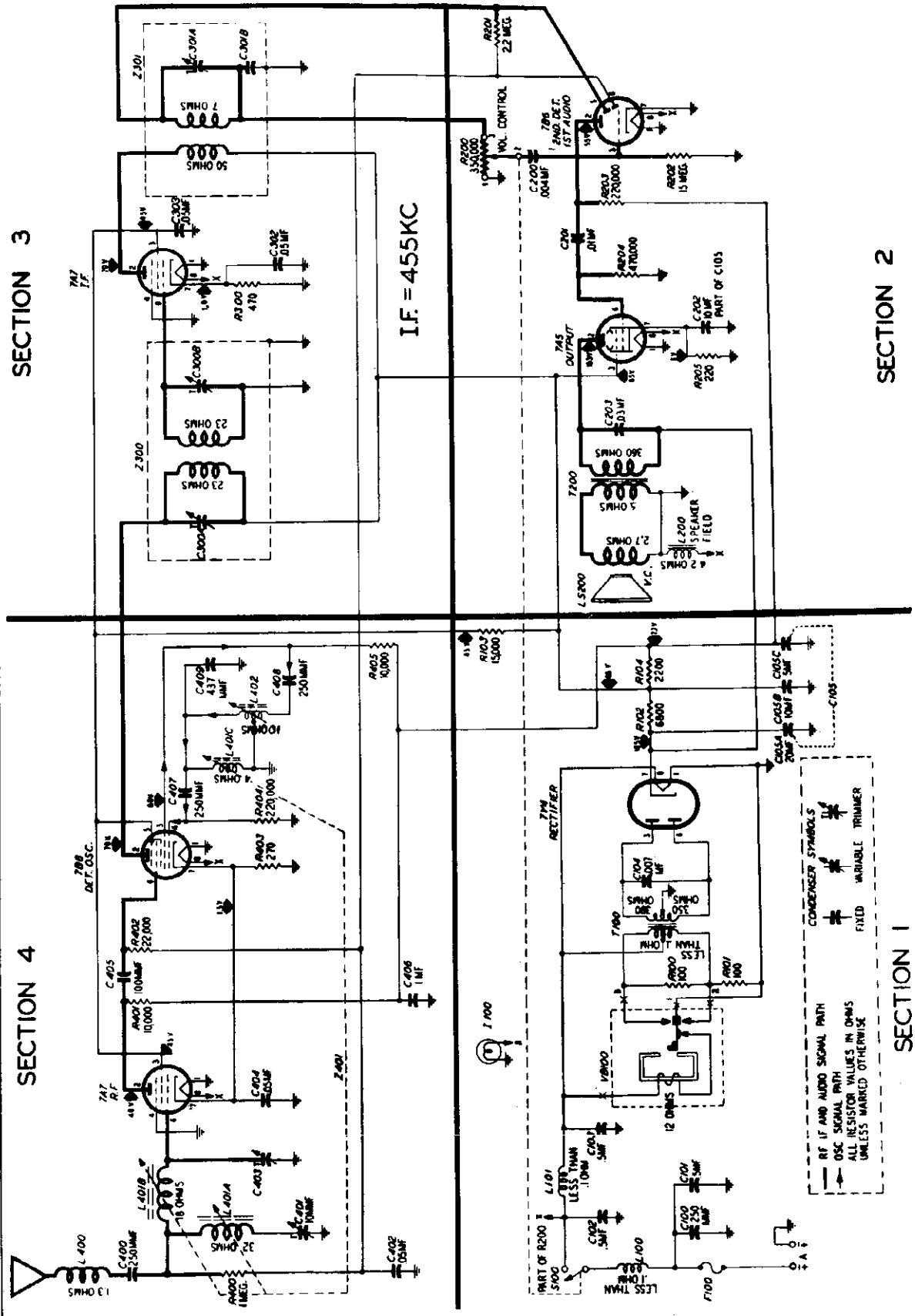

NOTE: All voltage, capacity, and resistance values shown are average. The voltages were measured between the points indicated and the receiver chassis (B–), using a 20,000-ohms-per-volt meter, with 6.3 volts d-c input to the receiver power supply; the volume control was set at minimum, and the tuning control at 540 kc.

©John F. Rider

© John F. Rider

ALIGNMENT PROCEDURE

CONNECT THE SIGNAL-GENERATOR output lead as follows:

For the i-f alignment (the first step in the chart), connect through a .05-mf. condenser to the antenna receptacle.

For the r-f alignment (all steps after the first), connect through a dummy aerial consisting of a 20-mmf. condenser in series with an aerial lead (Part No. 95-0211) plugged into the antenna receptacle. If the aerial lead is not available, connect a 30-mmf. condenser from the aerial terminal to the receiver chassis, and inject the signal through the 20-mmf. condenser alone.

CONNECT THE OUTPUT METER across the speaker voice coil. Do not disconnect the speaker during alignment.

SET THE RECEIVER VOLUME CONTROL at maximum. Adjust the signal-generator output as alignment progresses to keep the meter needle near center scale, using the lowest range on the output meter.

AFTER REINSTALLING THE RECEIVER in the car, and connecting the antenna, adjust the antenna trimmer (C403) for maximum signal strength on a weak station near 1400 kc.

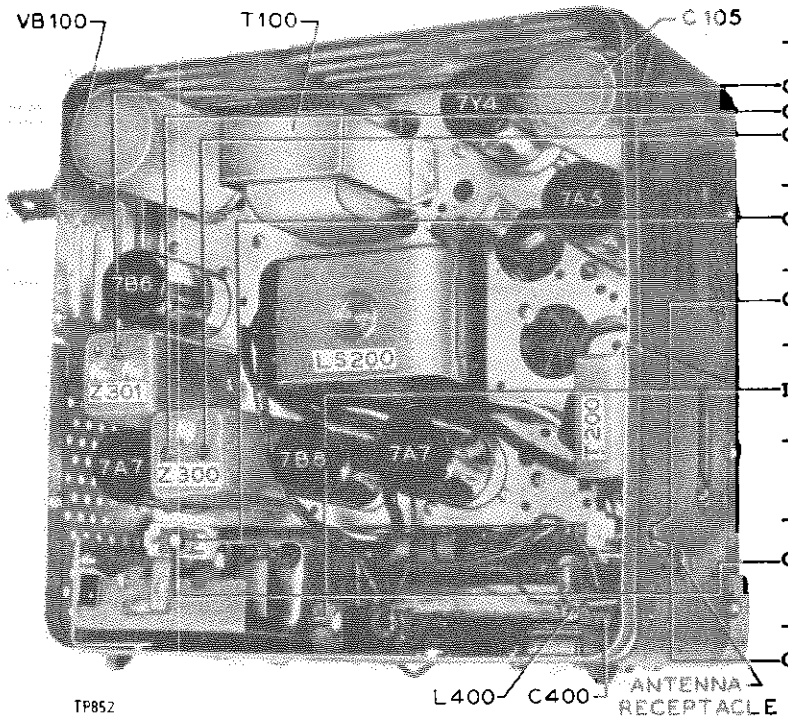

ADJUST IN ORDER	SPECIAL INSTRUCTIONS	DIAL SETTINGS SIG. GEN.	DIAL SETTINGS RECEIVER
C301A C300B C300A	1. Ground pin 4 of the 7B8 converter. Adjust the i-f trimmers for maximum in the order given, and then repeat the procedure.	455 kc.	1600 kc.
C401	2. Preset C401 to ½ turn from fully tight. Remove the ground from pin 4 of the 7B8.		
C403	3. Adjust for maximum.	1400 kc.	1400 kc.
L402	4. Adjust for maximum while rocking the tuning control.	580 kc.	580 kc.
	5. Tune in the 550-kc. signal with the receiver tuning control.	550 kc.	550 kc. (approx.)
C401	6. Adjust for minimum output.	1460 kc.	Do not alter from setting made in step 5.
C403	7. Adjust for maximum. Final adjustment to be made after the set has been reinstalled in the car, with the antenna connected.	1400 kc.	1400 kc.

MODELS S4624, S4625

SECTION 1

Reference No.	Description	Service Part No.
C100	Condenser, 250 mmf.	60-10245307*
C101	Condenser, .5 mf.	61-0137*
C102	Condenser, .5 mf.	61-0106*
C103	Condenser, .5 mf.	61-0137*
C104	Condenser, .007 mf.	61-0127*
C105	Condenser, electrolytic	61-0150*
	C105A: condenser, 20 mf.	Part of C105
	C105B: condenser, 10 mf.	Part of C105
	C105C: condenser, 5 mf.	Part of C105
F100	Fuse	45-2559
I100	Pilot lamp	34-2064*
L100	Choke, "A"	32-1644
L101	Choke, vibrator	65-0151
R100	Resistor, 100 ohms	66-1104340*
R101	Resistor, 100 ohms	66-1104340*
R102	Resistor, 6,800 ohms	66-2684340*
R103	Resistor, 15,000 ohms	66-3153340*
R104	Resistor, 2,200 ohms	66-2223340*
S100	Switch	Part of R200
T100	Transformer, power	65-0404*
VB100	Vibrator	83-0026*

SECTION 2

C200	Condenser, .004 mf.	61-0179*
C201	Condenser, .01 mf.	61-0120*
C202	Condenser, 10 mf.	Part of C105
C203	Condenser, .03 mf.	61-0119*
L200	Field, speaker	Part of LS200
LS200	Speaker	73-0068*
R200	Control, volume, 350,000 ohms	33-5540*
R201	Resistor, 2.2 megs.	66-5223340*
R202	Resistor, 15 megs.	66-6153340*
R203	Resistor, 220,000 ohms	66-4223340*
R204	Resistor, 470,000 ohms	66-4473340*
R205	Resistor, 220 ohms	66-1223340*
T200	Transformer, output	65-0395*

SECTION 3

C302	Condenser, .05	61-0111*
C303	Condenser, .05	61-0111*
R300	Resistor, 470 ohms	66-1473340*
Z300	Transformer, 1st i-f	65-0399
	C300A: condenser, trimmer	Part of Z300
	C300B: condenser, trimmer	Part of Z300
Z301	Transformer, 2nd i-f	65-0400
	C300A: condenser, trimmer	Part of Z301
	C301B: condenser, r-f filter	Part of Z301

SECTION 4

C400	Condenser, 250 mmf.	60-10245307*
C401	Condenser, image-suppressor trimmer (Part of Z401)	63-0071
C402	Condenser, .05 mf.	61-0111*
C403	Condenser, r-f trimmer	63-0064
C404	Condenser, .05 mf.	61-0101*
C405	Condenser, 100 mmf.	60-10105407*
C406	Condenser, .1 mf.	61-0104*
C407	Condenser, 250 mmf.	60-10245307*
C408	Condenser, 250 mmf.	60-10245307*
C409	Condenser, 437 mmf.	30-1220-22*
L400	Choke, antenna	65-0378
L402	Coil, oscillator tracking	65-0401
R400	Resistor, 1 meg.	66-5103340*
R401	Resistor, 10,000 ohms	66-3103340*
R402	Resistor, 22,000 ohms	66-3223340*
R403	Resistor, 270 ohms	66-1273340*
R404	Resistor, 220,000 ohms	66-4223340*
R405	Resistor, 10,000 ohms	66-3103340*
Z401	Manual inductive tuning assembly	76-2197
	L401A: coil, image suppressor (Part of Z401)	65-0406
	L401B: coil, r-f grid tuning (Part of Z401)	65-0407
	L401C: coil, oscillator grid tuning (Part of Z401)	65-0405

New part numbers have been given to the following items and apply only to the Model S-4625.

Description	Service Part No.
Dial hardware	
Bezel and stud assembly	76-2155
Dial	27-5922
Pointer	76-2475
Knob, tone control and nut cover	76-2171
Knob, tuning and volume	77-1043
Pilot-lamp assembly	
Shield	76-2338-1
Set mounting hardware	
Bolt, hook	56-3740
Lock washer	1W35046FA1

The following additional parts are supplied with the Model S-4625:

Dial hardware	
Rubber pad	54-4314

MISCELLANEOUS

Description	Service Part No.
Dial hardware	
Background	55-1139
Bezel and stud assembly	76-2156
Bracket, stud, and screen assembly	76-2189
Cord, drive (25-foot spool)	45-1459
Dial	27-5900
Felt	54-4267
Pointer	56-3234
Spring, pointer	57-1425FA1
Spring, retaining	28-9007FA1
Housing parts	
Connector, antenna	57-0591FA3
Cover, tube side	57-1547FC59
Cover, wiring side	57-1548FC59
Gasket, speaker	55-1045
Housing assembly	77-1177FC59
Inductive tuning assembly	76-2197
Bracket (inductive tuning unit mounting)	57-1787FA3
Coil assembly, r-f	65-0407
Coil assembly, image trap	65-0406
Coil assembly, oscillator	65-0405
Condenser, image-suppressor trimmer	63-0071
Core, iron (r-f)	57-1702
Core, iron (oscillator)	57-1703
Core assembly, iron (image trap)	77-0677
Drive spiral assembly	76-2165
Nut, backlash	57-1706
Pin, hair	57-1868FA11
Shaft, core guide	57-1672FA3
Spring, retaining (phosphor bronze)	57-1398
Pilot lamp assembly	
Bracket	57-1404FA3
Shield	76-2339
Socket assembly	76-1679
Set mounting hardware	
Bolt, hook	97-0135FA3
Nut	97-0229FA3
Nut, wing	1W23750FA3
Socket, tube	27-6138*
Socket, vibrator	27-6153
Speaker-mounting hardware	
Bolt	W1582FA3
Lockwasher	1W24257FA1
Nut	1W19988FA3
Suppression parts	
Braid, copper (bonding)	95-0073
Condenser, generator	30-4632
Distributor choke assembly	77-0947
Ground strap	77-0336
Ground strap, fender	77-0966
Nipple, distributor suppressor	57-7159
Screw, ground strap	1W19828FA3
Suppressor, distributor (high-voltage)	33-1333
Washer, brass	2W54094

Description	Service Part No.
Speed nut	1W56913FE7
Moulding	56-3739
Speaker mounting hardware	
Gasket	55-1045
Suppression parts	
Bolt, heater-cable-clamp	1W10636FA3
Condenser, ignition-coil	30-4007-1
Ground strap, heater-cable	76-2505
Ground strap, battery-cable	76-2557
Ground strap, windshield-wiper-motor	76-2556
Nut, heater-cable-clamp	1W19988FA3

Suppression parts in the Model S-4624 list that are not used in Model S-4625 are:

Distributor filter assembly	77-0947
Ground strap, muffler	77-0336
Ground strap, fender	77-0966

©John F. Rider

MODEL S4824,
Studebaker

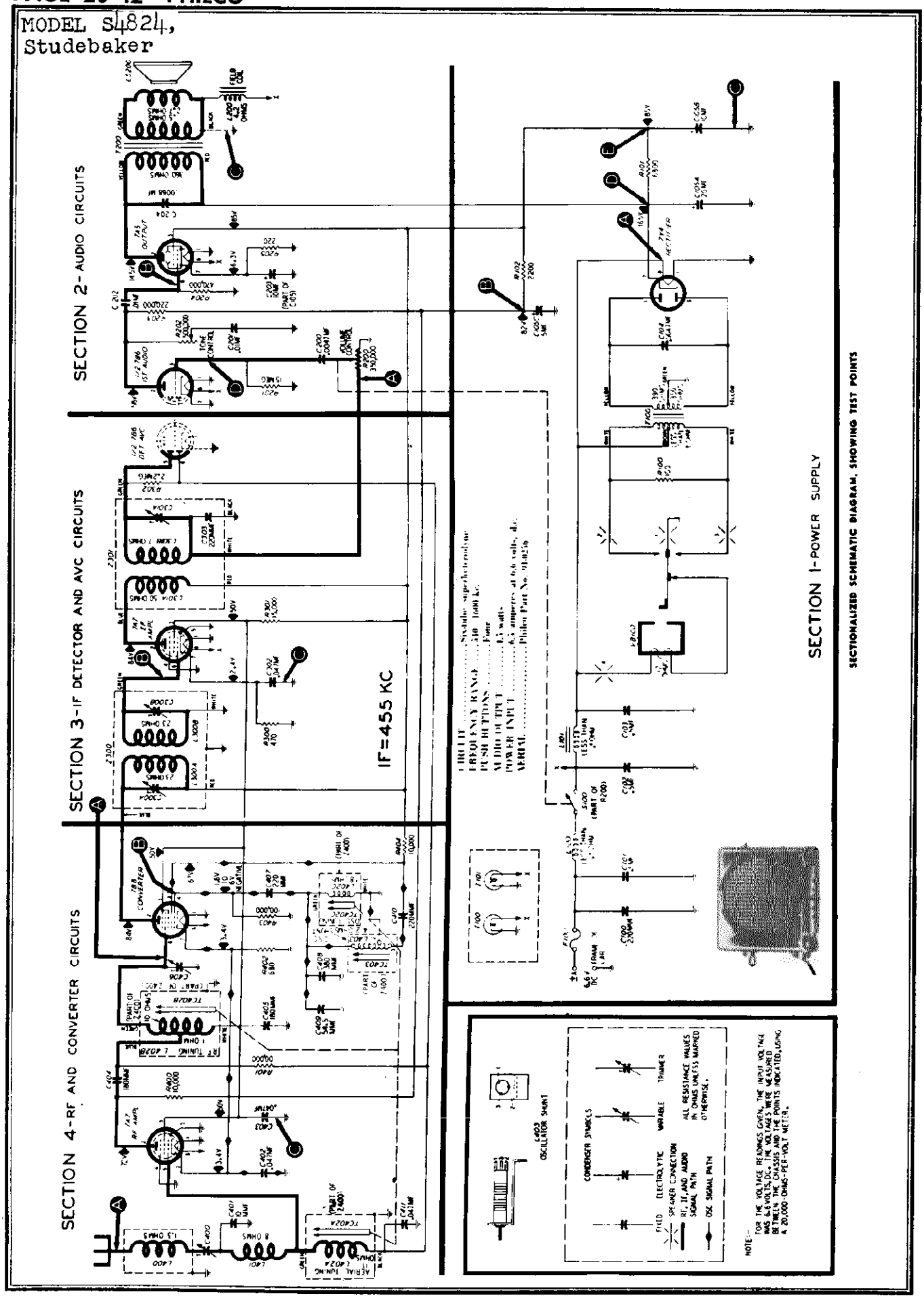

©John F. Rider

©John F. Rider

ALIGNMENT PROCEDURE

OUTPUT METER — Connect across voice-coil terminals.

SIGNAL GENERATOR — Connect ground lead to chassis; connect output lead as indicated in chart. Use modulated output.

RADIO CONTROLS — Set volume control to maximum, and tone control fully counterclockwise.

OUTPUT LEVEL — During alignment, adjust signal-generator output to maintain output-meter indication below 1 volt.

DUMMY AERIAL — For steps 2 and 3, connect generator output lead through 22-mmf. condenser to aerial receptacle; connect 30-mmf. condenser between receptacle and chassis.

IMPORTANT! The above instructions for the dummy aerial must be carefully followed if the radio is to perform at its best after being reinstalled in the car.

STEP	SIGNAL GENERATOR		RADIO		ADJUST
	CONNECTIONS TO RADIO	DIAL SETTING	DIAL SETTING	SPECIAL INSTRUCTIONS	
1	Through .05-mf. condenser to aerial receptacle.	455 kc.	1600 kc.	Adjust, in order given, for maximum output.	C301A — 2nd i-f sec. C300B — 1st i-f sec. C300A — 1st i-f pri.
2	Through dummy aerial.	580 kc.	580 kc.	Adjust for maximum while rocking tuning control. (See NOTE below.)	TC403 — Osc. padding
3	Same as step 2.	1400 kc.	1400 kc.	Adjust for maximum.	C406 — R.f. (shunt) C400 — Aerial (series)
4	Repeat steps 2 and 3 until no further improvement is obtained.				
5	After reinstalling radio in car, with aerial connected, adjust C400 for maximum output from weak station near 1400 kc.				

NOTE: If a satisfactory peak cannot be obtained, proceed to step 3

TOP VIEW, SHOWING TRIMMER AND TUNING-CORE LOCATIONS

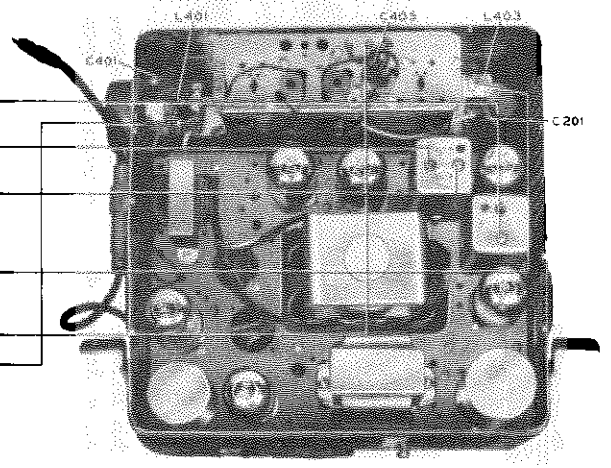

SETTING PUSH BUTTONS

Any one of the four station push buttons may be set for any frequency within the broadcast band.

1. Turn on the power, and allow the radio to warm up for fifteen minutes.

2. Push the button in, and tune in the desired station by pulling out slightly on the knurled front end of the button and then turning; turning the knurled end causes the dial pointer to move, indicating the frequency to which the circuits are turned.

3. Repeat the adjustment for each button.

TROUBLE-SHOOTING *Procedure*

For rapid trouble shooting, the radio circuit is divided into four sections, as follows:

Section 1—the power supply
Section 2—the audio circuits
Section 3—the i-f, detector, and a-v-c circuits
Section 4—the r-f and converter circuits

Test points are specified for each section, and are indicated in the sectionalized schematic diagram. The trouble-shooting procedure given for each section includes a simplified test chart and a bottom view of the chassis showing the locations of the test points and the components of that section.

In each chart, the first step is a master check for determining whether trouble exists in that section, without going through the entire chart.

Failure to obtain the "NORMAL INDICATION" in any given step indicates trouble in the circuit under test.

After isolating the trouble to a single stage, the defect is located by: first, testing the tube; second, measuring tube electrode voltages; third, measuring circuit resistances; fourth, substituting condensers. The trouble revealed should be corrected before testing further.

Preliminary Checks

To avoid possible damage to the radio, the following preliminary checks should be made before connecting the radio to a source of power.

1. Inspect both the top and the bottom of the chassis. Make sure that all tubes and the vibrator are secure in the proper sockets, and look for any broken or shorted connections, burned resistors, a blown fuse, or other obvious indications of trouble.

2. Measure the resistance between B+ (pin 7 of 7Y4 rectifier tube) and the chassis. When the ohmmeter test leads are connected in the proper polarity, the highest resistance reading will be obtained. If the reading is lower than 2500 ohms, check condenser C105A for leakage or short.

NOTE: The resistance value above, which is much lower than normal, does not represent a quality check of this condenser; the value given is the lowest at which the rectifier will operate safely while the voltage tests of Section 1 (power supply) are performed.

3. If the fuse is blown, check the vibrator before installing a new fuse; if the vibrator is defective, check the buffer condenser, C104, before installing a new vibrator.

MODEL S4824,
Studebaker

TROUBLE SHOOTING

Section 3 — I-F, DETECTOR, AND A-V-C CIRCUITS

For the tests in this section, use an r-f signal generator, with modulated output, set at 455 kc. Connect the generator ground lead to the chassis, test point C; connect the output lead through a .1-mf. condenser to the test points indicated in the chart.

Set the volume control to maximum, and the tone control fully clockwise. Set the radio tuning control to the extreme low-frequency end of the dial.

If the "NORMAL INDICATION" is obtained in step 1, proceed with the tests for Section 4 (r-f and converter circuits); if not, isolate and correct the trouble in this section.

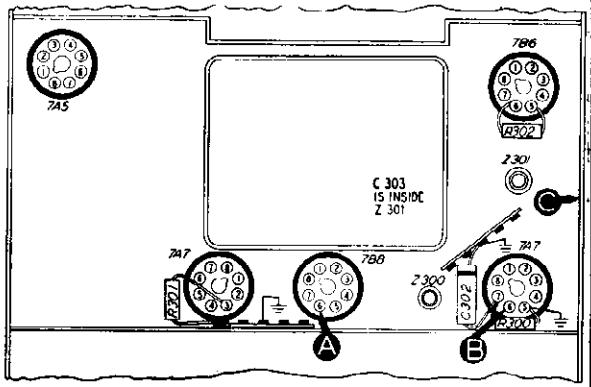

TP-4784C

BOTTOM VIEW, SHOWING SECTION 3 TEST POINTS

Since the circuit location of test point A for this section is in Section 4, the effectiveness of step one as a master check is dependent upon the condition of certain parts in Section 4; these parts are listed below under "POSSIBLE CAUSE OF ABNORMAL INDICATION."

STEP	TEST POINT	NORMAL INDICATION	POSSIBLE CAUSE OF ABNORMAL INDICATION
1	A	Loud, clear signal with weak signal input.	Trouble in this section. Isolate by the following tests.
2	B	Loud, clear signal with strong signal input.	Defective: 7A7. Open: L301A, L301B, C301A, R300, R301. Shorted: C300B, L301A, L301B, C301A.
3	A	Same as step 1.	Defective: 7B8*. Open: C300A, C300B, L300A, L300B, R402*. Shorted: C300A, L300A, L300B, C404*, C406*.

*This part, located in another section, may cause abnormal indication in this section.

TROUBLE SHOOTING

Section 4 — R-F AND CONVERTER CIRCUITS

For the tests in this section, with the exception of the oscillator test, use an r-f signal generator, with modulated output. Connect the generator ground lead to the chassis, test point C; connect the output lead through a .1-mf. condenser to the test points indicated in the chart.

Set the radio volume control to maximum, and the tone control fully clockwise. Set the radio tuning control and signal-generator frequency as indicated in the chart.

If the "NORMAL INDICATION" is not obtained in step 1, isolate the trouble by following the remaining steps.

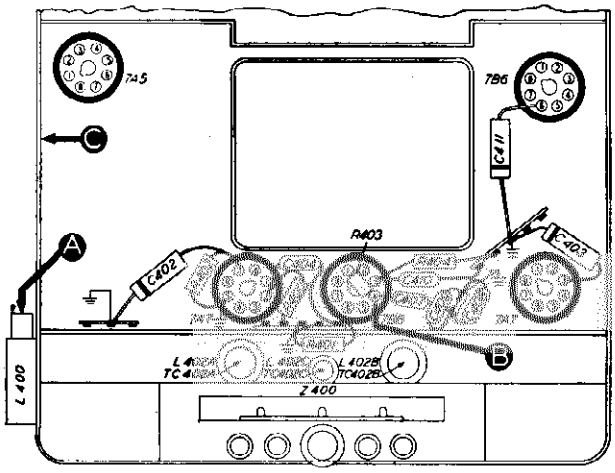

TP-4784D

BOTTOM VIEW, SHOWING SECTION 4 TEST POINTS

STEP	TEST POINT	SIGNAL GEN. FREQUENCY	RADIO TUNING	NORMAL INDICATION	POSSIBLE CAUSE OF ABNORMAL INDICATION
1	A	1000 kc.	Tune to signal.	Loud, clear signal with weak signal input.	Trouble in this section. Isolate by the following tests.
2	B (Osc. test; see note below.)			Negative 1.6 to 6 volts.	Defective: 7B8. Open: R403, C407, L402C, L403, C410, R404. Shorted: C407, C408, C409, C410, L402C, L403.
3	A	1000 kc.	Tune to signal.	Same as step 1.	Defective: 7A7. Open: L400, C400, L401, L402A, R400, C404, L402B, C405. Shorted: C401.
Listening Test: Distortion may be caused by open R302, R401, or C411.					

OSCILLATOR TEST: Connect the positive lead of a high-resistance voltmeter to the chassis; connect the prod end of the negative lead through a 100,000-ohm isolating resistor to the oscillator grid (pin 4) of the 7B8, test point B. Proper operation of the oscillator is indicated by negative voltages of approximately the values given in the chart (measured with 20,000-ohms-per-volt meter) throughout the tuning range.

MODEL S4824,
Studebaker

TROUBLE SHOOTING

Section 1 — POWER SUPPLY

Make the tests for this section with a d-c voltmeter; connect the leads between the chassis, test point C, and the test points indicated in the chart.

The voltage readings given were taken with a 20,000-ohms-per-volt meter, with an input voltage of 6.6 volts, d.c.

Set the volume control to minimum, and the tone control fully clockwise.

Follow the steps in the order given. If the "NORMAL INDICATION" is obtained in step 1, (a) and (b), proceed with the tests for Section 2 (audio circuits); if not, isolate and correct the trouble in this section.

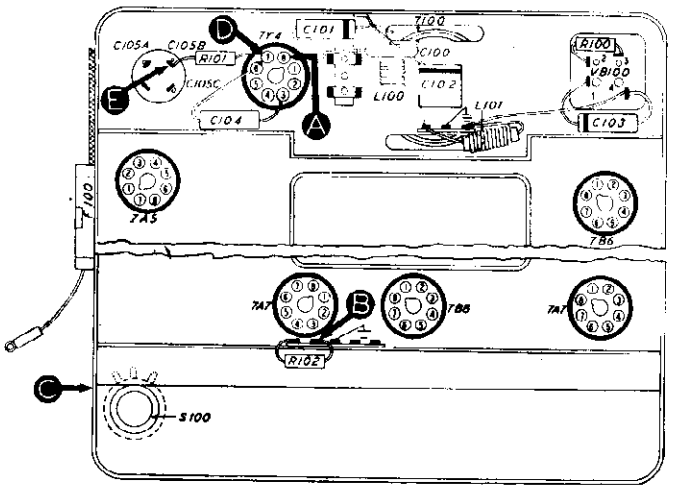

TP-4784A

BOTTOM VIEW, SHOWING SECTION 1 TEST POINTS

STEP	TEST POINT	NORMAL INDICATION	ABNORMAL INDICATION	POSSIBLE CAUSE OF ABNORMAL INDICATION
1 (a) 1 (b)	A B	6.6v 82v		Trouble in this section. Isolate by the following tests.
2	A	6.6v	No voltage Low voltage	Open: FS100, L100, S100, L101. Shorted: C100, C101, C102, C103. Leaky: C100, C101, C102, C103.
3	D	165v	No voltage Low voltage High voltage	Defective: 7Y4, VB100. Open: T100. Defective: 7Y4. Open: C105A, T100. Leaky: C105A. Shorted or leaky: C105B, C105C. Open: R101, R205*.
4	E	85v	No voltage Low voltage High voltage	Open: R101. Shorted: C105B. Leaky: C105B, C105C. Changed resistance: R101. Open: R102, R205*, T200*.
5	B	82v	No voltage Low voltage	Open: R102. Shorted: C105C. Leaky: C105C. Changed resistance: R102.
Listening Test: Abnormal hum may be caused by open C105B or C105C.				

This part, located in another section, may cause abnormal indication in this section.

TROUBLE SHOOTING

Section 2 — AUDIO CIRCUITS

For the tests in this section, use an audio-frequency signal generator. Connect the generator ground lead to the chassis, test point C; connect the output lead through a .1-mf. condenser to the test points indicated in the chart.

Set the volume control to maximum, and the tone control fully clockwise.

If the "NORMAL INDICATION" is obtained in step 1, proceed with the tests for Section 3 (i-f, detector, and a-v-c circuits); if not, isolate and correct the trouble in this section.

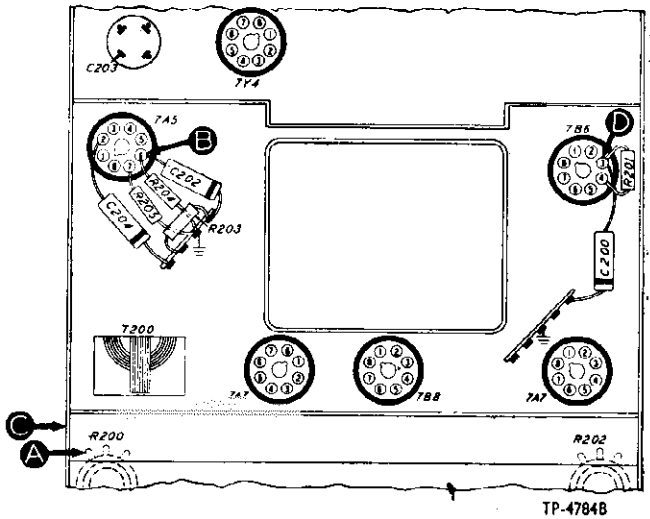

TP-4784B

BOTTOM VIEW, SHOWING SECTION 2 TEST POINTS

STEP	TEST POINT	NORMAL INDICATION	POSSIBLE CAUSE OF ABNORMAL INDICATION
1	A	Loud, clear signal with weak signal input.	Trouble in this section. Isolate by the following tests.
2	B	Clear signal with strong signal input.	Defective: 7A5, LS200. Open: R205, T200, L200. Shorted: C202, C204, C201 (rotate R202 through range).
3	D	Same as step 1.	Defective: 7B6. Open: C202, R203. Shorted: C303*.
4	A	Same as step 1.	Open: R200 (rotate through range), C200.
Listening Test: Distortion may be caused by open R201, R204, or by shorted or leaky C200, C202.			

*This part, located in another section, may cause abnormal indication in this section.

© John F. Rider

MODEL S4824,
Studebaker

Circuit Description

Studebaker-Philco Model S4824, a custom-built auto radio, is a six-tube superheterodyne with self-contained speaker. Permeability tuning is used for all main circuits. Four push buttons provide mechanical automatic tuning by actuating the pantograph tuning mechanism.

The circuit includes a 7A7 r-f amplifier, a 7B8 converter, a 7A7 i-f amplifier, a 7B6 detector-a.v.c.-1st audio amplifier, and a 7A5 output amplifier. The power supply has a non-synchronous vibrator and a 7Y4 rectifier.

The lower section of L402B, together with C405 and incidental circuit constants, comprises a series-resonant circuit at image frequencies; since this circuit is directly across the output circuit of the r-f amplifier, the image-frequency component of the output is by-passed to ground. L402B as a whole, with its associated components, functions as an r-f autotransformer, of which the output side is resonant at signal frequencies.

SECTION 1
POWER SUPPLY

Reference Symbol	Description	Service Part No.
C100	Condenser, r-f by-pass, 220 mmf.	62-122001001*
C101	Condenser, audio by-pass, .5 mf.	61-0137*
C102	Condenser, audio by-pass, .5 mf.	61-0137*
C103	Condenser, audio by-pass, .5 mf.	61-0137*
C104	Condenser, buffer, .0047 mf.	45-3500-7*
C105	Condenser, electrolytic, 4-section	61-0150
C105A	Condenser, filter, 20 mf., 350v	Part of C105
C105B	Condenser, filter, 10 mf., 350v	Part of C105
C105C	Condenser, filter, 5 mf., 300v	Part of C105
F100	Fuse, line, 14 amperes	45-2559
L100	Choke, "A"	32-1644
L101	Choke, hash filter	32-4170
R100	Resistor, damping, 100 ohms	66-1104340*
R101	Resistor, filter, 6800 ohms	68-2684340*
R102	Resistor, filter, 2200 ohms	68-2223340*
S100	Switch, on-off	Part of R200
T100	Transformer, power	65-0404
I100	Lamp, pilot	34-2064
I101	Lamp, pilot	34-2064
VB100	Vibrator	83-0026

SECTION 2
AUDIO CIRCUITS

C200	Condenser, d-c blocking, .0047 mf.	45-3502
C201	Condenser, tone control, .01 mf.	61-0120*
C202	Condenser, d-c blocking, .01 mf.	61-0120*
C203	Condenser, cathode by-pass, 10 mf., 25v.	Part of C105
C204	Condenser, tone compensation, .0068 mf.	45-3500-7*
R200	Volume control (with power switch) 350,000 ohms	33-5556-4
R201	Resistor, grid return, 15 megohms	66-5153340*
R202	Tone control, 500,000 ohms	33-5556-5
R203	Resistor, plate load, 220,000 ohms	66-4223340*
R204	Resistor, grid return, 470,000 ohms	66-4473340*
R205	Resistor, cathode bias, 220 ohms	66-1223340*
LS200	Speaker	36-1609-3
L200	Speaker field coil	Part of LS200
T200	Transformer, output	65-0395

SECTION 3
I-F, DETECTOR, AND A-V-C CIRCUITS

C300A	Condenser, trimmer	Part of Z300
C300B	Condenser, trimmer	Part of Z300
C301A	Condenser, trimmer	Part of Z301
C302	Condenser, cathode by-pass, .047 mf.	61-0122*
C303	Condenser, i-f filter (part of Z301), 220 mmf.	62-122001001*
L300A	Transformer primary, 1st i-f	Part of Z300
L300B	Transformer secondary, 1st i-f	Part of Z300
L301A	Transformer primary, 2nd i-f	Part of Z301
L301B	Transformer secondary, 2nd i-f	Part of Z301
R300	Resistor, cathode bias, 470 ohms	66-1473340*
R301	Resistor, screen dropping, 15,000 ohms	66-3153340*
R302	Resistor, a-v-c filter, 2.2 megohms	66-5223340*
Z300	Transformer, 1st i-f	65-0399
Z301	Transformer, 2nd i-f	65-0400

SECTION 4
R-F AND CONVERTER CIRCUITS

C400	Condenser, aerial trimmer	31-6472
C401	Condenser, aerial shunt, 10 mmf.	62-110009001*
C402	Condenser, cathode by-pass, .047 mf.	61-0122*
C403	Condenser, screen by-pass, .047 mf.	61-0122*

SECTION 4 (Continued)
R-F AND CONVERTER CIRCUITS

Reference Symbol	Description	Service Part No.
C404	Condenser, d-c blocking, 180 mmf.	60-10205307*
C405	Condenser, image tracking, 180 mmf.	60-10205307*
C406	Condenser, r-f trimmer (part of Z400)	63-0053
C407	Condenser, d-c blocking, 220 mmf.	62-122001001*
C408	Condenser, osc. shunt, 380 mmf.	30-1220-37
C409	Condenser, osc. shunt, 54.5 mmf.	61-0149
C410	Condenser, d-c blocking, 220 mmf.	62-122001001*
C411	Condenser, a-v-c filter, .047 mf.	61-0122*
L400	Choke, aerial	65-0459
L401	Choke, aerial	65-0437
L402A	Coil, aerial tuning (part of Z400)	65-0443-10
L402B	Coil, r-f tuning (part of Z400)	65-0443-11
L402C	Coil, osc. tuning (part of Z400)	65-0443-12
L403	Coil, osc. shunt (part of Z400)	65-0229-1
R400	Resistor, plate load, 10,000 ohms	66-3103340*
R401	Resistor, grid return, 100,000 ohms	66-4103340*
R402	Resistor, cathode bias, 680 ohms	66-1683340*
R403	Resistor, osc. grid bias, 100,000 ohms	66-4103340*
R404	Resistor, osc. anode feed, 10,000 ohms	66-3103340*
TC402A	Tuning core, aerial (part of Z400)	56-3812-4
TC402B	Tuning core, r-f (part of Z400)	56-3812-4
TC402C	Tuning core, osc. (part of Z400)	56-3812-4
TC403	Tuning core, osc. shunt (part of L403)	57-0996
Z400	Pantograph tuning assembly	77-0589-3

MISCELLANEOUS

Description	Service Part No.
"A" Lead	
"A"-lead assembly (fuse to set)	76-2070-35
"A" lead	77-0638
Grommet, "A" lead	27-4676
Bezel Assembly	
Bezel-and-stud assembly	76-2156-1
Dial scale	27-5997
Spring, dial mounting	28-9007
Housing Parts	
Cover, tube side	57-1547FC59
Cover, wiring side	57-1548FC59
Gasket, speaker	55-1045
Housing assembly	77-1039FC59
Knobs	
Control-knob assembly (tone and volume)	77-1043
Nut-cover assembly	78-2171
Manual-tuning knob	57-2379
Manual-tuning-knob extension	58-3867
Push-button-knob assembly	76-1984
Spring, manual-tuning knob	57-1628
Spacer, manual-tuning knob	57-1669
Pilot-lamp assembly	
Pilot-lamp socket and light filter, l.h.	76-2496
Pilot-lamp socket and light filter, r.h.	76-2497
Set Mounting Parts	
Bolt, hook	56-374
Nut, wing	1W23750FA3
Socket, tube (loktal)	27-6138
Socket, vibrator	27-6153
Suppression Parts	
Braid, copper	97-0073
Distributor suppressor	33-4170
Nipple, distributor cable	54-7159
Strap, grounding (battery)	78-2557
Strap, grounding (windshield-wiper motor)	76-2556
Tuning-Unit Parts (Pantograph Tuning Assembly)	
Pointer assembly	78-2482
Push-button spring	57-1651
Latch-bar spring	57-1650
Tuning unit	77-0588-3

©John F. Rider

MODEL 46-131

TESTS TO ISOLATE TROUBLE WITHIN SECTION 1

Make all tests for this section with a volt-ohmmeter, using the 0-250v. d-c range. Voltages given were taken with the set operating and drawing normal current from battery. See figures 3 and 4 for location of test points.

Test Points	Normal Reading	Possible Cause of Abnormal Reading
B to C (chassis)	79 volts	No voltage indicates open battery cable, defective switch S100, open resistor R100, shorted condenser C100. Low voltage indicates nearly dead battery, defective resistor R100, leaky condenser C100, or excessive plate or screen current by one or more tubes.
A to C	1.4 volts	No voltage indicates open battery cable or defective switch S100.
D to C	6 volts	Deviation in this voltage indicates change in value of resistor R100, or abnormal current flow because of defective parts in sections 2, 3, or 4.

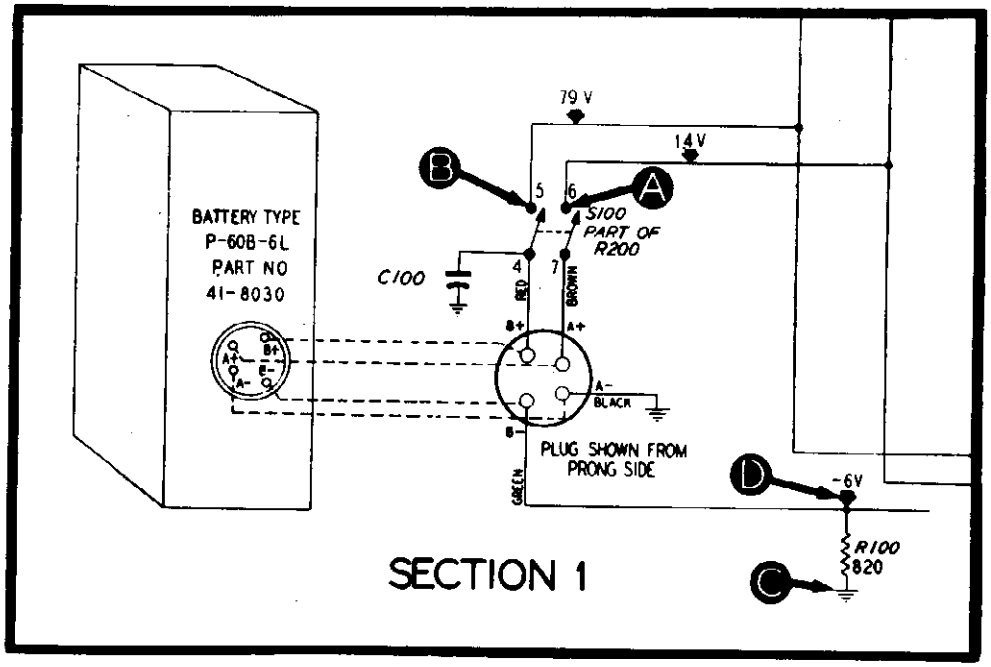

Figure 3. Section 1 schematic.

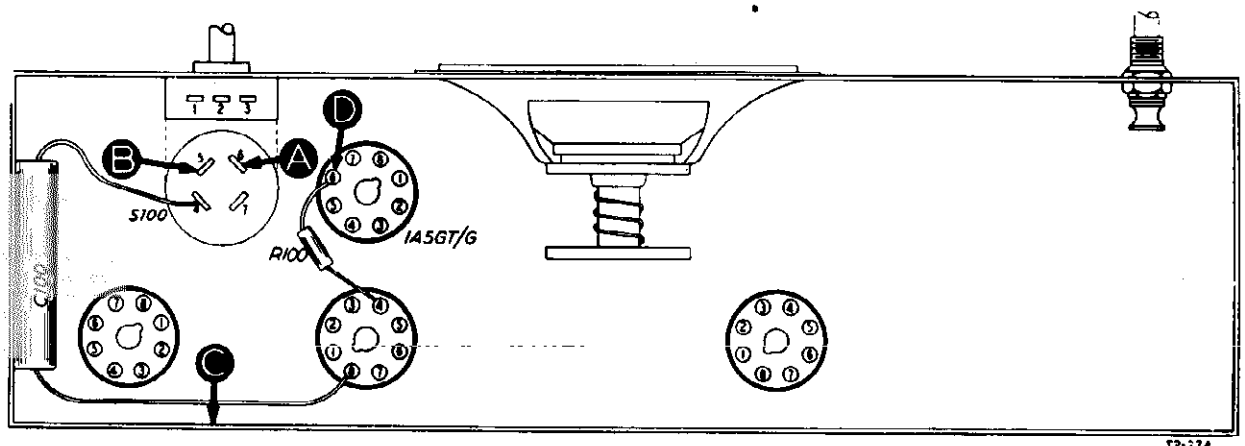

Figure 4. Bottom view, showing section 1 test points.

© John F. Rider

TESTS TO ISOLATE TROUBLE WITHIN SECTION 2

For all tests in this section use the audio range of the signal generator. Connect the generator output lead through a condenser (.01 to .25 mf.) to points indicated; connect the ground lead to receiver chassis. Adjust signal generator output for clear, audible signal.

Test Points	Normal Indication	Possible Cause of Abnormal Indication
E to C (chassis)	Clear, audible signal from speaker (receiver volume control at approximately three-fourths maximum).	No signal indicates defective 1A5GT/G, defective output transformer T200 or speaker LS200. Low and greatly distorted signal indicates leakage in condensers C202 or C203.
F to C	Clear, audible signal, same as preceding test.	No signal indicates open condenser C202, or shorted condenser C201; distortion indicates leakage in condenser C202, or open resistor R203.
G to C	Clear, audible signal with noticeable increase over that obtained in previous tests.	No signal indicates defective 1LH4, or open resistor R202. Distortion indicates defective 1LH4.
H to C	Clear, audible signal, same as preceding test.	No signal indicates open condenser C200; noisy or otherwise distorted signal indicates defective volume control R200. Rotate control through entire range for complete check.

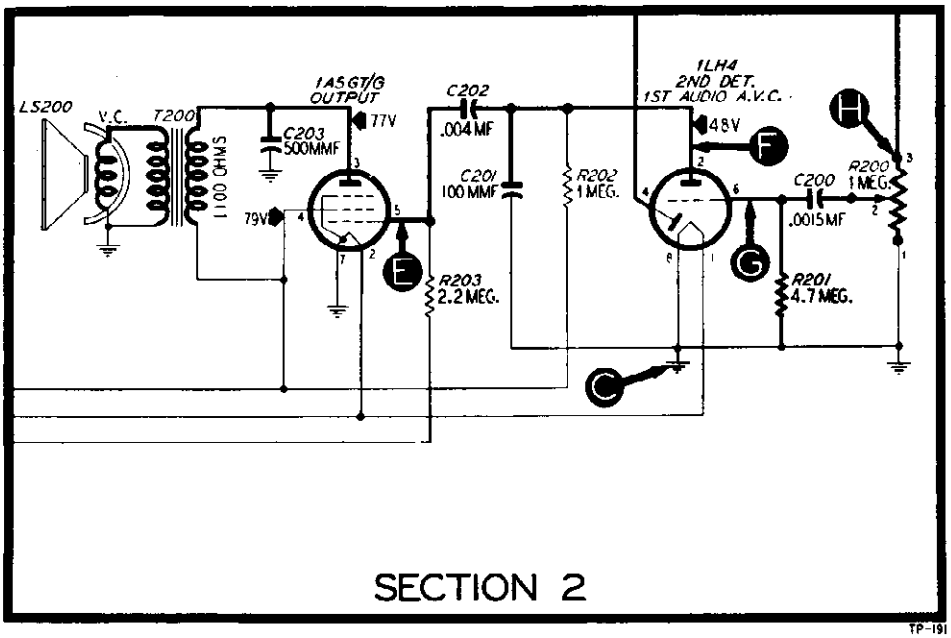

Figure 5. Section 2 schematic.

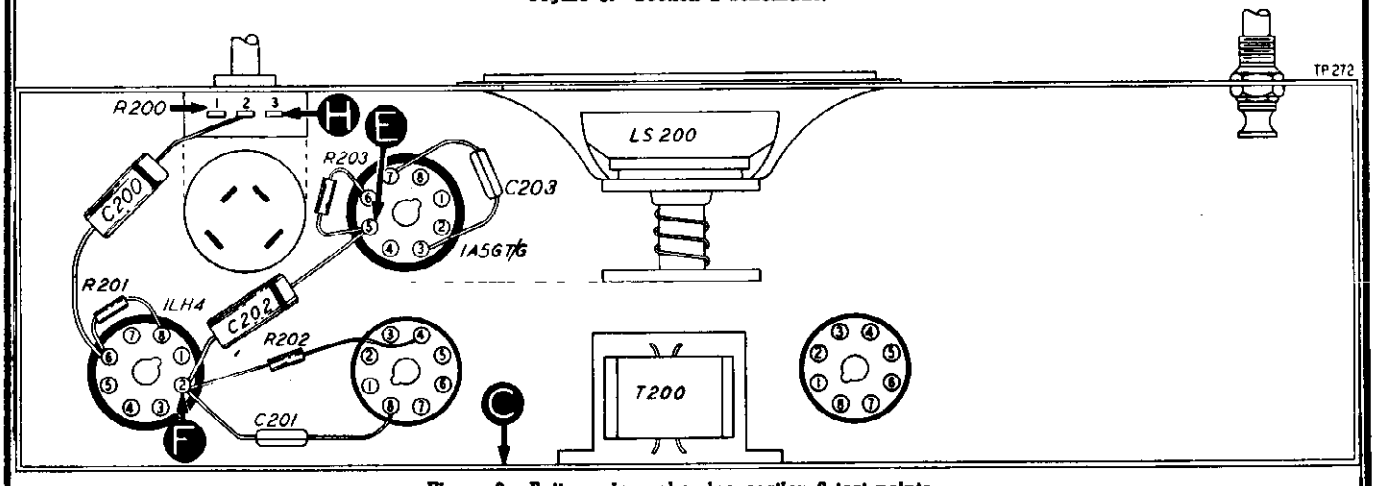

Figure 6. Bottom view, showing section 2 test points.

© John F. Rider

MODEL 46-131

TESTS TO ISOLATE TROUBLE WITHIN SECTION 3

For all tests in this section, set the signal generator to 455 kc., modulation on. Connect the generator output lead through a condenser (.01 to .25 mf.) to the points indicated; connect the ground lead to receiver chassis. Adjust signal generator output for clear, audible signal.

Test Points	Normal Indication	Possible Cause of Abnormal Indication
J to C (chassis)	Audible signal from speaker.	No signal, or very weak signal, indicates defective 1LN5 tube, defective or misaligned I-f transformer assembly Z301, or defective diode section of 1LH4 tube.
K to C	Audible signal from speaker.	No signal indicates defective or misaligned I-f transformer assembly Z300.

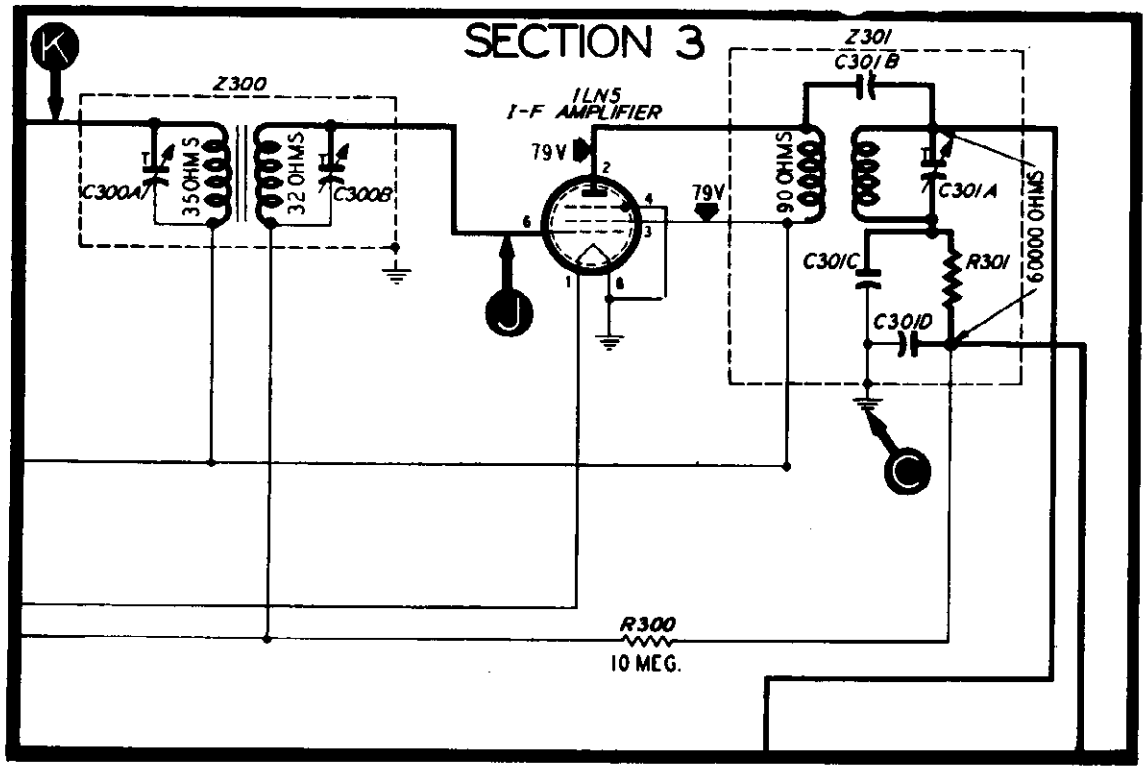

Figure 7. Section 3 schematic.

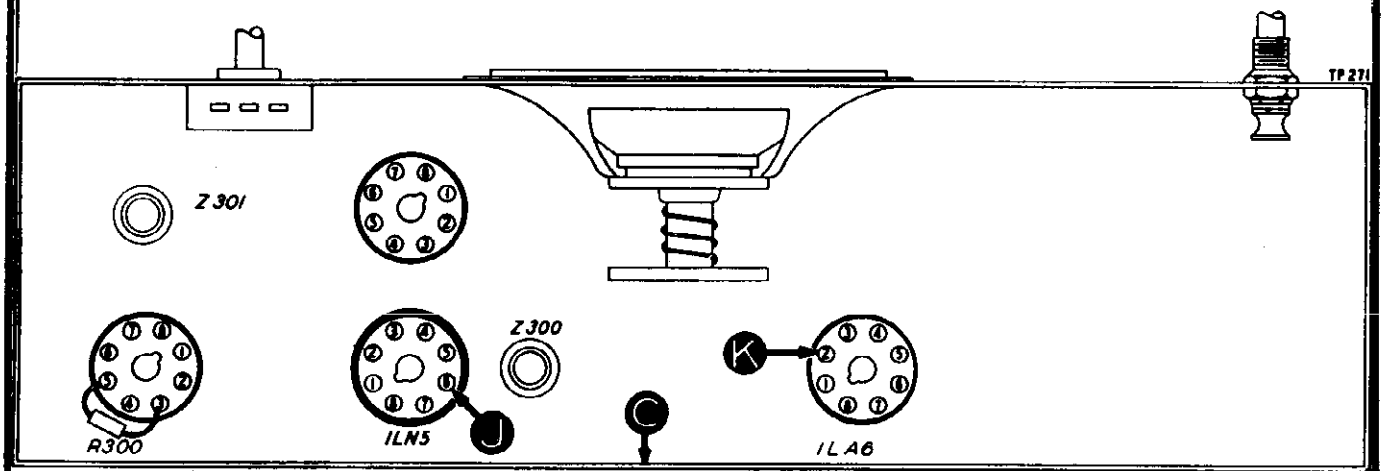

Figure 8. Bottom view, showing section 3 test points.

© John F. Rider

TESTS TO ISOLATE TROUBLE WITHIN SECTION 4

IMPORTANT: Before applying a test signal to this section, make a preliminary check by rotating the tuning control through its entire range. Any scraping noise heard in the speaker indicates bent tuning condenser plates, dirty wiper contacts or dirt between the condenser plates. These conditions should be remedied before proceeding with the tests. Then connect the signal-generator output lead through a condenser (.01 to .25 mf.) to indicated test points and the generator ground lead to "C" (receiver chassis). For best results, check operation first at 540 kc. and then at 1700 kc.

Test Points	Normal Indication	Possible Cause of Abnormal Indication
L to C (chassis)	Audible signal from speaker.	No signal indicates defective 1LA6 tube, defective oscillator transformer T401, shorted plates in oscillator section of condenser C401, shorted condenser C405, or defective resistor R401 or R402.
M to C	Audible signal from speaker.	No signal indicates defective antenna transformer T400, or shorted plates in antenna section of condenser C401.

OSCILLATOR GRID BIAS VOLTAGE. Ground test point "L", connect a voltmeter (20,000-ohms-per-volt, 10-volt scale) between "N" (—) and "C" (+), and rotate the tuning control throughout its entire range. The voltage reading should not fall below 1.5 volts throughout. Insufficient voltage indicates malfunctioning, and the components listed in the first test in the above chart should be checked in the order given.

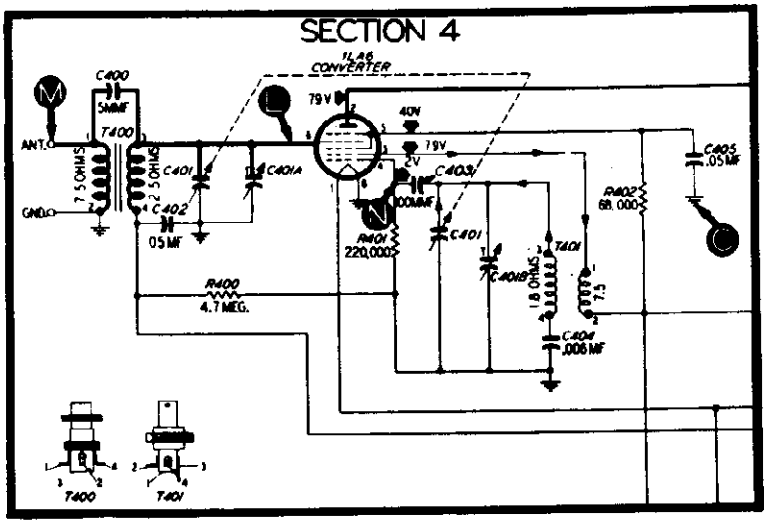

Figure 9. Section 4 schematic.

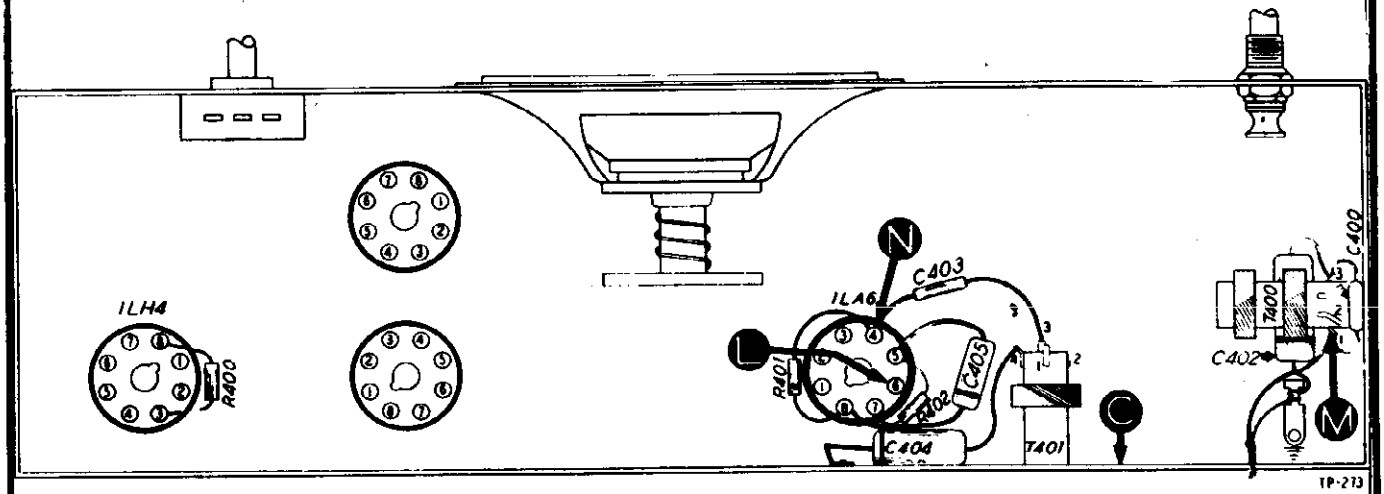

Figure 10. Bottom view, showing section 4 test points.

© John F. Rider

MODEL 46-131

CONNECTING ALIGNING EQUIPMENT

OUTPUT METER. Connect to voice coil lugs on rear of speaker, as shown in figure 11.

SIGNAL GENERATOR. Use a 100-mmf. condenser to couple the signal-generator output lead to the receiver. Adjust the output of the signal generator to give a signal strength sufficient to cause a readable deflection of the output meter, using the range on the meter which best indicates small variations in output. Reduce the output of the signal generator if the pointer of the output meter goes off scale as alignment progresses.

PROCEDURE. Turn receiver volume control to three-fourths maximum and adjust all trimmers, in the order listed, for maximum output.

ALIGNMENT CHART

SIGNAL GENERATOR		RECEIVER		
Connections to Receiver	Dial Setting (kc.)	Dial Setting (kc.)	Special Instructions	Adjust Trimmers in Given Order
Stator plate terminal, antenna section of tuning condenser, and chassis.	455	540	Turn C300B fully clockwise. Turn tuning condenser plates to fully meshed position. Make sure that dial pointer is set to the left index mark (the first small hole stamped 3¾ inches from left end of scale plate reflector). This setting corresponds to a dial setting of 540 kc.	C301A C300A C300B
Antenna lead and chassis.	1700	1700	Turn tuning condenser until dial pointer is on the first index mark (the first small hole 4⅛ inches from right end of the scale plate reflector).	C401B
Antenna lead and chassis.	1500	1500 (approx.)	Turn tuning condenser to position providing maximum reading on output meter.	C401A

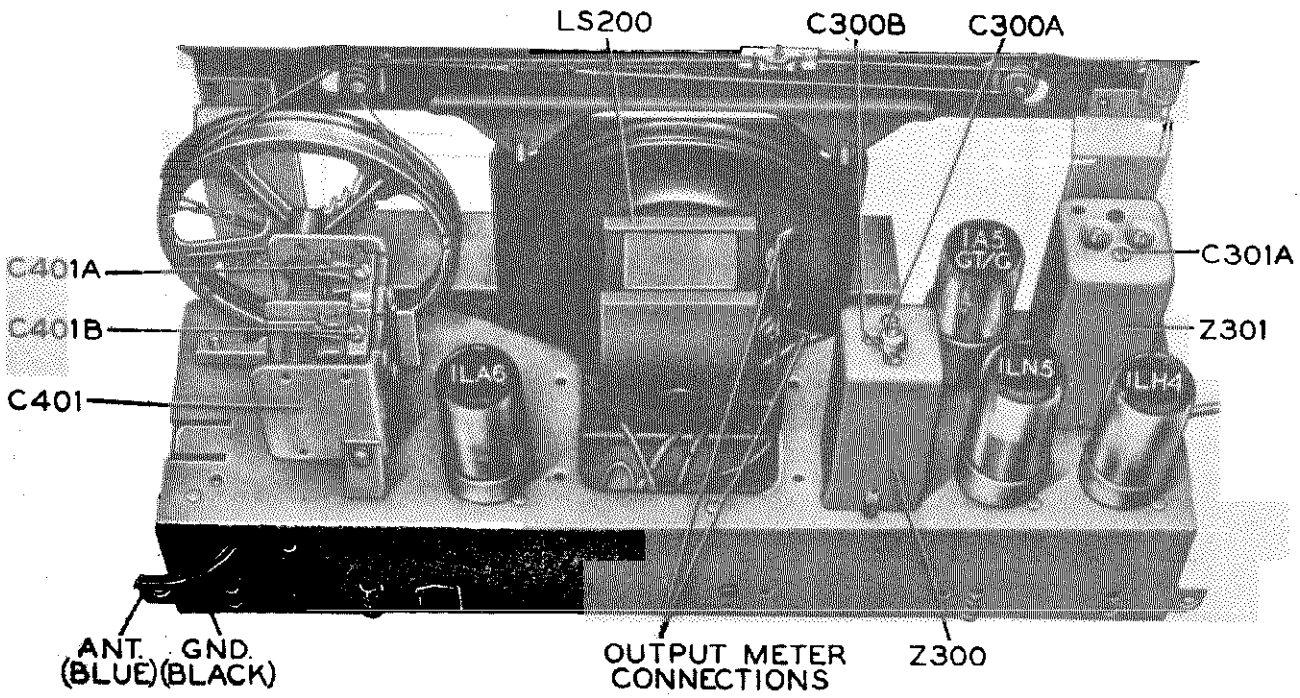

Figure 11. Top view, showing trimmer-condenser locations.

© John F. Rider

MODEL 46-131

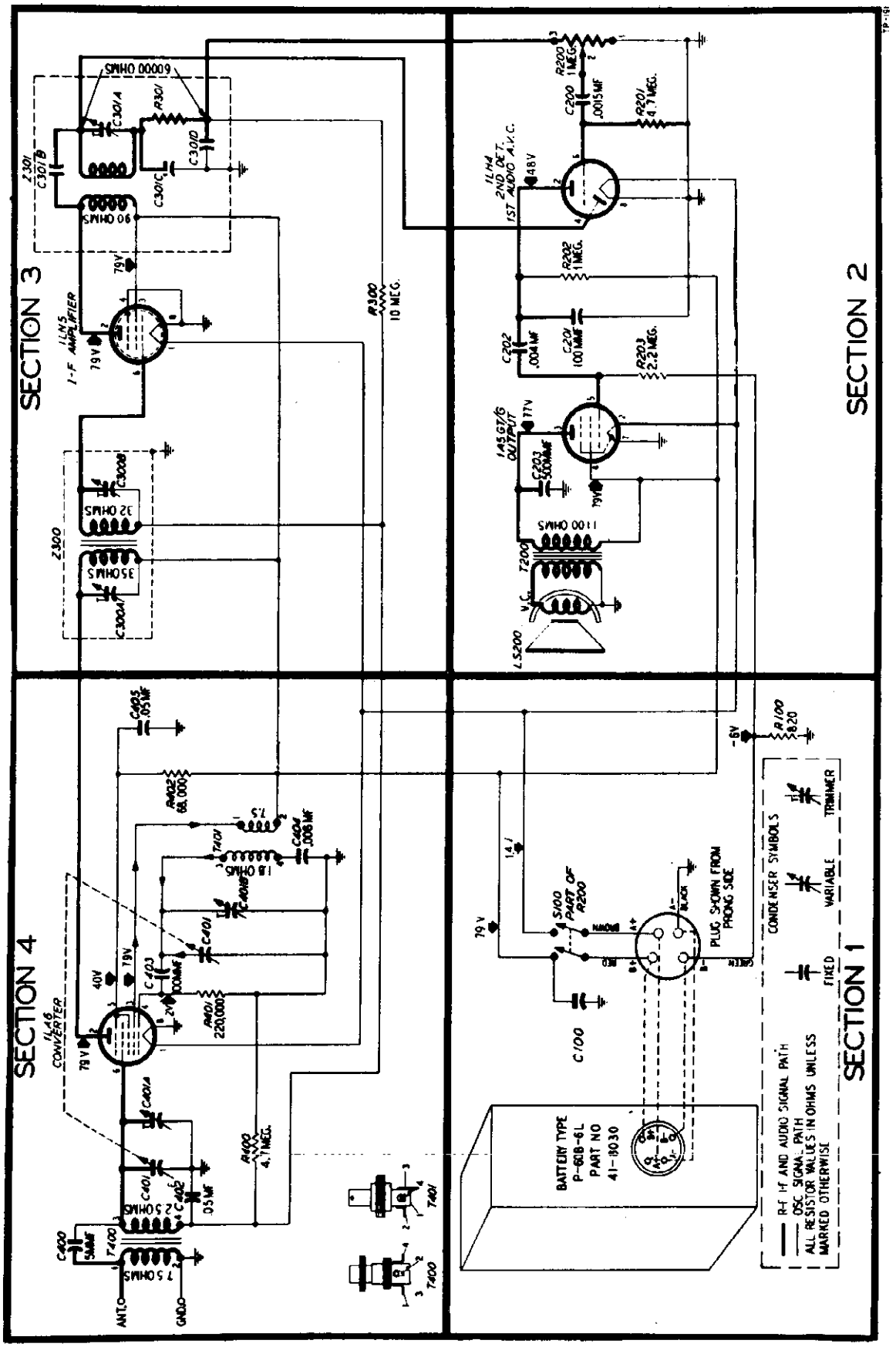

Figure 12. Complete schematic.

NOTE: All voltage, capacity and resistance values shown are average. The voltages shown were measured with a 20,000-ohms-per-volt meter between the indicated test points and C (chassis).

©John F. Rider

MODEL 46-131

Symbol designations used in the schematic and parts list are as follows:

C—condenser	S—switch
I—pilot lamp	T—transformer
LA—loop antenna	W—power cord
LS—loud speaker	and plug
R—resistor	Z—i-f transformer

NOTE: Parts marked with an asterisk (*) are general replacement items and will not be identical with those used on factory assemblies. Use only the "SERVICE PART NUMBER" shown in the parts list when ordering replacements.

REPLACEABLE PARTS LIST

SECTION 1

Reference Number	Description	Service Part No.
C-100	Condenser, electrolytic, 10 mf.	30-2540*
PL-100	Battery cable assembly	41-3709
R-100	Resistor, 820 ohms	66-1823340*
	S-100: switch	Part of R-200

SECTION 2

C-200	Condenser, .0015 mf.	30-4621
C-201	Condenser, 100 mmf.	60-10105407*
C-202	Condenser, .004 mf.	30-4623
C-203	Condenser, 500 mmf.	60-90505007
LS-200	Speaker	36-1507
R-200	Volume control, 1 meg.	33-5493
R-201	Resistor, 4.7 megs.	66-5473340*
R-202	Resistor, 1 meg.	66-5103340*
R-203	Resistor, 2.2 megs.	66-5223340*
T-200	Transformer, output	32-8240

SECTION 3

R-300	Resistor, 10 megs.	66-6101330*
Z-300	Transformer, 1st i-f	32-3966
	C-300-A: condenser, trimmer	Part of Z-300
	C-300-B: condenser, trimmer	Part of Z-300
Z-301	Transformer, 2nd i-f	32-3897
	C-301-A: condenser	Part of Z-301
	C-301-B: condenser, trimmer	Part of Z-301
	C-301-C: condenser	Part of Z-301
	C-301-D: condenser	Part of Z-301
	R-301: resistor	Part of Z-301

SECTION 4

C-400	Condenser, 5 mmf.	60-90505007
C-401	Condenser, tuning assembly	31-2641
	C-401-A: condenser, trimmer	Part of C-401
	C-401-B: condenser, trimmer	Part of C-401
C-402	Condenser, .05 mf.	30-4518*
C-403	Condenser, 100 mmf.	60-10105407*
C-404	Condenser, .006 mf.	30-4504*
C-405	Condenser, .05 mf.	30-4518*
R-400	Resistor, 4.7 megs.	66-5473340*
R-401	Resistor, 220,000 ohms	66-4223340*
R-402	Resistor, 68,000 ohms	66-3683340
T-400	Coil, antenna	32-3919
T-401	Coil, oscillator	32-4044

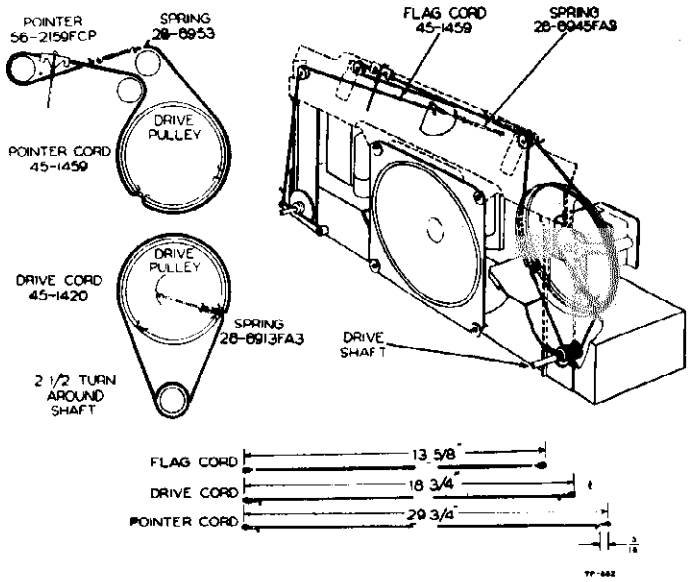

Figure 13. Drive cord installation details.

MISCELLANEOUS

Reference Number	Description	Service Part No.
	Antenna, ground cable	41-3699
	Cam assembly	76-1650
	Clamp, electrolytic condenser	56-1346
	Coil clip, oscillator coil mounting / antenna coil mounting	28-5002FE7
	Drive cord, flag drive (25-foot spool)	45-1459
	Drive cord, pointer drive (25-foot spool)	45-1459
	Drive cord, tuning condenser drive (25-foot spool)	45-1420
	Drive drum assembly	76-1651
	Grommet, tuning condenser mounting	27-4596
	Knob	54-4101
	Pointer	56-2159FCP
	Scale plate, flag and upright assembly	76-1652
	Screw, scale plate and upright assembly	1W19670FA3
	Screw and lockwasher, chassis mounting	1W32233FA3
	Socket, Loktal	27-6138*
	Socket, octal	27-6199*
	Spacer, speaker	26-2709
	Spacer, speaker mounting	1W29184
	Spacer, tuning condenser mounting	28-5665FA3
	Spring, flag drive	28-8945FA3
	Spring, spring wire	28-8953
	Spring, tuning condenser drive	28-8913FA3
	Stud, transfer lever mounting	1W29793
	Transfer lever assembly	76-1655
	Tuning shaft assembly	31-2640
	Washer, speaker mounting, steel	1W52237FA3
	Cabinet	10618
	Baffle and cloth assembly, 1/8" around speaker	40-8746
	Band, rubber	56-4025
	Cabinet, back	54-7100
	Grommet, scale bracket mounting	27-4596
	Pulleys	1W29740
	Scale, glass	27-5842
	Screw, chassis mounting	1W18678FA3
	Spacer, bracket-to-cabinet mounting	56-1307FA3
	Strap, right-hand	56-2672FA3
	Strap, left-hand	56-2671FA3
	Stud, back mounting	W2235-FA9
	Stud, baffle mounting	W2235-2FA9
	Washer, spring	56-1866

© John F. Rider

MODEL 46-132

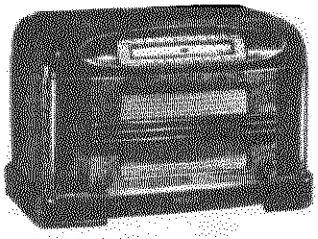

MODEL 46-132

SPECIFICATIONS

CABINET	Model 46-132 (wood, walnut finish)
CIRCUIT	Five-tube superheterodyne
FREQUENCY RANGE	540 to 1720 kc.
POWER INPUT	90 volts at 8 to 10 milliamperes (plate supply) 1.5 volts at .25 ampere (filament supply) From battery pack—Type P-60D-11L
POWER CONSUMPTION	1.3 watts (total for both plate and filament supply)
AERIAL	External, Philco Type 40-6383
INTERMEDIATE FREQUENCY	455 kc.
PHILCO TUBES USED	1LA6, 1LN5, 1LH4, 1A5GT/G—(2)

PHILCO TROUBLE-SHOOTING PROCEDURE

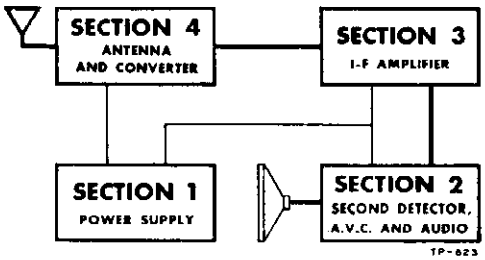

Figure 1. Block diagram (Heavy lines indicate signal path).

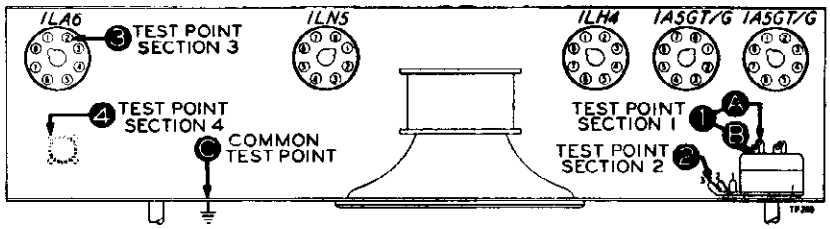

Figure 2. Bottom view showing test points.

In this manual, the receiver circuit is divided into four sections, as shown in figure 1. One test point is designated for each section, as shown in figure 2. Abnormal indications, secured when checking at these test points, localize trouble to the section under test. After localization, isolation of the faulty part is accomplished by testing in the order shown in the sectional test charts. A high-quality signal generator and a volt-ohmmeter are required. Voltage readings shown were taken with a 20,000-ohms-per-volt meter. To localize trouble, turn receiver volume control full on; proceed in the order given in the following chart. When applying a signal, connect the signal-generator output lead through a condenser (.01 to .25 mf.). Remedy any defect encountered before proceeding to the next check.

TESTS TO LOCALIZE TROUBLE TO ONE SECTION

SECTION	TEST	NORMAL RESULTS
Preliminary resistance check	Measure resistance between points 1B and C with battery disconnected from receiver. If resistance is low, check condensers C302 and C202 for leakage or shorts.	100,000 ohms or higher
1	Measure voltage betwee point 1A and C (chassis) Measure voltage between point 1B and C (chassis)	1.2 to 1.4 volts 69 to 79 volts
2	Apply audio signal between point 2 and C (chassis)	Loud, clear signal
3	Apply weak, modulated signal (455 kc.) between point 3 and C (chassis)	Loud, clear signal
4	Apply weak, modulated signal (frequency to which set is tuned) between point 4 and C (chassis)	Loud, clear signal

© John F. Rider

MODEL 46-132

TESTS TO ISOLATE TROUBLE WITHIN SECTION 1

NOTE: Make all tests for this section with a volt-ohmmeter, using the 0-250 V d-c range. Voltages given were taken with the set operating and drawing normal current from battery. See figures 3 and 4 for location of test points.

TEST POINTS	NORMAL READING	POSSIBLE CAUSE OF ABNORMAL READING
B to C (chassis)	79 volts	No voltage indicates open battery cable, defective switch S100, open resistor R100, shorted condenser C302 (see section 3). Low voltage indicates nearly dead battery, defective resistor R100, leaky condenser C302, or excessive plate or screen current by one or more tubes.
A to C	1.35 volts	No voltage indicates open battery cable or defective switch S100.
D to C	6 volts	Deviation in this voltage indicates change of value by resistor R100, or abnormal current flow because of defective parts in the sections 2, 3, or 4.

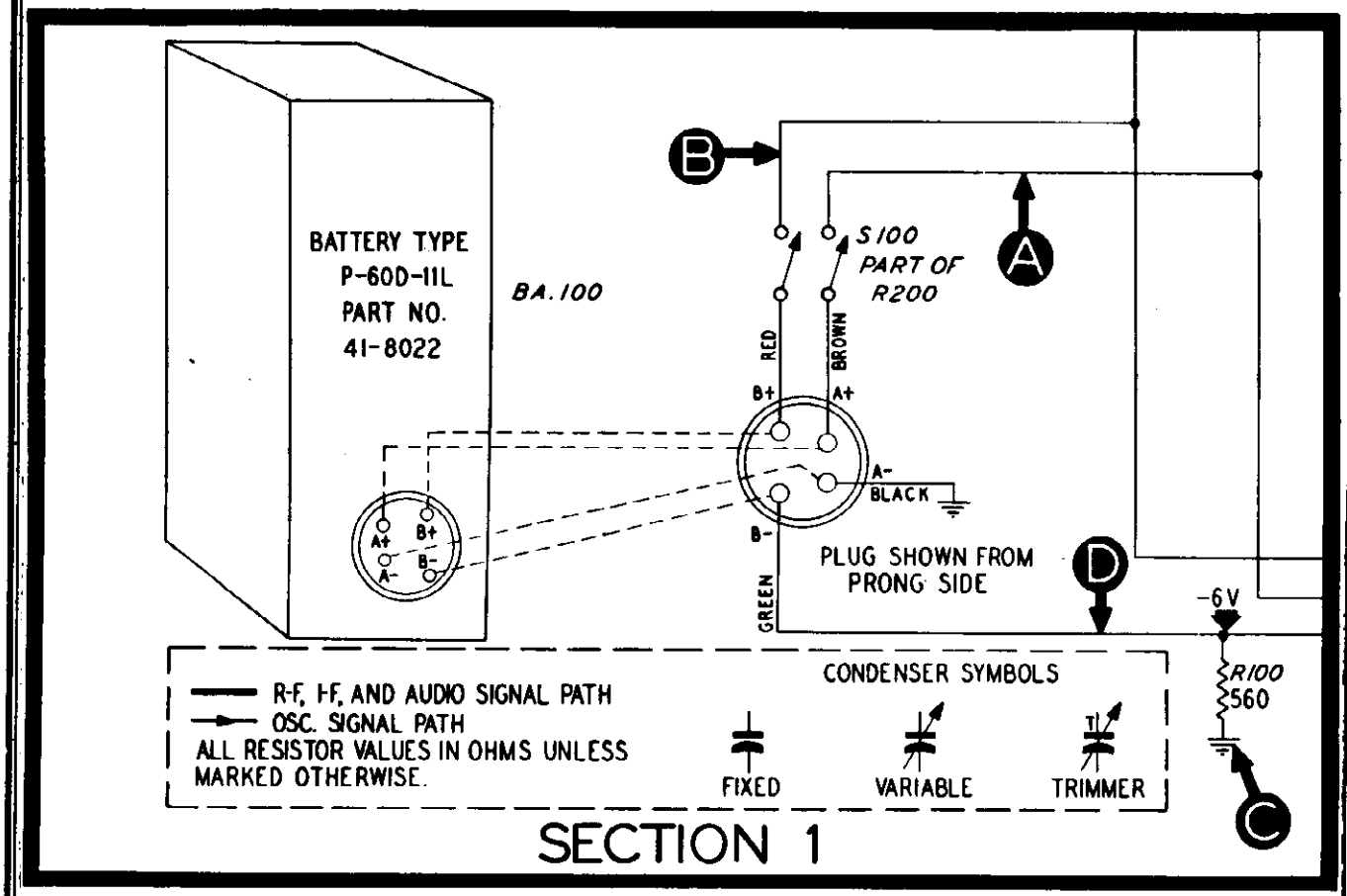

Figure 3. Section 1 schematic.

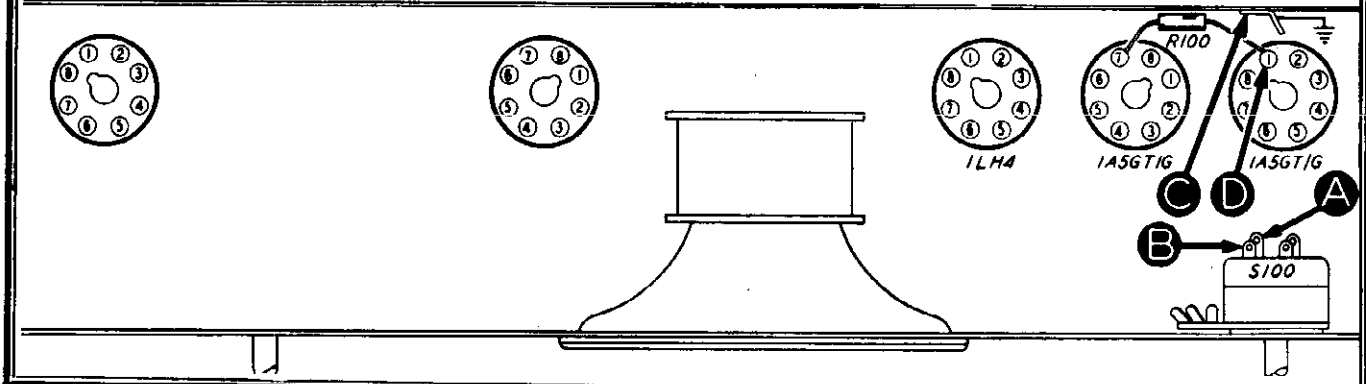

© John F. Rider

MODEL 46-132

TESTS TO ISOLATE TROUBLE WITHIN SECTION 2

For all tests in this section, use the audio range of the signal generator. Connect the generator output lead through a condenser (.01 to .25 mf.) to points indicated, and connect the ground lead to receiver chassis. Adjust signal-generator output for clear audible signal.

TEST POINTS	NORMAL INDICATION	POSSIBLE CAUSE OF ABNORMAL INDICATION
E to C (chassis)	Clear, audible signal from speaker (receiver volume control at approximately three-fourths maximum).	No signal indicates defective 1A5GT/G tube (into which the signal is fed), defective output transformer T200 or speaker LS200. Low and greatly distorted signal indicates leakage in condensers C203 or C204.
F to C	Clear, audible signal, as in preceding test.	No signal indicates open condenser C203 or shorted condenser C202; distortion indicates leakage in condenser C203.
G to C	Clear, audible signal with noticeable increase over that obtained in previous tests.	No signal indicates defective 1LH4 tube or open resistor R203. Distortion indicates defective 1LH4 tube.
H to C	Clear, audible signal, same as preceding test.	No signal indicates open condenser C201; noisy or otherwise distorted signal indicates defective volume control R200. Rotate control through entire range for complete check.

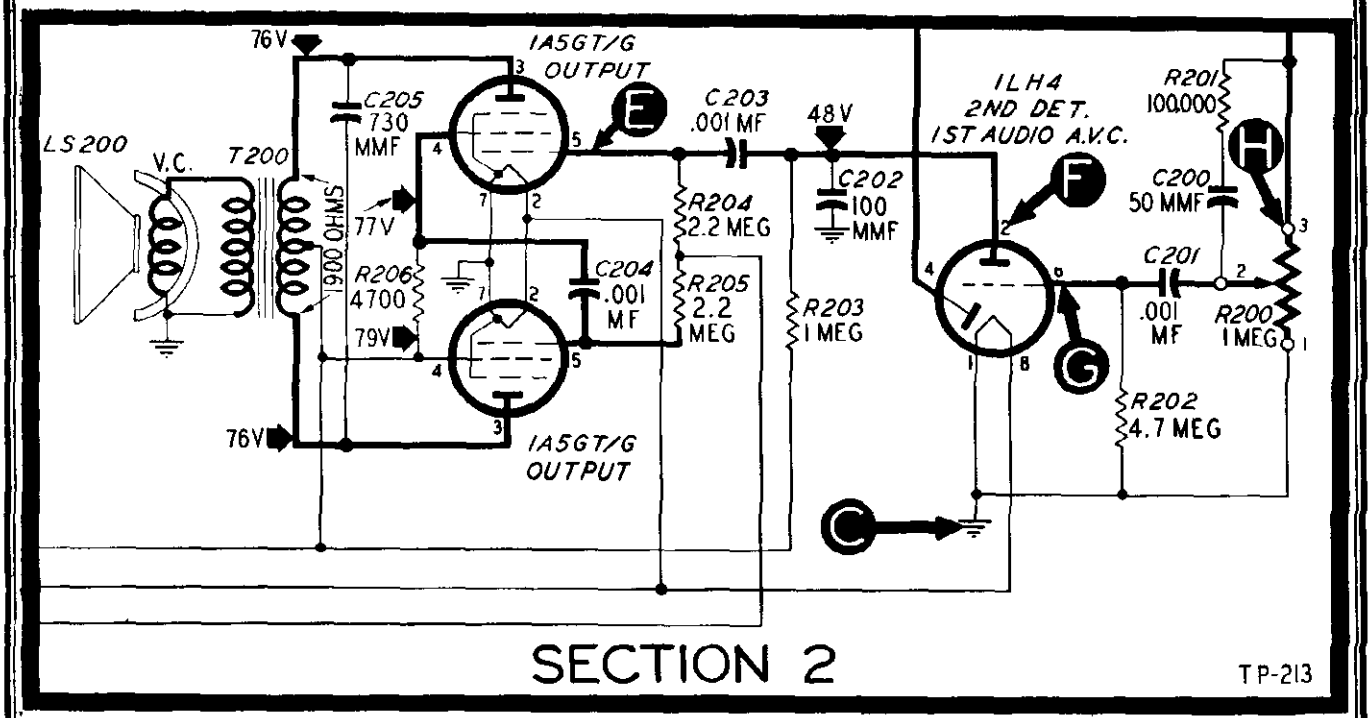

Figure 5. Section 2 schematic.

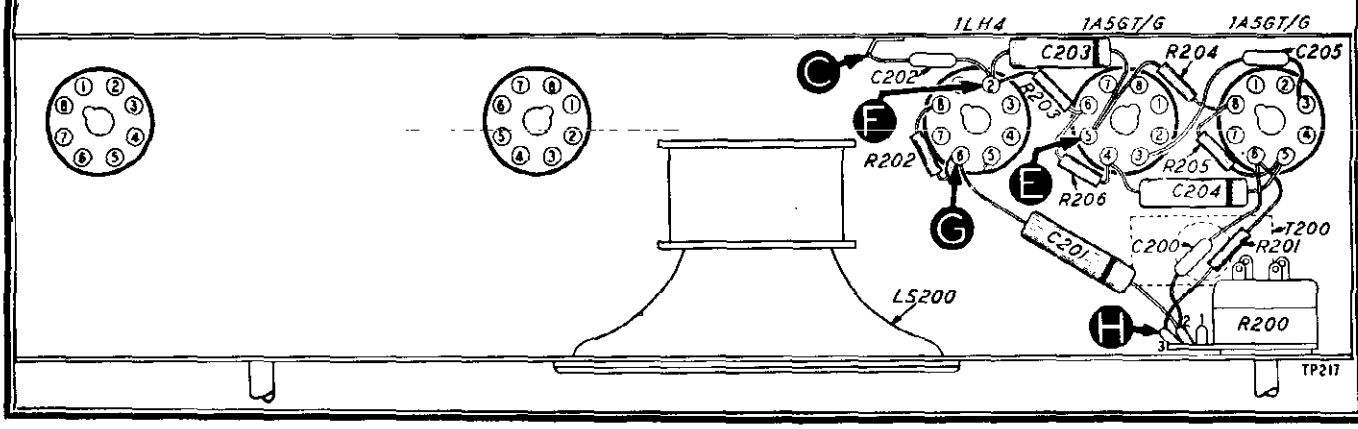

MODEL 46-132

TESTS TO ISOLATE TROUBLE WITHIN SECTION 3

NOTE: For all tests in this section, set the signal generator to 455 kc., modulation ON. Connect generator output lead through a condenser (.01 to .25 mf.) to the points indicated, and connect the ground lead to receiver chassis. Adjust signal-generator output for clear, audible signal.

TEST POINTS	NORMAL INDICATION	POSSIBLE CAUSE OF ABNORMAL INDICATION
J to C (chassis)	Audible signal from speaker.	No signal, or very weak signal, indicates defective 1LN5 tube, defective or misaligned i-f transformer assembly Z301, or defective diode section of 1LH4 tube.
K to C	Audible signal from speaker.	No signal indicates defective or misaligned i-f transformer assembly Z300.

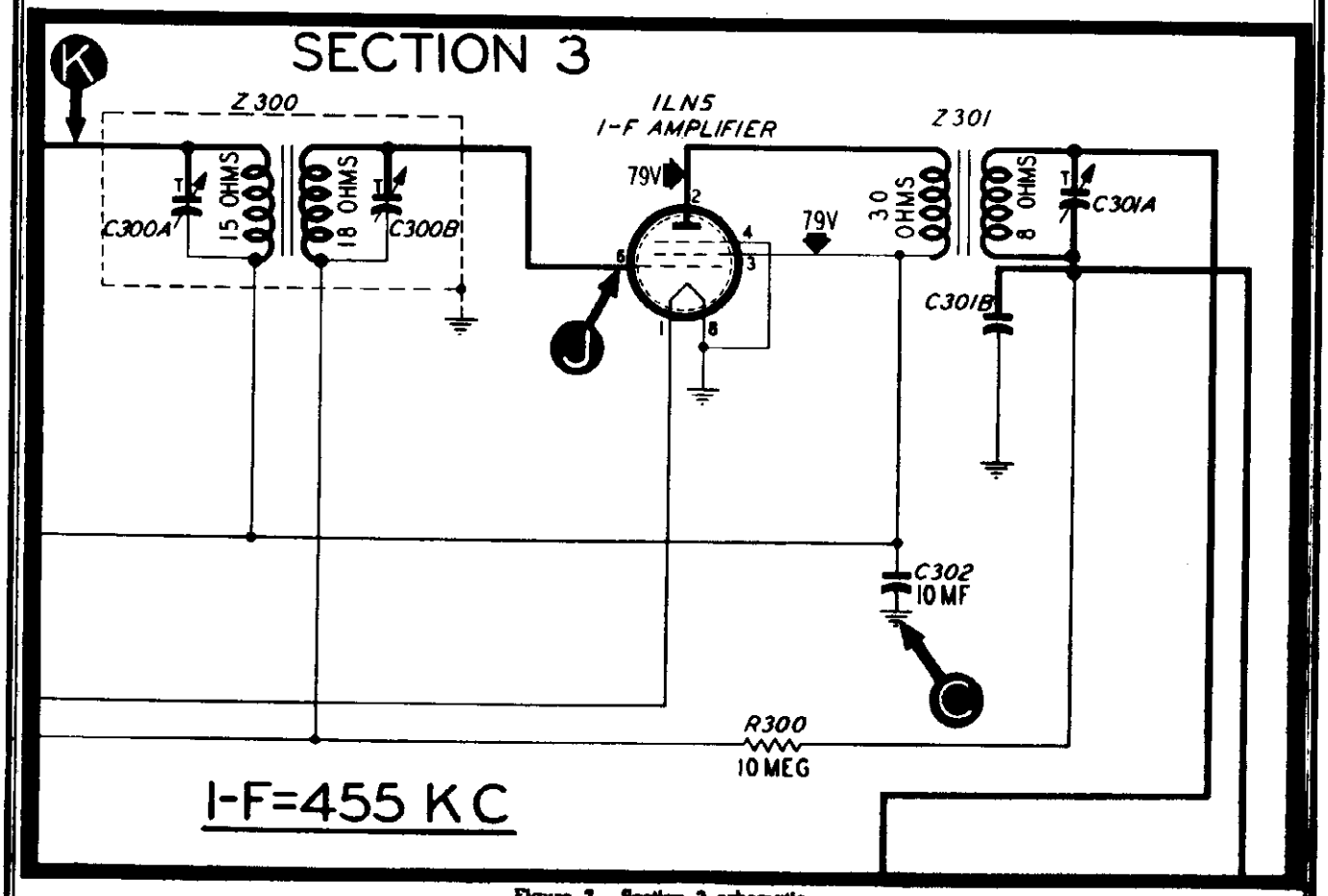

Figure 7. Section 3 schematic.

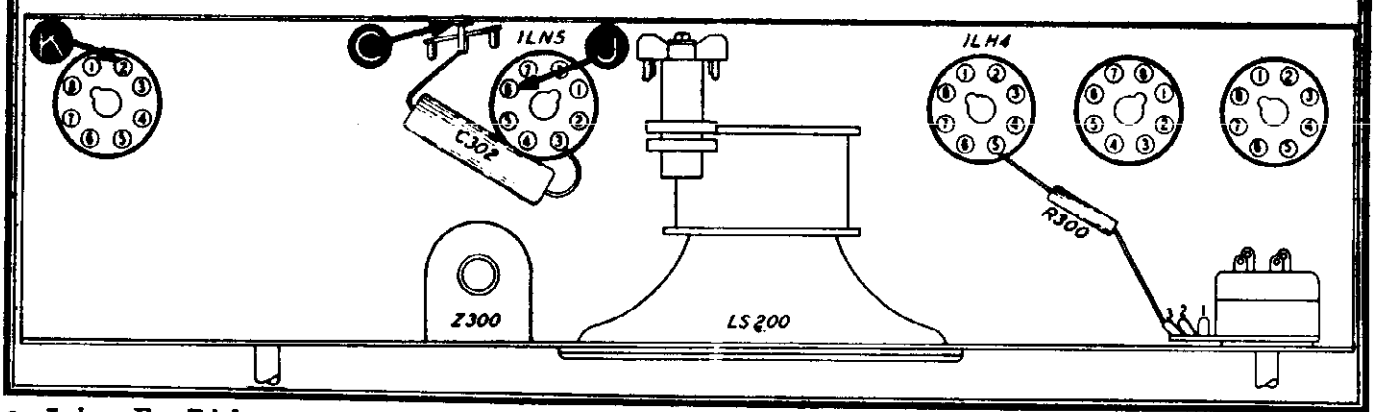

© John F. Rider

MODEL 46-132

TESTS TO ISOLATE TROUBLE WITHIN SECTION 4

IMPORTANT: Before applying a test signal to this section, make a preliminary check by rotating the tuning control throughout its entire range. Any scraping noise heard in the speaker indicates bent tuning condenser plates, dirty wiper contacts or dirt between the condenser plates, which conditions should be remedied before proceeding with the tests. Then connect the signal-generator output lead through a condenser (.01 to .25 mf.) to indicated test point and the generator ground lead to "C" (receiver chassis). For best results, check operation first at 540 kc. and then at 1700 kc.

TEST POINTS	NORMAL INDICATION	POSSIBLE CAUSE FOR ABNORMAL INDICATION
L to C (chassis)	Audible signal from speaker.	No signal indicates defective 1LA6 tube; defective oscillator transformer T401, shorted plates in oscillator section of condenser C401, shorted condenser C404 or defective resistor R401 or R402.
M to C	Audible signal from speaker.	No signal indicates defective antenna transformer T400, or shorted plates in antenna section of condenser C401.

OSCILLATOR GRID BIAS VOLTAGE. Ground test point "L"; connect a voltmeter (20,000 ohms-per-volt, 10-volt scale) through 50,000 ohm isolating resistor, between "N" (—) and "C" (+). Rotate the tuning control throughout its entire range. The voltage reading should not fall below 1.5 volts throughout. Insufficient voltage indicates malfunctioning, and the components listed in the first test in the above chart should be checked in the order given.

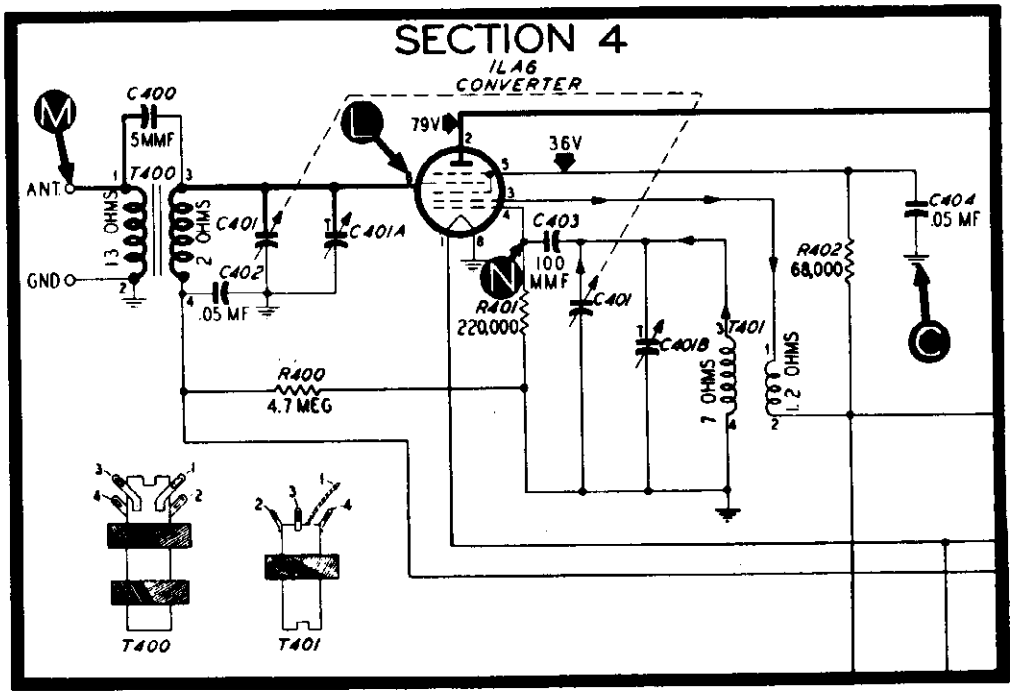

Figure 9. Section 4 schematic.

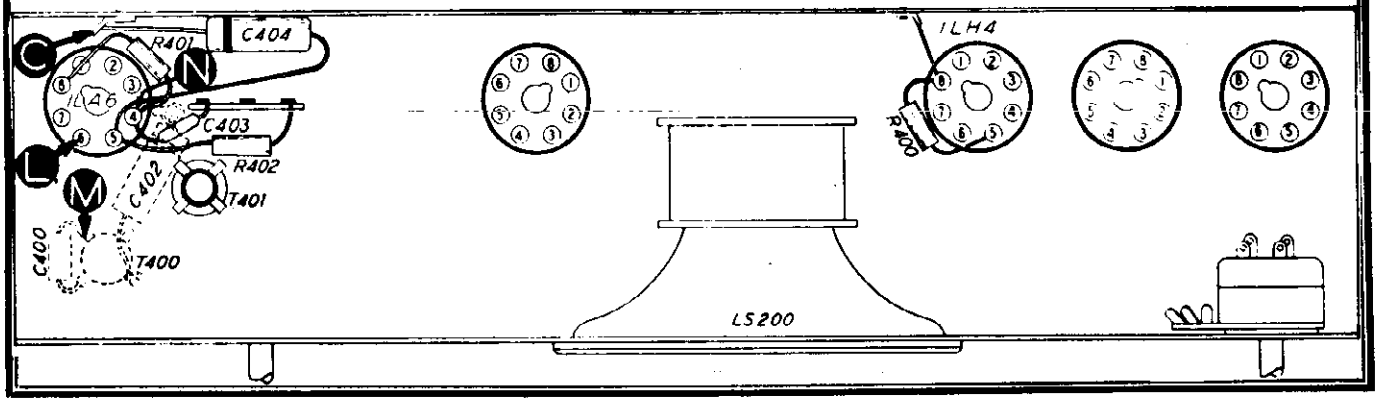

MODEL 46-132

CONNECTING ALIGNING EQUIPMENT

OUTPUT METER. Connect to voice coil of speaker, as shown in figure 11.

SIGNAL GENERATOR. Use a 100-mmf. condenser to couple the output lead to the receiver. Adjust the output of the signal generator to give a signal strength sufficient to cause a readable deflection of the output meter, using the range on the meter which best indicates small variations in output. Reduce the output of the signal generator if the pointer of the output meter goes off scale as alignment progresses.

PROCEDURE. Turn receiver volume control to maximum and adjust all trimmers in the order listed for maximum output.

ALIGNMENT CHART

SIGNAL GENERATOR		RECEIVER		
CONNECTIONS TO RECEIVER	DIAL SETTING (kc.)	DIAL SETTING (kc.)	SPECIAL INSTRUCTIONS	ADJUST TRIMMERS IN GIVEN ORDER
Stator plate terminal, antenna section of tuning condenser and chassis.	455	540	Turn C300B fully clockwise. Turn tuning condenser plates to full meshed position. Make sure that dial pointer is set to the left index mark (the first small hole stamped 3¾ inches from left end of scale plate reflector). This setting corresponds to a dial setting of 540 kc.	C301A C300A C300B 1f 1
Aerial lead and chassis.	1700	1700	Turn tuning condenser until dial pointer is on the first index mark (the first small hole 4⅛ inches from right end of the scale plate reflector).	C401B
Aerial lead and chassis.	1500	1500 (approx.)	Turn tuning condenser to position providing maximum reading on output meter.	C401A

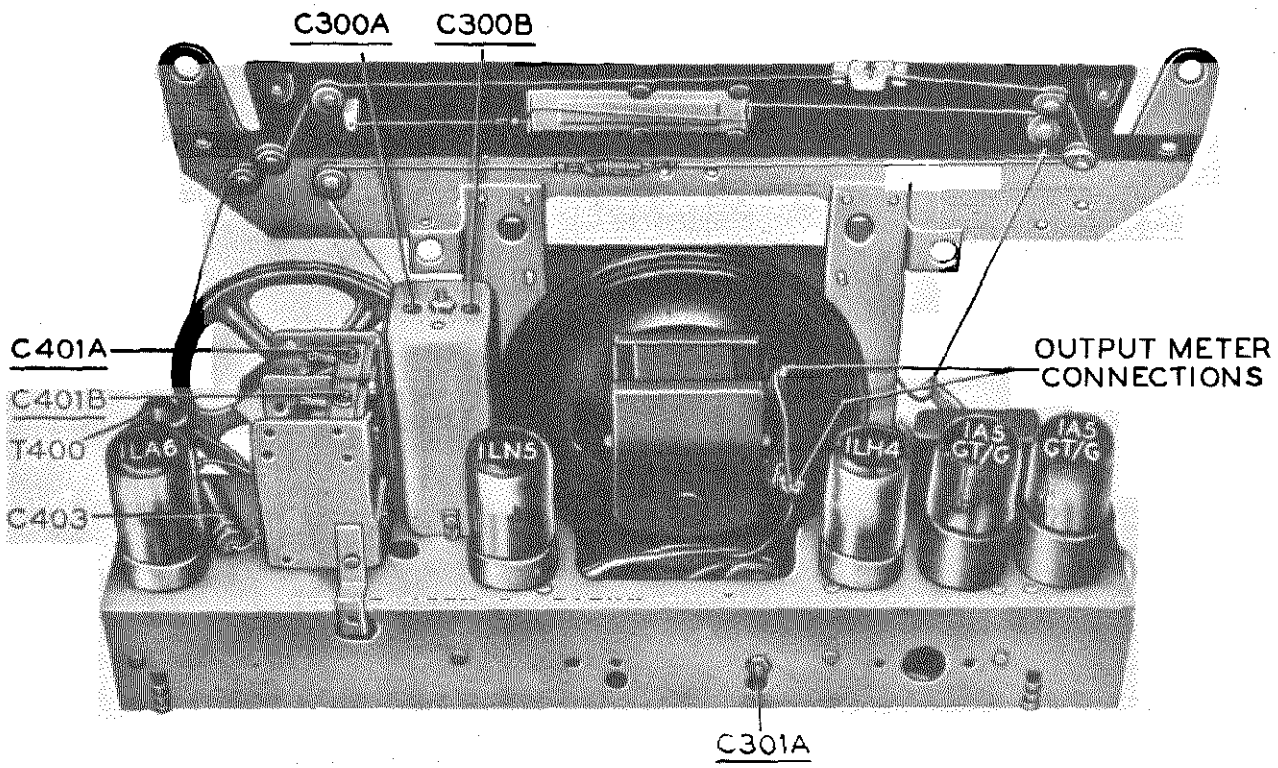

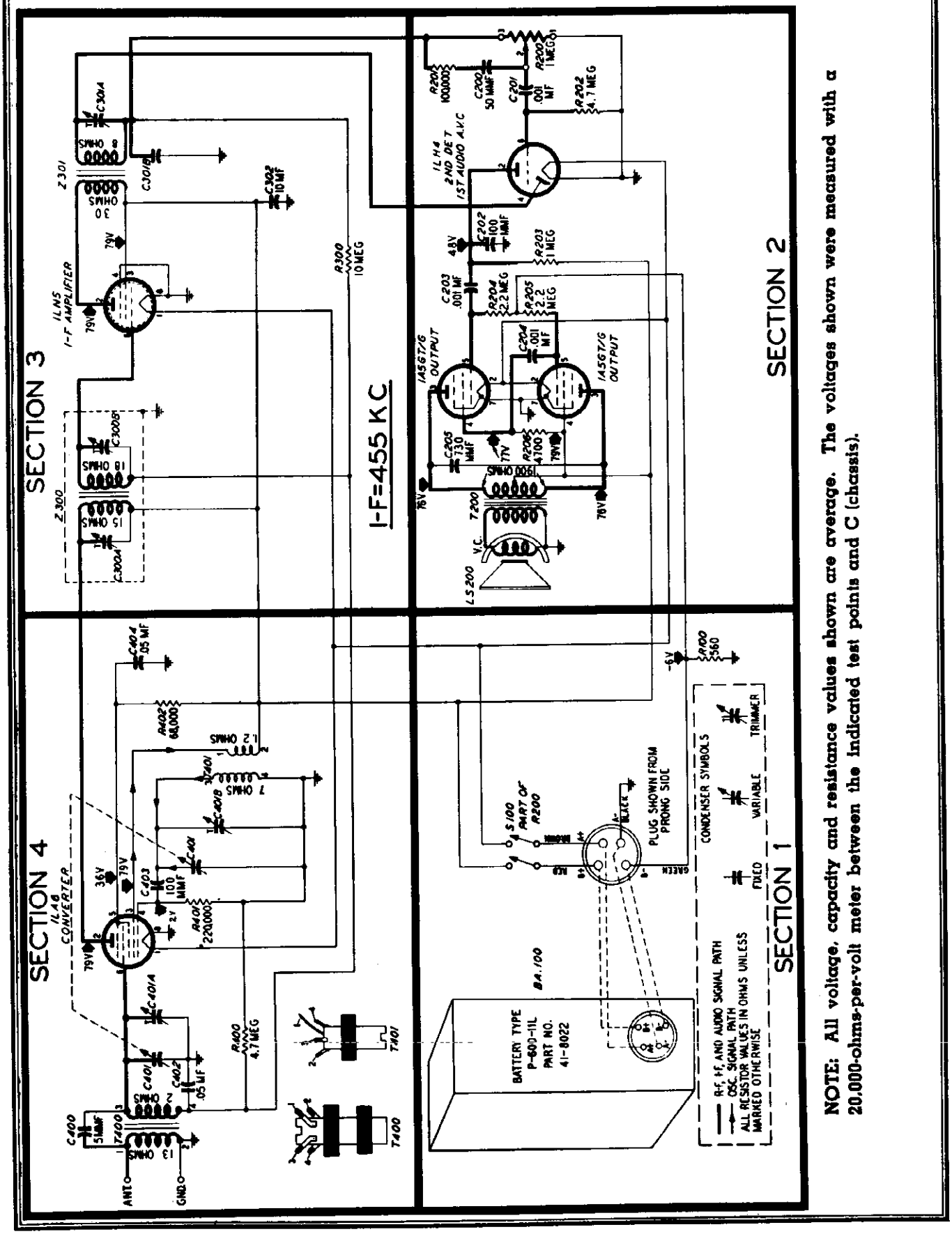

NOTE: All voltage, capacity and resistance values shown are average. The voltages shown were measured with a 20,000-ohms-per-volt meter between the indicated test points and C (chassis).

©John F. Rider

MODEL 46-132

Symbol designations used in the schematics and parts list are as follows:

C—condenser
I—pilot lamp
LA—loop antenna
LS—loudspeaker
R—resistor
S—switch
T—transformer
W—power cord and plug
Z—i-f transformer assembly

NOTE: Parts marked with an asterisk (*) are general replacement items and the numbers will not be identical with those used on factory assemblies. Use only the "SERVICE PART NO." shown below when ordering replacements.

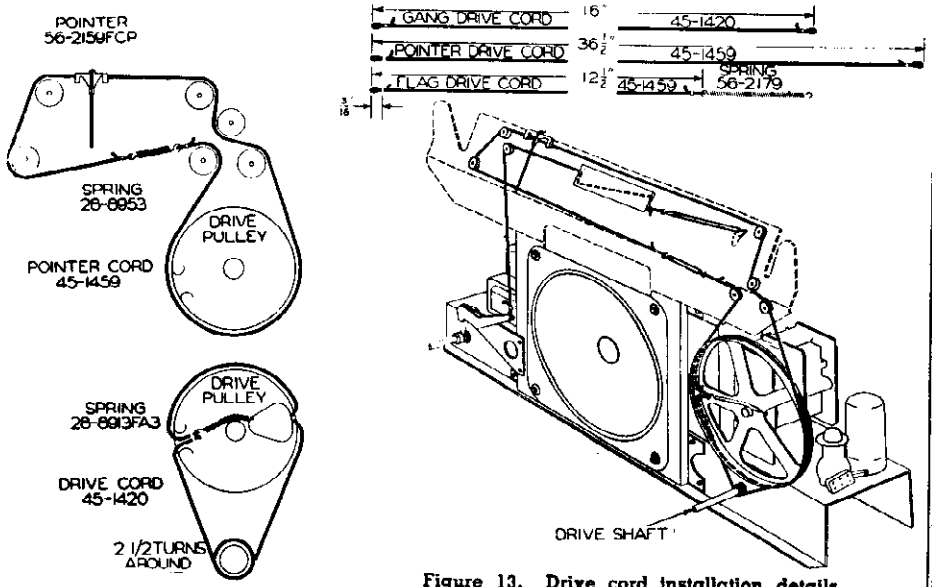

Figure 13. Drive cord installation details.

REPLACEMENT PARTS LIST

SECTION 1

Reference Number	Description	Service Part No.
S-100	Switch	Part of R-200
BA-100	Battery, type P-60D-11L	41-8022
	Battery cable assy.	41-3669
	Plug, battery cable	38-3399
R-100	Resistor, 560 ohms	66-1564360*

SECTION 2

C-200	Condenser, 50 mmf.	60-00513507*
C-201	Condenser, .001 mf.	30-4620
C-202	Condenser, 100 mmf.	60-10105407
C-203	Condenser, .001 mf.	30-4620
C-204	Condenser, .001 mf.	30-4620
C-205	Condenser, 730 mmf.	60-10755301*
R-200	Volume control, 1 meg.	33-5493
R-201	Resistor, 100,000 ohms	66-4103340*
R-202	Resistor, 4.7 megs.	66-5473340*
R-203	Resistor, 1 meg.	66-5103340*
R-204	Resistor, 2.2 megs.	66-5223340*
R-205	Resistor, 2.2 megs.	66-5223340*
R-206	Resistor, 4700 ohms	66-2473340
LS-200	Speaker	36-1507
T-200	Transformer, output	32-8152

SECTION 3

Z-300	Transformer, 1st I-F	32-3949
C-300-A	Condenser, trimmer	Part of Z-300
C-300-B	Condenser, trimmer	Part of Z-300
Z-301	Transformer, 2nd I-F	32-3963
C-301-A	Condenser, trimmer	Part of Z301
C-301-B	Condenser	Part of Z-301
C-302	Condenser, electrolytic, 10 mf.	30-2540
R-300	Resistor, 10 meg.	66-6103340*

SECTION 4

C-400	Condenser, 5 mmf.	60-90505007
C-401	Condenser, tuning	31-2708
C-401-A	Condenser, trimmer	Part of C-401
C-401-B	Condenser, trimmer	Part of C-401
C-402	Condenser, .05 mf.	30-4518*
C-403	Condenser, 100 mmf.	60-10105407*
C-404	Condenser, .05 mf.	30-4518*
R-400	Resistor, 4.7 meg.	66-5473340*
R-401	Resistor, 220,000 ohms	66-4223340*
R-402	Resistor, 68,000 ohms	66-3683340*
T-400	Transformer, antenna	32-3920
T-401	Transformer, oscillator	32-3184

MISCELLANEOUS

Description	Service Part No.
Coil clip, antenna oscillator mounting	28-5002FE7
Sleeve, tuning condenser mounting	28-5685FA3
Tuning shaft assy.	31-2554
Spring, tuning condenser	28-8913FA3
Spring, pointer drive	28-8953
Spring, flag	56-2179
Flag, operating arm assy.	76-1672
Flag	56-2180FCP
Pointer	56-2159FCP
Grommet, rubber, tuning condenser mounting, back	27-4610
Grommet, rubber, tuning condenser mounting, front	27-4596
Socket, octal	27-6199*
Socket, Loktal	27-6138*
Rivets	1W36671FA5
Knob assy.	54-4101
Cabinet, wood (includes scale and bezel)	10627
Drive drum assy.	76-1176FA3
Terminal panel assy.	12W45654
Screw, chassis mounting	1W19678FA9
Washer, chassis mounting	1W52353FA3
Drive cord, tuning condenser (25 ft. spool)	45-1420
Drive cord, flag and pointer (25 ft. spool)	45-1459
Scale plate and upright assy.	76-1579
Screws, speaker mounting	1W19670FA3
Washer, brass, speaker mounting	2W54094
Baffle and cloth assy.	40-6763
Scale strip	56-2068
Rubber bands, scale mounting	54-4168
Dial scale	27-5876
Felt feet	W2190
Pulley, drive cord	11W29740
Pulley stud	1W2918FA5
Transfer lever arm	56-2184FA3
Transfer lever arm, mounting bracket	56-2185FA3

© John F. Rider

Circuit Description

The Philco Models 47-204 and 47-205 are 5-tube, table-model superheterodyne radios, providing reception in the standard broadcast band. The two models are identical, except for cabinet and dial parts, as indicated in the parts list.

The high-impedance loop aerial normally provides adequate signal pick-up. An external aerial may be connected, if desired, by detaching the aerial lead (shown in figure 6) from the chassis, and connecting the lead to an external aerial lead-in. Do not use a ground.

The loop is coupled to the 7A8 converter tube. Variable-condenser tuning is employed, the oscillator rotor-section plates being shaped to obtain tracking, thus eliminating the necessity for a series padding condenser.

The 7A8 is transformer coupled to the 14A7 i-f amplifier, which is also transformer coupled to the diodes of the 14B6 second detector—first audio-frequency amplifier. A-v-c voltage is applied to the control grids of both the i-f and converter tubes.

The triode section of the 14B6 is the first audio stage, and is resistance coupled to the 50L6GT output tube. The output tube is transformer coupled to a permanent-magnet dynamic speaker.

D-c operating voltages are obtained from a 35Y4 half-wave rectifier, the output of which is filtered by a two-section resistor—condenser filter.

The choke, part of C304, and the condenser C304 in Section 3, figure 3, form a series-tuned circuit, resonant at the intermediate frequency. This combination offers less impedance than a condenser alone, at this frequency, thus reducing any tendency toward oscillation. This choke—condenser combination acts as a condenser for audio frequencies. By-passing at broadcast frequencies is made adequate by connecting the tuning-condenser gang to the chassis.

The 150,000-ohm resistor, R100, in Section 1, prevents hum which might otherwise occur under conditions of high humidity.

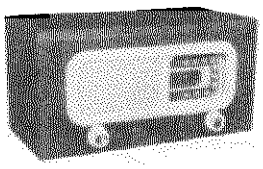

MODEL 47-204

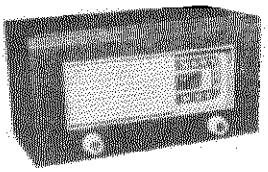

MODEL 47-205

SPECIFICATIONS

CABINET . . . . . Wood composition, simulated leather
CIRCUIT . . . . . Five-tube superheterodyne
FREQUENCY RANGE . . . . . 540 to 1,620 kc
OPERATING VOLTAGE . . 105 to 120 volts, a.c. or d.c.
POWER CONSUMPTION . . . . . 30 watts
AERIAL . . . . Loop fastened to cabinet; terminal also provided for outside aerial
INTERMEDIATE FREQUENCY . . . . . 455 kc
PHILCO TUBES (5), 7A8, 14A7, 14B6, 50L6GT, 35Y4
PANEL LAMP, 6—8-volt, bayonet base, Part No. 34-2068

TP-2779A & TP-2780A

Philco TROUBLE-SHOOTING Procedure

In this manual, the schematic diagram is divided into four sections, with a chassis layout for each section, showing components and test points for each section. The test points are also indicated on the schematic diagram in the corresponding section. A simplified trouble-shooting procedure is given in a chart for each section. The first step in each chart is a master check, indicating whether trouble exists in that section. Failure to secure the "NORMAL INDICATION" in a given step indicates trouble, which should be located by voltage, resistance, or capacitance checks of parts indicated in the step, and remedied before testing further.

Preliminary Checks

The following preliminary checks are recommended before turning on the radio:

1. Carefully inspect both top and bottom of the chassis. Make sure that all tubes are secure in their proper sockets (see figure 6), and look for bad connections, burnt resistors, or other obvious sources of trouble.

2. Measure the resistance between B plus and B minus (test points C and B— in figure 1), using the ohmmeter polarity giving the highest resistance reading; if the reading is lower than 50,000 ohms, check C101A, C101B, and C101C, for leakage or shorts.

©John F. Rider

MODELS 47-204, 47-205

TROUBLE SHOOTING — Section 1

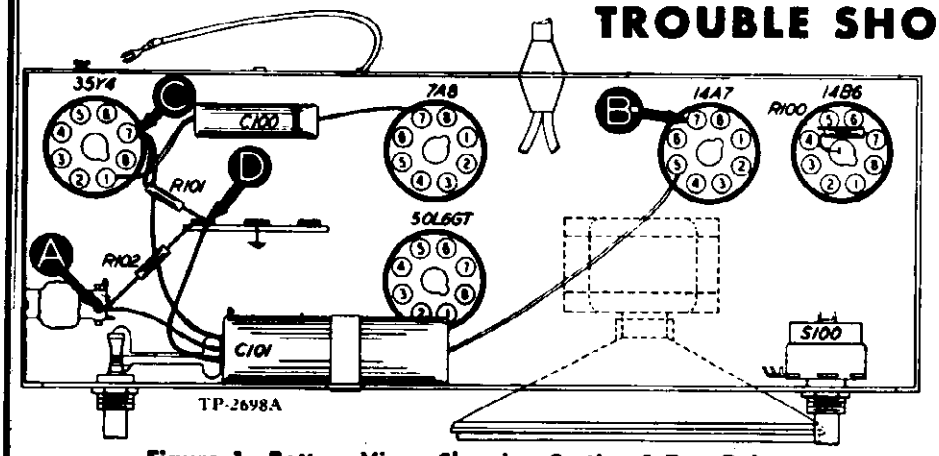

Figure 1. Bottom View, Showing Section 1 Test Points

Make the tests for this section with a d-c voltmeter, connecting the leads to the test points indicated in the chart. The voltages shown were taken with a 20,000-ohms-per-volt meter at a line voltage of 117 volts, 60 cycles.

Turn the volume control to minimum, and set the dial pointer at 540 kc.

Follow steps in sequence. If "NORMAL INDICATION" is obtained in step 1, proceed with tests for Section 2; if not, isolate and correct the trouble within this section.

STEP	TEST POINTS	NORMAL INDICATION	ABNORMAL INDICATION	POSSIBLE CAUSE OF ABNORMAL INDICATION
1	A to B—	90v		Trouble within this section; isolate by the following tests.
2	C to B—	115v	No voltage	Defective 35Y4 tube. Shorted C101A.
			Low voltage	Defective 35Y4 tube. Open C101A or I100. Leaky C101A.
			High voltage	Open R101.
3	D to B—	105v	No voltage	Shorted C101B.
			Low voltage	Open C101B. Leaky C101B or C203.
			High voltage	Open R102, T200, or R204.
4	A to B—	90v	No voltage	Shorted C101C.
			Low voltage	Leaky C101C.
			High voltage	Open R204.

Listening Test: Abnormal hum may be caused by open C101A, C101B, or C101C.

TROUBLE SHOOTING — Section 2

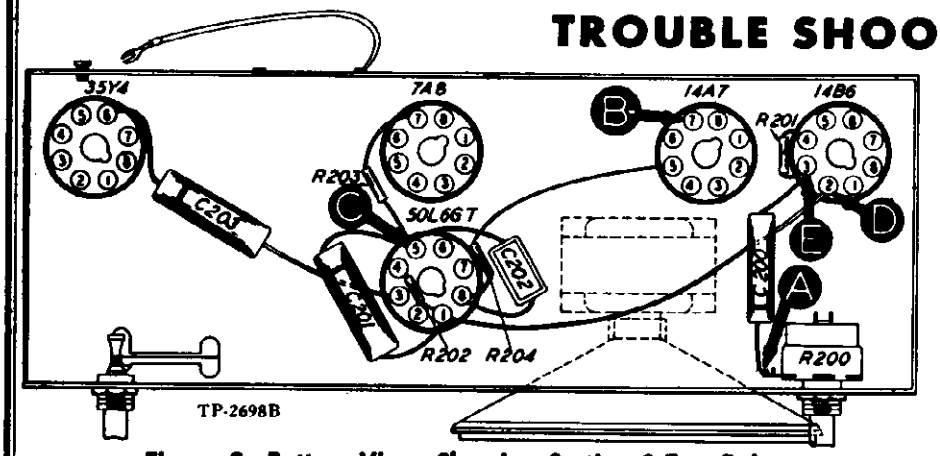

Figure 2. Bottom View, Showing Section 2 Test Points

Make tests for this section by using an audio signal. Connect ground lead of signal generator to B—; connect output lead through a .1-mf condenser to the test points indicated in the chart. Set the volume control at maximum. If "NORMAL INDICATION" is obtained in step 1, proceed with tests for Section 3; if not, isolate and correct the trouble within this section.

STEP	TEST POINT	NORMAL INDICATION	POSSIBLE CAUSE OF ABNORMAL INDICATION
1	A	Loud, clear signal with low signal-generator output	Trouble within this section; isolate by the following tests.
2	C	Clear signal with high signal-generator output	No signal: Open or shorted LS200 or T200. Shorted C203. Open R204. Defective 50L6GT tube. Weak or distorted signal: Defective 50L6GT tube, or LS200. Leaky C202 or C201. Open R203. Shorted R204.
3	D	Same as step 2	No signal: Open C201. Weak or distorted signal: Leaky C201.
4	E	Same as step 1	No signal: Open R202. Defective 14B6 tube. Weak or distorted signal: Shorted C200. Open R201. Defective 14B6 tube.
5	A	Same as step 1 Note: Rotate R200 through range	No signal: Open C200. Shorted C300D. Weak or distorted signal: Defective R200.

© John F. Rider

MODELS 47-204, 47-205

TROUBLE SHOOTING — Section 3

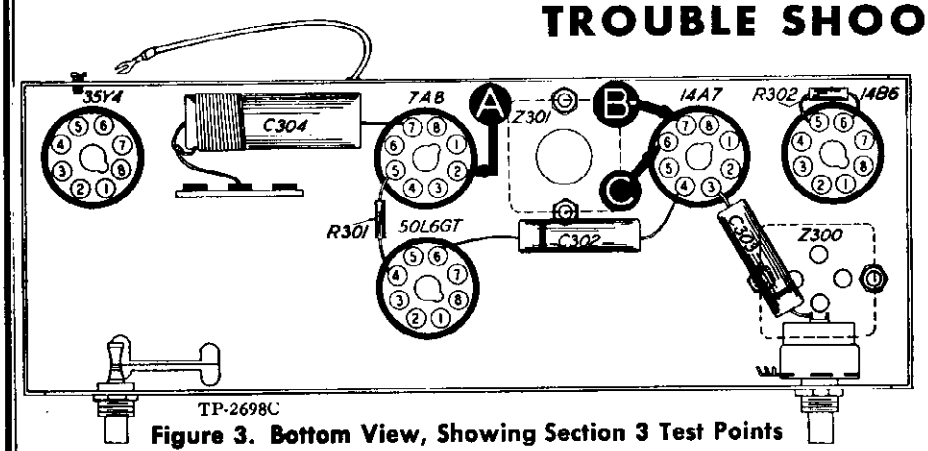

TP-2698C

Figure 3. Bottom View, Showing Section 3 Test Points

Make tests for this section by using an r-f signal generator with modulated output. Set generator frequency to 455 kc. Connect ground lead of signal generator to B—; connect output lead through a .1-mf condenser to the test points indicated in the chart. Set the volume control at maximum. If "NORMAL INDICATION" is obtained in step 1, proceed with tests for Section 4; if not, isolate and correct the trouble within this section.

STEP	TEST POINT	NORMAL INDICATION	POSSIBLE CAUSE OF ABNORMAL INDICATION
1	A	Clear signal with low signal-generator output	Trouble within this section; isolate by the following tests.
2	C	Same as step 1	No signal: Open or shorted Z300. Defective 14B6 or 14A7 tube. Open R301. Shorted C303. Weak or distorted signal: Leaky C303. Open C303 or C304. Defective 14B6 or 14A7 tube. Misaligned Z300. Leaky or open C302.
3	A	Same as step 1	No signal: Open or shorted Z301. Weak or distorted signal: Misaligned Z301.

TROUBLE SHOOTING — Section 4

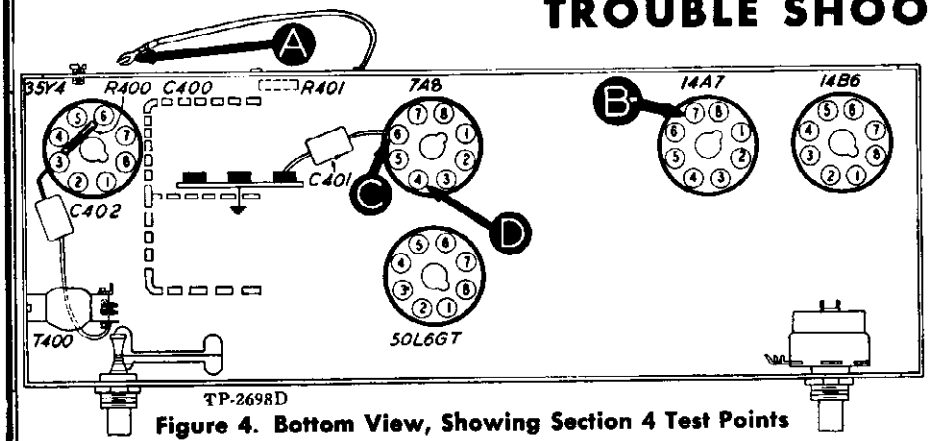

TP-2698D

Figure 4. Bottom View, Showing Section 4 Test Points

Make tests for this section by using an r-f signal generator with modulated output. Set frequency as noted in chart. Connect generator ground lead to B—; connect output lead through a .1-mf condenser to the test points indicated in the chart.

Inspect tuning condensers for bent plates, dirt, or poor wiper contacts; any or all of these will cause noise. If "NORMAL INDICATION" is not obtained in step 1, isolate trouble by following the remaining steps.

STEP	TEST POINT	DIAL SETTINGS		NORMAL INDICATION	POSSIBLE CAUSE OF ABNORMAL INDICATION
		SIG. GEN.	RADIO		
1	A	540 kc	540 kc	Clear signal with low signal-generator output	Trouble within this section; isolate by the following tests.
2	Osc. Test (see Note below)		540 to 1620 kc	Negative voltage	Open or shorted T400, C402, or R400. Shorted C400 or C400B. Defective 7A8 tube.
3	C	540 kc	540 kc	Same as step 1	No signal: Open or shorted Z301. Shorted C400 or C400A. Defective 7A8 tube. Weak or distorted signal: Shorted or open LA400. Defective 7A8 tube.
4	A	540 kc	540 kc	Same as step 1	Weak signal: Open C401.

NOTE: Oscillator test.—Connect positive lead of a 20,000-ohms-per-volt meter to B—; prod end of negative lead through a 100,000-ohm isolating resistor to test point D. Proper operation of oscillator is indicated by a negative voltage of 9 to 12 volts throughout range of tuning condenser.

MODELS 47-204, 47-205

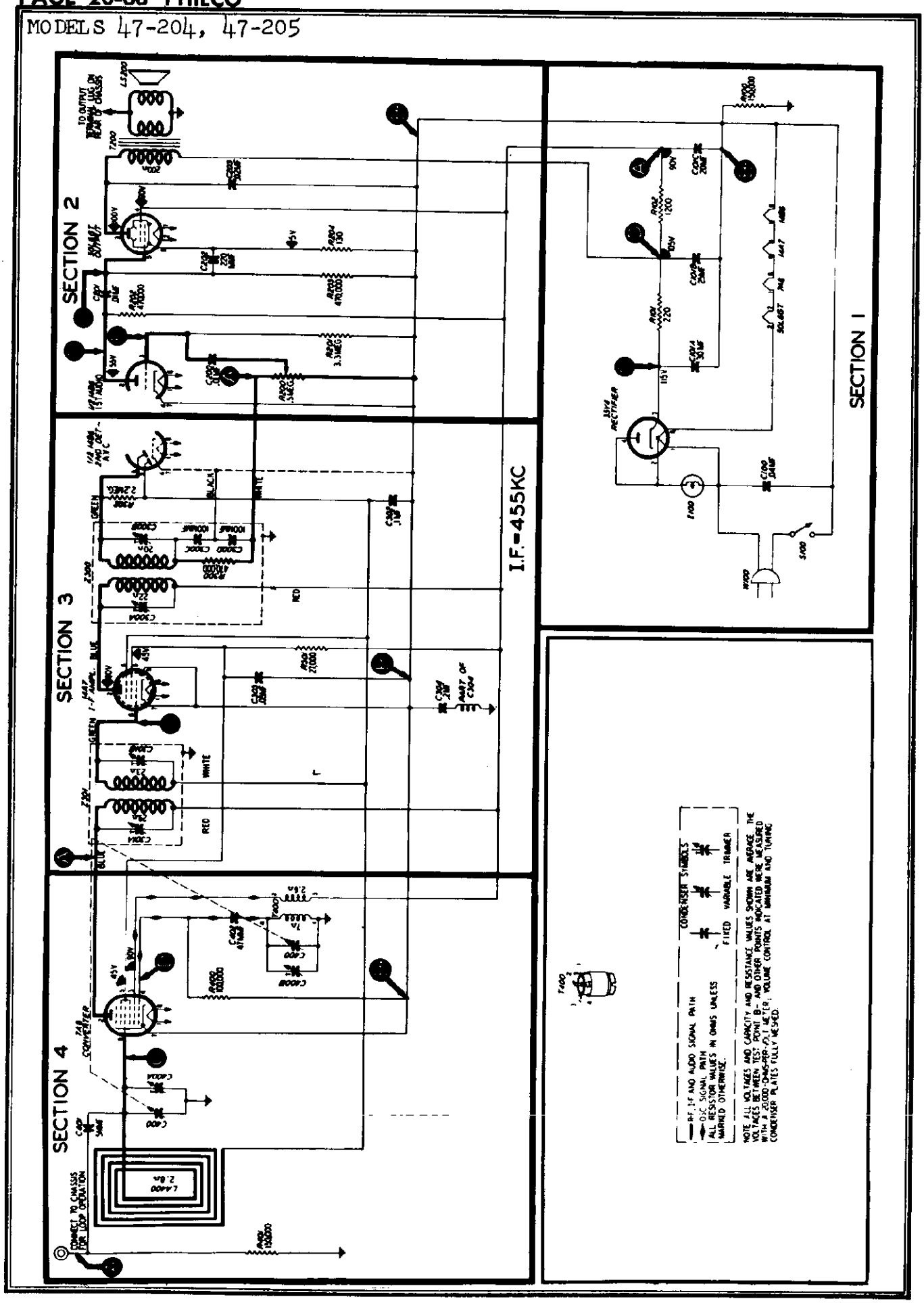

©John F. Rider

©John F Rider

ALIGNMENT PROCEDURE

TURN ON THE RADIO POWER, AND SET THE VOLUME CONTROL FULL ON

DIAL POINTER—Turn tuning condensers to full-mesh position. Set dial pointer to index dot, located to the left of "55."

OUTPUT METER—Connect to left (output) lug and center (chassis) lug of terminal panel, shown in figure 6.

SIGNAL GENERATOR—Connect ground lead to B—; connect output lead as indicated in the chart.

OUTPUT LEVEL—During alignment, adjust the signal-generator output to maintain an output-meter indication below 1.25 volts.

STEP	SIGNAL GENERATOR		RADIO		ADJUST
	CONNECTIONS TO RADIO	DIAL SETTING	DIAL SETTING	SPECIAL INSTRUCTIONS	
1				Turn C301B (copper screw) down tight.	
2	Through .1-mf condenser to test-point C of Section 4	455 kc	540 kc	Adjust trimmers, in the order given, for maximum output.	C300A, C300B, C301A, C301B
3	Through 100-mmf condenser to external aerial connector.	1600 kc	1600 kc	Disconnect external aerial lug from chassis. Adjust trimmer for maximum output.	C400B
4	Same	1500 kc	1500 kc	Adjust for maximum output.	C400A

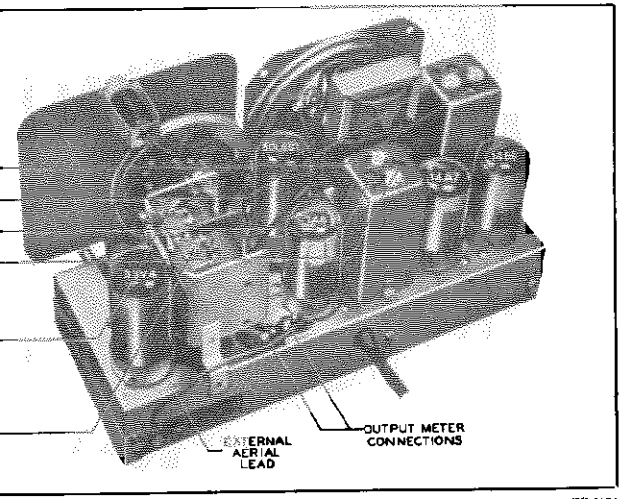

Figure 6. Chassis View, Showing Trimmer Locations

TP-3126

SYMBOLIZATION AND TERMINOLOGY

All components in the radio circuits are symbolized and located as follows:

C—condenser	LA—loop aerial	S—switch
I—pilot lamp	LS—loudspeaker	T—transformer
L—choke or coil	R—resistor	Z—electrical assembly

100-series components are in Section 1, the power supply.

200-series components are in Section 2, the second detector, a.v.c. and audio.

300-series components are in Section 3, the i-f amplifier.

400-series components are in Section 4, the aerial, r.f. and oscillator.

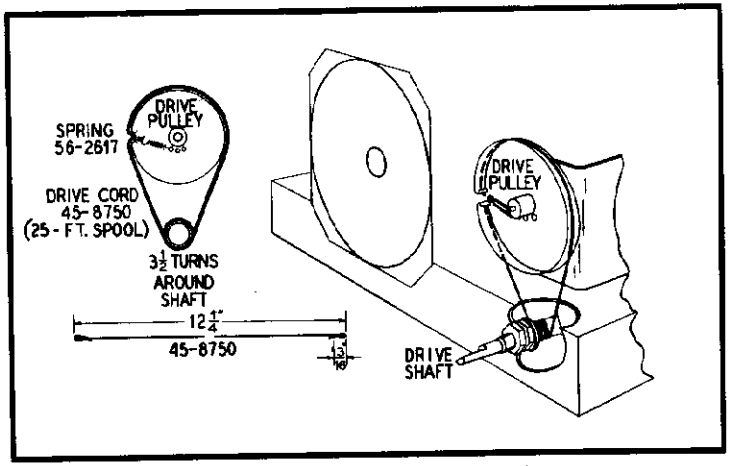

Figure 7. Drive-Cord Installation Details

MODELS 47-204, 47-205

REPLACEMENT PARTS LIST

NOTE: Parts marked with an asterisk (*) are general replacement items, and the numbers may not be identical with those on factory assemblies; also, the electrical values of some replacement items furnished may differ from the values indicated in the schematic and parts list. The values substituted in any case are so chosen that the operation of the instrument will be either unchanged or improved. When ordering replacements, use only the "Service Part No." in this parts list.

SECTION 1

Reference No.	Description	Service Part No.
C100	Condenser, line filter, .04 mf	45-3500-2*
C101	Condenser, electrolytic, 3-section filter	30-2573
C101A:	Condenser, electrolytic, 30 mf	Part of C101
C101B:	Condenser, electrolytic, 25 mf	Part of C101
C101C:	Condenser, electrolytic, 20 mf	Part of C101
R100	Resistor, leakage, 150,000 ohms	66-4153340*
R101	Resistor, filter, 220 ohms	66-1224340*
R102	Resistor, filter, 1200 ohms	66-2123340*
S100	Switch, power	Part of R200
W100	Power cord and plug	L3363
I100	Panel lamp	34-2068

SECTION 2

C200	Condenser, coupling, .01 mf	61-0120*
C201	Condenser, coupling, .01 mf	61-0120*
C202	Condenser, by-pass, 220 mmf	60-10205307*
C203	Condenser, by-pass, .02 mf	61-0108*
R200	Volume control (with power switch), 500,000 ohms	33-5429
R201	Resistor, grid load, 3.3 megohms	66-5333340*
R202	Resistor, plate load, 470,000 ohms	66-4473340*
R203	Resistor, grid load, 470,000 ohms	66-4473340*
R204	Resistor, bias, 130 ohms	66-1123340*
LS200	Speaker	36-1614
T200	Output transformer	Part of LS200

SECTION 3

C302	Condenser, a-v-c by-pass, .1 mf	61-0113*
C303	Condenser, screen by-pass, .05 mf	61-0122*
C304	Condenser and choke assembly, i-f by-pass, .2 mf	76-1161
R300	Resistor, diode load, 47,000 ohms	Part of Z300
R301	Resistor, screen, 27,000 ohms	66-3273340*
R302	Resistor, a-v-c, 2.2 megohms	66-5223340*
Z300	Transformer, 2nd i-f	32-3952
C300A:	Condenser, trimmer	Part of Z300
C300B:	Condenser, trimmer	Part of Z300
C300C:	Condenser, by-pass, 100 mmf	Part of Z300
C300D:	Condenser, by-pass, 100 mmf	Part of Z300
Z301	Transformer, 1st i-f	32-3967
C301A:	Condenser, trimmer	Part of Z301
C301B:	Condenser, trimmer	Part of Z301

SECTION 4

Reference No.	Description	Service Part No.
C400	Condenser, tuning, 2-section	31-2527-2
C400A:	Condenser, trimmer	Part of C400
C400B:	Condenser, trimmer	Part of C400
C401	Condenser, coupling, 5 mmf	60-90505007*
C402	Condenser, isolating, 47 mmf	60-00515307*
R400	Resistor, Osc., grid, 100,000 ohms	66-4103340*
R401	Resistor, aerial discharge, 150,000 ohms	66-4153340*
T400	Transformer, oscillator	32-3880
LA400	Loop aerial:	
	Model 47-204	32-4052-3
	Model 47-205	32-4052-1

MISCELLANEOUS

Description	Service Part No.
Cabinet	
Model 47-204	10674
Model 47-205	10673
Cabinet Hardware	
Back	54-7371
Baffle and cloth assembly	
Model 47-204	40-6906
Model 47-205	40-6905
Bezel	54-4152
Foot, felt	W2190
Grill (plastic), speaker	54-4458
Knob	
Model 47-204	54-4375
Model 47-205	54-4228
Window, acetate	27-5616
Clip, coil mounting	28-5002FA1
Dial-Scale Hardware	
Cord, drive (25-ft. spool)	45-8750
Pointer	54-4148-1
Scale, dial	
Model 47-204	27-5953
Model 47-205	27-5952
Screw, scale mounting	1W19674FA3
Spring, drive cord	56-2617
Washer, scale mounting	2W54094
Panel, terminal, loop aerial	76-2148
Panel, lamp assembly	76-1472
Shaft, drive assembly	31-2718
Socket, Loktal	27-6138*
Socket, octal	27-6174*

© John F. Rider

Circuit Description

Philco Model 48-1284 is a console-model radio-phonograph combination consisting of a seven-tube superheterodyne and a Philco Model M-8 Automatic Record Changer, operating on a.c. only. The tuning ranges are 540 to 1650 kc. and 9.3 to 15.7 mc. The built-in low-impedance loop normally provides adequate signal pickup; where greater pickup is required, an external aerial may be connected, using Philco Aerial Coupler Part No. 76-2353.

A 7AF7 dual triode is employed in a converter circuit designed for high signal-to-noise ratio and high conversion efficiency. A 7A7 pentode is used in the first i-f stage and the pentode section of a 7R7 dual-diode-pentode is used in the second i-f stage. The midget-type i-f transformers have permeability tuning for greater stability and efficiency. One diode section of the 7R7 is used as the detector, and the other is used to supply a-v-c voltage to the converter and the first i-f stage. A 7F7 dual triode functions as the first audio amplifier and phase inverter to drive two 6K6GT output tubes in push-pull.

More uniform frequency response and decreased harmonic distortion is obtained by the use of inverse feedback. Voltage from the secondary of the output transformer is fed back through a voltage divider, R209 and R210, over three stages to the first audio amplifier. Full control of bass and treble is made possible by a variable tone control, R201. Excellent frequency response at any volume level is provided by a 12-inch electrodynamic speaker.

Philco TROUBLE-SHOOTING Procedure

For rapid trouble shooting, the radio circuit is divided into four sections, as follows:

Section 1—the power supply
Section 2—the audio circuits
Section 3—the i-f, detector, and a-v-c circuits
Section 4—the r-f and converter circuits

Test points are specified for each section, and are indicated in the sectionalized schematic diagram. The trouble-shooting procedure given for each section includes a simplified test chart and a bottom view of the chassis showing the locations of the test points and the components of that section.

In each chart, the first step is a master check for determining whether trouble exists in that section, without going through the entire test procedure.

Failure to obtain the "NORMAL INDICATION" in any given step indicates trouble within the circuit under test.

After isolating the trouble to a single stage, the defect is located by: first, testing the tube; second, measuring tube electrode voltages; third, measuring circuit resistances; fourth, substituting condensers. Any trouble revealed should be corrected before testing further.



MODEL 48-1284

SPECIFICATIONS

CABINET	Wood console, walnut finish
RADIO CIRCUIT	Seven-tube superheterodyne
FREQUENCY RANGES	
Broadcast	540—1650 kc.
Short Wave	9.3—15.7 mc.
AUDIO OUTPUT	6 watts
OPERATING VOLTAGE	105—120 volts, 60 cycles, a.c.
POWER CONSUMPTION	
Radio	75 watts
Record Changer	20 watts
AERIAL	Built-in low-impedance loop; terminal provided for external aerial
INTERMEDIATE FREQUENCY	455 kc.
PHILCO TUBES (7)	7AF7, 7A7, 7R7, 7F7, 6K6GT (2), 7Z4
PHONOGRAPH	Philco Automatic Record Changer Model M-8 (for service information see manual PR-1478)

Preliminary Checks

To avoid possible damage to the radio, the following preliminary checks should be made before turning on the power:

1. Inspect both the top and the bottom of the chassis. Make sure that all tubes are secure in the proper sockets, and look for any broken or shorted connections, burned resistors, or other obvious indications of trouble.

2. Measure the resistance between B+ (pin 7 of 7Z4 rectifier) and B–, test point B. When the ohmmeter leads are connected in the proper polarity, the highest resistance reading will be obtained. If the reading is lower than 3000 ohms, check condensers C102, C103B, C311, and C306 for leakage or shorts. This resistance value, which is much lower than normal, does not represent a quality check of these condensers; it is the lowest value which will permit the rectifier to operate safely while the voltage tests of Section 1 (power supply) are performed.

© John F. Rider

MODEL 48-1284

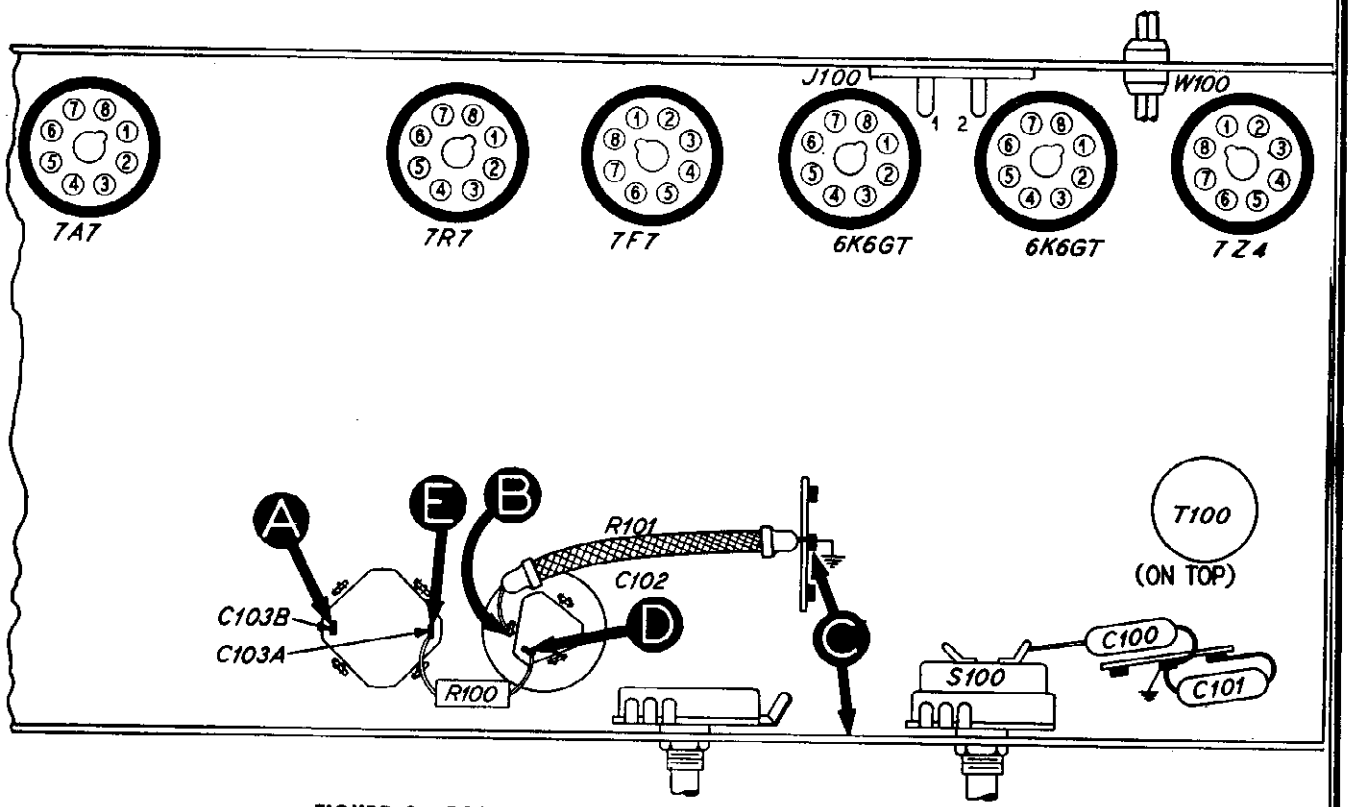

FIGURE 2. BOTTOM VIEW, SHOWING SECTION 1 TEST POINTS TP-5356-A

Section 1 TROUBLE SHOOTING

POWER SUPPLY

CAUTION: Do not turn on the power with the speaker disconnected, or the radio may be damaged.

Make the tests for this section with a d-c voltmeter; connect the leads between the test points indicated in the chart. The voltage readings given were taken with a 20,000-ohms-per-volt meter at a line voltage of 117 volts.

Set the band switch to the broadcast position. Set the volume control to minimum and turn the tone control fully clockwise.

Follow the steps in the order given. If the "NORMAL INDICATION" is obtained in step 1, proceed with the tests for Section 2 (audio circuits); if not, isolate and correct the trouble in this section.

STEP	TEST POINT	NORMAL INDICATION	ABNORMAL INDICATION	POSSIBLE CAUSE OF ABNORMAL INDICATION
1	A to C	255v		Trouble in this section. Isolate by the following tests.
2	D to B	300v	No voltage Low voltage High voltage	Defective: 7Z4. Open: T100, S100, W100. Shorted: C102, T200. Leaky: C102. Shorted or leaky: C103A, C103B, C306*, C311*, C210*, C211*. Open: L100, R100, R101, T200*.
3	B to C	−17v	High voltage	Open: R101.
4	E to C	205v	No voltage Low voltage	Open: R100. Shorted: C103A. Leaky: C103A. Increased resistance: R100.
5	A to C	255v	No voltage Low voltage High voltage	Open: L100, R101. Shorted: C103B. Leaky: C103B. Shorted: C210*, C211*. Open: T200*.
Listening Test: Abnormal hum may be caused by open C102, C103A, C103B, C100, or C101.				

*This part, located in another section, may cause abnormal indication in this section.

© John F. Rider

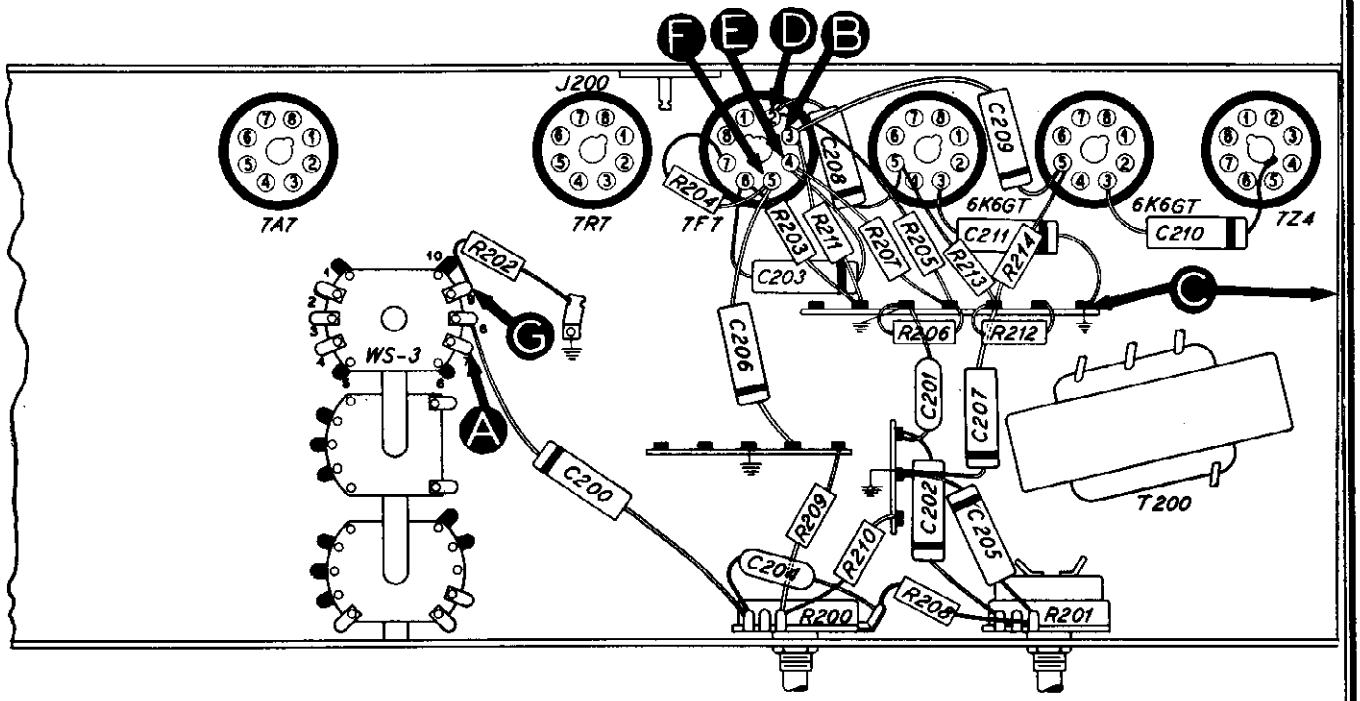

FIGURE 3. BOTTOM VIEW, SHOWING SECTION 2 TEST POINTS TP-5356-B

Section 2

TROUBLE SHOOTING

AUDIO CIRCUITS

For the tests in this section, use an audio-frequency signal generator. Connect the generator ground lead to the chassis, test point C; connect the output lead through a .1-mf. condenser to the test points indicated in the chart.

Set the volume control to maximum, turn the tone control fully clockwise, and set the band switch to the broadcast position for all of the steps except step 7.

If the "NORMAL INDICATION" is obtained in step 1, proceed with the tests for Section 3 (i-f, detector, and a-v-c circuits); if not, isolate and correct the trouble in this section.

STEP	TEST POINT	NORMAL INDICATION	POSSIBLE CAUSE OF ABNORMAL INDICATION
1	A	Loud, clear signal with weak signal input.	Trouble in this section. Isolate by the following tests.
2	B (Remove 7F7.)	Clear signal with strong signal input.	Defective: 6K6GT, T200. Shorted: C210, C209. Open: R214, R212, C209.
3	D (7F7 removed.)	Same as step 2.	Defective: 6K6GT, T200. Shorted: C208, C211. Open: R213, C208.
4	E (Replace 7F7.)	Loud, clear signal with moderate signal input.	Defective: 7F7. Shorted: C203. Open: R205, R206, R207, R211.
5	F	Same as step 1.	Defective: 7F7. Shorted: C201, C202. Open: C203, R203, R204.
6	A	Same as step 1.	Defective: R200 (rotate through range). Open: C200, C206, WS-3 (R), R209. Shorted: C302D*, C312*.
7	G (Set band switch to phono.)	Same as step 1.	Open: WS-3 (R).
Listening Test: Distortion may be caused by shorted or leaky C200, C206, C203, C208, or C209. Poor low-frequency response may be caused by open or shorted C205 or open R208.			

*This part, located in another section, may cause abnormal indication in this section.

© John F. Rider

MODEL 48-1284

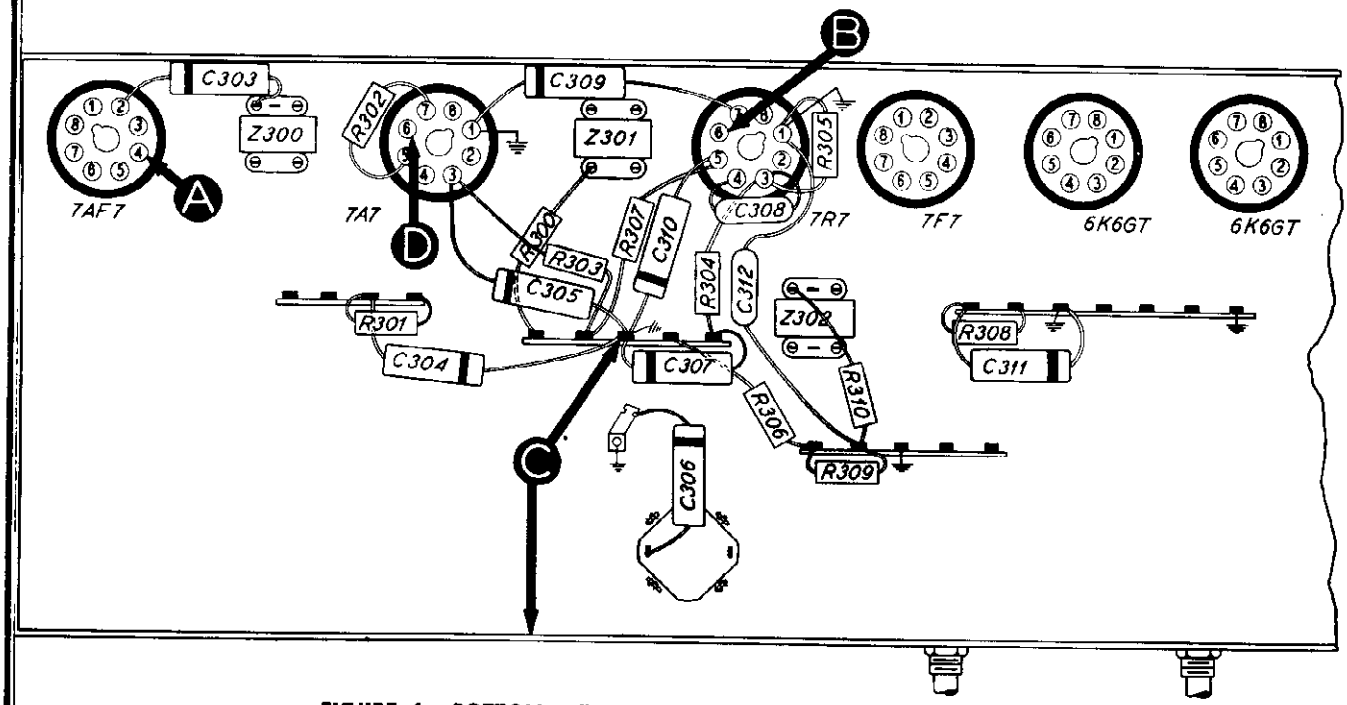

FIGURE 4. BOTTOM VIEW, SHOWING SECTION 3 TEST POINTS TP-5356-C

Section 3

TROUBLE SHOOTING

I-F, DETECTOR, AND A-V-C CIRCUITS

For the tests in this section, use an r-f signal generator, with modulated output, set at 455 kc. Connect the generator ground lead to the chassis, test point C; connect the output lead through a .1-mf. condenser to the test points indicated in the chart.

Set the radio-phono switch to the radio position and the band switch to the broadcast position. Set the volume control to maximum and turn the tone control fully clockwise. Rotate the tuning control until the tuning condenser is fully meshed.

If the "NORMAL INDICATION" is obtained in step 1, proceed with the tests for Section 4 (r-f and converter circuits); if not, isolate and correct the trouble in this section.

To provide a complete i-f-amplifier check, test point A for this section is placed at the grid of the mixer in Section 4; therefore, the effectiveness of step 1 as a master check is dependent upon the condition of certain parts in the mixer circuit. These parts are listed below under "POSSIBLE CAUSE OF ABNORMAL INDICATION".

STEP	TEST POINT	NORMAL INDICATION	POSSIBLE CAUSE OF ABNORMAL INDICATION
1	A	Loud, clear signal with weak signal input.	Trouble in this section. Isolate by the following tests.
2	B	Loud, clear signal with strong signal input.	Defective: 7R7. Open: L302A, L302B, R306, WS-2 (R), R309, R310, R308, R307, C302A, C302B. Shorted: L302A, L302B, C302A, C302B. Shorted or leaky: C310, C311, C302C. Misaligned: Z302.
3	D	Loud, clear signal with moderate signal input.	Defective: 7A7. Misaligned: Z301. Open: R302, R303, L301A, L301B, C301A, C301B. Shorted: C305, C301A, C301B, L301A, L301B.
4	A	Loud, clear signal with weak signal input.	Defective: 7AF7*. Misaligned: Z300. Open: R401*, R300, R301, L300A, L300B, L300C, C300A, C300B. Shorted: C303, C409*, C300A, C300B, L300A, L300B, L300C.

*This part, located in another section, may cause abnormal indication in this section.

© John F. Rider

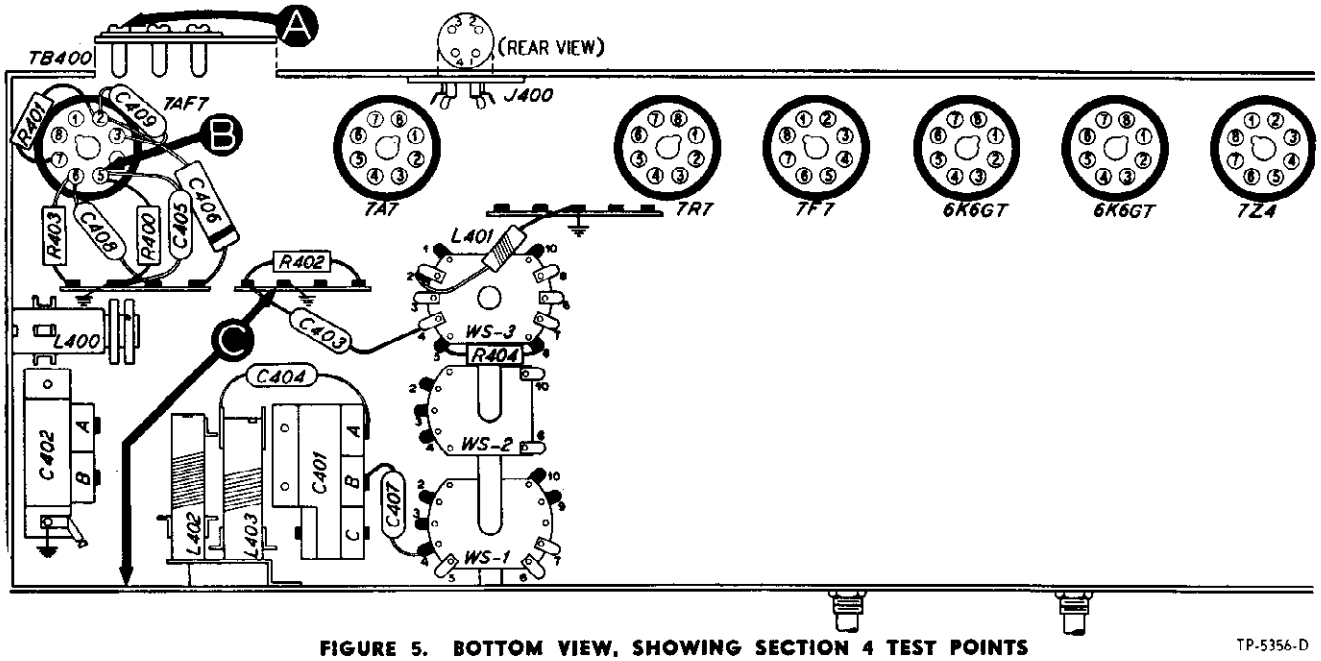

FIGURE 5. BOTTOM VIEW, SHOWING SECTION 4 TEST POINTS TP-5356-D

Section 4

TROUBLE SHOOTING

R-F AND CONVERTER CIRCUITS

For the tests in this section, with the exception of the oscillator tests, use an r-f signal generator with modulated output. Connect the generator ground lead to the chassis, test point C; connect the output lead through a .1-mf. condenser to the test points indicated in the chart.

Set the volume control to maximum and turn the tone control fully clockwise. Set the radio band switch, the tuning control, and the signal-generator frequency as indicated in the chart.

If the "NORMAL INDICATION" is not obtained in step 1, isolate and correct the trouble in this section. If the trouble is not revealed by the tests for this section, check the alignment.

STEP	TEST POINT	SIG. GEN. FREQ.	BAND SWITCH	RADIO TUNING	NORMAL INDICATION	POSSIBLE CAUSE OF ABNORMAL INDICATION
1 (a)	A	1000 kc.	BC	1000 kc.	Loud, clear signal with weak signal input.	Trouble in broadcast band. Isolate by the tests in steps 2 and 3.
1 (b)	A	15 mc.	SW	15 mc.	Same as step 1 (a).	Trouble in short-wave band. Isolate by the tests in steps 4 and 5.
2	B (Osc. test; see note below.)		BC	Rotate through range.	Negative 1.5 to 2.0 volts.	Defective: 7AF7. Open: L402, WS-1 (F), WS-2 (F), WS-3 (F), R400, C408, R403, R404, C405. Shorted or leaky: C405, C408, C400A, C402B, C401C. Shorted: L402.
3	A	1000 kc.	BC	1000 kc.	Loud, clear signal with weak signal input.	Open: L400, WS-3 (F), WS-3 (R), C403, C406, R401. Shorted: C400B, C402A.
4	B (Osc. test; see note below.)		SW	Rotate through range.	Negative 1.5 to 2.0 volts.	Defective: 7AF7. Open: L403, WS-1 (F), WS-2 (F), WS-3 (F), C407. Shorted: C401B, C407.
5	A	15 mc.	SW	15 mc.	Loud, clear signal with weak signal input.	Open: WS-3 (F), WS-3 (R), L401. Shorted: C401A.

OSCILLATOR TEST: Connect the positive lead of a high-resistance voltmeter to the chassis, test point C; connect the prod end of the negative lead through a 100,000-ohm isolating resistor to the oscillator grid (pin 5 of the 7AF7), test point B. Use a suitable meter range, such as 0—10 volts. Proper operation of the oscillator is indicated by negative voltages of approximately the values given in the chart (measured with a 20,000-ohms-per-volt meter) throughout the tuning range.

© John F. Rider

MODEL 48-1284

CALIBRATING DIAL BACKPLATE

When the radio chassis has been removed from the cabinet, dial calibration and alignment points should be marked on the dial backplate below the pointer.

The method of measuring for these points is illustrated in figure 1. Hold a ruler against the scale backplate, with the start of the ruler at the reference line shown, and mark pencil dots at the proper points for the required frequency settings. When the ruler is correctly placed, the index mark is approximately 2 inches from the reference point indicated in figure 1.

With the tuning gang fully meshed, the pointer should be adjusted on the dial-drive cord to coincide with the index mark.

After installation of the chassis in the cabinet, the dial pointer should be moved to coincide with the index mark on the dial. Coincidence of the pointer and index mark should occur with the tuning condenser fully meshed.

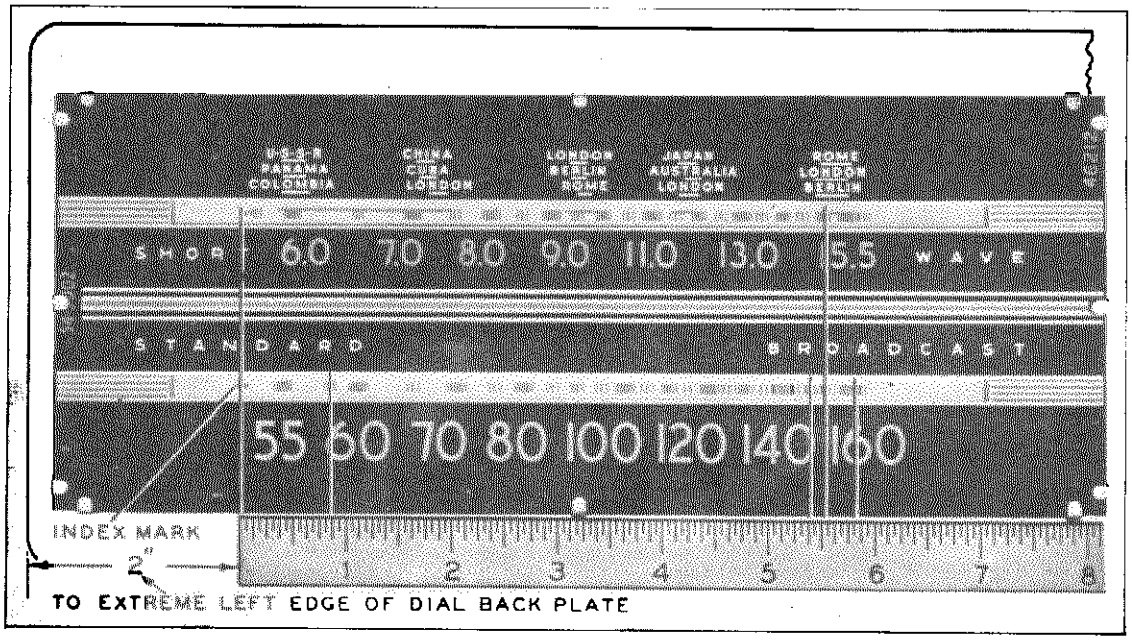

FIGURE 1. CALIBRATION MEASUREMENTS FOR DIAL BACKPLATE TP-5774

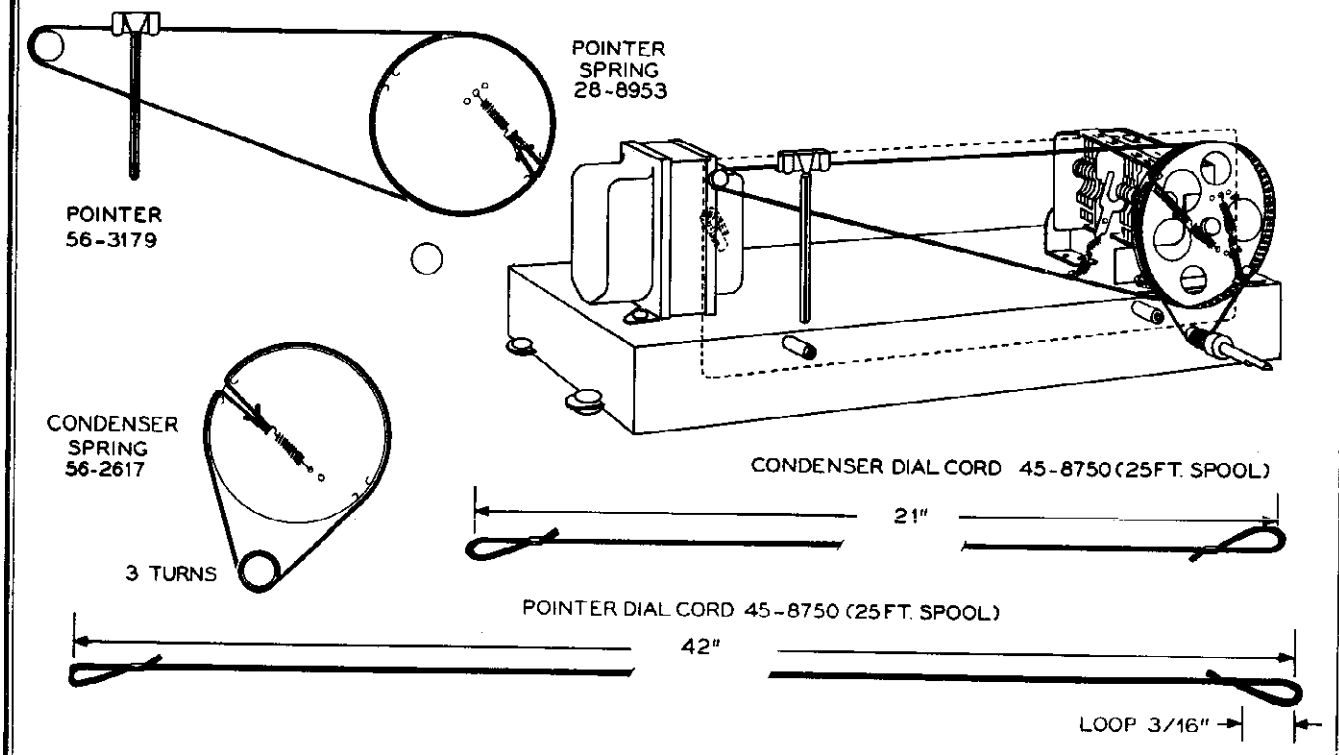

FIGURE 6. DRIVE-CORD INSTALLATION DETAILS

©John F. Rider

©Tabb B Dixon

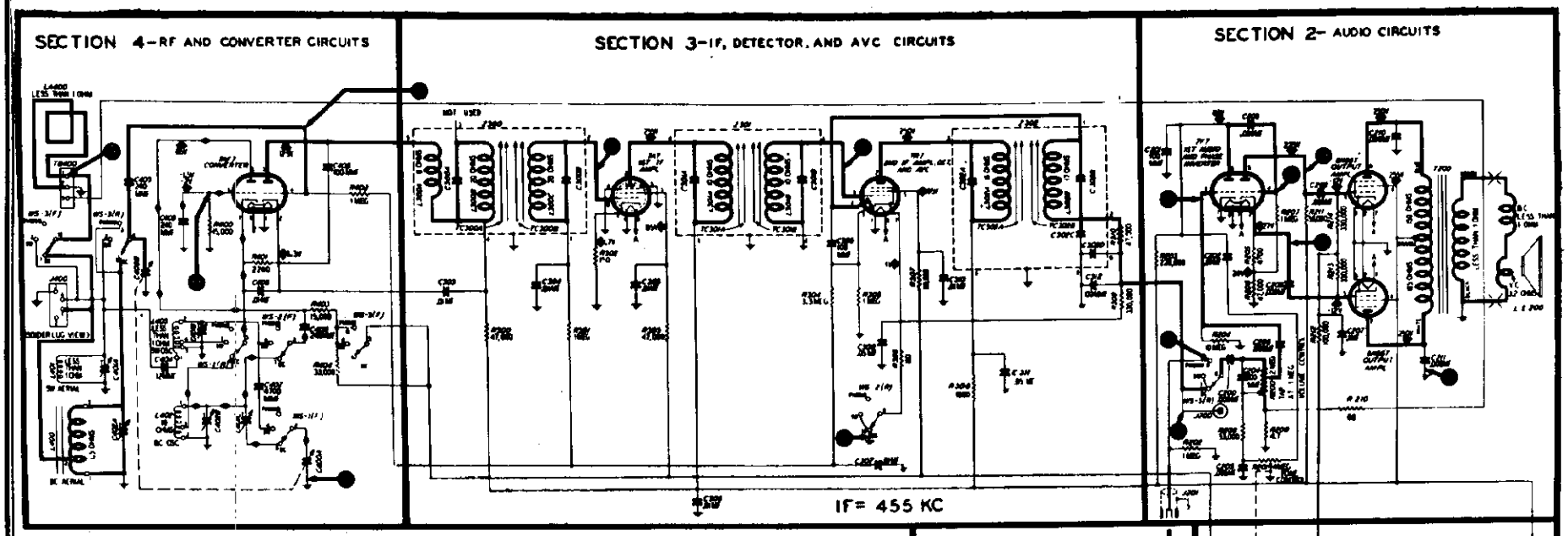

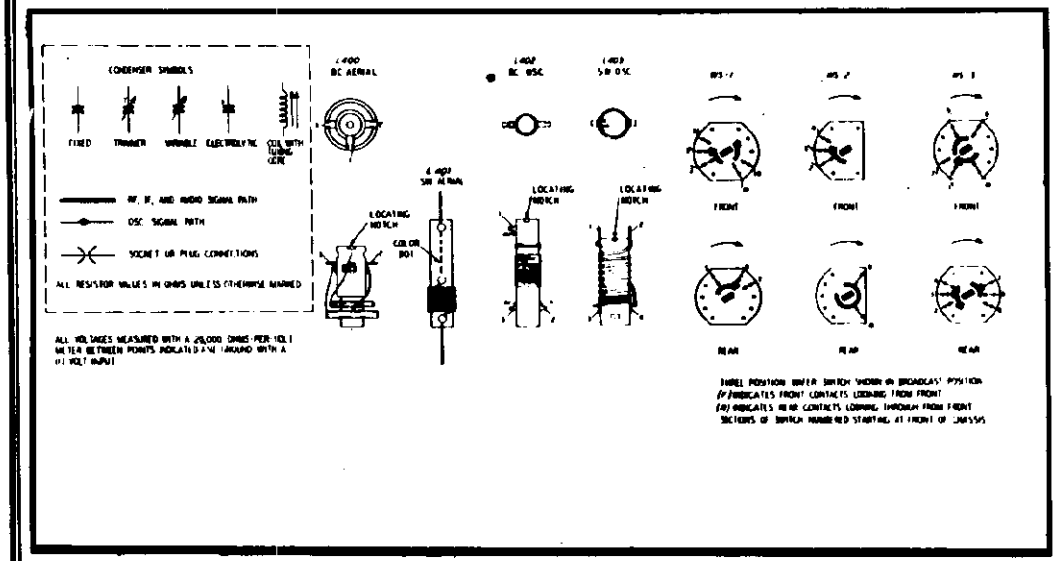

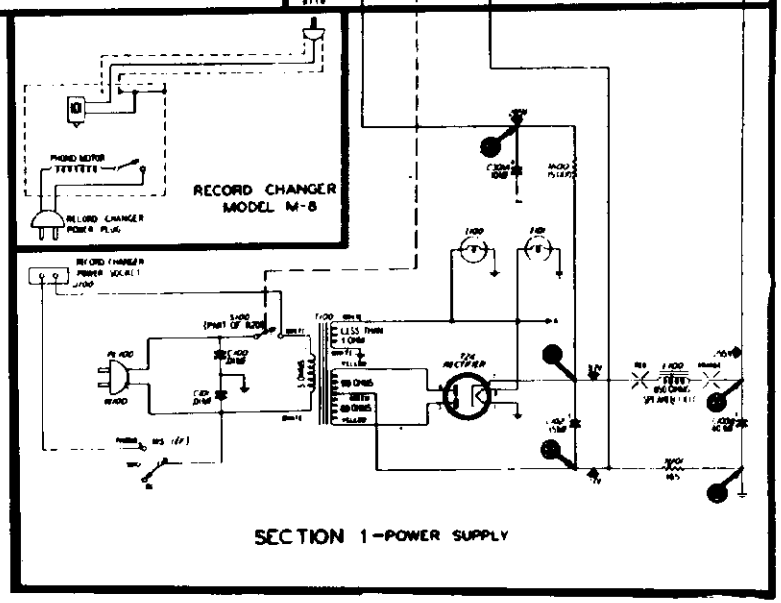

RECORD CHANGER: See Philco Model M-8, Pages RCD.CH. 19-1 through RCD.CH. 19-17

©John F. Rider

ALIGNMENT PROCEDURE

DIAL—Calibration and pointer-index measurements are shown in figure 1. With tuning condenser fully meshed, set pointer to index mark.

OUTPUT METER—Connect one lead to chassis, and other lead to terminal 3 of TB400.

SIGNAL GENERATOR—Connect generator ground lead to chassis; connect output lead as indicated in chart. Use modulated output.

RADIO CONTROLS—Set volume control to maximum and turn tone control fully counterclockwise.

OUTPUT LEVEL—During alignment, adjust signal-generator output to maintain output-meter indication below 1.5 volts.

STEP	SIGNAL GENERATOR		RADIO			ADJUST
	CONNECTION TO RADIO	DIAL SETTING	BAND SWITCH	DIAL SETTING	SPECIAL INSTRUCTIONS	
1	Through .1-mf. condenser to terminal 1 of TB400.	455 kc.	BC	540 kc.	Adjust tuning cores, in order given, for maximum output.	TC302B—3rd i-f sec. TC302A—3rd i-f pri. TC301B—2nd i-f sec. TC301A—2nd i-f pri. TC300B—1st i-f sec. TC300A—1st i-f pri.
2	Radiating loop (see note below).	580 kc.	BC	580 kc.	Adjust trimmer for maximum output.	C401C—BC osc. (series)
3	Same as step 2.	1600 kc.	BC	1600 kc.	Adjust trimmer for maximum output.	C402B—BC osc. (shunt)
4	Same as step 2.	1500 kc.	BC	1500 kc.	Adjust trimmer for maximum output.	C402A—BC aerial
5	Same as step 2.	580 kc.	BC	580 kc.	Adjust trimmer for maximum output while rocking tuning condenser.	C401C—BC osc. (series)
6	Repeat steps 3, 4, 5, 3, and 4 until no further improvement is noted.					
7	Same as step 2.	15 mc.	SW	15 mc.	Adjust trimmer for maximum output on first peak from loose position. Check for image at 14.1 mc.	C401B—SW osc.
8	Same as step 2.	15 mc.	SW	15 mc.	Adjust trimmer for maximum output while rocking tuning condenser.	C401A—SW aerial

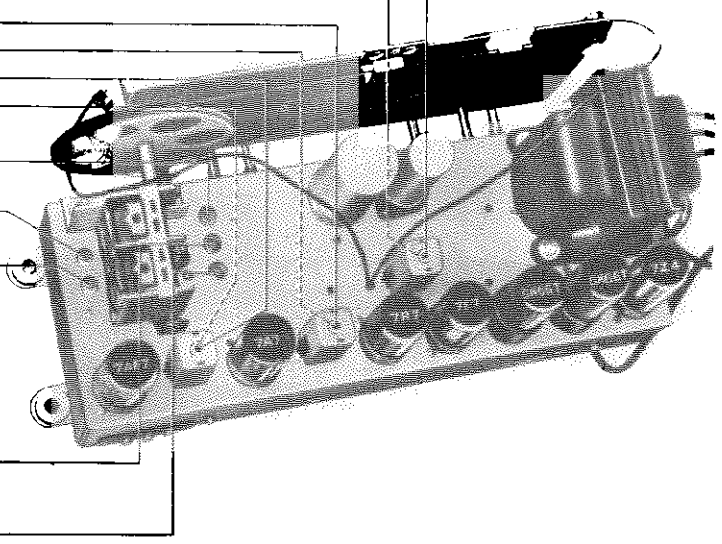

FIGURE 8. TOP VIEW, SHOWING TRIMMER LOCATIONS

RADIATING LOOP: Make up a 6—8-turn, 6-inch-diameter loop from insulated wire; connect to signal-generator leads and place near radio loop aerial. Make certain that radio loop aerial is connected to radio.

REPLACEMENT PARTS LIST

NOTE

Part numbers identified by an asterisk (*) indicate general replacement items. These numbers may not be identical with those on factory assemblies; also, the electrical values of some replacement items may differ from the values indicated in the schematic diagram and parts list. The values substituted in any case are so chosen that the operation of the radio will be either unchanged or improved. When ordering replacements, use only the "Service Part No."

SECTION 1—POWER SUPPLY

Reference Symbol	Description	Service Part No.
C100	Condenser, line filter, .01 mf.	81-0120*
C101	Condenser, line filter, .01 mf.	81-0120*
C102	Condenser, electrolytic, filter, 35 mf., 450v.	30-2570-25
C103	Condenser, electrolytic, 2-section	30-2570-24
C103A	Condenser, filter, 10 mf., 450v.	Part of C103
C103B	Condenser, filter, 40 mf., 450v.	Part of C103

REPLACEMENT PARTS LIST (Continued)

SECTION 1—POWER SUPPLY (Continued)

Reference Symbol	Description	Service Part No.
I100	Pilot lamp	34-2040
I101	Pilot lamp	34-2040
J100	Socket, record changer power	27-8200
L100	Speaker, field	Part of 36-1611-3
PL100	Plug, a-c power	Part of W100
R100	Resistor, filter, 15,000 ohms	66-31553400*
R101	Resistor, bias, 165 ohms	33-1334-3

SECTION 1—POWER SUPPLY (Continued)

Reference Symbol	Description	Service Part No.
S100	Switch, on-off	Part of 33-5538-29
T100	Transformer, power	32-8350
W100	Line-cord-and-plug assembly	L-2183*
WS-1 (F)	Switch-wafer section	Part of 42-1848

MODEL 49-1100

Circuit Description

Philco Radio Model 49-1100 is a six-tube superheterodyne, which provides reception in the standard-broadcast band. The circuit includes a 14AF7 converter, a 7B7 1st i-f amplifier, a 7B7 2nd i-f amplifier, a 7C6 detector, a.v.c., and 1st audio amplifier, and a 35L6GT output amplifier. The power supply employs a 50X6 rectifier in a voltage-doubling circuit.

A low-impedance loop aerial, located within the cabinet, normally provides adequate signal pickup. If greater signal pickup is required, the jumper should be disconnected from the terminal at the rear of the chassis and an external aerial connected to the terminal.

Two series-resonant circuits, consisting of condensers C302 and C303 together with the coils wound on these condensers, function as traps to prevent feedback of the intermediate frequency and the second harmonic of the intermediate frequency through the B– lead. One circuit is resonant at 455 kc., and the other at 910 kc. Each circuit offers a very low impedance to the resonant frequency, and, therefore, shunts it to the chassis.

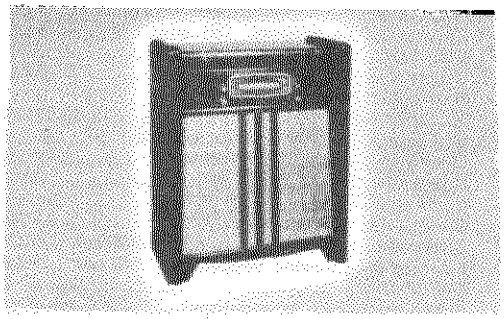

SPECIFICATIONS

CABINET	Wood, mahogany
CIRCUIT	Six-tube superheterodyne
FREQUENCY RANGE	540—1620 kc.
INTERMEDIATE FREQUENCY	455 kc.
AUDIO OUTPUT	2.5 watts
OPERATING VOLTAGE	105—120 volts, 60 cycles, a.c.
POWER CONSUMPTION	40 watts
AERIAL	Built-in low-impedance loop; provisions for external aerial.
PHILCO TUBES (6)	14AF7, 7B7(2), 7C6, 35L6GT, 50X6

TP-4525

Philco TROUBLE-SHOOTING *Procedure*

For rapid trouble shooting, the radio circuit is divided into four sections, as follows:

Section 1—the power supply
Section 2—the audio circuits
Section 3—the i-f, detector, and a-v-c circuits
Section 4—the r-f and converter circuits

Test points are specified for each section, and are indicated in the sectionalized schematic diagram. The trouble-shooting procedure given for each section includes a simplified test chart and a bottom view of the chassis showing the locations of the test points and the components of that section.

In each chart, the first step is a master check for determining whether trouble exists in that section, without going through the entire test procedure.

Failure to obtain the "NORMAL INDICATION" in any given step indicates trouble within the circuit under test.

After isolating the trouble to a single stage, the defect is located by: first, testing the tube; second, measuring tube electrode voltages; third, measuring circuit resistances; fourth, substituting condensers. The trouble revealed should be corrected before testing further.

Preliminary Checks

To avoid possible damage to the radio, the following preliminary checks should be made before connecting the radio to a source of power.

1. Inspect both the top and the bottom of the chassis. Make sure that all tubes are secure in the proper sockets, and look for any broken or shorted connections, burned resistors, or other obvious indications of trouble.
2. Measure the resistance between B+ (pin 7 of 50X6 rectifier) and B–. When the ohmmeter leads are connected in the proper polarity, the highest reading will be obtained. If the reading is lower than 3000 ohms, check condensers C101, C102, C103A, and C207 for leakage or shorts.

NOTE: The resistance value above, which is much lower than normal, does not represent a quality check of these condensers; the value given is the lowest at which the rectifier will operate safely while the voltage tests of Section 1 (power supply) are performed.

©John F. Rider

TROUBLE SHOOTING

Section 1—Power Supply

Make the tests for this section with a d-c voltmeter; connect the leads between B–, test point B, and the test points indicated in the chart.

The voltage readings given were taken with a 20,000-ohms-per-volt meter, at a line voltage of 117 volts.

Set the volume control to minimum, and the tone control fully clockwise.

Follow the steps in the order given. If the "NORMAL INDICATION" is obtained in step 1, proceed with the tests for Section 2 (audio circuits); if not, isolate and correct the trouble in this section.

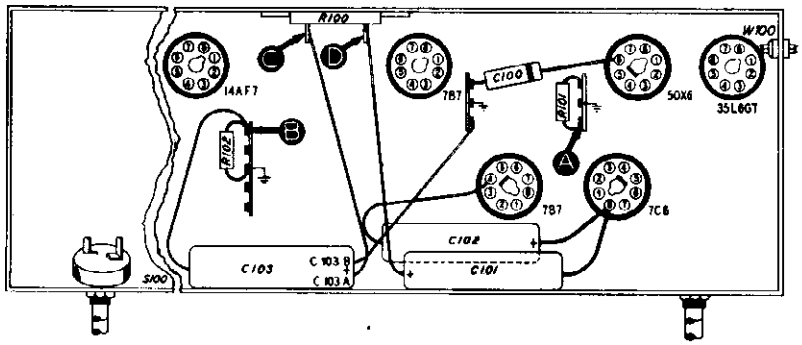

Figure 1. Bottom View, Showing Section 1 Test Points

STEP	TEST POINT	NORMAL INDICATION	ABNORMAL INDICATION	POSSIBLE CAUSE OF ABNORMAL INDICATION
1	A	107v		Trouble in this section. Isolate by the following tests.
2	D	225v	No voltage Low voltage High voltage	Defective: 50X6, S100, W100, PL100. Shorted: C101 and C102. Defective: 50X6. Open: C101, C102. Leaky: C101, C102, C103A, C103B. Open: R100, R101.
3	C	190v	No voltage Low voltage High voltage	Shorted: C103A. Open: R100. Changed resistance: R100. Shorted: C207*, C103B. Leaky: C103A. Open: R101, T200*, R207*.
4	A	107v	No voltage Low voltage High voltage	Shorted: C103B. Open: R101. Leaky: C103B. Open: R207*, T200*.
Listening Test: Abnormal hum may be caused by open C100, C103A, C103B, or R102.				

* This part, located in another section, may cause abnormal indication in this section.

TROUBLE SHOOTING

Section 2—Audio Circuits

For the tests in this section, use an audio-frequency signal generator. Connect the generator ground lead to B–, test point B; connect the output lead through a .1-mf. condenser to the test points indicated in the chart.

Set the volume control to maximum, and the tone control fully clockwise.

If the "NORMAL INDICATION" is obtained in step 1, proceed with the tests for Section 3 (i-f, detector, and a-v-c circuits); if not, isolate and correct the trouble in this section.

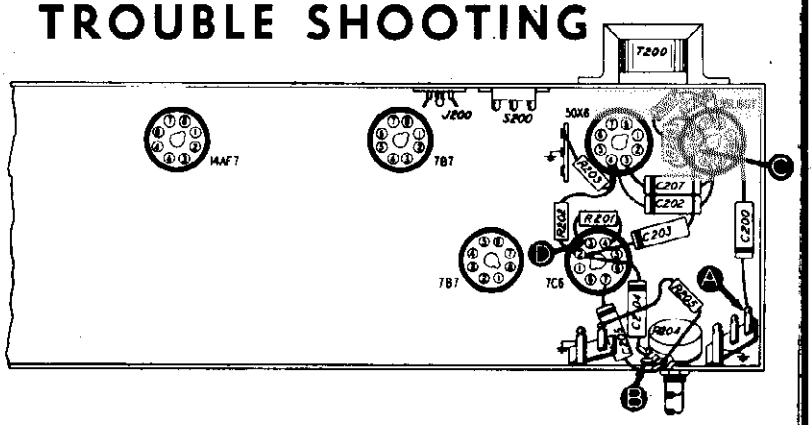

Figure 2. Bottom View, Showing Section 2 Test Points

STEP	TEST POINT	NORMAL INDICATION	POSSIBLE CAUSE OF ABNORMAL INDICATION
1	A	Loud, clear signal with weak signal input.	Trouble in this section. Isolate by the following tests.
2	C	Clear signal with strong signal input.	Open: T200, R207. Shorted: C203, C206, C207, C205. Leaky: C203. Defective: 35L6GT, LS200.
3	D	Same as step 1.	Open: R202, R203, C203. Shorted: C202, C204. Defective: 7C6 (triode section).
4	A	Same as step 1.	Open: C200, C201, R200 (rotate through range). Shorted: C307* C301D*.
Listening Test: Distortion may be caused by open R201 or R206, or by shorted or leaky C200 or C201.			

* This part, located in another section, may cause abnormal indication in this section.

© John F. Rider

MODEL 49-1100

Section 3—I-F, Detector, and A-V-C Circuits

TROUBLE SHOOTING

For the tests in this section, use an r-f signal generator, with modulated output, set at 455 kc. Connect the generator ground lead to B–, test point B; connect the output lead through a .1-mf. condenser to the test points indicated in the chart.

Set the volume control to maximum, and the tone control fully clockwise. Rotate the tuning control until the tuning condenser is fully meshed.

If the "NORMAL INDICATION" is obtained in step 1, proceed with the tests for Section 4 (r-f and converter circuits); if not, isolate and correct the trouble in this section.

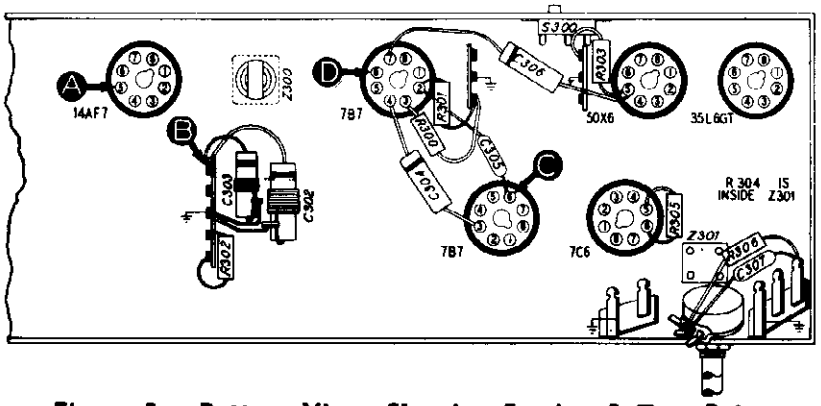

Figure 3. Bottom View, Showing Section 3 Test Points

Since the circuit location of test point A for this section is in Section 4, the effectiveness of step 1 as a master check is dependent upon the condition of certain parts in Section 4; these parts are listed below under "POSSIBLE CAUSE OF ABNORMAL INDICATION."

STEP	TEST POINT	NORMAL INDICATION	POSSIBLE CAUSE OF ABNORMAL INDICATION
1	A	Loud, clear signal with weak signal input.	Trouble in this section. Isolate by the following tests.
2	C	Loud, clear signal with moderate signal input.	Defective: 7B7 (2nd i-f amplifier). 7C6 (diode section). Open: L301A, L301B, R308, R304, R303, R300. Shorted: C305, C301A, C301B, C306, C304, C301C, L301A, L301B. Leaky: C305.
3	D	Same as step 1.	Defective: 7B7 (1st i-f amplifier). Open: C305, R301, R302. Shorted: C300B, L300B.
4	A	Same as step 1.	Defective: 14AF7. Open: R402*, L401*, L300A, C300A, L300B. Shorted: C300A, L300A.

NOTE: Voltage on the chassis may be caused by shorted C302 or C303. Oscillation may be caused by open C302 or C303.

* This part, located in another section, may cause abnormal indication in this section.

Section 4—R-F and Converter Circuits

TROUBLE SHOOTING

For the tests in this section, with the exception of the oscillator test, use an r-f signal generator with modulated output. Connect the generator ground lead to B–, test point B; connect the output lead through a .1-mf. condenser to the test points indicated in the chart.

Set the volume control to maximum, and the tone control fully clockwise. Set the radio tuning control and signal-generator frequency as indicated in the chart.

If the "NORMAL INDICATION" is not obtained in step 1, isolate and correct the trouble in this section.

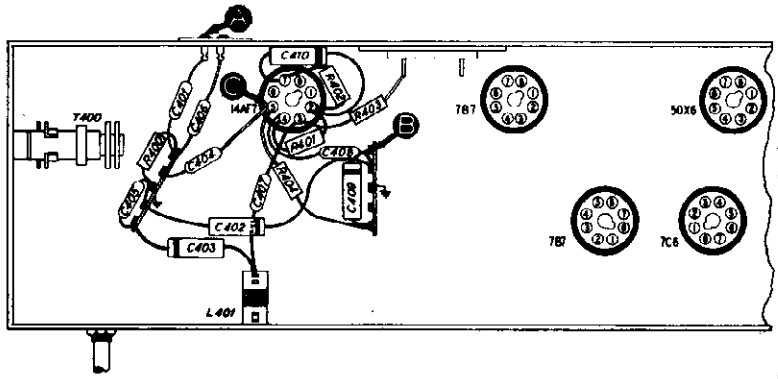

Figure 4. Bottom View, Showing Section 4 Test Points

STEP	TEST POINT	SIG. GEN. FREQ.	RADIO TUNING	NORMAL INDICATION	POSSIBLE CAUSE OF ABNORMAL INDICATION
1	A	1000 kc.	Tune to signal.	Loud, clear signal with weak signal input.	Trouble in this section. Isolate by the following tests.
2	C (Osc. test; see note below.)		Rotate through range.	Negative 3.5 to 5 volts.	Defective: 14AF7. Open C403, C407, C408, L401, R401. Shorted: C405, C400A, C400C, C408, C407. Leaky: C407, C408.
3	A	1000 kc.	Tune to signal.	Same as step 1.	Open: C401, C404, T400. Shorted: C400B, C400D, C408,

Listening Test: Distortion and hum may be caused by open C409 or R404.

OSCILLATOR TEST: Connect the positive lead of a high-resistance voltmeter to B–, test point B; connect the prod end of the negative lead through a 100,000-ohm isolating resistor to the oscillator grid (pin 4 of the 14AF7), test point C. Proper operation of the oscillator is indicated by negative voltages of approximately the values given in the chart (measured with 20,000-ohms-per-volt meter) throughout the tuning range.

© John F. Rider

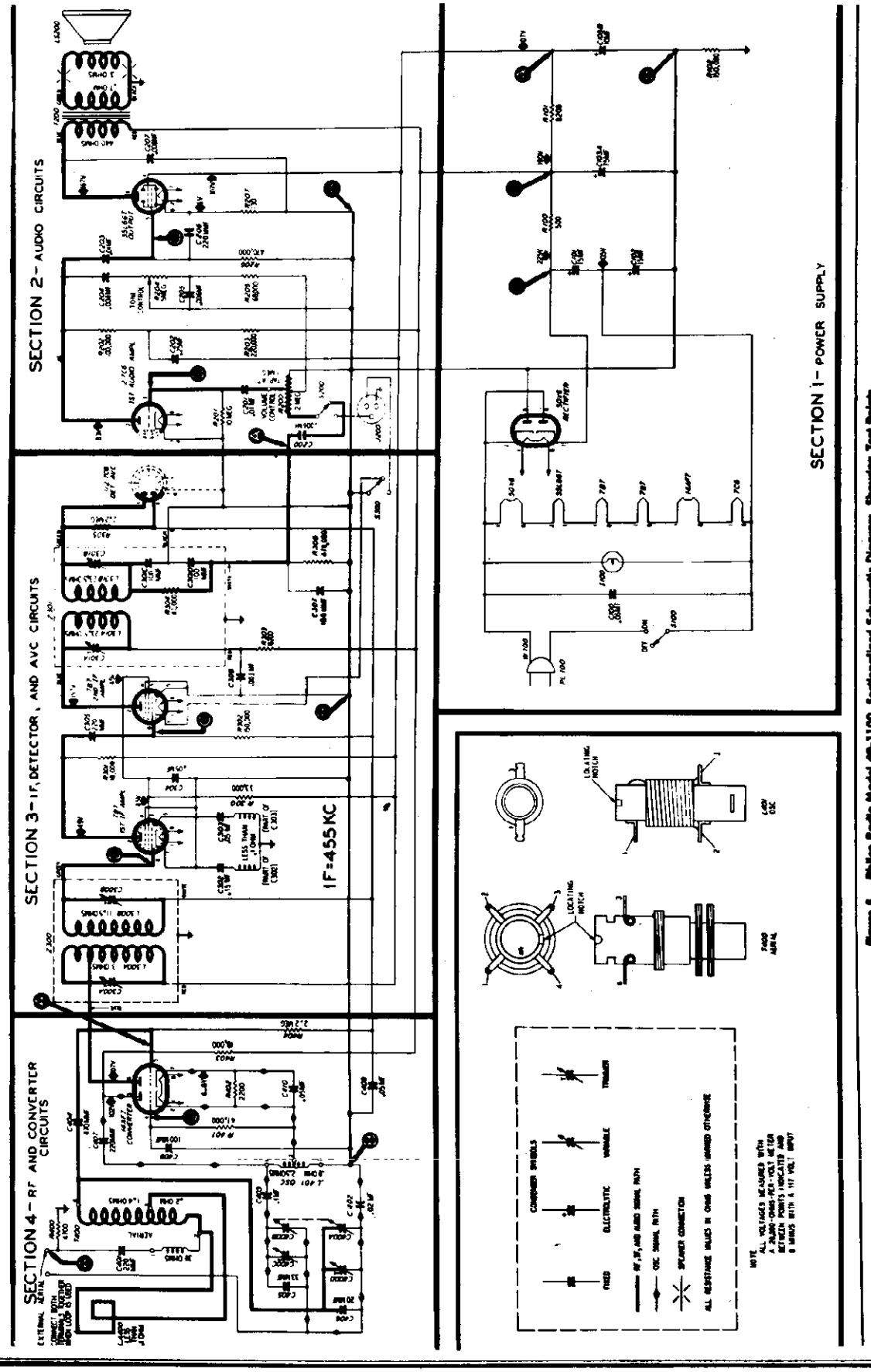

Figure 8. Philco Radio Model 49-1100, Sectionalized Schematic Diagram, Showing Test Points

©John F. Rider

ALIGNMENT PROCEDURE

DIAL—Calibration and pointer-index measurements are shown in figure 6. With tuning gang fully meshed, set pointer to index mark.

OUTPUT METER—Connect to voice-coil terminals.

SIGNAL GENERATOR—Connect as indicated in chart. Use modulated output.

RADIO CONTROLS—Set volume control to maximum, and tone control fully counterclockwise.

OUTPUT LEVEL—During alignment, adjust signal-generator output to maintain output-meter indication below 1.25 volts.

STEP	SIGNAL GENERATOR		RADIO		
	CONNECTIONS TO RADIO	DIAL SETTING	DIAL SETTING	SPECIAL INSTRUCTIONS	ADJUST
1				Turn trimmer fully tight.	C300B—1st i-f sec.
2	Through .1-mf. condenser to mixer grid (pin 5 of 14AF7).	455 kc.	Tuning gang fully meshed.	Adjust trimmers, in order given, for maximum output.	C301B—2nd i-f sec. C301A—2nd i-f pri. C300B—1st i-f sec. C300A—1st i-f pri.
3	Radiating loop (see note below).	1600 kc.	1600 kc.	Adjust trimmer for maximum output.	C400C—osc.
4	Same as step 3.	1500 kc.	1500 kc.	Adjust trimmer for maximum output.	C400D—aerial

RADIATING-LOOP NOTE: Make up a 6—8 turn, 6-inch-diameter loop, using insulated wire; connect to signal-generator leads and place near radio loop aerial. Make certain that radio loop aerial is connected to radio.

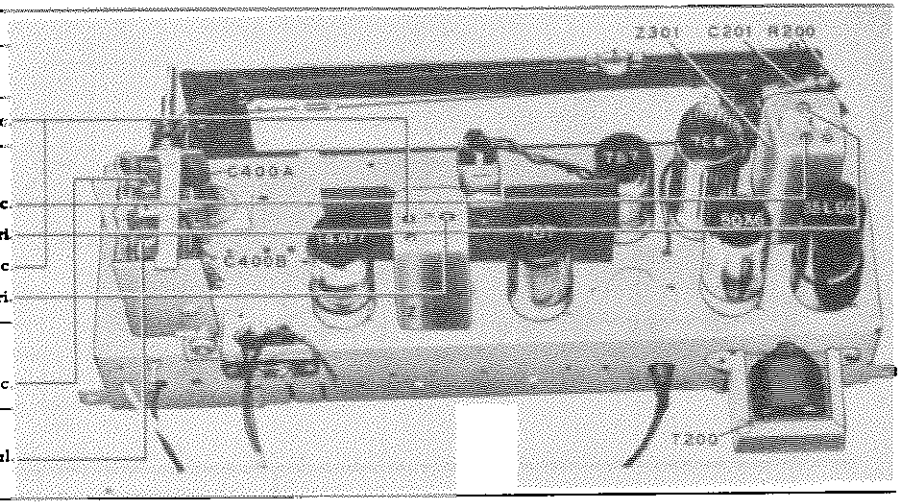

Figure 7. Top View, Showing Trimmer Locations

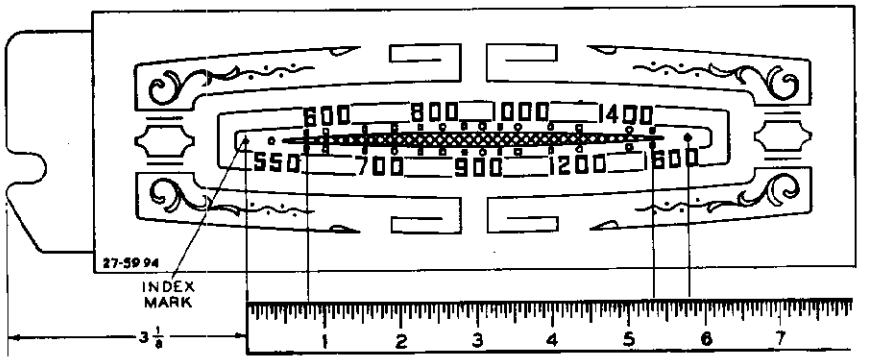

Figure 6. Calibration Measurements for Dial Backplate

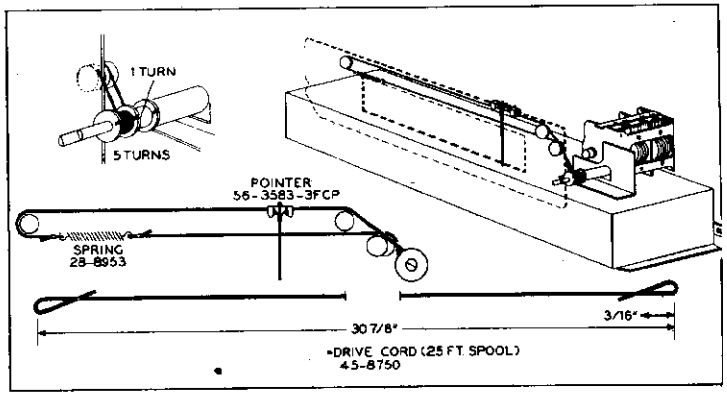

Figure 8. Drive-Cord Installation Details

REPLACEMENT PARTS LIST

NOTE: Part numbers marked with an asterisk (*) are general replacement items. These numbers may not be identical with those on factory assemblies; also, the electrical values of some replacement items may differ from the values indicated in the schematic diagram and parts list. The values substituted in any case are so chosen that the operation of the radio will be either unchanged or improved. When ordering replacements, use only the "Service Part No."

SECTION 1
POWER SUPPLY

Reference Symbol	Description	Service Part No.
C100	Condenser, line filter, .05 mf.	61-0122*
C101	Condenser, filter, 15 mf., 200v	30-2575-11
C102	Condenser, filter, 15 mf., 200v	30-2575-11
C103	Condenser, electrolytic, 2-section	30-2575-17
C103A	Condenser, filter, 75 mf., 250v	Part of C103
C103B	Condenser, filter, 10 mf., 250v	Part of C103
I100	Pilot lamp	34-2477*
R100	Resistor, filter, 500 ohms	33-3435-3
R101	Resistor, filter, 8200 ohms	66-2824340
R102	Resistor, leakage, 150,000 ohms	66-4153340*
S100	Switch, on-off	42-1837
W100	Power cord	41-3755-13
PL100	A-c plug	Part of W100

SECTION 2
AUDIO CIRCUITS

C200	Condenser, d-c blocking, .006 mf.	30-4504*
C201	Condenser, d-c blocking, .01 mf.	61-0120*
C202	Condenser, plate decoupling, .25 mf.	61-0125*
C203	Condenser, d-c blocking, .01 mf.	61-0120*
C204	Condenser, tone control, .004 mf.	30-4623*
C205	Condenser, tone compensation, .006 mf.	30-1226-2*
C206	Condenser, r-f by-pass, 220 mmf.	60-10205307*
C207	Condenser, tone compensation, .006 mf.	30-4504*
J200	Socket, accessory	27-6126
LS200	Speaker, 8" p-m	36-1626-1
R200	Volume control, 2 megohms (center-tapped)	33-5535-15
R201	Resistor, grid return, 10 megohms	66-6103340*
R202	Resistor, plate load, 100,000 ohms	66-4103340*
R203	Resistor, plate dropping, 220,000 ohms	66-4223340*
R204	Tone control, 5 megohms	33-5539-33
R205	Resistor, tone compensation, 68,000 ohms	66-3683340*
R206	Resistor, grid return, 470,000 ohms	66-4473340*
R207	Resistor, cathode bias, 130 ohms	66-1123340*
S200	Switch, accessory	42-1860
T200	Transformer, output	32-8242-3

SECTION 3
I-F, DETECTOR, AND A-V-C CIRCUITS

C300A	Condenser, trimmer	Part of Z300
C300B	Condenser, trimmer	Part of Z300
C301A	Condenser, trimmer	Part of Z301
C301B	Condenser, trimmer	Part of Z301
C301C	Condenser, a-v-c filter, 100 mmf.	Part of Z301
C301D	Condenser, a-v-c filter, 100 mmf.	Part of Z301
C302	Condenser-and-choke assembly, i-f filter, .15 mf.	38-9851-8
C303	Condenser-and-choke assembly, i-f filter, .05 mf.	38-9851-4
C304	Condenser, screen by-pass, .05 mf.	61-0122*
C305	Condenser, d-c blocking, 200 mmf.	60-10205307*
C306	Condenser, plate by-pass, .003 mf.	30-4582
C307	Condenser, r-f by-pass, 100 mmf.	60-10105407*
L300A	Transformer primary, 1st i-f	Part of Z300
L300B	Transformer secondary, 1st i-f	Part of Z300
L301A	Transformer primary, 2nd i-f	Part of Z301

SECTION 3 (Continued)
I-F, DETECTOR, AND A-V-C CIRCUITS

Reference Symbol	Description	Service Part No.
L301B	Transformer secondary, 2nd i-f	Part of Z301
R300	Resistor, screen dropping, 33,000 ohms	66-3333340*
R301	Resistor, plate load, 18,000 ohms	66-3183340*
R302	Resistor, grid return, 150,000 ohms	66-4153340*
R303	Resistor, plate decoupling, 8200 ohms	66-2823340*
R304	Resistor, i-f filter, 47,000 ohms	Part of Z301
R305	Resistor, a-v-c filter, 2.2 megohms	66-5223340*
R306	Resistor, diode load, 470,000 ohms	66-4473340*
S300	Switch, accessory	Part of 42-1860
Z300	Transformer, 1st i-f	32-4151-1
Z301	Transformer, 2nd i-f	32-3948-8

SECTION 4
R-F AND CONVERTER CIRCUITS

C400	Condenser, tuning gang	31-2715-1
C400A	Condenser, oscillator tuning	Part of C400
C400B	Condenser, aerial tuning	Part of C400
C400C	Condenser, oscillator trimmer	Part of C400
C400D	Condenser, aerial trimmer	Part of C400
C401	Condenser, aerial isolating, 220 mmf.	60-10205307*
C402	Condenser, r-f by-pass, .02 mf.	61-0108*
C403	Condenser, isolating, .1 mf.	30-4527
C404	Condenser, d-c blocking, 470 mmf.	60-10515307*
C405	Condenser, shunt, 33 mmf.	60-00305307*
C406	Condenser, shunt, 20 mmf.	60-00205307*
C407	Condenser, d-c blocking, 220 mmf.	60-10205307*
C408	Condenser, osc. grid, 100 mmf.	60-10105407*
C409	Condenser, a-v-c filter, .05 mf.	61-0122*
C410	Condenser, cathode by-pass, .05 mf.	61-0122*
L401	Coil, oscillator	32-4019-6
LA400	Loop aerial	76-3583
R400	Resistor, aerial discharge, 4700 ohms	66-2473340*
R401	Resistor, grid return, 47,000 ohms	66-3473340*
R402	Resistor, cathode bias, 2200 ohms	66-2223340*
R403	Resistor, plate feed, 18,000 ohms	66 3183340*
R404	Resistor, grid return, 2.2 megohms	66-5223340*
T400	Transformer, aerial	32-4023-1

MISCELLANEOUS

Description	Service Part No.
Bracket-and-clip assembly, pilot lamp	76-3177
Cabinet (less scale)	10701
Baffle and cloth	40-6981
Baffle, wood	219102
Bezel	56-5287
Dial scale	27-5994
Dome	45-6190
Scale strap	56-4756
Dial-backplate assembly	76-3713
Cord, drive (25-ft. spool)	45-8750*
Pointer	56-3583-3FCP
Spring	28-8953
Knob	54-4488
Pilot-lamp-socket assembly	27-6233
Socket, Loktal	27-6138*
Socket, octal	27-6174

©John F. Rider

MODEL 49-1401

Circuit Description

Philco Model 49-1401 is a table-model radio-phonograph combination consisting of a 5-tube superheterodyne, which provides reception on the standard broadcast band, and a Philco Model M-7 Automatic Record Player. The built-in loop aerial normally provides adequate signal pickup. However, a terminal has been provided for connecting an external aerial, if required.

The loop works directly into a 12BE6 converter, where the incoming signal is converted to the 455-kc. intermediate frequency. The oscillator section of the tuning-condenser gang has a specially shaped rotor, to provide proper tracking without the use of a series padding condenser. The converter is transformer-coupled to a 12BA6 i-f amplifier, which, in turn, is transformer-coupled to the diode section of a 6AQ6. Both i-f transformers have permeability-tuned primary and secondary windings. The diode section of the 6AQ6 acts as a detector, and also provides a-v-c voltage, which is applied to the grids of the converter and the i-f amplifier. The triode section of the 6AQ6, the first audio amplifier, is resistance-coupled to a 35L6GT beam-power-output amplifier, which supplies approximately 2 watts of audio power to a p-m dynamic speaker.

The d-c operating voltages are furnished by a voltage-doubler circuit employing a 50Y6GT rectifier and a resistor-condenser filter. Resistor R103 is connected between B– and the chassis to prevent hum due to condenser leakage under high-humidity conditions.

MODEL 49-1401

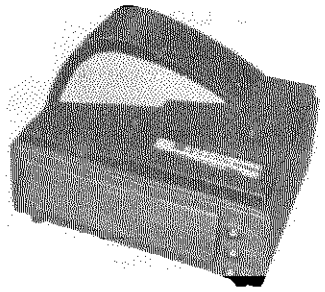

SPECIFICATIONS

CABINET	Wood, mahogany finish with black plastic top
RADIO CIRCUIT	Five-tube superheterodyne
FREQUENCY RANGE	540—1600 kc.
AUDIO OUTPUT	2 watts
OPERATING VOLTAGES	105—120 volts, 60 cycles, a.c.
POWER CONSUMPTION	
Radio only	35 watts
Radio-phonograph	50 watts
AERIAL	Built-in loop; terminal also provided for external aerial
INTERMEDIATE FREQUENCY	455 kc.
PHILCO TUBES (5)	12BE6, 12BA6, 6AQ6, 35L6GT, 50Y6GT

Philco TROUBLE-SHOOTING Procedure

For rapid trouble shooting, the radio circuit is divided into four sections, as follows:

Section 1 — the power supply
Section 2 — the audio circuits
Section 3 — the i-f, detector, and a-v-c circuits
Section 4 — the r-f and converter circuits

Test points are specified for each section, and are indicated in the sectionalized schematic diagram. The trouble-shooting procedure given for each section includes a simplified test chart and a bottom view of the chassis showing the locations of the test points and the components of that section.

In each chart, the first step is a master check for determining whether trouble exists in that section, without going through the entire chart.

Failure to obtain the "NORMAL INDICATION" in any given step indicates trouble within the circuit under test.

After isolating the trouble to a single stage, the defect is located by: first, testing the tube; second, measuring tube electrode voltages; third, measuring circuit resistances; fourth, substituting condensers. The trouble revealed should be corrected before testing further.

Preliminary Checks

To avoid possible damage to the radio, the following preliminary checks should be made before turning on the power:

1. Inspect both the top and the bottom of the chassis. Make sure that all tubes are secure in the proper sockets, and look for any broken or shorted connections, burned resistors, or other obvious sources of trouble.

2. Measure the resistance between B+, pin 4 of the 50Y6GT, and B–, test point B. When the ohmmeter leads are connected in the proper polarity, the highest resistance reading will be obtained. If the reading is lower than 2000 ohms, check condenser C102A for leakage or a short. This resistance value, which is much lower than normal, does not represent a quality check of this condenser; it is the lowest value which will permit the rectifier to operate safely while the voltage checks of Section 1 (power supply) are performed.

© John F. Rider

Section 1 — Power Supply

TROUBLE SHOOTING

Make the tests for this section with a d-c voltmeter. Connect the negative lead to B–, test point B; connect the positive lead to the test points indicated in the chart. The voltage readings given were taken with a 20,000-ohms-per-volt meter, at a line voltage of 117 volts, a.c.

Set the volume control to minimum, and the radio-phono switch to the radio position.

If the "NORMAL INDICATION" is obtained in step 1, proceed with the tests for Section 2 (audio circuits); if not, isolate and correct the trouble in this section.

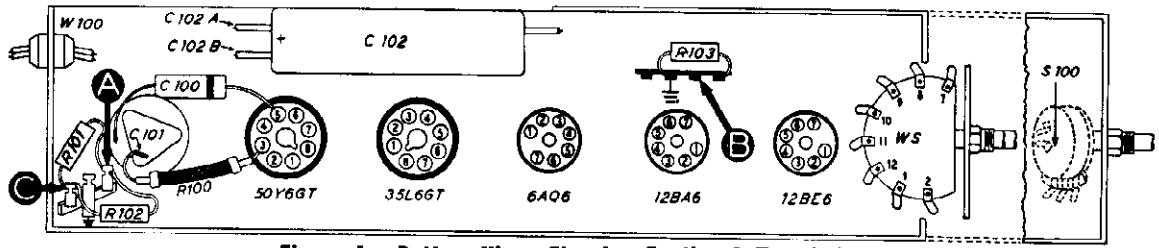

Figure 1. Bottom View, Showing Section 1 Test Points TP-5379A

STEP	TEST POINT	NORMAL INDICATION	ABNORMAL INDICATION	POSSIBLE CAUSE OF ABNORMAL INDICATION
1	A	110v		Trouble in this section. Isolate by the following tests.
2	C	200v	No voltage	Defective: 50Y6GT. Open: W100, S100, R100, C101. Shorted: C100.
			Low voltage	Defective: 50Y6GT. Open: C102A. Leaky: C102A, C101. Shorted: C101.
			High voltage	Open: R101, R102, C102B, R204*, T200*.
3	A	110v	No voltage	Shorted: C102B. Open: R101 and R102.
			Low voltage	Leaky: C102B. Shorted: C304. Open: R101, R102.
Listening Test: Abnormal hum may be caused by open or leaky C102A or C102B.				

*This part, located in another section, may cause abnormal indication in this section.

Section 2 — Audio Circuits

TROUBLE SHOOTING

For the tests in this section, use an audio-frequency signal generator. Connect the generator ground lead to B–, test point B; connect the output lead through a .1-mf. condenser to the test points indicated in the chart.

Set the radio volume control to maximum, and the radio-phono switch as indicated in the chart.

If the "NORMAL INDICATION" is obtained in step 1, proceed with the tests for Section 3 (i-f, detector, and a-v-c circuits); if not, isolate and correct the trouble in this section.

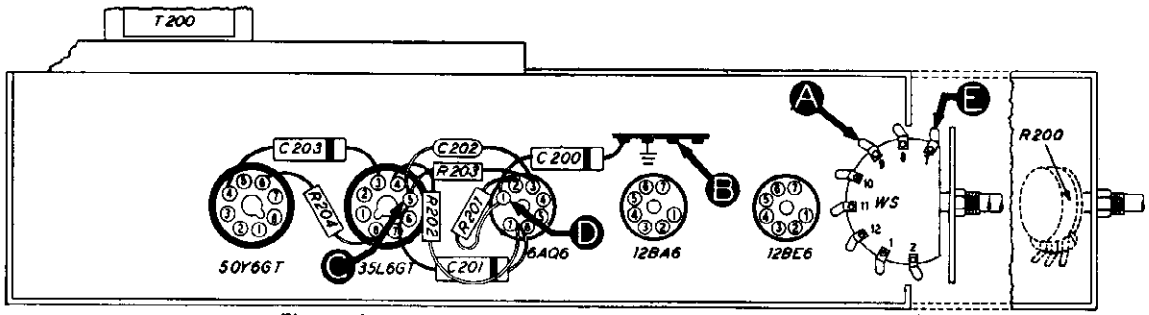

Figure 2. Bottom View, Showing Section 2 Test Points TP-5379B

STEP	TEST POINT	RADIO-PHONO SWITCH	NORMAL INDICATION	POSSIBLE CAUSE OF ABNORMAL INDICATION
1 (a)	A	Radio	Loud, clear speaker output with moderate generator input.	Trouble in this section. Isolate by the following tests.
1 (b)	E	Phono		
2	C	Radio	Clear output with strong input.	Defective: LS200, 35L6GT. Shorted: T200, C203, C201, C202. Open: T200, R204, R203. Leaky: C203.
3	D	Radio	Loud, clear output with moderate input.	Defective: 6AQ6. Shorted: C200. Open: C201, R202, R201. Leaky: C201.
4	A	Radio	Loud, clear output with moderate input.	Open: R200 (rotate), C200, WS. Shorted: WS.
5	E	Phono	Same as step 4.	Open or shorted: WS.
Listening Test: Distortion may be caused by leaky C201. Distortion on strong signals may be caused by shorted or leaky C200.				

© John F. Rider

MODEL 49-1401

Section 3 — I-F, Detector, and A-V-C Circuits

TROUBLE SHOOTING

For the tests in this section, use an r-f signal generator, with modulated output, set at 455 kc. Connect the generator ground lead to B–, test point B; connect the output lead through a .1-mf. condenser to the test points indicated in the chart.

Set the radio volume control to maximum, and the radio-phono switch to the radio position. Rotate the tuning control until the tuning condenser is fully meshed.

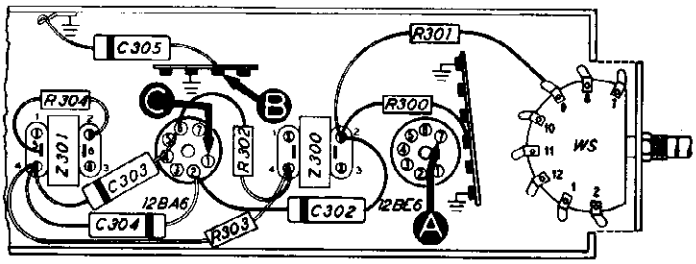

TP-5379C

Figure 3. Bottom View, Showing Section 3 Test Points

If the "NORMAL INDICATION" is obtained in step 1, proceed with the tests for Section 4 (r-f and converter circuits); if not, isolate and correct the trouble in this section.

To provide a complete i-f amplifier check, test point A for this section is placed at the grid of the converter in Section 4; therefore, the effectiveness of step 1 as a master check is dependent upon the condition of certain parts in the converter circuit. These parts are listed below under "POSSIBLE CAUSE OF ABNORMAL INDICATION."

STEP	TEST POINT	NORMAL INDICATION	POSSIBLE CAUSE OF ABNORMAL INDICATION
1	A	Loud, clear speaker output with weak generator input.	Trouble in this section. Isolate by the following tests.
2	C	Loud, clear output with strong input.	Defective: 12BA6, 6AQ6. Shorted: C300B, C301A, C301B, C301C, C301D, C303, C304, WS, L300B, L301A, L301B. Open: R302, R303, R304, L300B, L301A, L301B, R301, C301A, C301B. Leaky: C303, C304. Misaligned: Z301.
3	A	Loud, clear output with weak input.	Defective: 12BE6*. Shorted: C400A*, C400B*, C300A, L300A, L300B, C302. Open: L300A, R300, C300A, C300B. Misaligned: Z300.

*This part, located in another section, may cause abnormal indication in this section.

Section 4 — R-F and Converter Circuits

TROUBLE SHOOTING

For the tests in this section, with the exception of the oscillator test, use an r-f signal generator with modulated output. Connect the generator ground lead to B–, test point B; connect the output lead through a .1-mf. condenser to the test points indicated in the chart.

Set the radio volume control to maximum, and the radio-phono switch to the radio position. Set the tuning control and signal-generator frequency as indicated in the chart.

If the "NORMAL INDICATION" is obtained in step 1, further tests should be unnecessary; if not, isolate and correct the trouble in this section. If the trouble is not revealed by the tests for this section, check the alignment.

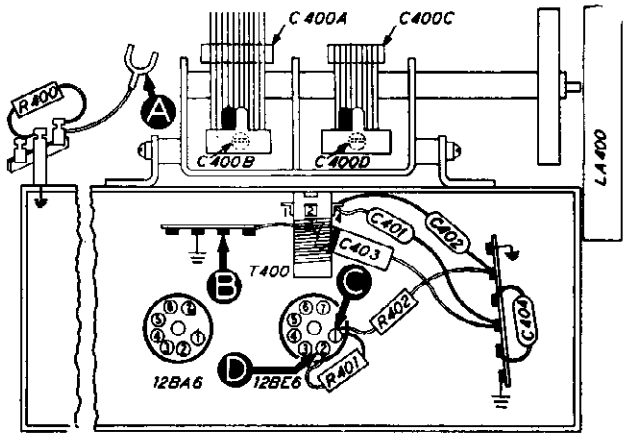

TP-5379D

Figure 4. Bottom View, Showing Section 4 Test Points

STEP	TEST POINT	SIG. GEN. FREQ.	RADIO TUNING	NORMAL INDICATION	POSSIBLE CAUSE OF ABNORMAL INDICATION
1	A	1000 kc.	Tune to signal.	Loud, clear speaker output with weak generator input.	Trouble in this section. Isolate by the following tests.
2	C — D (Osc. test: see note below.)		Rotate through range.	Negative 4 to 5 volts.	Defective: 12BE6. Shorted: C400C, C400D, C402, C401, L400A, L400B. Open: C402, L400A, L400B, R401, R402.
3	A	1000 kc.	Tune to signal.	Same as step 1.	Shorted: LA400, C400A, C400B. Open: LA400, C404.

OSCILLATOR TEST: Connect the positive lead of a high-resistance voltmeter to the oscillator cathode (pin 2 of 12BE6), test point D; connect the prod end of the negative lead through a 100,000-ohm isolating resistor to the oscillator grid (pin 1 of 12BE6), test point C. Use a suitable meter range, such as 0—10 volts. Proper operation of the oscillator is indicated by negative voltage within the range given in the chart (measured with a 20,000-ohms-per-volt meter) throughout the tuning range.

©John F Rider

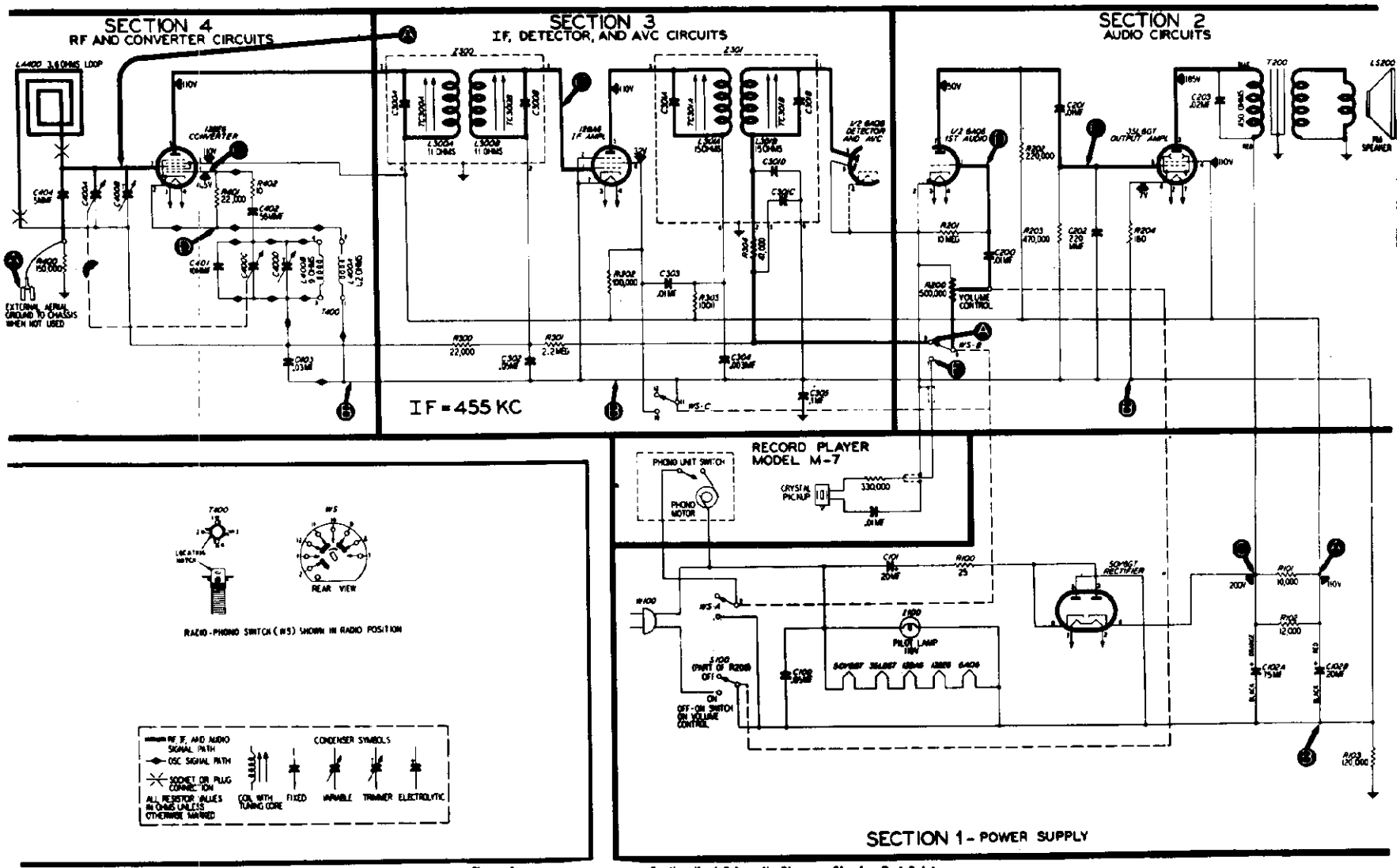

Figure 5. Sectionalized Schematic Diagram, Showing Test Points

RECORD CHANGER: See Philco Model M-7,
Pages RCD.CH. 18-32 to RCD.CH. 18-45

©John F. Rider

ALIGNMENT PROCEDURE

DIAL — Calibration and pointer-index measurements are shown in figure 7. With tuning condenser fully meshed, set pointer to index mark.

RADIO CONTROLS — Set volume control to maximum, and radio-phono switch to radio position.

OUTPUT METER — Connect to terminals indicated in figure 6.

SIGNAL GENERATOR — Connect ground lead to B–, test point B in figure 4, and connect output lead as indicated in chart. Use modulated output.

OUTPUT LEVEL — During alignment, adjust signal-generator output to maintain output-meter indication below 1.25 volts.

STEP	SIGNAL GENERATOR		RADIO		ADJUST
	CONNECTION TO RADIO	DIAL SETTING	DIAL SETTING	SPECIAL INSTRUCTIONS	
1	Through .1-mf. condenser to external-aerial lead. Make sure that radio loop aerial is connected to radio.	455 kc.	Tuning condenser fully meshed.	Adjust, in order given, for maximum output.	TC301B—2nd i-f sec TC301A—2nd i-f pri. TC300B—1st i-f sec. TC300A—1st i-f pri.
2	Radiating loop (see note below).	1600 kc.	1600 kc.	Adjust for maximum output.	C400D—osc.
3	Same as step 2.	1500 kc.	1500 kc.	Adjust for maximum output.	C400B—aerial

RADIATING LOOP: Make up a 6—8-turn, 6-inch-diameter loop, using insulated wire; connect to signal-generator leads and place near radio loop aerial. Make sure that radio loop aerial is connected to radio.

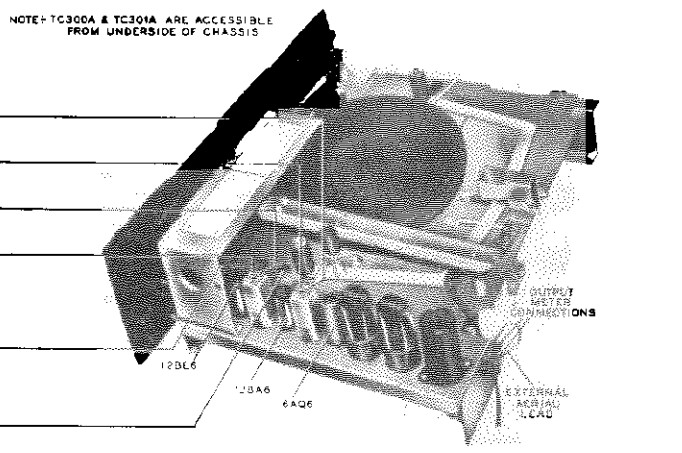

Figure 6. Top View, Showing Trimmer Locations

CALIBRATING DIAL BACKPLATE

When the radio chassis has been removed from the cabinet, dial-calibration and alignment points should be marked on the dial backplate, below the pointer.

The method of measuring for these points is illustrated in figure 7. Hold a ruler against the backplate, with the start of the ruler at the reference line shown, and mark pencil dots at the proper points for the required frequency settings. When the ruler is correctly placed, the index mark is approximately 2-3/8 inches from the reference point indicated in figure 7.

With the tuning gang fully meshed, the pointer should be adjusted on the dial-drive cord to coincide with the index mark.

After installing the chassis in the cabinet, the dial pointer should be moved to coincide with the index mark on the dial. Coincidence of the pointer and index mark should occur with the tuning condenser fully meshed.

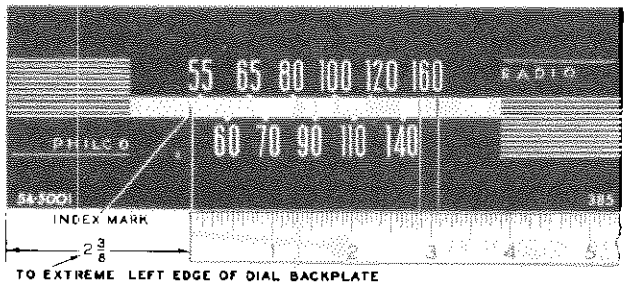

Figure 7. Dial-Backplate Calibration Measurements

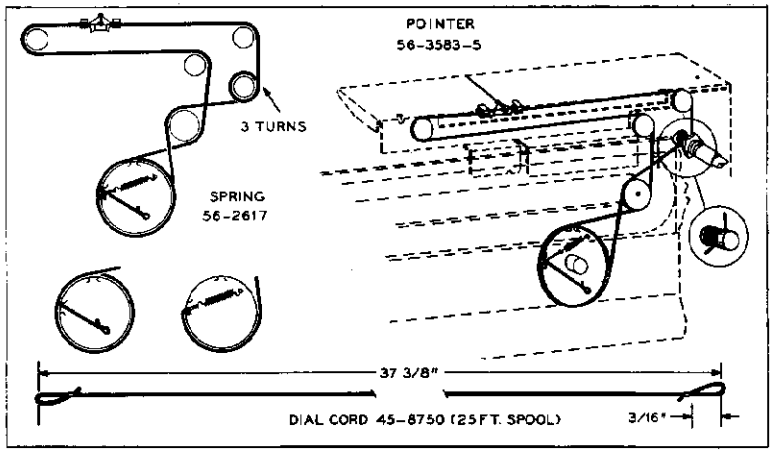

Figure 8. Drive-Cord Installation Details

SYMBOLIZATION

The components in the radio circuit are symbolized according to the types of parts and the sections of the radio in which the parts are located. The prefix letter of the symbol designates the type of part, as follows:

C —condenser	LA—loop aerial	S —switch	WS—wafer switch
I —pilot lamp	LS—loud-speaker	T —transformer	Z —electrical assembly
L —choke or coil	R —resistor	W —wire or cable	

The number of the symbol designates the section in which the part is located, as follows:

100-series components are in Section 1 — the power supply
200-series components are in Section 2 — the audio circuits
300-series components are in Section 3 — the i-f, detector, and a-v-c circuits
400-series components are in Section 4 — the r-f and converter circuits

REPLACEMENT PARTS LIST

NOTE: Parts marked with an asterisk (*) are general replacement items. These numbers may not be identical with those on factory assemblies; also, the electrical values of some replacement items may differ from the values indicated in the schematic diagram and replacement parts list. The values substituted in any case are so chosen that the operation of the radio will be either unchanged or improved. When ordering replacements, use only the "Service Part No."

SECTION 1
POWER SUPPLY

Reference Symbol	Description	Service Part No.
C100	Condenser, line filter, .05 mf.	61-0170*
C101	Condenser, filter, electrolytic, 20 mf., 200v	30-2568-22
C102	Condenser, electrolytic, two-section	30-2575-20
C102A	Condenser, filter, 75 mf., 250v	Part of C102
C102B	Condenser, filter, 20 mf., 250v	Part of C102
I100	Pilot lamp	32-2605*
R100	Resistor, current limiting, 25 ohms	33-1334-5
R101	Resistor, filter, 10,000 ohms	66-3104340*
R102	Resistor, filter, 12,000 ohms	66-3124340*
R103	Resistor, isolating, 120,000 ohms	66-4123340*
S100	Switch, off-on power	Part of 33-5538-30
W100	Line-cord-and-plug assembly	L-2183*
WS-A	Switch-wafer section	Part of 42-1847†

SECTION 2
AUDIO CIRCUITS

C200	Condenser, d-c blocking, .01 mf.	61-0120*
C201	Condenser, d-c blocking, .01 mf.	61-0120*
C202	Condenser, r-f by-pass, 220 mmf.	62-122001001*
C203	Condenser, tone compensation, .02 mf.	61-0108*
R200	Volume control, 500,000 ohms	33-5538-30
R201	Resistor, grid return, 10 megohms	66-6103340
R202	Resistor, plate load, 220,000 ohms	66-4223340
R203	Resistor, grid return, 470,000 ohms	66-4473340
R204	Resistor, cathode bias, 180 ohms	66-1183340
LS200	Loud-speaker, p-m	45-0002*
T200	Transformer, output	32-8351
WS-B	Switch-wafer section	Part of 42-1847†

SECTION 3
I-F, DETECTOR, AND A-V-C CIRCUITS

C300A	Condenser, fixed, 1st i-f primary	Part of Z300
C300B	Condenser, fixed, 1st i-f secondary	Part of Z300
C301A	Condenser, fixed, 2nd i-f primary	Part of Z301
C301B	Condenser, fixed, 2nd i-f secondary	Part of Z301
C301C	Condenser, i-f filter	Part of Z301
C301D	Condenser, i-f filter	Part of Z301
C302	Condenser, a-v-c filter, .05 mf.	61-0122*
C303	Condenser, screen by-pass, .01 mf.	61-0120*
C304	Condenser, plate by-pass, .003 mf.	61-0109*
C305	Condenser, r-f by-pass, .1 mf.	61-0113*
R300	Resistor, a-v-c filter, 22,000 ohms	66-3223340
R301	Resistor, a-v-c filter, 2.2 megohms	66-5223340
R302	Resistor, screen dropping, 100,000 ohms	66-4103340
R303	Resistor, plate dropping, 1,000 ohms	66-2103340
R304	Resistor, a-v-c filter, 47,000 ohms	66-3473340
WS-C	Switch-wafer section	Part of 42-1847†
Z300	Transformer, 1st i-f	32-4160
Z301	Transformer, 2nd i-f	32-4240

SECTION 4
R-F AND CONVERTER CIRCUITS

Reference Symbol	Description	Service Part No.
C400	Condenser, tuning gang	31-2727
C400A	Condenser, tuning, aerial section	Part of C400
C400B	Condenser, trimmer, aerial	Part of C400
C400C	Condenser, tuning, oscillator section	Part of C400
C40 D	Condenser, trimmer, oscillator	Part of C400
C401	Condenser, ceramic, 10 mmf.	30-1224-26
C402	Condenser, ceramic, 56 mmf.	60-00515307*
C403	Condenser, r-f by-pass, .03 mf.	45-3500-1*
C404	Condenser, aerial coupling, 5 mmf.	60-90505007*
LA400	Loop aerial	76-2127-7
R400	Resistor, leakage, 150,000 ohms	66-4103340
R401	Resistor, grid return, 22,000 ohms	66-3223340
R402	Resistor, parasitic suppressor, 10 ohms	66-0103340
T400	Transformer, oscillator	32-4190-2

†42-1847 is WS, wafer switch, single-wafer, radio-phono (includes WS-A, WS-B, WS-C).

MISCELLANEOUS

Description	Service Part No.
Cabinet and Cabinet Parts	
Baffle-and-cloth assembly	40-7504
Bracket, baffle-and-cloth mounting, 4 required	56-5466
Bracket, front top rail	56-5469FA3
Cabinet base, wood	10707
Cabinet top, plastic	54-4536
Connecting bar	76-2111
Cover, plastic top	54-4536
Dial scale	54-5001
Dial-scale strap	56-5465
Door	219113
Fastener, back	56-5476FA9
Fastener, front	56-5467FA3
Dial-Scale Hardware	
Dial cord, 25-foot spool	45-8750*
Panel, diffusing	54-7553
Pointer	56-3583-5
Shaft assembly	76-3731
Spring, diffusing panel, 2 required	56-3841
Spring, drive cord	56-2617
Clip, coil mounting	28-5002FCP
Knob, 3 required	54-4527-3
Panel, front	76-3741
Pin, door hinge, 2 required	56-5461FA15
Rail, record player	56-5464
Shield, tube	56-3979FA5
Socket, miniature	27-6226
Socket, octal	27-6174
Socket assembly, pilot lamp	27-6233-17

MODEL 49-1600

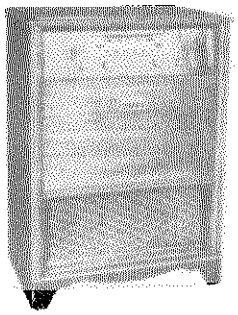

MODEL 49-1600

SPECIFICATIONS

CABINET	Modern classical, wood console, walnut finish.
CIRCUIT	Five-tube superhetrodyne
FREQUENCY RANGE	540—1620 kc.
AUDIO OUTPUT	3 watts
OPERATING VOLTAGE	117 volts, 60 cycles, a.c.
POWER CONSUMPTION	
Radio	35 watts
Phonograph	50 watts
AERIAL	High-impedance loop; also provision for external aerial.
INTERMEDIATE FREQUENCY	455 kc.
PHILCO TUBES (5)	14Q7, 12BA6, 7C6, 35L6GT, 50X6
RECORD PLAYER	Philco Automatic Record Changer Model M-9 (For service information refer to PR-1571.)

TP-5872

Circuit Description

Philco Model 49-1600 is a console radio-phonograph combination consisting of a five-tube superhetrodyne, which provides reception on the standard-broadcast band, and a Philco M9 Automatic Record Changer. The built-in loop aerial normally provides adequate signal pickup. However, provision has been made for connecting an external aerial, if required.

The loop works directly into a 14Q7 converter, where the incoming signal is converted to the 455-kc. intermediate frequency. The oscillator section of the tuning-condenser gang has a specially shaped rotor to provide proper tracking without the use of a series padding condenser. The converter is transformer-coupled to a 12BA6 i-f amplifier, which, in turn, is transformer-coupled to the diode section of a 7C6. Both i-f transformers have permeability-tuned primary and secondary windings. The diode section of the 7C6 acts as a detector, and also provides a-v-c voltage, which is applied to the grids of the converter and the i-f amplifier. The triode section of the 7C6, the first audio amplifier, is resistance-coupled to a 35L6GT beam-power-output amplifier, which supplies approximately three watts of audio power to a permanent-magnet dynamic speaker.

The d-c operating voltages are furnished by a voltage-doubler circuit employing a 50X6 rectifier and a resistor-condenser filter. Resistor R102 is connected between B– and the chassis to prevent hum due to condenser leakage under high-humidity conditions.

Philco TROUBLE-SHOOTING *Procedure*

For rapid trouble shooting, the radio circuit is divided into four sections, with test points specified for each section; these sections and test points are indicated in the schematic diagram. The trouble-shooting procedure given for each section includes a simplified test chart and a bottom view of the chassis, showing the locations of the test points and the components of that section.

In each chart, the first step is a master check for determining whether trouble exists in that section without going hrough the entire test procedure.

Failure to obtain the "NORMAL INDICATION" in any given step indicates trouble within the circuit under test.

After isolating the trouble to a single stage, the defect is located by: first, testing the tube; second, measuring tube electrode voltages; third, measuring circuit resistances; fourth, substituting condensers. The trouble revealed should he corrected before testing further.

Preliminary Checks

Before connecting the radio to a source of power, the following steps are recommended:

1. Inspect both the top and the bottom of the chassis. Make sure that all tubes are secure in the proper sockets, and look for any broken or shorted connections, burned resistors, or other obvious sources of trouble.
2. Measure the resistance between B+ (pin 2 of the 50X6 rectifier tube) and B–, test point B. When the ohmmeter test leads are connected in the proper polarity, the highest resistance reading will be obtained. If the reading is lower than 2700 ohms, check condensers C102A and C102B for leakage or shorts. The resistance value is much lower than normal, and is not intended as a quality check of these condensers; the value given is the lowest at which the rectifier will operate safely while the voltage checks of Section 1 (power supply) are performed.

©John F. Rider

Section 1 - Power Supply

TROUBLE SHOOTINC

For the tests in this section, use a d-c voltmeter. Connect the negative lead to B–, test point B; connect the positive lead to the test points indicated in the chart. The voltage readings given were taken with a 20,000-ohms-per-volt meter at a line voltage of 117 volts, a.c.

Turn on the power, set the volume control to minimum, and set the radio-phono switch to the radio position.

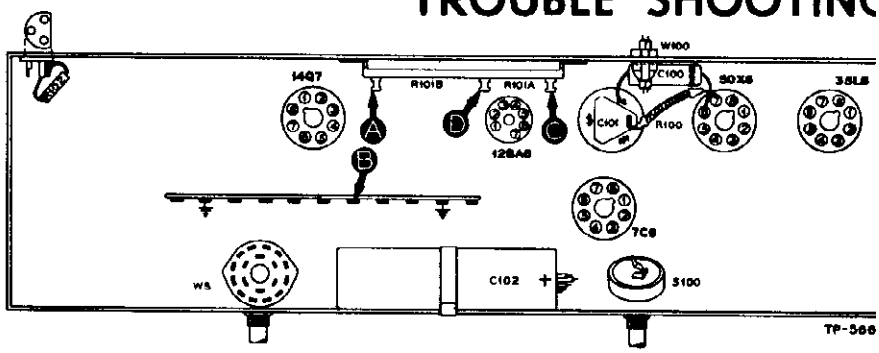

Figure 1. Bottom View, Showing Section 1 Test Points

If the "NORMAL INDICATION" is obtained in step 1, proceed with the tests for Section 2 (audio circuits); if no isolate and correct the trouble in this section.

STEP	TEST POINT	NORMAL INDICATION	ABNORMAL INDICATION	POSSIBLE CAUSE OF ABNORMAL INDICATION
1	A	110v		Trouble in this section. Isolate by the following tests.
2	C	215v	No voltage	Defective: 50X6. Shorted: C100, C102A. Open: W100, S100, R100, C101.
			Low voltage	Defective: 50X6. Shorted: C101. Leaky: C101, C102A. Open: C102A.
3	D	205v	High voltage	Open: R101A.
			No voltage	Shorted: C102B. Open: R101A.
			Low voltage	Leaky: C102B. Open: C102B.
4	A	110v	High voltage	Open: R101B, T200*, R205*.
			No voltage	Open: R101B. Shorted: C102C.
			Low voltage	Leaky: C102C. Shorted: C303*.
Listening Test: Abnormal hum may be caused by open or leaky C102A, C102B, or C102C.				

* This part, located in another section, may cause abnormal indication in this section.

Section 2 - Audio Circuits

TROUBLE SHOOTINC

For the tests in this section, use an audio-frequency signal generator. Connect the generator ground lead to B–, test point B; connect the output lead through a .1-mf. condenser to the test points indicated in the chart.

Set the volume control to maximum.

Set the radio-phono switch to the radio position for test points A, C, and D, and to the phono position for test point E.

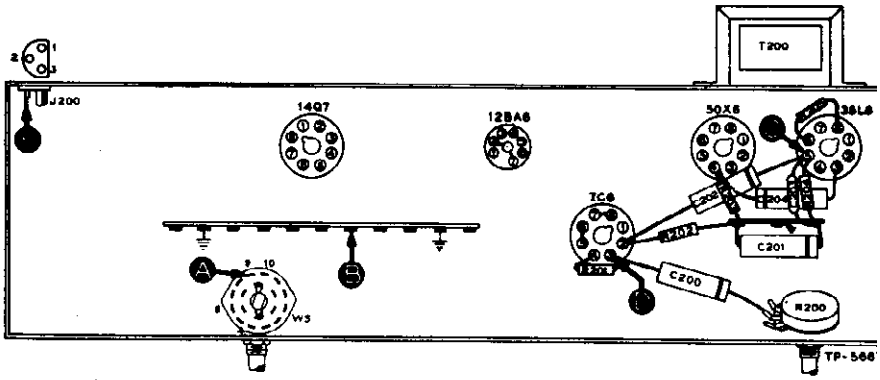

Figure 2. Bottom View, Showing Section 2 Test Points

If the "NORMAL INDICATION" is obtained in step 1, proceed with the tests for Section 3 (i-f detector, and a-v-c ci cuits); if not, isolate and correct the trouble in this section.

STEP	TEST POINT	NORMAL INDICATION	POSSIBLE CAUSE OF ABNORMAL INDICATION
1	A E	Loud, clear speaker output with moderate signal-generator input.	Trouble in this section. Isolate by the following tests.
2	C	Clear output with strong input.	Defective: 35L6GT, LS200. Shorted: T200, C202, C203, C204. Open: R204, R205, T200. Leaky: C204.
3	D	Loud, clear output with moderate input.	Defective: 7C6. Shorted: C200, C201. Open: C202, R201, R202, R203. Leaky: C202.
4	A	Same as step 1.	Open: R200 (rotate), C200, WS. Shorted: WS, C301*.
5	E	Same as step 1.	Open: WS. Shorted: WS.
Listening Test: Distortion may be caused by leaky C202. Distortion of strong signals may be caused by shorted or leaky C200.			

* This part, located in another section, may cause abnormal indication in this section.

© John F. Rider

MODEL 49-1600

Section 3—I-F, Detector, and A-V-C Circuits

TROUBLE SHOOTING

For the tests in this section, use an r-f signal generator, with modulated output, set at 455 kc. Connect the generator ground lead to B—, test point B; connect the output lead through a .1-mf. condenser to the test point indicated in the chart.

Set the volume control to maximum, and set the radio-phono switch to the radio position. Rotate the tuning control until the tuning condenser is fully meshed.

If the "NORMAL INDICATION" is obtained in step 1, proceed with the tests for Section 4 (r-f and converter circuits); if not, isolate and correct the trouble in this section.

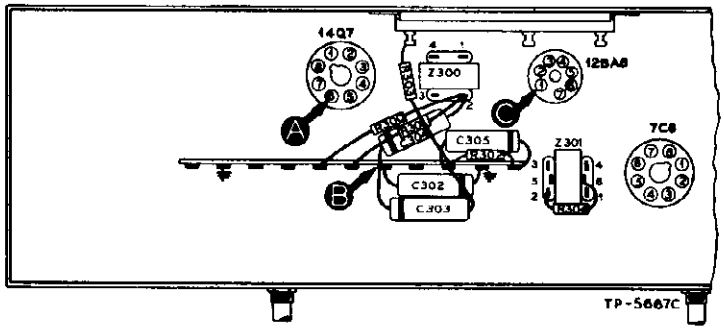

Figure 3. Bottom View, Showing Section 3 Test Points

To provide a complete i-f amplifier check, test point A for this section is placed at the grid of the mixer in Section 4; therefore, the effectiveness of step 1 as a master check is dependent upon the condition of certain parts in the mixer circuit. These parts are listed below under the "POSSIBLE CAUSE OF ABNORMAL INDICATION."

STEP	TEST POINT	NORMAL INDICATION	POSSIBLE CAUSE OF ABNORMAL INDICATION
1	A	Loud, clear speaker output with weak signal-generator input.	Trouble in this section. Isolate by the following tests.
2	C	Loud, clear output with moderate input.	Defective: 12BA6, 7C6. Shorted: C300B, C301A, C301B, C301C, C301D, C303, C305, L300B, L301A, L301B, WS-B. Open: C301A, C301B, L300B, L301A, L301B, R301, R302, R303, R304, WS-B. Leaky: C303, C305. Misaligned: Z301.
3	A	Loud, clear output with weak input.	Defective: 14Q7*. Shorted: C300A, L300A. Open: C300A, C300B, L300A, R300. Misaligned: Z300.

* This part, located in another section, may cause abnormal indication in this section.

Section 4—R-F and Converter Circuits

TROUBLE SHOOTING

For the tests in this section, with the exception of the oscillator test, use an r-f signal generator with modulated output. Connect the generator ground lead to B—, test point B; connect the output lead through a .1-mf. condenser to the test points indicated in the chart.

Set the volume control to maximum, and set the radio-phono switch to the radio position. Set the tuning control and the signal-generator frequency as indicated in the chart.

If the "NORMAL INDICATION" is not obtained in step 1, isolate and correct the trouble in this section. If the trouble is not revealed by the tests for this section, check the alignment.

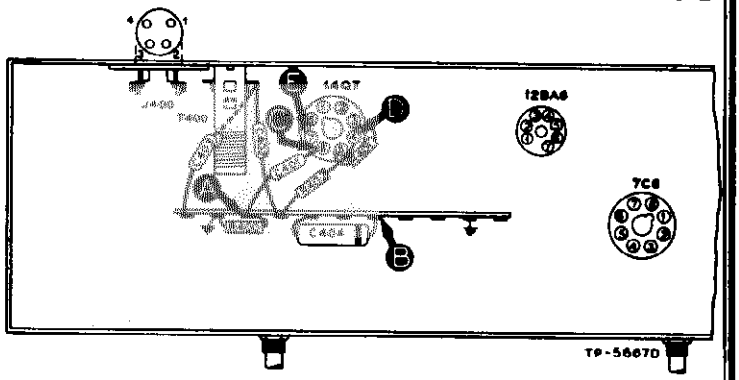

Figure 4. Bottom View, Showing Section 4 Test Points

STEP	TEST POINT	SIG. GEN. FREQ.	RADIO TUNING	NORMAL INDICATION	POSSIBLE CAUSE OF ABNORMAL INDICATION
1	A	1000 kc.	Tune to signal.	Loud, clear speaker output with weak signal-generator input.	Trouble in this section. Isolate by the following tests.
2	D—E (Osc. test: see note below.)		Rotate through range.	Negative 2 to 3 volts.	Defective: 14Q7. Shorted: C400 (osc. section), C400B, C402, C403, T400. Open: C402, R401, R402, T400.
3	C	1000 kc.	Tune to signal.	Same as step 1.	Defective: 14Q7. Shorted: C400 (aerial section), C400A, LA400. Open: LA400.
4	A	1000 kc.	Tune to signal.	Same as step 1.	Shorted: J400. Open: C401.

OSCILLATOR TEST: Connect the positive lead of a high-resistance voltmeter to the cathode of the 14Q7, test point E; connect the prod end of the negative lead through a 100,000-ohm isolating resistor to the oscillator grid (pin 4 of 14Q7), test point D. Use a suitable meter range, such as 0—10 volts. Proper operation of the oscillator is indicated by a negative voltage of approximately the value given in the chart (measured with a 20,000 ohms-per-volt meter) throughout the tuning range

© John F. Rider

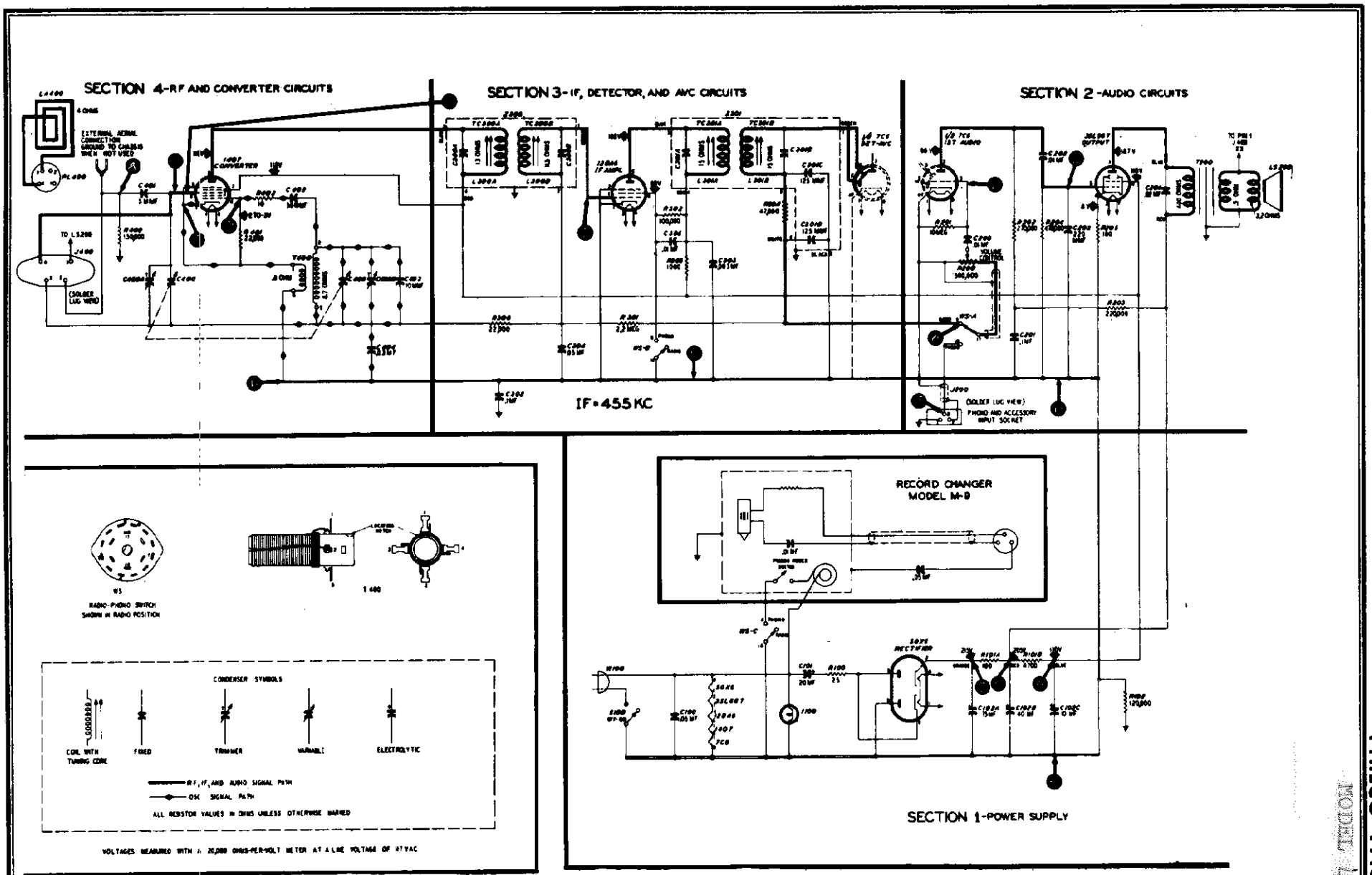

Figure 5. Philco Radio-Phonograph Model 49--1600, Sectionalized Schematic Diagram, Showing Test Points

RECORD CHANGER: See Philco Model M-9,
Pages PCD-CH-10-18 to PCD-CH-10-24

©Tahn & Rider

ALIGNMENT PROCEDURE

DIAL—Calibration and pointer-index measurements are shown in figure 7. With tuning condenser fully meshed, set pointer to index mark.

OUTPUT METER—Connect across voice coil.

SIGNAL GENERATOR—Connect as indicated in chart. Use modulated output.

RADIO CONTROLS—Set volume control to maximum, and radio-phono switch to radio position.

OUTPUT LEVEL—During alignment, adjust signal-generator output to maintain output-meter indication below 1.25 volts.

STEP	SIGNAL GENERATOR: CONNECTION TO RADIO	SIGNAL GENERATOR: DIAL SETTING	RADIO: DIAL SETTING	RADIO: SPECIAL INSTRUCTIONS	ADJUST
1	Ground lead to B– / output lead through .1-mf. condenser to external-aerial lead (loop aerial must be connected).	455 kc.	Tuning condenser fully meshed.	Adjust tuning cores, in order given, for maximum output.	TC301B—2nd i-f sec. TC301A—2nd i-f pri. TC300B—1st i-f sec. TC300A—1st i-f pri.
2	Radiating loop (see note below).	1600 kc.	1600 kc.	Adjust trimmer for maximum output.	C400B—osc.
3	Same as step 2.	1500 kc.	1500 kc.	Adjust trimmer for maximum output.	C400A—aerial

RADIATING LOOP: Make up a 6—8 turn, 6-inch-diameter loop from insulated wire; connect to signal-generator leads and place near radio loop aerial. The loop aerial must be connected.

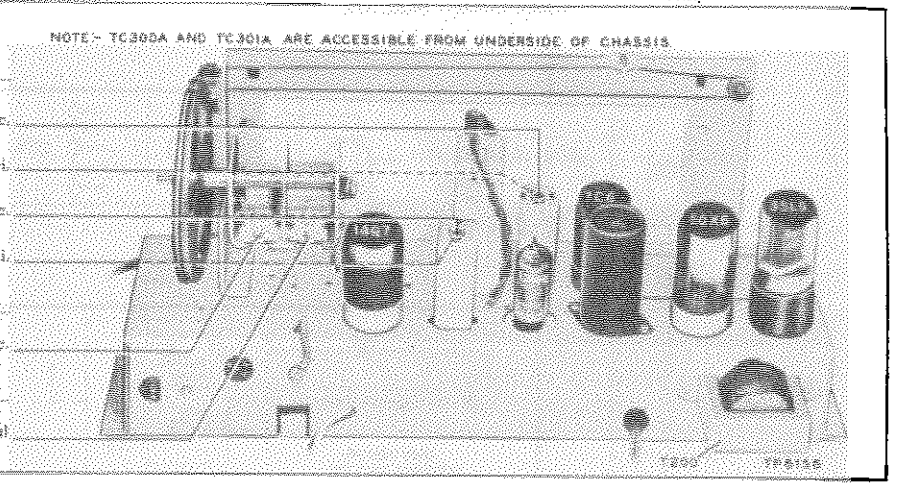

Figure 6. Top View, Showing Trimmer Locations

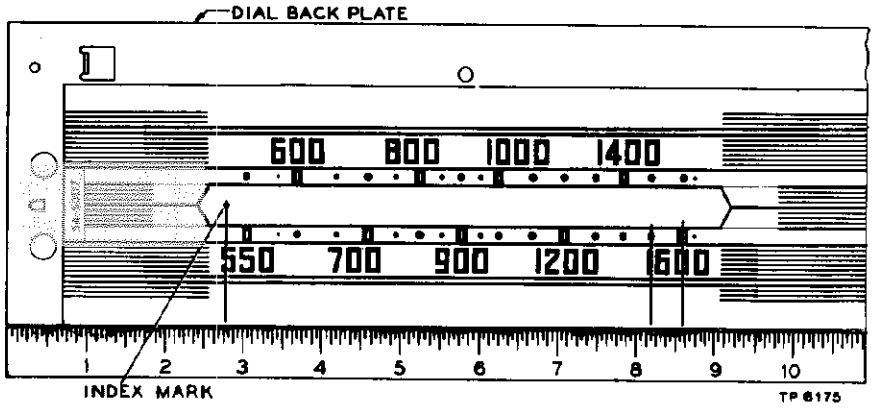

Figure 7. Calibration Measurements for Dial Backplate

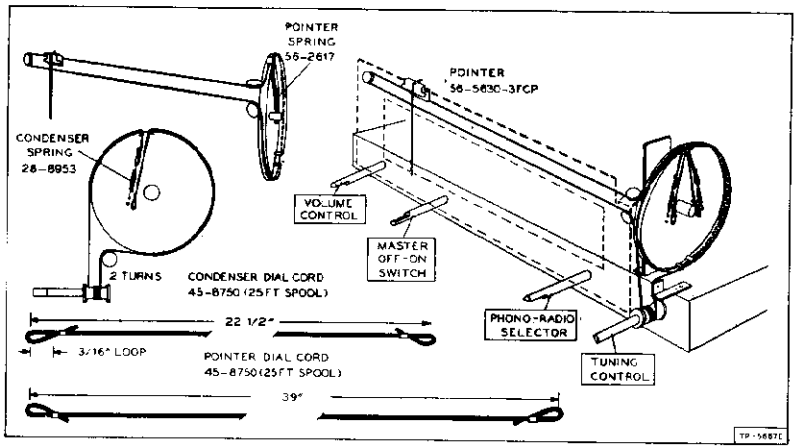

Figure 8. Drive-Cord Installation Details

SYMBOLIZATION

The components in the radio circuit are symbolized according to the types of parts and the sections of the radio i which the parts are located. The prefix letter of the symbol designates the type of part, as follows:

C—condenser	LS—Loud-speaker	TC—tuning core
I—pilot lamp	R—resistor	W—line-cord-and-plug assembly
L—choke or coil	S—switch	WS—Wafer switch
LA—loop aerial	T—transformer	Z—electrical assembly

The number of the symbol designates the section in which the part is located, as follows:

100-series components are in Section 1—the powersupply.
200-series components are in Section 2—the audio circuits.
300-series components are in Section 3—the i-f, detector, and a-v-c circuits.
400-series components are in Section 4—the r-f and converter circuits.

REPLACEMENT PARTS LIST

NOTE: Part numbers identified by an asterisk (*) indicate general replacement items. These numbers may not be identical with those on factory assemblies: also, the electrical values of some replacement items may differ from the values indicated in the schematic diagram and replacement parts list. The values substituted in any case are so chosen that the operation of the radio will be either unchanged or improved. When ordering replacements, use only the "Service Part No."

SECTION 1
POWER SUPPLY

Reference Symbol	Description	Service Part No.
C100	Condenser, line filter, .05 mf.	81-0122*
C101	Condenser, electrolytic, doubler, 20 mf.	30-2568-22
C102	Condenser, electrolytic, filter, 3-section	30-2575-23
C102A	Condenser, electrolytic, filter, 75 mf., 250v	Part of C102
C102B	Condenser, electrolytic, filter, 40 mf., 250v	Part of C102
C102C	Condenser, electrolytic, filter, 10 mf., 250v	Part of C102
I100	Lamp, pilot, 110v	34-2605*
R100	Resistor, current limiting, 25 ohms	33-1334-5
R101	Resistor, filter, 2-section	33-3435-18
R101A	Resistor, filter, 180 ohms	Part of R101
R101B	Resistor, filter, 4700 ohms	Part of R101
R102	Resistor, leakage, 120,000 ohms	66-4123340*
S100	Switch, off-on power	42-1837-3
W100	Line-cord-and-plug assembly	L-2193*
WS-C	Wafer switch, radio-phono	Part of WS

SECTION 2
AUDIO CIRCUITS

C200	Condenser, blocking, .01 mf.	81-0120*
C201	Condenser, decoupling, .1 mf.	81-0113*
C202	Condenser, d-c blocking, .01 mf.	81-0120*
C203	Condenser, grid by-pass, ceramic, 220 mmf.	62-122001001*
C204	Condenser, parasitic suppressor, .02 mf.	81-0108*
J200	Jack, phono input	27-6126
LS200	Speaker, permanent magnet	36-1626-1
R200	Volume control, 500,000 ohms	45-5019*
R201	Resistor, grid return, 10 megohms	66-6103340*
R202	Resistor, plate load, 270,000 ohms	66-4273340*
R203	Resistor, plate filter, 220,000 ohms	66-4223340*
R204	Resistor, grid return, 470,000 ohms	66-4473340*
R205	Resistor, cathode bias, 180 ohms	66-1183340*
T200	Transformer, output	32-8242-3
WS	Wafer switch, radio-phono	42-1824-2
WS-A	Wafer switch, radio-phono	Part of WS

SECTION 3
I-F, DETECTOR, AND A-V-C CIRCUITS

C300A	Condenser, fixed trimmer	Part of Z300
C300B	Condenser, fixed trimmer	Part of Z300
C301A	Condenser, fixed trimmer	Part of Z301
C301B	Condenser, fixed trimmer	Part of Z301
C301C	Condenser, i-f by-pass	Part of Z301
C301D	Condenser, i-f by-pass	Part of Z301
C302	Condenser, i-f by-pass, .1 mf.	81-0113*
C303	Condenser, decoupling, .003 mf.	81-0109*
C304	Condenser, a-v-c by-pass, .05 mf.	45-3500-2*
C305	Condenser, screen by-pass, .01 mf.	81-0120*
L300A	Primary, 1st i-f transformer	Part of Z300
L300B	Secondary, 1st i-f transformer	Part of Z300
L301A	Primary, 2nd i-f transformer	Part of Z301
L301B	Secondary, 2nd i-f transformer	Part of Z301
R300	Resistor, a-v-c filter, 22,000 ohms	66-3223340*

SECTION 3 (Continued)
I-F, DETECTOR, AND A-V-C- CIRCUITS

	Description	Servic Part No
R301	Resistor, a-v-c filter, 2.2 megohms	66-5223340
R302	Resistor, screen dropping, 100,000 ohms	66-5103340
R303	Resistor, plate dropping, 1,000 ohms	66-3103340
R304	Resistor, diode load, 47,000 ohms	66-3473340
TC300A	Tuning core	Part of Z30
TC300B	Tuning core	Part of Z30
TC301A	Tuning core	Part of Z30
TC301B	Tuning core	Part of Z30
WS-B	Switch, radio-phono	Part of W
Z300	Transformer, 1st i-f	32-416
Z301	Transformer, 2nd i-f	32-424

SECTION 4
R-F AND CONVERTER CIRCUITS

C400	Condenser, variable, 2-section	31-2727-
C400A	Condenser, trimmer, aerial	Part of C40
C400B	Condenser, trimmer, osc.	Part of C40
C401	Condenser, aerial coupling, mica, 5 mmf.	60-90505007
C402	Condenser, blocking, mica, 56 mmf.	62-056409001
C403	Condenser, fixed trimmer, ceramic, 10 mmf.	30-1224-2
C404	Condenser, a-v-c by-pass, .03 mf.	45-3500-1
J400	Jack, aerial input	27-6214-
LA400	Loop-aerial assembly	76-2127-
PL400	Plug, loop aerial	Part of LA40
R400	Resistor, isolating, 150,000 ohms	66-4153340
R401	Resistor, grid return, 22,000 ohms	66-3223340
R402	Resistor, parasitic suppressor, 10 ohms	66-0103340
T400	Transformer, oscillator	32-4190-

MISCELLANEOUS

Description	Servic Part No
Bracket-and-clip assembly, pilot lamp	76-400
Cable-and-plug assembly, phono input	41-3864-
Cabinet (less scale)	1071
Bezel	56-536
Cabinet back	54-760
Dial scale	54-500
Dial-Scale Hardware	
Dial-backplate assembly	76-400
Diffusing panel	54-760
Spring (2 required)	56-384
Snap fastener	28-4342FA
Drive cord (25-ft. spool)	45-8750
Pointer	56-5630-3FC
Spring	56-261
Shaft-and-pulley assembly	76-395
Spring, tuning-gang drive	28-895
Knob (4 required)	54-448
Socket assembly, pilot lamp	27-623
Socket, Loktal	27-6138
Socket, miniature	27-622
Socket, octal	27-6138

© John F. Rider

MODELS 49-1602, 49-1603,
49-1604, 49-1605

Circuit Description

Philco Radio-Phonograph Models 49-1602 and 49-1604 are identical electrically. Each model includes a Philco Automatic Record Changer Model M-9 and a six-tube superheterodyne which provides reception in the standard broadcast band.

A semi-high-impedance loop aerial normally gives adequate signal pickup; if greater signal pickup is required, an external aerial may be connected.

The loop aerial feeds into a 14AF7 converter. The aerial and oscillator circuits are tuned by ganged, variable tuning condensers. The two i-f stages employ 7B7 pentode amplifier tubes. The new Philco high-gain transformers are used for coupling in the r-f and i-f circuits, to provide additional amplification and to give better reproduction of the received r-f signal. The diode section of the 7C6 dual-diode-triode provides detection and a-v-c action. The triode section of this tube functions as the first audio amplifier, and is resistance-coupled to the 35L6GT output tube. The loudspeaker is a permanent-magnet, dynamic type. The power supply employs a 50X6 full-wave, voltage-doubler rectifier and a resistor-condenser filter network.

A 150,000-ohm resistor, R103, is connected between B– and the chassis to prevent hum under conditions of high humidity. The combination of C305 and its associated r-f choke is a series-resonant circuit at 455 kc., and functions as a low-impedance by-pass for the intermediate frequency.

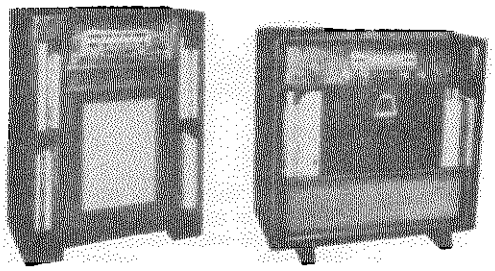

MODEL 49-1602 MODEL 49-1604
MODEL 49-1603 **SPECIFICATIONS** MODEL 49-1605

CABINET	
Model 49-1602	Wood console, walnut finish
Model 49-1604	Wood console, mahogany finish
CIRCUIT	Six-tube superheterodyne
FREQUENCY RANGE	540—1620 kc.
AUDIO OUTPUT	3 watts
OPERATING VOLTAGE	105—120 volts, a.c.
POWER CONSUMPTION	
Radio	65 watts
Phonograph	30 watts
AERIAL	Built-in semi-high-impedance loop; also provision for connecting external aerial.
INTERMEDIATE FREQUENCY	455 kc.
PHILCO TUBES (6)	7B7(2), 7C6, 14AF7, 35L6GT, 50X6
PHONOGRAPH	Philco Automatic Record Changer Model M-9

TP-5870 & TP-5819A

Philco TROUBLE-SHOOTING *Procedure*

For rapid trouble shooting, the radio circuit is divided into four sections, with test points specified for each section; these sections and test points are indicated in the schematic diagram. The trouble-shooting procedure given for each section includes a simplified test chart and a bottom view of the chassis showing the locations of the test points and the components of that section.

In each chart, the first step is a master check for determining whether trouble exists in that section, without going through the entire test procedure.

Failure to obtain the "NORMAL INDICATION" in any given step indicates trouble within the circuit under test.

After isolating the trouble to a single stage, the defect is located by: first, testing the tube; second, measuring tube electrode voltages; third, measuring circuit resistances; fourth, substituting condensers. The trouble revealed should be corrected before testing further.

Preliminary Checks

To avoid possible damage to the radio, the following preliminary checks should be made before it is turned on:

1. Inspect both the top and the bottom of the chassis. Make sure that all tubes are secure in the proper sockets, and look for any broken or shorted connections, burned resistors, or other obvious sources of trouble.
2. Measure the resistance between B+ (pin 7 of 50X6 rectifier) and B–, test point B. When the ohmmeter test leads are connected in the proper polarity, the highest resistance reading will be obtained. If the reading is lower than 3000 ohms, check condensers C102A and C102B for leakage or shorts. The resistance value given is much lower than normal, and is not intended as a quality check of these condensers; the value given is the lowest at which the rectifier will operate safely while the voltage checks of Section 1 (power supply) are performed.

Model 49-1603 **GENERAL INFORMATION** Model 49-1605

The radio chassis of these two models are electrically and mechanically identical to that of Model 49-1602. The record changer used is a Model M-9C (see diagram below)

PHONO PICKUP PARTS

Description	Service Part No.
Crystal pickup cartridge, P-30	35-2671-1
Needle for P-30 crystal	35-2670
Crystal pickup cartridge, Philco Special	35-2682
Needle for Philco Special crystal	35-2678
Pickup-and-needle assembly	45-1609

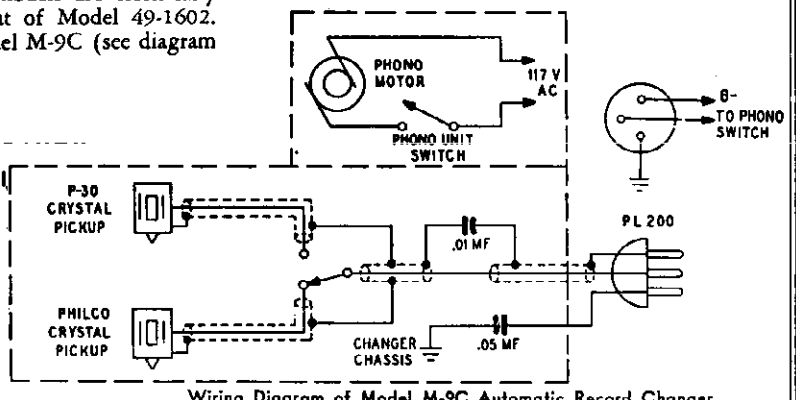

Wiring Diagram of Model M-9C Automatic Record Changer

©John F. Rider

TROUBLE SHOOTING

Section 1 - Power Supply

For the tests in this section, use a d-c voltmeter. Connect the negative lead to B—, test point B; connect the positive lead to the test points indicated in the chart. The voltage readings given were taken with a 20,000-ohms-per-volt meter at a line voltage of 117 volts, a.c.

Turn on the power, and set the volume control to minimum. Turn the tone control fully clockwise, and set the radio-phono switch to the radio position.

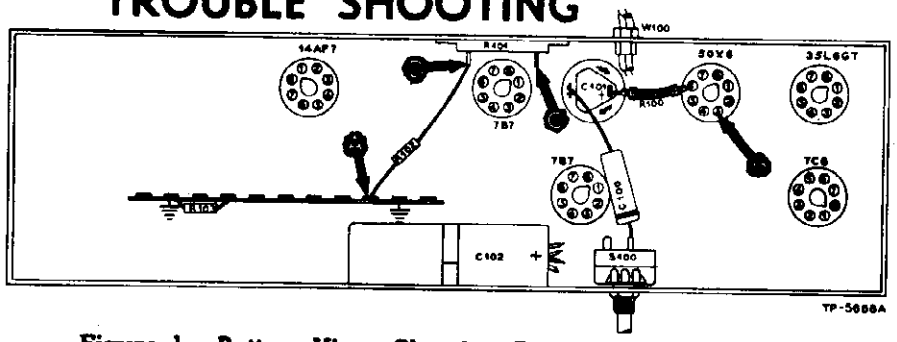

Figure 1. Bottom View, Showing Section 1 Test Points

If the "NORMAL INDICATION" is obtained in step 1, proceed with the tests for Section 2 (audio circuits); if not, isolate and correct the trouble in this section.

STEP	TEST POINT	NORMAL INDICATION	ABNORMAL INDICATION	POSSIBLE CAUSE OF ABNORMAL INDICATION
1	A	80v		Trouble within this section. Isolate by the following tests.
2	C	225v	No voltage	Defective: 50X6. Open: C101, R100, S100, W100. Shorted: C102A.
			Low voltage	Defective: 50X6. Open: C102A. Leaky: C102A, 102B. Shorted: C102C.
			High voltage	Open: R101, R207*, T200*.
3	D	195v	No voltage	Shorted: C102B.
			Low voltage	Open: C102B. Leaky: C102B.
			High voltage	Open: R102.
4	A	80v	No voltage	Shorted: C102C. Open: R102.
			Low voltage	Leaky: C102C.
Listening Test: Abnormal hum may be caused by open C102A, C102B, or C102C.				

* This part located in another section, may cause abnormal indication in this section.

Section 2 - Audio Circuits

For the tests in this section, use an audio-frequency signal generator. Connect the generator ground lead to B—, test point B; connect the output lead through a .1-mf. condenser to the test points indicated in the chart.

Set the volume control to maximum, and turn the tone control fully counterclockwise. Set the radio-phono switch to the radio position for test points A, C, and D, and to the phono position for test point E.

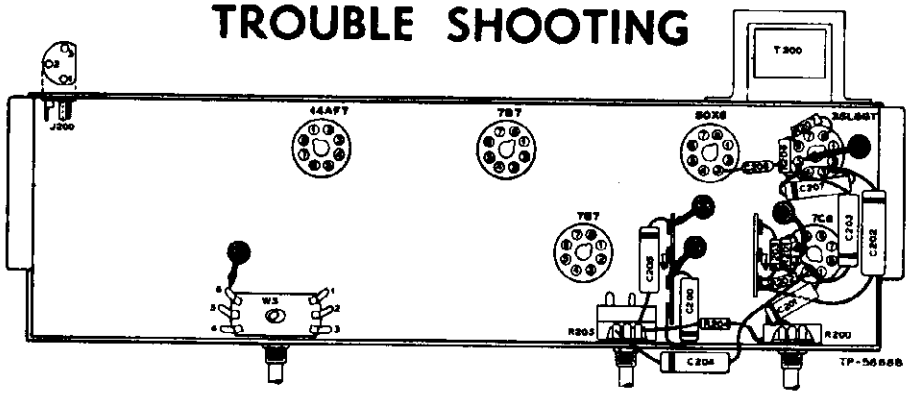

Figure 2. Bottom View, Showing Section 2 Test Points

If the "NORMAL INDICATION" is obtained in step 1, proceed with the tests for Section 3 (i-f, detector, and a-v-c circuits); if not, isolate and correct the trouble in this section.

STEP	TEST POINT	NORMAL INDICATION	POSSIBLE CAUSE OF ABNORMAL INDICATION
1	A E	Loud, clear speaker output with moderate signal-generator input.	Trouble within this section. Isolate by the following tests.
2	C	Moderate, clear output with strong input.	Defective: 35L6GT, LS200. Open: R206, R207, T200. Shorted or leaky: C206, C207.
3	D	Loud, clear output with moderate input.	Defective: 7C6. Open: C203, R201, R202, R203. Shorted or leaky: C202, C203, C204.
4	A	Same as step 3.	Open: C200, C201, R200, WS. Shorted: C205 (rotate R200).
5	E	Same as step 3.	Open: WS.
Listening test: Distortion may be caused by shorted or leaky C200, C201, or C203.			

MODELS 49-1602, 49-1603,
49-1604, 49-1605

Section 3—I-F, Detector, and A-V-C Circuits

TROUBLE SHOOTING

For the tests in this section, use an r-f signal generator, with modulated output, set at 455 kc. Connect the generator ground lead to B—, test point B; connect the output lead through a .1-mf. condenser to the test points indicated in the chart.

Set the volume control to maximum, and turn the tone control fully counterclockwise. Set the radio-phono switch to the radio position, and rotate the tuning control until the tuning condenser is fully meshed.

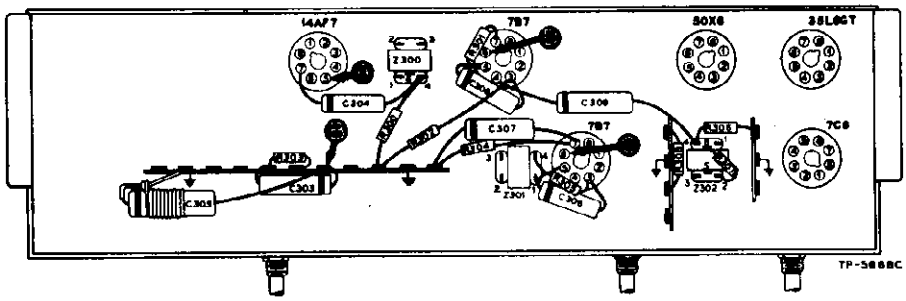

Figure 3. Bottom View, Showing Section 3 Test Points

If the "NORMAL INDICATION" is obtained in step 1, proceed with the tests for Section 4 (r-f and converter circuits); if not, isolate and correct the trouble in this section.

To provide a complete i-f amplifier check, test point A for this section is placed at the grid of the mixer in Section 4; therefore, the effectiveness of step 1 as a master check is dependent upon the condition of certain parts in the mixer circuit. These parts are listed below under the "POSSIBLE CAUSE OF ABNORMAL INDICATION."

STEP	TEST POINT	NORMAL INDICATION	POSSIBLE CAUSE OF ABNORMAL INDICATION
1	A	Loud, clear speaker output with weak signal-generator input.	Trouble within this section. Isolate by the following tests.
2	C	Loud, clear output with moderate input.	Defective: 7B7 (2nd i-f amplifier), 7C6 (diode section). Misaligned: Z302. Open: L302A, L302B, L301B, C307, C308, C309, R304, R305, R306, R307, R308, WS. Shorted: L302A, L302B, C301B, C302A, C302B, C302C, C302D, C307, C308, C309.
3	D	Loud, clear output with weak input.	Defective: 7B7 (1st i-f amplifier). Misaligned: Z301. Open: L301A, L301B, L300C, C305, C306, R301, R302. Shorted: C300B, C301A, C301B, C306.
4	A	Same as step 3.	Defective: 14AF7*. Misaligned: Z300. Open: L300A, L300B, L300C, R300, R403*, R404*. Shorted: C300A, C300B, C304.

*This part, located in another section, may cause abnormal indication in this section.

Section 4—R-F and Converter Circuits

TROUBLE SHOOTING

For the tests in this section, with the exception of the oscillator test, use an r-f signal generator with modulated output. Connect the generator ground lead to B—, test point B; connect the output lead through a .1-mf. condenser to the test points indicated in the chart.

Set the volume control to maximum, and turn the tone control fully counterclockwise. Set the radio-phono switch to the radio position, and set the tuning control and the signal-generator frequency as indicated in the chart.

If the "NORMAL INDICATION" is not obtained in step 1, isolate and correct the trouble in this section. If the trouble is not revealed by the tests for this section, check the alignment.

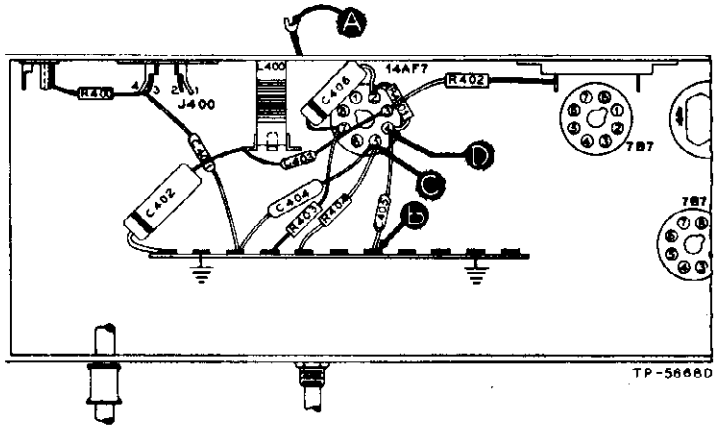

Figure 4. Bottom View, Showing Section 4 Test Points

STEP	TEST POINT	SIG. GEN. FREQ.	RADIO TUNING	NORMAL INDICATION	POSSIBLE CAUSE OF ABNORMAL INDICATION
1	A	1000 kc.	1000 kc.	Loud, clear speaker output with weak signal-generator input.	Trouble within this section. Isolate by the following tests.
2	C	1000 kc.	1000 kc.	Same as step 1.	Defective: 14AF7, osc. circuit. Open: C406, R403, R404. Shorted: C406.

MODELS 49-1602, 49-1603, 49-1604, 49-1605

NOTE: Part numbers identified by an asterisk (*) indicate general replacement items. These numbers may not be identical with those on factory assemblies: also, the electrical values of some replacement items may differ from the values indicated in the schematic diagram and replacement parts list. The values substituted in any case are so chosen that the operation of the radio will be either unchanged or improved. When ordering replacements, use only the "Service Part No."

SECTION 1
POWER SUPPLY

Reference Symbol	Description	Service Part No.
C100	Condenser, line-filter, .05 mf.	61-0122*
C101	Condenser, electrolytic, doubler, 20 mf.	30-2568-22
C102	Condenser, electrolytic, 3-section	30-2575-24
C102A	Condenser, filter, 75 mf.	Part of C102
C102B	Condenser, filter, 40 mf.	Part of C102
C102C	Condenser, filter, 10 mf.	Part of C102
I100	Lamp, pilot, 110v	34-2605
R100	Resistor, current limiter, 25 ohms	33-1334-5
R101	Resistor, filter, 500 ohms	33-3435-3
R102	Resistor, filter, wire-wound, 8200 ohms, 2.5 watts	66-2825360
R103	Resistor, leakage, 150,000 ohms	66-4153340*
S100	Switch, off-on	Part of R205
W100	Line-cord-and-plug assembly	L-2163*

SECTION 2
AUDIO CIRCUITS

C200	Condenser, blocking, .006 mf.	45-3500-7*
C201	Condenser, blocking, .01 mf.	61-0120*
C202	Condenser, plate decoupling, .25 mf.	61-0125*
C203	Condenser, d-c blocking, .01 mf.	61-0120*
C204	Condenser, tone compensation, .004 mf.	61-0179*
C205	Condenser, bass compensation, .006 mf.	45-3500-7*
C206	Condenser, grid by-pass, 220 mmf.	62-122001001*
C207	Condenser, parasitic suppressor, .006 mf.	45-3500-7*
J200	Jack, phono input	27-6126
LS200	Speaker, permanent magnet	38-1626-1
R200	Volume control, 2 megohms (tap at 1 megohm)	45-5019*
R201	Resistor, grid return, 10 megohms	66-6103340*
R202	Resistor, plate load, 100,000 ohms	66-4103340*
R203	Resistor, plate filter, 220,000 ohms	66-4223340*
R204	Resistor, bass compensation, 68,000 ohms	66-3683340*
R205	Tone control (with off-on switch), 5 megohms	33-5538-38
R206	Resistor, grid return, 470,000 ohms	66-4473340*
R207	Resistor, cathode bias, 130 ohms	66-1133340*
T200	Transformer, output	32-8242-3
WS	Switch, radio-phono	45-1745-1

SECTION 3
I-F, DETECTOR, AND A-V-C CIRCUITS

C300A	Condenser, fixed trimmer	Part of Z300
C300B	Condenser, fixed trimmer	Part of Z300
C301A	Condenser, fixed trimmer	Part of Z301
C301B	Condenser, fixed trimmer	Part of Z301
C302A	Condenser, fixed trimmer	Part of Z302
C302B	Condenser, fixed trimmer	Part of Z302
C302C	Condenser, i-f by-pass	Part of Z302
C302D	Condenser, i-f by-pass	Part of Z302
C303	Condenser, a-v-c by-pass, .05 mf.	61-0122*
C304	Condenser, decoupling, .01 mf.	61-0120*
C305	Condenser-and-choke assembly, .15 mf.	76-2361
C306	Condenser, screen by-pass, .01 mf.	61-0120*
C307	Condenser, cathode by-pass, .05 mf.	61-0122*
C308	Condenser, screen by-pass, .01 mf.	61-0120*
C309	Condenser, plate by-pass, .05 mf.	61-0122*
L300A	Primary, 1st i-f transformer	Part of Z300
L300B	Tertiary, 1st i-f transformer	Part of Z300
L300C	Secondary, 1st i-f transformer	Part of Z300
L301A	Primary, 2nd i-f transformer	Part of Z301
L301B	Secondary, 2nd i-f transformer	Part of Z301
L302A	Primary, 3rd i-f transformer	Part of Z302
L302B	Secondary, 3rd i-f transformer	Part of Z302
R300	Resistor, plate dropping, 10,000 ohms	66-3103340*
R301	Resistor, cathode bias, 100 ohms	66-1103340*
R302	Resistor, screen dropping, 1000 ohms	66-2103340*
R303	Resistor, a-v-c filter, 2.2 megohms	66-5223340*
R304	Resistor, cathode bias, 270 ohms	66-1273340*

SECTION 3 (Continued)
I-F, DETECTOR, AND A-V-C- CIRCUITS

Reference Symbol	Description	Service Part No
R305	Resistor, screen dropping, 1000 ohms	66-2103340
R306	Resistor, plate dropping, 8200 ohms	66-2823340
R307	Resistor, diode load, 47,000 ohms	66-3473340
R308	Resistor, a-v-c filter, 470,000 ohms	66-4473340
TC300A	Tuning core	Part of Z30
TC300B	Tuning core	Part of Z30
TC301A	Tuning core	Part of Z30
TC301B	Tuning core	Part of Z30
TC302A	Tuning core	Part of Z30
TC302B	Tuning core	Part of Z30
WS	Switch, radio-phono	Part of WS
Z300	Transformer, 1st i-f	32-425
Z301	Transformer, 2nd i-f	32-4160-
Z302	Transformer, 3rd i-f	32-4240-

SECTION 4
R-F AND CONVERTER CIRCUITS

C400	Condenser, tuning gang	31-2727-
C400A	Condenser, trimmer	Part of C40
C400B	Condenser, trimmer	Part of C40
C401	Condenser, series blocking, 5 mmf.	60-90505007
C402	Condenser, isolating, .04 mf.	45-3500-2
C403	Condenser, osc. plate 220 mmf.	62-122001001
C404	Condenser, grid blocking, 470 mmf.	60-10475307
C405	Condenser, osc. grid, 100 mmf.	60-10105017
C406	Condenser, by-pass, .05 mf.	61-0122
J400	Jack, aerial input	27-6214-
L400	Coil, oscillator	32-415
LA400	Loop aerial	32-431
R400	Resistor, external aerial loading, 150,000 ohms	66-4153340
R401	Resistor, osc. grid, 47,000 ohms	66-3473340
R402	Resistor, plate dropping, 220,000 ohms	66-4223340
R403	Resistor, cathode bias, 3900 ohms	66-2393340
R404	Resistor, grid return, 2.2 megohms	66-5223340
T400	Transformer, aerial	32-4033-

MISCELLANEOUS

Description	Service Part No
Antenna-lead assembly	76-1472-
Bracket-and-clip assembly	76-400
Cabinet and Cabinet Hardware	
Cabinet (less scale)	
Model 49-1602	1071
Model 49-1604(L)	10725
Model 49-1604(W)	1072
Back	54-763
Bezel	
Model 49-1602	56-5367FC
Model 49-1604	56-5855FC
Dial scale	
49-1602	54-501
49-1604	54-501
Knob (4)	54-448
Cable, shielded, pickup	41-3754-1
Cable, speaker	41-3806-
Cable, phono power	41-3747-1
Dial-backplate assembly	76-400
Diffusing panel	54-760
Drive cord (25-ft. spool)	45-8750
Pointer	56-5630FC
Spring (gang drive)	56-261
Spring (diffusing panel) (2)	56-384
Spring (pointer drive)	28-895
Mounting bracket, rear (tuning condenser)	56-5647FA
Rubber mount (3)	27-4771-
Mounting clamp, electrolytic condenser	56-1346-1FA
Mounting clips, aerial and osc. coil	28-5002FC
Mounting clips, i-f transformer	56-410
Shaft-and-pulley assembly	76-395
Shield, light, fiber	54-739
Socket assembly, pilot lamp	27-623
Socket, Loktal	27-6138
Socket, octal	27-617

©John F. Rider

ALIGNMENT PROCEDURE

RADIO CONTROLS—Set volume control to maximum, turn tone control fully counterclockwise, and set radio-phono switch to radio position.

OUTPUT LEVEL—During alignment, adjust signal-generator output to maintain output-meter indication below 1.25 volts.

DIAL—Calibration and pointer-index measurements are shown in figure 7. With tuning condenser fully meshed, set pointer to index mark.

OUTPUT METER—Connect across voice coil.

SIGNAL GENERATOR—Connect as indicated in chart. Use modulated output.

STEP	SIGNAL GENERATOR: CONNECTION TO RADIO	SIGNAL GENERATOR: DIAL SETTING	RADIO: DIAL SETTING	RADIO: SPECIAL INSTRUCTIONS	ADJUST
1	Ground lead to B−; output lead through .1-mf. condenser to mixer grid (pin 5 of 14AF7).	455 kc.	540 kc.	Adjust tuning cores, in order given, for maximum output.	TC302B—3rd i-f sec. TC302A—3rd i-f pri. TC301B—2nd i-f sec. TC301A—2nd i-f pri. TC300B—1st i-f sec. TC300A—1st i-f pri.
2	Radiating loop (see note below).	1600 kc.	1600 kc.	Adjust trimmer for maximum output.	C400B—osc.
3	Same as step 2.	1500 kc.	1500 kc.	Adjust trimmer for maximum output.	C400A—aerial

RADIATING LOOP: Make up a 6—8 turn, 6-inch diameter loop from insulated wire; connect to signal-generator leads and place near radio loop aerial. The loop aerial must be connected.

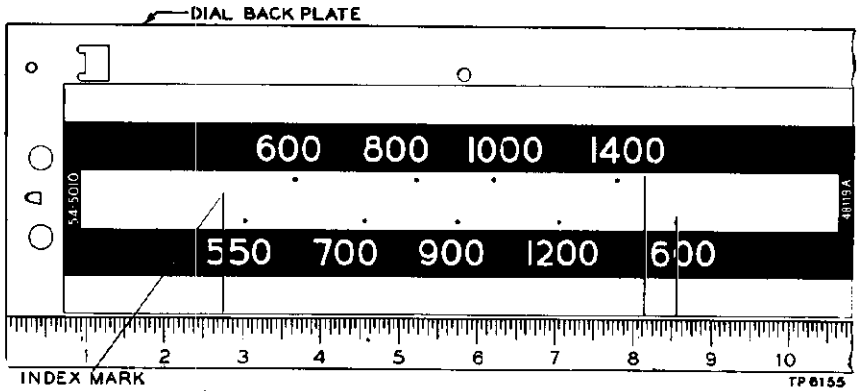

Figure 7. Calibration Measurements for Dial Backplate

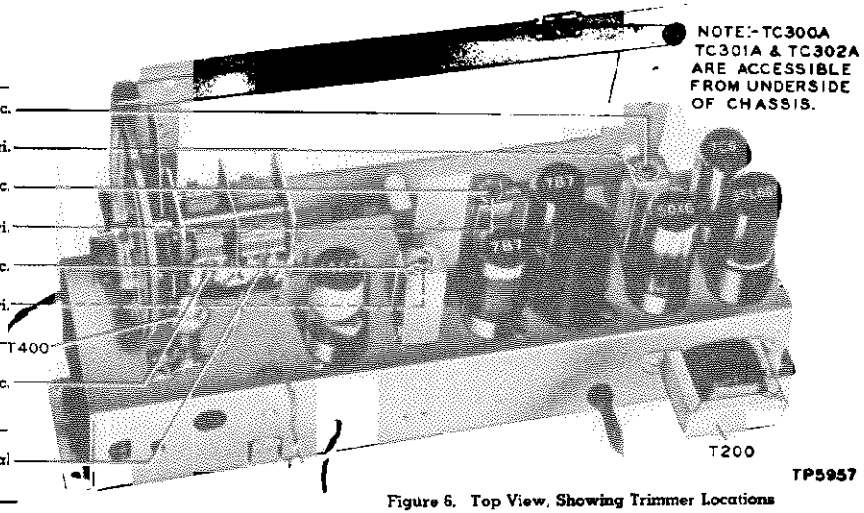

Figure 6. Top View, Showing Trimmer Locations

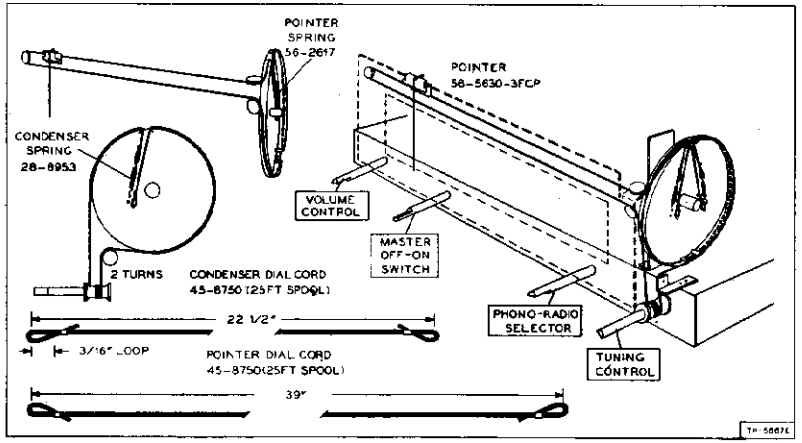

Figure 8. Drive-Cord Installation Details

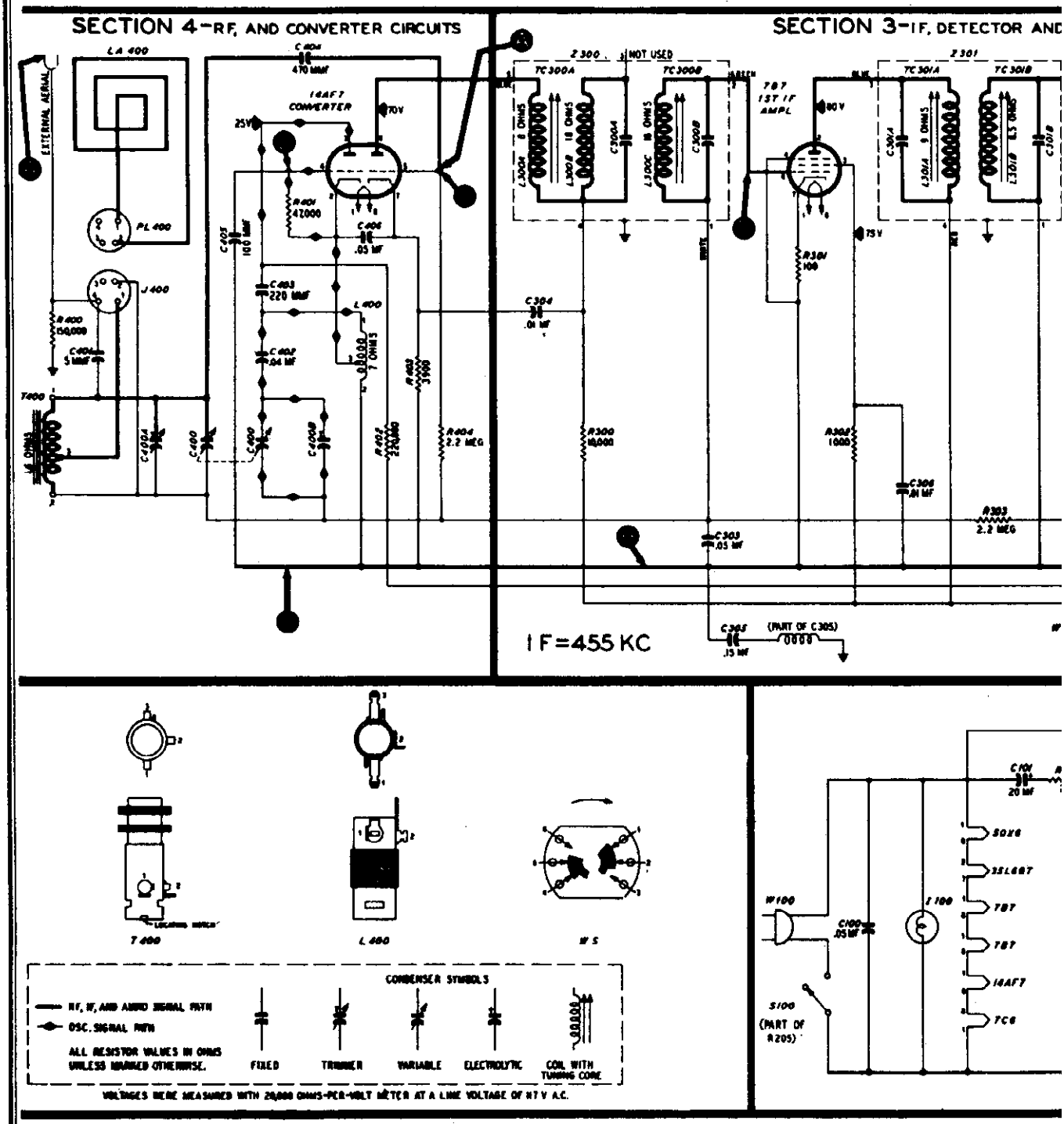

Figure 5. Philco Radio-Phonograph

STEP	TEST POINT	SIG. GEN. FREQ.	RADIO TUNING	NORMAL INDICATION	POSSIBLE CAUSE OF ABNORMAL INDICATION
3	D (Osc. test: see note below.)		Rotate through range.	Negative 1.5 to 2.5 volts.	Open: C402, C403, C405, R401, R402, L400. Shorted: C400, C400B, C402, C403, C405.
4	A	1000 kc.	1000 kc.	Same as step 1.	Open: LA400, C401, C404, T400. Shorted: C400, C400A, C404.

©John F. Rider

MODELS 49-1602, 49-1603, 49-1604, 49-1605

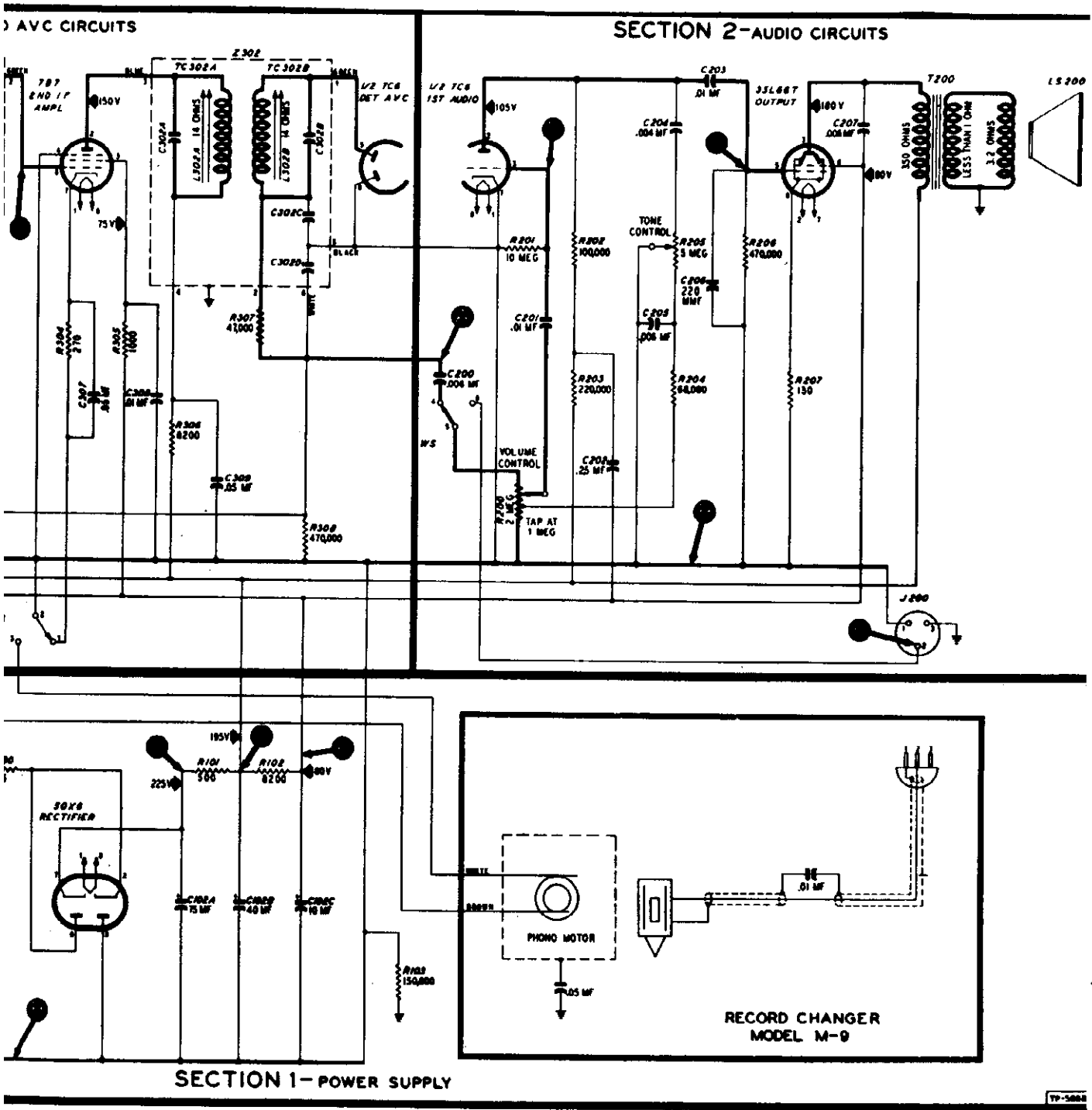

RECORD CHANGER: See Philco Model M-9, Pages RCD.CH. 19-18 to RCD.CH. 19-34.

— — **Sectionalized Schematic Diagram, Showing Test Points**

OSCILLATOR TESTS

Connect the positive lead of a high-resistance voltmeter to B–, test point B; connect the prod end of the negative lead through a 100,000-ohm isolating resistor to the oscillator grid (pin 4 of 14AF7), test point D. Use a suitable meter range, such as 0—10 volts. Proper operation of the oscillator is indicated by negative voltage of approximately the value given in the chart (measured with 20,000-ohms-per-volt meter) throughout the tuning range.

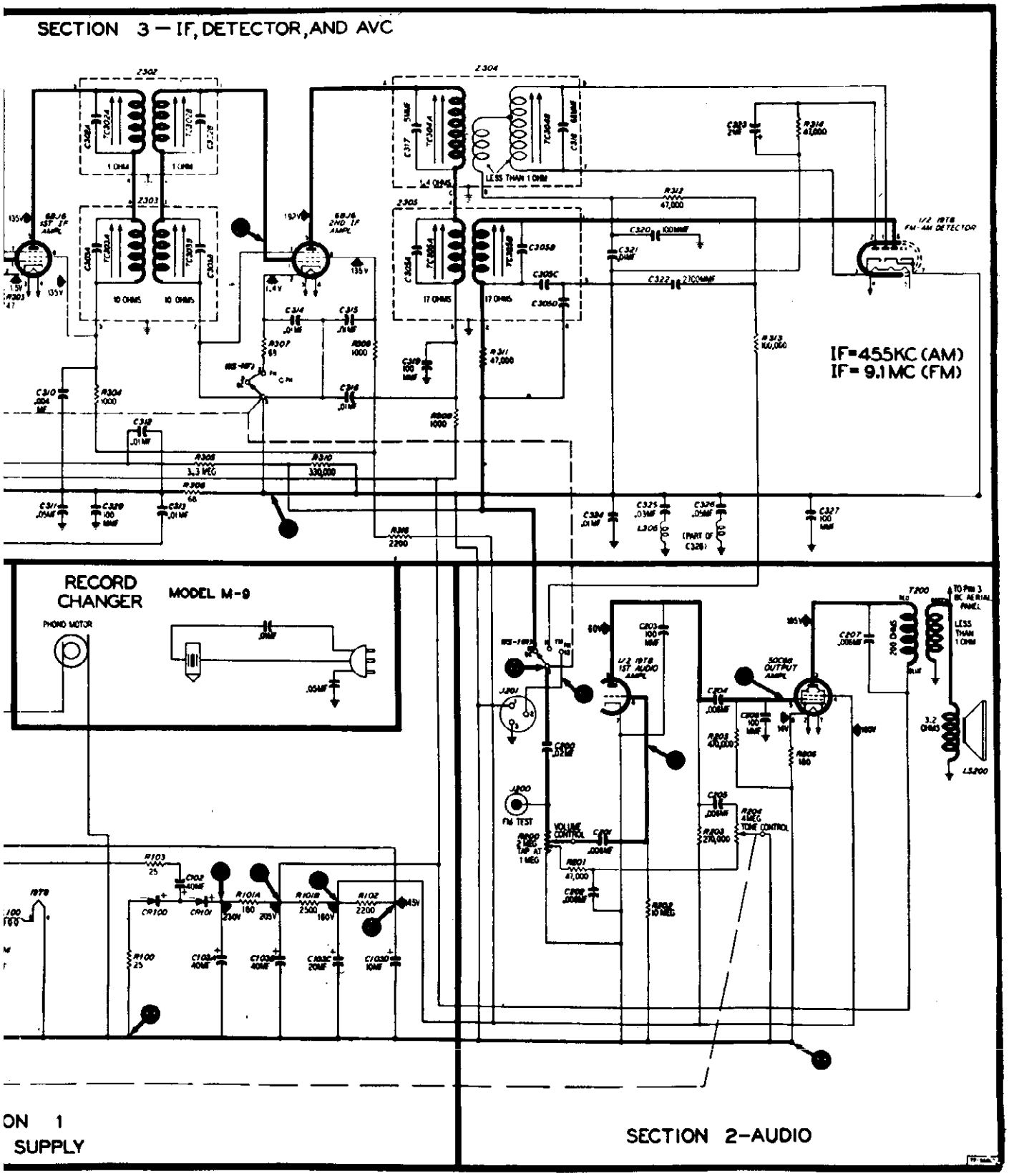

RECORD CHANGER: For Models 49-1609, 49-1611, See Philco Model M-9C, Pages RCD.CH. 19-35 to RCD.CH. 19-54.

MODELS 49-1606, 49-1609, 49-1611

Circuit Description

Philco Model 49-1606 is a console-model radio-phonograph, which provides reception on the standard-broadcast and FM bands. The radio is a seven-tube superheterodyne, with two selenium rectifiers incorporated in the power supply.

A built-in, high-impedance loop aerial for the broadcast band and a line-cord aerial for the FM band normally provide adequate signal pickup; if additional pickup is required, Philco Dipole Aerial, Part No. 45-1462, may be used. When connecting the dipole aerial, disconnect the black lead from terminal 2 of TB400, and attach this lead to pin 1 of the dipole-aerial plug, which fits into J400. No additional coupler is required.

To eliminate complicated switching and to provide better stability and greater gain on both bands, separate converter tubes are used for broadcast and FM reception. A 12AU6 high-gain pentode is used in a tuned r-f amplifier on the FM band. The output of this tube is fed to the 14F8 dual triode, which functions as the converter for the FM signal. A 12AU7 dual triode is used as the converter for the broadcast signal. Band switching is accomplished by means of a single-wafer switch, which connects the B+ voltage to the proper mixer plate.

A 6BJ6 tube is used in each of the two i-f amplifier stages. Two sets of i-f transformers are used—one set is tuned to 455 kc. for broadcast, and the other set is tuned to 9.1 mc. for FM. The use of two sets of i-f transformers makes better shielding possible, so that undesirable beat signals and interaction between transformers are eliminated.

Two diode sections of a 19T8 triple-diode-triode are used in a ratio-detector circuit, for detection of FM signals. The other diode section is used in a half-wave rectifier circuit, for detection of AM (broadcast) signals and to provide a-v-c action.

The triode section of the 19T8 functions as the first audio amplifier. The output of this stage is resistance-coupled to a 50C6G output tube, which is transformer-coupled to the permanent-magnet speaker.

Two selenium rectifiers are used in a half-wave voltage-doubler circuit, to supply the B+ voltage.



TP-5869B

MODEL 49-1606

SPECIFICATIONS

CABINET	Wood console, mahogany and blonde walnut
CIRCUIT	Seven-tube superheterodyne plus rectifiers
FREQUENCY RANGES	
Broadcast	540—1620 kc.
FM	88—108 mc.
AUDIO OUTPUT	5 watts
OPERATING VOLTAGE	105—125 volts, 60 cycles, a.c.
POWER CONSUMPTION	
Radio	65 watts
Phonograph	85 watts
AERIALS	Built-in, low-impedance loop for broadcast; line-cord aerial for FM
INTERMEDIATE FREQUENCY	
AM	455 kc.
FM	9.1 mc.
PHILCO TUBES (7)	12AU6, 12AU7, 14F8, 6BJ6(2), 19T8, 50C6G, selenium rectifier (2)
PHONOGRAPH	Philco Automatic Record Changer Model M-9.

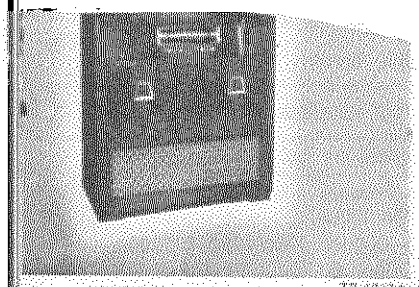

MODEL 49-1611 TP-6331A

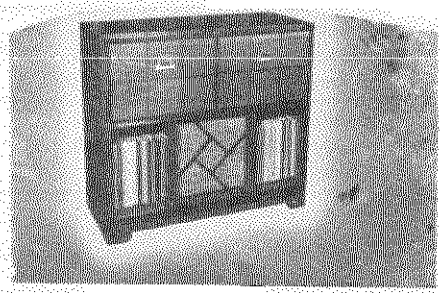

MODEL 49-1609 TP-6330A

GENERAL INFORMATION

The radio chassis of these two models are electrically and mechanically identical to that of Model 49-1606. The record changer used is a Model M-9C (see diagram below); for record changer service information, refer to Service Manual PR-1599.

Each model is housed in a different type of cabinet. Therefore, the loop aerials are of different dimensions. (The aerial circuits are electrically the same.)

© John F. Rider

MODELS 49-1606,
49-1609, 49-1611

SPECIFICATIONS

CABINET ..... Wood console: Model 49-1609, walnut or light finish; Model 49-1611, mahogany finish

POWER CONSUMPTION:
Radio ..... 40 watts
Phonograph ..... 20 watts

AERIALS ..... Semi-high-impedance loop; line-cord FM aerial; connector for external aerial

PHONOGRAPH ..... Philco Automatic Record Changer, Model M-9C (for service information, refer to Service Manual PR-1599)

Preliminary Checks

Measure the resistance between B+, test point C, and B–, test point B. When the ohmmeter test leads are connected in the proper polarity, the highest resistance reading will be obtained. If the reading is lower than 2500 ohms, check condensers C103A, C103B, and C316 for leakage or shorts. The resistance value given is much lower than normal, and is not intended as a quality check of these condensers; the value given is the lowest at which the rectifier will operate safely while the voltage checks of Section 1 (power supply) are performed.

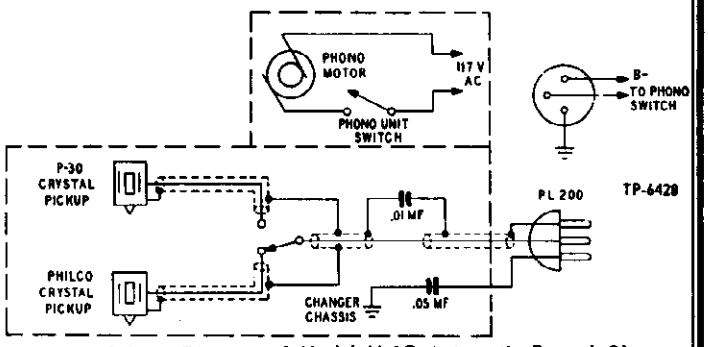

Wiring Diagram of Model M-9C Automatic Record Changer

Section 1 TROUBLE SHOOTING

POWER SUPPLY

For the tests in this section, use a d-c voltmeter. Connect the negative lead to B–, test point B; connect the positive lead to the test points indicated in the chart. The voltage readings given were taken with a 20,000-ohms-per-volt meter at a line voltage of 117 volts, a.c.

Turn on the power, and set the volume control to minimum. Turn the tone control fully clockwise, and set the band switch to the broadcast position.

If the "NORMAL INDICATION" is obtained in step 1, proceed with the tests for Section 2 (audio circuits); if not, isolate and correct the trouble in this section.

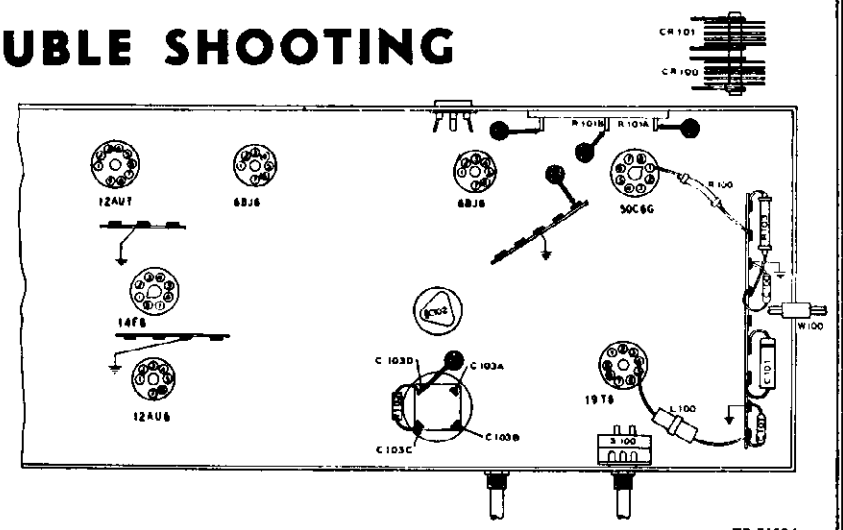

Figure 1. Bottom View, Showing Section 1 Test Points

STEP	TEST POINT	NORMAL INDICATION	ABNORMAL INDICATION	POSSIBLE CAUSE OF ABNORMAL INDICATION
1	A	145v		Trouble in this section. Isolate by the following tests.
2	C	230v	No voltage.	Defective: CR100, CR101. Open: C102, W100, R103, S100. Shorted: C103A, C101, C104, C100.
			Low voltage.	Defective: CR100, CR101. Open: C103A, R100. Shorted or leaky: C103B.
			High voltage.	Open: R101A, R101B, R102.
3	D	205v	No voltage.	Open: R101A. Shorted: C103B.
			Low voltage.	Leaky: C103B. Shorted: C103C, C316*.
			High voltage.	Open: R101B, R102, R206*, T200*.
4	E	160v	No voltage.	Open: R101B. Shorted: C103C.
			Low voltage.	Leaky: C103C. Shorted: C103D, C310*, C315*.
			High voltage.	Open: R102, R315*.
5	A	145v	No voltage.	Open: R102. Shorted: C103D.
			Low voltage.	Leaky: C103C.
Listening Test: Abnormal hum may be caused by open C103A, C103B, C103C, or C103D.				

* This part, located in another section, may cause abnormal indication in this section.

© John F. Rider

MODELS 49-1606, 49-1609, 49-1611

Section 2

TROUBLE SHOOTING
AUDIO CIRCUITS

For the tests in this section, use an audio-frequency signal generator. Connect the generator ground lead to B–, test point B; connect the output lead through a .1-mf. condenser to the test points indicated in the chart.

Set the volume control to maximum, and turn the tone control to the midpoint of its range. Set the band switch to the broadcast position for test points A, C, and D, and to the phono position for test point E.

If the "NORMAL INDICATION" is obtained in step 1, proceed with the tests for Section 3 (i-f, detector, and a-v-c circuits); if not, isolate and correct the trouble in this section.

STEP	TEST POINT	NORMAL INDICATION	POSSIBLE CAUSE OF ABNORMAL INDICATION
1	A E	Loud, clear speaker output with weak generator input.	Trouble in this section. Isolate by the following tests.
2	C	Clear signal with strong input.	Defective: 50C6G, LS200. Open: T200, R205, R206. Shorted: C206, C207, T200.
3	D	Same as step 1.	Defective: 19T8. Open: C204, R202, R203. Shorted: C203, C205 (rotate R204), C204.
4	A	Same as step 1.	Open: R200 (rotate through range), C200, C201, WS-1 (R). Shorted: C200, C201, C305D*.
5	E	Same as step 1.	Open: WS-1 (R).
Listening Test: Distortion may be caused by shorted or leaky C201 or C204. Distortion on strong signals may be caused by leaky or shorted C200.			

* This part, located in another section, may cause abnormal indication in this section.

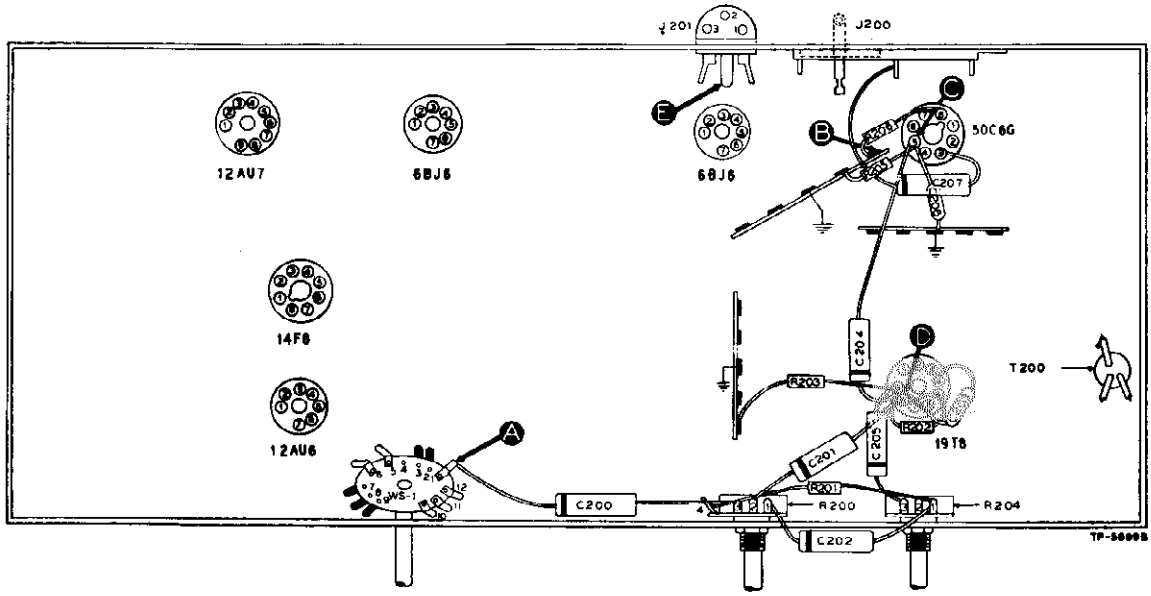

Figure 2. Bottom View, Showing Section 2 Test Points

Section 3

TROUBLE SHOOTING
I-F, DETECTOR, AND A-V-C CIRCUITS

AM Circuits

For the following tests, use an r-f signal generator, with modulated output, set at 455 kc. Connect the generator ground lead to B–, test point B; connect the output lead through a .1-mf. condenser to the test points indicated in the chart.

Set the volume control to maximum, and turn the tone control to the midpoint of its range. Set the radio-phono switch to the radio position, and rotate the tuning control until the tuning condenser is fully meshed.

If the "NORMAL INDICATION" is obtained in step 1, proceed with the tests for Section 4 (r-f and converter circuits); if not, isolate and correct the trouble in this section.

To provide a complete i-f-amplifier check, test point A for this section is placed at the grid of the mixer in Section 4; therefore, the effectiveness of step 1 as a master check is dependent upon the condition of certain parts in the mixer circuit. These parts are listed below under the "POSSIBLE CAUSE OF ABNORMAL INDICATION."

MODELS 49-1606, 49-1609, 49-1611

Section 3 (Cont.) TROUBLE SHOOTING

I-F, DETECTOR, AND A-V-C CIRCUITS

AM Chart

STEP	TEST POINT	NORMAL INDICATION	POSSIBLE CAUSE OF ABNORMAL INDICATION
1	A	Loud, clear speaker output with weak generator input.	Trouble in AM circuits. Isolate by the following tests.
2	C	Loud, clear output with strong input.	Defective: 6BJ6 (2nd i-f amplifier), 19T8 (diode section). Open: Z302, Z303, Z304, Z305, R307, R308, R309, R310, R311, WS-1 (F). Shorted: Z302, Z303, Z304, Z305, C314, C315, C316, C319. Misaligned: Z305.
3	D	Loud, clear output with moderate input.	Defective: 6BJ6 (1st i-f amplifier). Open: R303, R304, R305, R306, Z300, Z301, Z302, Z303. Shorted or leaky: C308, C310, Z300, Z301, Z302, Z303. Misaligned: Z303.
4	A	Same as step 1.	Defective: 12AU7. Open: Z301, R301, R302, R408*, R411*, R412*, WS-1 (F). Shorted or leaky: C307, Z301. Misaligned: Z301.

* This part, located in another section, may cause abnormal indication in this section.

FM Circuits

The following tests are also made with an AM r-f signal generator, using modulated output.

Observe the instructions preliminary to the tests for the AM circuits, with these exceptions: Set the band switch to the FM position. Set the signal-generator frequency to 9.1 mc., and detune to one side or the other until a satisfactory test signal is obtained.

The best indication of satisfactory FM-detector operation is the ability of this circuit to take the alignment properly (see page 11).

The parts which were found to be satisfactory for AM operation, with the exception of those indicated in the chart, will usually be satisfactory for FM operation.

If the "NORMAL INDICATION" is obtained in step 1, proceed with the tests for Section 4 (r-f and converter circuits); if not, isolate and correct the trouble in the FM circuits.

FM Chart

STEP	TEST POINT	NORMAL INDICATION	POSSIBLE CAUSE OF ABNORMAL INDICATION
1	E	Loud, clear speaker output with weak generator input.	Trouble in FM circuits. Isolate by the following tests.
2	C	Loud, clear output with strong input.	Defective: 6BJ6 (2nd i-f amplifier), 19T8 (diode sections). Open: Z304, C317, C318, C320, C321, C322, C323, R312, R313, R314, WS-1 (R)*. Shorted: Z304, C317, C318, C320, C321, C322, C323, WS-1 (R)*. Misaligned: Z304.
3	D	Loud, clear output with moderate input.	Defective: 6BJ6 (1st i-f amplifier). Misaligned: Z302. Shorted: Z302.
4	E	Same as step 1.	Defective: 14F8*. Open: Z300, R300, R405*, R410*, L402*, WS-1 (F). Shorted: C308, C420*, C328, Z300, WS-1 (F). Misaligned: Z300.

* This part, located in another section, may cause abnormal indication in this section.

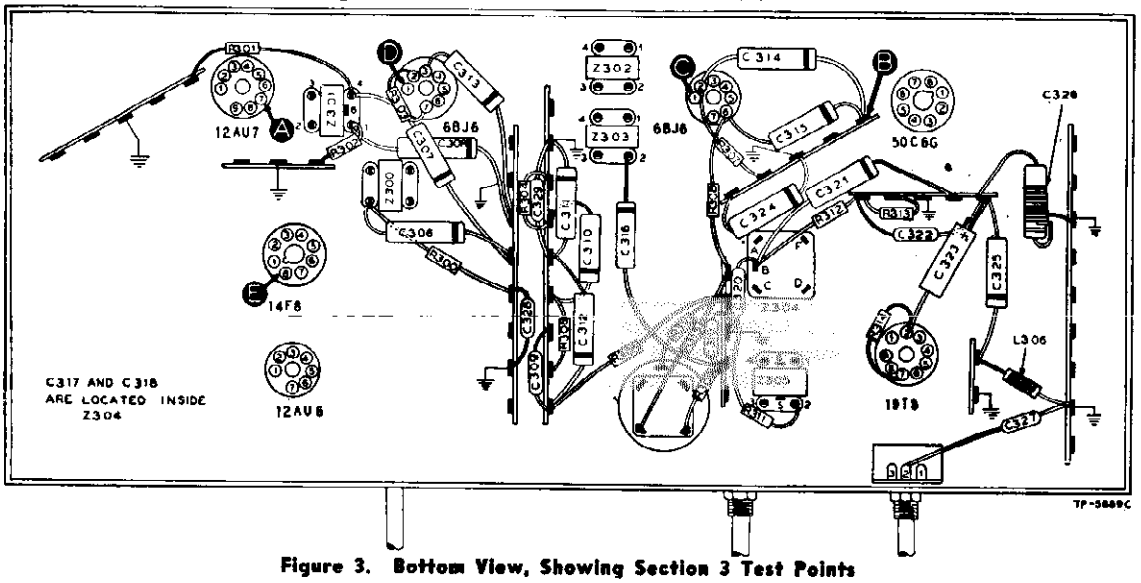

Figure 3. Bottom View, Showing Section 3 Test Points

MODELS 49-1606, 49-1609, 49-161

Section 4

TROUBLE SHOOTING
R-F AND CONVERTER CIRCUITS

AM Circuits

For the tests in this section, with the exception of the oscillator test, use an AM r-f signal generator with modulated output. Connect the generator ground lead to B–, test point B; connect the output lead through a .1-mf. condenser to the test points indicated in the chart.

Set the volume control to maximum, and turn the tone control to the midpoint of its range. Set the band switch to the broadcast position, and set the tuning control and the signal-generator frequency as indicated in the chart.

If the "NORMAL INDICATION" is not obtained in step 1, isolate and correct the trouble in the AM circuits. If the trouble is not revealed by the tests for this section, check the alignment.

FM Circuits

The following tests are also made with an AM r-f signal generator, using modulated output. Observe the instructions preliminary to the tests for the AM circuits with the following exceptions:

Set the band switch to the FM position.

If the "NORMAL INDICATION" is not obtained in step 1, isolate and correct the trouble in the FM circuits.

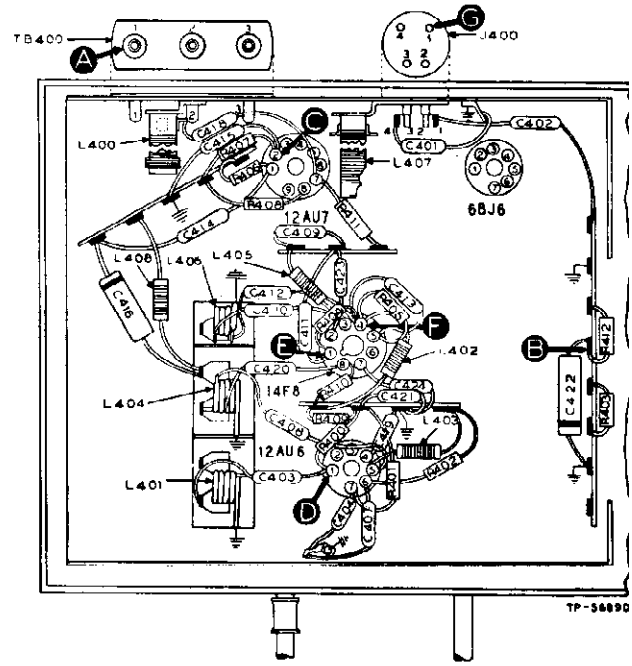

Figure 4. Bottom View, Showing Section 4 Test Points

AM Chart

STEP	TEST POINT	SIG. GEN. FREQ.	RADIO TUNING	NORMAL INDICATION	POSSIBLE CAUSE OF ABNORMAL INDICATION
1	A	1000 kc.	Tune to signal.	Loud, clear speaker output with weak generator input.	Trouble in AM circuits. Isolate by the following tests.
2	C (Osc. test: see note below.)		Tune through range.	Negative 2 to 2.5 volts.	Defective: 12AU7 (osc. section). Shorted: C414, C415, C400, C405B, C417, L407. Open: C414, C416, L408, L407, R412, R407, R406.
3	A	1000 kc.	Tune to signal.	Same as step 1.	Defective: 12AU7 (mixer section). Open: L400, C418, R411, R408. Shorted: C400, C405A, C406, C417.

OSCILLATOR TEST: Connect the positive lead of a high-resistance voltmeter to B–, test point B; connect the prod end of the negative lea through a 100,000-ohm isolating resistor to the oscillator grid (pin 2 of 12AU7), test point C. Use a suitable meter range, such as 0—1 volts. Proper operation of the oscillator is indicated by negative voltage of approximately the value given in the chart (measured wit 20,000-ohms-per-volt meter) throughout the tuning range.

FM Chart

STEP	TEST POINT	SIG. GEN. FREQ.	RADIO TUNING	NORMAL INDICATION	POSSIBLE CAUSE OF ABNORMAL INDICATION
1	G	100 mc.	Tune to signal.	Loud, clear speaker output with weak generator input.	Trouble in FM circuits. Isolate by the following tests.
2	E to F (Osc. test: see note below.)		Tune through range.	Negative 1 to 1.5 volts.	Defective: 14F8 (osc. section). Open: R412, L402, L408, L405, C412, R404, C410, R403. Shorted: C400, C400C, L406, C411, C412, C423, C424, C410, C409.
3	D	100 mc.	Tune to signal.	Same as step 1.	Defective: 12AU6. Open: L403, R402, R409, R401, R400, C408, L404, C420, R410, R405, C413. Shorted: C403, C404, C407, C408, L404, C400B, C400, C420.
4	G	100 mc.	Tune to signal.	Same as step 1.	Open: C402, L401, C403. Shorted: L401, C400A, C400, C403.

OSCILLATOR TEST: Connect the positive lead of a high-resistance voltmeter to test point F; connect the prod end of the negative lea through a 100,000-ohm isolating resistor to the oscillator grid (pin 2 of 14F8), test point E. Use a suitable meter range, such as 0—1 volts. Proper operation of the oscillator is indicated by negative voltage of approximately the value given in the chart (measured wit 20,000-ohms-per-volt meter) throughout the tuning range.

© John F. Rider

MODELS 49-1606, 49-1609, 49-1611

REPLACEMENT PARTS LIST

Model 49-1609 Model 49-1611

Replacement parts are the same as those in Model 49-1606, with the exception of LA400 and the MISCELLANEOUS parts listed below.

Reference Symbol	Description	Service Part No.
LA400	Loop assembly:	
	Model 49-1609	76-3583-10
	Model 49-1611	76-3583-8

Model 49-1609

Description	Service Part No. Walnut-finish cabinet	Light cabinet
Cabinet (less scale)	10705B	10705C
Baffle-and-cloth assembly	40-7598	40-7598
Bezel	54-4878	54-4878
Dial scale	54-5040	54-5040
Dome (foot, 4)	45-6190	45-6190
Doors, matched set of 2	45-6434	45-6446
Door pull (2)	56-5272	56-5272-1
Hinge, knife, with stop (1)	56-5713-1	56-5713-5
Hinge, knife (3)	56-5713-3	56-5713-7
Knob (4)	54-4486	54-4486

MISCELLANEOUS

Description	Service Part No.
Crystal pickup cartridge, P-30	35-2671-1
Needle for P-30 crystal	35-2670
Crystal pickup cartridge, Philco Special	35-2662
Needle for Philco Special crystal	35-2670

Model 49-1611

Description	Service Part No. (Mahogany-finish cabinet)
Cabinet (less scale)	10724
Baffle-and-cloth assembly	40-7548
Bezel	54-5055
Dial scale	54-5024
Dome (foot, 4)	45-6190
Door pull (2) (1)	56-5086
Door, record album } matched set	45-6466
Door, phono }	
Hinge, knife (2)	56-5522
Hinge (2)	45-6467
Instrument panel	45-6467
Knob (4)	54-4486

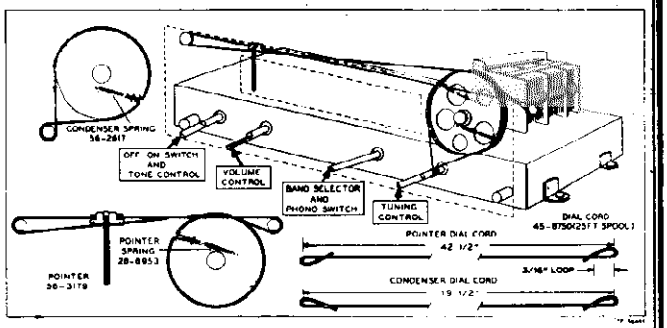

Figure 5. Drive-Cord Installation Details

REPLACEMENT PARTS LIST

NOTE: Part numbers identified by an asterisk (*) indicate general replacement items. These numbers may not be identical with those on factory assemblies; also, the electrical values of some replacement items may differ from the values indicated in the schematic diagram and replacement parts list. The values substituted in any case are so chosen that the operation of the radio will be either unchanged or improved. When ordering replacements, use only the "Service Part No."

SECTION 1
POWER SUPPLY

Reference Symbol	Description	Service Part No.
C100	Condenser, line by-pass, 100 mmf.	62-110009001*
C101	Condenser, line by-pass, .04 mf.	30-4119
C102	Condenser, electrolytic, filter, 40 mf., 200v	30-2568-28
C103	Condenser, electrolytic, 4-section	30-2568-24
C103A	Condenser, filter, 40 mf., 250v	Part of C106
C103B	Condenser, filter, 40 mf., 250v	Part of C106
C103C	Condenser, filter, 20 mf., 250v	Part of C106
C103D	Condenser, filter, 10 mf., 250v	Part of C106
C104	Condenser, r-f by-pass, 100 mmf.	62-110009001*
CR100	Rectifier, selenium, dry disc	34-8003-1
CR101	Rectifier, selenium, dry disc	34-8003-1
I100	Lamp, pilot	34-2605*
L100	Choke, filament, 100 microhenries	32-4143-4
R100	Resistor, current limiting, 25 ohms	33-1334-5
R101	Resistor, 2-section filter	33-3435-17
R101A	Resistor, filter, 180 ohms	Part of R101
R101B	Resistor, filter, 2500 ohms	Part of R101
R102	Resistor, filter, 2200 ohms	66-2224340
R103	Resistor, current limiting, 25 ohms	33-1334-5
S100	Switch, on-off	Part of R204
W100	Line cord and plug	L2183*
WS-1 (R)	Switch-wafer section	Part of 42-1874†

SECTION 2
AUDIO CIRCUITS

Reference Symbol	Description	Service Part No.
C200	Condenser, d-c blocking, .02 mf.	61-0108*
C201	Condenser, d-c blocking, .006 mf.	45-3500-7*
C202	Condenser, bass compensation, .006 mf.	45-3500-7*
C203	Condenser, by-pass, 100 mmf.	62-110009001*
C204	Condenser, d-c blocking, .006 mf.	45-3500-7*
C205	Condenser, tone compensation, .006 mf.	45-3500-7*
C206	Condenser, by-pass, 100 mmf.	62-110009001*
C207	Condenser, tone compensation, .006 mf.	45-3500-7*
J200	Socket, FM test	27-6180
J201	Socket, phono input	27-6126
LS200	Speaker	36-1626-1
R200	Volume control, 2 megohms (tap at 1 megohm)	35-5535-17
R201	Resistor, bass compensation, 47,000 ohms	66-3473340*

SECTION 2 (Continued)
AUDIO CIRCUITS

Reference Symbol	Description	Service Part No.
R202	Resistor, grid return, 10 megohms	66-6103340*
R203	Resistor, plate load, 270,000 ohms	66-4273340*
R204	Tone control (with on-off switch), 4 megohms	33-5538-34
R205	Resistor, grid return, 470,000 ohms	66-4473340*
R206	Resistor, cathode bias, 180 ohms	66-1183340*
T200	Transformer, audio output	32-8367
WS-1 (R)	Switch-wafer section	Part of 42-1874†

SECTION 3
I-F, DETECTOR, AND A-V-C CIRCUITS

C300A	Condenser, shunt	Part of Z300
C300B	Condenser, shunt	Part of Z300
C301A	Condenser, shunt	Part of Z301
C301B	Condenser, shunt	Part of Z301
C302A	Condenser, shunt	Part of Z302
C302B	Condenser, shunt	Part of Z302
C303A	Condenser, shunt	Part of Z303
C303B	Condenser, shunt	Part of Z303
C305A	Condenser, shunt	Part of Z305
C305B	Condenser, shunt	Part of Z305
C305C	Condenser, i-f filter	Part of Z305
C305D	Condenser, i-f filter	Part of Z305
C306	Condenser, plate decoupling (FM), .01 mf.	61-0120*
C307	Condenser, plate decoupling (AM), .01 mf.	61-0120*
C308	Condenser, a-v-c by-pass, .01 mf.	61-0120*
C309	Condenser, r-f by-pass, 100 mmf.	62-110009001*
C310	Condenser, plate decoupling, .004 mf.	61-0179*
C311	Condenser, r-f by-pass, .05 mf.	61-0122*
C312	Condenser, a-v-c filter, .01 mf.	61-0120*
C313	Condenser, r-f by-pass, .01 mf.	61-0120*
C314	Condenser, cathode by-pass, .01 mf.	61-0120*
C315	Condenser, screen by-pass, .01 mf.	61-0120*
C316	Condenser, plate decoupling, .01 mf.	61-0120*
C317	Condenser, i-f trimmer, fixed, 5 mmf.	Part of Z304
C318	Condenser, i-f trimmer, fixed, 68 mmf.	Part of Z304
C319	Condenser, plate decoupling, 100 mmf.	62-110009001*
C320	Condenser, r-f by-pass; 100 mmf.	62-110009001*
C321	Condenser, compensating, .01 mf.	61-0120*
C322	Condenser, decoupling, 2700 mmf.	60-20275404*

MODELS 49-1606, 49-1609, 49-1611

SECTION 3 (Continued)
I-F, DETECTOR, AND A-V-C CIRCUITS

Reference Symbol	Description	Service Part No.
C323	Condenser, electrolytic, FM-detector filter, 2 mf., 50v	30-2417-7
C324	Condenser, r-f by-pass, .01 mf.	61-0120*
C325	Condenser, tuned i-f by-pass, .03 mf.	45-3500-1*
C326	Condenser, tuned i-f by-pass, .05 mf.	61-0170*
C327	Condenser, r-f by-pass, 100 mmf.	62-110009001*
C328	Condenser, r-f by-pass, 1500 mmf.	62-215001011
C329	Condenser, r-f by-pass, 100 mmf.	62-110009001*
L306	Coil, tuned i-f by-pass	32-4061-2
R300	Resistor, plate decoupling, 33,000 ohms	66-3333340*
R301	Resistor, plate decoupling, 68,000 ohms	66-3683340*
R302	Resistor, grid return, 1 megohm	66-5103340*
R303	Resistor, cathode bias, 47 ohms	66-0473340*
R304	Resistor, plate decoupling, 1000 ohms	66-2103340*
R305	Resistor, a-v-c filter, 3.3 megohms	66-5333340*
R306	Resistor, isolating, 68 ohms	66-0683340*
R307	Resistor, cathode bias, 68 ohms	66-0683340*
R308	Resistor, screen dropping, 1000 ohms	66-2103340*
R309	Resistor, plate decoupling, 1000 ohms	66-2103340*
R310	Resistor, a-v-c return, 330,000 ohms	66-4333340*
R311	Resistor, diode load, 47,000 ohms	66-3473340*
R312	Resistor, isolating, 47,000 ohms	66-3473340*
R313	Resistor, isolating, 100,000 ohms	66-4103340*
R314	Resistor, FM-detector load, 47,000 ohms	66-3473340*
R315	Resistor, dropping, 2200 ohms	66-2223340*
TC300A	Tuning core	Part of Z300
TC300B	Tuning core	Part of Z300
TC301A	Tuning core	Part of Z301
TC301B	Tuning core	Part of Z301
TC302A	Tuning core	Part of Z302
TC302B	Tuning core	Part of Z302
TC303A	Tuning core	Part of Z303
TC303B	Tuning core	Part of Z303
TC304A	Tuning core	Part of Z304
TC304B	Tuning core	Part of Z304
TC305A	Tuning core	Part of Z305
TC305B	Tuning core	Part of Z305
WS-1 (F)	Switch-wafer section	Part of 42-1874†
Z300	Transformer, FM 1st i-f	32-4257
Z301	Transformer, AM 1st i-f	32-4258
Z302	Transformer, FM 2nd i-f	32-4257-1
Z303	Transformer, AM 2nd i-f	32-4160-3
Z304	Transformer, FM 3rd i-f	32-4261-1
Z305	Transformer, AM 3rd i-f	32-4240-2

SECTION 4
R-F AND CONVERTER CIRCUITS

Reference Symbol	Description	Service Part No.
C400	Condenser, tuning gang (3-section FM, 2-section AM)	31-3724-3
C400A	Condenser, trimmer, FM aerial	Part of C400
C400B	Condenser, trimmer, FM r-f	Part of C400
C400C	Condenser, trimmer, FM osc.	Part of C400
C401	Condenser, aerial coupling (FM), 100 mmf.	62-110009001*
C402	Condenser, aerial coupling (FM), 100 mmf.	62-110009001*
C403	Condenser, grid blocking, 51 mmf.	30-1224-2*
C404	Condenser, cathode by-pass, 100 mmf.	62-110009001*
C405	Condenser, trimmer assembly, 2-section	31-6476-18
C405A	Condenser, trimmer, AM aerial	Part of C405
C405B	Condenser, trimmer, AM osc.	Part of C405
C406	Condenser, isolating, 10 mmf.	62-010009001
C407	Condenser, screen by-pass, 100 mmf.	62-110009001*
C408	Condenser, blocking, 51 mmf.	30-1224-2*
C409	Condenser, by-pass, 1500 mmf.	62-215001011
C410	Condenser, blocking, 220 mmf.	62-122001001*
C411	Condenser, by-pass, 51 mmf.	30-1224-2*
C412	Condenser, blocking, 220 mmf.	62-122001001*
C413	Condenser, cathode by-pass, 100 mmf.	62-110009001*
C414	Condenser, blocking, 100 mmf.	62-110009001*
C415	Condenser, by-pass, 220 mmf.	66-122001001*
C416	Condenser, isolating, .01 mf.	61-0120*
C417	Condenser, cathode by-pass, 1500 mmf.	62-215001001
C418	Condenser, d-c blocking, 100 mmf.	62-110009001*
C419	Condenser, FM r-f by-pass, 100 mmf.	62-110009001*
C420	Condenser, d-c blocking, 100 mmf.	62-110009001*

SECTION 4 (Continued)
R-F AND CONVERTER CIRCUITS

Reference Symbol	Description	Service Part No.
C421	Condenser, r-f by-pass, 100 mmf.	62-110009001*
C422	Condenser, r-f by-pass, .03 mf.	45-3500-1*
C423	Condenser, FM r-f by-pass, 100 mmf.	62-110009001*
C424	Condenser, FM r-f by-pass, 100 mmf.	62-110009001*
J400	Socket, FM aerial	27-6214-1
L400	Coil, AM aerial	32-4033-11
L401	Coil, FM aerial	32-4158-1
L402	Coil, r-f isolating (FM)	32-4061-2
L403	Coil, FM r-f plate load	32-4061-2
L404	Coil, FM r-f	32-4159-1
L405	Coil, FM osc. plate load	32-4061-2
L406	Coil, FM osc.	32-4018-5
L407	Coil, AM osc.	32-4221-1
L408	Coil, r-f isolating	32-4061-2
LA400	Loop aerial	76-3583-9
R400	Resistor, grid return, 1 megohm	66-5103340*
R401	Resistor, cathode bias, 100 ohms	66-1103340*
R402	Resistor, screen dropping, 15,000 ohms	66-3153340*
R403	Resistor, plate decoupling, 4700 ohms	66-2473340*
R404	Resistor, grid return, 15,000 ohms	66-3153340*
R405	Resistor, cathode bias, 1500 ohms	66-2153340*
R406	Resistor, plate load, 15,000 ohms	66-3153340*
R407	Resistor, grid return, 15,000 ohms	66-3153340*
R408	Resistor, cathode bias, 2200 ohms	66-2223340*
R409	Resistor, isolating, 68 ohms	66-0683340*
R410	Resistor, grid return, 10,000 ohms	66-3103340*
R411	Resistor, grid return, 1 megohm	66-5103340*
R412	Resistor, isolating, 68 ohms	66-0683340*
TB400	Terminal board, aerial	38-9942

MISCELLANEOUS

Description	Service Part No.
Bracket-and-clip assembly, pilot lamp	76-3919
Cabinet (less scale)	
M	10725A
L	10725D
Back	54-7671
Baffle, speaker	219136
Baffle-and-cloth assembly	
M	40-7562
L	40-7562-1
Bezel	56-5855
Bin mechanism (L.H.)	76-3223-5
Bin mechanism (R.H.)	76-3223-6
Dome (4 required)	45-6190
Door, drop	
M	45-6463
L	45-6488
Door pull	
M	56-4420
L	56-4420-2
Frame, changer mounting	76-4104
Grommet, changer mounting	54-4313
Hinge (pair)	58-4066
Instrument panel	
M	45-6464
L	45-6469
Scale	54-5021
Scale strap	56-2234-2
Spring, bin mechanism (2 required)	56-4978
Spring, changer mounting (6 required)	56-3043FA15
Dial-backplate assembly	76-3918
Drive cord (25-ft. spool)	45-8750*
Fastener, snap (diffusing panel)	28-4342FA3
Panel, diffusing	54-7593
Pointer	56-5630-2
Spring, diffusing panel (2 required)	56-3841
Spring, gang	56-2617
Spring, pointer	28-8953
Shaft, drive (radio)	76-3479-1
Bushing (2 required)	54-7512
Socket assembly, pilot lamp	27-6233
Socket, minature (6BJ6)	27-6226
Socket, miniature (19T8)	27-6703-5
Socket, octal (50C6G)	27-6174-4

†42-1874 is a single-section wafer switch (band switch).

© John F. Rider

MODELS 49-1606,
49-1609, 49-1611

AM ALIGNMENT PROCEDURE

Make alignment with loop aerial connected to radio. The AM alignment should be completed before the FM alignment is made.

DIAL POINTER—Calibration and pointer-index measurements are shown in figure 7. With tuning gang fully meshed, set pointer to index marker.

OUTPUT METER—Connect between terminal 3 of aerial terminal board TB400 and chassis.

AM R-F SIGNAL GENERATOR—Connect as indicated in chart. Use modulated output.

RADIO CONTROLS—Set volume control to maximum, turn tone control fully counterclockwise, and set band switch to broadcast position.

OUTPUT LEVEL—During alignment, adjust signal-generator output to maintain output-meter indication below 1.25 volts.

FM ALIGNMENT PROCEDURE

Make AM Alignment First

OUTPUT METER—Connect between terminal 3 of aerial terminal board TB400 and chassis.

ALIGNMENT INDICATOR—Connect negative lead of 20,000-ohms-per-volt meter to pin 2 of 19T8 tube; connect positive lead to B–. Use 10-volt range.

AM R-F SIGNAL GENERATOR—Generator must have sufficient output to give a reading of 8.5 volts on alignment indicator. Connect ground lead to B–; connect output lead as indicated in chart. Use modulated output.

RADIO CONTROLS—Set volume control to maximum, turn tone control fully counterclockwise, and set band switch to FM position. Allow radio and signal generator to operate for at least 15 minutes before making alignment.

R-F-COIL—NOTE: Check resonance of coils L401, L404, and L406 by inserting each end of a powdered-iron tuning core, such as Philco Part No. 56-6100, into the coils. If the signal strength increases when the iron end is inserted, compress the turns slightly. If the signal strength increases when the brass end is inserted, spread the turns slightly. If the signal strength decreases when either the iron or the brass end is inserted, no further adjustment is necessary. Do not spread or compress turns of coil excessively; only a small change is required at these high frequencies.

SYMBOLIZATION

The components in the radio circuit are symbolized according to the types of parts and the sections of the radio in which the parts are located. The prefix letter of the symbol designates the type of part as follows:

C—condenser	LS—loud-speaker	W—line cord
I—pilot lamp	R—resistor	WS—wafer switch
L—choke or coil	S—switch	Z—electrical assembly
LA—loop aerial	T—transformer	

The number of the symbol designates the section in which the part is located, as follows:

100-series components are in Section 1—the power supply.
200-series components are in Section 2—the audio circuits.
300-series components are in Section 3—the i-f, detector, and a-v-c circuits.
400-series components are in Section 4—the r-f and converter circuits.

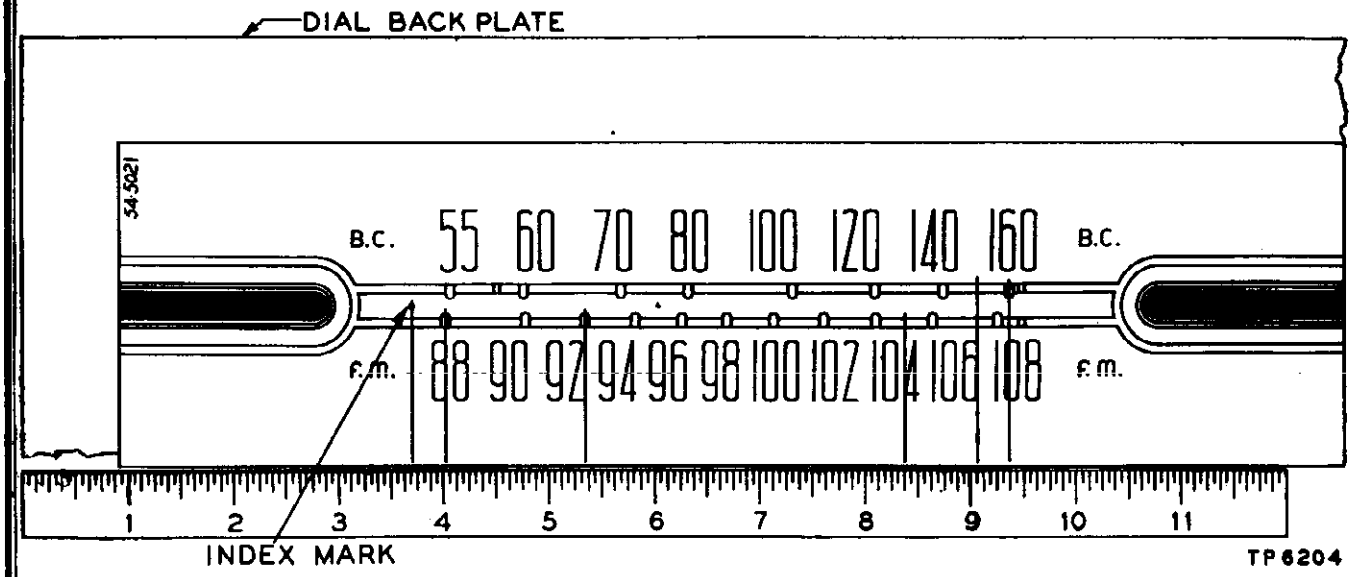

Figure 7. Dial-Backplate Calibration Measurements

©John F. Rider

AM ALIGNMENT CHART

STEP	SIGNAL GENERATOR		RADIO		ADJUST
	CONNECTION TO RADIO	DIAL SETTING	DIAL SETTING	SPECIAL INSTRUCTIONS	
1	Ground lead to B−; output lead through .1-mf. condenser to terminal of TB400.	455 kc.	540 kc.	Adjust tuning cores once only, in order given, for maximum output.	TC305B—AM 3rd i-f sec. TC305A—AM 3rd i-f prt. — SEE NOTE TC303B—AM 2nd i-f sec. TC303A—AM 2nd i-f prt. — SEE NOTE TC301B—AM 1st i-f sec. TC301A—AM 1st i-f prt. — SEE NOTE
2	Radiating loop (see note below).	1600 kc.	1600 kc.	Adjust trimmer for maximum output.	C405B—AM osc.
3	Same as step 2.	1500 kc.	1500 kc.	Adjust trimmer for maximum output.	C405A—AM aerial

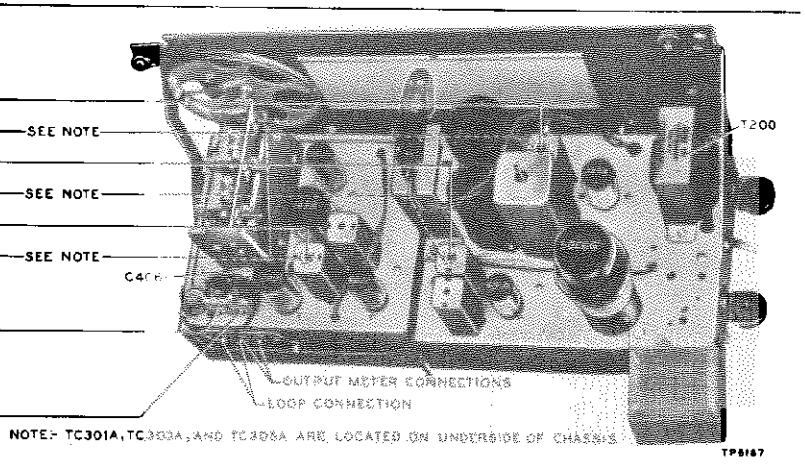

RADIATING LOOP: Make up a 6-to-8 turn, 6-inch-diameter loop from insulated wire; connect to signal-generator leads and place near radio loop aerial.

Figure 8. Top View, Showing AM Trimmer Locations

FM ALIGNMENT CHART

STEP	SIGNAL GENERATOR		RADIO		ADJUST
	CONNECTION TO RADIO	DIAL SETTING	DIAL SETTING	SPECIAL INSTRUCTIONS	
1	Ground lead to B−; output lead through .1-mf. condenser to pin 1 of 6BJ6 (1st i-f amplifier).	9.1 mc.	88 mc.	Adjust tuning cores for maximum reading on alignment indicator. Attenuate signal generator to maintain 10-volt reading. Repeat until no further improvement is noted. After this step, do not touch any of these tuning cores except as directed in step 3.	TC304B—FM 3rd i-f sec. — SEE NOTE TC304A—FM 3rd i-f prt. TC302B—FM 2nd i-f sec. TC302A—FM 2nd i-f prt. — SEE NOTE
2	Output lead through .1-mf. condenser to pin 8 of 14FR.	9.1 mc.	88 mc.	Adjust tuning cores for maximum reading on alignment indicator. Attenuate signal generator to maintain 10-volt reading. Repeat until no further improvement is noted. After this step, do not touch these tuning cores.	TC300B—FM 1st i-f sec. TC300A—FM 1st i-f prt. — SEE NOTE
3	Same as step 2.	9.1 mc.	88 mc.	Adjust tuning core for minimum reading on output meter. This adjustment is critical; repeat to make sure it is correct.	TC304B—FM 3rd i-f sec.
4	Output lead to terminal 2 of J400.	105 mc.	105 mc.	Adjust trimmer for maximum reading on alignment indicator.	C400C—FM osc.
5	Same as step 4.	105 mc.	105 mc.	Adjust trimmer for maximum reading on alignment indicator while rocking tuning control.	C400B—FM r-f
6	Same as step 4.	105 mc.	105 mc.	Adjust trimmer for maximum reading on alignment indicator.	C400A—FM aerial
7	Same as step 4.	92 mc.	92 mc.	Adjust coil for maximum (see r-f coil note).	L406—FM osc. coil — LOCATED ON UNDERSIDE OF CHASSIS
8	Same as step 4.	92 mc.	92 mc.	Adjust coil for maximum (see r-f coil note).	L404—FM r-f coil — LOCATED ON UNDERSIDE OF CHASSIS
9	Same as step 4.	92 mc.	92 mc.	Adjust coil for maximum (see r-f coil note).	L402—FM aerial coil — LOCATED ON UNDERSIDE OF CHASSIS
10	Repeat steps 4 through 9 until no further increase is obtained.				

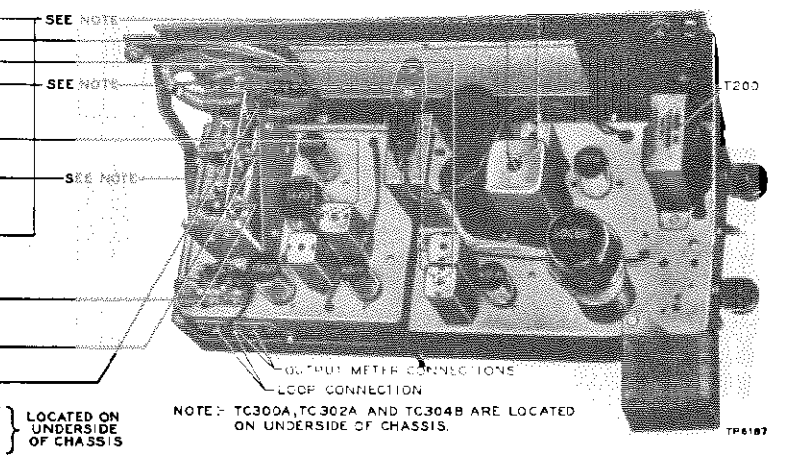

Figure 9. Top View, Showing FM Trimmer Locations

MODEL 50-520

Preliminary Checks

To avoid possible damage to the radio, the following preliminary checks should be made before it is turned on:

1. Inspect both the top and bottom of the chassis. Make sure that all tubes are secure in the proper sockets, and look for any broken or shorted connections, burned resistors, or other obvious sources of trouble.

2. Measure the resistance between B+ (pin 8 of 35Z5GT), test point C, and B—, test point B. When the ohmmeter test leads are connected in the proper polarity, the highest resistance reading will be obtained. If the reading is lower than 1500 ohms, check condensers C101A, C101B, C101C, and C203 for leakage or shorts. The resistance value given is much lower than normal, and is not intended as a quality check of these condensers; the value given is the lowest at which the rectifier will operate safely while the voltage checks of Section 1 (power supply) are performed.

Section 1—Power Supply

TROUBLE SHOOTING

For the tests in this section, use a d-c voltmeter. Connect the negative lead to B—, test point B; connect the positive lead to the test points indicated in the chart. The voltage readings given were taken with a 20,000-ohms-per-volt meter at a line voltage of 117 volts, a.c.

Turn on the power, and set the volume control to minimum.

If the "NORMAL INDICATION" is obtained in step 1, proceed with the tests for Section 2 (audio circuits); if not, isolate and correct the trouble in this section.

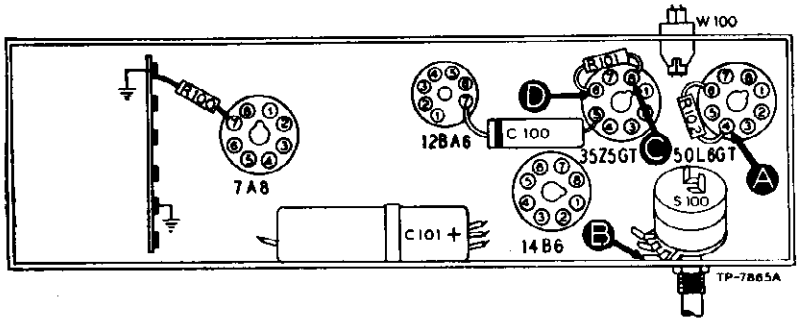

Figure 1. Bottom View, Showing Section 1 Test Points

STEP	TEST POINT	NORMAL INDICATION	ABNORMAL INDICATION	POSSIBLE CAUSE OF ABNORMAL INDICATION
1	A	105 volts		Trouble in this section. Isolate by the following tests.
2	C	130 volts	No voltage	Defective: 35Z5GT. Open: W100, S100. Shorted: C100, C101A.
			Low voltage	Defective: 35Z5GT. Open: C101A. Leaky: C101A.
			High voltage	Open: R101.
3	D	118 volts	No voltage	Open: R101. Shorted: C101B.
			Low voltage	Open: C101B. Leaky: C101B. Shorted: C203*.
			High voltage	Open: R102, T200*, R204*.
4	A	105 volts	No voltage	Open: R102. Shorted: C101C.
			Low voltage	Open: C101C. Leaky: C101C.
			High voltage	Open: R204*.
Listening Test: Abnormal hum may be caused by open C101A, C101B, or C101C.				

* This part, located in another section, may cause abnormal indication in this section.

Section 2—Audio Circuits

TROUBLE SHOOTING

For the tests in this section, use an audio-frequency generator. Connect the generator ground lead to B—, test point B; connect the output lead through a .1-μf. condenser to the test points in the chart.

Set the volume control to maximum, and adjust the signal-generator output as required for each step.

If the "NORMAL INDICATION" is obtained in step 1, proceed with the tests for Section 3 (i-f, detector, and a-v-c circuits); if not, isolate and correct the trouble in this section.

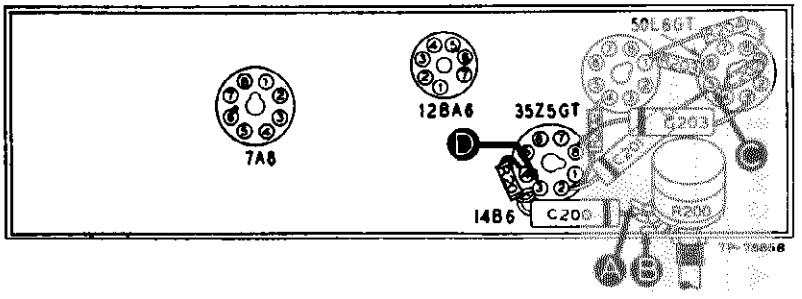

Figure 2. Bottom View, Showing Section 2 Test Points

STEP	TEST POINT	NORMAL INDICATION	POSSIBLE CAUSE OF ABNORMAL INDICATION
1	A	Loud, clear speaker output with weak signal input.	Trouble in this section. Isolate by the following tests.
2	C	Clear output with moderate input.	Defective: 50L6GT, LS200. Open: R204, T200. Shorted: C202, C203.
3	D	Same as step 1.	Defective: 14B6 (triode section). Open: C201, R202, R203. Shorted: C201.
4	A	Same as step 1.	Open: R200 (rotate through range), C200, R201. Shorted: C301D*.

* This part, located in another section, may cause abnormal indication in this section.

Section 3—I-F, Detector, and A-V-C Circuits — TROUBLE SHOOTING

For the tests in this section, use an r-f signal generator, with modulated output, set at 455 kc. Connect the generator ground lead to B—, test point B; connect the output lead through a 1-μf. condenser to the test points indicated in the chart.

Set the volume control to maximum, and rotate the tuning control until the tuning condenser is fully meshed.

If the "NORMAL INDICATION" is obtained in step 1, proceed with the tests for Section 4 (r-f and converter circuits); if not, isolate and correct the trouble in this section.

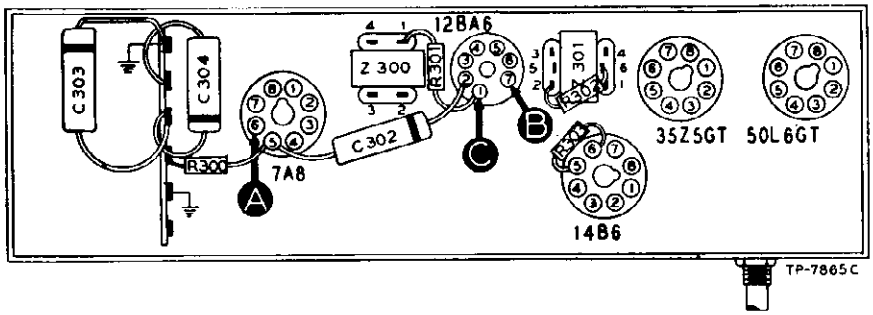

Figure 3. Bottom View, Showing Section 3 Test Points

To provide a complete i-f-amplifier check, test point A for this section is placed at the grid of the mixer in Section 4; therefore, the effectiveness of step 1 as a master check is dependant upon the condition of certain parts in the minor circuit. These parts are listed below under the "POSSIBLE CAUSE OF ABNORMAL INDICATION."

STEP	TEST POINT	NORMAL INDICATION	POSSIBLE CAUSE OF ABNORMAL INDICATION
1	A	Loud, clear speaker output with weak signal input.	Trouble in this section. Isolate by the following tests.
2	C	Loud, clear output with moderate input.	Defective: 12BA6, 14B6 (triode section). Misaligned: Z301. Open: C301A, C301B, L301A, L301B, R300, R302, R303. Shorted: C302, C300B, C301A, C301B, C301C.
3	A	Same as step 1.	Defective: 7A8*. Misaligned: Z300. Open: C300A, C300B, L300A, L300B, R301. Shorted: C300A, C400*, C400A*.

* This part, located in another section, may cause abnormal indication in this section.

Section 4—R-F and Converter Circuits — TROUBLE SHOOTING

For the tests in this section, with the exception of the oscillator test, use an r-f signal generator with modulated output. Connect the generator ground lead to B—, test point B; connect the output lead through a .1-μf. condenser to the test points indicated in the chart.

Set the volume control to maximum, and set the tuning control and the signal-generator frequency as indicated in the chart.

If the "NORMAL INDICATION" is not obtained in step 1, isolate and correct the trouble in this section. If the trouble is not revealed by the tests for this section, check the alignment.

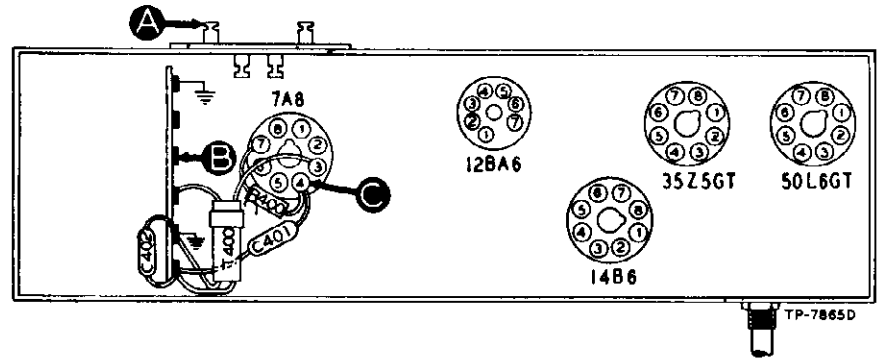

Figure 4. Bottom View, Showing Section 4 Test Points

STEP	TEST POINT	SIG. GEN. FREQ.	RADIO TUNING	NORMAL INDICATION	POSSIBLE CAUSE OF ABNORMAL INDICATION
1	A	1000 kc.	1000 kc.	Loud, clear speaker output with weak signal input.	Trouble in this section. Isolate by the following tests.
2	C (Osc. test; see note below.)		Tune through range.	Negative 4.5 to 7.5 volts.	Defective: 7A8. Open: C401, T400, R400. Shorted: T400, C401, C400, C400B, C402.
3	A	1000 kc.	1000 kc.	Same as step 1.	Defective: 7A8. Open: LA400. Shorted: LA400, C400, C400A.

OSCILLATOR TEST: Connect the positive lead of a high-resistance voltmeter to B— test point B; connect the prod end of the negative lead through a 100,000-ohm isolating resistor to the oscillator grid (pin 4 of 7A8), test point D. Use a suitable meter range, such as 0—10 volts. Proper operation of the oscillator is indicated by negative voltage of approximately the value given in the chart (measured with 20,000-ohms-per-volt meter) throughout the tuning range.

© John F. Rider

MODEL 50-520

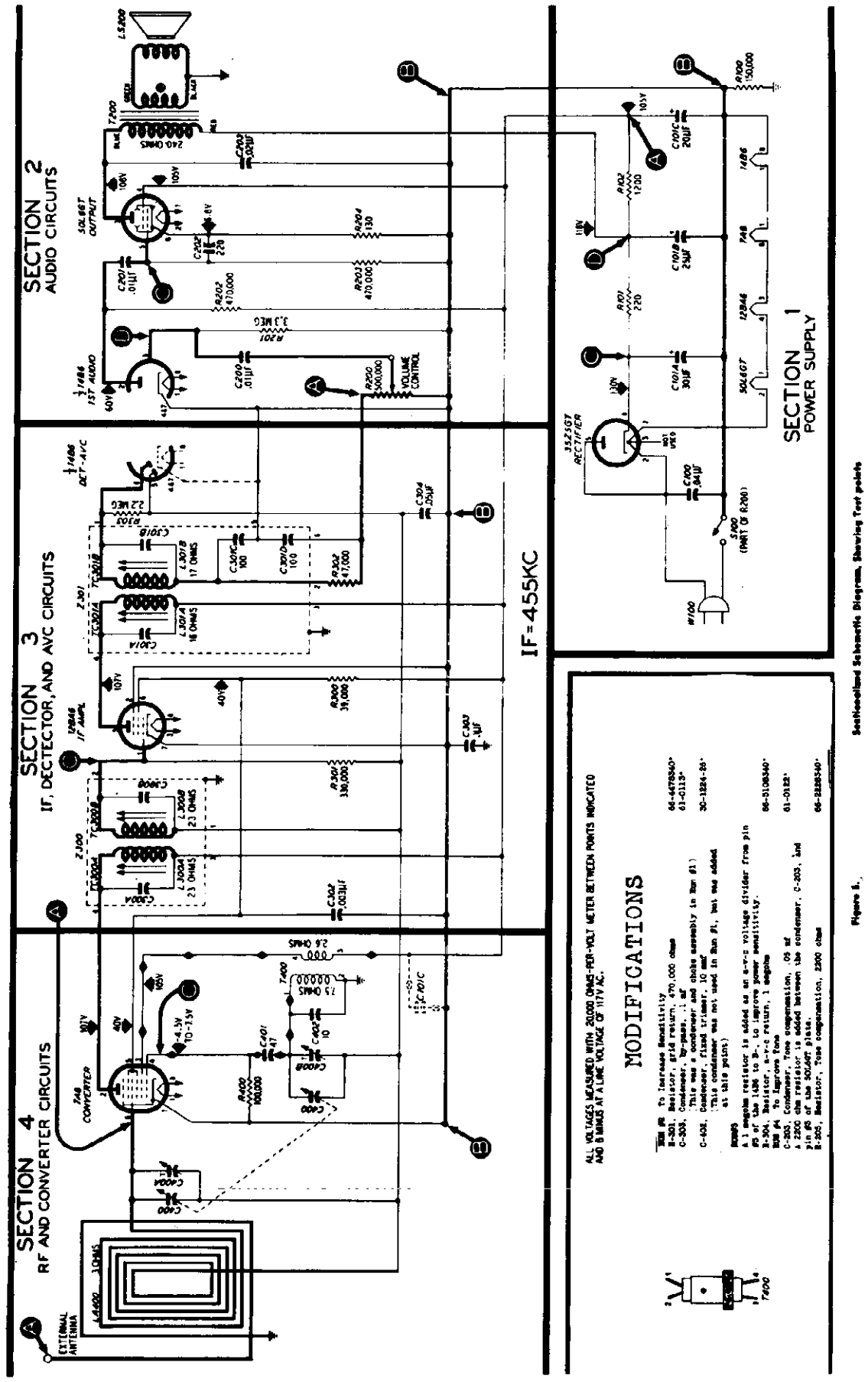

©John F. Rider

©John F. Rider

ALIGNMENT PROCEDURE

CONTROLS: Turn on radio and set volume control to maximum.

DIAL POINTER: Turn tuning condenser to full-mesh position. Set dial pointer to index mark, located to left of "55."

OUTPUT METER: Connect across voice-coil terminals.

SIGNAL GENERATOR: Connect as indicated in chart. Use modulated output.

OUTPUT LEVEL: During alignment, attenuate signal-generator output to maintain output-meter indication below 1.25 volts.

STEP	SIGNAL GENERATOR		RADIO		ADJUST
	CONNECTION TO RADIO	DIAL SETTING	DIAL SETTING	SPECIAL INSTRUCTIONS	
1	Ground lead to B—; output lead through .1-μf. condenser to pin 6 of 7A8 converter.	455 kc.	540 kc. (gang fully meshed)	Adjust tuning cores, in order given, for maximum output.	TC301B—2nd i-f sec. TC301A—2nd i-f pri. TC300B—1st i-f sec. TC300A—1st i-f pri.
2	Radiating loop; see note below.	1600 kc.	1600 kc.	Adjust trimmer for maximum output.	C400B—osc.
3	Same as step 2.	1500 kc.	1500 kc.	Adjust trimmer for maximum output.	C400A—aerial

RADIATING LOOP: Make up a 6—8 turn, 6-inch-diameter loop from insulated wire; connect to signal-generator leads and place near radio loop aerial.

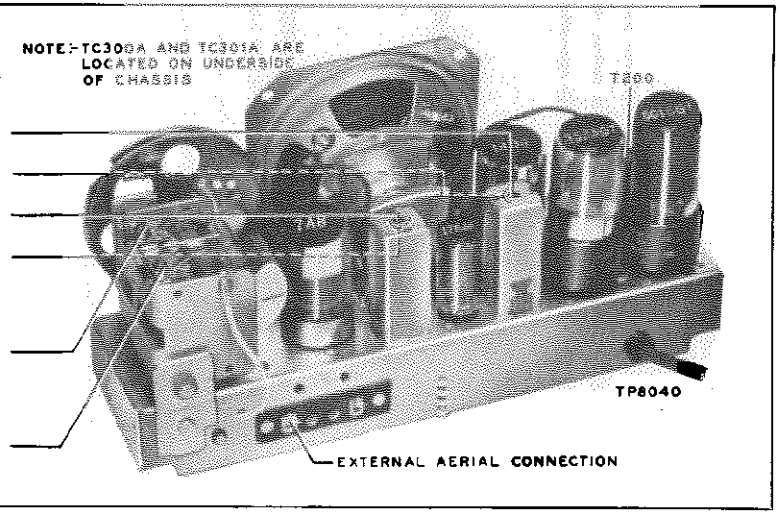

Figure 6. Top View, Showing Trimmer Locations

Circuit Description

Philco Radio Model 50-520 is a five-tube table-model superheterodyne, providing reception on the standard broadcast band. The high-impedance loop aerial normally provides adequate signal pickup. An external aerial may be connected, if desired, by attaching the lead to lug 4 on the rear of the chassis. Do not use a ground.

The loop is coupled to the 7A8 converter. Variable-condenser tuning is employed; the oscillator-rotor-section plates are shaped to obtain proper tracking, thus eliminating the necessity for a series padding condenser.

The 7A8 is transformer-coupled to the 12BA6 i-f amplifier, which is also transformer-coupled to the diodes of the 14B6, second detector and first audio amplifier. A-v-c voltage is applied to the control grids of both the i-f and converter tubes.

The triode section of the 14B6 is the first audio stage, and is resistance-coupled to the 50L6GT output tube. The output tube is transformer-coupled to a permanent-magnet speaker.

D-c operating voltages are obtained from a 35Z5GT half-wave rectifier, the output of which is filtered by a two-section, resistor-condenser filter. The 150,000-ohm resistor, R100, prevents hum which might otherwise occur under conditions of high humidity.

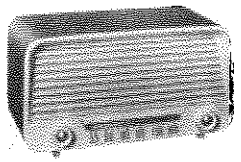

MODEL 50-520

SPECIFICATIONS

CABINET	
Model 50-520	Moulded plastic, mottled mahogany
Model 50-520I	Moulded plastic, ivory
CIRCUIT	Five-tube superheterodyne
FREQUENCY RANGE	540—1620 kc.
AUDIO OUTPUT	1.2 watts
OPERATING VOLTAGE	105—125 volts, a.c./d.c.
POWER CONSUMPTION	30 watts
AERIAL	High-impedance loop; provision for external aerial
INTERMEDIATE FREQUENCY	455 kc.
PHILCO TUBES (5)	7A8, 12BA6, 14B6, 50L6GT, 35Z5GT

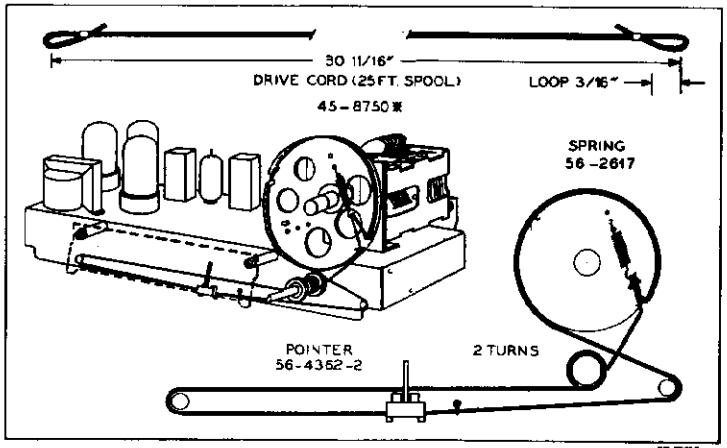

Figure 7. Drive-Cord Installation Details

MODEL 50-520

REPLACEMENT PARTS LIST

NOTE: Part numbers identified by an asterisk (*) indicate general replacement items. These numbers may not be identical with those on factory assemblies; also, the electrical values of some replacement items may differ from the values indicated in the schematic diagram and replacement parts list. The values substituted in any case are so chosen that the operation of the radio will be either unchanged or improved.

SECTION 1

POWER SUPPLY

Reference Symbol	Description	Service Part No.
C100	Condenser, line filter, .04 μf.	45-3500-2*
C101	Condenser, electrolytic, 3-section	30-2573
C101A	Condenser, filter, 30 μf., 150 v.	Part of C101
C101B	Condenser, filter, 25 μf., 150 v.	Part of C101
C101C	Condenser, filter, 20 μf., 150 v.	Part of C101
R100	Resistor, leakage, 150,000 ohms	66-4158340*
R101	Resistor, filter, 220 ohms, 1 watt	66-1224340*
R102	Resistor, filter, 1200 ohms	66-2128340*
S100	Switch, off-on	Part of R200
W100	Line cord	L-2183*

SECTION 2

AUDIO CIRCUITS

C200	Condenser, d-c blocking, .01 μf.	61-0120*
C201	Condenser, d-c blocking, .01 μf.	61-0120*
C202	Condenser, by-pass, 220 μμf.	62-122001001*
C203	Condenser, tone compensation, .02 μf.	61-0108*
LS200	Speaker, p.m.	36-1627-5
R200	Volume control (with off-on switch), 500,000 ohms	33-5566-4
R201	Resistor, grid return, 3.3 megohms	66-5338340*
R202	Resistor, plate load, 470,000 ohms	66-4478340*
R203	Resistor, grid return, 470,000 ohms	66-4478340*
R204	Resistor, cathode bias, 130 ohms, 1 watt	66-1124340*
T200	Transformer, output	32-8384

SECTION 3

I-F, DETECTOR, AND A-V-C CIRCUITS

C300A	Condenser, fixed trimmer	Part of Z300
C300B	Condenser, fixed trimmer	Part of Z300
C301A	Condenser, fixed trimmer	Part of Z301
C301B	Condenser, fixed trimmer	Part of Z301
C301C	Condenser, i-f filter	Part of Z301
C301D	Condenser, i-f filter	Part of Z301
C302	Condenser, screen by-pass, .003 μf.	61-0109*
C303	Condenser, by-pass, .1 μf.	61-0113*
C304	Condenser, a-v-c by-pass, .05 μf.	61-0122*
L300A	Coil, primary, 1st i-f.	Part of Z300
L300B	Coil, secondary, 1st i-f.	Part of Z300

SECTION 3 (Cont.)

Reference Symbol	Description	Service Part No.
L301A	Coil, primary, 2nd i-f.	Part of Z301
L301B	Coil, secondary, 2nd i-f.	Part of Z301
R300	Resistor, screen dropping, 39,000 ohms	66-3398340*
R301	Resistor, grid return, 330,000 ohms	66-4338340*
R302	Resistor, i-f filter, 47,000 ohms	66-3478340*
R303	Resistor, diode load, 2.2 megohms	66-5228340*
TC300A	Tuning core	Part of Z300
TC300B	Tuning core	Part of Z300
TC301A	Tuning core	Part of Z301
TC301B	Tuning core	Part of Z301
Z300	Transformer, 1st i-f	32-4160-6A
Z301	Transformer, 2nd i-f	32-4240-A

SECTION 4

R-F AND CONVERTER CIRCUITS

C400	Condenser, tuning gang, 2-section	31-2727-9
C400A	Condenser, trimmer, aerial	Part of C400
C400B	Condenser, trimmer, oscillator	Part of C400
C401	Condenser, d-c blocking, 47 μμf.	60-00515307*
C402	Condenser, fixed trimmer, 10 μμf.	30-1224-26*
LA400	Loop aerial	32-4052-33
R400	Resistor, grid return, 100,000 ohms	66-4108340*
T400	Transformer, oscillator	32-4263

MISCELLANEOUS

Description	Service Part No.
Cabinet, Model 50-520	10750
Cabinet, Model 50-520I	10750-1
Back	54-7777
Fastener (4)	W2235-2FA9
Knob	54-4527-11
Dial-backplate assembly	76-4658
Drive cord (25-ft. spool)	45-8750*
Drive-shaft-and-pulley assembly	76-3671-3
Pointer	56-4362-6
Spring	56-2617
Rubber mount, gang mounting (3)	27-4771-1
Socket, miniature (1)	27-6203
Socket, Loktal (2)	27-6138*
Socket, octal (2)	27-6174*

©John F. Rider

MODEL 49-1613

Circuit Description

Philco Radio-Phonograph Model 49-1613 contains an 11-tube superheterodyne and a Model M-12C Philco Automatic Record Changer.

A low-impedance loop aerial within the cabinet normally provides adequate signal pickup on the standard broadcast band. In most locations, the built-in FM dipole aerial provides satisfactory FM reception. In areas where FM signals are weak, an outdoor dipole aerial, such as Philco Part No. 45-1462, will provide additional pickup. To increase the pickup on both bands, use the Philco Aerial Coupler, Part No. 76-2353-1, with the outdoor dipole aerial. For increased pickup on the standard broadcast band only, the coupler may be used with an external aerial of the single-wire type, such as Philco Part No. 45-1494.

The r-f stage (FM only) and converter stage are mounted on a separate chassis, for improved performance at high frequencies. A 6AU6 high-frequency pentode is used in the r-f stage, and a 7F8 high-frequency double triode is employed as a converter.

Two transformer-coupler i-f stages are used. The transformers have two sets of windings; one set is tuned to 455 kc., for AM operation, and the other set is tuned to 9.1 mc., for FM operation. A 6BA6 high-frequency pentode is used in the first i-f stage. The pentode section of a 7R7 duo-diode, pentode functions as the second i-f amplifier; one diode of this tube is used for AM detection, while the other diode provides a.v.c.

The dual-diode section of a 7X7 is employed in the FM ratio-detector circuit; this circuit has good noise-reducing properties and an excellent tuning characteristic.

The triode section of the 7X7 functions as the first audio stage. A 6J5GT triode operates as a plate-and-cathode-loaded phase inverter, driving two 6K6GT output amplifiers, in push-pull operation. Tone fidelity is obtained by the use of inverse feedback in the audio system; feed-back voltage is taken from the secondary of the output transformer.

The Philco Electronic Scratch Eliminator, for phono operation, may be switched on or off, as required. The pentode section of a 7E7 functions as a variable shunt capacitance at the phono-input circuit; at low signal levels, a controlled portion of the higher audio frequencies is by-passed to ground. The grid bias of the reactance tube controls the effective capacitance, which

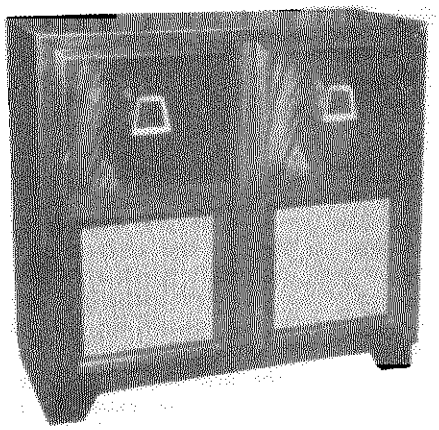

MODEL 49-1613

SPECIFICATIONS

CABINET	Wood, mahogany or light finish
CIRCUIT	11-tube superheterodyne
FREQUENCY RANGES	
Broadcast	540—1720 kc.
FM	88—108 mc.
AUDIO OUTPUT	7 watts
OPERATING VOLTAGE	105–120 volts, 60 cycles, a.c.
POWER CONSUMPTION	
Radio	110 watts
Phonograph	125 watts
AERIALS	Built-in loop and FM cabinet dipole; external aerial also may be used
INTERMEDIATE FREQUENCIES	
AM	455 kc.
FM	9.1 mc.
PHILCO TUBES (11)	6AU6, 7F8, 6BA6, 7R7, 7X7, 6J5GT, 6K6GT (2), 7E7, 7F7, 5AZ4
PHONOGRAPH	Philco Automatic Record Changer, Model M-12C (for service information, refer to service manual PR-1600)

TP-5849

© John F. Rider

becomes maximum with low bias, and minimum with high bias. This control bias is developed by the audio signal itself; a proportionate amount of the signal is taken from the pickup output, amplified by each triode section of the 7F7, and rectified by the diode section of the 7E7.

Philco TROUBLE-SHOOTING *Procedure*

For rapid trouble shooting, the radio circuit is divided into four sections, as follows:

Section 1—the power supply
Section 2—the audio circuits
Section 3—the i-f, detector, and a-v-c circuits
Section 4—the r-f and converter circuits

Test points are specified for each section, and are indicated in the sectionalized schematic diagram. The trouble-shooting procedure given for each section includes a simplified test chart and a bottom view of the chassis showing the locations of the test points and the components of that section.

In each chart, the first step is a master check for determining whether trouble exists in that section, without going through the entire chart.

Failure to obtain the "NORMAL INDICATION" in any given step indicates trouble within the circuit under test.

After isolating the trouble to a single stage, the defect is located by: first, testing the tube; second, measuring tube electrode voltages; third, measuring circuit resistances; fourth, substituting condensers. The trouble revealed should be corrected before testing further.

Preliminary Checks

To avoid possible damage to the radio, the following preliminary checks should be made before connecting the radio to a source of power:

1. Inspect the top and bottom of the chassis. Make sure that all tubes are secure in the proper sockets, and look for any broken or shorted connections, burned resistors, or other obvious indications of trouble.

2. Measure the resistance across condenser C102 (see figure 2). When the ohmmeter test leads are connected in the proper polarity, the highest resistance reading will be obtained. If the reading is lower than 3500 ohms, check condensers C102 and C103B for leakage or shorts.

The resistance value above, which is much lower than normal, does not represent a quality check of these condensers; the value given is the lowest at which the rectifier will operate safely while the voltage tests of Section 1 (power supply) are performed.

Important!

To avoid altering FM operation, special care should be used in replacing any part. Replacement parts should be placed in the same physical locations as the original parts; connections should be of the same length, and should be soldered to the same points. The placement or length of leads should not be changed.

CALIBRATING DIAL BACKPLATE

When the radio chassis has been removed from the cabinet, dial calibration and alignment points may be marked on the dial (chassis) backplate at the end of the pointer with a pencil. The method of measuring for these points is illustrated in figure 1.

With the tuning gang fully meshed, the pointer should be adjusted on the dial-drive cord to coincide with the index mark.

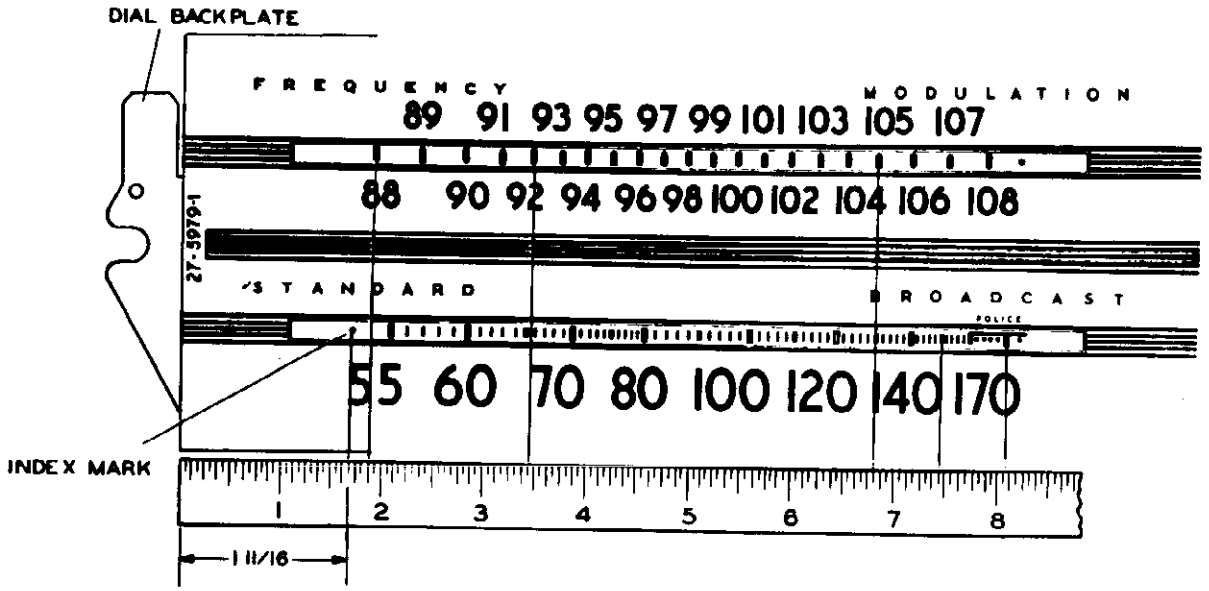

Figure 1. Dial-Backplate Calibration Measurements TP-6503

©John F. Rider

Section 1 TROUBLE SHOOTING

POWER SUPPLY

CAUTION: Do not turn on the power with the speaker disconnected, or the set may be damaged.

Make the tests for this section with a d-c voltmeter, connecting the leads between the chassis, test point C, and the test points indicated in the chart. The voltage readings given were taken with a 20,000-ohms-per-volt meter, at a line voltage of 117 volts, a.c.

Set the volume control to minimum, and the tone control fully counterclockwise. Set the band selector-phono switch to the broadcast position.

Follow the steps in the order given. If the "NORMAL INDICATION" is obtained in step 1, proceed with the tests for Section 2 (audio circuits); if not, isolate and correct the trouble in this section.

STEP	TEST POINT	NORMAL INDICATION	ABNORMAL INDICATION	POSSIBLE CAUSE OF ABNORMAL INDICATION
1	A	195v		Trouble in this section. Isolate by the following tests.
2	B	300v	No voltage. Low voltage. High voltage.	Defective: 5AZ4. Open: S100, T100. Shorted: C102. Defective: 5AZ4. Shorted: C103B, C310*, C411*. Leaky: C102. Open: C102, L100. Shorted: L100. Open T200*.
3	A	195v	No voltage. Low voltage. High voltage.	Open: R100. Shorted: C103A, C311*. Leaky: C103A, C311*. Changed resistance: R100. Open: T200*
4	D	Negative 27v	No voltage. High voltage.	Open: R101. Open: R102.
Listening Test: Abnormal hum and instability may be caused by open C103A or C103B.				

* This part, located in another section, may cause abnormal indication in this section.

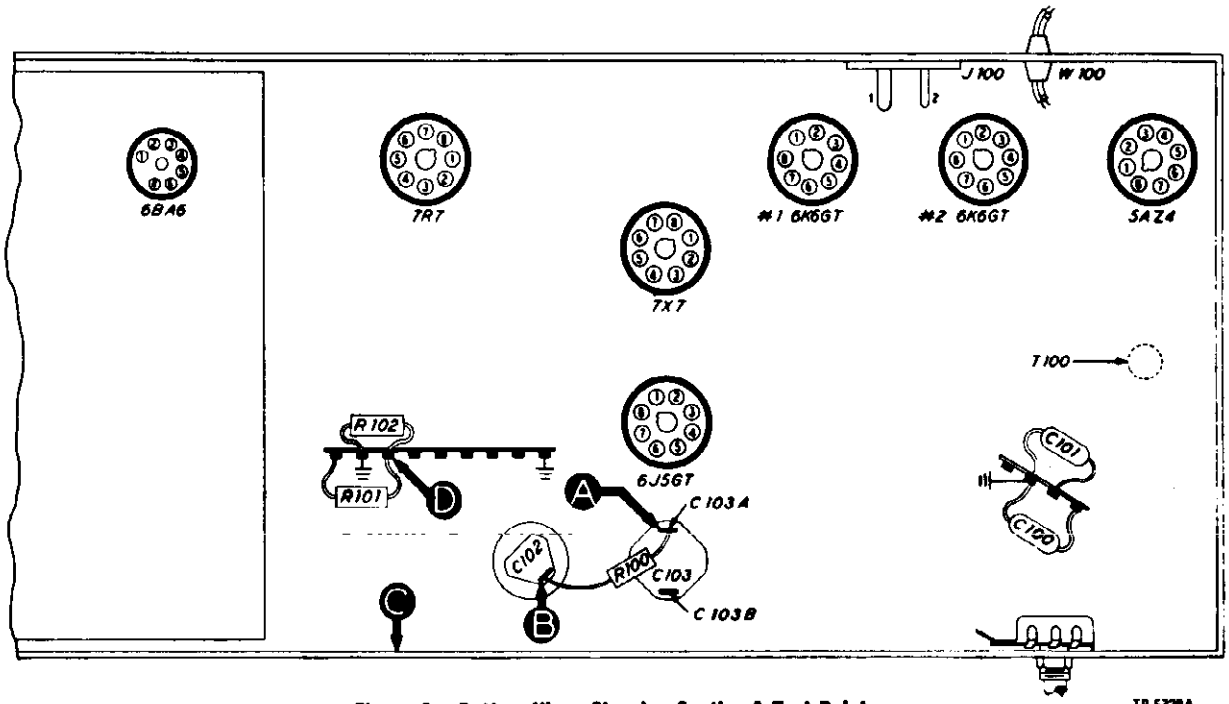

Figure 2. Bottom View, Showing Section 1 Test Points

© John F. Rider

MODEL 49-1613

Section 2 TROUBLE SHOOTING

AUDIO-AMPLIFIER TESTS

AUDIO CIRCUITS

Use an audio-frequency signal generator. Connect the generator ground lead to the chassis, test point C, and connect the output lead through a .1-mf. condenser to the test points indicated in the chart.

Set the volume control to maximum, and the tone control fully counterclockwise. Set the band (wafer) switch to the broadcast position. Make certain that the scratch-eliminator switch is turned off (two-position switch turned counterclockwise). If the "NORMAL INDICATION" is obtained in steps 1 and 6, proceed with the scratch-eliminator tests; if not, isolate and correct the trouble in the audio-amplifier circuits.

STEP	TEST POINT	NORMAL INDICATION	POSSIBLE CAUSE OF ABNORMAL INDICATION
1	A	Loud, clear signal with weak signal input.	Trouble in audio-amplifier circuits. Isolate by the following tests.
2	B (Remove 6J5GT)	Clear signal with strong signal input.	Defective: 6K6GT(#1), LS200. Open: C206, R211, T200. Shorted or leaky: C206, C209.
3	D (6J5GT removed)	Same as step 2.	Defective: 6K6GT(#2). Open: C207, R212. Shorted or leaky: C207.
4	E (Replace 6J5GT)	Loud, clear signal with moderate signal input.	Defective: 6J5GT. Open: R208, R209, R207, R210. Shorted or leaky: C205, C204.
5	A	Same as step 1.	Defective: 7X7. Open: R200 (rotate through range), C202, R205, R206. Shorted: C203.
6*	F	Loud, clear signal with weak signal input.	Open: R230, WS-2(R).
Listening Test: Distortion may be caused by leaky C202, C205, C206, or C207; or by open R205, C207, C211, or C212.			

* For this step, set band (wafer) switch to phono.

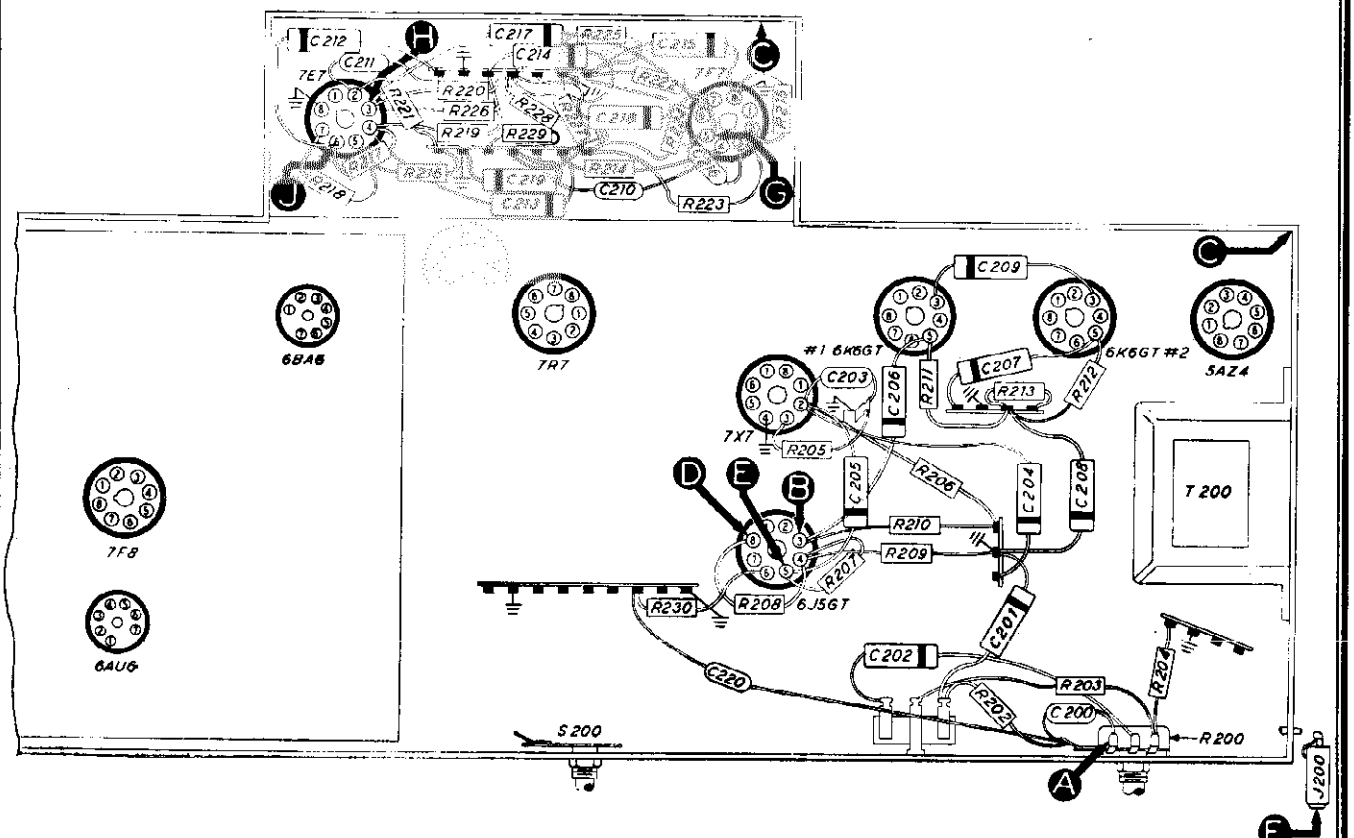

Figure 3. Bottom View, Showing Section 2 Test Points

TP-6456

© John F. Rider

Section 2 (Cont.) TROUBLE SHOOTING

SCRATCH-ELIMINATOR TESTS

Set the tone control fully counterclockwise. Turn the band (wafer) switch to the phono position. For all steps except 1(b), set the volume control to maximum; for this step, adjust the volume control as directed in the chart.

Turn the scratch eliminator on or off as indicated in the chart. (The scratch eliminator is on when the two-position switch is turned clockwise.)

Connect an output meter across the *primary* of the output transformer, T200.

IMPORTANT! For all steps except step 4, use the 0—10-volt output-meter range; for step 4 only, use the 0—50-volt range. If the proper ranges are not used, erroneous readings will result.

Connect the ground lead of an audio signal generator to the chassis, test point C, and connect the output lead through a .1-mf. condenser to the test points indicated in the chart. Set the generator for 5000 cycles. Adjust the generator output as directed in the chart.

If normal operation is indicated by the tests in step 1, (a) and (b), proceed with the tests for Section 3 (i-f, detector, and a-v-c circuits); if not, isolate and correct the trouble in the scratch-eliminator circuits.

NOTE: For steps 2, 3, and 4, connect the positive lead of a 20,000-ohms-per-volt, d-c voltmeter to the chassis, test point C; connect the prod end of the negative lead through a 100,000-ohm isolating resistor to the "VOLTMETER" test points indicated in the chart.

STEP	TEST POINT	SIG. GEN. OUTPUT	VOLT-METER	SPECIAL INSTRUCTIONS	POSSIBLE CAUSE OF ABNORMAL INDICATION
1(a)	F	Adjust for 10v output-meter reading, with scratch-eliminator off.		Turn scratch eliminator on; output voltage should drop to 6.5v (approx.).	
1(b)	F	Same as for 1(a).		Reduce volume control to obtain output-meter reading of 1v. Increase generator output for output-meter reading of 10v. Turn scratch eliminator on; output voltage should not drop below 8.8v (approx.).	Trouble in scratch-eliminator circuits. Isolate by the following tests.
2	G	See SPECIAL INSTRUCTIONS.	H	With scratch eliminator on, increase generator output for voltmeter reading of 8.8v, negative; failure to obtain this value indicates trouble.	Defective: 7F7, 7E7 (diode section), WS-3(R). Open R224, R222, R226, R228, C217, S200.
3	G	Same setting which produced 8.8v reading in step 2, with scratch eliminator on.	J	With scratch eliminator on, voltage at point J should be 2v, negative.	Open: R220, R219, R217. Shorted: C213, C214, C212.
4	F	Same as step 2.	H	With scratch eliminator on, voltage at point H should be approx. 28v, negative.	Defective: 7F7. Open: C210, C216, R214, R215, R223. Shorted or leaky: C216.
5	F	Adjust for 10v output-meter reading, with scratch eliminator off.		Turn scratch eliminator on; output voltage should drop to 6.5v (approx.).	Defective: 7E7 (pentode section). Open: R221, R216, R218, C211, C212. Shorted: C211, C212.

© John F. Rider

MODEL 49-1613

Section 3

TROUBLE SHOOTING

I-F, DETECTOR, AND A-V-C CIRCUITS

AM CIRCUITS

Use an r-f signal generator, with modulated output, set at 455 kc. Connect the generator ground lead to the chassis, test point C, and connect the output lead through a .1-mf. condenser to the test points indicated in the chart.

Set the volume control to maximum, and the tone control fully counterclockwise. Set the band (wafer) switch to the broadcast position. Turn the tuning condensers to full-mesh position.

If the "NORMAL INDICATION" is obtained in step 1, proceed with the tests for the FM circuits, or the tests for Section 4 (r-f and converter circuits); if not, isolate and correct the trouble in the AM circuits.

Since the circuit location of test point A for this section is in Section 4, the effectiveness of step 1 as a master check is dependent upon the condition of certain parts in Section 4; these parts are listed below under "POSSIBLE CAUSE OF ABNORMAL INDICATION."

STEP	TEST POINT	NORMAL INDICATION	POSSIBLE CAUSE OF ABNORMAL INDICATION
1	A	Loud, clear signal with weak signal input.	Trouble in AM circuits. Isolate by the following tests.
2	B	Loud, clear signal with strong signal input.	Defective: 7R7. Open: R309, R310, R312, L302A, L302C, L302D, R313, R314, R316, C325, C317, WS-3(R). Shorted: C317, C318, C321, C322, C323, C324, C320, C302B. Misaligned: Z302.
3	D	Loud, clear signal with moderate signal input.	Defective: 6BA6. Open: R302, R305, R308, R306, L301A, L301B, L301C, L301D, C301A, C301C, C301D. Shorted: C308, C301C, C301D, C309, C313, L301C, L301D, C300D. Misaligned: Z301.
4	A	Loud, clear signal with weak signal input.	Defective: 7F8*. Open: R406*, R405*, L406*, C300C, L300C, L300D, C300D, R300, WS-4(R), WS-4(F). Shorted: C300C, L300C, C303, C304, L300D. Misaligned: Z300.

* This part, located in another section, may cause abnormal indication in this section.

FM CIRCUITS

These tests are also made with an AM r-f signal generator, using modulated output.

Set the band (wafer) switch to the FM position, and follow the instructions preliminary to the tests for the AM circuits, with these exceptions: set the signal-generator frequency to 9.1 mc., and detune to one side or the other until a satisfactory test signal is obtained.

The best indication of satisfactory FM-detector operation is the ability of this circuit to take the alignment properly (see page 14).

If the "NORMAL INDICATION" is obtained in step 1, proceed with the tests for Section 4 (r-f and converter circuits); if not, isolate and correct the trouble in the FM circuits.

© John F. Rider

Section 3 (Cont.) TROUBLE SHOOTING

STEP	TEST POINT	NORMAL INDICATION	POSSIBLE CAUSE OF ABNORMAL INDICATION
1	A	Loud, clear signal with weak signal input.	Trouble in FM circuits. Isolate by the following tests.
2	B	Loud, clear signal with strong signal input.	Open: L302B, C302A, C328, C329, R315, R318, C325, R317, WS-3(R). Shorted: L302A, C319, C302A, C328, L302E, C329, C330, C331, C332, C326.
3	D	Loud, clear signal with moderate signal input.	Defective: 6BA6. Open: R302, R305, C308, R306, L301A, L301B, L301C, L301D, C301A, C301C, C301D. Shorted: C308, C301C, C301D, C309, C313, L301C, L301D, C300D. Misaligned: Z301.
4	A	Loud, clear signal with weak signal input.	Open: WS-4(R), WS-4(F).

C300 IS LOCATED IN Z300

C319, C320, C328, C329 LOCATED IN Z302

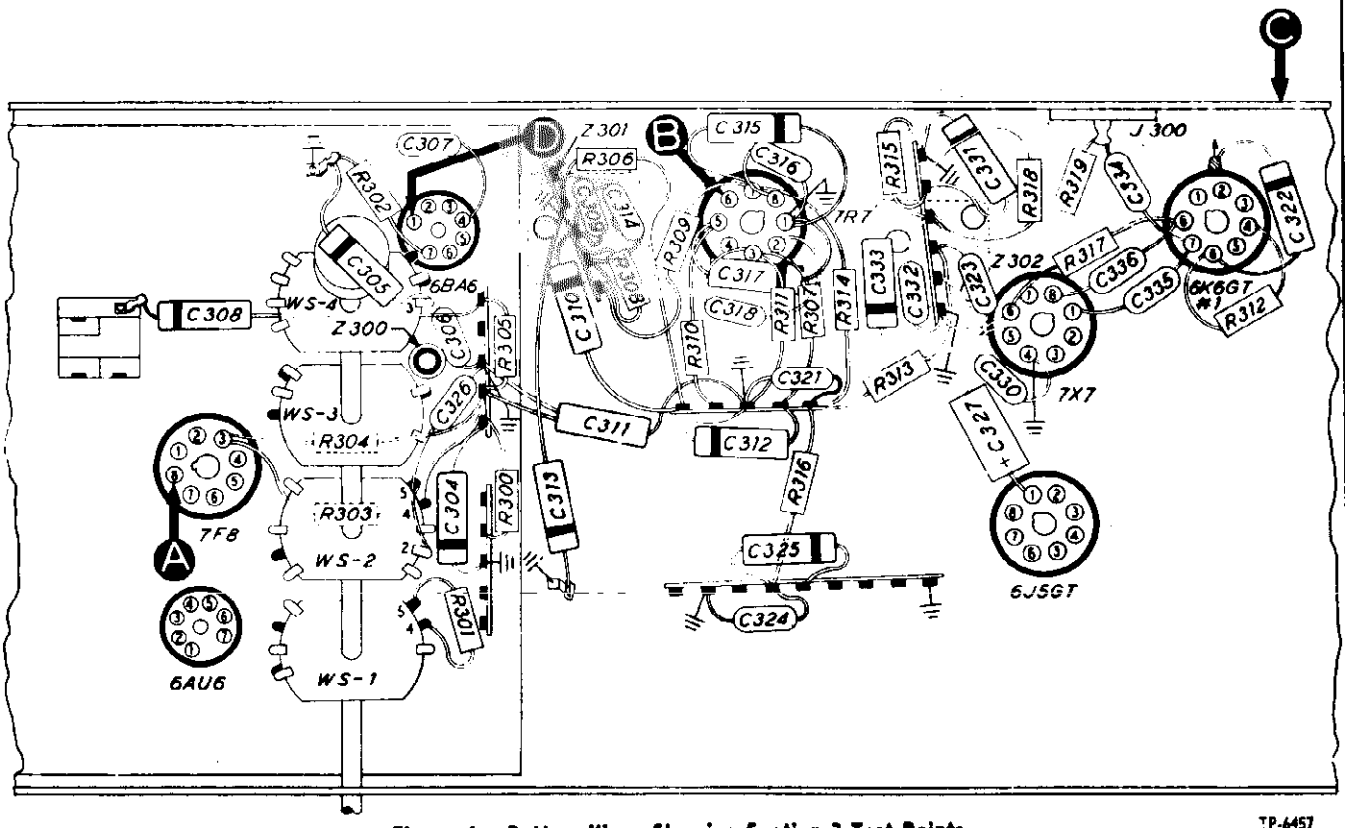

Figure 4. Bottom View, Showing Section 3 Test Points

TP-6457

MODEL 49-1613

Section 4 TROUBLE SHOOTING

For the following tests, with the exception of the oscillator tests, use an AM r-f signal generator, with modulated output. Connect the generator ground lead to the chassis, test point C, and connect the output lead through a .1-mf. condenser to the test points indicated in the chart.

Set the radio volume control to maximum, and the tone control fully counterclockwise.

Set the band (wafer) switch, tuning control, and signal-generator frequency as indicated in the chart.

OSCILLATOR TESTS (AM AND FM CIRCUITS): Connect the positive lead of a high-resistance d-c voltmeter to the chassis, and connect the negative lead through a 100,000-ohm isolating resistor to the 7F8 oscillator grid (pin 1), test point B. Use a suitable range, such as 0—10 volts. Proper operation of the oscillator is indicated by negative voltages of approximately the values given in the chart (measured with 20,000-ohms-per-volt meter), throughout the tuning range.

If the "NORMAL INDICATION" is not obtained in step 1 of both the AM and the FM test charts, isolate the trouble by following the remaining steps.

AM CIRCUITS

STEP	TEST POINT	SIG. GEN. FREQ.	BAND SWITCH	RADIO TUNING	NORMAL INDICATION	POSSIBLE CAUSE OF ABNORMAL INDICATION
1	A	1000 kc.	Broadcast	Tune to signal.	Loud, clear signal with weak signal input.	Trouble in AM circuits. Isolate by the following tests.
2 (Osc. test; see note above.)	B		Broadcast	Tune through range.	Negative 1.5v to 3.5v.	Defective: 7F8. Open: R304*, C405, C404B, C408, L404, R402, WS-2(F), WS-2(R), WS-1(F), WS-3(F), WS-3-(R). Shorted: C405, C404A, C400E, C404B, C408.
3	A	1000 kc.	Broadcast	Tune to signal.	Loud, clear signal with weak signal input.	Open: LA400, R401, L402, C402, C413, WS-1(R). Shorted: L402, C400D, C403.
Listening Test: Distortion may be caused by open R401 or R307*. Hum and instability may be caused by open C312* or R301*.						

* This part, located in another section, may cause abnormal indication in this section.

FM CIRCUITS

Observe the instructions preliminary to the tests for the AM circuits, with the following exception: After tuning the signal generator and the radio to 95 mc., detune one or the other until a satisfactory test signal is obtained.

STEP	TEST POINT	SIG. GEN. FREQ.	BAND SWITCH	RADIO TUNING	NORMAL INDICATION	POSSIBLE CAUSE OF ABNORMAL INDICATION
1	D	95 mc.	FM	Tune to signal.	Loud, clear signal with weak signal input.	Trouble in FM circuits. Isolate by the following tests.

Section 4 (Cont.) TROUBLE SHOOTING

STEP	TEST POINT	SIG. GEN. FREQ.	BAND SWITCH	RADIO TUNING	NORMAL INDICATION	POSSIBLE CAUSE OF ABNORMAL INDICATION
2 (Osc. test: see note above.)	B		FM	Tune through range.	Negative 1v.	Defective: 7F8. Open: L403, WS-2(F), WS-2(R), WS-1(F), WS-3(F), WS-3-(R). Shorted: L403, C400C, C400H.
3	D	95 mc.	FM	Tune to signal.	Loud, clear signal with weak signal input.	Defective: 6AU6. Open: L400, L405, R400, R403, R404, C409, L401, WS-1-(R). Shorted: L400, C400A, C400F, C407, C409, C410, C411, L401, C400B, C400G.

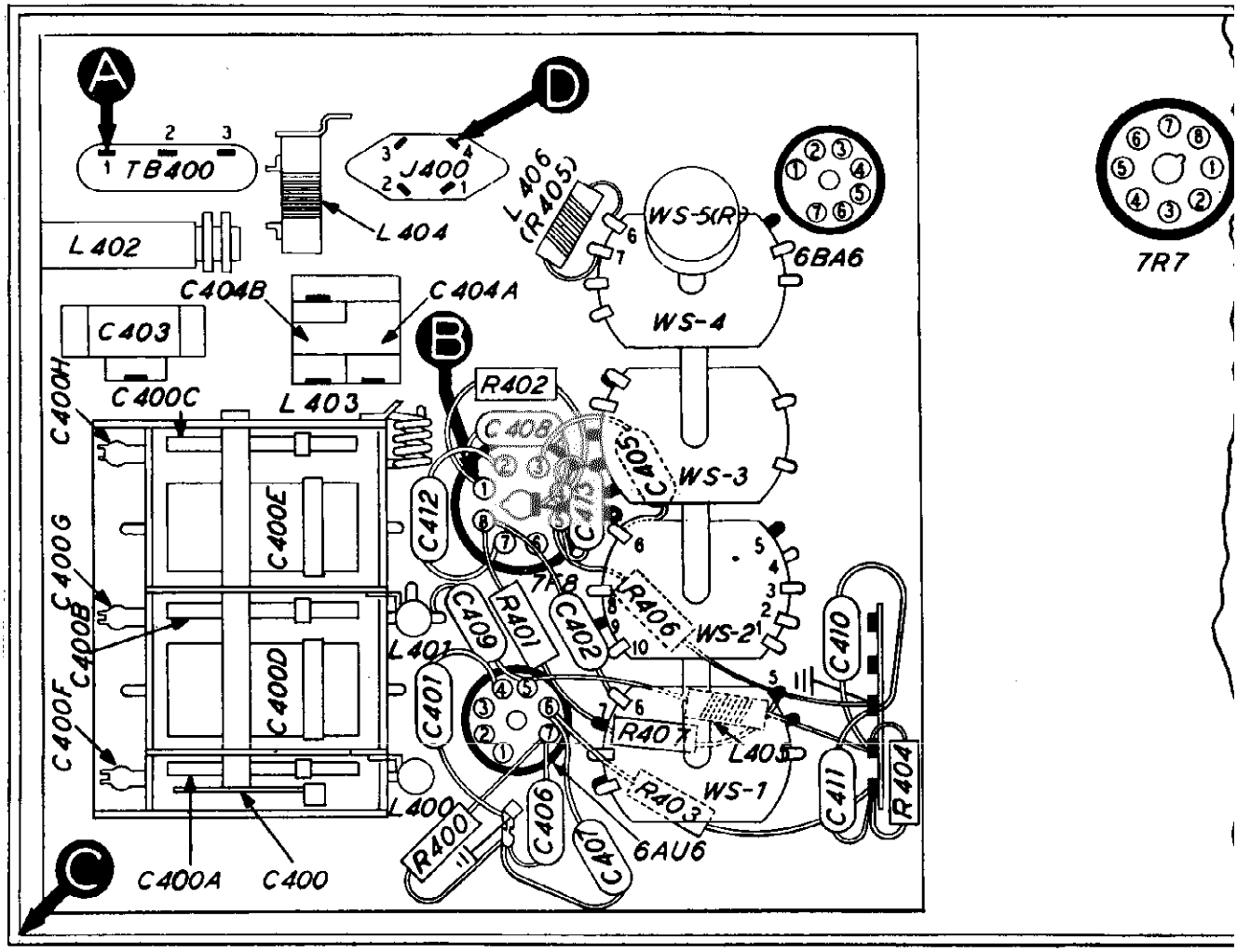

Figure 5. Bottom View, Showing Section 4 Test Points

TP-5328D

MODEL 49-1613

SYMBOLIZATION

The components in the radio circuit are symbolized according to the types of parts and the sections of the radio in which the parts are located. The prefix letter of the symbol designates the type of part, as follows:

C—condenser L—choke or coil LS—loud-speaker S—switch WS—wafer (band selector-phono) switch
I—pilot lamp LA—loop aerial R—resistor T—transformer Z—electrical assembly

The number of the symbol, except when the number is less than 100, designates the section in which the part is located, as follows:

100-series components are in Section 1 — the power supply
200-series components are in Section 2 — the audio circuits
300-series components are in Section 3 — the i-f amplifier, detector, and a v c circuits
400-series components are in Section 4 — the r-f and converter circuits

REPLACEMENT PARTS LIST

NOTE: Parts marked with an asterisk (*) are general replacement items. These numbers may not be identical with those on factory assemblies; also, the electrical values of some replacement items may differ from the values indicated in the schematic diagram and parts list. The values substituted in any case are so chosen that the operation of the radio will be either unchanged or improved. When ordering replacements, use only the "Service Part No."

SECTION 1
POWER SUPPLY

Reference Symbol	Description	Service Part No.
C100	Condenser, line filter, .01 mf.	30-1226-1
C101	Condenser, line filter, .01 mf.	30-1226-1
C102	Condenser, electrolytic, input filter, 20 mf., 450v	30-2568-8
C103	Condenser, electrolytic, 2-section	30-2556
C103A	Condenser, filter, 10 mf., 450v	Part of C103
C103B	Condenser, filter, 25 mf., 450v	Part of C103
I100	Lamp, pilot	34-2064
I101	Lamp, pilot	34-2064
J100	Socket, phono power	27-6200
L100	Speaker, field	Part of LS200
R100	Resistor, filter, 15,000 ohms	66-3153340
R101	Resistor, bias divider, 680,000 ohms	66-4683340*
R102	Resistor, bias divider, 680,000 ohms	66-4683340*
S100	Switch, on-off	Part of R201
T100	Transformer, power	32-8248
W100	Power cord and plug	41-3755-20
WS-5 (R)	Switch-wafer section, phono power	Part of 42-1803-1†

SECTION 2
AUDIO CIRCUITS

C200	Condenser, tone compensation, 100 mmf.	60-10105407*
C201	Condenser, tone compensation, .006 mf.	45-3500-7*
C202	Condenser, d-c blocking, .006 mf.	45-3500-7*
C203	Condenser, r-f by-pass, 100 mmf.	60-10105407*
C204	Condenser, tone control, .01 mf.	60-0120*
C205	Condenser, d-c blocking, .006 mf.	45-3500-7*
C206	Condenser, d-c blocking, .006 mf.	45-3500-7*
C207	Condenser, d-c blocking, .006 mf.	45-3500-7*
C208	Condenser, bias filter, .1 mf.	61-0113*
C209	Condenser, tone compensation, .003 mf.	61-0117*
C210	Condenser, high-pass filter, 150 mmf.	60-10155407*
C211	Condenser, reactance-feedback, 330 mmf.	60-10335407*
C212	Condenser, d-c blocking, .001 mf.	30-4620*
C213	Condenser, bias filter, .01 mf.	61-0120*
C214	Condenser, bias filter, .03 mf.	30-4517*
C215	Condenser, bias filter, .01 mf.	61-0120*
C216	Condenser, d-c blocking, 330 mmf.	60-10335407*
C217	Condenser, d-c blocking, .002 mf.	30-4622*
C218	Condenser, bias filter, .01 mf.	61-0108*
C219	Condenser, bias filter, .03 mf.	30-4517*
C220	Condenser, tone compensation, 150 mmf.	60-10155407*
J200	Phono cable and plug	41-3735-2
J201	Speaker cable and plug	41-3734-8
LS200	Speaker	36-1811-3
R200	Volume control, 2 megohms (tap at 1 megohm)	33-5535-1
R201	Tone control (with on-off switch), 6 megohms	33-5538-1
R202	Resistor, tone compensation, 33,000 ohms	66-3333340*
R203	Resistor, voltage divider, inverse feedback, 4.7 ohms	66-9473340*
R204	Resistor, voltage divider, inverse feedback, 68 ohms	66-0683340*
R205	Resistor, grid return, 10 megohms	66-6103340*
R206	Resistor, plate load, 220,000 ohms	66-4223340*
R207	Resistor, grid return, 1 megohm	66-5103340*
R208	Resistor, cathode bias, 4700 ohms	66-2473340*
R209	Resistor, cathode load, 47,000 ohms	66-3473340*

SECTION 2 (Continued)
AUDIO CIRCUITS

Reference Symbol	Description	Service Part No.
R210	Resistor, plate load, 56,000 ohms	66-3563340*
R211	Resistor, grid return, 330,000 ohms	66-4333340*
R212	Resistor, grid return, 330,000 ohms	66-4333340*
R213	Resistor, bias filter, 150,000 ohms	66-4153340*
R214	Resistor, grid return, 1 megohm	66-5103340*
R215	Resistor, cathode bias, 2200 ohms	66-2223340*
R216	Resistor, screen voltage divider, 33,000 ohms	66-3333340*
R217	Resistor, grid return, 1 megohm	66-5103340*
R218	Resistor, screen voltage divider, 33,000 ohms	66-3333340*
R219	Resistor, bias filter, 680,000 ohms	66-4683340*
R220	Resistor, bias filter, 220,000 ohms	66-4223340*
R221	Resistor, plate load, 18,000 ohms	66-3183340*
R222	Resistor, grid return, 560,000 ohms	66-4563340*
R223	Resistor, plate load, 220,000 ohms	66-4223340*
R224	Resistor, plate load, 100,000 ohms	66-4103340*
R225	Resistor, bias filter, 220,000 ohms	66-4223340*
R226	Resistor, diode load, 560,000 ohms	66-4563340*
R227	Resistor, bias filter, 1.5 megohms	66-5153340*
R228	Resistor, diode load, 220,000 ohms	66-4223340*
R229	Resistor, bias filter, 3.3 megohms	66-5333340*
R230	Resistor, low-pass filter, 47,000 ohms	66-3473340*
S200	Switch, on-off, scratch eliminator	42-1848
T200	Transformer, output	32-8274
WS-3 (F)	Switch-wafer section	Part of 42-1803-1†

SECTION 3
I-F, DETECTOR, AND A-V-C CIRCUITS

C300A	Condenser, trimmer	Part of Z300
C300B	Condenser, trimmer	Part of Z300
C300C	Condenser, shunt, 3000 mmf.	Part of Z300
C300D	Condenser, trimmer	Part of Z300
C301A	Condenser, trimmer	Part of Z301
C301B	Condenser, trimmer	Part of Z301
C301C	Condenser, shunt, 300 mmf.	Part of Z301
C301D	Condenser, trimmer	Part of Z301
C302A	Condenser, trimmer	Part of Z302
C302B	Condenser, trimmer	Part of Z302
C303	Condenser, d-c blocking, 6 mmf.	Part of Z300
C304	Condenser, plate by-pass, .01 mf.	61-0120*
C305	Condenser, r-f by-pass, .01 mf.	61-0120*
C306	Condenser, r-f by-pass, 100 mmf.	62-110009001*
C307	Condenser, filament by-pass, 100 mmf.	62-110009001*
C308	Condenser, screen by-pass, .01 mf.	61-0120*
C309	Condenser, plate by-pass, 100 mmf.	62-110009001*
C310	Condenser, r-f by-pass, .01 mf.	61-0120*
C311	Condenser, r-f by-pass, .01 mf.	30-4641
C312	Condenser, a-v-c filter, .01 mf.	61-0120*
C313	Condenser, plate by-pass, .01 mf.	61-0120*
C314	Condenser, r-f by-pass, 250 mmf.	62-122001001*
C315	Condenser, cathode by-pass, .05 mf.	61-0122*
C316	Condenser, filament by-pass, 100 mmf.	62-110009001*
C317	Condenser, screen by-pass, .01 mf.	61-0120*
C318	Condenser, d-c blocking, 100 mmf.	60-10105407*
C319	Condenser, d-c blocking, 27 mmf.	Part of Z302
C320	Condenser, shunt, 470 mmf.	Part of Z302
C321	Condenser, r-f by-pass, 100 mmf.	62-110009001*
C322	Condenser, plate by-pass, .05 mf.	61-0122*
C323	Condenser, r-f by-pass, 100 mmf.	60-10105407*
C324	Condenser, r-f by-pass, 100 mmf.	60-10105407*
C325	Condenser, d-c blocking, .006 mf.	45-3500-7*
C326	Condenser, r-f by-pass, 100 mmf.	62-110009001*

REPLACEMENT PARTS LIST (Continued)

SECTION 3 (Continued)
I-F, DETECTOR, AND A-V-C CIRCUITS

Reference Symbol	Description	Service Part No.
C327	Condenser, electrolytic, noise suppressor (FM), 2 mf., 50v	30-2417-7
C328	Condenser, shunt, 25 mmf.	Part of Z302
C329	Condenser, shunt, 15 mmf.	Part of Z302
C330	Condenser, balancing, 7.5 mmf.	30-1224-8
C331	Condenser, tone compensation, .008 mf.	30-4112
C332	Condenser, r-f by-pass, 100 mmf.	60-10105407*
C333	Condenser, d-c blocking, .006 mf.	45-3500-7*
C334	Condenser, r-f by-pass, 100 mmf.	60-10105407*
C335	Condenser, filament by-pass, 100 mmf.	62-110009001*
C336	Condenser, filament by-pass, 100 mmf.	62-110009001*
J300	Test socket	27-6180
L300A	Transformer, primary (FM), 1st i-f	Part of Z300
L300B	Transformer, secondary (FM), 1st i-f	Part of Z300
L300C	Transformer, primary (AM), 1st i-f	Part of Z300
L300D	Transformer, secondary (AM), 1st i-f	Part of Z300
L301A	Transformer, primary (FM), 2nd i-f	Part of Z301
L301B	Transformer, secondary (FM), 2nd i-f	Part of Z301
L301C	Transformer, primary (AM), 2nd i-f	Part of Z301
L301D	Transformer, secondary (AM), 2nd i-f	Part of Z301
L302A	Transformer, primary (FM), 3rd i-f	Part of Z302
L302B	Transformer, secondary (FM), 3rd i-f	Part of Z302
L302C	Transformer, primary (AM), 3rd i-f	Part of Z302
L302D	Transformer, secondary (AM), 3rd i-f	Part of Z302
L302E	Transformer, winding, isolating, 3rd i-f	Part of Z302
R300	Resistor, plate dropping, 47,000 ohms	66-3473340*
R301	Resistor, a-v-c filter, 2.2 megohms	66-5223340*
R302	Resistor, cathode bias, 68 ohms	66-0683340*
R303	Resistor, plate dropping, 4700 ohms	66-2473340*
R304	Resistor, plate dropping, 33,000 ohms	66-3333340*
R305	Resistor, screen dropping, 27,000 ohms	66-3273340*
R306	Resistor, plate decoupling, 1000 ohms	66-2103340*
R307	Resistor, a-v-c filter, 3.3 megohms	66-5333340*
R308	Resistor, grid return, 2.2 megohms	66-5223340*
R309	Resistor, cathode bias, 150 ohms	66-1153340*
R310	Resistor, screen dropping, 68,000 ohms	66-3683340*
R311	Resistor, a-v-c load, 1 megohm	66-5103340*
R312	Resistor, plate decoupling, 1000 ohms	66-2103340*
R313	Resistor, i-f filter, 47,000 ohms	66-3473340*
R314	Resistor, diode load, 330,000 ohms	66-4333340*
R315	Resistor, FM detector load, 6.8 megohms	66-5683340*
R316	Resistor, isolating, 100,000 ohms	66-4103340*
R317	Resistor, noise suppressor (FM), 47,000 ohms	66-3473340*
R318	Resistor, isolating, 100,000 ohms	66-4103340*
R319	Resistor, isolating, 100,000 ohms	66-4103340*
TC300A	Tuning core	Part of Z300
TC302A	Tuning core	Part of Z302
WS-2 (F)	Switch-wafer section	Part of 42-1803-1†
WS-2 (R)	Switch-wafer section	Part of 42-1803-1†
WS-3 (R)	Switch-wafer section	Part of 42-1803-1†
WS-4 (F)	Switch-wafer section	Part of 42-1803-1†
WS-4 (R)	Switch-wafer section	Part of 42-1803-1†
Z300	Transformer, 1st i-f	32-4146
Z301	Transformer, 2nd i-f	32-4156
Z302	Transformer, 3rd i-f	32-4147

SECTION 4
R-F AND CONVERTER CIRCUITS

C400	Condenser, tuning gang, 5-section	31-2703-2
C400A	Condenser, tuning, FM aerial	Part of C400
C400B	Condenser, tuning, FM r.f.	Part of C400
C400C	Condenser, tuning, FM osc.	Part of C400
C400D	Condenser, tuning, bc. aerial	Part of C400
C400E	Condenser, tuning, bc. osc.	Part of C400
C400F	Condenser, trimmer, FM aerial	Part of C400
C400G	Condenser, trimmer, FM r.f.	Part of C400
C400H	Condenser, trimmer, FM osc.	Part of C400
C401	Condenser, filament by-pass, 100 mmf.	62-110009001*
C402	Condenser, d-c blocking, 220 mmf.	62-122001001*
C403	Condenser, trimmer, bc. aerial	31-6473
C404	Condenser, trimmer assembly, 2-section	31-6476-5
C404A	Condenser, shunt trimmer, bc. osc.	Part of C404
C404B	Condenser, series padder, bc. osc.	Part of C404
C405	Condenser, d-c blocking, 220 mmf.	62-122001001*
C406	Condenser, cathode by-pass, 100 mmf.	62-110009001*
C407	Condenser, screen grid by-pass, 100 mmf.	62-110009001*
C408	Condenser, osc. grid, 100 mmf.	62-110009001*

SECTION 4 (Continued)
R-F AND CONVERTER CIRCUITS

Reference Symbol	Description	Service Part No.
C409	Condenser, d-c blocking, 33 mmf.	30-1224*
C410	Condenser, r-f by-pass, 1500 mmf.	62-215001011
C411	Condenser, r-f by-pass, 1500 mmf.	62-215001011
C412	Condenser, filament by-pass, 100 mmf.	62-110009001*
C413	Condenser, d-c blocking, 750 mmf.	60-10755301*
J400	Socket, FM aerial	27-6214-1
L400	Coil, FM aerial	32-4158
L401	Coil, FM r.f.	32-4159
L402	Coil, bc. aerial	32-4049-3
L403	Coil, FM osc.	32-4018-2
L404	Coil, bc. osc.	32-4221
L405	Coil, r-f choke (plate of 6AU6)	32-4061-2
L406	Coil (including R405), parasitic suppressor, (plate of 7F8)	32-4157
LA400	Loop aerial assembly	76-3583-6
R400	Resistor, cathode bias, 82 ohms	66-0823340*
R401	Resistor, grid return, 2.2 megohms	66-5223340*
R402	Resistor, grid return, 15,000 ohms	66-3153340*
R403	Resistor, screen dropping, 33,000 ohms	66-3333340*
R404	Resistor, plate decoupling, 1000 ohms	66-2103340*
R405	Resistor (with coil L406), parasitic suppressor, 150J ohms	Part of L406
R406	Resistor, cathode bias, 1500 ohms	66-2153340*
R407	Resistor, a-v-c voltage divider (FM), 470,000 ohms	66-4473340*
TB400	Terminal panel, bc. aerial	38-8942
WS-1 (F)	Switch-wafer section	Part of 42-1803-1†
WS-1 (R)	Switch-wafer section	Part of 42-1803-1†
WS-2 (F)	Switch-wafer section	Part of 42-1803-1†
WS-2 (R)	Switch-wafer section	Part of 42-1803-1†
WS-3 (F)	Switch-wafer section	Part of 42-1803-1†
WS-3 (R)	Switch-wafer section	Part of 42-1803-1†
† 42-1803-1	5-section wafer switch (band selector phono)	

MISCELLANEOUS

Description	Service Part No.
Cabinet and Cabinet Hardware	
Back, cabinet	54-7680
Baffle-and-Cloth Assembly	
For light cabinet, L.H.	40-7538-1
For light cabinet, R.H.	40-7592-1
For mahogany cabinet, L.H.	40-7538
For mahogany cabinet, R.H.	40-7592
Baffle, wood	219125
Bezel	56-4878
Bin mechanism, L.H.	76-3223-5
Bin mechanism, R.H.	76-3223-6
Bullet catch	45-6002-1
Dome (4)	45-6190
Door pull	56-4420-2
Frame assembly	76-4104
Hinge	
For light cabinet, L.H. (1)	56-5713-6
For light cabinet, R.H. (2)	56-5713-7
For light cabinet, R.H. (1)	56-5713-9
For mahogany cabinet, L.H. (1)	56-5713-8
For mahogany cabinet, R.H. (2)	56-5713-3
For mahogany cabinet, R.H. (1)	56-5713-2
Scale strap (2)	56-2234-1
Spring, bin mechanism (2)	56-4978
Strike plate	45-6003-1
Dial Scale and Scale Hardware	
Cord, drive (25-ft. spool)	45-8750*
Pointer	56-3179FCP
Scale	76-3187-1
Spring, pointer	28-8953
Escutcheon	56-5491FCP
Knob (4)	54-4486
Knob (1)	54-4338-2
Scale plate assembly	76-3187-6
Shield, pilot lamp	56-2194FA3
Socket, assembly, pilot lamp (2)	76-2109
Socket, Loktal	27-6177
Socket, Loktal (7F8)	27-6213
Socket, miniature (6BA6)	27-6226
Socket, octal	27-6174
Wafer-Switch Hardware	
Link assembly	76-2186-6
Shaft	56-3298FA11

© John F. Rider

MODEL 49-1613

ALIGNMENT PROCEDURE

When the complete AM and FM alignment is to be made, the AM alignment should be made FIRST; if AM alignment is not required, the FM alignment alone may be made.

ALIGNMENT OF AM CIRCUITS

DIAL POINTER: With tuning condensers fully meshed, dial pointer must coincide with index mark at low-frequency end of dial. (See "CALIBRATING DIAL BACKPLATE," page 2.)

OUTPUT METER: Connect between No. 3 terminal (voice-coil connection) of aerial terminal panel and chassis.

AM R-F SIGNAL GENERATOR: Connect ground lead to chassis, and output lead as indicated in chart. Use modulated output.

OUTPUT LEVEL: During alignment, signal-generator output must be attenuated to maintain radio output below 1.5 volts, as read on output meter.

CONTROLS: Set band switch to broadcast position. Set volume control to maximum, and tone control fully counterclockwise. Set signal-generator frequency and radio tuning dial as indicated in chart.

ALIGNMENT OF FM CIRCUITS

Make AM alignment (if required) first.

OUTPUT METER: Connect as for AM alignment (this meter is used only in step 3).

D-C METER: Connect 20,000-ohms-per-volt meter across 2-mf. condenser, C327, in FM-detector circuit—negative lead to pin 6 of 7X7 tube, and positive lead to chassis. Use 10-volt range.

AM R-F SIGNAL GENERATOR: Use modulated output for entire alignment. Generator must have sufficient output to give reading of approximately 9 volts on d-c meter, and signal should be attenuated during alignment to keep meter at this value. Connect generator ground lead to chassis, and output lead as indicated in chart.

VOLUME AND TONE CONTROLS: Same as for AM alignment.

RADIO BAND SWITCH, RADIO DIAL, AND SIGNAL-GENERATOR DIAL: Set as indicated in chart. Allow radio and generator to warm up for 15 minutes before starting alignment.

R-F COIL NOTE: When making the tracking adjustments, the resonance of the circuits using coils L400, L401, and L403 may be checked with a powdered-iron tuning core such as Part No. 56-6100. If the signal strength (meter reading) increases when the iron end is placed in, or near, the coil, compress the turns slightly. If the threaded brass end causes an increase in signal strength, spread the turns. Do not compress or spread the turns excessively; only a small change is required at these frequencies.

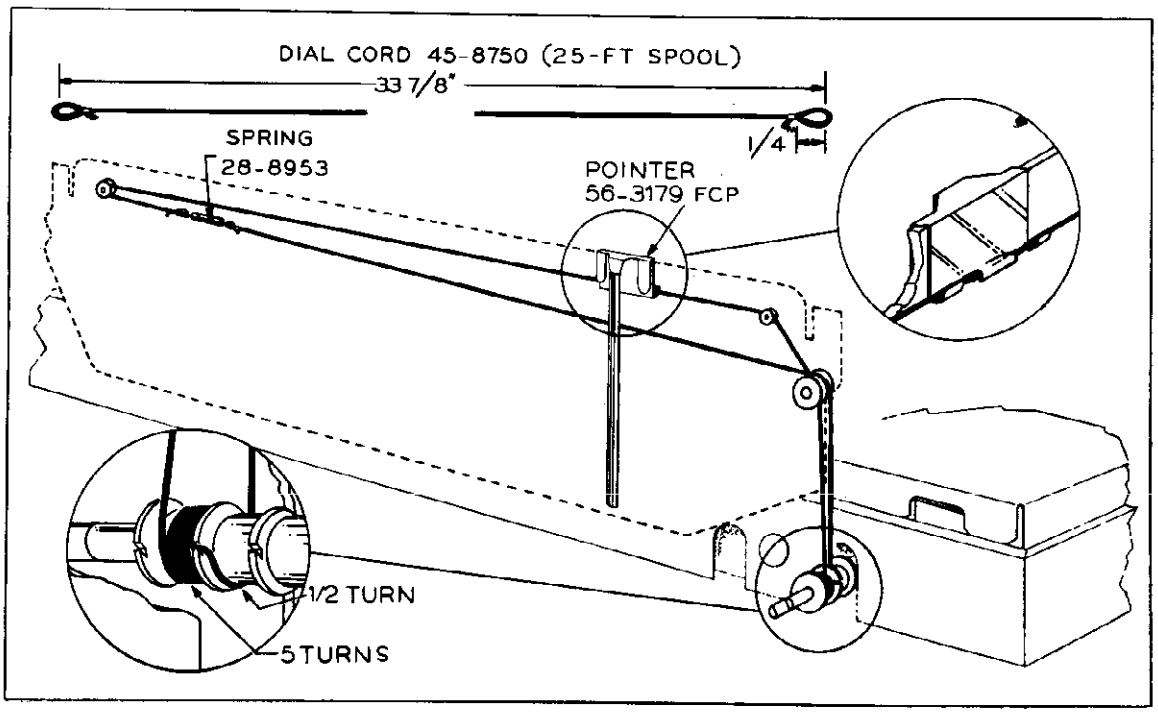

Figure 7. Drive-Cord Installation Details TP-4058E

© John F. Rider

MODEL 49-1613

AM ALIGNMENT CHART

STEP	SIGNAL GENERATOR		RADIO		ADJUST
	CONNECTIONS TO RADIO	DIAL SETTING	DIAL SETTING	SPECIAL INSTRUCTIONS	
1	Through .1-mf. condenser to terminal 1 of aerial terminal panel, TB400.	455 kc.	540 kc.	Adjust, in order given, for maximum output.	C302B—3rd C301D—2nd C300D—1st TC300A—1s
2	Radiating loop (see note below).	580 kc.	580 kc.	Adjust for maximum while rocking tuning control.	C404B—Osc.
3	Same as step 2.	1700 kc.	1700 kc.	Adjust for maximum.	C404A—Osc.
4	Same as step 2.	1500 kc.	1500 kc.	Adjust for maximum.	C403-
5	Same as step 2.	580 kc.	580 kc.	Adjust for maximum while rocking tuning control.	C404B—Osc.
6	Repeat steps 2, 3, and 4 until no further improvement is obtained.				

RADIATING LOOP: Make up a six-to-eight turn, 6-inch-diameter loop, using insulated wire; connect to signal-generator leads and place radio loop.

FM ALIGNMENT CHART

STEP	SIGNAL GENERATOR		RADIO		ADJUST
	CONNECTIONS TO RADIO	DIAL SETTING	DIAL SETTING	SPECIAL INSTRUCTIONS	
1	Through .1-mf. condenser to grid of 1st i-f ampl., 6BA6 (top plate of trimmer C300B*).	9.1 mc.	88 mc.	Adjust for maximum signal strength, as indicated by d-c voltmeter. Repeat until no further increase is obtained. After this step, do no disturb any of these settings except that of C302A, as directed in step 3.	C302A—Det. TC302A—I C301B—2nd C301A—2nd
2	Through .1-mf. condenser to mixer grid (pin 8) of 7F8.	9.1 mc.	88 mc.	Adjust for maximum. After this step, do not disturb either of these settings.	C300B—1st C300A—1st
3	Same as step 2.	9.1 mc.	88 mc.	Double-check the adjustment of C302A to make certain that audio output is at minimum. Use output meter. The setting is critical; adjust carefully.	C302A—Det.
4	To FM aerial terminal (terminal 4 of J400).	105 mc.	105 mc.	Adjust for maximum.	C400
5	Same as step 4.	105 mc.	105 mc.	Adjust for maximum while rocking tuning control.	C40(
6	Same as step 4.	105 mc.	105 mc.	Adjust for maximum.	C400F-
7	Same as step 4.	92 mc.	92 mc.	Adjust L403 for maximum (see R-F COIL NOTE above).	L403—(Osc. t
8	Same as step 4.	92 mc.	92 mc.	Adjust L401 for maximum while rocking tuning control (see R-F COIL NOTE above).	L401—(R-f t
9	Same as step 4.	92 mc.	92 mc.	Adjust L400 for maximum (see R-F COIL NOTE above).	L400—(Aerial t
10	Repeat steps 4 through 9 until no further increase is obtained.				

* Make this connection by sliding a piece of flattened wire solder down through alignment slot (see figure 9) in top of i-f transformer can.

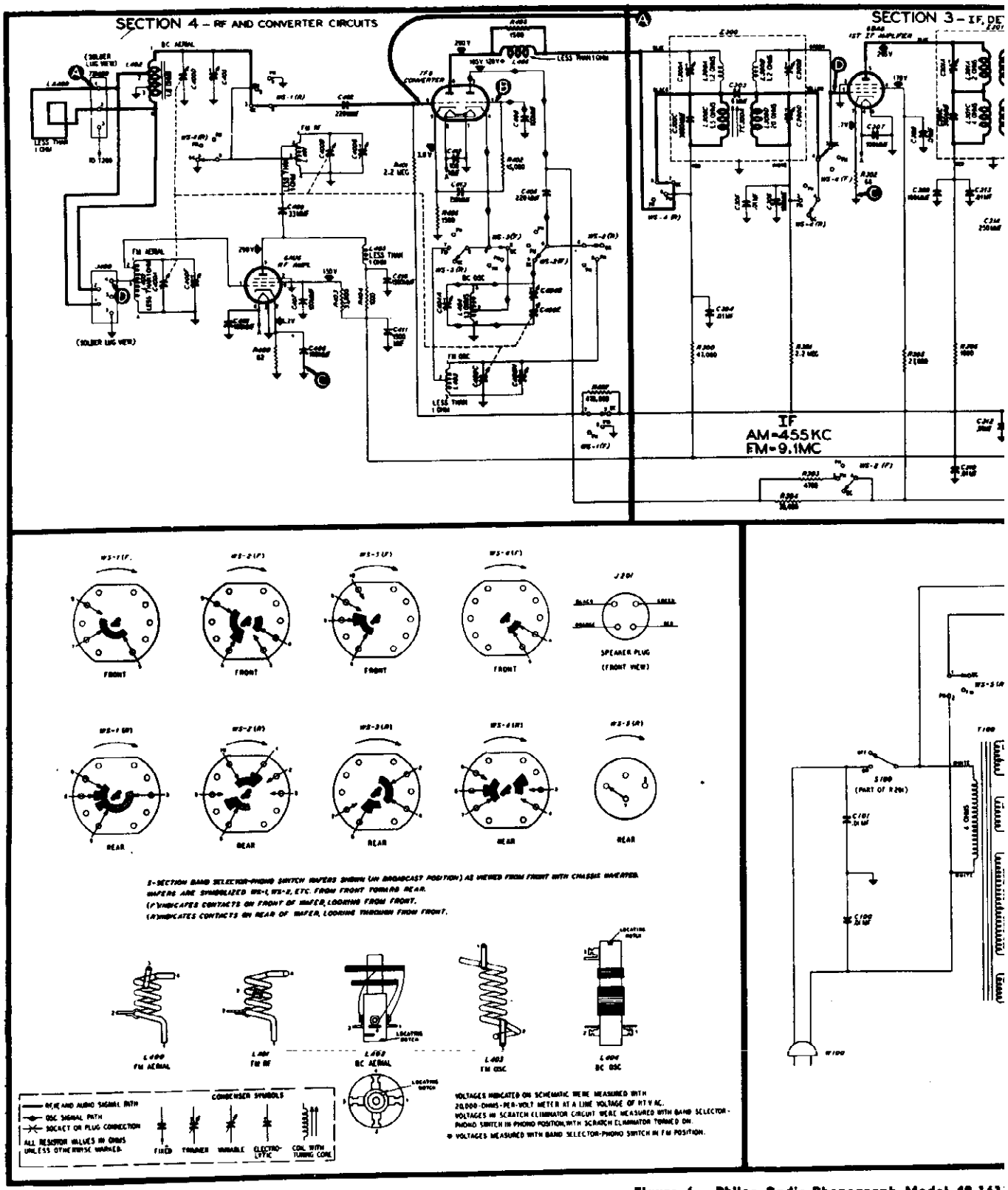

Figure 6. Philco Radio-Phonograph Model 49-161

RECORD CHANGER: See Philco Model M-12C, Pages RCD.CH. 19-55 to RCD.CH. 19-74.

©John F. Rider

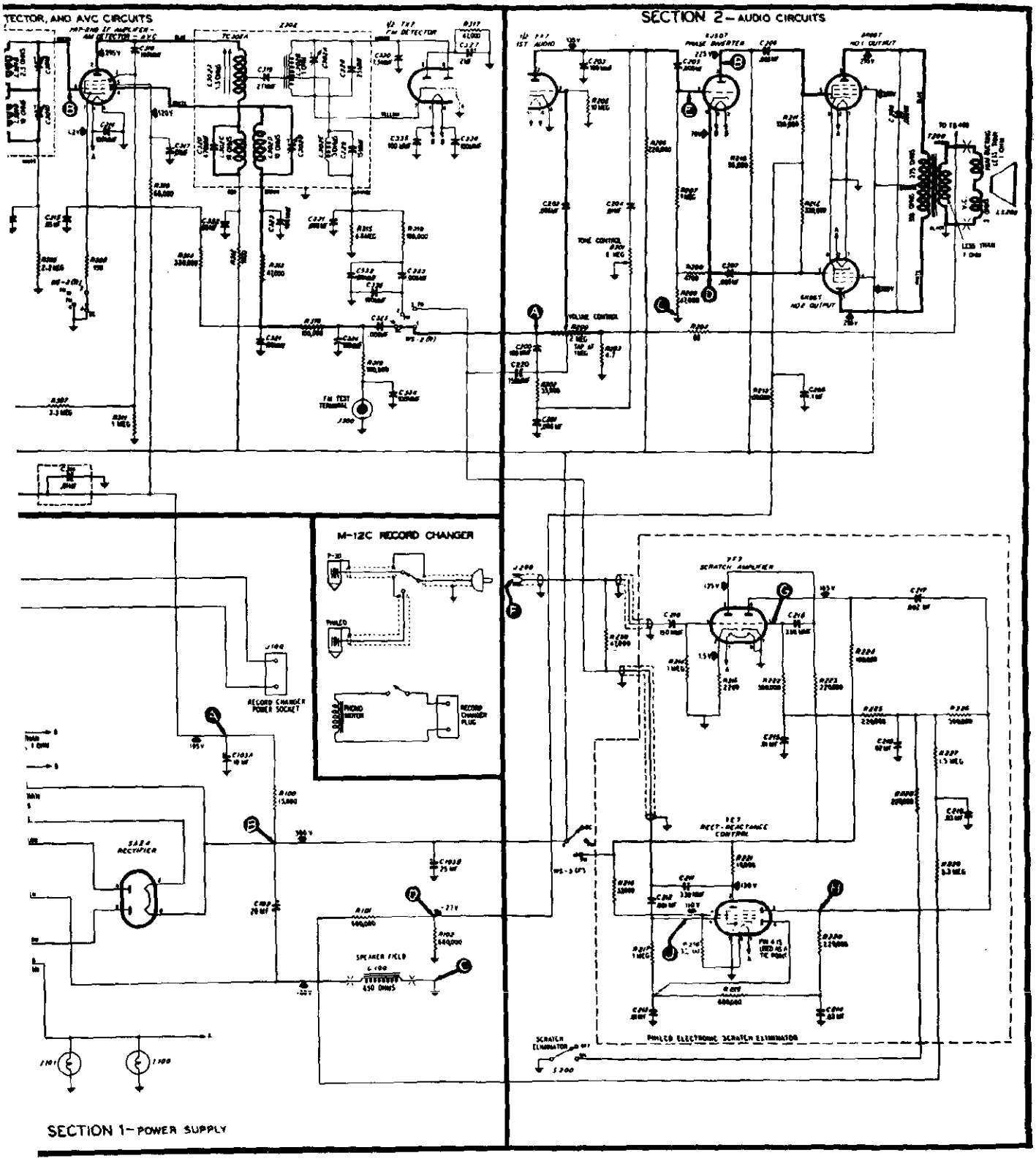

ctionalized Schematic Diagram, Showing Test Points

TP-6455

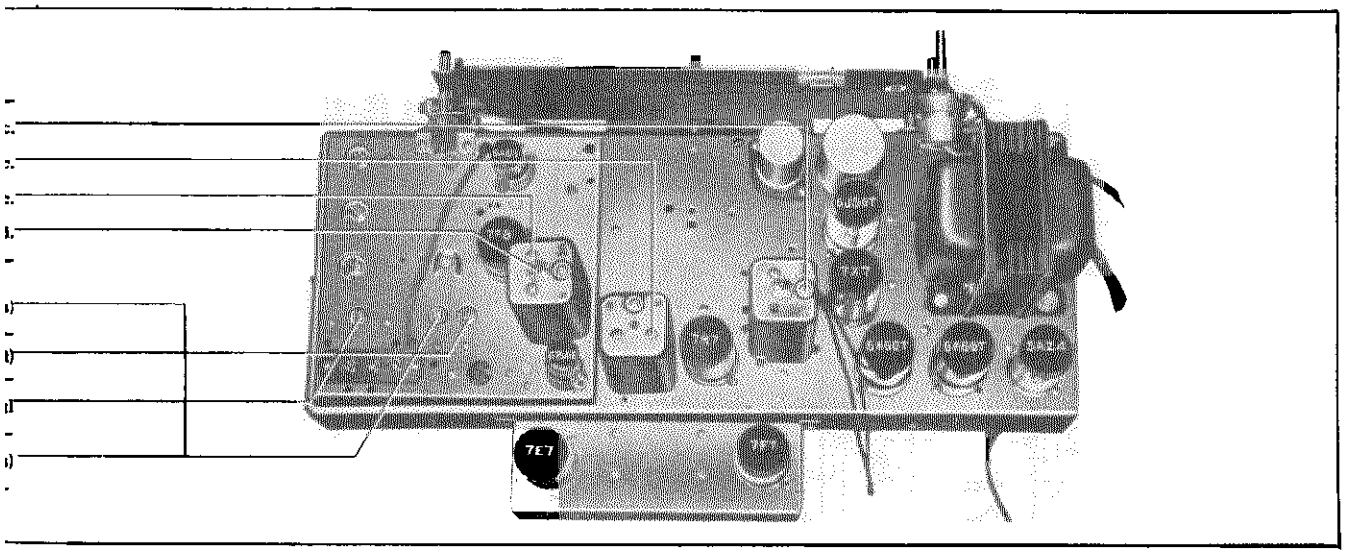

Figure 8. Top View, Showing AM Trimmer Locations

TP-5132-1

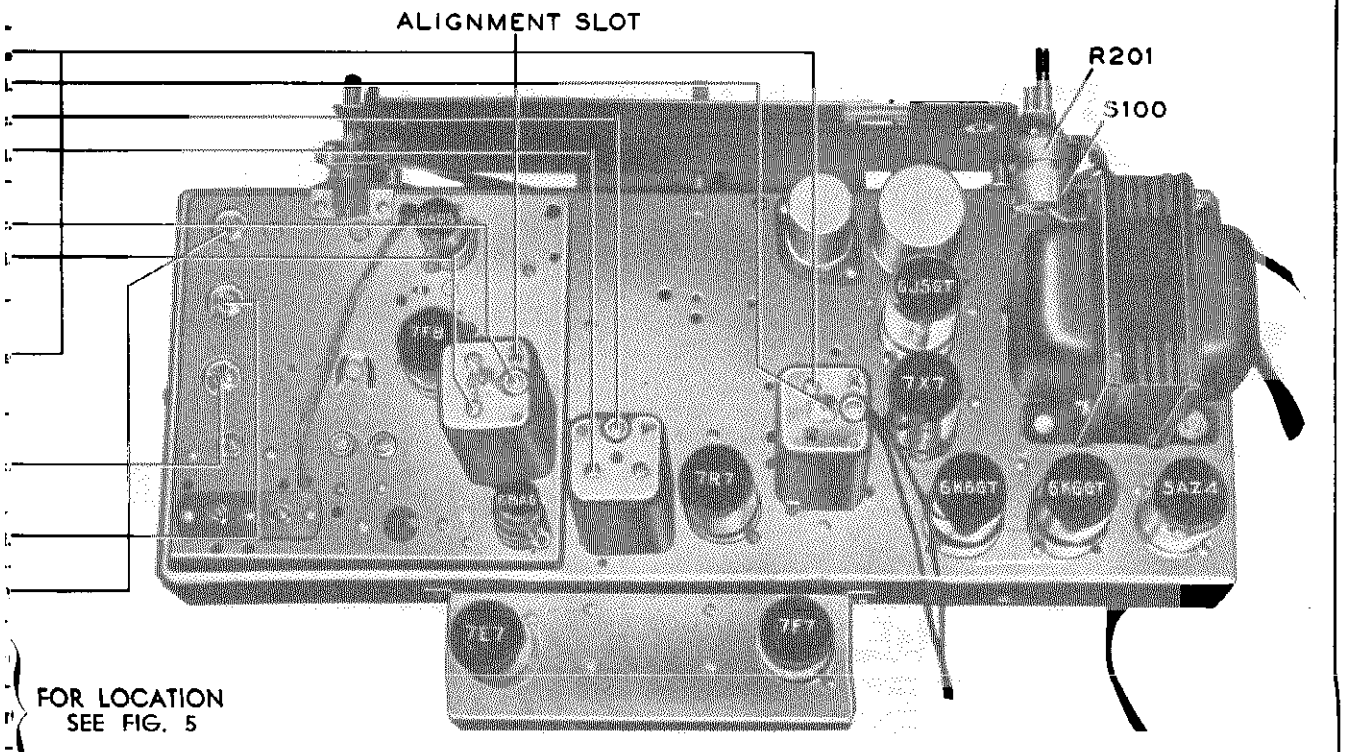

Figure 9. Top View, Showing FM Trimmer Locations

TP-5132-1

MODEL 49-1615

AM ALI

STEP	SIGNAL GENERATOR		RADIO	
	CONNECTION TO RADIO	DIAL SETTING	DIAL SETTING	SPECIAL INSTRUCTIONS
1	Through .1-mf. condenser to pin 8 of 7F8 tube.	455 kc.	Gang fully closed.	Adjust each trimmer, in order given, for maxin output. Do not repeat adjustments.
2	Loosely coupled with radiating loop. See note below.	1600 kc.	1600 kc.	Adjust for maximum output.
3	Same as step 2.	1500 kc.	1500 kc.	Adjust for maximum output.
4	Repeat steps 2 and 3 until no further increase in output is obtained.			

RADIATING LOOP: Make up a six-to-eight turn, 6-inch-diameter loop, using insulated wire; connect to signal generator leads and place near radio loop. Radio loop must be connected to set during alignment.

FM ALI

STEP	SIGNAL GENERATOR		RADIO	
	CONNECTION TO RADIO	DIAL SETTING	DIAL SETTING	SPECIAL INSTRUCTIONS
1	Through .1-mf. condenser to pin 1 of 6BA6 2nd i-f ampl.	9.1 mc.	88 mc.	Adjust trimmers, in order given, for maximum put.
2	Through .1-mf. condenser to pin 1 of 6BA6 1st i-f ampl.	9.1 mc.	88 mc.	Same as step 1.
3	Through .1-mf. condenser to pin 8 of 7F8 converter.	9.1 mc.	88 mc.	Same as step 1.
4	To FM aerial terminal (terminal 4 of J401).	105 mc.	105 mc.	Adjust for maximum.
5	Same as step 4.	92 mc.	92 mc.	Adjust L402 for maximum (see Note 1).
6	Same as step 4.	105 mc.	105 mc.	Adjust for maximum while rocking tuning contr
7	Same as step 4.	105 mc.	105 mc.	Adjust for maximum.
8	Dipole radiator (see Note 3).	92 mc.	92 mc.	Adjust L401 for maximum while rocking tuning trol (see Note 1).
9	Same as step 8.	92 mc.	92 mc.	Adjust L400 for maximum (see Note 1).
10	Repeat steps 5 through 10 until no further increase is obtained.			

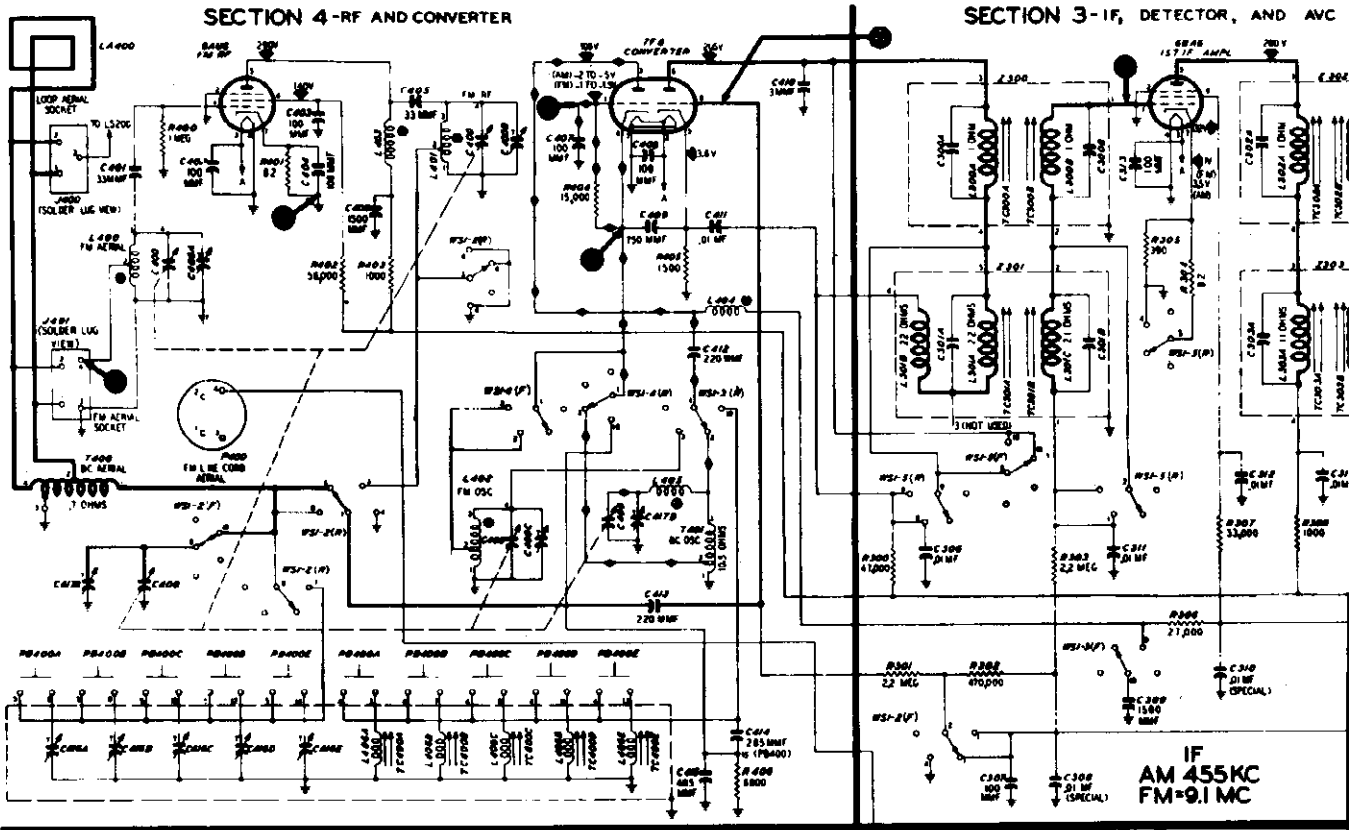

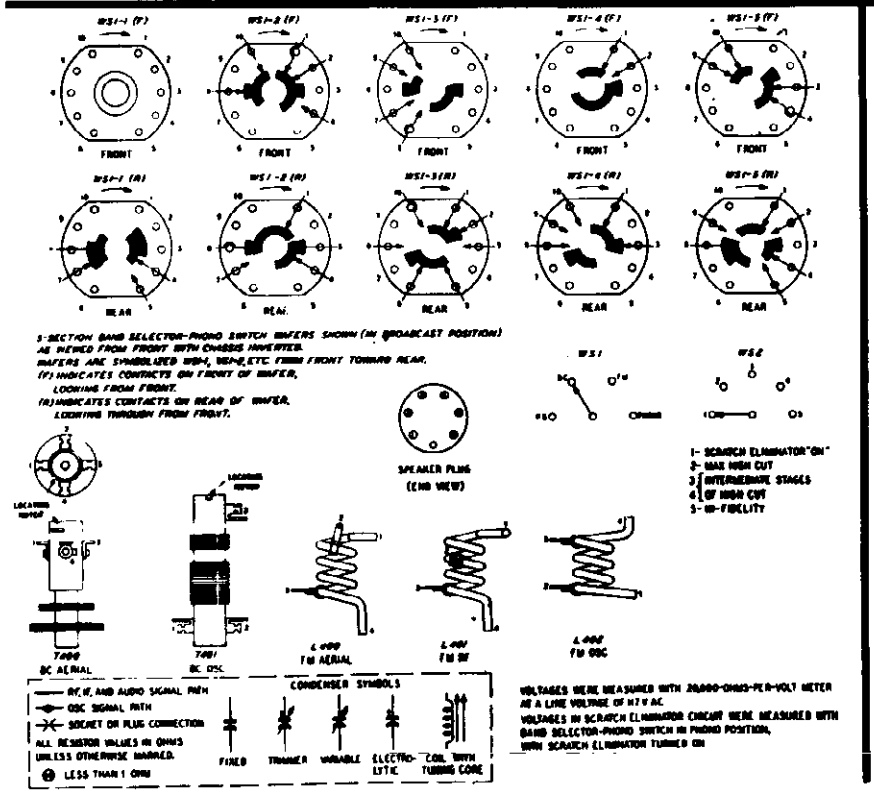

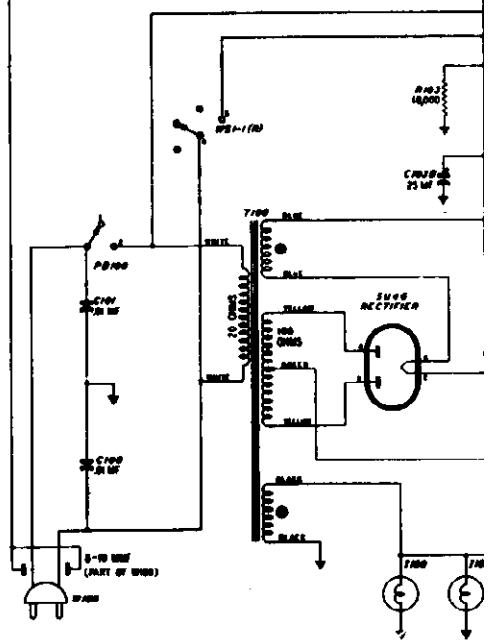

IMPORTANT!

To avoid altering FM operation, special care should be used in replacing any part. Replacement parts should be placed in the same physical positions as the original parts; connections should be of the same length, and should be soldered to the same points. The placement or length of leads should not be changed.

SPECIFICATIONS

CABINET ..... Wood console, mahogany finish, Georgian style

CIRCUIT ..... 11-tube superheterodyne

FREQUENCY RANGES

Broadcast ..... 540—1620 kc.

FM ..... 88—108 mc.

AUDIO OUTPUT ..... 10 watts

PUSH BUTTO

OPERATING V

POWER CONSU

Radio .....

Phonograph .

AERIALS .....

MODEL 49-1615

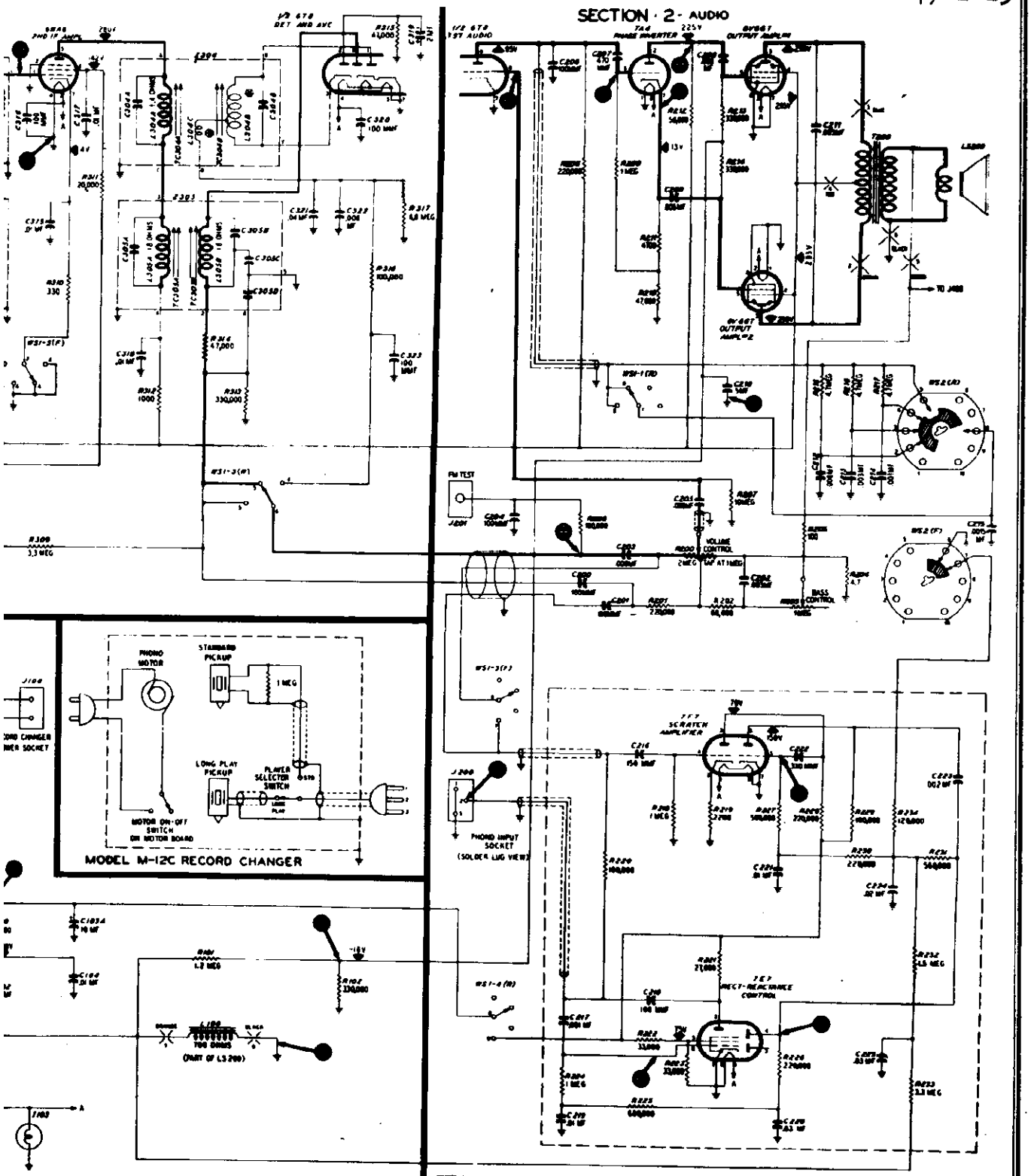

FIGURE 9.

PHILCO RADIO-PHONOGRAPH MODEL 49-1615. SECTIONALIZED SCHEMATIC DIAGRAM. SHOWING TEST POINTS

....Six: Five for broadcast stations, one for power on-off
..105—125 volts, 60 cycles, a.c.

N

....110 watts
....125 watts

....Low-impedance broadcast loop; FM line-cord aerial; provision for external aerial

INTERMEDIATE FREQUENCIES

AM .....455 kc.
FM .....9.1 mc.

PHONOGRAPH .....Philco Automatic Record Changer and Record Player Combination, Model M-12C

PHILCO TUBES (11) ....6AU6, 7F8, 6BA6(2), 6T8, 7A4, 6V6GT(2), 7E7, 7F7, 5U4G

The d-c resistance of the voice coil of LS200 is 10 ohms.

RECORD CHANGERS See Philco Model M-12C Pages

MENT CHART

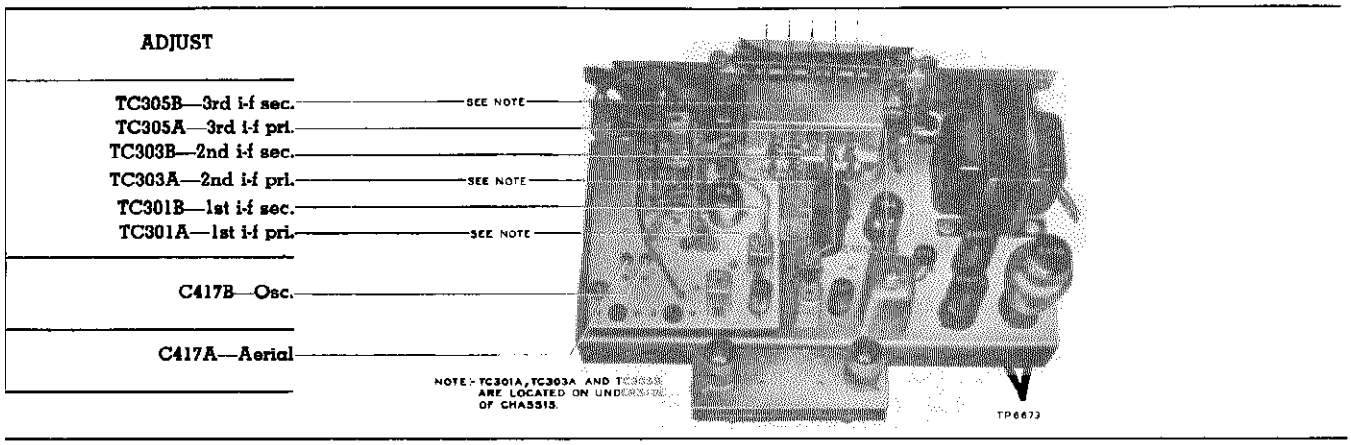

FIGURE 7. TOP VIEW, SHOWING AM TRIMMER LOCATIONS

MENT CHART

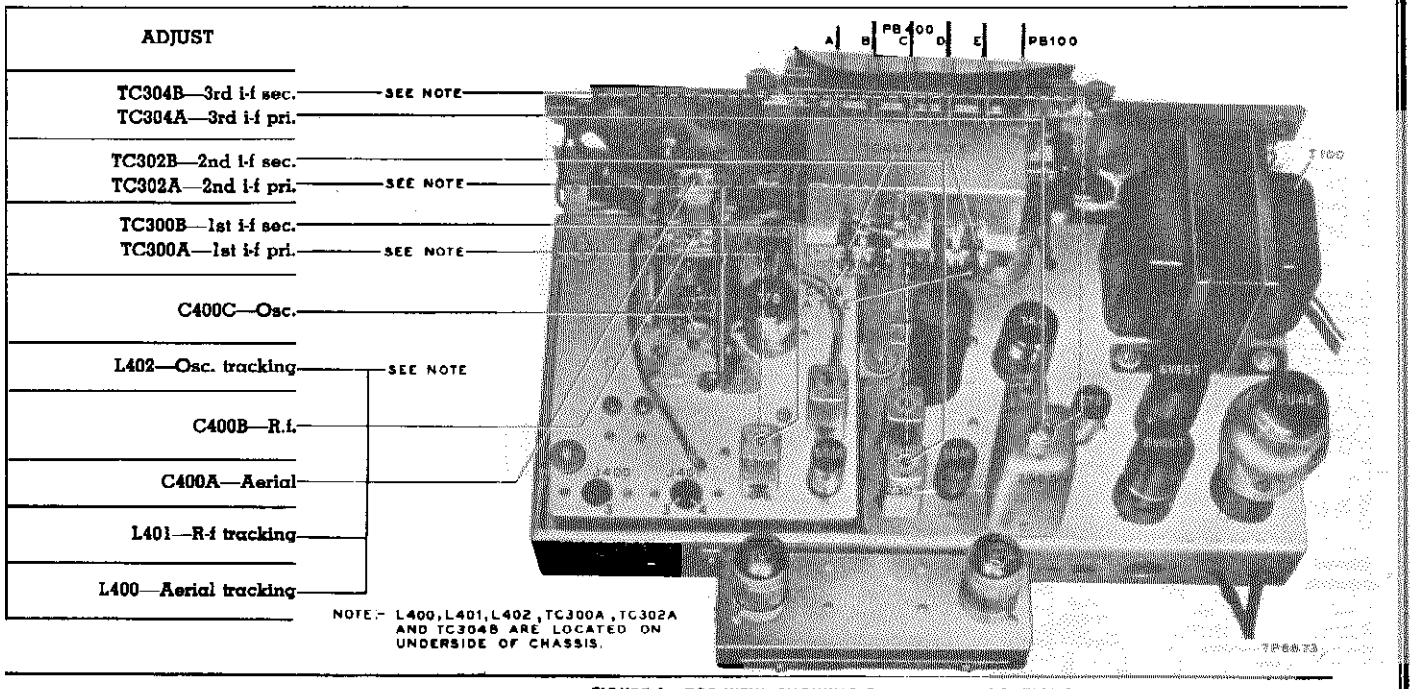

FIGURE 8. TOP VIEW, SHOWING FM TRIMMER LOCATIONS



MODEL 49-1615

CIRCUIT DESCRIPTION

Philco Radio-Phonograph Model 49-1615 consists of an 11-tube superheterodyne and a Model M-12C Philco Automatic Record Changer and Record Player (album length) Combination.

A low-impedance loop aerial within the cabinet normally provides adequate signal pickup on the standard broadcast band. In most localities, the built-in FM line-cord aerial provides satisfactory FM reception. In areas where FM signals are weak, an outdoor dipole aerial, such as Philco Part No. 45-1462, will provide additional pickup. To increase the pickup on both bands, use the Philco Aerial Coupler, Part No. 76-2353-1, with the outdoor dipole aerial. For increased signal pickup on the standard broadcast band only, use the coupler with an external aerial of the single-wire type, such as Philco Part No. 45-1494.

The r-f stage (FM only), the converter, and the 1st i-f amplifier are mounted on a separate chassis for improved operation at high frequencies. A 6AU6 high-frequency pentode is used as the FM r-f amplifier. A 7F8 high-frequency dual triode is employed as the converter. There are two transformer-coupled i-f stages using 6BA6 high-frequency pentodes. Each i-f stage has a double set of transformers; one is tuned to 9.1 mc., the FM intermediate frequency, and the other is tuned to 455 kc., the AM intermediate frequency. The use of individual transformers for FM and AM gives better stability and allows more complete shielding. In FM operation, the primary and secondary of the first AM i-f transformer are shorted out, to attenuate undesirable beat frequencies; switching of other windings is unnecessary.

The multi-purpose 6T8 provides AM and FM detection and functions as the first audio amplifier. Two diodes of this tube operate in a ratio detector circuit. The other diode acts as the AM detector and also supplies the a-v-c voltage. The triode section is the first audio amplifier for both radio and phono operation.

A 7A4 triode operates as a plate-and-cathode-loaded phase inverter, driving a pair of 6V6GT's in the push-pull output stage. Tone fidelity is obtained by the use of inverse feedback in the audio system. This feedback voltage is taken from the secondary of the output transformer and returned to the low side of the volume control.

Selective tone compensation is provided by a continuously variable bass booster and a five-step treble switch that ranges from Scratch Eliminator "on" through maximum high-cut to Hi Fidelity.

The Philco Electronic Scratch Eliminator, for phono operation, may be switched on or off, as required. In this circuit, the reactance tube (pentode section of a 7E7) functions as a variable shunt capacitance at the phono-input circuit; at low signal levels, this tube bypasses a controlled portion of the higher audio frequencies to ground. The grid bias of the reactance tube controls its effective capacitance, which becomes maximum with low bias and minimum with high bias. This control bias is developed by the audio signal itself; a proportionate amount of the signal is taken from the pickup output, amplified by each triode section of the 7F7, and rectified by the diode section of the 7E7.

©John F. Rider

MODEL 49-1615

TROUBLE SHOOTING

POWER SUPPLY

Section 1.

CAUTION: Do not turn on the power with the speaker disconnected, as this may cause damage to the set.

For the tests in this section, use a d-c voltmeter, connecting the leads between the chassis, test point C, and the test points indicated in the chart. The voltage readings given were taken with a 20,000-ohms-per-volt meter at a line voltage of 117 volts, a.c.

Turn on the power, and set the volume control to minimum. Turn the bass control fully counterclockwise, and set the treble selector switch to the left-hand TREBLE position. Set the band switch to the broadcast position.

If the "NORMAL INDICATION" is obtained in step 1, proceed with the tests for Section 2 (audio circuits); if not, isolate and correct the trouble in this section.

STEP	TEST POINT	NORMAL INDICATION	ABNORMAL INDICATION	POSSIBLE CAUSE OF ABNORMAL INDICATION
1	A	230v		Trouble in this section. Isolate by the following tests.
2	B	300v	No voltage	Defective: 5U4G. Open: T100, PB100, W100. Shorted: C100, C101.
			Low voltage	Defective: 5U4G. Open: C102, L100. Shorted: C103B, C311* C307*. Leaky: C102.
			High voltage	Open: T200*, R103. Shorted: L100.
3	A	230v	No voltage	Open: R100. Shorted: C103A, C303*.
			Low voltage	Leaky: C103A, C303*. Increased resistance: R100.
			High voltage	Open: T200*.
4	D	−16v	No voltage	Open: R101. Shorted: C210*.
			Low voltage	Leaky: C210*.
			High voltage	Open: R102.
Listening Test: Abnormal hum and instability may be caused by open C102, C103A, or C103B.				

* This part, located in another section, may cause abnormal indication in this section.

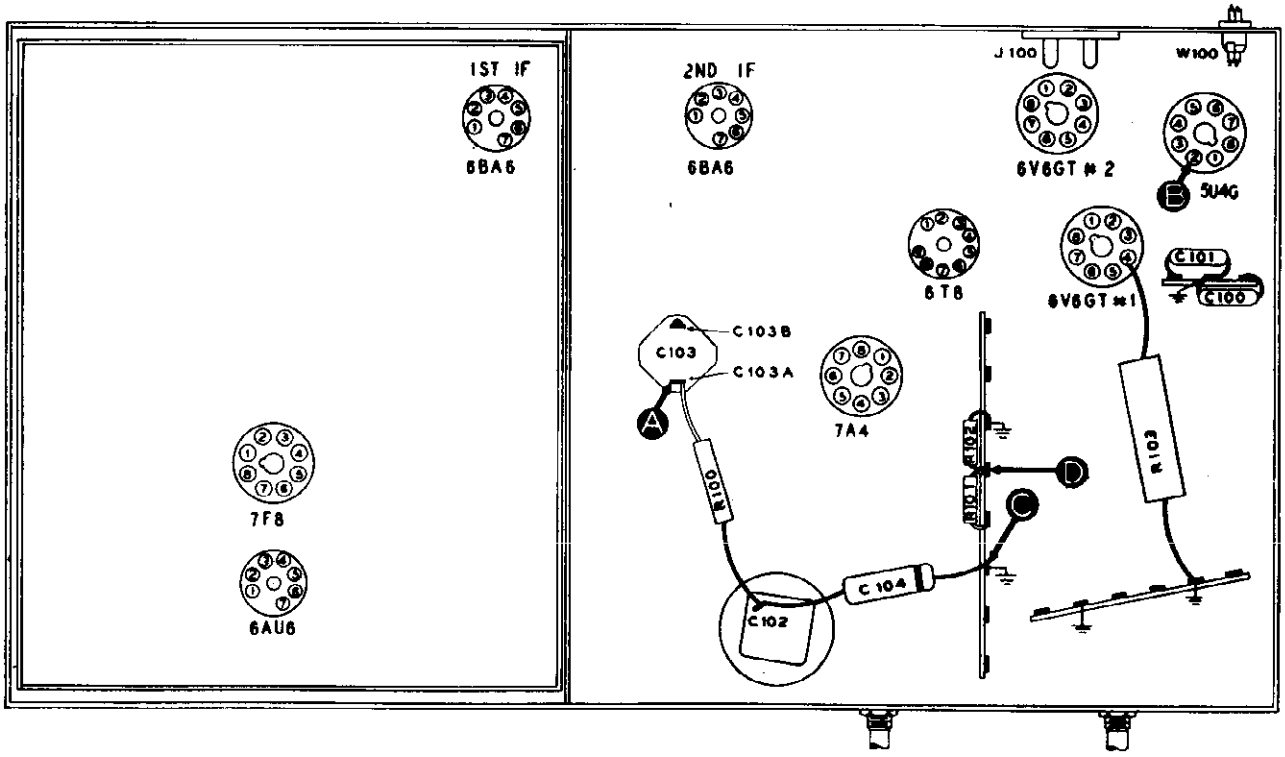

FIGURE 1. BOTTOM VIEW, SHOWING SECTION 1 TEST POINTS

©John F. Rider

TROUBLE SHOOTING

Section 2. AUDIO CIRCUITS

AUDIO-AMPLIFIER TESTS

For the tests in this section, use an audio-frequency signal generator. Connect the generator ground lead to the chassis, test point C; connect the output lead through a .1-mf. condenser to the test points indicated in the chart.

Set the volume control to maximum, and turn the bass control fully counterclockwise. Set the treble selector switch to the second TREBLE position. Set the band switch to the broadcast position unless otherwise noted in the chart.

If the "NORMAL INDICATION" is obtained in step 1, proceed with the tests for the scratch-eliminator circuits; if not, isolate and correct the trouble in the audio-amplifier circuits.

STEP	TEST POINT	NORMAL INDICATION	POSSIBLE CAUSE OF ABNORMAL INDICATION
1	A	Loud, clear speaker output with weak signal input.	Trouble in audio-amplifier circuits. Isolate by the following tests.
2	B (Remove 7A4)	Clear output with strong input.	Defective: 6V6GT (#1), LS200. Open: C208, R213, T200. Shorted or leaky: C208, C210, C211,
3	D (7A4 removed)	Clear output with strong input.	Defective: 6V6GT (#2). Open: C209, R214. Shorted or leaky: C209.
4	E (Replace 7A4)	Loud, clear output with moderate input.	Defective: 7A4. Open: R209, R210, R211, R212. Shorted or leaky: C207.
5 (a)	F	Loud, clear output with weak input.	Defective: 6T8. Open: R208, C207, R207. Shorted or leaky: C206, C215, C320*.
5 (b)	F	Loud, clear output with weak input, for all 5 positions of treble selector switch.	Open: C212, C213, C214, C215, R215, R216, R217, WS2. Shorted or leaky: C212, C213, C214.
6 (a)	A	Loud, clear output with weak input.	Open: C203, C205, R204, R200 (rotate through range).
6 (b)	A	Loud, clear output with weak input, for any position of bass control.	Open: R203, R202, C202. Shorted: C202.
7	G (Band switch in Phono position)	Loud, clear output with weak input.	Open: WS1-3 (F), R220. Shorted: shielded cable.
Listening Test: Abnormal hum and distortion may be caused by leaky C207, C208, C209, or by open C206 or C210.			

* This part, located in another section, may cause abnormal indication in this section.

SCRATCH-ELIMINATOR TESTS

Set the bass control fully counterclockwise. Turn the treble selector switch to the high-fidelity position, maximum clockwise. Set the band switch to the phono position. For all steps except 1(b), set the volume control to maximum; for this step, adjust the volume control as directed in the chart.

Turn the scratch eliminator on or off as indicated in the chart. (The scratch eliminator is on when the treble selector switch is in the counterclockwise position.)

Connect an output meter across the primary of the output transformer, T200.

IMPORTANT! For all steps except step 4, use the 0—10-volt output-meter range; for step 4 only, use the 0—50-volt range. If the proper ranges are not used, erroneous readings will result.

Connect the ground lead of an audio signal generator to the chassis, test point C, and connect the output lead through a .1-mf. condenser to the test points indicated in the chart. Set the generator for 5000 cycles. Adjust the generator output as directed in the chart.

If normal operation is indicated by the tests in step 1, (a) and (b), proceed with the tests for Section 3 (i-f, detector, and a-v-c circuits); if not, isolate and correct the trouble in the scratch-eliminator circuits.

NOTE: For steps 2, 3, and 4, connect the positive lead of a 20,000-ohms-per-volt, d-c voltmeter to the chassis, test point C; connect the prod end of the negative lead through a 100,000-ohm isolating resistor to the "VOLTMETER" test points indicated in the chart.

MODEL 49-1615

TROUBLE SHOOTING

AUDIO CIRCUITS (Cont.)

SCRATCH-ELIMINATOR TESTS

Section 2.

STEP	TEST POINT	SIGNAL GEN. OUTPUT	VOLT-METER	SPECIAL INSTRUCTIONS	POSSIBLE CAUSE OF ABNORMAL INDICATION
1 (a)	G	Adjust for 10v output-meter reading, with scratch eliminator off.		Turn scratch eliminator on; output voltage should drop to 6.5v (approx.).	
1 (b)	G	Same as for 1 (a).		Reduce volume control to obtain output-meter reading of 1v. Increase generator output for output-meter reading of 10v. Turn scratch eliminator on; output voltage should not drop below 8.8v (approx.).	Trouble in scratch-eliminator circuits. Isolate by the following tests.
2	H	See SPECIAL INSTRUCTIONS.	J	With scratch eliminator on, increase generator output for voltmeter reading of 8.8v, negative; failure to obtain this value indicates trouble.	Defective: 7F7, 7E7 (diode section), WS1-4 (R). Open: R229, R227, R231, R234, C223, WS2 (F).
3	H	Same setting which produced 8.8v reading in step 2, with scratch eliminator on.	K	With scratch eliminator on, voltage at point K should be 2v, negative.	Open: R226, R225, R224. Shorted: C219, C220, C217.
4	G	Same as step 2.	J	With scratch eliminator on, voltage at point J should be approx. 28v negative.	Defective: 7F7. Open: C216, C222, R218, R219, R228. Shorted or leaky: C222.
5	G	Adjust for 10v output-meter reading, with scratch eliminator off.		Turn scratch eliminator on; output voltage should drop to 6.5v (approx.).	Defective: 7E7 (pentode section). Open: R221, R222, R223, C218, C217. Shorted: C218, C217.

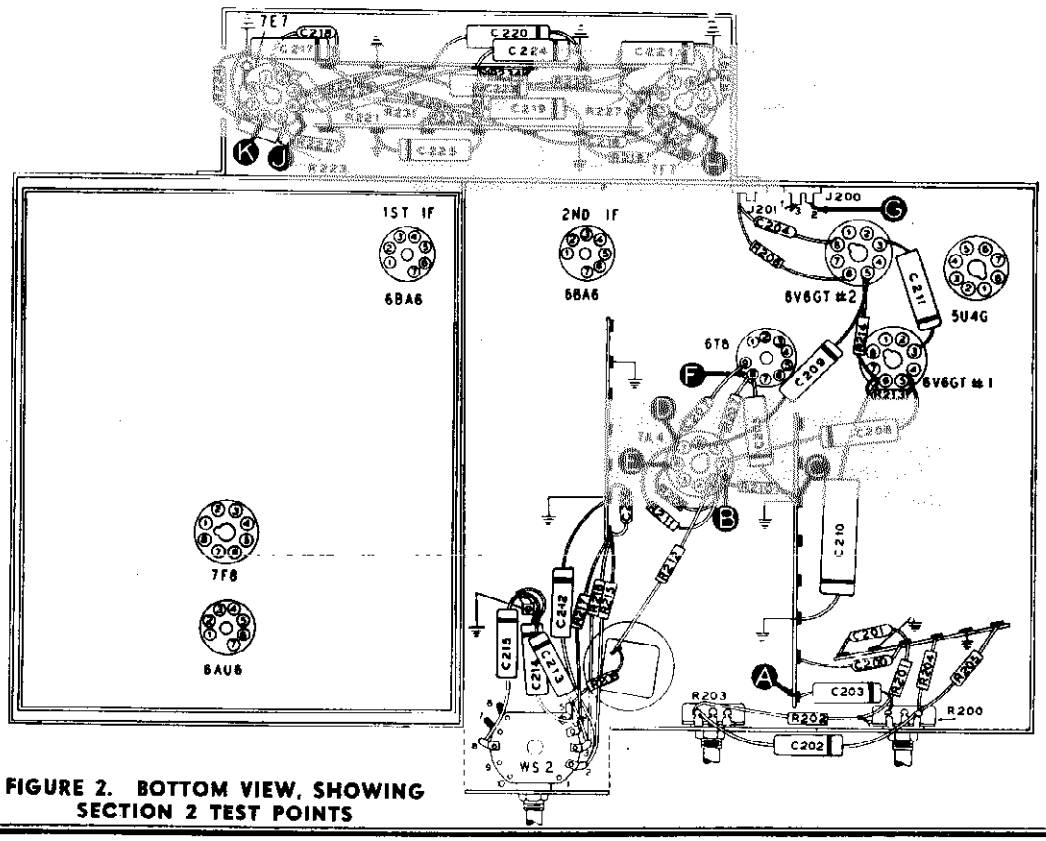

FIGURE 2. BOTTOM VIEW, SHOWING SECTION 2 TEST POINTS

TROUBLE SHOOTING

Section 3. I-F, DETECTOR, AND A-V-C CIRCUITS

AM TESTS

For the tests in this section, use an r-f signal generator, with modulated output, set at 455 kc. Connect the generator ground lead to the chassis, test point C; connect the output lead through a .1-mf. condenser to the test points indicated in the chart.

Set the volume control to maximum, and turn the bass control fully counterclockwise. Set the treble selector switch to the second TREBLE position. Set the band switch to the broadcast position, and rotate the tuning control until the tuning condenser is fully meshed.

If the "NORMAL INDICATION" is obtained in step 1, proceed with the FM tests; if not, isolate and correct the trouble in the AM circuits.

To provide a complete i-f-amplifier check, test point A for this section is placed at the grid of the mixer in Section 4; therefore, the effectiveness of step 1 as a master check is dependent upon the condition of certain parts in the mixer circuit. These parts are listed below under "POSSIBLE CAUSE OF ABNORMAL INDICATION."

STEP	TEST POINT	NORMAL INDICATION	POSSIBLE CAUSE OF ABNORMAL INDICATION
1	A	Loud, clear speaker output with weak signal input.	Trouble in AM i-f circuits. Isolate by the following tests.
2	B	Loud, clear output with strong input.	Defective: 6BA6 (2nd i-f ampl.), 6T8. Misaligned: Z305. Open: R310, R311, R312, R313, R314, L304A, L305B, L302B, L303B, WS1-5. Shorted: L303B, L305A, L305B. Shorted or leaky: C316, C315, C317, C318, C305A, C305B, C305C, C305D.
3	D	Loud, clear output with moderate input.	Defective: 6BA6 (1st i-f ampl.). Misaligned: Z303. Open: L300B, L301C, L302A, L302B, R303, R309, R305, R307, R308. Shorted: L303A. Shorted or leaky: C313, C312, C310, C314, C301B, C303A.
4	A	Loud, clear output with weak input.	Defective: 7F8*. Misaligned: Z301. Open: R405*, R300, R301, L300A, L301A, L301B. Shorted: L301A, L301B, L301C, WS1-5. Shorted or leaky: C410*, C411*, C409*, C301A, C301B, C306.
Listening Test: Abnormal hum may be caused by open: C306, C310, C312, C313, C314, C316, C317, C318.			

* This part, located in another section, may cause abnormal indication in this section.

FM CIRCUITS

Set the band switch to FM position, and follow the instructions preliminary to the AM tests with these exceptions; set the signal-generator frequency to 9.1 mc., and detune to one side or the other until a satisfactory test signal is obtained.

The most satisfactory check on the operation of the discriminator circuit is the ability of the circuit to take proper alignment. See ALIGNMENT OF FM CIRCUITS.

If the "NORMAL INDICATION" is obtained in step 1, proceed with the tests for Section 4 (r-f and converter circuits); if not, isolate and correct the trouble in the FM circuits.

Usually, if a part is found to operate satisfactorily for AM it will also operate satisfactorily for FM.

MODEL 49-1615

TROUBLE SHOOTING

Section 3. I-F, DETECTOR, AND A-V-C CIRCUITS (Cont.)

FM TESTS

STEP	TEST POINT	NORMAL INDICATION	POSSIBLE CAUSE OF ABNORMAL INDICATION
1	A	Loud, clear speaker output with weak signal input.	Trouble in FM i-f circuits. Isolate by the following tests.
2	B	Loud, clear output with strong input.	Open: WS1-5, L304B, L304C, R315, C319, R316, R317, WS1-3. Shorted or leaky: C322, C323, C304A, C304B, C319, C321. Shorted: L304A, L304B. Misaligned: Z304.
3	D	Loud, clear output with moderate input.	Misaligned: Z302. Shorted: L302A, L302B, C302A, C302B. Open: R304, WS1-5.
4	A	Loud, clear output with weak input.	Misaligned: Z300. Shorted: L300A, L300B, C300A, C300B, C307, WS1-2. Open: WS1-2, WS1-5.

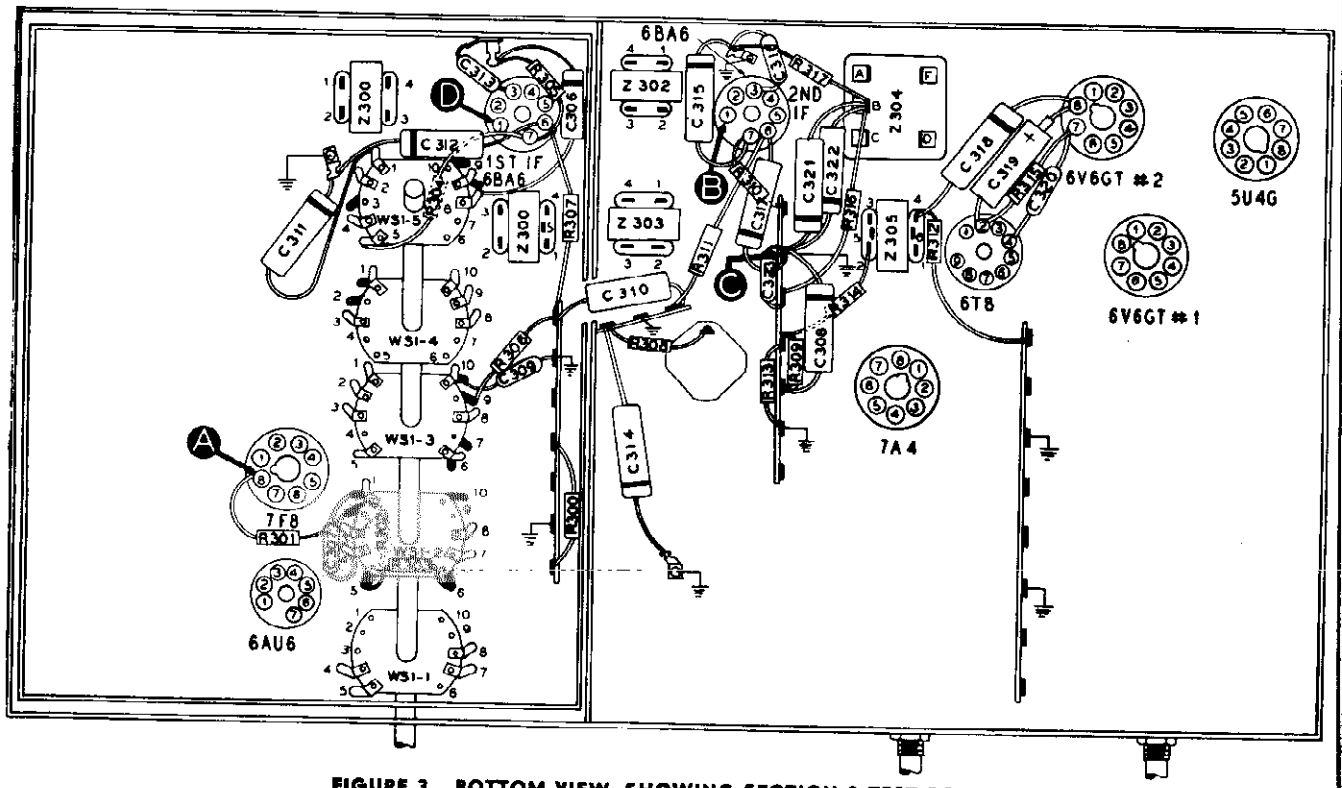

FIGURE 3. BOTTOM VIEW, SHOWING SECTION 3 TEST POINTS

TP-767JC

TROUBLE SHOOTING

Section 4. R-F AND CONVERTER CIRCUITS

For the tests in this section, with the exception of the oscillator test, use an r-f signal generator with modulated output. Connect the generator ground lead to the chassis, test point C; connect the output lead through a .1-mf. condenser to the test points indicated in the chart.

Set the volume control to maximum, and turn the bass control fully counterclockwise. Set the treble selector switch to the second TREBLE position. Set the band switch, tuning control, and signal-generator frequency as indicated in the chart.

If the "NORMAL INDICATION" is not obtained in step 1 of each chart, isolate and correct the trouble in this section. If the trouble is not revealed by the tests for this section, check the alignment.

OSCILLATOR TESTS: For the oscillator tests (steps 2 and 4 of the AM test chart, and step 2 of the FM test chart), connect the positive lead of a high-resistance voltmeter to the oscillator cathode, pin 4 of the 7F8 tube (test point D). Connect the prod end of the negative lead through a 100,000-ohm isolating resistor to the oscillator grid, pin 1 of the 7F8 tube (test point B). Use a suitable meter range, such as 0—10 volts. Proper operation of the oscillator is indicated by negative voltages of approximately the values given in the chart (measured with 20,000-ohms-per-volt meter) throughout the tuning ranges of the broadcast and FM bands.

AM TESTS

STEP	TEST POINT	SIGNAL GEN. FREQ.	BAND SWITCH	RADIO TUNING	NORMAL INDICATION	POSSIBLE CAUSE OF ABNORMAL INDICATION
1 (a) 1 (b)	A A	1000 kc. Tune to frequency of each push-button.	BC Push-button	Tune to signal. Depress each button, in order.	Loud, clear speaker output with weak signal input.	Trouble in AM r-f circuits. Isolate by the following tests.
2 (Osc. Test.)	B to D		BC	Tune through range.	Negative 2—5 volts.	Defective: 7F8. Open: R404, T401, L405, C412, L404, R306*, WS1-3, WS1-4. Shorted: C412, C400, C417B, C407.
3	A	1000 kc.	BC	Tune to signal.	Loud, clear output with weak input.	Open: T400, WS1-2, C413. Shorted: C400, C417A.
4 (Osc. Test.)	B to D		Push-button	Depress each button, in order.	Negative 2—5 volts.	Open: L406, PB400, R406, WS1-3, WS1-4. Shorted: C414, C415.
5	A	Tune to frequency of each push-button.	Push-button	Depress each button, in order.	Loud, clear output with weak input.	Open: WS1-2, PB400. Shorted: C416.
Listening Test: Distortion may be caused by open R301*, R302*, or R309*. Hum and distortion may be caused by open C308* or C310*.						

* This part, located in another section, may cause abnormal indication in this section.

FM TESTS

STEP	TEST POINT	SIGNAL GEN. FREQ.	BAND SWITCH	RADIO TUNING	NORMAL INDICATION	POSSIBLE CAUSE OF ABNORMAL INDICATION
1	E	95 mc.	FM	Tune to signal.	Loud, clear speaker output with weak signal input.	Trouble in FM r-f circuits. Isolate by the following tests.
2 (Osc. Test.)	B to D		FM	Tune through range.	Negative 1—1.5 volts.	Defective: 7F8. Open: L402, WS1-3, WS1-4. Shorted: C400, C400C, C309*. Shorted or leaky: C407, C409.
3	E	95 mc.	FM	Tune to signal.	Loud, clear output with weak input.	Defective: 6AU6. Open: L400, C401, R400, R401, R402, R403, L403, C405, L401. Shorted: C400, C400A, L400, L401, WS1-2, C400B. Shorted or leaky: C402, C404, C403, C405, C406.
Listening Test: Hum and distortion may be caused by open C402, C406, C408, C409.						

* This part, located in another section, may cause abnormal indication in this section.

MODEL 49-1615

SETTING THE PUSH BUTTONS

1. Connect the output meter between the No. 3 pin of the aerial input jack, J400, and the chassis. See figure 8.

2. Turn the volume control to maximum, and the bass control fully counterclockwise. Turn the treble selector switch fully clockwise. Set the band switch to the push-button position.

3. Couple the signal generator loosely to the loop aerial (see RADIATING LOOP note under AM ALIGNMENT CHART).

4. Turn on the power, and allow the radio to warm up for 15 minutes before starting the adjustments.

5. Starting with the lowest frequency desired, set the signal generator to the frequency (modulation on), push the station-selector push button, and adjust the associated oscillator tuning core and aerial trimmer condenser (marked on rear of chassis) for maximum indication on the output meter.

TROUBLE SHOOTING

R-F AND CONVERTER CIRCUITS (Cont.)

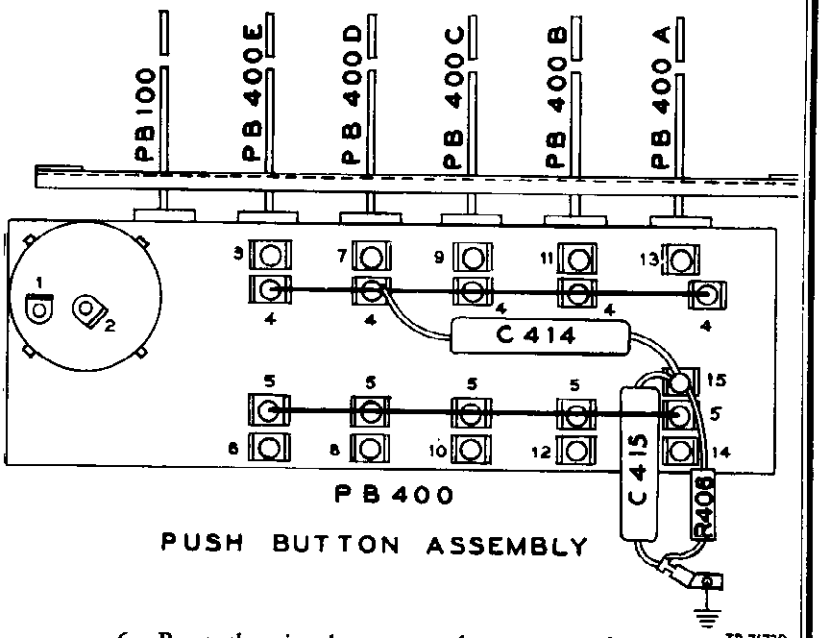

6. Reset the signal-generator frequency, and repeat the procedure for each remaining station-selector push button.

7. Turn off the signal generator, and make a final adjustment of all tuning cores and trimmer condensers while listening to the stations for which the adjustments are being made.

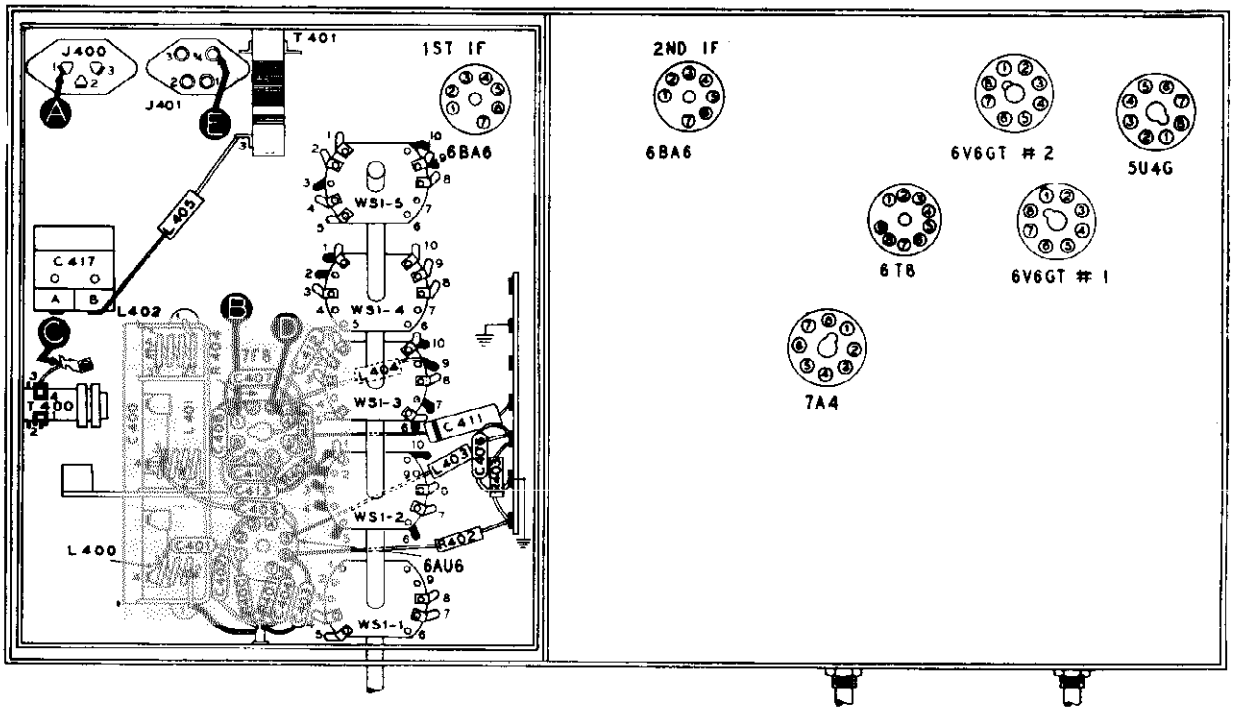

FIGURE 4. BOTTOM VIEW, SHOWING SECTION 4 TEST POINTS

TP-7673E

©John F. Rider

MODEL 49-1615

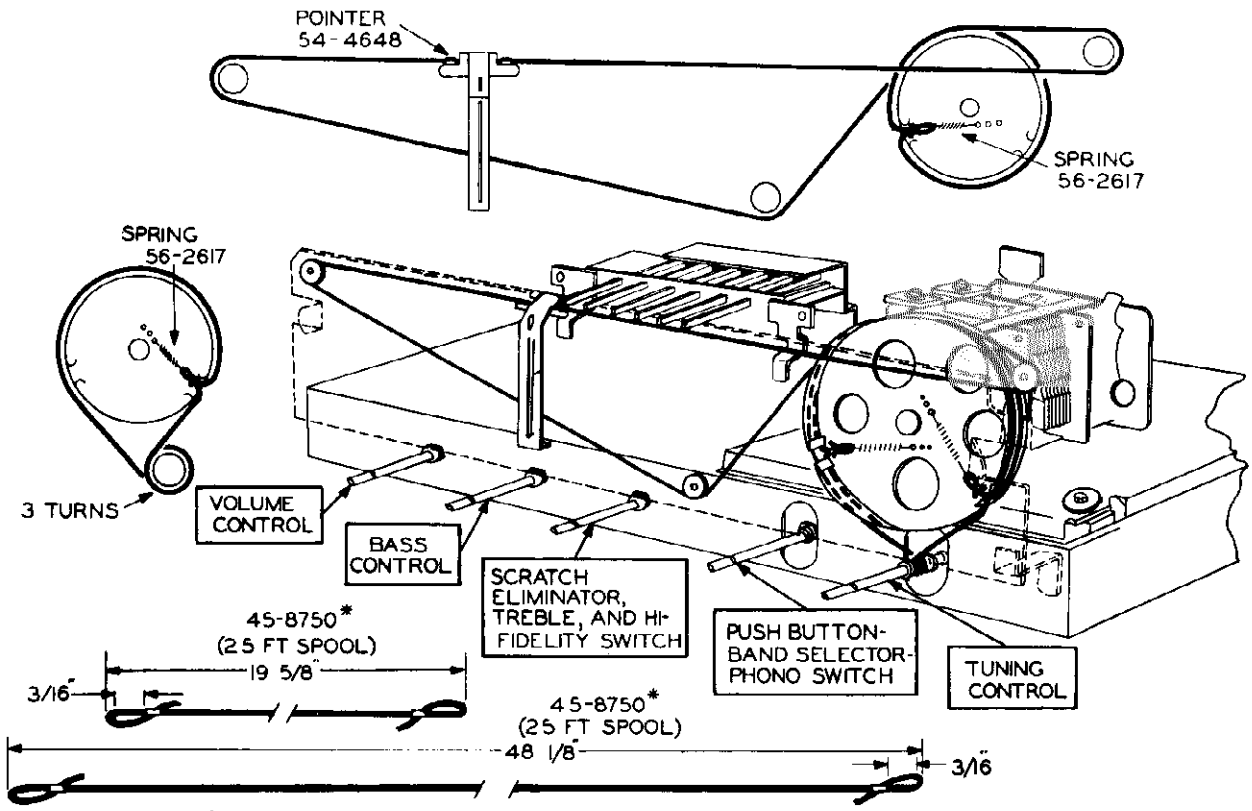

FIGURE 5. DRIVE-CORD INSTALLATION DETAILS TP-7673F

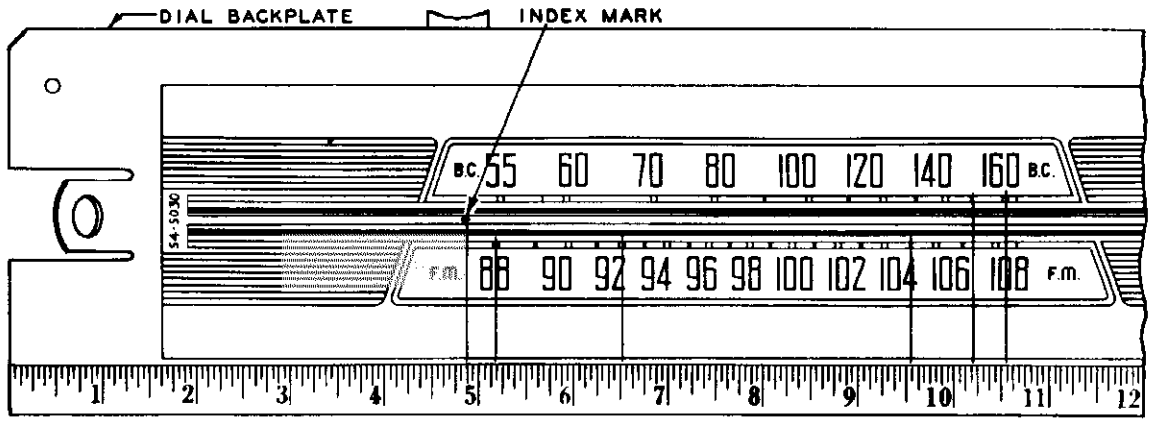

FIGURE 6. DIAL-BACKPLATE CALIBRATION MEASUREMENTS TP-7088

CALIBRATING DIAL BACKPLATE

When the radio chassis has been removed from the cabinet, dial calibration and alignment points may be marked on the dial backplate below the pointer.

The method of measuring for these points is illustrated in figure 6. Hold a ruler against the scale backplate, with the start of the ruler at the left-hand edge of the backplate, and mark pencil dots at the proper points for the required frequency settings. When the ruler is correctly placed, the index mark is approximately 4-7/8" from the reference point indicated in figure 6.

With the tuning gang fully meshed, the pointer should be adjusted on the dial drive cord to coincide with the index mark.

After the chassis is installed in the cabinet, the tuning condenser should be fully meshed, and the dial pointer should be moved to coincide with the index mark on the dial.

© John F. Rider

MODEL 49-1615

REPLACEMENT PARTS LIST

NOTE: Part numbers identified by an asterisk (*) are general replacement items. These numbers may not be identical with those on factory assemblies; also, the electrical values of some replacement items may differ from the values indicated in the schematic diagram and parts list. The values substituted in any case are so chosen that the operation of the radio will be either unchanged or improved. When ordering replacements, use only the "Service Part No."

SECTION 1
POWER SUPPLY

Reference Symbol	Description	Service Part No.
C100	Condenser, line filter, .01 mf.	60-0120*
C101	Condenser, line filter, .01 mf.	60-0120*
C102	Condenser, electrolytic, filter, 40 mf., 450v	30-2568-20
C103	Condenser, electrolytic, 2-section	30-2556
C103A	Condenser, filter, 10 mf., 450v	Part of C103
C103B	Condenser, filter, 25 mf., 450v	Part of C103
C104	Condenser, filter, .01 mf.	61-0120*
L100	Field coil, filter choke	Part of LS200
I100	Lamp, bin light, 6.3-volt	34-2040
I101	Lamp, jewel light, 6.3-volt	34-2040
I102	Lamp, pilot light, 6.3-volt	34-2040
I103	Lamp, pilot light, 6.3-volt	34-2040
J100	Socket, phono power	27-6200
PB100	Switch, power off-on	Part of 42-1881†
R100	Resistor, filter, 18,000 ohms, 10w	33-1335-85
R101	Resistor, bias divider, 1.2 megohms	66-5123340*
R102	Resistor, bias divider, 330,000 ohms	66-4333340*
R103	Resistor, bleeder, 18,000 ohms, 10 watts	33-1335-85
T100	Transformer, power	32-8378
W100	Line cord and plug	L-2183*
WS1-1(R)	Switch-wafer section	Part of 42-1877‡

SECTION 2
AUDIO CIRCUITS

C200	Condenser, AM tone compensation, 100 mmf.	62-110009001
C201	Condenser, AM tone compensation, 100 mmf.	62-110009001
C202	Condenser, bass tone compensation, .003 mf.	61-0117*
C203	Condenser, d-c blocking, .006 mf.	45-3500-7*
C204	Condenser, r-f by-pass, 100 mmf.	62-110009001
C205	Condenser, d-c blocking, .006 mf.	45-3500-7*
C206	Condenser, r-f by-pass, 100 mmf.	62-110009001
C207	Condenser, d-c blocking, 470 mmf.	60-10515307*
C208	Condenser, d-c blocking, .006 mf.	45-3500-7*
C209	Condenser, d-c blocking, .006 mf.	45-3500-7*
C210	Condenser, bias filter, .5 mf.	45-3500-10*
C211	Condenser, tone compensation, .003 mf.	61-0117*
C212	Condenser, tone compensation, .006 mf.	45-3500-7*
C213	Condenser, tone compensation, .003 mf.	61-0117*
C214	Condenser, tone compensation, .001 mf.	45-3500-5*
C215	Condenser, tone compensation, .0015 mf.	45-3500-6*
C216	Condenser, high-pass filter, 150 mmf.	60-10155407*
C217	Condenser, d-c blocking, .001 mf.	45-3500-5*
C218	Condenser, reactance feedback, 100 mmf.	60-10105407*
C219	Condenser, bias filter, .01 mf.	61-0120*

†42-1881 Push-button switch assembly

SECTION 2 (Continued)
AUDIO CIRCUITS

Reference Symbol	Description	Service Part No.
C220	Condenser, bias filter, .03 mf.	45-3500-1*
C221	Condenser, bias filter, .01 mf.	61-0120*
C222	Condenser, d-c blocking, 330 mmf.	60-10335407*
C223	Condenser, d-c blocking, .002 mf.	61-0062*
C224	Condenser, bias filter, .02 mf.	61-0108*
C225	Condenser, bias filter, .03 mf.	45-3500-1*
J200	Socket, phono input	27-6126
J201	Socket, FM test	27-6180
LS200	Speaker, electrodynamic, 12" (including L100)	36-1630
R200	Volume control, 2 megohms, tap at 1 megohm	33-5535-19
R201	Resistor, bass boost, 220,000 ohms	66-4223340*
R202	Resistor, tone compensation, 68,000 ohms	66-3683340*
R203	Tone control, bass, 1 megohm	33-5539-52
R204	Resistor, voltage divider, inverse feedback, 4.7 ohms	66-9473340*
R205	Resistor, voltage divider, inverse feedback, 100 ohms	66-1103340*
R206	Resistor, isolating, 100,000 ohms	66-4103340*
R207	Resistor, grid return, 10 megohms	66-6103340*
R208	Resistor, plate load, 220,000 ohms	66-4223340*
R209	Resistor, grid return, 1 megohm	66-5103340*
R210	Resistor, cathode bias, 47,000 ohms	66-3473340*
R211	Resistor, cathode load, 4700 ohms	66-2472340*
R212	Resistor, plate load, 56,000 ohms	66-3563340*
R213	Resistor, grid return, 330,000 ohms	66-4333340*
R214	Resistor, grid return, 330,000 ohms	66-4333340*
R215	Resistor, tone compensation, 4.7 megohms	66-5473340*
R216	Resistor, tone compensation, 4.7 megohms	66-5473340*
R217	Resistor, tone compensation, 4.7 megohms	66-5473340*
R218	Resistor, grid return, 1 megohm	66-5103340*
R219	Resistor, cathode bias, 2200 ohms	66-2223340*
R220	Resistor, low-pass filter, 100,000 ohms	66-4103340*
R221	Resistor, plate load, 27,000 ohms	66-3273340*
R222	Resistor, screen voltage divider, 33,000 ohms	66-3333340*
R223	Resistor, screen voltage divider, 33,000 ohms	66-3333340*
R224	Resistor, grid return, 1 megohm	66-5103340*
R225	Resistor, bias filter, 680,000 ohms	66-4683340*
R226	Resistor, bias filter, 220,000 ohms	66-4223340*
R227	Resistor, grid return, 560,000 ohms	66-4563340*
R228	Resistor, plate load, 220,000 ohms	66-4223340*
R229	Resistor, plate load, 100,000 ohms	66-4103340*
R230	Resistor, bias filter, 220,000 ohms	66-4223340*
R231	Resistor, diode load, 560,000 ohms	66-4563340*

‡42-1877 Band switch, 5-section

© John F. Rider

REPLACEMENT PARTS LIST

SECTION 2 (Continued)
AUDIO CIRCUITS

Reference Symbol	Description	Service Part No.
R232	Resistor, bias filter, 1.5 megohms	66-5153340*
R233	Resistor, bias filter, 3.3 megohms	66-5333340*
R234	Resistor, diode load, 120,000 ohms	66-4123340*
T200	Transformer, output	32-8379
WS1-1(R)	Switch-wafer section	Part of 42-1877‡
WS1-3(F)	Switch-wafer section	Part of 42-1877‡
WS1-4(R)	Switch-wafer section	Part of 42-1877‡
WS2	Switch, wafer, scratch eliminator off-on and fidelity (treble selector) switch	42-1876

SECTION 3
I-F, DETECTOR, AND A-V-C CIRCUITS

C300A	Condenser, fixed trimmer, pri., 1st FM i-f	Part of Z300
C300B	Condenser, fixed trimmer, sec., 1st FM i-f	Part of Z300
C301A	Condenser, fixed trimmer, pri., 1st AM i-f	Part of Z301
C301B	Condenser, fixed trimmer, sec., 1st AM i-f	Part of Z301
C302A	Condenser, fixed trimmer, pri., 2nd FM i-f	Part of Z302
C302B	Condenser, fixed trimmer, sec., 2nd FM i-f	Part of Z302
C303A	Condenser, fixed trimmer, pri., 2nd AM i-f	Part of Z303
C303B	Condenser, fixed trimmer, sec., 2nd AM i-f	Part of Z303
C304A	Condenser, fixed trimmer, pri., 3rd FM i-f	Part of Z304
C304B	Condenser, fixed trimmer, sec., 3rd FM i-f	Part of Z304
C305A	Condenser, fixed trimmer, pri., 3rd AM i-f	Part of Z305
C305B	Condenser, fixed trimmer, sec., 3rd AM i-f	Part of Z305
C305C	Condenser, r-f by-pass	Part of Z305
C305D	Condenser, r-f by-pass	Part of Z305
C306	Condenser, plate decoupling, .01 mf.	61-0120*
C307	Condenser, r-f by-pass, 100 mmf.	62-110009001
C308	Condenser (special), a-v-c filter, .01 mf.	30-4641
C309	Condenser, r-f by-pass, 1500 mmf.	62-215001011
C310	Condenser, (special), r-f by-pass, .01 mf.	30-4641
C311	Condenser, r-f by-pass, .01 mf.	61-0120*
C312	Condenser, screen by-pass, .01 mf.	61-0120*
C313	Condenser, filament by-pass, 100 mmf.	62-110009001
C314	Condenser, plate by-pass, .01 mf.	61-0120*
C315	Condenser, cathode by-pass, .01 mf.	61-0120*
C316	Condenser, filament by-pass, 100 mmf.	62-110009001
C317	Condenser, screen by-pass, .01 mf.	61-0120*
C318	Condenser, plate by-pass, .01 mf.	61-0120*
C319	Condenser, electrolytic, diode-load filter, 2 mf., 50v	30-2417-7
C320	Condenser, filament by-pass, 100 mmf.	62-110009001
C321	Condenser, de-emphasis, .04 mf.	45-3500-2
C322	Condenser, de-emphasis, .008 mf.	61-0174*
C323	Condenser, r-f by-pass, 100 mmf.	62-110009001
L300A	Coil, primary winding, 1st FM i-f	Part of Z300

(SECTION 3 (Continued)
I-F, DETECTOR, AND A-V-C CIRCUITS

Reference Symbol	Description	Service Part No
L300B	Coil, secondary winding, 1st FM i-f	Part of Z300
L301A	Coil, primary winding, 1st AM i-f	Part of Z301
L301B	Coil, tertiary winding, 1st AM i-f	Part of Z301
L301C	Coil, secondary winding, 1st AM i-f	Part of Z301
L302A	Coil, primary winding, 2nd FM i-f	Part of Z302
L302B	Coil, secondary winding, 2nd FM i-f	Part of Z302
L303A	Coil, primary winding, 2nd AM i-f	Part of Z303
L303B	Coil, secondary winding, 2nd AM i-f	Part of Z303
L304A	Coil, primary winding, 3rd FM i-f	Part of Z304
L304B	Coil, secondary winding, 3rd FM i-f	Part of Z304
L304C	Coil, tertiary winding, 3rd FM i-f	Part of Z304
L305A	Coil, primary winding, 3rd AM i-f	Part of Z305
L305B	Coil, secondary winding, 3rd AM i-f	Part of Z305
R300	Resistor, plate dropping, 47,000 ohms	66-3473340
R301	Resistor, grid return, 2.2 megohms	66-5223340
R302	Resistor, a-v-c voltage divider, 470,000 ohms	66-4473340
R303	Resistor, grid return, 2.2 megohms	66-5223340
R304	Resistor, cathode bias (FM), 82 ohms	66-0823340
R305	Resistor, cathode bias, 390 ohms	66-1393340
R306	Resistor, plate dropping, 27,000 ohms	66-3273340
R307	Resistor, screen dropping, 33,000 ohms	66-3333340
R308	Resistor, plate decoupling, 1000 ohms	66-2103340
R309	Resistor, a-v-c filter, 3.3 megohms	66-5333340
R310	Resistor, cathode bias, 330 ohms	66-1333340
R311	Resistor, screen dropping, 20,000 ohms	66-3203340
R312	Resistor, plate decoupling, 1000 ohms	66-2103340
R313	Resistor, diode load, 330,000 ohms	66-4333340
R314	Resistor, i-f filter, 47,000 ohms	66-3473340
R315	Resistor, FM diode load, 47,000 ohms	66-3473340
R316	Resistor, isolating, 100,000 ohms	66-4103340
R317	Resistor, FM detector load, 6.8 megohms	66-5683340
TC300A	Tuning core, pri., 1st FM i-f	Part of Z300
TC300B	Tuning core, sec., 1st FM i-f	Part of Z300
TC301A	Tuning core, pri., 1st AM i-f	Part of Z301
TC301B	Tuning core, sec., 1st AM i-f	Part of Z301
TC302A	Tuning core, pri., 2nd FM i-f	Part of Z302
TC302B	Tuning core, sec., 2nd FM i-f	Part of Z302
TC303A	Tuning core, pri., 2nd AM i-f	Part of Z303
TC303B	Tuning core, sec., 2nd AM i-f	Part of Z303
TC304A	Tuning core, pri., 3rd FM i-f	Part of Z304
TC304B	Tuning core, sec., 3rd FM i-f	Part of Z304
TC305A	Tuning core, pri., 3rd AM i-f	Part of Z305
TC305B	Tuning core, sec., 3rd AM i-f	Part of Z305
WS1-2(F)	Switch-wafer section	Part of 42-1877
WS1-3(F)	Switch-wafer section	Part of 42-1877
WS1-3(R)	Switch-wafer section	Part of 42-1877
WS1-5(F)	Switch-wafer section	Part of 42-1877
WS1-5(R)	Switch-wafer section	Part of 42-1877
Z300	Transformer, 1st FM i-f	32-4257
Z301	Transformer, 1st AM i-f	32-4258
Z302	Transformer, 2nd FM i-f	32-4257-1
Z303	Transformer, 2nd AM i-f	32-4160-3
Z304	Transformer, 3rd FM i-f	32-4261-1
Z305	Transformer, 3rd AM i-f	32-4240-2

‡42-1877 Band switch, 5-section

© John F. Rider

MODEL 49-1615

REPLACEMENT PARTS LIST

SECTION 4
R-F AND CONVERTER CIRCUITS

Reference Symbol	Description	Service Part No.
C400	Condenser, tuning gang (AM, 2-section; FM, 3-section)	31-2724-6
C400A	Condenser, trimmer, FM aerial	Part of C400
C400B	Condenser, trimmer, FM r.f.	Part of C400
C400C	Condenser, trimmer, FM osc.	Part of C400
C401	Condenser, d-c blocking, 33 mmf.	30-1224
C402	Condenser, filament by-pass, 100 mmf.	62-110009001
C403	Condenser, screen by-pass, 100 mmf.	62-110009001
C404	Condenser, cathode by-pass, 100 mmf.	62-110009001
C405	Condenser, d-c blocking, 33 mmf.	30-1224
C406	Condenser, r-f by-pass, 1500 mmf.	62-215001011
C407	Condenser, oscillator grid, 100 mmf.	62-110009001
C408	Condenser, filament by-pass, 100 mmf.	62-110009001
C409	Condenser, d-c blocking, 750 mmf.	60-10755301
C410	Condenser, plate by-pass, 3 mmf.	30-1221
C411	Condenser, r-f by-pass, .01 mf.	61-0120*
C412	Condenser, d-c blocking, 220 mmf.	62-122001001
C413	Condenser, d-c blocking, 220 mmf.	62-122001001
C414	Condenser, ceramic, r-f voltage divider, 285 mmf.	30-1224-14
C415	Condenser, ceramic, r-f voltage divider, 485 mmf.	30-1224-15
C416	Condenser, aerial trimmer assembly, push-button (including C416A to C416E)	31-6479-3
C417	Condenser, trimmer assembly, 2-section	31-6476-8
C417A	Condenser, trimmer, Bc. aerial	Part of C417
C417B	Condenser, trimmer, Bc. oscillator	Part of C417
J400	Socket, loop aerial	27-6214-6
J401	Socket, FM dipole	27-6214-1
LA400	Loop aerial, Bc.	76-4337-1
L400	Coil, FM aerial	32-4158-1
L401	Coil, FM r-f	32-4159-1
L402	Coil, FM oscillator	32-4018-5
L403	Coil, r-f choke, FM plate load	32-4061-2
L404	Coil, r-f choke	32-4061-2
L405	Coil, r-f choke	32-4061-2
L406	Coil, oscillator assembly, push-button	
L406A	Coil, oscillator, 900—1600 kc.	32-3779
L406B	Coil, oscillator, 850—1500 kc.	32-3779
L406C	Coil, oscillator, 650—1300 kc.	32-4059-2
L406D	Coil, oscillator, 600—1200 kc.	32-4059-2
L406E	Coil, oscillator, 540—1000 kc.	32-4059-2
P400	Plug, wire, and lug assembly, FM aerial	41-3791-1
PB400A to PB400E	Push-button switch assembly	42-1881
R400	Resistor, grid return, 1 megohm	66-5103340*
R401	Resistor, cathode bias, 82 ohms	66-0823340*
R402	Resistor, screen dropping, 56,000 ohms	66-3563340*
R403	Resistor, plate decoupling, 1000 ohms	66-2103340*
R404	Resistor, grid return, 15,000 ohms	66-3153340*
R405	Resistor, cathode bias, 1500 ohms	66-2153340*
R406	Resistor, cathode bias, 6800 ohms	66-2683340*
T400	Transformer, Bc. aerial	32-4049-3
T401	Transformer, Bc. oscillator	32-4221-3
TC400A to TC400E	Tuning cores, push-button oscillator	Part of Z400

‡42-1877 Band switch, 5-section

SECTION 4 (Continued)
R-F AND CONVERTER CIRCUITS

Reference Symbol	Description	Service Part No.
WS1-2(F)	Switch-wafer section	Part of 42-1877‡
WS1-2(R)	Switch-wafer section	Part of 42-1877‡
WS1-3(R)	Switch-wafer section	Part of 42-1877‡
WS1-4(F)	Switch-wafer section	Part of 42-1877‡
WS1-4(R)	Switch-wafer section	Part of 42-1877‡

MISCELLANEOUS

Description	Service Part No.
Cabinet and Cabinet Hardware	
Back assembly, wood	76-4344
Back, cabinet, masonite	54-7702
Baffle (cardboard) and cloth assembly	40-7575-1
Baffle, speaker	219138
Bezel	56-6375FCP
Bin mechanism, R.H.	76-3223-6
Bin mechanism, L.H.	76-3223-5
Spring (2) bin mechanism, phono mtg.	56-4978
Bullet catch (2)	45-6002
Strike plate (2), bullet catch	45-6003
Cabinet	10731
Door, record album	45-6473
Doors, matched set	45-6472
Door pull (2)	56-5398-1
Frame assembly, changer mounting	76-4104
Grommet (3) changer mtg.	54-4313
Spring (6) changer mtg.	56-3043FA15
Hinge, phono door	56-5713-3
Hinge, phono door	56-5713-4
Hinge, knife (stop), top, radio door	56-5713
Hinge, knife (stop), bottom, radio door	56-5713-2
Hinge, knife, R.H., top, record door	45-6449
Hinge, knife, L.H., bottom, record door	45-6449-1
Instrument panel	45-6474
Metal grille (2)	56-6370
Cable-and-plug assembly, speaker	41-3734-11
Dial Scale Parts and Hardware	
Cord, drive (25-ft. spool)	45-8750
Dial backplate-and-pulley assembly	76-4309
Knob (5)	54-4486
Pointer	54-4648
Carriage, pointer	56-6408
Spring (2), gang and pointer	56-2617
Push-button knob (6)	54-4292
Cap, plastic (6), push-button knob	54-4294
Tab kit	40-7583
Scale-and-backplate assembly	76-4298
Scale strap (2), end, scale mounting	56-2234-2
Scale strap, middle, scale mtg.	56-4758FE11
Jewel-and-bin-lamp assembly	41-3898
Pilot-lamp-socket assembly, L.H.	27-6233-22
Pilot-lamp-socket assembly, R.H.	27-6233-25
Shaft assembly, tuning	76-4245
Socket, Loktal, 7A4	27-6177
Socket, Loktal, 7F8 (r-f section, mica-filled bakelite)	27-6213
Socket, Loktal, 7E7, 7F7	27-6138
Socket, miniature, 6BA6 (2)	27-6226
Socket, miniature, 6AU6 (r-f section, mica-filled bakelite)	27-6203-1
Socket, miniature 6T8	27-6203-5
Socket, octal (3)	27-6174
Jewel, telltale	54-4304

© John F. Rider

MODEL 49-1615

ALIGNMENT PROCEDURE

CAUTION: Do not turn on the power with the speaker disconnected, or the radio may be damaged.

ALIGNMENT OF AM CIRCUITS

When the complete AM and FM alignment is to be made, the AM alignment should be made first; however, if AM alignment is not required, the FM alignment alone may be made.

DIAL POINTER: With the tuning condensers fully meshed, the dial pointer must coincide with the index mark at the low-frequency end of the dial. See "CALIBRATING DIAL BACKPLATE" for the method of measuring the backplate for index and calibration points.

CONTROLS: Set the volume control to maximum, and the bass control fully counterclockwise. Set the treble selector switch fully clockwise. Set the band switch to the broadcast position. Set the signal-generator dial and radio dial as indicated in the chart.

OUTPUT METER: Connect between the No. 3 terminal (voice-coil connection) of the loop aerial socket, J400, and the chassis. See figure 8.

AM SIGNAL GENERATOR: Connect the ground lead to the chassis, and the output lead as indicated in the chart. Use modulated output.

OUTPUT LEVEL: During alignment, the signal-generator output must be attenuated to hold the radio output below 1.5 volts, as read on the output meter.

ALIGNMENT OF FM CIRCUITS

BEFORE STARTING ALIGNMENT, ALLOW THE RADIO AND SIGNAL GENERATOR TO WARM UP FOR 15 MINUTES.

CONTROLS: Set the volume control to maximum, and the bass control fully counterclockwise. Set the treble selector switch fully clockwise. Set the band switch to the FM position. Set the signal-generator dial and radio dial as indicated in the chart.

OUTPUT METER: Connect between the No. 3 terminal (voice-coil connection) of the loop aerial socket, J400, and the chassis. See figure 8.

AM SIGNAL GENERATOR: Connect the ground lead to the chassis; connect the output lead through a .1-mf. condenser to the points specified in the chart. Use modulated output.

OUTPUT LEVEL: During alignment, the signal-generator output must be attenuated to hold the radio output below 1.5 volts, as read on the output meter.

LOCATIONS OF COILS: For the locations of coils L400, L401, and L402 (steps 8, 9, and 10), refer to figure 4.

Note 1. Check the tracking of oscillator and r-f circuits with a tuning wand. If placing the brass end in or near the coil increases the output-meter reading, spread the turns; if the powdered-iron end increases the output reading, compress the turns. If both ends cause a decrease in the output, the coil is correctly tuned. Do not change the coils excessively, since only a small adjustment is required at these frequencies.

Note 2. Make two simple dipole aerials to feed the signals from the signal generator to the radio. Each dipole aerial may consist of two 30-inch lengths of rubber-covered wire. Connect one dipole aerial to terminals 3 and 4 on the FM aerial socket, J401, of the radio. See figure 8. Connect the other dipole aerial to the output leads of the signal generator. Place the two dipoles several feet apart.

Note 3. The use of a signal generator for steps 5 through 11 is recommended only if the available generator is sufficiently accurate to insure correct frequency settings. Otherwise, an alternative procedure employing FM broadcast-station signals is recommended. For the adjustments at the high-frequency end of the band, use the station nearest 105 mc.; for the adjustments at the low-frequency end of the band, use the station nearest 88 mc. or 92 mc., as indicated. If the radio is greatly misaligned, it may be necessary to adjust the trimmers and coils for maximum noise at each end of the band before station signals can be heard.

© John F. Rider

MODEL 49-1615

Production Change Supplement

PRE-PRODUCTION CHANGES

The following parts were deleted:

Reference Symbol	Description	Service Part No.
C104	Condenser, filter, .01 mf.	61-0120*
C410	Condenser, plate by-pass, 3 mmf.	30-1221
C411	Condenser, r-f by-pass, .01 mf.	61-0120*

The following parts were changed:

Reference Symbol	New Description	New Service Part No.
C202	Condenser, bass compensation, .006 mf.	45-3500-7*
C312	Condenser, screen by-pass, .003 mf.	61-0109*
C315	Condenser, cathode by-pass, .05 mf.	61-0122*
C317	Condenser, screen by-pass, .003 mf.	61-0109*
R100	Resistor, filter, 10,000 ohms, 2 watts	66-3103340*
R304	Resistor, cathode bias (FM), 100 ohms	66-1108340*
R310	Resistor, cathode bias, 82 ohms	66-0828340*
R311	Resistor, screen dropping, 33,000 ohms	66-3338340*
R405	Resistor, cathode bias, 2200 ohms (R405 was disconnected from ground and connected to the oscillator cathode, pin 4 of the 7F8.)	66-2228340*
R406	Resistor, cathode bias, 1000 ohms The 1st and 2nd i-f amplifier tubes were changed to type 6BJ6.	66-2108340*

The following parts were added:

Reference Symbol	Description	Service Part No.
C324	Condenser, plate by-pass, .01 mf. (Connected from lug 3 of Z301 to ground, as shown in figure 1.)	61-0120*
L407	Coil, r-f choke (Connected in the lead from C417A to the BC aerial section of C400.)	32-4061-2

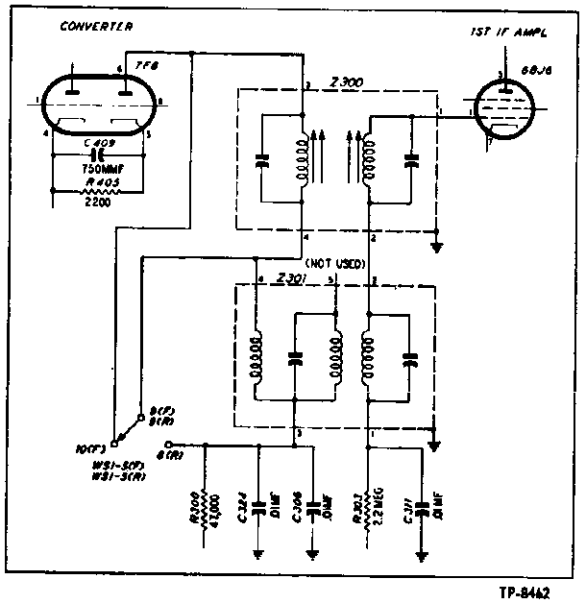

TP-8462

Figure 1.

The following circuit changes were made:
C314 was disconnected from ground, and connected to the 1st i-f amplifier screen, pin 6 of the first 6BJ6. In its new connection, C314 provides screen neutralization. C318 was disconnected from ground, and connected to the 2nd i-f amplifier screen, pin 6 of the second 6BJ6. In its new connection, C318 provides screen neutralization. The switching of the primaries of Z300 and Z301 was revised as shown in figure 1.

RUN 2 CHANGES (MAIN CHASSIS)

To eliminate inverse-feedback oscillation, the following part was changed:

Reference Symbol	New Description	New Service Part No.
R205	Resistor, volt[illegible] divider, inverse feedback, 12[illegible]	66-1128340*

RUN 2 CHANGES (SCRATCH-ELIMINATOR CHASSIS)

To improve phono-noise suppression, the following parts were changed:

Reference Symbol	New Description	New Service Part No.
C218	Condenser, d-c blocking, reactance feedback, 220 mmf.	82-122001001*
R229	Resistor, plate load, 33,000 ohms	66-3338340*

RUN 3 CHANGES

To prevent AM noise-pulse interference on FM, the following circuit changes were made:

The switching was removed from the secondary of Z301. C311 is now connected directly to lug 1 of Z301. The removed switch section is now used to ground the AM audio lead when in the FM position. Lug 2 of WS1-5(R) is tied to lug 5 of WS1-3(R), and lug 1 of WS1-5(R) is grounded. See figure 2.

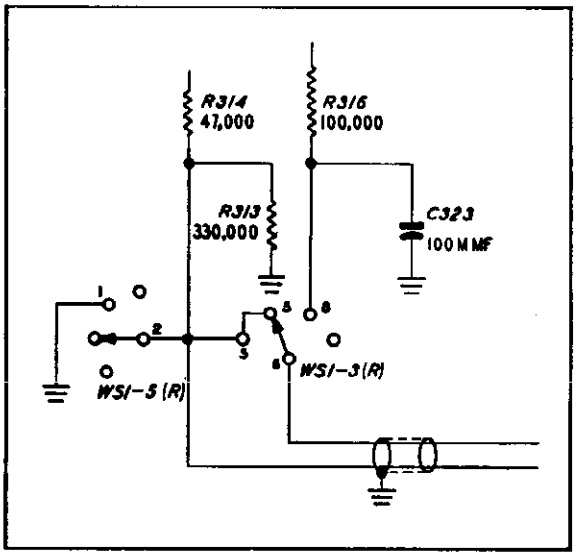

TP-8463

Figure 2.

©John F. Rider

Preliminary Checks

To avoid possible damage to the radio, the following preliminary checks should be made before it is turned on:

1. Inspect both the top and bottom of the chassis. Make sure that all tubes are secure in the proper sockets, and look for any broken or shorted connections, burned resistors, or other obvious indications of trouble.

Section 1—Power Supply

For the tests in this section, use a d-c voltmeter. Connect the negative lead to B—, test point B; connect the positive lead to the test points indicated in the chart. The voltage readings given were taken with a 20,000-ohms-per-volt meter at a line voltage of 117 volts, a.c.

Turn on the power, and set the volume control to minimum.

If the "NORMAL INDICATION" is obtained in step 1, proceed with the tests for Section 2 (audio circuits); if not, isolate and correct the trouble in this section.

2. Measure the resistance between B+ (test point C) and B— (test point B). See figure 1. When the ohmmeter test leads are connected in the proper polarity, the highest resistance reading will be obtained. If the reading is lower than 1500 ohms, check condensers C101A, C101B, C101C, and C203 for leakage or shorts. The resistance value given is much lower than normal, and is not intended as a quality check of these condensers; the value given is the lowest at which the rectifier will operate safely while the voltage checks of Section 1 (power supply) are performed.

TROUBLE SHOOTING

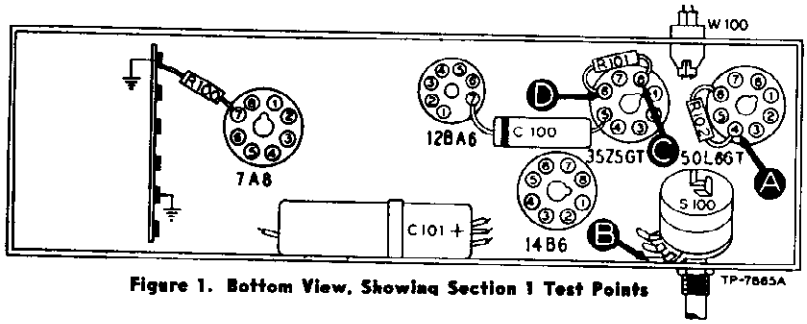

Figure 1. Bottom View, Showing Section 1 Test Points

STEP	TEST POINT	NORMAL INDICATION	ABNORMAL INDICATION	POSSIBLE CAUSE OF ABNORMAL INDICATION
1	A	105 volts		Trouble in this section. Isolate by the following tests.
2	C	130 volts	No voltage	Defective: 35Z5GT. Open: W100, S100. Shorted: C100, C101A.
			Low voltage	Defective: 35Z5GT. Open: C101A. Leaky: C101A.
			High voltage	Open: R101.
3	D	118 volts	No voltage	Open: R101. Shorted: C101B.
			Low voltage	Open: C101B. Shorted: C203*. Leaky: C101B.
			High voltage	Open: R102, T200*, R204*.
4	A	105 volts	No voltage	Shorted: C101C. Open: R102.
			Low voltage	Leaky: C101C. Open: C101C.
			High voltage	Open: R204*.
Listening Test: Abnormal hum may be caused by open C101A, C101B, or C101C.				

* This part, located in another section, may cause abnormal indication in this section.

Section 2—Audio Circuits

TROUBLE SHOOTING

For the tests in this section, use an audio-frequency signal generator. Connect the generator ground lead to B—, test point B; connect the output lead through a .1-μf. condenser to the test points indicated in the chart.

Set the volume control to maximum.

If the "NORMAL INDICATION" is obtained in step 1, proceed with the tests for Sections 3 (i-f, detector, and a-v-c circuits); if not, isolate and correct the trouble in this section.

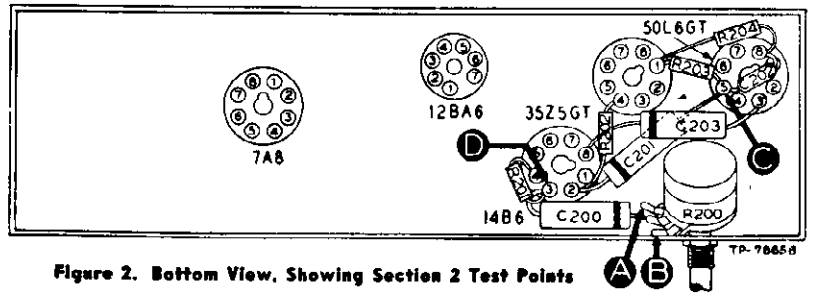

Figure 2. Bottom View, Showing Section 2 Test Points

STEP	TEST POINT	NORMAL INDICATION	POSSIBLE CAUSE OF ABNORMAL INDICATION
1	A	Loud, clear speaker output with weak signal input.	Trouble in this section. Isolate by the following tests.
2	C	Clear output with moderate signal input.	Defective: 50L6GT, LS200. Open: R204, T200. Shorted: C202, C203.
3	D	Same as step 1.	Defective: 14B6 (triode section). Open: C201, R202, R203. Shorted: C201.
4	A	Same as step 1.	Open: R200 (rotate through range), C200, R201. Shorted: C301D*.

* This part, located in another section, may cause abnormal indication in this section.

© John F. Rider

MODELS 50-522,
50-522-I, 50-524

Section 3—I-F, Detector, and A-V-C Circuits — TROUBLE SHOOTING

For the tests in this section, use an r-f signal generator, with modulated output, set at 455 kc. Connect the generator ground lead to B—, test point B; connect the output lead through a .1-μf. condenser to the test points indicated in the chart.

Set the volume control to maximum, and turn the tuning control until the tuning condenser is fully meshed.

If the "NORMAL INDICATION" is obtained in step 1, proceed with the tests for Section 4 (r-f and converter circuits); if not, isolate and correct the trouble in this section.

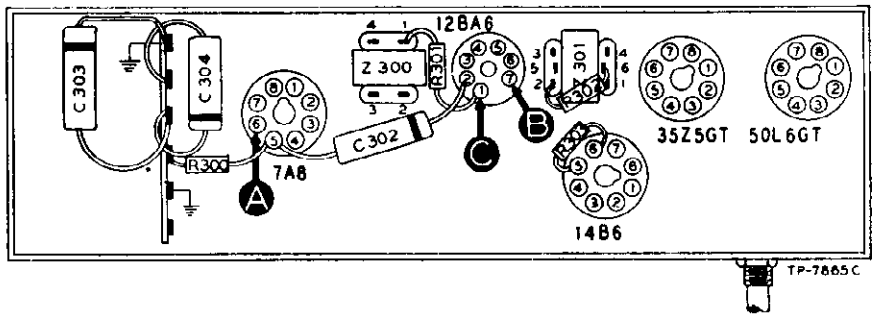

Figure 3. Bottom View, Showing Section 3 Test Points

To provide a complete i-f-amplifier check, test point A for this section is placed at the grid of the mixer in Section 4; therefore, the effectiveness of step 1 as a master check is dependent upon the condition of certain parts in the mixer circuit. These parts are listed below under "POSSIBLE CAUSE OF ABNORMAL INDICATION."

STEP	TEST POINT	NORMAL INDICATION	POSSIBLE CAUSE OF ABNORMAL INDICATION
1	A	Loud, clear speaker output with weak signal input.	Trouble in this section. Isolate by the following tests.
2	C	Loud, clear output with moderate input.	Defective: 12BA6, 14B6, (diode section). Misaligned: Z301. Open: R300, C301A, C301B, L301A, L301B, R302, R303. Shorted: C302, C300B, C301A, C301B, C301C.
3	A	Same as step 1.	Defective: 7A8*. Misaligned: Z300. Open: L300A, L300B, R301, C300A, C300B. Shorted: C300A, C400, C400A.

* This part, located in another section, may cause abnormal indication in this section.

Section 4—R-F and Converter Circuits — TROUBLE SHOOTING

For the tests in this section, with the exception of the oscillator test, use an r-f signal generator with modulated output. Connect the generator ground lead to B—, test point B; connect the output lead through a .1-μf. condenser to the test points indicated in the chart.

Set the volume control to maximum. Set the tuning control and the signal-generator frequency as indicated in the chart.

If the "NORMAL INDICATION" is not obtained in step 1, isolate and correct the trouble in this section. If the trouble is not revealed by the tests for this section, check the alignment.

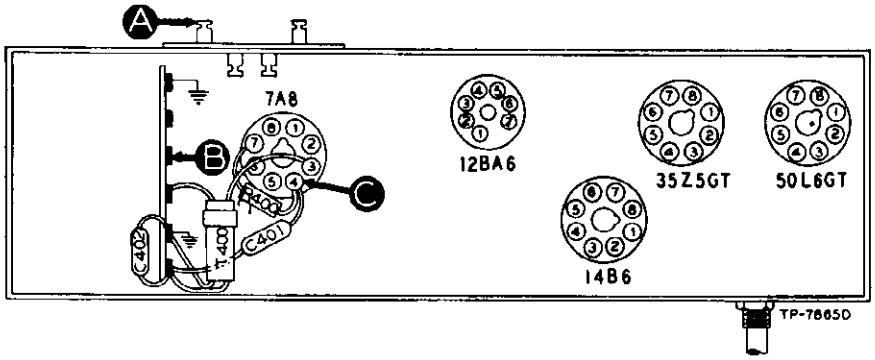

Figure 4. Bottom View, Showing Section 4 Test Points

STEP	TEST POINT	SIG. GEN. FREQ.	RADIO TUNING	NORMAL INDICATION	POSSIBLE CAUSE OF ABNORMAL INDICATION
1	A	1000 kc.	1000 kc.	Loud, clear speaker output with weak signal input.	Trouble in this section. Isolate by the following tests.
2	C Osc. test; see note below.		Tune through range.	Negative 4.5 to 7.5 volts.	Defective: 7A8. Open: C401, T400, R400. Shorted: T400, C401, C400, C400B, C402.
3	A	1000 kc.	1000 kc.	Same as step 1.	Defective: 7A8. Open: LA400. Shorted: C400, C400A, LA400.

OSCILLATOR TEST: Connect the positive lead of a high-resistance voltmeter to B—, test point B; connect the prod end of the negative lead through a 100,000-ohm isolating resistor to the 7A8 oscillator grid (pin 4), test point D. Use a suitable meter range, such as 0—10 volts. Proper operation of the oscillator is indicated by negative voltage of approximately the value given in the chart (measured with 20,000-ohms-per-volt meter), throughout the tuning range.

© John F. Rider

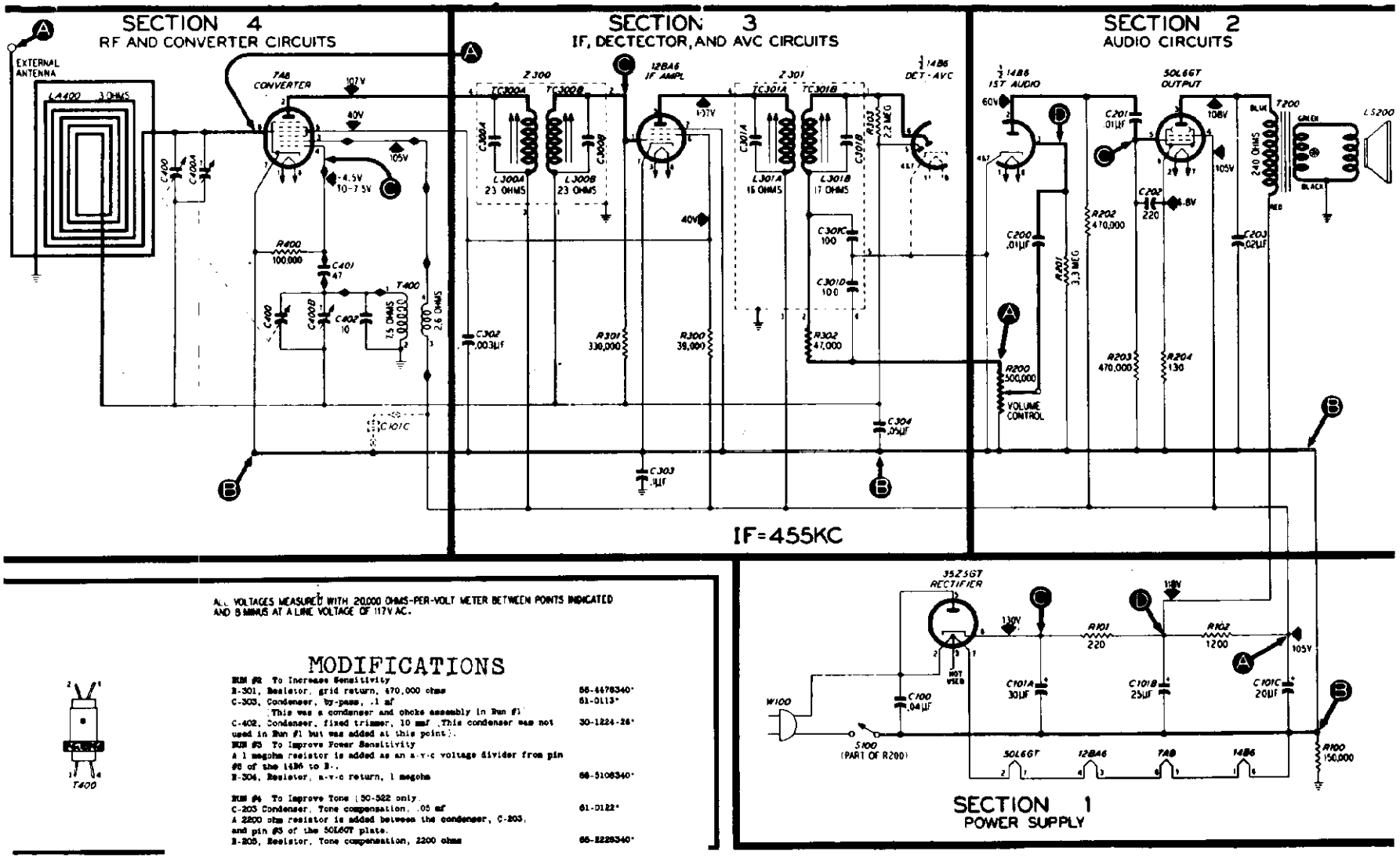

ALL VOLTAGES MEASURED WITH 20,000 OHMS-PER-VOLT METER BETWEEN POINTS INDICATED AND B MINUS AT A LINE VOLTAGE OF 117V AC.

MODIFICATIONS

RUN #2 To Increase Sensitivity

R-301, Resistor, grid return, 470,000 ohms — 66-4478340*

C-303, Condenser, by-pass, .1 mf — 61-0113*
This was a condenser and choke assembly in Run #1

C-402, Condenser, fixed trimmer, 10 mmf. This condenser was not used in Run #1 but was added at this point. — 30-1224-26*

RUN #3 To Improve Power Sensitivity

A 1 megohm resistor is added as an a-v-c voltage divider from pin #6 of the 14B6 to B-.

R-304, Resistor, a-v-c return, 1 megohm — 66-5108340*

RUN #4 To Improve Tone (50-522 only)

C-203 Condenser, Tone compensation, .05 mf — 61-0122*

A 2200 ohm resistor is added between the condenser, C-203, and pin #3 of the 50L6GT plate.

R-205, Resistor, Tone compensation, 2200 ohms — 66-2228340*

Pilot Lamp Addition (50-524 Only)

A pilot lamp has been added to improve dial illumination. This lamp wires between pin #2 and pin #3 (one side and tap of filament) of the 35Z5GT.

1-100 Pilot Lamp — 34-2088
Clip — 56-3545-6FA3
Pilot Lamp Socket Assembly — 27-5253-18

Sectionalized Schematic Diagram, Showing Test Points

©John F. Rider

ALIGNMENT PROCEDURE

CONTROLS: Turn on the radio, and set the volume control to maximum.

DIAL POINTER: Turn the tuning condenser to the full-mesh position. Set the dial pointer to the index mark, located to the left of "55."

OUTPUT METER: Connect across the voice-coil terminals.

SIGNAL GENERATOR: Connect as indicated in the chart.

OUTPUT LEVEL: During the alignment, adjust the signal-generator output to hold the output-meter indication below 1.25 volts.

STEP	SIGNAL GENERATOR		RADIO		ADJUST
	CONNECTION TO RADIO	DIAL SETTING	DIAL SETTING	SPECIAL INSTRUCTIONS	
1	Ground lead to B—; output lead through .1-μf. condenser to pin 6 of 7A8 tube.	455 kc.	540 kc. (gang fully meshed).	Adjust tuning cores, in order given, for maximum output.	TC301B—2nd i-f sec. TC301A—2nd i-f pri. TC300B—1st i-f sec. TC300A—1st i-f-pri.
2	Radiating loop; see note below.	1600 kc.	1600 kc.	Adjust for maximum.	C400B—osc.
3	Same as step 2.	1500 kc.	1500 kc.	Adjust for maximum.	C400A—aerial

RADIATING LOOP: make up a 6—8 turn, 6-inch-diameter loop from insulated wire; connect to signal-generator leads and place near radio loop aerial.

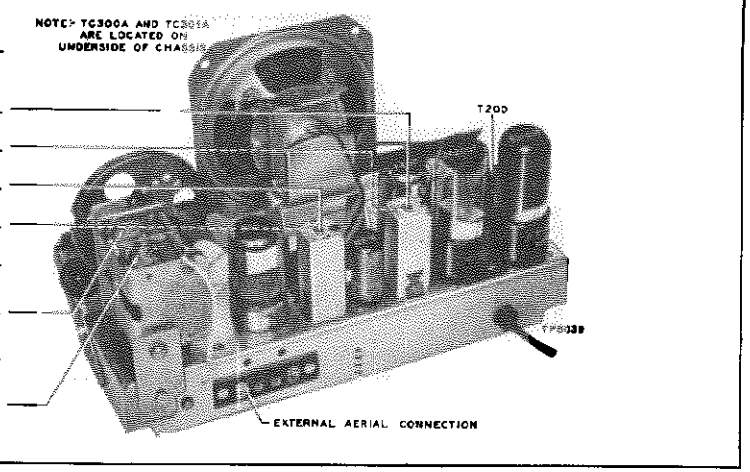

Figure 6. Top View, Showing Trimmer Locations

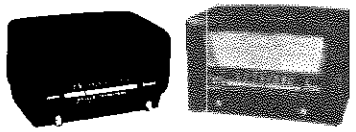

MODEL 50-522
MODEL 50-522-I

MODEL 50-524

SPECIFICATIONS

CABINET
Model 50-522 ....Molded plastic, mottled mahogany
Model 50-522-I .....Molded plastic, ivory
Model 50-524 .....Wood, mahogany finish
CIRCUIT.....5-tube superheterodyne
FREQUENCY RANGE.....540—1620 kc.
AUDIO OUTPUT.....1.2 watts
OPERATING VOLTAGE.....105—125 volts, a.c. or d.c.
POWER CONSUMPTION.....30 watts
AERIAL .....High-impedance loop; connector for external aerial
INTERMEDIATE FREQUENCY.....455 kc.
PHILCO TUBES (5).....7A8, 12BA6, 14B6, 50L6GT, 35Z5GT

Circuit Description

Philco Models 50-522, 50-522-I, and 50-524 are 5-tube, table-model superheterodyne radios, providing reception in the standard broadcast band. These three models are identical except for the cabinets and certain cabinet parts, as indicated in the Replacement Parts List.

The high-impedance loop aerial normally provides adequate signal pickup. An external aerial may be connected, if desired, by attaching the lead to lug No. 4 (shown in figure 6) on the rear of the chassis. Do not use a ground.

The converter employs a 7A8 tube. Variable-condenser tuning is used; the rotor plates of the oscillator section are specially shaped to obtain tracking, thus eliminating the necessity for a series padding condenser.

The 7A8 is transformer-coupled to the 12BA6 i-f amplifier, which is, in turn, transformer-coupled to the diodes of the 14B6 detector-first audio amplifier. A-v-c voltage is applied to the control grids of the i-f and converter tubes.

The triode section of the 14B6 is the first audio amplifier, and is resistance-coupled to the 50L6GT output tube, which works into a permanent-magnet speaker.

D-c operating voltages are obtained from a 35Z5GT half-wave rectifier, the output of which is filtered by a two-section resistance-capacitance filter.

Resistor R100, 150,000 ohms (in Section 1), prevents hum which might otherwise occur under conditions of high humidity.

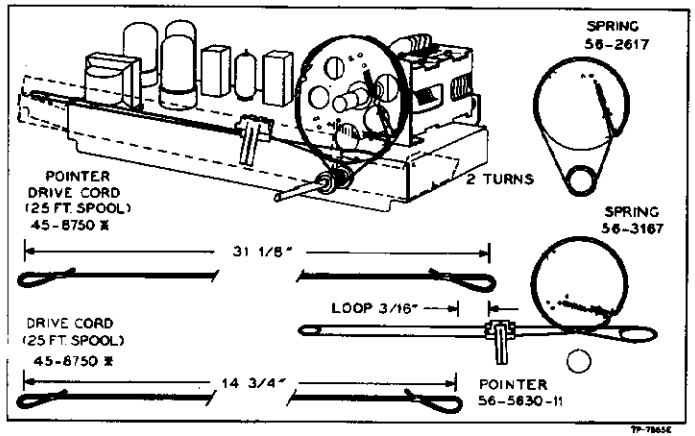

Figure 7. Drive-Cord-Installation Details

MODELS 50-522,
50-522-I, 50-524

REPLACEMENT PARTS LIST

NOTE: Part numbers identified by an asterisk (*) are general replacement items. These numbers may not be identical with those on factory parts; also, the electrical values of some replacement items may differ from the values indicated in the schematic diagram and parts list. The values substituted in any case are so chosen that the operation of the radio will be either unchanged or improved.

SECTION 1

POWER SUPPLY

Reference Symbol	Description	Service Part No.
C100	Condenser, line filter, .04 μf.	45-3500-2*
C101	Condenser, electrolytic, 3-section filter	30-2573
C101A	Condenser, filter, 30 μf., 150 v.	Part of C101
C101B	Condenser, filter, 25 μf., 150 v.	Part of C101
C101C	Condenser, filter, 20 μf., 150 v.	Part of C101
R100	Resistor, leakage, 150,000 ohms	66-4158340*
R101	Resistor, filter, 220 ohms, 1 watt	66-1224340*
R102	Resistor, filter, 1200 ohms	66-2128340*
S100	Switch, off-on	Part of R200
W100	Line cord and plug	L-2183*

SECTION 2

AUDIO CIRCUITS

C200	Condenser, d-c blocking, .01 μf.	61-0120*
C201	Condenser, d-c blocking, .01 μf.	61-0120*
C202	Condenser, by-pass, 220 μμf.	62-122001001*
C203	Condenser, tone compensation, .02 μf.	61-0108*
LS200	Speaker, p-m, 4"	36-1627-5
R200	Volume control (with off-on switch), 500,000 ohms	33-5566-4
R201	Resistor, grid return, 3.3 megohms	66-5338340*
R202	Resistor, plate load, 470,000 ohms	66-4478340*
R203	Resistor, grid return, 470,000 ohms	66-4478340*
R204	Resistor, cathode bias, 130 ohms, 1 watt	66-1124340*
T200	Transformer, output	32-8384

SECTION 3

I-F, DET. AND A-V-C CIRCUITS

C300A	Condenser, fixed trimmer	Part of Z300
C300B	Condenser, fixed trimmer	Part of Z300
C301A	Condenser, fixed trimmer	Part of Z301
C301B	Condenser, fixed trimmer	Part of Z301
C301C	Condenser, i-f filter	Part of Z301
C301D	Condenser, i-f filter	Part of Z301
C302	Condenser, screen by-pass, .003 μf.	61-0109*
C303	Condenser, by-pass, .1 μf.	61-0113*
C304	Condenser, a-v-c by-pass, .05 μf.	61-0122*
L300A	Coil, 1st i-f primary	Part of Z300
L300B	Coil, 1st i-f secondary	Part of Z300
L301A	Coil, 2nd i-f primary	Part of Z301
L301B	Coil, 2nd i-f secondary	Part of Z301
R300	Resistor, screen dropping, 39,000 ohms	66-3398340*
R301	Resistor, grid return, 330,000 ohms	66-4338340*
R302	Resistor, i-f filter, 47,000 ohms	66-3478340*
R303	Resistor, diode load, 2.2 megohms	66-5228340*
TC300A	Tuning core, 1st i-f primary	Part of Z300

SECTION 3 (Cont.)

Reference Symbol	Description	Service Part No.
TC300B	Tuning core, 1st i-f secondary	Part of Z300
TC301A	Tuning core, 2nd i-f primary	Part of Z301
TC301B	Tuning core, 2nd i-f secondary	Part of Z301
Z300	Transformer, 1st i-f	32-4160-6A
Z301	Transformer, 2nd i-f	32-4240-A

SECTION 4

R-F AND CONVERTER

C400	Condenser, tuning gang, 2-section	31-2727-2
C400A	Condenser, trimmer, aerial	Part of C400
C400B	Condenser, trimmer, oscillator	Part of C400
C401	Condenser, d-c blocking, 47 μμf.	60-00515307*
C402	Condenser, fixed trimmer, 10 μμf.	30-1224-26*
LA400	Loop aerial	
	Model 50-522, 50-522-I	32-4052-31
	Model 50-524	32-4052-34
R400	Resistor, grid return, 100,000 ohms	66-4108340*
T400	Transformer, oscillator	32-4263

MISCELLANEOUS

Description	Service Part No.
Cabinet	
Model 50-522	10747
Model 50-522-I	10747-1
Model 50-524	10754
Back	
Model 50-522, 50-522-I	54-7767
Model 50-524	54-7810
Fastener, cabinet back (4), 50-522, 50-522-I	W2235-2FA9
Dial scale, Model 50-524	54-5060-1
Scale strap (2)	56-7021-FA3
Knob	
Model 50-522	54-4674
Model 50-522-I	54-4674-1
Model 50-524	54-4527-3
Dial-backplate assembly	76-4570
Drive cord (25-ft. spool)	45-8750*
Spring, drive cord	56-2617
Drive-shaft-and-pulley assembly	76-3671-2
Pointer	56-5630-11
Spring, pointer	56-3167
Rubber mounts, gang mounting (3)	27-4771-1
Socket, Loktal (2)	27-6138*
Socket, miniature (1)	27-6203
Socket, octal (2)	27-6174*

© John F. Rider

MODEL 50-527,
50-527-I

Section 1 TROUBLE SHOOTING

POWER SUPPLY

For the tests in this section, use a d-c voltmeter. Connect the negative lead to B–, test point B; connect the positive lead to the test points indicated in the chart. The voltage readings given were taken with a 20,000-ohms-per-volt meter at a line voltage of 117 volts, a.c.

Turn on the power, and set the volume control to minimum.

If the "NORMAL INDICATION" is obtained in step 1, proceed with the tests for Section 2 (audio circuits); if not, isolate and correct the trouble in this section.

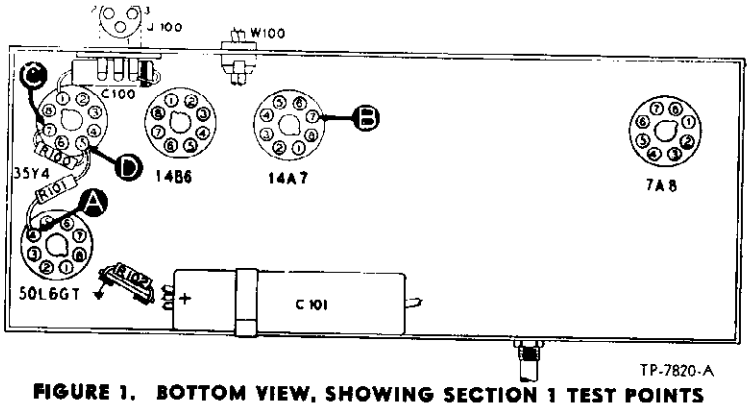

FIGURE 1. BOTTOM VIEW, SHOWING SECTION 1 TEST POINTS

STEP	TEST POINT	NORMAL INDICATION	ABNORMAL INDICATION	POSSIBLE CAUSE OF ABNORMAL INDICATION
1	A	95v		Trouble within this section. Isolate by the following tests.
2	C	108v	No voltage	Defective: 35Y4. Shorted: C101A. Open: S100, W100, J100.
			Low voltage	Defective: 35Y4. Open: C101A. Leaky: C101A.
			High voltage	Open: R100.
3	D	120v	No voltage	Shorted: C101B. Open: R100.
			Low voltage	Open: C101B. Leaky: C101B, C203*.
			High voltage	Open: R101, T200*, R203*.
4	A	95v	No voltage	Shorted: C101C. Open: R101.
			Low voltage	Leaky: C101C.
Listening Test: Abnormal hum may be caused by open C101A, C101B, or C101C.				

* This part, located in another section, may cause abnormal indication in this section.

Section 2 TROUBLE SHOOTING

AUDIO CIRCUITS

For the tests in this section, use an audio-frequency signal generator. Connect the generator ground lead to B–, test point B; connect the output lead through a .1-mf. condenser to the test points indicated in the chart.

Set the volume control to maximum.

If the "NORMAL INDICATION" is obtained in step 1, proceed with the tests for Section 3 (i-f, detector, and a-v-c circuits); if not, isolate and correct the trouble in this section.

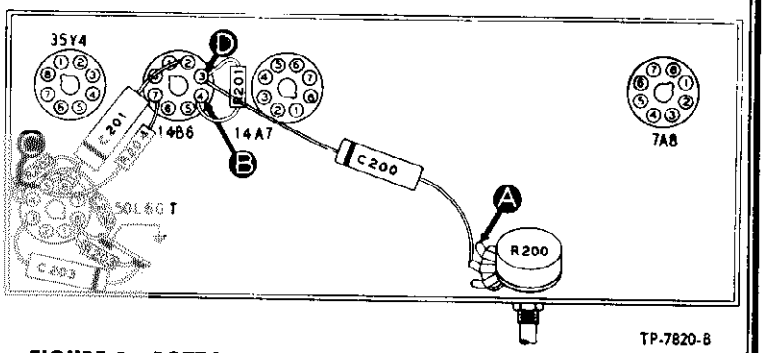

FIGURE 2. BOTTOM VIEW, SHOWING SECTION 2 TEST POINTS

STEP	TEST POINT	NORMAL INDICATION	POSSIBLE CAUSE OF ABNORMAL INDICATION
1	A	Loud, clear speaker output with weak signal-generator input.	Trouble within this section. Isolate by the following tests.
2	C	Clear output with strong input.	Defective: 50L6GT, LS200. Shorted: C202, C203. Open: R203, T200.
3	D	Clear output with moderate input.	Defective: 14B6. Shorted: C201. Open: C201, R202, R204.
4	A	Same as step 1.	Shorted: C301D*. Open: R200, R201, C200.
Listening Test: Distortion may be caused by shorted or leaky C201.			

* This part, located in another section, may cause abnormal indication in this section.

© John F. Rider

MODELS 50-527,
50-527-I

Section 3 TROUBLE SHOOTING

I-F, DETECTOR, AND A-V-C CIRCUITS

For the tests in this section, use an r-f signal generator, with modulated output, set at 455 kc. Connect the generator ground lead to B–, test point B; connect the output lead through a .1-mf. condenser to the test points indicated in the chart.

Set the volume control to maximum, and rotate the tuning control until the tuning condenser is fully meshed.

If the "NORMAL INDICATION" is obtained in step 1, proceed with the tests for Section 4 (r-f and converter circuits); if not, isolate and correct the trouble in this section.

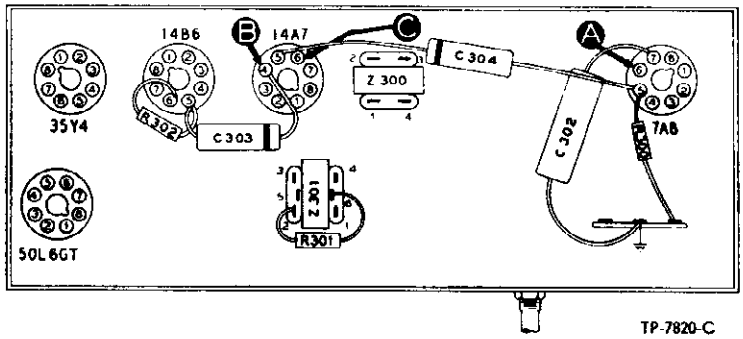

FIGURE 3. BOTTOM VIEW, SHOWING SECTION 3 TEST POINTS

To provide a complete i-f-amplifier check, test point A for this section is placed at the grid of the mixer in Section 4; therefore, the effectiveness of step 1 as a master check is dependent upon the condition of certain parts in the mixer circuit. These parts are listed below under "POSSIBLE CAUSE OF ABNORMAL INDICATION."

STEP	TEST POINT	NORMAL INDICATION	POSSIBLE CAUSE OF ABNORMAL INDICATION
1	A	Loud, clear speaker output with weak signal-generator input.	Trouble within this section. Isolate by the following tests.
2	C	Same as step 1.	Defective: 14A7, 14B6 (diode section). Shorted: L300B, C300B, L301A, C301A, L301B, C301B, C301C, C301D. Open: L301A, L301B, C301A, C301B, R300, R301, C304. Misaligned: Z301.
3	A	Same as step 1.	Defective: 7A8*. Shorted: C400*, C400A*, L300A, C300A. Open: L300A, L300B, C300A, C300B. Misaligned: Z300.
Listening Test: Hum and instability may be caused by open C302, C303.			

* This part, located in another section, may cause abnormal indication in this section.

Section 4 TROUBLE SHOOTING

R-F AND CONVERTER CIRCUITS

For the tests in this section, with the exception of the oscillator test, use an r-f signal generator, with modulated output. Connect the generator ground lead to B–, test point B; connect the output lead through a .1-mf. condenser to the test points indicated in the chart.

Set the volume control to maximum, and set the tuning control and the signal-generator frequency as indicated in the chart.

If the "NORMAL INDICATION" is not obtained in step 1, isolate and correct the trouble in this section. If the trouble is not revealed by the tests for this section, check the alignment.

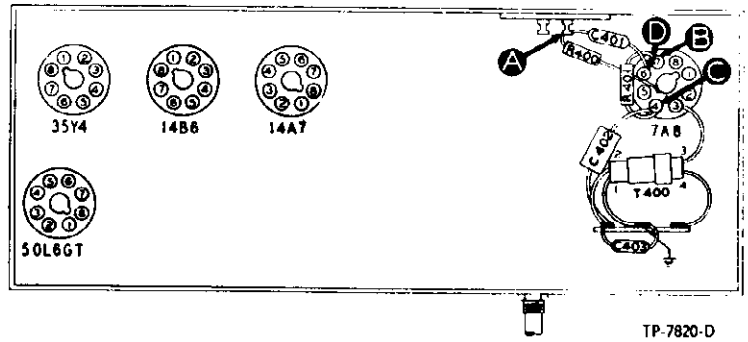

FIGURE 4. BOTTOM VIEW, SHOWING SECTION 4 TEST POINTS

STEP	TEST POINT	SIG. GEN. FREQUENCY	RADIO TUNING	NORMAL INDICATION	POSSIBLE CAUSE OF ABNORMAL INDICATION
1	A	1000 kc.	1000 kc.	Clear speaker output with weak signal-generator input.	Trouble within this section. Isolate by the following tests.
2	C (Osc. test; see note below.)	—	Rotate through range.	Negative 4v to 6v.	Defective: 7A8. Open: C402, R401, T402. Shorted: T400, C400, C400B, C403.
3	D	1000 kc.	1000 kc.	Same as step 1.	Defective: 7A8. Open: LA400. Shorted: C400, C400A, LA400.
4	A	1000 kc.	1000 kc.	Same as step 1.	Open: C401.

OSCILLATOR TEST: Connect the positive lead of a high-resistance voltmeter to the B–, test point B; connect the prod end of the negative lead through a 100,000-ohm isolating resistor to the 7A8 oscillator grid (pin 4), test point C. Use a suitable meter range, such as 0—10 volts. Proper operation of the oscillator is indicated by negative voltage of approximately the value given in the chart (measured with 20,000-ohms-per-volt meter) throughout the tuning range.

MODELS 50-527,
50-527-I

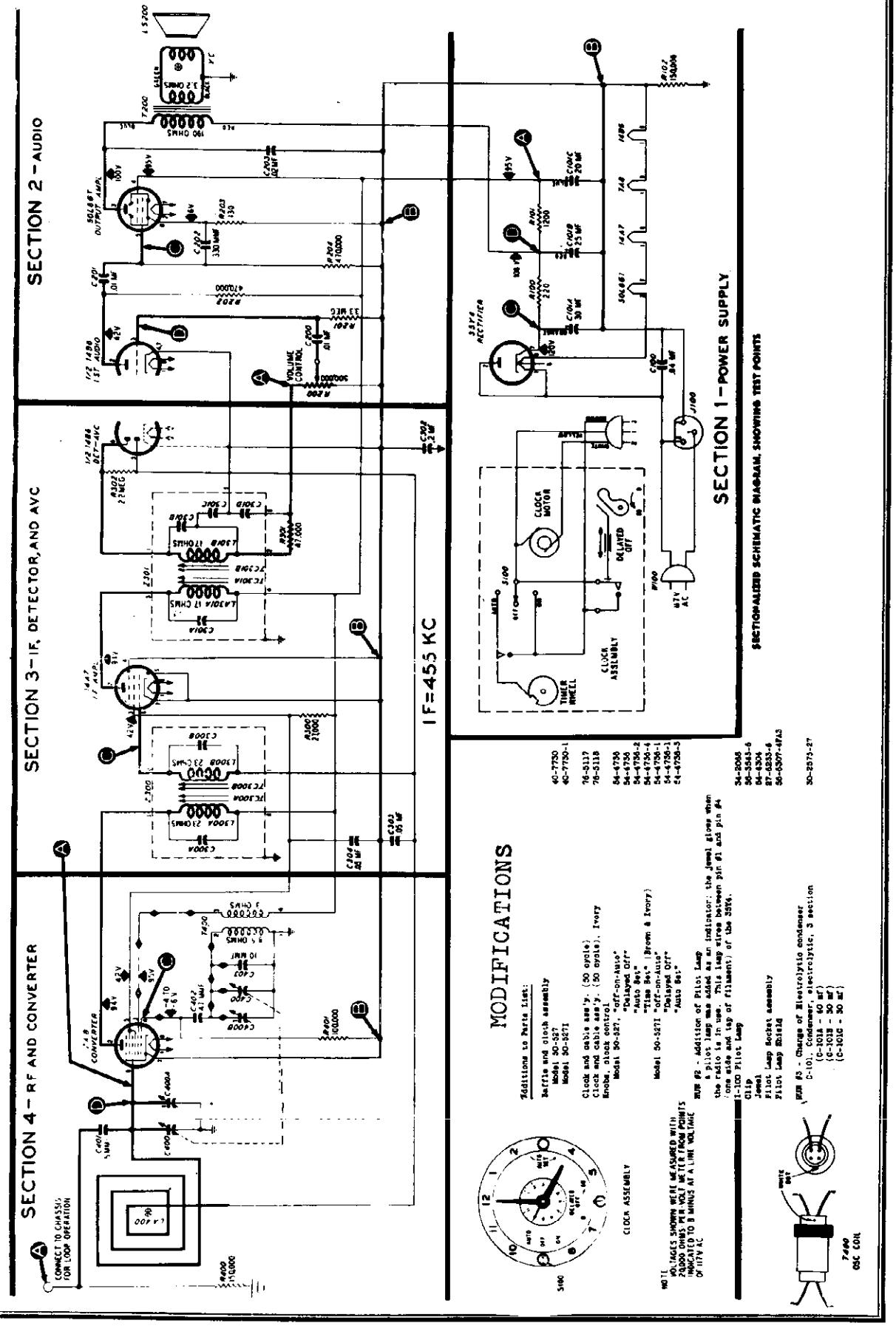

©John F. Rider

ALIGNMENT PROCEDURE

RADIO CONTROLS — Set volume control to maximum. Set tuning control as indicated in chart.

OUTPUT METER — connect across voice-coil terminals.

SIGNAL GENERATOR — Connect generator and set frequency as indicated in chart. Use modulated output.

OUTPUT LEVEL — During alignment, adjust signal-generator output to hold output-meter reading below 1.25 volts.

STEP	SIGNAL GENERATOR		RADIO		ADJUST
	CONNECTION TO RADIO	DIAL SETTING	DIAL SETTING	SPECIAL INSTRUCTIONS	
1	Connect ground lead to B–; output lead through .1-mf. condenser to grid (pin 6) of 7A8.	455 kc.	Tuning condenser fully meshed.	Adjust tuning cores, in order given, for maximum output.	TC301B—2nd i-f sec. TC301A—2nd i-f pri. TC300B—1st i-f sec. TC300A—1st i-f pri.
2	Radiating loop (see note below).	1600 kc.	1600 kc.	Adjust trimmer for maximum output.	C400B—Osc.
3	Same as step 2.	1500 kc.	1500 kc.	Adjust trimmer for maximum output.	C400A—Aerial

RADIATING LOOP: Make up a 6—8 turn, 6-inch-diameter loop, from insulated wire; connect to signal-generator leads and place near radio loop aerial.

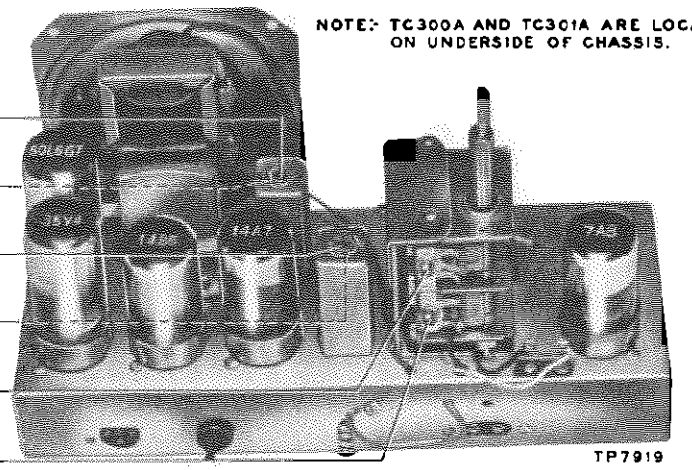

FIGURE 6. TOP VIEW, SHOWING TRIMMER LOCATION

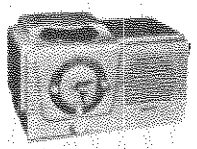

SPECIFICATIONS

CABINET	
Model 50-527	Molded Phenolic, brown
Model 50-527-I	Molded Phenolic, ivory
FREQUENCY RANGE	540—1600 kc.
AUDIO OUTPUT	1 watt
OPERATING VOLTAGE	117 volts, a.c.
POWER CONSUMPTION	30 watts
AERIAL	High-impedance loop; connector for external aerial
INTERMEDIATE FREQUENCY	455 kc.
PHILCO TUBES (5)	7A8, 14A7, 14B6, 50L6GT, 35Y4

TP-7964

Preliminary Checks

To avoid possible damage to the radio, the following preliminary checks should be made before it is turned on:

1. Inspect both the top and the bottom of the chassis. Make sure that all tubes are secure in the proper sockets, and look for any broken or shorted connections, burned resistors, or other obvious indications of trouble.

2. Measure the resistance between B+ (pin 7 of the 35Y4) and B–, test point B. When the ohmmeter test leads are connected in the proper polarity, the highest resistance reading will be obtained. If the reading is lower than 1500 ohms, check condensers C101A, C101B, C101C, and C203 for leakage or shorts. The resistance value given is much lower than normal, and is not intended as a quality check of these condensers; the value given is the lowest at which the rectifier will operate safely while the voltage checks of Section 1 (power supply) are performed.

Circuit Discription

Philco Radio-Clock Models 50-527 and 50-527-I are 5-tube table-model superheterodynes, providing reception in the standard broadcast band and the functions of an electric alarm clock.

A high-impedance loop aerial normally provides adequate signal pickup. An external aerial may be connected, if desired, by detaching the aerial lead from the chassis and connecting it to the external aerial leadin. Do not use a ground.

The loop aerial is coupled to the 7A8 converter. The aerial and oscillator circuits are tuned by ganged variable condensers, and the oscillator rotor-section plates are properly shaped to obtain tracking, thus eliminating the necessity for a series padding condenser.

The 7A8 converter is transformer-coupled to the 14A7 i-f amplifier, which is also transformer-coupled to the diodes of the 14B6 second detector — first audio amplifier. A-v-c voltage is applied to the control grids of both the i-f amplifier and converter tubes. The triode section of the 14B6 is the first audio stage, and is resistance-coupled to the 50L6GT output tube. The output tube works into a permanent-magnet speaker.

The operating voltages are supplied from a 35Y4 half-wave rectifier, and filtered by a three-section resistor-condenser network.

R102, a 150,000-ohm resistor, prevents hum which might otherwise occur under conditions of high humidity.

In addition to the normal features of a table-model radio and an electric clock, a radio alarm is included, which turns the radio on at any preset time; there is also a "delayed off" feature that automatically shuts the set off after any desired period up to an hour. These functions are available by the following control settings: For alarm action, the AUTO-OFF-ON switch is set to the AUTO position, and the alarm is set to the desired time. When the delayed off action is required, as when retiring, the DELAYED OFF switch is turned to the right, and the AUTO-OFF-ON switch is set to the AUTO position. The two actions may be combined, i.e., before retiring, the alarm may be set for the morning time, and the DELAYED OFF switch also set. The radio then plays for an hour, shuts itself off, and comes on again in the morning. When the AUTO-OFF-ON switch is set to the ON position, the radio operates independently of the clock. When the switch is set to the OFF position, the radio is turned off, and is not under the control of the clock.

PHILCO PAGE 20-19
MODELS 50-527
50-527-I

MODELS 50-527,
50-527-I

REPLACEMENT PARTS LIST

NOTE: Part numbers identified by an asterisk (*) are general replacement items. These numbers may not be identical with those on factory parts; also, the electrical values of some replacement items may differ from the values indicated in the schematic diagram and parts list. The values substituted in any case are so chosen that the operation of the radio will be either unchanged or improved.

SECTION 1

POWER SUPPLY

Reference Symbol	Description	Service Part No.
C100	Condenser, line filter, .04 mf.	45-3500*
C101	Condenser, electrolytic, 3-section	30-2573
C101A	Condenser, filter, 30 mf., 150v	Part of C101
C101B	Condenser, filter, 25 mf., 150v	Part of C101
C101C	Condenser, filter, 20 mf., 150v	Part of C101
J100	Socket, clock motor and switch	27-6126
R100	Resistor, filter, 220 ohms, 1 watt	66-1224340*
R101	Resistor, filter, 1200 ohms	66-2128340*
R102	Resistor, leakage, 150,000 ohms	66-4158340*
S100	Switch, AUTO-OFF-ON	Part of clock assembly
W100	Line cord and plug	L-2183*

SECTION 2

AUDIO CIRCUITS

C200	Condenser, d-c blocking, .01 mf.	61-0120*
C201	Condenser, d-c blocking, .01 mf.	61-0120*
C202	Condenser, parasitic suppressor, 330 mmf.	60-10335407*
C203	Condenser, tone compensation, .02 mf.	61-0108*
LS200	Speaker, p-m	36-1627
R200	Volume control, 500,000 ohms	33-5565-6
R201	Resistor, grid return, 3.3 megohms	66-5338340*
R202	Resistor, plate dropping, 470,000 ohms	66-4478340*
R203	Resistor, cathode bias, 130 ohms	66-1138340*
R204	Resistor, grid return, 470,000 ohms	66-4478340*
T200	Transformer, output	Part of LS200

SECTION 3

I-F, DETECTOR, AND A-V-C CIRCUITS

C300A	Condenser, fixed trimmer	Part of Z300
C300B	Condenser, fixed trimmer	Part of Z300
C301A	Condenser, fixed trimmer	Part of Z301
C301B	Condenser, fixed trimmer	Part of Z301
C301C	Condenser, fixed trimmer	Part of Z301
C301D	Condenser, fixed trimmer	Part of Z301
C302	Condenser, by-pass, .2 mf.	45-3500-3
C303	Condenser, a-v-c filter, .05 mf.	61-0122*
C304	Condenser, screen by-pass, .05 mf.	61-0122*
L300A	Coil, primary, 1st i-f	Part of Z300
L300B	Coil, secondary, 1st i-f	Part of Z300
L301A	Coil, primary, 2nd i-f	Part of Z301
L301B	Coil, secondary, 2nd i-f	Part of Z301

SECTION 3 (Cont.)

I-F, DETECTOR, AND A-V-C CIRCUITS

Reference Symbol	Description	Service Part No.
R300	Resistor, screen dropping, 27,000 ohms	66-3278340*
R301	Resistor, diode load, 47,000 ohms	66-3478340*
R302	Resistor, a-v-c filter, 2.2 megohms	66-5228340*
TC300A	Tuning core, primary, 1st i-f	Part of Z300
TC300B	Tuning core, secondary, 1st i-f	Part of Z300
TC301A	Tuning core, primary, 2nd i-f	Part of Z301
TC301B	Tuning core, secondary, 2nd i-f	Part of Z301
Z300	Transformer, 1st i-f	32-4160-6
Z301	Transformer, 2nd i-f	32-4240

SECTION 4

R-F AND CONVERTER CIRCUITS

C400	Condenser, tuning gang, 2-section	31-2731-1
C400A	Condenser, trimmer, aerial	Part of C400
C400B	Condenser, trimmer, osc.	Part of C400
C401	Condenser, aerial coupling, 5 mmf.	30-1224-5*
C402	Condenser, d-c blocking, 47 mmf.	60-00515307*
C403	Condenser, ceramic, oscillator compensator, 10 mmf.	30-1224-26
LA400	Loop aerial	32-4052-32
R400	Resistor, isolating, 150,000 ohms	66-4158340*
R401	Resistor, grid return, 100,000 ohms	66-4108340*
T400	Transformer, oscillator	32-4263

MISCELLANEOUS

Description	Service Part No.
Back	54-7631
Cabinet	
Model 50-527	10745
Model 50-527-I	10745-1
Clock, with cable assembly	
Model 50-527	76-4640
Model 50-527-I	76-4840
Clock cover	
Model 50-527	56-6710
Model 50-527-I	"
Dial, tuning	54-5055
Knob, volume control	
Model 50-527	27-4820
Model 50-527-I	54-4118
Socket, Loktal	27-6177

© John F. Rider

Circuit Description

Philco Model 50-620 is a portable four-tube superheterodyne providing reception on the standard-broadcast band. A high-impedance loop within the cabinet normally provides adequate signal pickup. However, provisions have been made for connecting an external aerial, if required.

The aerial circuit works directly into a 1R5 converter, where the incoming signal is converted to the 455-kc. intermediate frequency. A 1T4 is used in a single high-gain stage of i-f amplification, which employs neutralization to suppress oscillation. A 1.5-mmf. condenser, C304, feeds part of the i-f voltage, of the proper phase, back to the 1T4 grid through the tube-socket capacitance.

A 1U5 diode-pentode is used in the detector, a-v-c, and first audio circuits. The pentode section is resistance-coupled to a 3V4 pentode output amplifier, which works into a p-m speaker.

The d-c operating voltages are obtained from either a battery pack, Philco type P-361, or from a 105—120 volt, a-c or d-c power line. For power-line operation, the plate, screen, and filament voltages are provided by a power supply using a selenium rectifier, CR100.

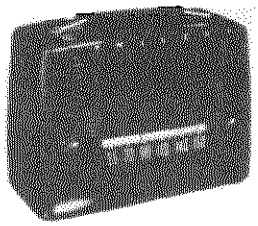

MODEL 50-620

SPECIFICATIONS

CABINET	Molded Polystyrene (maroon, brown, or green)
CIRCUIT	Four-tube superbeterodyne
FREQUENCY RANGE	540—1600 kc.
AUDIO OUTPUT	160 milliwatts
OPERATING VOLTAGES	Battery: "B", 90 volts; "A", 7.5 volts. A.c./d.c.: 105—120 volts
POWER CONSUMPTION	Battery: "B", 13 ma. at 90 volts; "A", 50 ma. at 7.5 volts. A.c./d.c.: 25 watts
AERIAL	Built-in high-impedance loop; terminal also provided for external aerial
INTERMEDIATE FREQUENCY	455 kc.
PHILCO TUBES (4)	1R5, 1T4, 1U5, 3V4
BATTERY TYPE	Philco P-361

TP-4523

Philco TROUBLE-SHOOTING Procedure

For rapid trouble shooting, the radio circuit is divided into four sections, with test points specified for each section; these sections and test points are indicated in the schematic diagram. The trouble-shooting procedure given for each section includes a simplified test chart and a bottom view of the chassis showing the locations of the test points and the components of that section.

In each chart, the first step is a master check for determining whether trouble exists in that section, without going through the entire chart.

Failure to obtain the "NORMAL INDICATION" in any given step indicates trouble within the circuit under test.

After isolating the trouble to a single stage, the defect is located by: first, testing the tube; second, measuring tube electrode voltages; third, measuring circuit resistances; fourth, substituting condensers. The trouble revealed should be corrected before testing further.

Preliminary Checks

To avoid possible damage to the radio, the following preliminary checks should be made before turning on the power:

1. Inspect both the top and the bottom of the chassi Make sure that all tubes are secure in the proper soc ets, and look for any broken or shorted connection burned resistors, or other obvious sources of trouble.

2. Check the total filament resistance, with t power switch turned on, the battery plug disconnecte from the battery, and the change-over switch in t battery position (power-cord plug inserted in receptac on rear of chassis). If the resistance between the A- and A—pins on the battery plug is higher than 1(ohms, one of the tube filaments is probably open.

NOTE: If the 3V4 filament is open, check condens C202 before replacing the tube.

3. Measure the resistance between B+ (output selenium rectifier), test point D, and B—, test point See figure 1. When the ohmmeter leads are connecte in the proper polarity, the highest resistance readir will be obtained. If the reading is lower than 20(ohms, check condensers C101A and C101B for leaka or shorts.

The resistance value above, which is much lower tha normal, does not represent a quality check of the condensers; it is the lowest value which will permit t rectifier to operate safely while the voltage checks Section 1 (power supply) are performed.

©John F. Rider

MODEL 50-620

Section 1—Power Supply

TROUBLE SHOOTING

Make the tests for this section with a d-c voltmeter. Connect the negative lead to B—, test point B; connect the positive lead to the test points indicated in the chart. The voltage readings given were taken with a 20,000-ohms-per-volt meter at a line voltage of 117 volts, a.c.

Set the volume control to minimum.

The battery pack should be replaced when the "A" voltage drops below 5 volts, or the "B" voltage drops below 60 volts.

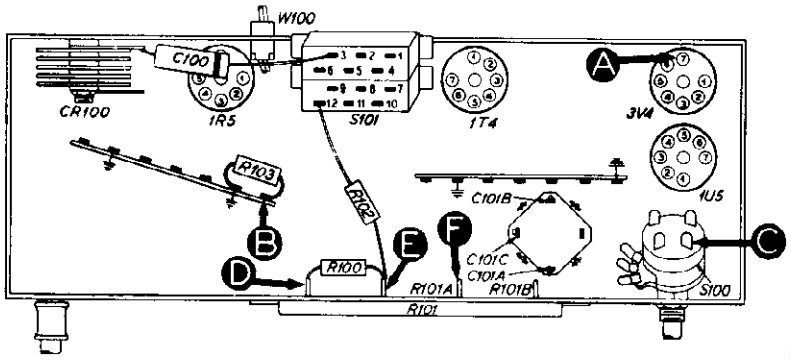

Figure 1. Bottom View, Showing Section 1 Test Points TP-5355A-1

If the "NORMAL INDICATION" is obtained in step 1, proceed with the tests for Section 2 (audio circuits); if not, isolate and correct the trouble in this section.

STEP	TEST POINT	NORMAL INDICATION	ABNORMAL INDICATION	POSSIBLE CAUSE OF ABNORMAL INDICATION
1(a) 1(b)	A C	7.5v 90v		Trouble in this section. Isolate by the following tests.
2	D	125v	Low voltage No voltage	Defective: CR100. Open C101A. Defective: CR100. Open: S100, S101.
3	E	120v	Low voltage No voltage	Changed resistance: R100. Leaky: C101A. Open: R100. Shorted: C101A.
4	F	65v	Low voltage No voltage	Changed resistance: R101A. Leaky: C101B. Open: R101A. Shorted: C101B.
5	A	7.5v	Low voltage High voltage No voltage	Changed resistance: R101B. Open: One or more filaments, R205*. Open: R101B, S101.
6	C	90v	Low voltage High voltage No voltage	Changed resistance: R102. Leaky: C101C. Open: R205*, T200*, S100. Open: R102, S101. Shorted: C101C.
Listening Test: Abnormal hum may be caused by open C101B, C101C, or C202*.				

*This part, located in another section, may cause abnormal indication in this section.

Section 2—Audio Circuits

TROUBLE SHOOTING

For the tests in this section, use an audio-frequency signal generator. Connect the generator ground lead to B—, test point B; connect the output lead through a .1-mf. condenser to the test points indicated in the chart.

Set the radio volume control to maximum.

If the "NORMAL INDICATION" is obtained in step 1, proceed with the tests for Section 3 (i-f, detector, and a-v-c circuits); if not, isolate and correct the trouble in this section.

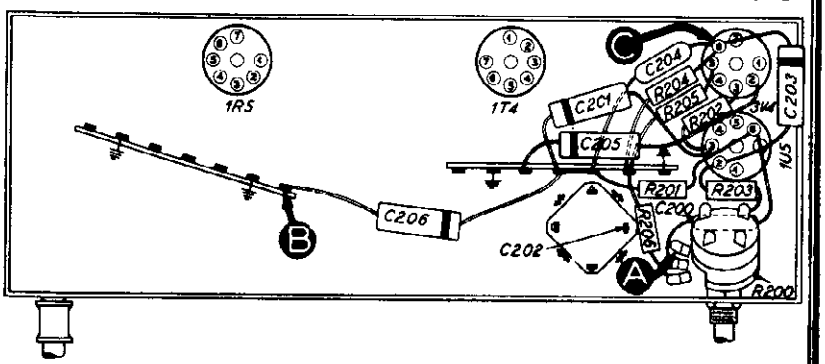

Figure 2. Bottom View, Showing Section 2 Test Points TP-5355B-1

STEP	TEST POINT	NORMAL INDICATION	POSSIBLE CAUSE OF ABNORMAL INDICATION
1	A	Loud, clear speaker output with moderate generator input.	Trouble in this section. Isolate by the following tests.
2	C	Clear speaker output with strong generator input.	Defective: 3V4, LS200. Open: R204, T200. Shorted: C203, C204, C205, T200.
3	A	Same as step 1.	Defective: 1U5, R200 (rotate). Open: C200, R201, R202, R203, C203. Shorted: C201, C301C*.
Listening Test: Distortion may be caused by leaky or shorted C203, or by changed resistance of R202. Distortion or strong signals may be caused by leaky or shorted C200.			

*This part, located in another section, may cause abnormal indication in this section.

©John F. Rider

Section 3—I-F, Detector, And A-V-C Circuits

TROUBLE SHOOTING

For the tests in this section, use an r-f signal generator, with modulated output, set at 455 kc. Connect the generator ground lead to B—, test point B; connect the output lead through a .1-mf. condenser to the test points indicated in the chart.

Set the radio volume control to maximum.

If the "NORMAL INDICATION" is obtained in step 1, proceed with the tests for Section 4 (r-f and converter circuits); if not, isolate and correct the trouble in this section.

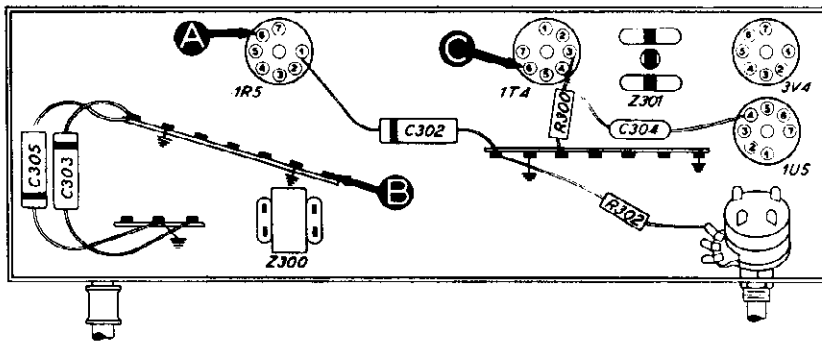

Figure 3. Bottom View, Showing Section 3 Test Points TP-5355C

To provide a complete i-f amplifier check, test point A for this section is placed at the grid of the mixer in Sectio 4; therefore, the effectiveness of step 1 as a master check is dependent upon the condition of certain parts in the mixer circuit. These parts are listed below under "POSSIBLE CAUSE OF ABNORMAL INDICATION."

STEP	TEST POINT	NORMAL INDICATION	POSSIBLE CAUSE OF ABNORMAL INDICATION
1	A	Loud, clear speaker output with weak generator input.	Trouble in this section. Isolate by the following tests.
2	C	Loud, clear output with moderate input.	Defective: 1T4, 1U5 (diode section). Misaligned: Z301. Open: R300, C303, L301A, R301, L301B, C301A. Shorted: C300B, C303, L301A, L301B, C301A, C301B.
3	A	Same as step 1.	Defective: 1R5*. Misaligned: Z300. Open: C300A, L300A, L300B, C300B, T400*. Shorted: C400A*, C400B*, C300A, L300A, L300B, C300B.

*This part, located in another section, may cause abnormal indication in this section.

Section 4—R-F And Converter Circuits

TROUBLE SHOOTING

For the tests in this section, with the exception of the oscillator test, use an r-f signal generator with modulated output. Connect the generator ground lead to B—, test point B; connect the output lead through a .1-mf. condenser to the test points indicated in the chart.

Set the radio volume control to maximum. Set the tuning control and signal-generator frequency as indicated in the chart.

If the "NORMAL INDICATION" is obtained in step 1, further tests should be unnecessary; if not, isolate and correct the trouble in this section. If the trouble is not revealed by the tests for this section, check the alignment.

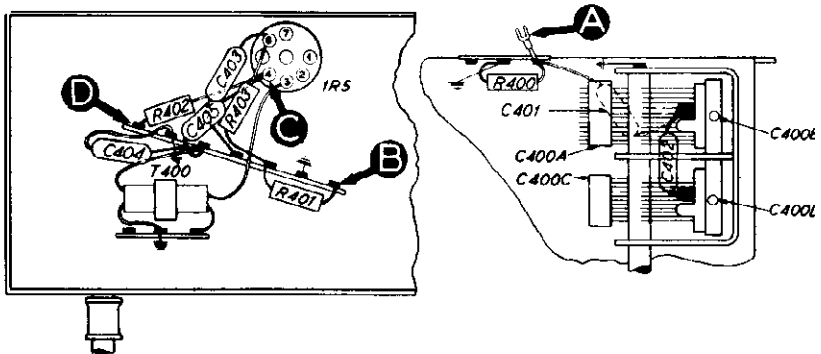

Figure 4. Bottom View, Showing Section 4 Test Points TP-5355D-1

STEP	TEST POINT	SIGNAL GEN. FREQUENCY	RADIO TUNING	NORMAL INDICATION	POSSIBLE CAUSE OF ABNORMAL INDICATION
1	A	1000 kc.	Tune to signal.	Loud, clear speaker output with weak generator input.	Trouble in this section. Isolate by the following tests.
2	C to D (Osc. test; see note below.)		Rotate through range.	Negative 5 to 10 volts.	Defective: 1R5. Open: R402, T400, C405. Shorted: C402, C400C, C400D.
3	A	1000 kc.	Tune to signal.	Same as step 1.	Open: C401, C403, R401, R403, LA400.

©John F. Rider

MODEL 50-620

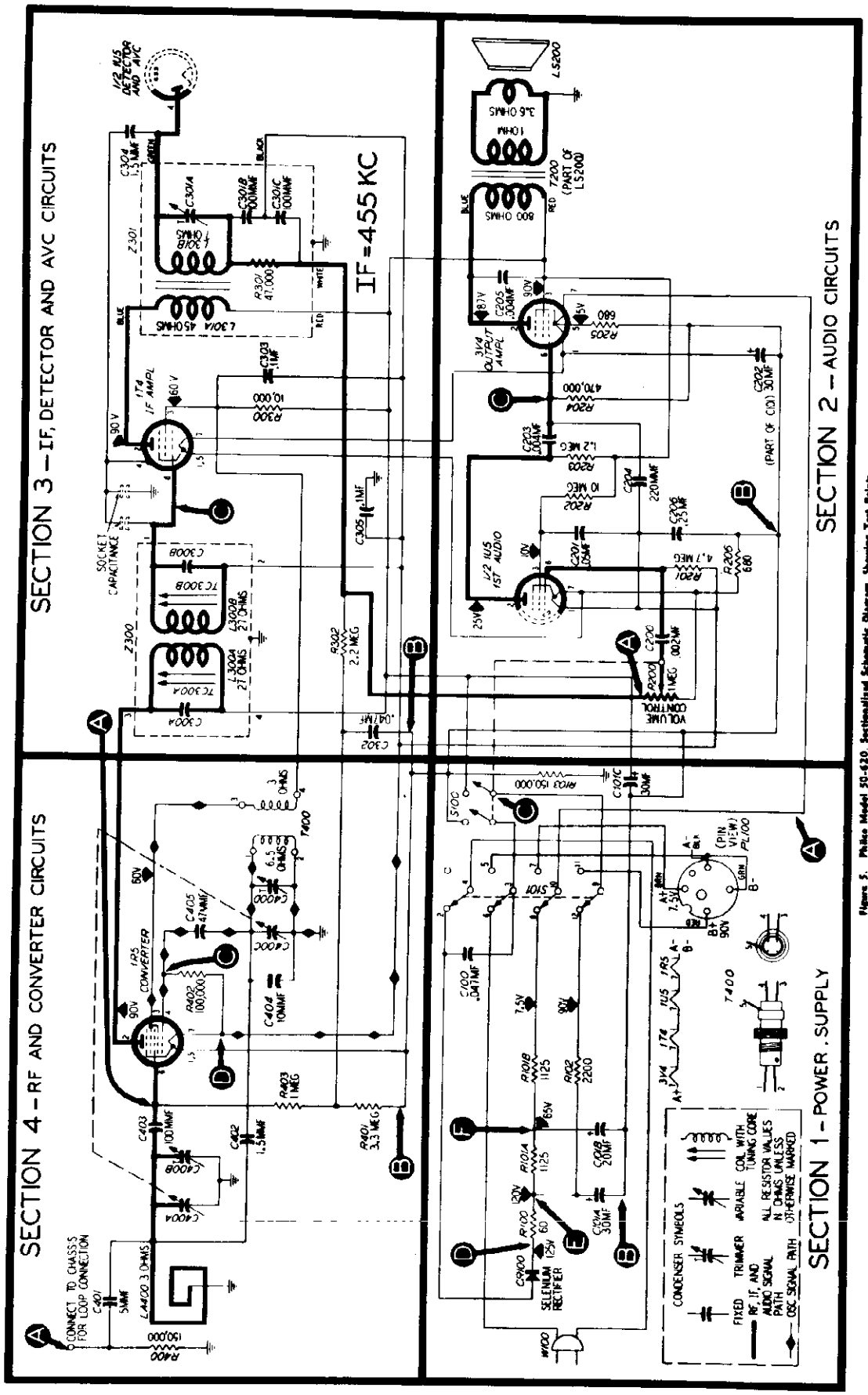

Figure 5. Philco Model 50-620 Sectionalized Schematic Diagram, Showing Test Points TP-5355-1

OSCILLATION TEST. Connect the positive lead of a high-resistance voltmeter to test point D, connect the metal end of the negative lead through a 100,000-ohm isolating resistor to the oscillator grid (pin 4 of the 1R5), test point C. Use a suitable meter range such as 0-10 volts. Proper operation of the oscillator is indicated by negative voltage within the range given on the chart (measured with a 20,000-ohms-per-volt meter) throughout the tuning range.

©John F. Rider

ALIGNMENT PROCEDURE

DIAL—Calibration and pointer-index measurements are shown in figure 7. With tuning condenser fully meshed, set pointer to index mark.

RADIO CONTROLS—Set volume control to maximum.

OUTPUT METER—Connect across voice-coil terminals.

SIGNAL GENERATOR—Use modulated output.

OUTPUT LEVEL—During alignment, adjust signal-generator output to maintain output-meter indication below .5 volt.

SPECIAL NOTE—The orientation of the loop with respect to the chassis is critical for correct tracking. During alignment, with the cabinet back (containing the loop) laid down on the bench, the chassis should be laid on its back, in approximately its normal relation to the loop.

STEP	SIGNAL GENERATOR		RADIO		ADJUST
	CONNECTION TO RADIO	DIAL SETTING	DIAL SETTING	SPECIAL INSTRUCTIONS	
1	Ground lead to B— (test point B in figure 4). Positive lead through .05-mf. condenser to external aerial lead. Make sure that radio loop aerial is connected to radio.	455 kc.	Tuning condenser fully meshed.	Adjust, in order given, for maximum output.	C301A—2nd i-f sec. TC300B—1st i-f sec. TC300A—1st i-f prl.
2	Radiating loop (see note below).	1600 kc.	1600 kc.	Adjust for maximum output.	C400D—osc.
3	Same as step 2.	1500 kc.	1500 kc.	Adjust for maximum output while rocking tuning condenser.	C400B—aerial

RADIATING LOOP: Make up a 8—8-turn, 8-inch-diameter loop, using insulated wire; connect to signal-generator leads and place near radio loop aerial. Make sure that radio loop aerial is connected to radio.

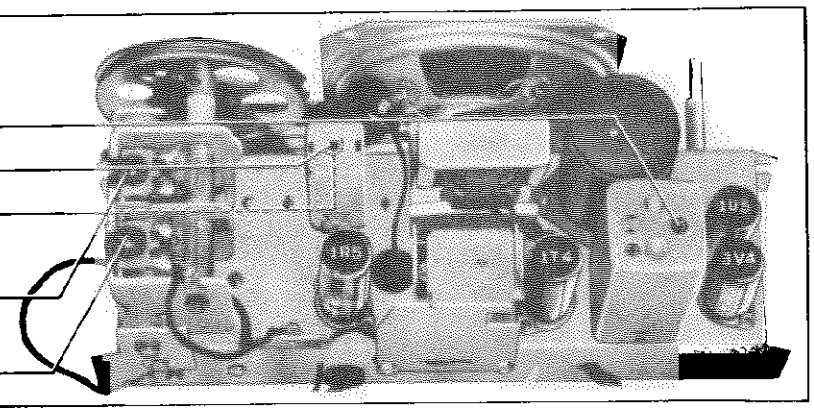

Figure 6. Top View, Showing Trimmer Locations TP-5283

CALIBRATING DIAL BACKPLATE

When the radio chassis has been removed from the cabinet, dial calibration and alignment points may be marked on the dial (chassis) backplate at the end of the pointer with a pencil. The method of measuring for these points is illustrated in figure 7.

With the tuning gang fully meshed, the pointer should be adjusted on the dial-drive cord to coincide with the index mark.

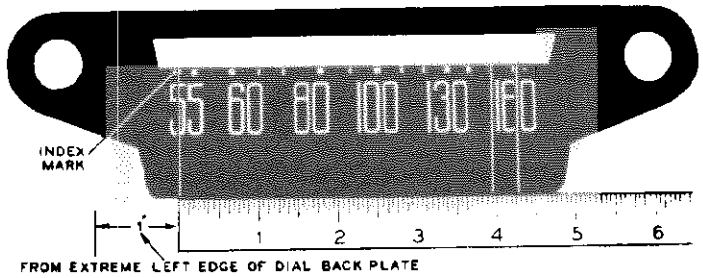

Figure 7. Dial-Backplate Calibration Measurements TP-5276

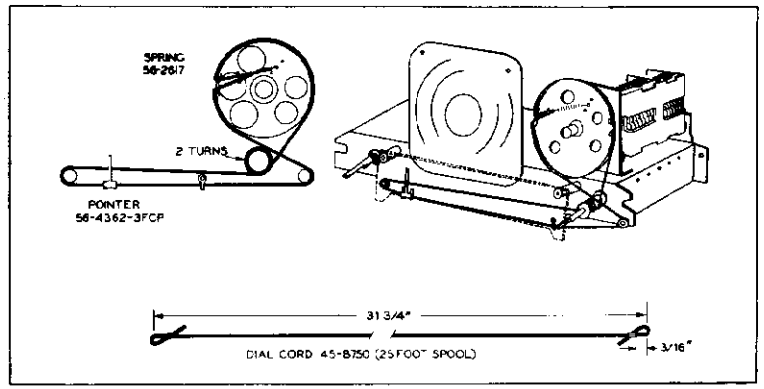

Figure 8. Drive-Cord Installation Details TP-5354E-1

MODEL 50-620

SYMBOLIZATION

The components in the radio circuit are symbolized according to the types of parts and the sections of the radio in which the parts are located. The prefix letter of the symbol designates the type of part, as follows:

C—condenser
I—pilot lamp
L—choke or coil
LA—loop aerial
LS—loud-speaker
R—resistor
S—switch
T—transformer
W—line cord
Z—electrical assembly

The number of the symbol designates the section in which the part is located, as follows:

100-series components are in Section 1—the power supply
200-series components are in Section 2—the audio circuits
300-series components are in Section 3—the i-f, detector, and a-v-c circuits
400-series components are in Section 4—the r-f and converter circuits

A suffix letter identifies the part as a component of the assembly which bears an identical number without a suffix letter, and with perhaps a different prefix letter.

REPLACEMENT PARTS LIST

NOTE: Part numbers identified by an asterisk (*) are general replacement items. These numbers may not be identical with those on factory assemblies; also, the electrical values of some replacement items may differ from the values indicated in the schematic diagram and parts list. The values substituted in any case are so chosen that the operation of the radio will be either unchanged or improved. When ordering replacements, use only the "Service Part No."

SECTION 1
POWER SUPPLY

Reference Symbol	Description	Service Part No.
C100	Condenser, line filter, .047 mf.	61-0122*
C101	Condenser, electrolytic, 4-section	30-2568-21
C101A	Condenser, filter, 30 mf., 150v	Part of C101
C101B	Condenser, filter, 20 mf., 150v	Part of C101
C101C	Condenser, filter, 30 mf., 150v	Part of C101
CR100	Rectifier, selenium	34-8003-1
PL100	Battery-cable-and-plug assembly	41-3712-2
R100	Resistor, current limiting, 60 ohms, 1 watt	33-1334
R101	Resistor, 2-section	33-3431-5
R101A	Resistor, filament-dropping, 1125 ohms, 3 watts	Part of R101
R101B	Resistor, filament-dropping, 1125 ohms, 3 watts	Part of R101
R102	Resistor, filter, 2200 ohms	66-2223340*
R103	Resistor, leakage, 150,000 ohms	66-4153340*
S100	Switch, on-off	Part of 33-5538-28
S101	Switch, change-over	42-1821
W100	Line-cord-and-plug assembly	L2183*

SECTION 2
AUDIO CIRCUITS

C200	Condenser, d-c blocking, .002 mf.	61-0062*
C201	Condenser, screen by-pass, .05 mf.	61-0122*
C202	Condenser, filter, 30 mf., 25v	Part of 30-2568-21
C203	Condenser, d-c blocking, .004 mf.	61-0179*
C204	Condenser, r-f by-pass, 220 mmf.	62-122001001*
C205	Condenser, tone compensation, .004 mf.	61-0179*
C206	Condenser, by-pass, .25 mf.	61-0125*
LS200	Loud-speaker, p-m	36-1627-9
R200	Volume control, 1 megohm	33-5538-28
R201	Resistor, grid return, 4.7 megohms	66-5473340*
R202	Resistor, screen dropping, 10 megohms	66-6103340*
R203	Resistor, plate load, 1.2 megohms	66-5123340*
R204	Resistor, grid return, 470,000 ohms	66-4473340*
R205	Resistor, bias, 680 ohms	66-1683340*
R206	Resistor, diode return, 470 ohms	66-1473340*
T200	Transformer, output	Part of LS200

SECTION 3
I-F, DETECTOR, AND A-V-C CIRCUITS

C300A	Condenser, shunt	Part of Z300
C300B	Condenser, shunt	Part of Z300
C301A	Condenser, trimmer	Part of Z301
C301B	Condenser, filter	Part of Z301
C301C	Condenser, filter	Part of Z301
C302	Condenser, a-v-c filter, .047 mf.	61-0122
C303	Condenser, screen by-pass, .1 mf.	61-0113*
C304	Condenser, neutralizing, 1.5 mmf.	30-1221-3
C305	Condenser, i-f by-pass, .1 mf.	30-4527
L300A	Transformer primary, 1st i-f	Part of Z300

SECTION 3 (Continued)
I-F, DETECTOR, AND A-V-C CIRCUITS

Reference Symbol	Description	Service Part No.
L300B	Transformer secondary, 1st i-f	Part of Z300
L301A	Transformer primary, 2nd i-f	Part of Z301
L301B	Transformer secondary, 2nd i-f	Part of Z301
R300	Resistor, screen dropping, 10,000 ohms	66-3103340*
R301	Resistor, filter, 47,000 ohms (Part of Z301)	66-3473340*
R302	Resistor, a-v-c filter, 2.2 megohms	66-5223340*
Z300	Transformer, 1st i-f	32-4160-4A
Z301	Transformer, 2nd i-f	32-3987-3*

SECTION 4
R-F AND CONVERTER CIRCUITS

C400	Condenser, tuning gang	31-2727-2
C400A	Condenser, tuning, aerial section	Part of C400
C400B	Condenser, trimmer, aerial	Part of C400
C400C	Condenser, tuning, oscillator section	Part of C400
C400D	Condenser, trimmer, oscillator	Part of C400
C401	Condenser, isolating, 5 mmf.	30-1224-5*
C402	Condenser, neutralizing, 1.5 mmf.	30-1221-3
C403	Condenser, d-c blocking, 100 mmf.	60-10105407*
C404	Condenser, temperature amp., 10 mmf.	30-1224-26*
C405	Condenser, d-c blocking, 47 mmf.	60-00515307*
LA400	Loop aerial	32-4274
R400	Resistor, leakage, 150,000 ohms	66-4153340*
R401	Resistor, grid return, 3.3 megohms	66-5333340*
R402	Resistor, oscillator bias, 100,000 ohms	66-4103340*
R403	Resistor, a-v-c divider, 1 megohm	66-5103340*
T400	Transformer, oscillator	32-4263

MISCELLANEOUS

Description	Service Part No.
Cabinets and Cabinet Parts	
Cabinet (M), maroon	10703
Cabinet (G), green	10703C
Cabinet (B), brown	10703D
Baffle	54-7577
Handle assembly (M) and (G)	76-4089
Handle assembly (B)	76-4089-2
Knob (M), 2 required	54-4557
Knob (G), 2 required	54-4557-3
Knob (B), 2 required	54-4557-4
Back (M)	54-4551
Back (G)	54-4551-3
Back (B)	54-4551-4
Dial Backplate	76-3668
Drive cord, 25-foot spool	45-8750*
Pointer	56-4362-3FCP
Spring, drive cord	56-2617
Lever assembly, switch	76-3666
Shaft-and-pulley assembly	76-3671-1
Socket, miniature	27-6203

©John F. Rider

SPECIFICATIONS

CABINET	Molded plastic, brown
CIRCUIT	Five-tube (plus rectifier) superheterodyne
FREQUENCY RANGE	540—1620 kc.
AUDIO OUTPUT	160 milliwatts
OPERATING VOLTAGES	117 volts, a.c. or d.c.; or 9-volt "A" battery and 90-volt "B" battery
POWER CONSUMPTION	
A-C or D-C Operation	15 watts
Battery Operation	55 ma. at 9 volts and 13 ma. at 90 volts
INTERMEDIATE FREQUENCY	265 kc.
PHILCO TUBES (5)	1T4, 1R5, 1U4, 1U5, 3V4
BATTERY TYPE	Philco P-363

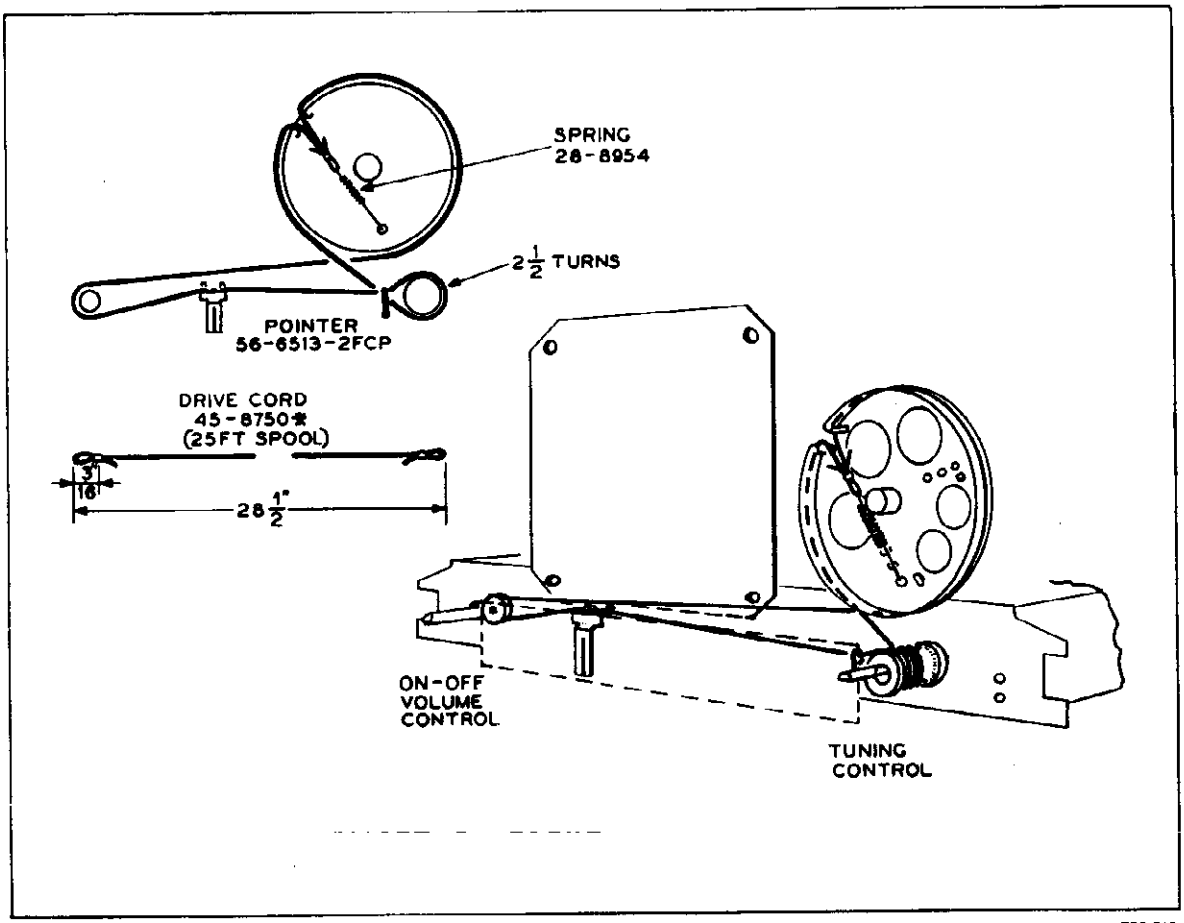

Figure 1. Drive-Cord Installation Details

TP9-513

©John F. Rider

MODEL 50-621

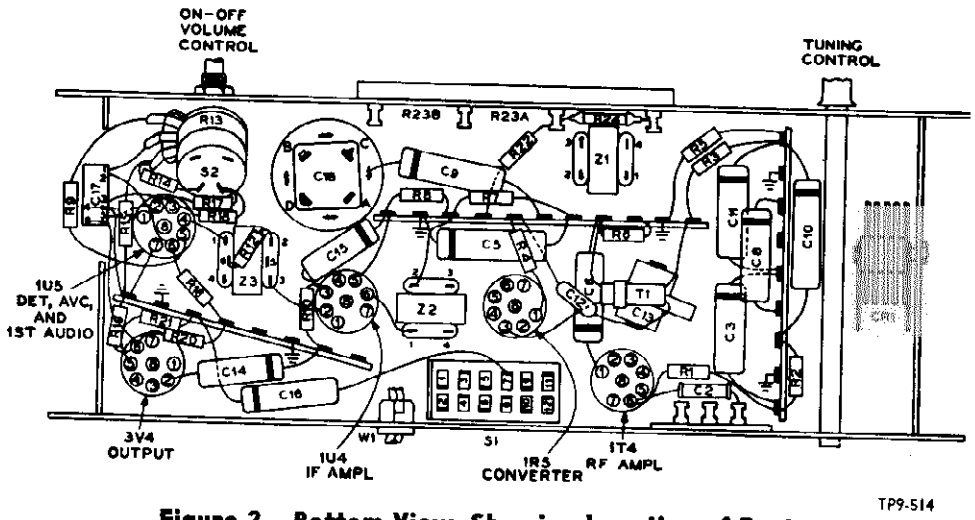

Figure 2. Bottom View, Showing Location of Parts

REPLACEMENT PARTS LIST

NOTE: Part numbers identified by an asterisk (*) are general replacement items. These numbers may not be identical with those on factory parts; also, the electrical values of some replacement items may differ from the values indicated in the schematic diagram and parts list. The values substituted in any case are so chosen that the operation of the radio will be either unchanged or improved. When ordering replacements, use only the "Service Part No."

Reference Symbol	Description	Service Part No.
C1	Condenser, tuning gang, 3-section	31-2747
C1A	Condenser, aerial trimmer	Part of C1
C1B	Condenser, r-f trimmer	Part of C1
C1C	Condenser, osc. trimmer	Part of C1
C2	Condenser, d-c blocking, 100 $\mu\mu f$.	62-110009001*
C3	Condenser, bias filter, .05 μf.	61-0122*
C4	Condenser, d-c blocking, 10 $\mu\mu f$.	Part of Z1
C5	Condenser, filament by-pass, .05 μf.	61-0122*
C6	Condenser, screen by-pass, .05 μf.	61-0122*
C7	Condenser, neutralization, 1.5 $\mu\mu f$.	30-1221-3
C8	Condenser, a-v-c filter, .05 μf.	61-0122*
C9	Condenser, filament by-pass, .1 μf.	61-0113*
C10	Condenser, filament by-pass, .1 μf.	61-0113*
C11	Condenser, filament by-pass, .05 μf.	61-0122*
C12	Condenser, d-c blocking, 47 $\mu\mu f$.	30-1224-2*
C13	Condenser, series padder, oscillator	31-6473-16
C14	Condenser, tone compensation, .004 μf.	61-0179*
C15	Condenser, screen neutralizing, .003 μf.	61-0109*
C16	Condenser, line by-pass, .04 μf.	45-3500-2*
C17	Condenser, ceramic, 4-section	30-1237
C17A	Condenser, screen by-pass, .01 μf.	Part of C17
C17B	Condenser, by-pass, 200 $\mu\mu f$.	Part of C17
C17C	Condenser, d-c blocking, .002 μf.	Part of C17
C17D	Condenser, d-c blocking, .001 μf.	Part of C17
C18	Condenser, electrolytic, 4-section	30-2568-26
C18A	Condenser, filament by-pass, 60 μf.	Part of C18
C18B	Condenser, filter, 30 μf.	Part of C18
C18C	Condenser, filter, 10 μf.	Part of C18
C18D	Condenser, filter, 60 μf.	Part of C18
CR1	Selenium rectifier	34-8300*
LA1	Loop aerial	32-4052-36
LS1	Speaker, 4-inch, with output transformer	36-1627-9
PL1	Plug and cable, battery	41-3712-5
R1	Resistor, grid return, 1 megohm	66-5108340*
R2	Resistor, a-v-c divider, 4.7 megohms	66-5478340*
R3	Resistor, grid return, 2.2 megohms	66-5228340*
R4	Resistor, grid return, 100,000 ohms	66-4108340*
R5	Resistor, leakage, 150,000 ohms	66-4158340*
R6	Resistor, dropping, 15,000 ohms	66-3158340*
R7	Resistor, grid return, 2200 ohms	66-2228340*
R8	Resistor, grid return, 2200 ohms	66-2228340*
R9	Resistor, a-v-c filter, 4.7 megohms	66-5478340*
R10	Resistor, neutralization, 2200 ohms	66-2228340*
R11	Resistor, a-v-c filter, 4.7 megohms	66-5478340*
R12	Resistor, i-f filter, 100,000 ohms	66-4108340*
R13	Volume control, 1 megohm	33-5566-11
R14	Resistor, diode return, 680 ohms	66-1688340*
R15	Resistor, diode return, 120 ohms	66-1128340*
R16	Resistor, grid return, 4.7 megohms	66-5478340*
R17	Resistor, plate load, 470,000 ohms	66-4478340*
R18	Resistor, screen dropping, 2.2 megohms	66-5228340*
R19	Resistor, grid return, 4.7 megohms	66-5478340*
R20	Resistor, grid return, 2.2 megohms	66-5228340*
R21	Resistor, bias, 680 ohms	66-1688340*
R22	Resistor, filter, 2200 ohms	66-2228340*
R23	Resistor, wire wound 2-section	33-3431-5
R23A	Resistor, filament dropping, 1125 ohms, 3 watts	Part of R23
R23B	Resistor, filament dropping, 1125 ohms, 3 watts	Part of R23
R24	Resistor, wire wound, current limiting, 60 ohms	33-1334
S1	Switch, change-over	42-1899
S2	Switch, on-off	Part of R13
T1	Transformer, oscillator	32-4263-2
T2	Transformer, output	Part of LS1
W1	Line cord	L-2183*
Z1	Transformer, r-f	32-4399A
Z2	Transformer, 1st i-f	32-4160-2A
Z3	Transformer, 2nd i-f	32-4240-6A

MISCELLANEOUS

Description	Service Part No.
Cabinet, complete	10761-3
Back	54-4712-1
Baffle	54-7857
Front	54-4711
Handle assembly	76-4960
Dial-backplate assembly	76-4957
Drive cord, 25-ft. spool	45-8750*
Pointer	56-6513-2FCP
Spring, drive cord	28-8954
Shaft and pulley assembly	76-3671-4
Shield, 1U5 tube	56-5629FA3
Base, shield	56-5628FA3
Socket, tube, miniature	27-6203

©John F. Rider

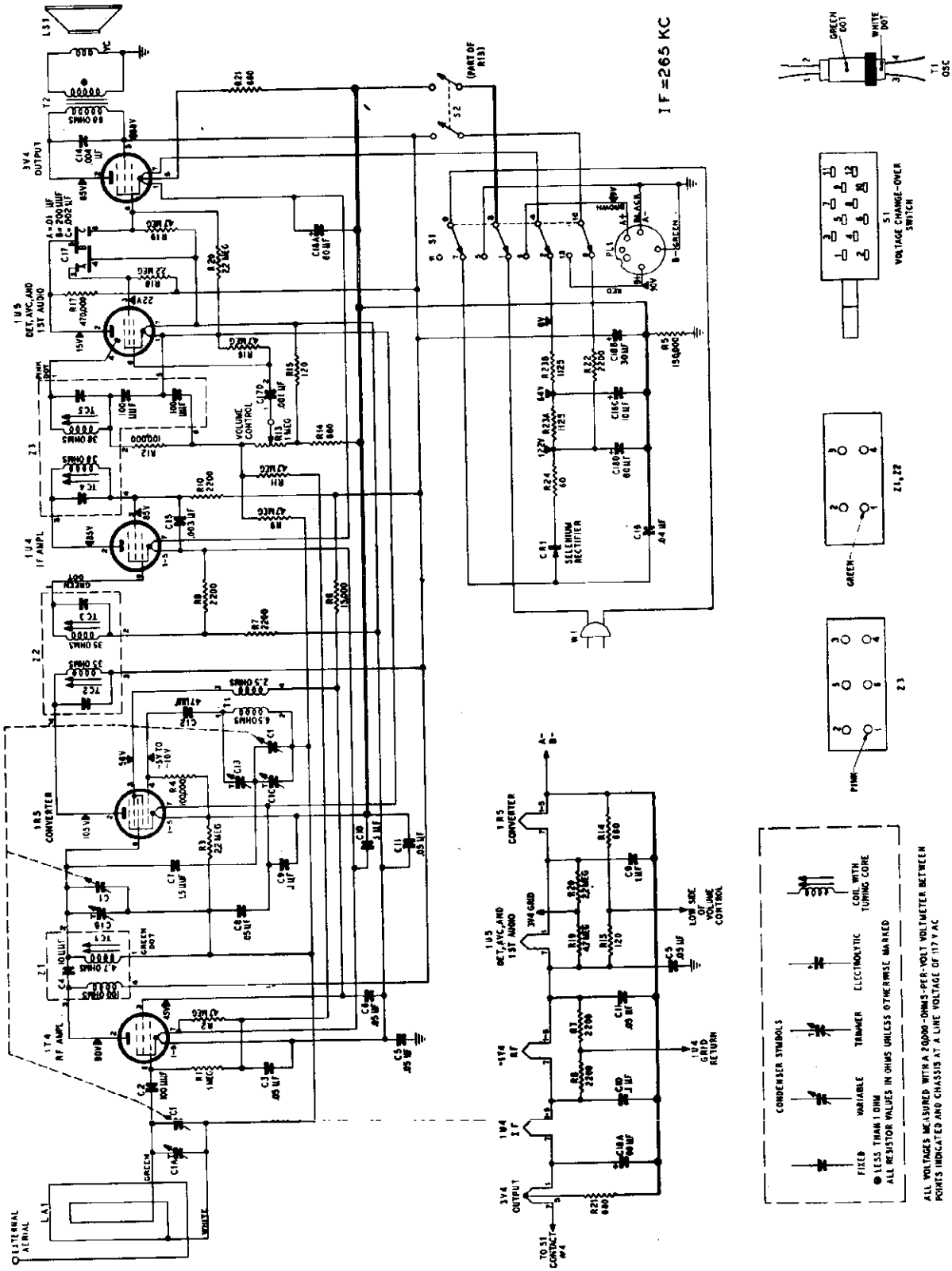

Figure 3. Philco Portable Radio Model 50-621, Complete Schematic Diagram

MODEL 50-621

ALIGNMENT PROCEDURE

POINTER—Set pointer to coincide with first index mark from left side of dial backplate (looking at backplate).

RADIO CONTROLS—Set volume control to maximum.

OUTPUT METER—Connect across voice-coil terminals.

SIGNAL GENERATOR—Use modulated output.

OUTPUT LEVEL—During alignment, adjust signal-generator output to maintain output-meter indication below .5 volt.

SPECIAL NOTE—The orientation of the loop with respect to the chassis and battery is critical for correct tracking. During alignment, with the cabinet back (containing the loop) lying flat on the bench, the chassis should be laid on its back in approximately its normal relation to the loop, with a 1/4"-thick wooden board separating the loop and chassis. The battery should also be placed as close as possible to its normal position with respect to the chassis and loop.

CRITICAL LEAD DRESS—To secure proper padding capacity, the green lead from pin 6 of the 1R5 tube to Z1 must be dressed over wiring panel, away from chassis, and the green lead from Z1 to the tuning condenser must be dressed away from chassis.

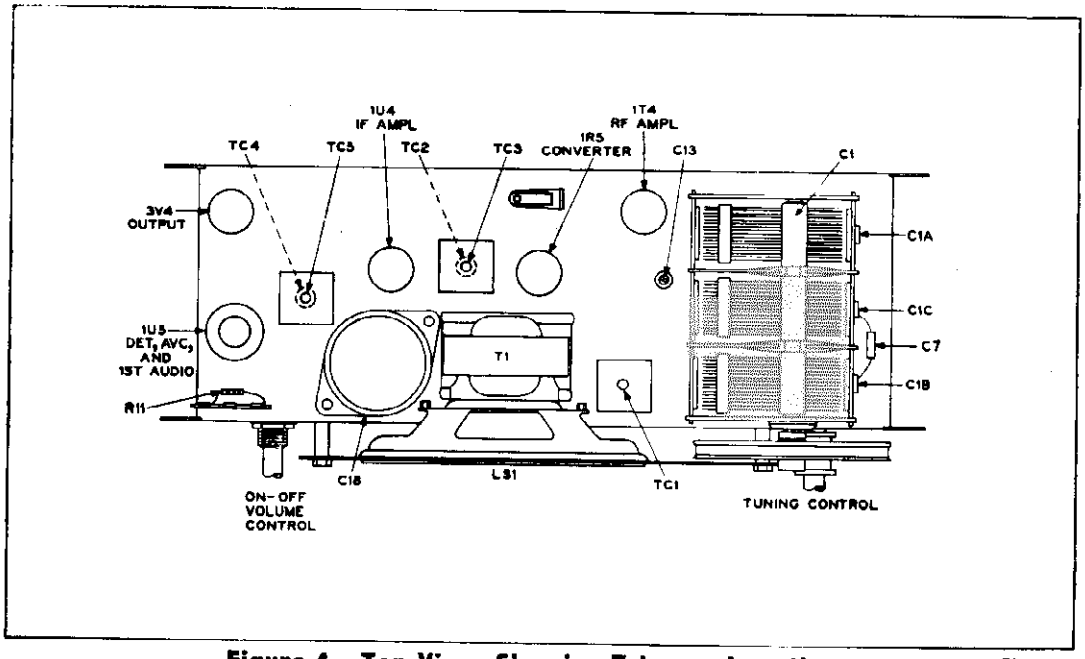

Figure 4. Top View, Showing Trimmer Locations

TP9-516

STEP	SIGNAL GENERATOR		RADIO		ADJUST
	CONNECTION TO RADIO	DIAL SETTING	DIAL SETTING	SPECIAL INSTRUCTIONS	
1	Through a .1-μf. condenser to pin 6 of the 1R5 converter.	265 kc.	540 kc. (gang fully meshed)	Adjust, in order given, for maximum output.	TC5—2nd i-f sec. TC4—2nd i-f pri. TC2—1st i-f pri. TC3—1st i-f sec.
2	Radiating loop. See note below.	1620 kc.	1620 kc. (gang fully open)	Adjust for maximum output. If low-frequency dial tracking is far off, make adjustments in steps 3 and 4 before making this adjustment.	C1C—osc. shunt
3	Same as step 2.	580 kc.	580 kc.	Adjust for maximum output while rocking tuning control.	C13—osc. series
4	Same as step 2.	580 kc.	580 kc.	Adjust for maximum output. This adjustment should not be made unless dial tracking is off, or sensitivity is low at low-frequency end (580 kc.).	TC1—r-f sec.
5	Same as step 2.	1500 kc.	1500 kc. (index mark at right)	Adjust, in order given, for maximum output.	C1B—r-f trimmer C1A—aerial trimmer
6	Repeat steps 3 and 5 until no further improvement is obtained.				

RADIATING LOOP: Make up a six-to-eight-turn, 6-inch-diameter loop using insulated wire; connect to signal-generator leads and place near radio loop.

©John F. Rider

MODEL 50-925

Circuit Description

Philco Radio Model 50-925 is a superheterodyne employing six tubes plus a selenium rectifier. Reception is provided in the standard-broadcast and FM bands. A built-in high-impedance loop is used as the aerial for the broadcast band, and the line cord is used as the aerial for the FM band. These aerials normally provide adequate signal pickup; if additional pickup is required on the FM band, Philco Dipole Aerial Part No. 45-1462 may be used. If it is desired to use the FM dipole aerial to provide additional AM as well as FM pickup, Aerial Coupler Part No. 45-1598 and Aerial Coupler Cable Part No. 45-1652 should be used in conjunction with the dipole aerial. The purpose of the cable is to permit the isolation of the coupler from the chassis, since the coupler must not be connected directly to the "hot" chassis.

A 12BA6 pentode is used as an r-f amplifier, for FM only. This stage is capacity-coupled to a 12BA7, which is employed as a mixer and oscillator for both bands, by switching the mixer grid and common cathode to the proper circuits.

For broadcast reception, the i-f signal is transformer-coupled to a 12BA6 i-f amplifier. The output of this stage is transformer-coupled to a diode section of the 19T8, which provides detection and a-v-c action.

For FM reception, an additional i-f amplifier stage, which employs another 12BA6, is used to provide adequate gain and stability. The 12BA6 is transformer-coupled to two diode sections of the 19T8, in a ratio-detector circuit. The proper detector for AM or FM is selected by the band switch at the detector output circuits.

In the i-f circuits, two sets of i-f transformers are used. One set is tuned to 455 kc., for standard broadcast, and the other set is tuned to 9.1 mc., for FM. The use of two sets of transformers makes better shielding possible, so that undesirable beat signals and interaction between transformers are eliminated. In switching bands, the band switch shorts the primary of the 1st i-f transformer for the undesired band.

The triode section of the 19T8 is employed as the first audio amplifier; this section is resistance-coupled to the 50C5 output tube, which supplies an audio output of approximately one watt to the permanent-magnet speaker.

The power supply utilizes a selenium rectifier in a half-wave-rectifier circuit, and operates from a line voltage of 105—120 volts, a.c. or d.c.

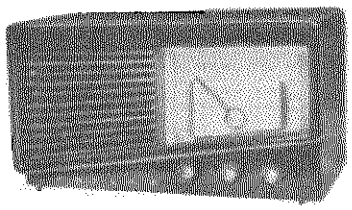

MODEL 50-925

SPECIFICATIONS

CABINET	Plastic, brown finish
CIRCUIT	6-tube superheterodyne, plus selenium rectifier
FREQUENCY RANGES	
Broadcast	540—1620 kc.
FM	88—108 mc.
AUDIO OUTPUT	1 watt
OPERATING VOLTAGE	105—120 volts, a.c. or d.c.
POWER CONSUMPTION	35 watts
AERIALS	Built-in high-impedance loop for AM, line cord for FM; also connector for external aerial
INTERMEDIATE FREQUENCIES	
Broadcast	455 kc.
FM	9.1 mc.
PHILCO TUBES (6)	12BA6(3), 12BA7, 19T8, 50C5

TP-8091

Philco TROUBLE SHOOTING *Procedure*

For rapid trouble shooting, the radio circuit is divided into four sections, with test points specified for each section; these sections and test points are indicated in the schematic diagram. The trouble-shooting procedure given for each section includes a simplified test chart and a bottom view of the chassis showing the locations of the test points and the components of that section.

In each chart, the first step is a master check for determining whether trouble exists in that section, without going through the entire test procedure.

Failure to obtain the "NORMAL INDICATION" in any given step indicates trouble within the circuit under test.

After isolating the trouble to a single stage, the defect is located by: first, testing the tube; second, measuring tube electrode voltages; third, measuring circuit resistances; fourth, substituting condensers. The trouble revealed should be corrected before testing further.

©John F. Rider

MODEL 50-925

Preliminary Checks

To avoid possible damage to the radio, the following preliminary checks should be made before it is turned on:

1. Inspect both the top and the bottom of the chassis. Make sure that all tubes are secure in the proper sockets, and look for any broken or shorted connections, burned resistors, or other obvious indications of trouble.
2. Measure the resistance between B+ (test point B) and the chassis (test point C). When the ohmmeter test leads are connected in the proper polarity, the highest resistance reading will be obtained. If the reading is lower than 1500 ohms, check condensers C102A, C102B, C102C, and C309 for leakage or shorts. The resistance value given is much lower than normal, and is not intended as a quality check of these condensers; the value given is the lowest at which the rectifier will operate safely while the voltage checks of Section 1 (power supply) are performed.

Section 1 TROUBLE SHOOTING

POWER SUPPLY

CAUTION—One side of the power line is connected directly to the chassis. Do not connect chassis to ground. Use all precautions to avoid shock.

For the tests in this section, use a d-c voltmeter. Connect the negative lead to the chassis, test point C; connect the positive lead to the test points indicated in the chart. The voltage readings given were taken with a 20,000-ohms-per-volt meter, at a line voltage of 117 volts, a.c.

Turn on the power, and set the volume control to minimum. Set the band switch for broadcast reception.

If the "NORMAL INDICATION" is obtained in step 1, proceed with the tests for Section 2 (audio circuits); if not, isolate and correct the trouble in this section.

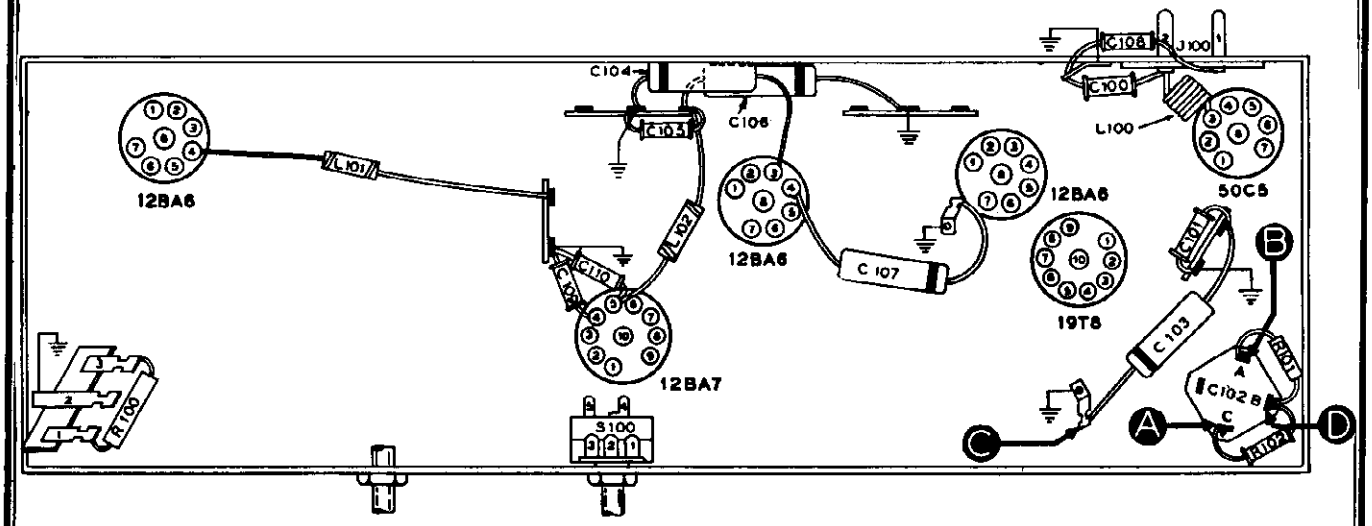

Figure 1. Bottom View, Showing Section 1 Test Points TP-8455A

STEP	TEST POINT	NORMAL INDICATION	ABNORMAL INDICATION	POSSIBLE CAUSE OF ABNORMAL INDICATION
1	A	100v		Trouble in this section. Isolate by the following tests.
2	B	135v	No voltage	Defective: CR100. Open: R100. Shorted: C102A.
			Low voltage	Defective: CR100. Shorted: C102A, C102B, C102C, C309*, C310*.
			High voltage	Open: R101.
3	D	120v	No voltage	Shorted: C102B. Open: R101.
			Low voltage	Leaky: C102B. Shorted: C102A, C102C.
			High voltage	Open: R102, T200* (primary), R204*.
4	A	100v	No voltage	Open: R102. Shorted: C102C.
			Low voltage	Shorted: C102B. Leaky: C102C.
Listening Test: Abnormal hum may be caused by open C102A, C102B, or C102C.				

* This part, located in another section, may cause abnormal indication in this section.

© John F. Rider

Section 2

TROUBLE SHOOTING

AUDIO CIRCUITS

For the tests in this section, use an audio-frequency signal generator. Connect the generator ground lead to the chassis, test point C; connect the output lead through a .1-mf. condenser to the test points indicated in the chart.

With the band switch set for broadcast reception (except for test point E), set the volume control to maximum.

If the "NORMAL INDICATION" is obtained in step 1, proceed with the tests for Section 3 (i-f, detector, and a-v-c circuits); if not, isolate and correct the trouble in this section.

STEP	TEST POINT	NORMAL INDICATION	POSSIBLE CAUSE OF ABNORMAL INDICATION
1	A E (Band switch in FM position)	Loud, clear speaker output with weak generator input.	Trouble in this section. Isolate by the following tests.
2	B	Loud, clear output with strong input.	Defective: 50C5. Open: R204, R203, C207, T200. Shorted: C205, C206, C207, C208. Leaky: C205, C206, C208.
3	D	Same as step 1.	Defective: 19T8 (triode section). Open: R201, R202, C205. Shorted or leaky: C204, C205.
4	A	Same as step 1.	Open: WS-1(F), R200, C203. Shorted: C202, C307*.
5	E (Band switch in FM position)	Same as step 1.	Open: C200, WS-1(F). Shorted: C201, C202.
Listening Test: Distortion may be caused by shorted or leaky C205 or by shorted, leaky, or open C207.			

* This part, located in another section, may cause abnormal indication in this section.

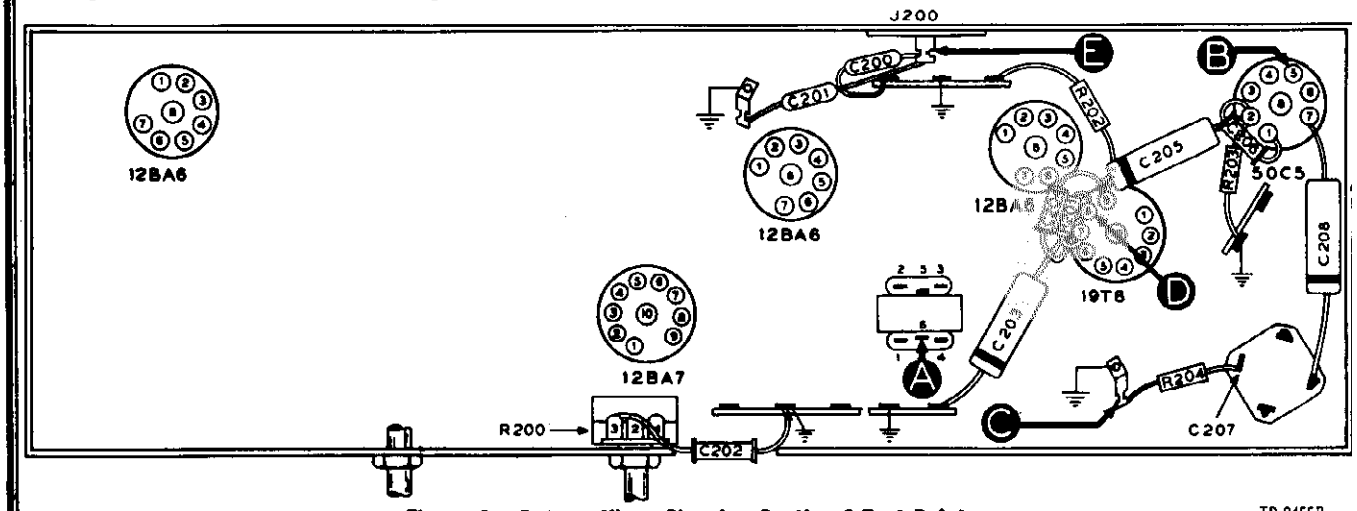

Figure 2. Bottom View, Showing Section 2 Test Points

TP-8455B

Section 3

TROUBLE SHOOTING

I-F, DETECTOR, AND A-V-C CIRCUITS

AM Circuits

For the AM tests in this section, use an AM r-f signal generator, with modulated output, set at 455 kc. Connect the generator ground lead to the chassis, test point C; connect the output lead through a .1-mf. condenser to the test points indicated in the chart.

With the volume control set to maximum, and the band switch set for broadcast reception, rotate the tuning control until the tuning condenser is fully meshed.

If the "NORMAL INDICATION" is obtained in step 1, proceed with the FM tests: if not, isolate and correct the trouble in the AM circuits.

To provide a complete i-f-amplifier check, test point A for this section is placed at the grid of the mixer in Section 4; therefore, the effectiveness of step 1 as a master check is dependent upon the condition of certain parts in the mixer circuit. These parts are listed on next page under "POSSIBLE CAUSE OF ABNORMAL INDICATION."

MODEL 50-925

Section 3 (Cont.) TROUBLE SHOOTING

AM Chart

STEP	TEST POINT	NORMAL INDICATION	POSSIBLE CAUSE OF ABNORMAL INDICATION
1	A	Loud, clear speaker output with weak generator input.	Trouble in AM circuits. Isolate by the following tests.
2	B	Loud, clear output with moderate input.	Defective: 12BA6, 19T8. Open: R301, R303, R305, R102*, R302. Shorted: C305, C303C, C303D. Misaligned or open: Z303.
3	A	Same as step 1.	Defective: 12BA7. Open: Z301, R404*, R300, WS-1(F), R402*, R307, L404. Shorted: C304, C408*, C409*. Misaligned: Z301.

* This part, located in another section, may cause abnormal indication in this section.

FM Circuits

For the FM tests in this section, follow the preliminary instructions for the AM tests, with the following exceptions:

Set the band switch for FM reception, set the signal generator to 9.1 mc., and detune to one side or the other until a satisfactory test signal is obtained.

The most satisfactory check on the operation of the discriminator circuit is the ability to make proper alignment as described under "ALIGNMENT PROCEDURE."

If the "NORMAL INDICATION" is obtained in step 1, proceed with the tests for Section 4 (r-f and converter circuits); if not, isolate and correct the trouble in this section.

FM Chart

STEP	TEST POINT	NORMAL INDICATION	POSSIBLE CAUSE OF ABNORMAL INDICATION
1	A	Loud, clear speaker output with weak generator input.	Trouble in FM circuits. Isolate by the following tests.
2	D	Loud, clear output with strong input.	Defective: 12BA6, 19T8 (diode sections). Open: R304, R308, R102*, R309, R310, Z304, C314, Z303. Shorted: C311, C312, C313, C314, C200*, C201*, Z304. Misaligned: Z304.
3	B	Loud, clear output with moderate input.	Open: Z302, R302, R306, R307, R301, R303. Shorted: C305, C309, C310. Misaligned: Z302.
4	A	Same as step 1.	Open: WS-1(F), R404*, Z300, Z301, R300, R102*, WS-2(R). Shorted: C408*, C409*, C304. Misaligned: Z300.

* This part, located in another section, may cause abnormal indication in this section.

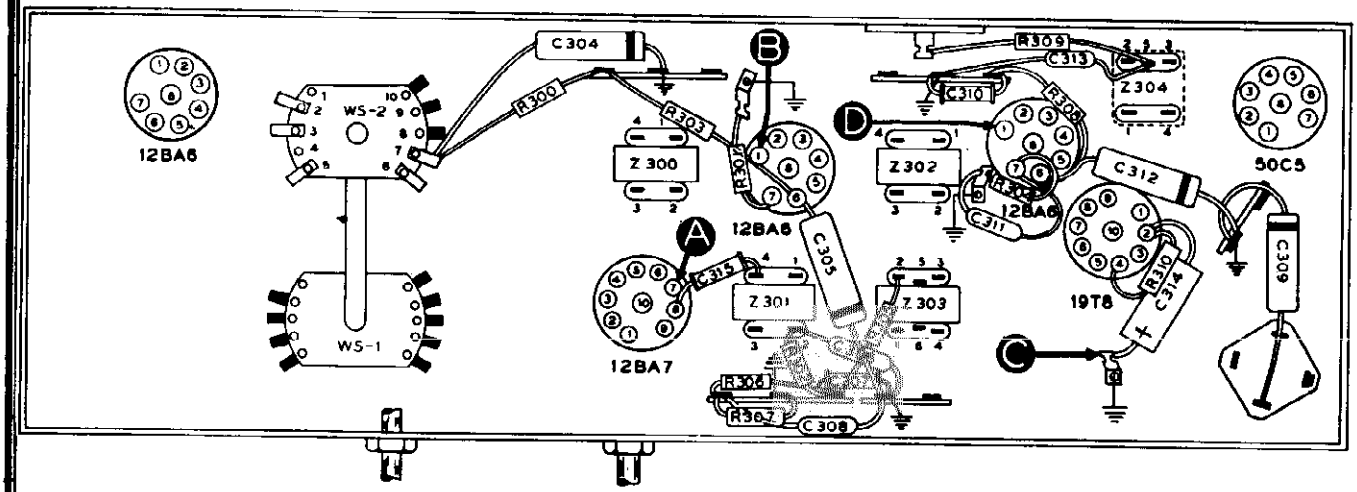

Figure 3. Bottom View, Showing Section 3 Test Points

TP-8455C

© John F. Rider

Section 4 TROUBLE SHOOTING

R-F AND CONVERTER CIRCUITS

AM Circuits

For the AM tests in this section, with the exception of the oscillator test, use an AM r-f signal generator with modulated output. Connect the generator ground lead to the chassis, test point C; connect the output lead through a .1-mf. condenser to the test points indicated in the chart.

With the volume control set to maximum, set the band switch for broadcast reception, and set the tuning control and signal-generator frequency as indicated in the chart.

If the "NORMAL INDICATION" is obtained in step 1, proceed with the tests for the FM circuits; if not, isolate and correct the trouble in the AM circuits.

FM Circuits

For the FM tests in this section, follow the preliminary instructions for the AM tests, except set the band switch for FM reception.

If the "NORMAL INDICATION" is obtained in step 1, further tests should be unnecessary; if not, isolate and correct the trouble in this section. If the trouble is not corrected by the tests for this section, check the alignment.

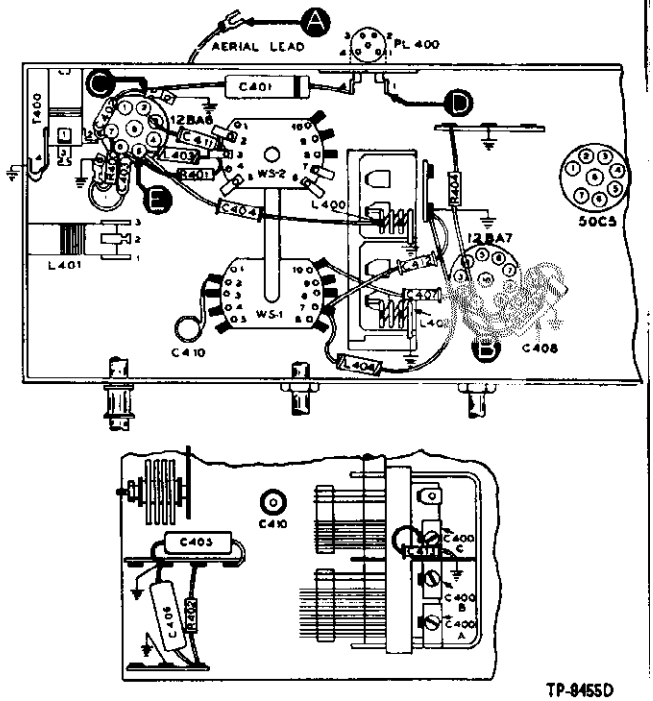

Figure 4. Bottom View, Showing Section 4 Test Points

AM Chart

STEP	TEST POINT	SIG. GEN. FREQ.	RADIO TUNING	NORMAL INDICATION	POSSIBLE CAUSE OF ABNORMAL INDICATION
1	A	1000 kc.	Tune to signal	Loud, clear speaker output with weak generator input.	Trouble in AM circuits. Isolate by the following tests.
2	B (Osc. test; see note below.)		Tune through range.	Negative .8 to 2.4 volts.	Open: WS-1(F), L401, C407, R403, R404, C408, C409. Shorted: C400C, C407, C304*, C408, C409. Defective: 12BA7 (osc. section). Misaligned: L401.
3	A	1000 kc.	Tune to signal	Same as step 1.	Open: T401, WS-2(F), R404, R300*, WS-1(F), R402. Shorted: C406, C408, C409.

* This part, located in another section, may cause abnormal indication in this section.

OSCILLATOR TEST: Connect the positive lead of a high-resistance voltmeter to the chassis, test point C; connect the prod end of the negative lead through a 100,000-ohm isolating resistor to the oscillator grid (pin 2) of the 12BA7, test point B. Use a suitable meter range, such as 0—10 volts. Proper operation of the oscillator is indicated by negative voltage of approximately the value given in the chart (measured with 20,000-ohms-per-volt meter) throughout the tuning range.

FM Chart

STEP	TEST POINT	SIG. GEN. FREQ.	RADIO TUNING	NORMAL INDICATION	POSSIBLE CAUSE OF ABNORMAL INDICATION
1	D	100 mc.	Tune to signal	Loud, clear speaker output with weak generator input.	Trouble in FM circuits. Isolate by the following tests.
2	B (Osc. test; see note above.)		Tune through range.	Negative .4 to 1.5 volts.	Defective: 12BA7 (osc. section). Open: WS-1(F), C407, R403, C410, R404, R300*. Shorted: C410, C407, C408, C409, C304*. Misaligned: L402.
3	E	100 mc.	Tune to signal	Loud, clear output with moderate input.	Defective: 12BA7. Open: C404, L400, WS-2(F). Shorted: C404, C400. Misaligned: L400.
4	D	100 mc.	Tune to signal	Loud, clear output with very weak input.	Defective: 12BA6. Open: T400, C401, C402, R400, R401, L403. Shorted: C402, C403, C309*, C310*.

* This part, located in another section may cause abnormal indication in this section.

© John F. Rider

MODEL 50-925

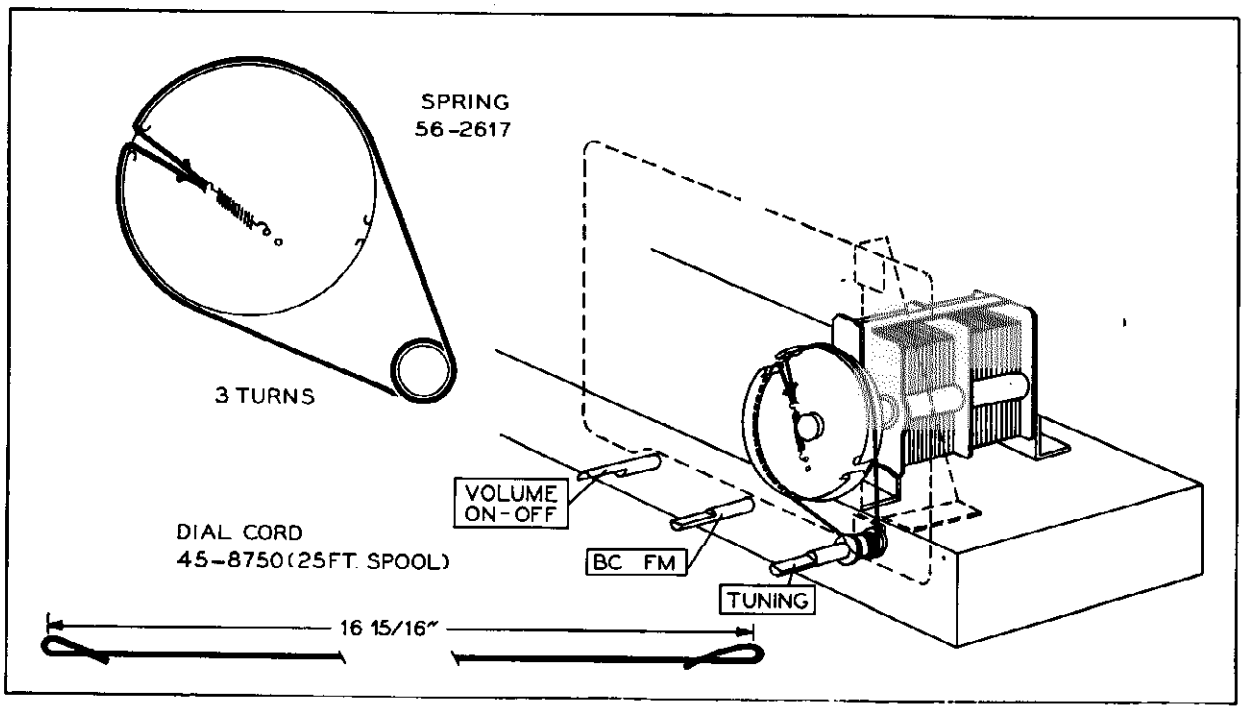

Figure 5. Drive-Cord Installation Details TP-5686E-1

REPLACEMENT PARTS LIST

NOTE: Part numbers identified by an asterisk (*) are general replacement items. These numbers may not be identical with those on factory parts; also, the electrical values of some replacement items may differ from the values indicated in the schematic diagram and parts list. The values substituted in any case are so chosen that the operation of the radio will be either unchanged or improved. When ordering replacements, use only the "Service Part No."

SECTION 1
POWER SUPPLY

Reference Symbol	Description	Service Part No.
C100	Condenser, line filter, 100 $\mu\mu f$	62-110009001*
C101	Condenser, line filter, 100 $\mu\mu f$	62-110009001*
C102	Condenser, electrolytic, 4 sections	30-2570-43
C102A	Condenser, filter, 40 mf., 150v	Part of C102
C102B	Condenser, filter, 70 mf., 150v	Part of C102
C102C	Condenser, filter, 40 mf., 150v	Part of C102
C103	Condenser, line by-pass, .04 μf	45-3500-2*
C104	Condenser, line by-pass, .01 μf	61-0120*
C105	Condenser, line by-pass, 100 $\mu\mu f$	62-110009001*
C106	Condenser, line by-pass, .01 μf	61-0120*
C107	Condenser, line by-pass, .01 μf	61-0120*
C108	Condenser, r-f by-pass, 100 $\mu\mu f$	62-110009001*
C109	Condenser, r-f by-pass, 100 $\mu\mu f$	62-110009001*
C110	Condenser, r-f by-pass, 100 $\mu\mu f$	62-110009001*
CR100	Selenium rectifier	34-8003-1
J100	Jack, male, a-c	27-4785-7
L100	Choke, line filter	32-4089-3
L101	Choke, filament	32-4061-2
L102	Choke, filament	32-4061-2
PL100	Plug, a-c	27-6200-1
R100	Resistor, current limiting, 20 ohms	33-1345
R101	Resistor, filter, 150 ohms	66-1154340*

SECTION 1 (Continued)
POWER SUPPLY

Reference Symbol	Description	Service Part No.
R102	Resistor, filter, 470 ohms	66-1474340*
S100	Switch, a-c, on-off	Part of R200
W100	Line cord	L-2183

SECTION 2
AUDIO CIRCUITS

C200	Condenser, FM coupling, .01 μf	61-0120*
C201	Condenser, de-emphasis, 2200 $\mu\mu f$	60-20225014
C202	Condenser, r-f by-pass, 100 $\mu\mu f$	62-110009001*
C203	Condenser, d-c blocking, .02 μf	61-0108*
C204	Condenser, parasitic suppressor, 680 $\mu\mu f$	62-168001001
C205	Condenser, audio coupling, .006 μf	45-3500-7*
C206	Condenser, r-f by-pass, 100 $\mu\mu f$	62-110009001*
C207	Condenser, electrolytic, cathode by-pass, 25 μf, 25v	Part of C102
C208	Condenser, tone compensating, .006 μf	45-3500-7*
J200	Jack, FM test	27-6180
LS200	Speaker, permanent-magnet	36-1614
R200	Volume control (with off-on switch) 500,000 ohms	33-5566-8
R201	Resistor, grid return, 10 megohms	66-6108340*

© John F. Rider

REPLACEMENT PARTS LIST (Continued)

SECTION 2 (Continued)

AUDIO CIRCUITS

Reference Symbol	Description	Service Part No.
R202	Resistor, plate load, 470,000 ohms	66-4478340*
R203	Resistor, grid return, 470,000 ohms	66-4478340*
R204	Resistor, cathode bias, 150 ohms	66-1158340*
T200	Transformer, output	Part of LS200
WS-1(F)†	Switch-wafer section	Part of 42-1896

SECTION 3

I-F, DET., AND A-V-C CIRCUITS

C300A	Condenser, fixed trimmer	Part of Z300
C300B	Condenser, fixed trimmer	Part of Z300
C301A	Condenser, fixed trimmer	Part of Z301
C301B	Condenser, fixed trimmer	Part of Z301
C302A	Condenser, fixed trimmer	Part of Z302
C302B	Condenser, fixed trimmer	Part of Z302
C303A	Condenser, fixed trimmer	Part of Z303
C303B	Condenser, fixed trimmer	Part of Z303
C303C	Condenser, i-f by-pass	Part of Z303
C303D	Condenser, i-f by-pass	Part of Z303
C304	Condenser, screen by-pass, .01 μf	61-0120*
C305	Condenser, screen by-pass, .003 μf	30-4582
C306	Condenser, a-v-c filter, .01 μf	61-0120*
C307	Condenser, r-f by-pass, 100 $\mu\mu f$	62-110009001*
C308	Condenser, a-v-c filter, .01 μf	61-0120*
C309	Condenser, i-f by-pass, .01 μf	61-0120*
C310	Condenser, r-f by-pass, 100 $\mu\mu f$	62-110009001*
C311	Condenser, cathode by-pass, .01 μf	61-0120*
C312	Condenser, screen by-pass, .002 μf	61-0062*
C313	Condenser, i-f by-pass, .01 μf	61-0120*
C314	Condenser, electrolytic filter, 2 μf, 50v	30-2417-7
C315	Condenser, r-f by-pass, 100 $\mu\mu f$	62-110009001*
L300A	Coil, 1st FM i-f primary	Part of Z300
L300B	Coil, 1st FM i-f secondary	Part of Z300
L301A	Coil, 1st AM i-f primary	Part of Z301
L301B	Coil, 1st AM i-f secondary	Part of Z301
L302A	Coil, 2nd FM i-f primary	Part of Z302
L302B	Coil, 2nd FM i-f secondary	Part of Z302
L303A	Coil, 2nd AM i-f primary	Part of Z303
L303B	Coil, 2nd AM i-f secondary	Part of Z303
L304A	Coil, FM discriminator transformer primary	Part of Z304
L304B	Coil, FM discriminator transformer secondary	Part of Z304
L304C	Coil, FM discriminator transformer tertiary	Part of Z304
R300	Resistor, plate load, 1000 ohms	66-2108340*
R301	Resistor, cathode bias, 47 ohms	66-0478340*
R302	Resistor, a-v-c filter, 1 megohm	66-5108340*
R303	Resistor, plate load, 1000 ohms	66-2108340*
R304	Resistor, cathode bias, 68 ohms	66-0688340*
R305	Resistor, r-f filter, 47,000 ohms	66-3478340*
R306	Resistor, a-v-c filter, 1 megohm	66-5108340*
R307	Resistor, isolating, 470,000 ohms	66-4478340*
R308	Resistor, plate load, 470 ohms	66-1478340*
R309	Resistor, isolating, 47,000 ohms	66-3478340*
R310	Resistor, FM detector load, 47,000 ohms	66-3478340*
TC300A	Tuning core	Part of Z300
TC300B	Tuning core	Part of Z300
TC301A	Tuning core	Part of Z301
TC301B	Tuning core	Part of Z301
TC302A	Tuning core	Part of Z302
TC302B	Tuning core	Part of Z302
TC303A	Tuning core	Part of Z303
TC303B	Tuning core	Part of Z303
TC304A	Tuning core	Part of Z304
TC304B	Tuning core	Part of Z304
WS-2(R)†	Switch-wafer section	Part of 42-1896
Z300	Transformer, 1st FM i-f	32-4372A
Z301	Transformer, 1st AM i-f	32-4160A

SECTION 3 (Continued)

I-F, DET., AND A-V-C CIRCUITS

Reference Symbol	Description	Service Part No
Z302	Transformer, 2nd FM i-f	32-4372-1A
Z303	Transformer, 2nd AM i-f	32-4240A
Z304	Transformer, 3rd FM i-f	32-4310

SECTION 4

R-F AND CONVERTER CIRCUITS

C400	Condenser, tuning gang	31-2733-1
C400A	Condenser, trimmer, aerial	Part of C400
C400B	Condenser, trimmer, FM r-f	Part of C400
C400C	Condenser, trimmer, AM osc.	Part of C400
C401	Condenser, aerial isolating, .01 μf	61-0120
C402	Condenser, cathode by-pass, 100 $\mu\mu f$	62-110009001
C403	Condenser, screen by-pass, 1500 $\mu\mu f$	62-215001011
C404	Condenser, d-c blocking, 220 $\mu\mu f$	62-122001001
C405	Condenser, aerial isolating, .01 μf	61-0120
C406	Condenser, r-f by-pass, .05 μf	61-0122
C407	Condenser, d-c blocking, 22 $\mu\mu f$	62-022009001
C408	Condenser, AM i-f by-pass, .01 μf	61-0120
C409	Condenser, FM i-f by-pass, 100 $\mu\mu f$	62-110009001
C410	Condenser, FM osc. trimmer	31-6495-3
C411	Condenser, r-f by-pass, 100 $\mu\mu f$	62-110009001
C412	Condenser, r-f by-pass, 6.5 $\mu\mu f$	30-1224-6
C413	Condenser, fixed trimmer, 13 $\mu\mu f$	62-015200001
J400	Jack, FM aerial	27-6214-8
L400	Coil, FM r-f	32-4392
L401	Coil, AM osc.	32-4153-3
L402	Coil, FM osc.	32-4391
L403	Coil, r-f choke	32-4061-2
L404	Coil, r-f choke	32-4111
LA400	Loop aerial	30-4052-35
PL400	Plug, wire-and-lug assembly, FM line-cord aerial (part of W100)	41-3791-1
R400	Resistor, cathode bias, 47 ohms	66-0478340
R401	Resistor, screen dropping, 1000 ohms	66-2108340
R402	Resistor, a-v-c voltage dropping, 33,000 ohms	66-3338340
R403	Resistor, grid return, 22,000 ohms	66-3228340
R404	Resistor, screen dropping, 1000 ohms	66-2108340
T400	Transformer, FM aerial	32-4390
WS-2(F)†	Switch-wafer section	Part of 42-1890
WS-1(F)†	Switch-wafer section	Part of 42-1890

†Wafer switch, 2 sections (band switch) 42-1890

MISCELLANEOUS

Description	Service Part N
Cabinet	10714-
Back	54-781
Baffle-and-cloth assembly	40-7535-
Window, acetate	54-459
Dial Scale	54-5011-
Drive cord, 25-foot spool	45-875
Spring, gang drive	56-261
Pointer	54-470
Drive Shaft	76-403
Bushing	27-943
Spring, retaining (2)	S7-1462FA
Insulator, volume-control shaft	54-781
Knob, "TUNING"	54-4527-
Knob, "FM-AM"	54-4527-2
Knob, "VOLUME-ON-OFF"	54-452
Shield, rectifier	54-781
Shield, tube base	56-3978-1FA
Socket, 7-pin miniature (3)	27-620
Socket, 7-pin miniature, 12BA6 r-f amp.	27-6203-
Socket, 9-pin miniature, 19T8	27-6203-
Socket, 9-pin miniature, 12BA7	27-6203-

AM ALIGNMENT PROCEDURE

Make alignment with loop aerial connected to radio. The AM alignment should be completed before the FM alignment is made.

DIAL POINTER — With tuning-condenser plates fully meshed, adjust pointer to coincide with index mark at low-frequency end of scale.

RADIO CONTROLS — Set volume control to maximum, set band switch for broadcast reception, and set tuning control a. indicated in chart.

OUTPUT METER — Connect across voice-coil terminals.

SIGNAL GENERATOR — Use AM r-f signal generator, with modulated output. Connect generator and set frequency as indicated in chart.

OUTPUT LEVEL — During alignment, signal-generator output must be attenuated to hold output-meter reading below 1.25 volts.

FM ALIGNMENT PROCEDURE

Make AM alignment first.

RADIO CONTROLS — Set volume control to maximum, set band switch for FM reception, and set tuning control as indicated in chart.

OUTPUT METER — Connect across voice-coil terminals. (This meter is used only for step 3.)

D-C VOLTMETER — Connect negative lead of d-c voltmeter (resistance of at least 20,000 ohms per volt) to pin 2 of 19T8 tube, and positive lead to chassis. Use 0—10-volt range.

SIGNAL GENERATOR — Use AM r-f signal generator, with modulated output. Connect ground lead to chassis. Connect output lead and set frequency as indicated in chart. Generator must have sufficient output to give reading of approximately 8.5 volts on d-c voltmeter; during alignment, generator output must be attenuated to hold meter reading at this value.

NOTE: Before starting FM alignment, allow radio and signal generator to warm up for 15 minutes.

MODIFICATIONS

MODEL 50-925 - Service Replacement
When replacing C-208, use the following:
C-208, Condenser, tone compensation, .0068mf — 30-4650-91
PRE-PRODUCTION CHANGES - To Increase Undistorted Output:
R-204, Resistor, cathode bias, 100 ohms — 66-1108340*

FOUR ADDITIONS TO IMPROVE F-M
1. A .01 mf condenser, C-111, has been added from the filament, pin #5, of the 12BA7 to ground in parallel with C-110.
C-111 Condenser, filament by-pass, .01 mf — 61-0120*
2. A 100 mmf condenser, C-414, has been added from pin #4 of J-400 to ground, making the low side of the primary of the F-M antenna coil ground at r-f potential. This is to prevent the F-M r-f stage from oscillating when the antenna is disconnected.
C-414, Condenser, r-f by-pass, 100 mmf — 68-110009001*

(3) A tube shield has been added to the 12BA6, 1st I-F amplifier.
Shield — 56-3979FA5
Shield Base — 56-3978FA5
4. A special lead shield assembly has been added to the 12BA7 converter tube to reduce microphonics in the F-M band.
Socket, 12BA7 — 27-6249
Tube shield and Lead Weight assembly — 76-5124
C-406, Condenser, r-f by-pass, .047 mf — 30-4650-45
A pilot lamp, I-100, has been added to improve dial lighting. It is wired from the junction of L-100 and R-100 to ground.
I-100, Pilot Lamp 110-125V., intermediate base — 34-2605*
Pilot Lamp Socket — 27-6233-34
Pilot Lamp Shield — 56-633.FA2
Spring Clip, Pilot Lamp socket mtg. — 28-2480FA1

RUN #2 - To Improve Conversion Gain
L-401 Coil, AM oscillator — 32-4153-5

RUN #3 - Prevention of Selenium Rectifier Burnouts
CR-100, has been changed to one of higher current rating.
RUN #2R and #3 are identical.
CR-100 Selenium Rectifier, 150 ma — 34-8300-2

RUN #4 - Also to prevent rectifier burnout and to reduce ripple current in the electrolytic condenser, C-108, and additional 20 ohm current limiting resistor, R-103, has been added between L-100 and R-100. This resistor wires between pin #3 of the 50C5 socket and the ungrounded lug of the 2 lug terminal panel, the junction of C-101, C-103 and the white wire to R-100.

R-103 Resistor, current limiting, 20 ohms — 33-1345

Part Number Changes:-

C-305 Condenser, screen by-pass .005 mf — 61-0109*
L-400 Coil, F-M r-f — 32-4392-1
L-402 Coil, F-M osc. — 32-4391-1
LA400, Loop Aerial — 32-4052-35
Pointer — 54-4599
Window, acetate — 54-4595-1

AM ALIGNMENT CHART

STEP	SIGNAL GENERATOR		RADIO		ADJUST TRIMMER
	CONNECTION TO RADIO	DIAL SETTING	DIAL SETTING	SPECIAL INSTRUCTIONS	
1	Ground lead to chassis. Output lead through .1-mf. condenser to mixer grid (pin 7) of 12BA7.	455 kc.	540 kc. (gang fully meshed)	Adjust for maximum output.	TC303B—2nd AM I-f sec. TC303A—2nd AM I-f prl. TC301B—1st AM I-f sec. TC301A—1st AM I-f prl.
2	Radiating loop. (See note below.)	1600 kc.	1600 kc.	Adjust for maximum output.	C400C—osc. trimmer
3	Same as step 2.	1500 kc.	1500 kc.	Adjust for maximum output.	C400A—antenna trimmer

NOTE: TC303A AND TC303A ARE LOCATED ON UNDERSIDE OF CHASSIS

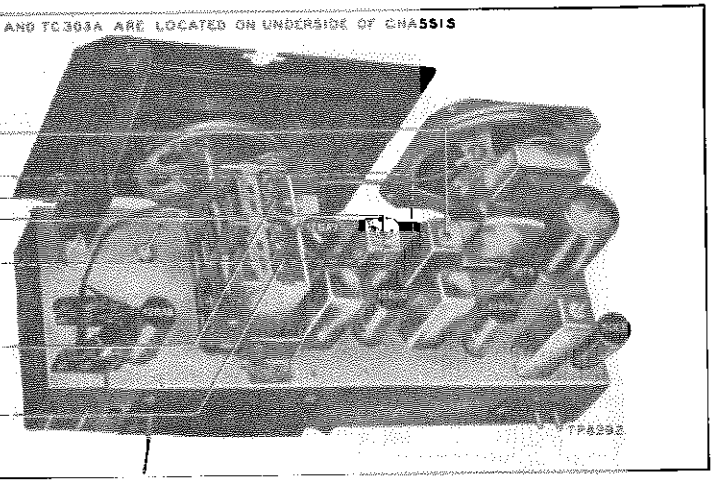

Figure 7. Top View, Showing AM Trimmer Locations

RADIATING LOOP: Make up a six-to-eight-turn, 8-inch-diameter loop from insulated wire; connect to generator terminals, and place near radio loop aerial. Radio loop aerial must be connected.

FM ALIGNMENT CHART

STEP	SIGNAL GENERATOR		RADIO		ADJUST TRIMMER
	CONNECTION TO RADIO	DIAL SETTING	DIAL SETTING	SPECIAL INSTRUCTIONS	
1	Through a .1-mf. condenser to control grid (pin 1) of 12BA6 1st I-f amp.	9.1 mc.	88 mc.	Adjust tuning cores for maximum reading on d-c voltmeter. Attenuate signal generator to maintain a reading of approximately 10 volts. Repeat adjustments until no further improvement is noted. After this step, do not disturb these tuning cores except as directed in step 9.	TC304B—discriminator sec. TC304A—discriminator prl. TC302B—FM 2nd I-f sec. TC302A—FM 2nd I-f prl.
2	Through .1-mf. condenser to pin 7 of 12BA7.	9.1 mc.	88 mc.	Adjust tuning cores for maximum reading on d-c voltmeter. Repeat adjustments until no further improvement is noted. Do not disturb these tuning cores after this step.	TC300B—FM 1st I-f sec. TC300A—FM 1st I-f prl.
3	Same as step 1.	9.1 mc.	88 mc.	Adjust tuning core for minimum reading on output meter. This adjustment is critical; repeat to make certain it is correct.	TC304B—discriminator sec.
4	To terminal 1 of J400.	105 mc.	105 mc.	Adjust trimmer for maximum reading on d-c voltmeter.	C410—FM osc.
5	Same as step 4.	105 mc.	105 mc.	Same as step 4.	C400B—FM r-f
6	Same as step 4.	92 mc.	92 mc.	Adjust coil for maximum reading on d-c voltmeter.	L402—FM osc. (tracking)
7	Same as step 4.	92 mc.	92 mc.	Same as step 6.	L400—FM r-f (tracking)
8	Same as step 4.	105 mc.	105 mc.	Same as step 4.	C410—FM osc.
9	Repeat steps 4 through 8 until no further improvement is noted.				

NOTE: TC300A, TC302A, TC304A, L402 AND L400 ARE LOCATED ON UNDERSIDE OF CHASSIS

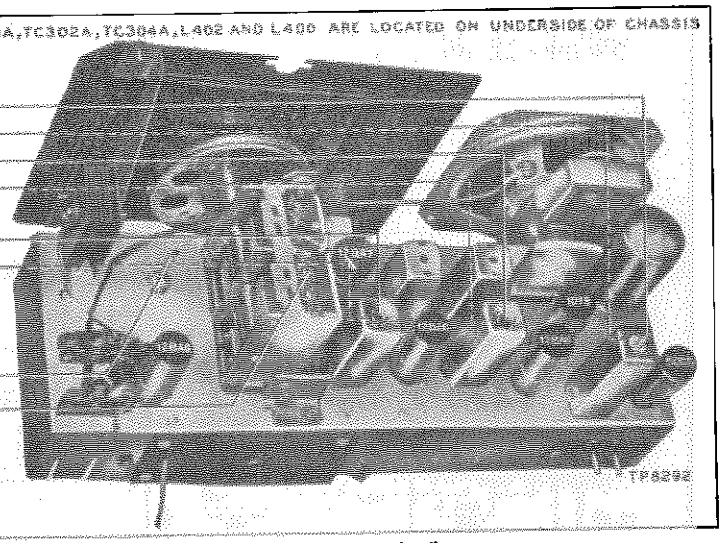

Figure 8. Top View, Showing FM Trimmer Locations

PR-1581

MODEL 50-925

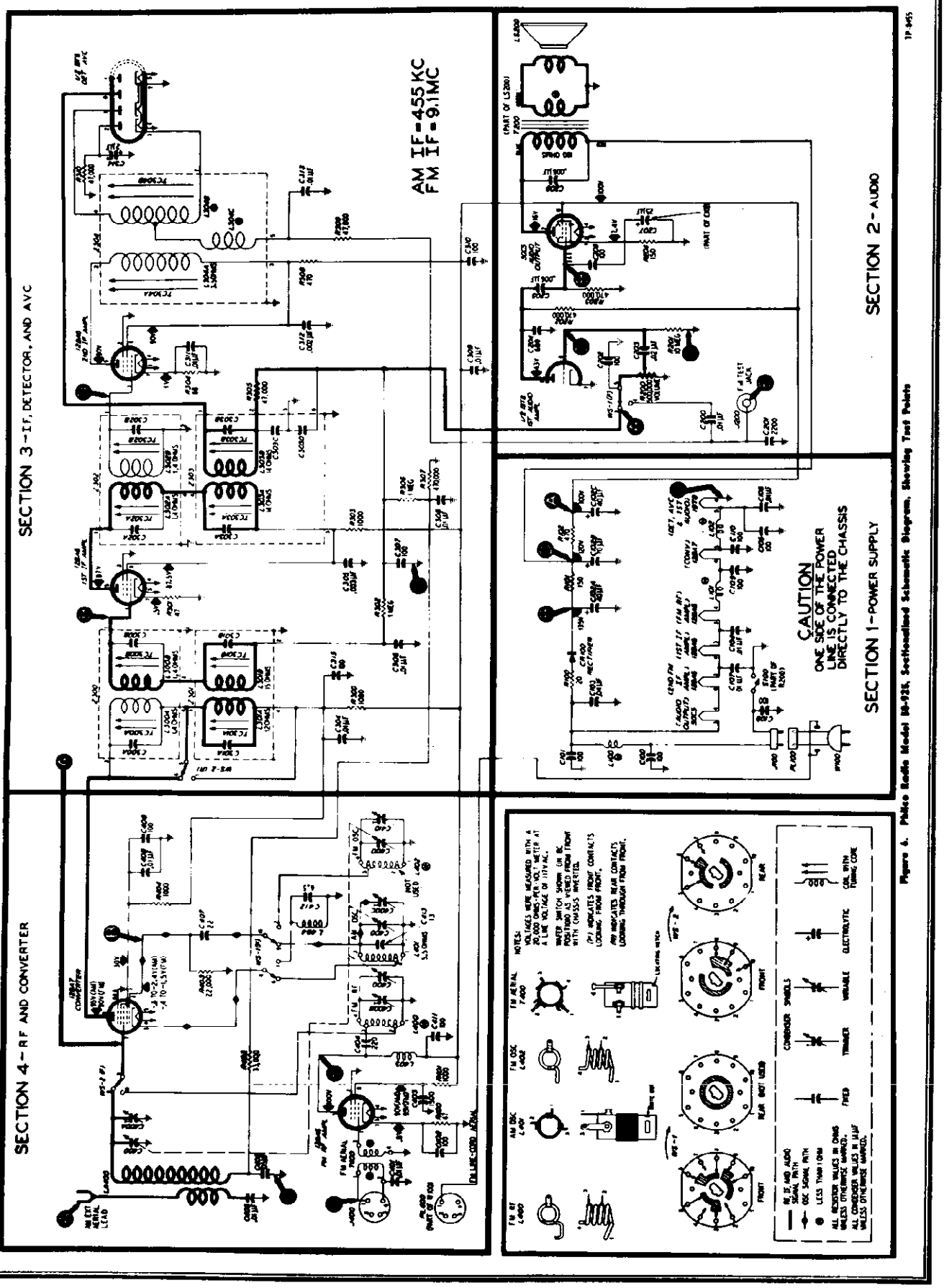

Figure 4. Philco Radio Model 50-925, Sectionalized Schematic Diagram, Showing Test Points

©John F. Rider

Circuit Description

Philco Radio-Phonograph Model 50-1420 is a table-model 5-tube superheterodyne radio with a Model M-9C Automatic Record Changer. For service information on the record changer, refer to the Service Manual (PR-1599) for Model M-9C Automatic Record Changer.

Reception is provided on the standard broadcast band.

The built-in loop aerial normally provides adequate signal pickup; however, a terminal is provided for an external aerial, if additional pickup is required.

The loop works directly into a 12BE6 converter; no series padder is required for the oscillator, as the tuning-condenser plates are shaped for tracking.

The i-f stage employs a 12BA6, operating at 455 kc. Both transformers are permeability-tuned in both primary and secondary windings.

The diode section of a 6AQ6 provides detection and a-v-c voltage; the triode section is the 1st audio amplifier, and is resistance-coupled to a 35L6GT beam-power output amplifier, which works into a PM speaker.

The d-c operating voltages are supplied by a voltage-doubling circuit using a 50Y7GT rectifier and a resistance-capacitance filter.

The 120,000-ohm resistor, R103, is connected between B— and the chassis, to prevent hum due to condenser leakage under high-humidity conditions.

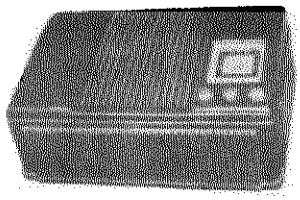

MODEL 50-1420

SPECIFICATIONS

CABINET	Brown molded bakelite
RADIO CIRCUIT	Five-tube superheterodyne
FREQUENCY RANGE	540—1600 kc.
AUDIO OUTPUT	2 watts
OPERATING VOLTAGES	105—120 volts, 60 cycles, a.c.
POWER CONSUMPTION	
Radio only	35 watts
Radio-phonograph	50 watts
AERIAL	Built-in loop; terminal also provided for external aerial
INTERMEDIATE FREQUENCY	455 kc.
PHILCO TUBES (5)	12BE6, 12BA6, 6AQ6, 35L6GT, 50Y7GT
PHONOGRAPH	Philco Automatic Record Changer Model M-9C (for service information see manual PR-1599)

TP-6527

Philco TROUBLE-SHOOTING Procedure

For rapid trouble shooting, the radio circuit is divided into four sections, as follows:

Section 1—the power supply
Section 2—the audio circuits
Section 3—the i-f, detector, and a-v-c circuits
Section 4—the r-f and converter circuits

Test points are specified for each section, and are indicated in the sectionalized schematic diagram. The trouble-shooting procedure given for each section includes a simplified test chart and a bottom view of the chassis showing the locations of the test points and the components of that section.

In each chart, the first step is a master check for determining whether trouble exists in that section, without going through the entire chart.

Failure to obtain the "NORMAL INDICATION" in any given step indicates trouble within the circuit under test.

After isolating the trouble to a single stage, the defect is located by: first, testing the tube; second, measuring tube electrode voltages; third, measuring circuit resistances; fourth, substituting condensers. The trouble revealed should be corrected before testing further.

Preliminary Checks

To avoid possible damage to the radio, the following preliminary checks should be made before turning on the power:

1. Inspect both the top and the bottom of the chassis. Make sure that all tubes are secure in the proper sockets, and look for any broken or shorted connections, burned resistors, or other obvious indications of trouble.

2. Measure the resistance between B+ (pin 4 of the 50Y7GT) and B—, test point B. When the ohmmeter leads are connected in the proper polarity, the highest resistance reading will be obtained. If the reading is lower than 2000 ohms, check condenser C102A for leakage or a short. This resistance value, which is much lower than normal, does not represent a quality check of this condenser; it is the lowest value which will permit the rectifier to operate safely while the voltage checks of Section 1 (power supply) are performed.

©John F. Rider

MODEL 50-1420

Section 1—Power Supply

TROUBLE SHOOTING

For the tests in this section, use a d-c voltmeter. Connect the negative lead to B—, test point B; connect the positive lead to the test points indicated in the chart. The voltage readings given were taken with a 20,000-ohms-per-volt meter at a line voltage of 117 volts, a.c.

Turn on the power, and set the volume control to minimum.

If the "NORMAL INDICATION" is obtained in step 1, proceed with the tests for Section 2 (audio circuits); if not, isolate and correct the trouble in this section.

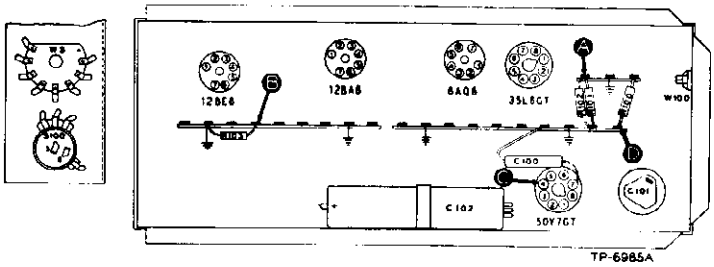

Figure 1. Bottom View, Showing Section 1 Test Points

STEP	TEST POINT	NORMAL INDICATION	ABNORMAL INDICATION	POSSIBLE CAUSE OF ABNORMAL INDICATION
1	A	120 volts		Trouble in this section. Isolate by the following tests.
2	C	212 volts	No voltage	Defective: 50Y7GT, I100. Shorted: C100, C101, C102A.
			Low voltage	Leaky: C100, C101, C102A.
			High voltage	Open: R100.
3	D	205 volts	No voltage	Defective: 50Y7GT. Shorted: C102B. Open: R100.
			Low voltage	Leaky: C102B.
			High voltage	Open: R101, R102, T200*.
4	A	120 volts	No voltage	Shorted: C102C. Open: R101 and R102 (in parallel).
			Low voltage	Leaky: C102C.

* This part, located in another section, may cause abnormal indication in this section.

Section 2—Audio Circuits

TROUBLE SHOOTING

For the tests in this section, use an audio-frequency signal generator. Connect the generator ground lead to B—, test point B; connect the output lead through a .1-mf. condenser to the test points indicated in the chart.

Set the radio volume control to maximum, and the radio-phono switch as indicated in the chart.

If the "NORMAL INDICATION" is obtained in step 1, proceed with the tests for Section 3 (i-f, detector, and a-v-c circuits); if not, isolate and correct the trouble in this section.

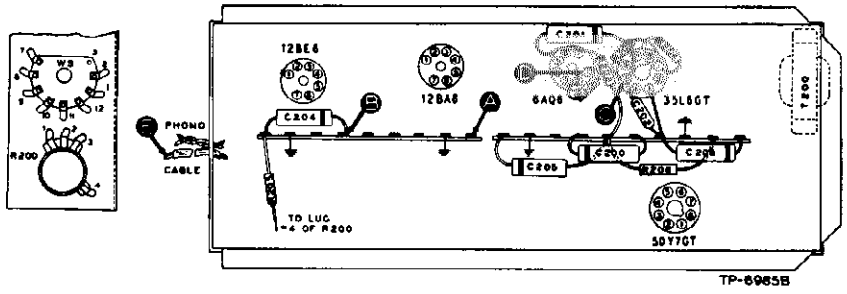

Figure 2. Bottom View, Showing Section 2 Test Points

STEP	TEST POINT	RADIO-PHONO SWITCH	NORMAL INDICATION	POSSIBLE CAUSE OF ABNORMAL INDICATION
1 (a)	A	Radio	Loud, clear speaker output with moderate generator input.	Trouble in this section. Isolate by the following tests.
1 (b)	E	Phono		
2	C	Radio	Clear output with strong input.	Defective: LS200, 35L6GT. Shorted: T200, C203, C201, C204, C202. Open: T200, R204, R205, R203. Leaky: C203.
3	D	Radio	Loud, clear output with moderate input.	Defective: 6AQ6. Shorted: C200, C205. Open: C201, R202, R201, R206. Leaky: C201.
4	A	Radio	Loud, clear output with moderate input.	Open: R200 (rotate), C200, WS. Shorted: WS.
5	E	Phono	Same as step 4.	Open or shorted: WS.
Listening Test: Distortion may be caused by leaky C201. Distortion on strong signals may be caused by shorted or leaky C200.				

©John F. Rider

Section 3—I-F, Detector, and A-V-C Circuits

TROUBLE SHOOTING

For the tests in this section, use an r-f signal generator, with modulated output, set at 455 kc. Connect the generator ground lead to B—, test point B; connect the output lead through a .1-mf. condenser to the test points indicated in the chart.

Set the radio volume control to maximum, and the radio-phono switch to the radio position. Rotate the tuning control until the tuning condenser is fully meshed.

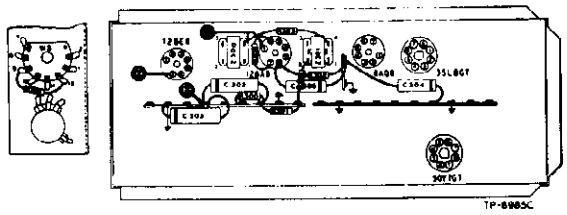

Figure 3. Bottom View, Showing Section 3 Test Points

If the "NORMAL INDICATION" is obtained in step 1, proceed with the tests for Section 4 (r-f and converter circuits); if not, isolate and correct the trouble in this section.

To provide a complete i-f amplifier check, test point A for this section is placed at the grid of the mixer in Section 4; therefore, the effectiveness of step 1 as a master check is dependent upon the condition of certain parts in the mixer circuit. These parts are listed below under "POSSIBLE CAUSE OF ABNORMAL INDICATION."

STEP	TEST POINT	NORMAL INDICATION	POSSIBLE CAUSE OF ABNORMAL INDICATION
1	A	Loud, clear speaker output with weak generator input.	Trouble in this section. Isolate by the following tests.
2	C	Loud, clear output with strong input.	Defective: 12BA6, 6AQ6. Shorted: C300B, C301A, C301B, C301C, C301D, C303, C304, WS, L300B, L301A, L301B. Open: R302, R303, R304, R305, L300B, L301A, L301B, R301, C301A, C301B. Leaky: C303, C304. Misaligned: Z301.
3	A	Loud, clear output with weak input.	Defective: 12BE6*. Shorted: C400A*, C400B*, C300A, L300A, L300B, C302. Open: L300A, R300, C300A, C300B. Misaligned: Z300.

* This part, located in another section, may cause abnormal indication in this section.

Section 4—R-F and Converter Circuits

TROUBLE SHOOTING

For the tests in this section, with the exception of the oscillator test, use an r-f signal generator with modulated output. Connect the generator ground lead to B—, test point B; connect the output lead through a .1-mf. condenser to the test points indicated in the chart.

Set the radio volume control to maximum, and the radio-phono switch to the radio position. Set the tuning control and signal-generator frequency as indicated in the chart.

If the "NORMAL INDICATION" is obtained in step 1, further tests should be unnecessary; if not, isolate and correct the trouble in this section. If the trouble is not revealed by the tests for this section, check the alignment.

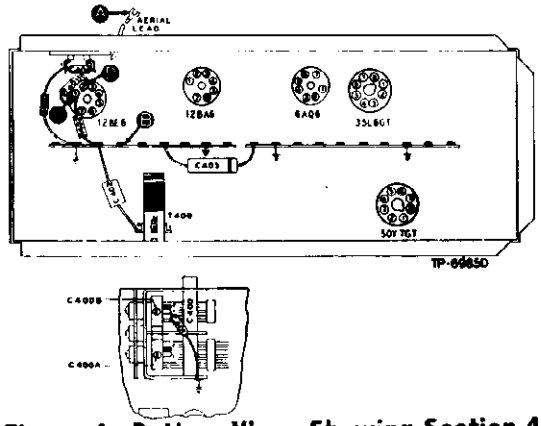

Figure 4. Bottom View, Showing Section 4 Test Points

STEP	TEST POINT	SIG. GEN. FREQ.	RADIO TUNING	NORMAL INDICATION	POSSIBLE CAUSE OF ABNORMAL INDICATION
1	A	1000 kc.	Tune to signal.	Loud, clear speaker output with weak generator input.	Trouble in this section. Isolate by the following tests.
2	C—D Osc. Test (see note below).		Rotate through range.	Negative 1.8 to 3.2 volts.	Defective: 12BE6. Shorted: C400, C400B, C402, C401, L400A, L400B. Open: C402, L400A, L400B, R401, R402.
3	A	1000 kc.	Tune to signal.	Same as step 1.	Shorted: LA400, C400, C400A. Open: LA400, C404.

OSCILLATOR TEST: Connect the positive lead of a high-resistance voltmeter to the oscillator cathode (pin 2 of 12BE6), test point D; connect the prod end of the negative lead through a 100,000-ohm isolating resistor to the oscillator grid (pin 1 of 12BE6), test point C. Use a suitable meter range, such as 0—10 volts. Proper operation of the oscillator is indicated by negative voltage within the range given in the chart (measured with a 20,000-ohms-per-volt meter) throughout the tuning range.

MODEL 50-1420

REPLACEMENT PARTS LIST

NOTE: A part number identified by an asterisk (*) indicates a general replacement item. The part numbers of these items may not be identical with those on factory parts; also, the electrical values of some replacement items may differ from the values given in the schematic diagram and parts list. The values substituted in any case are so chosen that the operation of the radio will be either unchanged or improved. When ordering replacements, use only the "Service Part No."

SECTION 1

POWER SUPPLY

Reference Symbol	Description	Service Part No.
C100	Condenser, line filter, .05 mf.	61-0107*
C101	Condenser, electrolytic, filter, 20 mf.	30-2568-22
C102	Condenser, electrolytic, 3-section	30-2575-26
C102A:	Condenser, filter, 40 mf.	Part of C102
C102B:	Condenser, filter, 40 mf.	Part of C102
C102C:	Condenser, filter, 20 mf.	Part of C102
I100	Pilot lamp	34-2605
R100	Resistor, filter, 180 ohms	66-1184340*
R101	Resistor, filter, 10,000 ohms	66-3103340*
R102	Resistor, filter, 10,000 ohms	66-3103340*
R103	Resistor, isolating, 120,000 ohms	66-4123340*
S100	Switch, power on-off	Part of R200
W100	Line cord and plug	L2183*
WS-A	Switch-wafer section	Part of 42-1847-1†

SECTION 2

AUDIO CIRCUITS

C200	Condenser, d-c blocking, .006 mf.	45-3500-7*
C201	Condenser, d-c blocking, .006 mf.	45-3500-7*
C202	Condenser, r-f by-pass, 220 mmf.	66-122001001*
C203	Condenser, tone compensation, .004 mf.	30-4623*
C204	Condenser, tone compensation, .01 mf.	61-0120*
C205	Condenser, by-pass, .1 mf.	61-0113*
R200	Volume control (with power on-off switch), 2 megohms, tapped at 1 megohm.	33-5535-15
R201	Resistor, grid return, 10 megohms.	66-6103340*
R202	Resistor, plate load, 220,000 ohms.	66-4223340*
R203	Resistor, grid return, 470,000 ohms.	66-4473340*
R204	Resistor, cathode bias, 180 ohms.	66-1183340*
R205	Resistor, tone compensation, 47,000 ohms.	66-3473340*
R206	Resistor, dropping, 330,000 ohms.	66-4333340*
LS200	Loud-speaker, PM	36-1625-3
T200	Transformer, output	32-8382
WS-B	Switch-wafer section	42-1847-2

† 42-1847-1 Wafer switch, single wafer, radio-phono (includes WS-A, WS-B, WS-C).

SECTION 3

I-F, DETECTOR, AND A-V-C CIRCUITS

C300A	Condenser, fixed, 1st i-f primary.	Part of Z300
C300B	Condenser, fixed, 1st i-f secondary.	Part of Z300
C301A	Condenser, fixed, 2nd i-f primary.	Part of Z301
C301B	Condenser, fixed, 2nd i-f secondary.	Part of Z301
C301C	Condenser, fixed, i-f filter.	Part of Z301
C301D	Condenser, fixed, i-f filter.	Part of Z301
C302	Condenser, a-v-c filter, .05 mf.	61-0122*
C303	Condenser, screen by-pass, .01 mf.	61-0120*
C304	Condenser, plate by-pass, .003 mf.	61-0109*
C305	Condenser, r-f by-pass, .1 mf.	61-0113*
R300	Resistor, a-v-c filter, 22,000 ohms.	66-3223340*
R301	Resistor, a-v-c filter, 2.2 megohms.	66-5223340*
R302	Resistor, screen dropping, 100,000 ohms.	66-4103340*

SECTION 3 (Cont.)

Reference Symbol	Description	Service Part No.
R303	Resistor, plate dropping, 1000 ohms.	66-2103340*
R304	Resistor, a-v-c filter, 47,000 ohms.	66-3473340*
R305	Resistor, diode load, 470,000 ohms.	66-4473340*
R306	Resistor, bias, 100 ohms.	66-1103340*
TC300A	Tuning core, 1st i-f primary.	Part of Z300
TC300B	Tuning core, 1st i-f secondary.	Part of Z300
TC301A	Tuning core, 2nd i-f primary.	Part of Z301
TC301B	Tuning core, 2nd i-f secondary.	Part of Z301
WS-C	Switch-wafer section	Part of 42-1847-1†
Z300	Transformer, 1st i-f	32-4160
Z301	Transformer, 2nd i-f	32-4240

SECTION 4

R-F AND CONVERTER CIRCUITS

C400	Condenser, tuning gang	31-2727-6
C400A:	Condenser, trimmer, aerial	Part of C400
C400B:	Condenser, trimmer, oscillator	Part of C400
C401	Condenser, ceramic, 10 mmf.	30-1224-6
C402	Condenser, ceramic, 56 mmf.	60-00515307*
C403	Condenser, r-f by-pass, .03 mf.	45-3500-1*
C404	Condenser, aerial coupling, 5 mmf.	60-90505007*
LA400	Loop aerial	32-4375
R400	Resistor, leakage, 150,000 ohms.	66-4153340*
R401	Resistor, grid return, 22,000 ohms.	66-3223340*
R402	Resistor, parasitic suppressor, 33 ohms.	66-0333340*
T400	Transformer, oscillator	32-4190-3

† 42-1847-2 Wafer switch, single wafer, radio-phono (includes WS-A, WS-B, WS-C).

MISCELLANEOUS

Description	Service Part No.
Bracket, scale	56-6500FA3
Cabinet and Cabinet Parts	
Baffle-and-cloth assy.	40-7640
Cabinet	10734
Foot, mtg. (4)	54-4645-1
Knob (3)	54-4557
Window, acetate	54-4665
Dial Scale and Hardware	
Dial cord (25-ft. spool)	45-8750
Pointer-and-spring assy.	76-4225
Scale	54-5047
Shaft assy., drive	76-4477
Spring, gang drive	56-2617
Pilot-lamp-socket assy.	76-1179-1
Reflector, pilot light	56-6037-1FA3
Shield, tube	56-3979PA5
Socket, octal (2)	27-6174
Socket, miniature (3)	27-6226
Socket, test	27-6114-1
Speed nut, changer mtg. (3)	1W60083FE7
Spring, changer mtg. (6)	56-3043PA15

©John F. Rider

MODEL 50-1420

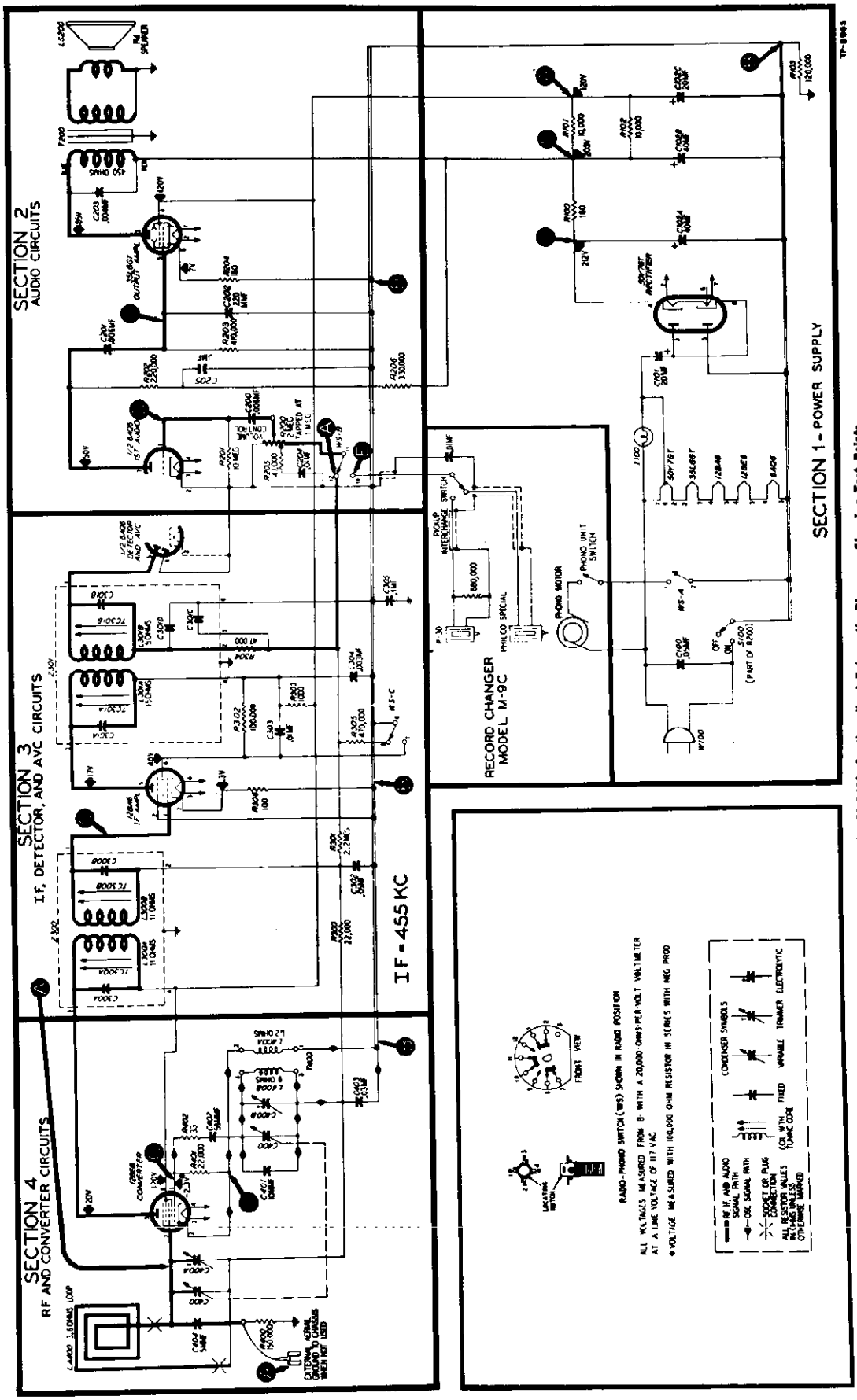

Figure 5. Philco Model 50-1420, Sectionalized Schematic Diagram, Showing Test Points

©John F. Rider

©John F. Rider

MODEL 50-1420

ALIGNMENT PROCEDURE

DIAL—With tuning condenser fully meshed, set pointer to index mark at low-frequency end of dial, beyond "55"

RADIO CONTROLS—Set volume control to maximum, and radio-phono switch to radio position.
OUTPUT METER—Connect to voice-coil terminals.

SIGNAL GENERATOR—Connect ground lead to B—, test point B in figure 4, and connect output lead as indicated in chart. Use modulated output.

OUTPUT LEVEL—During alignment, adjust signal-generator output to hold output-meter indication below 1.25 volts.

STEP	SIGNAL GENERATOR		RADIO		ADJUST
	CONNECTION TO RADIO	DIAL SETTING	DIAL SETTING	SPECIAL INSTRUCTIONS	
1	Through .1-mf. condenser to external-aerial lead. Make sure that radio loop aerial is connected to radio.	455 kc.	Tuning condenser fully meshed.	Adjust, in order given, for maximum output.	TC301B—2nd i-f sec. TC301A—2nd i-f pri. —SEE NOTE TC300B—1st i-f sec. TC300A—1st i-f pri. —SEE NOTE
2	Radiating loop (see note below).	1600 kc.	1600 kc.	Adjust for maximum output.	C400B—osc.
3	Same as step 2.	1500 kc.	1500 kc.	Adjust for maximum output.	C400A—aerial

RADIATING LOOP: Make up a 4—8-turn, 6-in-diameter loop, using insulated wire; connect to signal-generator leads and place near radio loop aerial.

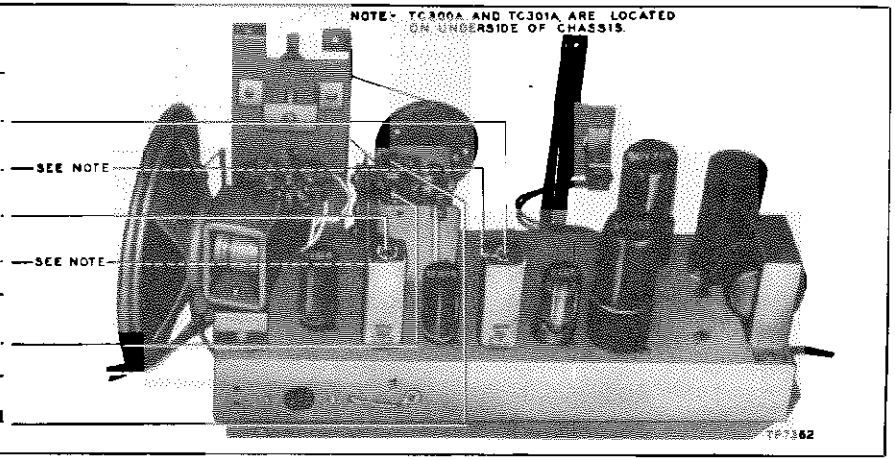

Figure 6. Top View, Showing Trimmer Locations

SYMBOLIZATION

The components in the radio circuit are symbolized according to the types of parts and the sections of the radio in which the parts are located. The prefix letter of the symbol designates the type of part, as follows:

C—condenser	LS—loud-speaker	W—wire or cable
I—pilot lamp	R—resistor	WS—wafer switch
L—choke or coil	S—switch	Z—electrical assembly
LA—loop aerial	T—transformer	

The number of the symbol designates the section in which the part is located, as follows:

100-series components are in Section 1—the power supply
200-series components are in Section 2—the audio circuits
300-series components are in Section 3—the i-f, detector, and a-v-c circuits
400-series components are in Section 4—the r-f and converter circuits

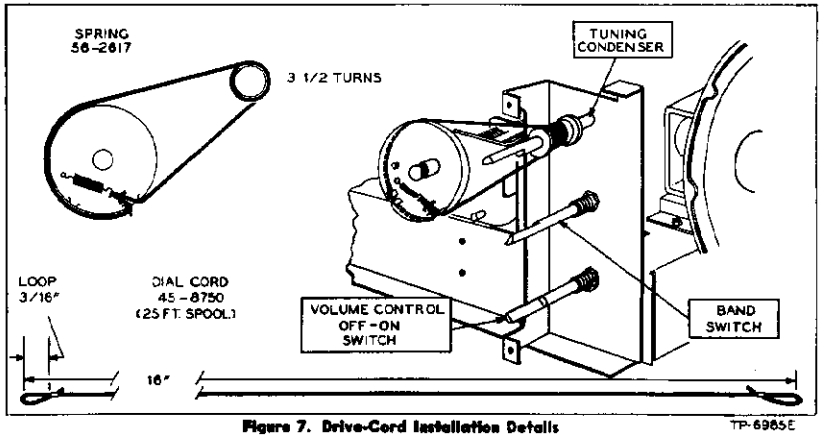

Figure 7. Drive-Cord Installation Details

Circuit Description

Philco Model 50-1725 is a console-model radio-phonograph, which provides reception on the standard-broadcast and FM bands. The radio is a seven-tube superheterodyne, with two selenium rectifiers incorporated in the power supply.

A built-in, high-impedance loop aerial for the broadcast band and a line-cord aerial for the FM band normally provide adequate signal pickup; if additional pickup is required, Philco Dipole Aerial, Part No. 45-1462, may be used. When connecting the dipole aerial disconnect the black lead from terminal 2 of TB400 and attach this lead to pin 1 of the dipole-aerial plug which fits into J400. No additional coupler is required.

To eliminate complicated switching and to provide better stability and greater gain on both bands, separate converter tubes are used for broadcast and FM reception. A 12AU6 high-gain pentode is used in a tuned r-f amplifier on the FM band. The output of this tube is fed to the 14F8 dual triode, which functions as the converter for the FM signal. A 12AU7 dual triode is used as the converter for the broadcast signal. Band switching is accomplished by means of a single-wafer switch, which connects the B+ voltage to the proper mixer plate.

A 6BJ6 tube is used in each of the two i-f amplifier stages. Two sets of i-f transformers are used—one set is tuned to 455 kc. for broadcast, and the other set is tuned to 9.1 mc. for FM. The use of two sets of i-f transformers makes better shielding possible, so that undesirable beat signals and interaction between transformers are eliminated.

Two diode sections of a 19T8 triple-diode are used in a ratio-detector circuit, for detection of FM signals. The other diode section is used in a half-wave rectifier circuit, for detection of AM (broadcast) signals and to provide a-v-c action.

The triode section of the 19T8 functions as the first audio amplifier. The output of this stage is resistance-coupled to a 50C6G output tube, which is transformer-coupled to the permanent-magnet speaker.

Two selenium rectifiers are used in a half-wave voltage-doubler circuit, to supply the B+ voltage.

Philco TROUBLE-SHOOTING *Procedure*

For rapid trouble shooting, the radio circuit is divided into four sections with test points specified for each section these sections and test points are indicated in the schematic diagram. The trouble-shooting procedure given for each section includes a simplified test chart and a bottom view of the chassis showing the locations of the test points and the components of that section.

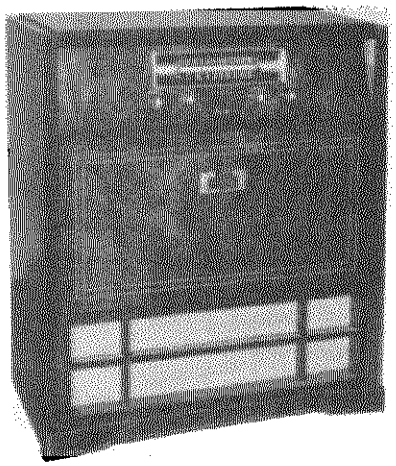

MODEL 50-1725

SPECIFICATIONS

CABINET	Wood console, mahogany finish
CIRCUIT	Seven-tube superheterodyne plus rectifiers
FREQUENCY RANGES	
Broadcast	540—1620 kc.
FM	88—108 mc.
AUDIO OUTPUT	5 watts
OPERATING VOLTAGE	105—125 volts, 60 cycles, a.c.
POWER CONSUMPTION	
Radio	65 watts
Phonograph	85 watts
AERIALS	Built-in, semi-high-impedance loop for broadcast; line-cord aerial for FM
INTERMEDIATE FREQUENCY	
AM	455 kc.
FM	9.1 mc.
PHILCO TUBES (7)	12AU6, 12AU7, 14F8, 6BJ6(2), 19T8, 50C6G, selenium rectifier (2)

©John F. Rider

In each chart, the first step is a master check for determining whether trouble exists in that section without going through the entire test procedure.

Failure to obtain the "NORMAL INDICATION" in any given step indicates trouble within the circuit under test.

After isolating the trouble to a single stage, the defect is located by: first, testing the tube; second, measuring tube electrode voltages; third, measuring circuit resistances; fourth, substituting condensers. The trouble revealed should be corrected before testing further.

Preliminary Checks

To avoid possible damage to the radio, the following preliminary checks should be made before it is turned on:

1. Inspect both the top and the bottom of the chassis. Make sure that all tubes are secure in the proper sockets, and look for any broken or shorted connections, burned resistors, or other obvious sources of trouble.

2. Measure the resistance between B+, test point C, and B—, test point B. When the ohmmeter test leads are connected in the proper polarity, the highest resistance reading will be obtained. If the reading is lower than 2500 ohms, check condensers C103A, C103B, and C316 for leakage or shorts. The resistance value given is much lower than normal, and is not intended as a quality check of these condensers; the value given is the lowest at which the rectifier will operate safely while the voltage checks of Section 1 (power supply) are performed.

Important!

To avoid altering FM operation, special care should be used in replacing any part. Replacement parts should be placed in the same physical positions as the original parts; connections should be of the same length, and should be soldered to the same points. The placement or length of leads should not be altered.

Section 1 TROUBLE SHOOTING

POWER SUPPLY

For the tests in this section, use a d-c voltmeter. Connect the negative lead to B—, test point B; connect the positive lead to the test points indicated in the chart. The voltage readings given were taken with a 20,000-ohms-per-volt meter at a line voltage of 117 volts, a.c.

Turn on the power, and set the volume control to minimum. Turn the tone control fully clockwise, and set the band switch to the broadcast position.

If the "NORMAL INDICATION" is obtained in step 1, proceed with the tests for Section 2 (audio circuits); if not, isolate and correct the trouble in this section.

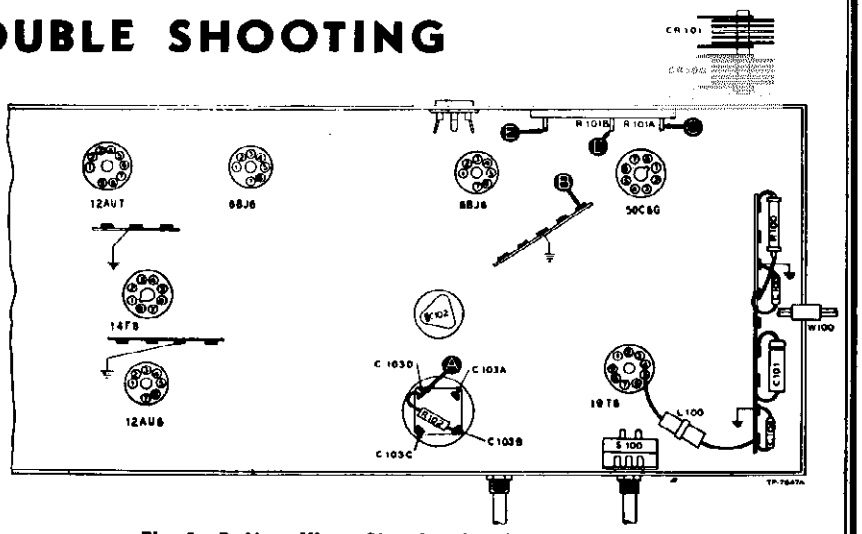

Fig. 1. Bottom View, Showing Section 1 Test Points

STEP	TEST POINT	NORMAL INDICATION	ABNORMAL INDICATION	POSSIBLE CAUSE OF ABNORMAL INDICATION
1	A	145v		Trouble in this section. Isolate by the following tests.
2	C	230v	No voltage.	Defective: CR100, CR101. Open: C102, W100, R100, S100. Shorted: C103A, C101, C104, C100, C313*, C330*.
			Low voltage.	Defective: CR100, CR101. Open: C103A. Shorted or leaky: C103B.
			High voltage.	Open: R101A, R101B, R102.
3	D	205v	No voltage.	Open: R101A. Shorted: C103B.
			Low voltage.	Leaky: C103B. Shorted: C103C, C316*.
			High voltage.	Open: R101B, R102, R206*, T200*.
4	E	160v	No voltage.	Open: R101B. Shorted: C103C.
			Low voltage.	Leaky: C103C. Shorted: C103D, C310*, C315*.
			High voltage.	Open: R102, R315*.
5	A	145v	No voltage.	Open: R102. Shorted: C103D.
			Low voltage.	Leaky: C103C.
Listening Test: Abnormal hum may be caused by open C103A, C103B, C103C, or C103D.				

* This part, located in another section, may cause abnormal indication in this section.

© John F. Rider

Section 2

TROUBLE SHOOTING

AUDIO CIRCUITS

For the tests in this section, use an audio-frequency signal generator. Connect the generator ground lead to B—, test point B; connect the output lead through a .1-mf. condenser to the test points indicated in the chart.

Set the volume control to maximum, and turn the tone control to the midpoint of its range. Set the band switch to the broadcast position for test points A, C, and D, and to the phono position for test point E.

If the "NORMAL INDICATION" is obtained in step 1, proceed with the tests for Section 3 (i-f, detector, and a-v-c circuits); if not, isolate and correct the trouble in this section.

STEP	TEST POINT	NORMAL INDICATION	POSSIBLE CAUSE OF ABNORMAL INDICATION
1	A E	Loud, clear speaker output with weak generator input.	Trouble in this section. Isolate by the following tests.
2	C	Clear signal with strong input.	Defective: 50C6G, LS200. Open: T200, R205, R206. Shorted: C206, C207, T200, C209.
3	D	Same as step 1.	Defective: 19T8. Open: C204, R202, R203. Shorted: C203, C205 (rotate R204), C204, C208.
4	A	Same as step 1.	Open: R200 (rotate through range), C200, C201, WS-1 (R). Shorted: C200, C201, C305D*.
5	E	Same as step 1.	Open: WS-1 (R).
Listening Test: Distortion may be caused by shorted or leaky C201 or C204. Distortion on strong signals may be caused by leaky or shorted C200.			

* This part, located in another section, may cause abnormal indication in this section.

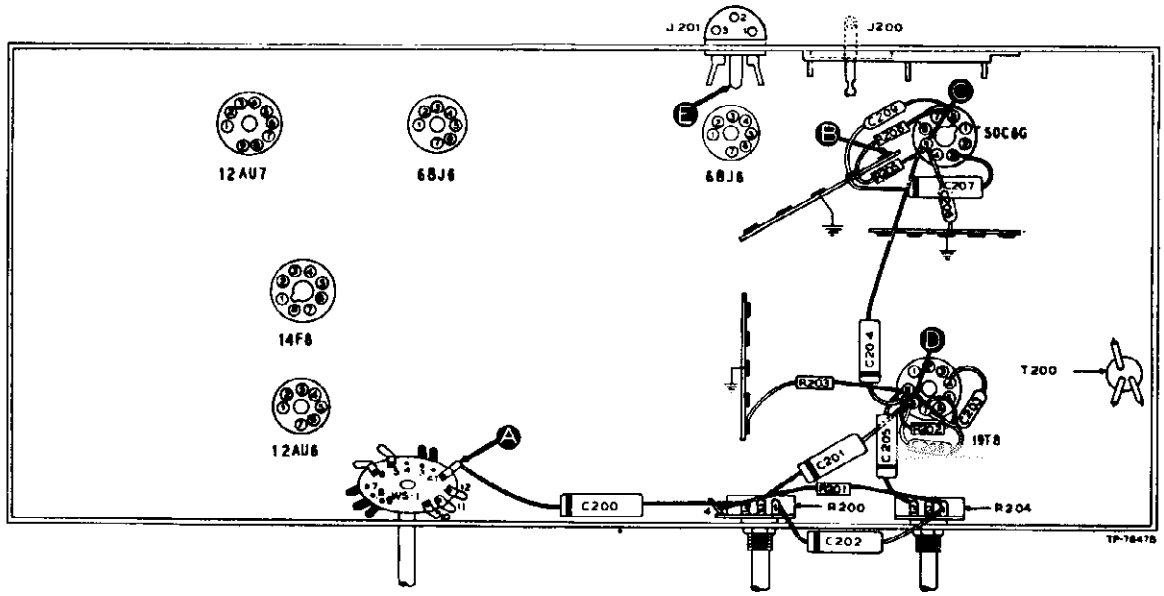

Fig. 2. Bottom View, Showing Section 2 Test Points

Section 3

TROUBLE SHOOTING

I-F, DETECTOR, AND A-V-C CIRCUITS

AM Circuits

For the following tests, use an r-f signal generator, with modulated output, set at 455 kc. Connect the generator ground lead to B—, test point B; connect the output lead through a .1-mf. condenser to the test points indicated in the chart.

Set the volume control to maximum, and turn the tone control to the midpoint of its range. Set the radio-phono switch to the radio position, and rotate the tuning control until the tuning condenser is fully meshed.

If the "NORMAL INDICATION" is obtained in step 1, proceed with the tests for Section 4 (r-f and converter circuits); if not, isolate and correct the trouble in this section.

To provide a complete i-f-amplifier check, test point A for this section is placed at the grid of the mixer in Section 4; therefore, the effectiveness of step 1 as a master check is dependent upon the condition of certain parts in the mixer circuit. These parts are listed below under the "POSSIBLE CAUSE OF ABNORMAL INDICATION."

MODEL 50-1725

Section 3 (Cont.)

TROUBLE SHOOTING

I-F, DETECTOR, AND A-V-C CIRCUITS

AM Chart

STEP	TEST POINT	NORMAL INDICATION	POSSIBLE CAUSE OF ABNORMAL INDICATION
1	A	Loud, clear speaker output with weak generator input.	Trouble in AM circuits. Isolate by the following tests.
2	C	Loud, clear output with strong input.	Defective: 6BJ6, (2nd i-f amplifier), 19T8 (diode section). Open: Z302, Z303, Z304, Z305, R307, R308, R309, R310, R311, WS-1 (F). Shorted Z302, Z303, Z304, Z305, C314, C315, C316, C319. Misaligned: Z305.
3	D	Loud, clear output with moderate input.	Defective: 6BJ6 (1st i-f amplifier). Open: R303, R304, R305, R306, Z300, Z301, Z302, Z303. Shorted or leaky: C308, C310, Z300, Z301, Z302, Z303. Misaligned: Z303.
4	A	Same as step 1.	Defective: 12AU7. Open Z301, R301, R302, R408*, R411*, R412*, WS-1 (F). Shorted or leaky: C307, Z301. Misaligned: Z301.

* This part, located in another section, may cause abnormal indication in this section.

FM Circuits

The following tests are also made with an AM r-f signal generator, using modulated output.

Observe the instructions preliminary to the tests for the AM circuits, with these exceptions: Set the band switch to the FM position. Set the signal-generator frequency to 9.1 mc., and detune to one side or the other until a satisfactory test signal is obtained.

The best indication of satisfactory FM-detector operation is the ability of this circuit to take the alignment properly (see page 11).

The parts which were found to be satisfactory for AM operation, with the exception of those indicated in the chart, will usually be satisfactory for FM operation.

If the "NORMAL INDICATION" is obtained in step 1, proceed with the tests for Section 4 (r-f and converter circuits); if not, isolate and correct the trouble in the FM circuits.

FM Chart

STEP	TEST POINT	NORMAL INDICATION	POSSIBLE CAUSE OF ABNORMAL INDICATION
1	E	Loud, clear speaker output with weak generator input.	Trouble in FM circuits. Isolate by the following tests.
2	C	Loud, clear output with strong input.	Defective: 6BJ6 (2nd i-f amplifier), 19T8 (diode sections). Open Z304, C317, C318, C320, C321, C322, C323, R312, R313, R314, WS-1 (R)*. Shorted: Z304, C317, C318, C320, C321, C322, C323, C332, WS-1 (R)*. Misaligned: Z304.
3	D	Loud, clear output with moderate input.	Defective: 6BJ6 (1st i-f amplifier). Misaligned: Z302. Shorted: Z302.
4	E	Same as step 1.	Defective: 14F8*. Open: Z300, R300, R405*, R410*, L407*, WS-1 (F). Shorted: C306, C420*, C328, Z300, WS-1 (F). Misaligned: Z300.

* This part, located in another section, may cause abnormal indication in this section.

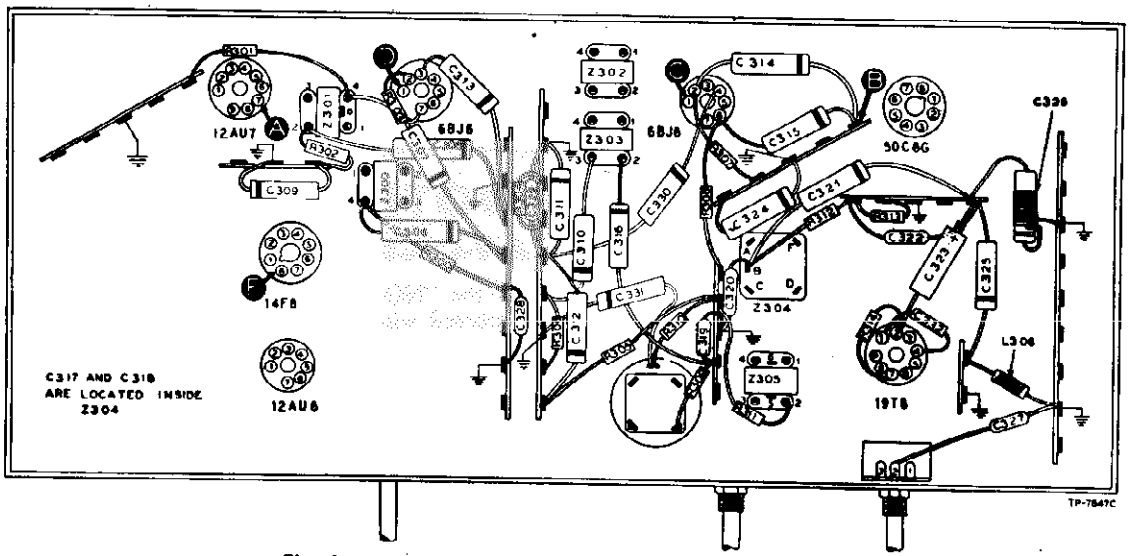

Fig. 3. Bottom View, Showing Section 3 Test Points

© John F. Rider

Section 4

TROUBLE SHOOTING
R-F AND CONVERTER CIRCUITS

AM Circuits

For the tests in this section, with the exception of the oscillator test, use an AM r-f signal generator with modulated output. Connect the generator ground lead to B—, test point B; connect the output lead through a .1-mf. condenser to the test points indicated in the chart.

Set the volume control to maximum, and turn the tone control to the midpoint of its range. Set the band switch to the broadcast position, and set the tuning control and the signal-generator frequency as indicated in the chart.

If the "NORMAL INDICATION" is not obtained in step 1, isolate and correct the trouble in the AM circuits. If the trouble is not revealed by the tests for this section, check the alignment.

FM Circuits

The following tests are also made with an AM r-f signal generator, using modulated output. Observe the instructions preliminary to the tests for the AM circuits with the following exceptions:

Set the band switch to the FM position.

If the "NORMAL INDICATION" is not obtained in step 1, isolate and correct the trouble in the FM circuits.

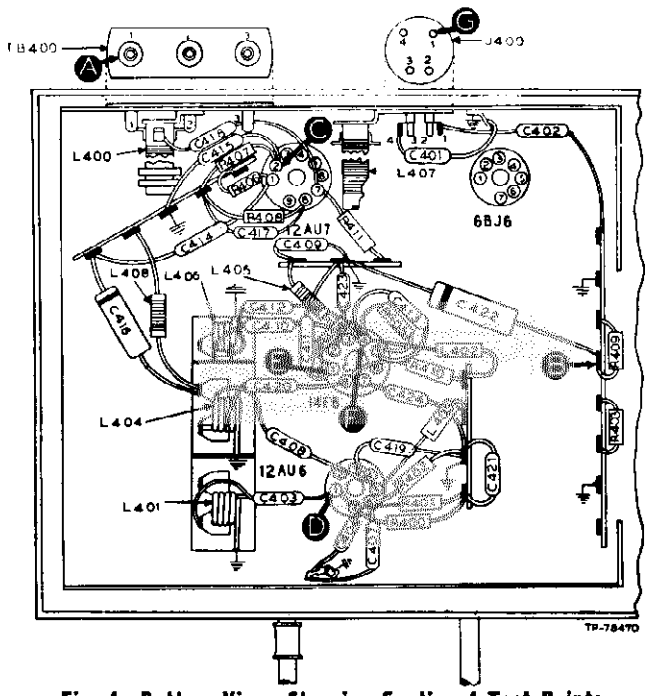

Fig. 4. Bottom View, Showing Section 4 Test Points

AM Chart

STEP	TEST POINT	SIG. GEN. FREQ.	RADIO TUNING	NORMAL INDICATION	POSSIBLE CAUSE OF ABNORMAL INDICATION
1	A	1000 kc.	Tune to signal.	Loud, clear speaker output with weak generator input.	Trouble in AM circuits. Isolate by the following tests.
2	C (Osc. test; see note below.)		Tune through range.	Negative 2 to 2.5 volts.	Defective: 12AU7 (osc. section). Shorted: C414, C415, C400, C405B, C417, L407. Open C414, C416, L408, L407, R412, R407, R406.
3	A	1000 kc.	Tune to signal.	Same as step 1.	Defective: 12AU7 (mixer section). Open: L400, L409, C418, R411, R408. Shorted: C400, C405A, C406, C417.

OSCILLATOR TEST: Connect the positive lead of a high-resistance voltmeter to B—, test point B; connect the prod end of the negative lead through a 100,000-ohm isolating resistor to the oscillator grid (pin 2 of 12AU7), test point C. Use a suitable meter range, such as 0—10 volts. Proper operation of the oscillator is indicated by negative voltage of approximately the value given in the chart (measured with 20,000-ohms-per-volt meter) throughout the tuning range.

FM Chart

STEP	TEST POINT	SIG. GEN. FREQ.	RADIO TUNING	NORMAL INDICATION	POSSIBLE CAUSE OF ABNORMAL INDICATION
1	G	100 mc.	Tune to signal.	Loud, clear speaker output with weak generator input.	Trouble in FM circuits. Isolate by the following tests.
2	E to F (Osc. test; see note below.)		Tune through range.	Negative 1 to 1.5 volts.	Defective: 14F8 (osc. section). Open: R409, L402, L406, L405, C412, R404, C410, R403. Shorted: C400, C400C, L406, C411, C412, C423, C424, C410, C409.
3	D	100 mc.	Tune to signal.	Same as step 1.	Defective: 12AU6. Open: L403, R402, R401, R400, C408, L404, C420, R410, R405, C413. Shorted: C403, C404, C407, C408, L404, C400B, C400, C420.
4	G	100 mc.	Tune to signal.	Same as step 1.	Open: C402, L401, C403. Shorted: L401, C400A, C400, C403.

OSCILLATOR TEST: Connect the positive lead of a high-resistance voltmeter to test point F; connect the prod end of the negative lead through a 100,000-ohm isolating resistor to the oscillator grid (pin 2 of 14F8), test point E. Use a suitable meter range, such as 0—10 volts. Proper operation of the oscillator is indicated by negative voltage of approximately the value given in the chart (measured with 20,000-ohms-per-volt meter) throughout the tuning range.

MODEL 50-1725

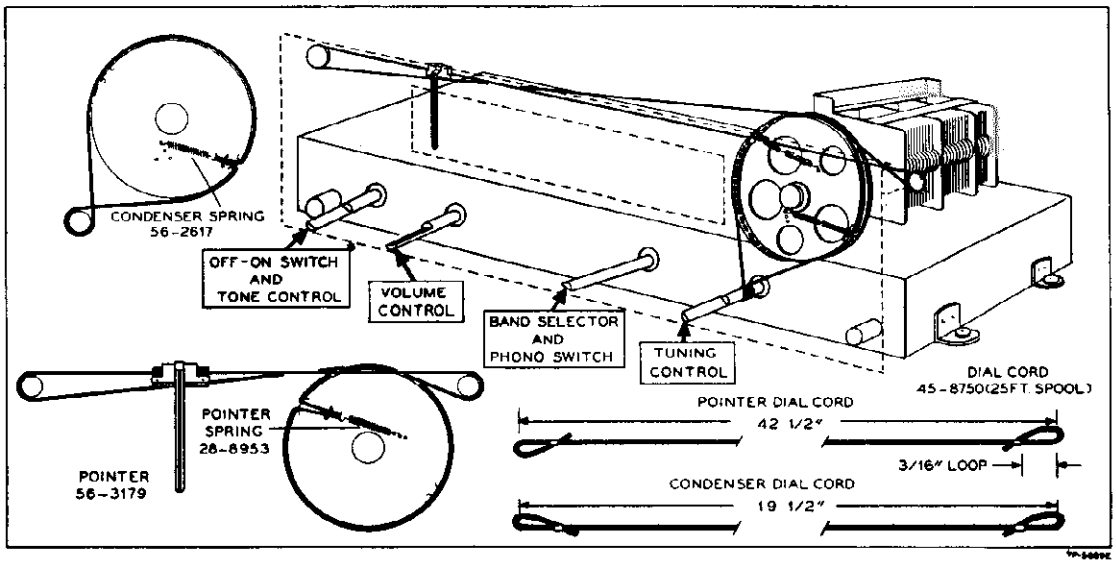

Figure 5. Drive-Cord Installation Details

REPLACEMENT PARTS LIST

NOTE: Part numbers identified by an asterisk (*) indicate general replacement items. These numbers may not be identical with those on factory assemblies; also, the electrical values of some replacement items may differ from the values indicated in the schematic diagram and replacement parts list. The values substituted in any case are so chosen that the operation of the radio will be either unchanged or improved. When ordering replacements, use only the "Service Part No."

SECTION 1
POWER SUPPLY

Reference Symbol	Description	Service Part No.
C100	Condenser, line by-pass, 100 mmf.	62-110009001*
C101	Condenser, line by-pass, .04 mf.	30-4119
C102	Condenser, electrolytic, filter, 40 mf., 200 v.	30-2568-28
C103	Condenser, electrolytic, 4-section	30-2568-24
C103A	Condenser, filter, 40 mf., 250 v.	Part of C106
C103B	Condenser, filter, 40 mf., 250 v.	Part of C106
C103C	Condenser, filter, 20 mf., 250 v.	Part of C106
C103D	Condenser, filter, 10 mf., 250 v.	Part of C106
C104	Condenser, r-f by-pass, 100 mmf.	62-110009001*
CR100	Rectifier, selenium, dry disc	34-8003-1
CR101	Rectifier, selenium, dry disc	34-8003-1
I100	Lamp, pilot	34-2605*
L100	Choke, filament, 100 microhenries	32-4143-4
R100	Resistor, current limiting, 50 ohms	33-1334
R101	Resistor, 2-section filter	33-3435-17
R101A	Resistor, filter, 180 ohms	Part of R101
R101B	Resistor, filter, 2500 ohms	Part of R101
R102	Resistor, filter, 2200 ohms	66-2224340
S100	Switch, on-off	Part of R204
W100	Line cord and plug	L2183*
WS-1(R)	Switch-wafer section	Part of 42-1874†

SECTION 2
AUDIO CIRCUITS

C200	Condenser, d-c blocking, .02 mf.	61-0108*
C201	Condenser, d-c blocking, .006 mf.	45-3500-7*
C202	Condenser, bass compensation, .006 mf.	45-3500-7*
C203	Condenser, by-pass, 100 mmf.	62-110009001*
C204	Condenser, d-c blocking, .006 mf.	45-3500-7*
C205	Condenser, tone compensation, .006 mf.	45-3500-7*
C206	Condenser, by-pass, 100 mmf.	62-110009001*
C207	Condenser, tone compensation, .006 mf.	45-3500-7*
C208	Condenser, 51 mmf.	30-1224-2*
C209	Condenser, cathode by-pass, 220 mmf.	62-122001001*
J200	Socket, FM test	27-6180
J201	Socket, phono input	27-6126
LS200	Speaker	36-1610-2
R200	Volume control, 2 megohms (tap at 1 megohm)	35-5535-17
R201	Resistor, bass compensation, 47,000 ohms	66-3473340*

SECTION 2 (Continued)
AUDIO CIRCUITS

Reference Symbol	Description	Service Part No.
R202	Resistor, grid return, 10 megohms	66-6103340*
R203	Resistor, plate load, 270,000 ohms	66-4273340*
R204	Tone control (with on-off switch), 4 megohms	33-5538-34
R205	Resistor, grid return, 470,000 ohms	66-4473340*
R206	Resistor, cathode bias, 220 ohms	66-1225340*
T200	Transformer, audio output	32-8367
WS-1(R)	Switch-wafer section	Part of 42-1874†

SECTION 3
I-F, DETECTOR, AND A-V-C CIRCUITS

C300A	Condenser, shunt	Part of Z300
C300B	Condenser, shunt	Part of Z300
C301A	Condenser, shunt	Part of Z301
C301B	Condenser, shunt	Part of Z301
C302A	Condenser, shunt	Part of Z302
C302B	Condenser, shunt	Part of Z302
C303A	Condenser, shunt	Part of Z303
C303B	Condenser, shunt	Part of Z303
C305A	Condenser, shunt	Part of Z305
C305B	Condenser, shunt	Part of Z305
C305C	Condenser, i-f filter	Part of Z305
C305D	Condenser, i-f filter	Part of Z305
C306	Condenser, plate decoupling (FM), .01 mf.	61-0120*
C307	Condenser, plate decoupling (AM), .01 mf.	61-0120*
C308	Condenser, a-v-c by-pass, .01 mf.	61-0120*
C309	Condenser, r-f by-pass, 100 mmf.	62-110009001*
C310	Condenser, plate decoupling, .004 mf.	61-0179*
C311	Condenser, r-f by-pass, .05 mf.	61-0122*
C312	Condenser, a-v-c filter, .01 mf.	61-0120*
C313	Condenser, r-f by-pass, .01 mf.	61-0120*
C314	Condenser, cathode by-pass, .01 mf.	61-0120*
C315	Condenser, screen by-pass, .01 mf.	61-0120*
C316	Condenser, plate decoupling, .01 mf.	61-0120*
C317	Condenser, i-f trimmer, fixed, 5 mmf.	Part of Z304
C318	Condenser, i-f trimmer, fixed, 68 mmf.	Part of Z304
C319	Condenser, plate decoupling, 100 mmf.	62-110009001*
C320	Condenser, r-f by-pass, 100 mmf.	62-110009001*
C321	Condenser, compensating, .01 mf.	61-0120*
C322	Condenser, decoupling, 2700 mmf.	60-20275404*
C323	Condenser, electrolytic, FM-detector filter, 2 mf., 50 v.	30-2417-7

SECTION 3 (Continued)
I-F, DETECTOR, AND A-V-C CIRCUITS

Reference Symbol	Description	Service Part No.
C324	Condenser, r-f by-pass, .01 mf.	61-0120*
C325	Condenser, tuned i-f by-pass, .03 mf.	45-3500-1*
C326	Condenser, tuned i-f by-pass, .05 mf.	61-0170*
C327	Condenser, r-f by-pass, 100 mmf.	62-110009001*
C328	Condenser, r-f by-pass, 1500 mmf.	62-215001011
C329	Condenser, r-f by-pass, 100 mmf.	62-110009001*
C330	Condenser, filament by-pass, .01 mf.	61-0120*
C331	Condenser, r-f by-pass, .01 mf.	61-0120*
C332	Condenser, neutralization, 2.2 mmf.	30-1221-6
L306	Coil, tuned i-f by-pass	32-4061-2
R300	Resistor, plate decoupling, 10,000 ohms	66-3103340*
R301	Resistor, plate decoupling, 10,000 ohms	66-3103340*
R302	Resistor, grid return, 1 megohm	66-5103340*
R303	Resistor, cathode bias, 47 ohms	66-0473340*
R304	Resistor, plate decoupling, 1000 ohms	66-2103340*
R305	Resistor, a-v-c filter, 3.3 megohms	66-5333340*
R306	Resistor, isolating, 68 ohms	66-0683340*
R307	Resistor, cathode bias, 68 ohms	66-0683340*
R308	Resistor, screen dropping, 10,000 ohms	66-3103340*
R309	Resistor, plate decoupling, 1000 ohms	66-2103340*
R310	Resistor, a-v-c return, 330,000 ohms	66-4333340*
R311	Resistor, diode load, 47,000 ohms	66-3473340*
R312	Resistor, isolating, 47,000 ohms	66-3473340*
R313	Resistor, isolating, 100,000 ohms	66-4103340*
R314	Resistor, FM-detector load, 47,000 ohms	66-3473340*
TC300A	Tuning core	Part of Z300
TC300B	Tuning core	Part of Z300
TC301A	Tuning core	Part of Z301
TC301B	Tuning core	Part of Z301
TC302A	Tuning core	Part of Z302
TC302B	Tuning core	Part of Z302
TC303A	Tuning core	Part of Z303
TC303B	Tuning core	Part of Z303
TC304A	Tuning core	Part of Z304
TC304B	Tuning core	Part of Z304
TC305A	Tuning core	Part of Z305
TC305B	Tuning core	Part of Z305
WS-1 (F)	Switch-wafer section	Part of 42-1874†
Z300	Transformer, FM 1st i-f.	32-4257
Z301	Transformer, AM 1st i-f.	32-4258
Z302	Transformer, FM 2nd i-f.	32-4257-1
Z303	Transformer, AM 2nd i-f.	32-4160-3
Z304	Transformer, FM 3rd i-f.	32-4261-1
Z305	Transformer, AM 3rd i-f.	32-4240-2

SECTION 4
R-F AND CONVERTER CIRCUITS

C400	Condenser, tuning gang (3-section FM, 2-section AM)	31-3724-3
C400A	Condenser, trimmer, FM aerial	Part of C400
C400B	Condenser, trimmer, FM r-f.	Part of C400
C400C	Condenser, trimmer, FM osc.	Part of C400
C401	Condenser, aerial coupling (FM), 100 mmf.	62-110009001*
C402	Condenser, aerial coupling (FM), 100 mmf.	62-110009001*
C403	Condenser, grid blocking, 51 mmf.	30-1224-2*
C404	Condenser, cathode by-pass, 100 mmf.	62-110009001*
C405	Condenser, trimmer assembly, 2-section	31-6476-18
C405A	Condenser, trimmer, AM aerial	Part of C405
C405B	Condenser, trimmer, AM osc.	Part of C405
C406	Condenser, isolating, 10 mmf.	62-010009001
C407	Condenser, screen by-pass, 100 mmf.	62-110009001*
C408	Condenser, blocking, 51 mmf.	30-1224-2*
C409	Condenser, by-pass, 1500 mmf.	62-215001011
C410	Condenser, blocking, 220 mmf.	62-122001001*
C411	Condenser, by-pass, 51 mmf.	30-1224-2*
C412	Condenser, blocking, 220 mmf.	62-122001001*
C413	Condenser, cathode by-pass, 100 mmf.	62-110009001*
C414	Condenser, blocking, 100 mmf.	62-110009001*
C415	Condenser, by-pass, 220 mmf.	66-122001001*
C416	Condenser, isolating, .01 mf.	61-0120*
C417	Condenser, cathode by-pass, 1500 mmf.	62-215001001
C418	Condenser, d-c blocking, 100 mmf.	62-110009001*
C419	Condenser, FM r-f by-pass, 100 mmf.	62-110009001*
C420	Condenser, d-c blocking, 220 mmf.	62-122001001*

SECTION 4 (Continued)
R-F AND CONVERTER CIRCUITS

Reference Symbol	Description	Service Part No.
C421	Condenser, r-f by-pass, 100 mmf.	62-110009001*
C422	Condenser, r-f by-pass, .02 mf.	61-0108*
C423	Condenser, FM r-f by-pass, 100 mmf.	62-110009001*
C424	Condenser, FM r-f by-pass, 100 mmf.	62-110009001*
J400	Socket, FM aerial	27-6214-1
L400	Coil, AM aerial	32-4033-11
L401	Coil, FM aerial	32-4158-1
L402	Coil, r-f isolating (FM)	32-4061-2
L403	Coil, FM r-f plate load.	32-4061-2
L404	Coil, FM r-f	32-4159-1
L405	Coil, FM osc. plate load.	32-4061-2
L406	Coil, FM osc.	32-4018-5
L407	Coil, AM osc.	32-4221-1
L408	Coil, r-f isolating	32-4061-2
L409	Coil, r-f isolating	32-4061-2
LA400	Loop aerial	76-3583-12
PL400	Plug, wire and lug assembly, FM line-cord aerial	41-3791-1
R400	Resistor, grid return, 1 megohm	66-5103340*
R401	Resistor, cathode bias, 100 ohms.	66-1103340*
R402	Resistor, screen dropping, 15,000 ohms.	66-3153340*
R403	Resistor, plate decoupling, 10,000 ohms.	66-3103340*
R404	Resistor, grid return, 15,000 ohms.	66-3153340*
R405	Resistor, cathode bias, 1500 ohms.	66-2153340*
R406	Resistor, plate load, 33,000 ohms.	66-3333340*
R407	Resistor, grid return, 15,000 ohms.	66-3153340*
R408	Resistor, cathode bias, 1500 ohms.	66-2153340*
R409	Resistor, isolating, 68 ohms.	66-0683340*
R410	Resistor, grid return, 10,000 ohms.	66-3103340*
R411	Resistor, grid return, 1 megohm.	66-5103340*
TB400	Terminal board, aerial	38-9942

MISCELLANEOUS

Description	Service Part No.
Bracket-and-clip assembly, pilot lamp	76-3919
Cabinet (less scale)	10751
Back	54-7814
Baffle, speaker	219-166
Baffle-and-cloth assembly	40-7674
Bezel	56-5855FCP
Bin mechanism (L.H.)	76-3223-5
Bin mechanism (R.H.)	76-3223-6
Dome (4 required)	45-6190
Door pull	56-6493
Frame, changer mounting	76-4104
Grommet, changer mounting	54-4313
Hinge (pair)	45-6036
Knob (4 required)	54-4376
Scale	54-5024
Scale strap (2 required)	56-2234-2
Scale strap, short	56-4756FE11
Spring, bin mechanism (2 required)	56-4978
Spring, changer mounting (6 required)	56-3043FA15
Dial-backplate assembly	76-3918
Drive cord (25-ft. spool)	45-8750*
Fastener, snap (diffusing panel)	28-4342FA3
Panel, diffusing	54-7593
Pointer	56-5630-2
Spring, diffusing panel (2 required)	56-3841
Spring, gang	56-2617
Spring, pointer	28-8953
Phono parts	
Condenser, blocking, .01 mf.	61-0120*
Condenser, blocking, .05 mf.	61-0122*
Crystal-pickup-cartridge-and-needle assembly, Philco special	45-1609
Crystal-pickup cartridge, P-30	35-2671-1
Needle, for P-30 crystal	45-1597
Shaft, drive (radio)	76-3479-1
Bushing (2 required)	54-7512
Socket assembly, pilot lamp	27-6233
Socket, miniature (6BJ6)	27-6226
Socket, miniature (19T8)	27-6703-5
Socket, octal (50C6G)	27-6174-4
Washer, fiber, speaker mounting (4 required)	27-7467

† 42-1874 is a single-section wafer switch (band switch).

MODEL 50-1725

AM ALIGNMENT PROCEDURE

Make alignment with loop aerial connected to radio. The AM alignment should be completed before the FM alignment is made.

DIAL POINTER—Calibration and pointer-index measurements are shown in figure 7. With tuning gang fully meshed, set pointer to index marker.

OUTPUT METER—Connect between terminal 3 of aerial terminal board TB400 and chassis.

AM R-F SIGNAL GENERATOR—Connect as indicated in chart. Use modulated output.

RADIO CONTROLS—Set volume control to maximum, turn tone control fully counterclockwise, and set band switch to broadcast position.

OUTPUT LEVEL—During alignment, adjust signal-generator output to maintain output-meter indication below 1.25 volts.

FM ALIGNMENT PROCEDURE

Make AM Alignment First

OUTPUT METER—Connect between terminal 3 of aerial terminal board TB400 and chassis.

ALIGNMENT INDICATOR—Connect negative lead of 20,000-ohms-per-volt meter to pin 2 of 19T8 tube; connect positive lead to B—. Use 10-volt range.

AM R-F SIGNAL GENERATOR—Generator must have sufficient output to give a reading of 8.5 volts on alignment indicator. Connect ground lead to B—; connect output lead as indicated in chart. Use modulated output.

RADIO CONTROLS—Set volume control to maximum, turn tone control fully counterclockwise, and set band switch to FM position. Allow radio and signal generator to operate for at least 15 minutes before making alignment.

R-F COIL—NOTE: Check resonance of coils L401, L404, and L406 by inserting each end of a powdered-iron tuning core such as Philco Part No. 56-6100, into the coils. If the signal strength increases when the iron end is inserted, compress the turns slightly. If the signal strength increases when the brass end is inserted, spread the turns slightly. If the signal strength decreases when either the iron or the brass end is inserted, no further adjustment is necessary. Do not spread or compress turns of coil excessively; only a small change is required at these high frequencies.

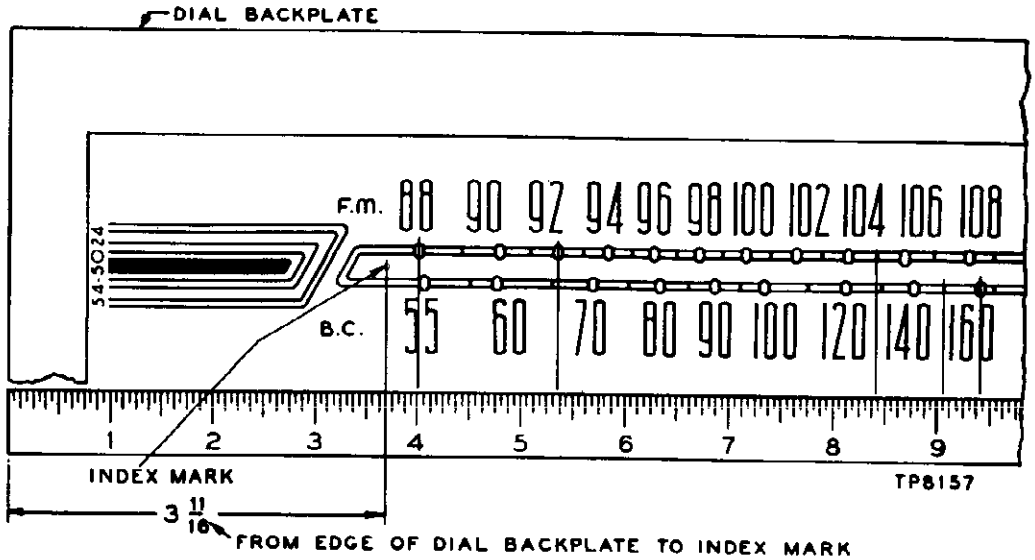

Figure 7. Dial-Backplate Calibration Measurements

© John F. Rider

MODEL 50-1725

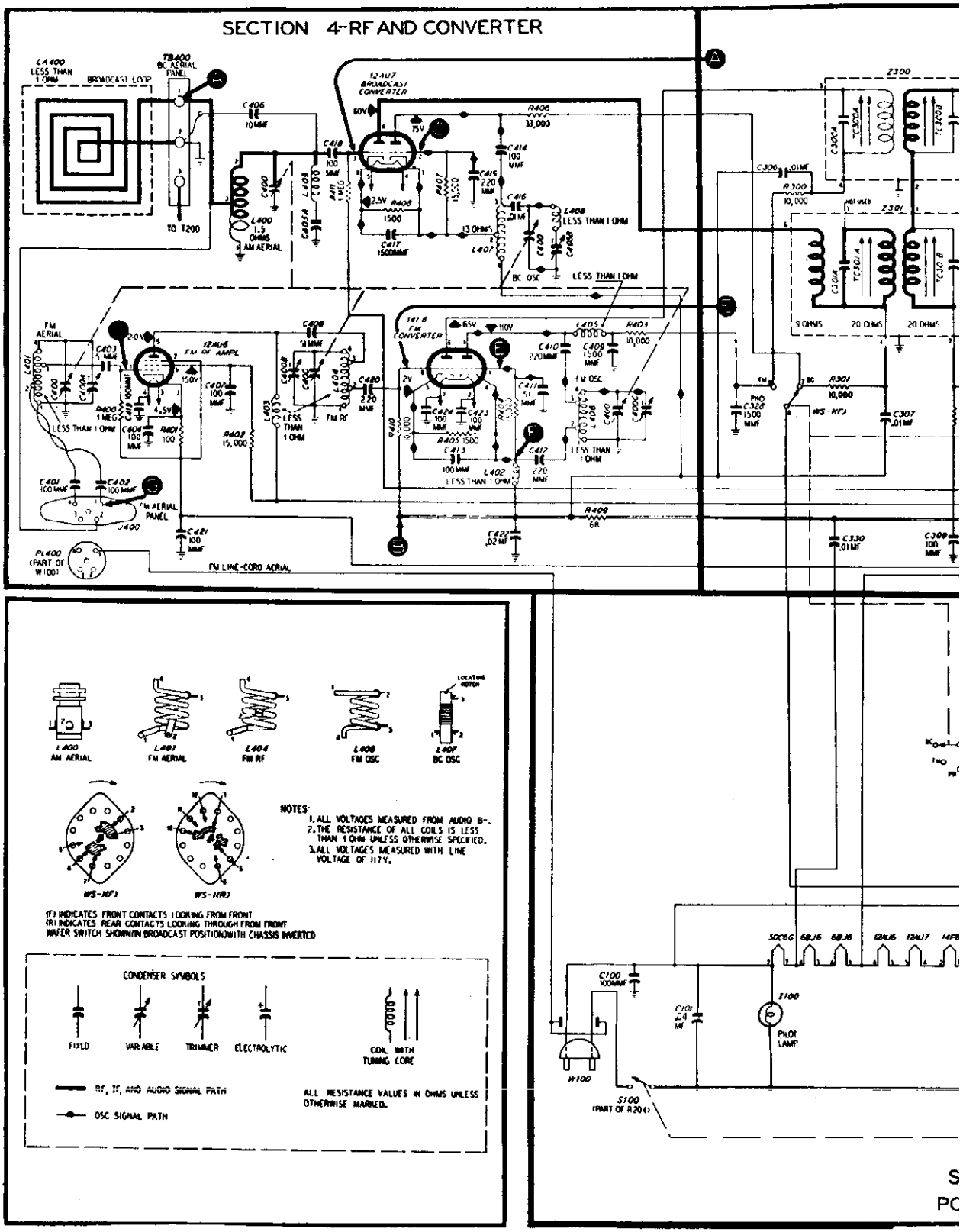

Figure 6.

RECORD CHANGER: See Philco Model M-9C, Pages RCD.CH. 19-35 through RCD.CH. 19-54

AM ALIGNMENT CHART

STEP	SIGNAL GENERATOR		RADIO		ADJUST
	CONNECTION TO RADIO	DIAL SETTING	DIAL SETTING	SPECIAL INSTRUCTIONS	
1	Ground lead to B−; output lead through .1-mf. condenser to terminal of TB400.	455 kc.	540 kc.	Adjust tuning cores once only, in order given, for Maximum output.	TC305B—AM 3r TC305A—AM 3r TC303B—AM 2n TC303A—AM 2n TC301B—AM 1 TC301A—AM 1
2	Radiating loop (see loop below).	1600 kc.	1600 kc.	Adjust trimmer for maximum output.	C405B—
3	Same as step 2.	1500 kc.	1500 kc.	Adjust trimmer for maximum output.	C405A—A

RADIATING LOOP: Make up a 6-to-8 turn, 6-inch-diameter loop from insulated wire; connect to signal-generator leads and near radio loop aerial.

FM ALIGNMENT CHART

STEP	SIGNAL GENERATOR		RADIO		ADJUST
	CONNECTION TO RADIO	DIAL SETTING	DIAL SETTING	SPECIAL INSTRUCTIONS	
1	Ground lead to B−; output lead through .1-mf. condenser to pin 1 of 6BJ6 (1st i-f amplifier).	9.1 mc.	88 mc.	Adjust tuning cores for maximum reading on alignment indicator. Attenuate signal generator to maintain 10-volt reading. Repeat until further improvement is noted. After this step, do not touch any of these tuning cores except as directed in step 3.	TC304B—FM 3 TC304A—FM 3 TC302B—FM 2 TC302A—FM 2
2	Output lead through .1-mf. condenser to pin 8 of 14F8.	9.1 mc.	88 mc.	Adjust tuning cores for maximum reading on alignment indicator. Attenuate signal generator to maintain 10-volt reading. Repeat until no further improvement is noted. After this step, do not touch these tuning cores.	TC300B—FM TC300A—FM
3	Same as step 2.	9.1 mc.	88 mc.	Adjust tuning core for minimum reading on output meter. This adjustment is critical; repeat to make sure it is correct.	TC304B—FM 3
4	Output lead to terminal 2 of J400.	105 mc.	105 mc.	Adjust trimmer for maximum reading on alignment indicator.	C400C—
5	Same as step 4.	105 mc.	105 mc.	Adjust trimmer for maximum reading on alignment indicator while rocking tuning control.	C400I
6	Same as step 4.	105 mc.	105 mc.	Adjust trimmer for maximum reading on alignment indicator.	C400A—I
7	Same as step 4.	92 mc.	92 mc.	Adjust coil for maximum (see r-f coil note).	L406—FM
8	Same as step 4.	92 mc.	92 mc.	Adjust coil for maximum (see r-f coil note).	L404—F
9	Same as step 4.	92 mc.	92 mc.	Adjust coil for maximum (see r-f coil note).	L401—FM s
10	Repeat steps 4 through 9 until no further increase is obtained.				

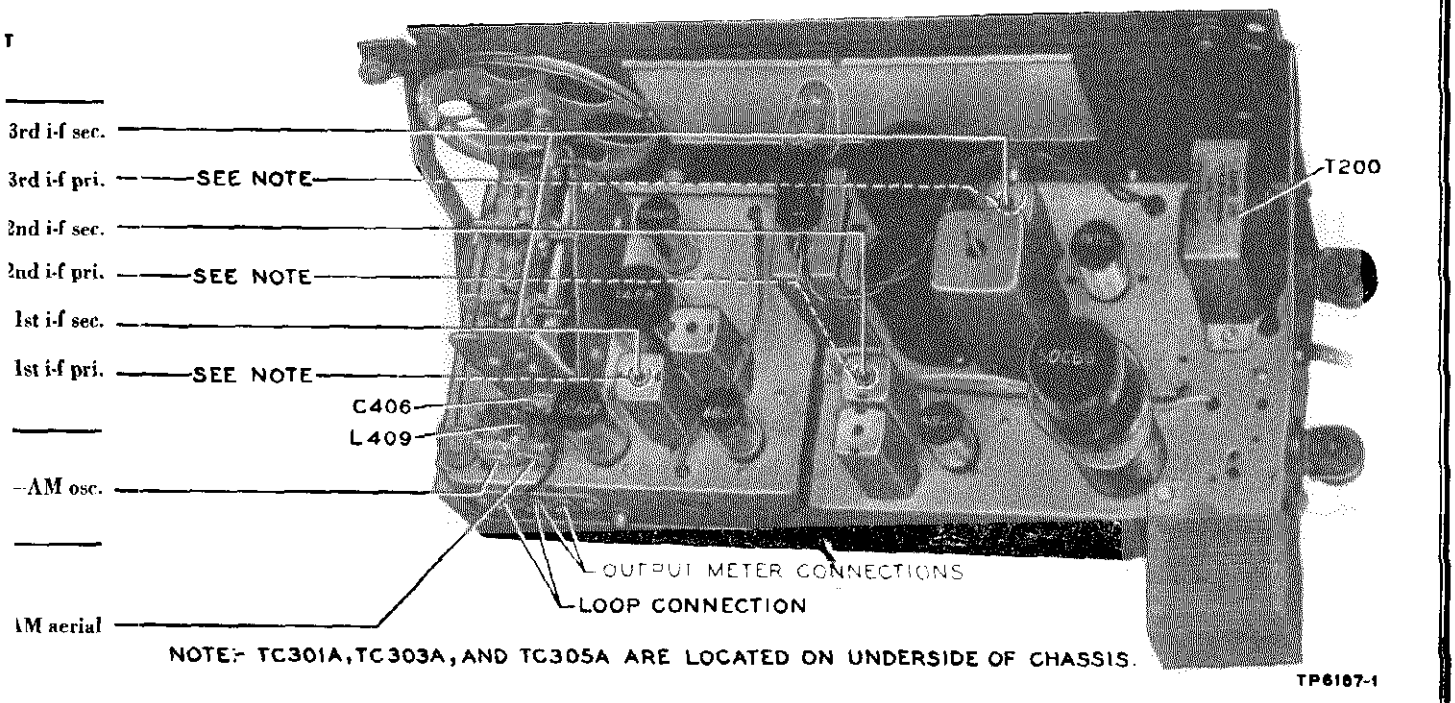

place

Figure 8. Top View, Showing AM Trimmer Locations

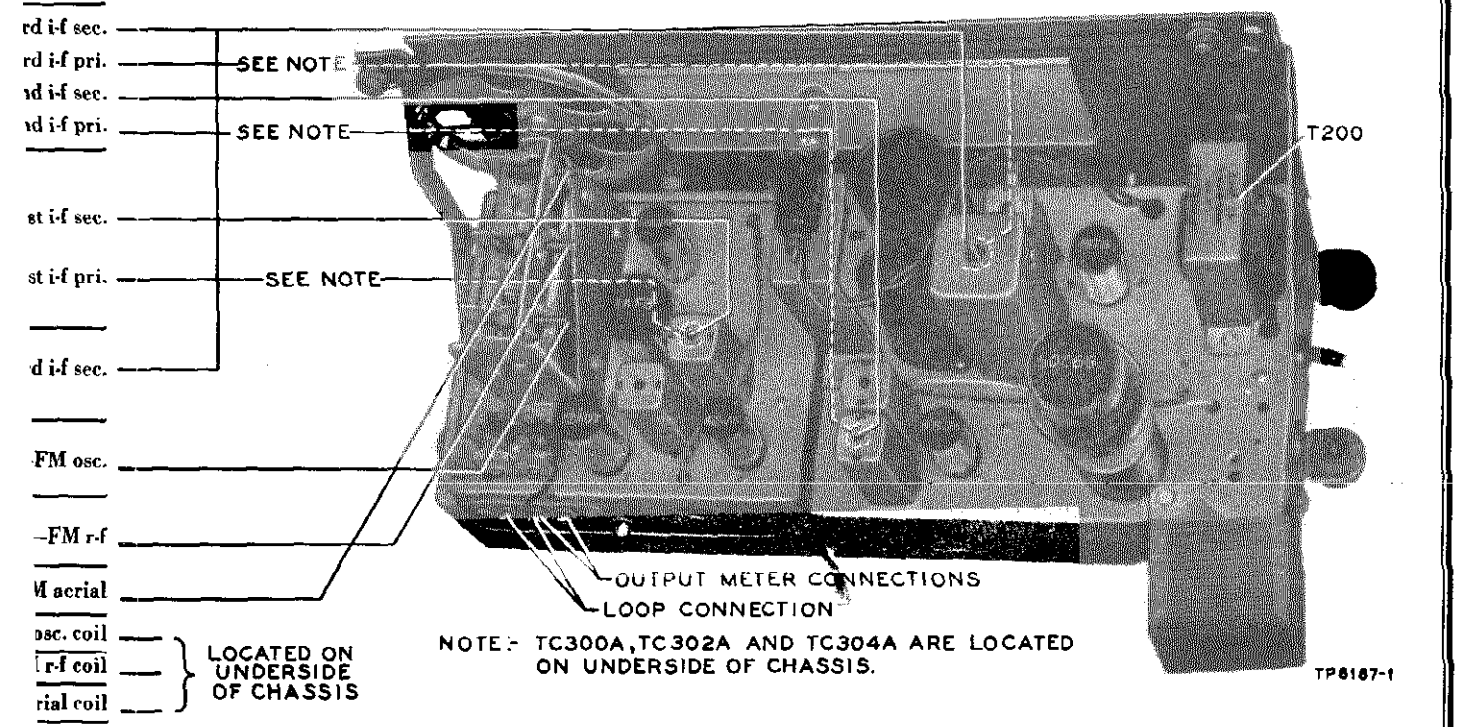

Figure 9. Top View, Showing FM Trimmer Locations

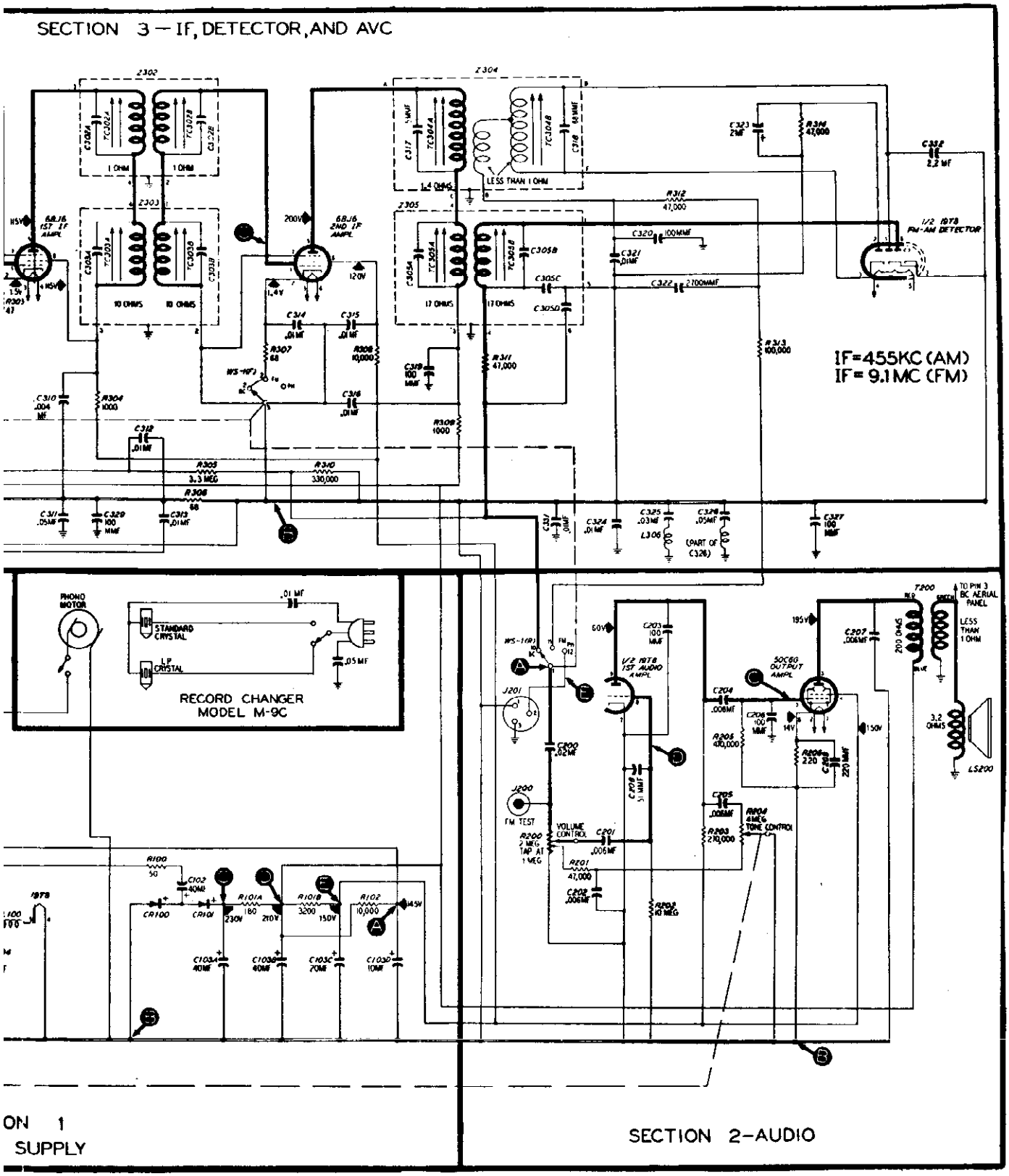

Sectionalized Schematic Diagram, Showing Test Points

MODEL 50-1726

AM ALIGNMENT CHART

STEP	SIGNAL GENERATOR		RADIO		ADJUS
	CONNECTIONS TO RADIO	DIAL SETTING	DIAL SETTING	SPECIAL INSTRUCTIONS	
1	Through .1-mf. condenser to terminal 1 of aerial terminal panel, TB400.	455 kc.	540 kc.	Adjust, in order given, for maximum output.	C302B—3 C301D—2 C300D—1 TC300A—1
2	Radiating loop (see note below).	580 kc.	580 kc.	Adjust for maximum while rocking tuning control.	C404B—Os
3	Same as step 2.	1700 kc.	1700 kc.	Adjust for maximum.	C404A—Os
4	Same as step 2.	1500 kc.	1500 kc.	Adjust for maximum.	C40
5	Same as step 2.	580 kc.	580 kc.	Adjust for maximum while rocking tuning control.	C404B—Os
6	Repeat steps 2, 3, and 4 until no further improvement is obtained.				

RADIATING LOOP: Make up a six-to-eight turn, 6-inch-diameter loop, using insulated wire; connect to signal-generator leads and plac radio loop.

FM ALIGNMENT CHART

STEP	SIGNAL GENERATOR		RADIO		ADJUS
	CONNECTIONS TO RADIO	DIAL SETTING	DIAL SETTING	SPECIAL INSTRUCTIONS	
1	Through .1-mf. condenser to grid of 1st i-f ampl., 6BA6 (top plate of trimmer C300B*).	9.1 mc.	88 mc.	Adjust for maximum signal strength, as indicated by d-c voltmeter. Repeat until no further increase is obtained. After this step, do no disturb any of these settings except that of C302A, as directed in step 3.	C302A—Det TC302A— C301B—2 C301A—2
2	Through .1-mf. condenser to mixer grid (pin 8) of 7F8.	9.1 mc.	88 mc.	Adjust for maximum. After this step, do not disturb either of these settings.	C300B—1 C300A—1
3	Same as step 2.	9.1 mc.	88 mc.	Double-check the adjustment of C302A to make certain that audio output is at minimum. Use output meter. The setting is critical; adjust carefully.	C302A—Det
4	To FM aerial terminal (terminal 4 of J400).	105 mc.	105 mc.	Adjust for maximum.	C40
5	Same as step 4.	105 mc.	105 mc.	Adjust for maximum while rocking tuning control.	C4
6	Same as step 4.	105 mc.	105 mc.	Adjust for maximum.	C400
7	Same as step 4.	92 mc.	92 mc.	Adjust L403 for maximum (see R-F COIL NOTE above).	L403—(Osc.
8	Same as step 4.	92 mc.	92 mc.	Adjust L401 for maximum while rocking tuning control (see R-F COIL NOTE above).	L401—(R-f
9	Same as step 4.	92 mc.	92 mc.	Adjust L400 for maximum (see R-F COIL NOTE above).	L400—(Aerial
10	Repeat steps 4 through 9 until no further increase is obtained.				

* Make this connection by sliding a piece of flattened wire solder down through alignment slot (see figure 9) in top of i-f transformer can

©John F. Rider

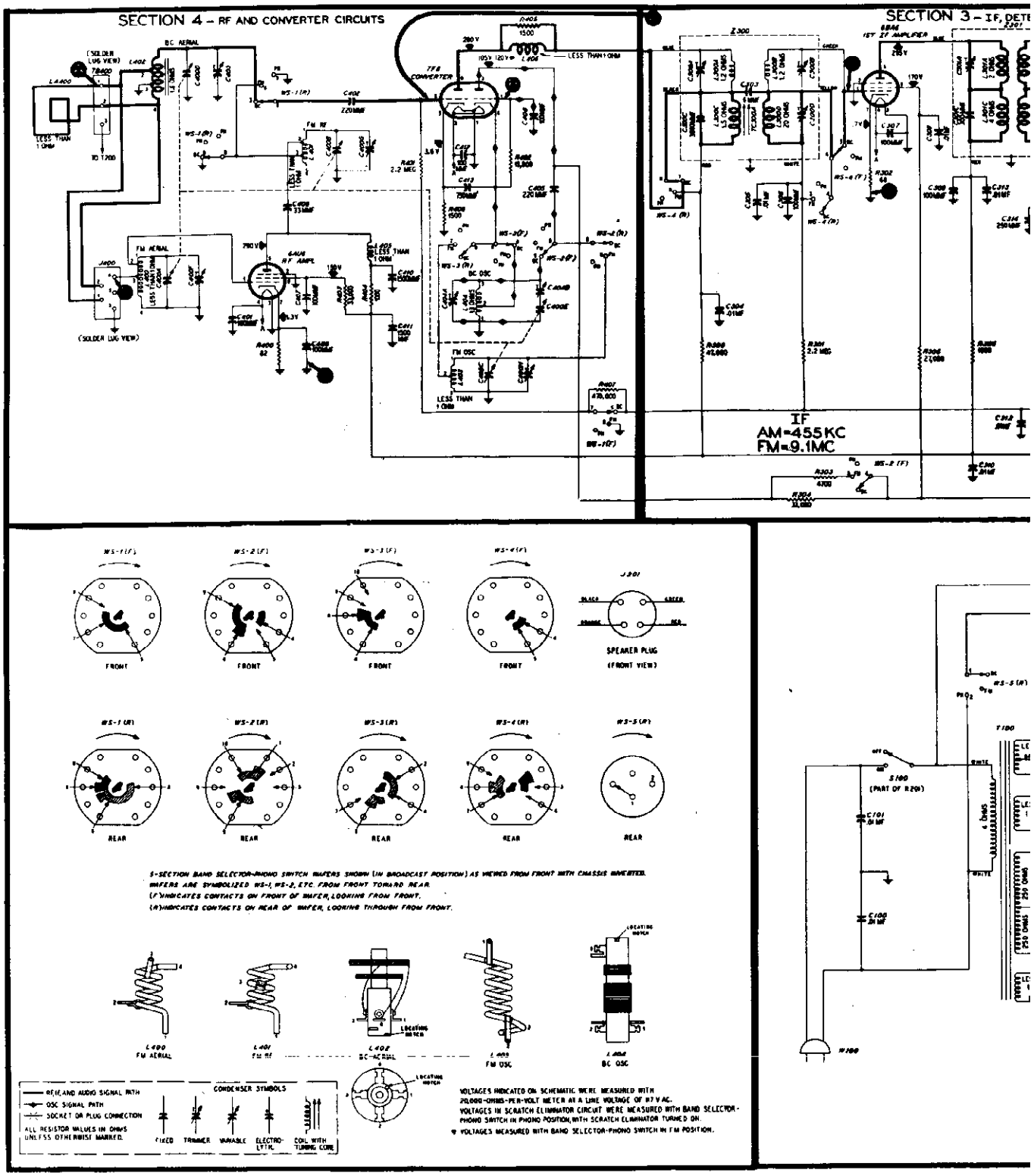

Figure 6. Philco Radio-Phonograph Model 50-172

RECORD CHANGER: See Philco Model M-20, Page RCD.CH. 20-1

©John F. Rider

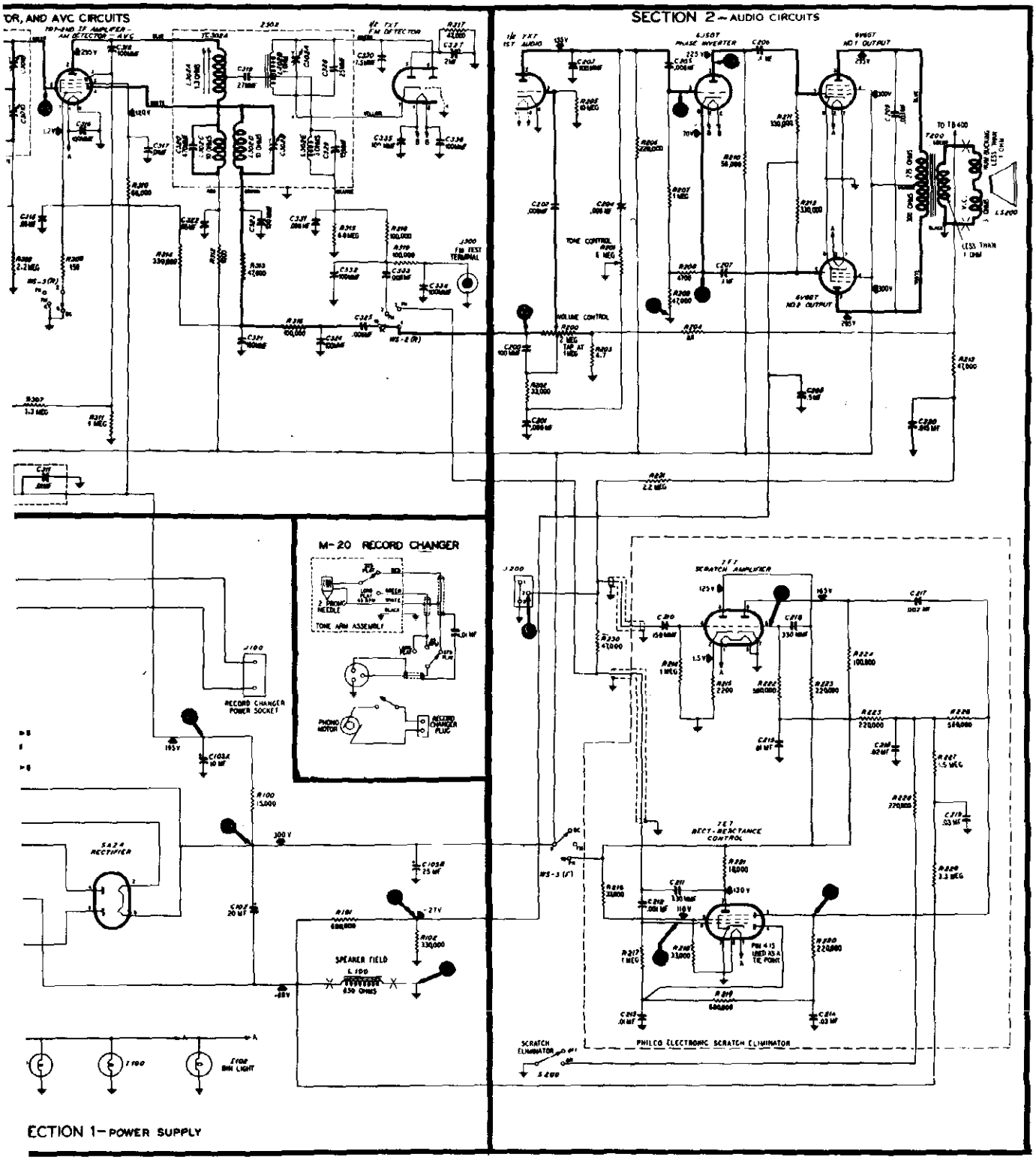

Nonalized Schematic Diagram, Showing Test Points

TP-6455-1

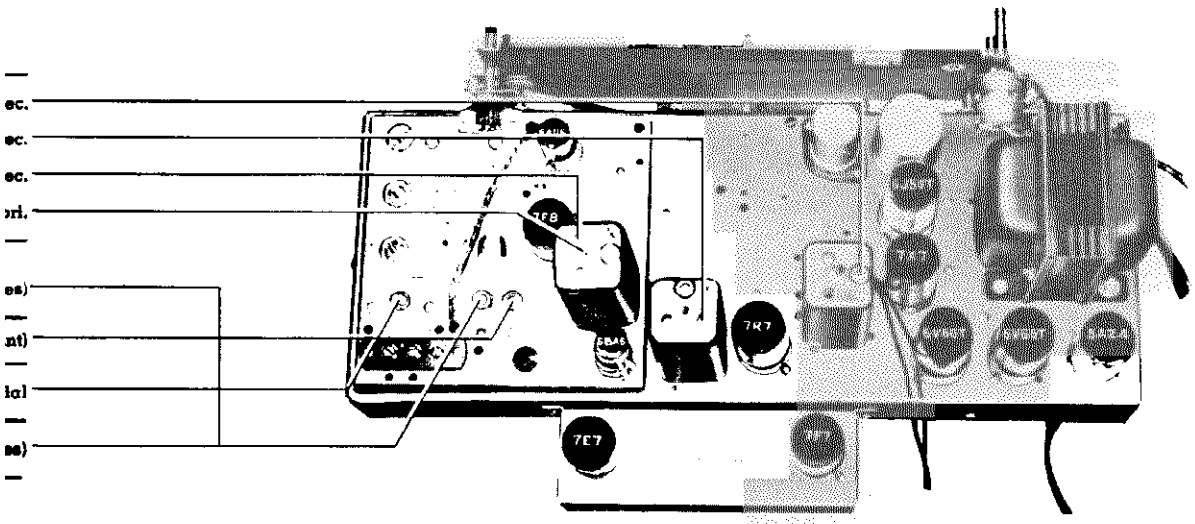

Figure 8. Top View, Showing AM Trimmer Locations

TP-5132-2

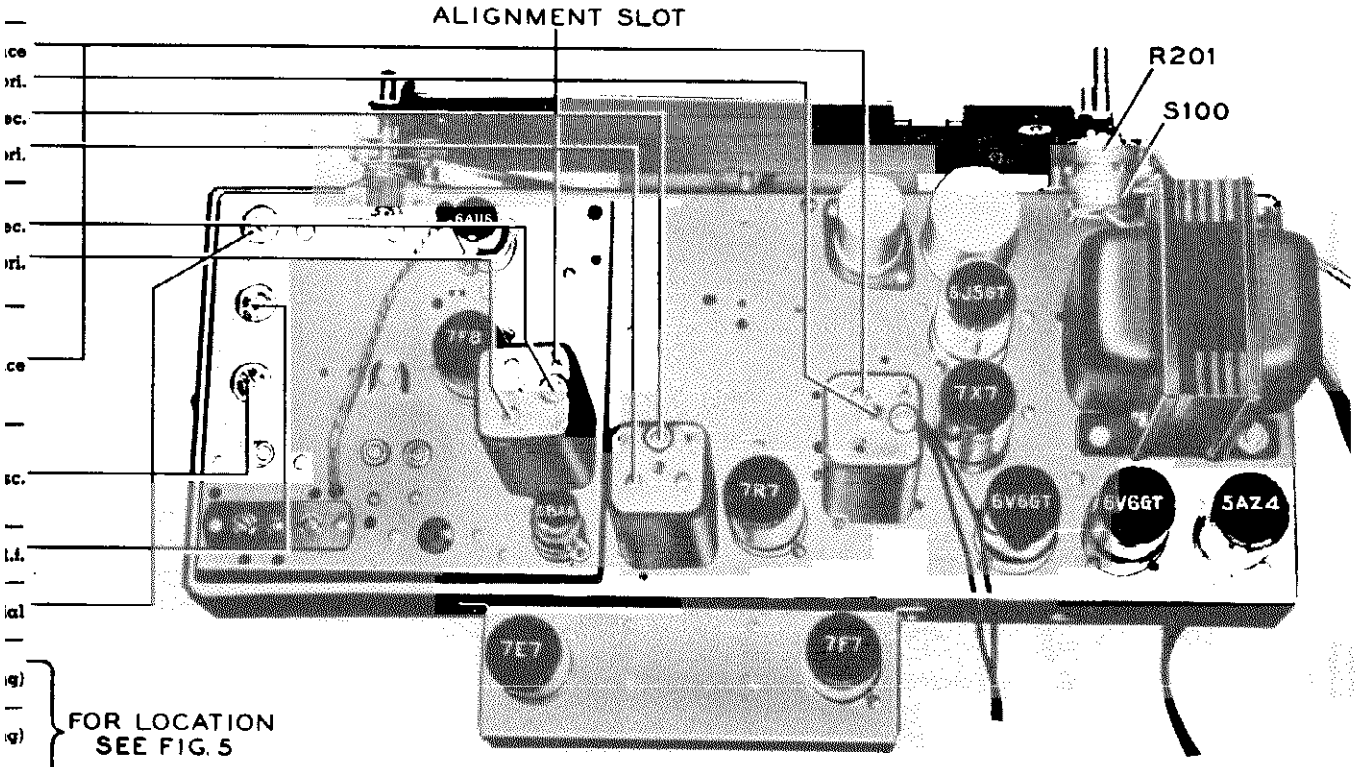

Figure 9. Top View, Showing FM Trimmer Locations

TP-5132-2

ALIGNMENT PROCEDURE

When the complete AM and FM alignment is to be made, the AM alignment should be made FIRST; if AM alignment is not required, the FM alignment alone may be made.

ALIGNMENT OF AM CIRCUITS

DIAL POINTER: With tuning condensers fully meshed, dial pointer must coincide with index mark at low-frequency end of dial. (See "CALIBRATING DIAL BACKPLATE," page 2.)

OUTPUT METER: Connect between No. 3 terminal (voice-coil connection) of aerial terminal panel and chassis.

AM R-F SIGNAL GENERATOR: Connect ground lead to chassis, and output lead as indicated in chart. Use modulated output.

OUTPUT LEVEL: During alignment, signal-generator output must be attenuated to maintain radio output below 1.5 volts, as read on output meter.

CONTROLS: Set band switch to broadcast position. Set volume control to maximum, and tone control fully counterclockwise. Set signal-generator frequency and radio tuning dial as indicated in chart.

ALIGNMENT OF FM CIRCUITS

Make AM alignment (if required) first.

OUTPUT METER: Connect as for AM alignment (this meter is used only in step 3).

D-C METER: Connect 20,000-ohms-per-volt meter across 2-mf. condenser, C327, in FM-detector circuit—negative lead to pin 6 of 7X7 tube, and positive lead to chassis. Use 10-volt range.

AM R-F SIGNAL GENERATOR: Use modulated output for entire alignment. Generator must have sufficient output to give reading of approximately 9 volts on d-c meter, and signal should be attenuated during alignment to keep meter at this value. Connect generator ground lead to chassis, and output lead as indicated in chart.

VOLUME AND TONE CONTROLS: Same as for AM alignment.

RADIO BAND SWITCH, RADIO DIAL, AND SIGNAL-GENERATOR DIAL: Set as indicated in chart. Allow radio and generator to warm up for 15 minutes before starting alignment.

R-F COIL NOTE: When making the tracking adjustments, the resonance of the circuits using coils L400, L401 and L403 may be checked with a powdered-iron tuning core such as Part No. 56-6100. If the signal strength (meter reading) increases when the iron end is placed in, or near, the coil, compress the turns slightly. If the threaded brass end causes an increase in signal strength, spread the turns. Do not compress or spread the turns excessively; only a small change is required at these frequencies.

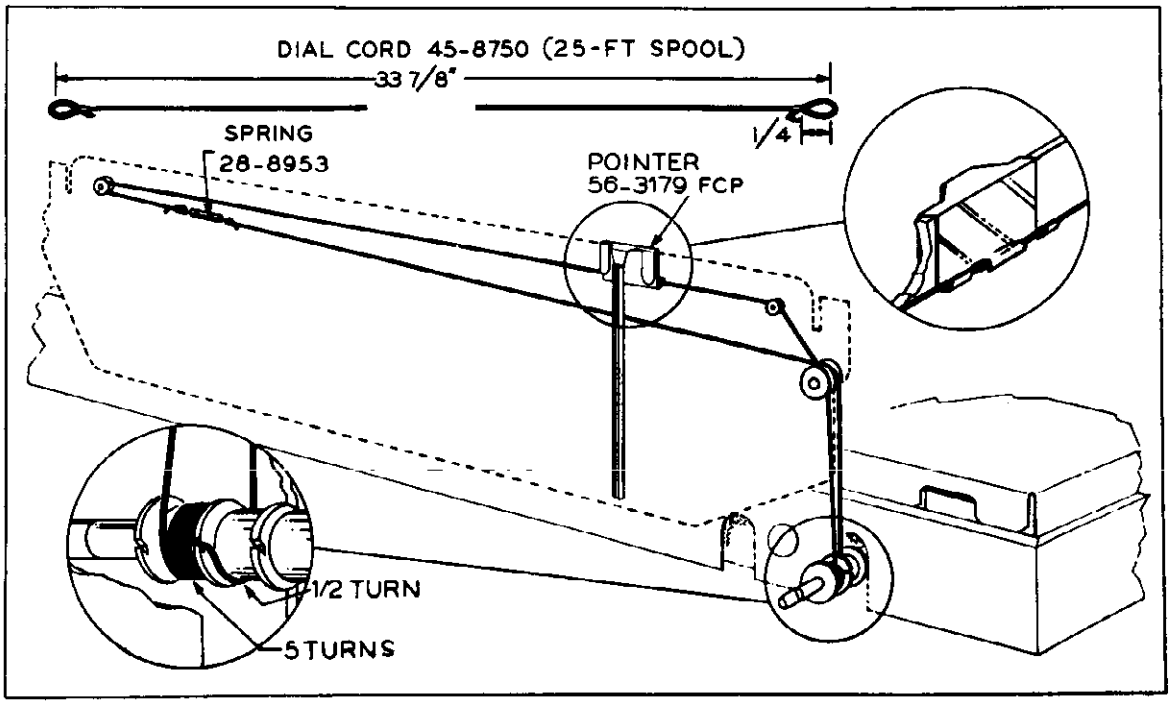

Figure 7. Drive-Cord Installation Details TP-4058E

MODEL 50-1726

Circuit Description

Philco Radio-Phonograph Model 50-1726 contains an 11-tube superheterodyne and a Model M-20 Philco Automatic Record Changer.

A low-impedance loop aerial within the cabinet normally provides adequate signal pickup on the standard broadcast band. In most locations, the built-in FM dipole aerial provides satisfactory FM reception. In areas where FM signals are weak, an outdoor dipole aerial, such as Philco Part No. 45-1462, will provide additional pickup. To increase the pickup on both bands, use the Philco Aerial Coupler, Part No. 76-2353-1, with the outdoor dipole aerial. For increased pickup on the standard broadcast band only, the coupler may be used with an external aerial of the single-wire type, such as Philco Part No. 45-1494.

The r-f stage (FM only) and converter stage are mounted on a separate chassis, for improved performance at high frequencies. A 6AU6 high-frequency pentode is used in the r-f stage, and a 7F8 high-frequency double triode is employed as a converter.

Two transformer-coupler i-f stages are used. The transformers have two sets of windings; one set is tuned to 455 kc., for AM operation, and the other set is tuned to 9.1 mc., for FM operation. A 6BA6 high-frequency pentode is used in the first i-f stage. The pentode section of a 7R7 duo-diode, pentode functions as the second i-f amplifier; one diode of this tube is used for AM detection, while the other diode provides a.v.c.

The dual-diode section of a 7X7 is employed in the FM ratio-detector circuit; this circuit has good noise-reducing properties and an excellent tuning characteristic.

The triode section of the 7X7 functions as the first audio stage. A 6J5GT triode operates as a plate-and-cathode-loaded phase inverter, driving two 6V6GT output amplifiers, in push-pull operation. Tone fidelity is obtained by the use of inverse feedback in the audio system; feed-back voltage is taken from the secondary of the output transformer.

The Philco Electronic Scratch Eliminator, for phono operation, may be switched on or off, as required. The pentode section of a 7E7 functions as a variable shunt capacitance at the phono-input circuit; at low signal levels, a controlled portion of the higher audio frequencies is by-passed to ground. The grid bias of the reactance tube controls the effective capacitance, which

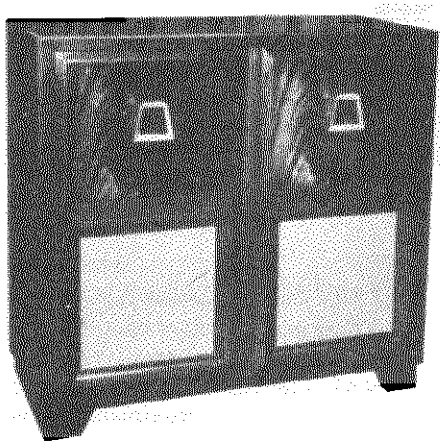

MODEL 50-1726

SPECIFICATIONS

CABINET	Wood, mahogany or light finish
CIRCUIT	11-tube superheterodyne
FREQUENCY RANGES	
Broadcast	540—1720 kc.
FM	88—108 mc.
AUDIO OUTPUT	7 watts
OPERATING VOLTAGE	105—120 volts, 60 cycles, a.c.
POWER CONSUMPTION	
Radio	110 watts
Phonograph	125 watts
AERIALS	Built-in loop and FM cabinet dipole; external aerial also may be used
INTERMEDIATE FREQUENCIES	
AM	455 kc.
FM	9.1 mc.
PHILCO TUBES (11)	6AU6, 7F8, 6BA6, 7R7, 7X7, 6J5GT, 6V6GT (2), 7E7, 7F7, 5AZ4
PHONOGRAPH	Philco Automatic Record Changer, Model M-20 (for service information, refer to service manual PR-1731)

TP-5849

©John F. Rider

becomes maximum with low bias, and minimum with high bias. This control bias is developed by the audio signal itself; a proportionate amount of the signal is taken from the pickup output, amplified by each triode section of the 7F7, and rectified by the diode section of the 7E7.

Philco TROUBLE-SHOOTING *Procedure*

For rapid trouble shooting, the radio circuit is divided into four sections, as follows:

Section 1—the power supply
Section 2—the audio circuits
Section 3—the i-f, detector, and a-v-c circuits
Section 4—the r-f and converter circuits

Test points are specified for each section, and are indicated in the sectionalized schematic diagram. The trouble-shooting procedure given for each section includes a simplified test chart and a bottom view of the chassis showing the locations of the test points and the components of that section.

In each chart, the first step is a master check for determining whether trouble exists in that section, without going through the entire chart.

Failure to obtain the "NORMAL INDICATION" in any given step indicates trouble within the circuit under test.

After isolating the trouble to a single stage, the defect is located by: first, testing the tube; second, measuring tube electrode voltages; third, measuring circuit resistances; fourth, substituting condensers. The trouble revealed should be corrected before testing further.

Preliminary Checks

To avoid possible damage to the radio, the following preliminary checks should be made before connecting the radio to a source of power:

1. Inspect the top and bottom of the chassis. Make sure that all tubes are secure in the proper sockets, and look for any broken or shorted connections, burned resistors, or other obvious indications of trouble.

2. Measure the resistance across condenser C102 (see figure 2). When the ohmmeter test leads are connected in the proper polarity, the highest resistance reading will be obtained. If the reading is lower than 3500 ohms, check condensers C102 and C103B for leakage or shorts.

The resistance value above, which is much lower than normal, does not represent a quality check of these condensers; the value given is the lowest at which the rectifier will operate safely while the voltage tests of Section 1 (power supply) are performed.

Important!

To avoid altering FM operation, special care should be used in replacing any part. Replacement parts should be placed in the same physical locations as the original parts; connections should be of the same length, and should be soldered to the same points. The placement or length of leads should not be changed.

CALIBRATING DIAL BACKPLATE

When the radio chassis has been removed from the cabinet, dial calibration and alignment points may be marked on the dial (chassis) backplate at the end of the pointer with a pencil. The method of measuring for these points is illustrated in figure 1.

With the tuning gang fully meshed, the pointer should be adjusted on the dial-drive cord to coincide with the index mark.

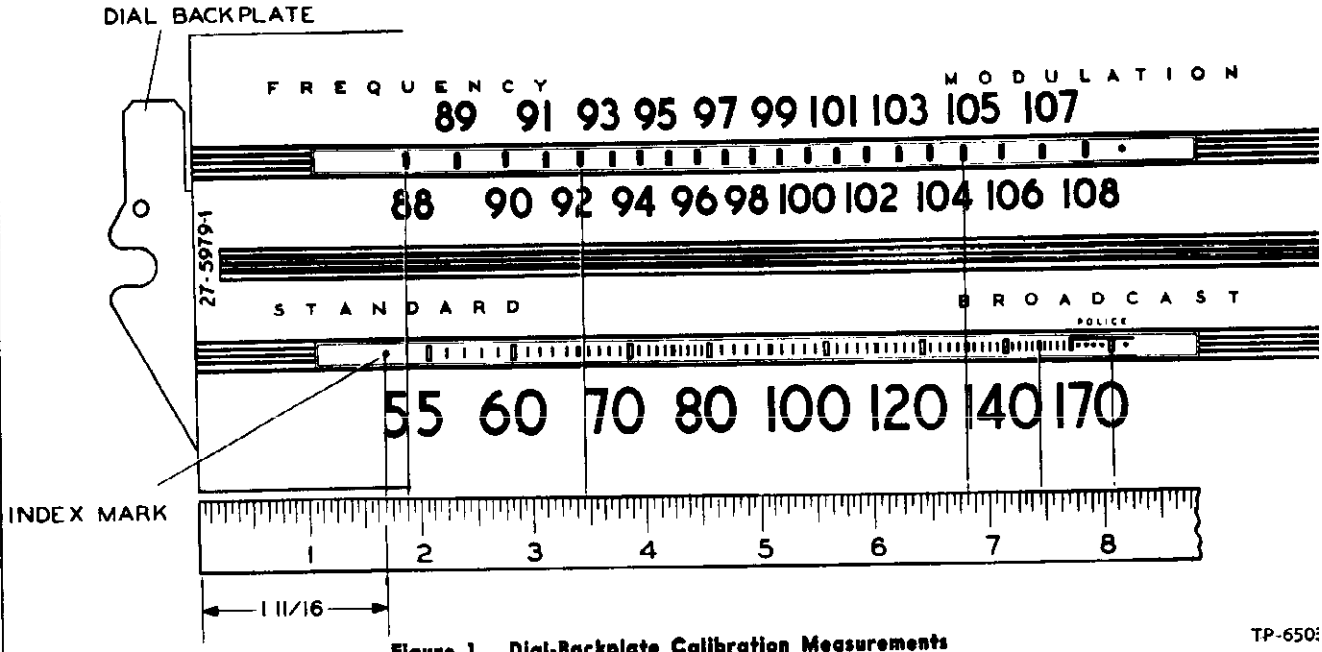

Figure 1. Dial-Backplate Calibration Measurements

TP-650

MODEL 50-1726

Section 1 TROUBLE SHOOTING

POWER SUPPLY

CAUTION: Do not turn on the power with the speaker disconnected, or the set may be damaged.

Make the tests for this section with a d-c voltmeter, connecting the leads between the chassis, test point C, and the test points indicated in the chart. The voltage readings given were taken with a 20,000-ohms-per-volt meter, at a line voltage of 117 volts, a.c.

Set the volume control to minimum, and the tone control fully counterclockwise. Set the band selector-phono switch to the broadcast position.

Follow the steps in the order given. If the "NORMAL INDICATION" is obtained in step 1, proceed with the tests for Section 2 (audio circuits); if not, isolate and correct the trouble in this section.

STEP	TEST POINT	NORMAL INDICATION	ABNORMAL INDICATION	POSSIBLE CAUSE OF ABNORMAL INDICATION
1	A	195v		Trouble in this section. Isolate by the following tests.
2	B	300v	No voltage. Low voltage. High voltage.	Defective: 5AZ4. Open: S100, T100. Shorted: C102. Defective: 5AZ4. Shorted: C103B, C310*, C411*. Leaky: C102. Open: C102, L100. Shorted: L100. Open T200*.
3	A	195v	No voltage. Low voltage. High voltage.	Open: R100. Shorted: C103A, C311*. Leaky: C103A, C311*. Changed resistance: R100. Open: T200*.
4	D	Negative 27v	No voltage. High voltage.	Open: R101. Open: R102.
Listening Test: Abnormal hum and instability may be caused by open C103A or C103B.				

* This part, located in another section, may cause abnormal indication in this section.

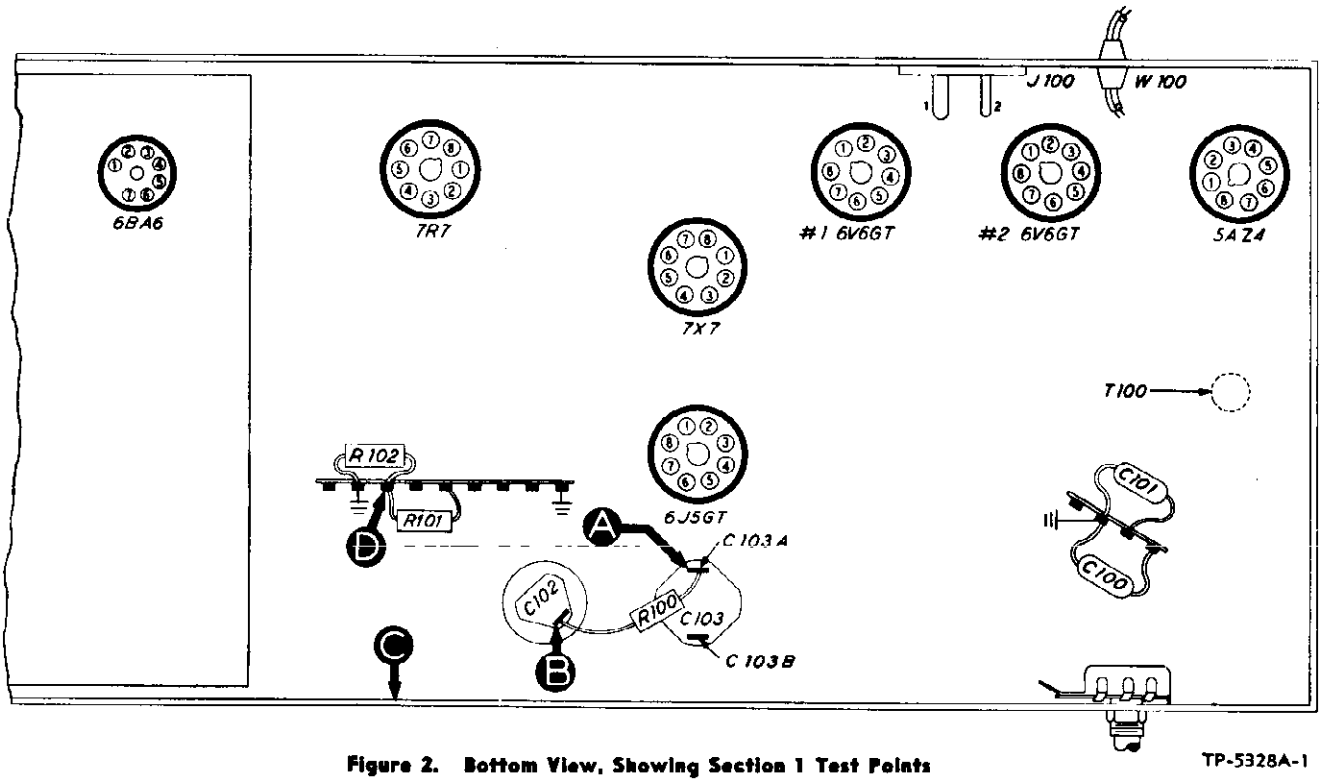

Figure 2. Bottom View, Showing Section 1 Test Points

TP-5328A-1

©John F. Rider

Section 2

TROUBLE SHOOTING

AUDIO-AMPLIFIER TESTS

AUDIO CIRCUITS

Use an audio-frequency signal generator. Connect the generator ground lead to the chassis, test point C, and connect the output lead through a .1-mf. condenser to the test points indicated in the chart.

Set the volume control to maximum, and the tone control fully counterclockwise. Set the band (wafer) switch to the broadcast position. Make certain that the scratch-eliminator switch is turned off (two-position switch turned counterclockwise). If the "NORMAL INDICATION" is obtained in steps 1 and 6, proceed with the scratch-eliminator tests; if not, isolate and correct the trouble in the audio-amplifier circuits.

STEP	TEST POINT	NORMAL INDICATION	POSSIBLE CAUSE OF ABNORMAL INDICATION
1	A	Loud, clear signal with weak signal input.	Trouble in audio-amplifier circuits. Isolate by the following tests.
2	B (Remove 6J5GT)	Clear signal with strong signal input.	Defective: 6V6GT(#1), LS200. Open: C206, R211, T200. Shorted or leaky: C206, C209.
3	D (6J5GT removed)	Same as step 2.	Defective: 6V6GT(#2). Open: C207, R212. Shorted or leaky: C207.
4	E (Replace 6J5GT)	Loud, clear signal with moderate signal input.	Defective: 6J5GT. Open: R208, R209, R207, R210. Shorted or leaky: C205, C204.
5	A	Same as step 1.	Defective: 7X7. Open: R200 (rotate through range), C202, R205, R206. Shorted: C203.
6*	F	Loud, clear signal with weak signal input.	Open: R230, WS-2(R).
Listening Test: Distortion may be caused by leaky C202, C205, C206, or C207; or by open R205, C207, C211, or C212.			

* For this step, set band (wafer) switch to phono.

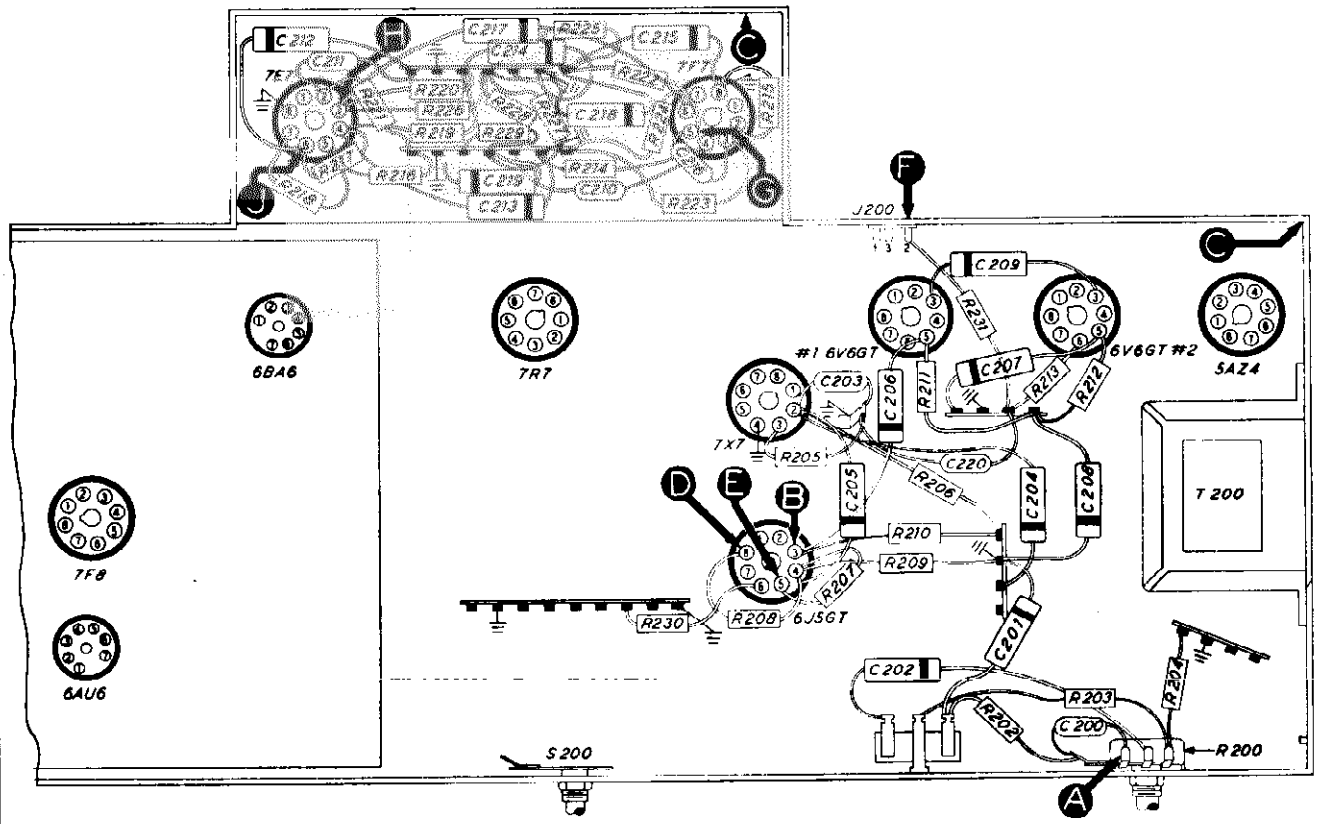

Figure 3. Bottom View, Showing Section 2 Test Points

TP-6456-1

©John F. Rider

MODEL 50-1726

Section 2 (Cont.) TROUBLE SHOOTING

SCRATCH-ELIMINATOR TESTS

Set the tone control fully counterclockwise. Turn the band (wafer) switch to the phono position. For all steps except 1(b), set the volume control to maximum; for this step, adjust the volume control as directed in the chart.

Turn the scratch eliminator on or off as indicated in the chart. (The scratch eliminator is on when the two-position switch is turned clockwise.)

Connect an output meter across the *primary* of the output transformer, T200.

IMPORTANT! For all steps except step 4, use the 0—10-volt output-meter range; for step 4 only, use the 0—50-volt range. If the proper ranges are not used, erroneous readings will result.

Connect the ground lead of an audio signal generator to the chassis, test point C, and connect the output lead through a .1-mf. condenser to the test points indicated in the chart. Set the generator for 5000 cycles. Adjust the generator output as directed in the chart.

If normal operation is indicated by the tests in step 1, (a) and (b), proceed with the tests for Section 3 (i-f, detector, and a-v-c circuits); if not, isolate and correct the trouble in the scratch-eliminator circuits.

NOTE: For steps 2, 3, and 4, connect the positive lead of a 20,000-ohms-per-volt, d-c voltmeter to the chassis, test point C; connect the prod end of the negative lead through a 100,000-ohm isolating resistor to the "VOLTMETER" test points indicated in the chart.

STEP	TEST POINT	SIG. GEN. OUTPUT	VOLT-METER	SPECIAL INSTRUCTIONS	POSSIBLE CAUSE OF ABNORMAL INDICATION
1(a)	F	Adjust for 10v output-meter reading, with scratch-eliminator off.		Turn scratch eliminator on; output voltage should drop to 6.5v (approx.).	
1(b)	F	Same as for 1(a).		Reduce volume control to obtain output-meter reading of 1v. Increase generator output for output-meter reading of 10v. Turn scratch eliminator on; output voltage should not drop below 8.8v (approx.).	Trouble in scratch-eliminator circuits. Isolate by the following tests.
2	G	See SPECIAL INSTRUCTIONS.	H	With scratch eliminator on, increase generator output for voltmeter reading of 8.8v, negative; failure to obtain this value indicates trouble.	Defective: 7F7, 7E7 (diode section), WS-3(R). Open R224, R222, R226, R228, C217, S200.
3	G	Same setting which produced 8.8v reading in step 2, with scratch eliminator on.	J	With scratch eliminator on, voltage at point J should be 2v, negative.	Open: R220, R219, R217. Shorted: C213, C214, C212.
4	F	Same as step 2.	H	With scratch eliminator on, voltage at point H should be approx. 28v, negative.	Defective: 7F7. Open: C210, C216, R214, R215, R223. Shorted or leaky: C216.
5	F	Adjust for 10v output-meter reading, with scratch eliminator off.		Turn scratch eliminator on; output voltage should drop to 6.5v (approx.).	Defective: 7E7 (pentode section). Open: R221, R216, R218, C211, C212. Shorted: C211, C212.

©John F. Rider

Section 3 TROUBLE SHOOTING

I-F, DETECTOR, AND A-V-C CIRCUITS

AM CIRCUITS

Use an r-f signal generator, with modulated output, set at 455 kc. Connect the generator ground lead to the chassis, test point C, and connect the output lead through a .1-mf. condenser to the test points indicated in the chart.

Set the volume control to maximum, and the tone control fully counterclockwise. Set the band (wafer) switch to the broadcast position. Turn the tuning condensers to full-mesh position.

If the "NORMAL INDICATION" is obtained in step 1, proceed with the tests for the FM circuits, or the tests for Section 4 (r-f and converter circuits); if not, isolate and correct the trouble in the AM circuits.

Since the circuit location of test point A for this section is in Section 4, the effectiveness of step 1 as a master check is dependent upon the condition of certain parts in Section 4; these parts are listed below under "POSSIBLE CAUSE OF ABNORMAL INDICATION."

STEP	TEST POINT	NORMAL INDICATION	POSSIBLE CAUSE OF ABNORMAL INDICATION
1	A	Loud, clear signal with weak signal input.	Trouble in AM circuits. Isolate by the following tests.
2	B	Loud, clear signal with strong signal input.	Defective: 7R7. Open: R309, R310, R312, L302A, L302C, L302D, R313, R314, R316, C325, C317, WS-3(R). Shorted: C317, C318, C321, C322, C323, C324, C320, C302B. Misaligned: Z302.
3	D	Loud, clear signal with moderate signal input.	Defective: 6BA6. Open: R302, R305, R308, R306, L301A, L301B, L301C, L301D, C301A, C301C, C301D. Shorted: C308, C301C, C301D, C309, C313, L301C, L301D, C300D. Misaligned: Z301.
4	A	Loud, clear signal with weak signal input.	Defective: 7F8*. Open: R406*, R405*, L406*, C300C, L300C, L300D, C300D, R300, WS-4(R), WS-4(F). Shorted: C300C, L300C, C303, C304, L300D. Misaligned: Z300.

*This part, located in another section, may cause abnormal indication in this section.

FM CIRCUITS

These tests are also made with an AM r-f signal generator, using modulated output.

Set the band (wafer) switch to the FM position, and follow the instructions preliminary to the tests for the AM circuits, with these exceptions: set the signal-generator frequency to 9.1 mc., and detune to one side or the other until a satisfactory test signal is obtained.

The best indication of satisfactory FM-detector operation is the ability of this circuit to take the alignment properly (see page 14).

If the "NORMAL INDICATION" is obtained in step 1, proceed with the tests for Section 4 (r-f and converter circuits); if not, isolate and correct the trouble in the FM circuits.

MODEL 50-1726

Section 3 (Cont.) TROUBLE SHOOTING

STEP	TEST POINT	NORMAL INDICATION	POSSIBLE CAUSE OF ABNORMAL INDICATION
1	A	Loud, clear signal with weak signal input.	Trouble in FM circuits. Isolate by the following tests.
2	B	Loud, clear signal with strong signal input.	Open: L302B, C302A, C328, C329, R315, R318, C325, R317, WS-3(R). Shorted: L302A, C319, C302A, C328, L302E, C329, C330, C331, C332.
3	D	Loud, clear signal with moderate signal input.	Defective: 6BA6. Open: R302, R305, C308, R306, L301A, L301B, L301C, L301D, C301A, C301C, C301D. Shorted: C308, C301C, C301D, C309, C313, L301C, L301D, C300D. Misaligned: Z301.
4	A	Loud, clear signal with weak signal input.	Open: WS-4(R), WS-4(F).

C300 IS LOCATED IN Z300

C319, C320, C328, C329 LOCATED IN Z302

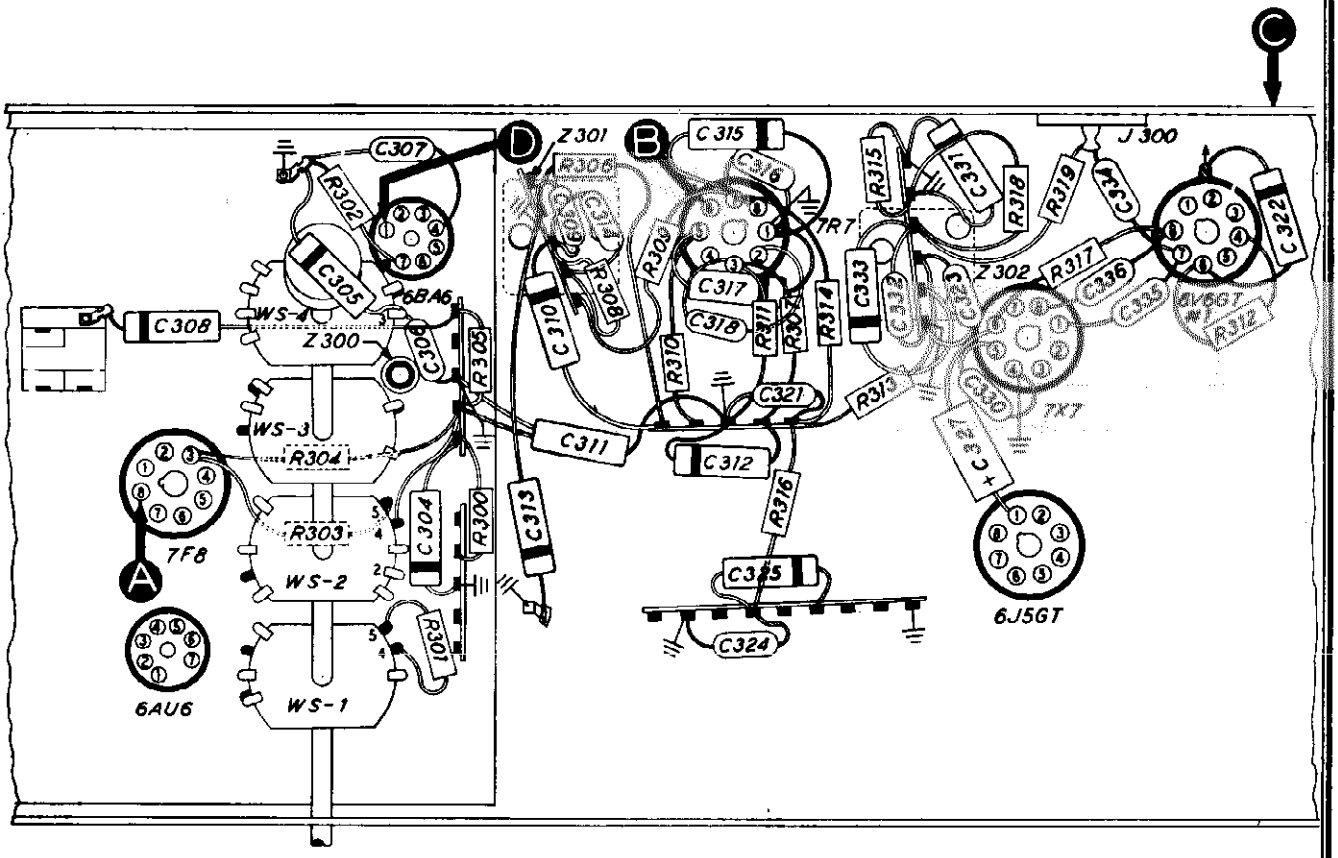

Figure 4. Bottom View, Showing Section 3 Test Points

TP-6457-1

Section 4 TROUBLE SHOOTING

For the following tests, with the exception of the oscillator tests, use an AM r-f signal generator, with modulated output. Connect the generator ground lead to the chassis, test point C, and connect the output lead through a .1-mf. condenser to the test points indicated in the chart.

Set the radio volume control to maximum, and the tone control fully counterclockwise.

Set the band (wafer) switch, tuning control, and signal-generator frequency as indicated in the chart.

OSCILLATOR TESTS (AM AND FM CIRCUITS): Connect the positive lead of a high-resistance d-c voltmeter to the chassis, and connect the negative lead through a 100,000-ohm isolating resistor to the 7F8 oscillator grid (pin 1), test point B. Use a suitable range, such as 0—10 volts. Proper operation of the oscillator is indicated by negative voltages of approximately the values given in the chart (measured with 20,000-ohms-per-volt meter), throughout the tuning range.

If the "NORMAL INDICATION" is not obtained in step 1 of both the AM and the FM test charts, isolate the trouble by following the remaining steps.

AM CIRCUITS

STEP	TEST POINT	SIG. GEN. FREQ.	BAND SWITCH	RADIO TUNING	NORMAL INDICATION	POSSIBLE CAUSE OF ABNORMAL INDICATION
1	A	1000 kc.	Broadcast	Tune to signal.	Loud, clear signal with weak signal input.	Trouble in AM circuits. Isolate by the following tests.
2 (Osc. test; see note above.)	B		Broadcast	Tune through range.	Negative 1.5v to 3.5v.	Defective: 7F8. Open: R304*, C405, C404B, C408, L404, R402, WS-2(F), WS-2(R), WS-1(F), WS-3(F), WS-3(R). Shorted: C405, C404A, C400E, C404B, C408.
3	A	1000 kc.	Broadcast	Tune to signal.	Loud, clear signal with weak signal input.	Open: LA400, R401, L402, C402, C413, WS-1(R). Shorted: L402, C400D, C403.

Listening Test: Distortion may be caused by open R401 or R307*.
Hum and instability may be caused by open C312* or R301*.

This part, located in another section, may cause abnormal indication in this section.

FM CIRCUITS

Observe the instructions preliminary to the tests for the AM circuits, with the following exception: After tuning the signal generator and the radio to 95 mc., detune one or the other until a satisfactory test signal is obtained.

STEP	TEST POINT	SIG. GEN. FREQ.	BAND SWITCH	RADIO TUNING	NORMAL INDICATION	POSSIBLE CAUSE OF ABNORMAL INDICATION
1	D	95 mc.	FM	Tune to signal.	Loud, clear signal with weak signal input.	Trouble in FM circuits. Isolate by the following tests.

©John F. Rider

MODEL 50-1726

Section 4 (Cont.) TROUBLE SHOOTING

STEP	TEST POINT	SIG. GEN. FREQ.	BAND SWITCH	RADIO TUNING	NORMAL INDICATION	POSSIBLE CAUSE OF ABNORMAL INDICATION
2 (Osc. test; see note above.)	B		FM	Tune through range.	Negative 1v.	Defective: 7F8. Open: L403, WS-2(F), WS-2(R), WS-1(F), WS-3(F), WS-3-(R). Shorted: L403, C400C, C400H.
3	D	95 mc.	FM	Tune to signal.	Loud, clear signal with weak signal input.	Defective: 6AU6. Open: L400, L405, R400, R403, R404, C409, L401, WS-1-(R). Shorted: L400, C400A, C400F, C407, C409, C410, C411, L401, C400B, C400G.

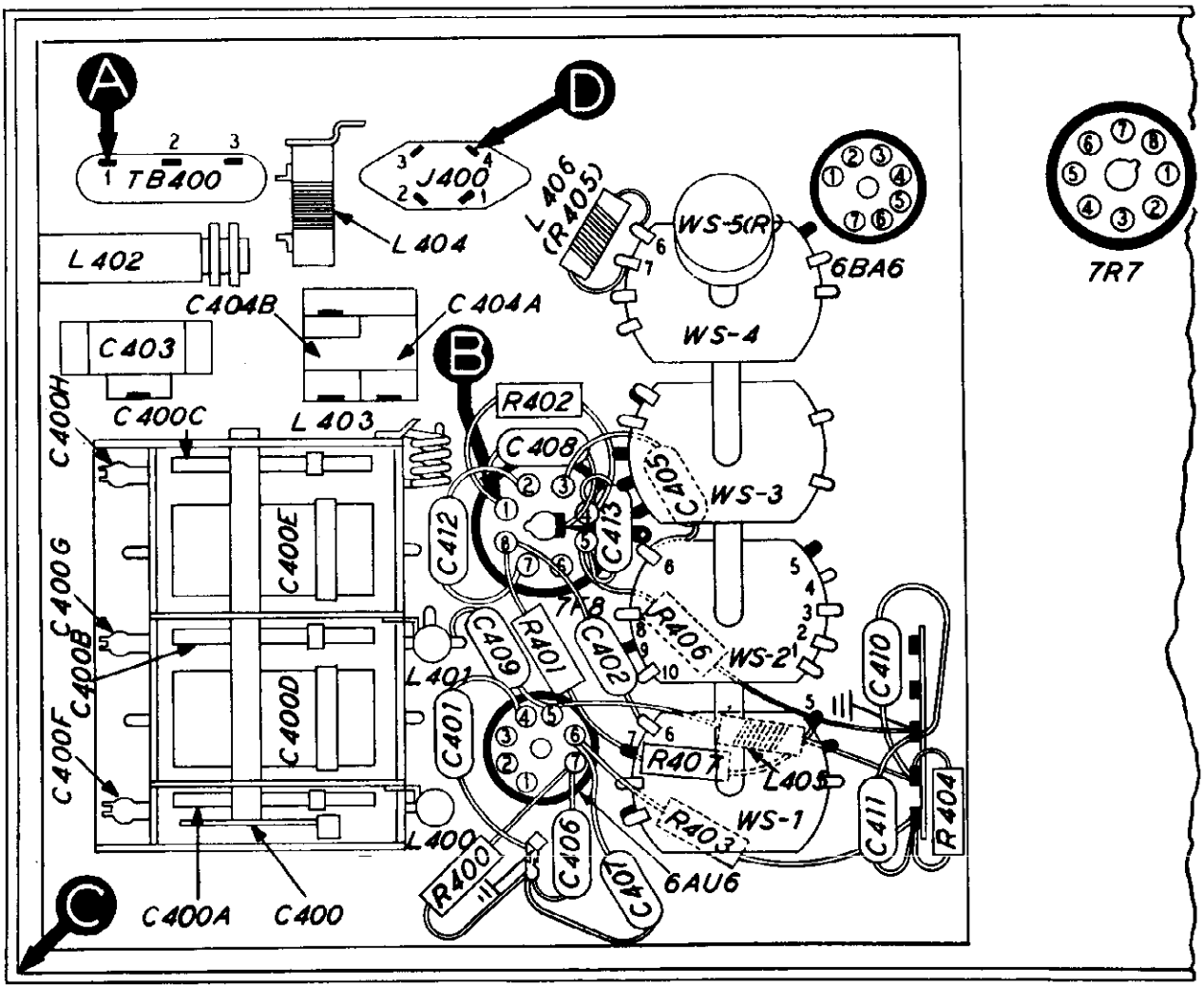

Figure 5. Bottom View, Showing Section 4 Test Points

TP-5328D

SYMBOLIZATION

MODEL 50-1726

The components in the radio circuit are symbolized according to the types of parts and the sections of the radio in which the parts are located. The prefix letter of the symbol designates the type of part, as follows:

C—condenser L—choke or coil LS—loud-speaker S—switch WS—wafer (band selector-phono) switch
I—pilot lamp LA—loop aerial R—resistor T—transformer Z—electrical assembly

The number of the symbol, except when the number is less than 100, designates the section in which the part is located, as follows:

100-series components are in Section 1 — the power supply
200-series components are in Section 2 — the audio circuits
300-series components are in Section 3 — the i-f amplifier, detector, and a-v-c circuits
400-series components are in Section 4 — the r-f and converter circuits

REPLACEMENT PARTS LIST

NOTE: Parts marked with an asterisk (*) are general replacement items. These numbers may not be identical with those on factory assemblies; also, the electrical values of some replacement items may differ from the values indicated in the schematic diagram and parts list. The values substituted in any case are so chosen that the operation of the radio will be either unchanged or improved. When ordering replacements, use only the "Service Part No."

SECTION 1
POWER SUPPLY

Reference Symbol	Description	Service Part No.
C100	Condenser, line filter, .01 mf.	30-1228-1
C101	Condenser, line filter, .01 mf.	30-1226-1
C102	Condenser, electrolytic, input filter, 20 mf., 450v	30-2568-8
C103	Condenser, electrolytic, 2-section	30-2556
C103A	Condenser, filter, 10 mf., 450v	Part of C103
C103B	Condenser, filter, 25 mf., 450v	Part of C103
I100	Lamp, pilot	34-2064
I101 & I102	Lamp, pilot	34-2064
J100	Socket, phono power	27-6200
L100	Speaker, field	Part of LS200
R100	Resistor, filter, 15,000 ohms	66-3155340
R101	Resistor, bias divider, 680,000 ohms	66-4683340*
R102	Resistor, bias divider, 330,000 ohms	66-4333340*
S100	Switch, on-off	Part of R201
T100	Transformer, power	32-8248
W100	Power cord and plug	41-3755-20
WS-5 (R)	Switch-wafer section, phono power	Part of 42-1803-2†

SECTION 2
AUDIO CIRCUITS

C200	Condenser, tone compensation, 100 mmf.	60-10105407*
C201	Condenser, tone compensation, .006 mf.	45-3500-7*
C202	Condenser, d-c blocking, .006 mf.	45-3500-7*
C203	Condenser, r-f by-pass, 100 mmf.	60-10105407*
C204	Condenser, tone control, .006 mf.	45-3500-7*
C205	Condenser, d-c blocking, .006 mf.	45-3500-7*
C206	Condenser, d-c blocking, .1 mf.	45-3500-8*
C207	Condenser, d-c blocking, .1 mf.	45-3500-8*
C208	Condenser, bias filter, .5 mf.	61-0133*
C209	Condenser, tone compensation, .003 mf.	61-0117*
C210	Condenser, high-pass filter, 150 mmf.	60-10155407*
C211	Condenser, reactance-feedback, 330 mmf.	60-10335407*
C212	Condenser, d-c blocking, .001 mf.	30-4620*
C213	Condenser, bias filter, .01 mf.	61-0120*
C214	Condenser, bias filter, .03 mf.	30-4517*
C215	Condenser, bias filter, .01 mf.	61-0120*
C216	Condenser, d-c blocking, 330 mmf.	60-10335407*
C217	Condenser, d-c blocking, .002 mf.	30-4622*
C218	Condenser, bias filter, .01 mf.	61-0108*
C219	Condenser, bias filter, .03 mf.	30-4517*
C220	Condenser, feedback filter, .015 mf.	45-3505-59
J200	Phono socket	27-6126
J201	Speaker cable and plug	41-3734-9
LS200	Speaker	36-1611-3
R200	Volume control, 2 megohms (tap at 1 megohm)	33-5535-1
R201	Tone control (with on-off switch), 6 megohms	33-5538-1
R202	Resistor, tone compensation, 33,000 ohms	66-3333340*
R203	Resistor, voltage divider, inverse feedback, 4.7 ohms	66-9473340*
R204	Resistor, voltage divider, inverse feedback, 68 ohms	66-0683340*
R205	Resistor, grid return, 10 megohms	66-6103340*
R206	Resistor, plate load, 220,000 ohms	66-4223340*
R207	Resistor, grid return, 1 megohm	66-5103340*
R208	Resistor, cathode bias, 4700 ohms	66-2473340*
R209	Resistor, cathode load, 47,000 ohms	66-3473340*
R210	Resistor, plate load, 56,000 ohms	66-3563340*
R211	Resistor, grid return, 330,000 ohms	66-4333340*
R212	Resistor, grid return, 330,000 ohms	66-4333340*

SECTION 2 (Continued)
AUDIO CIRCUITS

Reference Symbol	Description	Service Part No.
R213	Resistor, feedback, 47,000 ohms	66-3478340*
R214	Resistor, grid return, 1 megohm	66-5103340*
R215	Resistor, cathode bias, 2200 ohms	66-2223340*
R216	Resistor, screen voltage divider, 33,000 ohms	66-3333340*
R217	Resistor, grid return, 1 megohm	66-5103340*
R218	Resistor, screen voltage divider, 33,000 ohms	66-3333340*
R219	Resistor, bias filter, 680,000 ohms	66-4683340*
R220	Resistor, bias filter, 220,000 ohms	66-4223340*
R221	Resistor, plate load, 18,000 ohms	66-3183540*
R222	Resistor, grid return, 560,000 ohms	66-4563340*
R223	Resistor, plate load, 220,000 ohms	66-4223340*
R224	Resistor, plate load, 100,000 ohms	66-4103340*
R225	Resistor, bias filter, 220,000 ohms	66-4223340*
R226	Resistor, diode load, 560,000 ohms	66-4563340*
R227	Resistor, bias filter, 1.5 megohms	66-5153340*
R228	Resistor, diode load, 220,000 ohms	66-4223340*
R229	Resistor, bias filter, 3.3 megohms	66-5333340*
R230	Resistor, low-pass filter, 47,000 ohms	66-3473340*
R231	Resistor, phono feedback, 2.2 megohms	66-5228340*
S200	Switch, on-off, scratch eliminator	42-1848-1
T200	Transformer, output	32-8274
WS-3 (F)	Switch-wafer section	Part of 42-1803-2†

SECTION 3
I-F, DETECTOR, AND A-V-C CIRCUITS

C300A	Condenser, trimmer	Part of Z300
C300B	Condenser, trimmer	Part of Z300
C300C	Condenser, shunt, 3000 mmf.	Part of Z300
C300D	Condenser, trimmer	Part of Z300
C301A	Condenser, trimmer	Part of Z301
C301B	Condenser, trimmer	Part of Z301
C301C	Condenser, shunt, 300 mmf.	Part of Z301
C301D	Condenser, trimmer	Part of Z301
C302A	Condenser, trimmer	Part of Z302
C302B	Condenser, trimmer	Part of Z302
C303	Condenser, d-c blocking, 6 mmf.	Part of Z300
C304	Condenser, plate by-pass, .01 mf.	61-0120*
C305	Condenser, r-f by-pass, .01 mf.	61-0120*
C306	Condenser, r-f by-pass, 100 mmf.	62-110009001*
C307	Condenser, filament by-pass, 100 mmf.	62-110009001*
C308	Condenser, screen by-pass, .01 mf.	61-0120*
C309	Condenser, plate by-pass, 100 mmf.	62-110009001*
C310	Condenser, r-f by-pass, .01 mf.	61-0120*
C311	Condenser, r-f by-pass, .01 mf.	30-4641
C312	Condenser, a-v-c filter, .01 mf.	61-0120*
C313	Condenser, plate by-pass, .01 mf.	61-0120*
C314	Condenser, r-f by-pass, 250 mmf.	62-122001001*
C315	Condenser, cathode by-pass, .05 mf.	61-0122*
C316	Condenser, filament by-pass, 100 mmf.	62-110009001*
C317	Condenser, screen by-pass, .01 mf.	61-0120*
C318	Condenser, d-c blocking, 100 mmf.	60-10105407*
C319	Condenser, d-c blocking, 27 mmf.	Part of Z302
C320	Condenser, shunt, 470 mmf.	Part of Z302
C321	Condenser, r-f by-pass, 100 mmf.	62-110009001*
C322	Condenser, plate by-pass, .05 mf.	61-0122*
C323	Condenser, r-f by-pass, 100 mmf.	60-10105407*
C324	Condenser, r-f by-pass, 100 mmf.	60-10105407*
C325	Condenser, d-c blocking, .006 mf.	45-3500-7*
C327	Condenser, electrolytic, noise suppressor (FM), 2 mf., 50v	30-2417-7
C328	Condenser, shunt, 25 mmf.	Part of Z302
C329	Condenser, shunt, 15 mmf.	Part of Z302
C330	Condenser, balancing, 7.5 mmf.	30-1224-8
C331	Condenser, tone compensation, .008 mf.	30-4112

MODEL 50-1726

SECTION 3 (Continued)
I-F, DETECTOR, AND A-V-C CIRCUITS

Reference Symbol	Description	Service Part No.
C332	Condenser, r-f by-pass, 100 mmf.	60-10105407*
C333	Condenser, d-c blocking, .006 mf.	45-3500-7*
C334	Condenser, r-f by-pass, 100 mmf.	60-10105407*
C335	Condenser, filament by-pass, 100 mmf.	62-110009001*
C336	Condenser, filament by-pass, 100 mmf.	62-110009001*
J300	Test socket	27-6180
L300A	Transformer, primary (FM), 1st i-f	Part of Z300
L300B	Transformer, secondary (FM), 1st i-f	Part of Z300
L300C	Transformer, primary (AM), 1st i-f	Part of Z300
L300D	Transformer, secondary (AM), 1st i-f	Part of Z300
L301A	Transformer, primary (FM), 2nd i-f	Part of Z301
L301B	Transformer, secondary (FM), 2nd i-f	Part of Z301
L301C	Transformer, primary (AM), 2nd i-f	Part of Z301
L301D	Transformer, secondary (AM), 2nd i-f	Part of Z301
L302A	Transformer, primary (FM), 3rd i-f	Part of Z302
L302B	Transformer, secondary (FM), 3rd i-f	Part of Z302
L302C	Transformer, primary (AM), 3rd i-f	Part of Z302
L302D	Transformer, secondary (AM), 3rd i-f	Part of Z302
L302E	Transformer, winding, isolating, 3rd i-f.	Part of Z302
R300	Resistor, plate dropping, 47,000 ohms	66-3473340*
R301	Resistor, a-v-c filter, 2.2 megohms	66-5223340*
R302	Resistor, cathode bias, 68 ohms	66-0683340*
R303	Resistor, plate dropping, 4700 ohms	66-2473340*
R304	Resistor, plate dropping, 33,000 ohms	66-3333340*
R305	Resistor, screen dropping, 27,000 ohms	66-3273340*
R306	Resistor, plate decoupling, 1000 ohms	66-2103340*
R307	Resistor, a-v-c filter, 3.3 megohms	66-5333340*
R308	Resistor, grid return, 2.2 megohms	66-5223340*
R309	Resistor, cathode bias, 150 ohms	66-1153340*
R310	Resistor, screen dropping, 68,000 ohms	66-3683340*
R311	Resistor, a-v-c load, 1 megohm	66-5103340*
R312	Resistor, plate decoupling, 1000 ohms	66-2103340*
R313	Resistor, i-f filter, 47,000 ohms	66-3473340*
R314	Resistor, diode load, 330,000 ohms	66-4333340*
R315	Resistor, FM detector load, 6.8 megohms.	66-5683340*
R316	Resistor, isolating, 100,000 ohms	66-4103340*
R317	Resistor, noise suppressor (FM), 47,000 ohms	66-3473340*
R318	Resistor, isolating, 100,000 ohms	66-4103340*
R319	Resistor, isolating, 100,000 ohms	66-4103340*
TC300A	Tuning core	Part of Z300
TC302A	Tuning core	Part of Z302
WS-2 (F)	Switch-wafer section	Part of 42-1803-2†
WS-2 (R)	Switch-wafer section	Part of 42-1803-2†
WS-3 (R)	Switch-wafer section	Part of 42-1803-2†
WS-4 (F)	Switch-wafer section	Part of 42-1803-2†
WS-4 (R)	Switch-wafer section	Part of 42-1803-2†
Z300	Transformer, 1st i-f	32-4146
Z301	Transformer, 2nd i-f	32-4156
Z302	Transformer, 3rd i-f	32-4147

SECTION 4
R-F AND CONVERTER CIRCUITS

Reference Symbol	Description	Service Part No.
C400	Condenser, tuning gang, 5-section	31-2703-6
C400A	Condenser, tuning, FM aerial	Part of C400
C400B	Condenser, tuning, FM r.f.	Part of C400
C400C	Condenser, tuning, FM osc.	Part of C400
C400D	Condenser, tuning, bc. aerial	Part of C400
C400E	Condenser, tuning, bc. osc.	Part of C400
C400F	Condenser, trimmer, FM aerial	Part of C400
C400G	Condenser, trimmer, FM r.f.	Part of C400
C400H	Condenser, trimmer, FM osc.	Part of C400
C401	Condenser, filament by-pass, 100 mmf.	62-110009001*
C402	Condenser, d-c blocking, 220 mmf.	62-122001001*
C403	Condenser, trimmer, bc. aerial	31-6473
C404	Condenser, trimmer assembly, 2-section	31-6476-5
C404A	Condenser, shunt trimmer, bc. osc.	Part of C404
C404B	Condenser, series padder, bc. osc.	Part of C404
C405	Condenser, d-c blocking, 220 mmf.	62-122001001*
C406	Condenser, cathode by-pass, 100 mmf.	62-110009001*
C407	Condenser, screen grid by-pass, 100 mmf.	62-110009001*
C408	Condenser, osc. grid, 100 mmf.	62-110009001*
C409	Condenser, d-c blocking, 33 mmf.	30-1224*
C410	Condenser, r-f by-pass, 1500 mmf.	62-215001011
C411	Condenser, r-f by-pass, 1500 mmf.	62-215001011
C412	Condenser, filament by-pass, 100 mmf.	62-110009001*
C413	Condenser, d-c blocking, 750 mmf.	60-10755301*
J400	Socket, FM aerial	27-6214-1
L400	Coil, FM aerial	32-4158
L401	Coil, FM r.f.	32-4159
L402	Coil, bc. aerial	32-4049-3

SECTION 4 (Continued)
R-F AND CONVERTER CIRCUITS

Reference Symbol	Description	Service Part No.
L403	Coil, FM osc.	32-4018-2
L404	Coil, bc. osc.	32-4221
L405	Coil, r-f choke (plate of 6AU6)	32-4061-2
L406	Coil (including R405), parasitic suppressor, (plate of 7F8)	32-4157
LA400	Loop aerial assembly	76-3583-6
R400	Resistor, cathode bias, 82 ohms	66-0823340*
R401	Resistor, grid return, 2.2 megohms	66-5223340*
R402	Resistor, grid return, 15,000 ohms	66-3153340*
R403	Resistor, screen dropping, 33,000 ohms	66-3333340*
R404	Resistor, plate decoupling, 1000 ohms	66-2103340*
R405	Resistor (with coil L406), parasitic suppresor, 1500 ohms	Part of L406
R406	Resistor, cathode bias, 1500 ohms	66-2153340*
R407	Resistor, a-v-c voltage divider (FM), 470,000 ohms	66-4473340*
TB-400	Terminal panel, bc. aerial	38-9942
WS-1 (F)	Switch-wafer section	Part of 42-1803-2†
WS-1 (R)	Switch-wafer section	Part of 42-1803-2†
WS-2 (F)	Switch-wafer section	Part of 42-1803-2†
WS-2 (R)	Switch-wafer section	Part of 42-1803-2†
WS-3 (F)	Switch-wafer section	Part of 42-1803-2†
WS-3 (R)	Switch-wafer section	Part of 42-1803-2†

† 42-1803-2 5-section wafer switch (band selector-phono)

MISCELLANEOUS

Description	Service Part No.
Cabinet and Cabinet Hardware	
Back, cabinet	54-7680
Backplate	76-2005-3
Baffle-and-Cloth Assembly	
For light cabinet, L.H. (speaker)	40-7538-1
For light cabinet, R.H. (dummy)	40-7592-1
For mahogany cabinet, L.H. (speaker)	40-7538
For mahogany cabinet, R.H. (dummy)	40-7592
Baffle, wood	219125
Bezel	56-4878
Bin mechanism, L.H.	76-3223-5
Bin mechanism, L.H.	76-3223-6
Bullet catch (light)	45-6002-1
Bullet catch (mahogany)	45-6002
Cabinet, mahogany	10721B
Cabinet, light	10721C
Dome (4)	45-6190
Door pull (light)	56-4420-2
Door pull (mahogany)	56-4420
Frame assembly	76-4104
Hinge	
For light cabinet, L.H. (1)	56-5713-6
For light cabinet, R.H. (2)	56-5713-7
For light cabinet, R.H. (1)	56-5713-9
For mahogany cabinet, L.H. (1)	56-5713-8
For mahogany cabinet, R.H. (2)	56-5713-3
For mahogany cabinet, R.H. (1)	56-5713-2
Scale strap (2)	56-2234-1
Spring, bin mechanism (2)	56-4978
Strike plate (light)	45-6003-1
Dial Scale and Scale Hardware	
Cord, drive (25-ft. spool)	45-6750*
Pointer	56-3179
Scale	76-3187-6
Spring, pointer	28-8953
Escutcheon	56-5491FCP
Knob (4)	54-4488
Knob (1)	54-4338-1
Light shield	56-6307-6FA3
Scale plate assembly	76-3187-6
Shield, pilot lamp	56-2194FA3
Socket, assembly, pilot lamp (2)	76-2108
Socket, assembly, binlight	27-6233-50
Socket, Loktal	27-6138
Socket, Loktal (7F8)	27-6213
Socket, miniature (6BA6)	27-6226
Socket, octal	27-6174
Spring, changer mounting	56-7059FA9
Spring, changer mounting	56-7059-1FJ47
Strike plate, mahogany	45-6003
Wafer-Switch Hardware	
Link assembly	76-2186-6
Shaft	56-3298FA11

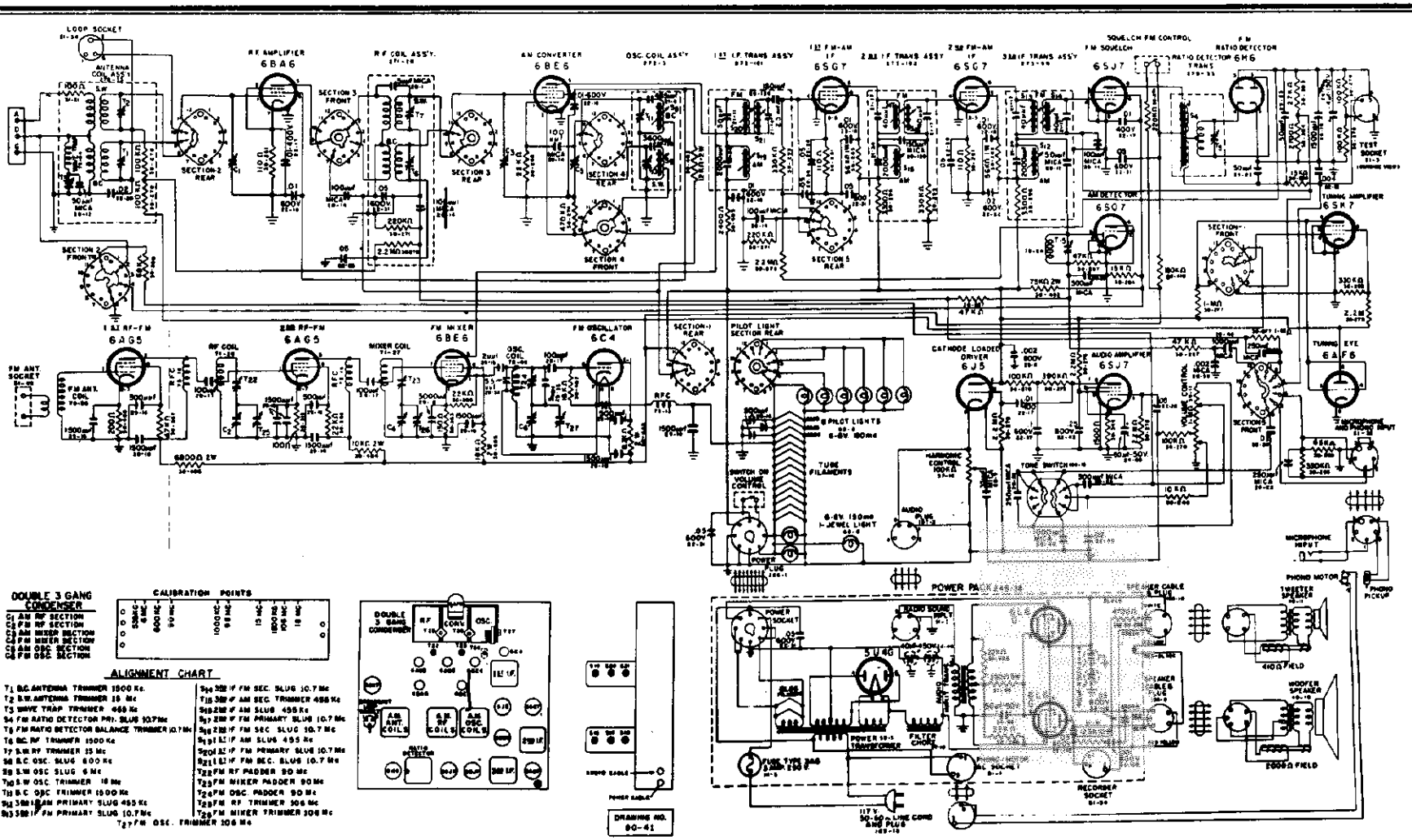

Band 1: Microphone input (microphone not supplied)
Band 2: Phonograph
Band 3: Frequency Modulation (88 to 108 megocycles)
Band 4: Standard Broadcast—loop operation (535 to 1720 kilocycles)
Band 5: Standard Broadcast—external antenna operation (535 to 1720 kilocycles)
Band 6: Short Wave (5.6 to 19.8 megacycles)

RECORD CHANGER: See Webster Model 156, Pages RCD.CH. 19-1 to RCD.CH. 19-11

ALIGNMENT CHART

STEP	CIRCUIT ALIGNED	RECEIVER		SIGNAL GENERATOR		METER		TRIMMER OR SLUG ADJUST	PROCEDURE
		BAND SWITCH	DIAL POINTER	FREQUENCY	CONNECTIONS	TYPE (See Notes)	CONNECTIONS		
1	AM IF	BC ANT.	55	455 kc	Through .1 mfd. to center gang large stator	A	Across speaker voice coil	15, 12, 16, 19	Adjust for maximum output
2	FM IF	FM	88	10.7 mc	Through .1 mfd. to center gang small stator	B	FM Test Socket, #4 cold (+), #5 high (—)	4, 13, 14, 17, 18, 20, 21	Adjust for maximum negative DC voltage
3	Ratio Detector	FM	88	10.7 mc	Through .1 mfd. to center gang small stator	B	FM Test Socket, #2 cold #1 high	5	Check VTVM zero set. Turn trimmer slowly through point where DC polarity reverses. Carefully set for zero DC at reversal point
4	AM IF Trap	BC ANT	55	455 kc	Through 200 mmf to "A" and "G" posts of AM antenna strip	A	Across speaker voice coil	3	Adjust for minimum output
5	BC RF	BC ANT	150	1500 kc	Through 200 mmf to "A" and "G" posts of AM antenna strip	A	Across speaker voice coil	11, 6, 1	Adjust for maximum output
6			60	600 kc	Through 200 mmf to "A" and "G" posts of AM antenna strip	A	Across speaker voice coil	8	Adjust for maximum output while rocking gang
7			Repeat Steps 5 and 6						
8	SW RF	SW	18	18 mc	Through 400 ohms to "A" and "G" posts of AM antenna strip	A	Across speaker voice coil	10	Adjust osc. trimmer for maximum output. (osc. on high side of signal)
9			15	15 mc	Through 400 ohms to "A" and "G" posts of AM antenna strip	A	Across speaker voice coil	7, 2	Adjust for maximum output
10			6	6.0 mc	Through 400 ohms to "A" and "G" posts of AM antenna strip	A	Across speaker voice coil	9	Adjust for maximum output while rocking gang
11			Repeat Steps 8, 9 and 10						
12	FM RF	FM	90	90 mc	To dipole terminals FM antenna strip	B	FM Test Socket, #4 low (+), #5 high (—)	24, 23, 22	Adjust for maximum negative DC voltage
13			106	106 mc	To dipole terminals FM antenna strip	B	FM Test Socket, #4 low (+), #5 high (—)	27, 26, 25	Adjust for maximum negative DC voltage
14			Repeat Steps 12 and 13 as required						

ALIGNMENT NOTES

See Alignment chart (next Page) and layout diagram showing trimmers.

The following notes are intended for the use of an expert radio technician:

Alignment should be attempted only if the proper meters and a signal generator are at your disposal. Insulated alignment tools are necessary. Output meters should include:

A) a low range AC Voltmeter

B) a 0-20 volt DC vacuum tube Voltmeter

The signal generator must cover the frequencies of 455 kc, 600 kc, 1500 kc, 6 mc, 10.7 mc, 15 mc, 18 mc, 90 mc and 106 mc.

During alignment the line voltage feeding the receiver power supply should be kept at approximately 117 volts.

The receiver should be allowed to warm up for at least 30 minutes before making any adjustments.

The location of adjustment screws are indicated clearly on the schematic diagram. Alignment adjustments should be made only in the sequence given in the chart.

SETTING THE PUSHBUTTONS

The Model FM-210 Series is equipped with 8 pushbuttons which mechanically operate the dual three-gang tuning condenser. It is permissible for some of these buttons to be used for tuning into FM stations (preferably those toward the left of the dial), but for best FM reception the tuning knob should be adjusted slightly after the pushbutton has located the approximate setting of the FM station. For the broadcast band, however, push-button tuning will be sufficient, and no further adjustment will be necessary.

The initial adjustment of the pushbuttons is as follows:

1. Remove the bakelite cap
2. Loosen the locking screw behind the cap
3. Tune into the desired station carefully by turning the manual tuning knob until the opening in the tuning indicator eye is at a minimum
4. Depress the exposed pushbutton shaft as far as possible and tighten the locking screw
5. Place the station identification tab in the bakelite button and cover with celluloid tab.
6. Replace the button on the shaft

TUNING RANGE

Broadcast Band—535 to 1720 kc or 174 to 561 meters.

Short Wave Band—5.67 to 24.0 mc or 12.5 to 53.6 meters.

ALIGNMENT NOTES

Alignment should be attempted only if a low range A.C. meter, a signal generator, and insulated alignment tools are at your disposal. The A.C. meter is used as an outputmeter. The signal generator must cover a frequency range from 450 kc to 24 mc.

It is essential that the signal generator be connected to the points indicated in the alignment chart through the proper dummy antenna.

A good ground connection, secured between the groundpost of the signal generator and the chassis, is necessary.

The output of the signal generator must always be kept at its lowest possible value. This is to prevent the automatic volume control of the receiver from interfering with accurate alignment.

During alignment, the line voltage feeding the receiver power supply should be kept at approximately 230 volts.

The locations of adjustment screws are indicated clearly on the schematic diagram. Alignment adjustments should be made only in the sequence given in the chart.

For all alignments, connect the outputmeter across the voice coil. With the volume control turned fully clockwise, tune for a maximum reading.

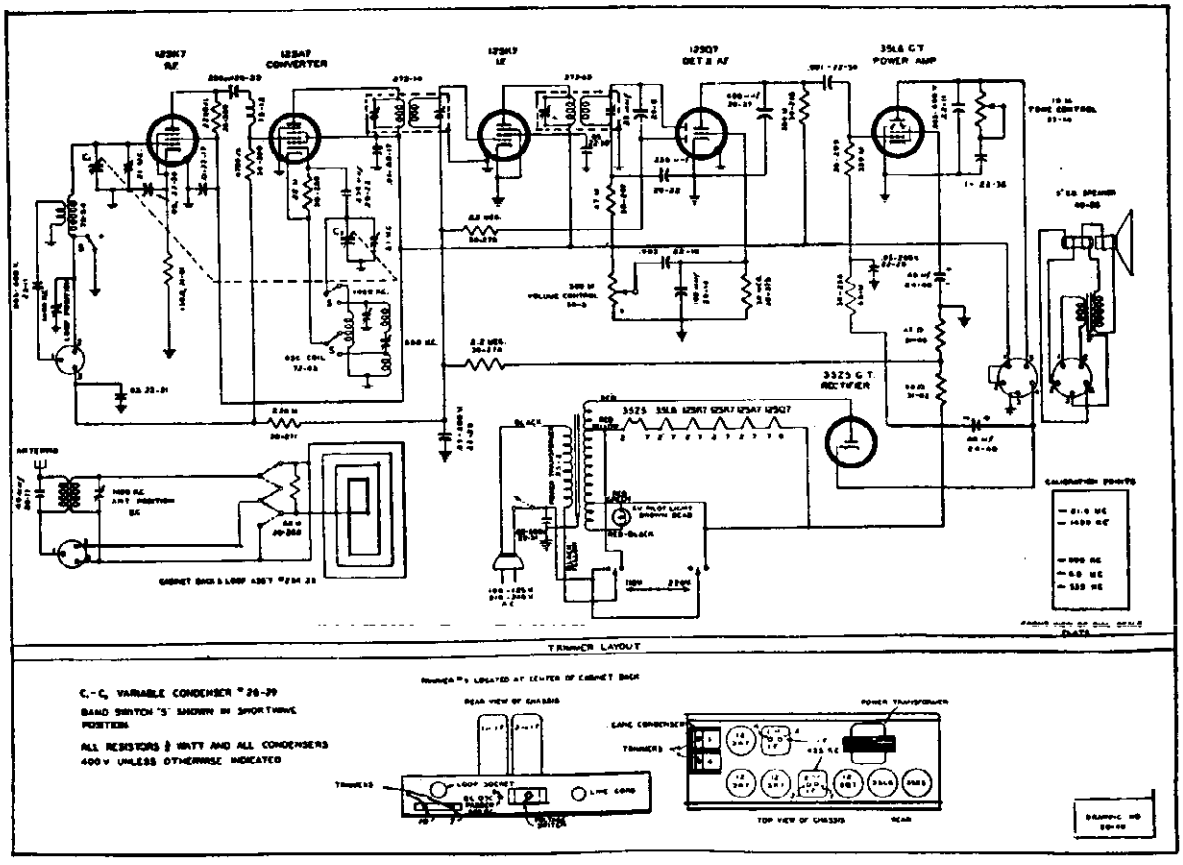

©John F. Rider

©John F Rider

ALIGNMENT CHART

STEP	CIRCUIT ALIGNED	RECEIVER		SIGNAL GENERATOR		DUMMY ANTENNA	ADJUSTMENTS (All maximum output)
		BAND SWITCH	DIAL POINTER	FREQUENCY	CONNECTION		
1	IF	BC	Low end of dial	455 KC	Grid of 12SK7 RF	0.1 mfd.	#1, 2, 3, 4
2	SW	SW	E	21 MC	Antenna Post	400 ohm carbon resistor	First #5 Then #6
3	BC	BC	D	1400 KC	Antenna Post	200 mmfd. mica capacitor	#7
4	BC	BC	C	600 KC	Antenna Post	200 mmfd. mica capacitor	#8
5	Repeat steps 3 and 4						
6	BC	BC	Set for broadcast station near 1400 KC			—	#9 and #10

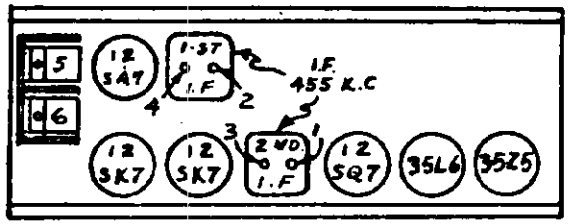

TOP

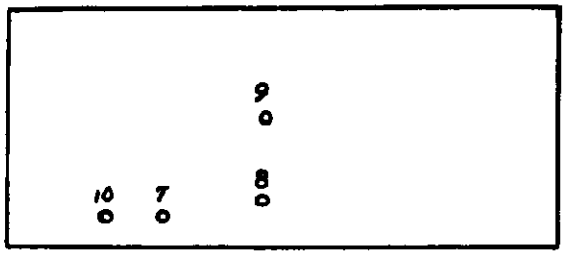

BACK

E — 21.0 MC
D — 1400 KC
C — 600 KC
B — 6.0 MC
A — 535 KC

This Pilot superheterodyne receiver has FIVE tubes and one selenium rectifier. The set operates on either alternating or direct current power supply (105 to 125 volts) or on self-contained batteries. Since it features a selenium rectifier, it will play immediately after being turned on, on either battery or house current power supply.

TUNING RANGE

Broadcast Band—535 to 1605 kc or 187 to 561 meters.

Short Wave Band—5.63 to 16.56 mc or 18.2 to 53.2 meters.

ALIGNMENT NOTES

Alignment should be attempted only if a low range A.C. meter, a signal generator, and insulated alignment tools are at your disposal. The A.C. meter is used as an output-meter. The signal generator must cover a frequency range from 262 kc to 16 mc.

It is essential that the signal generator be connected to the points indicated in the alignment chart through the proper dummy antenna.

A good connection between the groundpost of the signal generator and the chassis, is necessary. DO NOT connect chassis or generator to an external ground.

The output of the signal generator must always be kept at its lowest possible value. This is to prevent the automatic volume control of the receiver from interfering with accurate alignment.

During alignment, the line voltage feeding the receiver power supply should be kept at approximately 117 volts.

The locations of adjustment screws are indicated clearly on the schematic diagram. Alignment adjustments should be made only in the sequence given in the chart.

For all alignments, connect the outputmeter across the voice coil. With the volume control turned fully clockwise tune for a maximum reading.

BATTERIES

The battery portion of this receiver contains two Eveready No. 746 "A" batteries of 4½ volts, and two Eveready No. 482 "B" batteries of 45 volts each. The set is so designed that these batteries will all last the same length of time.

It is a good idea to take the receiver to your dealer when purchasing replacement batteries. He will connect the batteries correctly. If you do it yourself, first MAKE SURE THAT THE POWER SWITCH IS COMPLETELY TURNED OFF.

When removing the batteries, first unscrew clamps, and then remove battery plugs. Be sure not to pull on the cables, but on the plugs themselves.

Place the new "A" and "B" batteries in position shown on diagram below and replace clamps.

The blue and white cable, coming from the chassis, has 2-prong plugs which are then plugged into the "A" batteries. The red and black cable has two 3-prong plugs, both of which are plugged into the "B" batteries.

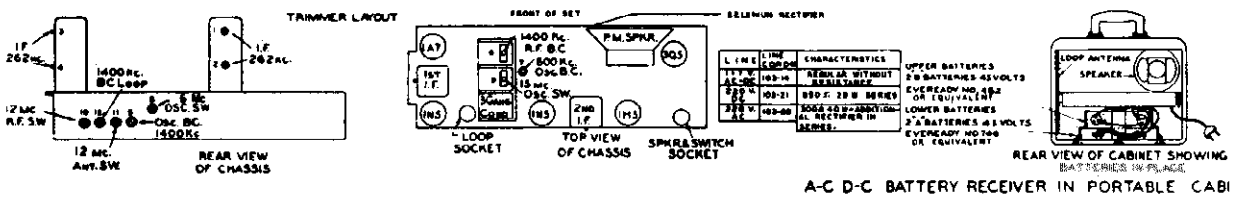

A-C D-C BATTERY RECEIVER IN PORTABLE CABINET

©John F. Rider

©John F. Rider

ALIGNMENT CHART

STEP	CIRCUIT ALIGNED	RECEIVER		SIGNAL GENERATOR		DUMMY ANTENNA	ADJUSTMENTS (All maximum output)
		BAND SWITCH	DIAL POINTER	FREQUENCY	CONNECTION		
1	IF	BC	Low end of dial	262 KC	Grid of 1A7GT conv.	0.1 mfd.	#1, 2, 3, 4
2	BC	BC	1400 KC	1400 KC	Antenna Post	200 mmfd. mica cap.	First #5 Then #6
3	BC	BC	600 KC	600 KC	Antenna Post	200 mmfd. mica cap.	#7
4	Repeat steps 2 and 3						
5	SW	SW	6 MC	6 MC	Antenna Post	400 ohm carbon resistor	#8
6	SW	SW	15 MC	15 MC	Antenna Post	400 ohm carbon resistor	#9
7	SW	SW	Tune in generator	12 MC	Antenna Post	400 ohm carbon resistor	First #10, while rocking Then #11
8	Repeat step 5 while rocking for maximum output.						
9	Repeat steps 6 and 7.						
10	Repeat step 2, trimmer #5 only.						
11	BC	BC	Tune in broadcast station near 1400 KC				#12

NOTE: Align step 1 to 10 with chassis out of cabinet, but loop plugged in. Step 11 must be taken with set properly placed in cabinet, and batteries and loop in the normal position.

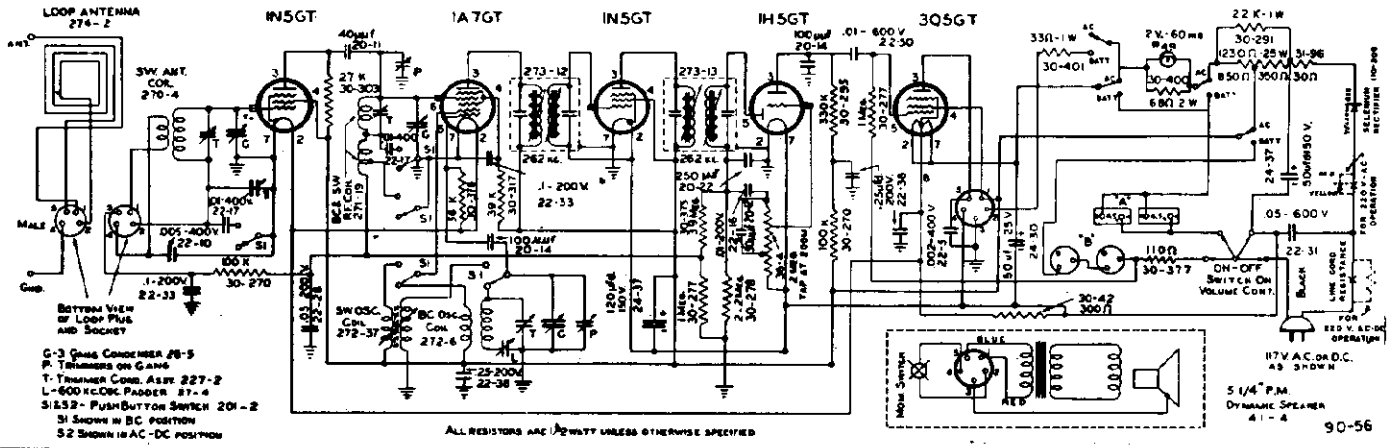

MODEL T-612

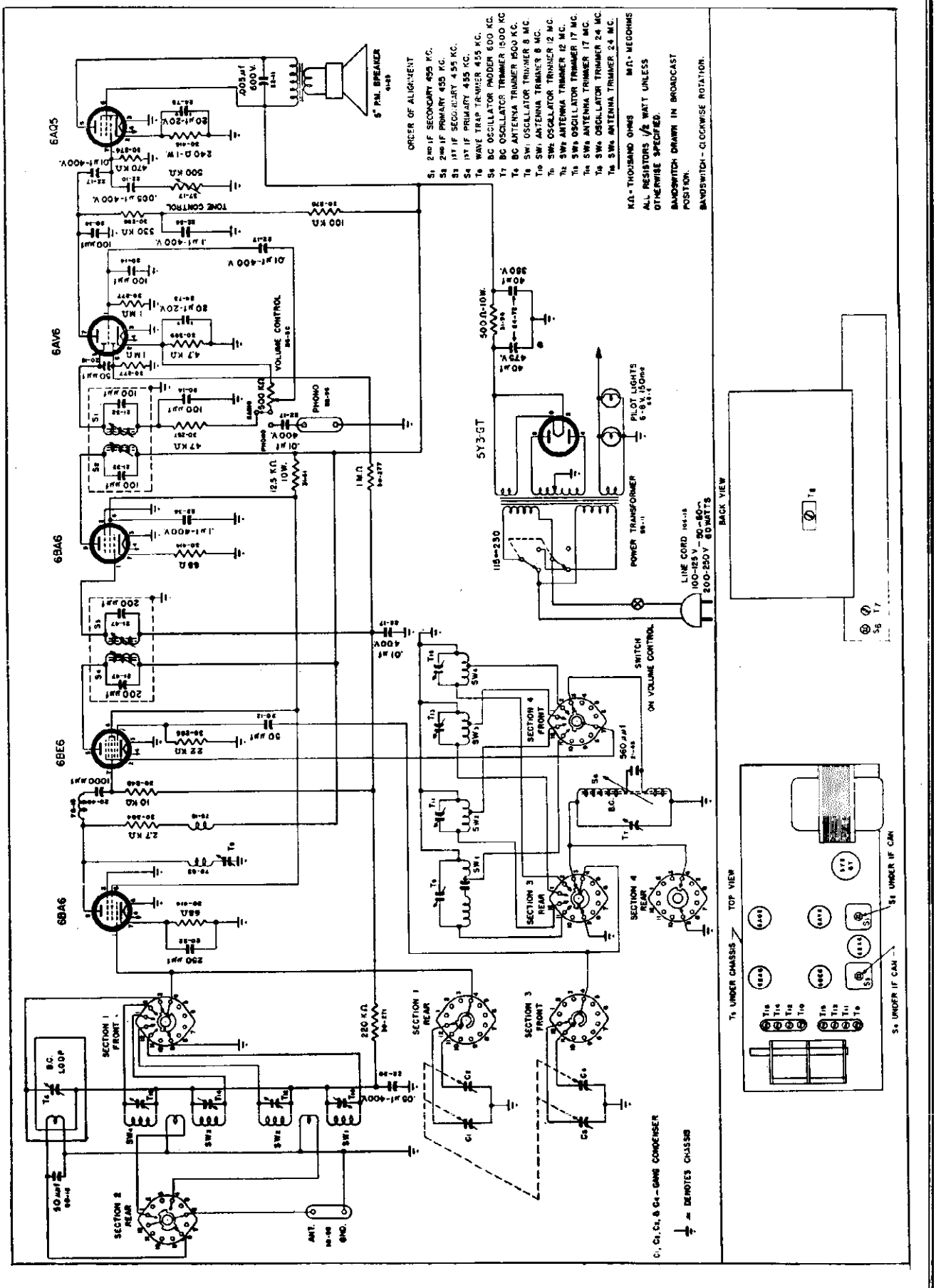

©John F. Rider

MODELS 650 Series,
V-652

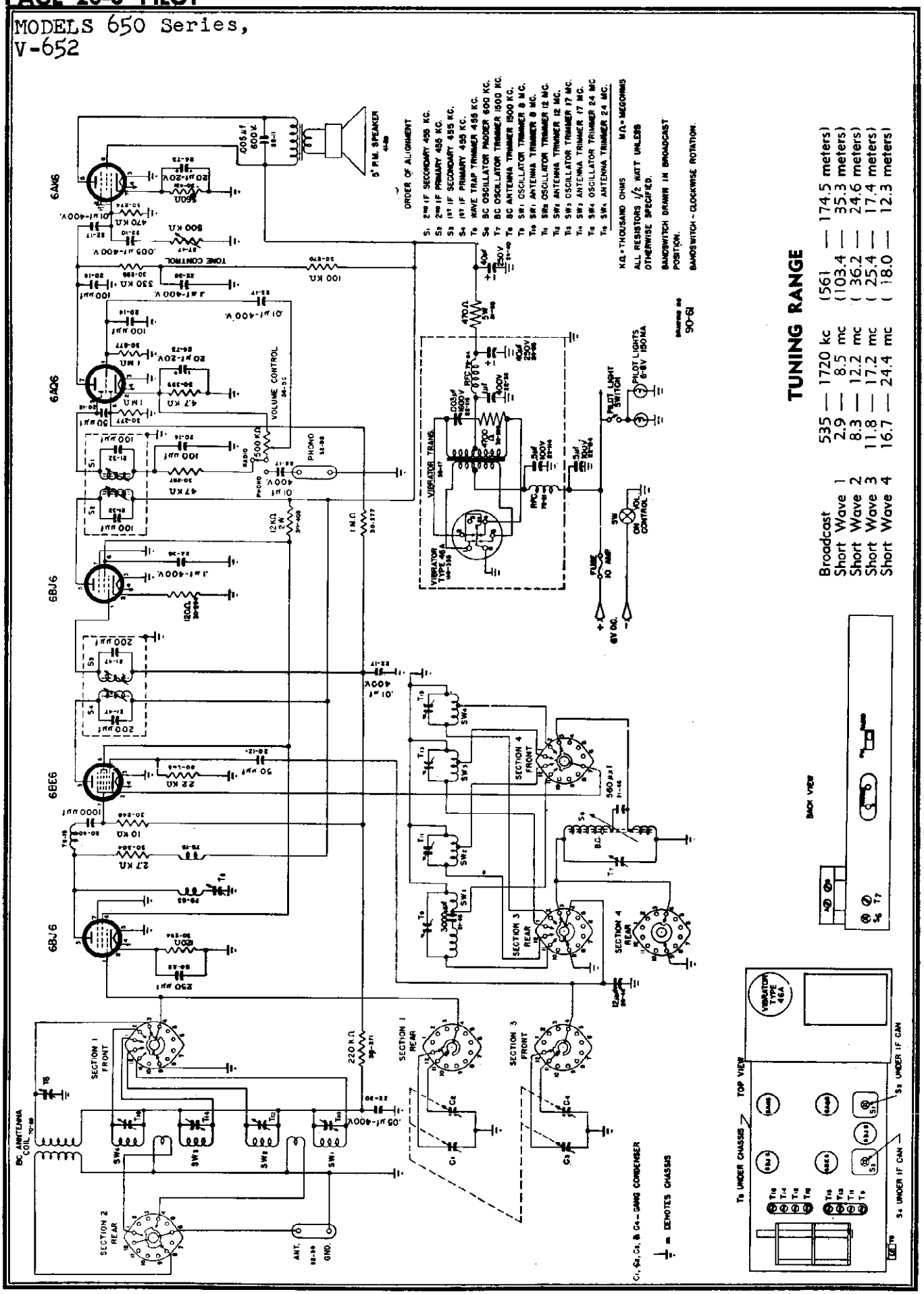

©John F. Rider

©John F. Rider

ALIGNMENT CHART

STEP	CIRCUIT ALIGNED	RECEIVER		SIGNAL GENERATOR		TRIMMER OR IRON CORE TO BE ADJUSTED	PROCEDURE
		BAND SWITCH	DIAL POINTER	FREQUENCY	CONNECTION		
1	I.F.	B'dc'st.	At low frequency end of dial	455 kc	Thru 0.1 mfd. condenser to front section of gang	S1, S2 S3, S4	Adjust for maximum output
2	I.F. Trap.	B'dc'st.	At low frequency end of dial	455 kc	Thru 200 mmf. condenser to Ant. Terminal "A"	T5	Adjust for minimum output
3	B'dc'st. R.F.	B'dc'st.	150 on dial	1500 kc	Thru 200 mmf. condenser to Ant. Terminal "A"	1. T7 (osc) 2. T8 (ant)	Adjust for maximum output
4	B'dc'st. R.F.	B'dc'st.	60 on dial	600 kc	Thru 200 mmf. condenser to Ant. Terminal "A"	S6 (padder)	Adjust for maximum output while rocking var. cond.
5	B'dc'st. R.F.	B'dc'st.	Repeat steps 3, 4 and 3				
6	S.W. 1	S.W. 1	8 mc on dial	8.0 mc	Thru 400 ohm resistor to "A" terminal	1. T9 (osc) 2. T10 (ant)	Adjust for maximum output
7	S.W. 2	S.W. 2	12 mc on dial	12 mc	Thru 400 ohm resistor to "A" terminal	1. T11 (osc) 2. T12 (ant)	Adjust for maximum output
8	S.W. 3	S.W. 3	17 mc on dial	17 mc	Thru 400 ohm resistor to "A" terminal	1. T13 (osc) 2. T14 (ant)	Adjust for maximum output
9	S.W. 4	S.W. 4	24 mc on dial	24 mc	Thru 400 ohm resistor to "A" terminal	1. T15 (osc) 2. T16 (ant)	Adjust for maximum output

ALIGNMENT NOTES

Alignment should be attempted only if a low range A.C. meter, a signal generator, and insulated alignment tools are at your disposal. The A.C. meter is used as an output meter. The signal generator must cover a frequency range from 450 kc to 24 mc.

It is essential that the signal generator be connected to the points indicated in the alignment chart through the proper dummy antenna.

A good ground connection, secured between the groundpost of the signal generator and the chassis, is necessary.

The output of the signal generator must always be kept at its lowest possible value. This is to prevent the automatic volume control of the receiver from interfering with accurate alignment.

The locations of adjustment screws are indicated clearly on the schematic diagram Alignment adjustments should be made only in the sequence given in the chart.

For all alignments, connect the output meter across the voice coil. With the volume control turned fully clockwise, tune for a maximum reading.

MODEL 800 Series

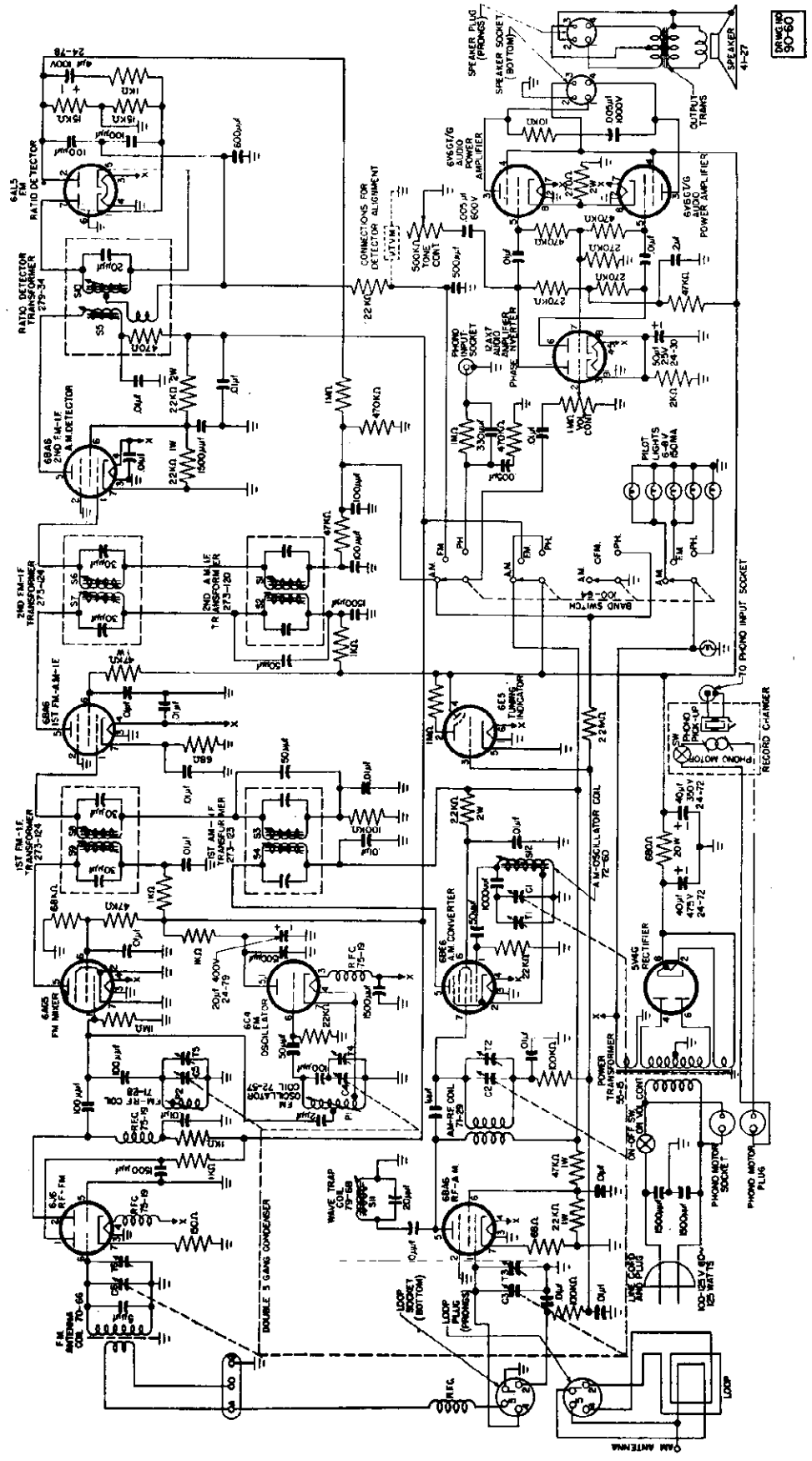

USAGE

Standard Broadcast (AM)—Built-in loop or external antenna operation—540 to 1720 kc

Frequency Modulation (FM)—Built-in or external dipole antenna operation—88 to 108 mc

Automatic Phonograph—Webster "156" changer

RECORD CHANGER: See Webster Model 156, Pages RCD.CH. 19-1 to RCD.CH. 19-11

©John F. Rider

©John F. Rider

ALIGNMENT CHART

STEP	CIRCUIT ALIGNED	RECEIVER BAND SWITCH	RECEIVER DIAL POINTER	SIGNAL GENERATOR FREQUENCY	SIGNAL GENERATOR CONNECTIONS	OUTPUT METER TYPE	OUTPUT METER CONNECTIONS	TRIMMER OR SLUG ADJUST	PROCEDURE
1	AM-I.F.	AM	55	455KC	Through .1 mf to mixer gang—large stator	A	Across Speaker Voice Coil	S1, S2, S3, S4	Adjust for maximum output
2	FM-I.F.	FM	88	10.7MC	Through .1 mf to mixer gang—small stator	B	Pin# 2—FM ratio detector & ground	S5, S6, S7, S8, S9	Adjust for maximum negative DC voltage
3	Ratio Detector	FM	88	10.7MC	SAME	B	From audio output of ratio detector to ground (See Circuit Diagram)	S10	Check VTVM zero set. Turn slug slowly through point where DC polarity reverses. Carefully set for zero DC at reversal point.
4	B.C. Wave Trap	AM	55	455KC	Through 200 mmf to "A" & "G" terminals of antenna strip	A	Across Speaker Voice Coil	S11	Adjust for minimum output
5	B.C. R.F.	AM	150	1500KC	Through 200 mmf to "A" & "G" terminals of antenna strip	A	Across Speaker Voice Coil	T1, T2, T3	Adjust for maximum output
6			60	600KC	SAME	A	Across Speaker Voice Coil	S12	Adjust for maximum output while rocking gang
7			Repeat Steps 5 and 6 as required						
8	FM	FM	90	90MC	To "A" & "D" terminals Antenna strip	B	Pin #2 — F.M. Ratio Detector & Ground	P1, P2,	Adjust for maximum negative DC voltage.
9	R.F.		106	106MC	SAME	B	SAME	T4, T5, T6	Adjust for maximum negative DC voltage
10			Repeat Steps 8 and 9 as required						

ALIGNMENT NOTES

Alignment should be attempted only if the proper meters and a signal generator are at your disposal. Insulated alignment tools are necessary. Output meters should include:

(A) a low range AC Voltmeter

(B) a 0-20 volt DC vacuum tube Voltmeter

The signal generator must cover the frequencies of 455 kc, 600 kc, 1500 kc, 10.7 mc, 90 mc and 106 mc.

During alignment the line voltage feeding the receiver power supply should be kept at approximately 117 volts.

The receiver should be allowed to warm up for at least 30 minutes before making any adjustments.

The location of adjustment screws are indicated clearly on the schematic diagram. Alignment adjustments should be made only in the sequence given in the chart.

MODEL 810 Series

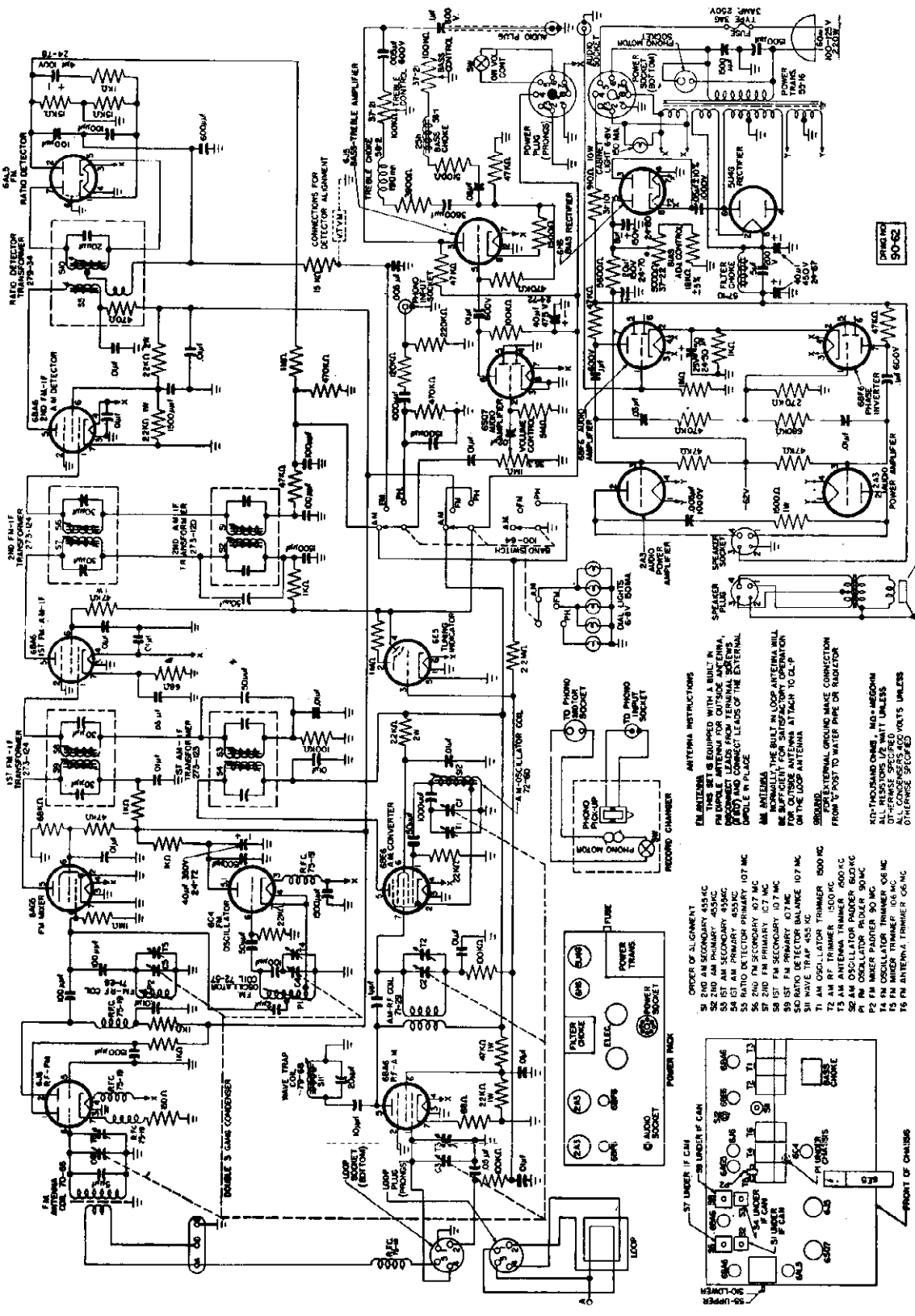

RECORD CHANGER: See Webster Model 156, Pages RCD.CH. 19-1 to RCD.CH. 19-11.

USAGE

Standard Broadcast (Amplitude Modulation—AM)—Built-in loop or external antenna operation—540 to 1720 kc

Frequency Modulation (FM)—Built-in or external dipole antenna operation—88 to 108 mc

Automatic Phonograph—Webster "156" changer

©John F. Rider

© John F. Rider

ALIGNMENT NOTES

Alignment should be attempted only if the proper meters and a signal generator are at your disposal. Insulated alignment tools are necessary. Output meters should include:

(A) a low range AC Voltmeter

(B) a 0-20 volt DC vacuum tube Voltmeter

The signal generator must cover the frequencies of 455 kc. 600 kc. 1500 kc. 107 mc, 90 mc and 106 mc.

During alignment the line voltage feeding the receiver power supply should be kept at approximately 117 volts.

The receiver should be allowed to warm up for at least 30 minutes before making any adjustments.

The location of adjustment screws are indicated clearly on the schematic diagram. Alignment adjustments should be made only in the sequence given in the chart.

BIAS ADJUSTMENT

This adjustment is made at the factory and will normally not require adjustment in the field. However, if for any reason it does require adjustment, proceed as follows:

(1) Connect a 20,000 ohm per volt or a vacuum tube voltmeter between the junction of the two 47,000 ohm 2A3 grid resistors and ground (positive side of meter to ground).

(2) Adjust bias control (screwdriver adjustment inside of power supply chassis) until meter reads exactly—62 volts.

Improper adjustment of this control will impair the tone quality of the receiver and may shorten the lives of the 2A3 tubes.

ALIGNMENT CHART

(Follow Sequence as Indicated)

STEP	CIRCUIT ALIGNED	RECEIVER		SIGNAL GENERATOR		OUTPUT METER		TRIMMER OR SLUG ADJUST	PROCEDURE
		BAND SWITCH	DIAL POINTER	FREQUENCY	CONNECTIONS	TYPE	CONNECTIONS		
1	AM-I.F.	AM	55	455KC	Through .1 mf to mixer gang—large stator	A	Across Speaker Voice Coil	S1, S2, S3, S4	Adjust for maximum output
2	FM-I.F.	FM	88	10.7MC	Through .1 mf to mixer gang—small stator	B	Pin# 2—FM ratio detector & ground	S5, S6, S7, S8, S9	Adjust for maximum negative DC voltage
3	Ratio Detector	FM	88	10.7MC	SAME	B	From audio output of ratio detector to ground (See Circuit Diagram)	S10	Check VTVM zero set. Turn slug slowly through point where DC polarity reverses. Carefully set for zero DC at reversal point.
4	B.C. Wave Trap	AM	55	455KC	Through 200 mmf to "A" & "G" terminals of antenna strip	A	Across Speaker Voice Coil	S11	Adjust for minimum output
5	B.C. R.F.	AM	150	1500KC	Through 200 mmf to "A" & "G" terminals of antenna strip	A	Across Speaker Voice Coil	T1, T2, T3	Adjust for maximum output
6			60	600KC	SAME	A	Across Speaker Voice Coil	S12	Adjust for maximum output while rocking gang
7			Repeat Steps 5 and 6 as required						
8	FM R.F.	FM	90	90MC	To "A" & "D" terminals Antenna strip	B	Pin #2 — F.M. Ratio Detector & Ground	P1, P2,	Adjust for maximum negative DC voltage.
9			106	106MC	SAME	B	SAME	T4, T5, T6	Adjust for maximum negative DC voltage
10			Repeat Steps 8 and 9 as required						

MODELS 8F43, Ch. RC 1037B;
CV-45, Ch. RS-1001

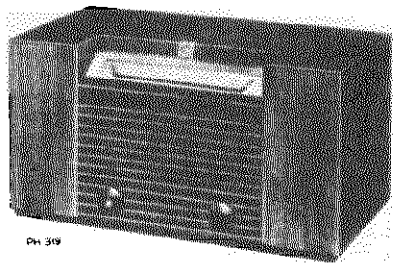

Model 8F43

CV-45 Electrifier →

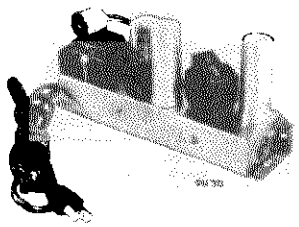

Specifications

Tuning Range ..... 540 KC.—1600KC.
Intermediate Frequency ..... 455 KC.

Tube Complement

(1) RCA—1A7 GT ..... Converter
(2) RCA—1N5 GT ..... 1F Amplifier
(3) RCA—1H5 GT 2nd Det., A.V.C., and A-F Amplifier
(4) RCA—3Q5 GT ..... Output
RCA—6X5 GT ..... (in CV-45) ..... Rectifier

Power Output Rating

Undistorted ..... 160 MW.
Maximum ..... 270 MW.

Loudspeaker

Type 922258-2 ..... 4 x 6 inch PM
V.C. impedance at 400 cycles ..... 3.4 ohms

Power Supply

(1) RCA Battery Pack—VS022.
"A" Battery, 1½ volts, Drain—0.24 amperes.
"B" Battery, 90 volts, Drain—10.5 ma.
(2) Electrifier—(CV-45)
105 to 125 volts, 60 cycles, AC.

Cabinet Dimensions

Height ..... $9^{7}/_{16}$ in. Width ..... 17½ in. Depth ..... $9^{1}/_{2}$ in.

Replacement Parts

Stock No.	DESCRIPTION
	CHASSIS ASSEMBLIES RC 1037B
*73884	Capacitor—Variable tuning capacitor (C11, C11a, C12, C12a)
*73901	Capacitor—Ceramic, 51 mmf. (C10)
39630	Capacitor—Mica, 120 mmf. (C8, C9)
72571	Capacitor—Mica, 330 mmf. (C4)
70822	Capacitor—Tubular, .002 mfd., 600 volts (C3)
70606	Capacitor—Tubular, .005 mfd., 400 volts (C5, C6)
70615	Capacitor—Tubular, .05 mfd., 400 volts (C2)
70617	Capacitor—Tubular, 0.1 mfd., 400 volts (C1)
38593	Capacitor—Electrolytic, 10 mfd., 90 volts (C7)
71404	Coil—Antenna coil complete with adjustable core and stud (L1, L2)
71431	Coil—Oscillator coil complete with adjustable core and stud (L3, L4)
71168	Control—Volume control and power switch (R9, S1)
†72953	Cord—Drive cord. (approx. 52" overall length required)
72283	Grommets—Rubber grommet to mount tuning condenser (3 required)
*73886	Indicator—Station selector indicator
*73888	Plate—Dial back plate complete with pulleys, less dial
71162	Plug—Battery shorting plug—3 prong male
30550	Plug—4 prong male plug for battery cable
	Resistor—Fixed, composition, 470 ohms, ±20%, ½ watt (R4)
	Resistor—Fixed, composition, 68,000 ohms, ±20%, ½ watt (R2)
	Resistor—Fixed, composition, 220,000 ohms, ±20%, ½ watt (R1)
	Resistor—Fixed, composition, 1 megohm, ±20%, ½ watt (R5)
	Resistor—Fixed, composition, 2.2 megohm, ±20%, ½ watt (R6)
	Resistor—Fixed, composition, 3.3 megohm, ±20%, ½ watt (R3)
	Resistor—Fixed, composition, 10 megohm, ±20%, ½ watt (R7, R8)
*73887	Shaft—Tuning knob shaft
70377	Shield—Shield for 1A7GT tube
71163	Socket—Battery shorting socket—3 contact female
37605	Socket—Tube socket
70390	Spring—Drive cord spring
71403	Transformer—First I.F. transformer (T1)
71400	Transformer—Second I.F. transformer (T2)
71047	Transformer—Output transformer (T3)
33726	Washer—"C" washer for tuning knob shaft
	SPEAKER ASSEMBLIES 922258-2
71056	Speaker—4" x 6" elliptical P.M. speaker complete with cone and voice coil
	MISCELLANEOUS
70388	Clamp—Dial clamp (2 required)
X1660	Cloth—Grille cloth
*73886	Dial—Glass dial scale
39002	Foot—Rubber foot (4 required)
70473	Knob—Tuning knob
71164	Knob—Volume control knob
72649	Motif—Decorative motif
38458	Nut—Speed nut to fasten motif
30900	Spring—Retaining spring for knobs
	CV-45 ELECTRIFIER RS-1001
71840	Capacitor—Electrolytic, dual, 2,000 mfd., 6 volts (C3, C4)
71844	Capacitor—Electrolytic, dual, 20 mfd., 150 volts (C1, C2)
35089	Fastener—Push fastener for bottom cover
71838	Reactor—Filter reactor
71839	Rectifier—Rectifier complete with mounting bracket
72787	Resistor—1.2 ohms, ½ watt (R3)
12463	Resistor—27 ohms, ½ watt (R1)
30788	Resistor—4,700 ohms, 1 watt (R2)
71841	Socket—3 contact female socket
31027	Socket—4 contact female socket for battery cable
37605	Socket—Tube socket
71837	Transformer—Power transformer, 117 volt, 60 cycle (T1)

*This is the first time this Stock No. has appeared in Service Data.
†Stock No. 72953 is a reel containing 250 ft. of cord.

©John F. Rider

MODELS 8F43, Ch. RC 1037B;
CV-45, Ch. RS-1001

Alignment Procedure

Output Meter Alignment.—Connect the meter across the voice coil and turn the receiver volume control to maximum.

Test Oscillator.—Connect the low side of the test oscillator to the receiver chassis, and keep the output low to avoid AVC action.

Pre-Setting Dial.—With gang condenser in full mesh, the pointer should be set at the left-hand end dial calibration mark.

Steps	Connect high side of test oscillator to—	Tune test oscillator to—	Turn radio dial to—	Adjust for maximum output
1	1N5GT grid in series with .1 mfd.	455 kc.	Quiet point near 600 kc.	T-2 2nd I.F. trans.
2	1A7GT grid in series with .1 mfd.			T-1* 1st I.F. trans.
3	Antenna lead in series with 220 mmfd.	1600 kc.	1600 kc. mark	C12A
4		540 kc.	540 kc. mark	L3
5		Repeat Steps 3 and 4.		
6		1400 kc.	1400 kc. signal	C11A
7		600 kc.	600 kc. signal	L2
8		Repeat Steps 6 and 7.		

*Do not readjust T-2.

Critical Lead Dress

1. Keep output plate capacitor dressed close to the chassis.
2. Keep lead from lug A of second IF transformer down and dressed close around the 1H5GT tube socket.
3. Dress 1N5GT plate lead close to chassis.
4. Dress C1 down and away from the antenna coil.
5. Dress C3 and C5 away from each other.
6. Dress the lead from 2nd. IF transformer to the volume control clear of other components.

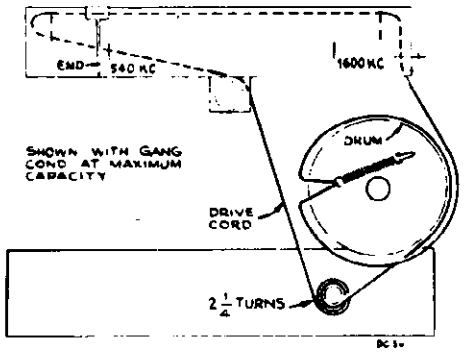

Dial Indicator and Drive Mechanism Showing Alignment Check Points

NOTE:—

When using the electrifier, remove the shorting plug on the chassis (adjacent to the 1A7GT tube) and replace it with a similar plug, attached to the electrifier. Also connect the remaining plug attached to the electrifier, in place of the normal battery plug. The receiver will operate in the normal manner, using the same control for turning the set on and off.

Do not plug electrifier into a DC outlet.

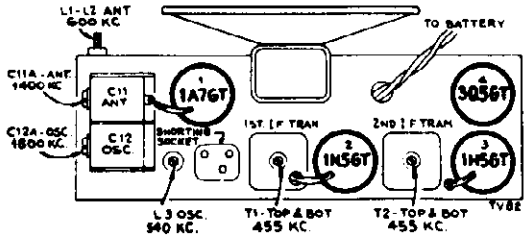

Tube and Trimmer Locations

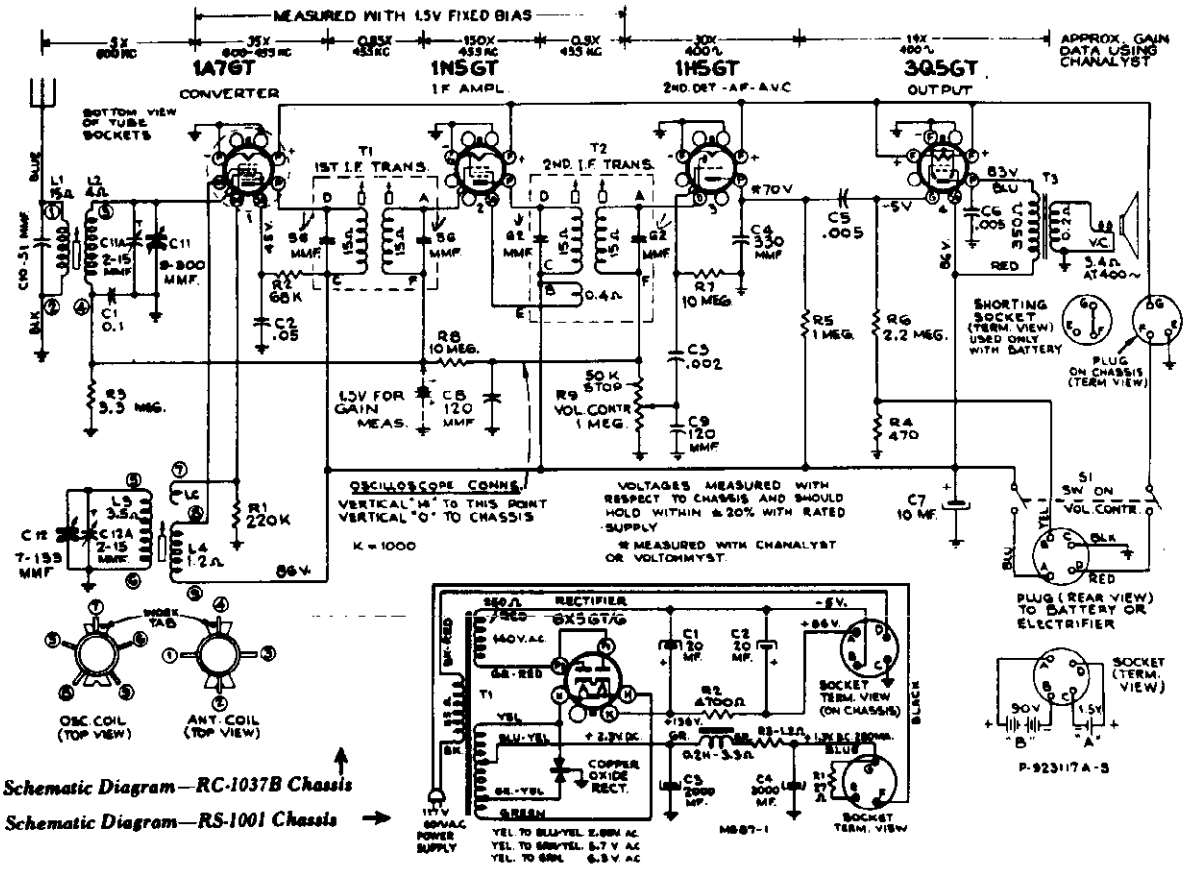

Schematic Diagram—RC-1037B Chassis

Schematic Diagram—RS-1001 Chassis →

©John F. Rider

MODEL 9BX5,
Ch. RC-1059B, RC-1059C

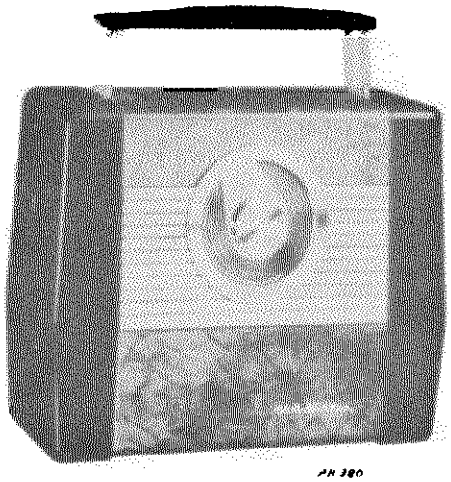

PH 380

Specifications

Tuning Range .....540-1600 kc.
Intermediate Frequency .....455 kc.

Tube Complement
(1) RCA 1R5 .....Converter
(2) RCA 1U4 .....I. F. Amplifier
(3) RCA 1U5 .....Det.-A. V. C.-A. F. Amp.
(4) RCA 3V4 .....Output
(5) RCA 117Z3 .....Rectifier

Power Supply Rating
Power Line Operation
115 volts, d. c. or 50 to 60 cycles a. c. .....18 watts
or
Battery Operated .....VS 050 Battery
(Average life—100 hrs. intermittent service)

Loudspeaker (92577-1)
Size and type .....4 in. PM dynamic
Voice coil impedance .....3.4 ohms at 400 cycles

Power Output
Undistorted—150 milliwatts Maximum—250 milliwatts
(Output is slightly lower on battery operation)

Cabinet Dimensions
Height 9½ in. Width 11 in. Depth 5 in.

Weight
5 lb. less battery 8 lb. 2 oz. with battery

AC-DC Operation

This receiver will operate on 115 volts, d. c. or 50 to 60 cycles a. c.

A power cord is stored inside the cabinet. To open the cabinet, push upward on the two metal ball catches at the top rear of the cabinet. Remove the plug of the power cord from its socket on the chassis and insert the plug into a convenient electrical outlet. A slot in the bottom of the back cover allows the back to be closed with the cord passing through.

Note: If reception is not obtained on d. c., reverse plug in outlet receptacle. This may also reduce hum on a. c. operation.

When returning to battery operation replace the plug in the socket provided on the chassis, roll up the cord and place under the raised portion of the battery holder bracket.

Note: Make certain that the plug is fully inserted (base of plug touching chassis) to assure proper operation of the Batt-Line switch.

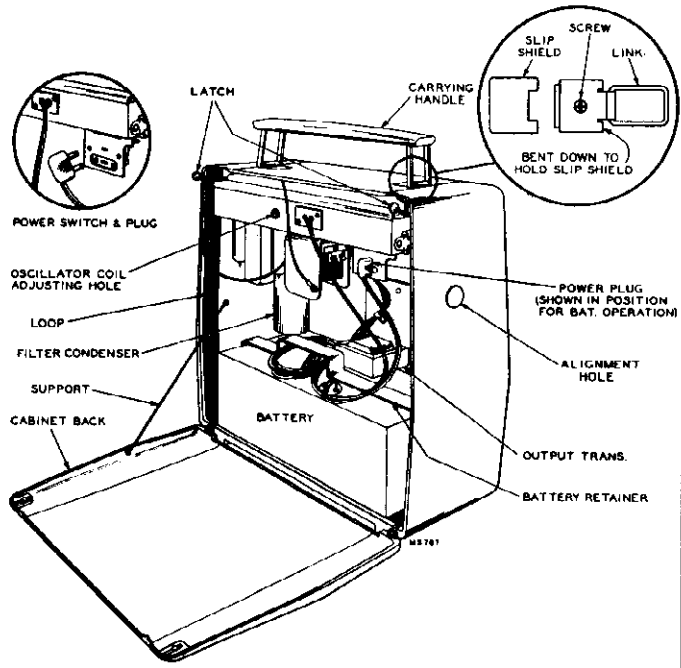

Cabinet Hinges

The cabinet hinges may be readily removed, they are secured to the cabinet and back by force fit. To remove back from cabinet—pull straight outward on both hinges at the same time.

To Remove Chassis

1. Pull off the volume control knob
2. Close tuning condenser (dial at 54) to prevent possible damage to tuning condenser.
3. Unsolder the loop leads.
4. Remove the plug from the battery.
5. Remove the two screws holding the bottom edge of the speaker and the screw holding dial back-plate to cabinet.
6. Remove the two slip shields beneath the handle. They may be removed by pushing straight toward the top center of the case. The chassis mounting screws are then accessible.
7. Remove the two screws at the top of the cabinet while supporting the chassis with one hand.

Note: When re-installing, replace speaker holding screws first but do not securely tighten until the two screws at the top of the cabinet have been tightened.

©John F. Rider

MODEL 9BX5,
Ch. RC-1059B, RC-1059C

Alignment Procedure

Cathode Ray Alignment is the preferable method. Connections for the oscilloscope are shown on the schematic diagram.

Output Meter Alignment.—If this method is used, connect the meter across the voice coil and turn the receiver volume control to maximum.

Test Oscillator.—For all alignment operations, connect the low side of the test oscillator to the receiver chassis and keep the oscillator output as low as possible to avoid AVC action.

Battery operation of the receiver is preferable during alignment; on a. c. operation an isolation transformer (117v./117v.) may be necessary for the receiver if the test oscillator is also a. c. operated.

Note: Battery or substitute must be in place for ant. alignment (step 5).

Alignment Tabulation

Step	Connect high side of test oscillator to—	Test oscillator output—	Turn receiver dial to—	Adjust for maximum peak output
1	Disconnect loop—remove chassis—remove bottom plate, connect a 10,000 ohm resistor from C1 stator terminal to tuning condenser frame.			
2	Stator terminal of C1 thru 01 mf. capacitor	455 kc	55	*Top and bottom T2 (2nd. I-F. trans.) *Top and bottom T1 (1st. I-F trans.)
3	Remove the 10,000 ohm resistor. Replace bottom cover and install chassis in cabinet. Re-connect loop.			
4	Short wire placed near receiver (for radiated signal)	1600 kc	160	†C5 (osc.)
5		1400 kc	140	†C2 (ant.)
6		600 kc	60	*L2 (osc.) while rocking gang
7		Repeat steps 4, 5 and 6		

NOTES:

*The magnetite cores of L2 and T2 and T1 do not have visible adjusting screws. The cores have screw driver slots to permit adjustment (use non-metallic screwdriver).

†Adjustable thru hole in side of case.

CAUTION.—

Do not remove any tubes from the chassis with the set operating and the plug connected to the power line. Damage to tubes may result.

Critical Lead Dress

1. Dress output plate bypass C20 capacitor against chassis.
2. Dress output plate lead to output transformer against chassis.
3. Dress audio coupling capacitor C14 (volume control to grid of 1U5) away from chassis, away from audio limiting resistor R8 and to permit adjustment of second I.F. Transformer.
4. Dress all exposed leads away from each other, and away from chassis to prevent short circuits.
5. Dress all filament and ground leads against chassis.
6. Dress filament bypass capacitor C23 and accompanying compensating resistor R15 (volume control to 1U4) against volume control.
7. Dress power line cord away from line-battery switch mechanism.
8. Dress all capacitors and wiring away from oscillator coil.
9. Dress 4 mmf. neutralizing capacitor C7 against A.V.C. bypass capacitor C8 (1U4 filament to first I.F. trans.).

Note: These instruments are designed to be operated with a battery in position inside the cabinet. Reception will be below normal unless the battery is in its normal location.

The position of the battery pack affects the loop inductance. Therefore, when the battery is removed, the loop inductance will change (increase) and the sensitivity will be slightly worse because of improper electrical tracking of the loop circuit with the heterodyne oscillator.

Where a battery is temporarily unavailable, a sheet of aluminum 8½" long x 3⅝" wide and from .020 to .050" thick may be placed in the cabinet in the position occupied by the battery so that it is lying flat down on the bottom. This sheet of aluminum has an effect on the loop inductance similar to the effect caused by the battery and will, therefore, return the performance of the loop to approximately the same as obtained when a battery is installed. If aluminum is not available, brass may be substituted with approximately the same performance. DO NOT USE STEEL OR IRON since the performance will be adversely affected. If desired, the sheet of aluminum may be waxed to the inside bottom of the case. DO NOT PLACE ANY WAX, CEMENT OR OTHER MATERIAL ON THE LOOP WINDINGS.

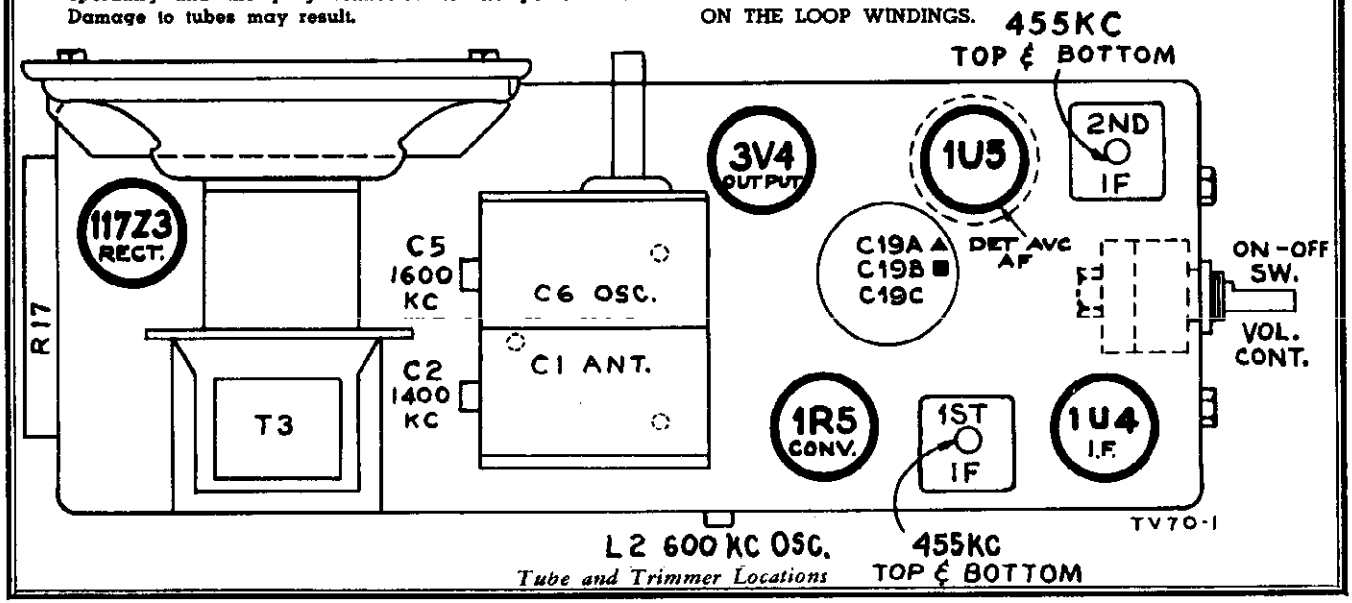

Tube and Trimmer Locations

MODEL 9BX5, Cl. RC-1059B, RC-1059C

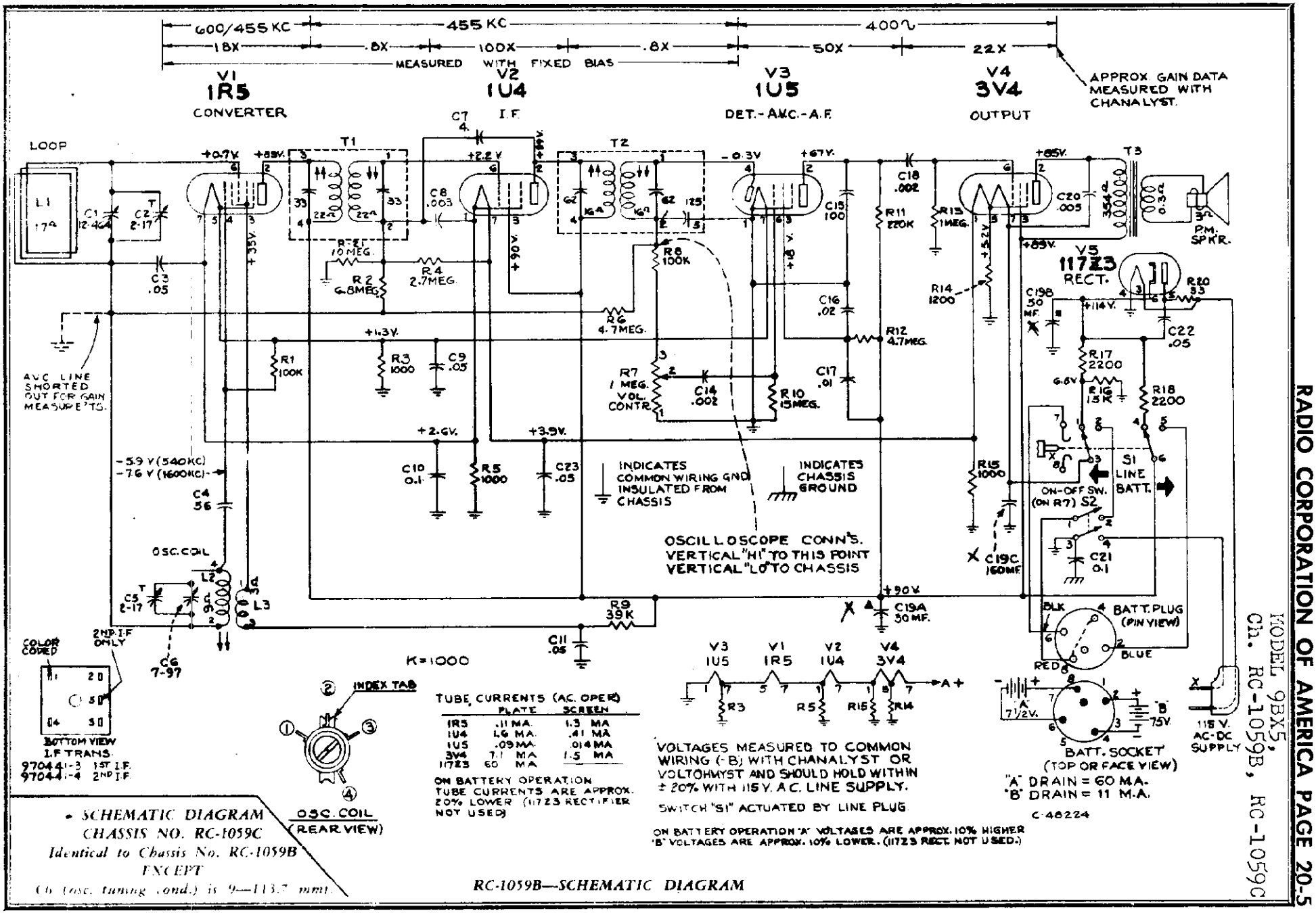

• SCHEMATIC DIAGRAM
CHASSIS NO. RC-1059C
Identical to Chassis No. RC-1059B EXCEPT
C6 (osc. tuning cond.) is 9—113.7 mmf.

RC-1059B—SCHEMATIC DIAGRAM

MODEL 9BX5,
Ch. RC-1059B, RC-1059C

Replacement Parts

STOCK No.	DESCRIPTION
	CHASSIS ASSEMBLIES
	RC 1059B and RC 1059C
*74286	Capacitor—Variable tuning capacitor for RC 1059B (C1, C2, C5, C6)
*74406	Capacitor—Variable tuning capacitor for RC 1059C (C1, C2, C5, C6)
73153	Capacitor—Ceramic, 4 mmf. (C7)
71924	Capacitor—Ceramic, 56 mmf. (C4)
73152	Capacitor—Ceramic, 100 mmf. (C15)
73750	Capacitor—Tubular, .002 mfd., 200 volts (C14, C18)
73961	Capacitor—Tubular, .003 mfd., 200 volts (C8)
72791	Capacitor—Tubular, .005 mfd., 400 volts (C20)
71923	Capacitor—Tubular, .01 mfd., 200 volts (C17)
71928	Capacitor—Tubular, .02 mfd., 200 volts (C16)
72596	Capacitor—Tubular, .05 mfd., 200 volts (C9, C23)
73553	Capacitor—Tubular, .05 mfd., 400 volts (C3, C11, C22)
73784	Capacitor—Tubular, 0.1 mfd., 200 volts (C10)
70617	Capacitor—Tubular, 0.1 mfd., 400 volts (C21)
73127	Capacitor—Electrolytic, comprising 1 section of 50 mfd., 150 volts, 1 section of 30 mfd., 150 volts and 1 section of 160 mfd., 25 volts (C19A, C19B, C19C)
73935	Clip Mounting clip for I-F transformer (2 required)
73114	Coil—Oscillator coil complete with adjustable core for RC 1059B (L2, L3)
*74405	Coil—Oscillator coil complete with adjustable core for RC 1059C (L2, L3)
*74285	Control—Volume control and power switch (R7, S2)
70022	Cord—Power cord and plug
*74282	Dial—Dial scale and back plate assembly less cushions
72283	Grommet—Rubber grommet to mount tuning condenser (3 required)
*74284	Knob—Tuning knob complete with indicator window
28452	Plate—Mounting plate for electrolytic capacitor
73275	Plug—5 prong male plug for battery cable
73237	Resistor—Wire wound, 33 ohms, 150 MA (R20)
	Resistor—Fixed, composition, 1000 ohms, ±10%, ½ watt (R3, R5, R15)
	Resistor—Fixed, composition, 1200 ohms, ±10%, ½ watt (R14)
	Resistor—Fixed, composition, 2200 ohms, ±10%, ½ watt (R18)
73132	Resistor—Wire wound, 2200 ohms, 7 watts (R17)
	Resistor—Fixed, composition, 15,000 ohms, ±10%, ½ watt (R16)
	Resistor—Fixed, composition, 39,000 ohms, ±10%, ½ watt (R9)
	Resistor—Fixed, composition, 100,000 ohms, ±20%, ½ watt (R1)
	Resistor—Fixed, composition, 100,000 ohms, ±10%, ½ watt (R8)
	Resistor Fixed, composition, 220,000 ohms, ±20%, ½ watt (R11)
	Resistor—Fixed, composition, 1 megohm, ±20%, ½ watt (R13)
	Resistor—Fixed, composition, 2.7 megohms, ±10%, ½ watt (R4)
	Resistor—Fixed, composition, 4.7 megohms, ±20%, ½ watt (R12)
	Resistor—Fixed, composition, 4.7 megohms, ±10%, ½ watt (R6)
	Resistor—Fixed, composition, 6.8 megohms, ±10%, ½ watt (R2)
	Resistor—Fixed, composition, 10 megohms, ±10%, ½ watt (R21)
	Resistor—Fixed, composition, 15 megohms, ±20%, ½ watt (R10)
73103	Shield—Tube shield for 1U5 tube
73117	Socket—Tube socket
14270	Spring—Retaining spring for tuning knob
71039	Switch—"Line-Battery" switch (S1)
73129	Transformer—First I-F transformer (T1)
73130	Transformer—Second I-F transformer (T2)
71047	Transformer—Output transformer (T3)
	SPEAKER ASSEMBLIES
	92577-1
73123	Speaker—4" P.M. speaker complete with cone and voice coil
	MISCELLANEOUS
*74287	Back—Case back—less hinges
73147	Ball—Metal ball with groove for back cover latching mechanism (2 required)
*74292	Button—Plug button for L.H. case side
Y2099	Case—Case complete with loop, metal front, decorative ring, and emblem—less latch mechanism, hinges, handle, handle mounting plate and case back (L1)
*74302	Channel—Carrying handle under channel
*74457	Cushion—Rubber cushion for under-side of carrying handle
70425	Clip—Spring clip for volume control knob
73549	Emblem "RCA Victor" emblem
*74293	Front—Decorative metal front for case
*74288	Handle—Carrying handle less links and under channel
74180	Hinge—Cabinet hinge (2 required)
*74290	Knob—Volume control knob—less spring clip
*74303	Link—Carrying handle link (2 required)
73141	Loop—Antenna loop (L1)
73145	Nut—Hex nut with groove for back cover latching mechanism (2 required)
*74289	Plate—Carrying handle mounting plate (2 required)
*74294	Ring—Decorative ring for front of case
*74291	Screw—#4-40 x ⅜" flat head cross recessed machine screw for mounting flexible drop support (2 required)
*74295	Screw #4-40 x 7/16" flat head cross recessed machine screw for mounting latch mechanism to case side
*74304	Screw #4 x 5/16" flat head thread cutting screw for handle (2 required)
*74301	Screw—8 x ⅜" pan head cross recessed thread cutting screw for holding speaker (2 required) or dial plate to case
*74364	Shield—Slip shield for handle mounting plate (2 required)
73148	Spring Extension spring for back cover latching mechanism—L.H.
73146	Spring—Extension spring for back cover latching mechanism—R.H.
73483	Support—Flexible drop support for back cover

*This is the first time that this Stock No. has appeared in Service Data.

©John F. Rider

MODEL 9BX56,
Ch. RC-1068

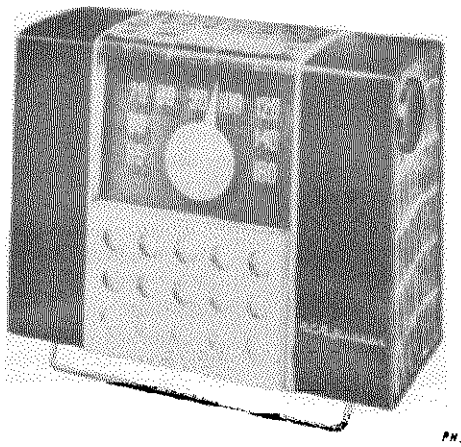

PH381

Specifications

Tuning Range ..... 540-1600 kc.
Intermediate Frequency ..... 455 kc.

Tube Complement

(1) RCA 1R5 ..... Converter
(2) RCA 1U4 ..... I.F. Amplifier
(3) RCA 1U5 ..... Det.—A.V.C.—A.F. Amp.
(4) RCA 3V4 ..... Output
(A selenium rectifier is used)

Power Supply Rating

Power Line Operation
115 volts d.c. or 50 to 60 cycles a.c. ..... 17 watts
or
Battery Operation
1 RCA VS 065 "A" Battery ..... 7.5 v., 60 ma.
1 RCA VS 016 "B" Battery ..... 67.5 v., 10 ma.
(Battery life—approx. 40 hrs. intermittent service)

Power Output

A.C. operation ..... 150 mw. undistorted, 250 mw. max.
Batt. operation ..... 70 mw. undistorted, 180 mw. max.

Loudspeaker (92584-1)

Size and type ..... 4 in. PM dynamic
Voice coil impedance ..... 3.2 ohms @ 400 cycles

Dial Drive Ratio ..... 6:1 (3 turns of knob)

Cabinet Dimensions

Height $8\frac{3}{8}$ in. Width $10\frac{1}{2}$ in. Depth 5 in.

Weight $5\frac{1}{2}$ lbs. (less batteries) $6\frac{1}{4}$ lbs. (with batteries)

To Open Cabinet:

The back is secured to the cabinet with two clip catches at the top and two hinges at the bottom. To open—while facing the front of the receiver, with the handle in the upright position grip the sides of the cabinet with both hands and push the top of the back to the rear with both thumbs.

To Remove Back:

Open the cabinet as explained above. With the back fully open, grip the cabinet as illustrated. Insert a screwdriver under one hinge retainer and pry the center of the retainer out of the opening in the cabinet while maintaining pressure on the back with the fingers and on the cabinet with the thumb. Repeat this procedure with the other hinge retainer. Pull straight to the rear.

To Remove Cabinet Foot:

Open the cabinet. Grip the end of the spring clip with long nose pliers as illustrated and pull toward the center of the cabinet. Repeat this procedure with the other clip.

To Remove Chassis:

1. Remove knobs (pull off).
2. Open cabinet.
3. Unsolder loop leads.
4. Disconnect batteries and speaker.
5. Remove the two screws which hold the dial back plate to the cabinet.
6. Remove the TWO SCREWS AT THE BOTTOM EDGE OF THE REAR CHASSIS APRON.
7. Pull chassis to rear.

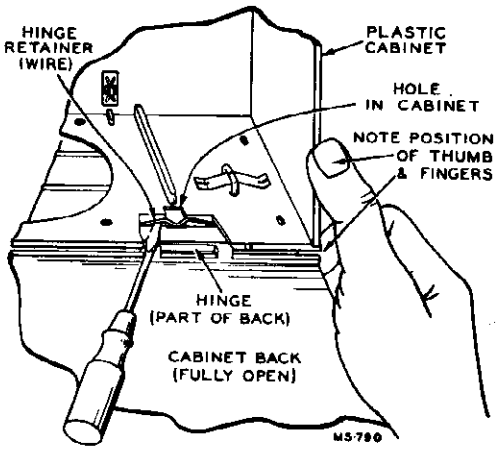

Removal of Cabinet Back

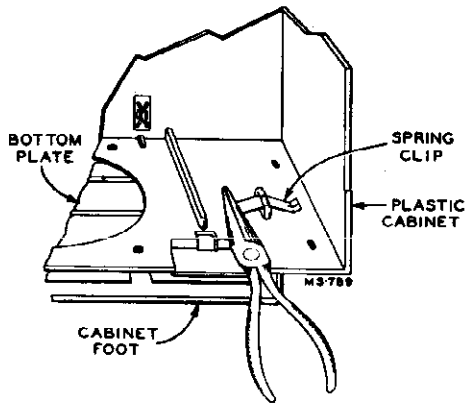

Removal of Cabinet Foot

©John F. Rider

MODEL 9BX56,Ch. RC-1068

Alignment Procedure

Cathode Ray Alignment is the preferable method. Connections for the oscilloscope are shown on the schematic diagram.

Output Meter Alignment. If this method is used, connect the meter across the voice coil and turn the receiver volume control to maximum.

Test Oscillator. For all alignment operations, connect the low side of the test oscillator to the receiver chassis and keep the oscillator output as low as possible to avoid AVC action.

Battery operation of the receiver is preferable during alignment; on a.c. operation an isolation transformer (117v./117v.) may be necessary for the receiver if the test oscillator is also a.c. operated.

Dial Pointer Position. There are two score marks on the dial back plate—with the tuning condenser fully meshed (closed) the pointer should be set to the LEFT HAND MARK.

The RIGHT HAND MARK is for 1600 kc.

The dial is not easily removed. A reproduction of the dial is illustrated on another page. It is suggested that a tracing be made of it for use in alignment.

Step	Connect high side of test oscillator to—	Test oscillator output—	Turn receiver dial to—	Adjust for maximum peak output
1	Disconnect loop—remove chassis—connect a 1000 ohm resistor from C1 stator terminal to tuning condenser frame.			
2	Stator terminal of C1 through a 39 mmf. capacitor	455 kc.	Quiet point near 160	*Top and bottom T2 (2nd I-F trans.) *Top and bottom T1 (1st I-F trans.)
3	Remove the 1000 ohm resistor. Replace but do not fasten chassis in cabinet. Re-connect loop.			
4	Short wire placed near receiver (for radiated signal)	1630 kc.	Max. clockwise	†C5 (osc.)
5		1400 kc.	140	†C2 (ant.)
6		600 kc.	60	*L2 (osc.) while rocking gang
7		Repeat steps 4, 5 and 6		
8	Fasten chassis to cabinet.			

NOTES:

* The magnetite cores of L2, T2 and T1 do not have visible adjusting screws. The cores have screw driver slots to permit adjustment (use non-metallic screwdriver).

† C5 and C2 are more readily accessible if the chassis is not fully inserted into the cabinet. However the chassis should be near its proper position because its position affects the inductance of the loop.

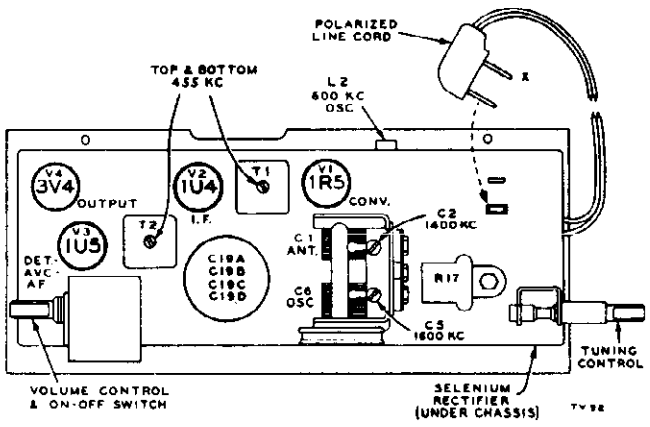

Tube and Trimmer Locations

Power Line Operation:

A power cord is stored inside the cabinet. Open the cabinet and remove the plug of the power cord from its socket on the chassis and insert the plug into a convenient electrical outlet. A slot in the right-hand end of the cabinet allows the back to be closed with the cord passing through.

NOTE: If reception is not obtained on DC, reverse plug in outlet receptacle. On AC operation this may reduce hum.

When returning to battery operation replace the plug in the socket provided on the chassis, with the cord extending toward the back.

NOTE: Make certain that the plug is fully inserted (base of plug touching chassis) to assure proper operation of the Batt-Line switch.

CAUTION.—

Do not remove any tubes from the chassis with the set operating and the plug connected to the power line. Damage to tubes may result.

Critical Lead Dress

1. Dress 1R5 plate lead and 1U4 grid lead down against chassis.
2. Dress all filament and ground leads against chassis.
3. Dress the 4 mmf. neutralizing capacitor C7 against the 1U4 tube socket with short lead at the plate end.
4. Dress .002 mf. capacitor C14 down against chassis and away from other wiring.
5. Dress .05 mf. capacitor C9 down over top of C14.
6. Dress capacitors C10 and C22 away from oscillator coil so that pressure is not exerted on the side of the coil.
7. Dress all wiring away from the selenium rectifier.
8. Dress .003 mf. capacitor C8 as near chassis as possible.

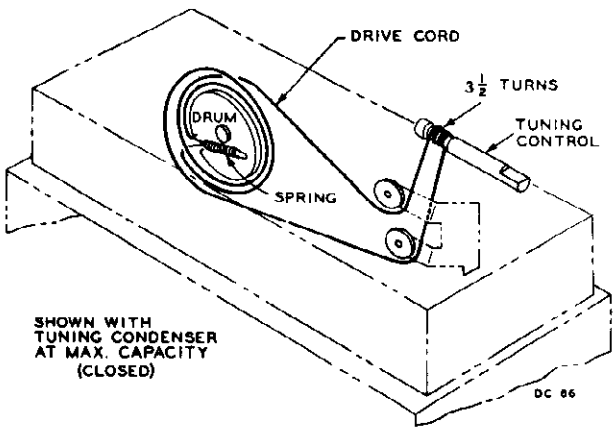

Dial Drive Cord

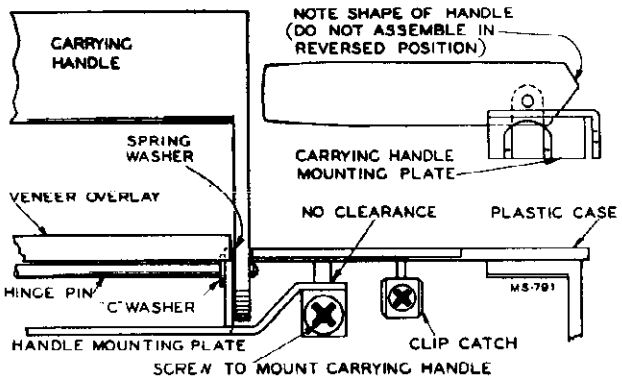

Carrying Handle Assembly

©John F. Rider

©John F. Rider

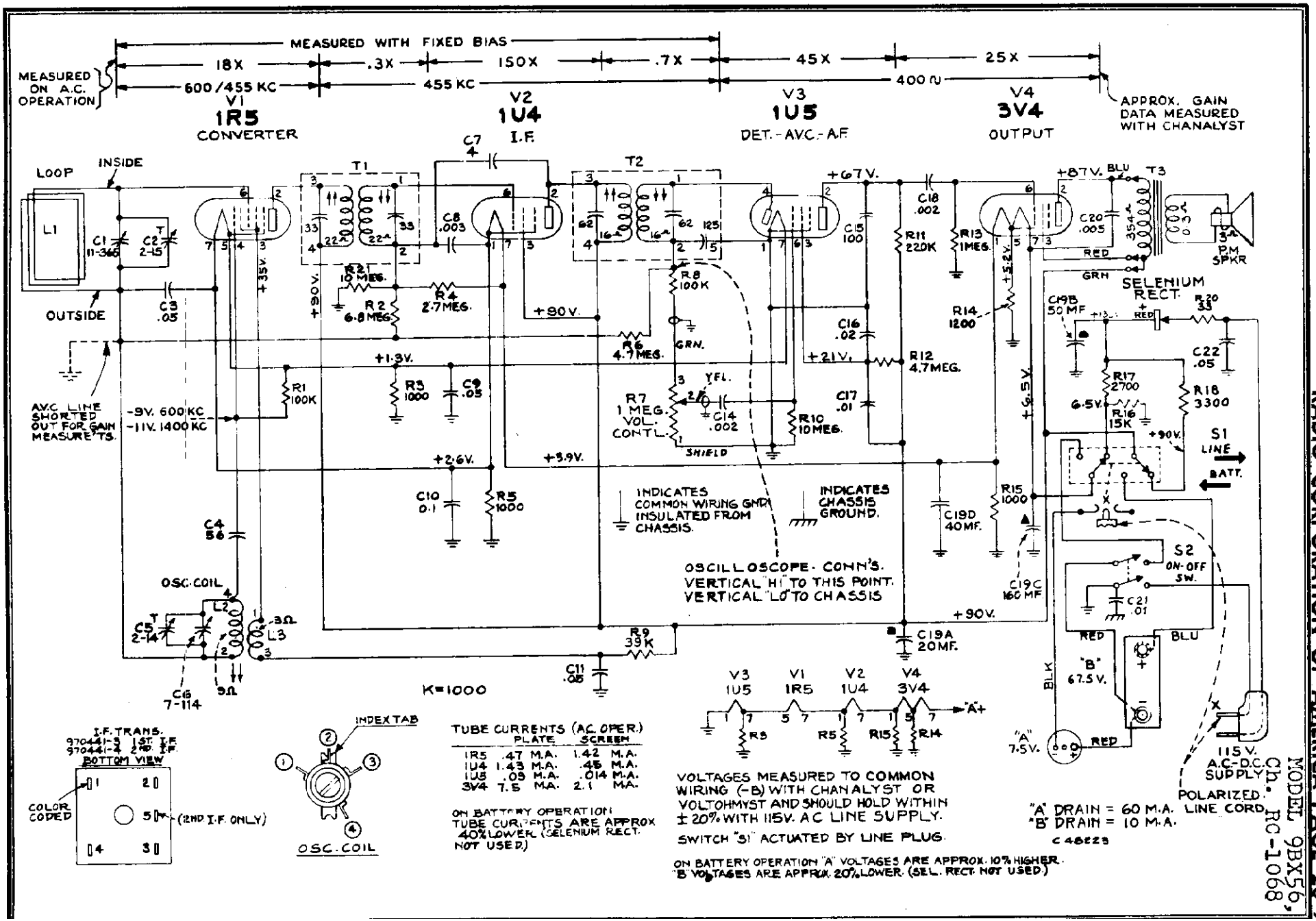

RADIO CORPORATION OF AMERICA PAGE 20-9
MODEL 9BX56, Ch. RC-1068

MODEL 9BX56,
Ch. RC-1068

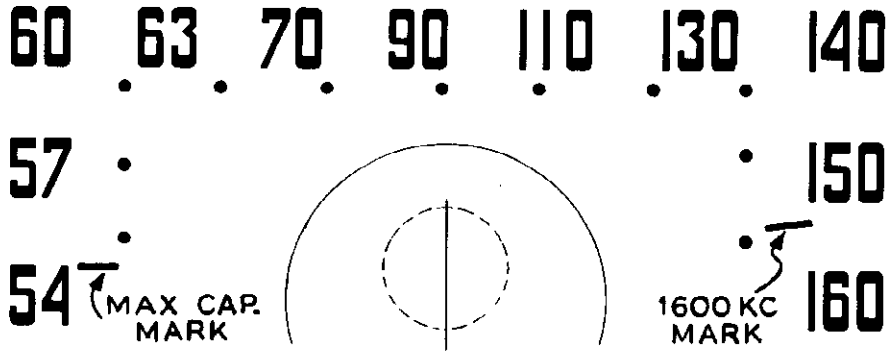

Dial Scale 933722

The dial scale drawing shown is a full size reproduction. It can be used as a reference in alignment procedure.

Replacement Parts

STOCK No.	DESCRIPTION
	CHASSIS ASSEMBLIES
	RC 1068
*74318	Bracket—Drive cord pulley bracket complete with two (2) pulleys
*74323	Capacitor—Variable tuning capacitor (C1, C2, C5, C6)
73153	Capacitor—Ceramic, 4 mmf. (C7)
71924	Capacitor—Ceramic, 56 mmf. (C4)
73152	Capacitor—Ceramic, 100 mmf. (C15)
73750	Capacitor—Tubular, .002 mfd., 200 volts (C14, C18)
73961	Capacitor—Tubular, .003 mfd., 200 volts (C8)
72791	Capacitor—Tubular, .005 mfd., 400 volts (C20)
71923	Capacitor—Tubular, .01 mfd., 200 volts (C17)
71928	Capacitor—Tubular, .02 mfd., 200 volts (C16)
71551	Capacitor—Tubular, .05 mfd., 200 volts (C9)
54859	Capacitor—Tubular, .05 mfd., 400 volts (C11)
73553	Capacitor—Tubular, .05 mfd., 400 volts (C3, C22)
73784	Capacitor—Tubular 0.1 mfd., 200 volts (C10)
70617	Capacitor—Tubular, 0.1 mfd., 400 volts (C21)
73113	Capacitor—Electrolytic, comprising 1 section of 50 mfd., 150 volts, 1 section of 20 mfd., 150 volts, 1 section of 160 mfd., 25 volts and 1 section of 40 mfd., 25 volts (C19A, C19B, C19C, C19D)
73935	Clip—I-F transformer mounting clip (2 required)
73114	Coil—Oscillator coil (L2, L3)
*74315	Connector—"B" Battery connector—less cable
73125	Control—Volume control and power switch (R7, S2)
†72953	Cord—Drive cord (approx. 19" length required)
70022	Cord—Power cord and plug
72283	Grommet—Rubber grommet to mount tuning capacitor (3 required)
*74321	Indicator—Station selector indicator
18469	Plate—Bakelite mounting plate for electrolytic capacitor
*74317	Plate—Dial back plate—less dial
31572	Plug—3 contact female plug for speaker cable
*74324	Plug—3 prong male plug for battery cable
*74322	Rectifier—Selenium rectifier
73237	Resistor—Wire wound, 33 ohms, 150 MA (R20)
	Resistor—Fixed, composition, 1000 ohms, ±10%, ½ watt (R3, R5, R15)
	Resistor—Fixed, composition, 1200 ohms, ±10%, ½ watt (R14)
*74319	Resistor—Wire wound, 2700 ohms, 7 watts (R17)
	Resistor—Fixed, composition, 3300 ohms, ±10%, ½ watt (R18)
	Resistor—Fixed, composition, 15,000 ohms, ±10%, ½ watt (R16)
	Resistor—Fixed, composition, 39,000 ohms, ±10%, ½ watt (R9)
	Resistor—Fixed, composition, 100,000 ohms, ±20%, ½ watt (R1)
	Resistor—Fixed, composition, 100,000 ohms, ±10%, ½ watt (R8)
	Resistor—Fixed, composition, 220,000 ohms, ±20%, ½ watt (R11)
	Resistor—Fixed, composition, 1 megohm, ±20%, ½ watt (R13)
	Resistor—Fixed, composition, 2.7 megohms, ±10%, ½ watt (R4)
	Resistor—Fixed, composition, 4.7 megohms, ±20%, ½ watt (R12)
	Resistor—Fixed, composition, 4.7 megohms, ±10%, ½ watt (R6)
	Resistor—Fixed, composition, 6.8 megohms, ±10%, ½ watt (R2)
	Resistor—Fixed, composition, 10 megohms, ±20%, ½ watt (R10)
	Resistor—Fixed, composition, 10 megohms, ±10%, ½ watt (R21)

STOCK No.	DESCRIPTION
*74320	Shaft—Tuning knob shaft
38904	Socket—2 contact socket for power cord
73117	Socket—Tube socket
72540	Spring—Drive cord spring
71039	Switch—"Line-Battery" change switch (S1)
73129	Transformer—First I-F transformer (T1)
73130	Transformer—Second I-F transformer (T2)
35969	Washer—"C" washer for tuning knob shaft
	SPEAKER ASSEMBLIES
	92584-1
	RL 108 B5
*74415	Connector—3 contact male connector for speaker
*74411	Speaker—4" P.M. speaker complete with cone and voice coil—less output transformer and connector
71047	Transformer—Output transformer (T3)
	MISCELLANEOUS
*74328	Back—Cabinet back complete with two hinges, two top retainers and two hinge retainers
*74327	Board—Antenna loop lead terminal board complete with retaining clip
*74346	Button—Dial drop door release button
Y2108	Cabinet—Cabinet including veneer overlay with drop door catch, loop and loop supports—less drop door, handle, foot, trim strips, dial, clip catches, protective bottom plate and back (L1)
*74339	Catch—Cabinet back clip catch (fastens to cabinet) (2 required)
*74345	Catch—Drop door catch assembly
*74338	Clip—Spring clip for holding cabinet foot (2 required)
*74334	Dial—Polystyrene dial scale
*74330	Door—Drop door for front of cabinet
73549	Emblem—"RCA Victor" emblem
*74331	Foot—Cabinet mounting foot—less protective plate
*74349	Handle—Carrying handle—less mounting plate and hinge pin
73490	Knob—Volume control knob or tuning knob
*74326	Loop—Antenna loop (L1)
*74412	Nut—Speed nut for speaker mounting (4 required)
*74337	Nut—Speed nut for mounting dial (4 required)
*74340	Nut—Speed nut for mounting veneer overlay (4 required)
*74336	Nut—Spring nut to fasten cabinet trim strip (2 required for each strip)
*74329	Overlay—Veneer overlay for top of cabinet including drop door catch and release button
*74351	Pin—Carrying handle hinge pin
*74344	Plate—Protective bottom plate for cabinet—less foot
*74350	Plate—Mounting plate for carrying handle
*74325	Screen—Speaker screen
*74348	Screw—#4 x 3/16" self tapping round head screw (cross-recessed) for mounting drop door catch (2 required)
*74341	Screw—#4 x 5/16" self tapping round head (cross-recessed) screw for cabinet back clip catch
*74342	Screw—#8 x 7/16" self tapping round head (cross-recessed) screw for carrying handle mounting plate (2 required)
*74335	Spring—Drop door release spring for front of cabinet (2 required)
14270	Spring—Retaining spring for knobs
*74347	Spring—Coil spring for drop door release button
*74332	Strip—Trim strip—R.H.
*74333	Strip—Trim strip—L.H.
*74353	Washer—"C" washer for carrying handle hinge pin
*74352	Washer—Spring washer for carrying handle hinge pin (2 required)
*74343	Washer—Spring washer for dial drop door (2 required)

* This is the first time that this Stock No. has appeared in Service Data.
† Stock No. 72953 is a reel containing 250 feet of cord.

©John F. Rider

MODEL 9W102,
Ch. RC-618D

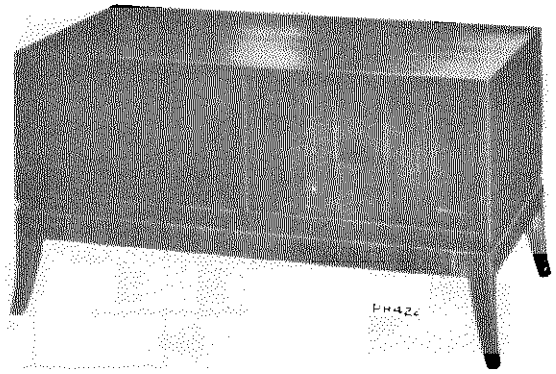

FOR RECORD CHANGER INFORMATION REFER TO RP 168 SERIES SERVICE DATA

Specifications

Tuning Range
Standard Broadcast (AM) .....540-1600 kc.
Frequency Modulation (FM) .....88-108 mc.
Intermediate Frequencies .....AM—455 kc., FM—10.7 mc.

Tube Complement

(1)	RCA 6J6	Mixer and Oscillator
(2)	RCA 6BA6	I-F Amplifier
(3)	RCA 6AU6	Driver
(4)	RCA 6AL5	Ratio Detector
(5)	RCA 6AV6	A-F Amplifier
(6)	RCA 6V6GT	Output
(7)	RCA 6AV6	AM Det.—AVC—Ph. Inv.
(8)	RCA 6V6GT	Output
(9)	RCA 6X5GT	Rectifier
(10)	RCA 6BF6	Phono Pre-amplifier

Dial Lamps (2) .....Type No. 51, 6-8 volts, 0.2 amp.
Jewel Lamp .....Type No. 51, 6-8 volts, 0.2 amp.

Tuning Drive Ratio .....18:1 (9 turns of knob)

Power Supply Rating .....115 volts, 60 cycles, 90 watts

Loudspeaker (92569-5W)
Size and type .....12 in. PM
Voice coil impedance .....3.2 ohms at 400 cycles

Power Output
Undistorted 6 watts .....Maximum 7 watts

Cabinet Dimensions
Height 19⅞" Width 38¾" Depth 20"

Weight .....71 lbs.

Record Changer (RP-168A-1)
Turntable speed .....45 r.p.m.
Record capacity .....Up to 10 RCA 7 in. fine groove
Pickup .....Crystal (medium output)

Description

Model 9W102 is identical electrically with Models 9W101 and 9W103. It uses a vertical type of dial. The chassis differs mechanically from that used in 9W101 and 9W103 in that the volume control and range switch shafts are combined as a dual knob control (a drive cord couples the volume control to the volume control knob shaft). The second I-F transformer is stamped 970435-6 and is identical to that used in 9W101 and 9W103 except for having a copper plated shield can to reduce feedback to the loop. **Refer to Service Data on Models 9W101, 9W103, 9W105 for additional information.**

(Supplementary Information on 9W101, 9W103 and 9W105 contained in this publication.)

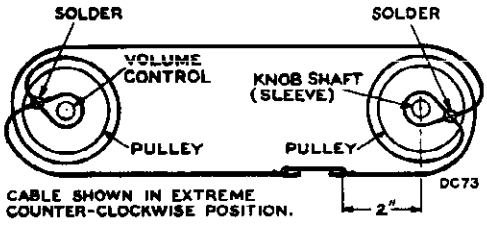

Volume Control Flexible Cable

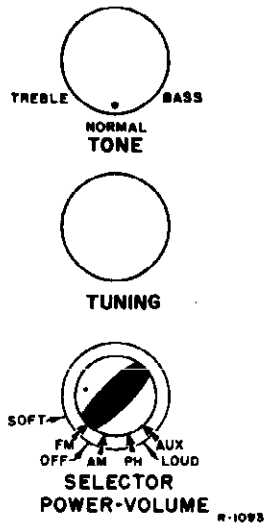

Controls

©John F. Rider

MODEL 9W102,
Ch. RC-618D

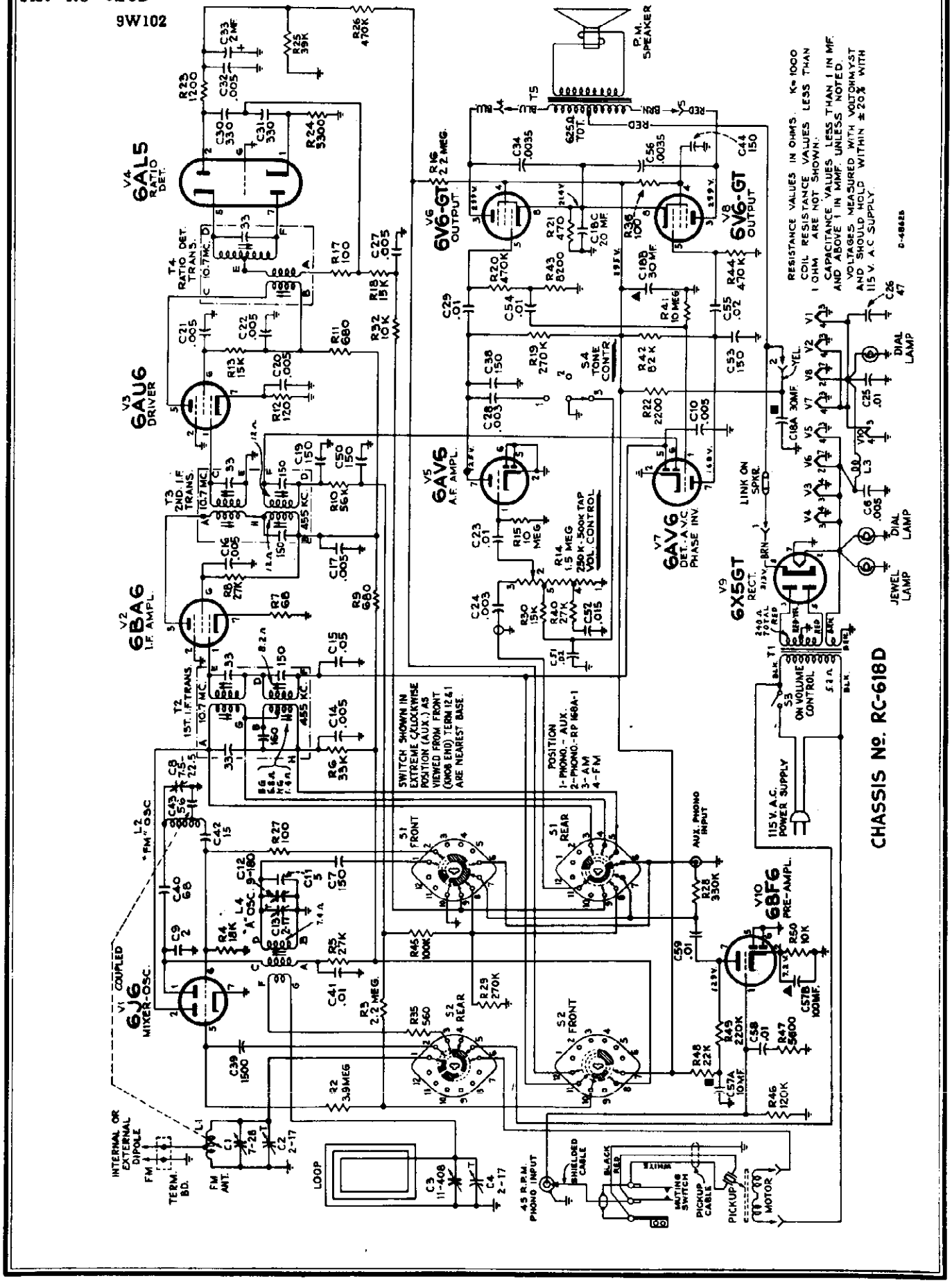

©John F. Rider

MODELS 9W102, Ch. RC-618D;
9W101, 9W103, Ch. RC-618B, Rev;
9W105, Ch. RC-618C, Rev.

Alignment Procedure

Identical to that given in 9W101, 9W103, 9W105 Service Data Except

After the chassis is installed in the cabinet, recheck the adjustment of C4 (AM Ant.) at 1400 kc. and L4 (AM Osc.) at 600 kc. Two holes in the right hand side of the radio compartment drawer permit access to these adjustments.

The dial indicator should be set to the SPECIFIED POSITION on the dial back plate with the tuning condenser at max. capacity.

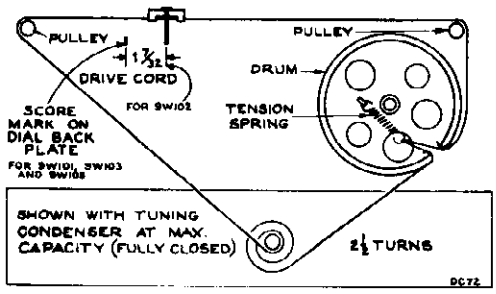

Dial Indicator and Drive Mechanism

9W101, 9W103, 9W105 (RC-618B, RC-618C) SUPPLEMENTARY INFORMATION

Added Capacitor:

A capacitor (150 mmf.—C44) has been added between the screen grid terminal of V8 (6V6GT) socket and chassis as shown in the illustration below. This was done to eliminate spurious audio oscillation.

Correction to Simplified Schematics:

The simplified schematic diagrams (phono position) on page 7 of 9W101, 9W103, 9W105 Service Data show C34 and C56 connected to ground. They should be shown connected to the cathodes of the 6V6GT tubes as shown in the illustration below.

Change in Wiring:

To improve FM stability one dial lamp is now connected to pin #2 of V9 (6X5GT). Previously both were connected to pin #2 of V8 (6V6GT).

Substitute Speaker:

Speakers stamped 92569-1WX have been used as a substitute for 92569-5W speakers in Model 9W101; 92569-1WX speakers have a 2.2 ohm voice coil; 92569-5W speakers have a 3.2 ohm voice coil.

Changes in Parts List:

CHASSIS ASSEMBLIES

Add:

48125 Capacitor—Ceramic, 150 mmf. (C44) [same as C7, C19, C38, C50, C53]

SPEAKER ASSEMBLY
92569-1WX
(Used on Model 9W101)

13867 Cap—Dust cap
36145 Cone—Cone and voice coil assembly
5039 Plug—4 prong male plug for speaker
71145 Suspension—Metal cone suspension
37899 Transformer—Output transformer (T3)

NOTE: When replacing complete speaker order Stock No. 73635 (92569-5W).

MISCELLANEOUS

Add:

37396 Grommet—Rubber grommet for mounting speaker (3 required)—for Model 9W103

Correction:

73896 Loop—Loop antenna complete for Models 9W101 and 9W103 (previously listed for 9W101 and 9W105)

Pickup Arm Cable:

The RP-168A-1 record changer pickup arm cable now being used is a three wire cable (RED-WHITE-BLACK). In some instruments the black wire is omitted or a shielded wire may be used as shown in 9W101, 9W103, 9W105 Service Data. The latest connection diagram is given below.

I.F. Transformer Substitution:

In some chassis I.F. transformers stamped 970435-2 have been used as a substitute for 2nd. I.F transformers stamped 970435-5.

The 455 Kc. windings of 970435-2 transformers use resonating capacitors of 235 mmf. each, the d.c. resistance of each winding is, 8.2 ohm, the transformer indicated in the schematic diagram is stamped 970435-5.

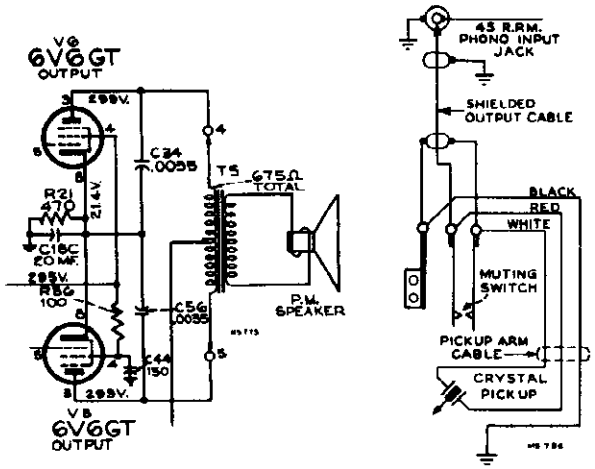

Output Tubes Circuit Pickup Arm Cable
Models 9W101, 9W103, 9W105

Incorrect Color Code on Capacitor:

Some ceramic capacitors C11 (5 mmf.) have been used which have a color code of BLACK-GREEN-BLACK. The capacitor is correct, but the color code is incorrect. The normal color code of this capacitor is GREEN-BLACK-WHITE.

Record Changer Mounting Screws:

The original mounting screws used a cover which screwed into the top of the mounting screw. The screws now being used have a plug-in type of cover.

Change in Parts List:

MISCELLANEOUS

Change:

74209 Cover—Mounting screw cover (threaded type) for RP 168-A-1 record changer (3 required) (used with RCA 74424 screw).

74424 Screw—#8-32 x 1¾" special screw (tapped hole) for RP 168-A-1 record changer (3 required) (used with RCA 74209 cover).

Add:

74579 Bumper—Rubber bumper (black) for front panel of record changer drawer—walnut or mahogany instruments—Models 9W101 and 9W103 (2 required)

74580 Bumper—Rubber bumper (white) for front panel of record changer drawer—blond or limed oak instruments—Models 9W101 and 9W103 (2 required)

74581 Cover—Mounting screw cover (plug-in type) for RP 168-A-1 record changer (3 required) (used with RCA 74582 screw).

74582 Screw—#8-32 x 1¾" special screw (non-tapped hole) for RP 168-A-1 record changer (3 required) (used with RCA 74581 cover).

©John F. Rider

MODEL 9W102,
Ch. RC-618D

Replacement Parts

STOCK No.	DESCRIPTION
	CHASSIS ASSEMBLIES RC 618D
73893	Board—"F. M." terminal board
74641	Cable—Flexible cable to operate volume control
73889	Capacitor—Variable tuning capacitor C1, C2, C3, C4, C8, C12, C13
73866	Capacitor—Ceramic, 2 mmf. C9
93056	Capacitor—Ceramic, 5 mmf. C11
39044	Capacitor—Ceramic, 15 mmf. C42
39042	Capacitor—Ceramic, 47 mmf. C26
73867	Capacitor—Ceramic, 56 mmf. C43
33379	Capacitor—Ceramic, 68 mmf. C40
48125	Capacitor—Ceramic, 150 mmf.....C7, C19, C38, C44, C50, C53
39640	Capacitor—Mica, 330 mmf. C30, C31
73748	Capacitor—Ceramic, 1500 mmf. C39
73473	Capacitor—Ceramic, 5000 mmf. C6, C10
73659	Capacitor—Tubular, .003 mfd., 200 volts C24
72573	Capacitor—Tubular, .003 mfd., 400 volts C28
70646	Capacitor—Tubular, .0035 mfd., 1000 volts C34, C56
71926	Capacitor—Tubular, .005 mfd., 200 volts C20, C27, C32
71553	Capacitor—Tubular, .005 mfd., 400 volts C14, C16, C17, C21, C22
71923	Capacitor—Tubular, .01 mfd., 200 volts C23, C25
71925	Capacitor—Tubular, .01 mfd., 400 volts C29, C41, C54
73561	Capacitor—Tubular, .01 mfd., 400 volts C58, C59
72120	Capacitor—Tubular, .015 mfd., 200 volts C52
71928	Capacitor—Tubular, .02 mfd., 200 volts C51
73638	Capacitor—Tubular, .02 mfd., 400 volts C55
71551	Capacitor—Tubular, .05 mfd., 200 volts C15
73747	Capacitor—Electrolytic, 2 mfd., 50 volts C33
74200	Capacitor—Electrolytic, comprising 1 section of 10 mfd., 300 volts and 1 section of 100 mfd., 10 volts....C57A, C57B
73372	Capacitor—Electrolytic, comprising 1 section of 30 mfd., 350 volts, 1 section of 30 mfd., 300 volts and 1 section of 20 mfd., 25 volts C18A, C18B, C18C
73744	Coil—Oscillator coil—A.M. L4
73918	Coil—Antenna coil—F.M. L1
73916	Coil—Oscillator coil—F.M. L2
71942	Coil—Filament choke coil L3
33514	Connector—Phono input connection socket (dual)
5040	Connector—4-contact female connecting socket for speaker cable
30868	Connector—2-contact female connecting socket for record changer motor cable
*74639	Control—Volume control and power switch (R14, S3)
†72953	Cord—Drive cord (approximately 48" overall length required)
73690	Cord—Power cord and plug
16058	Grommet—Rubber grommet to mount R-F shelf (4 required)
72069	Grommet—Rubber grommet for rear mounting feet (2 required)
73895	Indicator—Station selector indicator
*74645	Nut—#8-32 hex retainer nut between R-F shelf and volume control knob shaft
74297	Plate—Dial back plate assembly complete with two (2) drive cord pulleys
*74640	Pulley—Pulley and hub for volume control shaft
	Resistors—Fixed composition resistors:
	68 ohms, ±10%, ½ watt R7
	100 ohms, ±10%, ½ watt R17, R27, R36
	120 ohms, ±10%, ½ watt R12
	470 ohms, ±10%, 2 watts R21
	560 ohms, ±10%, ½ watt R35
	680 ohms, ±20%, ½ watt R9, R11
	1200 ohms, ±5%, ½ watt R23
73637	Resistor—Wire wound, 2200 ohms, 5 watts R22
	Resistors—Fixed composition resistors:
	3300 ohms, ±5%, ½ watt R24
	5600 ohms, ±10%, ½ watt R47
	8200 ohms, ±10%, ½ watt R43
	10,000 ohms, ±10%, ½ watt R32, R50
	15,000 ohms, ±10%, ½ watt R13, R18, R30
	18,000 ohms, ±10%, ½ watt R4
	22,000 ohms, ±10%, ½ watt R48
	27,000 ohms, ±10%, ½ watt R8, R40
	27,000 ohms, ±10%, 1 watt R5
	33,000 ohms, ±10%, ½ watt R6
	39,000 ohms, ±10%, ½ watt R25
	56,000 ohms, ±10%, 1 watt R10
	82,000 ohms, ±10%, ½ watt R42
	100,000 ohms, ±10%, ½ watt R45
	120,000 ohms, ±10%, ½ watt R46
	220,000 ohms, ±10%, ½ watt R49
	270,000 ohms, ±10%, ½ watt R19, R29
	330,000 ohms, ±10%, ½ watt R28
	470,000 ohms, ±10%, ½ watt R20, R26, R44
	2.2 megohms, ±20%, ½ watt R3
	3.9 megohms, ±10%, ½ watt R2
	10 megohms, ±20%, ½ watt R15, R41
	22 megohms, ±20%, ½ watt R16

STOCK No.	DESCRIPTION
73894	Shaft—Tuning knob shaft
73632	Shield—Tube shield—for V2, V5
*74646	Sleeve—Sleeve and pulley assembly (for volume control knob shaft)
72516	Socket—Tube socket, miniature—for V4, V5, V7
73606	Socket—Tube socket, miniature—for V1, V2, V3
31251	Socket—Tube socket, octal, wafer—for V6, V8, V9
73117	Socket—Tube socket, miniature—for V10
31364	Socket—Dial lamp or pilot lamp socket
74038	Spring—Tension spring for drive cord
74202	Support—Polystyrene support for F.M. oscillator coil complete with mounting bracket
73891	Switch—Tone control switch (S4)
*74644	Switch—Selector switch (S1, S2)
73743	Transformer—Ratio detector transformer (T4)
73745	Transformer—First I.F. transformer—dual (T2)
*74642	Transformer—Second I.F. transformer—dual (T3)
*74643	Transformer—Power transformer, 115 volt, 60 cycle (T1)
33726	Washer—"C" washer for tuning knob shaft
	SPEAKER ASSEMBLIES Stamped 92569-5W RL 103B5
13867	Cap—Dust cap
73934	Cone—Cone and voice coil assembly
5039	Plug—4-prong male plug for speaker
73635	Speaker—12" PM speaker complete with cone and voice coil—less output transformer and plug
71145	Suspension—Metal cone suspension
73636	Transformer—Output transformer (T5)
	Note: If stamping on speaker does not agree with above number, order replacement parts by referring to model number of instrument, number stamped on speaker and full description of part required.
	MISCELLANEOUS
*74649	Antenna—F.M. antenna
74205	Bezel—Dial scale bezel less dial
74054	Bracket—Pilot lamp bracket
71105	Cable—Shielded pickup cable for record changer, complete with pin plug
13103	Cap—Pilot lamp cap
71892	Catch—Door strike and catch
74298	Clamp—Dial clamp (2 required)
X3038	Cloth—Grille cloth (2 required) for mahogany or walnut instruments
X3039	Cloth—Grille cloth (2 required) for oak instruments
30868	Connector—2-contact female connecting socket for motor cable
30870	Connector—2-contact male connecting plug for motor cable
74581	Cover—Mounting screw cover (plug-in type) for mounting record changer (3 required)
*74737	Decal—Control panel function decal for mahogany or walnut instruments
*74738	Decal—Control panel function decal for oak instruments
74273	Decal—Trade mark decal ("Victrola")
*74647	Dial—Glass dial scale
73549	Emblem—"RCA Victor" emblem (metal)
11889	Grommet—Rubber grommet for front apron of chassis (2 required)
73735	Hinge—Drop door hinge (2 required)
71821	Knob—Tuning knob—maroon—for mahogany or walnut instruments
72824	Knob—Tuning knob—brown—for oak instruments
73998	Knob—Volume control knob—maroon—for mahogany or walnut cabinets
73995	Knob—Volume control knob—brown—for oak instruments
73230	Knob—Function switch knob—maroon—for mahogany or walnut instruments
73231	Knob—Function switch knob—brown—for oak instruments
*74845	Knob—Tone control switch knob—maroon—for mahogany or walnut instruments
*74846	Knob—Tone control switch knob—brown—for oak instruments
11765	Lamp—Dial lamp—Mazda 51
*74648	Loop—Antenna loop
74208	Nut—Tee nut for mounting record changer (3 required)
74582	Screw—#8-32 x 1¾" special screw for mounting record changer (3 required)
*74736	Slide—Record changer tray slide
74421	Spring—Conical spring for mounting record changer—upper—RH side (1 required)
74422	Spring—Conical spring for mounting record changer—upper—LH side (2 required)
74423	Spring—Conical spring for mounting record changer—lower (3 required)
30900	Spring—Retaining spring for knobs 71821 and 72824
72845	Spring—Retaining spring for knobs 73995 and 73998
14270	Spring—Retaining spring for knobs 73230 and 73231
73412	Support—Drop door fall support

©John F. Rider

MODELS 9X561, Ch. RC-1079B;
9X562, Ch. RC-1079C

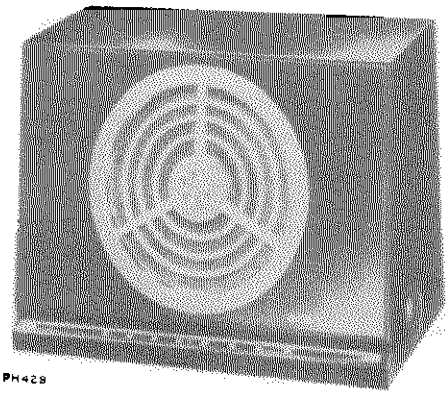

PH428

9X561
Maroon

9X562
Ivory

Specifications

Tuning Range..... 540-1600 kc

Intermediate Frequency..... 455 kc

Tube Complement

(1) RCA 12SA7 ..... Converter
(2) RCA 12SK7 ..... I-F Amplifier
(3) RCA 12SQ7 ..... Det.—A.V.C.—A-F Amp.
(4) RCA 50L6GT ..... Output
(5) RCA 35Z5GT ..... Rectifier

Power Supply Rating

115 volts a.c., 50 to 60 cycles or d.c..... 30 watts

Power Output

Undistorted ..... .85 watts
Maximum ..... 1.1 watts

Dial Lamps (2)..... Mazda type 1490, 3.2 volts, .16 amp.

Loudspeaker (92586-4)

Size and Type..... 8 in. PM
Voice Coil Impedance..... 3.2 ohms at 400 cycles

Cabinet Dimensions

Height... 9¾" Width... 12½" Depth... 8⅜"

Weight..... 9 lbs.

Tuning Drive Ratio..... 9 to 1 (4½ turns of knob)

POWER SUPPLY POLARITY.— For operation on d.c., the power plug must be inserted in the outlet for correct polarity. If the set does not function, reverse the plug. On a.c., reversal of the plug may reduce hum.

Replacement Parts

Stock No.	DESCRIPTION
	CHASSIS ASSEMBLIES **RC 1079B—9X561** **RC 1079C—9X562**
74655	Back—Cabinet back (maroon) and loop assembly for Model 9X561 ..... L1
*74656	Back—Cabinet back (ivory) and loop assembly for Model 9X562 ..... L1
74653	Capacitor—Variable tuning capacitor.. C1, C2, C3, C4
71924	Capacitor—Ceramic, 56 mmf..... C5
*74661	Capacitor—Ceramic, 470 mmf..... C14
74662	Capacitor—Electrolytic, comprising 1 section of 80 mfd., 150 volts and 1 section of 50 mfd., 150 volts..... C16A, C16B
73186	Capacitor—Tubular, .001 mfd., 400 volts..... C9
71927	Capacitor—Tubular, .002 mfd., 400 volts..... C15
71923	Capacitor—Tubular, .01 mfd., 200 volts..... C12
72827	Capacitor—Tubular, .01 mfd., 400 volts..... C17
71928	Capacitor—Tubular, .02 mfd., 200 volts..... C13
73553	Capacitor—Tubular, .05 mfd., 400 volts..... C8, C18
70617	Capacitor—Tubular, 0.1 mfd., 400 volts..... C19, C6
73935	Clip—Mounting clip for I.F. transformers
74448	Coil—Oscillator coil..... L2, L3
35787	Connector—Phono input connector (socket)
74133	Control—Volume control and power switch.. R10, S1
†72953	Cord—Drive cord (approx. 43" overall length required)
73693	Grommet—Power cord strain relief (1 set)
72283	Grommet—Rubber grommet for mounting tuning capacitor (3 required)
74658	Indicator—Station selector indicator (ivory) for Model 9X561
74657	Indicator—Station selector indicator (red) for Model 9X562
71116	Lamp—Dial lamp—Mazda 1490
74651	Plate—Dial back plate (maroon) complete with three (3) pulleys for Model 9X561
74652	Plate—Dial back plate (ivory) complete with three (3) pulleys for Model 9X562
74660	Resistor—Wire wound, 15 ohms, ½ watt..... R16
	Resistors—Fixed composition resistors:
	82 ohms, ±10%, ½ watt..... R17
	150 ohms, ±10%, ½ watt..... R14
	1,000 ohms, ±10%, 1 watt..... R15
	22,000 ohms, ±10%, ½ watt..... R2
	33,000 ohms, ±10%, ½ watt..... R9
	56,000 ohms, ±10%, ½ watt..... R4
	220,000 ohms, ±10%, ½ watt..... R12, R18
	330,000 ohms, ±10%, ½ watt..... R6
	470,000 ohms, ±10%, ½ watt..... R13
	3.3 megohm, ±10%, ½ watt..... R5
	10 megohm, ±10%, ½ watt..... R11
74659	Shaft—Tuning knob shaft and pulley
31251	Socket—Tube socket, octal
74663	Socket—Dial lamp socket
74038	Spring—Tension spring for drive cord
33634	Switch—Phono switch..... S2
*74654	Transformer—Output transformer..... T3
73036	Transformer—First I.F. transformer..... T1
73037	Transformer—Second I.F. transformer..... T2
33726	Washer—"C" washer for tuning knob shaft
	SPEAKER ASSEMBLIES **STAMPED 92586-4**
*74759	Cone—Cone and voice coil assembly
*74664	Speaker—8" P.M. speaker complete with cone and voice coil NOTE: If stamping on speaker does not agree with above number, order replacement parts by referring to model number of instrument, number stamped on speaker and full description of part required.
	MISCELLANEOUS
*74665	Bezel—Round bezel for cabinet—polystyrene
Y2131	Cabinet—Plastic cabinet—maroon—for Model 9X561
Y2132	Cabinet—Plastic cabinet — ivory — for Model 9X562
74904	Clamp—Dial clamp
74671	Clip—Dial clip (1 set)
*74675	Cloth—Grille cloth for Model 9X561
*74756	Cloth—Grille cloth for Model 9X562
74668	Dial—Dial scale
74674	Emblem—"RCA Victor" emblem
74666	Knob—Control knob—maroon—for Model 9X561
*74667	Knob—Control knob—ivory—for Model 9X562
*74673	Nut—Speed nut to fasten bezel
*74669	Screw—No. 8 x ⅝" pan head cross-recessed screw to fasten speaker (4 required)
*74670	Screw—No. 8 x 7/16" pan head cross-recessed screw to fasten dial clamps (2 required)
74734	Spring—Spring clip for knob

©John F. Rider

MODELS 9X561, Ch. RC-1079B;
9X562, Ch. RC-1079C

Lead Dress

1. Dress all heater leads down to chassis and away from all audio grid and plate wiring.
2. Dress power cord down to chassis base and corner.
3. Dress capacitor C18 against back apron.
4. Dress capacitor C13 down to base alongside of shielded lead.
5. Dress output transformer leads down to chassis.
6. Dress capacitors C9 and C15 as direct as possible.
7. Dress dial lamp leads on top of chassis between 12SQ7 and 50L6GT tubes; below chassis, as short as possible to rectifier socket.
8. Dress excess loop leads away from tubes and clear of tuning condenser.

Alignment Procedure

Test-Oscillator. — For all alignment operations, connect the low side of the test-oscillator to the receiver chassis, and keep the oscillator output as low as possible to avoid a-v-c action.

On AC operation an isolation transformer (115 v./115 v.) may be necessary for the receiver if the test oscillator is also AC operated.

Steps	Connect the high side of test-oscillator to—	Tune test-osc. to—	Turn radio dial to—	Adjust the following for max. output
1	12SK7 I-F grid through 0.1 mfd. capacitor	455 kc	Quiet-point 1600 kc end of dial	T2 (top and bottom) 2nd I-F trans.
2	Stator of C1 through 0.1 mfd.			*T1 (top and bottom) 1st I-F trans.
3	Short wire placed near loop to radiate signal	1620 kc	Min. cap.	C4 (osc.)
4		1400 kc	1400 kc	†C2 (ant.)
5		600 kc	600 kc	L3 (osc.) Rock gang
6		Repeat steps 3, 4 and 5.		

*Do not readjust T2 when test oscillator is connected to C1.

†When adjusting C2 (ant. trimmer) it is necessary to have the loop in the same position and spacing as it will have when assembled in the cabinet.

Dial Calibration

With the tuning condenser fully meshed, the dial pointer should be set to the first score mark at the left-hand end of the dial back plate. The four score marks represent: Max. cap. 600 kc 1400 kc min. cap.

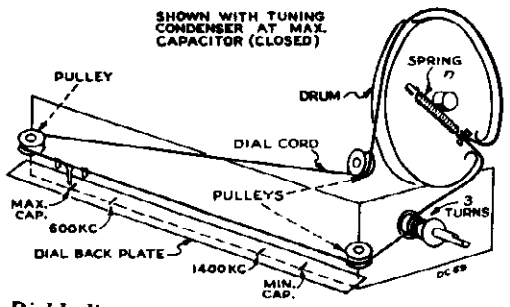

Dial Indicator and Drive Cord

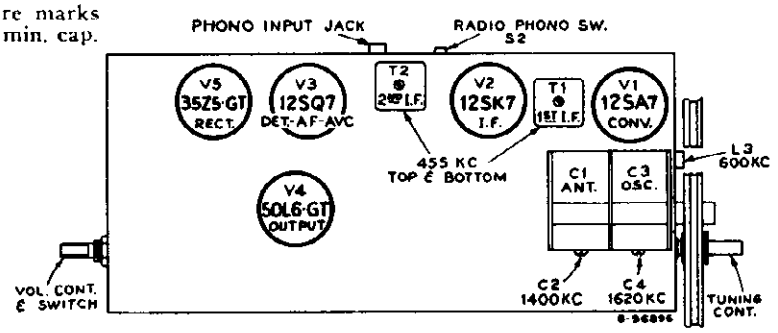

Tube and Trimmer Locations

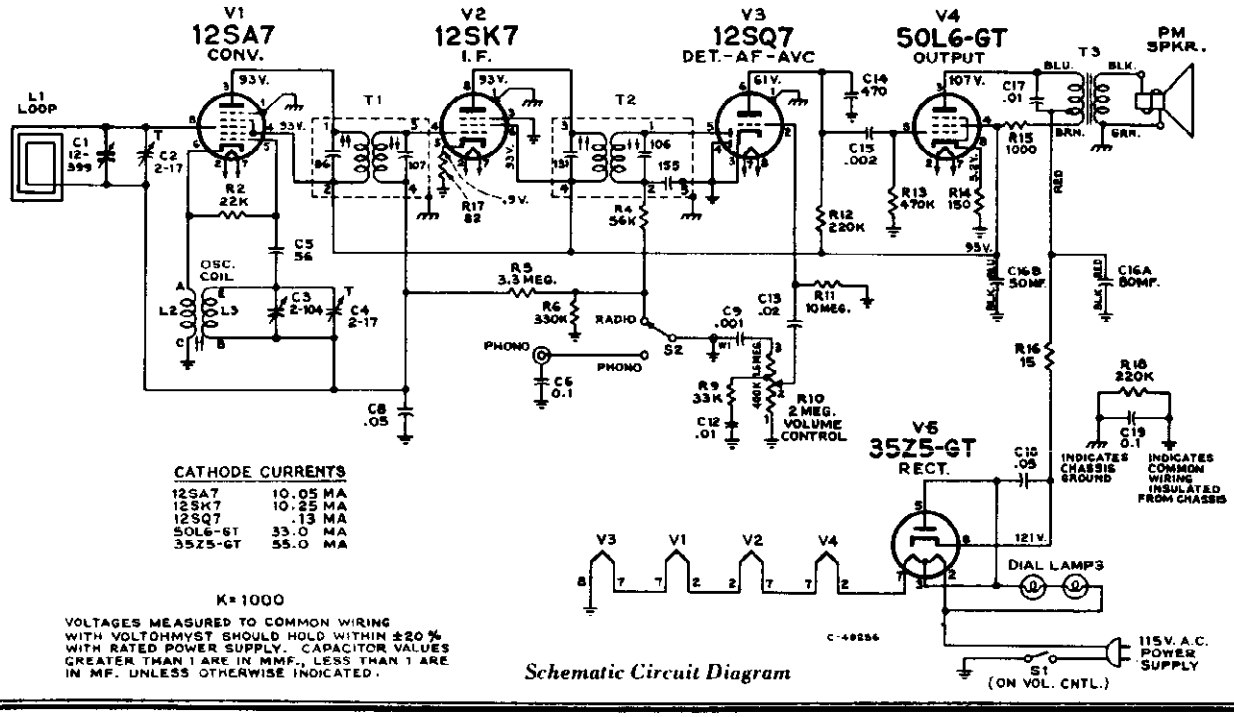

CATHODE CURRENTS

12SA7	10.05 MA
12SK7	10.25 MA
12SQ7	.13 MA
50L6-GT	33.0 MA
35Z5-GT	55.0 MA

K=1000

VOLTAGES MEASURED TO COMMON WIRING WITH VOLTOHMYST SHOULD HOLD WITHIN ±20% WITH RATED POWER SUPPLY. CAPACITOR VALUES GREATER THAN 1 ARE IN MMF., LESS THAN 1 ARE IN MF. UNLESS OTHERWISE INDICATED.

Schematic Circuit Diagram

©John F. Rider

MODELS 9X571, Ch. RC-1079;
9X572, Ch. RC-1079A

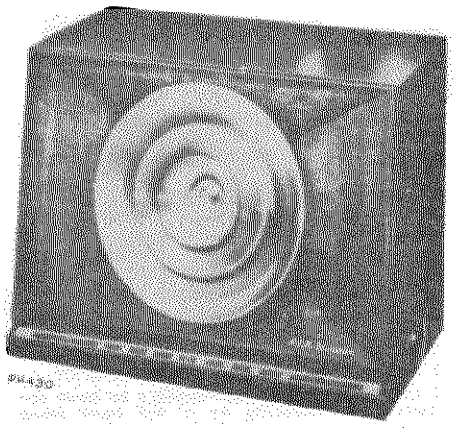

9X571
Maroon

9X572
Ivory

Specifications

Tuning Range ..... 540-1600 kc
Intermediate Frequency ..... 455 kc
Tube Complement
(1) RCA 12SA7 ..... Converter
(2) RCA 12SK7 ..... I-F Amplifier
(3) RCA 12SQ7 ..... Det.—A.V.C.—A-F Amp.
(4) RCA 50L6GT ..... Output
(5) RCA 35Z5GT ..... Rectifier
Power Supply Rating
115 volts a.c., 50 to 60 cycles or d.c. ..... 30 watts
Power Output
Undistorted ..... 1.1 watts
Maximum ..... 1.75 watts

Dial Lamps (2) ..... Mazda type 1490, 3.2 volts, .16 amp.
Loudspeaker (92586-2W)
Size and Type ..... 8 in. PM
Voice Coil Impedance ..... 3.2 ohms at 400 cycles
Cabinet Dimensions
Height... 9 11/16" Width... 12½" Depth... 8 5/16"
Weight ..... 10 lbs.
Tuning Drive Ratio ..... 9 to 1 (4½ turns of knob)

POWER SUPPLY POLARITY. — For operation on d.c., the power plug must be inserted in the outlet for correct polarity. If the set does not function, reverse the plug. On a.c., reversal of the plug may reduce hum.

Replacement Parts

Stock No.	DESCRIPTION
	CHASSIS ASSEMBLIES **RC 1079 Model 9X571** **RC 1079A Model 9X572**
*74655	Back—Cabinet back (tan) and loop assembly ... L1
*74653	Capacitor—Variable tuning capacitor C1, C2, C3, C4
71924	Capacitor—Ceramic, 56 mmf. ... C5
71514	Capacitor—Ceramic, 82 mmf. ... C11
73501	Capacitor—Ceramic, 150 mmf. ... C7, C14
*74678	Capacitor—Electrolytic, comprising 2 sections of 120 mfd., 150 volts and 1 section of 40 mfd., 25 volts ... C16A, C16B, C16C
73186	Capacitor—Tubular, .001 mfd., 400 volts ... C9
73961	Capacitor—Tubular, .003 mfd., 200 volts ... C10
71923	Capacitor—Tubular, .01 mfd., 200 volts ... C12
72827	Capacitor—Tubular, .01 mfd., 400 volts ... C15, C17
71928	Capacitor—Tubular, .02 mfd., 200 volts ... C13, C20
73553	Capacitor—Tubular, .05 mfd., 400 volts ... C8, C18
70617	Capacitor—Tubular, 0.1 mfd., 400 volts ... C19, C6
73935	Clip—Mounting clip for I.F. transformer
74448	Coil—Oscillator coil ... L2, L3
35787	Connector—Phono input connector (socket)
71596	Control—Volume control ... R10
†72953	Cord—Dial drive cord (approx. 43" overall length required)
73693	Grommet—Power cord strain relief (1 set)
72283	Grommet—Rubber grommet for mounting tuning capacitor (3 required)
*74658	Indicator—Station selector indicator (ivory) for Model 9X571
*74657	Indicator—Station selector indicator (red) for Model 9X572
71116	Lamp—Dial lamp—Mazda 1490
*74651	Plate—Dial back plate (maroon) complete with three (3) pulleys for Model 9X571
*74652	Plate—Dial back plate (ivory) complete with three (3) pulleys for Model 9X572
18469	Plate—Bakelite mounting plate for electrolytic capacitor
72313	Resistor—Fuse type, 33 ohms ... R16
	Resistors—Fixed composition resistors
	82 ohms, ±10%, ½ watt ... R17
	150 ohms, ±10%, ½ watt ... R14
	1,000 ohms, ±10%, 1 watt ... R15
	18,000 ohms, ±10%, ½ watt ... R19
	22,000 ohms, ±10%, ½ watt ... R2
	27,000 ohms, ±10%, ½ watt ... R9
	56,000 ohms, ±10%, ½ watt ... R4
	220,000 ohms, ±10%, ½ watt ... R6, R7, R12, R18
	470,000 ohms, ±10%, ½ watt ... R13
	1 megohm, ±10%, ½ watt ... R8
	3.3 megohms, ±10%, ½ watt ... R5
	10 megohm, ±10%, ½ watt ... R11

Stock No.	DESCRIPTION
*74659	Shaft—Tuning knob shaft and pulley
31251	Socket—Tube socket, octal
*74663	Socket—Dial lamp sockets and lead assembly
74038	Spring—Tension spring for drive cord
*74676	Switch—Function switch ... S1
73036	Transformer—First I.F. transformer ... T1
73037	Transformer—Second I.F. transformer ... T2
*74677	Transformer—Output transformer ... T3
33726	Washer—"C" washer for tuning knob shaft
	SPEAKER ASSEMBLIES **92586-2W** **RL 105C2**
*74758	Cone—Cone and voice coil assembly
*74679	Speaker—8" P.M. speaker complete with cone and voice coil NOTE. — If stamping on speaker does not agree with above number, order replacement parts by referring to model number of instrument, number stamped on speaker and full description of part required.
	MISCELLANEOUS
*74683	Base—Grille base for diffuser rings
*74687	Button—Diffuser decorative button
Y2133	Cabinet—Plastic cabinet—maroon—less diffuser rings and dial—Model 9X571
Y2134	Cabinet—Plastic cabinet — ivory — less diffuser rings and dial—Model 9X572
74904	Clamp—Dial clamp
*74671	Clip—Dial clip (1 set)
*74689	Cushion—Rubber cushion between cabinet and grille base
*74682	Decal—Function switch decal
*74668	Dial—Dial scale
*74674	Emblem—"RCA Victor" emblem
*74680	Knob—Function switch knob — light tan — for Model 9X572
*74681	Knob — Function switch knob — maroon — for Model 9X571
*74666	Knob—Volume control or tuning knob—maroon —for Model 9X571
*74806	Knob—Volume control or tuning knob—light tan—for Model 9X572
74340	Nut—Speed nut to hold decorative button
*74685	Nut—Speed nut to hold diffuser rings (18 required)
*74684	Ring—Outer diffuser ring (7" diameter)
*74685	Ring—Middle diffuser ring (4 15/32" diameter)
*74686	Ring—Inner diffuser ring (2 21/32" diameter)
74301	Screw—No. 8 x ⅜" pan head, cross-recessed screw for mounting grille base (6 required)
*74734	Spring—Retaining spring for knobs

©John F. Rider

MODELS 9X571, Ch. RC-1079; 9X572, Ch. RC-1079A

Critical Lead Dress

1. Dress all heater leads down to chassis and away from all audio grid and plate wiring.
2. Dress power cord to back apron and away from phono jack.
3. Dress capacitor C18 against back apron.
4. Connect shielded capacitor C13 direct and with a minimum of exposed leads.
5. Dress dial lamp leads on top of chassis around electrolytic capacitor and between 12SQ7 and 50L6GT tubes.
6. Dress output transformer leads down to chassis.
7. Dress excess loop leads away from tubes and clear of tuning condenser.

Test-Oscillator. — For all alignment operations, connect the low side of the test-oscillator to the receiver chassis, and keep the oscillator output as low as possible to avoid a-v-c action.

On AC operation an isolation transformer (115 v./115 v.) may be necessary for the receiver if the test oscillator is also AC operated.

Dial Calibration

With the tuning condenser fully meshed, the dial pointer should be set to the first score mark at the left-hand end of the dial back plate. The four score marks represent: Max. cap. 600 kc 1400 kc min. cap.

Steps	Connect the high side of test-oscillator to—	Tune test-osc. to—	Turn radio dial to—	Adjust the following for max. output
1	*12SK7 I-F grid through 0.1 mfd. capacitor	455 kc	Quiet-point 1600 kc end of dial	T2 (top and bottom) 2nd I-F trans.
2	Stator of C1 through 0.1 mfd.			*T1 (top and bottom) 1st I-F trans.
3	Short wire placed near loop to radiate signal	1620 kc	Min. cap.	C4 (osc.)
4		1400 kc	1400 kc	†C2 (ant.)
5		600 kc	600 kc	L3 (osc.) Rock gang
6		Repeat steps 3, 4 and 5.		

*Do not readjust T2 when test oscillator is connected to C1.

†When adjusting C2 (ant. trimmer) it is necessary to have the loop in the same position and spacing as it will have when assembled in the cabinet.

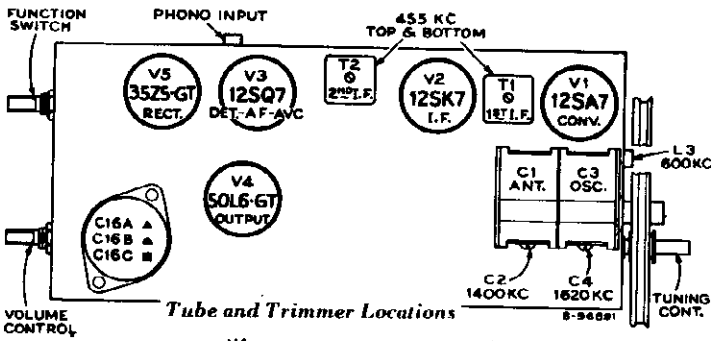

Tube and Trimmer Locations

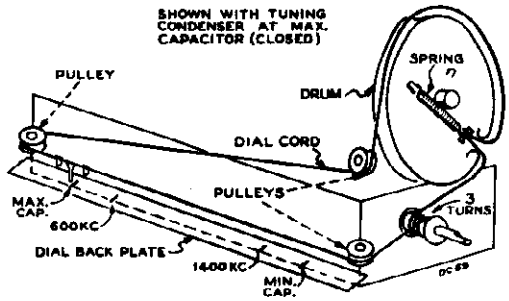

Dial Indicator and Drive Cord

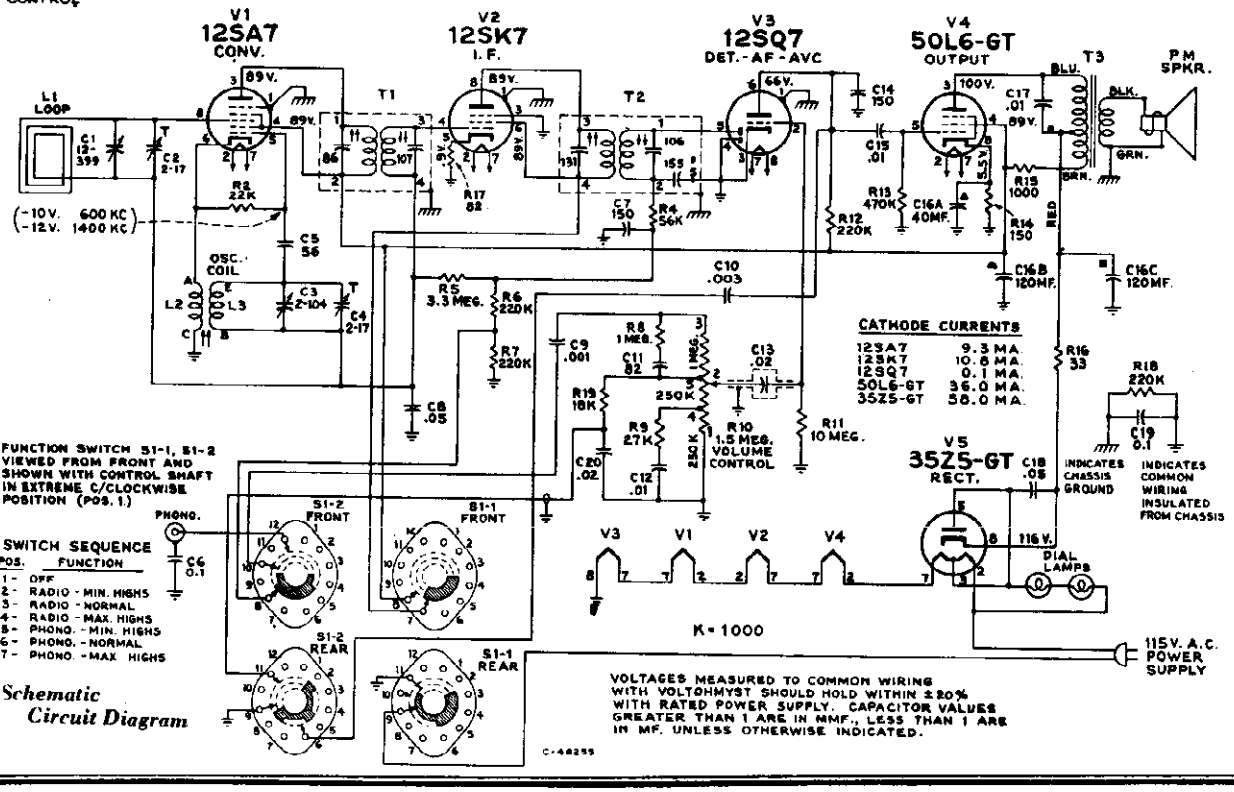

Schematic Circuit Diagram

©John F. Rider

MODELS 9X641, Ch. RC-1080;
9X642, Ch. RC-1080A

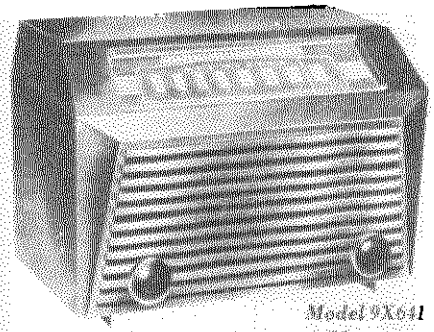

Model 9X641
Maroon

Model 9X642
Ivory

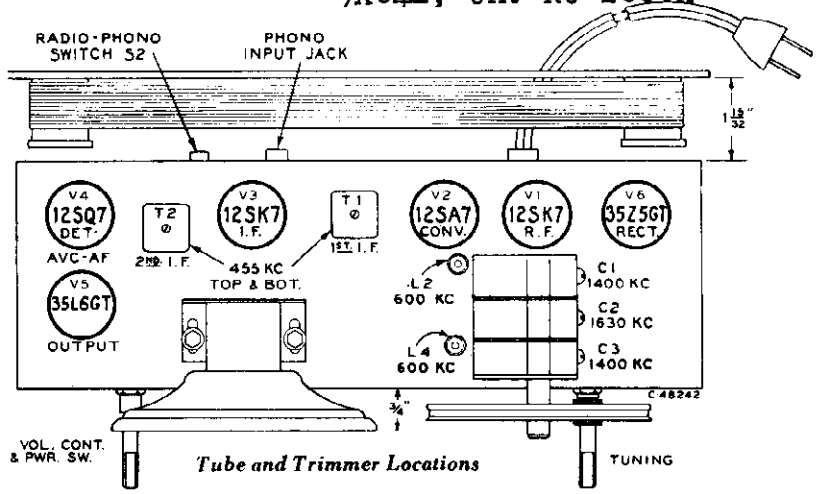

Tube and Trimmer Locations

SPECIFICATIONS

Tuning Range ..... 540—1600 kc

Intermediate Frequency ..... 455 kc

Tube Complement

(1) RCA 12SK7	R.F. Amplifier
(2) RCA 12SA7	Converter
(3) RCA 12SK7	I.F. Amplifier
(4) RCA 12SQ7	Det.-A.V.C.-A.F. Amp.
(5) RCA 35L6GT	Output
(6) RCA 35Z5GT	Rectifier

Power Supply Rating
115 volts d. c. or 50 to 60 cycles a. c. ..... 32 watts

Dial Lamp ..... Mazda type 51, 6-8 volts, 0.2 amp.

Loudspeaker (92572-4)
Size and type ..... 5-in. P.M.
Voice coil impedance ..... 3.2 ohms at 400 cycles

Power Output
Undistorted ..... 0.75 watt
Maximum ..... 1.25 watts

Tuning-Drive Ratio ..... 10 to 1 (5 turns of knob)

Weight ..... 8¾ lbs.

Cabinet Dimensions
Height ..... 8½" Width ..... 12⅜" Depth ..... 7½"

REPLACEMENT PARTS

STOCK No.	DESCRIPTION	STOCK No.	DESCRIPTION
	CHASSIS ASSEMBLIES **RC 1080—9X641 RC 1080A—9X642**		Resistor—Fixed, composition, 22,000 ohms, ±10%, ½ watt (R3)
*74694	Back—Cabinet back and loop assembly—maroon—for Model 9X641		Resistor—Fixed, composition, 56,000 ohms, ±10%, ½ watt (R7)
*74695	Back—Cabinet back and loop assembly—ivory—for Model 9X642		Resistor—Fixed, composition, 220,000 ohms, ±10%, ½ watt (R5, R6)
*74692	Capacitor—Variable tuning capacitor (C1, C2, C3, C4, C5, C6)		Resistor—Fixed, composition, 470,000 ohms, ±10%, ½ watt (R10)
39042	Capacitor—Ceramic, 47 mmf. (C8)		Resistor—Fixed, composition, 2.2 megohm, ±10%, ½ watt (R8)
71924	Capacitor—Ceramic, 56 mmf. (C9)		Resistor—Fixed, composition, 4.7 megohm, ±10%, ½ watt (R9)
73501	Capacitor—Ceramic, 150 mmf. (C12, C13)	*74691	Shaft—Tuning knob shaft and pulley
*74662	Capacitor—Electrolytic, comprising 1 section of 80 mfd. 150 volts and 1 section of 50 mfd. 150 volts (C19A, C19B)	54414	Socket—Tube socket
		*74697	Socket—Dial lamp socket and lead
72315	Capacitor—Tubular, .002 mfd. 200 volts (C14)	74038	Spring—Tension spring for drive cord
70572	Capacitor—Tubular, .015 mfd. 400 volts (C16)	33634	Switch—Radio-Phono switch (S2)
71928	Capacitor—Tubular, .02 mfd. 200 volts (C15)	73036	Transformer—First I.F. transformer (T1)
73553	Capacitor—Tubular, .05 mfd. 400 volts (C17, C18)	73037	Transformer—Second I.F. transformer (T2)
70617	Capacitor—Tubular, .1 mfd. 400 volts (C10, C11)	73976	Transformer—Output transformer (T3)
73935	Clip—Mounting clip for I.F. transformer	35969	Washer—"C" washer for tuning shaft
73677	Coil—R.F. coil (L1, L2)		
*74693	Coil—Oscillator coil (L3, L4)		**SPEAKER ASSEMBLIES** **Stamped 92572-4**
35787	Connector—Phono input connector (socket)		
38410	Control—Volume control and power switch (R14, S1)	73900	Speaker—5" P.M. speaker complete with cone and voice coil NOTE.—If stamping of speaker does not agree with above number, order replacement by referring to model number of instrument and number stamped on speaker.
70392	Cord—Power cord and plug		
†72953	Cord—Dial drive cord (approx. 52" overall length required)		
72283	Grommet—Rubber grommet to mount variable tuning capacitor (3 required)		
73693	Grommet—Power cord strain relief (1 set)		
*74696	Indicator—Station selector indicator		
*74690	Plate—Dial back plate complete with four (4) drive cord pulleys, less dial		**MISCELLANEOUS**
*74660	Resistor—Wire wound, 15 ohms, ½ watt (R13)	Y2135	Cabinet—Plastic cabinet—maroon—for Model 9X641
	Resistor—Fixed, composition, 68 ohms, ±10%, ½ watt (R1, R4)	Y2136	Cabinet—Plastic cabinet—ivory—for Model 9X642
	Resistor—Fixed, composition, 120 ohms, ±10%, ½ watt (R11)	*74699	Clamp—Dial clamp (1 set)
	Resistor—Fixed, composition, 1,200 ohms, ±10%, 1 watt (R12)	*74698	Dial—Dial scale
	Resistor—Fixed, composition, 12,000 ohms, ±10%, ½ watt (R2)	71821	Knob—Control knob—maroon—for Model 9X641
		72645	Knob—Control knob—ivory—for Model 9X642
		11765	Lamp—Dial lamp—Mazda 51
		30900	Spring—Retaining spring for knobs

† Stock No. 72953 is a reel containing 250 feet of cord.
* THIS IS THE FIRST TIME THIS STOCK NUMBER HAS APPEARED

© John F. Rider

MODELS 9X641, Ch. RC-1080;
9X642, Ch. RC-1080A

ALIGNMENT PROCEDURE

Cathode Ray Alignment is the preferable method. Connections for the oscilloscope are shown on the schematic diagram.

Output Meter Alignment.—If this method is used, connect the meter across the voice coil and turn the receiver volume control to maximum.

Test Oscillator.—Connect low side of test oscillator to common wiring in series with a .1 mf. capacitor. If the test oscillator is a. c. operated it may be necessary to use an isolation transformer for the receiver during alignment and the low side of the test oscillator connected directly to common wiring at the electrolytic capacitor. Keep the oscillator output low to prevent a-v-c action.

Step	Connect high side of sig. gen. to—	Sig. gen. output	Turn radio dial to—	Adjust for peak output
1	Pin No. 8 of 12SA7 tube	455 kc	Quiet point near 600 kc	Top and bottom cores of T1
2				Top and bottom cores of T2
3	"External Antenna" terminal through 100 mmf. capacitor	1,400 kc	1,400 kc	C6 Osc. C5 R.F. C4 Ant.
4		Shunt C5 with 22,000 ohm resistor		
		600 kc	600 kc	L4 Osc. (Rock gang)
5		Remove 22,000 ohm resistor from C5		
		600 kc	600 kc	L2 R.F.
6		Repeat steps 3, 4 and 5		

The position of the loop antenna in relation to the chassis affects adjustment of C4. The correct position is indicated on the illustration "Tube and Trimmer Locations."

NOTE.—If reception is not obtained on d. c. operation, reverse plug in outlet receptacle. On a.c. operation this may reduce hum.

The position of the speaker is adjustable; the correct position is indicated on the illustration "Tube and Trimmer Locations."

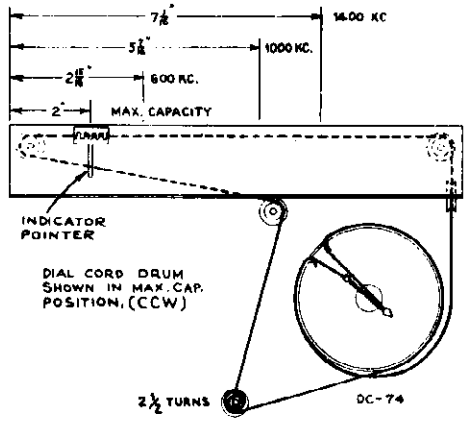

Dial Indicator and Drive Mechanism

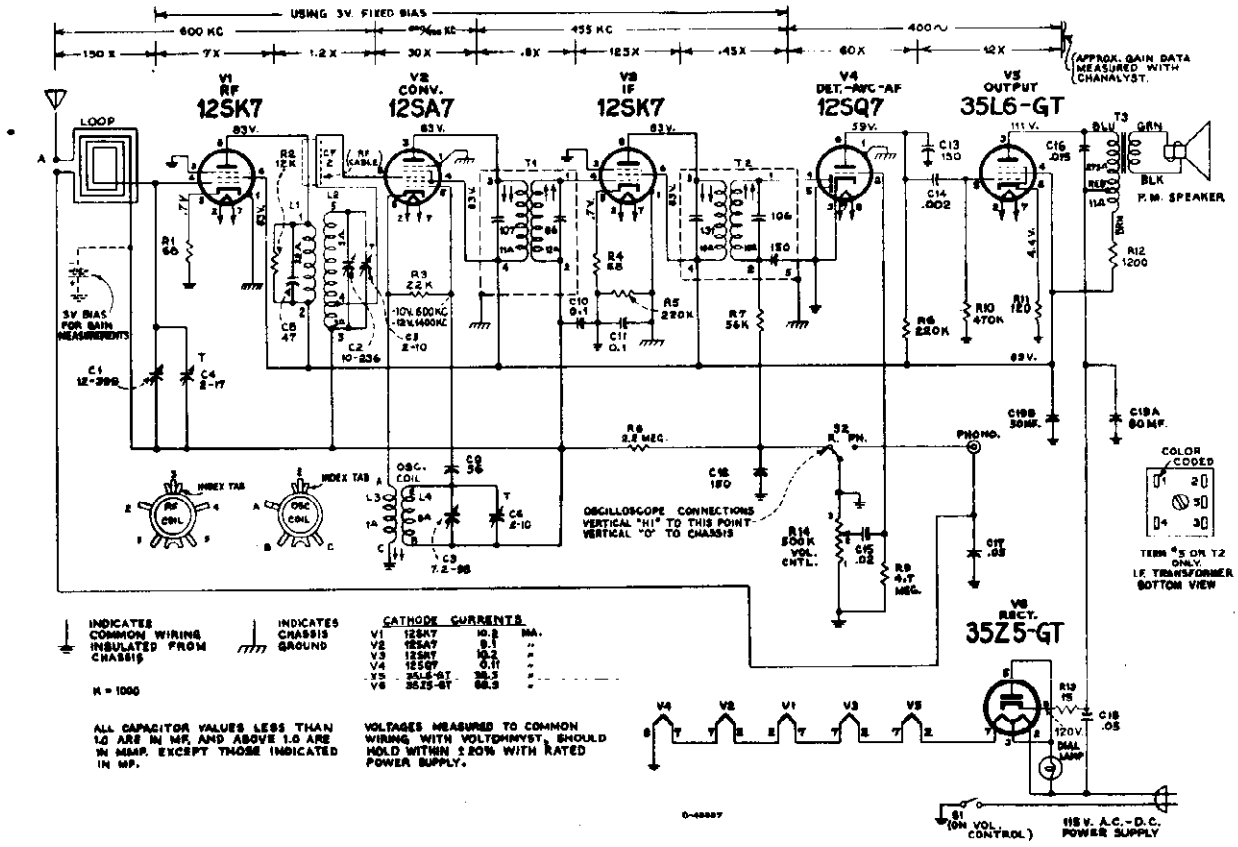

Schematic Diagram

In some chassis an alternate filter capacitor is used which has three sections. The low voltage section (20 mf. 25 volts) is not used. The alternate capacitor is mounted on top of the chassis and is available as Stock No. 73975.

©John F. Rider

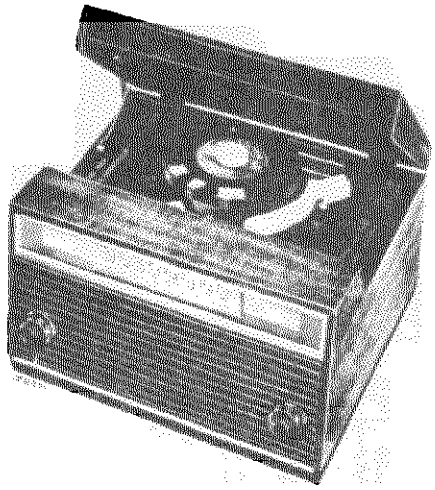

Tube and Trimmer Locations

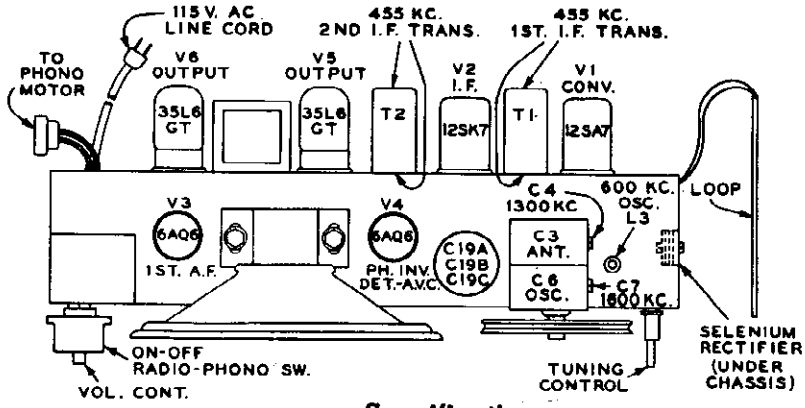

Alignment Procedure

Output Meter.—Connect meter across speaker voice coil. Turn volume control to maximum.

Test Oscillator.—Connect low side of test oscillator to common wiring in series with a .1 mf. capacitor. If the test oscillator is a.c. operated it may be necessary to use an isolation transformer for the receiver during alignment and the low side of the test oscillator connected directly to common wiring at the electrolytic capacitor. Keep the oscillator output low to prevent a-v-c action.

Dial Pointer Adjustment.—Rotate tuning condenser fully counterclockwise (plates fully meshed). Adjust indicator pointer so that it is 3⅜" from the left hand edge of the dial back plate.

Steps	Connect the high side of test-oscillator to—	Tune test-osc. to—	Turn radio dial to—	Adjust the following for max. output
1	I.F. grid, in series with .1 mfd.	455 kc	Quiet point 1,600 kc end of dial	Pri. & Sec. 2nd I.F. transformer
2	Converter grid in series with .1 mfd.			Pri. & Sec. 1st I.F. transformer
NOTE.—ANTENNA LOOP AND RECORD CHANGER MUST BE IN CABINET FOR THE FOLLOWING				
3	Short wire placed near loop for radiated signal	1,620 kc	Extreme R. H. end (gang open)	C7 (osc.)
4		1,400 kc	1,400 kc	C4 (ant.)
5		600 kc	600 kc	Osc. Coil L3 Rock gang
6	Repeat steps 3, 4, & 5 if necessary			

Dial Indicator and Drive Mechanism

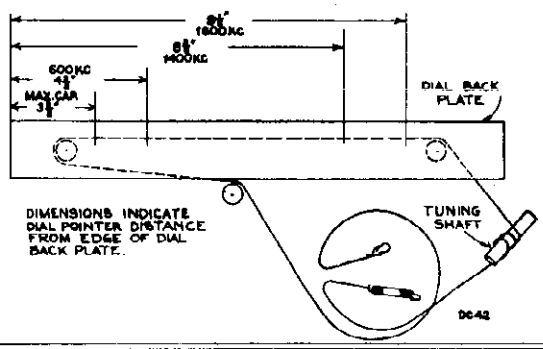

Specifications

Tuning Range ..... 540-1600 kc
Intermediate Frequency ..... 455 kc
Tube Complement

1. RCA-12SA7 ..... Converter
2. RCA-12SK7 ..... I-F Amplifier
3. RCA-6AQ6 ..... A-F Amplifier
4. RCA-6AQ6 ..... 2nd Det.-Ph. Inv.
5. RCA-35L6GT } Push-Pull Output
6. RCA-35L6GT }

A selenium rectifier is used.

Power Supply Rating 115 volts, 60 cycles a.c., 60 watts.
Dial Lamps (2) .....Mazda type 51, 6-8 volts, 0.2 amp.

Loudspeaker (92573-1K)
Size and type ..... 5" x 7" P.M.
Voice coil impedance ..... 3.4 ohms at 400 cycles
Power Output
Undistorted ..... 2.2 watts
Maximum ..... 3.0 watts
Cabinet Dimensions
Height 9 13/16" Width 18¼" Depth 14⅜"
Tuning Drive Ratio ..... 10½:1 (5¼ turns of knob)
Record Changer (RP-168A-1)
Turntable speed ..... 45 r.p.m
Records used ..... Long playing—7 in.
Record capacity ..... 8 records
Pickup ..... Crystal (medium output)

Service Hints

The two 6AQ6 tubes and the dial lamps are accessible by removing the sloping panel in the front of the record changer compartment.

When re-installing the chassis in the cabinet the dial lamps should be positioned to give maximum illumination of the dial without direct light of the lamps being visible from the front of the cabinet.

The chassis mounting board should be flush against the front of the cabinet.

The position of the speaker is adjustable. When correctly positioned, it should set firmly against the front of the cabinet but with no undue strain on the speaker.

CAUTION.—CLOSE TUNING CONDENSER PLATES COMPLETELY (C-C-W) BEFORE REMOVING OR RE-INSTALLING CHASSIS.

Controls

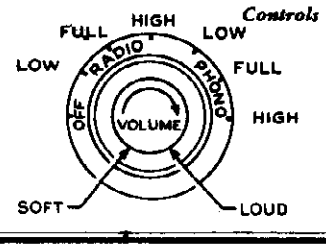

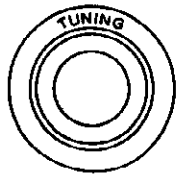

©John F. Rider

MODEL 9Y7, Ch. RC-1057B

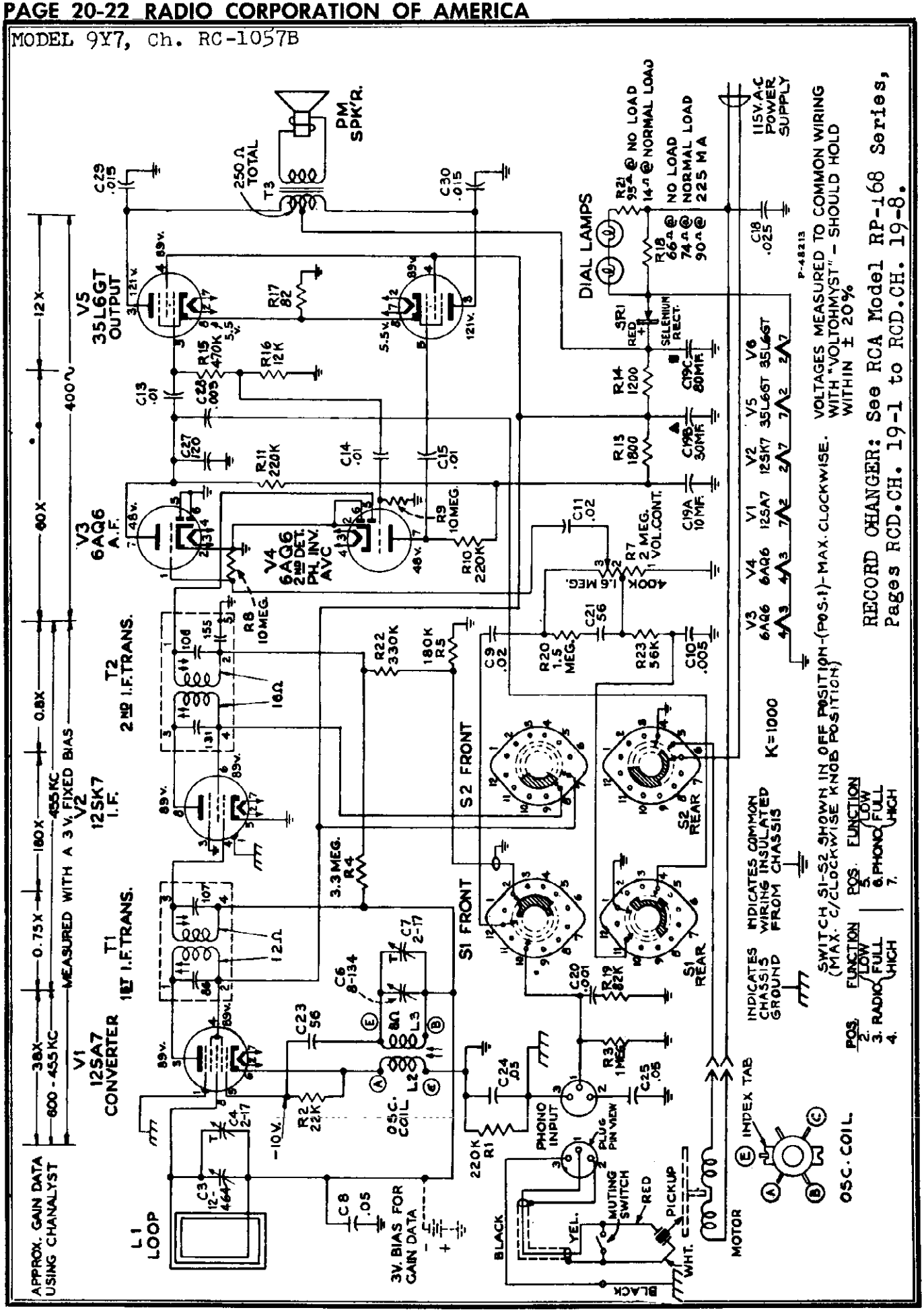

© John F. Rider

Replacement Parts

STOCK No.	DESCRIPTION
	CHASSIS ASSEMBLIES RC 1057B
71042	Button—Plug button to cover holes for I.F. transformers' adjustment (2 required)
*74246	Capacitor—Variable tuning capacitor (C3, C6, C7)
*74270	Capacitor—Mica trimmer, 3-30 mmf. (C26)
39622	Capacitor—Mica, 56 mmf. (C21)
73499	Capacitor—Ceramic, 56 mmf. (C23)
39630	Capacitor—Mica, 120 mmf. (C27)
70600	Capacitor—Tubular, .001 mfd., 400 volts (C20)
70603	Capacitor—Tubular, .003 mfd., 400 volts (C28)
72791	Capacitor—Tubular, .005 mfd., 400 volts (C10)
70612	Capacitor—Tubular, .025 mfd., 400 volts (C18)
73561	Capacitor—Tubular, .01 mfd., 400 volts (C13, C14, C15)
70572	Capacitor—Tubular, .015 mfd., 400 volts (C29, C30)
73638	Capacitor—Tubular, .02 mfd., 400 volts (C9)
70611	Capacitor—Tubular, .02 mfd., 400 volts (C11)
73553	Capacitor—Tubular, .05 mfd., 400 volts (C8, C25)
70615	Capacitor—Tubular, .05 mfd., 400 volts (C24)
73013	Capacitor—Electrolytic, comprising 1 section of 80 mfd., 150 volts, 1 section of 30 mfd., 150 volts and 1 section of 10 mfd., 150 volts (C19A, C19B, C19C)
73935	Clip—Mounting clip for I.F. transformers (2 required)
73048	Coil—Oscillator coil (L2, L3)
38403	Control—Volume control (R7)
†72953	Cord—Drive cord (approx. 50" length required)
70392	Cord—Power cord and plug
70397	Gear—Power, radio and phono switch gear
73014	Gear—Volume control gear—less spring
72283	Grommet—Rubber grommet to mount tuning capacitor (3 required)
73886	Indicator—Station selector indicator
*74248	Loop—Antenna loop (L1)
*74216	Plate—Dial back plate complete with three (3) drive cord pulleys, less dial
30868	Plug—2 contact female plug for motor cable
73009	Rectifier—Selenium rectifier (SR1)
73038	Resistor—Normal value, 66 ohms with positive temperature coefficient (R18)
	Resistor—Fixed, composition, 82 ohms, ±10%, 1 watt (R17)
73072	Resistor—Normal value, 95 ohms with negative temperature coefficient (R21)
	Resistor—Fixed, composition, 1200 ohms, ±10%, 1 watt (R14)
	Resistor—Fixed, composition, 1800 ohms, ±10%, ½ watt (R13)
	Resistor—Fixed, composition, 12,000 ohms, ±10%, ½ watt (R16)
	Resistor—Fixed, composition, 22,000 ohms, ±20%, ½ watt (R2)
	Resistor—Fixed, composition, 56,000 ohms, ±10%, ½ watt (R23)
	Resistor—Fixed, composition, 82,000 ohms, ±10%, ½ watt (R19)
	Resistor—Fixed, composition, 180,000 ohms, ±10%, ½ watt (R5)
	Resistor—Fixed, composition, 220,000 ohms, ±20%, ½ watt (R1, R10, R11)
	Resistor—Fixed, composition, 330,000 ohms, ±10%, ½ watt (R22)
	Resistor—Fixed, composition, 470,000 ohms, ±10%, ½ watt (R15)
	Resistor—Fixed, composition, 470,000 ohms, ±20%, ½ watt (R12)
	Resistor—Fixed, composition, 1 megohm, ±10%, ½ watt (R3)
	Resistor—Fixed, composition, 1.5 megohms, ±10%, ½ watt (R20)
	Resistor—Fixed, composition, 3.3 megohms, ±20%, ½ watt (R4)
	Resistor—Fixed, composition, 10 megohms, ±20%, ½ watt (R8, R9)
73012	Shaft—Tuning knob shaft
73103	Shield—Tube shield for miniature tubes (2 required)
72998	Socket—Dial lamp socket and lead assembly
36422	Socket—Phono input socket, 3 contact
9914	Socket—Tube socket, miniature, for V3
72516	Socket—Tube socket, miniature, for V4
37605	Socket—Tube socket, octal
74038	Spring—Drive cord spring
70396	Spring—Volume control gear tension spring
73011	Switch—Power, radio and phono switch (S1, S2)
73036	Transformer—First I.F. transformer (T1)
73037	Transformer—Second I.F. transformer (T2)
73008	Transformer—Output transformer (T3)
33726	Washer—"C" washer for tuning knob shaft
*74029	Washer—Fibre washer for tuning knob shaft
70406	Washer—Spring washer for volume control
34457	Washer—Spring washer for tuning knob shaft
	SPEAKER ASSEMBLIES 92573-1K
72728	Cone—Cone and voice coil assembly
74454	Gasket—Rubber gasket for speaker
72727	Speaker—5" x 7" P.M. speaker complete with cone and voice coil
	MISCELLANEOUS
74225	Bezel—Dial scale bezel less dial
*74209	Cover—Cover for record changer mounting screw (3 required)
*74273	Decal—Trademark decal (Victrola)
*74224	Dial—Polystyrene dial scale
*74237	Escutcheon—Tuning control escutcheon for blonde instruments
*74236	Escutcheon—Tuning control escutcheon for mahogany or walnut instruments
*74235	Escutcheon—Power—radio—phono switch escutcheon for blonde instruments
*74234	Escutcheon—Power—radio—phono switch escutcheon for mahogany or walnut instruments
72894	Foot—Rubber foot (4 required)
72692	Hinge—Cabinet lid hinge (2 required)
*74223	Knob—Power, radio and phono switch knob—tan—for blonde instruments
*74222	Knob—Power, radio and phono switch knob—maroon—for walnut or mahogany finish instruments
*74221	Knob—tuning knob—tan—for blonde instruments
*74220	Knob—Tuning knob—maroon—for walnut or mahogany finish instruments
*74219	Knob—Volume control knob—tan—for blonde instruments
*74218	Knob—Volume control knob—maroon—for walnut or mahogany finish instruments
11765	Lamp—Dial lamp
*74208	Nut—Tee nut for mounting record changer (3 required)
71095	Nut—Speed nut for dial scale bezel (8 required)
74192	Plug—3 prong male plug for shielded pickup cable
74424	Screw—#8-32 x 1¾" special head screw for mounting record changer (3 required)
74421	Spring—Conical spring for mounting record changer—upper—R. H. side (1 required)
74422	Spring—Conical spring for mounting record changer—upper—L. H. side (2 required)
74423	Spring—Conical spring for mounting record changer—lower (3 required)
14270	Spring—Retaining spring for knobs
71824	Stud—Stud and screw to mount lid hinge (1 set)
30688	Support—Cabinet lid support

† Stock No. 72953 is a reel containing 250 feet of cord.

* THIS IS THE FIRST TIME THIS STOCK NUMBER HAS APPEARED IN SERVICE DATA.

© John F. Rider

Specifications

Tuning Range ..... 540-1600 kc
Intermediate Frequency ..... 455 kc

Tube Complement

(1) RCA 12SA7 ..... Converter
(2) RCA 12SK7 ..... I-F Amplifier
(3) RCA 12SQ7 ..... Det.—A.V.C.—A-F Amplifier
(4) RCA 50L6GT ..... Output
(5) RCA 35Z5GT ..... Rectifier

Power Supply Rating

115 volts a.c., 60 cycles ..... 45 watts total

Power Output

Undistorted ..... 1.1 watts
Maximum ..... 1.75 watts

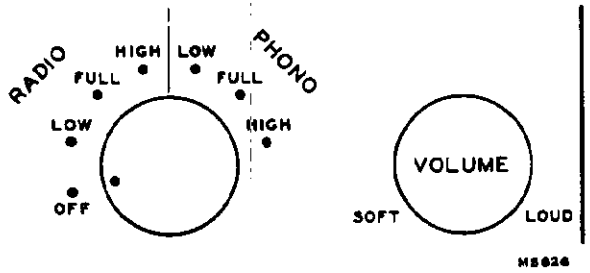

Controls

Dial Lamps (2) ..... Mazda type 1490, 3.2 volts, .16 amp.

Loudspeaker (92586-2W)

Size and Type ..... 8 in. PM
Voice Coil Impedance ..... 3.2 ohms at 400 cycles

Cabinet Dimensions

Height .... 28" Width .... 18½" Depth .... 14¼"

Weight ..... 36 lbs.

Tuning Drive Ratio ..... 9 to 1 (4½ turns of knob)

Record Changer RP168A-1

Power Supply

Although this model employs an AC-DC receiver chassis, the instrument is not suitable for use on DC, as this would damage the motor in the record changer.

Replacement Parts

Stock No.	DESCRIPTION
	CHASSIS ASSEMBLIES RC 1079 D
74655	Back—Chassis back and loop assembly (L1)
74653	Capacitor—Variable tuning capacitor (C1, C2, C3, C4)
71924	Capacitor—Ceramic, 56 mmf. (C5)
71614	Capacitor—Ceramic, 120 mmf. (C11)
73501	Capacitor—Ceramic, 150 mmf. (C14, C7)
74678	Capacitor—Electrolytic comprising 2 sections of 120 mfd, 150 volts and 1 section of 40 mfd, 25 volts (C16A, C16B, C16C)
73186	Capacitor—Tubular, paper, .001 mfd, 400 volts (C9)
73961	Capacitor—Tubular, paper, .003 mfd, 200 volts (C10)
72573	Capacitor—Tubular, paper, .003 mfd, 400 volts (C21)
72791	Capacitor—Tubular, paper, .005 mfd, 400 volts (C17)
71823	Capacitor—Tubular, paper, .01 mfd, 200 volts (C12)
72827	Capacitor—Tubular, paper, .01 mfd, 400 volts (C15)
71928	Capacitor—Tubular, paper, .02 mfd, 200 volts (C13, C20)
73553	Capacitor—Tubular, paper, .05 mfd, 400 volts (C8, C18, C6, C19)
73935	Clip—Mounting clip for I.F. transformer
74448	Coil—Oscillator coil (L2, L3)
36422	Connector—3 contact female connector for pickup cable (J1)
30868	Connector—2 contact female connector for motor cable (P3)
*74827	Control—Volume control (R10)
†72953	Cord—Drive cord (approx. 43" overall)
73893	Grommet—Power cord strain relief (1 set)
72283	Grommet—Rubber grommet for mounting tuning capacitor (3 required)
74658	Indicator—Station selector indicator
71116	Lamp—Dial lamp—Mazda 1490
74651	Plate—Dial back plate complete with three (3) pulleys
18469	Plate—Bakelite mounting plate for electrolytic
72313	Resistor—Fuse type, 33 ohms (R16)
	Resistors—Fixed composition:
	82 ohms, ±10%, ½ watt (R17)
	150 ohms, ±10%, ½ watt (R14)
	1,000 ohms, ±10%, 1 watt (R15)
	18,000 ohms, ±10%, ½ watt (R19)
	22,000 ohms, ±10%, ½ watt (R2)
	27,000 ohms, ±10%, ½ watt (R9)
	56,000 ohms, ±10%, ½ watt (R4)
	120,000 ohms, ±10%, ½ watt (R3)
	220,000 ohms, ±10%, ½ watt (R6, R7, R12, R18)
	470,000 ohms, ±10%, ½ watt (R13)
	680,000 ohms, ±10%, ½ watt (R8)
	1 megohm, ±10%, ½ watt (R1)
	3.3 megohm, ±10%, ½ watt (R5)
	10 megohm, ±10%, ½ watt (R11)
*74825	Shaft—Tuning knob shaft and pulley
31251	Socket—Tube socket, octal
74683	Socket—Dial lamp socket assembly complete with two (2) sockets (miniature bases) and leads
74038	Spring—Tension spring for drive cord
*74826	Switch—Function switch (S1)
73038	Transformer—First I.F. transformer (T1)
73037	Transformer—Second I.F. transformer (T2)
74677	Transformer—Output transformer (T3)
33726	Washer—"C" washer for tuning knob shaft
	SPEAKER ASSEMBLIES 92586-2W RL 105 C2
74758	Cone—Cone and voice coil assembly
74679	Speaker—8" P.M. speaker complete with cone and voice coil NOTE: If stamping on speaker does not agree with above speaker number, order replacement parts by referring to model number of instrument and full description of part required.
	MISCELLANEOUS
*74832	Bottom—Bottom cover for record changer compartment (2 required)
*74833	Bracket—Lamp bracket (2 required)
*74830	Clamp—Dial clamp (2 required)
X1756	Cloth—Grille cloth
74192	Connector—3 contact male connector for pickup cable (P1)
74581	Cover—Plug-in cover for record changer mounting screws (3 required)
*74831	Cushion—Rubber cushion for dial clamp
74682	Decal—Function switch decal for mahogany or walnut instruments
*74835	Decal—Function switch decal for oak instruments
74273	Decal—Trade mark decal
*74829	Dial—Dial scale
74674	Emblem—"RCA Victor" emblem
74828	Knob—Function switch knob—tan—for oak instruments
74681	Knob—Function switch knob—maroon—for mahogany or walnut instruments
74686	Knob—Volume control or tuning knob—maroon—for mahogany or walnut instruments
74247	Knob—Volume control or tuning knob—tan—for oak instruments
74208	Nut—Tee nut for mounting record changer
73770	Pull—Drawer pull
74582	Screw—No. 8-32 x 1¾" special head screw for mounting record changer (3 required)
74835	Slide—Slide mechanism assembly for record changer drawer
74422	Spring—Conical spring for mounting record changer (upper LH) (2 required)
74421	Spring—Conical spring for mounting record changer (upper RH) (1 required)
74423	Spring—Conical spring for mounting record changer (lower) (3 required)

†Stock No. 72953 is a reel containing 250 feet of cord.
*This is the first time that this Stock No. has appeared in Service Data.

APPLY TO YOUR RCA DISTRIBUTOR FOR PRICES OF REPLACEMENT PARTS

©John F. Rider

Alignment Procedure

Critical Lead Dress

1. Dress all heater leads down to chassis and away from all audio grid and plate wiring.
2. Dress power cord to back apron and away from phono jack.
3. Dress capacitor C18 against back apron.
4. Connect shielded capacitor C13 direct and with a minimum of exposed leads.
5. Dress dial lamp leads on top of chassis around electrolytic capacitor and between 12SQ7 and 50L6GT tubes.
6. Dress output transformer leads down to chassis.
7. Dress excess loop leads away from tubes and clear of tuning condenser.

Test-Oscillator. — For all alignment operations, connect the low side of the test-oscillator to the receiver chassis, and keep the oscillator output as low as possible to avoid a-v-c action.

An isolation transformer (115 v./115 v.) may be necessary for the receiver if the test oscillator is also AC operated.

Dial Calibration

With the tuning condenser fully meshed, the dial pointer should be set to the first score mark at the left-hand end of the dial back plate. The four score marks represent: Max. cap., 600 kc, 1400 kc and min. cap.

Steps	Connect the high side of test-oscillator to—	Tune test-osc. to—	Turn radio dial to—	Adjust the following for max. output
1	12SK7 I-F grid through 0.1 mfd. capacitor	455 kc	Quiet-point 1600 kc end of dial	T2 (top and bottom) 2nd I-F trans.
2	Stator of C1 through 0.1 mfd.			*T1 (top and bottom) 1st I-F trans.
3	Short wire placed near loop to radiate signal	1630 kc	Min. cap.	C4 (osc.)
4		1400 kc	1400 kc	†C2 (ant.)
5		600 kc	600 kc	L3 (osc.) Rock gang
6	Repeat steps 3, 4 and 5.			

*Do not readjust T2 when test oscillator is connected to C1.

†When adjusting C2 (ant. trimmer) it is necessary to have the loop in the same position and spacing as it will have when assembled in the cabinet.

Care of Sapphire

The record changer sapphire is protected by a permanent metal guard. LINT MAY COLLECT TO CLOG THE OPENING IN THE GUARD AT THE SAPPHIRE POINT AND CAUSE POOR RECORD REPRODUCTION. This may require occasional cleaning of the guard opening — clean by carefully brushing with a small soft brush.

Record Separators

In the out of cycle position the record separator knives or discs are normally concealed inside the center post. During service, the position of the star wheel on the underside of the record changer may be accidentally shifted; this may cause the separator knives to be extended when they should be concealed.

If the separator knives are thus extended — turn the power on so that the turntable is revolving, gently press fingers against the extended knives until they disappear inside the center post — **DO THIS ONLY WHILE MECHANISM IS OUT OF CYCLE.**

Landing Adjustment "A"

If the pickup lands inside the starting grooves — turn screw "A" slightly clockwise. If pickup lands outside the starting grooves — turn screw "A" slightly counterclockwise.

Pickup Height Adjustment "B"

During cycle the pickup arm must rise high enough to clear a stack of eight records on the turntable, but not high enough to cause the top of the arm to touch records resting on the record supports.

If pickup does not clear a stack of eight records — or if pickup arm touches records on record supports — turn screw "B" slightly.

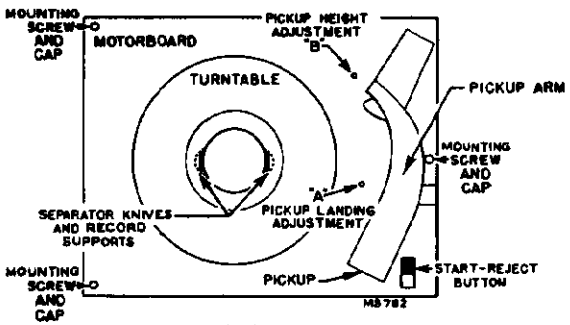

Record Changer Adjustments

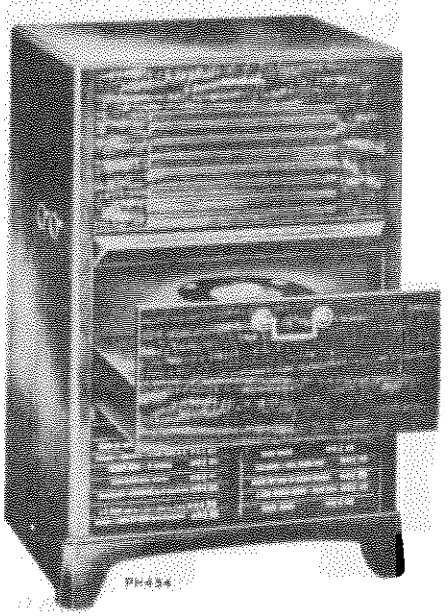

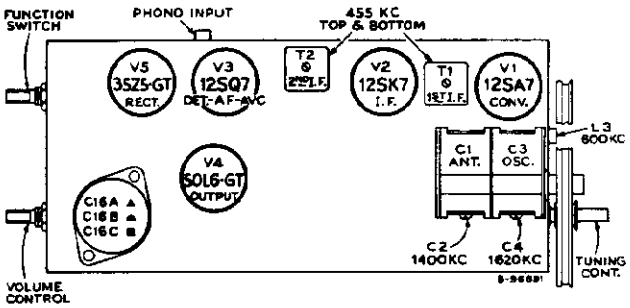

Tube and Trimmer Locations

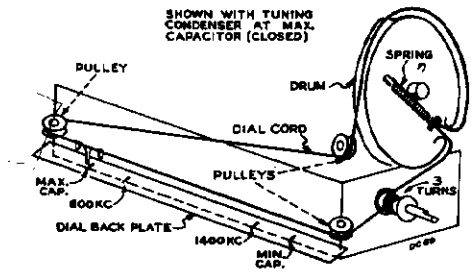

Dial Indicator and Drive Cord

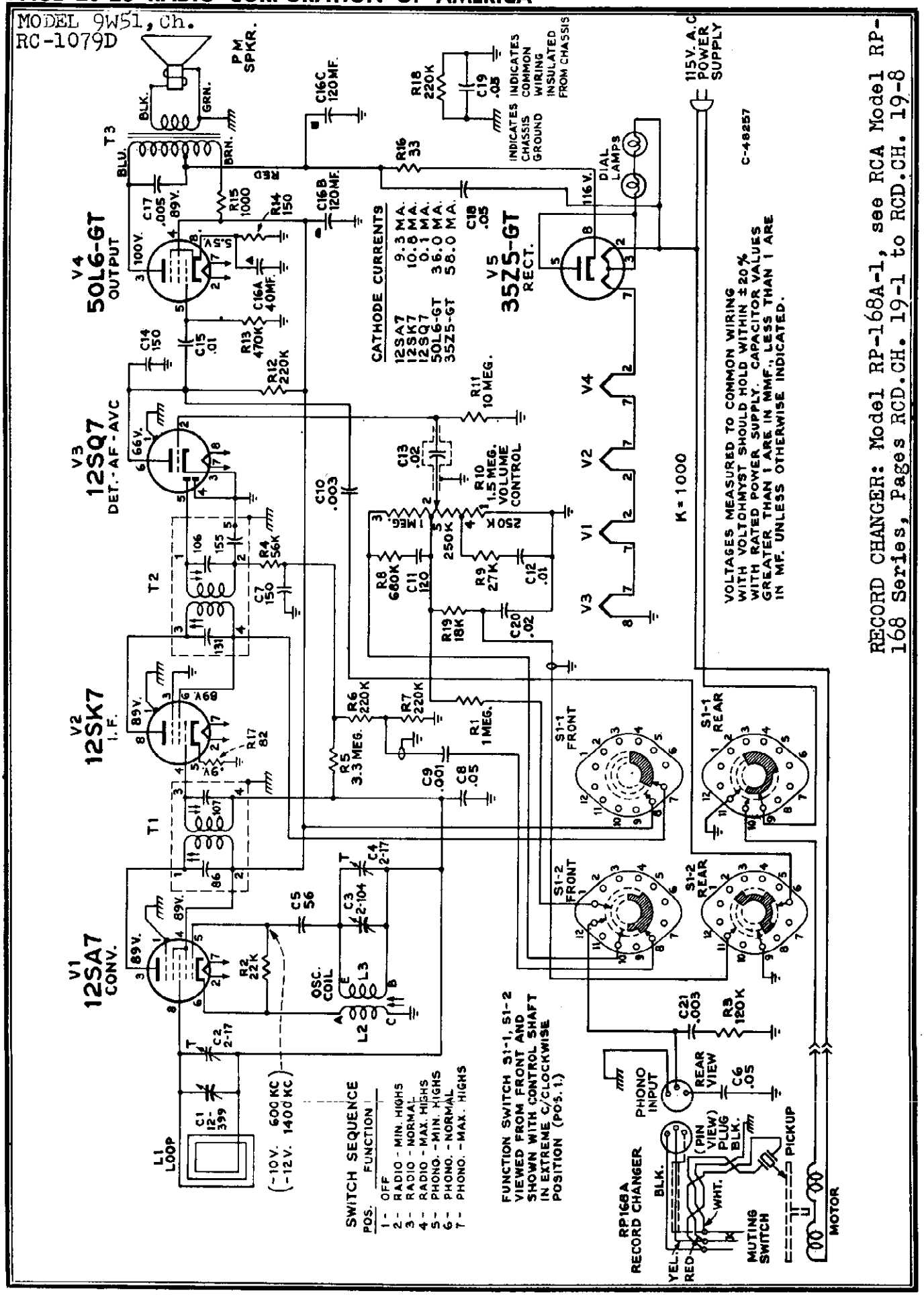

RECORD CHANGER: Model RP-168A-1, see RCA Model RP-168 Series, Pages RCD.CH. 19-1 to RCD.CH. 19-8

© John F. Rider

MODEL 9Y51,
Ch. RC-1077

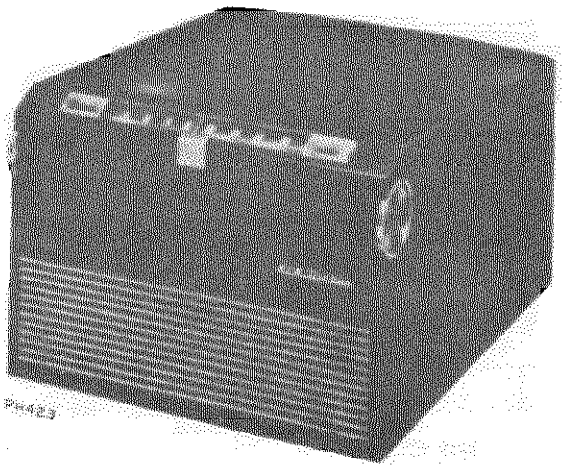

Specifications

Tuning Range ..... 540-1600 kc

Intermediate Frequency ..... 455 kc

Tube Complement

1. RCA-12BE6 ..... Converter
2. RCA-12BA6 ..... I-F Amplifier
3. RCA-12AV6 ..... Det., AVC., A-F Amplifier
4. RCA-50L6GT ..... } Output Rectifier
5. RCA-35W4 ..... }

Power Supply Rating ..... 115 volts, 60 cycles a.c., 60 watts

Dial Lamps (2) ..... Mazda type 1490, 3.2 volts, 0.16 amp.

Loudspeaker (92585-1)

Size and type ..... 5" x 7" P.M.
Voice coil impedance ..... 3.2 ohms at 400 cycles

Power Output

Undistorted ..... 1 watt
Maximum ..... 1.5 watts

Cabinet Dimensions

Height 7¾" Width 12⅜" Depth 14¼"

Tuning Drive Ratio ..... 7½:1 (3¾ turns of knob)

Record Changer (RP-168-1 modified or RP-168B-1)

Turntable speed ..... 45 r.p.m.
Records used ..... Long playing—7 in.
Record capacity ..... Up to 10 records
Pickup ..... Crystal (medium output)
Pickup arm assembly RMP129-2

Service Hints

The tubes and the dial lamps are accessible by removing the panel in the front of the record changer compartment.

The chassis metal mounting plate should be flush against the front of the cabinet.

The position of the speaker is adjustable. When correctly positioned, it should set firmly against the front of the cabinet but with no undue strain on the speaker.

Care of Sapphire

The record changer sapphire is protected by a permanent metal guard. LINT MAY COLLECT TO CLOG THE OPENING IN THE GUARD AT THE SAPPHIRE POINT AND CAUSE POOR RECORD REPRODUCTION. This may require occasional cleaning of the guard opening—clean by carefully brushing with a small soft brush.

Record Separators

In the out of cycle position the record separator knives or discs are normally concealed inside the center post. During service, the position of the star wheel on the underside of the record changer may be accidently shifted; this may cause the separator knives to be extended when they should be concealed.

If the separator knives are thus extended—turn the power on so that the turntable is revolving, gently press fingers against the extended knives until they disappear inside the center post—**DO THIS ONLY WHILE MECHANISM IS OUT OF CYCLE.**

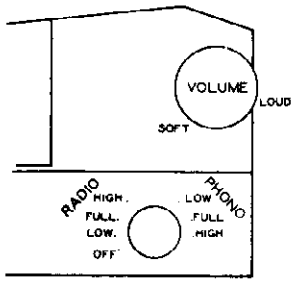

Controls

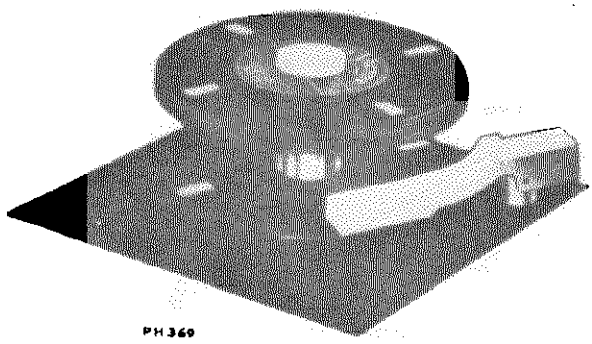

PH360

This instrument incorporates either a RP168-1 (modified) or a RP-168B-1 record changer and a RMP129-2 pickup arm assembly. Refer to Service Data RP-168 Series, 3rd edition, for information on record player.

Alignment Procedure

Output Meter.—Connect meter across speaker voice coil. Turn volume control to maximum.

Test Oscillator.—Connect low side of test oscillator to common wiring in series with a .1 mf. capacitor. If the test oscillator is a.c. operated it may be necessary to use an isolation transformer for the receiver during alignment and the low side of the test oscillator connected directly to common wiring at the electrolytic capacitor. Keep the oscillator output low to prevent a-v-c action.

Dial Pointer Adjustment.—Rotate tuning condenser until the plates are fully open. Adjust indicator pointer to 1630 kc (extreme high frequency end of the scale).

©John F. Rider

MODEL 9Y51,
Ch. RC-1077

LEAD DRESS

1. Dress all heater leads and pilot light leads down to chassis and as far as possible from all audio grid and plate wiring.
2. Dress all exposed leads away from each other and away from chassis to prevent short circuits.
3. Dress lead from R.F. section of gang to V1 pin 7 direct but away from chassis base to reduce capacity, also away from fuse resistor.
4. Dress lead from oscillator section of gang to oscillator coil direct but away from chassis base to reduce capacity.
5. Connect capacitor C20 with short leads between gang frame and mounting bracket.
6. Dress output transformer leads down to base.
7. Dress loop antenna leads away from gang plates and tubes.
8. Dress 33-ohm limiting resistor away from chassis.

Pickup Landing Adjustment "A"

The pickup point should land half-way between the outer edge of the record and the first music groove.

If the pickup lands inside the starting grooves—turn screw "A" slightly clockwise. If pickup lands outside the starting grooves—turn screw "A."

Pickup Height Adjustment "B"

During cycle the pickup arm must rise high enough to clear a stack of eight records on the turntable, but not high enough to cause the top of the arm to touch records resting on the record supports.

If pickup does not clear a stack of eight records—turn screw "B" slightly clockwise. If pickup arm touches records on record supports—turn screw "B."

Steps	Connect the high side of test to—	Tune test-osc. to—	Turn radio dial to—	Adjust the following for max. output
1	I.F. grid, in series with .1 mfd.	455 kc	Quiet point 1,600 kc end of dial	Pri. & Sec. 2nd I.F. transformer
2	Converter grid in series with .1 mfd.			Pri. & Sec. 1st I.F. transformer
NOTE.—ANTENNA LOOP AND RECORD CHANGER MUST BE IN CABINET FOR THE FOLLOWING				
3	Short wire placed near loop for radiated signal	1,630 kc	Extreme R. H. end (gang open)	C4 (osc.)
4		1,400 kc	1,400 kc	C2 (ant.)
5		600 kc	600 kc	Osc. Coil L3 Rock gang
6	Repeat steps 3, 4, & 5 if necessary			

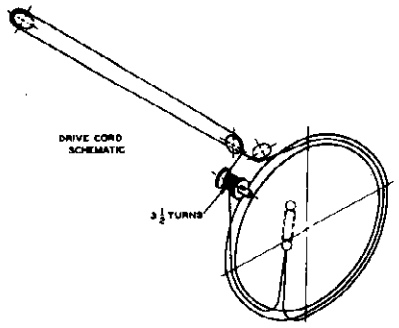

Dial drive mechanism

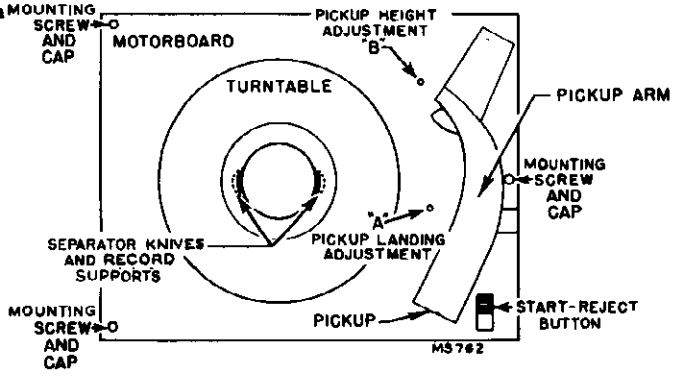

Record changer adjustments

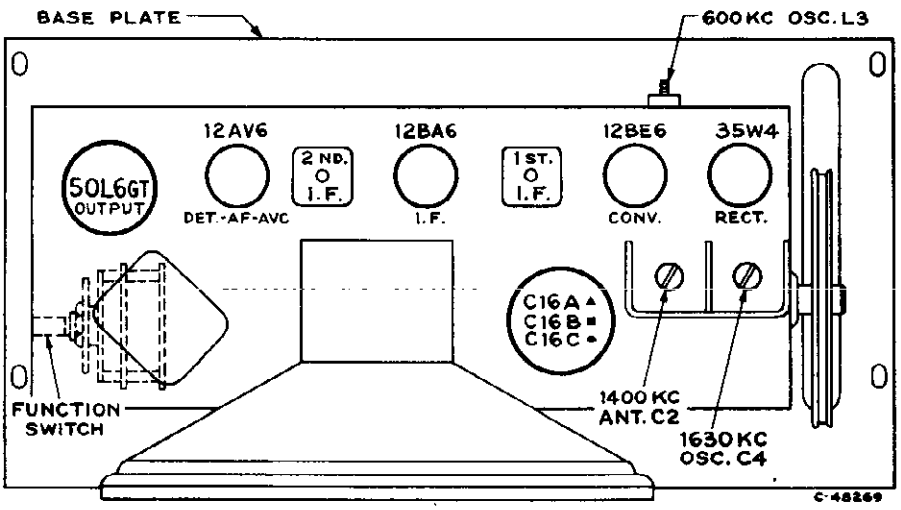

Tube and trimmer location

©John F. Rider

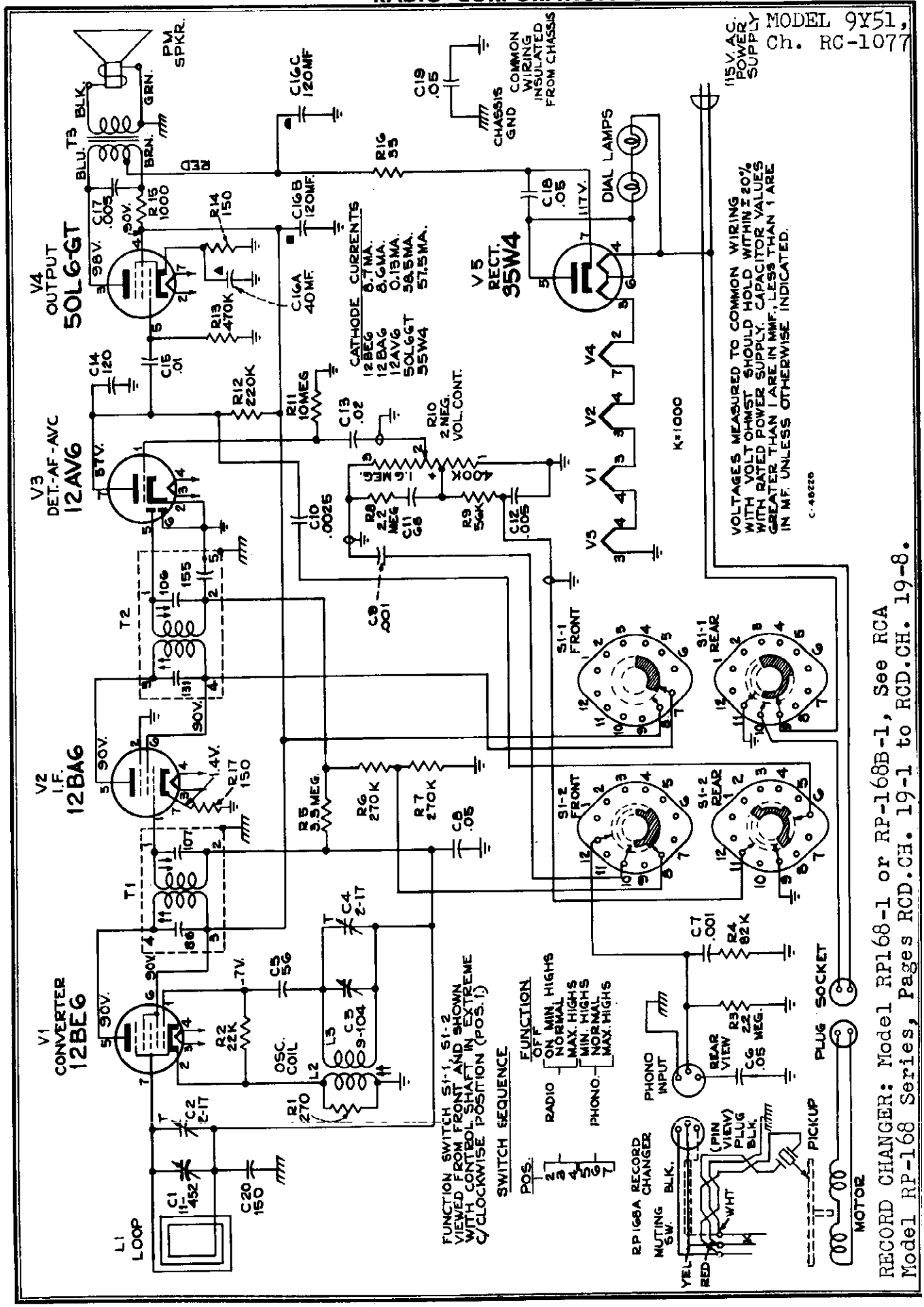

RECORD CHANGER: Model RP168-1 or RP-168B-1, See RCA Model RP-168 Series, Pages RCD.CH. 19-1 to RCD.CH. 19-8.

©John F. Rider

MODEL 9Y51,
Ch. RC-1077

Replacement Parts

STOCK No.	DESCRIPTION
	CHASSIS ASSEMBLIES RC 1077
*74700	Bracket—Drive cord pulley bracket (L. H.) complete with one (1) pulley and one (1) terminal board.
*74705	Bracket—Drive cord pulley bracket (R. H.) complete with two (2) pulleys less long bracket.
*74704	Capacitor—Variable tuning capacitor—less bracket..C1, C2, C3, C4
71924	Capacitor—Ceramic, 56 mmf. C5
74884	Capacitor—Ceramic, 68 mmf. C11
39630	Capacitor—Mica, 120 mmf. C14
39632	Capacitor—Mica, 150 mmf. C20
74678	Capacitor—Electrolytic, comprising 2 sections of 120 mfd., 150 volts and 1 section of 40 mfd., 25 volts C16A, C16B, C16C
72792	Capacitor—Tubular, .001 mfd., 200 volts C7
73186	Capacitor—Tubular, .001 mfd., 400 volts C9
71926	Capacitor—Tubular, .005 mfd., 200 volts C12
72791	Capacitor—Tubular, .005 mfd., 400 volts C17
70602	Capacitor—Tubular, .0025 mfd., 400 volts C10
72827	Capacitor—Tubular, .01 mfd., 400 volts C15
71928	Capacitor—Tubular, .02 mfd., 200 volts C13
73553	Capacitor—Tubular, .05 mfd., 400 volts C6, C8, C18, C19
73935	Clip—Mounting clip for I. F. transformer
74448	Coil—Oscillator coil L2, L3
36422	Connector—3 contact female connector (phono input socket) J1
30868	Connector—2 contact female connector for motor cable....P3
*74702	Control—Volume control R10
†72953	Cord—Drive cord (approx. 49" overall length required)
74454	Gasket—Rubber gasket for between speaker and cabinet
73693	Grommet—Power cord strain relief (1 set)
72283	Grommet—Rubber grommet to mount variable capacitor (3 required)
*74703	Loop—Antenna loop L1
18469	Plate—Bakelite mounting plate for electrolytic capacitor
72313	Resistor—Fuse type, 33 ohms R16
	Resistor—Fixed composition resistors:
	150 ohms, ±10%, ½ watt R14, R17
	270 ohms, ±10%, ½ watt R1
	1,000 ohms, ±10%, 1 watt R15
	22,000 ohms, ±10%, ½ watt R2
	56,000 ohms, ±10%, ½ watt R9
	82,000 ohms, ±10%, ½ watt R4
	220,000 ohms, ±10%, ½ watt R12
	270,000 ohms, ±10%, ½ watt R6, R7
	470,000 ohms, ±10%, ½ watt R13
	2.2 megohm, ±10%, ½ watt R3, R8
	3.3 megohm, ±10%, ½ watt R5
	10 megohm, ±10%, ½ watt R11
*74701	Shaft—Tuning knob shaft and pulley
73584	Shield—Tube shield for 12AV6
70827	Socket—Tube socket, octal, wafer
73117	Socket—Tube socket
72998	Socket—Dial lamp socket and lead
74038	Spring—Drive cord spring
*74676	Switch—Function switch S1
74677	Transformer—Output transformer T3
73488	Transformer—First I.F. transformer T1
73037	Transformer—Second I.F. transformer T2
33726	Washer—"C" washer for tuning knob shaft
	SPEAKER ASSEMBLIES Stamped 92585-1
*74706	Speaker—5" x 7" elliptical P. M. speaker **Note:** If stamping on speaker does not agree with above number, order replacement parts by referring to model number of instrument, number stamped on speaker and full description of part required.
	MISCELLANEOUS
Y2137	Cabinet—Plastic cabinet—maroon
*74713	Clamp—Dial clamp (2 required)
73508	Clip—Spring clip for knob
*74719	Clip—Spring clip for radio compartment back panel (2 required)
74192	Connector—3 contact male connector for shielded pickup cable
74682	Decal—Function switch decal
74273	Decal—Trade mark decal
74722	Dial—Dial scale
74674	Emblem—"RCA Victor" emblem
72894	Foot—Rubber foot (4 required)
*74707	Grille—Metal grille
74210	Knob—Reject knob
*74710	Knob—Volume control or tuning knob
*74711	Knob—Function switch knob
72692	Hinge—Cabinet lid hinge (2 required)
74709	Indicator—Station selector indicator
71116	Lamp—Dial lamp
*74940	Lever—"Start-Reject" actuating lever
*74720	Lid—Cabinet lid
*74717	Mask—End mask for dial (2 required)
*74708	Motif—Decorative motif for front of cabinet
*74623	Mounting—One set of hardware consisting of 3 rubber grommets, 3 flat washers, and 3 eyelets to mount record changer
*74715	Panel—Radio compartment back panel
*74721	Plate—Dial back plate, less dial
74212	Nut—Speed nut for reject knob
*74712	Nut—Speed nut for "Start-Reject" actuating lever
72765	Nut—Speed nut to fasten motif (1 required) or to fasten dial (2 required)
73728	Screen—Ventilation screen (2 7/16" x 1¼") (2 required)
*74716	Screw—#6-32 x ¼" cross-recessed oval head machine screw for lid support (4 required) or radio compartment back panel (3 required)
14270	Spring—Retaining spring for function switch knob
*74718	Spring—Return spring for "Start-Reject" actuating lever
71824	Stud—Stud and screw to mount lid hinge (1 set) (2 required)
*74714	Support—Lid support

† Stock No. 72953 is a reel containing 250 feet of cord.

* This is the first time this stock number has appeared in Service Data.

©John F. Rider

REL MODELS 646B, 647B AND 648B FM BROADCAST RECEIVERS 88 TO 108 MC.

These receivers are single superheterodyne units of orthodox circuit and design. As with all VHF receiving equipment, performance is dependent on correct installation, particularly the associated antenna and lead-in system.

The nominal impedance at the antenna terminals (marked A - A) is 150 ohms. Both 70 and 300 ohm lines may be used here without serious mismatch consequences. Whether or not the ground terminal (marked G) is used depends on local conditions. Because of uncertainties in this connection and because the input circuit coupling is fairly tight, the latter is not precisely tracked at the factory. For very weak signals or for technical use at any one frequency, this circuit may be trimmed by adjusting C1. This is accessible at the top of the chassis and is located as shown in the tube layout sketch.

For convenience in tuning and rough measuring the circuits are adjusted so that one small division of the TUNE meter corresponds to a frequency shift of about 20 kilocycles, and so that the steps of the RF GAIN control are roughly ten to one each. Indications on the SIGNAL meter are approximately linear. Both these meters may be supplemented externally by use of the connections on the rear terminal board. The TUNE meter is 25-0-25 microamperes, and the SIGNAL is 0-1 milliampere.

To use external meters, remove the strap between terminals 4 and 5 and the ground bus from terminal 5, then connect the TUNE meter between terminals 5 and 1 (ground) and the SIGNAL meter between terminal 4 and 1. If only one of these meters are connected externally, the terminal for the second meter must be connected to terminal 1.

Terminals are provided for connecting an external signal to the audio amplifier input and selecting this signal by means of the switch on the front panel. Terminal 2 is high and terminal 1 is ground. These terminals represent an AC impedance of about one megohm and 30 micro-microfarads. For the 646B about 2V. RMS input is required for full audio amplifier output.

The 646B and 647B receivers are designed for operation at 115 volts. They should not be operated permanently on lines higher than 125 volts. The 648 receiver requires at least 5.8 volts DC at the indicated terminals. They are connected for negative ground. If the vehicle has a positive ground system the vibrators must be reoriented according to the legend on the top of the Vibrapacks.

The maximum audio output of the 646B receiver is ten watts into either 500 or 8 ohms (mismatch up to 2 to 1 here is not generally aurally serious). The maximum output of the 647B receiver is + 18 DBM into 600 or 150 ohms. This receiver is connected for 600 ohm load; to use with 150 ohm load the output transformer should be restrapped by replacing strap from 5 to 6 by a strap from 4 to 6 and another from 5 to 7. The maximum audio output of the 648B receiver is 4 watts into 6 ohms.

©John F. Rider

MODELS 646B,
647B, 648B

CHASSIS TUBE AND TRIMMER LAYOUT

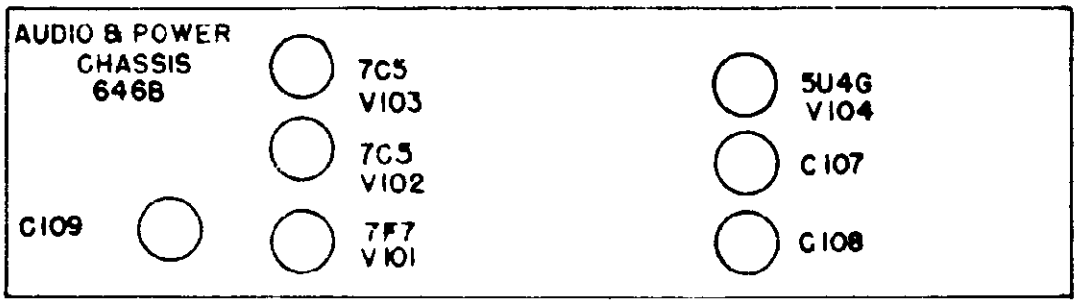

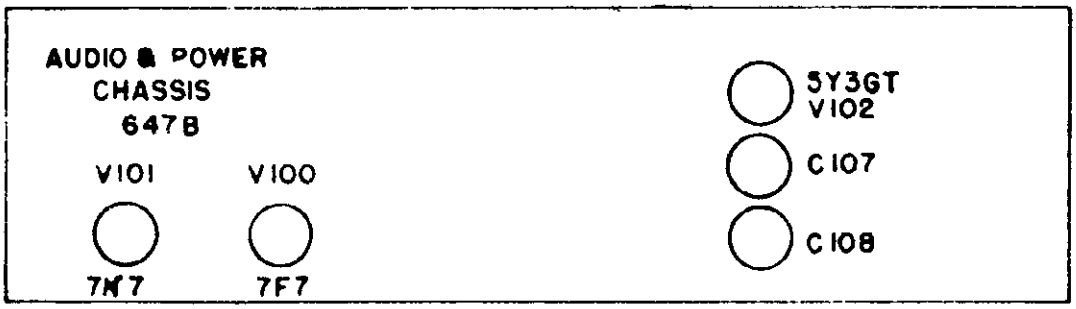

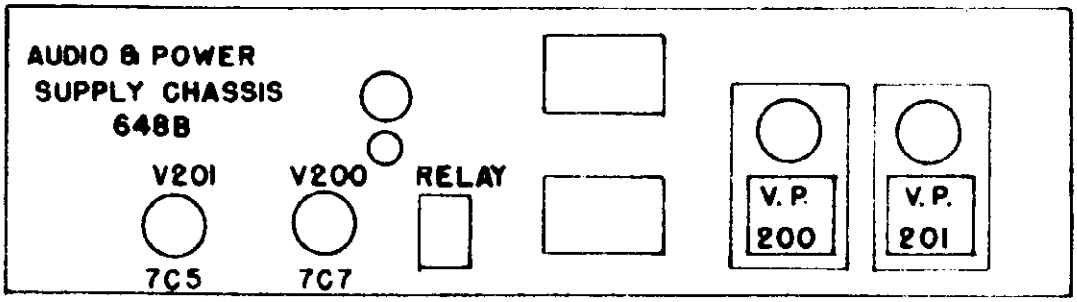

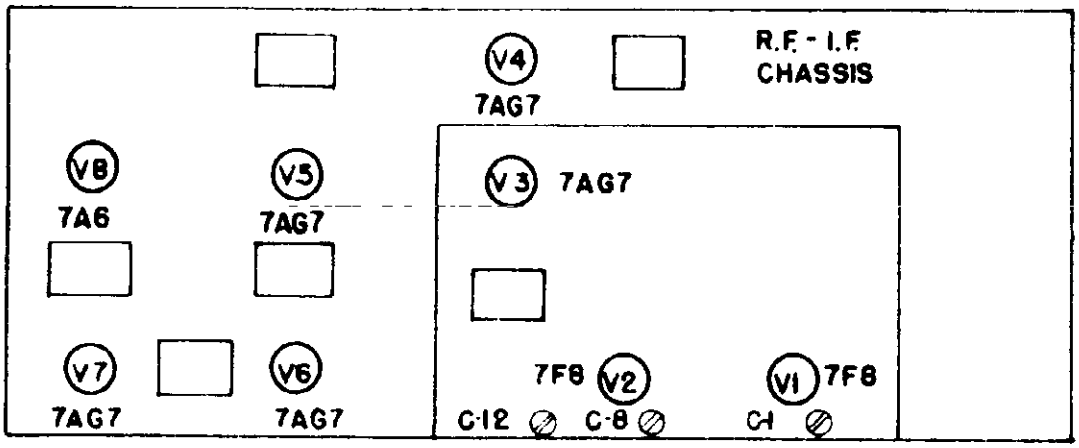

©John F. Rider

MODELS 646B, 647B, 648B

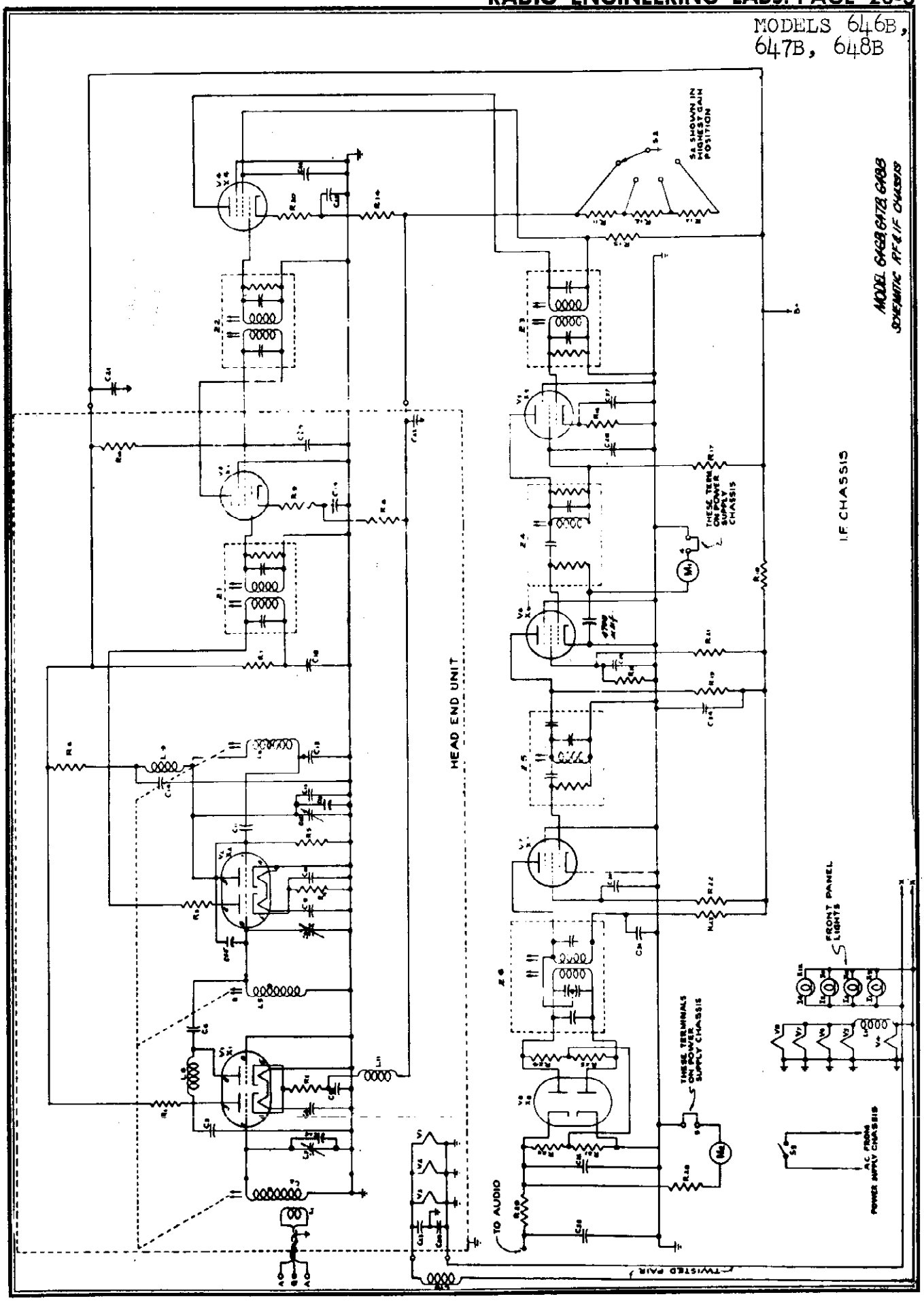

©John F. Rider

MODEL 646B

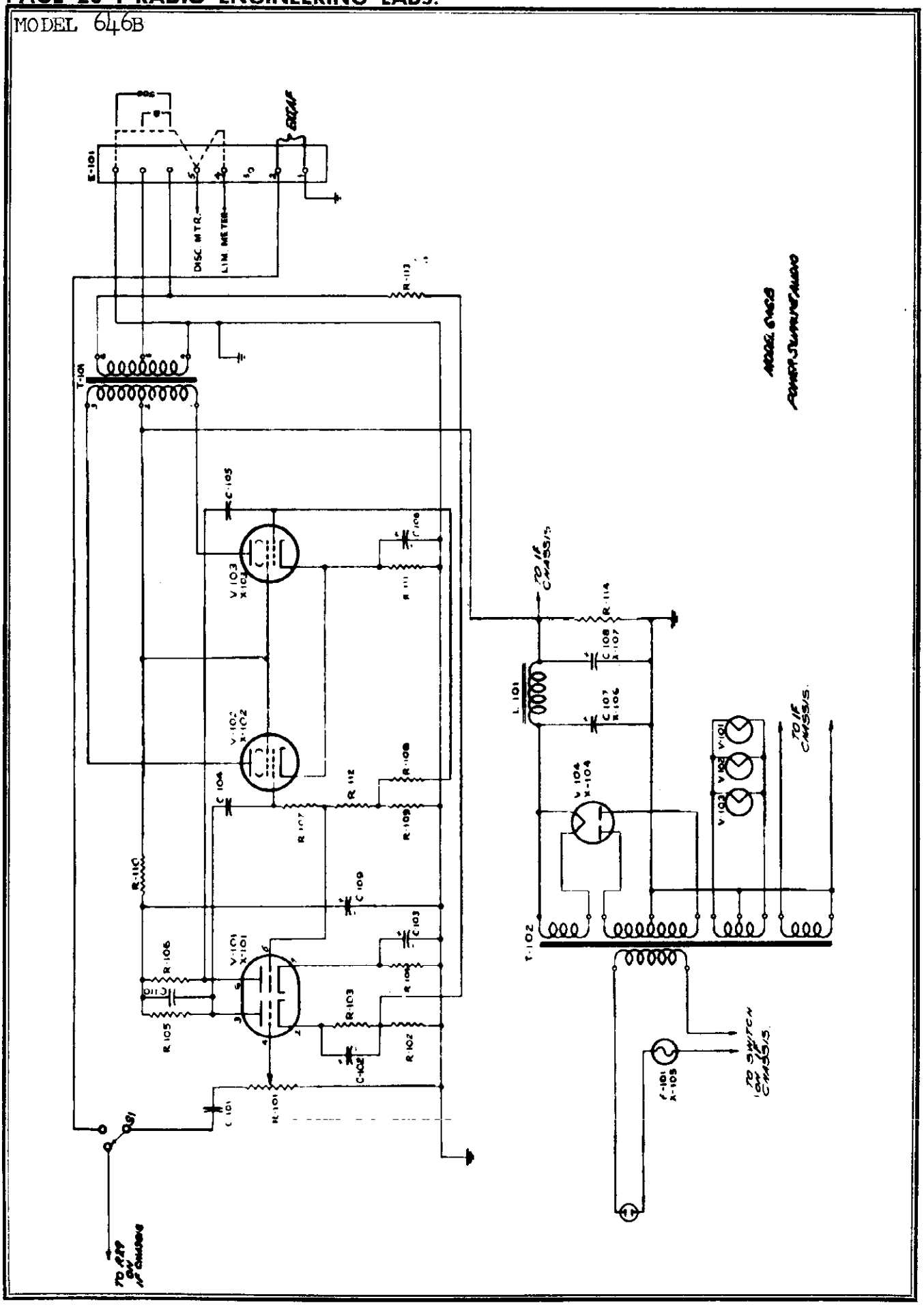

©John F. Rider

MODEL 647B

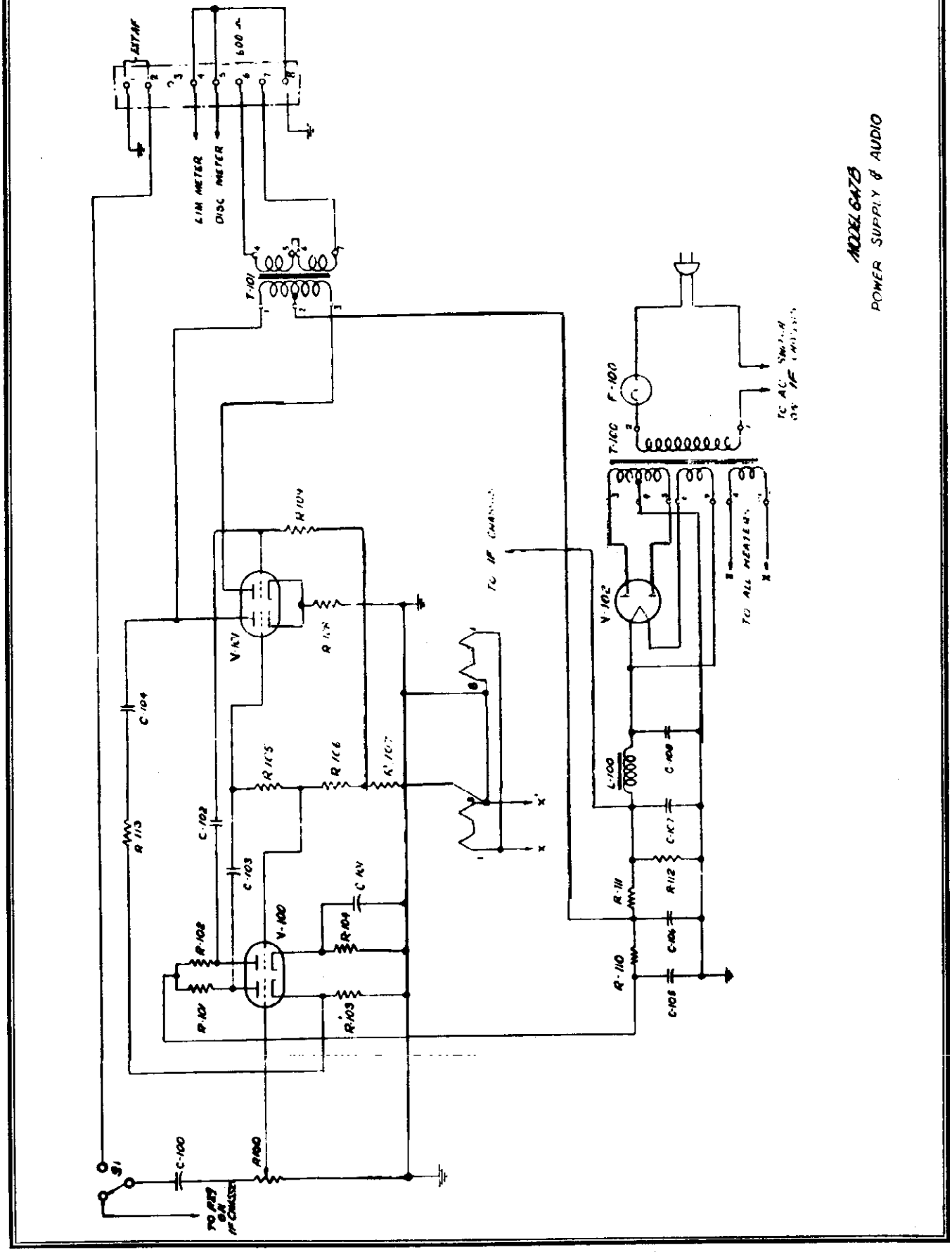

©John F. Rider

MODEL 648B

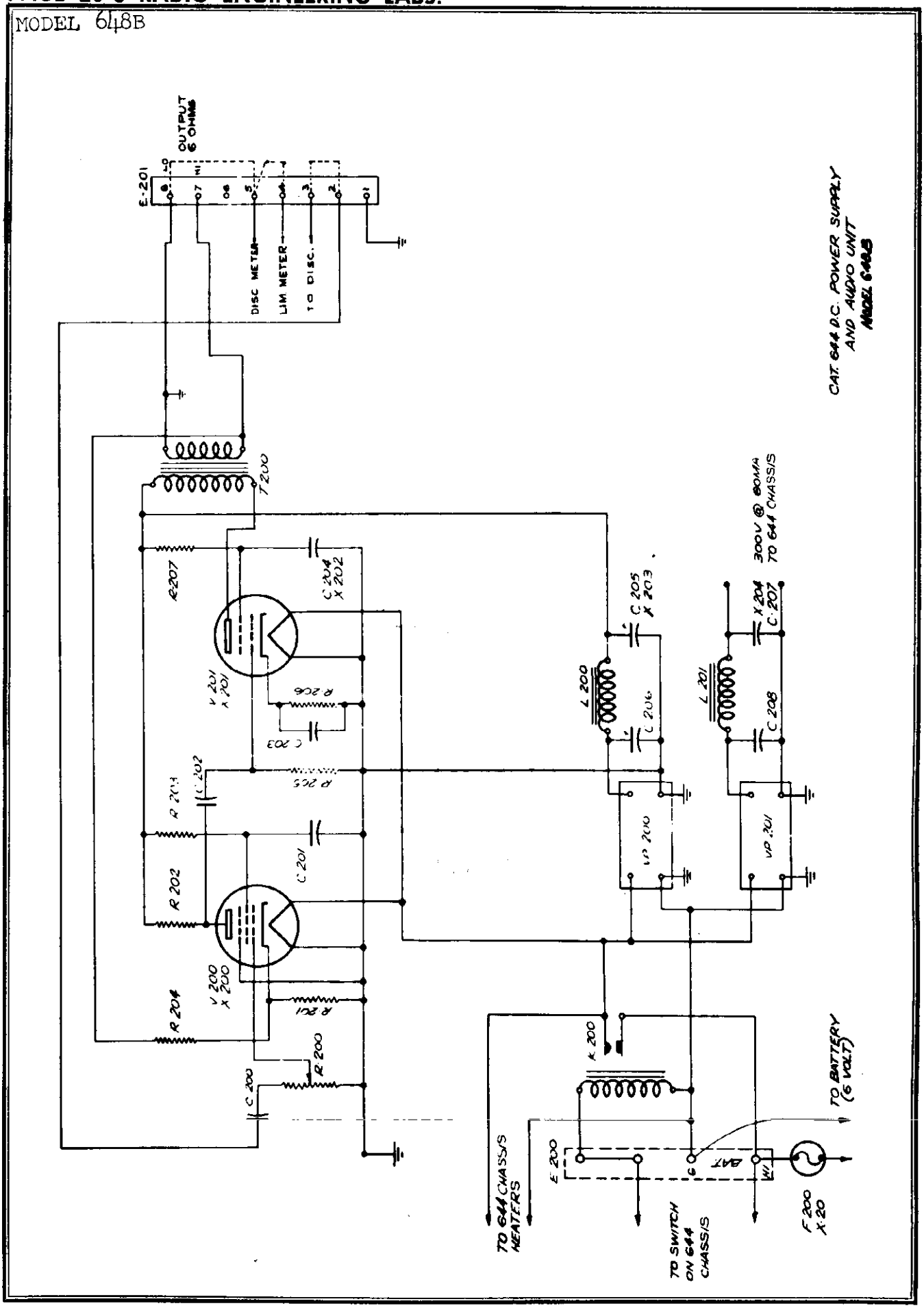

©John F. Rider

MODEL 646B, 647B and 648B FM RECEIVER PARTS LIST FOR RF AND IF CHASSIS

SYMBOL REF.	DESCRIPTION
C1	Capacitor, glass, variable 1-12 mmfd., 500 VDCW
C1A	Capacitor, ceramic, 4.7 mmfd.
C2	Not used
C2A	Not used
C3	Capacitor, 500 mmfd., ±20%, 500 VDCW
C4	Capacitor, 1200 mmfd., ±20%, 300 VDCW
C5	Same as C4
C6	Capacitor, 47 mmfd., ±10%, 500 VDCW
C7	Not used
C7A	Not used
C8	Same as C1
C9	Same as C4
C10	Same as C4
C11	Capacitor, 22 mmfd., ±10%, 500 VDCW
C12	Same as C1
C13	Capacitor, 20 mmfd., ±10%, 500 VDCW, N375
C14	Same as C3
C15	Same as C11
C16	Capacitor, 22 mmfd., ±5%, 500 VDCW
C17	Not used
C18	Capacitor, 4700 mmfd., 600 VDCW
C19) C20) C21)	Same As C18
C21A	Capacitor, 500 mmfd.
C22) C23) C24)	Same as C4
C25) C26) C27) C28) C29) C30) C31)	Same as C18
C32	Same as C6
C33	Capacitor, 470 mmfd. ±10%, 500 VDCW
C34	Same as C18
C35	Capacitor, 1.0 mmfd. ±20%

SYMBOL REF.	DESCRIPTION
I1	Pilot light, miniature bayonet base, 6-8 volts, .15 amps.
I2) I3) I4)	Same as I1
L1) L2)	Antenna and first grid Coil assembly
L3	Not used
L4	Not used
L5	Mixer grid coil
L6	Oscillator coil
L7	Not used
L8	Choke, 3 Microhenries, ±25%
L9) L10) L11)	Same as L8
M1	Signal strength meter, 0-1 ma.
M2	Tuning meter, 25-0-25 microamps.
R1	Resistor, 4700 ohms, ±10%, 1 watt
R2	Resistor, 270 ohms, ±10%, 1/2 watt
R3	Resistor, 100 ohms, ±10%, 1/2 watt
R4	Resistor, 1500 ohms, ±10%, 1/2 watt
R5	Resistor, 15,000 ohms, ±10%, 1/2 watt
R6	Resistor, 39,000 ohms, ±10%, 1 watt
R7	Resistor, 220,000 ohms, ±10%, 1/2 watt
R8	Resistor, 150 ohms ±10%, 1/2 watt
R9	Resistor, 47 ohms, ±10%, 1/2 watt
R10	Resistor, 1000 ohms, ±20%, 1/2 watt
R11	Resistor, 330 ohms, ±10%, 1/2 watt
R12	Resistor, 560 ohms, ±10%, 1/2 watt
R13	Resistor, 820 ohms, ±10%, 1/2 watt
R14	Same as R8

© John F. Rider

MODELS 646B, 647B, 648B

MODEL 646B, 647B and 648B FM RCVR PARTS LIST FOR RF AND IF CHASSIS(CONT'D)

SYMBOL REF.	DESCRIPTION
R15	Same as R10
R16	Resistor, 100,000 ohms, ±10%, 1/2 watt
R17	Same as R10
R18	Same as R10
R19	Resistor, 100,000 ohms, ±10%, 1 watt
R20	Resistor, 47,000 ohms ±10%, 1 watt
R21	Same as R20
R22	Resistor, 47,000 ohms, ±10%, 1/2 watt
R23	Resistor, 68,000 ohms, ±10%, 1 watt
R24	Resistor, 10,000 ohms, ±10%, 1/2 watt
R25	Same as R24
R26	Resistor, 33,000 ohms, ±10%, 1/2 watt
R27	Same as R26
R28	Resistor, 470,000 ohms, ±10%, 1/2 watt
R29	Resistor, 150,000 ohms, ±10%, 1/2 watt
R30	Same as R9
S1	Not used
S2	Switch, tap, 3 pole, 4 position
S3	Switch, single pole, single throw, rotary
V1	Type 7F8 tube
V2	Same as V1
V3	Type 7AG7 tube
V4) V5) V6) V7)	Same as V3
V8	Type 7A6 tube
X1	Socket, octal, mica filled Bakelite
X2) X3) X4) X5) X6) X7) X8)	Same as X1
X9	Miniature, bayonet type socket
X10) X11) X12)	Same as X9
Z1	Interstage coupling unit, 10.7 mc.
Z2	Interstage coupling unit, 10.7 mc.
Z3	Same as Z1
Z4	Interstage coupling unit, D. 10.7 mc.
Z5	Interstage coupling unit, 10.7 mc.
Z6	Discriminator assembly unit, 10.7 mc.

MODEL 646B COMBINED AUDIO & POWER SUPPLY CHASSIS

SYMBOL REF.	DESCRIPTION
C101	Capacitor, fixed, paper, tubular, .05 mfd., 600 VDCW, ±20%.
C102	Capacitor, fixed, dry electrolytic, 25 mfd., 25 VDCW
C103	Same as C102
C104	Same as C101
C105	Same as C101
C106	Capacitor, fixed, dry electrolytic, 25 mfd., 50 VDCW
C107	Capacitor, fixed, electrolytic, 20 mfd., 475 VDCW
C108	Capacitor, fixed, electrolytic, 40 mfd., 475 VDCW
C109	Capacitor, fixed, electrolytic, 10 mfd., 475 VDCW
C110	Capacitor, fixed, mica 300 mmfd., ±20%, 500 VDCW

© John F. Rider

MODEL 646B COMBINED AUDIO & POWER SUPPLY CHASSIS (CONT'D)

SYMBOL REF.	DESCRIPTION
F101	Fuse, 2 ampere, 250 volts
L101	Choke, 10 henries, 0.160 amps
R101	Resistor, variable, composition, 1 megohm, Z taper standard shaft
R102	Resistor, 220 ohms, 1/2 watt, ±10%
R103	Resistor, 2700 ohms, 1/2 watt, ±10%
R104	Same as R103
R105	Resistor, 18,000 ohms, 1/2 watt, ±10%
R106	Same as R105
R107	Resistor, 330,000 ohms, 1/2 watt, ±10%
R108	Same as R107
R109	Resistor, 100,000 ohms, 1/2 watt, ±10%
R110	Resistor, 4700 ohms, 1 watt, ±10%
R111	Resistor, 220 ohms, 10 watts, ±5%
R112	Same as R110
R113	Resistor, 10,000 ohms 1 watt, ±10%
R114	Resistor, 150,000 ohms, 2 watts, ±10%
S101	Switch, rotary, SPDT
T101	Transformer, output, Pri. 10,000 ohms CT, 12 Ma. DC unbalance, push-pull windings, balanced at high audio frequencies, Sec. 8/500 ohms, Max operation level 10 watts
T102	Transformer, power, Prl, 115 volts, 50/60 cycles, single phase, Sec. #1. 320-0-320 volts RMS at 0.160 amp. Sec. #2, 5 volts at 3 amps., Sec. #3. 6.3 volts, Sec. #4, 6.3 volts CT at 1.5 amp.
V101	Tube, type 7F7
V102	Tube type 7C5
V103	Same as V102
V104	Tube type 5U4G
X101	Socket, loctal, mica-filled bakelite
X102	Same as X101
X103	Same as X101
X104	Socket, octal, mica-filled bakelite
X105	Fuse holder, molded black bakelite, finger operated

MODEL 647B COMBINED AUDIO & POWER SUPPLY CHASSIS

SYMBOL REF.	DESCRIPTION
C100	Capacitor, .05 mfd., 600 VDCW
C101	Capacitor, electrolytic, 50 mfd., 25 VDCW
C102	Same as C100
C103	Same as C100
C104	Capacitor, 125 mfd., 600 VDCW
C105	Capacitor, electrolytic, dual 20 mfd., 450 VDCW
C106	Part of C105
C107	Capacitor, electrolytic, 40 mfd., 475 VDCW
C108	Capacitor, electrolytic, 20 mfd., 475 VDCW
F100	Fuse, glass, 1 amp., 250 volts
L100	Choke, 10 henries at 0.100 amp.
R100	Resistor, variable, 1 megohm, ±10%, 1/2 watt, "Z" taper, clarostat 37
R101	Resistor, 100,000 ohms, ±10% 1/2 watt
R102	Same as R101
R103	Resistor, 2200 ohms, ±10%, 1/2 watt
R104	Same as R103
R105	Resistor, 330,000 ohms, ±10%, 1/2 watt
R106	Resistor, 4,700 ohms, ±10%, 1/2 watt
R107	Same as R101
R108	Resistor, 680 ohms, ±10%, 1/2 watt
R109	Same as R105
R110	Resistor, 27,000 ohms, ±10%, 1/2 watt
R111	Resistor, 1500 ohms, ±10%, 1 watt

©John F. Rider

MODELS 647B, 648B

MODEL 647B COMBINED AUDIO & POWER SUPPLY CHASSIS (CONT'D)

SYMBOL REF.	DESCRIPTION
R112	Resistor, 100,000 ohms, ±10%, 2 watts
R113	Resistor, 68,000 ohms, ±10%, 1/2 watt
S100	Switch, rotary, SPDT
T100	Transformer, power, Pri, 115 volts, 50/60 cycles, single phase, Sec. #1, 310-0-310 volts RMS at 0.1 amp., Sec. #2, 5 volts at 2.0 amp., Sec. #3, 6.3 volts at 2.5 amps.
T101	Transformer, output, Pri. 16,000 ohms, CT: 6 Ma. DC unbalance, push-pull windings balanced for high audio frequencies, Sec. 600/150 ohms Max. operation level +26 d b m
V100	Tube type 7F7
V101	Tube type 7N7
V102	Tube type 5Y3GT
X100	Socket, loctal, mica-filled bakelite
X101	Same as X100
X102	Socket, loctal, mica-filled bakelite
X105	Fuse holder, molded black bakelite, finger operated

MODEL 648B COMBINED AUDIO AND POWER SUPPLY CHASSIS

SYMBOL REF.	DESCRIPTION
C200	Capacitor, .05 mfd., 600 VDCW, ±20%
C201	Capacitor, 0.1 mfd., 600 VDCW, ±20%
C202	Capacitor - Same as C200
C203	Capacitor, 50 mfd., 50 VDCW
C204	Capacitor, 3 section, 10-10-10 mfd., 450 VDCW
C205	Capacitor, dual, 40-40 mfd., 450 VDCW
C206	Capacitor - Part of C204 (10 mfd. section)
C207	Capacitor - Part of C205 (40 mfd. section)
C208	Capacitor - Part of C204 (10 mfd. section)
F200	Fuse, 20 amp. *Littlefuse type 4AG
K200	Relay, filament-single pole, normally open, DC operation
L200	Choke, filter, smooth, 10 henries
L201	Same as L1
R200	Resistor, variable, .5 megohms, 20% accuracy, 1/2 watt
R201	Resistor, 560 ohms 1/2 watt, ±10%
R202	Resistor, 100,000 ohms, 1 watt, ±10%
R203	Resistor, 680,000 ohms, 1/2 watt, ±10%
R204	Resistor, 1000 ohms, 1/2 watt, ±10%
R205	Resistor, 390,000 ohms, 1/2 watt, ±10%
R206	Resistor, 330 ohms, 1 watt, ±10%
R207	Resistor, 15,000 ohms, 1 watt, ±10%
T200	Transformer, output, single 7C5 to loudspeaker
V201	Tube type 7C5
VP200	Vibrapack, audio supply
VP201	Vibrapack - (receiver supply) - Same as VP200
X200	Socket, loctal, mica-filled bakelite
X201	Socket - Same as X200
X202	Fuse holder

©John F. Rider

©John F. Rider

ALIGNMENT PROCEDURE

The following alignment procedure is for use only by competent service men having the proper equipment. Re-alignment is very seldom needed and is usually only required after some major part has been replaced because of damage to the receiver.

The equipment required for re-aligning this receiver is an output meter and a modulated source of radio frequency (a signal generator or microvolter). This source of radio frequency must be accurately calibrated in frequency and must have a method of varying the output.

All alignments must be made with the volume control turned full on and with the signal input from the generator reduced to as low a value as possible while still giving a sufficient output to be easily read on the output meter.

Connect the output meter, through a .5 M.F. condenser and a resistance of such a value as to make the total meter resistance approximately 10,000 ohms, to the two small pins of the speaker plug. The output meter remains connected during the entire alignment procedure.

Connect the signal generator to the grid cap of the 6A7 tube through a .1 M.F. condenser. Connect the ground of the generator to the ground lead of the receiver. With the wave switch on broadcast position and the dial set to about 1000 K.C., feed in a 456 K.C. signal. Adjust the trimmers on top of the first and second I.F. transformers until the maximum output is obtained. This aligns the I.F.

Leaving the signal generator connected to the grid cap of the 6A7, turn the wave switch to the right hand (short wave) position. Set the dial and the signal generator to 15.0 M.C. Tune in the signal by adjusting the 15.0 M.C. oscillator trimmer. The signal will he heard at two different settings of the trimmer. The proper setting is the one where the signal is heard when the trimmer is the loosest. Also when the dial of the receiver is turned the signal will be heard again at about 14.0 M.C. If the signal is heard at about 16.0 M.C. on the dial instead of 14.0 M.C. the wrong setting has been used and should be corrected.

Set the wave switch on broadcast position and turn the dial to the extreme high frequency end. Feed a 1680 K.C. signal to the receiver antenna post through a .00025 M.F. mica condenser. Adjust the 1680 K.C. broadcast oscillator trimmer for maximum output. Set the generator to 1500 K.C. and tune in this signal on the receiver. Then adjust the 1500 K.C. broadcast antenna trimmer and the 1500 K.C.broadcast preselector trimmer for maximum output. Set the generator to 600 K.C. and adjust the 600 K.C. broadcast oscillator pad to maximum output while tuning the receiver back and forth across the signal from the generator. This completes the alignment of the broadcast band.

The police band is aligned by feeding a 4.0 M.C. signal to the receiver antenna lead through the .00025 condenser. Turn the wave switch to the center position and tune the receiver to this signal. Adjust the 4.0 M.C. police antenna trimmer for best output.

The short wave band is aligned in the same way using a 15 M.C. signal and adjusting the 15 M.C. short wave antenna trimmer after having turned the wave switch to the right hand position.

DESCRIPTION

This receiver is an 8 tube alternating current operated superheterodyne.

The tubes used are a 6A7 as oscillator modulator, a 6D6 as I.F. amplifier, a 6H6G as A.V.C. and audio rectifier, a 6Y7G as audio voltage amplifier, an 80 as a power rectifier, a 6G5 as tuning indicator and two type 6V6G tubes as push pull audio power amplifiers.

This receiver is made to cover 3 tuning bands, the standard broadcast band which ranges from 1680 K.C. to 535 K.C., the middle or police band which has a frequency range of from 5.4 M.C. to 1.7 M.C. and high frequency or foreign band which is from 19 M.C. to 5.0 M.C.

PARTS LIST

Part No.	Description
19-116	3 Gang Variable Condenser
69-107	Wave Switch
10-175	1st I.F. Transformer
10-176	2nd I.F. Transformer
10-183	S.W. Antenna Coil
10-184	S.W. Oscillator Coil
10-180	B.C. Oscillator Coil
10-182	Police Band Antenna Coil
10-181	Police Band Oscillator Coil
10-179	B.C. Ant. & Preselector Coil
80-129	Power Transformer (115 V. 50-60 Cycle)
18-201	12 M.F.D. Wet Electrolytic Condenser
18-202	10 M.F.D. Wet Electrolytic Condenser
24-113	Volume Control
26-110	Tone Control with Switch
20-100	B.C. Oscillator Padding Condenser
20-101	3 Gang Trimmer
79-231	6 inch Dynamic Speaker
79-224	12 inch Dynamic Speaker

MODELS D50,
D51, D53, D54

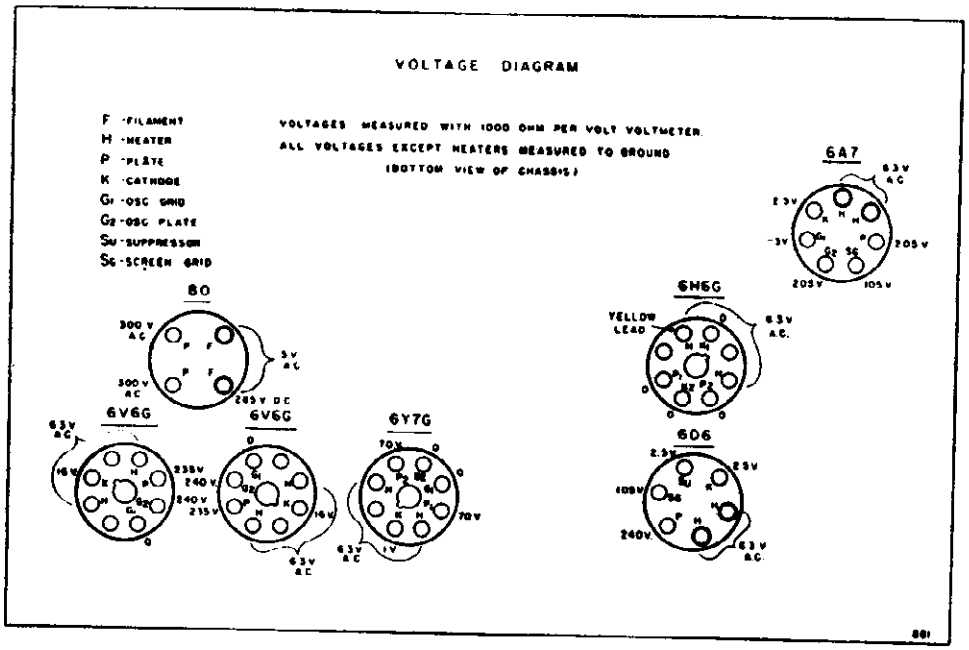

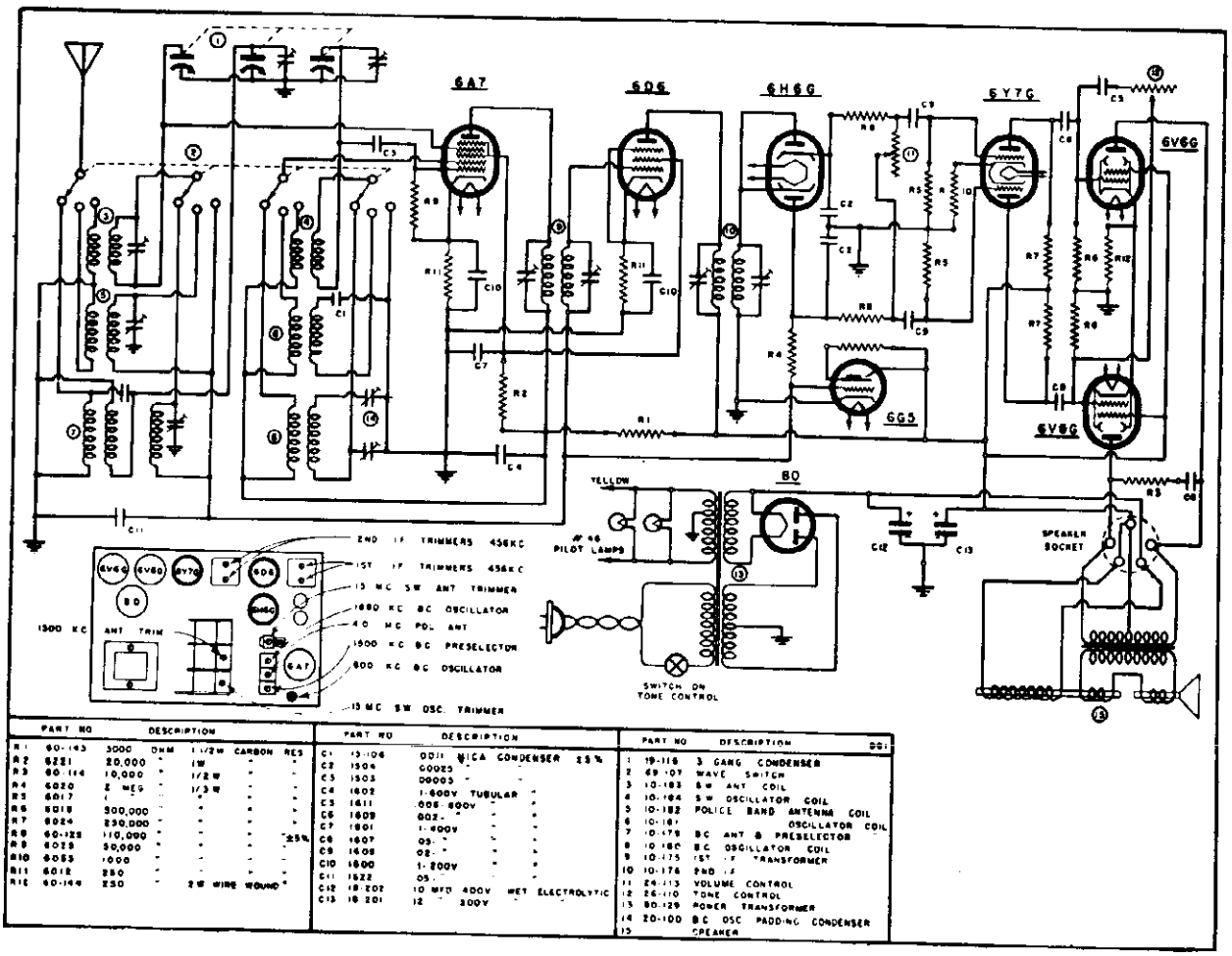

PART NO	DESCRIPTION
R1 60-143	3000 OHM 1-1/2W CARBON RES
R2 6221	20,000 " 1W " "
R3 60-144	10,000 " 1/2W " "
R4 6020	2 MEG " 1/2W " "
R5 6017	1 " " " " "
R6 6018	500,000 " " " " "
R7 6024	250,000 " " " " "
R8 60-125	110,000 " " " " " ±5%
R9 6025	50,000 " " " " "
R10 6063	1000 " " " " "
R11 6018	250 " " " " "
R12 60-149	250 " 2W WIRE WOUND "

PART NO	DESCRIPTION
C1 13-106	0001 MICA CONDENSER ±5%
C2 1504	.00025 " "
C3 1503	.00005 " "
C4 1602	1-600V TUBULAR "
C5 1611	.006-600V " "
C6 1609	.002- " " "
C7 1601	1-400V " "
C8 1607	.05- " " "
C9 1608	.02- " " "
C10 1600	1-200V " "
C11 1622	.05- " "
C12 18-202	10 MFD 400V WET ELECTROLYTIC
C13 18-201	12 " 300V " "

PART NO	DESCRIPTION
1 19-116	3 GANG CONDENSER
2 69-107	WAVE SWITCH
3 10-183	S-W ANT COIL
4 10-184	S-W OSCILLATOR COIL
5 10-182	POLICE BAND ANTENNA COIL
6 10-181	" OSCILLATOR COIL
7 10-179	B.C. ANT & PRESELECTOR
8 10-180	B.C. OSCILLATOR COIL
9 10-175	1ST I.F. TRANSFORMER
10 10-176	2ND I.F. "
11 26-113	VOLUME CONTROL
12 26-110	TONE CONTROL
13 80-129	POWER TRANSFORMER
14 20-100	B.C. OSC. PADDING CONDENSER
15	SPEAKER

©John F. Rider

MODELS JS-188,
JS-189, JS-190

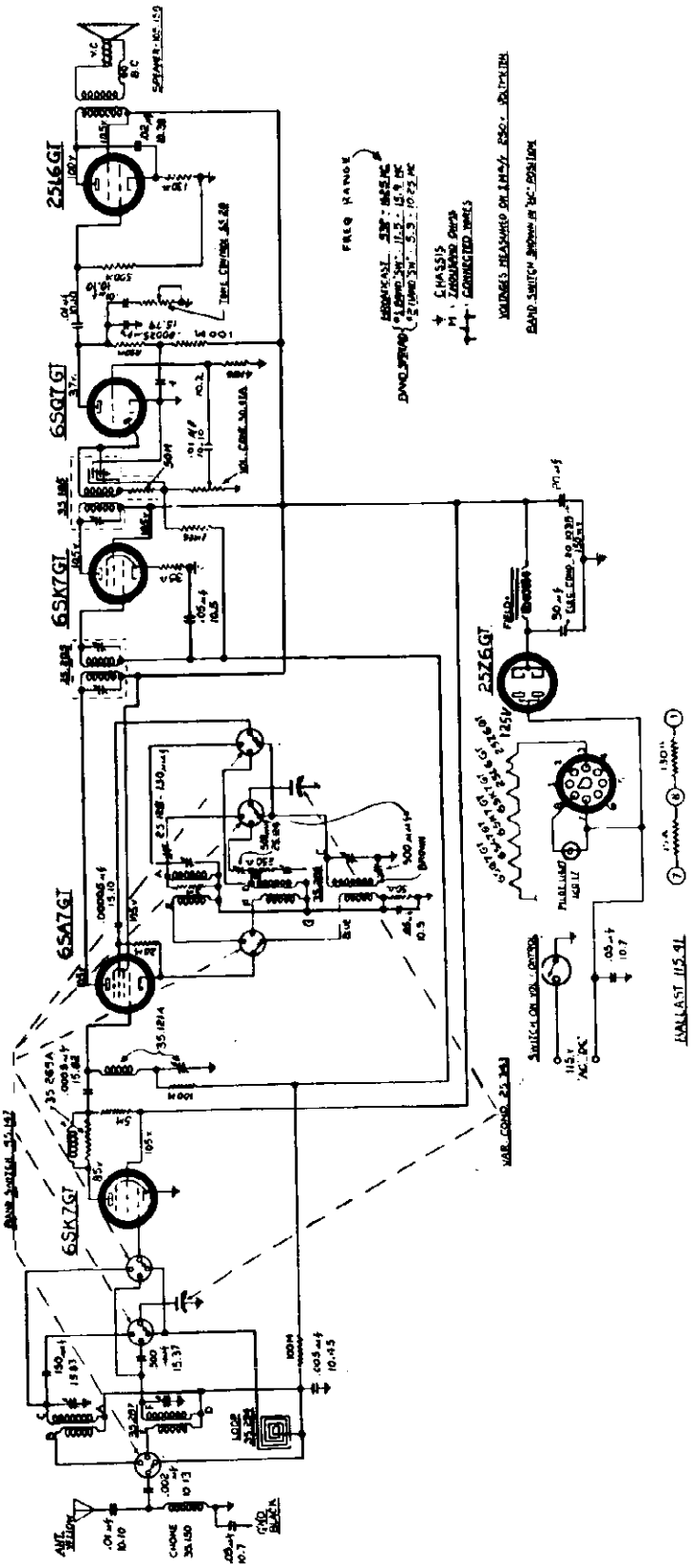

TUNING RANGE: 538 to 1625KC; 5.3 to 10.25MC; and 11.5 to 15.9MC covers regular American Broadcast stations, the high fidelity broadcast experimental stations, Amateurs, Aircraft and all regular International Short Wave Stations.

BAND SPREAD TUNING

Band Spread Tuning which is the feature of this series, allows ease of tuning on IMPORTANT International Short Wave Stations, particularly the 19-20 and 25 meter bands and 31-40 and 49 meter bands.

DIAL LAMP: Chassis uses one 6-8 Volt, 150M.A. Lamp. When replacing Dial Lamp use only similar Lamp or damage will result.

©John F. Rider

MODELS JS-191, JS-300

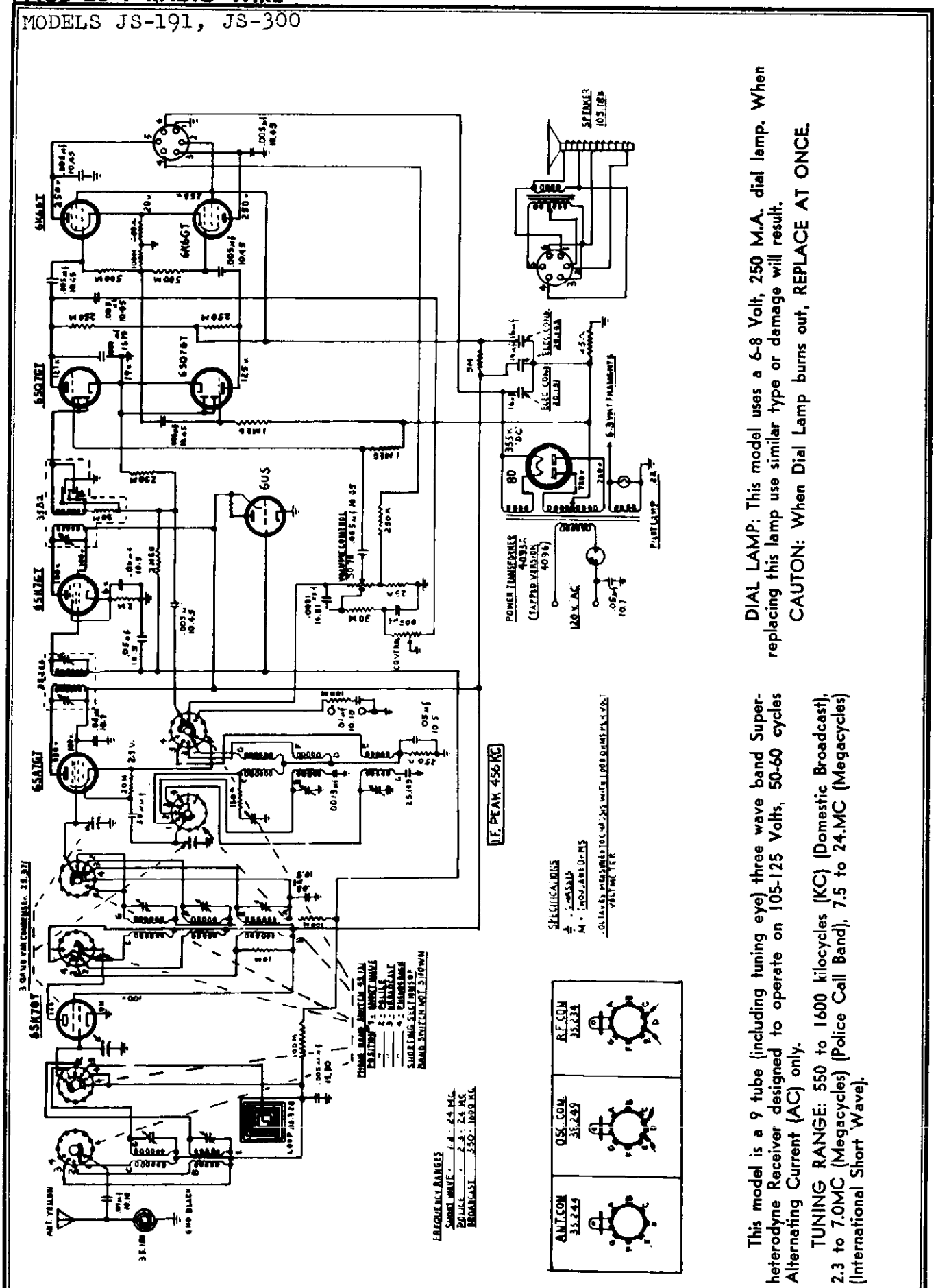

DIAL LAMP: This model uses a 6-8 Volt, 250 M.A. dial lamp. When replacing this lamp use similar type or damage will result.

CAUTON: When Dial Lamp burns out, REPLACE AT ONCE.

This model is a 9 tube (including tuning eye) three wave band Superheterodyne Receiver designed to operate on 105-125 Volts, 50-60 cycles Alternating Current (AC) only.

TUNING RANGE: 550 to 1600 kilocycles (KC) (Domestic Broadcast), 2.3 to 7.0MC (Megacycles) (Police Call Band), 7.5 to 24.MC (Megacycles) (International Short Wave).

©John F. Rider

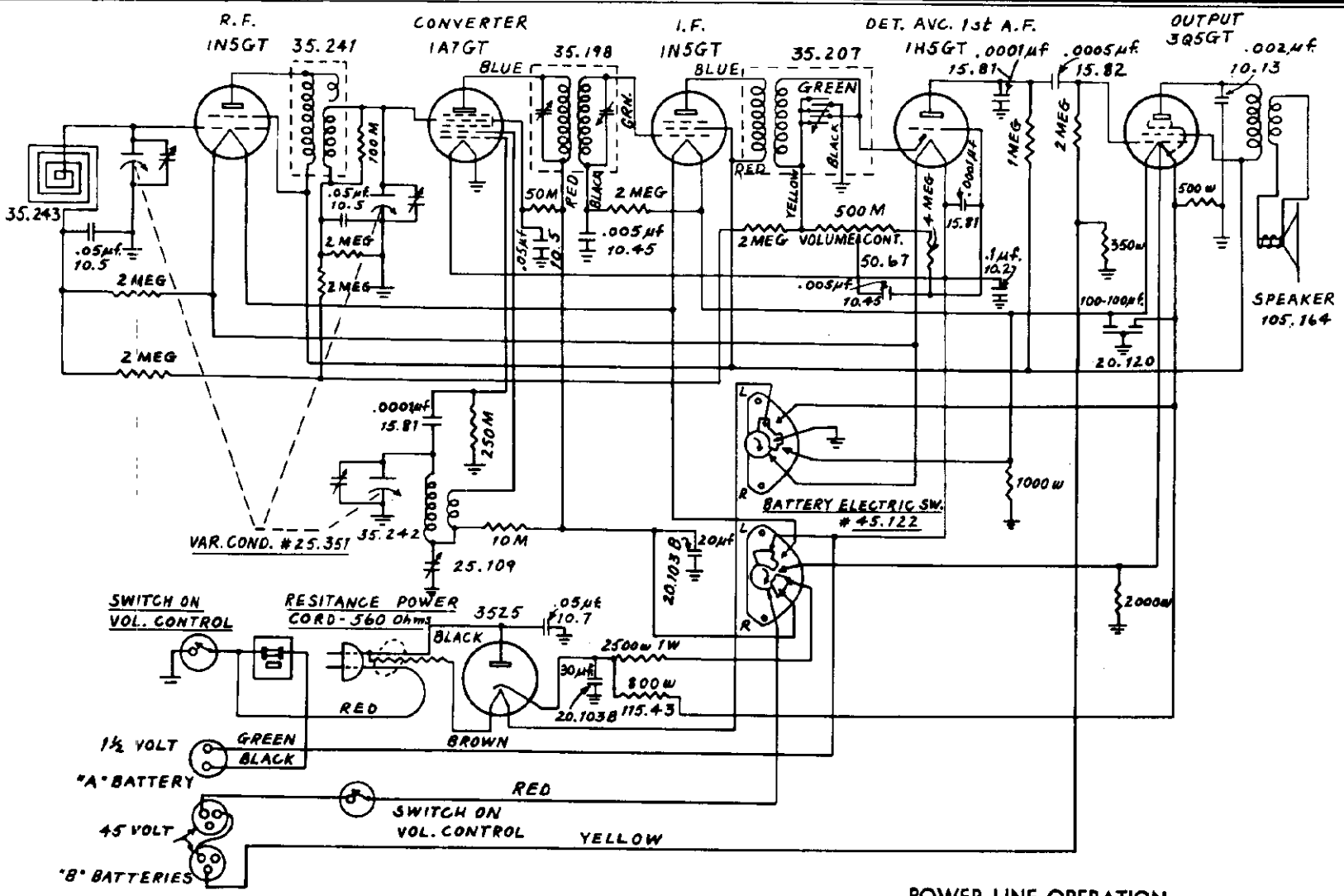

This Six-tube Receiver is designed to operate on self-contained Battery Power Unit or 115 volts, 40 to 60 cycles, Alternating Current (AC) or 115 volts Direct Current (DC)

The tuning range, 540 to 1600 Kilocycles (555 to 187 meters) covers the regular broadcast and experimental high-fidelity broadcast stations.

POWER LINE OPERATION

Release catch at top and drop rear cover of case. Remove Power Cord Plug from receptacle (automatically disconnecting batteries), uncoil Power Cord to its full length and close cover, allowing Cord to pass through notch in case. Insert Power Cord Plug into electric outlet and operate receiver as described above.

Allow 20 seconds for tubes to heat. If receiver fails to operate on D.C., or hums slightly on A.C., reverse Power Cord Plug.

MODEL JS-242

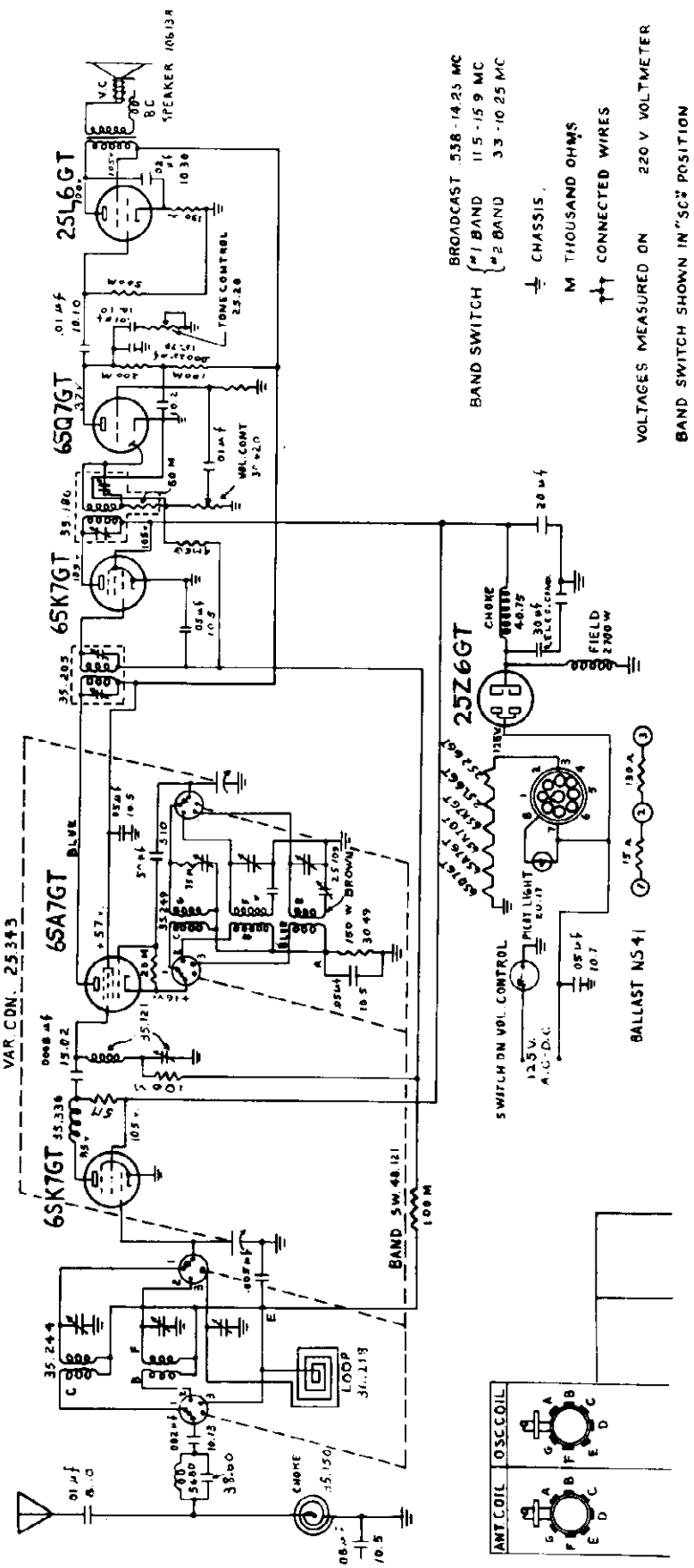

This is a 6 tube Plus Ballast AC-DC, 3 Wave Band Receiver.

TUNING RANGE: 538 to 1625KC; 5.3 to 10.25MC; and 11.5 to 15.9MG covers regular American Broadcast stations, the high fidelity broadcast experimental stations, Amateurs, Aircraft and all regular International Short Wave Stations.

SHORT WAVE RECEPTION: An external aerial is absolutely necessary for good reception on all Short Wave Bands. In installing an Antenna to be used with this receiver, every precaution should be observed to keep interfering noises at the minimum.

For connection to the Antenna, a YELLOW wire is brought out from the rear of the receiver.

©John F. Rider

MODEL M8

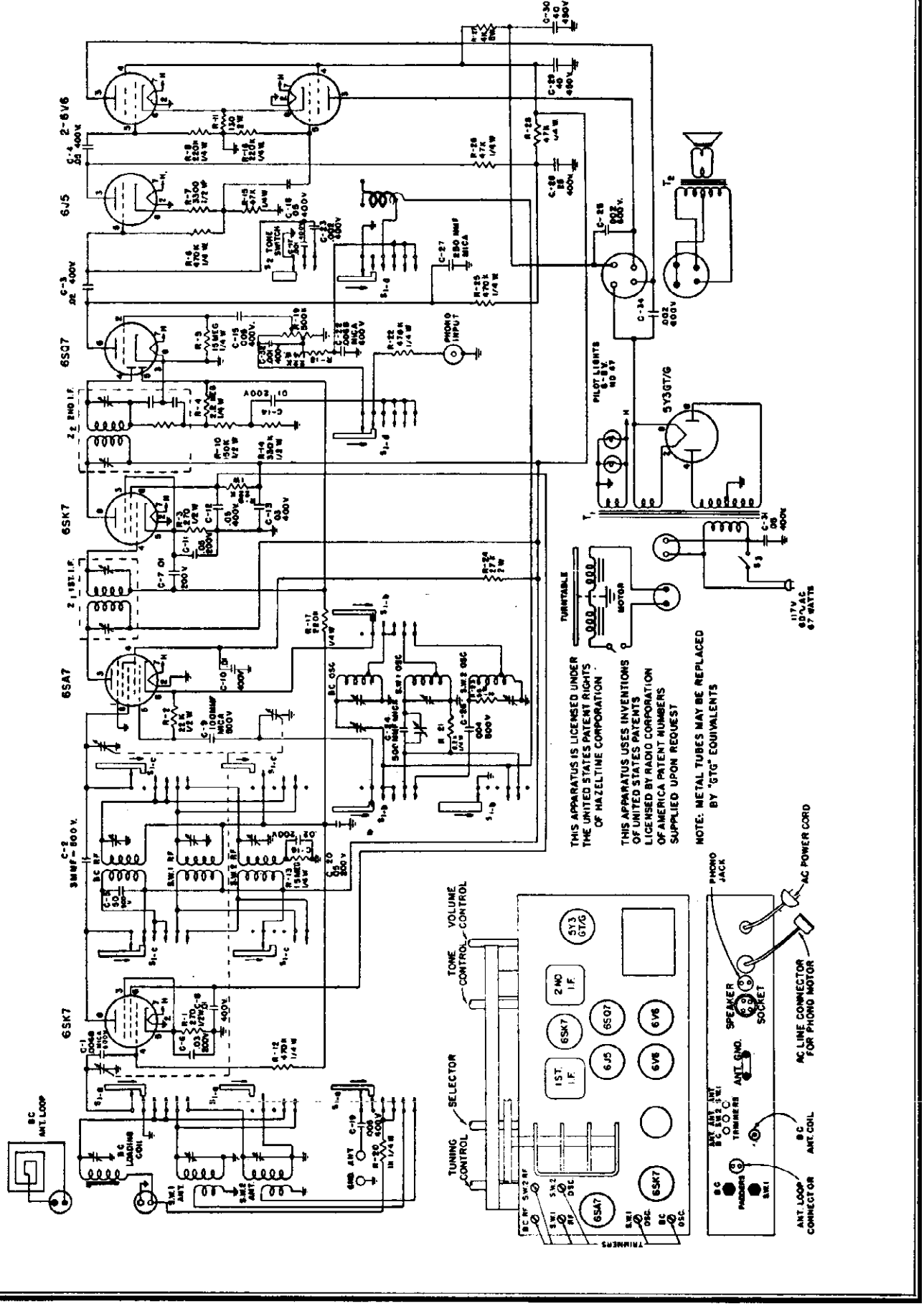

©John F. Rider

©John F. Rider

POWER SOURCE:

This receiver may be operated from either an AC or DC line, between 105 and 125 volts. On AC lines the frequency must be 50 to 60 cycles.

TUBE COMPLEMENT:

1 12BE6 — AM converter.
1 12BA6 — AM intermediate frequency amplifier.
1 12AT6 — AM demodulator and AVC; AM-FM 1st audio amplifier.
1 14F8 — FM oscillator-mixer-Super Regenerative I.F. amp.
1 35B5 — Audio output amplifier.
1 35W4 — Power rectifier.

INSTALLATION:

1. Antenna Connection.

AM—A self contained loop antenna is provided, which will give satisfactory reception on the standard broadcast band without requiring any additional external antenna. However, if stronger signals are desired from weak or distant stations an external antenna may be connected to the wire extending from the loop.

FM—A self contained line antenna system is provided for reception of stations appearing in the FM band. To use this line antenna a short wire jumper should be connected between the two outside screw terminals of the FM antenna panel, which is mounted on the broadcast loop antenna form. Should poor reception conditions make it necessary, an FM dipole antenna may be connected to the left hand and center screw terminals of the FM antenna panel. In such a case, the line antenna link should be disconnected.

2. Ground.

This set has been designed to operate without an external ground, and the use of any ground connection is not recommended.

3. Power Connection.

After making certain that the power circuit is rated between 105 and 125 volts extend the line cord to its full length and insert the plug into the nearest convenient outlet. If the supply is DC, and the set fails to operate, it may be necessary to reverse the plug connection to secure operation of the set.

SERVICE ADJUSTMENTS:

Alignment or adjustment of the various circuits of this receiver can only be made by a skilled radio technician with the proper equipment.

NOTE: Points A, B, C, D, E, and F are noted on the circuit diagram.

AM Equipment:

Equipment Required:
a) Broadcast Band Signal Generator.
b) Output Meter.

1. Set band switch at AM. Advance volume control to full volume setting.
2. Connect output meter across voice control at points "E" and "F".
3. Connect the "high" side of the Signal Generator to point "A" through a .01 mfd condenser. Connect the "ground" side to point "B". Adjust the Signal Generator to 455 kc and with the receiver switched on, adjust the first and second I.F. transformers for peak output as shown on the output meter. The signal injected into the receiver should be as small in magnitude as possible, consistent with a useful deflection on the output meter.
4. Connect the "high" side of the Generator to the antenna terminal with a 200 mmf condenser inserted in series. Connect the "ground" side of the Generator to point "B".
5. Tune receiver to 150 on the dial. Adjust Signal Generator to 1500 kc. Adjust BC oscillator and BC antenna trimmers for maximum output. Use a weak signal for final adjustment.

FM Equipment:

Equipment Required:
a) 21.75 kc oscillator.
b) FM Signal Generator for 88 to 108 megacycle range.
c) Output meter.

1. Connect output meter across points "E" and "F".
2. With set switched on and volume control at maximum, feed modulated 21.75 mc signal into terminals "C" and "D".
3. Adjust tank coil for maximum response on output meter.
4. Disconnect 21.75 kc oscillator and connect FM signal generator to points "C" and "D".
5. Set receiver dial to 88 megacycles and adjust Signal Generator for same frequency. Adjust spacing of FM oscillator coil for maximum signal response.
6. Tune receiver to 108 megacycles and adjust Signal Generator to same frequency. Adjust FM oscillator trimmer for maximum signal response.
7. Repeat operation 5 and 6.
8. Tune receiver to 90 megacycles and adjust Signal Generator for same frequency. Adjust spacing of the FM antenna coil for maximum signal response with minimum background noise. Slowly rock tuning control while performing this adjustment.
10. Repeat operations 8 and 9.

MODEL M19

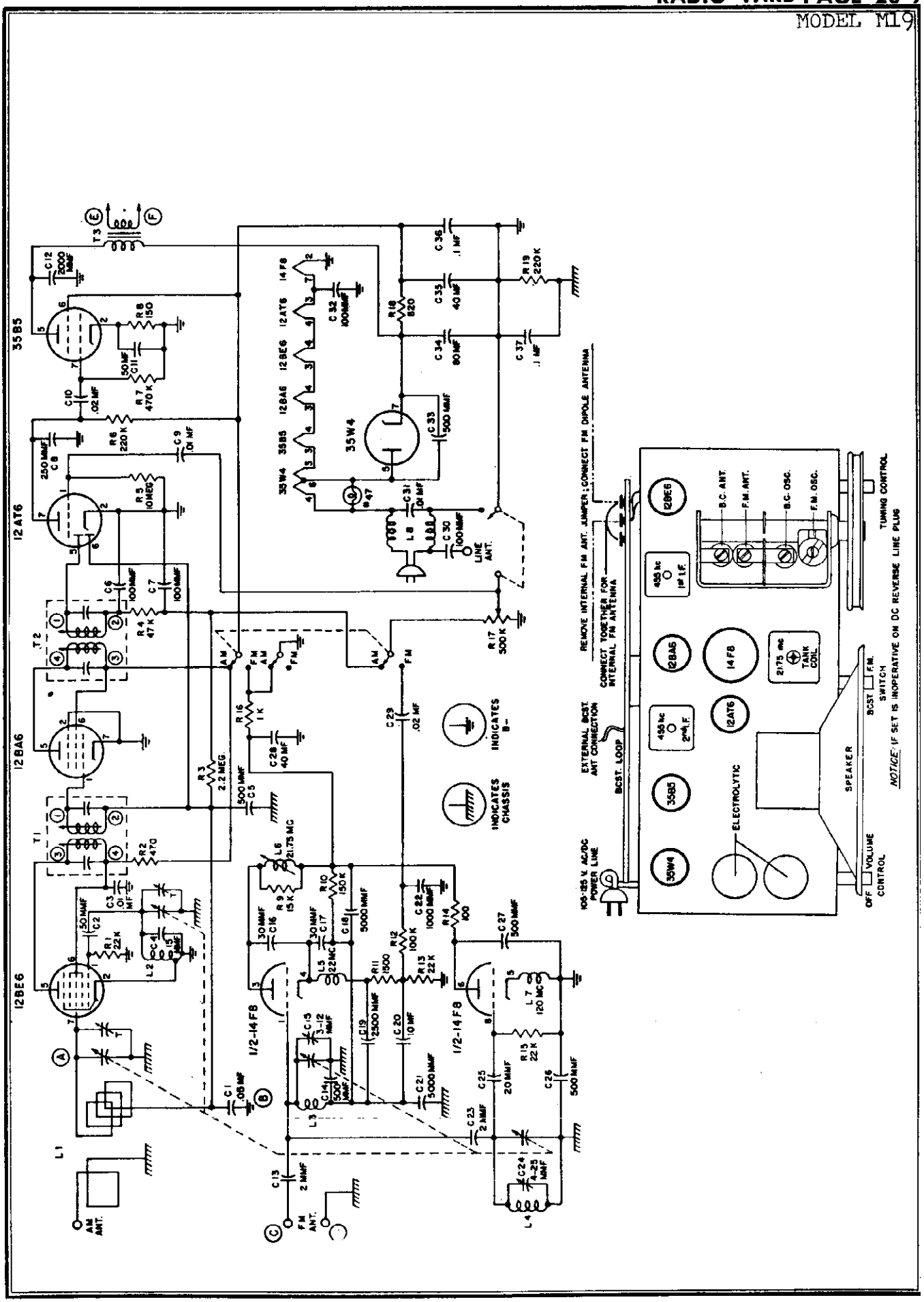

©John F. Rider

MODEL M61

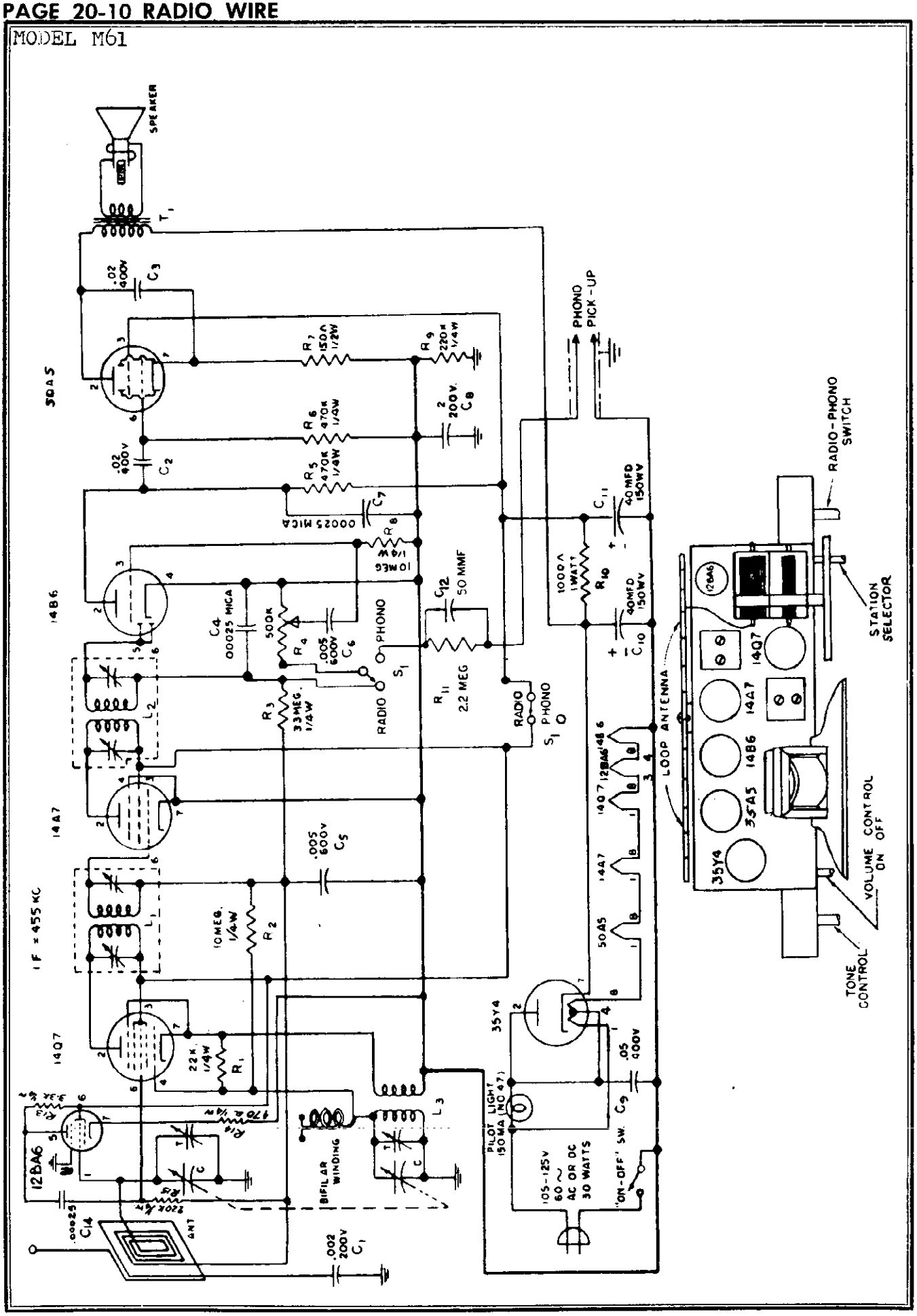

©John F. Rider

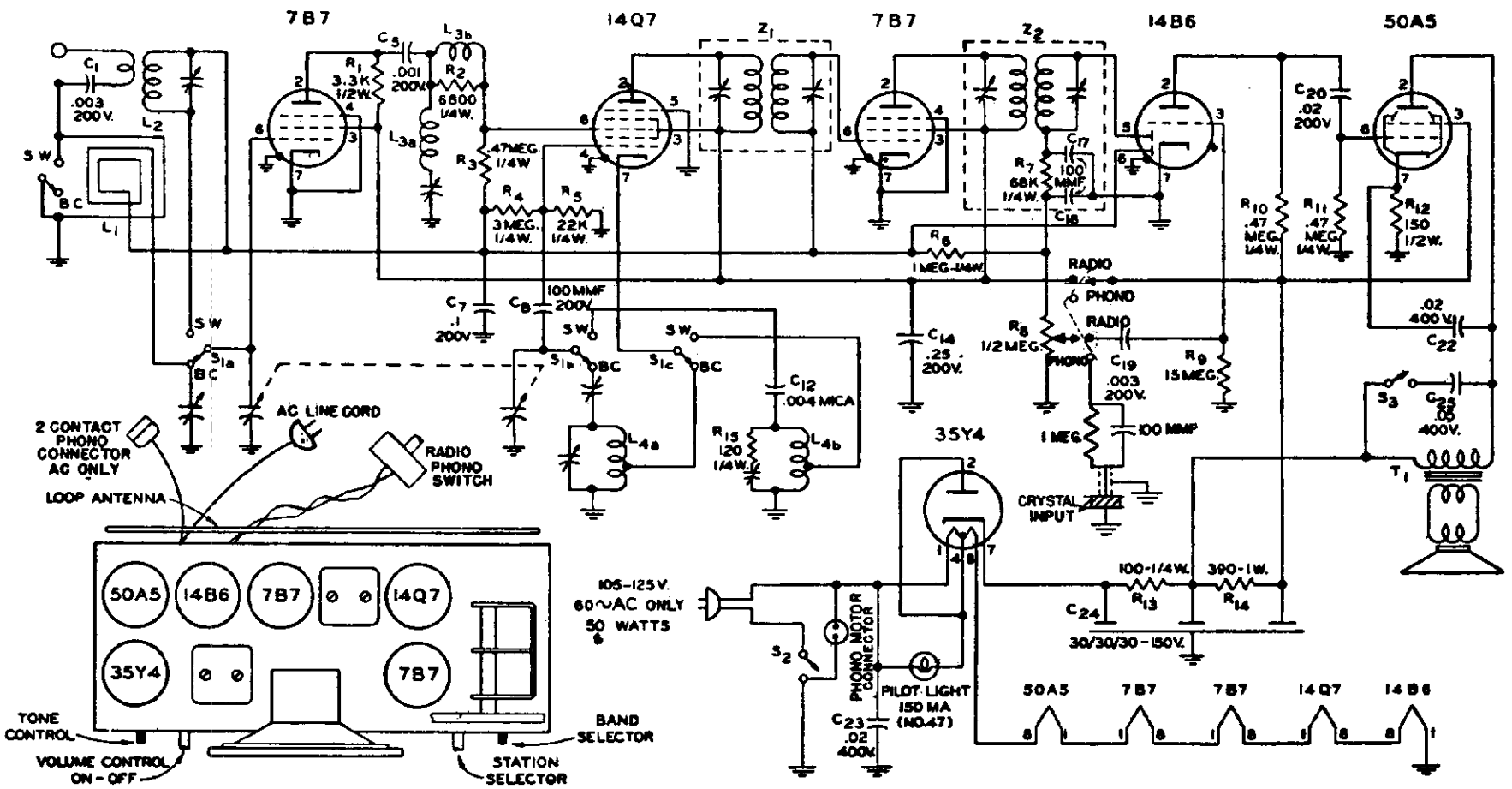

CAUTION: TO REPLACE TUBES, REMOVE SCREWS ON SLOPING BOARD IN CABINET & TILT BOARD BACK, AFTER FIRST REMOVING PLUG FROM CURRENT OUTLET

©John F. Rider

ALIGNMENT PROCEDURE

Correct alignment is of extreme importance in all-wave receivers. The receivers are properly aligned at the factory with precision equipment and realignment should not be attempted by the service technician until all other causes of faulty operation are corrected.

In order to properly realign the receiver the following equipment is necessary:

1. A signal generator which will provide an accurately calibrated signal at any frequency from 456 kilocycles to 18 megacycles. The generator should have adjustable signal output.

2. An output audio voltmeter of the low voltage type to be connected across the moving coil of the speaker. This should be capable of providing a readable deflection for relatively low output levels to avoid the effects of overload.

3. An insulated or non-metallic screw driver for the adjustment of trimmers.

I F ALIGNMENT 456 KC

1. Connect the output meter (low scale) across the loud speaker voice coil. Turn the wave band switch to broadcast position. Turn the volume control to its maximum position..

2. Connect the test oscillator ground to chassis and the "hot" lead from the test oscillator to the grid of the 6L7 converter tube through a series .1 Mfd. condenser. Set test oscillator to 456 KC.

3. Adjust I F alignment screws of second I F transformer adjacent to 6F6 power tube to maximum output, reducing output of test oscillator to keep the meter reading on scale as alignment proceeds.

4. Adjust alignment of first I F transformer, (directly behind tuning condenser) to maximum output as described above.

5. Readjust these trimmers for accurate alignment. Always use the lowest possible output from the test oscillator to preclude the possibility of automatic volume control action confusing proper adjustment.

NOTE: Since coils are used in series it is absolutely necessary to align the high frequency bands first, in the order indicated.

FOREIGN BAND 5.7 TO 18.5 MEGACYCLES

1. With test oscillator connected to the antenna and ground terminals through a 400 ohm resistor set oscillator at 16 megacycles.

2. Set the dial scale to 16 megacycles and adjust the oscillator trimmer condenser (C 4) to a resonance using the counterclockwise or low capacity point.

3. Adjust input circuit trimmer (C 5) to maximum response, rocking the gang condenser back and forth a degree or two to obtain proper maximum.

POLICE OR MIDDLE BAND 1.75 TO 5.8 MEGACYCLES

1. With the test oscillator connected as above set the oscillator and dial to 5.5 megacycles.

2. Adjust oscillator trimmer condenser (C 6) for maximum response using the counterclockwise or low capacity point.

3. Adjust input circuit trimmer (C 7) to maximum response rocking the gang condenser as described above.

BROADCAST BAND 535 TO 1800 KC

1. With test oscillator connected to antenna and ground through a 200 Mfd. condenser set oscillator and receiver dial to 1600 kilocycles.

2. Adjust broadcast oscillator trimmer (C 8) to obtain maximum response.

3. Adjust antenna circuit trimmer (C 9) for maximum output.

4. Adjust preselector trimmer (C 10) for maximum output.

5. Set test oscillator and dial to 600 kilocycles and tune in the signal, then adjust broadcast band padding condenser (C 11) for maximum output This padder is mounted on the aluminum coil deck near the panel and is adjusted through a hole provided in the back of the chassis pan. Rock the condenser back and forth a degree or two in order to obtain proper maximum.

6. Repeat the 1600 KC adjustments described above for greater accuracy.

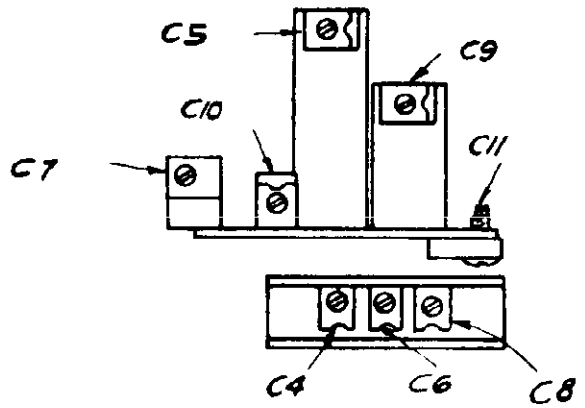

Fig. 2 Location of Trimmers

SCHEMATIC WIRING DIAGRAM

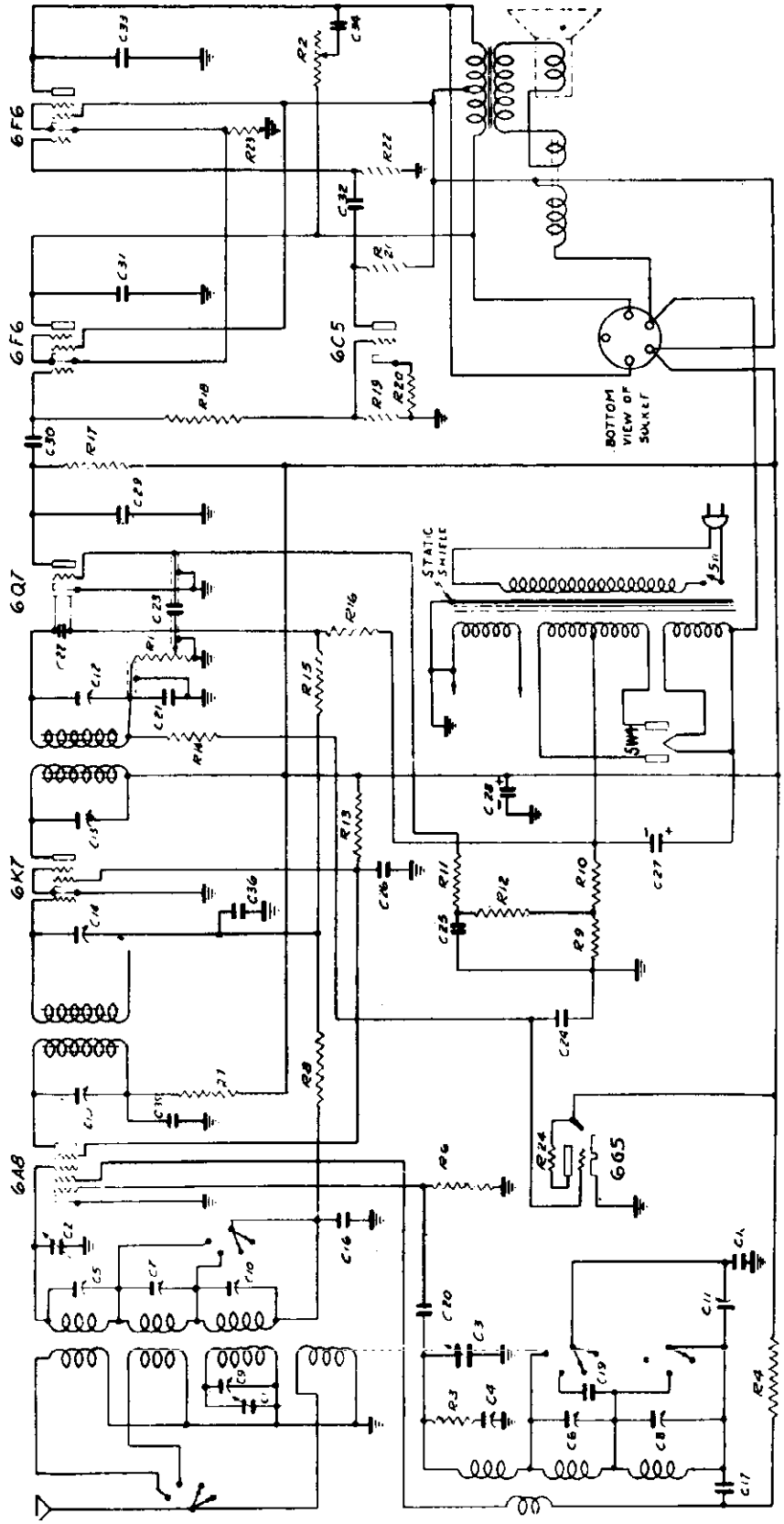

Fig. 1 Tuning Controls and Tube Position

©John F. Rider

MODELS MB3, MB3A

SCHEMATIC LOCATION	PART No.	DESCRIPTION
	15089	Bulb pilot light (edgelight)
	B-15045	Bezel
C1 C2 C3	C-16530	Condenser, variable gang model MB3—MB3A
C11	A-16472	Condenser, padder 340 uuf 960 uuf
C4 C6 C8	A-16473	Condenser, trimmer 3-30 uuf (triple strip)
C7	A-15246-2	Condenser, trimmer 3-30 uuf (bakelite base)
C5 C9 C10	A-16474	Condenser, trimmer 3-30 uuf (ceramic base)
C27	A-15236-3	Condenser, wet electrolytic 25 Mfd. 400 volts
C28	A-15237-2	Condenser, wet electrolytic 10 Mfd. 300 volts
C29	15918	Condenser, mica 100 Mfd. +—20% type O
C21	15928	Condenser, mica 250 Mfd. +—20% type O
C20 C22	15929	Condenser, mica 50 Mmfd. +—20% type O
C17	15930	Condenser, mica 2000 Mmfd. +—20% type W
C18	15931	Condenser, mica 4300 Mmfd. +—5% type W
C19	15932	Condenser, mica 1750 Mmfd. +—5% type W
C16 C36	15752	Condenser, tubular .05 Mfd. 200 volts
C31 C33	15753	Condenser, tubular .002 Mfd. 600 volts
C23 C30 C32	15754	Condenser, tubular .01 Mfd. 400 volts
C35	15757	Condenser, tubular .1 Mfd. 400 volts
C24	15763	Condenser, tubular .01 Mfd. 200 volts
C34	15764	Condenser, tubular .03 Mfd. 400 volts
C25	15770	Condenser, tubular .2 Mfd. 200 volts
C26	15773	Condenser, tubular .2 Mfd. 400 volts
R2	B-16832	Control, tone
R1	B-16831	Control, volume
	16938	Coil and mounting assembly
	B-15044	Glass convex
	A-15039	Knob
	B-15041	Retaining spring for Bezel
	B-15043	Retaining ring for Glass
R13	15501	Resistor, carbon 25,000 +—20% 1 watt
R12	15511	Resistor, carbon 50,000 +—20% ¼ watt
R17	15512	Resistor, carbon 250,000 +—20% ¼ watt
R8	15515	Resistor, carbon 100,000 +—20% ¼ watt
R14 R15 R16 R24	15517	Resistor, carbon 1 meg. +—20% ¼ watt
R7	15542	Resistor, carbon 1,000 +—20% ¼ watt
R22	15554	Resistor, carbon 500,000 +—10% ¼ watt
R4	15558	Resistor, carbon 10,000 +—20% ½ watt
R11	15559	Resistor, carbon 3 meg. +—20% ¼ watt
R3	3320	No. 38 D. C. C. Manganin wire 2 ohms
R18	15604	Resistor, carbon 435,000 +—10% ¼ watt
R19	15605	Resistor, carbon 100,000 +—10% ¼ watt
R20	15606	Resistor, carbon 5,000 +—10% ¼ watt
R23	15607	Resistor, carbon 250 +—10% 2 watt
R12	15608	Resistor, carbon 50,000 +—10% ¼ watt
R6	15552	Resistor, carbon 30,000 +—20% ¼ watt
R9 R10	A-16564	Resistor, candohm 27.5 and 15 ohms .245 watts
	A-16829	Socket speaker
	15066	Socket 6 K7
	15083	Socket 6 C5
	15084	Socket 6 F6
	16470	Socket 5 W4
	16469	Socket 6 Q7
	16537	Socket 6 A8
	B-16635	Socket 6 G5 with leads
	A-15054	Socket pilot light (edgelight) R. H.
	A-15053	Socket pilot light (edgelight) L. H.
	C-16852	Speaker
	A-16818	Transformer 1st, I. F.
	A-16819	Transformer 2nd I. F.
	C-16544-5	Transformer, Power 110 volt 50-60 cycles
	C-16806	Transformer, Power Universal Tap
	A-1950	Washer Felt
	16941	Dial and Paper Strip Assembly
	A-15023	Pointer (Minute)
	A-15024	Pointer (Tuning)
	B-16813	Paper Dial Backing

VOLTAGE CHART

POSITION	TUBE	Ef	Ek	Eg SCREEN	Ep SUPPRESSOR	Ep TRIODE	Ep PENTODE
Converter	6 A8	6.3	3.0	110.0			225.0
T. F. Amplifier	6 K7	6.3	3.0	110.0			230.0
Detector—AVC	6 Q7	6.3	2.0			95.0	
Phase Inverter	6 C5	6.3	7.0			150.0	
Power Output	6 F6	6.3	14 0	230 0			225
Power Output	6 F6	6.3	14.0	230.0			225
Rectifier	5 W4	5 0					

©Tahn & Rider

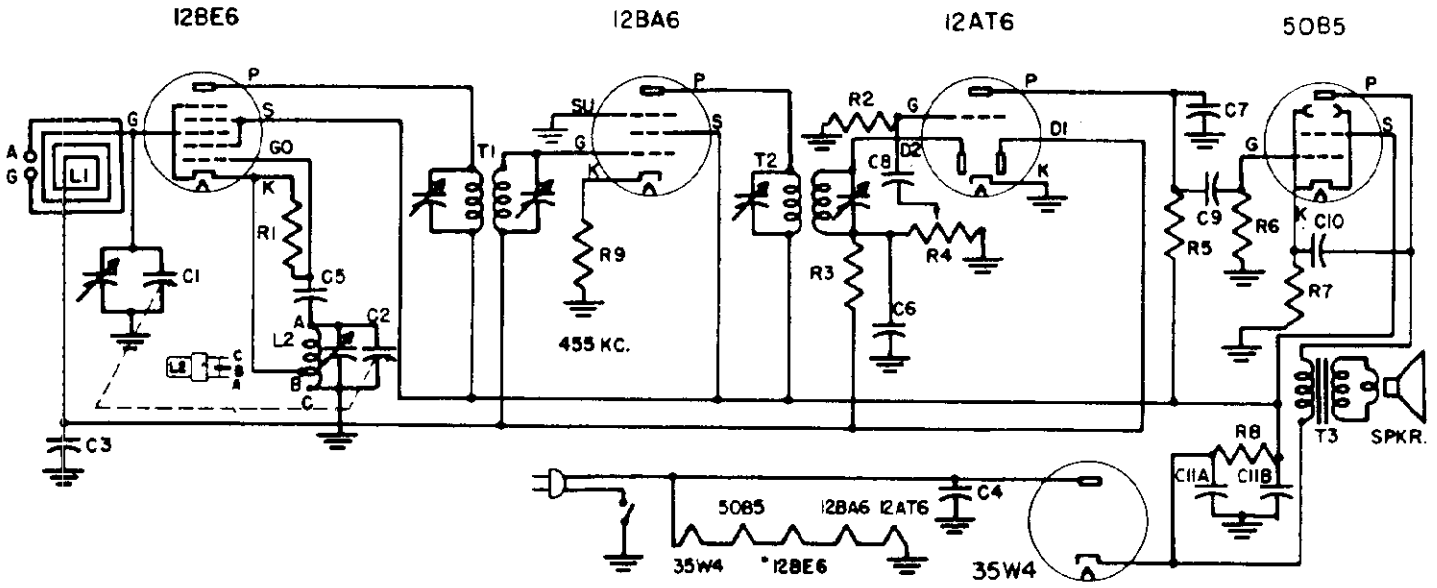

I.F. 455KC.

Part No.	Circ. Sym.	Description
CV-10002-E	C1,C2	CONDENSER - VARIABLE TUNING WITH DRUM
CP-14503	C3,C4	CONDENSER - .05 MFD. 400 VOLT.
CM-15500	C5	CONDENSER - .00005 MFD. MICA
CM-15251	C6,C7	CONDENSER - .00025 MFD. MICA
CP-14103	C8,C9	CONDENSER - .01 MFD. 400 VOLT.
CP-14503	C10	CONDENSER - .05 MFD. 400 VOLT.
CL-10001	C11A;C11B	CONDENSER - 20/20 MFD. 150 VOLT ELECT
RC-32002	R1	RESISTOR - CARBON 20,000 OHMS 1/2 WATT
RC-31005	R2	RESISTOR - CARBON 10 MEG. 1/2 WATT
RC-32004	R3	RESISTOR - CARBON 2 MEG. 1/2 WATT
VC-10105	R4	VOLUME CONTROL - 1 MEG. (WITH SWITCH).

Part No.	Circ. Sym.	Description
RC-32503	R5	RESISTOR - CARBON 250,000 OHMS 1/2 WATT
RC-35003	R6	RESISTOR - CARBON 500,000 OHMS 1/2 WATT
RC-31500	R7	RESISTOR - CARBON 150 OHMS 1/2 WATT
RC-32000	R8	RESISTOR - CARBON 200 OHMS 1/2 WATT
RC-31001	R9	RESISTOR - CARBON 68 OHMS 1/2 WATT
AL-10004	L1	LOOP ANTENNA
TRC-10000-D	L2	COIL, OSCILLATOR
TS-10000	T1	TRANSFORMER IST. I.F.
TS-10001	T2	TRANSFORMER 2ND. I.F.
TO-10000	T3	TRANSFORMER - OUTPUT FOR SPEAKER
SR-10000	SPKR	SPEAKER, 4" P.M.

MODEL MC-16

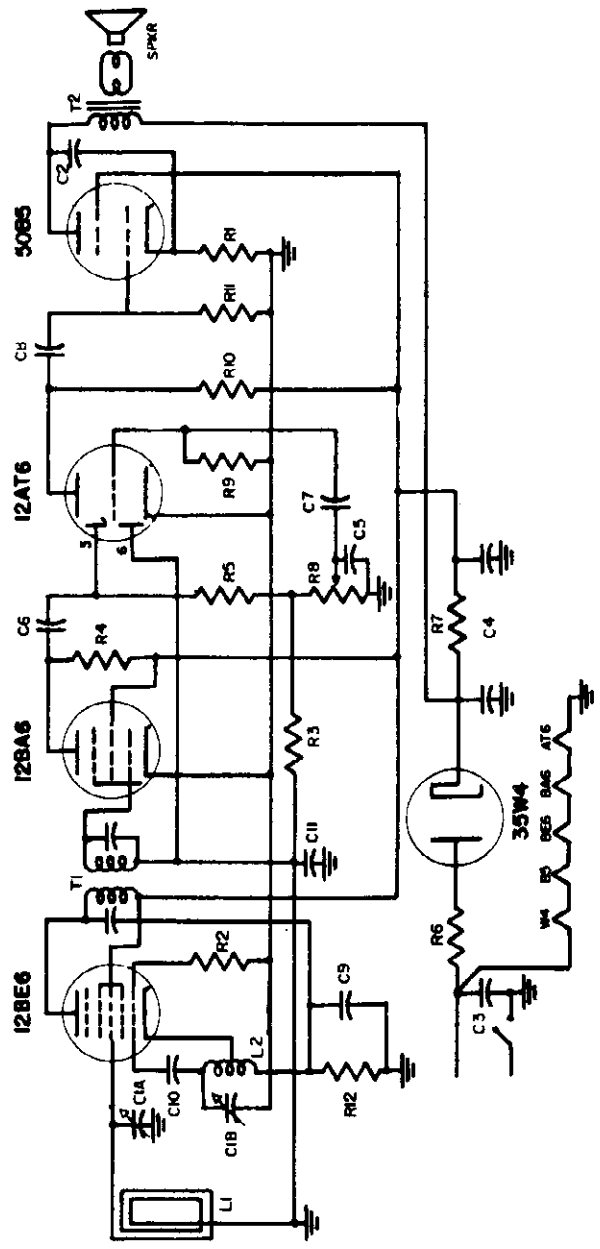

Part No.	Circuit Symbol	Description	Part No.	Circuit Symbol	Description
CY-10008	C1	Variable condenser for Model 5A7	RCP-30220	R6	Resistor carbon 22 ohm ½ watt
CPP-14203	C2	Condenser paper tub .02 mfd-400V	RCP-41001	R7	Resistor carbon 1000 ohm 1 watt
CPP-14503	C3	Condenser paper tub .05 mfd-400V	VCP-10105	R8	Volume control 1 megohm and switch
CLP-10007	C4	Condenser electrolytic 50-30 mfd-150V	VCP-12105	R8	Volume control for Model 5A7- 1 megohm
CMP-15251	C5, C6	Condenser mica 250 mmf-500V	RCP-31005	R9	Resistor carbon 10 megohm ½ watt
CPP-12103	C7, C8	Condenser paper tub .01 mfd-200V	RCP-32203	R10	Resistor carbon 220,000 ohm ½ watt
CPP-11103	C9	Condenser paper tub .01 mfd-150V	RCP-34703	R11	Resistor carbon 470,000 ohm ½ watt
CMP-15500	C10	Condenser mica 50 mmf-500V	ALP-10013	L1	Loop antenna
CPP-12203	C11	Condenser paper .02 mfd-200V	TRCP-10000-D	L2	Oscillator coil
RCP-31500	R1, R12	Resistor carbon 150 ohm ½ watt	TSP-10002	T1	I.F. Transformer
RCP-31002	R2	Resistor carbon 10,000 ohm ½ watt	TOP-10000	T2	Output transformer
RCP-32204	R3	Resistor carbon 2.2 megohm ½ watt	SRP-10005	SPKR	Speaker P.M. 3" round for Model 5A7
RCP-36801	R4	Resistor carbon 6800 ohm ½ watt			
RCP-31003	R5	Resistor carbon 100,000 ohm ½ watt			

MODELS 1-421, 1-542

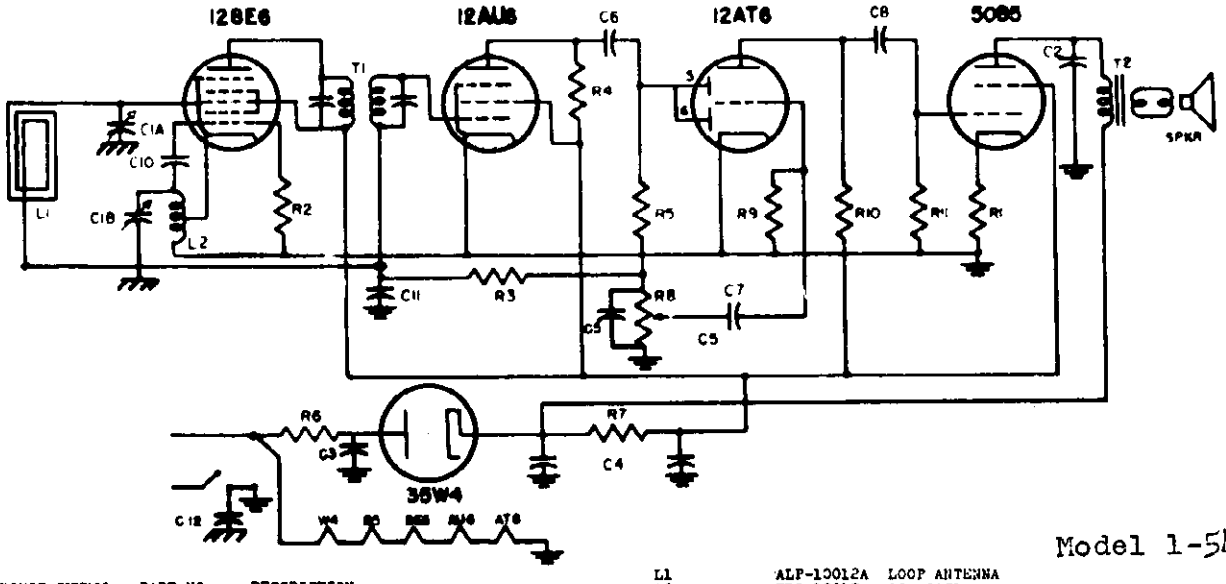

Model 1-542

CIRCUIT SYMBOL	PART NO	DESCRIPTION
C1 A B	CV-10010	CONDENSER VARIABLE
C2	CP-14103	" PAPER TUBE .01 mfd 400v
C3	CP-14203	" " " .02 " "
C4	CE-10017	" ELECTROLYTIC 30-20 mfd.150v
C5	CM-15251	" MICA 250 mmf. 500v
C6	CM-15500	" " 50 " "
C7	CP-12202	" PAPER TUBE .002mfd.200v.
C8	CP-12502	" " " .005 " "
C10		PART OF L2
C11	CP-12103	CONDENSER PAPER .01 " "
C12	CP-12203	" " .02 " "
L1	ALP-10012A	LOOP ANTENNA
L2	TRC-10017	OSC.COIL
R1	RC-31500	RESISTOR CARBON 150 ohms 1/2 watt
R2	RC-31502	" " 15,000 " "
R3	RC-32204	" " 2.2 meg " "
R4	RC-31002	" " 10,000 " "
R5	RC-31503	" " 150,000 " "
R6	RC-30220	" " 22 " "
R7	RC-42001	" " 2000 " "
R8	VC-12106	VOLUME CONTROL 1 MEG WITH SWITCH
R9	RC-31005	RESISTOR CARBON 10 MEG 1/2 watt
R10	RC-32203	" " 220,000 ohms 1/2 watt
R11	RC-34703	" " 470,000 " "
T1	TO-10000	OUTPUT TRANS
T2	TS-10039	I.F. TRANS. 455 KC

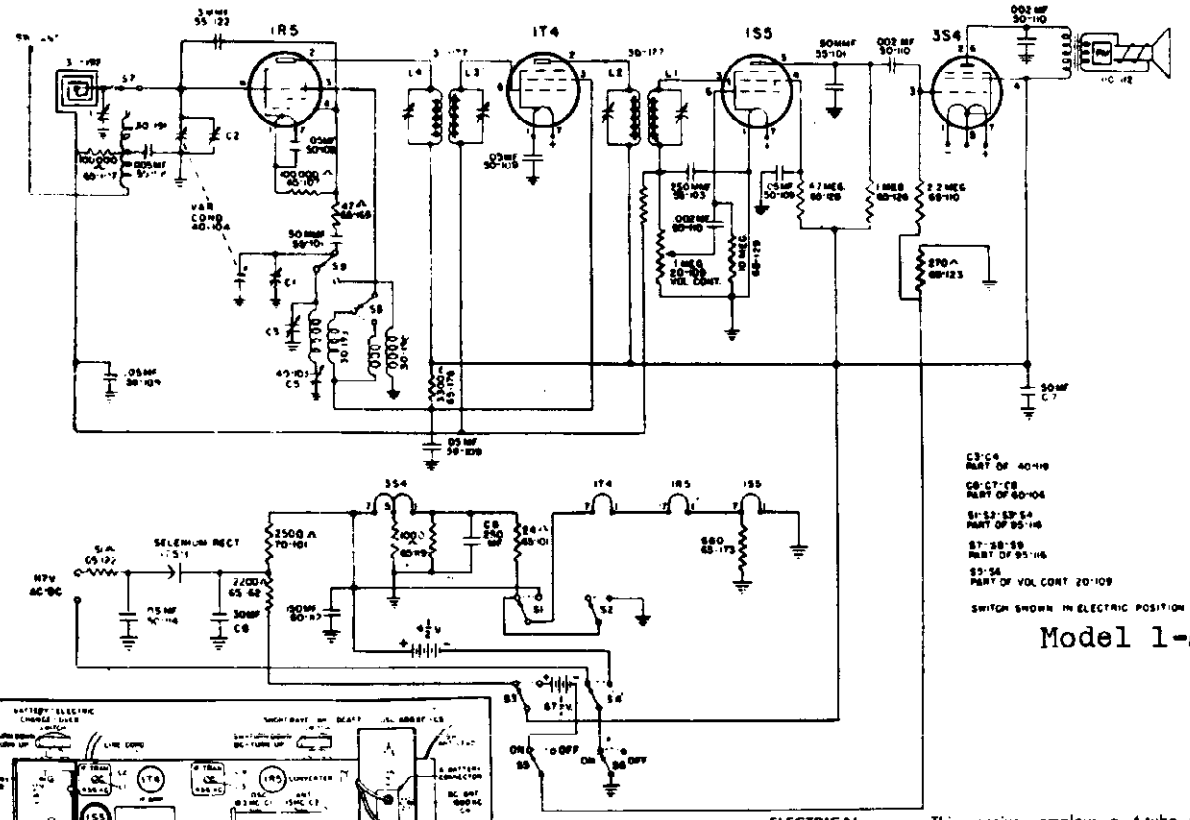

Model 1-421

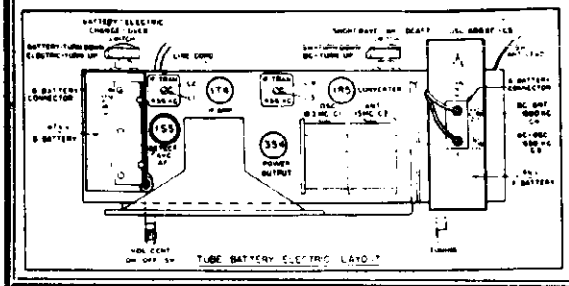

ELECTRICAL SPECIFICATIONS: This receiver employs a 4-tube superheterodyne circuit of 8 tuned stages. The frequency range is from 1650 to 540 KC, and 18.3 to 5.8 MC. The tube compliment is as follows: 1-1R5, 1-1T4, 1-1S5 and 1-3S4. See diagram for location of batteries and tubes.

SET DEVELOPS MICROPHONIC HOWL Check 1S5 Tube. Replace with new tube if necessary.

© John F. Rider

MODEL 1-422

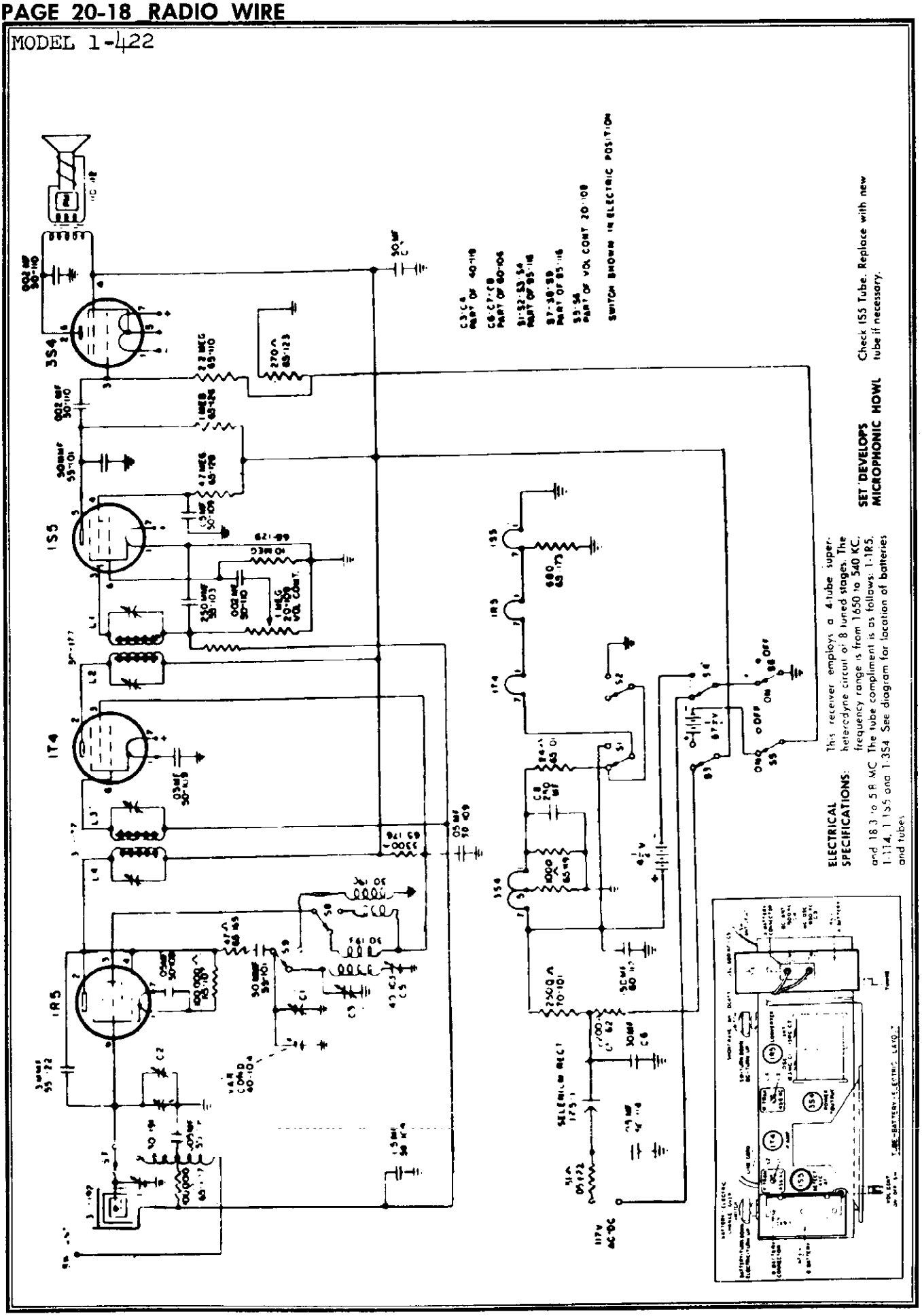

©John F. Rider

MODEL 1-427

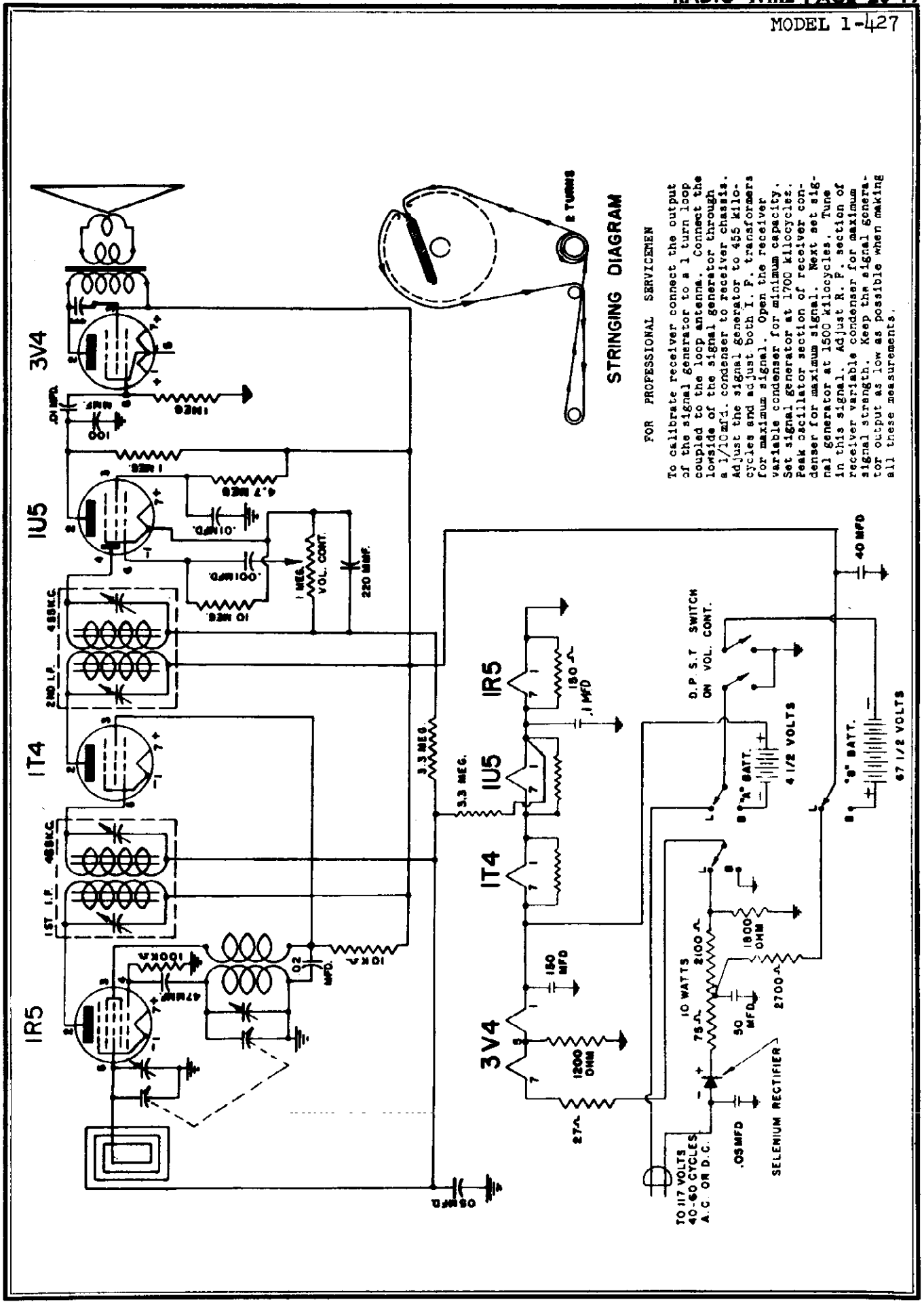

©John F. Rider

MODEL 1-524

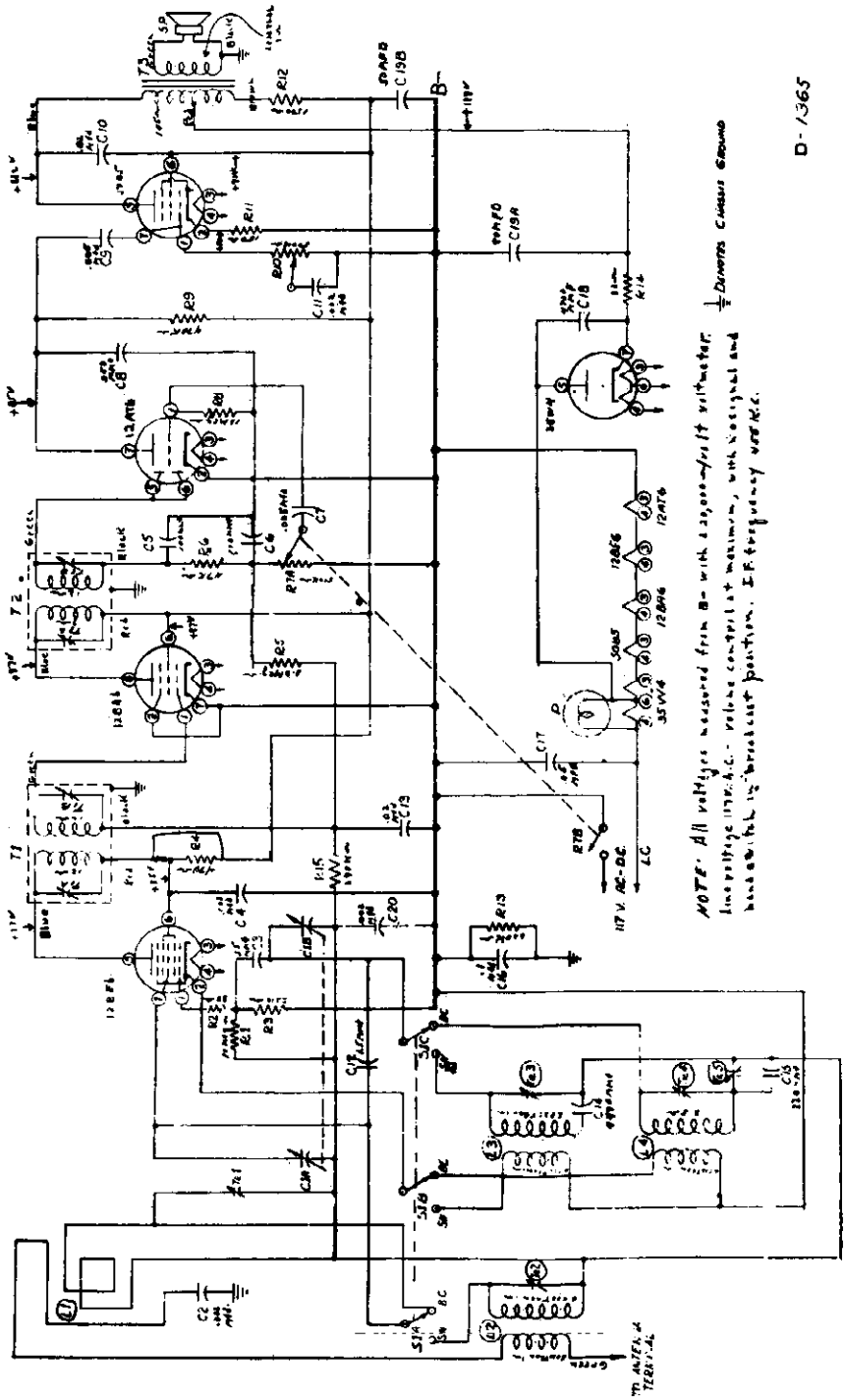

D-1365

L1	1	LOOP ANTENNA ASSY	C-1372
L2	1	S.WAVE ANTENNA COIL	B-1358
L3	1	S.WAVE OSCILLATOR COIL	B-1357
L4	1	BROADCAST OSCILLATOR COIL	B-1359
T1	1	INPUT I.F. TRANSFORMER ASSY	B-1038-1
T2	1	OUTPUT I.F. TRANSFORMER ASSY	B-1061-1
T3	1	OUTPUT TRANSFORMER	S-1021
SP	1	SPEAKER 3" PM	S-1391
S1A/S1B,SC	1	WAVE BAND SWITCH	S-1354
P	1	PILOT BULB #47 W/LEAD	S-1233
LC	1	6"Line Cord with Mouse Hole Rivet UL Approved	S-330-1
VT1	1	TUBE 12BE6	S-360-12-16
VT2	1	TUBE 12BA6	S-360-12-26
VT3	1	TUBE 12AT6	S-360-12-36
VT4	1	TUBE 50 B5	S-360-50-16
VT5	1	TUBE 35 W4	S-360-35-16

R1,R9	2	[illegible]	[illegible]	[illegible]	S-1363
R2,R3	1	[illegible]	15-18 ohms	On Unit	
R4	1	[illegible]	110-140 ohms	Bracket	
R7,R8	2	RESISTOR 10 MEG	½W ±10%		S-459-145-20
R11	1	RESISTOR 330	½W ±20%		S-460-13-20
R5	1	RESISTOR 22 K Ω	½W ±10%		S-459-81-20
R6	1	RESISTOR 470 Ω	½W ±10%		S-459-49-20
R10	1	RESISTOR 22 MEG	½W ±20%		S-459-153-20
R14	1	RESISTOR 47 K Ω	½W ±20%		S-459-89-20
R15	1	RESISTOR 47 K Ω	½W ±20%	WIRE ENDS	S-459-89-20
R16	1	VOLUME CONTROL .5 MEG	20% WITH SWITCH		S-1094-3
R17,R18	1	VOLUME CONTROL .5 MEG	20% WITH SWITCH		S-1094-3
R19	1	RESISTOR 47 MEG	½W ±20%		S-460-153-20
R20	1	TONE CONTROL .5 MEG	±20%		S-1011-3
C11	1	RESISTOR .150 OHMS	½W ±10%		S-459-33-10
C12	1	RESISTOR 1500 Ω	½W ±10%		S-459-53-10
R13	1	RESISTOR .22 MEG	½W ±20%		S-459-105-20
R14	1	RESISTOR 33 Ω	½W ±20%		S-459-13-20
R15	1	RESISTOR 390K Ω	½W ±20%		S-459-149-20

C1	1	TRIMMER MICA 4-70 MMF	S-1376
C2	1	CONDENSER PAPER 1.0 MFD 400V	S-429-56
C3	1	CONDENSER CERAMIC 25 MMF 1000V	S-411-A-1
C4	1	CONDENSER PAPER .1 MFD 400V	S-4000-48
C5	1	CONDENSER MICA 100 MMF 5%	S-459-21-1
C6	1	TRIMMER PAPER DIELECTRIC .005 MFD 400V	S-400B-5-4
C7	1	CONDENSER MICA 250 MMF 500V ±10%	S-459-24-1
C8	1	CONDENSER PAPER .05 MFD 400V	S-400M-15-4
C9	1	CONDENSER CERAMIC 1000 MMF 500V	S-411-2-1
C10	1	CONDENSER PAPER .1 MFD 400V	S-4000-48-2
C16	1	TRIMMER MICA 4-400 MMF 500V	S-1372
C17	1	CONDENSER MICA .220 MMF 1000V ±20%	S-459-24-1
C18	1	CONDENSER PAPER DIELECTRIC .005 MFD 400V	S-400B-25-4
C19	1	CONDENSER PAPER DIELECTRIC .05 MFD 400V	S-400M-15-4
C20	1	CONDENSER MICA 1700 MMF 1%	S-459-117-1
C21	1	CONDENSER MICA 1700 MMF 1%	S-459-117-1
C22	1	CONDENSER MICA 1700 MMF 1%	S-459-117-1
C23	1	CONDENSER MICA 1700 MMF 1%	S-459-117-1
C24	1	CONDENSER MICA 1700 MMF 1%	S-459-117-1
C25	1	CONDENSER MICA 1700 MMF 1%	S-459-117-1
C26	1	CONDENSER MICA 1700 MMF 1%	S-459-117-1
C27	1	CONDENSER MICA 1700 MMF 1%	S-459-117-1
C28	1	CONDENSER MICA 1700 MMF 1%	S-459-117-1
C29	1	CONDENSER MICA 1700 MMF 1%	S-459-117-1
C30	1	CONDENSER MICA 1700 MMF 1%	S-459-117-1
C31	1	CONDENSER MICA 1700 MMF 1%	S-459-117-1
C32	1	CONDENSER MICA 1700 MMF 1%	S-459-117-1
C33	1	CONDENSER MICA 1700 MMF 1%	S-459-117-1
C34	1	CONDENSER MICA 1700 MMF 1%	S-459-117-1
C35	1	CONDENSER MICA 1700 MMF 1%	S-459-117-1
C36	1	CONDENSER MICA 1700 MMF 1%	S-459-117-1
C37	1	CONDENSER MICA 1700 MMF 1%	S-459-117-1
C38	1	CONDENSER MICA 1700 MMF 1%	S-459-117-1
C39	1	CONDENSER MICA 1700 MMF 1%	S-459-117-1
C40	1	CONDENSER MICA 1700 MMF 1%	S-459-117-1
C41	1	CONDENSER MICA 1700 MMF 1%	S-459-117-1
C42	1	CONDENSER MICA 1700 MMF 1%	S-459-117-1
C43	1	CONDENSER MICA 1700 MMF 1%	S-459-117-1
C44	1	CONDENSER MICA 1700 MMF 1%	S-459-117-1
C45	1	CONDENSER MICA 1700 MMF 1%	S-459-117-1
C46	1	CONDENSER MICA 1700 MMF 1%	S-459-117-1
C47	1	CONDENSER MICA 1700 MMF 1%	S-459-117-1
C48	1	CONDENSER MICA 1700 MMF 1%	S-459-117-1
C49	1	CONDENSER MICA 1700 MMF 1%	S-459-117-1
C50	1	CONDENSER MICA 1700 MMF 1%	S-459-117-1
C51	1	CONDENSER MICA 1700 MMF 1%	S-459-117-1
C52	1	CONDENSER MICA 1700 MMF 1%	S-459-117-1
C53	1	CONDENSER MICA 1700 MMF 1%	S-459-117-1
C54	1	CONDENSER MICA 1700 MMF 1%	S-459-117-1
C55	1	CONDENSER MICA 1700 MMF 1%	S-459-117-1
C56	1	CONDENSER MICA 1700 MMF 1%	S-459-117-1
C57	1	CONDENSER MICA 1700 MMF 1%	S-459-117-1
C58	1	CONDENSER MICA 1700 MMF 1%	S-459-117-1
C59	1	CONDENSER MICA 1700 MMF 1%	S-459-117-1
C60	1	CONDENSER MICA 1700 MMF 1%	S-459-117-1
C61	1	CONDENSER MICA 1700 MMF 1%	S-459-117-1
C62	1	CONDENSER MICA 1700 MMF 1%	S-459-117-1
C63	1	CONDENSER MICA 1700 MMF 1%	S-459-117-1
C64	1	CONDENSER MICA 1700 MMF 1%	S-459-117-1
C65	1	CONDENSER MICA 1700 MMF 1%	S-459-117-1
C66	1	CONDENSER MICA 1700 MMF 1%	S-459-117-1
C67	1	CONDENSER MICA 1700 MMF 1%	S-459-117-1
C68	1	CONDENSER MICA 1700 MMF 1%	S-459-117-1
C69	1	CONDENSER MICA 1700 MMF 1%	S-459-117-1
C70	1	CONDENSER MICA 1700 MMF 1%	S-459-117-1
C71	1	CONDENSER MICA 1700 MMF 1%	S-459-117-1
C72	1	CONDENSER MICA 1700 MMF 1%	S-459-117-1
C73	1	CONDENSER MICA 1700 MMF 1%	S-459-117-1
C74	1	CONDENSER MICA 1700 MMF 1%	S-459-117-1
C75	1	CONDENSER MICA 1700 MMF 1%	S-459-117-1
C76	1	CONDENSER MICA 1700 MMF 1%	S-459-117-1
C77	1	CONDENSER MICA 1700 MMF 1%	S-459-117-1
C78	1	CONDENSER MICA 1700 MMF 1%	S-459-117-1
C79	1	CONDENSER MICA 1700 MMF 1%	S-459-117-1
C80	1	CONDENSER MICA 1700 MMF 1%	S-459-117-1
C81	1	CONDENSER MICA 1700 MMF 1%	S-459-117-1
C82	1	CONDENSER MICA 1700 MMF 1%	S-459-117-1
C83	1	CONDENSER MICA 1700 MMF 1%	S-459-117-1
C84	1	CONDENSER MICA 1700 MMF 1%	S-459-117-1
C85	1	CONDENSER MICA 1700 MMF 1%	S-459-117-1
C86	1	CONDENSER MICA 1700 MMF 1%	S-459-117-1
C87	1	CONDENSER MICA 1700 MMF 1%	S-459-117-1
C88	1	CONDENSER MICA 1700 MMF 1%	S-459-117-1
C89	1	CONDENSER MICA 1700 MMF 1%	S-459-117-1
C90	1	CONDENSER MICA 1700 MMF 1%	S-459-117-1
C91	1	CONDENSER MICA 1700 MMF 1%	S-459-117-1
C92	1	CONDENSER MICA 1700 MMF 1%	S-459-117-1
C93	1	CONDENSER MICA 1700 MMF 1%	S-459-117-1
C94	1	CONDENSER MICA 1700 MMF 1%	S-459-117-1
C95	1	CONDENSER MICA 1700 MMF 1%	S-459-117-1
C96	1	CONDENSER MICA 1700 MMF 1%	S-459-117-1
C97	1	CONDENSER MICA 1700 MMF 1%	S-459-117-1
C98	1	CONDENSER MICA 1700 MMF 1%	S-459-117-1
C99	1	CONDENSER MICA 1700 MMF 1%	S-459-117-1
C100	1	CONDENSER MICA 1700 MMF 1%	S-459-117-1

BILL OF MATERIALS

©John F. Rider

MODEL 1-819

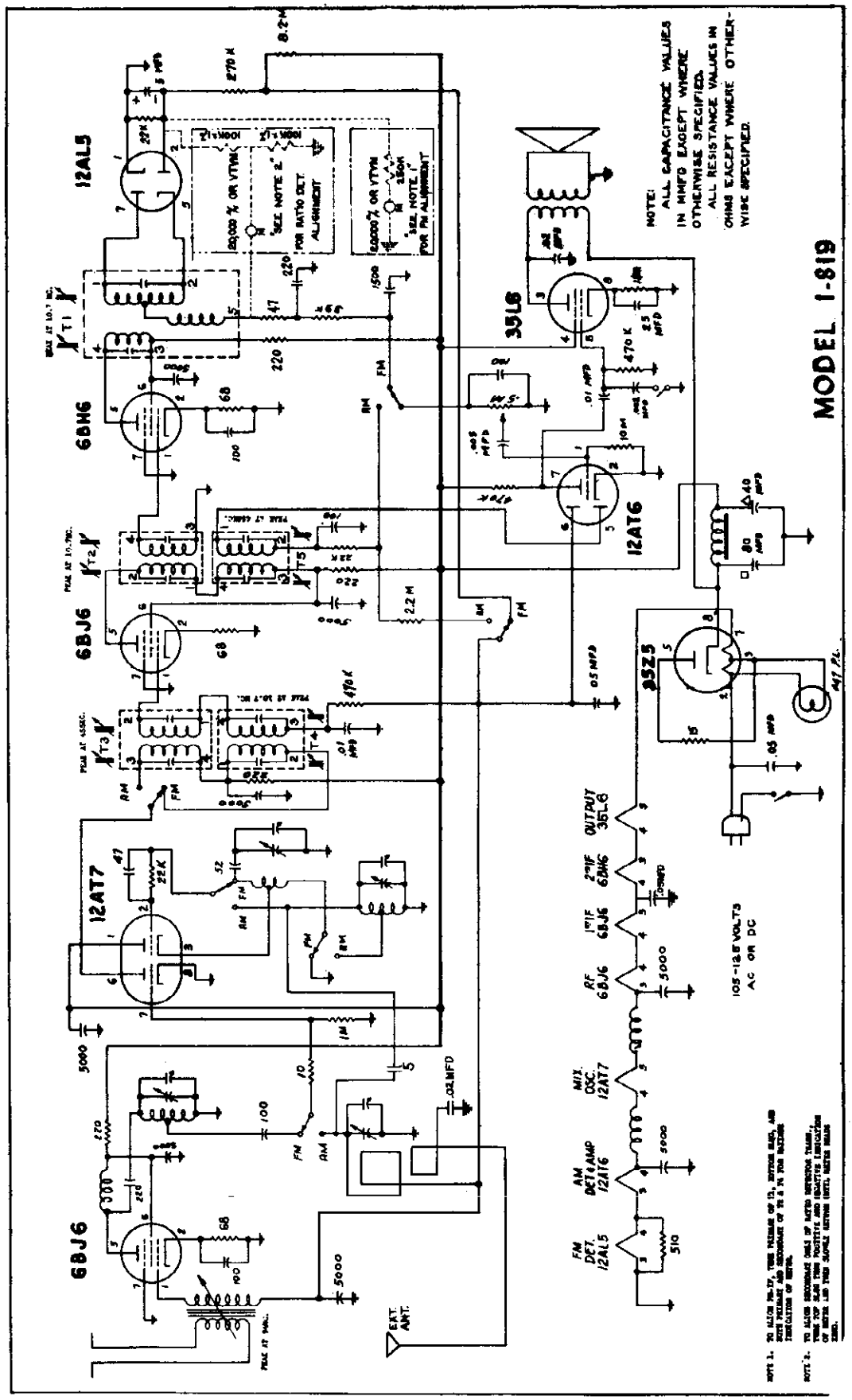
MODEL 1-819
12AL5
6BH6
6BJ6
12AT7
6BJ6
12AT6
35L6
35Z5
NOTE: ALL CAPACITANCE VALUES IN MMFD EXCEPT WHERE OTHERWISE SPECIFIED. ALL RESISTANCE VALUES IN OHMS EXCEPT WHERE OTHERWISE SPECIFIED.
105-125 VOLTS AC OR DC
OUTPUT 35L6
2ND IF 6BH6
1ST IF 6BJ6
RF 6BJ6
MIX. OSC. 12AT7
AM DET. AMP 12AT6
FM DET. 12AL5
EXT. ANT.
AM
FM

This Receiver features the latest in A. M. - F. M., Receiver Design. Eleven (11) tubes plus a Rectifier are used in the A. M. — F. M. superheterodyne circuit. separate antennas are supplied for A. M. and F. M. An automatic frequency control tube is used to stabilize the F. M. and simplify tuning.

TUBE COMPLEMENT:

1 Type 6BA6 — F. M. R F. Amplifier
1 Type 7F8 — F. M. Converter
1 Type 7Q7 — A. M. Converter
1 Type 6C4 — Automatic Frequency Control
1 Type 7AH7 — I. F. Amplifier
1 Type 6SH7 — Detector Driver (F.M.)
1 Type 6SQ7 — 1st Audio Amplifier, A. M. Detector
1 Type 7A6 — Ratio Detector
1 Type 7F7 — 2nd Audio Amplifier and phase inverter
2 Type 7C5 — Beam power output.
1 Type 5Y3/GT — Rectifier.

1. OPERATING CONTROLS:

1) The "ON-OFF" power switch and Tone Control is the knob at the extreme left of the set. Turn this control in a clockwise direction until the switch clicks and the dial becomes illuminated. Turning this control further in the same direction will change the tone.

2) The Volume Control is the second knob from the left. Turning this control in a clockwise direction will increase the volume.

3) The Band Switch is the third knob from the left. The extreme counterclockwise position of this knob is for phonograph operation. The center position is for F.M. reception. The extreme clockwise position is for A. M. reception.

4) The Tuning Control is the extreme right hand knob. Turning this knob in either direction will move the dial pointer and select the stations on the A. M. or F. M. Bands.

2. ANTENNAS:

In most cases it will not be necessary to use external antennas, since the receiver is equipped with a loop antenna for AM reception and an indoor type folded dipole antenna for FM reception.

When inadequate reception is obtained from a desired station, it may be necessary to reposition the antennas to favor that station. On AM, the loop should be turned so that the edge faces toward the station desired. On FM, the entire cabinet should be positioned so that the back is broadside to the direction from which the signals are transmitted.

For the reception of weak or distant stations, or for the operation of the receiver in unfavorable locations, provisions are made for the use of external antennas. The folded dipole should be disconnected when an external FM antenna is employed.

Do not disconnect the AM loop when an external antenna is used on standard broadcast.

3. SERVICE NOTES:

Failure of the Receiver to operate may be due to:

1) All tubes not firmly in sockets.
2) No current at power socket.
3) Band Switch in wrong position.
4) Speaker not plugged in.
5) Antennas not attached.
6) Defective fuse in Receiver.

4. ALIGNMENT PROCEDURE FOR A. M.:

Equipment Required:

a) Broadcast Band Signal Generator.
b) Output Meter.

1. Set band switch to AM, advance volume control to full volume setting.

2. Connect output meter across voice coil.

3. Connect the Signal Generator across the broadcast band antenna (Rear) section of the variable condenser. The "high" side of the Generator should connect to the stator section and the "ground" side to the chassis. Adjust the Signal Generator to 455 kc and with the receiver switched on, adjust the first and second I. F. transformers for peak output as shown on the output meter. The signal injected into the receiver should be as small in magnitude as possible, consistent with a useful deflection on the output meter.

4. Connect the "high" side of the Generator to the antenna terminal with a 200mmf condenser inserted in series. Connect the "ground" side of the Generator to the chassis. Tune receiver to 60 on the dial, adjust Signal Generator to 600kc. Adjust the BC antenna coil for maximum deflection on the output meter. Use a weak signal.

5. Tune receiver to 160 on the dial. Adjust Signal Generator to 1600kc. Adjust BC oscillator and BC antenna trimmers for maximum output.

6. Repeat operations 4 and 5.

5. *ALIGNMENT PROCEDURE FOR F. M.:*

NOTE: *Points A. B. C. D. E. F. G. and H are noted on circuit diagram. Points C, and D have been brought out to the unused contacts of the speaker socket at the rear of the chassis.*

Equipment Required:

a) High frequency Signal Generator with 88-108 Mc tuning range.

b) Signal Generator capable of delivering .1 Volt at 10.7mc.

c) Audio output meter.

d) D. C. vacuum tube voltmeter with zero center scale.

e) Tuning wand.

Disable A.F.C. during alignment of F.M. circuits by short circuiting point "B" to chassis.

A. Ratio Detector Alignment:

1. Connect V.T.V.M. across point "C" and ground, (Detector Voltage).

2. Feed 10.7mc unmodulated R.F. Signal into 6SH7 grid (point A) through .01 ufd. condenser. This signal should be .1 volt.

3. Adjust primary of Ratio Detector (T-5) for maximum voltage indication on V. T. V. M.

4. Connect zero centered V. T. V. M. across point "D" and ground.

5. Adjust secondary of Ratio Detector (T-5) for zero indication.

6. Tune 10.7mc Signal Generator higher in frequency (about 200kc) until maximum voltage reading is obtained on V. T. V. M.; note this voltage, then tune signal generator lower in frequency until maximum voltage of the opposite polarity is obtained. Note this voltage, then if necessary re-adjust primary of the Det. (T-5) until the voltages are about equal on either the high or low side of 10.7 mc.

B. 10.7 I. F. ALIGNMENT:

1. Shunt a 1,000-ohm carbon resistor across the primary of the detector (T-5) (Points G and H).

2. Connect output meter across speaker voice coil.

3. Volume and tone controls at maximum clockwise position.

4. Connect 10.7mc (modulated 30%) signal generator through .01ufd. condenser across point "F" and ground.

5. Adjust secondary, then primary of (T-3) for maximum audio output. (Reduce input signal to maintain output at .5-watt level.)

6. Connect 10.7mc 30% modulated signal generator across point "E" and ground.

7. Adjust secondary, then primary of (T-1) for maximum audio output. (Reduce input signal to maintain output at .5-watt level.)

8. Remove 1000-ohm shunting resistor from across primary of (T-5).

C. OSCILLATOR AND R. F. ALIGNMENT:

1. Connect V. T. V. M. across point "C" and ground, (detector voltage).

2. Connect 108mc signal generator to FM antenna terminals. If generator impedance is low, put one 150-ohm carbon resistor in series with each of the generator leads. Tune receiver dial to 108 mc.

3. Adjust FM oscillator trimmer (C-51) for maximum V. T. V. M. reading.

4. Adjust FM R.F. trimmer (C-52) for maximum V. T. V. M. reading. During alignment reduce input signal to maintain Detector voltage at 2.V.

5. Repeat steps 3 and 4.

6. Feed a 90mc signal into antenna terminals (as in C-2), tune receiver dial to signal.

7. Test R. F. coil with tuning wand and if necessary adjust spacing of FM R.F. coil (L-4) for maximum V.T.-V.M. reading at 90mc. During alignment reduce input signal to maintain Detector voltage at 2.V.

8. Repeat steps 2 and 4 if necessary.

9. Remove A.F.C. shorting jumper.

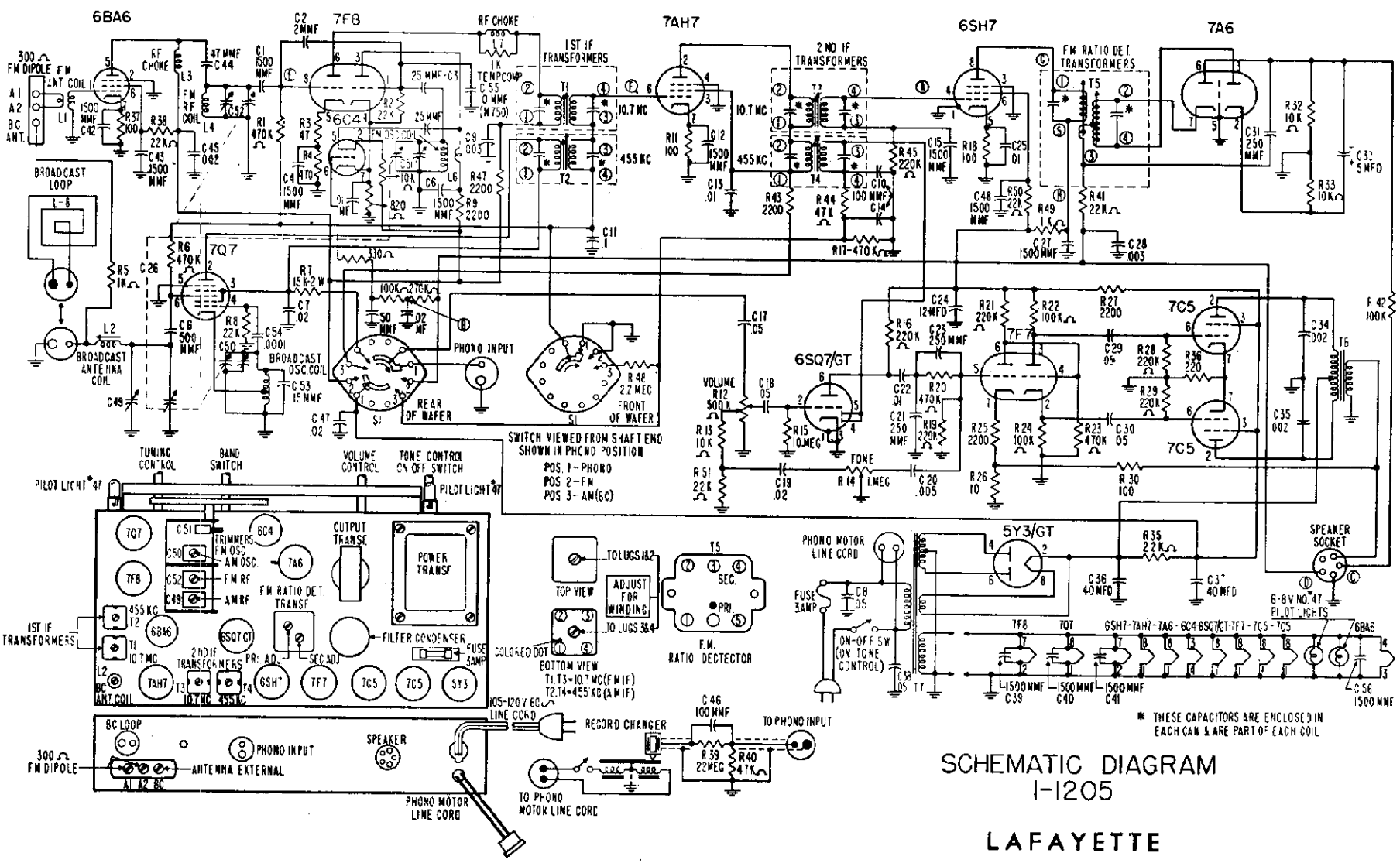

SCHEMATIC DIAGRAM
I-1205

LAFAYETTE

RADIO WIRE PAGE 20-25

MODEL I-1205

MODELS 617, 618

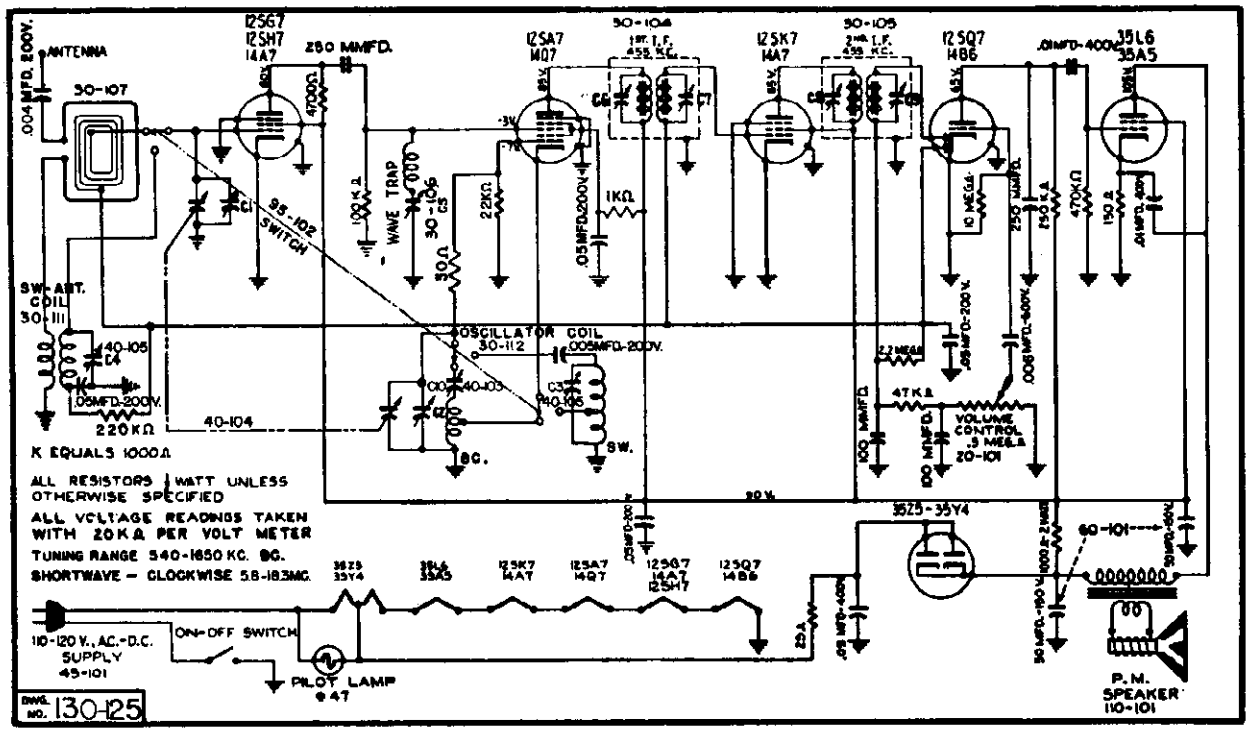

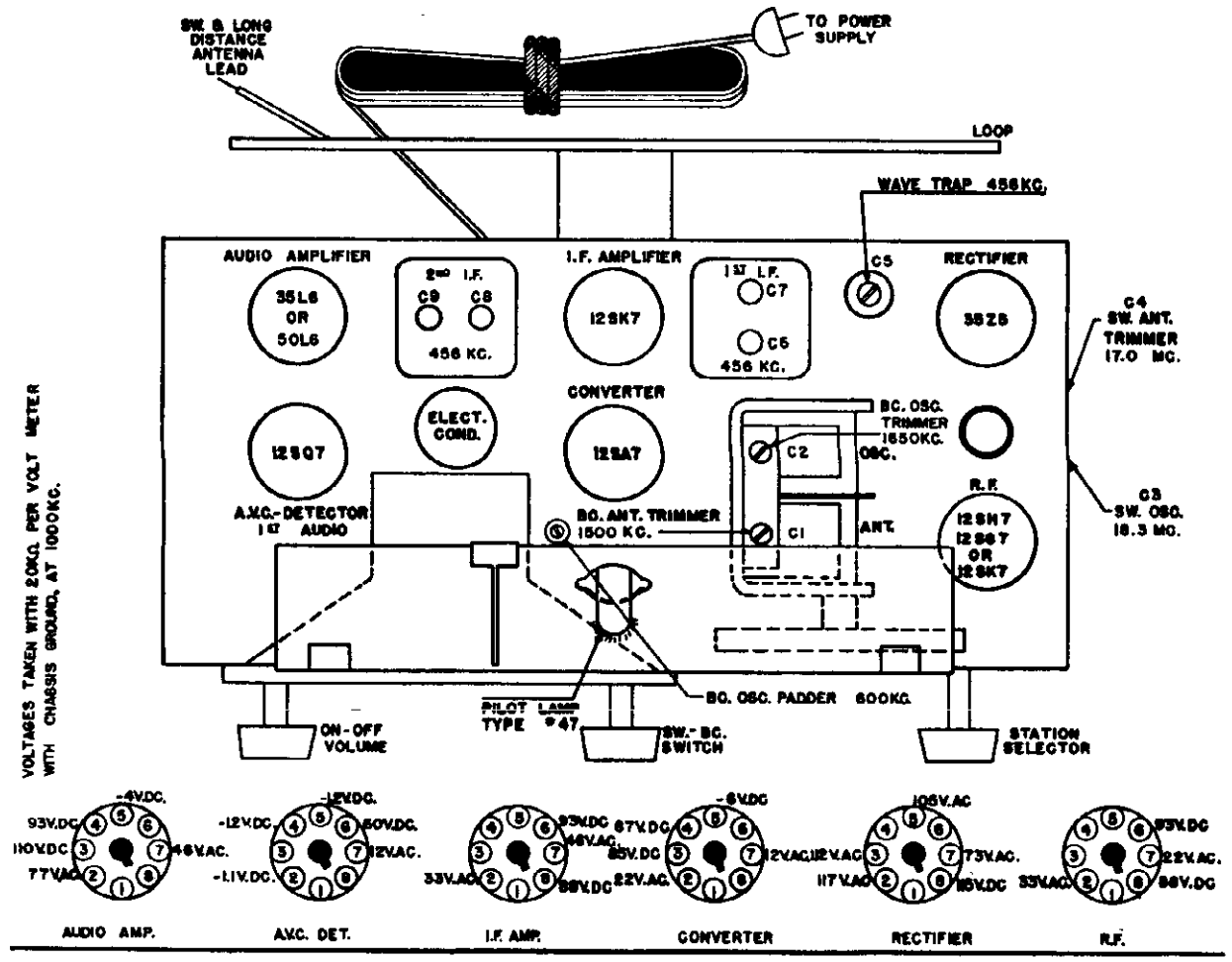

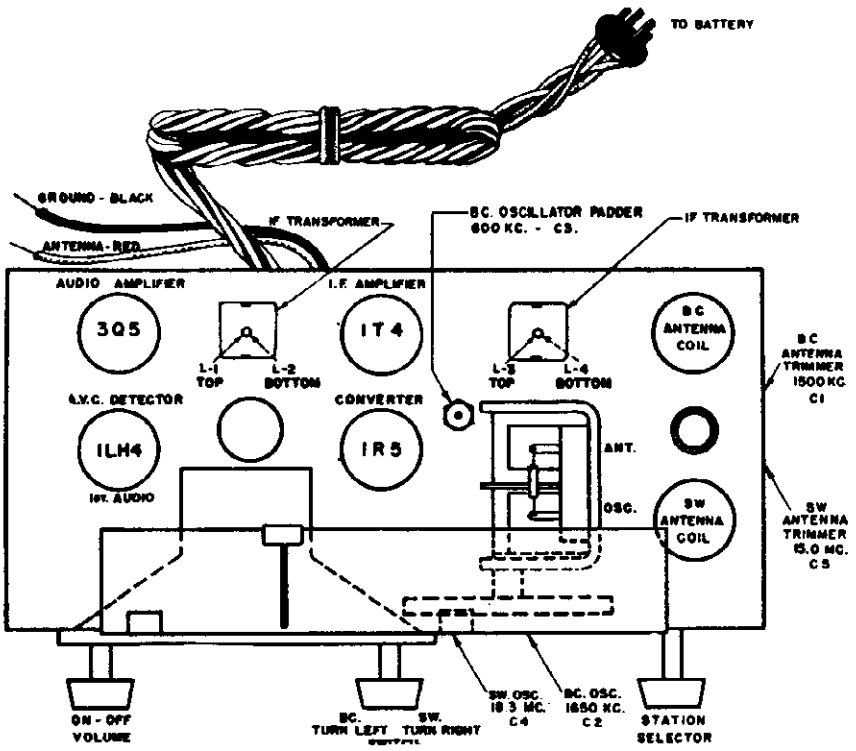

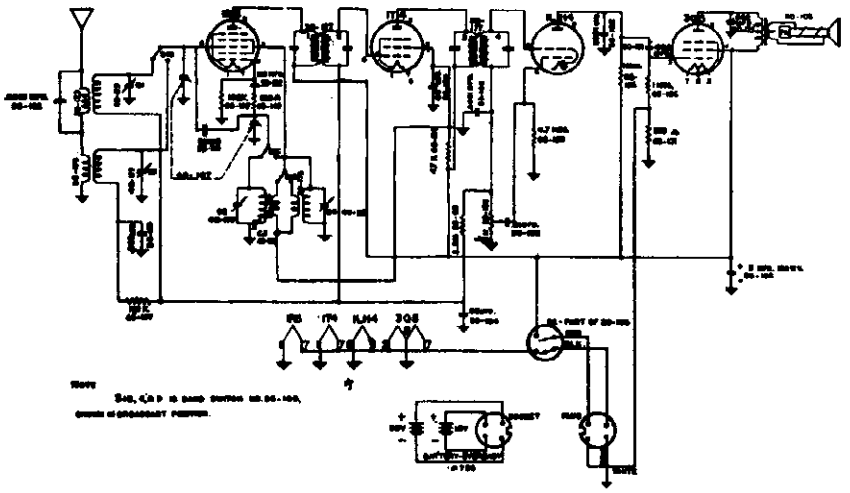

DWG. 130-178

ALIGNMENT INSTRUCTIONS

SET VOLUME CONTROL AT MAXIMUM VOLUME AND OUTPUT FROM SIGNAL GENERATOR NO HIGHER THAN IS NECESSARY TO OBTAIN OUTPUT READING.

TUNING RANGE

BROADCAST :- 540 - 1650 KC. SHORTWAVE :- 5.9 - 18.3 MC.

DUMMY ANTENNA	SIGNAL GENERATOR COUPLING	BAND SWITCH POSITION	SIGNAL GEN'R FREQUENCY	RADIO DIAL SETTING	OUTPUT METER	ADJUST	REMARKS
.05 MFD	R.F. SECTION OF VARIABLE CONDENSER	B C EXTREME LEFT	455 KC	1650 KC.	ACROSS VOICE COIL	L1, L2, L3, L4.	ADJUST FOR MAXIMUM
100 MMFD.	ANTENNA LEAD	B C	1650 KC	1650 KC.	" "	C1	" " "
100 MMFD.	" "	B C	1500 KC	1500 KC.	" "	C2	" " "
100 MMFD.	" "	B C	600 KC	600 KC.	" "	C3	ROCK GANG & ADJUST FOR MAXIMUM OUTPUT. RECHECK C1 & C2 ADJUSTMENTS AS GIVEN
400 Ω	" "	S W EXTREME RIGHT	18.3 MC.	18.3 MC.	" "	* C4	ADJUST FOR MAXIMUM
400 Ω	" "	S W	15 MC	15 MC.	" "	X C5	ROCK GANG & ADJUST FOR MAXIMUM OUTPUT.

MODELS 621, 622

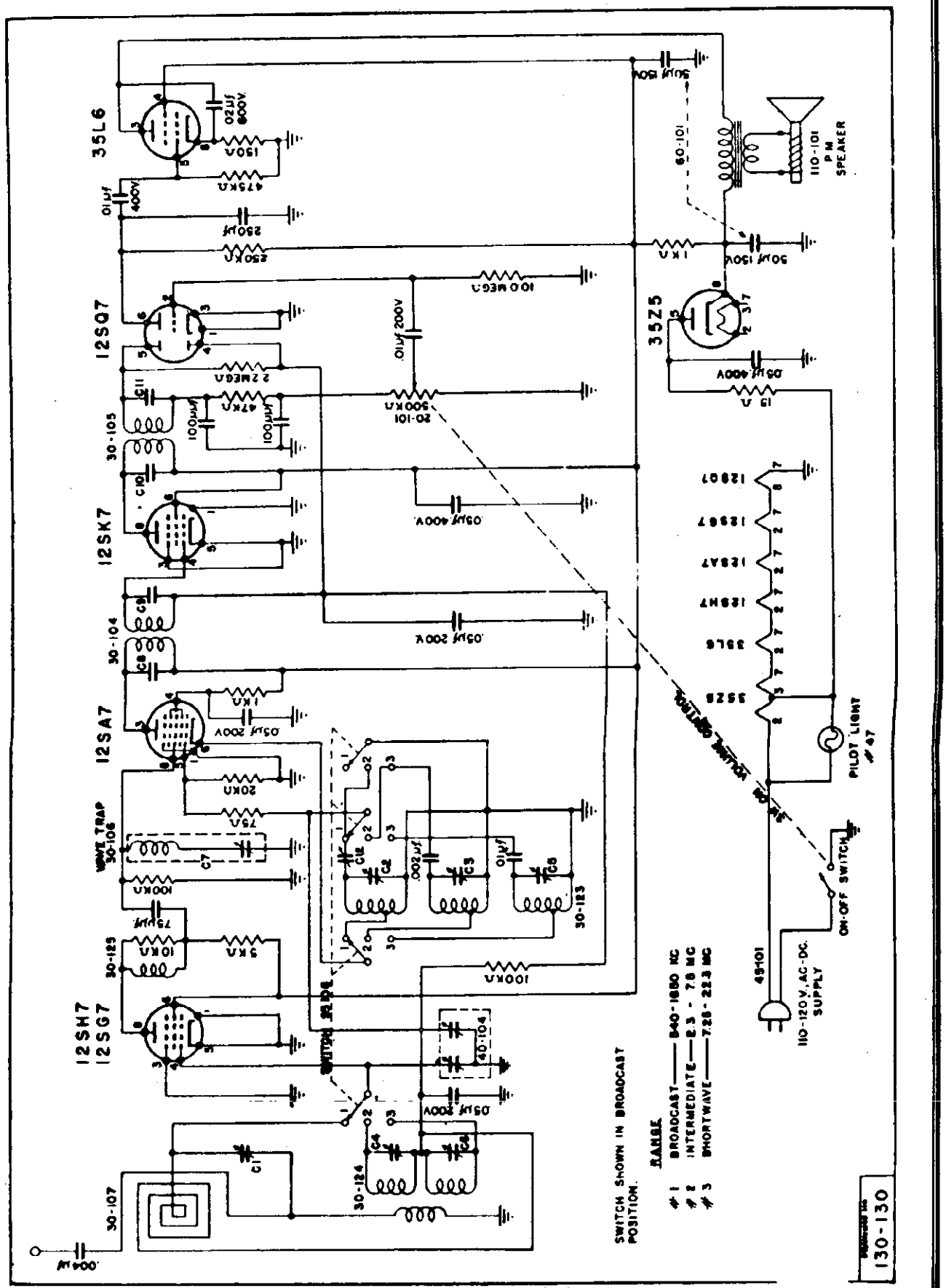

ALIGNMENT INSTRUCTIONS

SET VOLUME CONTROL AT MAXIMUM VOLUME AND OUTPUT FROM SIGNAL GENERATOR NO HIGHER THAN IS NECESSARY TO OBTAIN OUTPUT READING

TUNING RANGE BROADCAST 540 - 1650 INTERMEDIATE 2.25 - 7.5 SHORTWAVE 7.25 - 22.3

DUMMY ANTENNA	SIGNAL GENERATOR COUPLING	BAND SWITCH POSITION	SIGNAL GEN FREQUENCY	RADIO DIAL SETTING	OUTPUT METER	ADJUST	REMARKS
1 MFD	RF SECTION OF VARIABLE CONDENSER	BC	455 KC	1650 KC	ACROSS VOICE COIL	C8 , C9 C10 , C11	ADJUST FOR MAXIMUM
1 MFD	" "	BC	455 KC	600 KC	" "	C7	" " MINIMUM
200 MMFD	ANTENNA LEAD	BC	1650 KC	1650 KC	" "	C2	" " MAXIMUM TRIMMER UNDER CHASSIS
200 MMFD	" "	BC	1500 KC	1500 KC	" "	C1	" " "
200 MMFD	" "	BC	600 KC	600 KC	" "	C12	ROCK GANG & ADJUST FOR MAXIMUM OUTPUT RECHECK C1 & C2 ADJUSTMENTS AS GIVEN
400 Ω	" "	INTERMEDIATE	7.5 MC	7.5 MC	" "	C3	ADJUST FOR MAXIMUM
400 Ω	" "	INTERMEDIATE	7.0 MC	7 MC	" "	C4	ROCK GANG & ADJUST FOR MAXIMUM OUTPUT
400 Ω	" "	SW	22.3 MC	22.3 MC	" "	C5	ADJUST FOR MAXIMUM
400 Ω	" "	SW	20 MC	20 MC	" "	C6	ROCK GANG & ADJUST FOR MAXIMUM OUTPUT

130-135 IF TWO PEAKS CAN BE OBTAINED USE ONE WITH TRIMMER SCREW FURTHER OUT

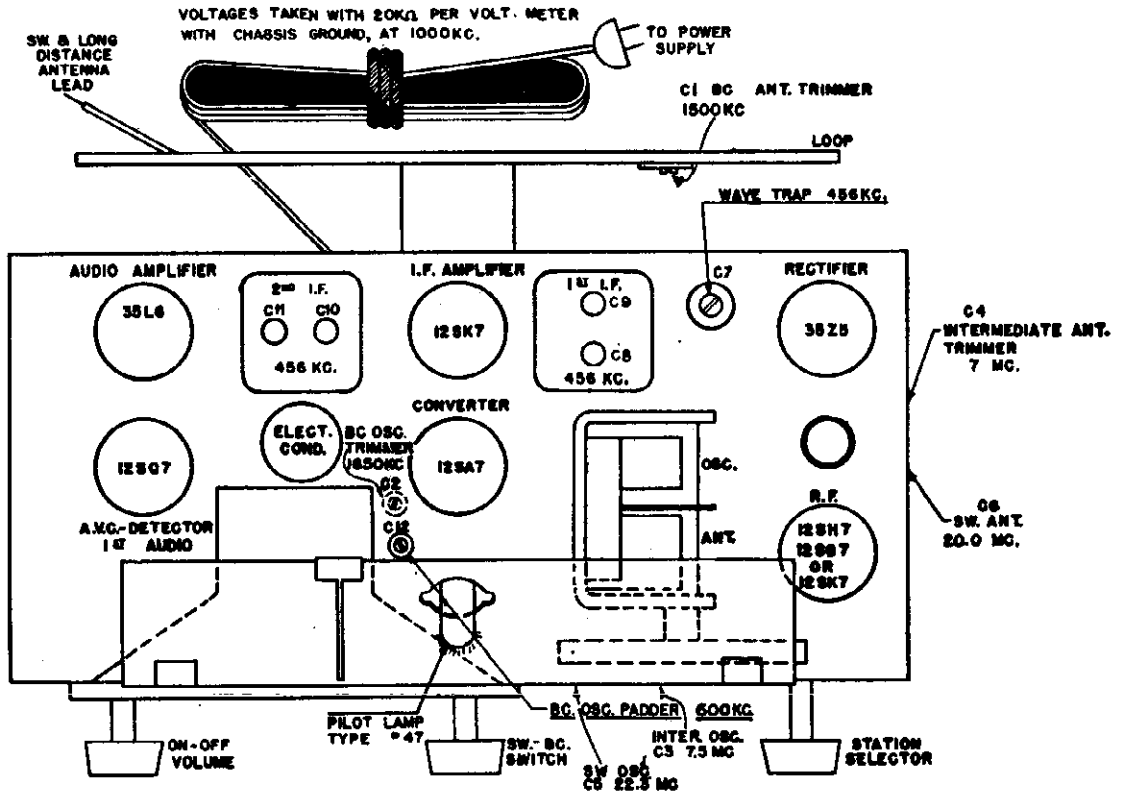

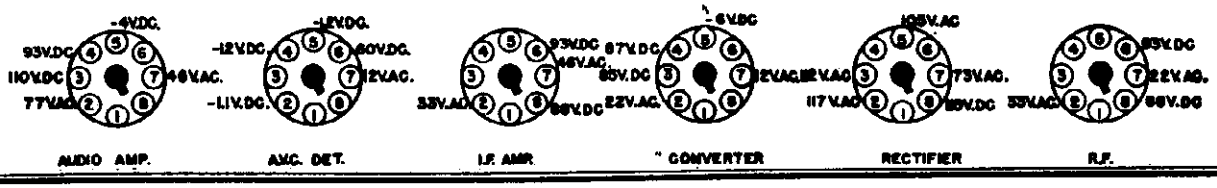

MODEL 1030TP

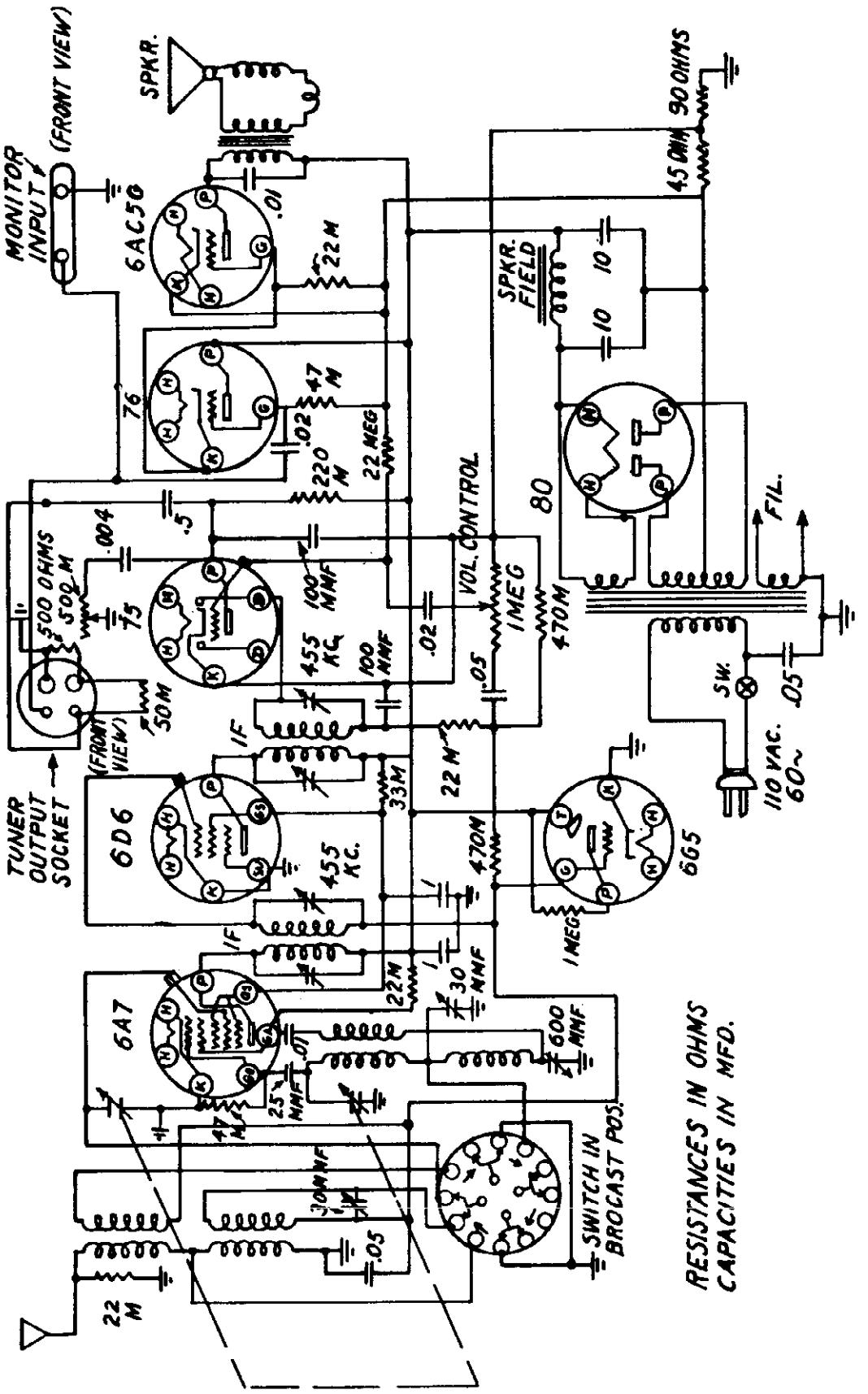

NOTE- THE MONITOR SPEAKER MAY BE CONNECTED TO THE TUNER OUTPUT SOCKET. BY CONNECTING 2 AND 3 ON THE OUTPUT TUNER OUTPUT IMPEDANCES- 1 AND 3 HIGH IMPED. 1 AND 4 500 OHMS.

RESISTANCES IN OHMS
CAPACITIES IN MFD.

© John F. Rider

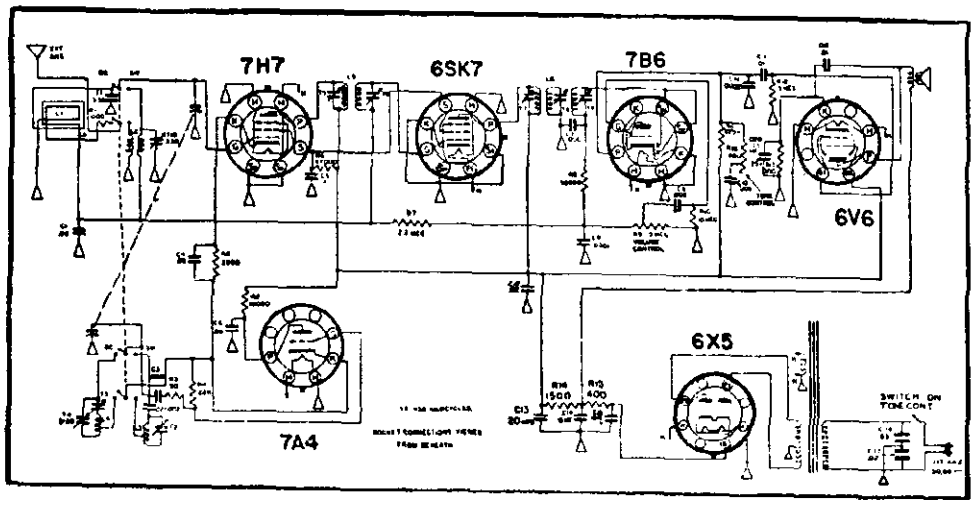

ALIGNMENT PROCEDURE

Output meter connection.....Across voice coil

Output meter reading to indicate ½ watt.....1.25V for 3.2 Ohm voice coil

Connection of generator ground.....Receiver chassis

Generator *modulation*.....Approximately 30% @ 400 cycles

Position of volume control.....Fully clockwise

Position of tone control.....High position

WAVE BAND SW.	POSITION OF DIAL POINTER	GEN. FREQ.	GEN. CONN.	DUMMY ANT.	TRIMMERS ADJ. IN ORDER SHOW	TRIMMER FUNCS
B. C.	540 kc	455 kc	7H7 Grid	.1 mfd	T9-T7-T8-T6-T5	I. F.
	1500 kc	1500 kc	* note		T4-T1	Osc. - Ant.
	600 kc	600 kc	* *note*		T3-Rock Var. Cond.	Osc. - Padder
	1500 kc	1500 kc	* note		Readjust T4	Osc.
S. W.	18 mc	18 mc	Ant. Post	RMA Standard All Wave	T2 **	Osc.
	16 mc	16 mc	Ant. Post	RMA Standard All Wave	T10	Ant.

PARTS LIST

Schematic Location	Part No.	Description
	457	Cabinet
	62172	Cover — back
L1	28135	Coil, loop
L2	28137	Coil, SW — Ant.
L3	28138	Coil, SW osc with trimmer
L4	28136	Coil, BC osc with padder
C1, C4, C6, C16		Condenser, .05 mfd, 400 volts
C5		Condenser, .1 mfd, 400 volts
C9		Condenser, .002 mfd, 400 volts
C19		Condenser, .005 mfd, 400 volts
C11		Condenser, .01 mfd, 400 volts
C12		Condenser, .01 mfd, 800 volts
C18, C17		Condenser, .02 mfd, 400 volts
C3, C8, C7		Condenser, Mica, .0001 mfd, 400 volts
C19		Condenser, Mica, .00025 — 400 volts
C2		Condenser, Mica, .003 — 400 volts
C	1655	Variable condenser
C13, C14, C15	20102	Condensers, electrolytic, 20 mfd, 16 mfd, 16 mfd, 350-volts —
C20	20105	Condensers, electrolytic, 25 mf, 25 volts
T1, T10, T4	1725	Condenser, trimmers on bracket (3) 3-30 mmfd
R9	2470	Control, volume, .5 megohm
R14	2521	Control, tone, .25 megohm with switch
	8581	Cord, power
	4579	Dial cord
	40109	Dial scale
	4140	Dial pointer
	4633	Dial spring
	39138	Knob, tone, off-on
	39139	*Knob, SW - BC*
	39140	Knob, tuning
	39141	Knob, volume
	4911	Lamp, dial #47 (2)
R1		1000 ohm, ½ watt
R2		2200 ohm, ½ watt
R3		47 ohm, ½ watt
R4		22,000 ohm, ½ watt
R5		*10,000 ohm, ½ watt*
R7		2.2 megohm, ½ watt
R6, R8		47,000 ohm, ½ watt
R11		220,000 ohm, ½ watt
R13		300 ohm, 1 watt, wire wound
R14		1500 ohm, 1 watt, wire wound
R15		400 ohm, 1 watt, wire wound
R10		10 megohm, ½ watt
R12		*.5 megohm, ½ watt*
	8107	Socket, pilot lamp (2)
	3784	Switch, band, BC - SW
	5866	Speaker, 5" output transformer
	1089	Transformer, power **
L5	3323	Transformer, I.F. Input
L6	3523	Transformer, I.F. Output

TUBES

1—6V6	1—6X5	1—6SK7
1—7H7	1—7A4	1—7B6

** For 115 - 230 volt operation use transformer #1090

POWER SUPPLY:

This receiver is designed for operation on A. C. (Alternating Current) only. 105-125 volts, 50-60 cycles. If in doubt as to the voltage and frequency supplied to your home, telephone your local Power Company.

MODELS 651, 653

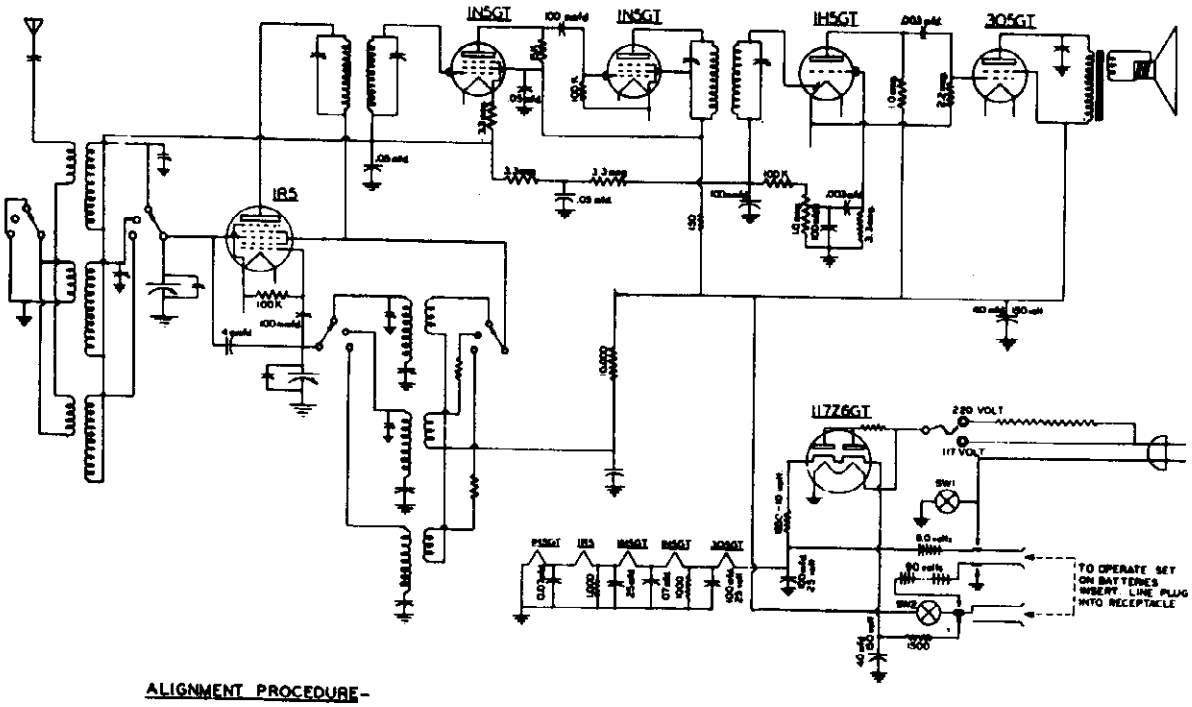

ALIGNMENT PROCEDURE-

Note: Use isolating condenser in feeding signals from the signal generator

Step	Set Gen at	Connect Gen to	Set Bandswitch	Set dial at	Vary	For	Check For
#1	455KC	R.F. Sec of Variable	BC	Min cap	I.F. Trimmer	Max. response	Max sensitivity
#2	18MC	Antenna terminal	SW (6-18MC)	18MC	Variable osc trimmer	gen sig.	to make sure not image frequency (image should appear in frequency).
#3	16MC	"	"	16MC	Variable RF trimmer	Max. response	Check entire band for good sentivity
#4	6MC	"	P.B (2-6MC)	6MC	P.B. osc trimmer	Gen. signal	To make sure not on image frequency
#5	5MC	"	"	5MC	P.B. Ant trimmer	Max. resp.	Check entire band for good sentivity
#6	1600KC	"	B.C.	1600KC	BC Ant trimmer	Gen. signal	
#7	1600KC	"	"	"	BC Ant trimmer	Max response	
#8	600KC	"	"	600KC	BC Padder	Gen. Signal	
#9		Recheck all steps					

TO REPLACE BATTERIES

Unscrew the two bolts holding the loop to the chassis and loosen the metal bar holding the "B" batteries in place. Pull the battery plugs out and replace new batteries in the same relative position. Use 2 Eveready #746 (or equivalent) and 2 Eveready #482 (or equivalent).

Batteries are considered to be poor or defective when they measure 1/3 less terminal voltage than the normal value thus the 90 volt "B" batteries should read better than 60 volts and the 9 volts "A" batteries should read better than 6 volts. These voltage measurements are to be taken after the set has been playing in the battery position for approximately one quarter hour. Use a voltmeter with low drain to read voltages (a 1000 ohm per volt meter or better)

TO OPERATE THIS SET ON A 120 VOLT POWER LINE.

Disconnect the set from the power line. Take voltage selector plug (behind loop under loop mounting bracket) and insert into the 120 volt jack (black)

TO OPERATE THIS SET ON A 220 VOLT POWER LINE

Disconnect the set from the power line. Take voltage selector plug (behind loop under loop mounting bracket) and insert it into the 220 volt jack (red).

CAUTION:

NEVER PLUG THIS SET INTO A 220 VOLT POWER LINE WHEN THE VOLTAGE SELECTOR PLUG IS IN THE 120 VOLT POSITION (BLACK JACK) OTHERWISE PERMANENT DAMAGE WILL RESULT.

DO NOT CUT THE LINE CORD OR OTHERWISE CHANGE IT'S CHARACTERISTICS OR DAMAGE WILL OCCUR.

DO NOT CHANGE TUBES WHILE THIS SET IS TURNED ON SINCE DAMAGE CAN BE CAUSED BY SO DOING.

©John F. Rider

MODEL 655

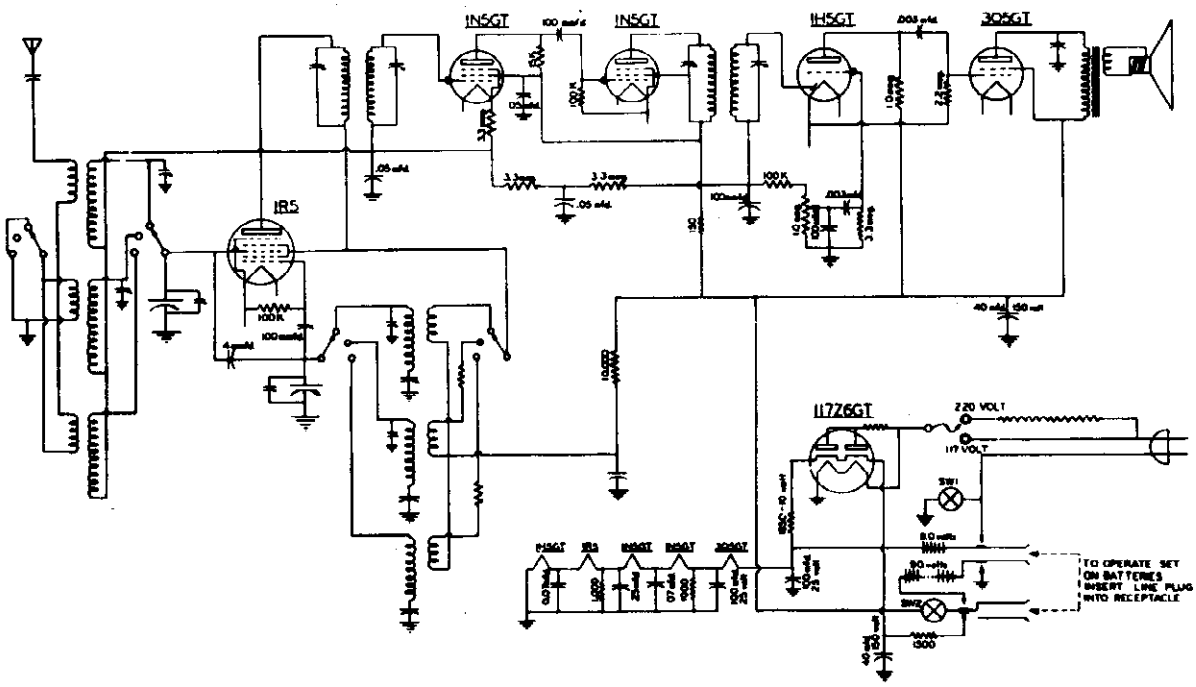

ALIGNMENT PROCEDURE-

Note: Use isolating condenser in feeding signals from the signal generator

Step	Set Gen at	Connect Gen to	Set Bandswitch	Set dial at	Vary	For	Check For
#1	455KC	R.F. Sec of Variable	BC	Min cap	I.F. Trimmer	Max. response	Max sensitivity
#2	18MC	Antenna terminal	SW (6-18MC)	18MC	Variable osc trimmer	gen sig.	to make sure not image frequency (image should appear in frequency)
#3	16MC	"	"	16MC	Variable RF trimmer	Max. response	Check entire band for good sentivity
#4	400 KC	"	LW	400	LW osc trimmer	Gen. signal	To make sure not on image frequency
#5	350KC	"	"	350	LW Ant trimmer	Max. resp.	Check entire band for good sentivity
#6	1600KC	"	B.C.	1600KC	BC Ant trimmer	Gen. signal	
#7	1600KC	"	"	"	BC Ant trimmer	Max response	
#8	600KC	"	"	600KC	BC Padder	Gen Signal	
#9		Recheck all steps					

TO REPLACE BATTERIES

Unscrew the two bolts holding the loop to the chassis and loosen the metal bar holding the "B" batteries in place. Pull the battery plugs out and replace new batteries in the same relative position. Use 2 Eveready # 746 (or equivalent) and 2 Eveready #402 (or equivalent).

Batteries are considered to be poor or defective when they measure 1/3 less terminal voltage than the normal value thus the 90 volt "B" batteries should read better than 60 volts and the 9 volts "A" batteries should read better than 6 volts. These voltage measurements are to be taken after the set has been playing in the battery position for approximately one quarter hour. Use a voltmeter with low drain to read voltages (a 1000 ohm per volt meter or better)

TO OPERATE THIS SET ON A 120 VOLT POWER LINE.

Disconnect the set from the power line. Take voltage selector plug (behind loop under loop mounting bracket) and insert into the 120 volt jack (red).

TO OPERATE THIS SET ON A 220 VOLT POWER LINE

Disconnect the set from the power line. Take voltage selector plug (behind loop under loop mounting bracket) and insert it into the 220 volt jack (red).

CAUTION:

NEVER PLUG THIS SET INTO A 220 VOLT POWER LINE WHEN THE VOLTAGE SELECTOR PLUG IS IN THE 120 VOLT POSITION (BLACK JACK) OTHERWISE PERMANENT DAMAGE WILL RESULT. DO NOT CUT THE LINE CORD OR OTHERWISE CHANGE IT'S CHARACTERISTICS OR DAMAGE WILL OCCUR.

DO NOT CHANGE TUBES WHILE THE SET IS TURNED ON SINCE DAMAGE CAN BE CAUSED BY SO DOING.

MODEL 1300

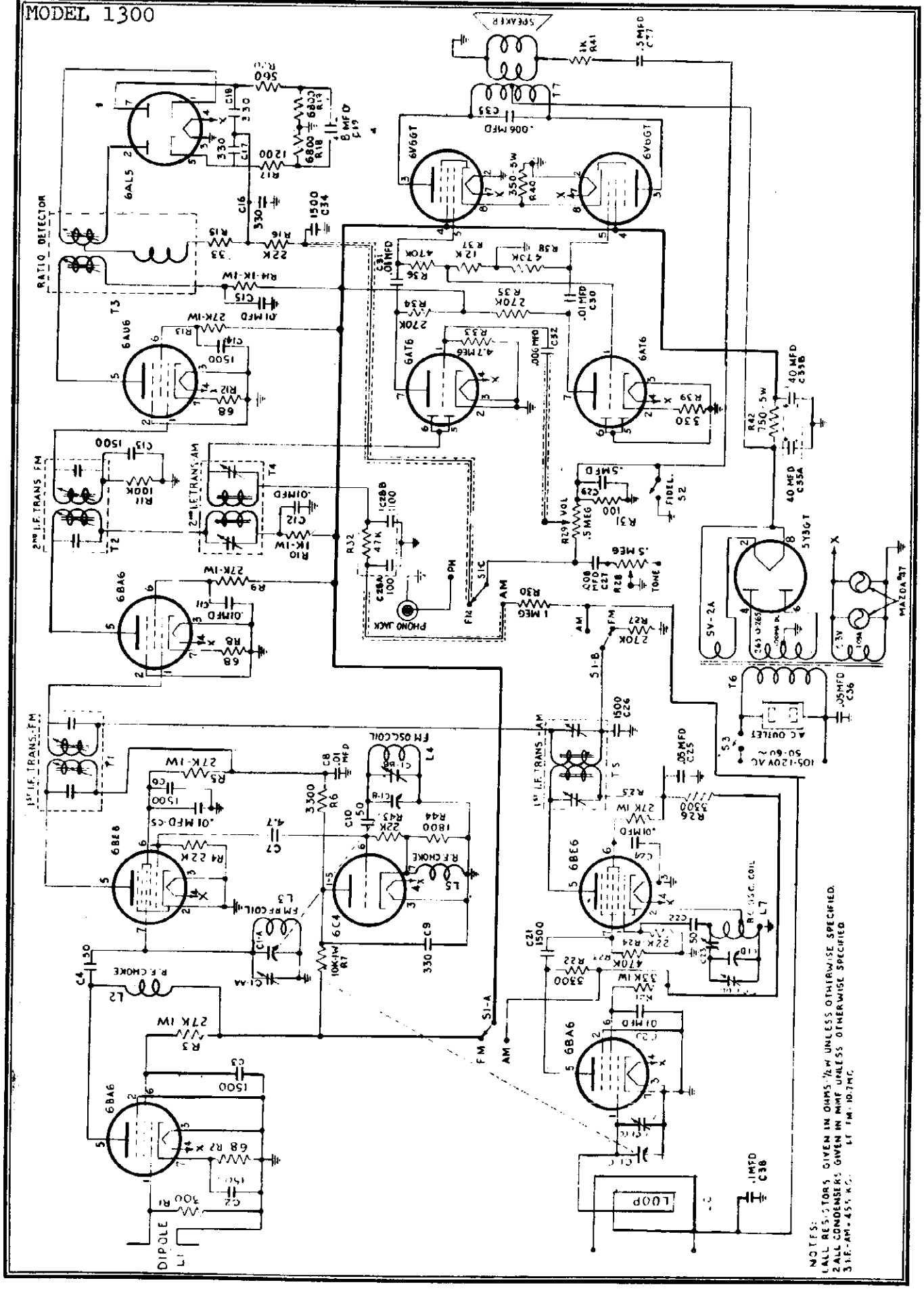

©John F. Rider

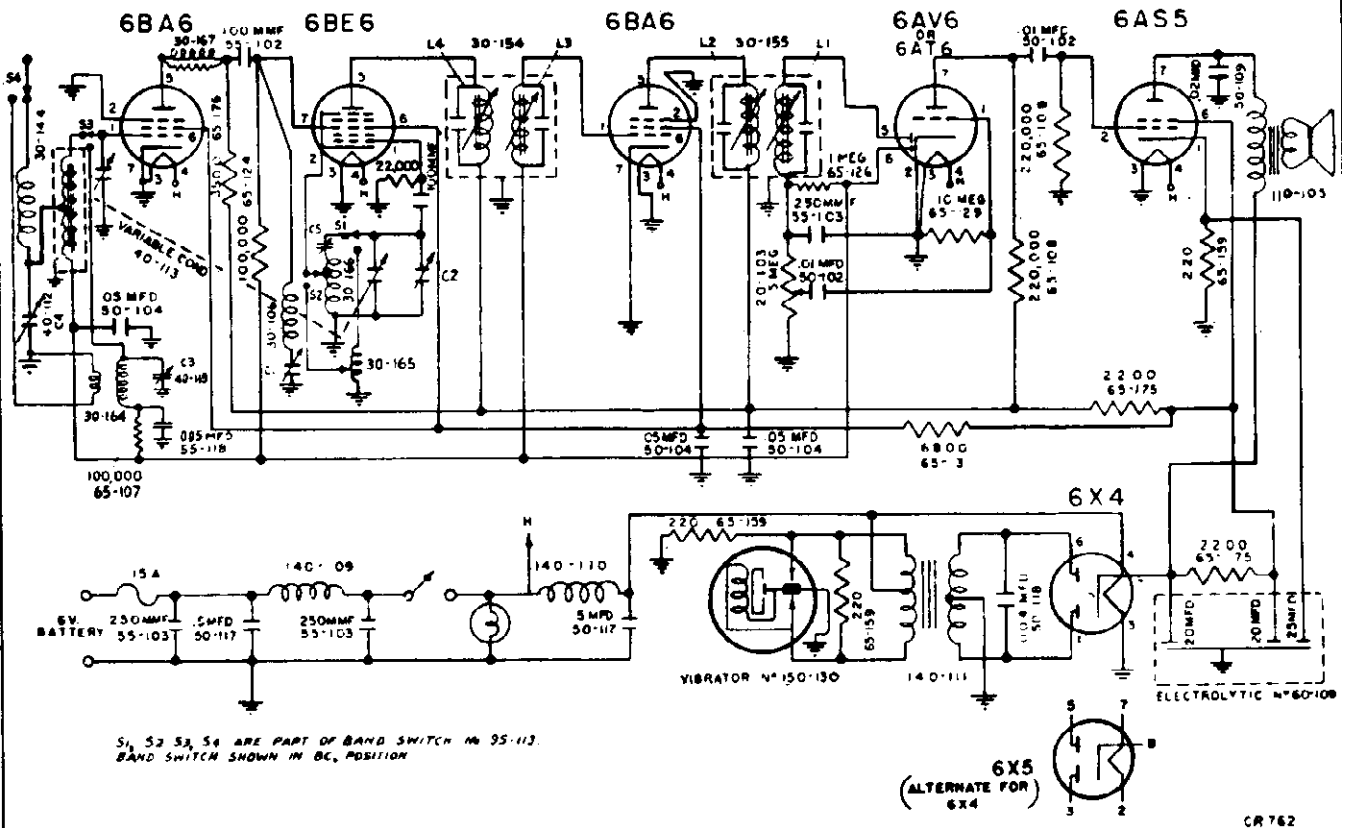

ALIGNMENT INSTRUCTIONS

SET VOLUME CONTROL AT MAXIMUM VOLUME AND OUTPUT FROM SIGNAL GENERATOR NO HIGHER THAN IS NECESSARY TO OBTAIN OUTPUT READING.

TUNING RANGE

BROADCAST:- 540 - 1650 KC. SHORTWAVE:- 5.8 - 18.3 MC.

DUMMY ANTENNA	SIGNAL GENERATOR COUPLING TO	BAND SWITCH POSITION	SIGNAL GEN'R FREQUENCY	RADIO DIAL SETTING	OUTPUT METER	ADJUST	REMARKS
.1 MFD.	PIN "7" ON 6BE6 SOCKET	B C	456 KC.	FULL OPEN	ACROSS VOICE COIL	L1, L2, L3, L4.	ADJUST FOR MAXIMUM OUTPUT
.1 MFD	PIN "1" ON 6BA6 (RF)	B C	456 KC.	" "	" "	C1	" " MINIMUM
200 OHMS	ANTENNA SOCKET	S W	18.3 MC.	" "	" "	* C2	" " MAXIMUM
200 OHMS	" "	S W	15 MC.	APPROX. 19 METERS	" "	C 3	ROCK GANG & ADJUST FOR MAXIMUM OUTPUT. C3 ADJUSTMENT
30 MMFD.	" "	B C	1400 KC.	APPROX. 1400 KC.	" "	C 4	ADJUST FOR MAXIMUM OUTPUT
30 MMFD.	" "	B C	600 KC.	600 KC.	" "	C 5	ROCK GANG & ADJUST FOR MAXIMUM OUTPUT.

* IF TWO PEAKS CAN BE OBTAINED, USE ONE WITH TRIMMER SCREW FURTHER IN.

© John F. Rider

MODELS CR762, CR762T

Model CR762

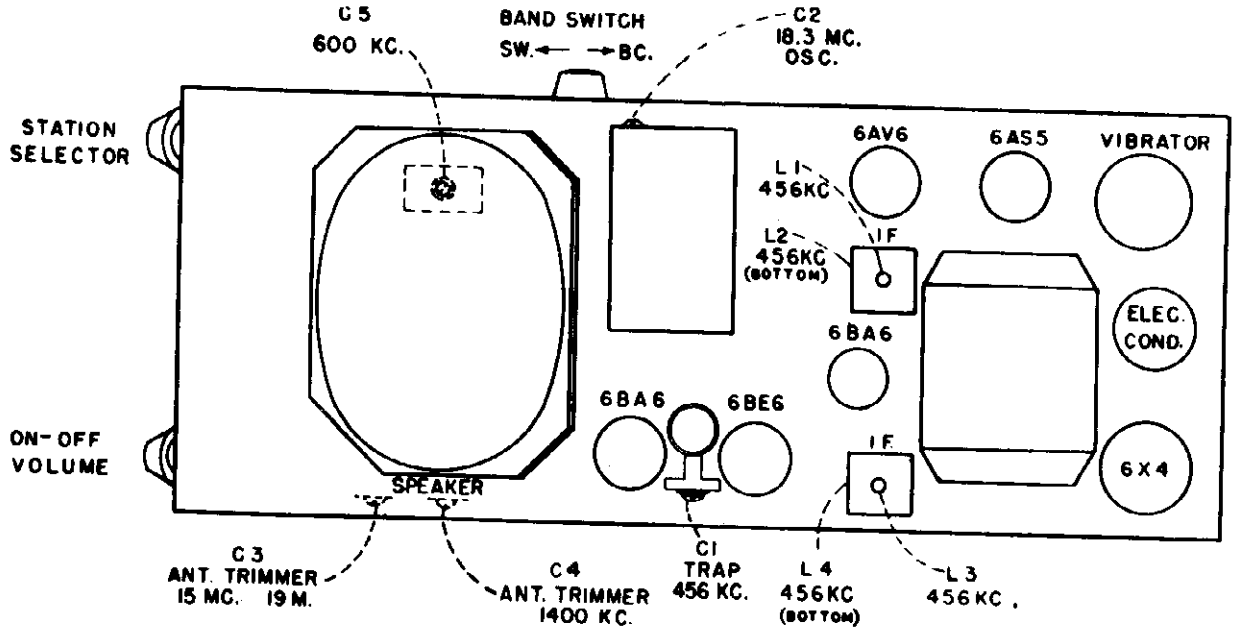

Model CR762T

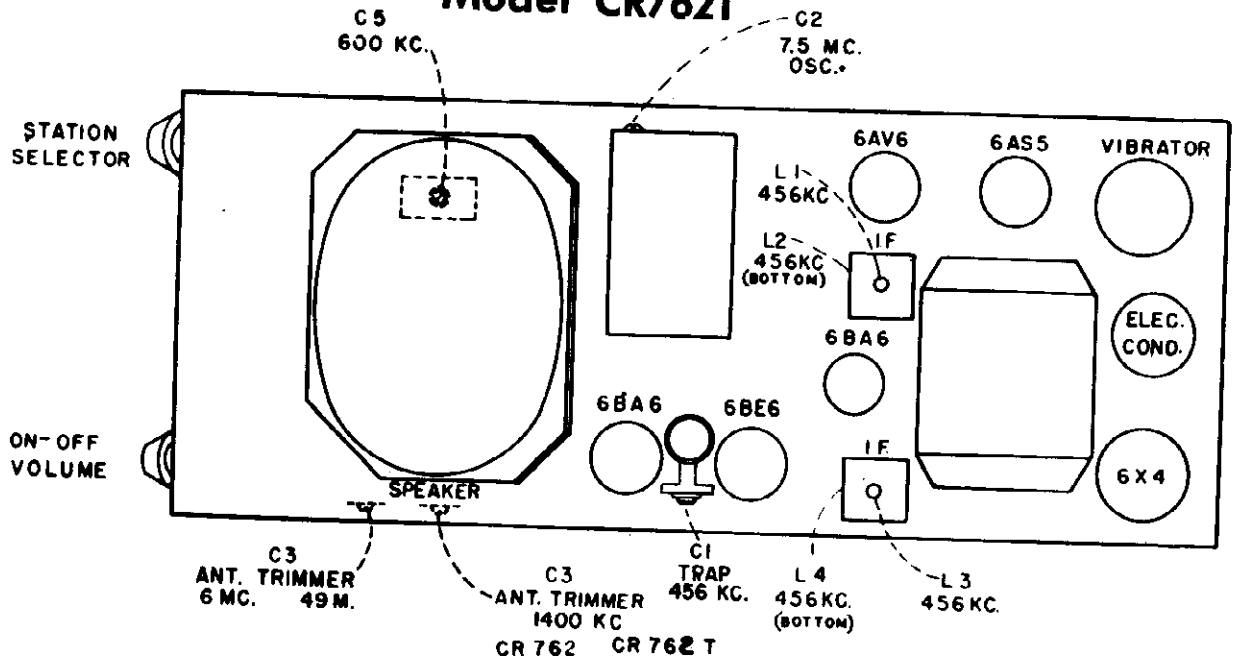

CR 762 CR 762 T

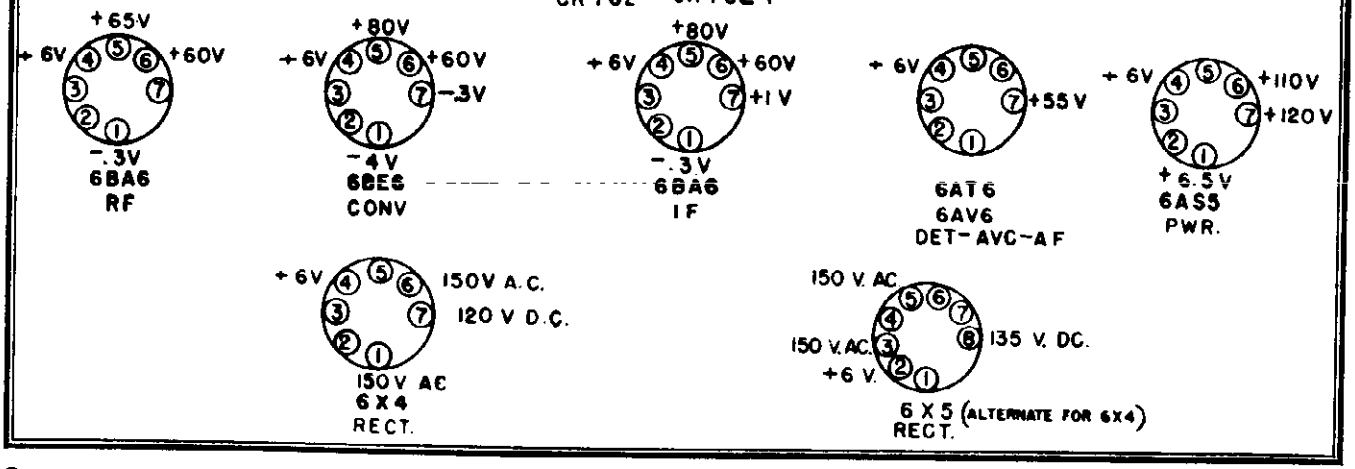

©John F. Rider

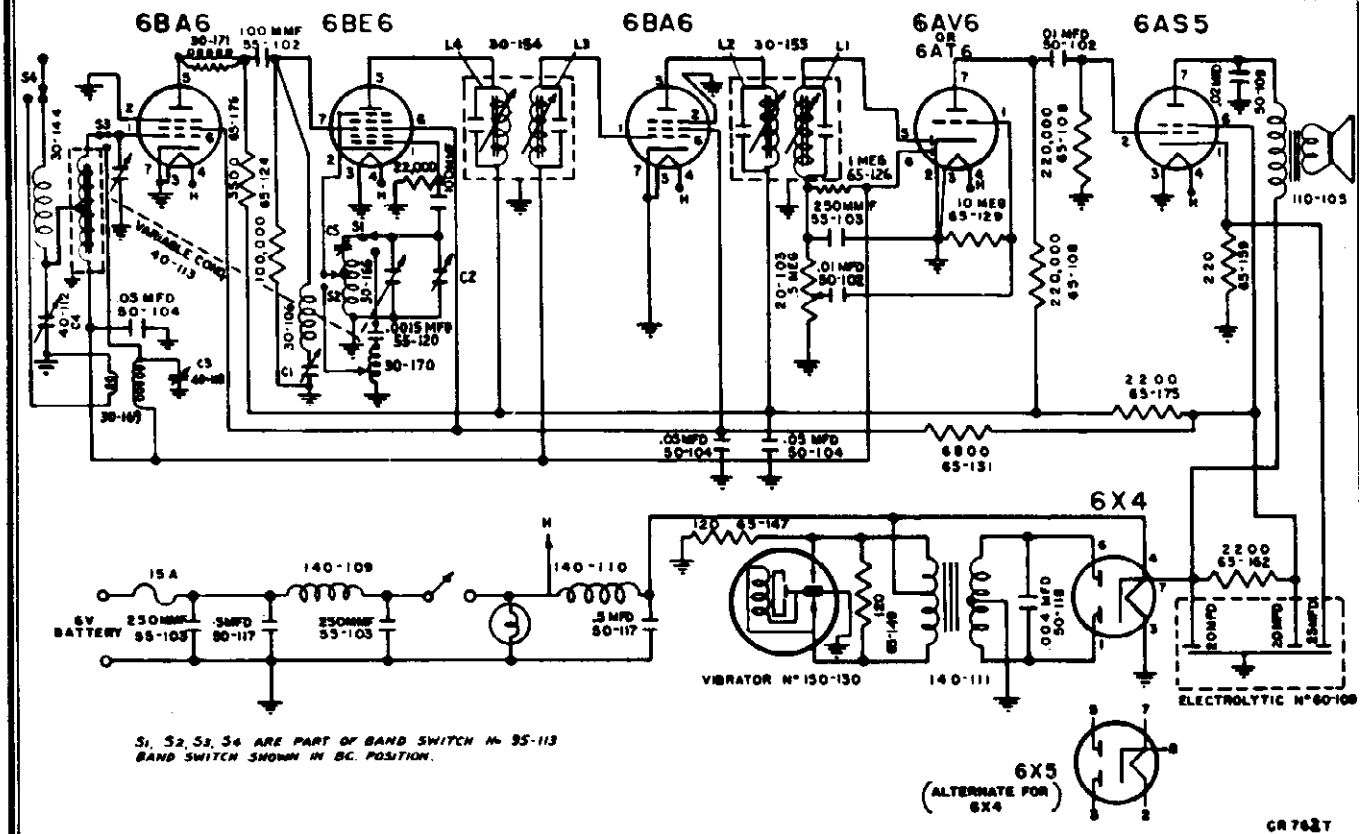

ALIGNMENT INSTRUCTIONS

SET VOLUME CONTROL AT MAXIMUM VOLUME AND OUTPUT FROM SIGNAL GENERATOR NO HIGHER THAN IS NECESSARY TO OBTAIN OUTPUT READING

TUNING RANGE

BROADCAST :- 540 - 1650 KC SHORTWAVE - 2.3 - 7.5 MC.

DUMMY ANTENNA	SIGNAL GENERATOR COUPLING ON	BAND SWITCH POSITION	SIGNAL GEN'R FREQUENCY	RADIO DIAL SETTING	OUTPUT METER	ADJUST	REMARKS
.1 MFD	PIN * 7 ON 6BE6 SOCKET	B C	456 KC	FULL OPEN	ACROSS VOICE COIL	L1, L2, L3, L4	ADJUST FOR MAXIMUM OUTPUT
.1 MFD.	PIN * 1 ON 6BA6 (RF) "	B C	456 KC	" "	" "	C1	" " MINIMUM "
200 OHMS	ANTENNA SOCKET	S W	7.5 MC.	" "	" "	* C2	" " MAXIMUM "
200 OHMS	" "	S W	6 MC.	APPROX. 49 METERS	" "	C3	ROCK GANG & ADJUST FOR MAXIMUM OUTPUT. C3 ADJUSTMENT
30 MMFD.	" "	B C	1400 KC.	APPROX. 1400 KC.	" "	C4	ADJUST FOR MAXIMUM OUTPUT
30 MMFD.	" "	B C	600 KC.	600 KC.	" "	C5	ROCK GANG & ADJUST FOR MAXIMUM OUTPUT.

* IF TWO PEAKS CAN BE OBTAINED, USE ONE WITH TRIMMER SCREW FURTHER OUT.

© John F. Rider

MODEL 1877

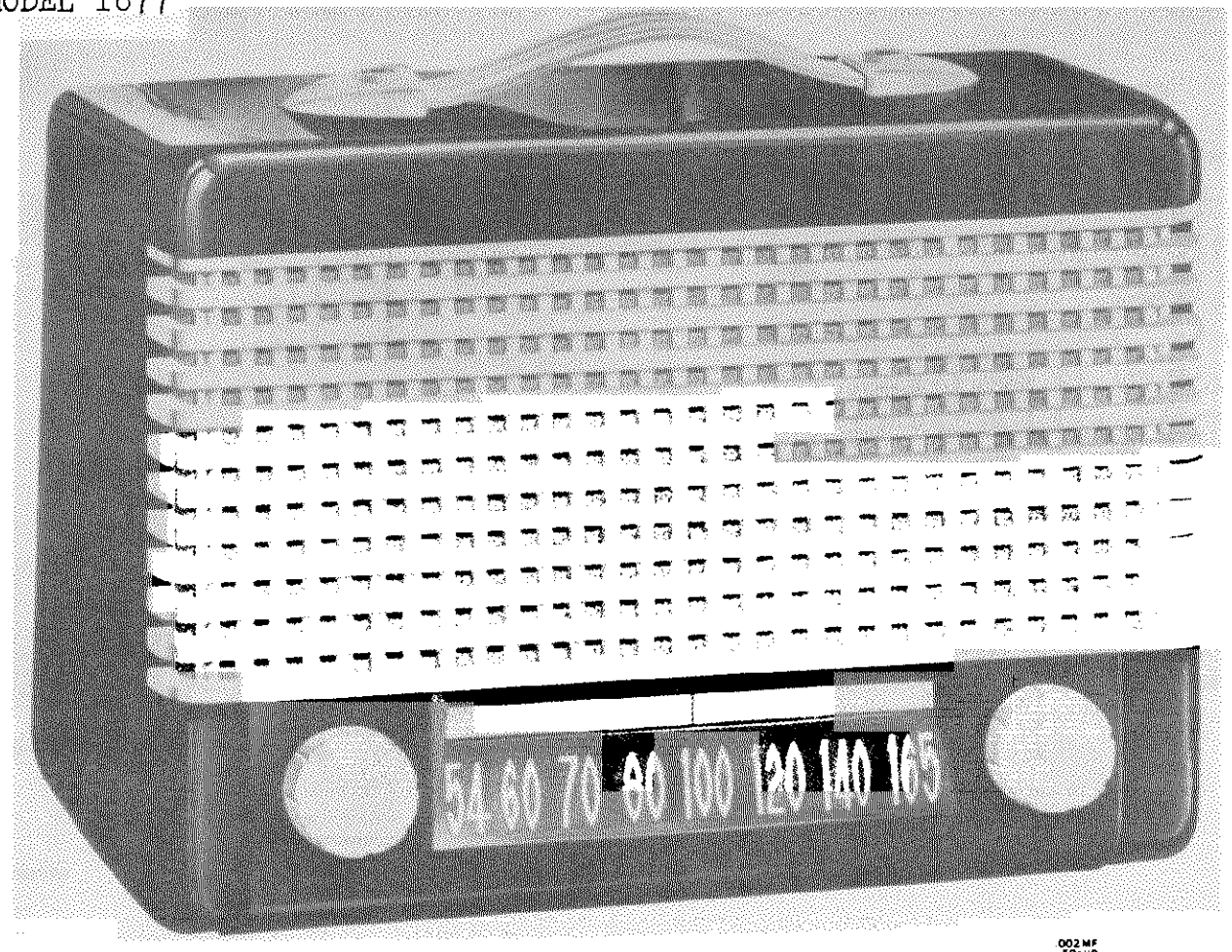

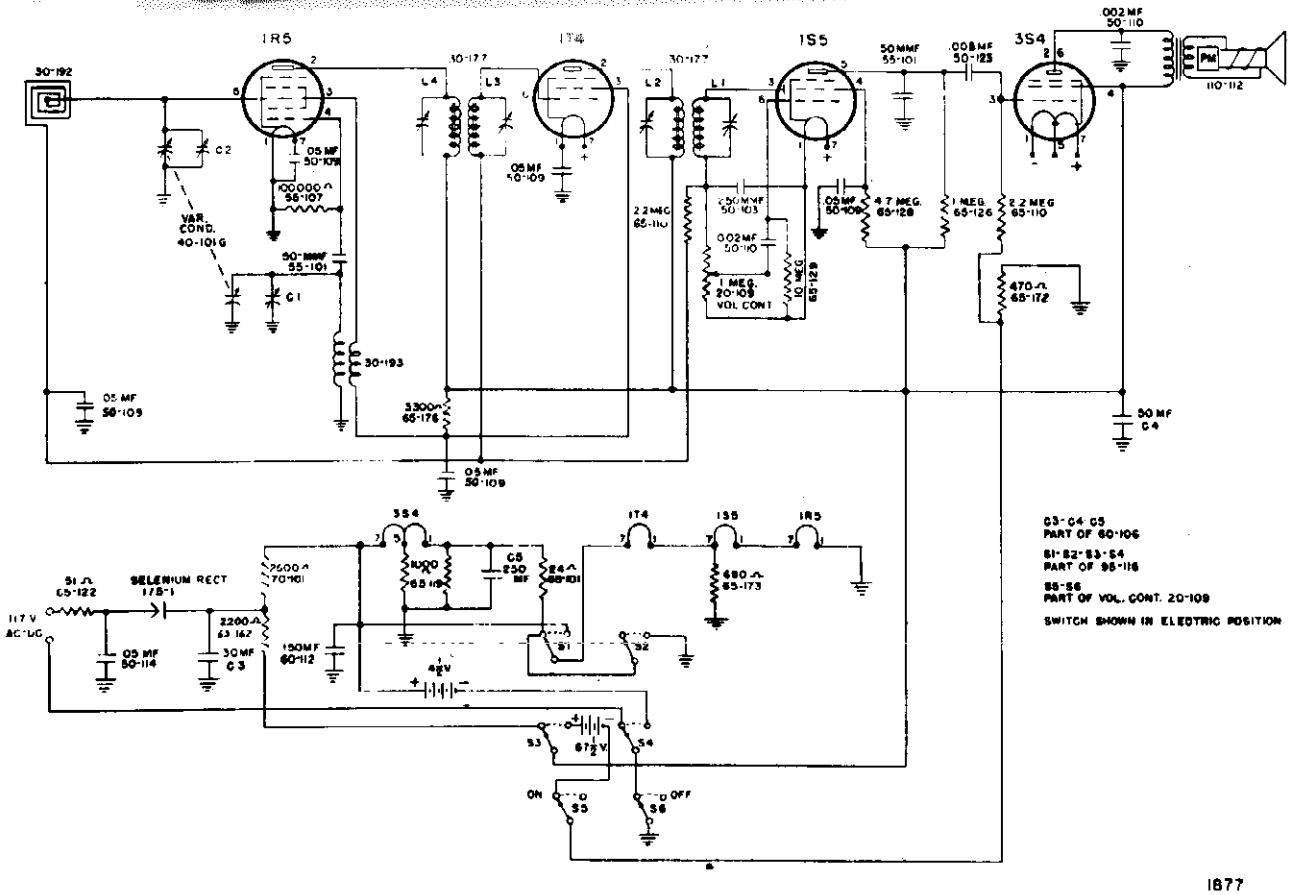

©John F. Rider

MODEL 1877-220V.

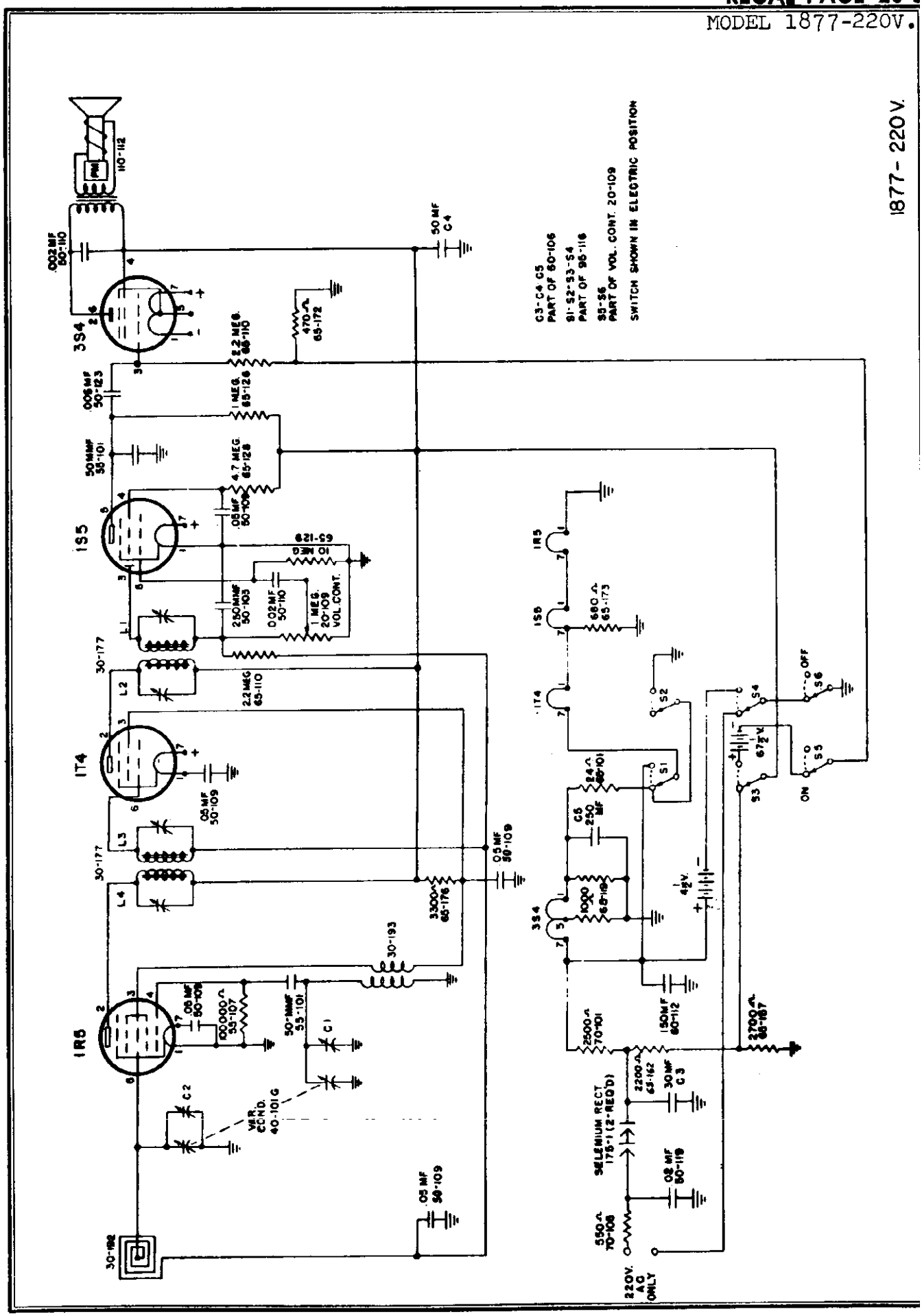

MODEL 1878

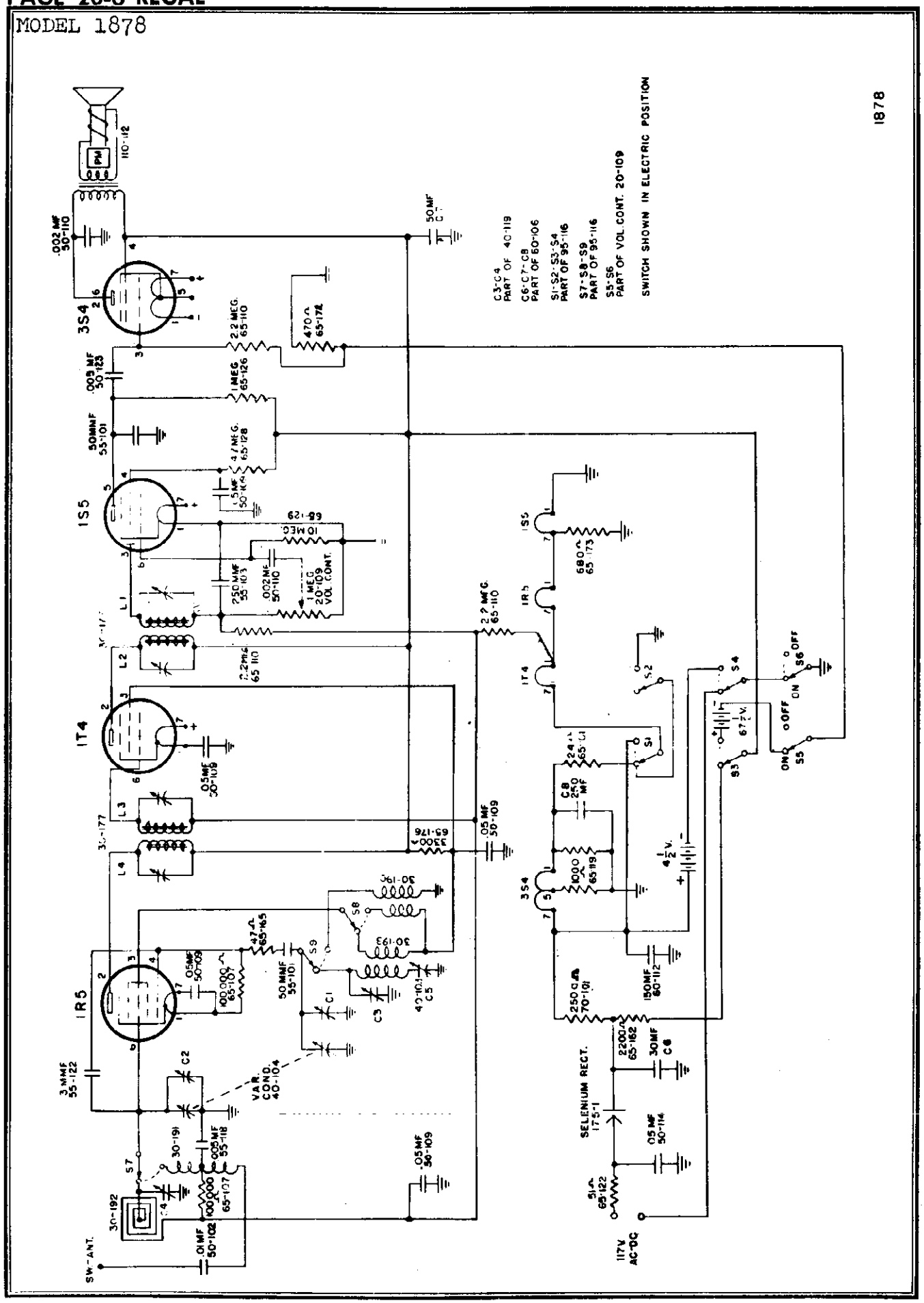

©John F. Rider

MODEL 1878-220V.

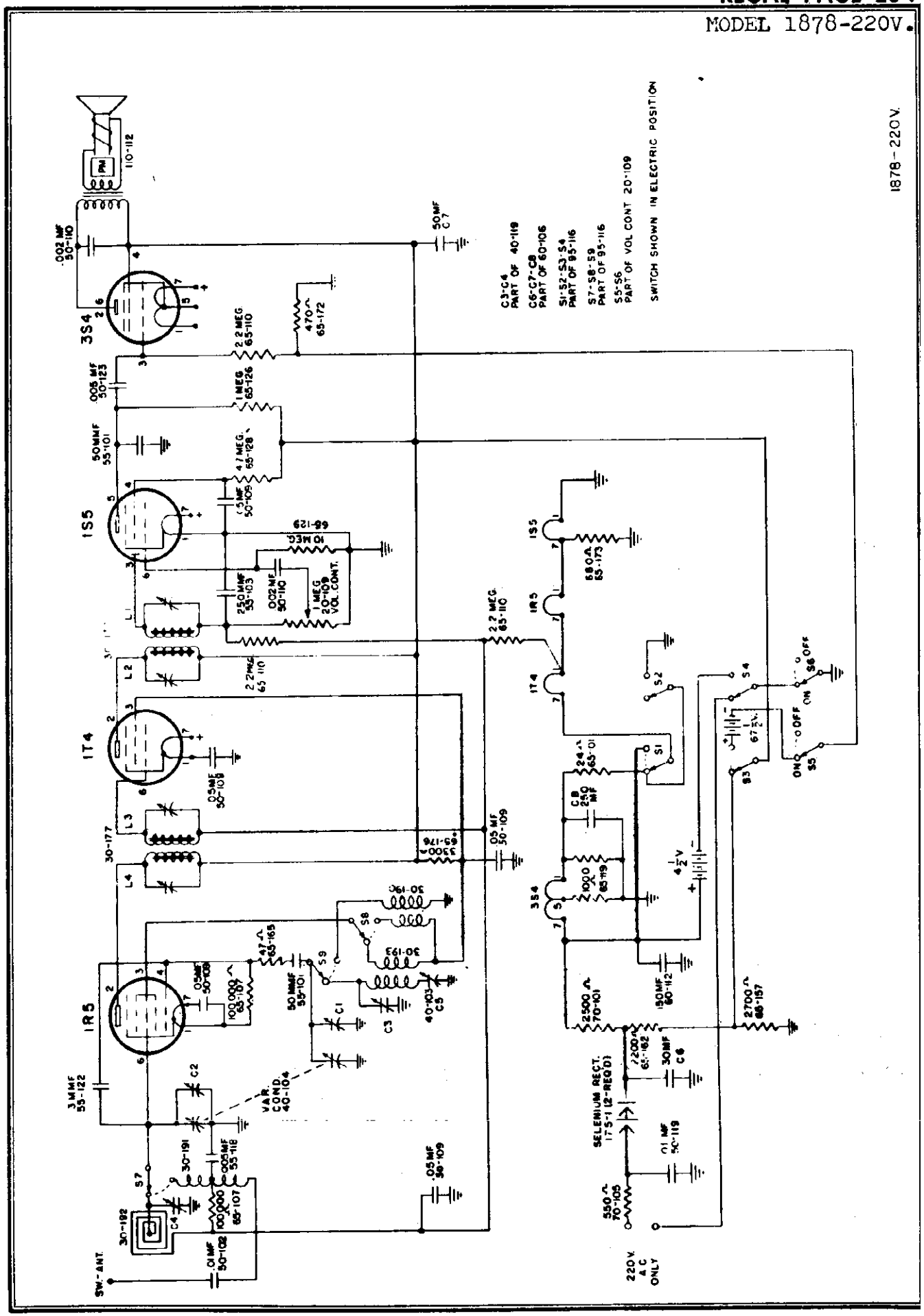

MODEL 2000

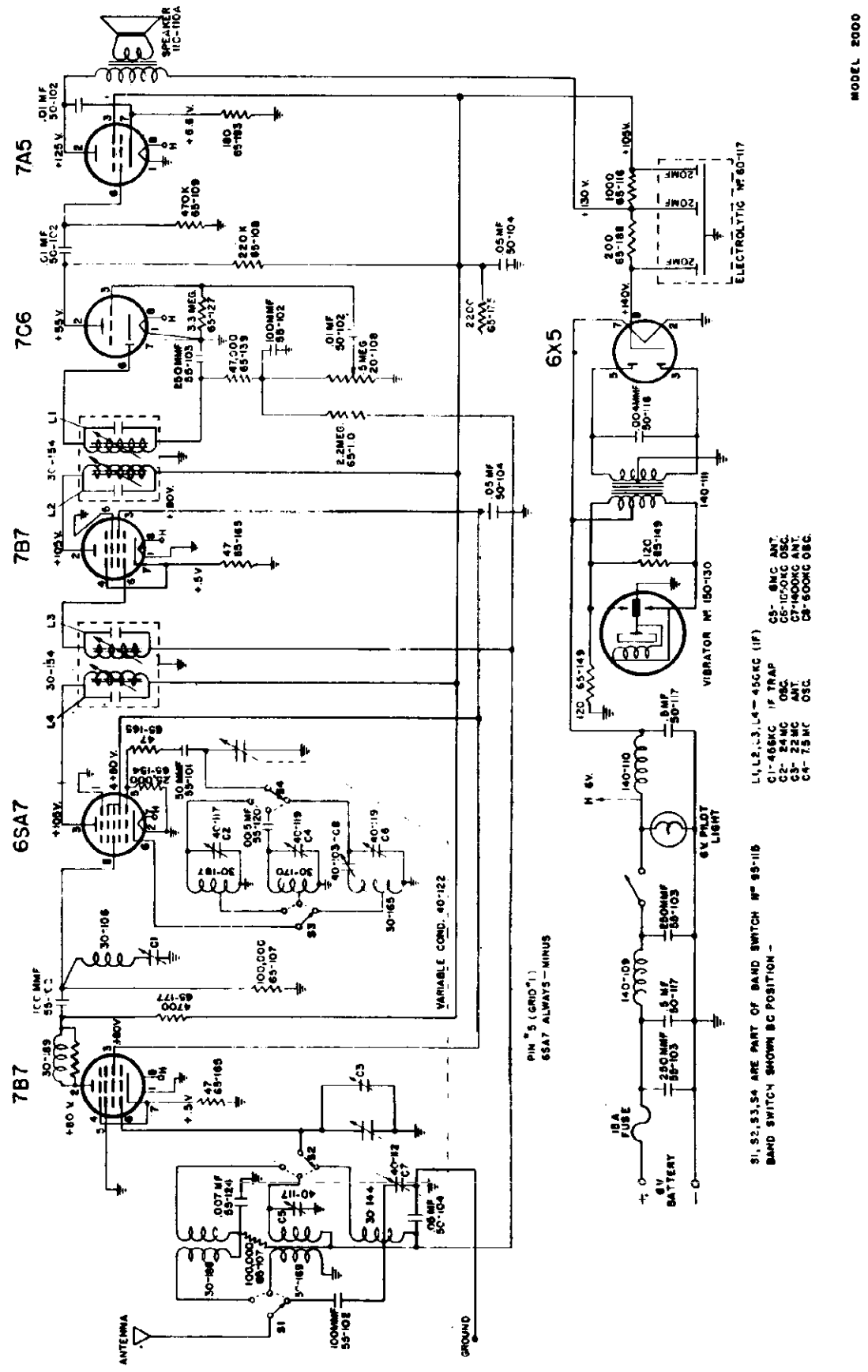

©John F. Rider

MODELS 2000, 4963

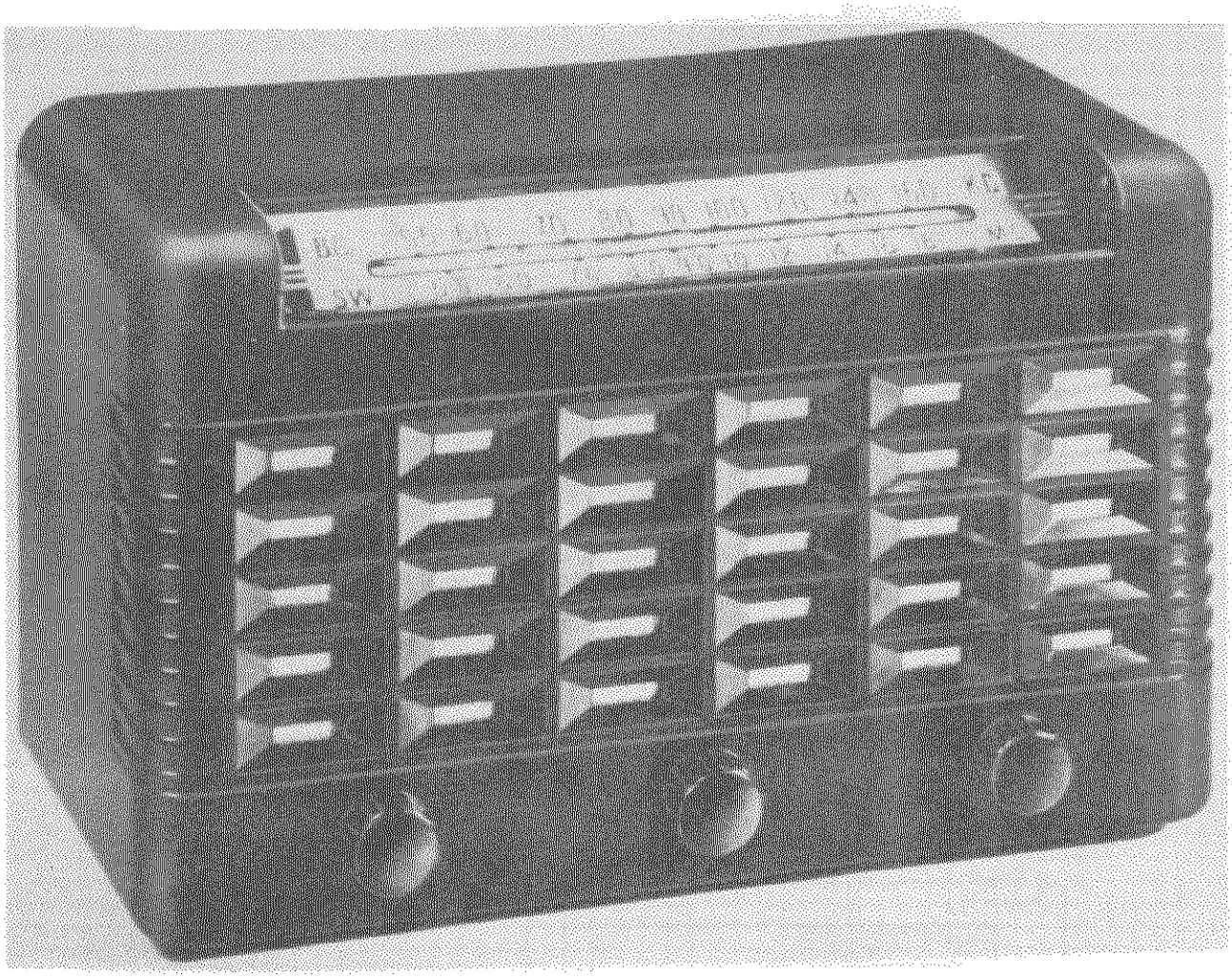

ALIGNMENT INSTRUCTIONS

SET VOLUME CONTROL AT MAXIMUM VOLUME AND OUTPUT FROM SIGNAL GENERATOR NO HIGHER THAN IS NECESSARY TO OBTAIN OUTPUT READING

TUNING RANGE

BROADCAST 540-1650 KC , INTERNATIONAL - 7-24 MC , TROPIC 2.3-7.4 MC

	DUMMY ANTENNA	SIGNAL GENERATOR COUPLING ON	BAND SWITCH POSITION	SIGNAL GEN'R FREQUENCY	RADIO DIAL SETTING	OUTPUT METER	ADJUST	REMARKS
1	.1 MFD	PIN #6 ON 7B7 (RF) SOCKET	B C	456 KC	FULL OPEN	ACROSS VOICE COIL	L1, L2, L3, L4,	ADJUST FOR MAXIMUM OUTPUT
2	.1 MFD	PIN #6 ON 7B7 (RF) SOCKET	B C	456 KC	FULL OPEN	ACROSS VOICE COIL	C1	ADJUST FOR MINIMUM OUTPUT
3	200 OHMS	ANTENNA LEAD	INTERNATIONAL	24MC	FULL OPEN	ACROSS VOICE COIL	* C2	AJUST FOR MAXIMUM OUTPUT
4	200 OHMS	ANTENNA LEAD	INTERNATIONAL	20 MC	APPROX 20 MC	ACROSS VOICE COIL	C3	ROCK GANG & ADJUST FOR MAXIMUM OUTPUT C3 ADJUSTMENT
5	200 OHMS	ANTENNA LEAD	TROPIC	7.4 MC	FULL OPEN	ACROSS VOICE COIL	+ C4	ADJUST FOR MAXIMUM OUTPUT
6	200 OHMS	ANTENNA LEAD	TROPIC	6 MC	APPROX. 6 MC	ACROSS VOICE COIL	C5	ADJUST FOR MAXIMUM OUTPUT
7	50 MMFD	ANTENNA LEAD	B C	1650 KC	FULL OPEN	ACROSS VOICE COIL	C6	ADJUST FOR MAXIMUM OUTPUT
8	50 MMFD	ANTENNA LEAD	B C	1400 KC	APPROX 1400 KC	ACROSS VOICE COIL	C7	ADJUST FOR MAXIMUM OUTPUT
9	50 MMFD	ANTENNA LEAD	B C	600 KC	600 KC	ACROSS VOICE COIL	C8	ROCK GANG & ADJUST FOR MAXIMUM OUTPUT

* IF TWO PEAKS CAN BE OBTAINED, USE ONE WITH TRIMMER SCREW FURTHER IN.
+ IF TWO PEAKS CAN BE OBTAINED, USE ONE WITH TRIMMER SCREW FURTHER OUT.

©John F. Rider

MODEL 4963

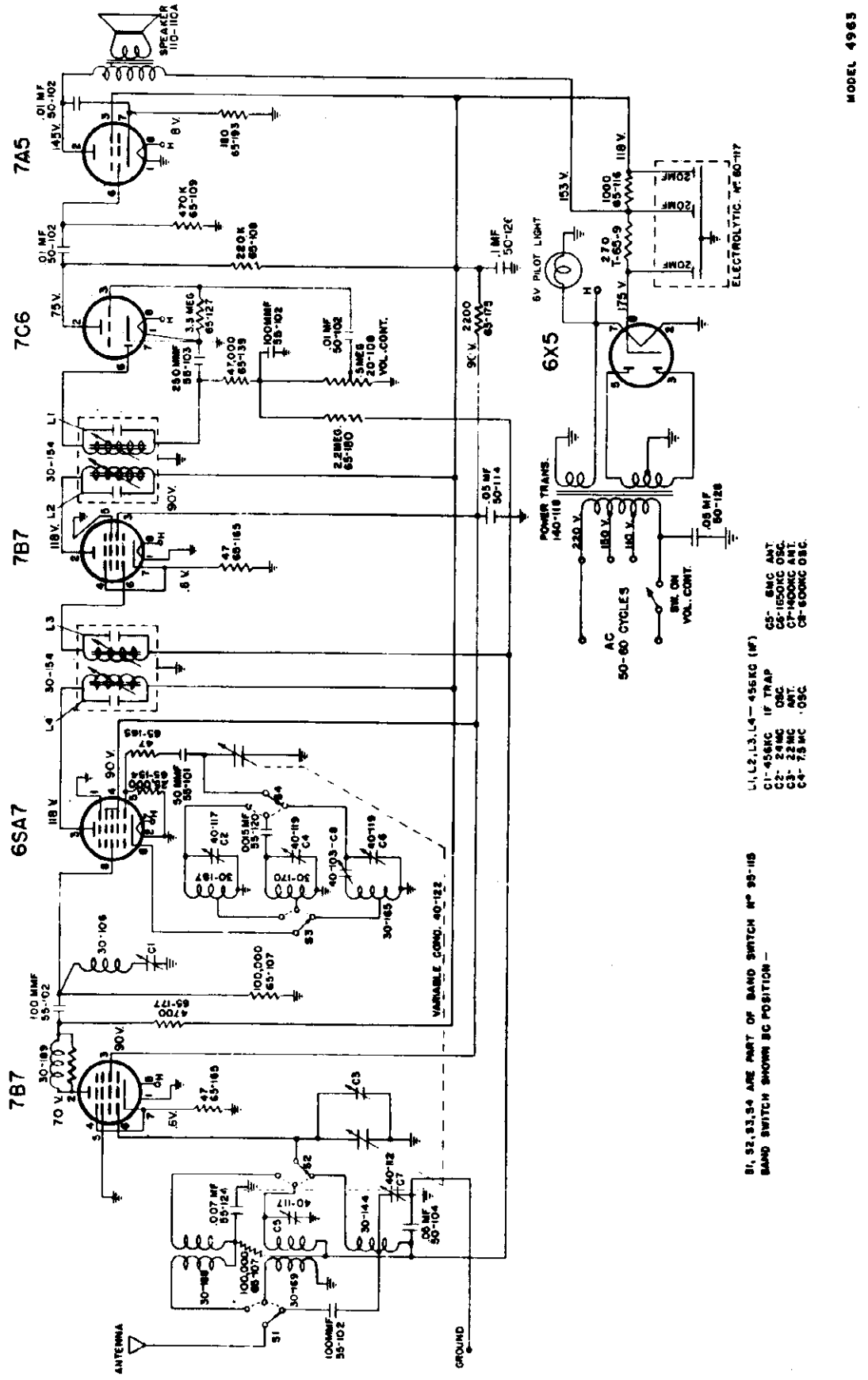

©John F. Rider

ALIGNMENT INSTRUCTIONS

SET VOLUME CONTROL AT MAXIMUM VOLUME AND OUTPUT FROM SIGNAL GENERATOR NO HIGHER THAN IS NECESSARY TO OBTAIN OUTPUT READING.

TUNING RANGE

BROADCAST :- 550 - 1650 KC SHORTWAVE :- 5.8 - 18.3 MC.

DUMMY ANTENNA	SIGNAL GENERATOR COUPLING	BAND SWITCH POSITION	SIGNAL GEN'R FREQUENCY	RADIO DIAL SETTING	OUTPUT METER	ADJUST	REMARKS
.05 MFD	R.F. SECTION OF VARIABLE CONDENSER	B C EXTREME LEFT	455 KC.	165.0 KC.	ACROSS VOICE COIL	L1, L2, L3, L4.	ADJUST FOR MAXIMUM
100 MMFD.	ANTENNA LEAD	B C	1650 KC.	1650 KC.	" "	C1	" " "
100 MMFD.	" "	B C	1500 KC.	1500 KC.	" "	C2	" " "
100 MMFD.	" "	B C	600 KC	600 KC.	" "	C3	ROCK GANG & ADJUST FOR MAXIMUM OUTPUT. RECHECK C1 & C2 ADJUSTMENTS AS GIVEN.
400 Ω	" "	S W EXTREME RIGHT	18.3 MC.	18.3 MC.	" "	* C4	ADJUST FOR MAXIMUM.
400 Ω	" "	S W	15 MC.	15 MC.	" "	× C5	ROCK GANG & ADJUST FOR MAXIMUM OUTPUT.

* IF TWO PEAKS CAN BE OBTAINED, USE ONE WITH TRIMMER SCREW FURTHER IN.
× IMAGE FREQUENCY SHOULD APPEAR AT 15.9 MC. AND BE CONSIDERABLY WEAKER.

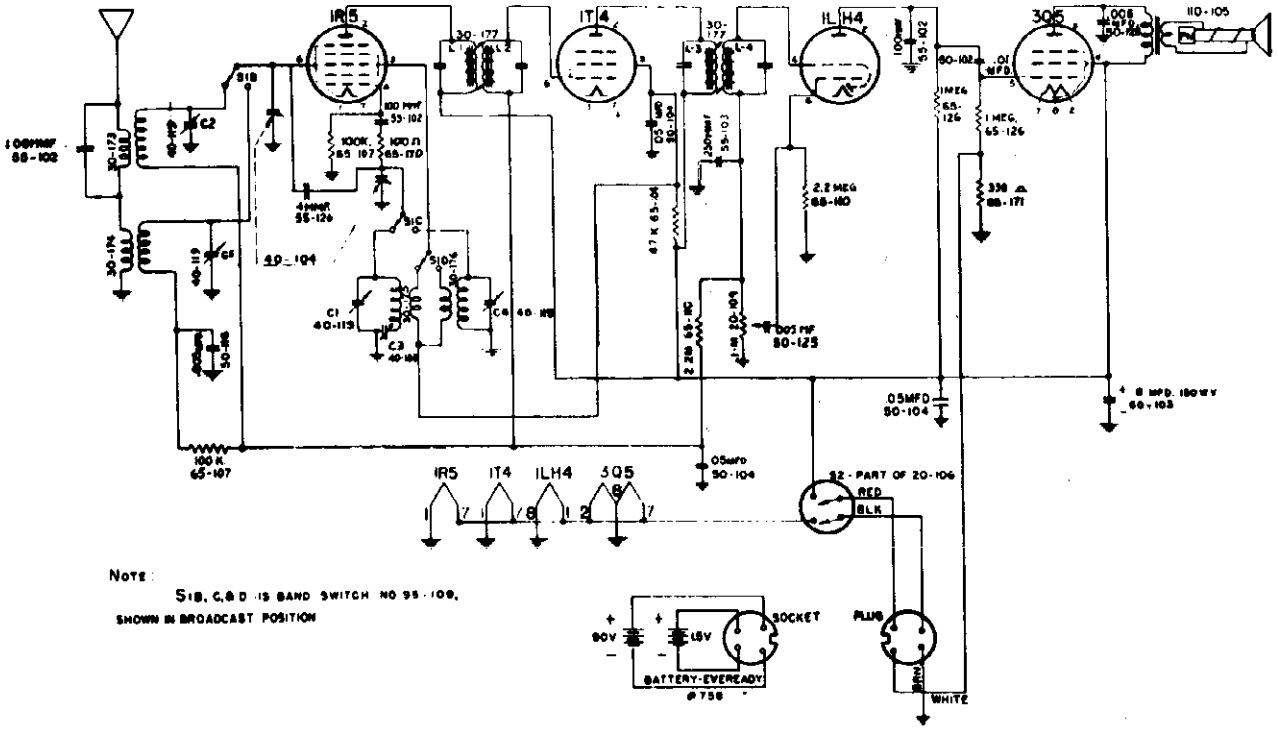

NOTE:
S1B, C, & D IS BAND SWITCH NO 95-109, SHOWN IN BROADCAST POSITION

DWG. 130-178

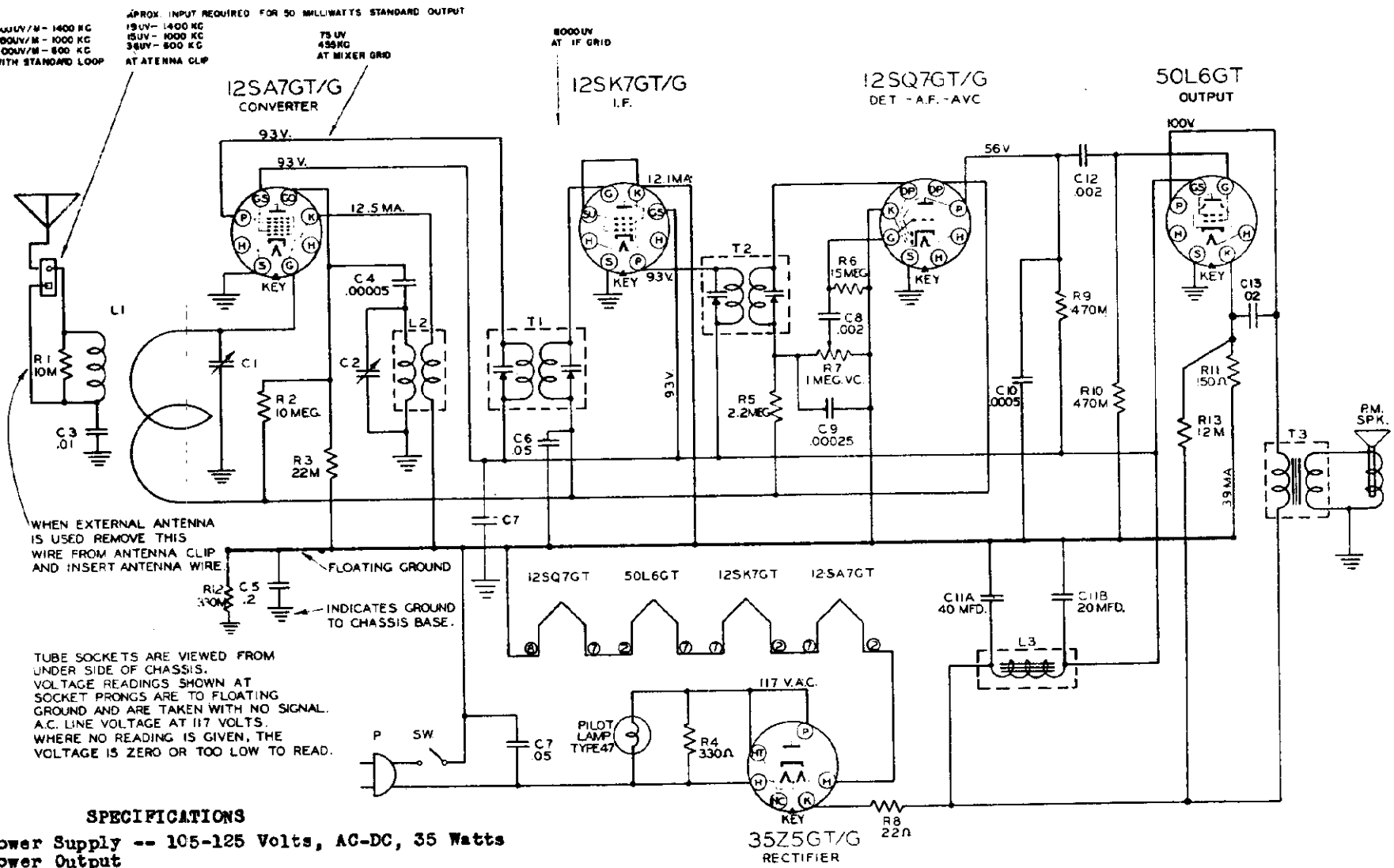

SPECIFICATIONS

Power Supply -- 105-125 Volts, AC-DC, 35 Watts
Power Output
Undistorted 1.1 Watts, Maximum - 2.36 Watts
Tuning Range Broadcast Band 54-1600 Kc
Speaker
Voice Coil Impedance 3.2 Ohms

Note: On some sets C13, condenser was connected from the plate to the screen grid of the output tube instead of from plate to cathode.
Some sets do not have the B+ bypass condenser C7, (from the screen lug of the 12SA7 tube socket to chassis).

Difference between 6011 and 6012:

Model 6011 has a walnut cabinet. Model 6012 has an ivory cabinet.
Chassis 132.816 has walnut pushbuttons. Chassis 132.816A has ivory pushbuttons.

MODELS 6011, Ch. 132.816;
6012. Ch. 132.816A

MODELS 6011, Ch. 132.816;
6012, Ch. 132.816A

ALIGNMENT PROCEDURE

PRELIMINARY:

Output meter connection .....Across Speaker Voice Coil
Output meter reading to indicate 50 mw (Standard output)..... .4 Volt
Generator modulation..... 30% 400 Cycles
Position of volume control ..... Fully Clockwise
Position of dial pointer with variable condenser fully closed ..... *See Note Below

POSITION OF VARIABLE	GENERATOR FREQUENCY	DUMMY ANTENNA	GENERATOR CONNECTION HIGH SIDE	GENERATOR CONNECTION GROUND LEAD	ADJUST TRIMMERS IN ORDER SHOWN	TRIMMER FUNCTION
Open	455 Kc	.05 mfd.	Mixer grid	Floating ground	T2-T1	IF
1400 Kc	1400 Kc	200 mmf.	Ant. Clip	Floating ground	C-2, C-1	Osc. Ant.

IMPORTANT ALIGNMENT NOTES

1. *To Set Pointer: With variable condenser completely closed set pointer at right hand edge of rectangular notch cut in lower edge of dial backing plate near right hand end. The inverted v in lower edge of dial backing plate near left hand end is the 1400 Kc calibration mark.
2. Place set loop in the same position and at the same distance with respect to the back of the chassis as it would be when the set is mounted in the cabinet, during alignment of the RF stage. (1-1/16" from back of chassis to front of long loop strip).
3. If a standard test loop is used with the signal generator for alignment of the receiver the black wire will be left in the antenna clip. When the generator lead is connected to ant. clip the black wire is removed from the clip.
4. The alignment procedure should be repeated in the original order for greatest accuracy. Always keep the output from the signal generator at its lowest possible value to make the A. V. C. action of the receiver ineffective.

INSTRUCTIONS FOR SETTING UP PUSH BUTTONS:

Allow the receiver to remain on for ten to fifteen minutes before making the push button adjustments. Each of the push buttons should be set to a desired station in the following manner:

1. Make a list of the four local stations for which push button tuning is desired and punch out the corresponding call letters from the call letter sheets.
2. Lift each button and insert a call letter tab into the slot at the side of the button, centering it in the front opening.
3. Lift a push button and insert a screw driver in the slotted screw head just below the button. Press down and loosen the locking screw by turning it to the left about two turns.
4. While holding the screw all the way down with the screw driver, tune in the desired station by hand with the tuning knob. Turning the tuning knob back and forth slightly either side of the station while holding the screw down will help to obtain a precise setting.
5. Tighten the screw, keeping it pushed all the way down while tightening it.
6. Check for accuracy by moving the pointer off the station about an inch and retuning it by depressing the push button set up for that station. If the setting is not accurate, repeat the foregoing procedure.
7. Follow the same procedure for each of the remaining buttons.
8. Should you desire to change your selection of stations, the old call letters can be removed from the buttons by pushing them out with a penknife, nail file or eraser on a pencil and repeating steps 3 to 8.

PARTS LIST

Schematic Location	Part No.	Description
R1		Resistor, 10,000 ohm, ½ watt
R2		Resistor, 10 megohm, ½ watt
R3		Resistor, 22,000 ohm, ½ watt
R4		Resistor, 330, ohm, ½ watt
R5		Resistor, 2.2 megohm, ½ watt
R6		Resistor, 15 megohm, ½ watt
R7	N19390	Volume Control and Switch (1 megohm)
R8		Resistor, 22 ohm, ½ watt
R9,R10		Resistor, 470,000 ohm, ½ watt
R11		Resistor, 150 ohm, ½ watt
R12		Resistor, 330,000 ohm, ½ watt
R13		Resistor, 12,000 ohm, 1 watt
C1,C2	N19389	Condenser, variable
C3		Condenser, .01 mfd., 400 V.
C4		Condenser, .000005 mfd., 500 V. Mica
C5		Condenser, .2 mfd., 400 V.
C6		Condenser, .05 mfd., 200 V.
C7		Condenser, .05 mfd., 400 V.
C8,C12		Condenser, .002 mfd., 400 V.
C9		Condenser, .00025 mfd., 500 V. Mica
C10		Condenser, .0005 mfd., 500 V. Mica
C11A-11B	N19360	Condenser, Electrolytic, 40-20 mfd., 150 V.
C13		Condenser, .02 mfd., 400 V.
T1	N19358	Transformer, 1st I. F.
T2	N19356	Transformer, 2nd I. F.
T3	N19388	Transformer, Output
L1	N19353	Antenna Loop Assembly
	N19234	Socket, Antenna Loop
	N19359	Socket Assy., Dial Light
L2	N19354	Coil, oscillator
L3	N19357	Choke, Iron Core "B"
Spk.	N19403	Speaker, 4" P. M.
L		Dial Light - Mazda 47
	N20064-3	Line Cord and Plug Assembly
	N19988	Cabinet Assembly, Walnut (Cat. No. 6011)
	N19989	Cabinet Assembly, Ivory (Cat. No. 6012)
	N19495	Handle Assembly
	N19266	Knob, Tuning or Volume, Walnut (Cat. No. 6011)
	N19267	Knob, Tuning or Volume, Ivory (Cat. No. 6012)
	N19276	Push Button, Walnut (Cat. No. 6011)
	N19275	Push Button, Ivory (Cat. No. 6012)
	N19341	Scale, Dial
	N19410	Retainer, Antenna Loop
	N19374	Instruction Sheet
	N19340	Call Letter Sheets, Set
	N19221	Tuning Shaft Ass'y
	N19344-2	Pulley, Wood, 1" Dia.
	N19344-3	Pulley, Wood, 11/16" Dia.
	N19407	Pointer, Dial
	N19347	Baffle Board
	N20149-2	Spring, Dial Cord
	N19361	Clip, Hairpin
	N19132	Cord, Dial Drive

©John F. Rider

MODELS 6011, Ch. 132.816;
6012, Ch. 132.816A

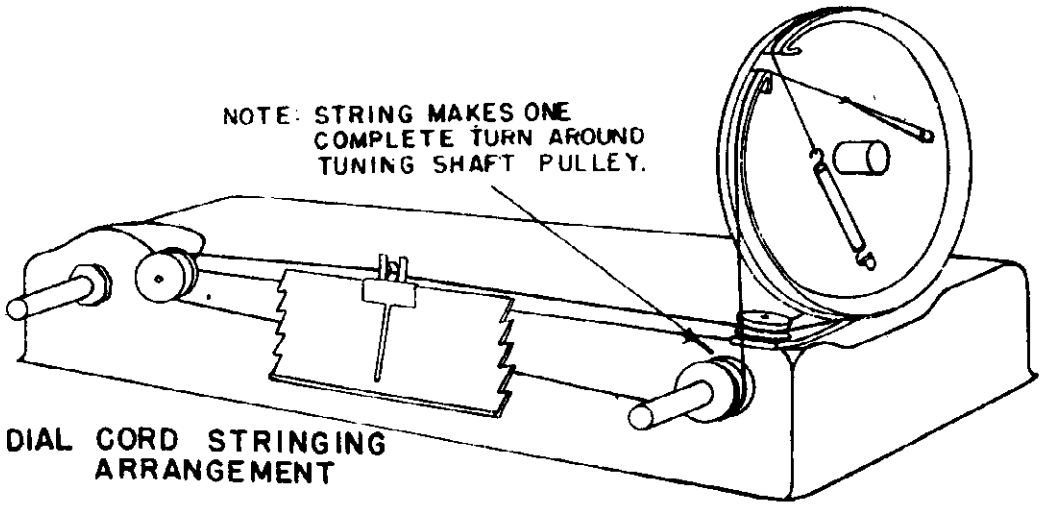

DIAL CORD STRINGING ARRANGEMENT

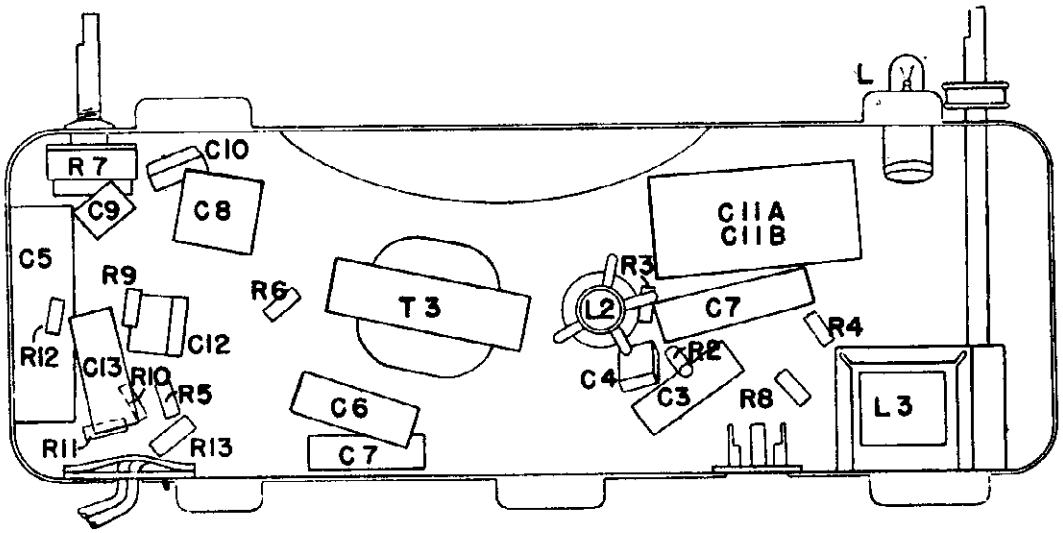

LOCATION OF PARTS UNDER CHASSIS



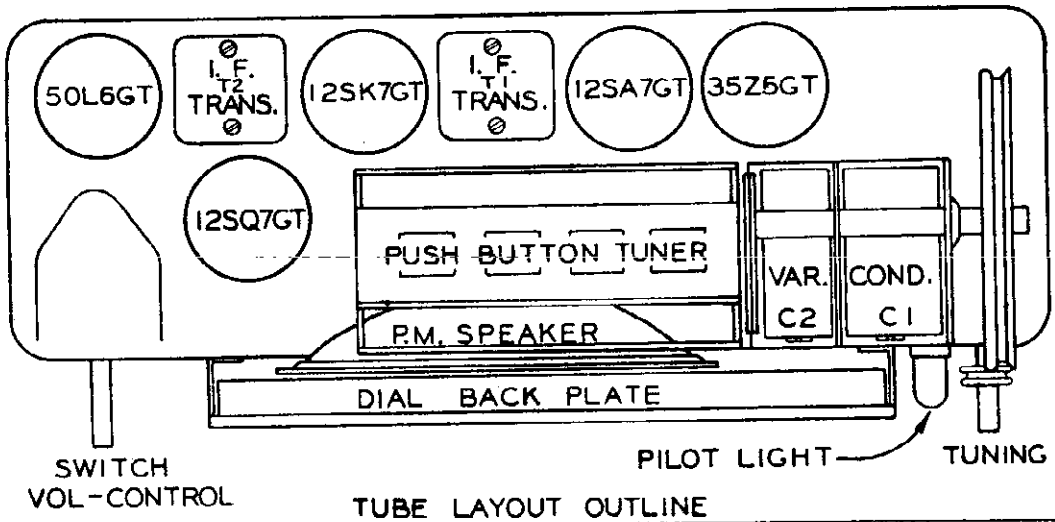

TUBE LAYOUT OUTLINE

©John F. Rider

MODEL 7111,
Ch. 434.140

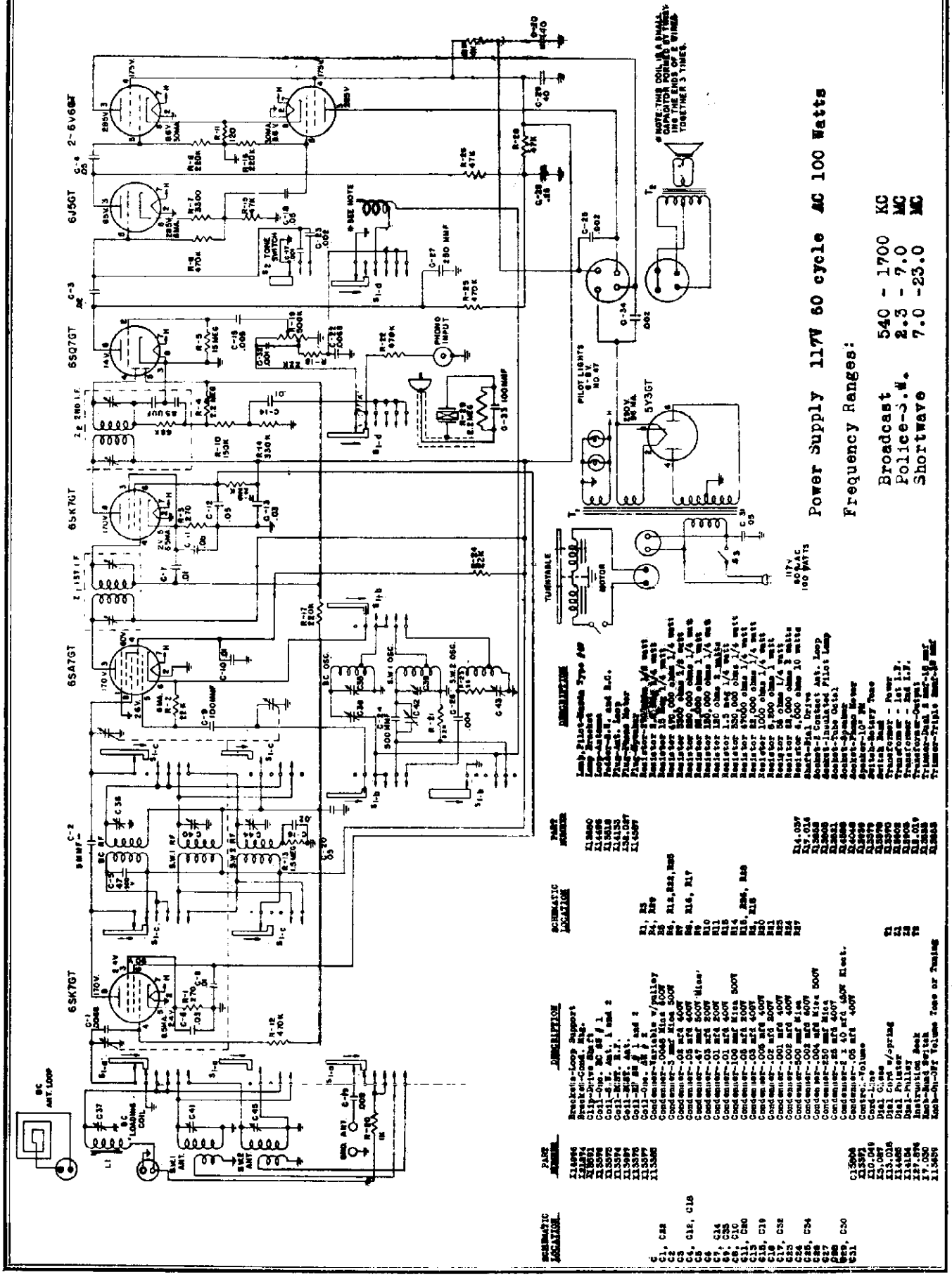

©John F. Rider

MODEL 7111,
Ch. 434.140

ALIGNMENT PROCEDURE

PRELIMINARY:

Output Meter Connection . . . . . Across loud speaker voice coil
Output meter reading to indicate .5 watts . . . . . 1.3 Volts
Generator ground lead connection . . . . . Receiver chassis
Dummy Antenna value to be in series with generator output . . . . . See chart below
Connection of generator output lead . . . . . See chart below
Generator Modulation . . . . . 30%, 400 cycles
Position of Volume Control. . . . . Fully on
Position of Tone Control . . . . . Maximum Clockwise (Treble)
Position of pointer with tuner fully closed. "X" mark below 550 kc calibration mark

WAVE BAND SWITCH POSITION	POSITION OF TUNER	GENERATOR FREQUENCY	DUMMY ANTENNA	GENERATOR CONNECTION	ADJUSTMENTS (IN ORDER) SHOWN	FUNCTION
BC	Open	455 KC	.1 mfd.	RF Tuning condenser stator	Z2,Z1	IF
BC	Open	1680 KC	.0002 mfd.	Ant. Term.	C35	Osc.
BC	1500	1500 KC	.0002 mfd.	Ant. Term.	C36,C37	RF,Antenna
BC	600 (rock)	600 KC	.0002 mfd.	Ant. Term.	C38,S1	Pad.Ant.Slug
Police	Open	7.2 MC	.01 mfd.	Converter grid	C39	Osc.
Police	2.5 (rock)	2.5 MC	400 ohm	Ant. Term.	C42	Padder
Police	6.0	6.0 MC	400 ohm	Ant. Term.	C40,C41	RF, Antenna
SW	Open	23.5 MC	400 ohm	Ant. Term.	C43	Osc.
SW	21	21.0 MC	400 ohm	Ant. Term.	C44,C45	RF, Antenna

IMPORTANT ALIGNMENT NOTES

The alignment must be done in the order given.

The entire Alignment Procedure should be repeated step by step in the original order for greatest accuracy.

Always keep the output power from the generator at its lowest possible value to prevent the AVC of the receiver from interfering with accurate alignment.

During alignment of the "BC" Band Padder and both "SW" Band converter (RF) trimmers, the tuner should be rocked through resonance to assure alignment.

Power Output Undistorted.....10 Watts Maximum...13 Watts

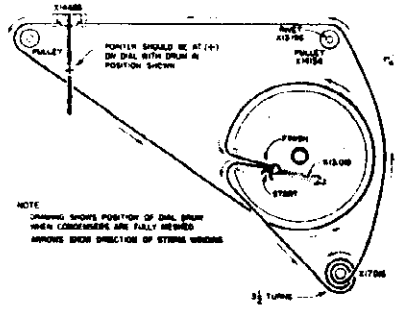

DIAL STRING HOOKUP

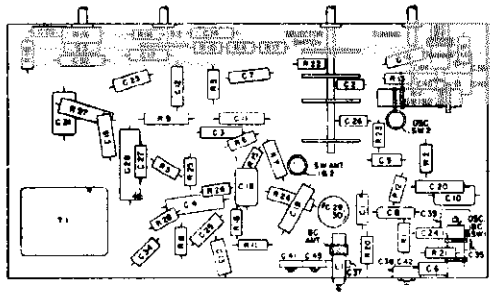

LOCATION OF PARTS UNDER CHASSIS 434.140

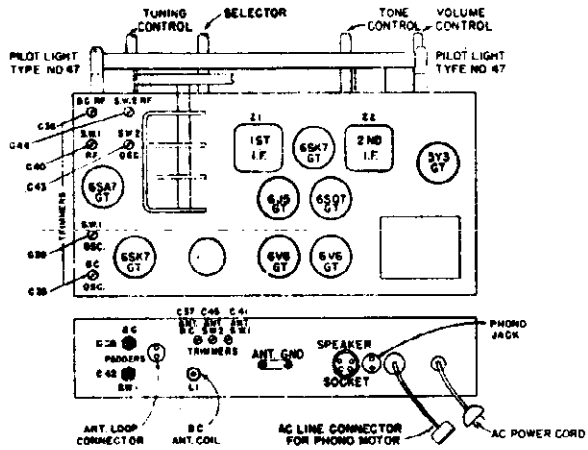

LOCATION OF PARTS ON TOP OF CHASSIS 434.140

©John F. Rider

Moto-Matic Tuner for use on Models 7216, 7217, 7218, 7222; Ch. 100.184, 100.185, 100.186

REFER TO INDIVIDUAL CHASSIS SERVICE MANUAL FOR OTHER DATA

The Moto-Matic Tuner is used on Models 100.184, 100.185 and 100.186. It is an electrically driven device for automatically tuning the receiver to any one of fifteen preselected frequencies. The receiver can be tuned either automatically or manually without the need of turning a switch.

The operating mechanism of this tuning device consists of fifteen sets each of keys: station selector cams and pawls. In addition it has two mult-contact control switches.

The back switch, mounted on the rear of the tuner, has four sets of contacts. From front to rear, they are:

1. REVERSING: for reversing the direction of motor rotation.
2. POWER: for opening and closing the motor power supply line.
3. MUTE: for killing the audio system to prevent noises during automatic tuning.
4. A.F.C.: for cutting out A.F.C. during automatic tuning.

The side switch, mounted on the right end of the tuner, has two sets of contacts. From the top down, they are:

1. A.F.C.: for cutting out A.F.C. during manual tuning and during setting up.
2. POWER: for opening and closing the motor and automatic light power supply line.

With the tuner in the manual tuning position all switch contacts are in the position shown in figure 1. As a button is pressed in, its pawl is pulled against a station selector cam. It will be noted that these cams have two different heights, that is, a high and a low side. If the pawl comes to rest against the high side of the cam, the reversing contacts on the back switch are closed to the front for one direction of motor rotation. If the pawl comes to rest against the low side of the cam, the reversing contacts close to the back for the other direction of motor rotation. The direction of rotation will always be such as to bring the notch on the cam around to the pawl by the shortest route.

The motor drives the mechanism to the proper position for the desired station. Then the pawl falls into the notch on the selector cam and causes the bakelite cam to set the back switch contacts in new positions. The Power contacts open, shutting off the motor. The Mute contacts open allowing the signal to come in. The A.F.C. contacts open and A.F.C. puts the finishing touch to the automatic tuning operation.

A friction clutch in the gear train, driving the cam shaft, acts as a buffer and absorbs the shock of the sudden stop when the pawl falls into the notch on station selector cam.

The flywheel on the back end of the tuning shaft provides a "spinner" action while tuning manually.

TROUBLE CHART

The following service chart lists the most typical troubles, gives the most likely causes, and indicates the figures and paragraphs in which information may be found to aid in correcting the troubles. While this chart is necessarily incomplete, its careful study will enable the serviceman to diagnose most of the service complaints he receives on the Moto-Matic Tuner.

No reference is made to failures of the Moto-Matic Tuner when such failures are due to broken leads, loose connections, etc. It must be borne in mind, however, that certain indications are common to both radio and tuner troubles. For examples, Automatic Frequency Control may not be functioning because of improper contact adjustment of the tuner switches or because of an electrical defect in the chassis. **Therefore,** when servicing the tuner, check the possibilities of radio troubles causing the same symptoms.

BUTTON DOES NOT STAY IN OR DOES NOT RELEASE

COMPLAINT	PROBABLE CAUSE	FOR REMEDY SEE
Button will not stay in when pushed in.	Kickout pointer tip improperly adjusted.	Section 34.
	Kickout spring bent down too far.	Section 35.
	Insufficient tension in key stop bar return spring.	Section 35.
	Jammed or stuck key stop bar.	
	Star wheel stuck or not moving freely on tuning shaft.	Section 37.
	Bent or sprung key stop bar.	
Depressed button does not release when another button is pushed in.	Kickout tip jams against star wheel.	Section 36.
	Stuck or jammed pawl.	Sections 25, 26 and 36.
	Stuck or jammed key.	
Depressed button will not release when tuning knob is turned.	Kickout tip not engaging star wheel.	Section 34.
	Also check those listed for previous fault.	Section 36.

POINTER DOES NOT MOVE WHEN BUTTON IS PUSHED

Motor hums but does not run.	Reversing contacts on back switch not closing.	Secs. 1 & 3 or 1 & 9
	Motor stalled due to mechanical overload and clutch not slipping.	Secs. 20 and 22.
	Defective motor.	
	Low line voltage or improper frequency	Section 49.
Motor runs but pointer does not move.	Clutch slipping.	Sections 20, 21 & 22.
	Pointer drive gear slipping on shaft or out of mesh.	Section 52.
	Pointer loose on cord.	
	Pointer sticking on guide rail due to rust.	
Motor does not hum and tuner does not move with button in.	Power contacts on back switch not closing	Secs. 1,4,5, or 1,10,11.
	Power contacts on side switch not closing	Sections 14, 15 & 18.
	Bakelite back switch operating cam binding on contact arms or out of position.	Section 13.

©John F. Rider

POINTER MOVES BUT DOES NOT TUNE STATION PROPERLY

COMPLAINT	PROBABLE CAUSE	FOR REMEDY SEE
Pointer stops at wrong point.	Improper setting-up of mechanism.	Sections 44, 45, 46 and 47.
	Not locked up tight.	
Pointer stops at proper point, but	Mute contacts on back switch not opening. (No noise will be heard in this case).	Secs. 1 & 5 or 1 & 11
	Tuning backlash.	See "Tuning Backlash" below.
(A) No signal is heard.	Gang condenser drive gears out of mesh or slipping on shaft.	Section 52.
	Flexible coupling slipping on shaft.	
	Station not broadcasting or signal too weak as in daytime or during period of fading.	
(B) Signal is not heard clearly.	A.F.C. contacts on back or side switch not opening.	1,5,17,57 or 1,11,17, 57.
	A.F.C. not functioning.	Sections 55 to 57.
	Weak signal or no aerial.	Section 44.
(C) Wrong station comes in.	Desired signal off, weak or faded.	Section 44.
	Not set up properly.	Sections 44, 45, 46 and 47.
	Set off calibration.	Sections 51 and 54.
(D) Motor continues to run.	Pawl does not fall far enough into station selector cam to cut power off.	Burrs on pawl or cam. Sticking pawl.
	Power contacts on back switch not adjusted properly.	Sections 1, 4, 5 or 1, 10, 11
Pointer stops at a different place each time for a certain button.	Mechanism not locked up tight.	Sections 31 and 44g.
	Dial pointer slipping on cord.	Section 53g.
	Left end bearing bracket loose.	Sections 54 and 60.
	Pointer drive gears slipping out of mesh or on shaft.	Sections 52.
	Loose set screw.	
Pointer stops off station occasionally.	Pointer backlash. (Note pointer backlash will cause apparent rather than actual mistuning.)	Section 60.
	Pawl does not fall far enough into station selector cam.	Sec. 1 & 5a, 1& 11a, and 24
Pointer goes to end of dial and motor stalls and hums, or continues to run by slipping the clutch.	Station selector cam turned around beyond its normal operating range.	Section 27.
	Reversing contacts on back switch not adjusted properly.	Secs. 1 & 3 or 1 & 9.
	Bakelite cam binding on contact arm or out of position.	Section 13.
Motor continues to operate, moving the pointer back and forth over a short distance, after tuning to the approximate frequency to which the button is set.	Reversing contacts on back switch are not adjusted properly - set too close.	Secs. 1 & 3 or 1 & 9.
Motor starts before button is pushed in far enough to catch.	Side switch power contacts are being closed too soon.	Section 10.
Motor starts in the wrong direction then corrects itself as the button is pushed the rest of the way in.		
Intermittent operation of motor, lights, etc.	Insufficient contact pressure or dirty contacts on back or side switch.	Sections 3a, 4b and 15 or 9a, 10b and 15.
	Loose silver contact in contact blade of switches.	
	Bakelite cam binding on contact arms or out of position.	Section 13.
Tuning backlash. (Note: the high tuning ratio greatly exaggerates the effect of most of these conditions.)	Clutch slips.	Sections 21 and 22.
	Play between gang condenser drive gears due to insufficient compression in thrust spring in flexible coupling.	Sections 41 and 42.
	Play between gears due to improper setting of anti-backlash springs.	Section 40.
	Play between gear and stud.	
	Gear stud loose.	
	Gang condenser sways.	Section 59.
	Loose set screw in coupling or gear.	
	Loose or worn bearings.	
	Friction roller rotates relative to tuning shaft.	
Calibration incorrect.	Dial pointer or gang condenser drive gears jump teeth, slip on cam shaft or out of mesh.	Sections 42 and 52.
	Loose set screw in gear or coupling.	
	Dial pointer slips on dial cord.	Section 53g.
	Left end bearing bracket loose.	Sections 54 and 60.
	Excessive pointer backlash.	Section 60.

©John F. Rider

Moto-Matic Tuner

MANUAL TUNING DIFFICULTIES

COMPLAINT	PROBABLE CAUSE	FOR REMEDY SEE
Set tunes very broadly	A.F.C. contacts on side switch not closing.	Section 17.
Tuning knob sticks and catches in going from automatic to manual tuning.	Burrs on tip of kickout arm and star wheel.	Sections 38 and 61.
	Adjustable tip of kickout arm set improperly.	Section 34.
Pointer does not move when tuning knob is turned, although works OK in automatic position.	Oil or grease on drive rubber on friction wheel.	Section 58.
	Jammed bar and arm assembly.	
	Insufficient tension in bar and arm assembly return spring.	Section 58.
Pointer does not move when tuning knob is tuned.	Bent tuning shaft.	
	Oil or grease on drive rubber of friction wheel.	Section 58.
	Jammed bar and arm assembly.	
	Insufficient pressure between friction wheel and friction roller.	Section 58
	Gear driving dial cord drum is out of mesh or slipping on shaft.	Section 52.
	Slipping clutch.	Sections 21 and 22.

DIFFICULTIES OCCURRING DURING SET-UP BUT NOT IN NORMAL OPERATION

Set tunes very broadly.	A.F.C. contacts on side switch not closing when set-up knob is out and a button is in.	Sec. 17 & Fig. 7.
Button does not release when set-up knob is worked in or out.	Kickout spring set too far from kickout arm.	Section 35.
Visual tuning indicator off or flickers on and off. (This applies only to chassis with visual indicator wired to side switch. See section 14.)	Improper adjustment of side switch.	Section 15.
Automatic light off or flickers on and off.	Loose silver contact on contact blade.	
Mechanism locks up during setting up of a station.	Was not completely unlocked.	Section 30.
	Defective locking mechanism.	Section 32.
	Station selector cam sticking.	Section 32.
	Turning the set-up knob too suddenly.	Section 32.

MISCELLANEOUS TUNER TROUBLES

During automatic tuning visual tuning indicator light is on or flickers on and off. (Applies only to chassis with visual indicator wired to side switch. See section 14.)	Improper adjustment of side switch.	Sections 14 and 15.
	Loose silver contact in switch blade.	
Dial and automatic lights go out and set is killed momentarily when a button is pushed in or released.	Both reversing contacts on back switch closed at once and shorting 6 volt winding of power transformer.	Section 5a or 9a.
	Short operating arm of side switch grounding against friction roller assembly at point C.	Figure 5A.
Gears noisy during automatic tuning.	Motor pinion and first reduction gear not meshing properly.	Section 39.
	Too much compression in anti-backlash springs in gears.	Section 40.
	Burrs, bent teeth, and other irregularities on gears, especially the higher speed ones.	
Black ground lead near 6H6 tube under chassis heats up and smokes.	Short operating arm of side switch grounding against friction roller assembly at point C.	Figure 5A.
	A short between hot B-V. line and chassis.	
	Tuning shaft bearing stop out of place and grounding power blade of side switch.	Section 48.
Slight hum when button is depressed - not heard when button is released.	Poor or defective discriminator tube.	Change discriminator (6H6) tube.
Short in wiring when turning set-up knob.	Tuning shaft bearing stop out of place grounds power blade of side switch.	Section 48.
Signals are heard when tuning from one station to another automatically.	Mute contact on back switch not closing or making poor contact.	Sections 4b or 10b.
Set noisy electrically when starting and stopping during automatic-tuning.	Set used with insufficient antenna or mute contacts on back switch closing too late and opening too soon.	Reduce spacing between mute contacts on Back Switch. (Figure 4)
Mechanism reaches a definite stop before the pointer reaches either end of the dial.	The cam assembly stop pin and the gang condenser stops are not set so they reach their respective stop points at approximately the same time.	Section 51.
Band indicator hangs up when changing ranges.	Knot on band indicator cord jams against visual tuning indicator light bulb.	
	Torsion spring slipped out of place.	
	Link on range switch over dead center.	

ADJUSTMENT OF THE BACK SWITCH

THE SUCCESSFUL OPERATION OF THE ENTIRE MECHANISM DEPENDS TO A LARGE DEGREE ON THE CORRECT ADJUSTMENT OF THE BACK SWITCH: For this reason it is highly important that all contacts be set exactly right.

1 Two different types of Back Switches, and associated Bakelite Operating Cams, have been used. To determine whether the Switch is of the early or later type, notice the shape of the Bakelite Cam. The shape of the Bakelite Cam used on early units is shown in figure 1A; on later units it is shaped as in figure 1B. The various operating positions of the early type are shown in figures 1A, 2A, 3A and 4A. The positions of the later type are shown in figures 1B, 2B, 3B and 4B. Details of the correct settings for the early type are explained in sections 2 to 6. Details of the correct settings for the later type are explained in sections 8 to 12. MINOR ADJUSTMENTS OF THE BACK SWITCH TO SECURE THESE SETTINGS MAY BE MADE BY BENDING THE VARIOUS BLADES OF THE SWITCH.

EARLY TYPE BACK SWITCH

2 Run the dial pointer to 530 KC. Turn the power off. With the mechanism in the manual position, the Back Switch Operating Arms should clear the Bakelite Cam by the amounts indicated in figure 1A. Push any button so that the Pawl falls on the high side of the Station Selector Cam. The Reversing Contacts Operating Arm should clear the Bakelite Cam as indicated in figure 2A. IF THESE CLEARANCES ARE APPROXIMATELY CORRECT, PROCEED WITH SECTION 3. However, if the clearances are not as shown, slight discrepancies can be corrected by bending the Arms, but if the entire switch seems to be out of position, loosen the Bracket Mounting Screws (Figure 2A) and move the entire Back Switch assembly to give the proper clearances.

3 Release any depressed buttons. Move the Bakelite Cam up and down by hand to make sure that the Reversing Contacts make and break properly as follows. These are the three short switch blades nearest the Bakelite Cam.

a. With the Bakelite Cam down as in figure 2A, the center contact should make with the front contact, while with the Bakelite Cam pulled up as in figure 3A, the center contact should make with the Back Reversing Contact. After the instant of closing the blades should move slightly to show adequate contact pressure. IMPORTANT: Make sure that the center contact is not touching both the front and back contacts at any one time, since this may short circuit the 6-volt winding of the power transformer. If the Reversing Contacts do not make or break properly, bend the switch blades to secure proper operation.

b. With the dial pointer at 530 KC. push each button and make sure that the Reversing Contacts Operating Arm does not touch the Bakelite Cam. See figure 2A. The Pawl, in every case, should rest on the High Side of the Station Selector Cam.

c. Now pull out the Set-up Knob and run the pointer to the high frequency end of the dial by turning the Set-up Knob clockwise. Push each button to make sure that the center contact closes with the back Reversing contact. See figure 3A. In every case the Pawl should rest on the Low Side of its cam.

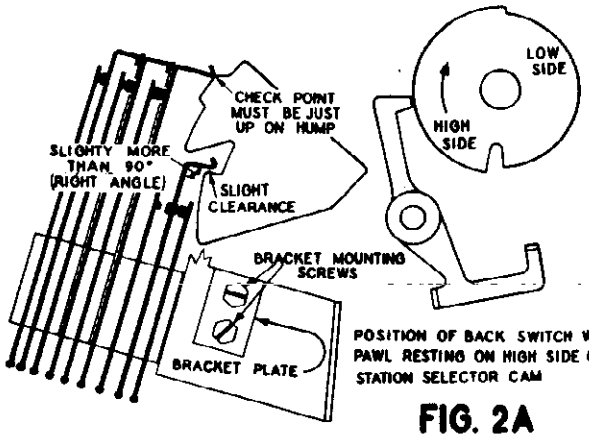

POSITION OF BACK SWITCH WITH PAWL RESTING ON HIGH SIDE OF STATION SELECTOR CAM

FIG. 2A

4 Turn the Tuning Knob to release the depressed button. This puts the Bakelite Cam in the position shown in figure 1A. so the Power, Mute and A.F.C. contacts of the Back Switch can be checked as follows:

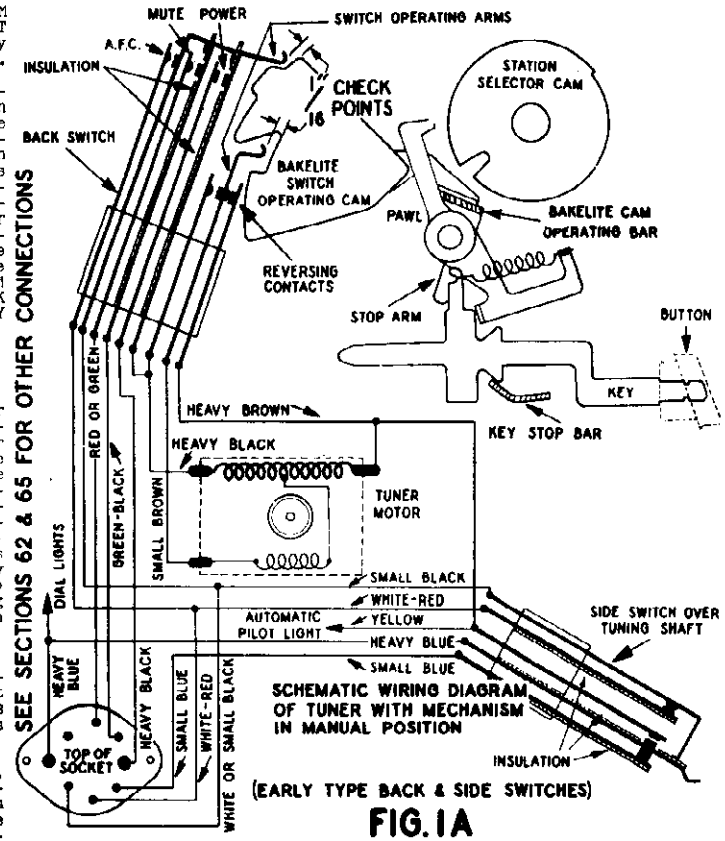

(EARLY TYPE BACK & SIDE SWITCHES)

FIG. 1A

a. The long Mute blade should barely hold the thin bakelite strip against the Power blade, and the long A.F.C. blade should barely hold the thin bakelite strip against the Mute blade.

b. All three sets of contacts should be open approximately 1/64 to 1/32 of an inch. Move the Bakelite Cam up and down by hand and observe the action of the contacts. As the Bakelite Cam is moved up (to the position of figures 2A or 3A) all three sets of contacts should close. After the instant of closing the blades should move slightly to show adequate contact pressure.

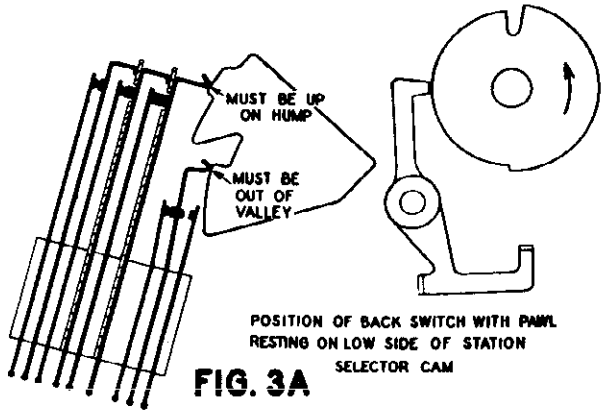

POSITION OF BACK SWITCH WITH PAWL RESTING ON LOW SIDE OF STATION SELECTOR CAM

FIG. 3A

5 To finish checking the setting; pull out the Set-up Knob, unlock the Cam Assembly by turning the Set-up Knob clockwise as far as it will go. A slight click should be heard as the mechanism is unlocked. Then proceed as follows:

a. Run the dial pointer to the low frequency end of the dial. Push any button so that the Pawl Falls on the High Side of the Station Selector Cam. The upper Back Switch Operating Arm should rest just up on the "Hump" of the Bakelite Cam, at the "Check Point" shown in figure 2A. If the Operating Arm is not in this position, bend the Arm slightly to secure such setting. If the Operating Arm is down off the "Hump", the Power, Mute or A.F.C. contacts may remain closed after a station is tuned in. If

©John F. Rider

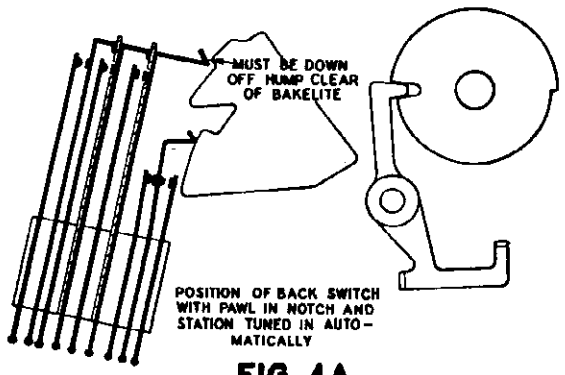

FIG. 4A

the Operating Arm is farther up on the "Hump", the Power contacts may open and cut the power off before the Pawl falls completely into the Notch.

b. Turn the Set-up Knob until the Pawl of the depressed button falls into the Notch on the Station Selector Cam. The Power, Mute and A.F.C. contacts should now be open at least 1/64 inch as shown in Figure 4A.

c. Repeat step 5a. with each of the other buttons then repeat step 5b. with each button. Due to slight variations in the Pawls, it may not be possible to adjust for all buttons so that the Back Switch Operating Arm comes exactly at the "Check Point" but make sure that the Power, Mute and A.F.C. contacts are open at least 1/64 of an inch for each button when the Pawl is in the Notch. Notice, too, that the bending of any switch blade or operating arm may throw out a preceding adjustment. For this reason it is well to check through the entire adjustment procedure a second time.

6 Lock up the Cam Assembly by turning the Set-up Knob as far counter-clockwise as possible. Turn on the power and check the operation of the unit.

REPLACING EARLY TYPE BACK SWITCH

7 If it is necessary to replace the early type Back Switch with the later type, since we stock only the later type, part number 10054112564, it will also be necessary to change the Bakelite Cam to the later type, part number 10054112563. To make this change proceed as follows:

a. File off the two rivets holding the Bakelite Cam to its arm.

b. Put the new Cam in place and secure with two 6/32 machine screws.

c. Remove the two screws holding the Back Switch to its bracket and transfer the wires from the old switch to corresponding terminals on the new switch.

d. Fasten the new switch in place and adjust as described in sections 8 to 12.

LATER TYPE BACK SWITCH

8 Run the dial pointer to 530 KC. Turn the power off. Push any button so that the Pawl falls on the High Side of the Station Selector Cam. The Back Switch Operating Arms should clear the Bakelite Cam by the amounts indicated in figure 2B. IF THE CLEARANCES ARE APPROXIMATELY CORRECT, PROCEED WITH SECTION 9. However, if the clearances are not as shown, slight discrepancies can be corrected by bending the Arms, but if the entire switch seems to be out of position, loosen the Bracket Mounting Screws (see figure 2B) and move the entire Back Switch assembly to give the proper clearances.

9 Move the Bakelite Cam up and down by hand to make sure that the Reversing Contacts make and break properly as follows. These are the three short switch blades nearest the Bakelite Cam.

a. With the Bakelite Cam down as in figure 2B, the center contact should make with the front contact, while with the Bakelite Cam pulled up as in figure 3B, the center contact should make with the back Reversing Contact. After the instant of closing the blades should move slightly to show adequate contact pressure. IMPORTANT: Make sure that the center contact is not touching both the front and back contacts at any one time, since this may short circuit the 6-volt winding of the power transformer. If the Reversing Contacts do not make or break, bend the switch blades to secure proper operation.

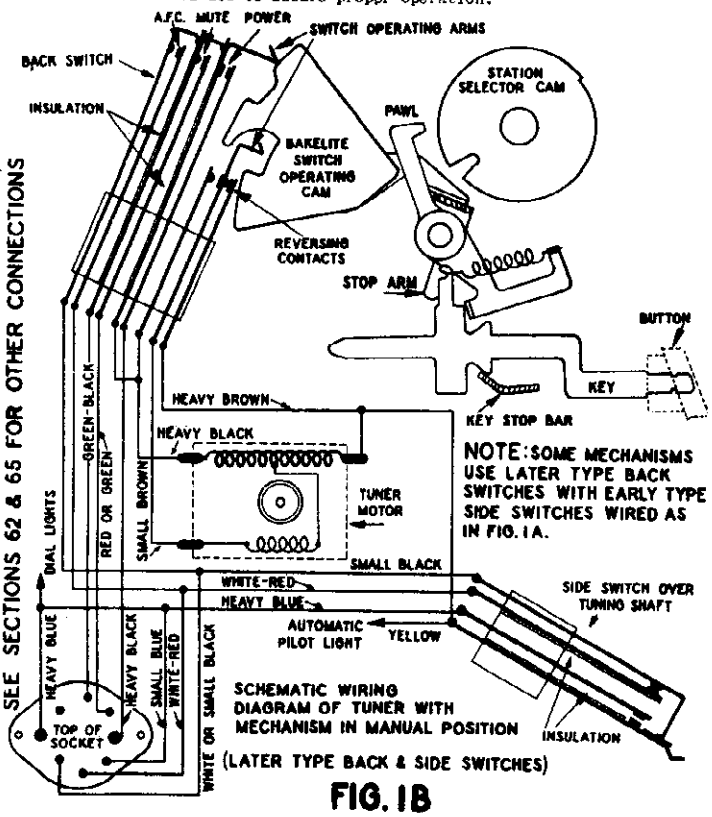

FIG. 1B

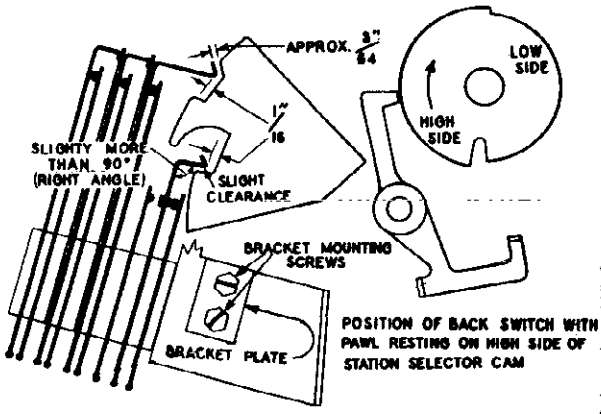

FIG. 2B

b. With the dial pointer at 530 KC. push each button and make sure that the Reversing Contacts Operating Arm does not touch the Bakelite Cam. See figure 2B. The Pawl, in every case, should rest on the High Side of the Station Selector Cam.

c. Now pull out the Set-up Knob and run the pointer to the high frequency end of the dial by turning the Set-up Knob clockwise. Push each button to make sure that the center contact closes with the Back Reversing Contact. In every case the Pawl should rest on the Low Side of the cam. See figure 3B.

10 With the Pawl still resting on the Low Side of the Station Selector Cam, the Power, Mute and A.F.C. contacts of the Back Switch are to be checked as follows:

a. Leave the Bakelite Cam in the Position of figure 3B. The long Mute blade should barely hold the thin bakelite strip against the Power blade, and the long A.F.C. blade should barely hold the thin bakelite strip against the Mute blade.

b. Move the Bakelite Cam up and down by hand and observe the action of the contacts. With the Bakelite Cam up as shown in figure 4B all three sets of contacts should be open approximately 1/32 of an inch. As the Bakelite Cam is moved down (to the position of figure 3B) all three sets of contacts should close. After the instant of closing the blades should move slightly to show adequate contact pressure.

© John F. Rider

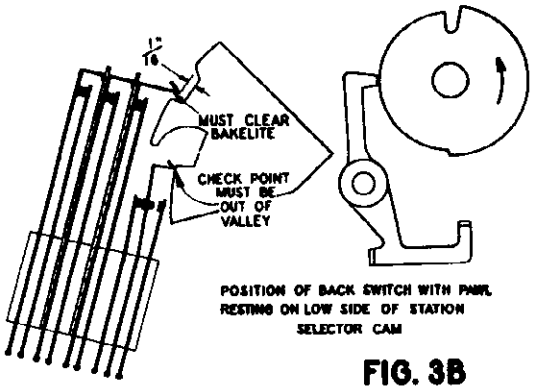

POSITION OF BACK SWITCH WITH PAWL RESTING ON LOW SIDE OF STATION SELECTOR CAM

FIG. 3B

SIDE SWITCH ADJUSTMENT

14 There are two general types of Side Switches, namely the early type with five blades and the later type with only four blades. The Side Switch change was made after the Back Switch change, so that there are units equipped with the early Side Switch but with later type Back Switch.

The extra blade in the early Side Switch was used to switch the Visual Tuning Indicator light on during Manual tuning and off during Automatic Tuning. With the later Side Switch this light remains on during both Manual and Automatic tuning. In addition, with the later side switch the 6 volt line and Motor-Automatic light circuit wires were reversed. See figure 1A and 1B for circuit difference.

15 With the power off, adjust to secure the making and breaking of the contacts as illustrated. FOR EARLY TYPE SIDE SWITCH REFER TO FIGURES 5A, 6A AND 7A. FOR LATER TYPE SIDE SWITCH REFER TO FIGURES 5B, 6B and 7B. After the instant of closing the blades should move slightly to show adequate contact pressure. For some adjustments it may be better to bend the Long or Short Switch Operating Arms instead of the Switch blades.

CONCLUDED ON NEXT PAGE

11 To finish the checking Pull out the Set-up Knob. Unlock the Cam Assembly by turning the Set-up Knob clockwise as far as it will go. A slight click should be heard as the mechanism is unlocked. Then proceed as follows:

a. Push any button. Turn the Set-up Knob until the Pawl drops into the Notch on the Station Selector Cam. The upper Back Switch Operating Arm should rest just up out of the "Valley" on the Bakelite Cam (See "Check Point" on figure 4B), and

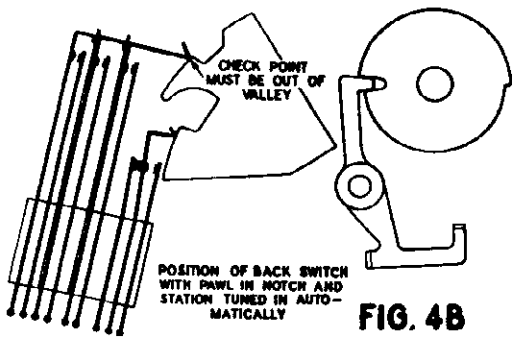

POSITION OF BACK SWITCH WITH PAWL IN NOTCH AND STATION TUNED IN AUTOMATICALLY

FIG. 4B

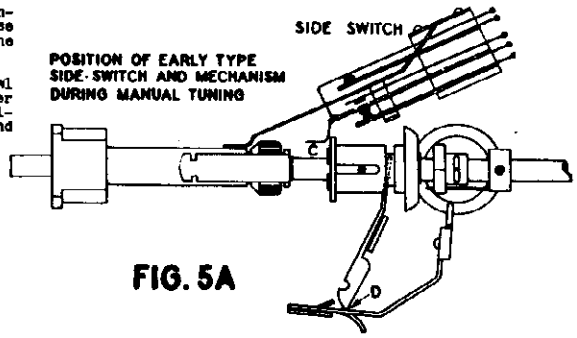

POSITION OF EARLY TYPE SIDE SWITCH AND MECHANISM DURING MANUAL TUNING

FIG. 5A

the Power, Mute and A.F.C. contacts should be open at least 1/32 of an inch. If the Operating Arm is not out of the "Valley" far enough to open the contacts properly, bend the Operating Arm down slightly. If the Operating Arm is farther out of the "Valley" than indicated by the "Check Point", the Power contacts may open and cut the power off before the Pawl falls completely into the Notch. If the Operating Arm does not come out of the "Valley" far enough, the Power, Mute or A.F.C. contacts may remain closed after a station is tuned in.

b. Repeat the above step for each of the other buttons. This is important. Due to slight variations in the Pawls, it may not be possible to adjust for all buttons so that the Back Switch Operating Arm comes exactly at the "Check Point" of figure 4B, but make sure that the Power, Mute and A.F.C. contacts are open at least 1/32 of an inch for each button, when the Pawl is in the Notch. Notice, too, that the bending of any switch blade or operating arm may throw out a preceding adjustment. For this reason it is well to check through the entire adjustment procedure a second time

12 Lock up the Cam Assembly by turning the Set-up Knob as far counter-clockwise as possible. Turn the power on and check the operation of the unit.

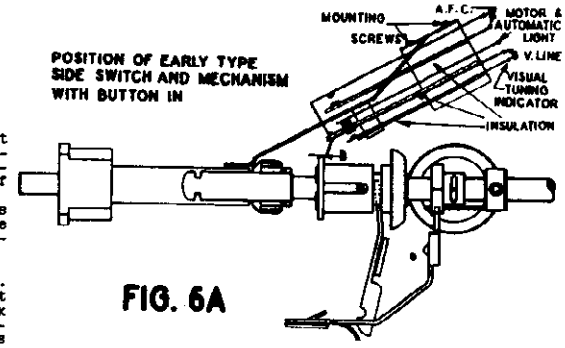

POSITION OF EARLY TYPE SIDE SWITCH AND MECHANISM WITH BUTTON IN

FIG. 6A

BAKELITE SWITCH OPERATING CAM

13 The Bakelite Cam may stick because of improper adjustment of the Back Switch. The clearances shown in figures 1A or 1B should be maintained. This prevents too much pressure by the Back Switch Operating Arms against the Bakelite Cam. See paragraph 4a or 10a. Other causes for the Bakelite Cam to stick are; rough edges on the Bakelite, and insufficient tension in the Bakelite Cam Return Spring (figure 13). Tension in the Return Spring may be increased, if found necessary, by simply cutting off a few turns and forming a new hook on the end.

The Stop Arm (figure 1B) on the bar carrying the Bakelite Cam, should hit against the Rubber Stop (figure 14). This keeps the Bakelite Cam from jumping too high and catching over the Reversing Contact Arm. If this Rubber Stop is missing, a couple of turns of friction tape around the shaft will serve the same purpose.

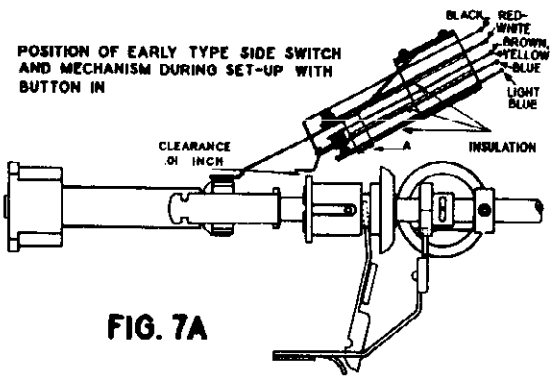

POSITION OF EARLY TYPE SIDE SWITCH AND MECHANISM DURING SET-UP WITH BUTTON IN

FIG. 7A

© John F. Rider

16 IT IS IMPORTANT THAT THE MOTOR CONTACTS ON THE SIDE SWITCH DO NOT CLOSE UNTIL AFTER THE REVERSING CONTACTS OF THE BACK SWITCH CLOSE. To secure such sequence of contact closing, the bakelite ring on the Friction Roller Assembly (figure 13) should not come farther forward, under the Short Operating Arm of the Side Switch, than shown at point B, figure 8. If loosening the Switch Mounting Screws does not permit enough movement of the switch to secure this positioning, it may be necessary to bend the Short Switch Operating Arm.

17 Care must be taken that the Automatic Frequency Control contacts on the Side Switch are open during automatic tuning and closed during manual tuning. If they are open when tuning manually the set will appear to tune broadly. The A.F.C. contacts must be closed during setting up, or the Station Selector Cams may be set improperly. If the A.F.C. contacts do not open when tuning automatically, mistuning by the mechanism will result in poor tone quality. In extreme cases of mistuning the station may not be heard at all.

18 When tuning automatically or during set-up, if the automatic Light does not come on and the Motor does not move or the Automatic Light flickers, bend the Side Switch blade, third from the top, down a little. If the blade is bend down too far the light will remain on all the time, even during manual tuning. Also the sequence of contact closing mentioned in section 16 will not be obtained.

19 If the Visual Tuning Indicator Light flickers or goes out during set-up, when a button is pressed, the following may be the cause. The bakelite ring on the Friction Roller Assembly is probably lifting the Short Side Switch Operating Arm, causing it to open the Visual Tuning Indicator circuit. There should be a very slight clearance, about .01 of an inch, between the bakelite ring and the Operating Arm during set-up, with a button in, as shown in figure 7A. Either the end of the Long Switch Operating should be bent down, so it will press harder against the Set-up Gear, or the lifting hook (A, figure 7A) should be bent up slightly.

CLUTCH

20 The Clutch is purely a friction device. It is a standard anti-backlash gear held on a Collar by a flat, horseshoe shaped Spring Washer as shown in figure 8. The frictional resistance between Spring and Collar and the Gear normally can transmit enough power to drive the Cam Shaft, Dial Pointer and Gang Condenser. If an abnormal load is placed on the Clutch it should slip. If the Clutch becomes locked or stuck so it cannot slip when overloaded, other parts of the mechanism may be damaged because of the absence of the "shock absorber" action of the Clutch.

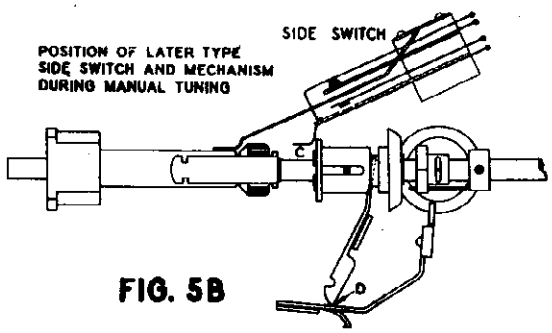

FIG. 5B

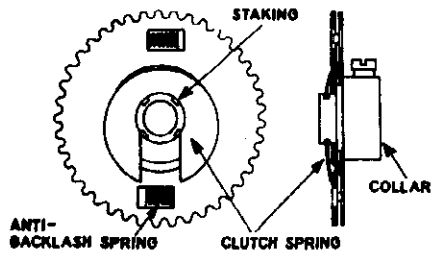

FIG. 8

21 THE CLUTCH MAY SLIP BECAUSE IT IS FULL OF OIL OR GREASE OR THE HORSESHOE SHAPED SPRING HAS CRACKED OR WEAKENED. If oil or grease is present, wash it off with carbon tetrachloride or similar cleaning fluid. The Spring can be slipped out and replaced without any dismantling of the mechanism. NOTICE THAT THE SET SCREW IN THE CLUTCH MUST BE SO POSITIONED, IF THE CLUTCH IS MOVED OR REPLACED, THAT IT WILL NOT JAM AGAINST THE SET-UP CROWN GEAR. Sometimes the Clutch may slip because the Pawl, although falling far enough into the Notch on its Station Selector Cam to prevent the shaft from rotating, does not fall far enough to operate the Back Switch and cut the power off. Check the Back Switch adjustment as outlined in sections 4 to 6 if an early type Back Switch is used, or sections 10 to 12 if the later type Back Switch is used. Also remove any rough edges from Pawl and Notch with emery cloth or a small oil stone.

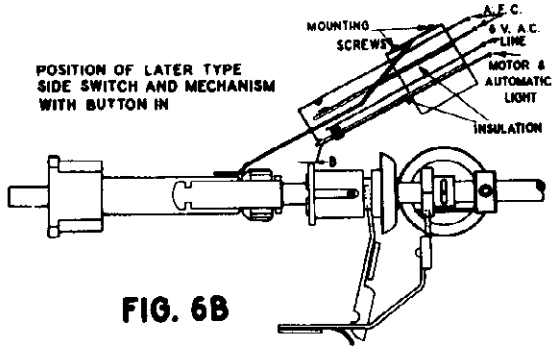

FIG. 6B

22 OVERLOAD ON THE CLUTCH MAY ARISE FROM ANY ONE OR COMBINATION OF THE FOLLOWING CAUSES:

a. Binding of the Dial Pointer against the Dial, Dial Frame or cabinet, or rough, rusty or bent Dial Pointer Guide Rail.

b. Dial Pointer drive cable too tight.

c. Jammed or stuck dial cord guide pulley or pulleys.

d. Crossed dial cord on the Drum. Re-thread the dial cord correctly as shown in figure 11 and section 53.

e. Dial Cord Drum binding against Driver Gear or stuck on shaft.

f. The Pointer Driver Gear (figure 15) out of mesh and binding against the Drum Gear. Set Driver Gear to mesh with center of face of gear on Drum and check end play in Cam Shaft (See section 52.)

g. Misalignment or tight Cam Shaft Bearings. Loosen the screws holding the End Bearing Bracket (figures 10 and 15). Hold the Knurled Gears (figure 10) out of mesh by compressing the Flexible Coupling. Rotate the Cam Shaft back and forth a few times to permit the bearings to realign themselves. Then tighten the screws, taking care not to shift the Brackets while doing so. Be sure that both Right End Bearing Bracket Mounting Screws are tight, otherwise dial calibration cannot be maintained. Binding or tightness in the inner bearings is usually the result of sprung End Brackets, which should be straightened.

h. Cam Shaft sprung or bent. In most cases it will be necessary to replace the whole unit.

i. Collar on left end of Cam Shaft (figure 14) binding against Left End Bracket. Push the Cam Shaft as far to the left

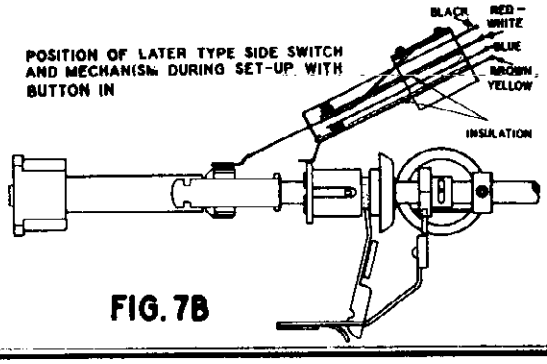

FIG. 7B

as it will go. Loosen the Collar Set Screw and reset the Collar so it will have from .006 to .010 of an inch clearance between it and the Left End Bracket.

j. Set-up Crown Gear assembly binding (Fig. 13).

k. Gang Condenser Drive Gears out of mesh and binding (figure 10).

l. Thrust Spring in Flexible Coupling compressed too much. The Thrust Spring should exert just enough pressure on the Condenser Drive Gears (Fig. 10) to prevent backlash.

m. Extension Shaft out of line and binding (Fig. 10).

n. Tight, jammed or sticking Gang Condenser.

If correcting the above conditions does not stop the clutch from slipping replace the Clutch Spring, part number 10054111138. In extreme cases it may be necessary to replace entire Clutch Assembly as indicated below.

23 TO REMOVE THE CLUTCH PROCEED AS FOLLOWS:
a. Remove the L shaped horizontal brace on the back of the Dial Frame. This is the part supported by the brackets screwed to the sides of the chassis.

b. Take the Side Switch Mounting Screws out and swing the switch out of the way.

c. Drive out the pin through the Friction Roller Assembly (Figure 13). Pull out the pin in the Star Wheel. Loosen the set screws in the Star Spring Collar and Flywheel. The Tuning Shaft can now be pulled out. (NOTE that there is a groove around the tuning shaft. The Set Screw of the Star Spring Collar fits into this groove, thus fixing the lateral position of the shaft with respect to the End Bracket.)

d. Take the Set-up Knob off. Remove the Tuning Shaft Bearing and pull the Sleeve and Set-up Gear out of the End Bracket.

e. Take the Retaining Ring off the Set-up Crown Gear Stud and remove the Crown Gear Assembly.

f. Remove the Right End Bearing and Bracket (Figure 10).

g. Take the Knurled Crown Gear off the Extension Shaft (Figure 10).

h. Loosen the Clutch Set Screw, disassemble the Clutch and slide the Collar and Gear Sections off the Cam Shaft to the right.

PAWLS

24 If a Pawl does not fall completely into the Notch on the Station Selector Cam, check the setting of the Back Switch. It is probable that the Power contacts are opening too soon. Notice that in order to fall into the Notch, the Pawl must work against the bar carrying the Bakelite Cam. Anything that makes this Bar operate hard should be corrected. See that the end of the Pawl and Notch on the Station Selector Cam are smooth and free from burrs. Then try closing up the Power contacts on the Back Switch a little more, but only after checking the above points. This may be done by bending the Power blade so the Power contacts are closer together, when the Bakelite Cam is in the position shown in figure 4. DO NOT CHANGE THE OUTLINE OF THE PAWL OR CAM NOTCH.

25 The Pawls can sometimes be made to jam when two Station Selector Cams are set to one station, especially if both Cams are not set exactly to the same frequency and an attempt is made to push one button, then the other button. The Motor will hum or the Clutch will slip until the button is released. What actually happens is this: When such a button is pushed that its Pawl, in falling directly into the Notch on the Station Selector Cam, binds against the high-side wall of the Notch, the Bakelite Cam assumes the position shown in figure 3. The Motor drives the Station Selector Cam tighter against the Pawl and prevents it from falling farther into the Notch. The jammed Pawl may be released by pushing another button and no damage is done. It is possible, with close adjustments of the Back Switch Contacts, to make the Pawls jam as indicated above even when they are set exactly to the same frequency. FOR THIS REASON THE SETTING OF TWO OR MORE BUTTONS TO ONE FREQUENCY ON DEMONSTRATOR SETS IS NOT RECOMMENDED AS GOOD PRACTICE

26 A similar condition may exist when the set is tuned to a station manually, and then the button set for that station is pushed.

STATION SELECTOR CAMS

27 The Cam Assembly is designed to operate through slightly less than 180°. The Cams though, can be rotated all the way around. Obviously then, it is possible to set a Cam so that its Notch will not pass under the Pawl. If a Cam were so set and the button pushed in, the Pointer would run to the end of the Dial and the Motor would continue to operate. This occurs because the Notch has not come around so the Pawl could fall in and cut the power off. TO CORRECT SUCH FAULT: Turn the power off. Pull out the Set-up Knob. Unlock the Cam Assembly by turning the Set-up Knob clockwise as far as it will go. A slight click should be heard as the mechanism is unlocked. Then push in the offending button. Rotate the Set-up Knob to run the Dial Pointer clear to the very end of the Dial in one direction then in the other. The Cam should now be in the proper position, ready to be set up to a station.

28 A similar condition is when a Cam is set to bring the Pointer to the very end of the Dial. The Pawl may lack just a very little bit of falling in far enough to cause the power to be cut off. Reset the Cam so the Pawl can fall in before the Cam Assembly Stop Pin (Figure 14) hits the stop.

KEYS

29 It is quite unlikely that the Keys will require any adjustment. Their failure to work properly will usually be due to improper adjustment or operation of some other part or parts of the mechanism.

CAM ASSEMBLY LOCK

30 Refer to figure 9. The left saw-tooth section of the Lock, the Spring Retaining Washer and the Latch Spring are keyed to the Cam Shaft. The right saw-tooth section of the Lock and Lock Gear (Figure 13) are free to turn on the Cam Shaft, subject to certain limits. These limits are complete engagement of the teeth on the two sections of the Lock in one direction, and a stop on the Lock Gear in the other direction. Rotating the right half of the Lock counter-clockwise (by turning the Set-up Knob clockwise) will cause the two saw-tooth sections to assume the meshed or unlocked position shown in figure 9A. It should relieve the pressure on the Station Selector Cams and Friction Washers enough so that they can be turned on the Cam Shaft quite freely. In this position the flat Latch Spring Arm should be hooked over the Stop on the Lock Gear (Figure 9A). The Cam Assembly may then be rotated within its working range, by the use of the Set-up Knob, without causing the mechanism to lock up.

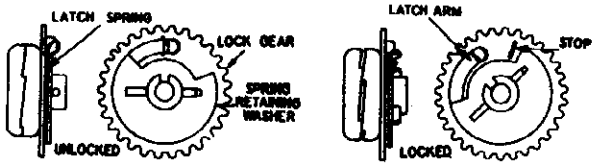

CAM ASSEMBLY LOCK

FIG. 9A FIG. 9B

31 The Cam Assembly will be locked up if the Set-up Knob is turned after the Cam Assembly Stop Pin (Figure 14) reaches the Back Stop on the Left End Bracket. This occurs because the Latch Arm slips over the Stop on the Lock Gear and permits expansion of the lock as shown in figure 9B. When fully unmeshed the lock has expanded about .030 of an inch. The stop on the Lock Gear would be against the stop portion of the Spring Retaining Washer, and only the tips of the teeth on the saw-tooth sections would be touching each other. The pressure exerted on the Station Selector Cams will depend upon the amount the saw-tooth sections are unmeshed. When unmeshed (locked up) as far as possible, with the Stop on the Lock Gear against the Stop on the Retaining Washer, if there is still insufficient pressure being exerted to keep the Station Selector Cams from slipping, proceed as follows: Unlock the Cam Assembly and slip a horse-shoe shaped shim, about .01 on an inch thick, down between the left Station Selector Cam and the Bushing (Figure 14). Do not make this shim too thick or the mechanism will tend to lock up while attempting to set up stations.

32 Locking up of the mechanism during set-up may be due to a Station Selector Cam not turning freely enough because of dirt, grit, etc. between the Cams and the Friction Spacer Washers. This may also result from defective Latch parts or a quick sudden turn of the Set-up Knob. TO REMOVE THE LATCH SPRING OR THE LOCK GEAR, first remove the Clutch as outlined in section 23. Then remove the Reduction Gears. Unlock the Assembly and pull out the pin through the Cam Shaft, to the right of the Lock (Figure 14). The Retaining Washer, Latch Spring and Lock Gear may now be slid off the right end of the Cam Shaft.

BAR AND ARM ASSEMBLY

33 The lower end of the Arm should rest right on the "hump" of the Kickout as shown at D in figures 5, with the mechanism in the manual tuning position. If the adjustment is correct any movement of the Arm, either forward or backwards, should allow the Kickout Arm to rise. This setting can usually be secured by moving the Friction Wheel in or out on the Motor Shaft, thus sliding the Friction Roller Assembly (Figure 13) backward or forward on the Tuning Shaft. The amount of adjustment possible by this method is limited by the movement of the Friction Wheel possible without causing it to interfere with the

©John F. Rider

Star Wheel, or the Motor Pinion becoming disengaged from the First Reduction Gear. Further adjustment, if necessary, may be made by bending the Arm slightly, preferably at its upper end. THE ADJUSTMENT SHOULD NOT BE CARRIED OUT TO THE DETRIMENT OF THOSE ADJUSTMENTS REQUIRED FOR THE SIDE SWITCH AS INDICATED IN SECTIONS 18 AND 19.

KEY STOP BAR AND KICKOUT ARM

34 The Adjustable Tip on the Kickout Arm in engaging the Star Wheel (Figure 6) determines the position of the Key Stop Bar (Figures 1B and 13), which holds the buttons in. If the Tip on the Kickout is set too low, the Key Stop Bar swings up so far that the buttons are hard to release. If the Tip is set too high the buttons will not stay depressed, since the Key Stop Bar (Figure 1B) cannot come up far enough to catch and hold the keys in. Therefore, the Adjustable Tip on the Kickout Arm should be set as high as possible and still allow the buttons to stay in.

35 Failure of buttons to stay depressed may also be due to: the Kickout Spring (Figure 13) being bent down too far (it should clear the Kickout Arm by about 1/16 of an inch when the mechanism is in the automatic position); insufficient tension in the Return Spring on the Key Stop Bar; or the Key Stop Bar is sprung down in the middle. Also see section 37.

36 If a button will not release when another is pushed, the Key Stop Bar may be jammed or sprung, or held from normal movement by the Kickout Arm being caught on the Star Wheel; or a Pawl may be sticking in its Station Selector Cam.

STAR WHEEL

37 The Star Spring Collar (Figure 13) should be set so that the spring holds the Star Wheel in such position that the Pin is midway between the ends of the slot in the Star Wheel hub. At the same time the set screw in the Collar should be in the groove around the tuning shaft, to locate the tuning shaft in the End Bracket. Within the limits of movement allowed by the Slot and Pin, the Star Wheel should turn quite freely on the Tuning Shaft except as restrained by the Spring. Otherwise the Tip of the Kickout Arm may sometimes engage one of the points of the Star Wheel and hold the Key Stop Bar down, thus preventing the Key from catching and staying depressed. (Sections 34 to 36 and Figure 6.)

38 All edges and corners of the Star Wheel must be smooth and free from burrs. If not, the Tip of the Kickout Arm (Figure 13) may catch and prevent the buttons from staying in or being released.

MOTOR

39 The Motor is mounted on the Right End Bracket by two Mounting Screws (Figure 13) through oversize holes in the Bracket. The size of the holes permit adjusting the meshing of the Motor Pinion and the First Reduction Gear for minimum noise. Noisy operation may be caused by either too tight or too loose meshing of the Gears. Too tight meshing will also load up the drives because of binding. See section 49 for details on "Universal" type motor.

ANTI-BACKLASH GEARS

40 There are two types of Anti-backlash Gears used in the Moto-Matic Tuner. One type is made up of two spur gear sections and two small coil springs. Such gears are used in the gear reduction train driving the Cam Shaft (Figure 13), the Clutch (Figure 8) and the Pointer Drive Gear (Figure 15). The springs in these gears should be compressed by displacing the two gear sections one or two teeth with respect to each other. DISPLACEMENT OF THE GEAR SECTION FACING YOU SHOULD ALWAYS BE CLOCKWISE WITH RESPECT TO THE OTHER GEAR SECTION. Too little compression in the springs cause play and backlash. Too much compression causes binding, tending to load up the driver, and noisy operation. The First Reduction Gear (next to the motor pinion, Figure 13) uses light springs, part number 85815; the Second Reduction Gear (next to the Clutch, Figure 13) uses heavier springs, part number 10054112465; the Clutch and Pointer Drive Gear use still heavier springs, part number 1005489086. The correct displacement between sections of these gears, when equipped with the proper springs, should be not less than one nor more than two teeth.

41 The other type of gear is used to drive the Gang Condenser (Figure 10). The teeth of such gears are so shaped that, when the gears are kept tightly meshed together, backlash is prevented.

FLEXIBLE COUPLING

42 This device permits some misalignment of the Gang Condenser Shaft and the Extension Shaft (Figure 10), without causing binding in the bearings supporting the shafts. Inside of it is a coiled compression spring which keeps the Knurled Gears in mesh and prevents backlash. TO ADJUST THIS SPRING: Set the Coupling so the end of the Gang Condenser Shaft is flush with the inside edge of the back coupling collar. Tighten the set screw in the back coupling collar. Put the Knurled Gears in mesh, then compress the spring in the Coupling slightly and tighten the set screw in the front collar of the coupling. There now should be just enough thrust by the compressed coil spring to keep the Knurled Gears in mesh and free from backlash. If not, loosen the front set screw in the coupling, compress the spring a little more and retighten the set screw.

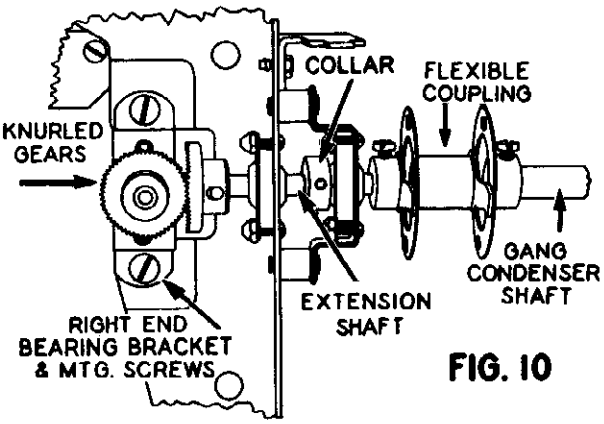

FIG. 10

GANG CONDENSER DRIVE

43 A few of the early chassis used a single section coupling. Later sets use a double section coupling, part number 10054112450, as shown in figure 10. This latter type is more flexible than the former and consequently, causes less binding when the Extension and Gang Condenser shafts are badly out of line. Only the later type is carried in stock. Therefore, if it is necessary to replace the older type, it will also be necessary to use Spring, part number 10054112490, and Extension Shaft, part number 10054112488, with the new coupling. Or in place of the new shaft, the old shaft may be used by cutting off 11/16 of an inch and chamfering the end like the piece which was cut off. The new shaft should be 2 3/16 inches long.

SETTING UP

44 THE FOLLOWING POINTS MUST BE OBSERVED DURING THE SETTING UP AND USE OF THE AUTOMATIC MECHANISM IF BEST RESULTS ARE TO BE OBTAINED.

ON MODEL 100.186 THE TONE CONTROL BROADENS THE TUNING WHEN IN THE TREBLE POSITION, MAXIMUM CLOCKWISE, THEREFORE THIS POSITION POSITIVELY MUST NOT BE USED DURING SET-UP.

a. Use a GOOD antenna.

b. Allow the set to warm up for twenty minutes before setting it up.

c. Set up the buttons from left to right, that is, the right hand buttons should be the last to be set up.

d. Avoid setting buttons on weak or fading signals.

e. Tune carefully when setting up.

f. After a button is set up, do not push that button again until the mechanism is locked. To do so will spoil the setting of that button.

g. Lock up tight. Continue to force the Set-up Knob in a counter-clockwise direction even after it seems to reach a definite stop. If you do not use force, the setting of the buttons may change.

45 Detailed, illustrated instructions for setting up the Moto-Matic Tuner are included with each receiver. In brief, the setting up procedure is as follows:

a. Pull off the Tuning Knob. This reveals the Set-up Knob (Figure 13). Pull the Set-up Knob out. Unlock the mechanism by turning the Set-up Knob clockwise until a slight click is heard.

b. Push in a button. After the Pointer has stopped moving, grasp the Set-up Knob and tune in the station to which the button is to be set.

© John F. Rider

c. Push in another button. After the pointer has stopped moving, again grasp the Set-up Knob and tune in the Station to which this button is to be set.

d. Continue to push in buttons and tune in the stations until as many are set up as desired. Then release the last button set up, by pushing the Set-up Knob part way in.

e. Pull the Set-up Knob back out. Lock up the Cam Assembly by turning the Set-up Knob counter-clockwise as far as it will go. Continue to force the Set-up Knob in a counter-clockwise direction even after it seems to reach a definite stop. If you do not use force, the settings of the buttons may change.

f. Push in the Set-up Knob and replace the Tuning Knob.

46 Occasionally a unit may be encountered in which it is difficult to set up accurately, the extreme right hand buttons. In such case, they should be set to stations at the low frequency end of the dial, or used to locate short wave bands.

47 In case of complaint that a button set for some frequency, does not tune to that point within 10 K.C., or more, after locking up, it usually develops that the Station Selector Cam has inadvertently been moved before it was locked. This may come about by turning the Set-up Knob slightly when releasing the button, preparatory to locking the mechanism. Another possibility, if the Back Switch is not adjusted properly, is that by pushing a second button the motor will start before the pawl falls clear of the first cam, thus causing this cam to be shifted slightly before it is locked in place.

48 A short may occur in the unit due to the Tuning Shaft Bearing Stop (Figure 13) getting out of place. It then catches on the Set-up Gear. When the gear is turned counter-clockwise it forces the Bearing Stop against the hot blade of the Side Switch. Solder the Bearing Stop in place.

UNIVERSAL MODELS CONNECTIONS

49 The tuner motor may not operate if the line voltage drops very much below 105 volts. The motor used in the 60 cycle models will only operate properly on 50 to 60 cycles. Special motors, used in 25 to 80 cycle models, can be connected for operation on other frequencies as shown below:

MOTOR CONNECTIONS FOR TUNER MOTOR USED ON 25-60 CYCLES UNIVERSAL MODELS.

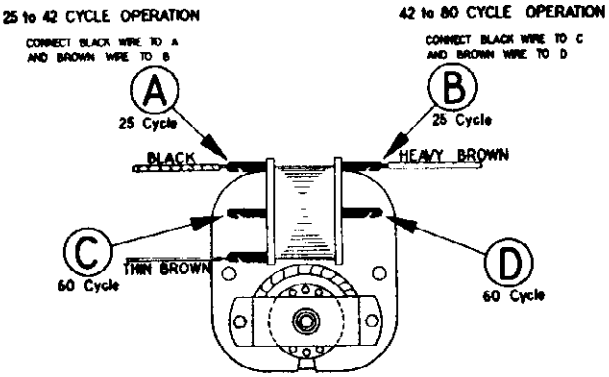

50 The connections for the Light Ray Tuner transformer, both standard 60 cycles, and universal 25 to 80 cycle types are shown on the various chassis service manuals.

DIAL MECHANISM AND CALIBRATION

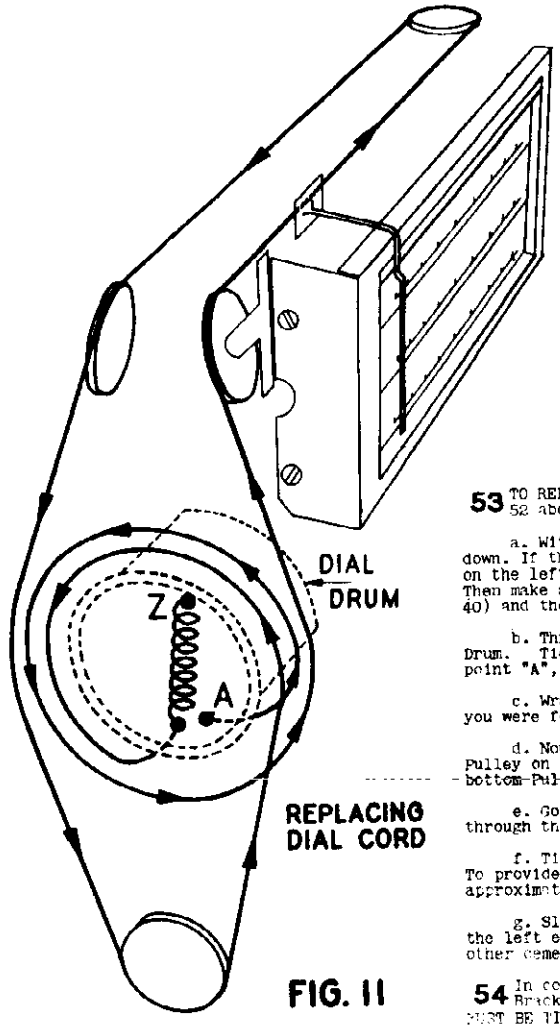

REPLACING DIAL CORD

FIG. 11

51 The Cam Assembly Stop Pin, located on the left end of the Cam Assembly (Figure 14), allows approximately 180° of rotation of the Assembly and provides a strong, positive stop for the mechanism during locking and unlocking. It also protects the less rugged stops on the Gang Condenser. This Pin should strike the Stop just before the Gang Condenser is in full mesh or fully open. If it does not, to establish the correct relation between these two sets of stops: Loosen the set screw in the Knurled Condenser Drive Gear (Figures 10 and 15) on the Cam Shaft. Turn the Cam Assembly until the Stop Pin on it points to the back and is resting against the Stop on the Left End Bracket (Figure 14). Close the Gang Condenser to full mesh, then open it up just the least bit to relieve the Condenser Stop and tighten the set screw in the Knurled Gear. This allows the heavy Cam Assembly Stop Pin to reach its Stop first in each direction, since its working arc is slightly less than that of the Gang Condenser. See chassis service manual for complete calibration instructions.

52 The Knurled Gear (Figure 10) driving the Gang Condenser should be set on the Cam Shaft so that the center of its face engages the Crown Gear on the Extension Shaft. The dial Drive Gear, located on the left end of the Cam Shaft, (Figure 15) should engage the center of the face of the gear on the Dial Cord Drum. Check the end play in the Cam Shaft to see that these two sets of gears will not become unmeshed. If there is excessive end play in the Cam Shaft, move the collar (Figure 14) in closer to the Left End Bracket. There should be approximately .010 of an inch play between the Collar and Bracket.

53 TO REPLACE THE DIAL CORD: First check the points outlined in sections 51 and 52 above, then refer to figure 11 and proceed as follows:

a. With the Gang Condenser closed, the holes in the Dial Cord Drum should be down. If they are not, loosen the set screw in the Pointer Drive Gear (Figure 15) on the left end of the Cam Shaft, and rotate the Dial Cord Drum so that they are. Then make sure that the anti-backlash springs are compressed one tooth (section 40) and the gears are meshing properly before tightening the set screw.

b. Thread one end of the Dial Cord through the front hole of the two on the Drum. Tie a knot near the end of the inside of the Drum. This is the starting point "A", figure 11.

c. Wrap one and one quarter turns around the Drum counter-clockwise as though you were following the threads of a left hand screw.

d. Now go up over the front Pulley on the left end of the Dial; around the Pulley on the right end; over the back Pulley on the left end; down around the bottom Pulley and up to the front of the Drum.

e. Go around the Drum three quarters of a turn counter-clockwise and up through the back hole.

f. Tie the Tension Spring on and hook it over the hook on the Drum at "Z". To provide proper tension in the Dial Cord the extended spring should measure approximately 1 1/4 inch in length over all, when the Cord system is equalized.

g. Slip the Pointer clip under the Cord, set the Pointer at the last mark on the left end of the Dial Scale, close the clip and put on a drop of household or other cement on the Cord and clip junction.

54 In connection with Calibration, notice that movement of the Left End Bearing Bracket (Figure 15) changes the Pointer setting. BOTH SCREWS IN THIS BRACKET MUST BE TIGHT.

©John F. Rider

CHECKING A.F.C.

55 In order to determine if the Automatic Frequency Control System is working, either of the following methods may be employed without removing the chassis from the cabinet.

a. Select a local station whose signal is fairly strong and which operates on a frequency below 1000 KC. Tune manually to a frequency slightly above that of the selected station, but close enough to the signal that it can be heard somewhat distorted.

b. Open the A.F.C. (two upper) contacts on the Side Switch, by reaching into the back of the set with a pointed stick and forcing the contacts apart.

c. A.F.C. should then pull the signal in clearly and hold it, while the contacts remain open.

d. Now tune below the station frequency a few KC. and open the A.F.C. contacts again. Again A.F.C. should pull the signal in clearly.

56 The same check on Automatic Frequency Control action can be made from the front of the set by proceeding as follows:

a. Pull off the Tuning Knob. Pull out the Set-up Knob. Unlock the mechanism by turning the Set-up Knob clockwise until a slight click is heard.

b. Push a button in. After the pointer stops, tune in a fairly strong station below 1000 KC. Then detune until the signal is somewhat distorted.

c. Now, push the Set-up Knob in and leave it in. This also releases the depressed button. Push the same button in again. This should open the A.F.C. contacts on the Side Switch, and allow A.F.C. to bring the signal in clearly.

d. Pull the Set-up Knob out. Push the same button in again. Detune the other side of the station and repeat paragraph c.

57 If Automatic Frequency Control does not appear to be working: First make sure that the A.F.C. contacts on the Back and Side Switches (Figure 1 to 7) are open when a station is tuned in automatically and that the A.F.C. contacts on the Side Switch are closed when tuning manually or setting up the mechanism. Then check the Discriminator, Control, R.F., Mixer, and I.F. tubes. Re-align the I.F., Broadcast and discriminator trimmers as explained in the chassis service manuals before attempting to locate a fault in the chassis.

MANUAL TUNING

58 There should be sufficient traction between the Friction Roller and the Friction Wheel (Figure 13) to provide positive movement of the mechanism when the Tuning Knob is turned, providing there is no mechanical overload in the system. If the Dial Pointer fails to move when tuning manually, first, try washing the Rubber Ring on the Friction Wheel with carbon tetrachloride to remove any oil or grease. The traction between the Friction Roller and Friction Wheel may be increased slightly by sliding the Friction Wheel out farther on the Motor Shaft. The contact pressure between the Friction Wheel and Roller can be increased by shortening the Return Spring on the Bar and Arm Assembly (Figure 13). However, shortening this spring makes the buttons harder to push in.

59 Because of the exceptionally high tuning ratio used in this unit, the compounding effect on any slight lost motion is such that every precaution must be taken to keep backlash within satisfactory limits. Backlash will be at a minimum with proper adjustment of the various gears, as outlined in sections 40 and 41. Considerable lost motion will result if the Gang Condenser sways because of too loose mounting or because it turns too stiffly. Assuming the Clutch is in good working condition, it will only slip if mechanically overloaded.

60 In case of excessive Pointer backlash, check the following points; BOTH screws in the Left End Bearing Bracket must be tight. See that the Pointer Drive Gear(Figure 15) is not slipping on the Cam Shaft, that the anti-backlash springs in the gear are compressed at least one tooth, and that it does not slip out of mesh with the gear on the drum. The Dial Cord should be tight enough to extend the Tension Spring in the Drum so it measures about 1 1/4 inches long. See that the Pointer does not slip on the Cord and slides freely on the Guide Rail.

61 If the Tuning Shaft turns only a part of a revolution then catches, with a button depressed, it is probably due to burrs or rough edges on the Star Wheel or Adjustable Tip of the Kickout Arm (Figure 13). Or it may be that the buttons are too hard to release, because of improper adjustment of the Kickout Arm tip. See sections 36 and 37.

CHANGING MECHANISM

62 The early production sets have the Moto-Matic Tuner wired directly to the chassis. Later sets are equipped with a socket and plug to facilitate removal of the mechanism. The socket on the later mechanism is mounted about four inches from the right end, and facing the rear, on the horizontal reinforcing member on the back of the Dial Assembly. It is connected in as shown in figures 1A or 1B, depending upon the type of Side Switch (See Section 14.)

63 To change the Moto-Matic Tuner and Dial Assembly, part number 10054112727, it is only necessary to unsolder the green and the green-black wires to the volume control, take the volume control off the bracket, slip the Visual Tuning Indicator Light socket off, pull the above mentioned plug, loosen the set screw in the Flexible Coupling (Figure 10) and take out the four screws holding the assembly to the chassis. If the assembly has no plug on it see section 65.

When installing the new Moto-Matic Tuner and Dial Assembly see section 51 for dial calibration instructions, and section 42 for information on adjusting the tension in the spring in the flexible coupling.

64 To change the Moto-Matic Tuner, part number 10054111350, only, it is necessary to remove the Dial Cord from the Drum (Figure 11), take out the four screws holding the two End Bearing Brackets to the frame, pull out the plug and take out the four screws holding the unit to the frame. The two front screws holding the unit to the frame can be reached by removing the second or third and the sixth or seventh button shells in the bottom row. If the unit has no plug on it see section 65.

When installing the new Moto-Matic Tuner, see section 22g for alignment of the End Bearings, sections 51 to 53 for restringing the dial cord and dial calibration, and section 42 for information on adjusting the tension in the spring in the flexible coupling.

65 If it is necessary to put one of the later mechanism, having the socket, on an early chassis, the Plug (Figure 12), part number 10054112736, must be wired to the chassis. The plug is provided with seven color coded wires of sufficient length to connect to the proper points on the under side of the chassis. Disconnect an old wire and connect the corresponding new wire, following the colors for identification, before disconnecting the next old wire. However, some of the cable wires may have a different color than the original chassis wires. Briefly the cable wires are:

Black (Heavy)	To grounded side of 6 volt winding of power transformer.
Blue (Heavy)	To other terminal of 6 volt winding of power transformer.
Light Blue	To one leg of the Reactance Dimmer Coil (The Visual Tuning Indicator Light is connected to the other leg.)
White - Red	On models 100.184 and 100.185 to A.V.C. cathode (the one with the white-green wire attached to it) of the 6H6 tube. On model 100.186 to the ungrounded cathode of the discriminator (6H6) tube.
Small Black or White	On models 100.184 and 100.185 to other cathode of the 6H6 tube - the one with the brown wire attached to it. On model 100.186 to ground.
Green - Black	On model 100.184 to ground. On models 100.185 and 100.186 to one end of the audio input choke - the end connected to the control grid of one of the 6V6 output tubes with a green-black wire.
Green or Red	On model 100.184 to the control grid of the 6L6 output tube. On models 100.185 and 100.186 to the other end of the audio input choke - the end connected to the control grid of the other 6V6 output tube with a green wire.

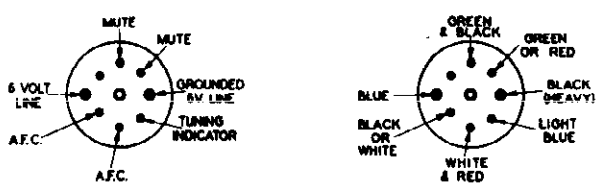

TOP VIEW OF PLUG

FIG. 12

©John F. Rider

SPECIAL TOOLS

66 A special spring adjuster tool, part number 10054117468, list price $0.75 may be obtained from the factory for adjusting the Back and Side switch blades, although a pair of duck-bill pliers or a screw driver can be used.

67 Wrenches can also be supplied by the factory for the fluted (Bristol) set screws used in various parts of the Moto-Matic Tuner. For the #6 (small) set screws, the wrench is part number 10054112483, and for the #8 (large) set screw, the wrench is part number 1005412484. These wrenches have a list price of 7 cents each.

HOW TO ORDER PARTS FOR THE "MOTO-MATIC TUNER" USED ON CHASSIS HAVING IDENTIFICATION NUMBER 100.184 ; 100.185 OR 100.186 .

1. Use Purchase Order Form 5284.
2. On the Purchase Order always give the following information:
   (1) PART NUMBER and DESCRIPTION for each part ordered, as given in this parts list, regardless of number printed on part itself. When no part number is assigned, order by description and rating. Also give PRICE of part (indicate if no selling).
   (2) THE IDENTIFICATION NUMBER, WHICH IS 100.184 ; 100.185 OR 100.186 THIS NUMBER IS FOUND ON THE LEFT REAR CORNER OF THE CHASSIS.
3. ORDERING INSTRUCTIONS.
   Send Purchase Orders DIRECT to Stewart-Warner Corp., 1828 Diversey Pkwy., Chicago, Ill.

BUTTON RETAINING SPRING, 10054111633



BUTTON WASHER 10054111576



BUTTON SPRING 10054111577



BUTTON BODY 10054112428



RADIO STATION LIST

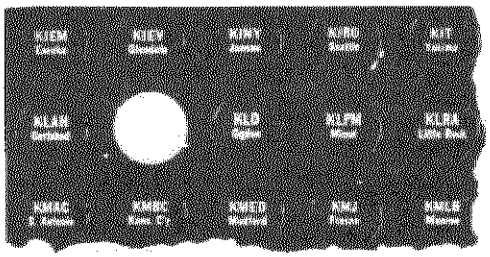



BUTTON REINFORCING DISC 10054112547



BUTTON CAP 10054112545



BUTTON WINDOW 10054111878



TABS, STATION CALL LETTERS 10054112005

PARTS LIST-SOURCE NO. 100

Wherever the word "right" or "left" appears in the following list, it is understood that you are standing in front of the mechanism.

The Identification Numbers are to assist you in identifying parts shown on figures 13, 14 and 15 or to indicate in which figure the part can be seen. The identification is NOT TO BE USED in place of the part number, when ordering parts.

PART NUMBER	IDENTIFICATION NO.	DESCRIPTION
10054111591	1	Arm (long) side switch operating
10054111627	2	Bar & Arm Assembly
10054111526	3	Bearing - on tuning shaft
10054111176	4	Bracket - left end of mechanism
10054111547	5	Bracket - with studs (right end of mechanism)
10054111569	6	Bracket - pust button escutcheon support
10054111162	7	Bushing - left end of cam shaft
10054112428		Button Body - for tuner
10054112545		Button Cap - for push button
10054111878		Button Window - celluloid for push button
10054112547		Button Reinforcing Disc - for push button
10054111533		Button retaining spring - inside push button
10054111577		Button spring - in push button
10054111576		Button Washer - in push button
10054111617	8	Cam - bakelite for back switch operation (with arm)
10054112563	8	Cam - bakelite-less operating arm
10054111625	9	Cam Shaft - with cams and right end bracket
10054111568	10	Cams - station selector
10054111146	11	Clutch - collar, spring & gear
10054111160	12	Collar - retaining (less set screw) left end of cam shaft
10054111161		Collar - retainer for pawls
10054111616	13	Collar & Spring - for star wheel
10054111882		Collar - inside of locking cam
10054111137		Drive Ring - rubber (on friction wheel)
10054111693	14	Escutcheon - metal, for push button
10054111310	15	Flywheel -with set screws
10054111549	16	Friction Roller - on rear end of tuning shaft
10054111169	17	Friction Spacer - between cams
10054111402	18	Friction Wheel - (on motor shaft) with rubber ring
10054111137	18	Drive ring rubber (on frict.wheel)
10054111145	19	Gear - and pinion (reduction)
10054111157	20	Gear - crown & pinion, for "Setting-up"
10054111523	21	Gear - set up (on tuning shaft)
10054112726		Housing - with keys
10054112522	22	Key stop bar - kickout assembly
10054111632	23	Knob - for setting up
10054111408		Lock - saw tooth adjacent to cam (left half)-Fig. 14
10054111548	24	Lock - saw tooth with gear (right half)
10054112727	25	Moto-Matic Tuner-complete with all dials-ready to mount on chassis
10054111350	26	Moto-Matic Tuner only, less dial frame assembly
10054111380	27	Motor - 6 volt 60 cycles
10054112354		Motor - 6 volt 25 to 60 cycles
10054111491	28	Pawl & Bushing - single unit
10054111634		Pawls & Shaft - (assembly)
10054111148	29	Pin - cam shaft, left end
10054111409		Pin - for friction roller-Fig.13
10054111410		Pin - in star wheel
10054111411	30	Pin - cam shaft - right end
10054111863		Pin - inside of lock
10054111557		Retainer - over left end of pawl shaft (brass)
10054111152		Retaining Ring-for reduction gears
10054111153		Retaining Ring-for crown gear
1005475032		Screw - #4 for kickout tip - Per C
1005485040		Screw - #6 Hex.hd.for mtg. frame - Per C
1005488707		Screw - Binder Hd. for mtg. push button escutcheon - Per dz.
10054111673		Screws - (through back switch)
10054111968		Screw - side switch mtg.-Fig.6
1005485827		Set Screw - on clutch collar-Fig.8
10054111554		Set Screw - #4 headless (for pawl collar)
10054111403		Set Screw - #8 for set up knob - Figure 13
10054111588		Set Screw - for collar and star spring mtg. (6/32)
10054112138		Set Screw - 6/32 round head
10054111166		Shaft - for pawls
10054111405		Shaft - for key stop bar
10054111406		Shaft - for bar & arm assembly
10054111590	31	Shaft - tuning
1005485815		Spring - between reduction gear sections (next to motor)
1005489086		Spring - coil between sections of clutch gear - Fig. 8
10054112465		Spring - between reduction gear sections (next to clutch)
10054111138		Spring - horseshoe shaped on clutch
10054111151		Spring - key stop bar shaft retainer
10054111528		Spring - coil (inside of lock)
10054111552		Spring - flat, with tongue, on lock (latch spring)-Fig.9
10054111555		Spring - for key and pawls
10054111609	32	Spring - kickout
10054111933	33	Spring - coil,key stop bar return
10054112568	34	Spring - bakelite cam return
10054111440	35	Star Wheel - on tuning shaft
10054111674	36	Switch - side (above tuning shaft)
10054112564	37	Switch - back, later type
10054112521	38	Tip - adjustable on kickout arm
1005476999		Washer - lock,for kickout tipPer C
1005477113		Washer - flat,for kickout tipPer C
10054111169	17	Washer - friction spacer (between cams)
10054111553		Washer - spring retainer on lock mechanism - Figure 9
10054112483		Wrench - for #6 fluted set screw
10054112484		Wrench - for #8 fluted set screw

©John F. Rider

Moto-Matic Tuner

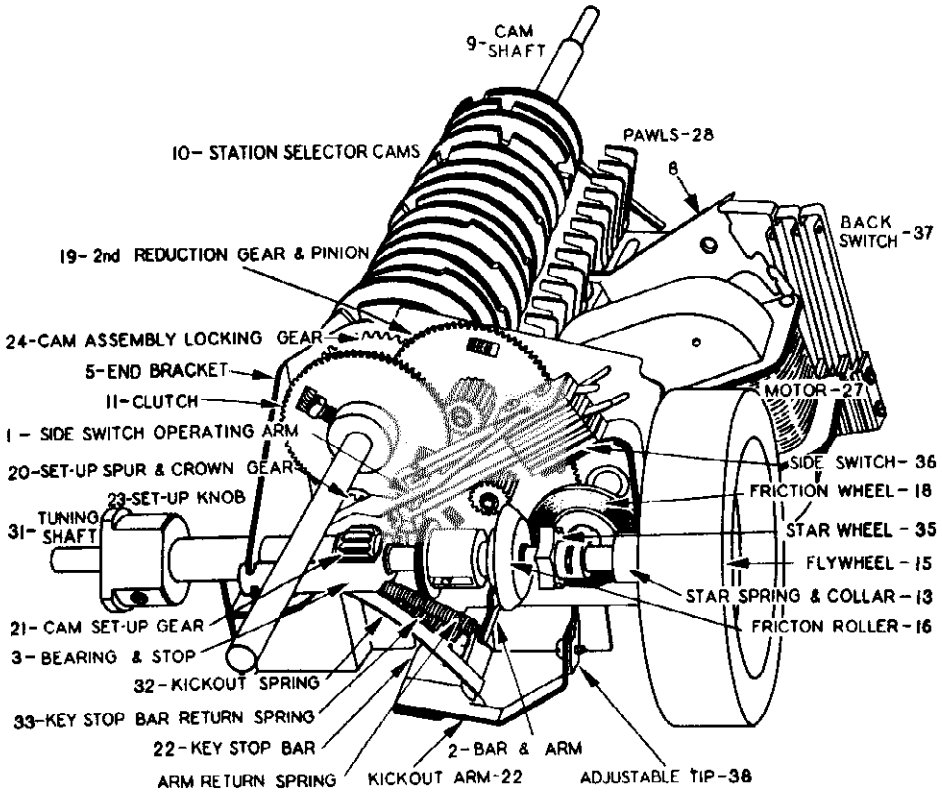

LEFT END VIEW OF MECHANISM

FIG. 13

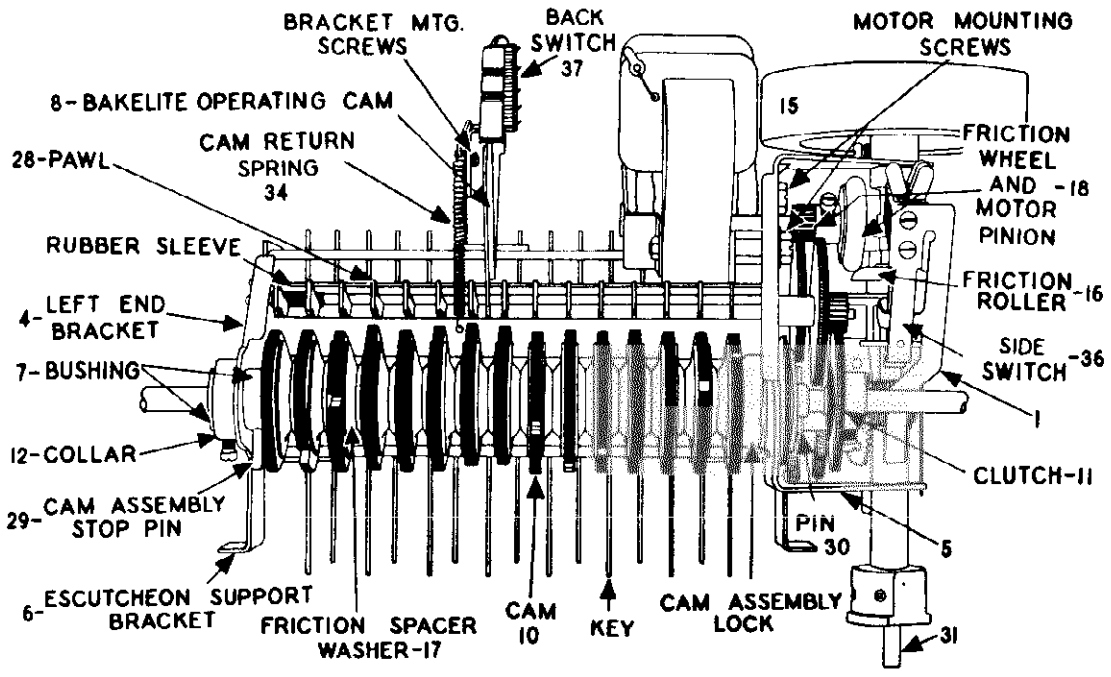

26 TOP VIEW OF MECHANISM

FIG. 14

©John F. Rider

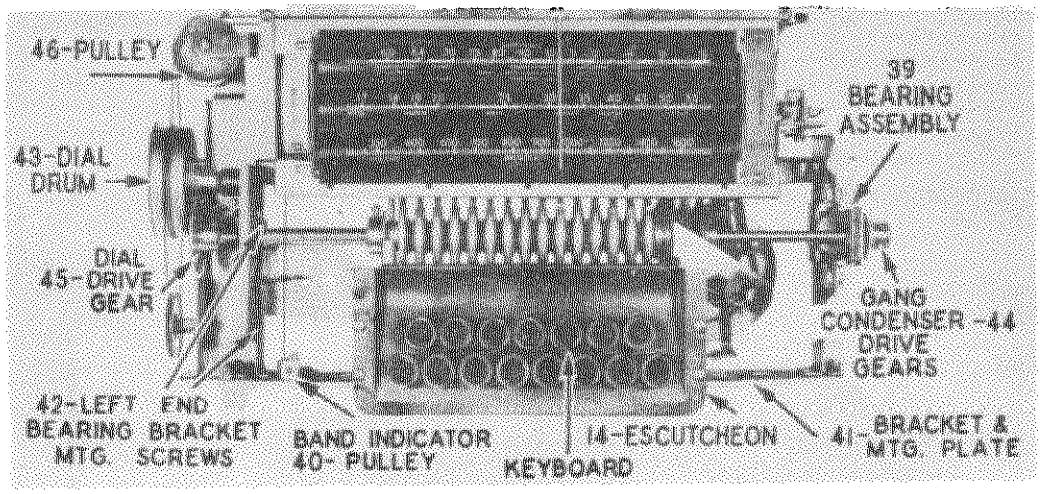

25 FRONT VIEW OF MYSTIC MECHANISM AND DIAL ASSEMBLY

FIG. 15

DIAL MECHANISM AND MISCELLANEOUS PARTS LIST

Wherever the word "right" or "left" appears in the following list, it is understood that you are standing in front of the mechanism. The Identification Numbers are to assist you in identifying parts shown in figures 13, 14 and 15 or to indicate in which figure the part can be seen. The identification is NOT TO BE USED in place of the part number, when ordering parts.

PART NUMBER	IDENTIFICATION NO.	DESCRIPTION
10054111930		Band Indicator & frame assem.
10054111694	39	Bearing Assembly-self aligning, on right end of cam shaft & supports gang extension shaft
10054111601		Bearing - self aligning
10054111692		Bearing Retainer-plate, copper
10054112658		Belt - for range switch drive
10054111261		Bolt - chassis mtg.(#14X1-1/4)
1005488631		Bracket - for range switch support (under chassis)
10054111630	40	Bracket & Pulley-for band indicator cord
10054111693	41	Bracket & Mounting Plate - for Moto-Matic Tuner
10054111894	39	Bracket & Bearing - right side of shaft
10054111899	42	Bracket & Bearing - left side of shaft
10054111260		Bushing - rubber(for chass.mtg.)
10054111892		Bushing - rubber, Moto-Matic Tuner mtg. to chassis
10054111658		Clip - for pulley retaining
10054110782		Cord - for band inciator (2 ft. required) - Per ft.
10054111308		Cord - dial drive(6 ft. lgths.)
10054111864	43	Dial Drum - with gear
10054111286		Escutcheon-for dial(with glass)
10054111287		Escutcheon - around push button opening
10054111690		Felt - oil wick for bearing
10054112450		Flexible Cplg. -with set screws
10054111665		Frame - dial, with scale
10054111608	44	Gear - right end of cam shaft drive gang condenser
10054111629	45	Gear - dial drive (left end of cam shaft)
10054111631	44	Gear - crown, on extension gang shaft
10054111496		Knob - tuning or volume
10054111497		Knob - range or tone
10054111197		Lever-for band ind.(on shaft)
10054111370		Link & Lever - for range switch drive(used in early production)
10054112633		Plug - for mech. connecting (8 prong)
10054112736		Plug and cable-for mechanism connecting
10054111859		Pointer - for dial, with slider
10054111622	46	Pulley - dial cord drive
10054111630		Pulley & Bracket-for band ind.
10054112628		Pulley - on range switch shaft under chassis
1005484214		Retaining Ring - for dial drum
1005489837		Retaining Spring - for holding escutcheon to cabinet
10054111222		Scale - dial
10054110718		Screw - band ind. pivot(shaft)
10054111116		Screw - #5X5/8 Moto-Matic Tuner mtg.
1005485827		Set Screw - 8/32 square head
10054111403		Set Screw - 8/32 fluted head
10054112138		Set Screw - 8/32 slotted head
10054110716		Shaft, band indicator
10054112488		Shaft, extension (between gang condenser & unit) - Figure 10
10054111373		Shaft - for range switch
1005485427		Socket - octal base
10054110501		Socket - 4 prong (for speaker)
10054110627		Socket - dial lamp and automatic lamp
10054111006		Socket - Light Ray dimmer lamp
10054112630		Socket & Bracket - for electrical connections to mechanism
10054111090		Spacer - steel, Moto-Matic Tuner mtg. to chassis
10054111670		Spacer - rubber for Moto-Matic Tuner mtg. to chassis
10054117468		Spring Bender - (switch adjusting tool)
1005489086		Spring - between sections of dial dr. gaar left side of mech.
10054111232		Spring - torsion for band ind.
10054111862		Spring - dr. cord tension Fig.11
10054112490		Spring - in flexible coupling
10054111676		Stud - lower left idler pulley
10054112667		Stud - for pulley mtg. (for top pulley)
10054112005		Tabs - sta. call letters(6 sheets)
1005485086		Terminal Strip - G.D.A.
1005489709		Terminal Strip - phono
10054112483		Wrench - for #8 fluted set screw
10054112484		Wrench - for #7 fluted set screw

©John F. Rider

MODEL 7216,
Ch. 100.184

ELECTRICAL SPECIFICATIONS

TUBE COMPLEMENT

1 6K7	R.F. Amp.	1 6H6	Discriminator-2nd Det.-A.V.C.
1 6L7	1st Det.	1 6L6	Power output
1 6C5	Osc.	1 6F5	1st A.F. Amp.
1 6K7	1st I.F. Amp.	1 5U4-G	Rectifier
1 6K7	2nd I.F. Amp.	1 6J7	Control

POWER SUPPLY

Model 7218 is supplied for either 25 or 60 cycle power supplies — 105-135 volts, - 50-60 cycle - 140 watts; 105-135 volts, - 25 cycle - 140 watts

FREQUENCY RANGES		ALIGNMENT FREQUENCIES
Broadcast Band	525 to 1680KC.	1500 KC.: 600 KC.
Police Band	1655 to 5600 KC.	5000 KC.
Short Wave Band	5540 to 18,100 KC.	16,000 KC.

INTERMEDIATE FREQUENCY.....465 KC

POWER OUTPUT

Type.....Single Stage beam power
Undistorted.....6 watts
Maximum.....8 watts

LOUD SPEAKERS

Part No.	Size	Model	Field Res. (Hot)	Field Coil Voltage
10058281	12"	7216	400	45 volts

OPERATING FEATURES		CHASSIS FEATURES	
Fidelity Rge. (±6DB)	50-3000 cycle	R. F. stages	one
Tone control	3 position	Number of I.F. stages	two
Resonance indicator	"Light Ray" Indicator	Number of Cond. in gang	three
Volume stabilizer	A.V.C. system	Antenna	Conv. or Doublet
Tuning corrector	A.F.C. system	Wave trap	465 KC
"Moto-Matic" tuner	Push button control		

MECHANICAL SPECIFICATIONS

OPERATING CONTROLS		CONTROL OPERATION	
1. Upper Left Knob	Power Switch & Volume	Turning right	Power on, Vol. Incr.
2. Lower Left Knob	Tone Control	Turning right	Bass to Brilliant
3. Upper Right Knob	Station Selector	Spinner Tuning	
4. Lower Right Knob	Band Switch	Turning Right to Left	S.W.-P.-B.C.

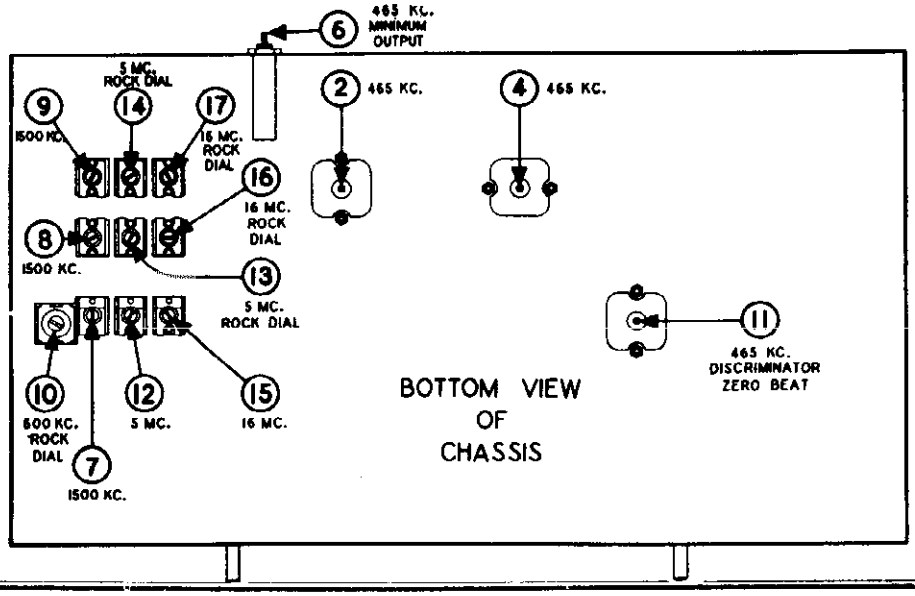

©John F. Rider

The 100.184 automatic tuning superheterodyne receiver has a frequency range extending from 525 KC. to 18,100 KC. The intermediate frequency is 465 KC.

The receiver is designed for use with either a conventional single wire type or a special noise reducing doublet. A 465 KC. wave trap is connected in series with the antenna input to prevent code interference from stations operating in the vicinity of 465 KC.

A conventional superheterodyne circuit is used with the exception that maximum efficiency and stability are insured by the use of a separate oscillator and a specially constructed R.F. bridge. The bridge has the distinct advantages of being extremely compact and may be removed by the disconnecting of only a few leads. This means a great saving of time in the servicing of any part of the R.F. unit.

Since the R.F. and I.F. systems are typical of the superheterodyne it will not be necessary to discuss their function other than stating that the filtered automatic volume control voltage is applied to both the R.F. and 1st detector and the I.F. stages.

The second I.F. stage is followed by a new type of I.F. transformer in order that the A.F.C. voltage may be obtainable. The A.F.C. discriminator is coupled through the third (discriminator) I.F. transformer directly to the 2nd I.F. stage. The third (or discriminator) I.F. transformer secondary is connected directly to the diode plates of the 6H6 tube, which performs the triple function of a linear second detector, A.V.C. and discriminator. The audio component of the output of this tube is supplied to the volume control and amplified in the usual manner. The A.V.C. voltage is taken off at the same point of the diode load resistor network and supplied to the R. F. 1st dectector and 1st I.F. tubes while the A.V.C. voltage for the 2nd I.F. tube is taken off at another point on this same network.

The center tap of the secondary of the third I. F. transformer is connected to the high side of the primary of this transformer, through a coupling condenser. Since the ends of the secondary are connected directly to the diode plates of the 6H6 discriminator tube, this connection serves to introduce the proper voltages to each of the diode plates and thus satisfies the first conditions for an A.F.C. system.

The two rectified voltages appearing between each of the diode plates and its respective cathode are arranged to buck each other.

This is accomplished by connecting both diode load resistors to the center tap of the 3rd I.F. transformer. Thus when the cathode of one 6H6 is grounded a voltage will appear between the second cathode and ground if the frequency coming through the I.F. stage is not 465 KC. (indicating improperly tuned receiver). This voltage may be either positive or negative depending upon whether the frequency coming through the I.F. system is above or below 465 KC. This voltage is known as the control voltage and is filtered and applied to the grid of the control tube which in turn supplies either more or less lagging current to the tank circuit of the oscillator. The amount of lagging current flowing in the oscillator coil will determine the amount of apparent inductance added to the coil. The amount of inductance added or subtracted will in turn correct the frequency of oscillator as near as possible so that the frequency going through the I.F. system will be nearly 465 KC; thus giving a perfectly tuned program even though the station pointer may not be set to the exact frequency of the incoming signal.

Another important feature of this receiver is the "Moto-Matic" Electric Tuner, which automatically tunes the receiver to the desired station. Since this feature is extremely important from a service angle we have prepared a separate manual on the "Moto-Matic" Electric Tuner, which covers in detail the service procedure for this unit. This manual also contains a complete itemized and pictorial parts list of "Moto-Matic" tuner parts. Specify Part Number 10059112932 when ordering this booklet.

© John F. Rider

MODEL 7216,
Ch. 100.184

A.F.C. ALIGNMENT

IMPORTANT:- The following adjustment must be made after every re-adjustment of the I.F. and broadcast band trimmers.

The A.F.C. discriminator should be adjusted as follows:

1. Be sure no buttons are depressed. Loosely couple the output of the signal generator to the 6L7 control grid by clipping the signal generator output lead to the insulation on the control grid wire, or connect to the grid clip through a 50 mmfd. mica condenser. BE SURE THE RANGE SWITCH IS IN THE BROADCAST (COUNTER-CLOCKWISE) POSITION.

2. Adjust the signal generator to resonance with I.F. system by tuning the signal generator dial for maximum output meter deflection. Be sure that the receiver dial is at some point where it has no tuning effect on the generator signal. Switch off the modulation.

3. With the signal generator connected and operating as in #2, connect antenna and manually tune in powerful local station in region of 1000 KC. or lower. (Avoid stations around 930 KC. which might beat with second harmonic of test oscillator.)

4. Adjust receiver tuning dial to obtain zero beat between the test oscillator and the incoming signal. (A very slight adjustment is all that is required. Be careful not to tune off signal.)

5. Refer to the illustration above. It is now necessary to open the A.F.C. contacts and allow the A.F.C. to function. This may be done by placing a piece of smooth cardboard between the A.F.C. contacts as shown in the figure. Be careful not to bend or malform the switch in any way.

6. Now, adjust the secondary of the discriminator transformer (Trimmer #11) to restore zero beat. NOTE: This trimmer should be adjusted to the point where the frequency of the beat note increases rapidly if the trimmer is turned in either direction. Other zero beat points may be found with the trimmer all the way in or all the way out, but these settings are incorrect.

If this operation has been performed correctly, the opening or closing of the A.F.C. contacts on the side switch by inserting or removing the cardboard, should not change the beat note by more than a slight rumble.

NOTE:- Where a second signal generator is available step #3 above may be varied as follows:

Connect second signal generator (set at about 1000 KC.) to antenna and tune in its signal. Switch off modulation and proceed as before.

This method is somewhat preferable to the first as the zero beat setting is more easily determined when both signals are unmodulated.

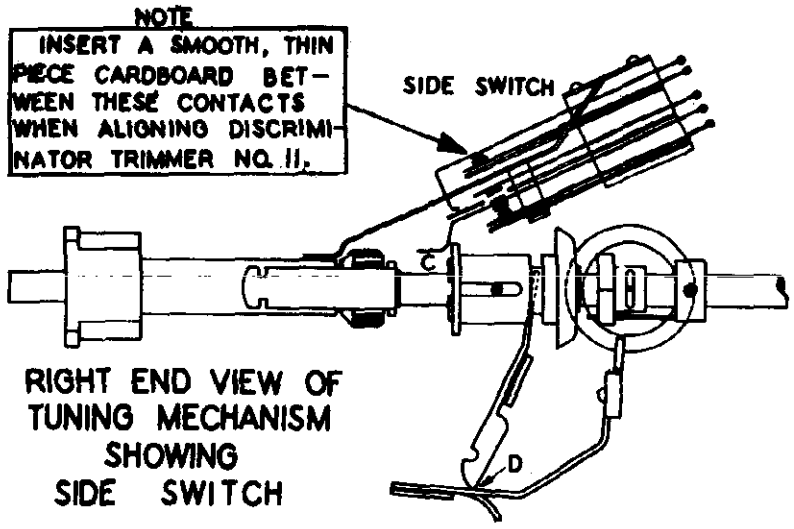

RIGHT END VIEW OF TUNING MECHANISM SHOWING SIDE SWITCH

©John F. Rider

MODEL 7216,
Ch. 100.184

ALIGNMENT PROCEDURE

Before attempting to align the receiver check to see that the dial pointer is opposite the last scale division on the low frequency end of the dial when the gang condenser is in full mesh. Also when the gang condenser is in full mesh the stop pin on the left side of the tuner should be resting against the back stop. If after examination it is found that the gang is in full mesh and the stop pin is against the back stop, but the pointer is set to the wrong position, it will only be necessary to loosen the set screw on the dial drive gear at the left side of the mechanism. Then grasp the large drum on the same side of the tuner and turn it until the pointer is set correctly. Now retighten the set screw in the gear being careful to see that the gear is meshing properly.

On the other hand if the stop pin does not rest against the back stop with the gang condenser in full mesh, loosen the set screw on the gang condenser side of the flexible coupler. Then turn the tuning knob until the stop pin rests against the back stop on the tuner. Now tighten the set screw in the flexible coupler and proceed to set the pointer to its correct position by the method described in the previous paragraph.

Output meter connections	Across voice coil leads
Output meter reading to indicate 0.5 watt output	1.42 volts
Average sensitivity in microvolts for 0.5 watt output	15 Microvolts
Generator ground connection	Receiver Chassis
Connection of generator output lead	See chart below
Generator modulation	30%, 400 cycles
Position of volume control	Maximum clockwise

HOW TO TEST THE A.F.C. SYSTEM

Connect the antenna and tune in a powerful local station. The setting of the tone control does not affect this test. Remove the cardboard that you placed between the A.F.C. contacts on the side switch when aligning. The A.F.C. is now off.

Next, detune the receiver dial until the music or speech becomes somewhat distorted. Now place a piece of smooth cardboard between the A.F.C. contacts on the side switch as shown in the illustration at the top of this page. This allows A.F.C. to function and it should improve the quality of the program.

Similarly detune the receiver dial in the opposite direction, with the cardboard removed from between the A.F.C. contacts (contacts closed). Then place the cardboard between the contacts again and check for improved quality of reception.

It will be noted that the correction for mistuning afforded by the A.F.C. system is not as marked at stations near the low frequency end of the dial scale as it is at the higher broadcast frequencies. This is characteristic of A.F.C. systems. However, if opening the A.F.C. contacts on the side switch (by inserting the piece of cardboard betweeen the contacts) has no effect on the signal, or if it corrects for mistuning in one direction only, check the receiver as follows:

1. Re-align I.F. broadcast band, and discriminator trimmers.
2. Check all the tubes in the receiver. Defective 6H6 and 6J7 tubes, also the R.F. 1st Detector, and I.F. tubes may cause poor A.F.C. action.
3. If the above procedure fails to remedy the defect in A.F.C. action, check the entire A.F.C. circuit itself for possible troubles.

© John F. Rider

MODEL 7216,
Ch. 100.184

DUMMY ANT. IN SERIES WITH SIG. GEN.	CONNECTION OF SIG. GENERATOR OUTPUT TO RECEIVER	SIGNAL GENERATOR FREQUENCY	RANGE SWITCH POSITION	RECEIVER DIAL SETTING	TRIMMER NUMBER	TRIMMER DESCRIPTION	TYPE OF ADJUSTMENT
.1 MFD CONDENSER	CONTROL GRID OF 6L7 TUBE	465 KC.	BROADCAST (Counter-clockwise)	ANY POINT WHERE IT DOES NOT AFFECT THE SIGNAL	1-2	1ST I. F.	Adjust for maximum output. Then repeat adjustment.
					3-4	2ND I. F.	
					5	3RD I. F.	
400 OHM CARBON RESISTOR	ANTENNA TERMINAL	465 KC.	BROADCAST (Counter-clockwise)	ANY POINT WHERE IT DOES NOT AFFECT THE SIGNAL	6	WAVE TRAP	Adjust for minimum output using a strong generator signal.
400 OHM CARBON RESISTOR	ANTENNA TERMINAL	1500 KC.	BROADCAST (Counter-clockwise)	1500 KC.	7	BROADCAST OSCILLATOR (Shunt)	Adjust trimmer to bring in signal.
400 OHM CARBON RESISTOR	ANTENNA TERMINAL	1500 KC.	BROADCAST (Counter-clockwise)	TUNE TO 1500 KC. GENERATOR SIGNAL	8	BROADCAST DETECTOR	Adjust for maximum output.
					9	BROADCAST ANTENNA	
400 OHM CARBON RESISTOR	ANTENNA TERMINAL	600 KC.	BROADCAST (Counter-clockwise)	TUNE TO 600 KC. GENERATOR SIGNAL	10	BROADCAST OSCILLATOR (Series Pad)	Adjust for maximum output. Try to increase output by detuning trimmer and retuning receiver dial until maximum output is obtained.
THE A.F.C. MUST NOW BE ALIGNED. SEE "A.F.C. ALIGNMENT" ON THE NEXT PAGE FOR PROCEDURE							
400 OHM CARBON RESISTOR	ANTENNA TERMINAL	5 MC.	POLICE (Center)	5 MC.	12	POLICE OSCILLATOR (Shunt)	Adjust to bring in signal. Check to see if proper peak was obtained by tuning in image at approx. 4.1 MC. If image does not appear realign at 5 MC. with trimmer screw farther out. Recheck image.
400 OHM CARBON RESISTOR	ANTENNA TERMINAL	5 MC.	POLICE (Center)	TUNE TO 5 MC. GENERATOR SIGNAL	13	POLICE DETECTOR	Adjust for maximum output. Try to increase output by detuning trimmer and retuning receiver dial until maximum output is obtained.
					14	POLICE ANTENNA	
400 OHM CARBON RESISTOR	ANTENNA TERMINAL	16 MC.	SHORT-WAVE (Clockwise)	16 MC.	15	SHORT-WAVE OSCIALLATOR (Shunt)	Adjust to bring in signal. Check to see if proper peak was obtained by tuning in image at approx. 15.1 KC. If image does not appear realign at 16 KC. with trimmer screw farther out. Recheck image
400 OHM CARBON RESISTOR	ANTENNA TERMINAL	16 MC.	SHORT-WAVE (Clockwise)	16 MC.	16	SHORT-WAVE DETECTOR	Adjust for maximum output. Try to increase output by detuning trimmer and retuning receiver dial until maximum output is obtained.
					17	SHORT-WAVE ANTENNA	

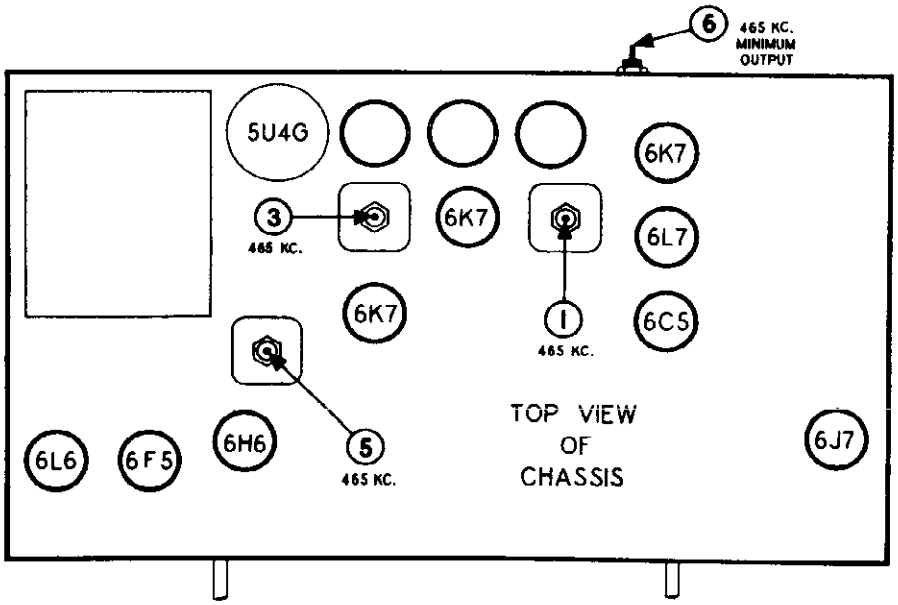

© John F. Rider

© John F. Rider

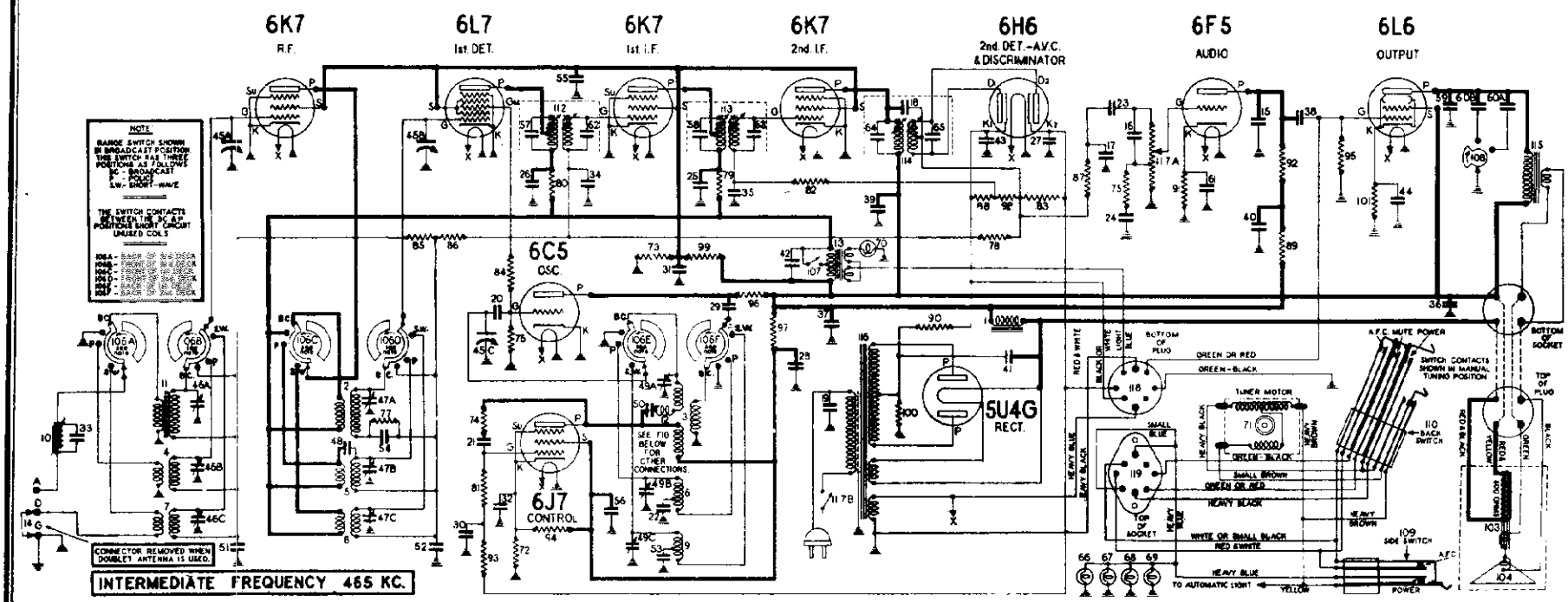

PHONOGRAPH CONNECTIONS

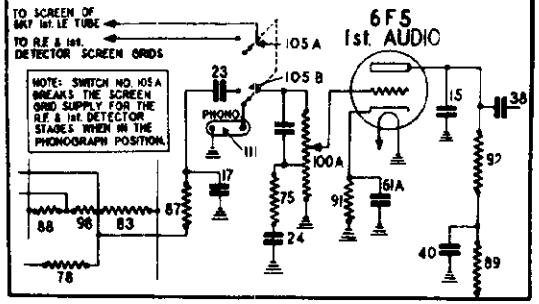

LIGHT RAY TUNER CONNECTIONS FOR UNIVERSAL 25 to 80 CYCLE

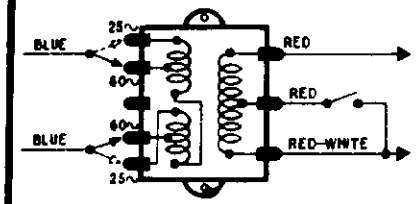

LIGHT RAY TUNER CONNECTIONS 50 to 60 CYCLES

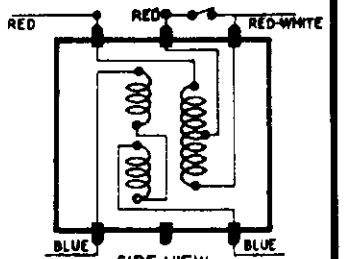

CONNECTIONS FOR UNIVERSAL TUNER MOTOR USED ON 25 TO 80 CYCLE MODELS.

25 to 42 CYCLE OPERATION 42 to 80 CYCLE OPERATION

CONNECT BLACK WIRE TO A AND BROWN WIRE TO B

CONNECT BLACK WIRE TO C AND BROWN WIRE TO D

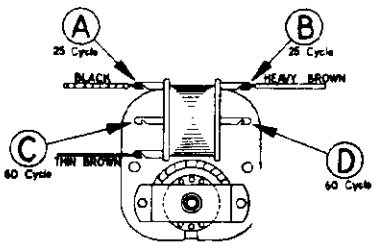

NOTE These sets are designed for 105 to 125 volt A.C. operation. To convert these sets for operation at other voltages, it is necessary to replace the power transformer with the Universal voltage transformer #10010112333 listed under "Replacement Parts" on Page 6. Sets already equipped with this transformer can be identified by the square metal cover on the top of the power transformer. Voltage taps are brought out, enabling operation at voltages of 90 to 140 and 180 to 260 volts.

MODEL 7216,
Ch. 100.184

NOTE: The frequency rating of your receiver is indicated on the label affixed to the rear of the chassis. The models marked "50 to 60 cycles" are already connected for 50 to 60 cycle operation, and cannot be operated at a lower frequency. THE MODELS MARKED "25 TO 80 CYCLES" ARE CONNECTED FOR OPERATION AT 25 CYCLES. For operation at other frequencies, the connections to the "Moto-Matic Tuner" motor and the "Light Ray" tuner transformer must be changed. Illustrations showing these connections are found on Page 8 of this manual.

In the event that you wish to convert a "50 to 60 cycle" model to a "25 to 80 cycle" model, it will be necessary to replace the power transformer, tuner motor and "Light Ray" tuner transformer. These parts are listed under "Replacement Parts" on Page 6.

NOTE: Certain types of metal tubes used in this set may be replaced with the equivalent glass tubes, provided the proper shield assembly is used. These types are listed in the table below:

Metal Tube	Equivalent Glass Tube	Tube Shield Assembly Required
6C5	6C5-G	10054112921
6F5	6F5-G	10054112921
6H6	6H6-G	10054112921
6K7	6K7-G	10054112921
6L7	6L7-G	10054112921

The 6J7 control tube cannot be replaced with the equivalent glass tube, so a metal tube is required when replacing this tube. The 6L6 must also be replaced with a metal tube. The 5U4-G tube never requires a shield.

SOCKET VOLTAGES

ANTENNA GROUNDED — DIAL TUNED TO 525 KC

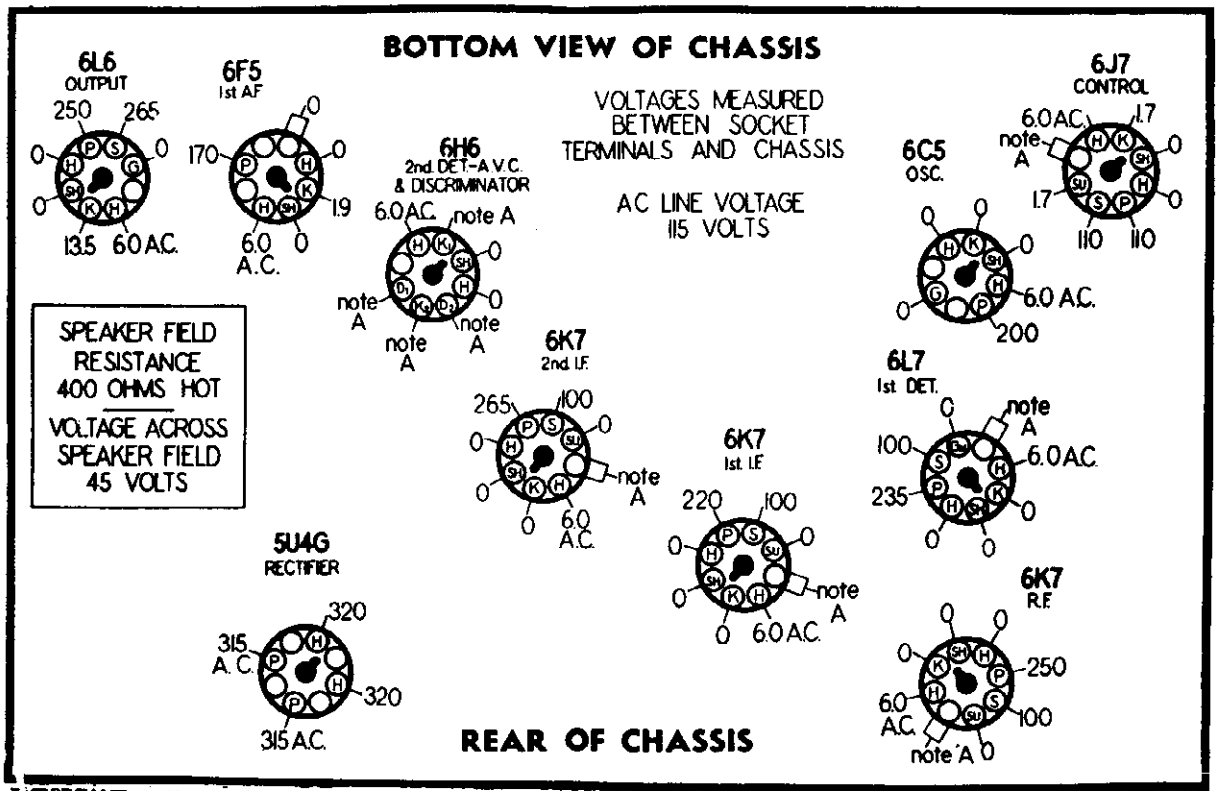

IMPORTANT: Use a high resistance voltmeter of 1000 ohms per volt.

NOTE A: The bias for the control grids of the 6L7 1st Det., 6K7 R.F., 6K7 1st I.F and 6K7 2nd I.F. tubes, also the voltage on the 6H6 diodes and cathodes and the control grid of the 6J7. is -3.6 volts measured across resistor number 100.

©John F. Rider

ELECTRICAL PARTS

PART NUMBER	SCHEMATIC LOCATION	DESCRIPTION
10014112097	1	Choke - Filter
10014112327	1	Choke - Filter (Special Wax Dipped)
10028111056	2	Coil - R. F. (broadcast)
10028111057	3	Coil - oscillator (broadcast)
10028111058	4	Coil - antenna (police)
10028111059	5	Coil - R. F. (police)
10028111060	6	Coil - oscillator (police)
10028111062	7	Coil - antenna (short-wave)
10028111063	8	Coil - R. F. (short-wave)
10028111064	9	Coil - oscillator (short-wave)
10031111079	10	Coil - wave trap
10028111103	11	Coil - antenna (broadcast)
10028111486	12	Coil - compensating inductance
10014112103	13	Coil - Light Ray transf. (60 cycle)
10014112204	13	Coil - Light Ray transf. (25 to 80 cycles
10014112328	13	Coil - Light Ray transf. (Special Wax Dip
1005465321	14	Connector - ground
10019837B5	15-16-17-18	Condenser - mica, 110 mmf.
10019839?6	19	Condenser - .012 mfd. - 1000 volt
10019865061	20	Condenser - mica, 51 mmfd.
10019853?4	21	Condenser - mica, 510 mmf.
10019854B7	22	Condenser - mica, 1370 mmfd.(3%)
10019881B9	23	Condenser - paper .05 mfd. 200 volt
10019880?0	24-25-26-27-28-29	Condenser - paper .01 mfd. 400 volt
10019880?6	30	Condenser - paper .1 mfd. 150 volt
10019881?1	31	Condenser - paper .1 mfd. 300 volt
10019881?3	32	Condenser - paper .25 mfd. 150 volt
10019882?5	33	Condenser - mica, 2100 mmfd.
10019885?4	34-35	Condenser - paper .05 mfd. 150 volt
10020111469	36-37	Condenser - electrolytic 16 mfd. 450 volt
10019111252	38	Condenser - paper .05 mfd. 400 volt
10019886?2	39-40	Condenser - paper .1 mfd. 400 volt
10020069?37	41	Condenser - electrolytic 30 mfd. 450 volt
10020110377	42-43-44	Condenser - electrolytic 10 mfd. 25 volt-
10020112113	42-43-44	Condenser - electrolytic 10 mfd. 50 volt-
10016111073	45A to 45C	Condenser - variable gang
10017111078	46A to 46C, 47A to 47C	Condenser - trimmer (3 section) for R. F. or antenna (all bands)
10019111080	48	Condenser - 3 mmfd. (wire)
10017111089	49A to 49C	Condenser - trimmer (3 section) (for oscillator) (all bands)
10017111115	50	Condenser - pad (single section)
10019111117	51-52	Condenser - low loss .05 mfd. 150 volt
10019111122	53	Condenser - mica, 3580 mmfd. (3%)
10019111123	54	Condenser - mica, 7750 mmfd. (5%)
10020112467	55-56	Condenser - electrolytic 4 mfd. 200 volt-
10020111298	55-56	Condenser - electrolytic 4 mfd. 200 volt-
10019111342	57-58	Condenser - mica, 200 mmfd. (5%)
1001989628	59	Condenser - paper .004 mfd. 750 volt
10019111364	60A to 60B	Condenser - shielded (Section A - .02 mfd. - 600 volt) (Section B - .03 mfd. - 600 volt)
10020110377	61	Condenser - electrolytic 10 mfd. 25 volt-
10020112113	61	Condenser - electrolytic 10 mfd. 50 volt-
10019111575	62-63-64-65	Condenser - mica 220 mmfd. (5%)
10049110629	66-67-68-69	Lamp - 6.3 volt - .25 amps.
10049110911	70	Lamp - Light Ray Tuner - 2.5 volt .5 amp.
10054111380	71	Motor - 6 volt - 60 cycles
10054112354	71	Motor - 6 volt, 25 to 80 cycles
10022112096	72	Resistor - wire wound 130 ohms 1/2 watt
10023110551	73	Resistor - carbon 15,000 ohm 1 watt
10023110599	74	Resistor - carbon 56,000 ohm 1/4 watt
10023110566	75	Resistor - carbon 33,000 ohm 1/4 watt
10023110552	76	Resistor - carbon 47,000 ohm 1/4 watt
10023110553	77	Resistor - carbon 220,000 1/4 watt
10023110554	78	Resistor - carbon 1 megohm 1/4 watt
10023110557	79-80	Resistor - carbon 4700 ohm 1/4 watt
10023110559	81-82-83	Resistor - carbon 470,000 ohm 1/4 watt
10023110560	84	Resistor - carbon 100 ohm 1/4 watt
10023110564	85-86-87-88	Resistor - carbon 100,000 ohm 1/4watt
10023110552	89	Resistor - carbon 47,000 ohm 1/4 watt
10023110557	90	Resistor - carbon 4700 ohm 1/4 watt
10023110567	91	Resistor - carbon 3900 ohm 1/4 watt
10023110564	92	Resistor - carbon 100,000 ohm 1/4 watt
10023110580	93	Resistor - carbon 3.3 megohm 1/4 watt
10023110575	94	Resistor - carbon 12,000 ohm 2 watt
10023110553	95	Resistor - carbon 220,000 ohm 1/4 watt
10023110592	96	Resistor - carbon, 22, 000 ohm 1 watt
10023110593	97	Resistor - carbon 18,000 ohm 3 watt
10023110594	98	Resistor - carbon 390,000 ohm 1/4 watt
10023110596	99	Resistor - carbon 15,000 ohm 3 watt
10022111515	100	Resistor - wire wound 27 ohm 1/2watt (5%)
10022111514	101	Resistor - wire wound 170 ohm 2 watt
10028111111	102	R. F. unit - coils, range switch, gang & trimmers - complete
10058281	103	Speaker - dynamic 12 inch
10058111490	104	Cone - voice coil assem. for 10058281spkr.
10037111077	106A - 106F	Switch - range
10058111218	107	Switch - for Light Ray Tuner
10038111381	108	Switch - tone control
10054111674	109	Switch - multi .contact(above tuning shaft)
10054112564	110	Switch - at rear
10033111336	112	Transformer - 1st I.F.
10034111675	113	Transformer - 2nd I.F.
10035111840	114	Transformer - I. F. discriminator
10013111361	115	Transformer - output
10013112326	115	Transformer - output (Special Wax Dipped)
10010111447	116	Transformer - power 115 volt - 60 cycle
10010112176	116	Transformer - power 115 volt - 25 cycle
10010112300	116	Transformer - power 100-240V.-50-133 cy.
10024111358	117A-117B	Volume Control - 1 meg.(with off-on sw.)

DIAL DRIVE AND MISCELLANEOUS PARTS

FOR COMPLETE LIST OF PARTS SEE MOTO-MATIC TUNER MANUAL)

10054111930	Band indicator - and frame assembly
10054112658	Belt - for range switch drive
10054111261	Bolt - chassis mtg. (#14 X 1-1/4)
10054111260	Bushing - rubber (for chassis mtg.)
10054111892	Bushing - hard rubber,Moto-Matic Tuner to chassis
10054111656	Clip - for pulley retaining
10054110782	Cord - for band ind.(2 ft. required) Per Ft.
10054111302	Cord - dial drive (8 ft. lengths)
10044112922	Escutcheon - for dial (with glass)
10044111227	Escutcheon - around push button opening
10054111865	Frame - dial, with scale
10039111496	Knob - tuning or volume
10039111497	Knob - range or tone
10054111197	Lever - for band indicator (on shaft)
10054111370	Link & Lever - for range switch drive (used in early production)
10054112833	Plug - for mechanism connecting (8 prong)
10054110498	Plug - speaker (4 prong)
10041111859	Pointer - for dial, with slider
10054111622	Pulley - dial cord drive
10054111630	Pulley & Bracket - for band indicator
10054112626	Pulley - on range switch shaft under chassis
1005484214	Retaining Ring - for dial drum shafts
1005488837	Retaining Spring - for retaining escut. to cab.
10040111222	Scale - dial
10054110716	Screw - band indicator pivot
10054111116	Screw - #5 X 5/8, Moto-Matic Tuner mtg.
1005485827	Set Screw - 8/32 square head
10054111403	Set Screw - 8/32 fluted head
10054112136	Set Screw - 8/32 slotted head
10054111373	Shaft - for range switch
10054112921	Shield - for use with glass tubes
1001885427	Socket - octal base
10018110501	Socket - 4 prong (for spkr.)
10054110627	Socket - dial lamp & automotic lamp
10054111008	Socket - Light Ray tuner lamp
10054112630	Socket & Bracket - for elect. conn. to mech.
10054111252	Spring - torsion for band indicator
10054111882	Spring - drive cord tension
10054110400	Spring - in flexible coupler
10054111678	Stud - lower left idler pulley
10054112676	Stud - for pulley mtg. (for top pulleys)
10054112005	Tabs - station call letters (45 sheets)
1005485068	Terminal Strip - G.D.A.
1005487508	Washer - embossed (for mtg.electrolytic cond.)
1005488748	Washer - (paper) for back of knobs
1005489027	Washers - spring for range shaft
10054111252	Washer - flat steel mtg. (15/16" O.D.)
10044112925	Name Label for Dial Escutcheon

MOTO-MATIC TUNER PARTS

(FOR COMPLETE LIST OF PARTS SEE MOTO-MATIC TUNER MANUAL)

10054112727	Moto-Matic Tuner - complete with all dials ready to mount on chassis
10054111350	Moto-Matic Tuner only, less dial frame assembly
10054112428	Button Body - for tuner
10054112545	Button Cap - for push button
10054111878	Button Window - celluloid for push button
10054112547	Button Reinforcing Disc - for push button
10054111633	Button Retaining Spring - inside push button
10054111577	Button Spring - in push button
10054111576	Button Washer - in push button
10054112563	Cam - bakelite - less operating arm
10054111146	Clutch - bushing, spring and gear
10054111137	Drive Ring - rubber
10054111380	Motor - 6 volt, 60 cycles
10054112354	Motor - 6 volt, 25 to 80 cycles
10054112736	Plug - with cable for tuner connection
10054111138	Spring - horseshoe shaped on clutch
10054111674	Switch Side - multiple contact(over tuning shaft
10054112564	Switch Back -(multiple contact)
10054112521	Tip - adjustable for key stop and kickout arm
10054112483	Wrench - for fluted head set screws #6
10054112484	Wrench - for fluted head set screws #8
10054117488	Spring Benders
10059112928	Instruction Book

©John F. Rider

MODEL 7217,
Ch. 100.185

ELECTRICAL SPECIFICATIONS

TUBE COMPLEMENT

1 6K7	R.F. Amp.	1 6H6	Discriminator-2nd Det.-A.V.C.
1 6L7	1st Det.	1 6C5	1st A.F. Amp.
1 6C5	Osc.	2 6V6	Power output
1 6K7	1st I.F. Amp.	1 5U4	Rectifier
1 6K7	2nd I.F. Amp.	1 6J7	Control

POWER SUPPLY

Model 7218 is supplied for either 25 or 60 cycle power supplies.	105-135 volts, - 50-60 cycle - 140 watts 105-135 volts, - 25 cycle - 140 watts

FREQUENCY RANGES		ALIGNMENT FREQUENCIES
Broadcast Band	525 to 1680 KC.	1500 KC.; 600 KC.
Police Band	1655 to 5600 KC.	5000 KC.
Short Wave Band	5540 to 18,100 KC.	16,000 KC.

INTERMEDIATE FREQUENCY.....465 KC

POWER OUTPUT

Type	Push-pull beam power
Undistorted	8 watts
Maximum	10 watts

LOUD SPEAKERS

Part No.	Size	Model	Field Res. (Hot)	Field Coil Voltage
10058282	12"	7217	400	50 volts

OPERATING FEATURES		CHASSIS FEATURES	
Fidelity Rge. (±6DB)	50-3000 cycle	R. F. stages	one
Tone control	4 position	Number of I.F. stages	two
Resonance indicator	"Light Ray" Indicator	Number of Cond. in gang	three
Volume stabilizer	A.V.C. system	Antenna	Conv. or Doublet
Tuning corrector	A.F.C. system	Wave trap	465 KC
"Moto-Matic" tuner	Push button control		

MECHANICAL SPECIFICATIONS

OPERATING CONTROLS		CONTROL OPERATION	
1. Upper Left Knob	Power Switch & Volume	Turning right	Power on, Vol. Incr.
2. Lower Left Knob	Tone Control	Turning right	Bass to Brilliant
3. Upper Right Knob	Station Selector	Spinner Tuning	
4. Lower Right Knob	Band Switch	Turning Right to Left	S.W.-P.-B.C.

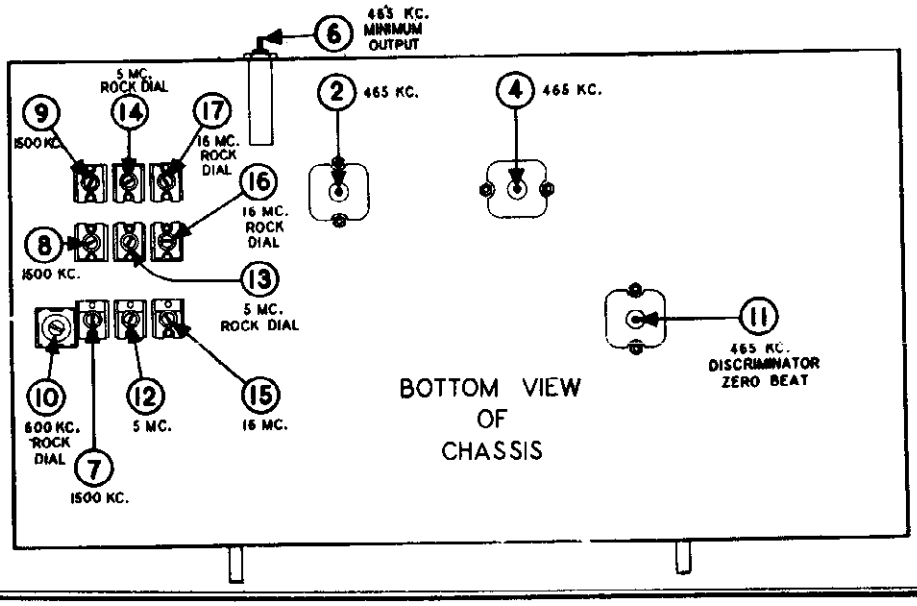

©John F. Rider

GENERAL INFORMATION & SERVICE HINTS

The 100.185 automatic tuning superheterodyne receiver has a frequency range extending from 525 KC. to 18,100 KC. The intermediate frequency is 465 KC.

The receiver is designed for use with either a conventional single wire type or a special noise reducing doublet. A 465 KC wave trap is connected in series with the antenna input to prevent code interference from stations operating in the vicinity of 465 KC.

A conventional superheterodyne circuit is used with the exception that maximum efficiency and stability are insured by the use of a separate oscillator and a specially constructed R.F. bridge. The bridge has the distinct advantages of being extremely compact and may be removed by the disconnecting of only a few leads. This means a great saving of time in the servicing of any part of the R.F. unit.

Since the R.F. and I.F. systems are typical of the superheterodyne it will not be necessary to discuss their function other than stating that the filtered automatic volume control voltage is applied to both the R.F. and 1st detector and the I.F. stages.

The second I.F. stage is followed by a new type of I.F. transformer in order that the A.F.C. voltage may be obtainable. The A.F.C. discriminator is coupled through the third (discriminator) I.F. transformer directly to the 2nd I.F. stage. The third (or discriminator) I.F. transformer secondary is connected directly to the diode plates of the 6H6 tube, which performs the triple function of a linear second detector, A.V.C. and discriminator. The audio component of the output of this tube is supplied to the volume control and amplified in the usual manner. The A.V.C. voltage is taken off at the same point of the diode load resistor network and supplied to the R. F. 1st dectector and 1st I.F. tubes while the A.V.C. voltage for the 2nd I.F. tube is taken off at another point on this same network.

The center tap of the secondary of the third I. F. transformer is connected to the high side of the primary of this transformer, through a coupling condenser. Since the ends of the secondary are connected directly to the diode plates of the 6H6 discriminator tube, this connection serves to introduce the proper voltages to each of the diode plates and thus satisfies the first conditions for an A.F.C. system.

The two rectified voltages appearing between each of the diode plates and its respective cathode are arranged to buck each other.

This is accomplished by connecting both diode load resistors to the center tap of the 3rd I.F. transformer. Thus when the cathode of one 6H6 is grounded a voltage will appear between the second cathode and ground if the frequency coming through the I.F. stage is not 465 KC. (indicating improperly tuned receiver). This voltage may be either positive or negative depending upon whether the frequency coming through the I.F. system is above or below 465 KC. This voltage is known as the control voltage and is filtered and applied to the grid of the control tube which in turn supplies either more or less lagging current to the tank circuit of the oscillator. The amount of lagging current flowing in the oscillator coil will determine the amount of apparent inductance added to the coil. The amount of inductance added or subtracted will in turn correct the frequency of oscillator as near as possible so that the frequency going through the I.F. system will be nearly 465 KC; thus giving a perfectly tuned program even though the station pointer may not be set to the exact frequency of the incoming signal.

Another important feature of this receiver is the "Moto-Matic" Electric Tuner, which automatically tunes the receiver to the desired station. Since this feature is extremely important from a service angle we have prepared a separate manual on the "Moto-Matic" Electric Tuner, which covers in detail the service procedure for this unit. This manual also contains a complete itemized and pictorial parts list of "Moto-Matic" tuner parts. Specify Part Number 10059112932 when ordering this booklet.

© John F. Rider

MODEL 7217,
Ch. 100.185

DUMMY ANT. IN SERIES WITH SIG. GEN.	CONNECTION OF SIG. GENERATOR OUTPUT TO RECEIVER	SIGNAL GENERATOR FREQUENCY	RANGE SWITCH POSITION	RECEIVER DIAL SETTING	TRIMMER NUMBER	TRIMMER DESCRIPTION	TYPE OF ADJUSTMENT
.1 MFD CONDENSER	CONTROL GRID OF 6L7 TUBE	465 KC.	BROADCAST (Counter-clockwise)	ANY POINT WHERE IT DOES NOT AFFECT THE SIGNAL	1-2	1ST I. F.	Adjust for maximum output. Then repeat adjustment.
					3-4	2ND I. F.	
					5	3RD I. F.	
400 OHM CARBON RESISTOR	ANTENNA TERMINAL	465 KC.	BROADCAST (Counter-clockwise)	ANY POINT WHERE IT DOES NOT AFFECT THE SIGNAL	6	WAVE TRAP	Adjust for minimum output using a strong generator signal.
400 OHM CARBON RESISTOR	ANTENNA TERMINAL	1500 KC.	BROADCAST (Counter-clockwise)	1500 KC.	7	BROADCAST OSCILLATOR (Shunt)	Adjust trimmer to bring in signal.
400 OHM CARBON RESISTOR	ANTENNA TERMINAL	1500 KC.	BROADCAST (Counter-clockwise)	TUNE TO 1500 KC. GENERATOR SIGNAL	8	BROADCAST DETECTOR	Adjust for maximum output.
					9	BROADCAST ANTENNA	
400 OHM CARBON RESISTOR	ANTENNA TERMINAL	600 KC.	BROADCAST (Counter-clockwise)	TUNE TO 600 KC. GENERATOR SIGNAL	10	BROADCAST OSCILLATOR (Series Pad)	Adjust for maximum output. Try to increase output by detuning trimmer and retuning receiver dial until maximum output is obtained.
THE A.F.C. MUST NOW BE ALIGNED. SEE "A.F.C. ALIGNMENT" ON THE NEXT PAGE FOR PROCEDURE							
400 OHM CARBON RESISTOR	ANTENNA TERMINAL	5 MC.	POLICE (Center)	5 MC.	12	POLICE OSCILLATOR (Shunt)	Adjust to bring in signal. Check to see if proper peak was obtained by tuning in image at approx. 4.1 MC. If image does not appear realign at 5 MC. with trimmer screw farther out. Recheck image.
400 OHM CARBON RESISTOR	ANTENNA TERMINAL	5 MC.	POLICE (Center)	TUNE TO 5 MC. GENERATOR SIGNAL	13	POLICE DETECTOR	Adjust for maximum output. Try to increase output by detuning trimmer and retuning receiver dial until maximum output is obtained.
					14	POLICE ANTENNA	
400 OHM CARBON RESISTOR	ANTENNA TERMINAL	16 MC.	SHORT-WAVE (Clockwise)	16 MC.	15	SHORT-WAVE OSCIALLATOR (Shunt)	Adjust to bring in signal. Check to see if proper peak was obtained by tuning in image at approx. 15.1 KC. If image does not appear realign at 16 KC. with trimmer screw farther out. Recheck image
400 OHM CARBON RESISTOR	ANTENNA TERMINAL	16 MC.	SHORT-WAVE (Clockwise)	16 MC.	16	SHORT-WAVE DETECTOR	Adjust for maximum output. Try to increase output by detuning trimmer and retuning receiver dial until maximum output is obtained.
					17	SHORT-WAVE ANTENNA	

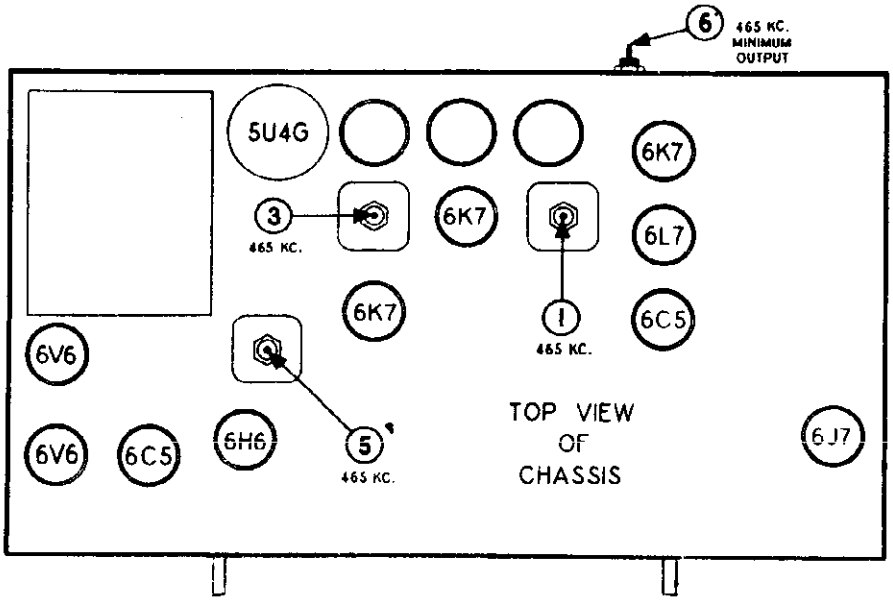

© John F. Rider

ALIGNMENT PROCEDURE

Before attempting to align the receiver check to see that the dial pointer is opposite the last scale division on the low frequency end of the dial when the gang condenser is in full mesh. Also when the gang condenser is in full mesh the stop pin on the left side of the tuner should be resting against the back stop. If after examination it is found that the gang is in full mesh and the stop pin is against the back stop, but the pointer is set to the wrong position, it will only be necessary to loosen the set screw on the dial drive gear at the left side of the mechanism. Then grasp the large drum on the same side of the tuner and turn it until the pointer is set correctly. Now retighten the set screw in the gear being careful to see that the gear is meshing properly.

On the other hand if the stop pin does not rest against the back stop with the gang condenser in full mesh, loosen the set screw on the gang condenser side of the flexible coupler. Then turn the tuning knob until the stop pin rests against the back stop on the tuner. Now tighten the set screw in the flexible coupler and proceed to set the pointer to its correct position by the method described in the previous paragraph.

Output meter connections.....Across voice coil leads

Output meter reading to indicate 0.5 watt output.....1.42 volts

Average sensitivity in microvolts for 0.5 watt output.....15 Microvolts

Generator ground connection.....Receiver Chassis

Connection of generator output lead.....See chart below

Generator modulation.....30%, 400 cycles

Position of volume control.....Maximum clockwise

HOW TO TEST THE A.F.C. SYSTEM

Connect the antenna and tune in a powerful local station. The setting of the tone control does not affect this test. Remove the cardboard that you placed between the A.F.C. contacts on the side switch when aligning. The A.F.C. is now off.

Next, detune the receiver dial until the music or speech becomes somewhat distorted. Now place a piece of smooth cardboard between the A.F.C. contacts on the side switch as shown in the illustration at the top of this page. This allows A.F.C. to function and it should improve the quality of the program.

Similarly detune the receiver dial in the opposite direction, with the cardboard removed from between the A.F.C. contacts (contacts closed). Then place the cardboard between the contacts again and check for improved quality of reception.

It will be noted that the correction for mistuning afforded by the A.F.C. system is not as marked at stations near the low frequency end of the dial scale as it is at the higher broadcast frequencies. This is characteristic of A.F.C. systems. However, if opening the A.F.C. contacts on the side switch (by inserting the piece of cardboard between the contacts) has no effect on the signal, or if it corrects for mistuning in one direction only, check the receiver as follows:

1. Re-align I.F. broadcast band, and discriminator, trimmers.
2. Check all the tubes in the receiver. Defective 6H6 and 6J7 tubes, also the R.F. 1st Detector, and I.F. tubes may cause poor A.F.C. action.
3. If the above procedure fails to remedy the defect in A.F.C. action, check the entire A.F.C. circuit itself for possible troubles.

© John F. Rider

MODEL 7217,
Ch. 100.185

A.F.C. ALIGNMENT

IMPORTANT:- The following adjustment must be made after every re-adjustment of the I.F. and broadcast band trimmers.

The A.F.C. discriminator should be adjusted as follows:

1. Be sure no buttons are depressed. Loosely couple the output of the signal generator to the 6L7 control grid by clipping the signal generator output lead to the insulation on the control grid wire, or connect to the grid clip through a 50 mmfd. mica condenser. BE SURE THE RANGE SWITCH IS IN THE BROADCAST (COUNTER-CLOCKWISE) POSITION.

2. Adjust the signal generator to resonance with I.F. system by tuning the signal generator dial for maximum output meter deflection. Be sure that the receiver dial is at some point where it has no tuning effect on the generator signal. Switch off the modulation.

3. With the signal generator connected and operating as in #2, connect antenna and manually tune in powerful local station in region of 1000 KC. or lower. (Avoid stations around 930 KC. which might beat with second harmonic of test oscillator.)

4. Adjust receiver tuning dial to obtain zero beat between the test oscillator and the incoming signal. (A very slight adjustment is all that is required. Be careful not to tune off signal.)

5. Refer to the illustration above. It is now necessary to open the A.F.C. contacts and allow the A.F.C. to function. This may be done by placing a piece of smooth cardboard between the A.F.C. contacts as shown in the figure. Be careful not to bend or malform the switch in any way.

6. Now, adjust the secondary of the discriminator transformer (Trimmer #11) to restore zero beat. NOTE: This trimmer should be adjusted to the point where the frequency of the beat note increases rapidly if the trimmer is turned in either direction. Other zero beat points may be found with the trimmer all the way in or all the way out, but these settings are incorrect.

If this operation has been performed correctly, the opening or closing of the A.F.C. contacts on the side switch by inserting or removing the cardboard, should not change the beat note by more than a slight rumble.

NOTE:- Where a second signal generator is available step #3 above may be varied as follows:

Connect second signal generator (set at about 1000 KC.) to antenna and tune in its signal. Switch off modulation and proceed as before.

This method is somewhat preferable to the first as the zero beat setting is more easily determined when both signals are unmodulated.

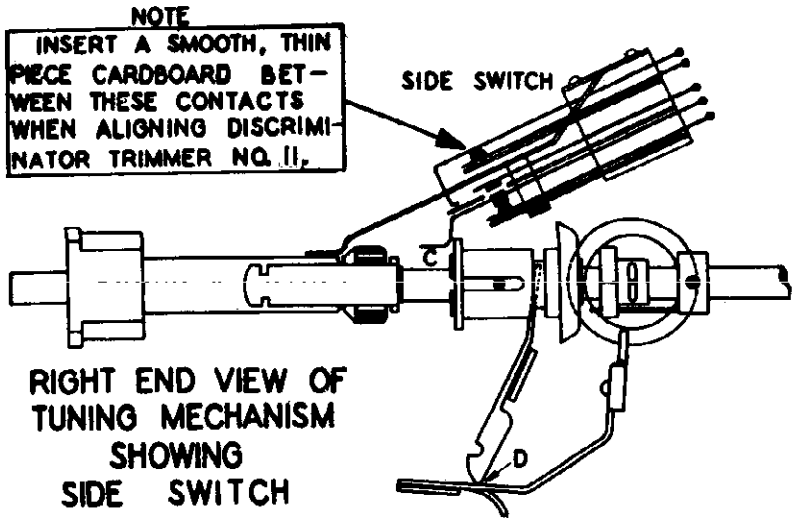

RIGHT END VIEW OF TUNING MECHANISM SHOWING SIDE SWITCH

©John F. Rider

NOTE: The frequency rating of your receiver is indicated on the label affixed to the rear of the chassis. The models marked "50 to 60 cycles" are already connected for 50 to 60 cycle operation, and cannot be operated at a lower frequency. THE MODELS MARKED "25 TO 80 CYCLES" ARE CONNECTED FOR OPERATION AT 25 CYCLES. For operation at other frequencies, the connections to the "Moto-Matic Tuner" motor and the "Light Ray" tuner transformer must be changed. Illustrations showing these connections are found on Page 8 of this manual.

In the event that you wish to convert a "50 to 60 cycle" model to a "25 to 80 cycle" model, it will be necessary to replace the power transformer, tuner motor and "Light Ray" tuner transformer. These parts are listed under "Replacement Parts" on Page 6.

NOTE: Certain types of metal tubes used in this set may be replaced with the equivalent glass tubes, provided the proper shield assembly is used. These types are listed in the table below:

Metal Tube	Equivalent Glass Tube	Tube Shield Assembly Required
6C5	6C5-G	10054112921
6H6	6H6-G	10054112921
6K7	6K7-G	10054112921
6L7	6L7-G	10054112921

The 6J7 control tube cannot be replaced by a glass tube, so a metal tube must be used for replacement purposes. The 6V6 tubes may be replaced with 6V6-G glass tubes, and these tubes require no shield. The 5U4-G rectifier tube is never shielded.

SOCKET VOLTAGES

ANTENNA GROUNDED — DIAL TUNED TO 525 KC.

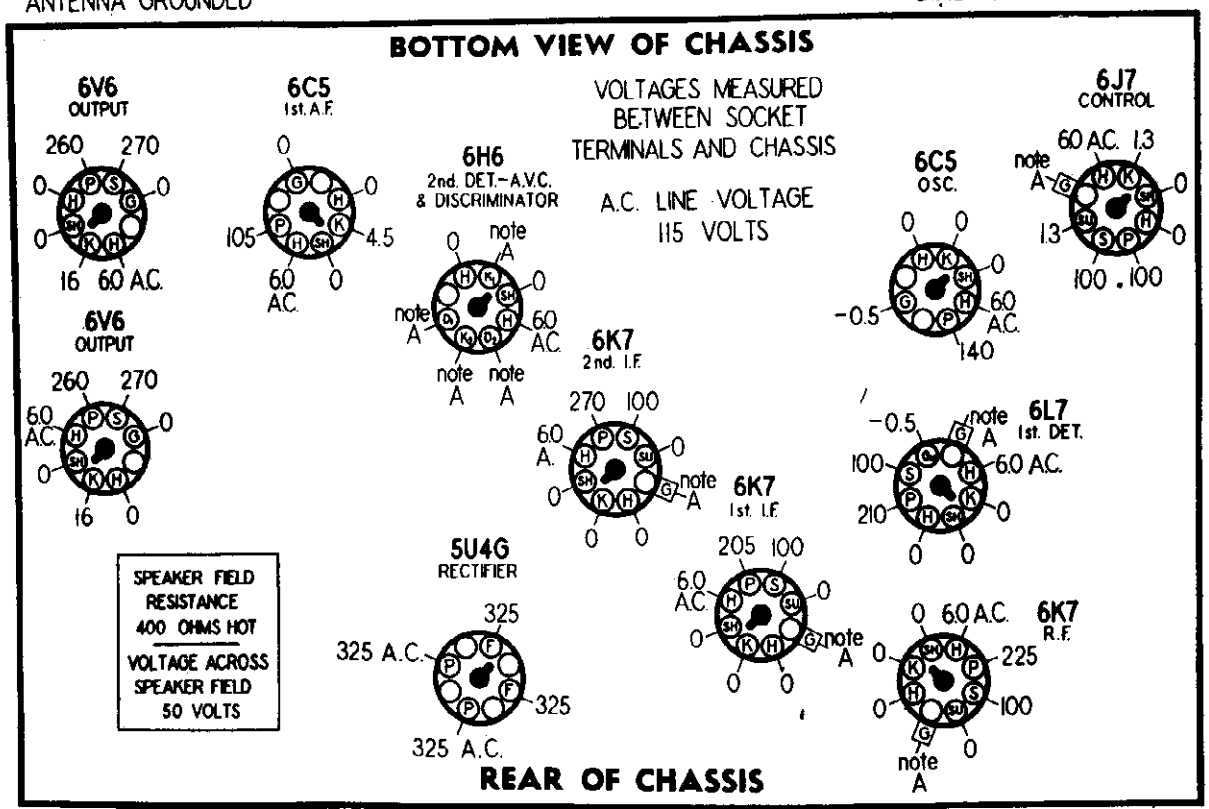

IMPORTANT: Use a high resistance voltmeter of 1000 ohms per volt.

NOTE A: The bias for the control grids of the 6L7 1st Det., 6K7 R.F., 6K7 1st I.F. and 6K7 2nd 1.F. tubes, also the voltage on the 6H6 diodes and cathodes and the control grid of the 6J7, is -3.6 volts measured across resistor number 101.

©John F. Rider

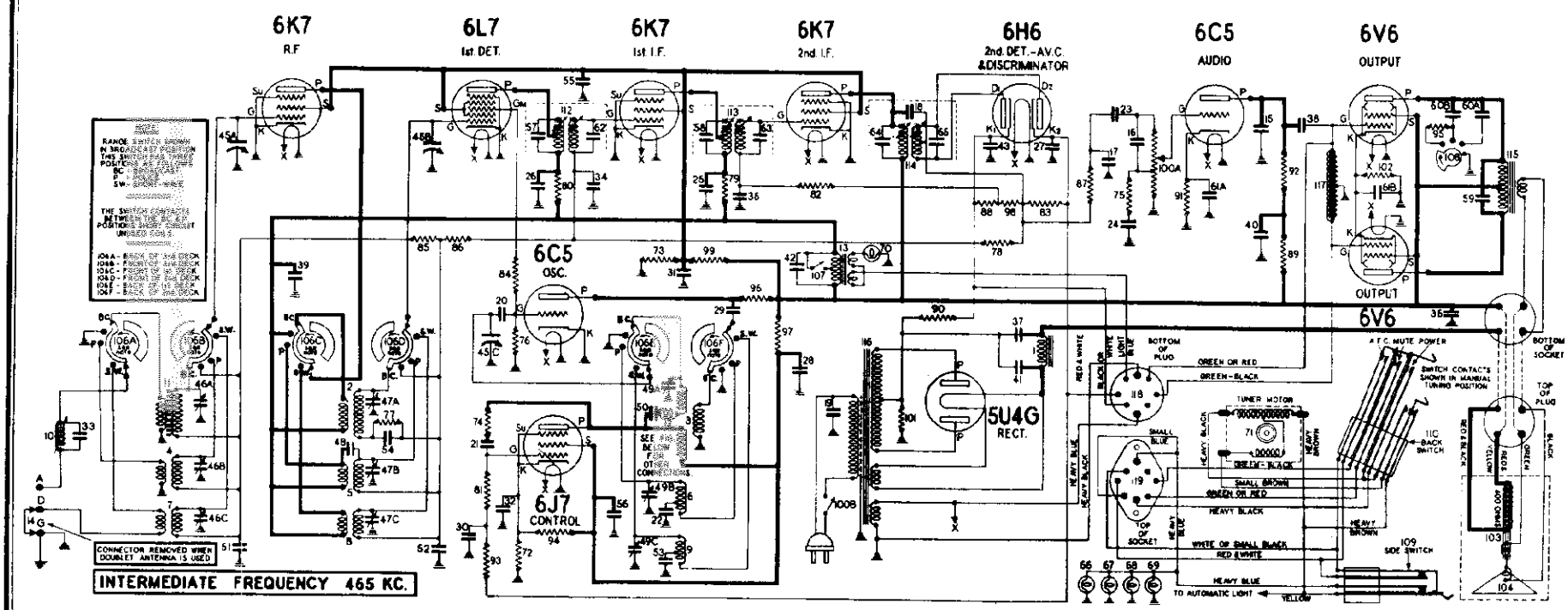

PHONOGRAPH CONNECTIONS

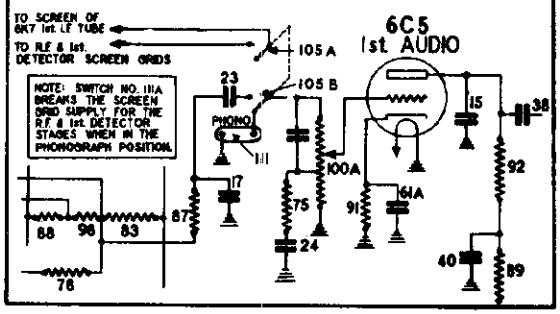

LIGHT RAY TUNER CONNECTIONS FOR UNIVERSAL 25 to 80 CYCLE

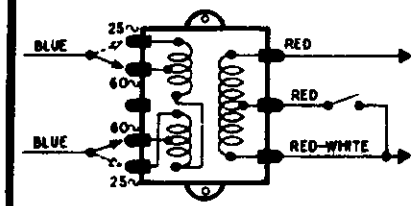

LIGHT RAY TUNER CONNECTIONS 50 to 60 CYCLES

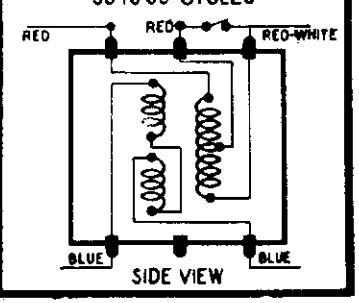

CONNECTIONS FOR UNIVERSAL TUNER MOTOR USED ON 25 TO 80 CYCLE MODELS.

25 to 42 CYCLE OPERATION — CONNECT BLACK WIRE TO A AND BROWN WIRE TO B

42 to 80 CYCLE OPERATION — CONNECT BLACK WIRE TO C AND BROWN WIRE TO D

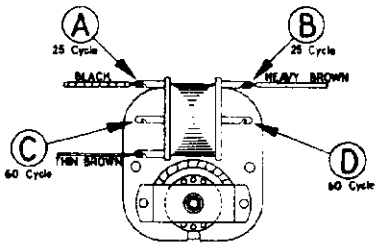

NOTE These sets are designed for 105 to 125 volt A.C. operation. To convert these sets for operation at other voltages, it is necessary to replace the power transformer with the Universal voltage transformer #10010112333 listed under "Replacement Parts" on Page 6. Sets already equipped with this transformer can be identified by the square metal cover on the top of the power transformer. Voltage taps are brought out, enabling operation at voltages of 90 to 140 and 180 to 260 volts.

© John F. Rider

MODEL 7217,
Ch. 100.185

ELECTRICAL PARTS

PART NUMBER	SCHEMATIC LOCATION	DESCRIPTION
10014111330	-----1-----	Choke - filter
10014112330		Choke - filter (Special Wax Dipped)
10028111056	-----2-----	Coil - R. F. (broadcast)
10028111057	-----3-----	Coil - oscillator (broadcast)
10028111058	-----4-----	Coil - antenna (police)
10028111059	-----5-----	Coil - R. F. (police)
10028111060	-----6-----	Coil - oscillator (police)
10028111062	-----7-----	Coil - antenna (short wave)
10028111063	-----8-----	Coil - R. F. (short wave)
10028111064	-----9-----	Coil - oscillator (short wave)
10031111079	-----10----	Coil - wave trap
10028111103	-----11----	Coil - antenna (broadcast)
10028111488	-----12----	Coil - compensating inductance
10014112103		Coil - light ray tuner (60 cycle)
10014112204	-----13----	Coil - light ray tuner (25 to 60 cycle)
10014112328		Coil - light ray tuner
1005485321	-----14----	Connector - ground
1001983783	15-16-17-18	Condenser - mica, 110 mmf.
1001983978	-----19----	Condenser - shielded .012 mfd. 1000 volt
1001985061	-----20----	Condenser - mica, 51 mmfd.
1001985394	-----21----	Condenser - mica, 510 mmf.
1001985467	-----22----	Condenser - mica, 1370 mmfd. (3%)
1001986028	-----23----	Condenser - paper .02 mfd. 400 volt
1001986029	-----24----	Condenser - paper .004 mfd. 400 volt
1001986030	-25-26-27-28-29	Condenser - paper .01 mfd. 400 volt
1001986046	-----30----	Condenser - paper .1 mfd. 150 volt
1001986191	-----31----	Condenser - paper .1 mfd. 300 volt
1001986193	-----32----	Condenser - paper .25 mfd. 150 volt
1001986205	-----33----	Condenser - mica, 2100 mmfd.
1001986534	--34-35----	Condenser - paper .05 mfd. 150 volt
1001986680	--36-37----	Condenser - electrolytic 8 mfd. 450 volt
1001986682	--38-39-40-	Condenser - paper .1 mfd. 400 volt
1002089937	-----41----	Condenser - electrolytic 30 mfd. 450 volt
10020110377	--42-43----	Condenser - electrolytic 10 mfd. 25 volt
10020112113		Condenser - electrolytic 10 mfd. 50 volt
10018111073	45A to 45C	Condenser - variable gang
10017111078	46A to 46C 47A to 47C	Condenser - trimmer (3 section) for R. F. or antenna (all bands)
10019111080	-----48----	Condenser - 3 mmfd. (wire)
10017111069	49A to 49C	Condenser - trimmer (3 section) for oscillator (all bands)
0017111115	-----50----	Condenser - pad (single section)
10019111117	--51-52----	Condenser - low loss .05 mfd. 150 volt
10019111122	-----53----	Condenser - mica, 3580 mmfd. (3%)
10019111123	-----54----	Condenser - mica, 7750 mmfd. (5%)
10020111298	--55-56----	Condenser - electrolytic 4 mfd. 200 volt
10020112467		Condenser - electrolytic 4 mfd. 200 volt
10019111342	--57-58----	Condenser - mica, 200 mmfd. (5%)
10019111346	-----59----	Condenser - mica, 2000 mmfd. 1000 volt
10019111384	-60A - 60B-	Condenser - shielded (Section A - .02 mfd. - 600 volt) (Section B - .03 mfd. - 600 volt)
10020111468	-61A - 61B-	Condenser - elect. dual 10 mfd. 25 volt
10019111575	62-63-64-65	Condenser - mica, 220 mmfd. (5%)
10049110629	66-67-68-69	Lamp - 6.3 V. .25 amps.
10049110911	-----70----	Lamp - light ray tuner 2.5 volt .5 amp.
10054111380	-----71----	Motor - 6 volt - 60 cycles
1005412384		Motor - 6 volt - 25 to 60 cycles
1002085460	-----72----	Resistor - wire wound 150 ohms 1/2 watt
10023110551	-----73----	Resistor - carbon 15,000 ohm 1 watt
10023110552	-74-75-76--	Resistor - carbon 47,000 ohm 1/4 watt
10023110553	-----77----	Resistor - carbon 220,000 ohm 1/4 watt
10023110554	-----78----	Resistor - carbon 1 megohm 1/4 watt
10023110557	--79-80----	Resistor - carbon 4,700 ohm 1/4 watt
10023110559	-81-82-83--	Resistor - carbon 470,000 ohm 1/4 watt
10023110560	-----84----	Resistor - carbon 100 ohm 1/4 watt
10023110564	85-86-87-88	Resistor - carbon 100,000 ohm ½ watt (20%
10023110565	-----89----	Resistor - carbon 22,000 ohm 1/4 watt
10023110573	-----90----	Resistor - carbon 2,200 ohm 1/4 watt
10023110577	-----91----	Resistor - carbon 3,300 ohm 1/4 watt
10023110578	-----92----	Resistor - carbon 68,000 ohm 1/4 watt
10023110580	-----93----	Resistor - carbon 3.3 megohm 1/4 watt
10023110582	-----94----	Resistor - carbon 12,000 ohm 1 watt
10023110583	-----95----	Resistor - carbon 4,700 ohm 1/2 watt
10023110592	-----96----	Resistor - carbon 22,000 ohm 1 watt
10023110593	-----97----	Resistor - carbon 18,000 ohm 3 watt
10023110594	-----98----	Resistor - carbon 390,000 ohm 1/4 watt
10023110595	-----99----	Resistor - carbon 12,000 ohm 3 watt
10024111358	100A - 100B	Resistor - volume control (1 meg.) (with off-on switch)
10022111515	----101----	Resistor - wire wound 27 ohm 1/2 watt (5%)
10022111638	----102----	Resistor - wire wound 200 ohm 2 watt (5%)
10028111111		R. F. unit - coils, range switch, gang and trimmers complete
10058282	----103----	Speaker - dynamic 12 inch
10057111490	----104----	Cone - voice coil assembly for 10058282 speaker
10037111077	106A - 106F	Switch - range
10038111218	----107----	Switch - for Light Ray Tuner
10038111351	----108----	Switch - tone control
10054111674	----109----	Switch - multiple contact (above tuning shaft)
10054112564	----110----	Switch - at rear
10033111336	----112----	Transformer - 1st I.F.
10034111675	----113----	Transformer - 2nd I.F.
10035111340	----114----	Transformer - I.F. discriminator
10013111334	----115----	Transformer - output
10013112329		Transformer - output (Special wax)
10010111447		Transformer - power 115 volt - 60 cycle
10010112176	----116----	Transformer - power 115 volt - 25 cycle
10010112300		Transformer - power 100-240V.-50-133 cy.
10012111351	----117----	Transformer - impedance coupler
10012112331		Transformer - impedance coupler (Spec. Wax
10054112633	----118----	Plug - for mechanism connecting (8 prong)
10054112630	----119----	Socket & Bracket - for electrical connections to tuner unit

DIAL DRIVE AND MISCELLANEOUS PARTS

(FOR COMPLETE LIST OF PARTS SEE MOTO-MATIC TUNER MANUAL)

10054111930	Band indicator - and frame assembly
10054112656	Belt - for range switch drive
10054111261	Bolt - chassis mtg. (#14 X 1-1/4)
10054111260	Bushing - rubber (for chassis mtg.)
10054111892	Bushing - hard rubber, Moto-Matic Tuner to chass
10054111658	Clip - for pulley retaining
10054110782	Cord - for band ind. (2 ft. required) ---- Per Ft.
10054111302	Cord - dial drive (5 ft. lengths)
10044112922	Escutcheon - for dial (with glass)
10044111227	Escutcheon - around push button opening
10054111865	Frame - dial, with scale
10039111496	Knob - tuning or volume
10039111497	Knob - range or tone
10054111197	Lever - for band indicator (on shaft)
10054111370	Link & Lever - for range switch drive (used in early production)
10054112633	Plug - for mechanism connecting (8 prong)
10054110496	Plug - speaker (4 prong)
10041111859	Pointer - for dial, with slider
10054111622	Pulley - dial cord drive
10054111630	Pulley & Bracket - for band indicator
10054112628	Pulley - on range switch shaft under chassis
1005484214	Retaining Ring - for dial drum shafts
1005499837	Retaining Spring - for retaining escut. to cab.
10040111222	Scale - dial
10054110716	Screw - band indicator pivot
10054111116	Screw - #5 X 5/8, Moto-Matic Tuner
1005485827	Set Screw - 8/32 square head
10054111403	Set Screw - 8/32 fluted head
10054112138	Set Screw - 8/32 slotted head
10054111373	Shaft - for range switch
10054112921	Shield - for use with glass tubes
1001585427	Socket - octal base
10018110601	Socket - 4 prong (for spkr.)
10054110627	Socket - dial lamp & automatic lamp
10054111008	Socket - Light Ray tuner lamp
10054112630	Socket & Bracket - for elect. conn. to mech.
10054111232	Spring - torsion for band indicator
10054111862	Spring - drive cord tension
10054112490	Spring - in flexible coupler
10054111676	Stud - lower left idler pulley
10054112867	Stud - for pulley mtg. (for top pulleys)
10054112006	Tabs - station call letters (6 sheets)
1005485066	Terminal Strip - O.D.A.
1005467568	Washer - embossed (for mtg. electrolytic cond.)
1005489746	Washer - (paper) for back of knobs
1005489027	Washers - spring for range shaft
10054111262	Washer - flat steel mtg. (15/16" O.D.)
10044112925	Name Label for Dial Escutcheon

MOTO-MATIC TUNER PARTS

(FOR COMPLETE LIST OF PARTS SEE MOTO-MATIC TUNER MANUAL)

10054112727	Moto-Matic Tuner - complete with all dials ready to mount on chassis
10054111350	Moto-Matic Tuner only, less dial frame assem.
10054112428	Button Body - for tuner
10054112545	Button Cap - for push button
10054111878	Button Window - celluloid for push button
10054112547	Button Reinforcing Disc - for push button
10054111633	Button Retaining Spring - inside push button
10054111577	Button Spring - in push button
10054111576	Button Washer - in push button
10054112563	Cam - bakelite - less operating arm
10054111148	Clutch - bushing, spring and gear
10054111137	Drive Ring - rubber
10054111380	Motor - 6 volt, 60 cycles
10054112354	Motor - 6 volt, 25 to 60 cycles
10054112736	Plug - with cable for tuner connection
10054111138	Spring - horseshoe shaped on clutch
10054111674	Switch Side - mult. contact (above tuning shaft)
10054112564	Switch Back - (multiple contact)
10054112521	Tip - adjustable for key stop and kickout arm
10054112483	Wrench - for fluted head set screws #8
10054112484	Wrench - for fluted head set screws #8
10054117468	Spring Benders
10059112927	Instruction Book

©John F. Rider

MODELS 7218, 7222,
Ch. 100.186

ELECTRICAL SPECIFICATIONS

TUBE COMPLEMENT

1 6K7	R.F. Amp.	1 6U6	2nd Det.-A.V.C.
1 6L7	1st Det.	1 6C5	1st A.F. Amp.
1 6C5	Osc.	1 6C5	2nd A.F. Amp.
1 6K7	1st I.F. Amp.	2 6V6	Power output
1 6K7	2nd I.F. Amp.	2 5W4	Rectifier
1 6H6	Discriminator	1 6J7	Control

POWER SUPPLY

Model 7218 is supplied for either 25 or 60 cycle power supplies.

105-135 volts, - 50-60 cycle - 140 watts
105-135 volts, - 25 cycle - 140 watts

FREQUENCY RANGES		ALIGNMENT FREQUENCIES
Broadcast Band	525 to 1680 KC.	1500 KC.; 600 KC.
Police Band	1655 to 5600 KC.	5000 KC.
Short Wave Band	5540 to 18,100 KC.	16,000 KC.

INTERMEDIATE FREQUENCY.....465 KC

POWER OUTPUT

Type.....Push-pull beam power
Undistorted.....10 watts
Maximum.....16 watts

LOUD SPEAKERS

Part No.	Size	Model	Field Res. (Hot)	Field Coil Voltage
10058288	12"	7218	400	55 volts

OPERATING FEATURES		CHASSIS FEATURES	
Fidelity Rge. (±10DB)	30-7000 cycle	R. F. stages	one
Tone control	4 position	Number of I.F. stages	two
Resonance indicator	"Light Ray" Indicator	Number of Cond. in gang	three
Volume stabilizer	A.V.C. system	Antenna	Conv. or Doublet
Tuning corrector	A.F.C. system	Wave trap	465 KC
"Moto-Matic" tuner	Push button control	Combined selectivity & tone control	

MECHANICAL SPECIFICATIONS

OPERATING CONTROLS		CONTROL OPERATION	
1. Upper Left Knob	Power Switch & Volume	Turning right	Power on, Vol.Incr.
2. Lower Left Knob	Tone & Selectivity Control	Turning right	Bass to Brilliant
3. Upper Right Knob	Station Selector	Spinner Tuning	
4. Lower Right Knob	Band Switch	Turning Left to Right	S.W.-P-B.C.

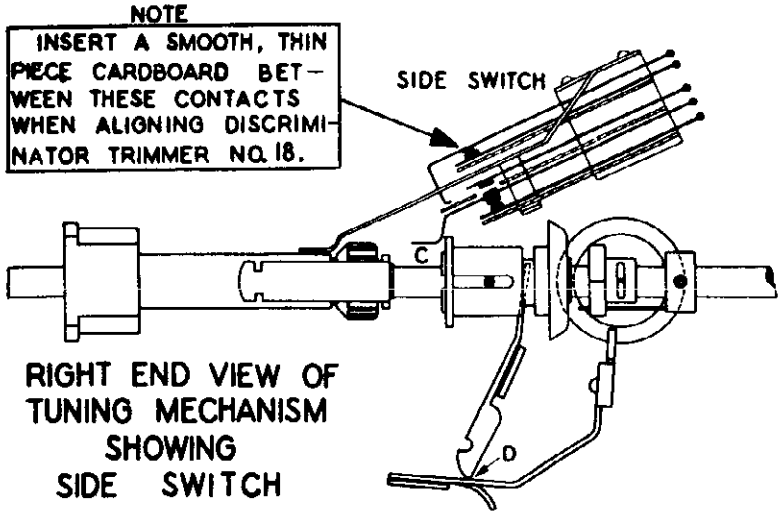

RIGHT END VIEW OF TUNING MECHANISM SHOWING SIDE SWITCH

© John F. Rider

MODELS 7218, 7222,
Ch. 100.186

The 100.186 automatic tuning superheterodyne receiver has a frequency range extending from 525 KC. to 18,100 KC. The intermediate frequency is 465 KC.

The receiver is designed for use with either a conventional single wire type or a special noise reducing doublet. A 465 KC. wave trap is connected in series with the antenna input to prevent code interference from stations operating in the vicinity of 465 KC.

A conventional superheterodyne circuit is used with the exception that maximum efficiency and stability are insured by the use of a separate oscillator and a specially constructed R.F. bridge. The bridge has the distinct advantages of being extremely compact and may be removed by the disconnecting of only a few leads. This means a great saving of time in the servicing of any part of the R.F. unit.

Since the R.F. and I.F. systems are typical of the superheterodyne it will not be necessary to discuss their function other than stating that the filtered automatic volume control voltage is applied to both the R.F. and 1st detector and 1st I.F. stages.

A selectivity control is combined with the tone control switch. When this switch is in the maximum clockwise (brilliant) position, the response curve of the I.F. amplifier is broadened.

The second I.F. stage is followed by a new arrangement of I.F. transformers in order that the A.F.C. system may be introduced. The A.F.C. discriminator is coupled through the third (discriminator) I.F. transformer directly to the 2nd I.F. stage. The third I.F. transformer also contains a special "pick-up" coil which is inductively coupled to the primary of that transformer. This pick-up coil introduces the intermediate frequency voltage in the 4th I.F. transformer which in turn is applied to the diode plates of a 6H6 linear 2nd detector and A.V.C. tube. The audio component is now supplied to the volume control and amplified in the usual manner.

Returning again to the third (or discriminator) I.F. transformer we find that the ends of its secondary are connected to the diode plates of a 6H6 discriminator tube. The center tap of the secondary of the third I.F. is connected to the high side of the primary of the 3rd I.F. through a coupling condenser. This connection serves to introduce the proper voltages to each of the diode plates of the discriminator tube and thus satisfies the first conditions for an A.F.C. system.

The two rectified voltages appearing between each of the diode plates and its respective cathode are arranged to buck each other.

This is accomplished by connecting both diode load resistors to the center tap of the 3rd I.F. transformer. Thus when the cathode of one 6H6 is grounded a voltage will appear between the second cathode and ground if the frequency coming through the I.F. stage is not 465 KC. (indicating improperly tuned receiver). This voltage may be either positive or negative depending upon whether the frequency coming through the I.F. system is above or below 465 KC. This voltage is known as the control voltage and is filtered and applied to the grid of the control tube which in turn supplies either more or less lagging current to the tank circuit of the oscillator. The amount of lagging current flowing in the oscillator coil will determine the amount of apparent inductance added to the coil. The amount of inductance added or subtracted will in turn correct the frequency of oscillator as near as possible so that the frequency going through the I.F. system will be nearly 465 KC; thus giving a perfectly tuned program even though the station pointer may not be set to the exact frequency of the incoming signal.

Another important feature of this receiver is the "Moto-Matic" Electric Tuner, which automatically tunes the receiver to the desired station. Since this feature is extremely important from a service angle we have prepared a separate manual on the "Moto-Matic" Electric Tuner, which covers in detail the service procedure for this unit. This manual also contains a complete itemized and pictorial parts list of "Moto-Matic" tuner parts. Specify Part Number 10059112932 when ordering this booklet.

© John F. Rider

MODELS 7218, 7222,
Ch. 100.186

Certain types of metal tubes used in this set may be replaced with the equivalent glass tubes, provided the proper shield assembly is used. These types are listed in the table below:

Metal Tube	Equivalent Glass Tube	Tube Shield Assembly Required
6C5	6C5-G	10054112921
6H6	6H6-G	10054112921
6K7	6K7-G	10054112921
6L7	6L7-G	10054112921

The 6J7 control tube cannot be replaced by a glass tube, so a metal tube must be used for replacement purposes. The 6V6 tubes may be replaced with 6V6-G glass tubes, and these tubes require no shield. 5W4-G glass tubes may be substituted for the 5W4 metal tubes, and no shield is required.

The frequency rating of your receiver is indicated on the label affixed to the rear of the chassis. The models marked "50 to 60 cycles" are already connected for 50 to 60 cycle operation, and cannot be operated at a lower frequency. THE MODELS MARKED "25 TO 80 CYCLES" ARE CONNECTED FOR OPERATION AT 25 CYCLES. For operation at other frequencies, the connections to the "Moto-Matic Tuner" motor and the "Light Ray" tuner transformer must be changed. Illustrations showing these connections are found on Page 8 of this manual.

In the event that you wish to convert a "50 to 60 cycle" model to a "25 to 80 cycle" model, it will be necessary to replace the power transformer, tuner motor and "Light Ray" tuner transformer. These parts are listed under "Replacement Parts" on Page 6.

SOCKET VOLTAGES

ANTENNA GROUNDED — DIAL TUNED TO 525 K.C.

BOTTOM VIEW OF CHASSIS

VOLTAGES MEASURED BETWEEN SOCKET TERMINALS AND CHASSIS

A.C. LINE VOLTAGE 115 VOLTS

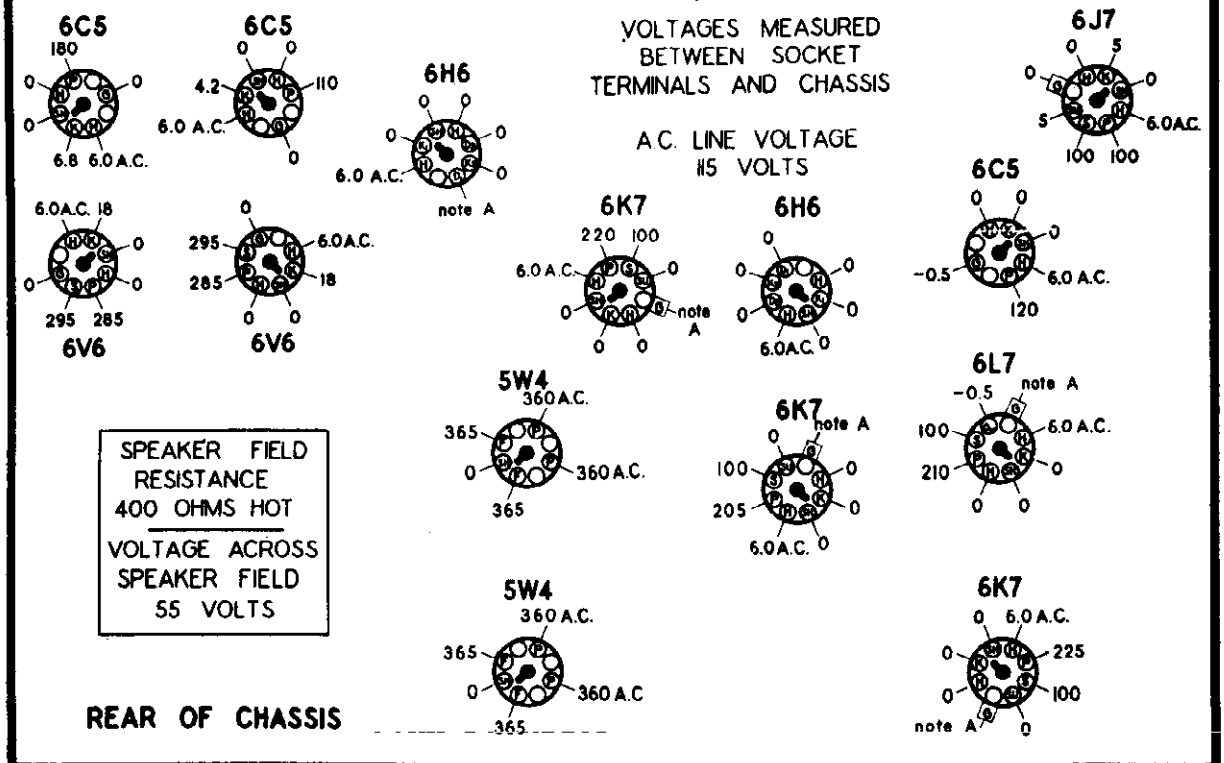

IMPORTANT: Use a high resistance voltmeter of 1000 ohms per volt.

NOTE A: The bias for the control grids of the 6L7 1st Det., 6K7 R.F., 6K7 1st I.F. and 6K7 2nd I.F. tubes, also the voltage on the 6H6 A.V.C. diode, is -4 volts measured across resistor number 76.

©John F. Rider

MODELS 7218, 7222,
Ch. 100.186

A.F.C. ALIGNMENT

IMPORTANT:- The following adjustment must be made after every re-adjustment of the I.F. and broadcast band trimmers.

The A.F.C. discriminator should be adjusted as follows:

1. Be sure no buttons are depressed. Loosely couple the output of the signal generator to the 6L7 control grid by clipping the signal generator output lead to the insulation on the control grid wire, or connect to the grid clip through a 50 mmfd. mica condenser. BE SURE THE RANGE SWITCH IS IN THE BROADCAST (COUNTER-CLOCKWISE) POSITION.

2. Adjust the signal generator to resonance with I.F. system by tuning the signal generator dial for maximum output meter deflection. Be sure that the receiver dial is at some point where it has no tuning effect on the generator signal. Switch off the modulation.

3. With the signal generator connected and operating as in #2, connect antenna and manually tune in powerful local station in region of 1000 KC. or lower. (Avoid stations around 930 KC. which might beat with second harmonic of test oscillator.)

4. Adjust receiver tuning dial to obtain zero beat between the test oscillator and the incoming signal. (A very slight adjustment is all that is required. Be careful not to tune off signal.)

5. Refer to the illustration above. It is now necessary to open the A.F.C. contacts and allow the A.F.C. to function. This may be done by placing a piece of smooth cardboard between the A.F.C. contacts as shown in the figure. Be careful not to bend or malform the switch in any way.

6. Now, adjust the secondary of the discriminator transformer (Trimmer #18) to restore zero beat. NOTE: This trimmer should be adjusted to the point where the frequency of the beat note increases rapidly if the trimmer is turned in either direction. Other zero beat points may be found with the trimmer all the way in or all the way out, but these settings are incorrect.

If this operation has been performed correctly, the opening or closing of the A.F.C. contacts on the side switch by inserting or removing the cardboard, should not change the beat note by more than a slight rumble.

NOTE:- Where a second signal generator is available step #3 above may be varied as follows:

Connect second signal generator (set at about 1000 KC.) to antenna and tune in its signal. Switch off modulation and proceed as before.

This method is somewhat preferable to the first as the zero beat setting is more easily determined when both signals are unmodulated.

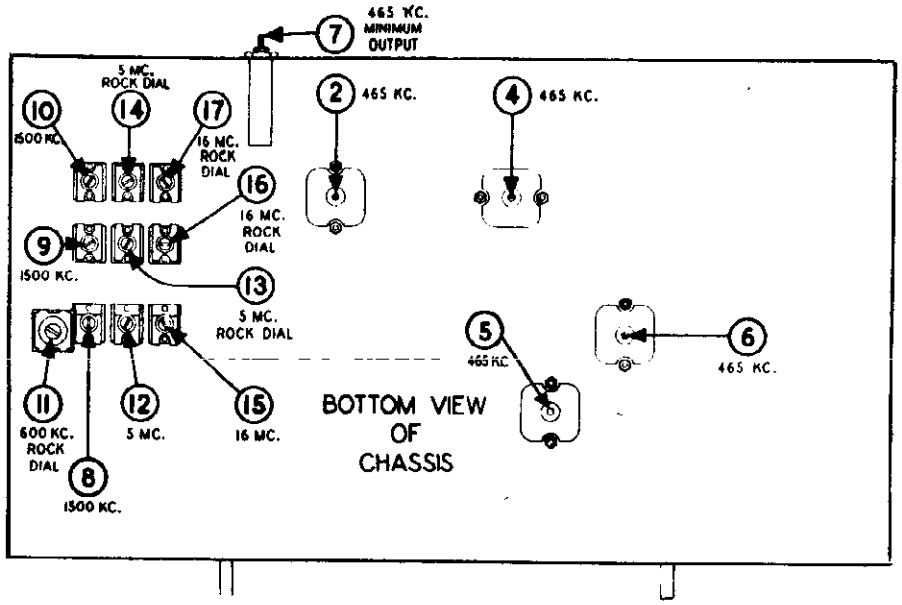

©John F. Rider

MODELS 7218, 7222,
Ch. 100.186

HOW TO TEST THE A.F.C. SYSTEM

Connect the antenna and tune in a powerful local station. BE SURE THE TONE SWITCH IS IN THE MAXIMUM COUNTER-CLOCKWISE POSITION. Remove the cardboard that you placed between the A.F.C. contacts on the side switch when aligning. The A.F.C. is now off.

Next, detune the receiver dial until the music or speech becomes somewhat distorted. Now place a piece of smooth cardboard between the A.F.C. contacts on the side switch as shown in the illustration at the top of this page. This allows A.F.C. to function and it should improve the quality of the program.

Similarly detune the receiver dial in the opposite direction, with the cardboard removed from between the A.F.C. contacts (contacts closed). Then place the cardboard between the contacts again and check for improved quality of reception.

It will be noted that the correction for mistuning afforded by the A.F.C. system is not as marked at stations near the low frequency end of the dial scale as it is at the higher broadcast frequencies. This is characteristic of A.F.C. systems. However, if opening the A.F.C. contacts on the side switch (by inserting the piece of cardboard between the contacts) has no effect on the signal, or if it corrects for mistuning in one direction only, check the receiver as follows:

1. Re-align I.F. broadcast band, and discriminator trimmers.
2. Check all the tubes in the receiver. Defective 6H6 and 6J7 tubes, also the R.F. 1st Detector, and I.F. tubes may cause poor A.F.C. action.
3. If the above procedure fails to remedy the defect in A.F.C. action, check the entire A.F.C. circuit itself for possible troubles.

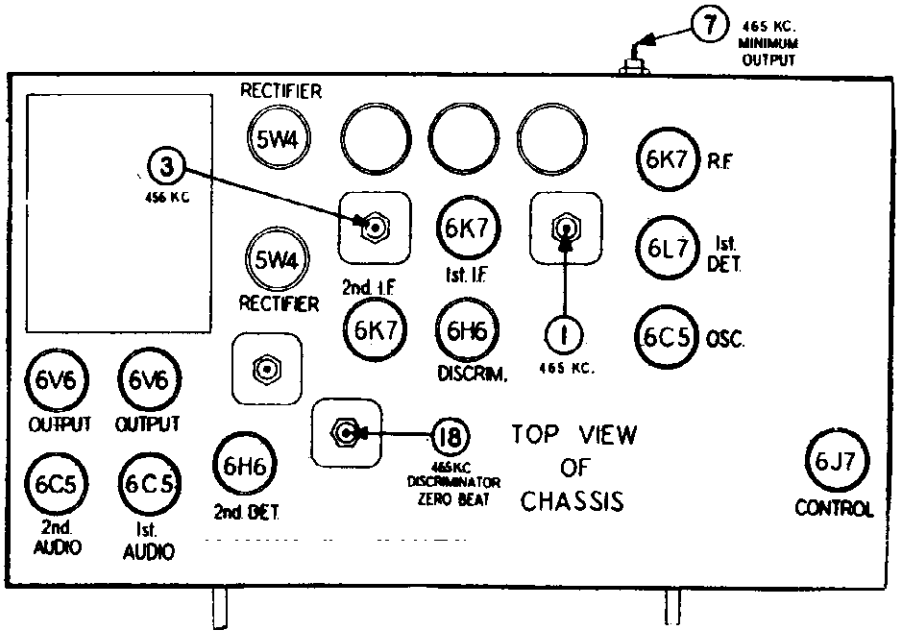

©John F. Rider

MODELS 7218, 7222,
Ch. 100.186

ALIGNMENT PROCEDURE

Before attempting to align the receiver check to see that the dial pointer is opposite the last scale division on the low frequency end of the dial when the gang condenser is in full mesh. Also when the gang condenser is in full mesh the stop pin on the left side of the tuner should be resting against the back stop. If after examination it is found that the gang is in full mesh and the stop pin is against the back stop, but the pointer is set to the wrong position, it will only be necessary to loosen the set screw on the dial drive gear at the left side of the mechanism. Then grasp the large drum on the same side of the tuner and turn it until the pointer is set correctly. Now retighten the set screw in the gear being careful to see that the gear is meshing properly.

On the other hand if the stop pin does not rest against the back stop with the gang condenser in full mesh, loosen the set screw on the gang condenser side of the flexible coupler. Then turn the tuning knob until the stop pin rests against the back stop on the tuner. Now tighten the set screw in the flexible coupler and proceed to set the pointer to its correct position by the method described in the previous paragraph.

Output meter connections.....Across voice coil leads
Output meter reading to indicate 0.5 watt output.....1.0 volts
Average sensitivity in microvolts for 0.5 watt output.....15 Microvolts
Generator ground connection.....Receiver Chassis
Connection of generator output lead.....See chart below
Generator modulation.....30%, 400 cycles
Position of volume control.....Maximum clockwise

-IMPORTANT-

1.-TONE CONTROL MUST BE IN SHARP POSITION (COUNTER-CLOCKWISE)
2.-ALLOW RECEIVER TO WARM UP 15 MINUTES BEFORE ALIGNING.
3.-SEE THAT NO BUTTONS ARE DEPRESSED WHEN ALIGNING RECEIVER.

TYPE OF DUMMY ANT. IN SERIES WITH SIG.GEN.	POINT TO CONNECT OUTPUT OF SIGNAL GENERATOR.	SIGNAL GENERATOR FREQUENCY	RANGE SWITCH POSITION	RECEIVER DIAL SETTING	TRIMMER NUMBER (see diag. next page)	TRIMMER DESCRIPTION	TYPE OF ADJUSTMENT
.1 MFD CONDENSER	CONTROL GRID OF 6U7 TUBE	465 KC.	BROADCAST (Counter-clockwise)	ANY POINT WHERE IT DOES NOT AFFECT THE SIGNAL	1-2	1ST I.F.	Adjust for maximum output. Then repeat adjustment. The tone control switch must be in the SHARP-POSITION (Counter-clockwise),or the alignment will be incorrect.
					3-4	2ND I.F.	
					5	3RD I.F.	
					6	4TH I.F.	
400 OHM CARBON RESISTOR	ANTENNA TERMINAL	465 KC.	BROADCAST (Counter-clockwise)	ANY POINT WHERE IT DOES NOT AFFECT THE SIGNAL	7	WAVE TRAP	Adjust for minimum output using a strong generator signal.
400 OHM CARBON RESISTOR	ANTENNA TERMINAL	1500 KC.	BROADCAST (Counter-clockwise)	1500 KC.	8	BROADCAST OSCILLATOR (Shunt)	Adjust trimmer to bring in signal.
400 OHM CARBON RESISTOR	ANTENNA TERMINAL	1500 KC.	BROADCAST (Counter-clockwise)	TUNE TO 1500 KC. GENERATOR SIGNAL	9	BROADCAST DETECTOR	Adjust for maximum output.
					10	BROADCAST ANTENNA	
400 OHM CARBON RESISTOR	ANTENNA TERMINAL	600 KC.	BROADCAST (Counter-clockwise)	TUNE TO 600 KC. GENERATOR SIGNAL	11	BROADCAST OSCILLATOR (Series Pad)	Adjust for maximum output. Try to increase output by detuning trimmer and retuning receiver dial until maximum output is obtained.
400 OHM CARBON RESISTOR	ANTENNA TERMINAL	5 MC.	POLICE (Center)	5 MC.	12	POLICE OSCILLATOR (Shunt)	Adjust to bring in signal. Check to see if proper peak was obtained by tuning in image at approx. 4.1 MC. If image does not appear realign at 5 MC. with trimmer screw farther out. Recheck image.
400 OHM CARBON RESISTOR	ANTENNA TERMINAL	5 MC.	POLICE (Center)	TUNE TO 5 MC. GENERATOR SIGNAL	13	POLICE DETECTOR	Adjust for maximum output. Try to increase output by detuning trimmer and retuning receiver dial until maximum output is obtained.
					14	POLICE ANTENNA	
400 OHM CARBON RESISTOR	ANTENNA TERMINAL	16 MC.	SHORT-WAVE (Clockwise)	16 MC.	15	SHORT-WAVE OSCILLATOR (Shunt)	Adjust to bring in signal. Check to see if proper peak was obtained by tuning in image at approx. 15.1 MC. If image does not appear realign at 16 MC. with trimmer screw farther out. Recheck image.
400 OHM CARBON RESISTOR	ANTENNA TERMINAL	16 MC.	SHORT-WAVE (Clockwise)	16 MC.	16	SHORT-WAVE DETECTOR	Adjust for maximum output. Try to increase output by detuning trimmer and retuning receiver dial until maximum output is obtained.
					17	SHORT-WAVE ANTENNA	

THE AFC MUST NOW BE ALIGNED.
SEE "A.F.C. ALIGNMENT" ON THE NEXT PAGE FOR PROCEDURE

© John F. Rider

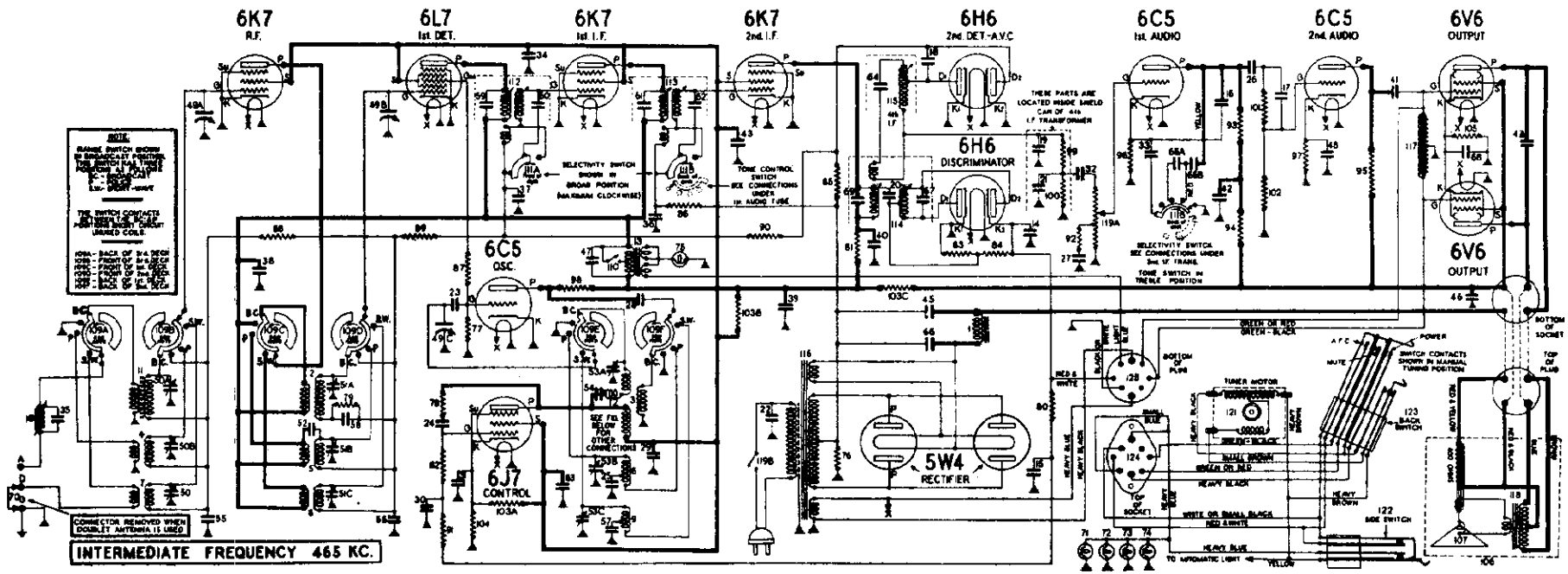

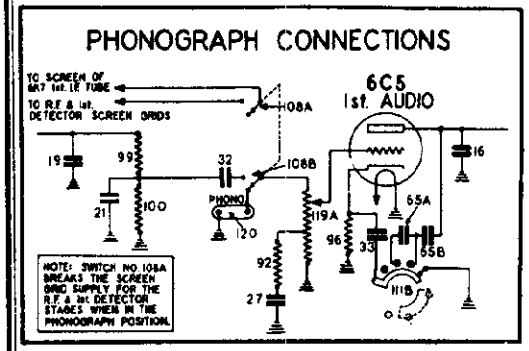

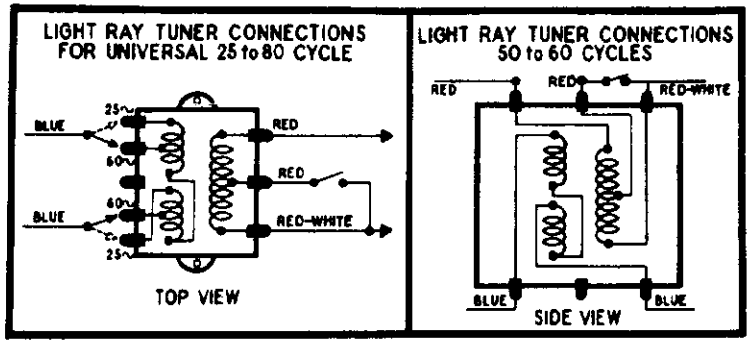

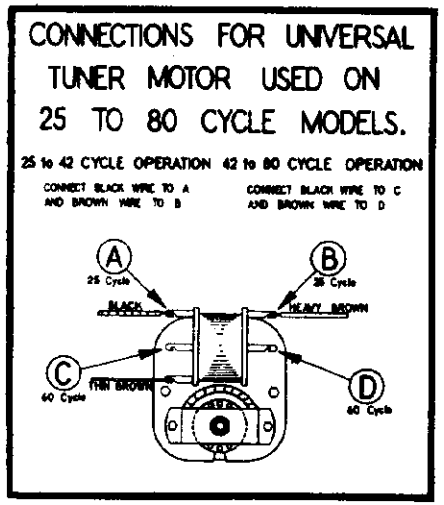

NOTE These sets are designed for 105 to 125 volt A.C. operation. To convert these sets for operation at other voltages, it is necessary to replace the power transformer with the Universal voltage transformer #10010112333 listed under "Replacement Parts" on Page 6. Sets already equipped with this transformer can be identified by the square metal cover on the top of the power transformer. Voltage taps are brought out, enabling operation at voltages of 90 to 140 and 180 to 260 volts.

ELECTRICAL PARTS

PART NUMBER	SCHEMATIC LOCATION	DESCRIPTION
10014111330	1	Choke - filter
10014112330		Choke - filter (Special Wax Dipped)
10028111056	2	Coil - R. F. Broadcast
10028111057	3	Coil - oscillator broadcast
10028111058	4	Coil - antenna (police)
10028111059	5	Coil - R. F. (police)
10028111060	6	Coil - oscillator (police)
10028111062	7	Coil - antenna (short wave)
10028111063	8	Coil - R. F. (short wave)
10028111064	9	Coil - oscillator (short wave)
10031111079	10	Coil - wave trap
10028111103	11	Coil - antenna broadcast
10028111488	12	Coil - compensating inductance
10014112103	13	Coil - Light Ray Tuner (60 cycle)
10014112204		Coil - Light Ray Tuner (25 to 60 cycle)
10014112328		Coil - Light Ray Tuner (Special Wax Dipped)
1001983539	14-15-16-17-18	Condenser - mica 250 mmf.
1001983783	19-20-21	Condenser - mica, 110 mmf.
1001983976	22	Condenser - shielded .012 mfd. 1000 volt
1001985061	23	Condenser - mica .51 mmfd.
1001985294	24	Condenser - mica 510 mmf.
1001985467	25	Condenser - mica, 1370 mmfd. (3%)
1001986026	26	Condenser - paper .02 mfd. 400 volt
1001986030	27-28-29	Condenser - paper .01 mfd. 400 volt
1001986046	30-31	Condenser - paper .1 mfd. 150 volt
1001988189	32-33	Condenser - paper .05 mfd. 200 volt
1001988191	34	Condenser - paper .1 mfd. 300 volt
1001988205	35	Condenser - mica, 2100 mmfd.
1001988534	36-37	Condenser - paper .05 mfd. 150 volt
1001988682	38-39-40-41-42	Condenser - paper .1 mfd. 400 volt
1001989532	43	Condenser - paper .25 mfd. 200 volt
1001989820	44	Condenser - paper .004 mfd. 750 volt
1002069937	45-46	Condenser - electrolytic 30 mfd. 450 volt
10020110377	47-48	Condenser - electrolytic 10 mfd. 25 volt
10020112480		Condenser - electrolytic 10 mfd. 25 volt
10016111073	49A to C	Condenser - variable gang
10017111078	50A to C, 51A to C	Condenser - trimmer (3 section) for R. F. or Ant.)
10019111080	52	Condenser - wire 1.8 mmfd.
10017111089	53A to C	Condenser - trimmer (3 section) for osc.
10017111115	54	Condenser - padder
10019111117	55-56	Condenser - low loss .05 mfd. 150 volt
10019111122	57	Condenser - mica, 3580 mmfd. (3%)
10019111123	58	Condenser - mica, 7750 mmfd.
10019111342	59-60-61-62-63-64	Condenser - mica, 200 mmfd. (5%)
10019111387	65A - 65B	Condenser - shielded dual (Section A - .01 mfd. 600 volt) (Section B - .02 mfd. 600 volt)
10020111469	66	Condenser - electrolytic 16 mfd. 450 volt
10020111652	67	Condenser - electrolytic 12 mfd. 150 volt
10020112476		Condenser - electrolytic 12 mfd. 150 volt
10020111689	68	Condenser - electrolytic 20 mfd. 25 volt
10020112481		Condenser - electrolytic 20 mfd. 25 volt
10019111910	69	Condenser - mica, 150 mmfd. (5%)
1005485321	70	Connector - ground doublet
10049110629	71-72-73-74	Lamp - dial 6 to 8 volt .25 amp.
10049110911	75	Lamp - Light Ray Tuner 2.5 volt .5 amp.
1002289769	76	Resistor - wire wound 40 ohm 1 watt
10023110552	77-78	Resistor - carbon 47,000 ohm 1/4 watt
10023110553	79	Resistor - carbon 220,000 ohm 1/4 watt
10023110554	80	Resistor - carbon 1 megohm 1/4 watt
10023110557	81	Resistor - carbon 4700 ohm 1/4 watt
10023110559	82-83-84-85-86	Resistor - carbon 470,000 ohm 1/4 watt
10023110560	87	Resistor - carbon 100 ohm 1/4 watt
10023110564	88-89-90	Resistor - carbon 100,000 ohm 1/4 watt
10023110580	91	Resistor - carbon 3.3 megohm 1/4 watt
10023110585	92-93-94-95	Resistor - carbon 33,000 ohm 1/4 watt
10023110586	96-97	Resistor - carbon 2,200 ohm 1/4 watt
10023110592	98	Resistor - carbon 22,000 ohm 1/4 watt
10023110597	99-100	Resistor - carbon 100,000 ohm 1/4 watt
10023110598	101-102	Resistor - carbon 330,000 ohm ½ W. (10%)
10021111417	103A - 103C	Resistor - bleeder: Section A 5600 ohms, Section B 5600 ohms, Section C 1500 ohms
10022111665	104	Resistor - wire wound 280 ohms ½ W. (5%)
10022111666	105	Resistor - wire wound 250 ohms 2 watt
10028111111		R. F. unit - coils, range switch, gang and trimmers - complete
10058280	106	Speaker - dynamic 12 inch
10058115006		Speaker - dynamic 10 inch
10058115007		Speaker - P.M. dynamic 8 inch
10057112109	107	Cone - voice coil assem. for 10058280 spkr.
10057112575		Cone - voice coil for 100115006 speaker
10057112673		Cone - voice coil assy. (100115007 spkr.)
10037111077	109A to F	Switch - range
10038111218	110	Switch - Light Ray Tuner
10038111401	111A - 111B	Switch - tone & selectivity control
10033111425	112-113	Transformer - 1st or 2nd I.F.
10034111426	114	Transformer - discriminator I.F.
10035111427	115	Transformer - 4th I.F.
10010111393	116	Transformer - power 115 volt 60 cycle
10010112183		Transformer - power 117 volt 25 cycle
10010112333		Transformer - power 100-240V.-50-133 cy.
10014111331	117	Transformer - impedance coupler
10014112331		Transformer - impedance coupler (Spec. Wax
10013111398	118	Transformer - output for 10058280 spkr.)
10013112573		Transformer - output for 10058115006 spkr.
10024111358	119A - 119B	Vol. Cont. - 1 meg. (with-off-on switch)
10054112354	121	Motor - 6 volt, 25 to 60 cycles
10054111380		Motor - 6 volt, 60 cycles
10054111674	122	Switch - mult. contact (above tuning sft.)
10054112564	123	Switch - at rear
10054112630	124	Socket & Brkt. - for elect. conn. to tuning unit
10054112633	125	Plug - for tuner unit conn. (8 prong)

DIAL DRIVE AND MISCELLANEOUS PARTS

(FOR COMPLETE LIST OF PARTS SEE MOTO-MATIC TUNER MANUAL)

PART NUMBER	DESCRIPTION
10054111930	Band indicator - and frame assembly
10054112258	Belt - for range switch drive
10054111231	Bolt - chassis mtg. (#14 X 1-1/4)
10054111260	Bushing - rubber (for chassis mtg.)
10051111692	Bushing - hard rubber, Moto-Matic Tuner to chass
10054111358	Clip - for pulley retaining
10056110782	Cord - for band ind. (2 ft. required)----Per Ft.
10054111302	Cord - dial drive (3 ft. lengths)
10044112922	Escutcheon - for dial (with glass)
10044111227	Escutcheon - around push button opening
10054111635	Frame - dial, with scale
10039111496	Knob - tuning or volume
10039111497	Knob - range or tone
10054111197	Lever - for band indicator (on shaft)
10054111370	Link & Lever - for range switch drive (used in early production)
10054112635	Plug - for mechanism connecting (8 prong)
10054110496	Plug - speaker (4 prong)
10041111859	Pointer - for dial, with slider
10054111622	Pulley - dial cord drive
10054111630	Pulley & Bracket - for band indicator
10054112328	Pulley - on range switch shaft under chassis
1005484214	Retaining Ring - for dial drum shafts
1005489637	Retaining Spring - for retaining escut. to cab.
10040111222	Scale - dial
10054110718	Screw - band indicator pivot
10054111116	Screw - #5 X 5/8, Moto-Matic Tuner
1005485827	Set Screw - 8/32 square head
10054111403	Set Screw - 8/32 fluted head
10054112138	Set Screw - 8/32 slotted head
10054111575	Shaft - for range switch
10054112921	Shield - for use with glass tubes

PART NUMBER	DESCRIPTION
1001085427	Socket - octal base
10018110501	Socket - 4 prong (for spkr.)
10054110627	Socket - dial lamp & automatic lamp
10054111038	Socket - Light Ray tuner lamp
10054112030	Socket & Bracket - for elect. conn. to mech.
10054111272	Spring - torsion for band indicator
10054111862	Spring - drive cord tension
10054112190	Spring - in flexible coupler
10054111678	Stud - lower left idler pulley
10054112367	Stud - for pulley mtg. (for top pulleys)
10054112005	Tabs - station call letters (6 sheets)
1005485030	Terminal Strip - G.D.A.
1005487508	Washer - embossed (for mtg. electrolytic cond.)
1005189749	Washer - (paper) for back of knobs
1005489027	Washers - spring for range shaft
10054111272	Washer - flat steel atr. (15/16" O.D.)

MOTO-MATIC TUNER PARTS

(FOR COMPLETE LIST OF PARTS SEE MOTO-MATIC TUNER MANUAL)

PART NUMBER	DESCRIPTION
10054112727	Moto-Matic Tuner - complete with all dials ready to mount on chassis
10054111250	Moto-Matic Tuner only, less dial frame assembly
10054112128	Button Body - for tuner
10054112565	Button Cap - for push button
10054111878	Button Window - celluloid for push button
10054112547	Button Reinforcing Disc - for push button
10054111633	Button Retaining Spring - inside push button
10054111577	Button Spring - in push button
10054111576	Button Washer - in push button
10054112563	Cam - bakelite - less operating arm
10054111146	Clutch - bushing, spring and gear
10054111137	Drive Ring - rubber
10054111380	Motor - 6 volt, 60 cycles
10054112354	Motor - 6 volt, 25 to 60 cycles
10054112736	Plug - with cable for tuner connection
10054111138	Spring - horseshoe shaped on clutch
10054111374	Switch Side - mul. contact (above tuning shaft)
10054112564	Switch Pack - (multiple contact)
10054112521	Tip - adjustable for key stop and kickout arm
10054112483	Wrench - for fluted head set screws #6
10054112484	Wrench - for fluted head set screws #8
10054117468	Spring Benders
10059112920	Instruction Book

©John F. Rider

MODEL 8021,
Ch. 132.868

ALIGNMENT PROCEDURE

PRELIMINARY:

Output meter connection	Across speaker voice coil
Output meter reading to indicate 50 MW (Standard Output)	.4 volt
Generator modulation	30 % 400 cycles
Position of volume control	Fully clockwise
Set dial pointer	Last mark left end dial, variable condenser closed
Set band switch	To left for AM alignment; to right for FM alignment

AM ALIGNMENT

Position of Variable	Generator Frequency	Dummy Antenna	Generator Connection High Side	Generator Connection Ground Lead	Adjust Trimmers In Order Shown For Max. Output	Trimmer Function
Open	455 Kc	.05 Mfd.	Mixer Grid	Chassis	(1) (2) (3) (4)	I. F.
1400 Kc	1400 Kc		*Test loop	Test loop	(11)	Oscillator
1400 Kc	1400 Kc		*Test loop	Test loop	(12)	Antenna
**600 Kc	600 Kc		*Test loop	Test loop	Check point	Antenna

*Connect generator lead to a Standard Hazeltine Test Loop, Model 1150, placed two feet from the set loop, or three turns of wire about six inches in diameter, placed about one foot from the set loop. Or the generator can be connected with the high side lead to the green lead on the set loop and the ground lead to the chassis.

**With a generator signal of 600 Kc, tune the set to the point where maximum output is obtained, which should be approximately 600 Kc on the dial. Adjust antenna section plates of variable for maximum output.

The alignment procedure should be repeated in the original order for greatest accuracy.

Always keep the output from the signal generator at its lowest possible value to make the A. V. C. action of the receiver ineffective.

FM ALIGNMENT

DETECTOR AND IF ALIGNMENT USING SIGNAL GENERATOR AND OSCILLOSCOPE

1.—Connect FM Generator, High Side, to grid of 2nd IF tube through .005 mfd. dummy.

2.—Set generator frequency to 10.7 Mc modulated either 60 cycles or 400 cycles, 250 Kc sweep (125 Kc deviation).

3.—Connect vertical input of scope across volume control of receiver (Grounded terminal to chassis, ungrounded terminal to high side of the control).

4.—Set scope switch for internal syncronization and set horizontal oscillator to 2 X frequency of modulating voltage of generator. (120 or 800 cycles).

5.—Turn variable condenser fully open, and band switch to right (FM).

6.—Adjust frequency vernier of horizontal oscillator on scope until the pattern becomes stationary.

7.—Adjust detector primary slug No. 5 for maximum vertical sweep of the scope pattern.

8.—Adjust detector secondary slug No. 6 to center the cross over point of the pattern. Pattern should look like figure 1, with the same amount of curve on both ends, and the cross-over point in the center.

9.—Connect generator, high side, to grid of 12BE6 converter tube (socket pin No. 7).

10.—Adjust IF slugs 7, 8, 9, and 10 for the greatest vertical sweep of the pattern, consistent with linearity. (If the IF slugs are adjusted for maximum sweep of the pattern, the pattern may become non-linear. Therefore, adjustment should be made for the greatest sweep which can be obtained and still have all four ends of the "X" pattern similar in size and shape.

11.—Check the alignment of the IF and detector circuits by varying the signal generator frequency above and below the center frequency of 10.7 Mc. If the receiver is perfectly aligned, two smaller "X" patterns of similar size and shape will result, one on either side of the center frequency. See figure 2.

X PATTERN
CENTER FREQUENCY

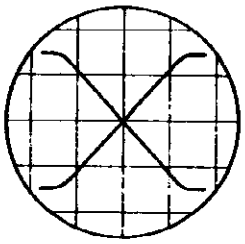

FIG 1

SMALL X PATTERN
ABOVE AND BELOW
CENTER FREQUENCY

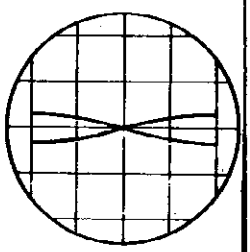

FIG. 2

RF

Position of Variable	Generator Frequency	Dummy Antenna	Generator Connection High Side	Generator Connection Ground Lead	Adjust Trimmers In Order Shown	Trimmer Function
108 Mc	108 Mc	★ 300 Ohm	Ant. Terminal	Ant. Terminal	(14)	Oscillator
88 Mc	88 Mc	★ 300 Ohm	Ant. Terminal	Ant. Terminal	(13)	Oscillator

Repeat the above oscillator adjustments until proper coverage is obtained on both ends of band since the two adjustments effect each other.

105 Mc	105 Mc	300 Ohm	Ant. Terminal	Ant. Terminal	(17) (18)	RF and Ant.
91 Mc	91 Mc	300 Ohm	Ant. Terminal	Ant. Terminal	(15) (16)	RF and Ant.

Repeat "RF and Ant." adjustments until proper tracking is obtained at both 91 and 105 Mc, since tracking the set at one frequency affects the track at the other frequency.

All RF trimmers are adjusted for maximum output, measured with output meter across speaker voice coil.

For RF alignment, use FM generator signal modulated with 400 cycles 45 Kc sweep (22.5 Kc deviation).

★The 300 ohm dummy should be made up of two 150 ohm resistors, one placed in each lead at the receiver antenna terminals.

© John F. Rider

MODEL 8021,
Ch. 132.868

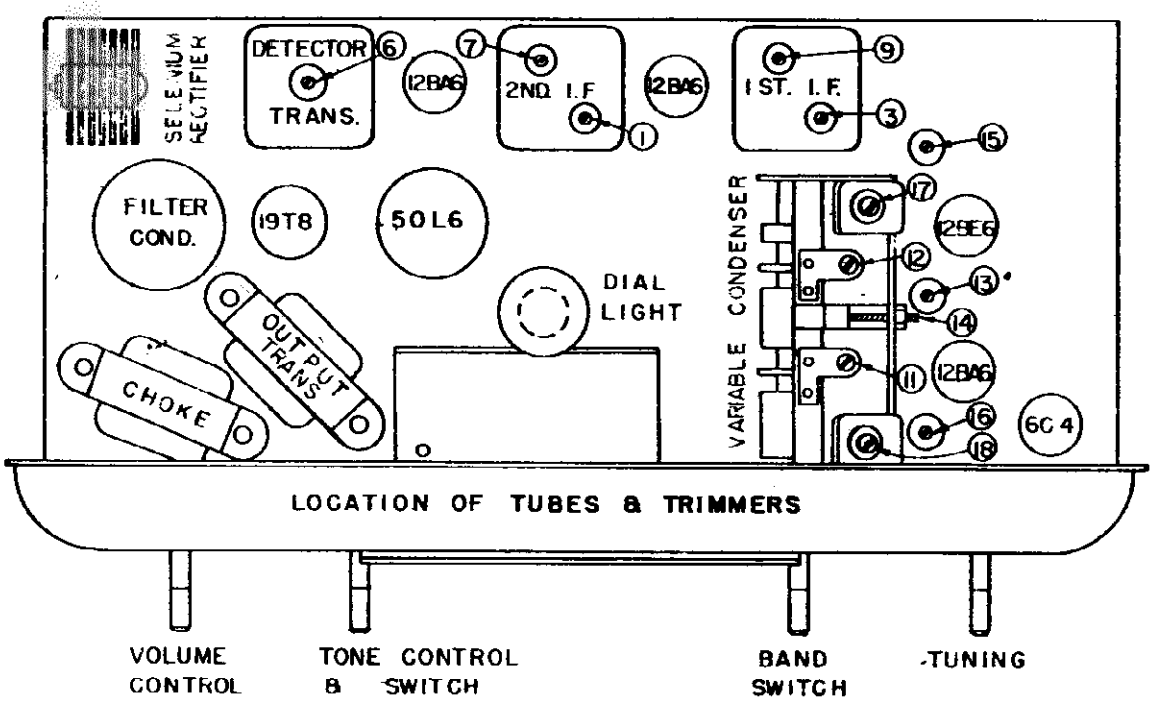

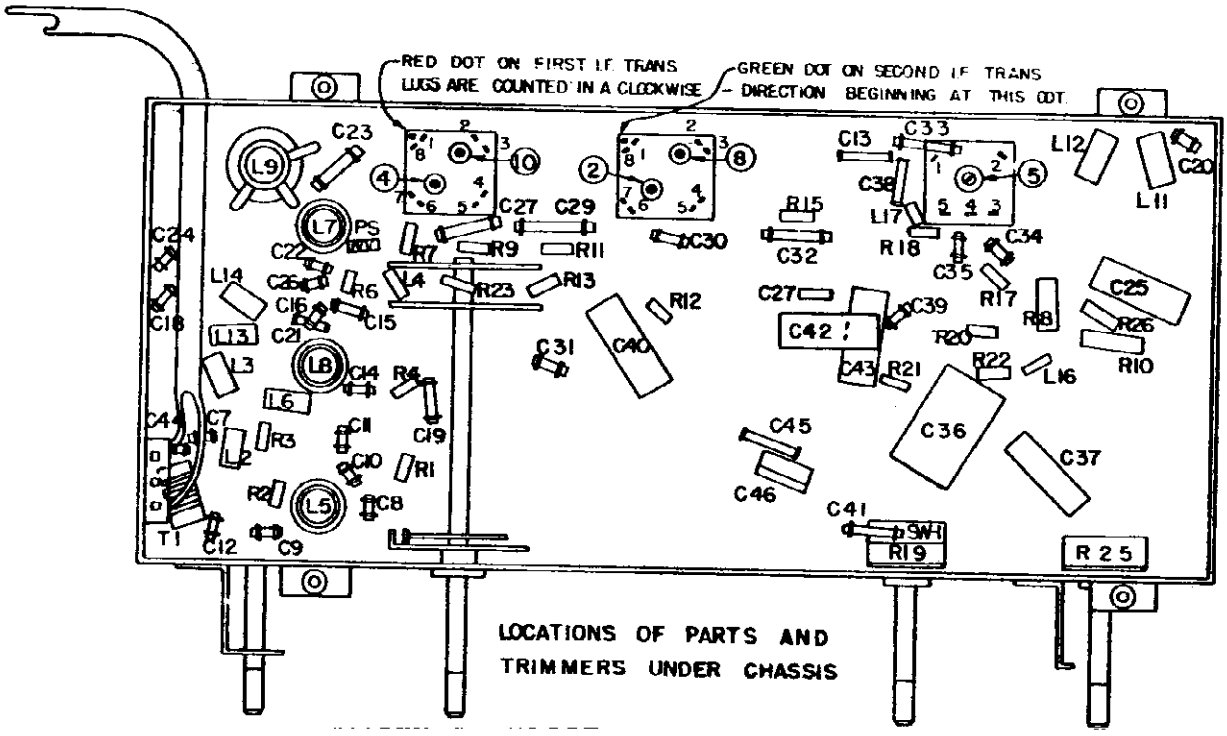

NOTE: On some sets of this model, a separate condenser was used as a bypass on the 50L6 cathode, and the low voltage section of Part No. N21744 was not used. This was done to prevent Hum due to coupling between the high and low voltage sections of N21744. This coupling was caused by improper sequence of winding of the sections in some of the N21744 condensers.

©John F. Rider

MODEL 8021,
Ch. 132.868

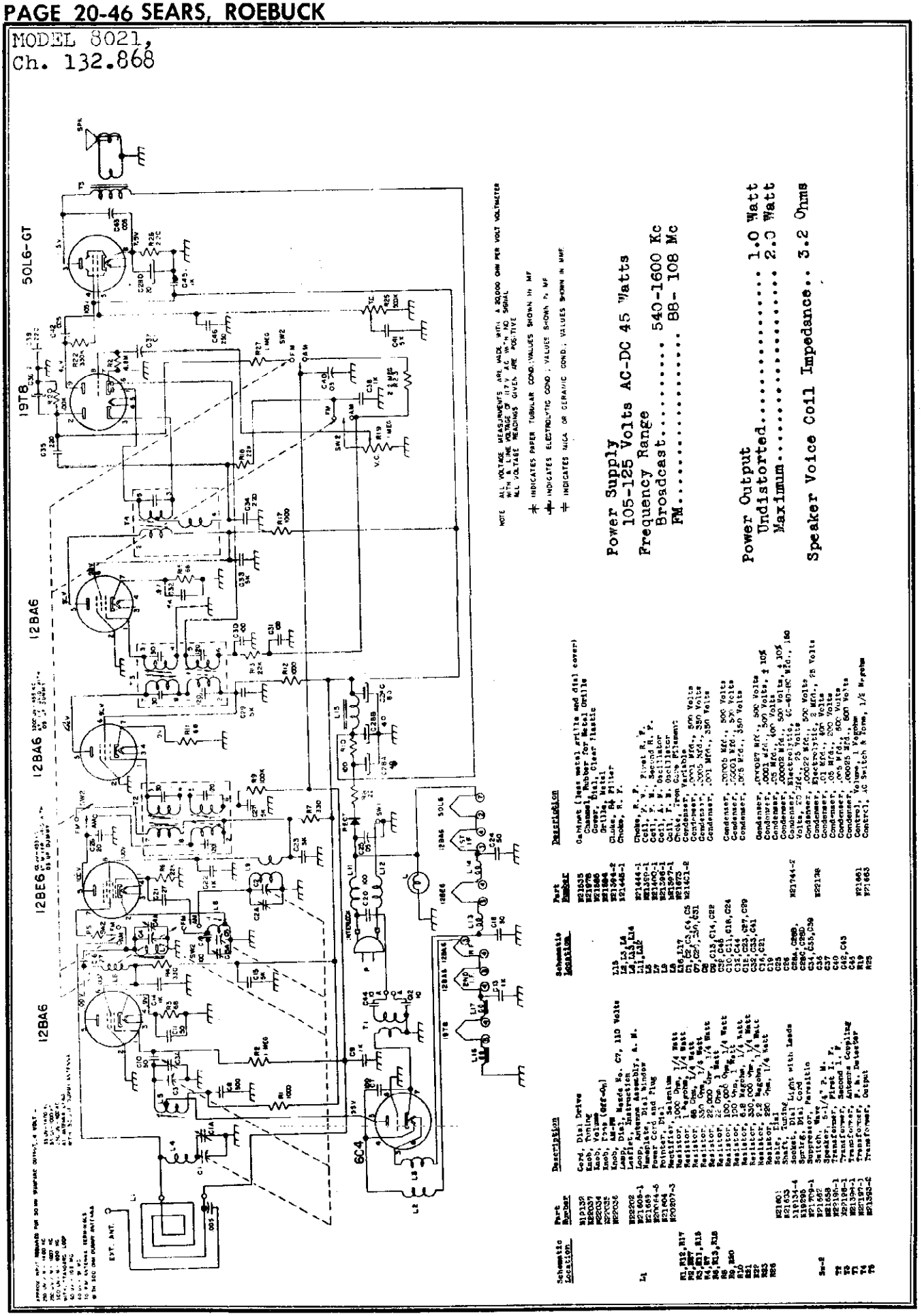

Power Supply
105-125 Volts AC-DC 45 Watts
Frequency Range
Broadcast..... 540-1600 Kc
FM..... 88- 108 Mc

Power Output
Undistorted..... 1.0 Watt
Maximum..... 2.0 Watt

Speaker Voice Coil Impedance.. 3.2 Ohms

Schematic Location	Part Number	Description
	21359	Cord, Dial Drive
	20037	Knob, Tuning
	22034	Knob, Volume
	22035	Knob, Tone
	22036	Knob, Dial, Bands Sw. C7, 110 Volts
		Lamp, Instruction
	22202	Loop, Antenna Assembly, A. M.
	21608-1	Nameplate, Dial Window
	21669	Power Cord and Plug
	20744-5	Potentiometer, Volume
	21804	Primary, Speaker
	20807-3	Resistor, 1000 Ohm, 1/4 Watt
R1,R16,R17		Resistor, 1 Megohm, 1/4 Watt
R2,R27		Resistor, 68 Ohm, 1/4 Watt
R3,R18		Resistor, 330 Ohm, 1/4 Watt
R4		Resistor, 22,000 Ohm, 1/4 Watt
R5		Resistor, 2200 Ohm, 1 Watt
R6,R13,R15		Resistor, 100,000 Ohm, 1/4 Watt
R8		Resistor, 10 Megohm, 1/4 Watt
R9,R20		Resistor, 100 Ohm, 1/4 Watt
R10		Resistor, 6.8 Megohm, 1/4 Watt
R11		Resistor, 330,000 Ohm, 1/4 Watt
R12		Resistor, 2.2 Megohm, 1/4 Watt
R14		Resistor, 1280 Ohm, 1/4 Watt
R19	21601	Shaft, Tuning
R21	21633	Socket, Dial Light with Leads
R22	21634-4	Spring, Dial Cord
R23	18295	Suppressor, Parasitic
R24	21779-1	Switch, Band
R25	21665	Switch, Wave (4 P. 2 W.
R26	21658	Speaker, 5-1/4" P. M.
R28	21659	Transformer, First I. F.
T1	21918-1	Transformer, Second I. F.
T2	21919-1	Transformer, Antenna Coupling
T3	21937-1	Transformer, R. F. Detector
T4	21938-1	Transformer, Output
T5	21938-2	Transformer, Power
	21635	Cabinet (less metal grille and dial cover)
	21676	Channel, Rubber Cord Metal Grille
	21686	Dial, Plastic Plastic
	21564-2	Grille, Metal
	21445-1	Guide, R. F. Filter
		Choke, R. F.
L1	21444-1	Choke, R. F.
L2	21380-1	Coil, P. M., Plate R. F.
L3	21440-1	Coil, P. M., Second R. F.
L4	21398-1	Coil, P. M., Oscillator
L5	21399-1	Coil, P. M., Oscillator
L6,L17	21972	Coil, P. M., Oscillator
C1,C2,C3,C4,C5	21421-2	Choke, Iron Core Filament
C6,C7,C30,C31		Condenser, Variable
C8		Condenser, .0001 Mfd., 500 Volts
C9,C13,C14,C22		Condenser, .0001 Mfd., 350 Volts
C10		Condenser, .0001 Mfd., 350 Volts
C11,C16,C24		Condenser, .00005 Mfd., 500 Volts
C12		Condenser, .00001 Mfd., 5% Volts
C15,C23,C27,C29		Condenser, .005 Mfd., 350 Volts
C17,C33,C41		
C18,C21		Condenser, .01 Mfd., 500 Volts
C19		Condenser, .0001 Mfd., 500 Volts, ± 10%
C25		Condenser, .05 Mfd., 400 Volts
C26		Condenser, .00002 Mfd., 500 Volts, ± 10%
C28,C29	21744-2	Condenser, Electrolytic, 40-40-40 Mfd., 150 Volts, 25 Cycle
C32,C35,C39		Condenser, .00022 Mfd., 5% Volts
C34	22138	Condenser, Electrolytic, 25 Mfd., 25 Volts
C36		Condenser, .05 Mfd., 400 Volts
C37		Condenser, .05 Mfd., 200 Volts
C40		Condenser, .005 Mfd., 600 Volts
C42,C43		Condenser, .00025 Mfd., 600 Volts
C44		Control, Volume, 1 Megohm
R1	21661	Control, AC Switch & Tone, 1/2 Megohm
R29	21663	

©John F. Rider

MODEL 8021,
Ch. 132.868; Rev.

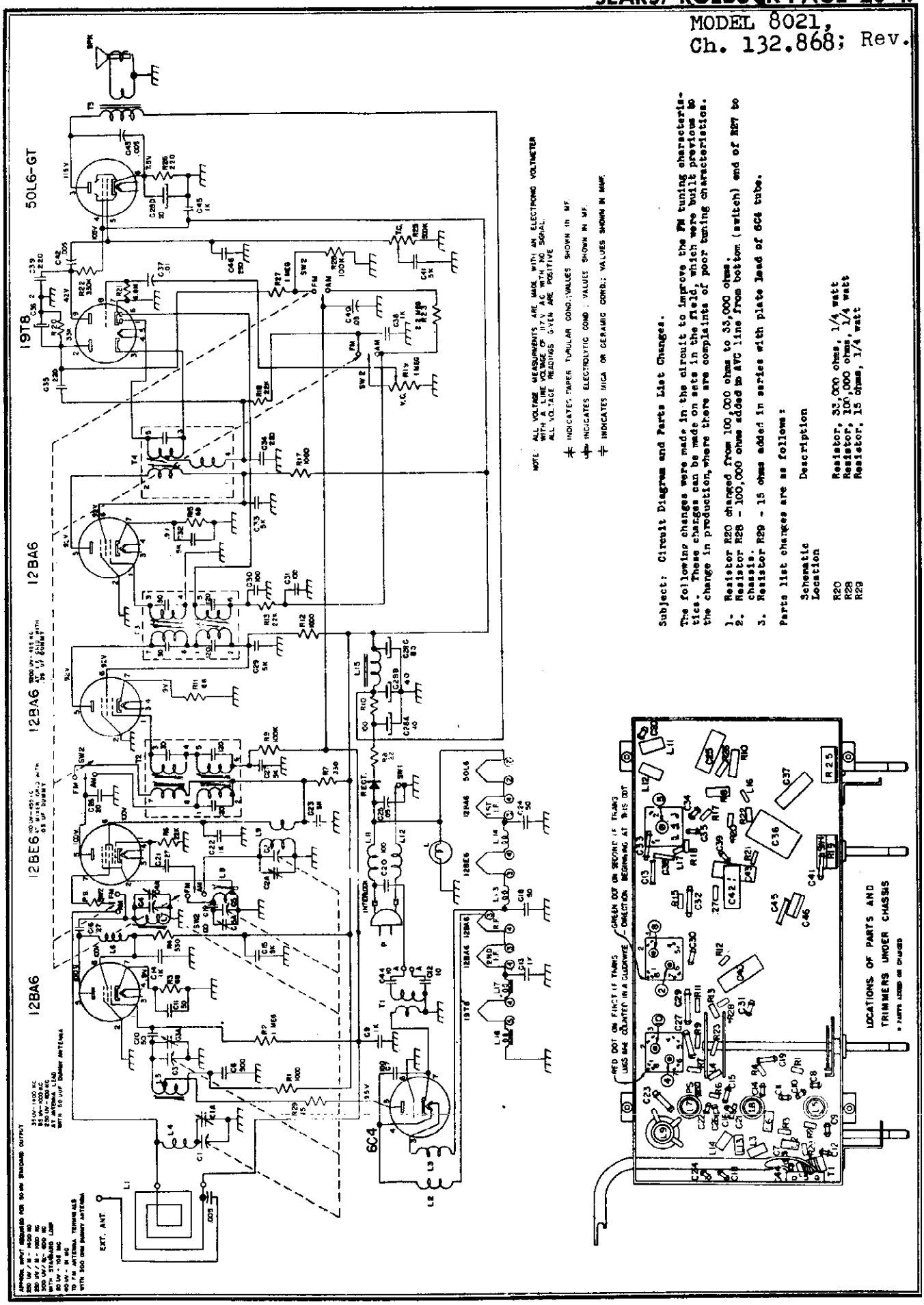

Subject: Circuit Diagram and Parts List Changes.

The following changes were made in the circuit to improve the FM tuning characteristics. These changes can be made on sets in the field, which were built previous to the change in production, where there are complaints of poor tuning characteristics.

1. Resistor R20 changed from 100,000 ohms to 33,000 ohms.
2. Resistor R28 - 100,000 ohms added to AVC line from bottom (switch) end of R27 to chassis.
3. Resistor R29 - 15 ohms added in series with plate lead of 6C4 tube.

Parts list changes are as follows:

Schematic Location	Description
R20	Resistor, 33,000 ohms, 1/4 watt
R28	Resistor, 100,000 ohms, 1/4 watt
R29	Resistor, 15 ohms, 1/4 watt

©John F. Rider

MODEL 8022,
Ch. 478,206

ALIGNMENT PROCEDURE

PRELIMINARY:

Output meter connection . . . . . Across speaker voice coil
Output meter reading to indicate 500 MW (Standard Output). . . . . 1.27 volt
Generator modulation . . . . . 30% - 400 cycles
Position of volume control . . . . . Fully clockwise
Set Dial Pointer . . . . . 1 3/32" from center of left shaft, variable condenser closed
Set band switch . . . . . To left for AM alignment; to right for FM alignment

AM ALIGNMENT

POSITION OF VARIABLE	GENERATOR FREQUENCY	DUMMY ANTENNA	GENERATOR CONNECTION HIGH SIDE	GENERATOR CONNECTION GROUND LEAD	ADJUST TRIMMERS IN ORDER SHOWN FOR MAX. OUTPUT	TRIMMER FUNCTION
Open	455 Kc	.05 Mfd	Mixer grid	Chassis	T8, T12, T11	I. F.
1620 Kc	1620 Kc		*Test loop	Test loop	T1	Oscillator
1400 Kc	1400 Kc		*Test loop	Test loop	T3	Antenna
**600 Kc	600		*Test loop	Test loop	Check point	Antenna

* Connect generator lead to a Standard Hazeltine Test Loop, Model 1150, placed two feet from the set loop, or three turns of wire about six inches in diameter, placed about one foot from the set loop.

**With a generator signal of 600 Kc, tune the set to the point where maximum output is obtained, which should be approximately 600 Kc on the dial. Adjust antenna section plates of variable for maximum output.

The alignment procedure should be repeated in the original order for greatest accuracy.

Always keep the output from the signal generator at its lowest possible value to make the A. V. C. action of the receiver ineffective.

FM ALIGNMENT

DETECTOR AND IF ALIGNMENT USING SIGNAL GENERATOR AND OSCILLOSCOPE

1. Connect vertical input of scope across volume control of receiver (Grounded terminal to chassis, ungrounded terminal to high side of the control).
2. Connect FM Generator, High Side, to grid of 2nd IF tube through .01 mfd. dummy, Low Side, to chassis.
3. Connect sweep voltage of generator to horizontal terminals of scope.
4. Set generator frequency to 10.7 Mc modulation either 60 cycles or 400 cycles, 250 Kc sweep (125 Kc deviation).
5. Set volume control to maximum, variable condenser fully open, band switch to right (FM).
6. Adjust detector primary slug *T9 for maximum vertical sweep of the scope pattern.
7. Adjust detector secondary slug *T10 for symmetry of the pattern. Pattern should look like Fig. 1, with the same amount of curve on both ends
8. Connect generator, high side, to mixer coil as in Fig. 6, low side to chassis.
9. Short A. V. C. to chassis at junction of R21 and R16.
10. Disconnect the negative lead of C19 from pin #2 of 19T8.
11. Connect vertical input of scope across R22. (Grounded terminal to chassis, ungrounded terminal to high side of resistor.)
12. Adjust IF slugs T7, T6, T5, for greatest vertical sweep of the pattern. Stagger tune (detune) slightly so that pattern looks like Fig. 7.
13. Resolder the negative lead of condenser disconnected after alignment is completed.

NOTE: A double trace pattern, as in Fig. 2 or Fig. 3 for detector alignment, or Fig. 4 for IF alignment, may be caused by a slight out of phase condition between the sweep voltage to the horizontal terminals of the scope and the modulation on the generator signal. To correct this condition, connect a condenser of about .005 mf. across the horizontal input terminals of the scope and a 1 megohm variable resistance in series with the lead to the ungrounded terminal. Adjust the resistance until the two traces coincide.

DETECTOR ALIGNMENT USING SIGNAL GENERATOR AND VTVM

POSITION OF VARIABLE	GENERATOR FREQUENCY	DUMMY ANTENNA	GENERATOR CONNECTION HIGH SIDE	GENERATOR CONNECTION GROUND LEAD	ADJUST TRIMMERS IN ORDER SHOWN FOR MAX. OUTPUT	TRIMMER FUNCTION
Open	10.7 Mc	.01 Mfd.	2d IF grid	Chassis	*T9, *T10	Detector

* T9 is adjusted for maximum A. V. C. voltage. A vacuum tube voltmeter or a 20,000 ohm per volt voltmeter with a low V. range can be used to measure the A. V. C. voltage. Connect negative lead to junction of R21 and R16 on band switch and positive lead to the chassis.

© John F. Rider

MODEL 8022,
Ch. 478.206

* T10 is adjusted for zero reading of a vacuum tube voltmeter or a 20,000 ohm per volt voltmeter, connected as shown in Fig. 5. Rock this adjustment through the zero point to see that the voltage is positive on one side of the zero point and negative on the other.

NOTE: If a 10.7 Mc FM generator is not available for alignment of detector, an unmodulated signal of 10.7 Mc from an accurately calibrated conventional AM type generator can be used. (Voltmeter alignment only).

I.F. alignment using signal generator and V. T. V. M. not recommended.

RF

POSITION OF VARIABLE	GENERATOR FREQUENCY	DUMMY ANTENNA	GENERATOR CONNECTION HIGH SIDE	GENERATOR CONNECTION GROUND LEAD	ADJUST TRIMMERS IN ORDER SHOWN FOR MAX. OUTPUT	TRIMMER FUNCTION
Open	109 Mc	300 Ohm	Ant. Term.	Ant. Term.	T2	Oscillator
Closed	87.5 Mc	300 Ohm	Ant. Term.	Ant. Term.	Spacing of LC-11	Oscillator

Repeat the above oscillator adjustments until proper coverage is obtained on both ends of band since the two adjustments effect each other.

106 Mc	106 Mc	300 Ohm	Ant. Term.	Ant. Term.	T4***	RF
90 Mc	90 Mc	300 Ohm	Ant. Term.	Ant. Term.	Spacing of LC-12	RF

Repeat "RF and Ant." adjustments until proper tracking is obtained at both 90 and 106 Mc, since tracking the set at one frequency effects the tracking at the other frequency.

All RF trimmers are adjusted for maximum output, measured with output meter across speaker voice coil.

For RF alignment, use FM generator signal modulated with 400 cycles 45 Mc sweep (22.5 Kc deviation).

NOTE: On sets which use LF-33 A in place of LF-33, the trimmer locations are reversed.

***On sets where T4 has been eliminated (Fig. 6) adjust R. F. by spacing of LC-12 at 106 Mc. and check for tracking at 90 Mc.

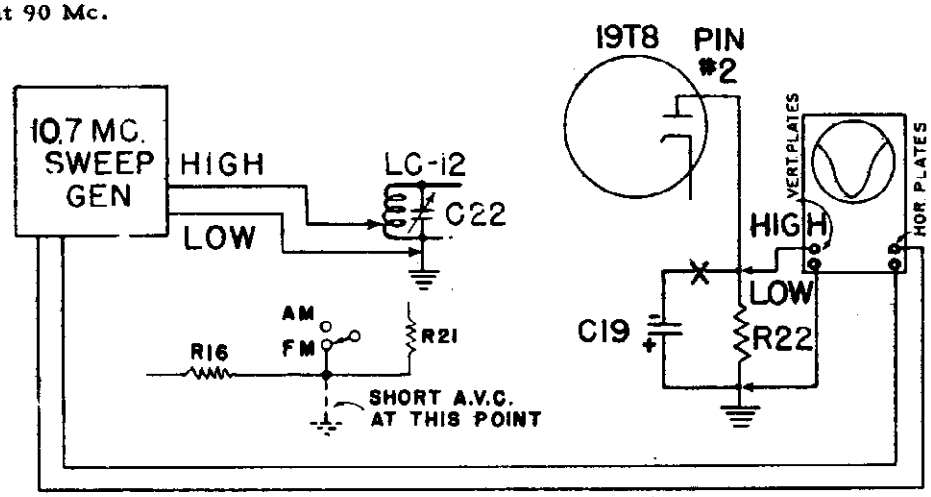

Fig. 6
DETECTOR AND I F ALIGNMENT CONNECTIONS

OSCILLOSCOPE PATTERNS

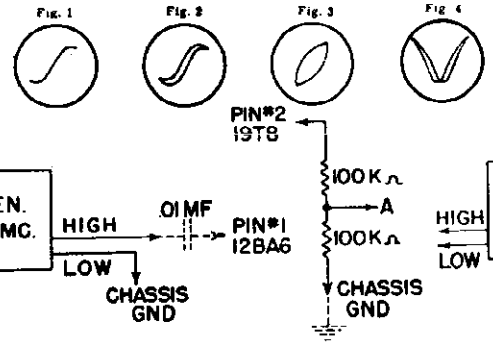

Fig. 5
DETECTOR ALIGNMENT CONNECTIONS

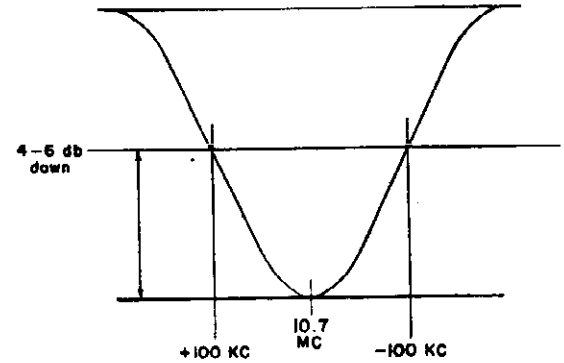

Fig. 7

MODEL 8022,
Ch. 478.206

TUBE LOCATIONS

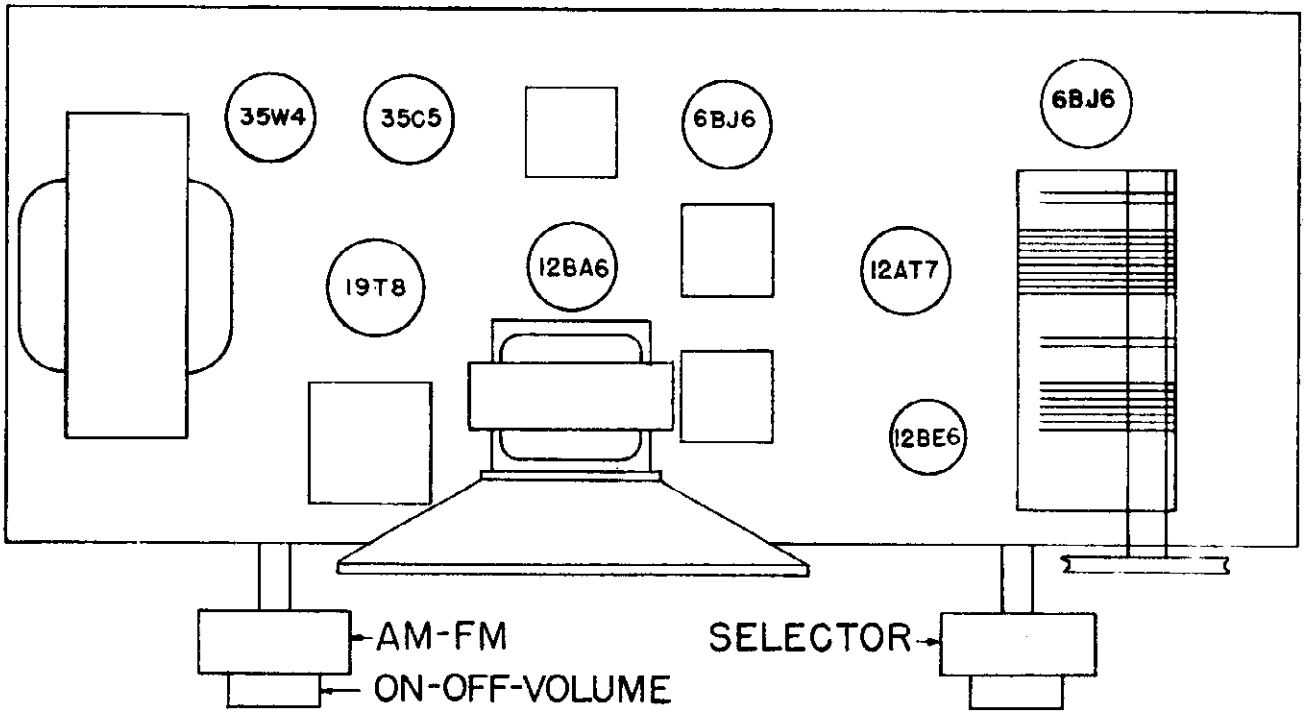

Fig. 8

REPAIR PARTS LIST

Schematic Location	Part Number	Description	MU Code	Schematic Location	Part Number	Description	MU Code
LF-30	LF-30	Transformer, FM-IF		C20	CP-203-20	Capacitor, .02 MFD 800 V	
LF-31	LF-31	Transformer, AM-FM-IF		C21	CP-103-1	Capacitor, .01 MFD 400 V	
LF-32	LF-32	Transformer, AM-IF		C22,23)	CV-17	Capacitor, Variable	A5
LF-33	LF-33	Transformer, Ratio Det		C24,25)			
TR-19	TR-19	Transformer, Isolation		R1,4,6)	RC-102-1	Resistor, 1000 ohms 1/2 W. 20%	
LC-9	LC-9	Coil, Oscillator AM		R8,12,16			
LC-11	LC-11	Coil, Oscillator,FM		R2,10	RC-104-1	Resistor, 1000000 ohms 1/2 W. 20%	
LC-12	LC-12	Coil, RF-FM		R13,14			
LC-13	LC-13	Choke, Filament		R3,9,11	RC-680-2	Resistor, 68 ohms 1/2 W. 10%	
LC-14	LC-14	Choke, Plate		R5	RC-222-2	Resistor, 2200 ohms, 1/2 W. 10%	
LC-15	LC-15	Choke, Grid		R7	RC-103-2	Resistor, 10000 ohms 1/2 W. 10%	
LC-16	LC-16	Choke, Cathode		R15	RC-225-1	Resistor, 2.2 Meg Ohms 1/2 W. 20%	
LC-17	LC-13	Choke, Filament		R17,26	RC-181-2	Resistor, 180 ohms 1/2 W. 10%	
LC-18	LC-13	Choke, Filament		R18	RC-393-2	Resistor, 39000 ohms 1/2 W. 10%	
	SO-17-S	Socket, Min Wafer, 7 Pin With Shield		R19	RC-106-1	Resistor, 10 Meg ohms 1/2 W. 20%	
	SO-19-S	Socket, Min Wafer, 9 Pin With Shield		R20	VC-17	Control, On-Off & Volume, 1 Meg'	
	SO-17	Socket, Min Wafer, Without Shield		R21,24)			
C1a, b)				R28)	RC-224-1	Resistor, 220000 ohms 1/2 W. 20%	
C2a, b)				R22	RC-163-3	Resistor, 16000 ohms 1/2 W. 5%	
C3a, b)	CC-2-1	Capacitor, 2X.002 MFD Ceramic		R23	RC-223-1	Resistor, 22000 ohms 1/2 W. 20%	
C4a, b)				R25	RC-271-8	Resistor, 270 ohms, 2 W. 10%	
C5a, b)				R27	RC-474-1	Resistor, .47 Meg ohms 1/2 W. 20%	
C6a, b)	CC-2-2	Capacitor, 2X.004 MFD Ceramic		R29	RC-471-8	Resistor, 470 ohms 2 W.10%	
C7,26,27	CC-1-1	Capacitor, .005 MFD Ceramic		S1,2,3,4		W/AM-FM Four Pole, D.T.Switch. (On R-20)	
C8a,b,c,d) CE-18)	CE-18	Capacitor 20x40x20x10 MFD 150 V. Electrolytic		LP-13	LP-13	Loop, Antenna	
C9,28	CP-202-2	Capacitor, .002 MFD 400 V			CB-120	Cabinet, Bakelite	AAO
C10,19	CC-047-8	Capacitor, 47MMF Ceramic 10%			GR-27	Silk Cloth on Cardboard	
C11	CC-101-7	Capacitor, 100 MMF Ceramic 20%			DL-26	Dial Plate W/Lettering	
C12	CMS-033-9	Capacitor, 33 MMF Silver Mica 5%			PN-17	Dial Pointer	
C13	CM-102	Capacitor, .001 MFD Mica			KN-28	Knob Assembly	
C14	CSP-1	Capacitor, 1 MMF			KN-26	Knob - Large	
C15,30	CC-068-7	Capacitor, 68 MMF Ceramic ± 20%			KN-27	Knob - Small	
C16, 31	CM-151-1	Capacitor, 150 MMF Mica 20%			IB-20	Instruction Sheet	
C18,32) C33,34)	CP-503-1	Capacitor, .05 MFD 400 V			PY-3	Pulley, Drive Shaft	
C19	CE-19	Capacitor, 4 MFD 500 W V. Elect			SA-24	Shaft Drive	
					SP-41-10B	Speaker, 4" P.M. & O.T. TR-10B	AAO
					SG-1	Spring, Dial	
					CR-2	Dial Cord	

©John F. Rider

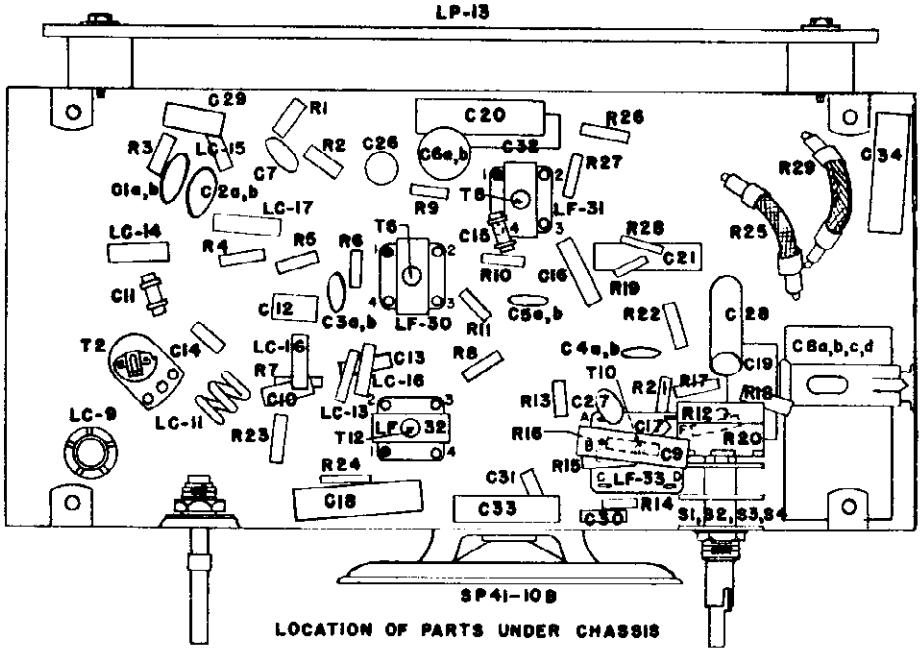

LOCATION OF PARTS UNDER CHASSIS

NOTE:
GREEN DOTS ON THREE I.F. TRANSFORMERS INDICATE LUG NO. 1. LUGS ARE COUNTED IN A CLOCKWISE DIRECTION FROM THESE DOTS.

RATIO DETECTOR TRANSFORMER (LF-33) LUGS ARE LETTERED IN A COUNTER-CLOCKWISE DIRECTION STARTING AT POINT "A".

Fig. 9

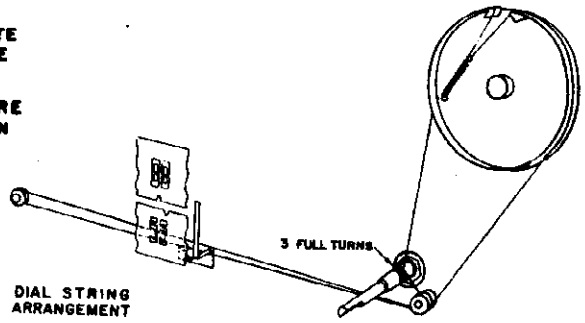

DIAL STRING ARRANGEMENT

Fig. 10

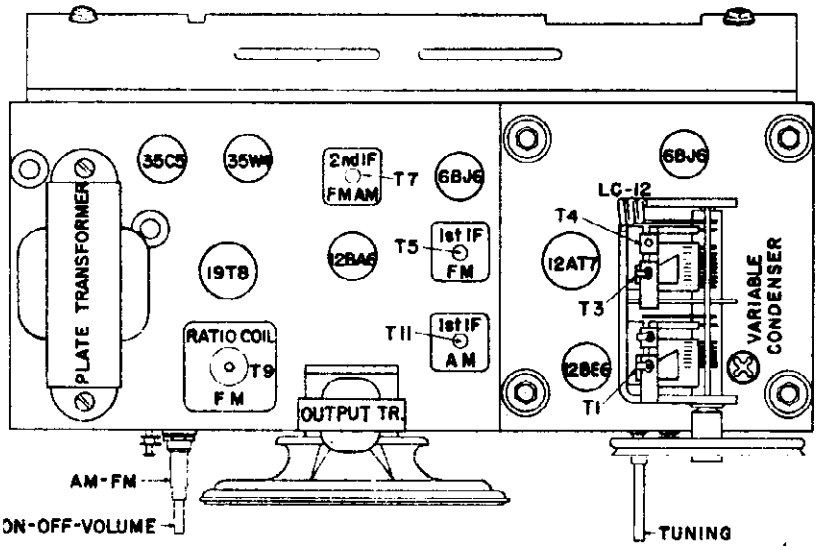

LOCATION OF TUBES & TRIMMERS ON TOP OF CHASSIS

Fig. 11

© John F. Rider

MODEL 8022,
Ch. 478.206

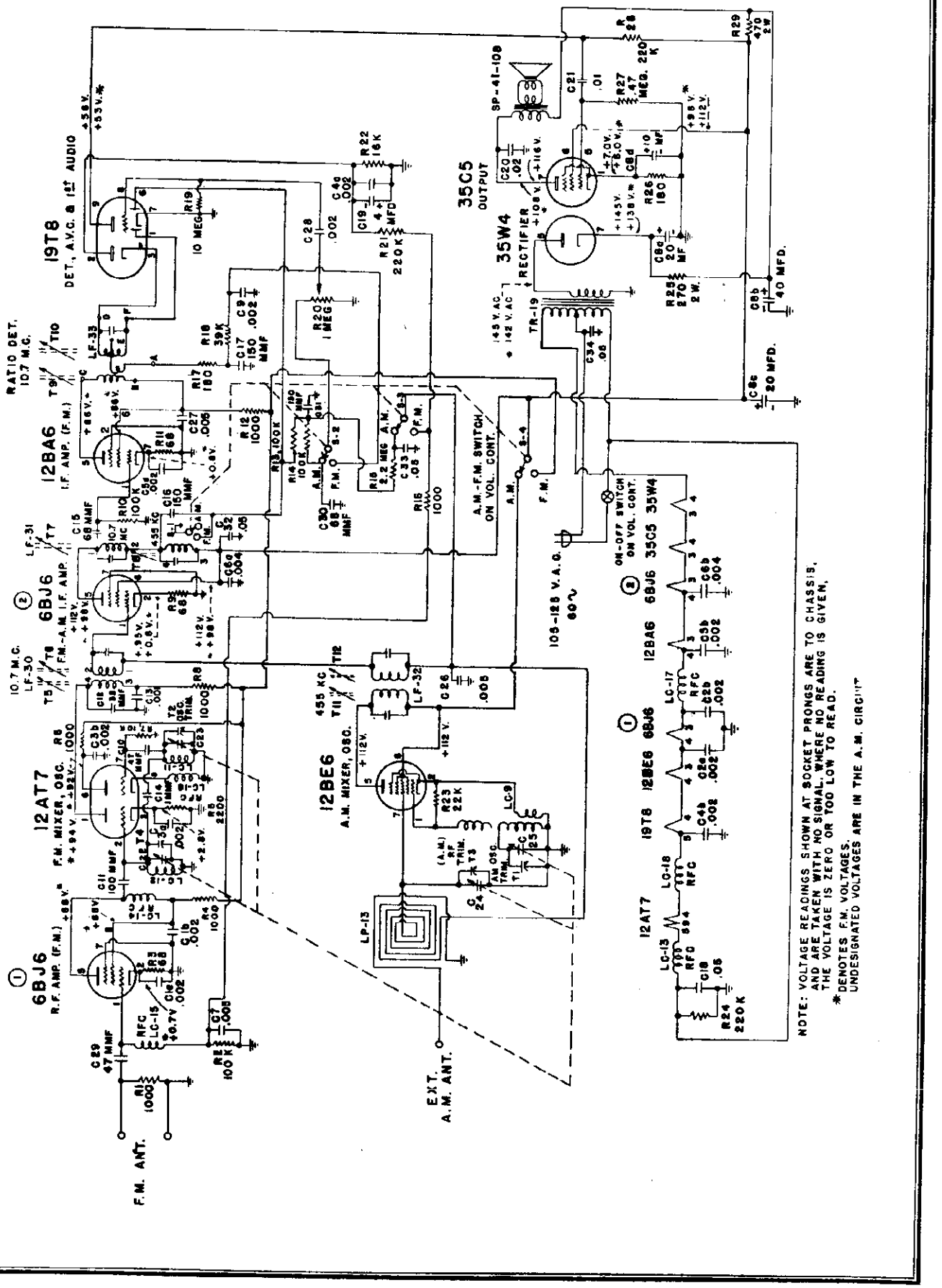

©John F. Rider

MODELS 8024, 8025,
Ch. 478.206-1

REPAIR PARTS LIST

Schematic Location	Part Number	Description	MU Code
T1	LF-30	Transformer, FM-IF	
T5	LF-32	Transformer, AM-IF	
T3	LF-33A	Transformer, Ratio Det.	
T2	LF-34	Transformer, FM-IF	
T4	LF-35	Transformer, AM-IF	
T6	TR-21	Transformer, Isolation	B5
L7	LC-9	Coil, Oscillator AM	
L5	LC-11	Coil, Oscillator	
L3	LC-12	Coil, RF FM	
L8, 9	LC-13	Choke, Filament	
L2	LC-14	Choke, Plate	
L1	LC-15	Choke, Grid	
L4	LC-16	Choke, Cathode	
TC-2	TA-2	Ceramic Trimmer-520 MMF	
C2a, 2b, C3a, 3b, C4a, 4b	CC-2-1	Capacitor, 2 x .004 MFD Ceramic	
C5a, 5b	CC-2-2	Capacitor, 2 x .004 MFD Herlec	
C8, 16, 24	CC-1-1	Capacitor, .005 MFD Herlec	
C15, 23	CP-503-1	Capacitor, .05 MFD 400 V	
C22	CE-19	Capacitor, 4 MFD 50 W;V, Electrolytic	
C25	CP-203-20	Capacitor, .02 MFD 800 V	
C28	CP-103-1	Capacitor, .01 MFD 400 V	
C17	CC-3,3-11	Capacitor, 3.3 MMF ±10%	
C29, 30, C31, 32 TC1, TC3, TC4	CV-17	Capacitor, Variable (AM-FM) Capacitors, Trimmer	A5
C26, 27	CP-203-1	Capacitor, .02 - 400 V. Paper	
R1, 4, 7, 8, 11, 19	RC-102-1	Resistor, 1000 ohms 1/2W 20%	
R2, 17	RC-104-1	Resistor, 100,000 ohms 1/2W 20%	
R3, 9, 10	RC-680-2	Resistor, 68 ohms 1/2W ±10%	
R5	RC-222-2	Resistor, 2200 ohms 1/2W ±10%	
R6	RC-103-2	Resistor, 10,000 ohms 1/2W ±10%	
R18	RC-225-1	Resistor, 2.2 Meg ohms 1/2W 20%	
R22	RC-181-2	Resistor, 180 ohms 1/2W ±10%	
R14	RC-273-3	Resistor, 27,000 ohms 1/2W ±5%	
R21, 25	RW-101-8	Resistor, 100 ohms W.W	
C6a, 6b, C6c, 6d	CE-18	Capacitor, 20x40x20 (150V)x10 (25V) Electrolytic	
C1a, 1b, C1c	CC-3-0	Capacitor, 3 x .0015 Herlec	
C18, 21	CP-202-2	Capacitor, .002 MFD 400 V	
C7, 11	CC-047-8	Capacitor, 47 MMF Ceramic 10%	
C9	CC-101-7	Capacitor, 100 MMF Ceramic 20%	
C12	CMS-033-9	Capacitor, 33 MMF Silver Mica 5%	
C13	CM-102	Capacitor, .001 MFD Mica	
C10	CSP-1	Capacitor, 1 MMF 10%	
C20	CC-068-7	Capacitor, 68 MMF Ceramic ±20%	
C19	CM-151-1	Capacitor, 150 MMF Mica 20%	
C14	CM-331-8	Capacitor, 330 MMF Mica ±10% 500 V 2W ±10%	
R12	RC-393-2	Resistor, 39,000 ohms 1/2W 10%	
R13	RC-106-1	Resistor, 10 Meg ohms 1/2W 20%	
R16	VC-17	Control, On-Off & Volume 1 meg Includes S1, S2, S3-D.T. Switch	
R15, 24	RC-224-1	Resistor, 220,000 ohms 1/2W 20%	
R20	RC-223-1	Resistor, 22,000 ohms 1/2W 20%	
R23	RC-474-1	Resistor, .47 Meg ohms 1/2W 20%	
R26	RW-471-8	Resistor, 470 ohms 2W W.W. ±10%	
L6	LP-18	Loop Antenna	
	CB-158-I	Cabinet, Bakelite (Ivory)	A0
	CB-158-W	Cabinet, Bakelite (Walnut)	AA0
	GR-27	Silk Cloth on Cardboard	
	DL-26	Dial Plate	
	PN-17	Dial Pointer	
	KN-28	Knob Assembly	
	KN-26	Knob, Large	
	KN-27	Knob, Small	
	IB-20	Instruction Sheet	
	PY-3	Pulley, Drive Shaft	
	SA-24	Shaft, Drive	
	SG-1	Spring Dial	
	CR-2	Dial Cord	
T7	SP41-10B	Speaker 4" P.M. & O.T.	AA0

ALIGNMENT PROCEDURE

PRELIMINARY:

Output meter connection ..... Across speaker voice coil
Output meter reading to indicate 500 MW (Standard Output) ..... 1.27 volt
Generator modulation ..... 30% 400 cycles
Position of volume control ..... Fully clockwise
Set Dial Pointer ..... 1-3/32" from center of left shaft, variable condenser closed
Set band switch ..... To left for AM alignment; to right for FM alignment

AM ALIGNMENT

POSITION OF VARIABLE	GENERATOR FREQUENCY	DUMMY ANTENNA	GENERATOR CONNECTION HIGH SIDE	GENERATOR CONNECTION GROUND LEAD	ADJUST TRIMMERS IN ORDER SHOWN FOR MAX. OUTPUT	TRIMMER FUNCTION
Open	455 Kc	.05 Mfd.	Mixer grid	Chassis	1, 2, 3, 4	I.F.
1620 Kc	1620 Kc		*Test loop	Test loop	11	Oscillator
1400 Kc	1400 Kc		*Test loop	Test loop	12	Antenna
**600 Kc	600 Kc		*Test loop	Test loop	Checkpoint	Antenna

*Connect generator lead to a Standard Hazeltine Test Loop, Model 1150, placed two feet from the set loop, or three turns of wire about six inches in diameter, placed about one foot from the set loop.

**With a generator signal of 600 Kc, tune the set to the point where maximum output is obtained, which should be approximately 600 Kc on the dial. Adjust antenna section plates of variable for maximum output.

©John F. Rider

MODELS 8024, 8025,
Ch. 478.206-1

The alignment procedure should be repeated in the original order for greatest accuracy.

Always keep the output from the signal generator at its lowest possible value to make the A. V. C. action of the receiver ineffective.

FM ALIGNMENT

DETECTOR AND IF ALIGNMENT USING SIGNAL GENERATOR AND OSCILLOSCOPE

1. Connect vertical input of scope across volume control of receiver (grounded terminal to chassis, ungrounded terminal to high side of the control).
2. Connect FM Generator, High Side, to grid of 2nd IF tube through .01 mfd. dummy, Low Side, to chassis.
3. Connect sweep voltage of generator to horizontal terminals of scope.
4. Set generator frequency to 10.7 Mc modulated either 60 cycles or 400 cycles, 250 Kc sweep (125 Kc deviation.
5. Set volume control to maximum, variable condenser fully open, band switch to right (FM).
6. Adjust detector primary slug #5 for maximum vertical sweep of the scope pattern.
7. Adjust detector secondary slug #6 for symmetry of the pattern. Pattern should look like Fig. 1, with the same amount of curve on both ends.
8. Connect generator, high side, to mixer coil as in Fig. 7, low side to chassis.
9. Short A. V. C. to chassis at junction of R15 and R19.
10. Disconnect the negative lead of C22 from pin #2 of 6T8.
11. Connect vertical input of scope across R14. (Grounded terminal to chassis, ungrounded terminal to high side of resistor.)
12. Adjust IF slugs 7, 8, 9, 10 for greatest vertical sweep of the pattern. Stagger tune (detune) slightly so that pattern looks like Fig. 4.
13. Resolder the negative lead of condenser disconnected after alignment is completed.

NOTE: A double trace pattern, as in Fig. 2 or Fig. 3 for detector alignment, or Fig. 5 for IF alignment, may be caused by a slight out of phase condition between the sweep voltage to the horizontal terminals of the scope and the modulation on the generator signal. To correct this condition, connect a condenser of about .0005 mf. across the horizontal input terminals of the scope and a 1 megohm variable resistance in series with the lead to the ungrounded terminal. Adjust the resistance until the two traces coincide.

DETECTOR ALIGNMENT USING SIGNAL GENERATOR AND VTVM

POSITION OF VARIABLE	GENERATOR FREQUENCY	DUMMY ANTENNA	GENERATOR CONNECTION HIGH SIDE	GENERATOR CONNECTION GROUND LEAD	ADJUST TRIMMERS IN ORDER SHOWN	TRIMMER FUNCTION
Open	10.7 Mc	.01 Mfd.	2d IF grid	Chassis	#*5, #*6	Detector

#*5 is adjusted for maximum A. V. C. voltage. A vacuum tube voltmeter or a 20,000 ohm per volt voltmeter with a low V. range can be used to measure the A. V. C. voltage. Connect negative lead to junction of R15 and R19 on band switch and positive lead to the chassis.

#*6 is adjusted for zero reading of a vacuum tube voltmeter or a 20,000 ohm per volt voltmeter, connected as shown in Fig. 6. Rock this adjustment through the zero point to see that the voltage is positive on one side of the zero point and negative on the other.

NOTE: If a 10.7 Mc FM generator is not available for alignment of detector, and unmodulated signal of 10.7 Mc from an accurately calibrated conventional AM type generator can be used. (Voltmeter alignment only.)

I.F. alignment using signal generator and V.T.V.M. not recommended.

RF

POSITION OF VARIABLE	GENERATOR FREQUENCY	DUMMY ANTENNA	GENERATOR CONNECTION HIGH SIDE	GENERATOR CONNECTION GROUND LEAD	ADJUST TRIMMERS IN ORDER SHOWN	TRIMMER FUNCTION
Open	109 Mc	300 Ohm	Ant. Term.	Ant. Term.	#13	Oscillator
Closed	87.5 Mc	300 Ohm	Ant. Term.	Ant. Term.	Spacing of L-5	Oscillator

Repeat the above oscillator adjustments until proper coverage is obtained on both ends of band since the two adjustments effect each other.

106 Mc	106 Mc	300 Ohm	Ant. Term.	Ant. Term.	#14	RF
90 Mc	90 Mc	300 Ohm	Ant. Term.	Ant. Term.	Spacing of L-3	RF

Repeat "RF and Ant." adjustments until proper tracking is obtained at both 90 and 106 Mc, since tracing the set at one frequency effects the tracking at the other frequency.

All RF trimmers are adjusted for maximum output, measured with output meter across speaker voice coil.

For RF alignment, use FM generator signal modulated with 400 cycles 45 Kc sweep (22.5 Kc deviation).

©John F. Rider

OSCILLOSCOPE PATTERNS

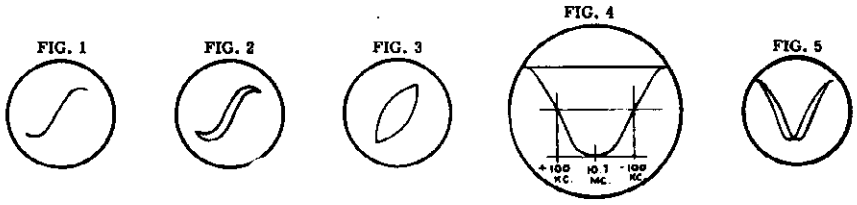

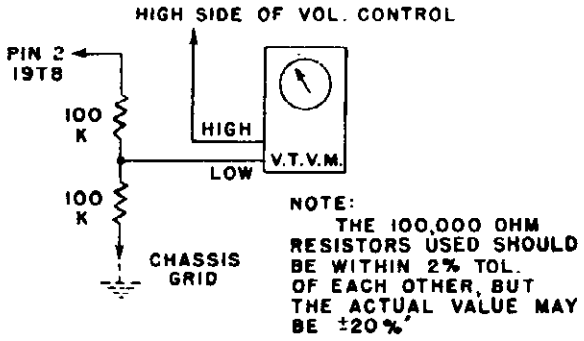

FIG. 6

DETECTOR ALIGNMENT

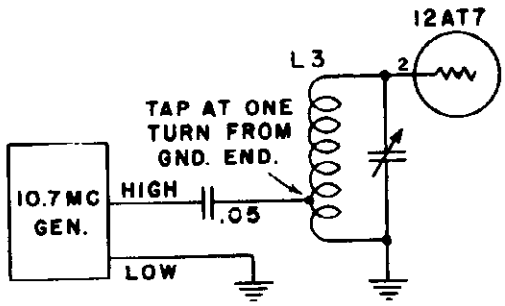

FIG. 7

DETECTOR ON I F ALIGNMENT

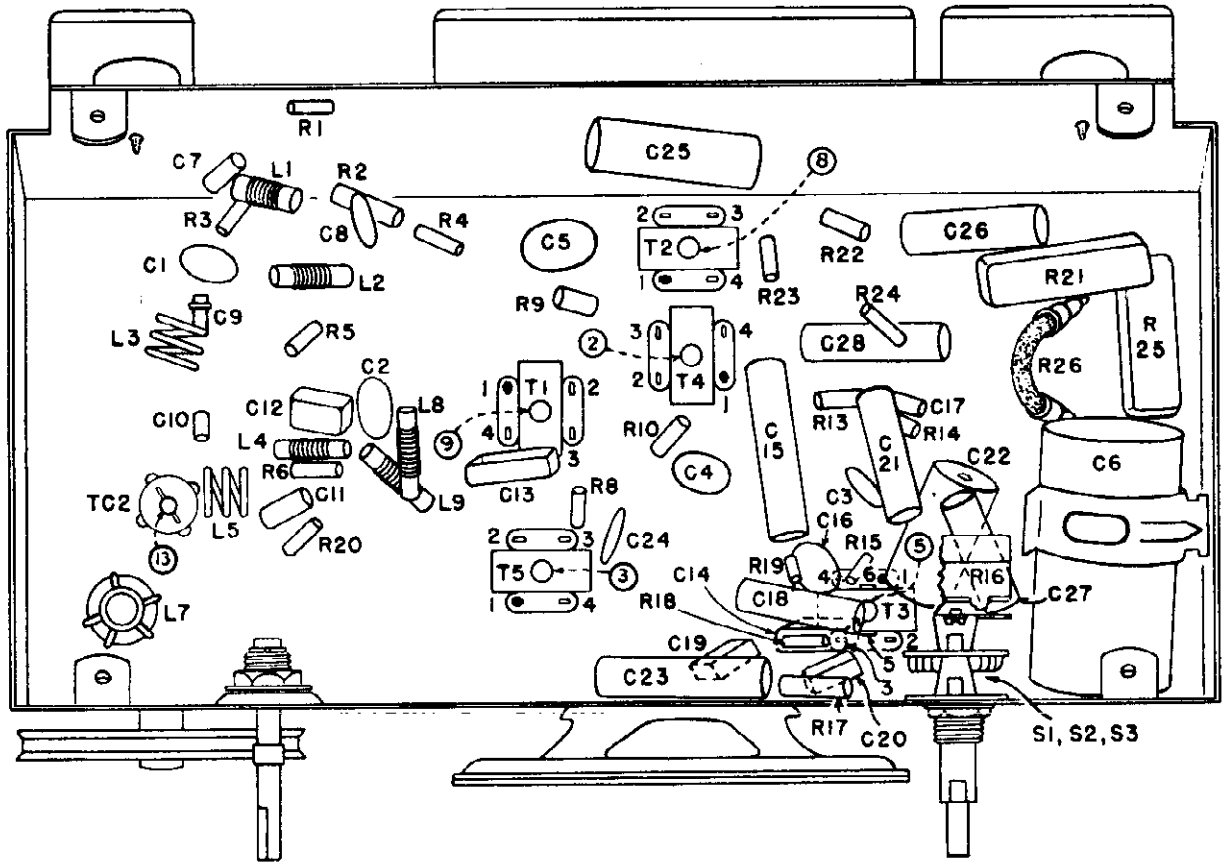

LOCATION OF PARTS UNDER CHASSIS

FIG. 8

©John F. Rider

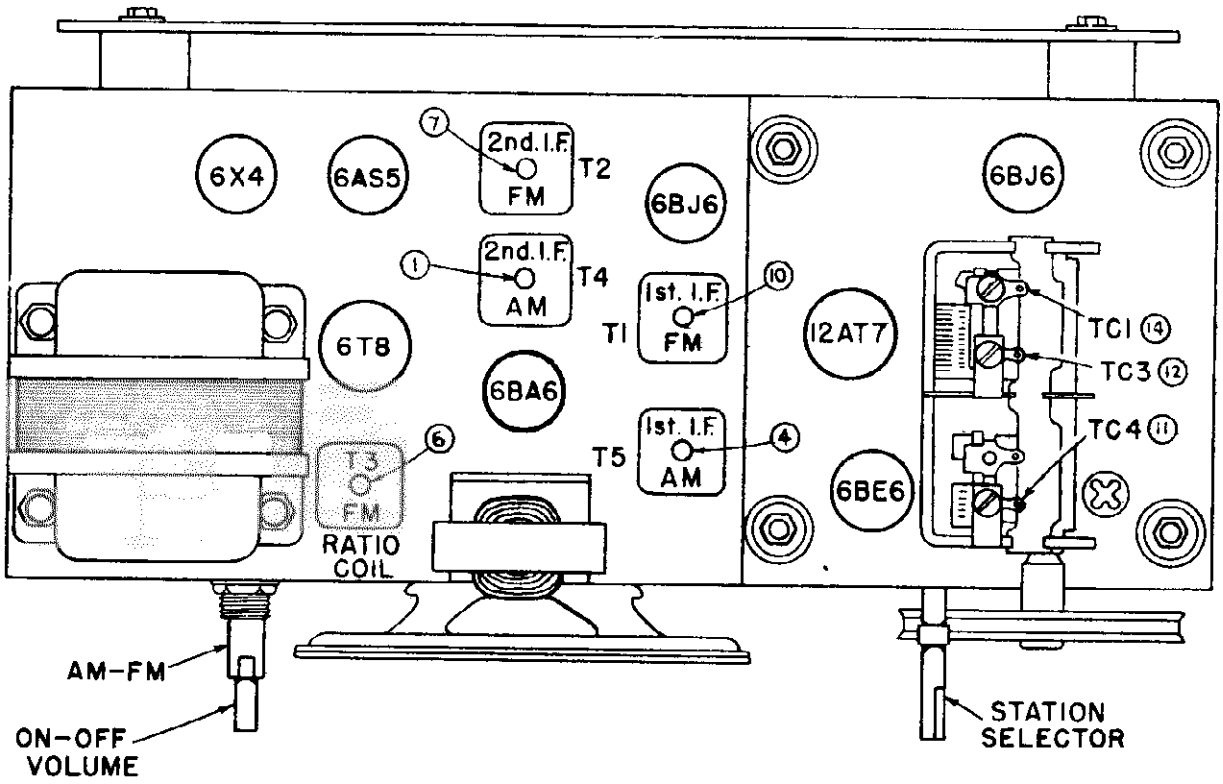

LOCATIONS OF PARTS ON TOP OF CHASSIS

FIG. 9

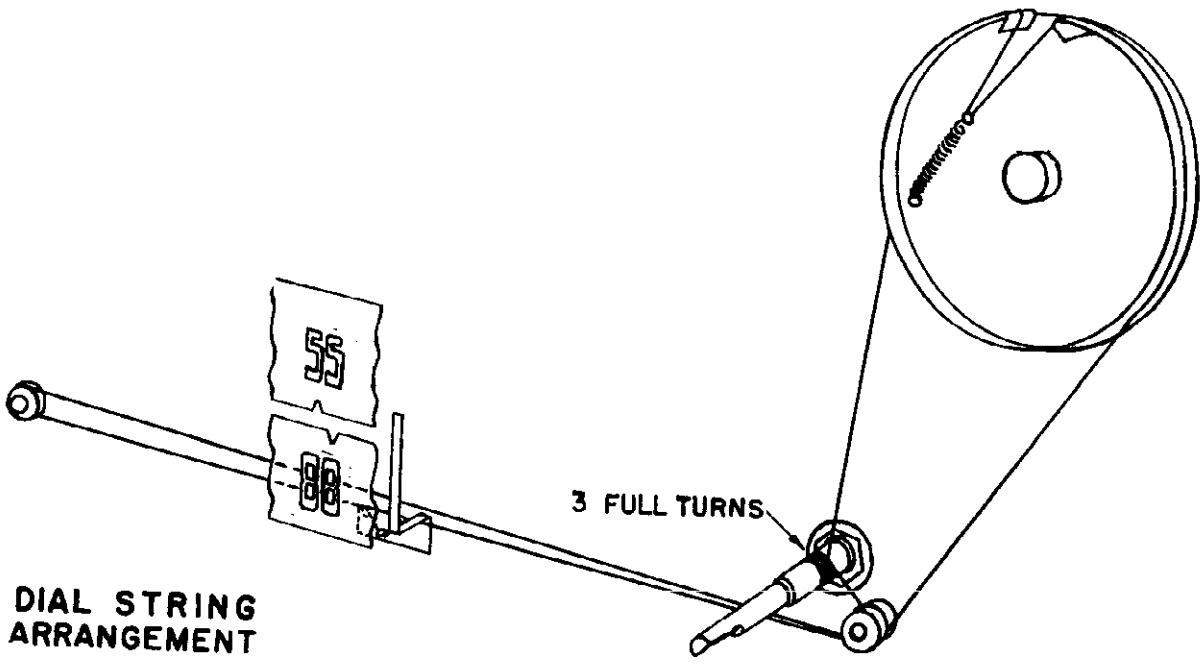

FIG. 10

©John F. Rider

MODELS 8024, 8025,
Ch. 478-206-1

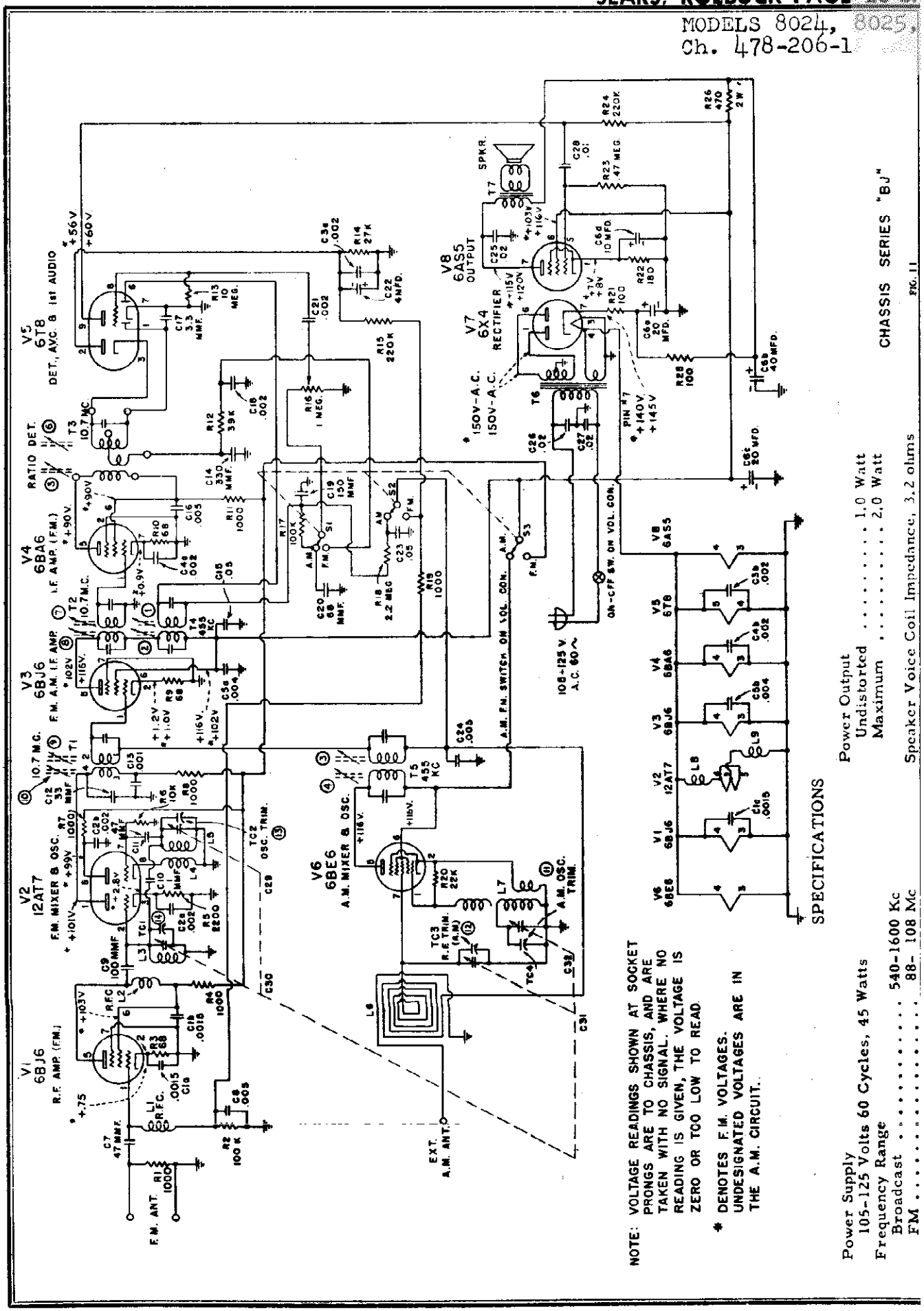

NOTE: VOLTAGE READINGS SHOWN AT SOCKET PRONGS ARE TO CHASSIS, AND ARE TAKEN WITH NO SIGNAL. WHERE NO READING IS GIVEN, THE VOLTAGE IS ZERO OR TOO LOW TO READ.

* DENOTES F.M. VOLTAGES. UNDESIGNATED VOLTAGES ARE IN THE A.M. CIRCUIT.

SPECIFICATIONS

Power Output
Undistorted ..... 1.0 Watt
Maximum ..... 2.0 Watt

Speaker Voice Coil Impedance, 3.2 ohms

Power Supply
105-125 Volts 60 Cycles, 45 Watts

Frequency Range
Broadcast ..... 540-1600 Kc
FM ..... 88- 108 Mc

©John F. Rider

MODEL 8071,
Ch. 135.242

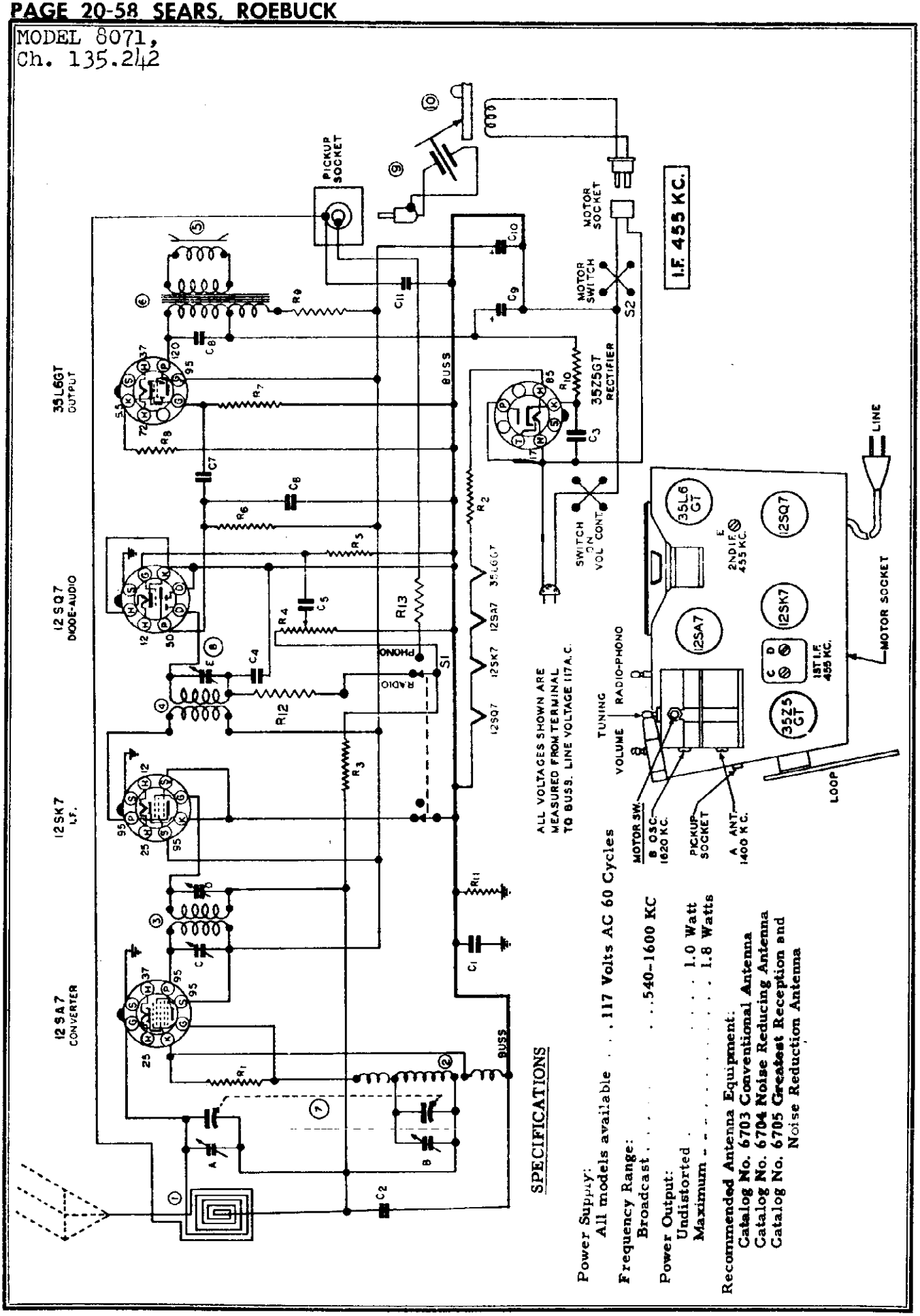

SPECIFICATIONS

Power Supply:
All models available . . . 117 Volts AC 60 Cycles

Frequency Range:
Broadcast . . . . . 540-1600 KC

Power Output:
Undistorted . . . . . 1.0 Watt
Maximum . . . . . 1.8 Watts

Recommended Antenna Equipment:
Catalog No. 6703 Conventional Antenna
Catalog No. 6704 Noise Reducing Antenna
Catalog No. 6705 Greatest Reception and Noise Reduction Antenna

©John F. Rider

MODEL 8071,
Ch. 135.242

ALIGNMENT PROCEDURE

PRELIMINARY:

Output Meter Connection . . . . . Across loud speaker voice coil
Generator ground lead connection . . . . . Receiver chassis
Dummy Antenna value to be in series with generator output . . . . . See chart below
Connection of generator output lead . . . . . See chart below
Generator Modulation . . . . . 30%, 400 cycles
Position of Volume Control . . . . . Fully on

POSITION OF TUNER	GENERATOR FREQUENCY	DUMMY ANTENNA	GENERATOR CONNECTION	TRIMMER ADJUSTMENTS (IN ORDER) SHOWN	TRIMMER FUNCTION
Closed	455 KC	.1 mfd.	125A7 Transl. grid.	E, D, C	IF
Open	1620 KC	.0001 mfd.	Ant.	B	Oscillator
1400 KC	1400 KC	.0001 mfd.	Ant. 1	A	Transl.

IMPORTANT ALIGNMENT NOTES

The alignment must be done in the order given.

The entire alignment Procedure should be repeated step by step in the original order for greatest accuracy.

Always keep the output power from the generator at its lowest possible value to prevent the AVC of the receiver from interfering with accurate alignment.

SCHEMATIC LOCATION	PART NUMBER	DESCRIPTION
	F-7520	Arm - Pickup (Less Crystal)
	F-5763	Cartridge - Crystal - Astatic L70
	F-242	Cabinet - Radio - Molded
	F-241	Cabinet - Radio - Molded ivory
	F-6093	Capacitor - Variable Assembly
8	F-4048	Capacitor - Trimmer - Single
C9,C10	F-5051	Capacitor - Electrolytic - 40 Mfd. 150 V. 40 Mfd. 150 V.
C4	F-1374	Capacitor - Mica - .0001 Mfd. 500 V. 20%
C6	F-4890	Capacitor - .0005 Mfd. 600 V. 25% +60%
C5	F-4894	Capacitor - .005 Mfd. 600 V. 20% +40%
C7	F-1344	Capacitor - .01 Mfd. 400 V. 20% +20%
C8	F-1376	Capacitor - .02 Mfd. 400 V. 20% +20%
C1,C2	F-1345	Capacitor - .05 Mfd. 200 V. 20% +20%
C3	F-1346	Capacitor - .05 Mfd. 400 V. 20% +20%
C11	F-4897	Capacitor - .09 Mfd. 200 V. 10% +10%
2	F-4810	Coil - Oscillator
R4	F-6239	Control - On-Off & Volume
	F-1090	Cord - Line
	F-1577	Knob - Volume Control & Radio - Phono Switch
	F-6103	Knob - Station Selector
	F-7513	Leaflet - Instruction
1	F-6100	Loop - Antenna
10	F-7526	Motor - Phono - 60 Cycle (Less Turntable)
	F-7527	Idler Wheel
	F-7528	Turntable - 8"
R10	F-4022	Resistor - 33 Ohm - 1/2 W. - 20%
R8	F-4067	Resistor - 180 Ohm - 1.2 W. - 10%
R1	F-4025	Resistor - 22,000 Ohm - 1/2 W. - 20%
R12	F-4069	Resistor - 47,000 Ohm - 1/2 W. - 20%
R6,R11	F-4026	Resistor - 220,000 Ohm - 1/2W. - 20%
R7	F-4027	Resistor - 470,000 Ohm - 1/2W. - 20%
R3,R13	F-1262	Resistor - 1 Megohm - 1/2 W. - 20%
R5	F-4028	Resistor - 6.8 Megohm - 1/2 W. - 20%
R9	F-5358	Resistor - 1,000 Ohm - 1 W. - 10%
	F-4978	Shield - L.F. Transformer
	F-3229	Socket - Tube + 8 Prong - Octal
	F-6102	Speaker - 4" P.M.
	F-2877	Switch - Radio - Phono
	F-2094	Switch - Motor - On-Off
T1	F-4813	Transformer - I.F. #1
T2	F-4846	Transformer - I.F. #2
T3	F-4875	Transformer - Output

©John F. Rider

MODEL 8073,
Ch. 135.243

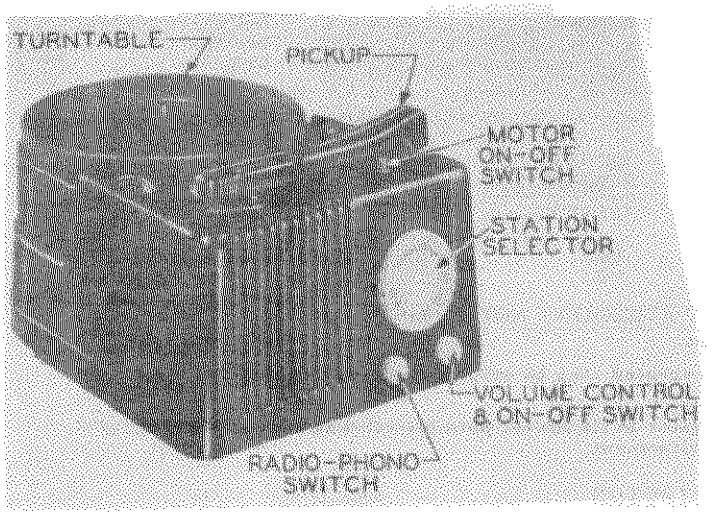

REPAIR PARTS LIST

SCHEMATIC LOCATION	NUMBER	DESCRIPTION
	F-7525	Arm - Pickup (Less Crystal)
	F-5763	Cartridge - Crystal - Astatic L70
	F-293	Cabinet - Radio - Molded
	F-7516	Capacitor - Variable Assembly
C11	F-4048	Capacitor - Trimmer - Single
C17,C18	F-5051	Capacitor - Electrolytic - 40 MFD. 150V. 40 MFD. 150V.
C12	F-1374	Capacitor - Mica - .0001 Mfd. 500V. 20%
C14	F-4890	Capacitor - .0005 Mfd. 600V. -25% + 60%
C13	F-4894	Capacitor - .005 Mfd. 600V. -20% + 40%
C15	F-1344	Capacitor - .01 Mfd. 400V. -20% + 20%
C16	F-1376	Capacitor - .02 Mfd. 400V. -20% + 20%
C5,C6,C9	F-1345	Capacitor - .05 Mfd. 200V. -20% + 20%
C19	F-1346	Capacitor - .05 Mfd. 400V. -20% + 20%
C10	F-4957	Capacitor - .09 Mfd. 200V. -10% + 10%
L1	F-7139	Coil - Oscillator
R6	F-6239	Control - On-Off & Volume
	F-1090	Cord - Line
	F-1577	Knob - Volume Control & Radio-Phono Switch
	F-7511	Knob - Station Selector
	P-7513	Leaflet - Instruction
	F-6100	Loop - Antenna
	F-7526	Motor - Phono - 60 Cycle (Less Turntable)
	F-7527	Idler Wheel
	F-7528	Turntable - 8"
R9	F-4067	Resistor - 180 Ohm - 1/2 W. - 10%
R1	F-4025	Resistor - 22,000 Ohm - 1/2 W. - 20%
R4	F-4069	Resistor - 47,000 Ohm - 1/2 W. - 20%
R2,R8	F-4026	Resistor - 220,000 Ohm - 1/2 W. - 20%
R10	F-4027	Resistor - 470,000 Ohm - 1/2 W. - 20%
R3,R5	F-1262	Resistor - 1 Megohm - 1/2 W. - 20%
R7	F-4028	Resistor - 6.8 Megohm - 1/2 W. - 20%
R11	F-5358	Resistor - 1,000 Ohm - 1 W. - 10%
	F-4978	Shield - I. F. Transformer
	F-7515	Socket - Tube - 8 Prong - Octal
	F-6102	Speaker - 4" P. M.
	F-2877	Switch - Radio - Phono
	F-2094	Switch - Motor - On-Off
T1	F-4813	Transformer - I. F. #1
T2	F-4846	Transformer - I. F. #2
T3	F-4875	Transformer - Output

SPECIFICATIONS

Power Supply:
All models available . . . . . 117 Volts AC 60 Cycles

Frequency Range:
Broadcast . . . . . 535-1620 KC

Recommended Antenna Equipment
Catalog No. 6703 Conventional Antenna
Catalog No. 6704 Noise Reducing Antenna
Catalog No. 6705 Greatest Reception and Noise Reduction Antenna

Power Output:
Undistorted . . . . . 1.0 Watt
Maximum . . . . . 1.8 Watts

ALIGNMENT PROCEDURE

PRELIMINARY:

Output Meter Connection. . . . . Across loud speaker voice coil
Generator ground lead connection. . . . . Floating Ground
Dummy Antenna Value to be in series with generator output. . . . . See chart below
Connection of Generator Output lead . . . . . See chart below
Generator Modulation . . . . . 30%, 400 Cycles
Position of Volume Control . . . . . Fully on

POSITION OF TUNER	GENERATOR FREQUENCY	DUMMY ANTENNA	GENERATOR CONNECTION	TRIMMER ADJUSTMENTS (IN ORDER) SHOWN	TRIMMER FUNCTION
Closed	455 KC	.1 mfd.	12SA7GT Transl.Grid	C11,C8 & C7	I.F.
Open	1620 KC	.0002 mfd.	Loop	C4	Oscillator
1400 KC	1400 KC	.0002 mfd.	Loop	C2	Transl.

IMPORTANT ALIGNMENT NOTES

The alignment must be done in the order given.

The entire Alignment Procedure should be repeated step by step in the original order for greatest accuracy.

Always keep the output power from the generator at its lowest possible value to prevent the AVC of the receiver from interfering with accurate alignment.

©John F. Rider

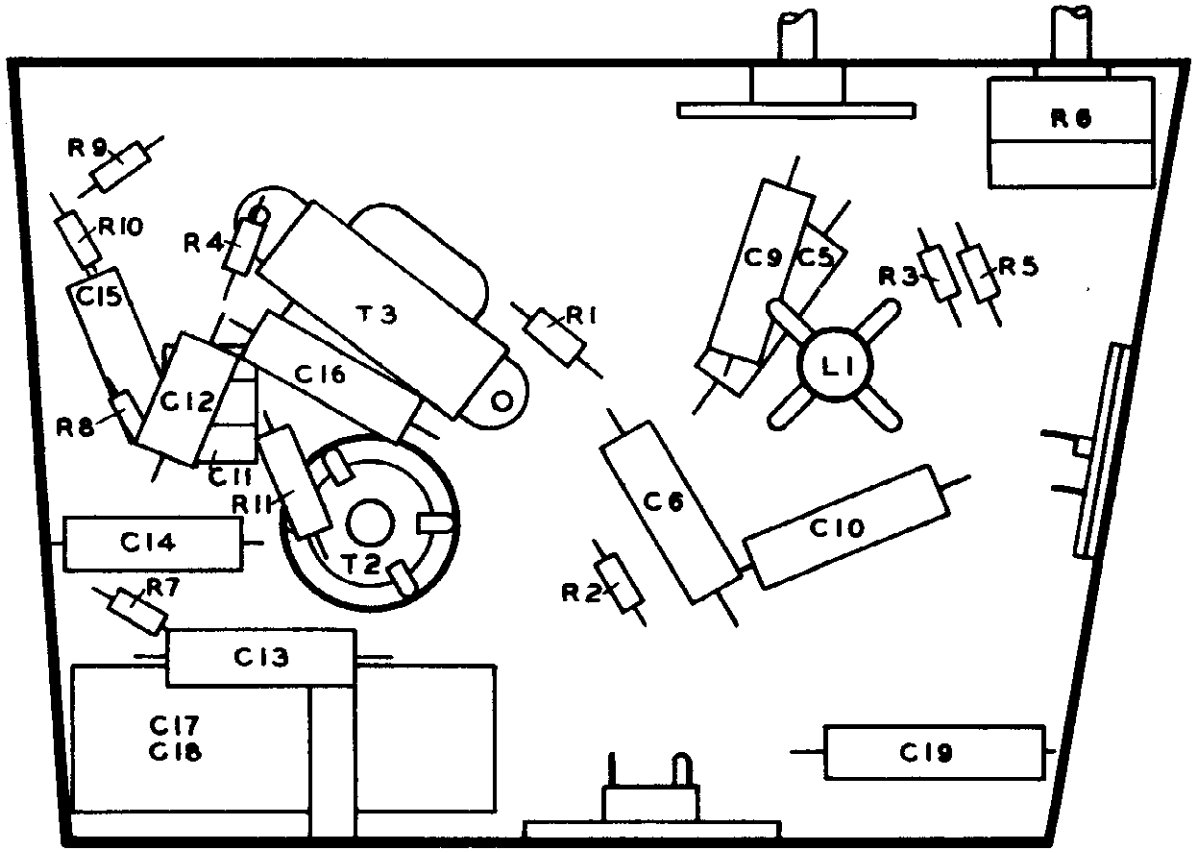

LOCATION OF PARTS UNDER CHASSIS

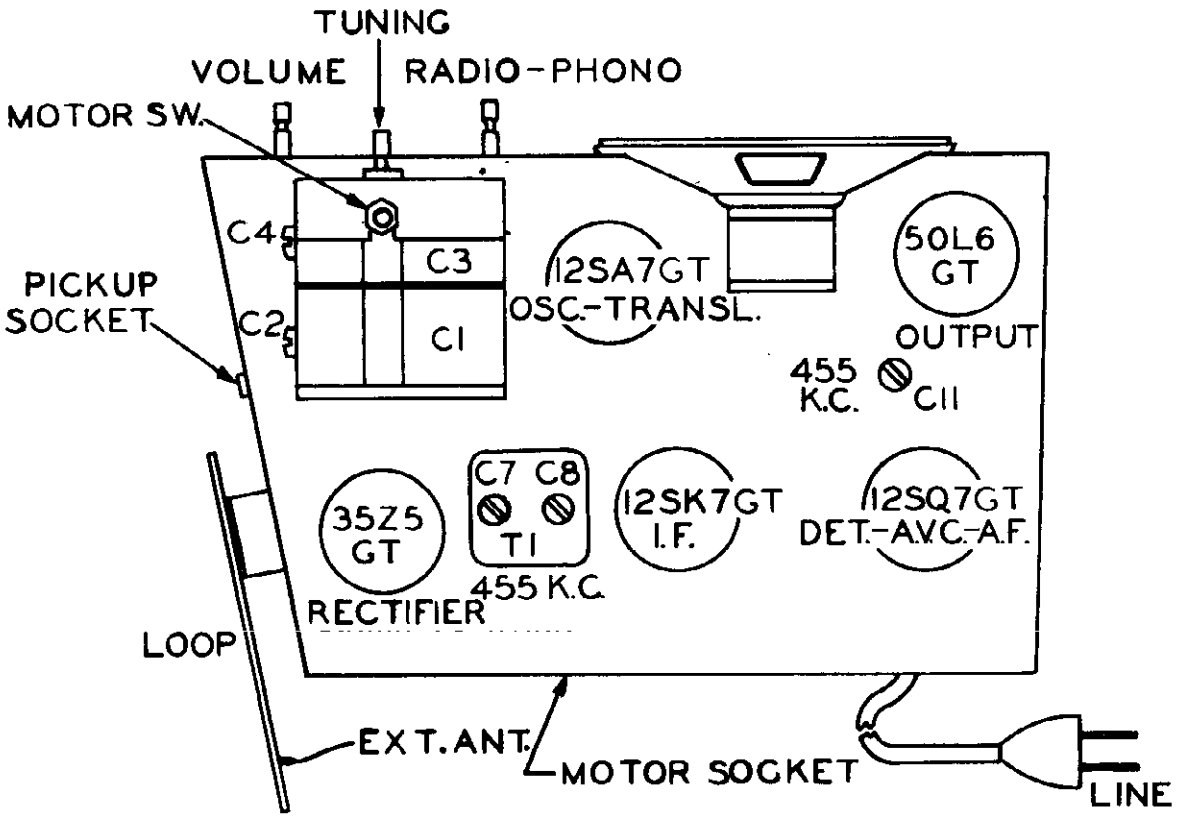

LOCATION OF PARTS ON TOP OF CHASSIS

©John F. Rider

MODEL 8073,
Ch. 135.243

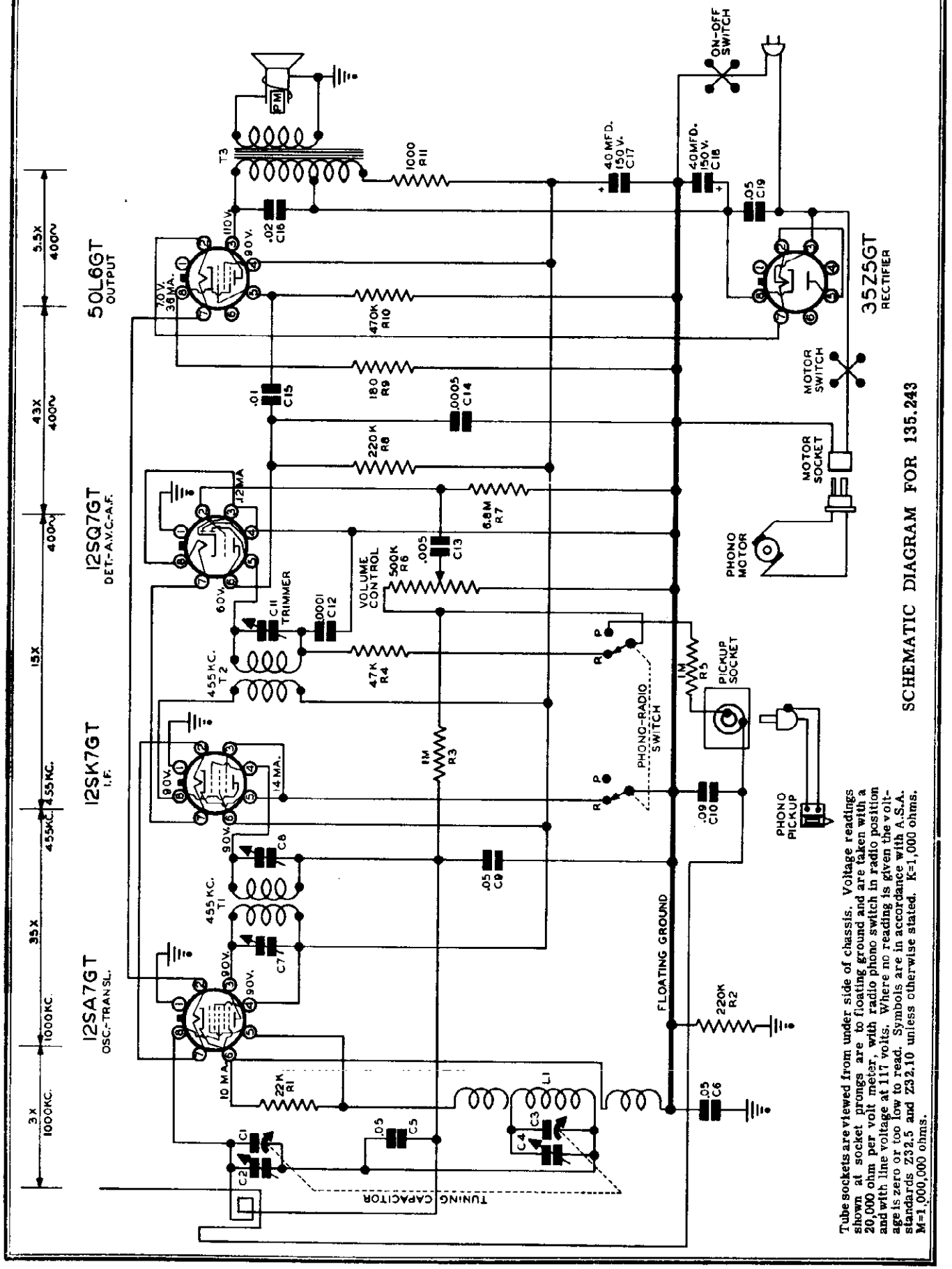

©John F. Rider

MODEL 9000,
Ch. 132.857

SPECIFICATIONS

Power Supply
105-125 Volts AC-DC 30 Watts

Frequency Range
Broadcast 540-1600 Kc

Power Output
Undistorted .85 Watt
Maximum 2.3 Watt

Speaker Voice Coil Impedance 3.2 Ohms

SCHEMATIC LOCATION	PART NO.	DESCRIPTION
	N22084	Cabinet, Brown
L2	N22101-1	Coil, Oscillator
C1A, C1B	N22105	Condenser, Variable, 2 Gang
C2, C6		Condenser, Ceramic, .00022 Mfd.350 V. G.P.
C3		Condenser, .05 Mfd., 200 Volt
C4, C5		Condenser, .05 Mfd., 400 Volt
C7		Condenser, Molded, .00005 Mfd., J.P.
C8, C10		Condenser, Mica, .00025 Mfd., 500 Volt
C9		Condenser, .002 Mfd., 600 Volt
C11		Condenser, .005 Mfd., 600 Volt
C12A, C12B C12C		Condenser, Electrolytic, 50-30 Mfd., 150 Volt, 20 Mfd., 25 Volt
C13		Condenser, .01 Mfd., 400 Volt
P	N20254-2	Cord, Power
	N22085	Knob, Tuning, Brown
	N22086	Knob, Volume, Brown
	N22089	Leaflet, Instruction
L1	N22100	Loop, Antenna & Rear Cover Assy.
R1		Resistor, 330,000 Ohms, 1/4 Watt
R2		Resistor, 3300 Ohms, 1/4 Watt
R3, R9, R10		Resistor, 470,000 Ohms, 1/4 Watt
R4		Resistor, 22,000 Ohms, 1/4 Watt
R5		Resistor, 4.7 Megohm, 1/4 Watt
R6	N22107	Resistor, 2 Megohm, Vol. Control & Sw.
R7		Resistor, 33 Ohm, 1/4 Watt
R8		Resistor, 10 Megohm, 1/4 Watt
R11		Resistor, 150 Ohms, 1/4 Watt
R12		Resistor, 1200 Ohms, 1 Watt
Spk.	N22104	Speaker, 4" P. M.
T1	N22102-1	Transformer, I. F.
T2	N22103-1	Transformer, Output

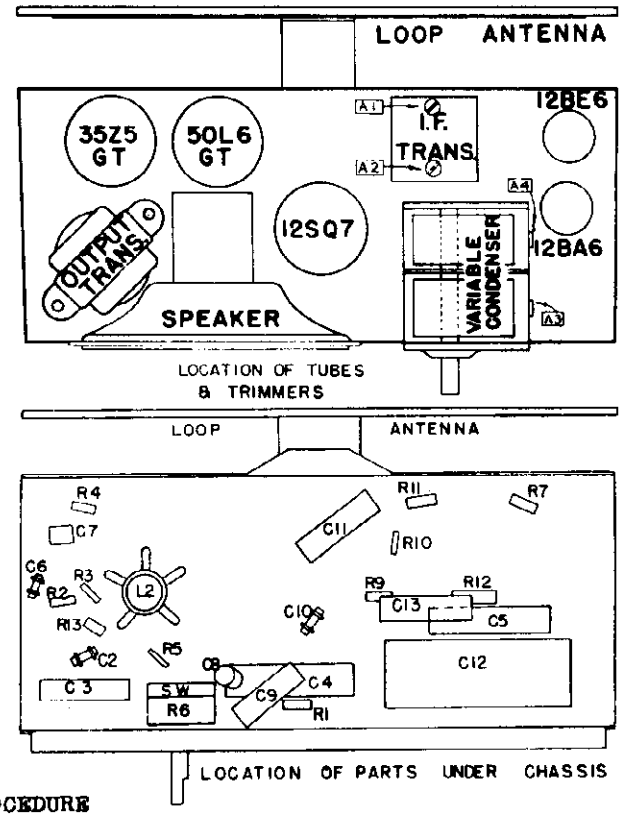

ALIGNMENT PROCEDURE

PRELIMINARY:

Output meter connection ..... Across speaker voice coil
Output meter reading to indicate 200 MW (Standard output)..... .8 volt
Generator modulation ..... 30% 400 cycles
Position of volume control ..... Fully clockwise

POSITION OF VARIABLE	GENERATOR FREQUENCY	DUMMY ANTENNA	GENERATOR CONNECTION HIGH SIDE	GENERATOR CONNECTION GND. LEAD	ADJUST TRIMMERS IN ORDER SHOWN	TRIMMER FUNCTION
Open	455 Kc	.05 Mfd	Mixer Grid	Fltg. Gnd.	A1 - A2	I. F.
Open	1620 Kc		Test Loop	Test Loop	A3	Oscillator
1400 Kc	1400 Kc		Test Loop	Test Loop	A4	Antenna
600 Kc	600 Kc		Test Loop	Test Loop	**Check Point	Antenna

IMPORTANT ALIGNMENT NOTES

* Connect generator lead to a test loop placed a short distance from the set loop, or connect high side to green lead on set loop through a 200 mmf. condenser and ground lead to floating ground of receiver.

** Check sensitivity at 600 Kc. If low, adjust antenna section plates of variable for maximum output at 600 Kc.

The alignment procedure should be repeated in the original order for greatest accuracy Always keep the output from the signal generator at its lowest possible value to make the A. V. C. action of the receiver ineffective.

©John F. Rider

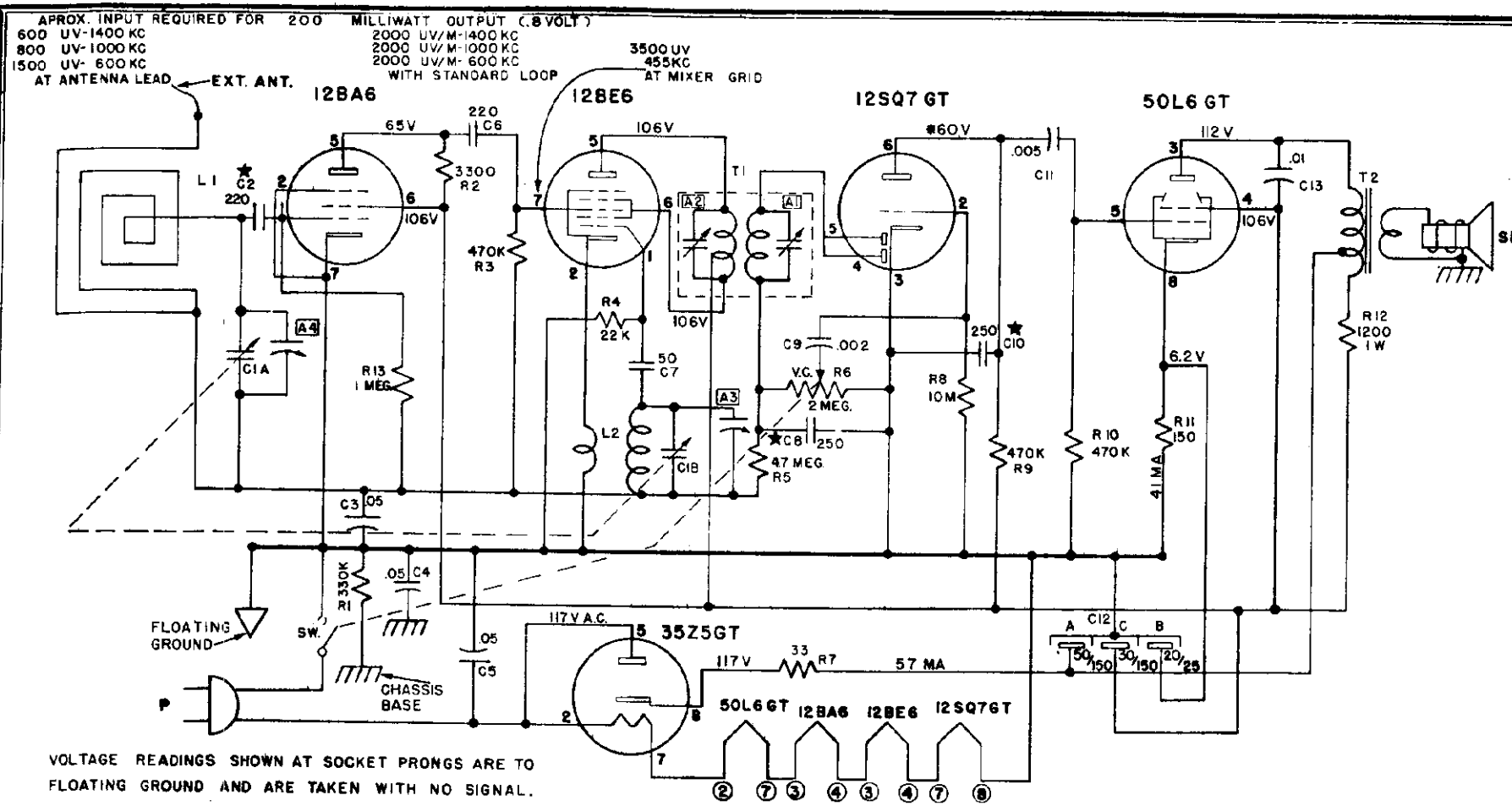

VOLTAGE READINGS SHOWN AT SOCKET PRONGS ARE TO FLOATING GROUND AND ARE TAKEN WITH NO SIGNAL.

AC LINE VOLTAGE AT 117 VOLTS.

* MEASURED WITH VACUUM TUBE VOLTMETER.

CAPACITY OF CONDENSERS LESS THAN .001 MF IS SHOWN IN MMF.

★CERTAIN CONDENSERS VALUES IN EARLY PRODUCTION SETS WERE SLIGHTLY DIFFERENT THAN THOSE SHOWN:
C2 WAS 250 MMFD. – NOW IS 220 MMFD.
C10 WAS 220 MMFD. – NOW IS 250 MMFD.
C8 WAS 50 MMFD. – NOW IS 250 MMFD.
THESE CHANGES WERE MADE FOR EASE OF PRODUCTION AND THE USE OF EITHER VALUE WILL HAVE NO EFFECT ON THE PERFORMANCE OF THE RECIVER.

Condenser Value Changes: CHANGES
C2 was changed from 250 mmf. Mica to 220 mmf. Ceramic
C10 was changed from 220 mmf. Ceramic to 250 mmf. Mica
C8 was changed from 50 mmf. Molded to 250 mmf. Mica

Circuit Change: A few of the first sets produced had a .001 Mfd. 600 Volt Condenser on the Loop Antenna connected from the external antenna winding to A. V. C.

Correction: The Schematic Diagram printed on some of the first Instruction Sheets and Chassis Labels showed R10 connected to B+: this should have been shown connected to floating ground.

o John F. Rider

MODELS 9005, 9006
Ch. 132.858

SPECIFICATIONS

Power Supply
105-125 Volts AC-DC 35 Watts

Frequency Range
Broadcast 540-1600 Kc

Power Output
Undistorted .8 Watt
Maximum 2.0 Watt

Speaker Voice Coil Impedance 3.2 Ohms

ALIGNMENT PROCEDURE

PRELIMINARY:

Output meter connection ..... Across speaker voice coil
Output meter reading to indicate .5 W (Standard Output)..... 1.26 volt
Generator modulation ..... 30% 400 cycles
Position of volume control ..... Fully clockwise
Dial pointer position with variable condenser closed.....Last mark on dial

POSITION OF VARIABLE	GENERATOR FREQUENCY	DUMMY ANTENNA	GENERATOR CONNECTION HIGH SIDE	GENERATOR CONNECTION GND. LEAD	ADJUST TRIMMERS IN ORDER SHOWN	TRIMMER FUNCTION
Open	455 Kc	.05 Mfd.	Mixer Grid	Fltg. Gnd.	A1,A2,A3,A4	I. F.
1400 Kc	1400 Kc	200 Mmf.	*Ant. Lead	Fltg. Gnd.	A5	Oscillator
1400 Kc	1400 Kc	200 Mmf.	*Ant. Lead	Fltg. Gnd.	A6	Antenna
600 Kc	600 Kc	200 Mmf.	*Ant. Lead	Fltg. Gnd.	**Check Point	Antenna

IMPORTANT ALIGNMENT NOTES

* Connect generator lead to green wire on loop antenna or a test loop may be used on the generator placed a short distance from the set loop.
** Check sensitivity at 600 Kc. If low, adjust antenna section plates of variable for maximum output at 600 Kc.
The alignment procedure should be repeated in the original order for greatest accuracy. Always keep the output from the signal generator at its lowest possible value to make the A. V. C. action of the receiver ineffective.

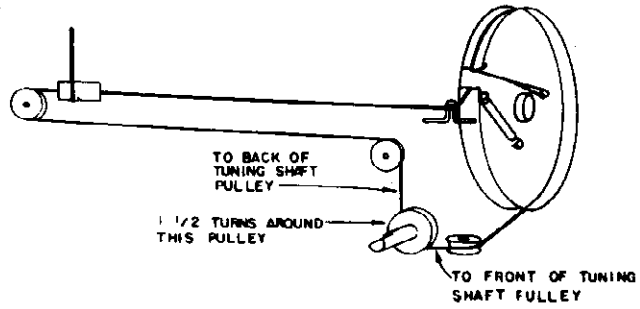

DIAL STRINGING ARRANGEMENT

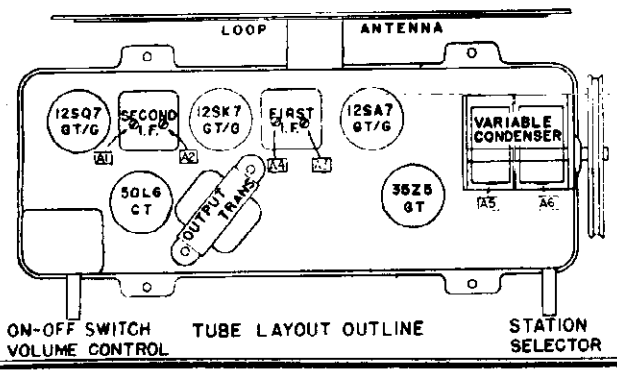

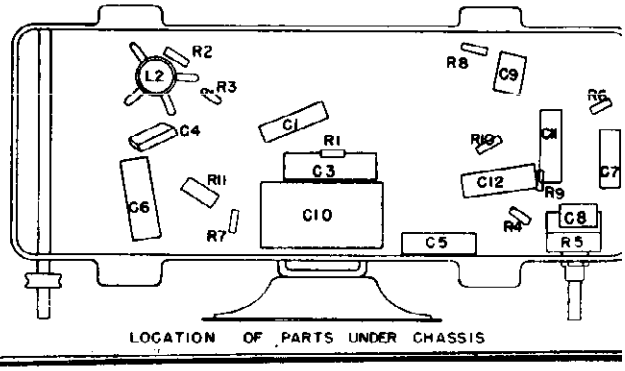

©John F. Rider

MODELS 9005, 9006,
Ch. 132.858

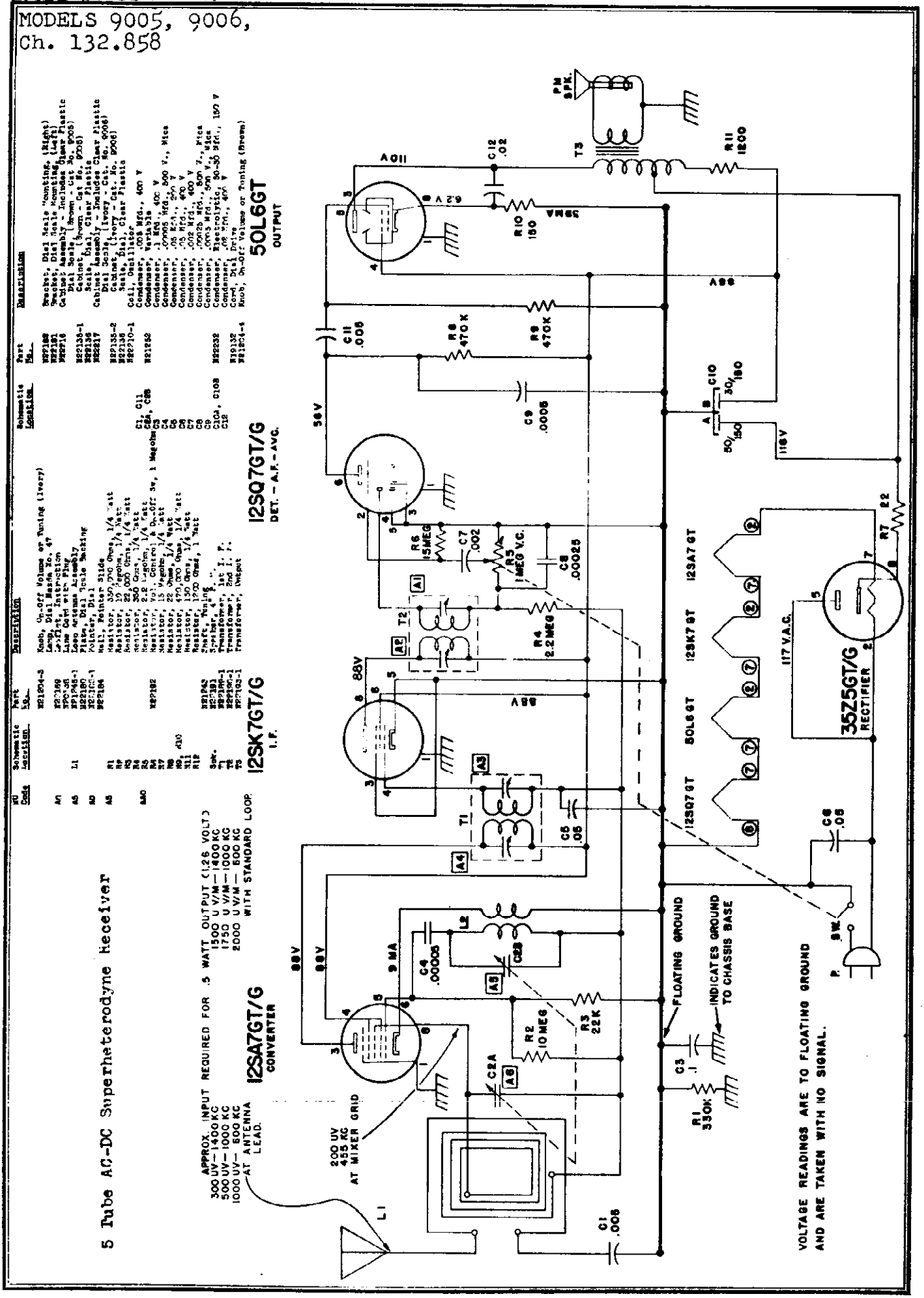

KD Code	Schematic Location	Part No.	Description
		821204-3	Knob, On-Off Volume or Tuning (Ivory)
		821189	Lamp, Dial Scale No. 47
	A1	820436	Lenslet, Instruction
		820746-1	Lens Cover Strip
	A5 L1	821940	Loop Antenna Assembly
		821800-1	Mask, Dial Scale Backing
	A9	821184	Pilot, Dial
			Rail, Pointer Slide
	A8 R1		Resistor, 330,000 Ohms, 1/4 Watt
	R2		Resistor, 10 Megohm, 1/4 Watt
	R3		Resistor, 22,000 Ohms, 1/4 Watt
	R4		Resistor, 2.2 Megohm, 1/4 Watt
	R5	821182	Resistor, Vol. Control & On-Off Sw, 1 Megohm
	R6		Resistor, 1.5 Megohm, 1/4 Watt
	R7		Resistor, 22 Ohms, 1/4 Watt
	R8 R9		Resistor, 470,000 Ohms, 1/4 Watt
	R10		Resistor, 180 Ohms, 1/4 Watt
	R11		Resistor, 1200 Ohms, 1 Watt
			Shaft, Tuning
	Spkr.	821242	Speaker, 4" P.M.
	T1	821191	Transformer, 1st I. F.
	T2	821196-1	Transformer, 2nd I. F.
	T3	821193-1	Transformer, Output

KD Code	Schematic Location	Part No.	Description
		821188	Bracket, Dial Scale Mounting, (Right)
		821187	Bracket, Dial Scale Mounting, (Left)
		821216	Cabinet Assembly - Includes Clear Plastic Dial Scale, (Brown - Cat No. 9005)
		821138-1	Cabinet, (Brown - Cat No. 9005)
		821136	Scale, Dial, Clear Plastic
		821217	Cabinet Assembly - Includes Clear Plastic Dial Scale, (Ivory - Cat. No. 9006)
		821138-2	Cabinet, (Ivory - Cat. No. 9006)
		821136	Scale, Dial, Clear Plastic
		821210-1	Coil, Oscillator
			Condenser, .005 Mfd., 400 V
			Condenser, Variable
	C1, C11		Condenser, .1 Mfd., 400 V
	C2A, C2B	821252	Condenser, .1 Mfd., 400 V
	C3		Condenser, .00005 Mfd., 500 V., Mica
	C4		Condenser, .05 Mfd., 200 V
	C5		Condenser, .05 Mfd., 400 V
	C6		Condenser, .002 Mfd., 400 V
	C7		Condenser, .00025 Mfd., 500 V., Mica
	C8		Condenser, .0005 Mfd., 500 V., Mica
	C9		Condenser, Electrolytic, 30-30 Mfd., 150 V
	C10	822232	Condenser, .05 Mfd., 400 V
	C12		Cord, Dial Drive
		819132	Knob, On-Off Volume or Tuning (Brown)
		821254-4	

MODEL 9022,
Ch. 132.871

SPECIFICATIONS

Power Supply
105 120 Volts AC 50 Watts
Frequency Range
Broadcast . . . . . 540-1600 Kc
FM . . . . . 88- 108 Mc

Power Output
Undistorted . . . . 1.0 watt
Maximum . . . . . 2.5 watt

Speaker Voice Coil Impedance 3.2 ohms

ALIGNMENT PROCEDURE

PRELIMINARY:

Output meter connection ---------- Across speaker voice coil.
Output meter reading to indicate 500 MW ---------- 1.27 volts.
Generator Modulation ---------- 30%, 400 cycles.
Position of volume control ---------- Fully clockwise.
Set dial pointer ---------- Horizontal, variable condenser closed.
Set band switch ---------- To left for AM alignment, to right for FM alignment.

AM ALIGNMENT

Position of Variable	Generator Frequency	Dummy Ant.	Generator Connection (high)	Generator Connection Ground Lead	Adjust Trimmer In Order Shown For Max. Output	Trimmer Function
Open	455 Kc	.05 mfd.	Mixer Grid	Chassis	A1, A2, A3, A4,	I.F.
Open	1650 Kc		*Test Loop	Test Loop	A5	Oscillator
1400 Kc	1400 Kc		*Test Loop	Test Loop	A6	Antenna
**600 Kc	600 Kc		*Test Loop	Test Loop	Check Point	Antenna

* Connect generator lead to a Standard Hazeltine Test Loop, Model 1150, placed two feet from the set loop, or three turns of wire about six inches in diameter, placed about one foot from the set loop. Or the generator can be connected with the high side lead to the AM antenna screw terminal and the ground lead to the chassis.

** With a generator signal of 600 Kc, tune the set to the point where maximum output is obtained, which should be approximately 600 Kc on the dial. Adjust antenna section places of variable for maximum output.

The alignment procedure should be repeated in the original order for greatest accuracy.

Always keep the output from the signal generator at its lowest possible value to make the A. V. C. action of the receiver ineffective.

FM ALIGNMENT

Detector and I.F. alignment using Signal Generator and Oscilloscope.

1. Connect FM Generator, High side, to grid (pin 1) of 6BA6 2nd I.F. tube through .005 mfd. dummy.
2. Set generator frequency to 10.7 Mc. modulated either 60 cycles or 400 cycles, 250 Kc sweep (125 Kc. deviation).
3. Connect vertical input of scope across volume control of receiver (grounded terminal to chassis, ungrounded terminal to high side of control).
4. Set scope switch for internal synchronization and set horizontal oscillator to 2X frequency of modulating voltage of generator. (120 or 800 cycles)
5. Turn variable condenser fully open, and band switch to right (FM).
6. Adjust frequency vernier of horizontal oscillator on scope until the pattern becomes stationary.
7. Adjust ratio detector primary slug No. A7 for maximum vertical sweep of the scope pattern.
8. Adjust ratio detector secondary slug No. A8 to center the cross over point of the pattern. Pattern should look like Fig. 1, with the same amount of curve on both ends, and the cross over point in the center.
9. Connect generator, high side, to center antenna screw terminal on bottom of chassis.
10. Adjust I.F. slugs A9, A10 and All for the greatest vertical sweep of the pattern, consistent with linearity. If the I.F. slugs are adjusted for maximum sweep of the pattern, the pattern may become non-linear. Therefore, adjustment should be made for the greatest sweep which can be obtained and still have all four ends of the "X" pattern similar in size and shape.
11. Check the alignment of the I.F. and detector circuits by varying the signal generator frequency above and below the center frequency of 10.7 Mc. If the receiver is perfectly aligned, two smaller "X" patterns of similar size and shape will result, one on either side of the center frequency. See Figure 2.

X PATTERN CENTER FREQUENCY

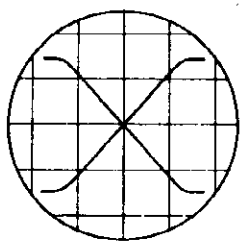

FIG 1

SMALL X PATTERN ABOVE AND BELOW CENTER FREQUENCY

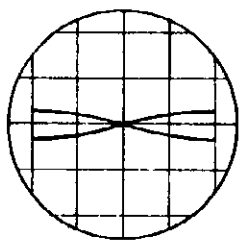

FIG 2

Position of Variable	Generator Frequency	Dummy Ant.	RF Generator Connection High Side Ant. (FM) Terminal	Generator Connection Ground Lead Ground (G) Terminal	Adjust Trimmers In Order Shown	Trimmer Function
Fully Open	108.5 Mc.	*300 ohm	Ant. (FM) Terminal	Ground (G) Terminal	A12	Oscillator
Fully Closed	87.5 Mc.	*300 ohm	Ant. (FM) Terminal	Ground (G) Terminal	† Check Point	Oscillator
105 Mc.	105 Mc.	*300 ohm	Ant. (FM) Terminal	Ground (G) Terminal	**A13	R.F.
91 Mc.	91 Mc.	*300 ohm	Ant. (FM) Terminal	Ground (G) Terminal	† Check Point	R.F.

For R.F. alignment use FM generator signal modulated with 400 cycles 45 Kc. sweep (22.5 Kc.) deviation).

* The 300 ohm dummy should be made up of two 150 ohm resistors, one placed in each lead at the receiver antenna terminals.

**When this trimmer is adjusted the Variable Condenser should be rocked back and forth through the frequency, to prevent erroneous maximum readings, due to oscillator pulling.

© John F. Rider

MODEL 9022,
Ch. 132.871

† The Coils L4 and L5 can be spread or squeezed together if necessary to obtain the proper band coverage and track at the low frequency end of the band. This should not be necessary in most cases, and the high frequency end of the band should always be realigned if the Coils are adjusted.

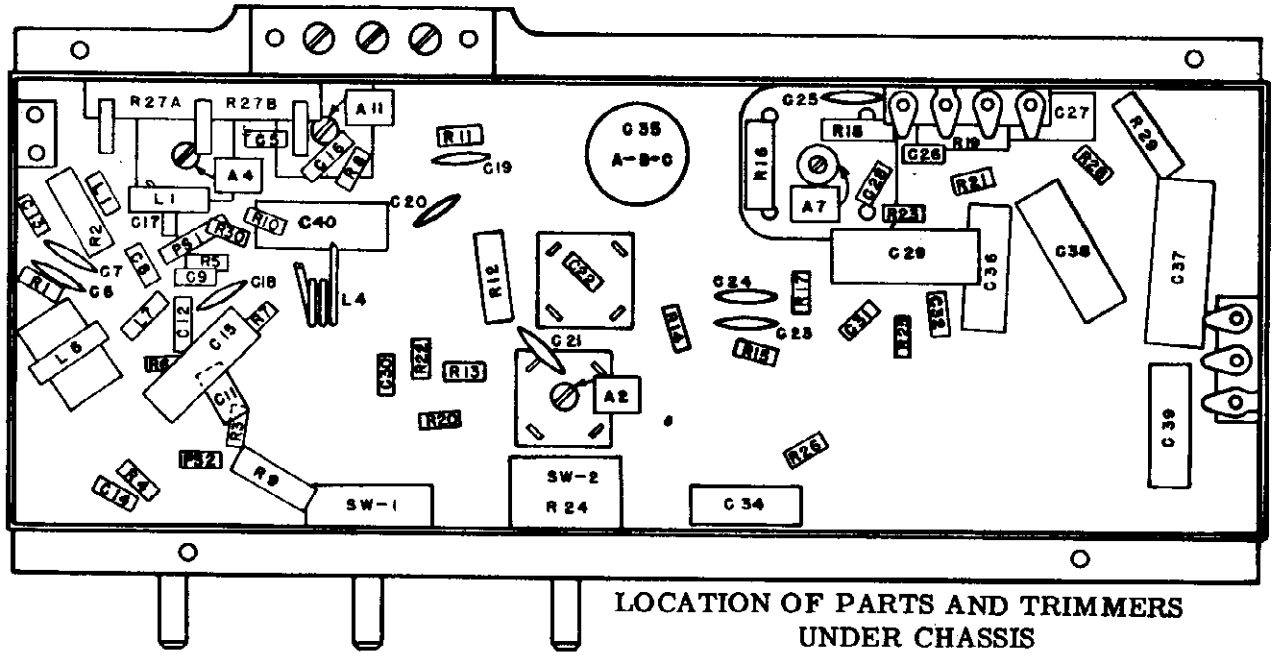

LOCATION OF PARTS AND TRIMMERS UNDER CHASSIS

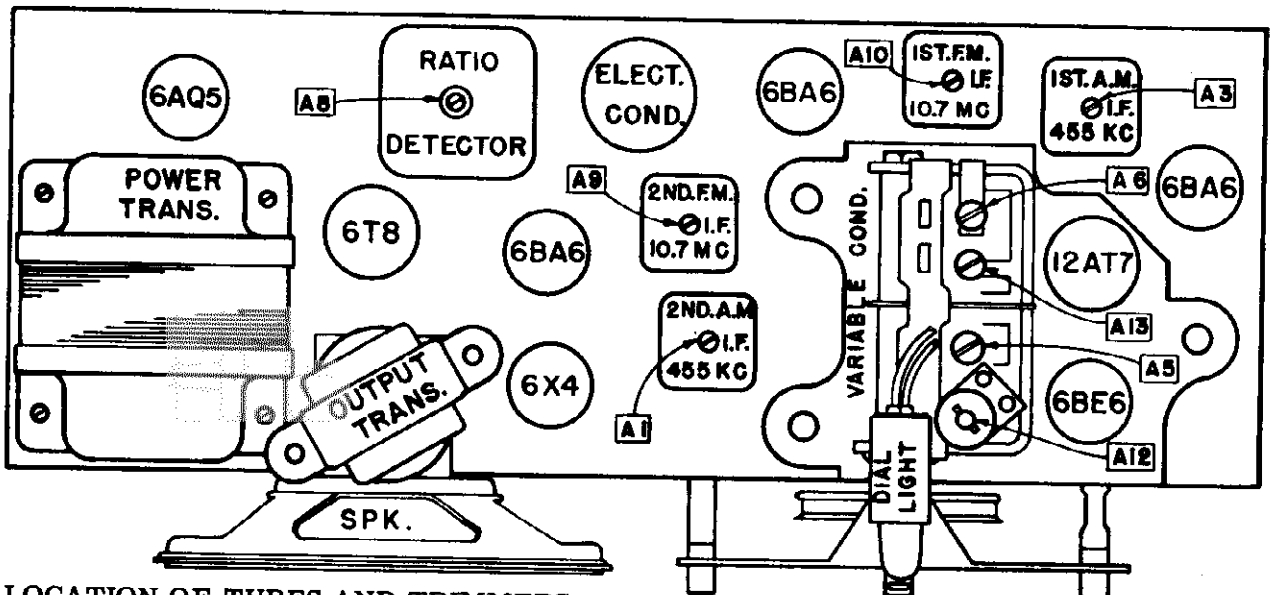

LOCATION OF TUBES AND TRIMMERS ON TOP OF CHASSIS

VOLUME CONTROL & SWITCH

BAND SWITCH

TUNING

TECHNICAL INFORMATION FOR SERVICE MEN

AM Tuning range – 540 Kc to 1600 Kc. Intermediate Frequency – 455 Kc. I.F. and R.F. measurements made at 500 milliwatts output – approximately 1.27 volts on a rectifier type voltmeter connected across speaker voice coil.

Approximate input for 500 MW output: I.F. 300 uv; R.F. with standard loop: at 600 Kc, 1200 uv/m. at 1000 Kc, 1050 uv/m; at 1400 Kc, 800 uv/m.

FM Tuning range – 88 megacycles to 108 megacycles. Intermediate Frequency 10.7 megacycles. I.F. and R.F. measurements made at 500 milliwatts output – approximately 1.27 volts on a rectifier type voltmeter connected across speaker voice coil. Approximate input for 500 MW output: I.F. 300 uv; R.F. "Absolute Measurements": 91 megacycles, 125 uv; 105 megacycles, 100 uv.

©John F. Rider

©John F. Rider

C40 was added after the start of production to reduce hum modulation sometimes noticeable on the AM band with the power plug inserted with a particular polarity. Should hum modulation be encountered on any set manufactured prior to this change, reversing the plug should eliminate it.

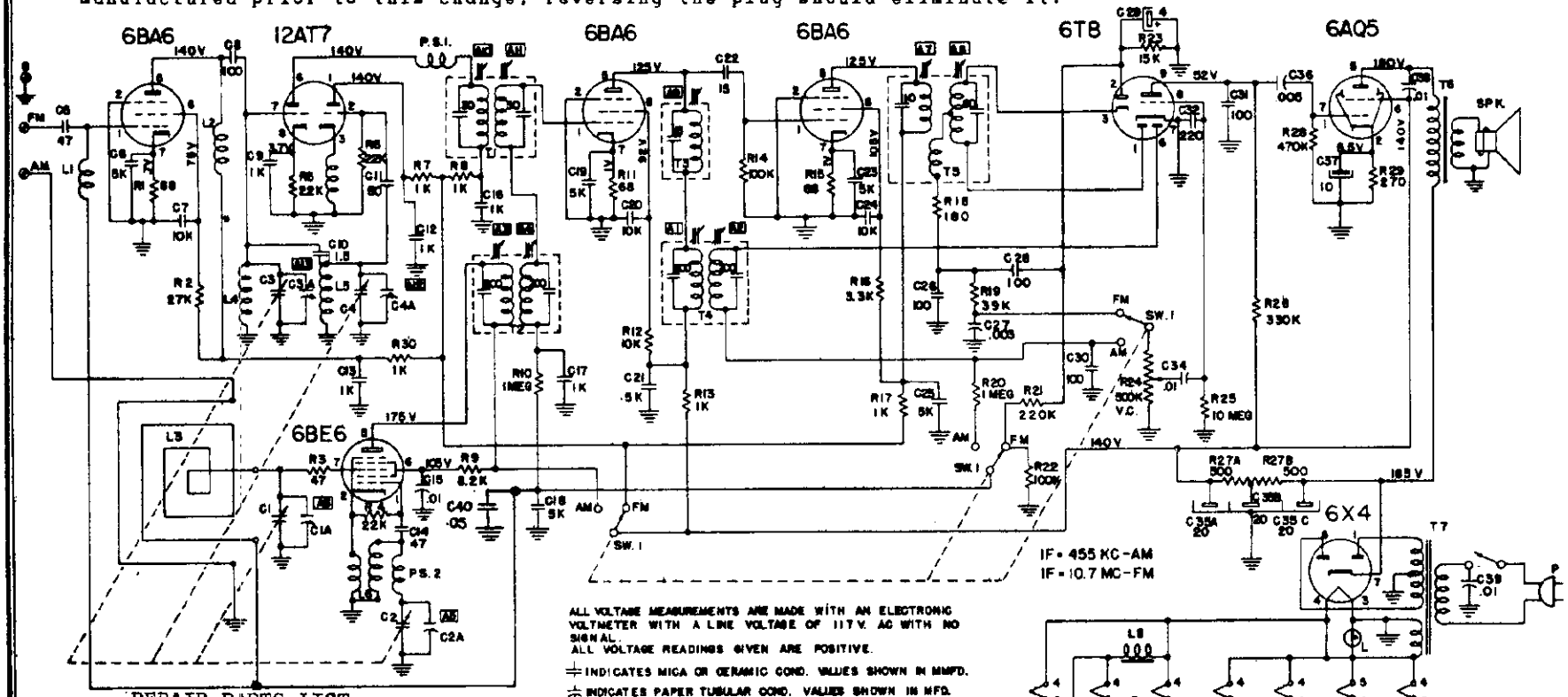

ALL VOLTAGE MEASUREMENTS ARE MADE WITH AN ELECTRONIC VOLTMETER WITH A LINE VOLTAGE OF 117 V. AC WITH NO SIGNAL.
ALL VOLTAGE READINGS GIVEN ARE POSITIVE.

⏚ INDICATES MICA OR CERAMIC COND. VALUES SHOWN IN MMFD.

⏚ INDICATES PAPER TUBULAR COND. VALUES SHOWN IN MFD.

⏚ INDICATES ELECTROLYTIC COND. VALUES SHOWN IN MFD.

REPAIR PARTS LIST

Schematic Location	Part Number	Description	Sears Code
L8	H22656	Antenna Loop Ass'y.	AA5
	H19426	Cabinet, Ivory	A0
	H22608	Baffle, Speaker	AA6
	H22605	Cloth, Grille, Rear	
	H19452	Cloth, Grille, Front	
L1	H22648	Choke, High Frequency, 1.8 uh	
L2	H21445	Choke, High Frequency, 7.8 uh	
L7	H22597-1	Choke, High Frequency, 3 uh	
L8	H21673	Choke, R.F., Iron Core, 14 uh	
L4	H22603	Coil, R.F. FM	
L5	H22594	Coil, Oscillator, FM	
L6	H22607	Coil, Oscillator, AM	
C1,C2,C3,C4	H22600	Condenser, Variable	A-5
C4A	H22726	Condenser, Osc. Temp. Cor. 5-25 uuf	
C5,C14		Condenser, Ceramic, 47 uuf, 350 V.	
C6,C18,C19, C21,C23,C25		Condenser, Disc, 5K uuf, 350 V.	
C7,C20,C24		Condenser, Disc, 10K uuf, 350 V.	
C8,C26,,C28 C30,C31		Condenser, Ceramic, 300 uuf, 350 V.	
C9,C12,C15, C16, C17		Condenser, Ceramic, 1K uuf, 350 V.	
C10		Condenser, Ceramic, 1.5 uuf, 350 V. Gimmick	
C11		Condenser, Ceramic, 90 uuf, 500 V. N750	
C13,C36,C38		Condenser, P.T., .01 uf, 400 V.	
C22		Condenser, Ceramic, 15 uuf, 350 V.	
C27		Condenser, P.T., .005 uf, 600 V.	
C29	H22659	Condenser, Electrolytic, 4 uf, 25 V.	
C32		Condenser, Ceramic, 220 uuf, 350 V.	AA5

Schematic Location	Part Number	Description
C35A,C35B, C35C	H22602	Condenser, Electrolytic, 20-20-20 uf 250 V.
C26		Condenser, P.T., .005 uf, 600 V.
C37	H22602	Condenser, Electrolytic, 10 uf, 25 V.
C39		Condenser, Molded, .01 uf, 600 V.
C40		Condenser, .05 uf, 200 V.
R30,SW-2	H22601	Control, Volume & Switch 500 K ohms
	H19132	Cord, Dial Drive
	H20135-14	Cord, Power with Plug
	H16278	Crystal, Dial
	H22604-5A	Knob, On-Off Volume
	H22604-5B	Knob, AM-FM
	H22604-6C	Knob, Tuning
		Lamp, Dial, Mazda, No. 47
	H22604	Leaflet, Instruction
	H22578	Plate, Chassis Bottom
	H19284-1	Pointer, Dial
R1,R11,R18		Resistor, 68 ohms, ½ watt
R2		Resistor, 27K ohms, 1 watt
R3		Resistor, 47 ohms, ½ watt
R4,R6		Resistor, 22K ohms, ½ watt
R5		Resistor, 2200 ohms, ½ watt
R7,R8,R15 R17,R20		Resistor, 1K ohms, ½ watt
R9		Resistor, 8.2K ohms, 1 watt
R10,R20		Resistor, 1 megohm, ½ watt
R12		Resistor, 10K ohms, 1 watt
R14,R22		Resistor, 100K ohms, ½ watt

R16		Resistor, 3.3K ohms, 1 watt	
R18		Resistor, 180 ohms, ½ watt	
R19		Resistor, 39K ohms, ½ watt	
R21		Resistor, 220K ohms, ½ watt	
R23		Resistor, 15K ohms, 1 watt	
R25		Resistor, 10 megohms, ½ watt	
R26		Resistor, 330K ohms, ½ watt	
R27A,R27B	H22624	Resistor, 2 x 500 ohms, 8 watts	
R28		Resistor, 470K ohms, ½ watt	
R29		Resistor, 270 ohms, 1 watt	
	H22681	Scale, Dial	Sears Code
	H22562	Shaft, Tuning	
	H19628-3	Socket, Dial-Lite with Leads	
SPK.	H22595	Speaker, 4" P.M.	A5
	H19132	Spring, Dial Cord	AA6
FM-2	H22534-1	Suppressor Ass'y. Parasitic - AM	
AM-1	H22535-1	Suppressor Ass'y. Parasitic - FM	
SW-1	H22596	Switch, Band, FM-AM	
T2,T4	H22552-1	Transformer, I.F., AM 455 Kc	
T3	H22597	Transformer, 1st I.F., FM, 10.7 Mc.	
T5	H22593	Transformer, 2nd I.F., FM, 10.7 Mc.	
T6	H22546	Transformer, Output	
T7	H22539	Transformer, Power	A6
T8	H22592	Transformer, Ratio Detector	AA0

MODEL 9073,
Ch. 135.244

SPECIFICATIONS

Power Supply:
All models available . . . . . 117 Volts AC 60 Cycles

Frequency Range:
Broadcast . . . . . 535-1620 KC

Recommended Antenna Equipment
Catalog No. 6703 Conventional Antenna
Catalog No. 6704 Noise Reducing Antenn
Catalog No. 6705 Greatest Reception anc
Noise Reduction Antenna

Power Output:
Undistorted . . . . . 1.0 Watt
Maximum . . . . . 1.8 Watts

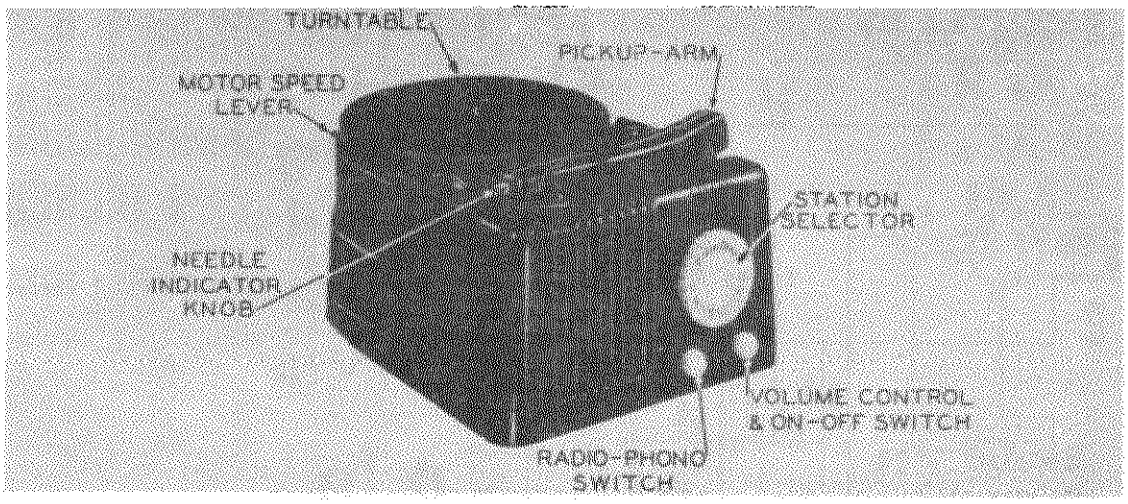

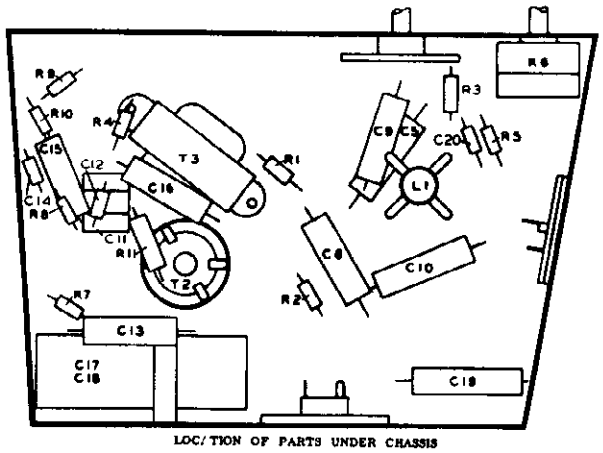

LOCATION OF PARTS UNDER CHASSIS

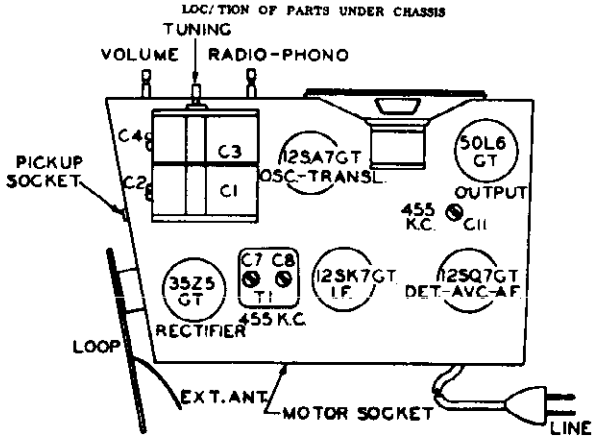

LOCATION OF PARTS ON TOP OF CHASSIS

©John F. Rider

MODEL 9073,
Ch. 135.244

REPAIR PARTS LIST

SCHEMATIC LOCATION	PART NUMBER	DESCRIPTION	MU CODE
	F-7569	Arm Pickup (Less Crystal)	AAO
	F-7570	Cartridge Crystal (Incl. Needles)	B5
	F-7581	Needle, Phono (for 33 and 45 RPM Records)	
	F-7582	Needle, Phono (for 78 RPM Records)	
	F-294	Cabinet Radio Molded	AO
	F-7563	Capacitor—Variable Assembly	AAO
C11	F-4048	Capacitor—Trimmer—Single	
C17, C18	F-5051	Capacitor—Electrolytic—40 MFD. 150V. 40 MFD. 150V.	
C12, C14, C20	F-6488	Capacitor—Ceramic 250 MMFD. 500V.	
C13	F-4894	Capacitor—.005 MFD. 600V.	
C15, C16	F-1344	Capacitor—.01 MFD. 400V.	
C5, C6, C9	F-1345	Capacitor—.05 MFD. 200V.	
C19	F-1346	Capacitor—.05 MFD. 400V.	
C10	F-4957	Capacitor—.09 MFD. 200V.	
L1	F-7139	Coil—Oscillator	
R6	F-7555	Control—On-Off & Volume	
	F-1090	Cord—Line	
	F-1577	Knob—Volume Control & Radio Phono Switch	
	F-7511	Knob—Station Selector	
	F-7557	Leaflet—Instruction	
	F-6100	Loop—Antenna	
	F-7568	Motor—Phono—60 Cycle (Less Turntable)	AO
	F-7527	Idler Wheel	
	F-7528	Turntable—8"	
R9	F-4067	Resistor—180 Ohm—½ W—10%	
R1	F-4025	Resistor—22,000 Ohm—½ W—20%	
R4	F-4069	Resistor—47,000 Ohm—½ W—20%	
R2, R8	F-4026	Resistor—220,000 Ohm—½ W—20%	
R5, R10	F-4027	Resistor—470,000 Ohm—½ W—20%	
R3	F-1262	Resistor—1 Megohm—½ W—20%	
R7	F-4028	Resistor—6.8 Megohm—½ W—10%	
R11	F-5358	Resistor—1,000 Ohm—1W—10%	
	F-4978	Shield—I. F. Transformer	
	F-7515	Socket—Tube—8 Prong—Octal	
	F-6102	Speaker—4" P. M.	A5
	F-7554	Switch—Radio-Phono	
T1	F-4813	Transformer—I.F. #1	
T2	F-4846	Transformer—I.F. #2	
T3	F-4875	Transformer—Output	

ALIGNMENT PROCEDURE

PRELIMINARY:

Output Meter Connection. . . . . Across loud speaker voice coil
Generator ground lead connection. . . . . Floating Ground
Dummy Antenna Value to be in series with generator output. . . . . See chart below
Connection of Generator Output lead . . . . . See chart below
Generator Modulation . . . . . 30%, 400 Cycles
Position of Volume Control . . . . . Fully on

POSITION OF TUNER	GENERATOR FREQUENCY	DUMMY ANTENNA	GENERATOR CONNECTION	TRIMMER ADJUSTMENTS (IN ORDER) SHOWN	TRIMMER FUNCTION
Closed	455 KC	.1 mfd.	12SA7GT Transl.Grid	C11,C8 & C7	I.F.
Open	1620 KC	.0002 mfd.	Loop	C4	Oscillator
1400 KC	1400 KC	.0002 mfd.	Loop	C2	Transl.

IMPORTANT ALIGNMENT NOTES

The alignment must be done in the order given.

The entire Alignment Procedure should be repeated step by step in the original order for greatest accuracy.

Always keep the output power from the generator at its lowest possible value to prevent the AVC of the receiver from interfering with accurate alignment.

©John F. Rider

MODEL 9073,
Ch. 135.244

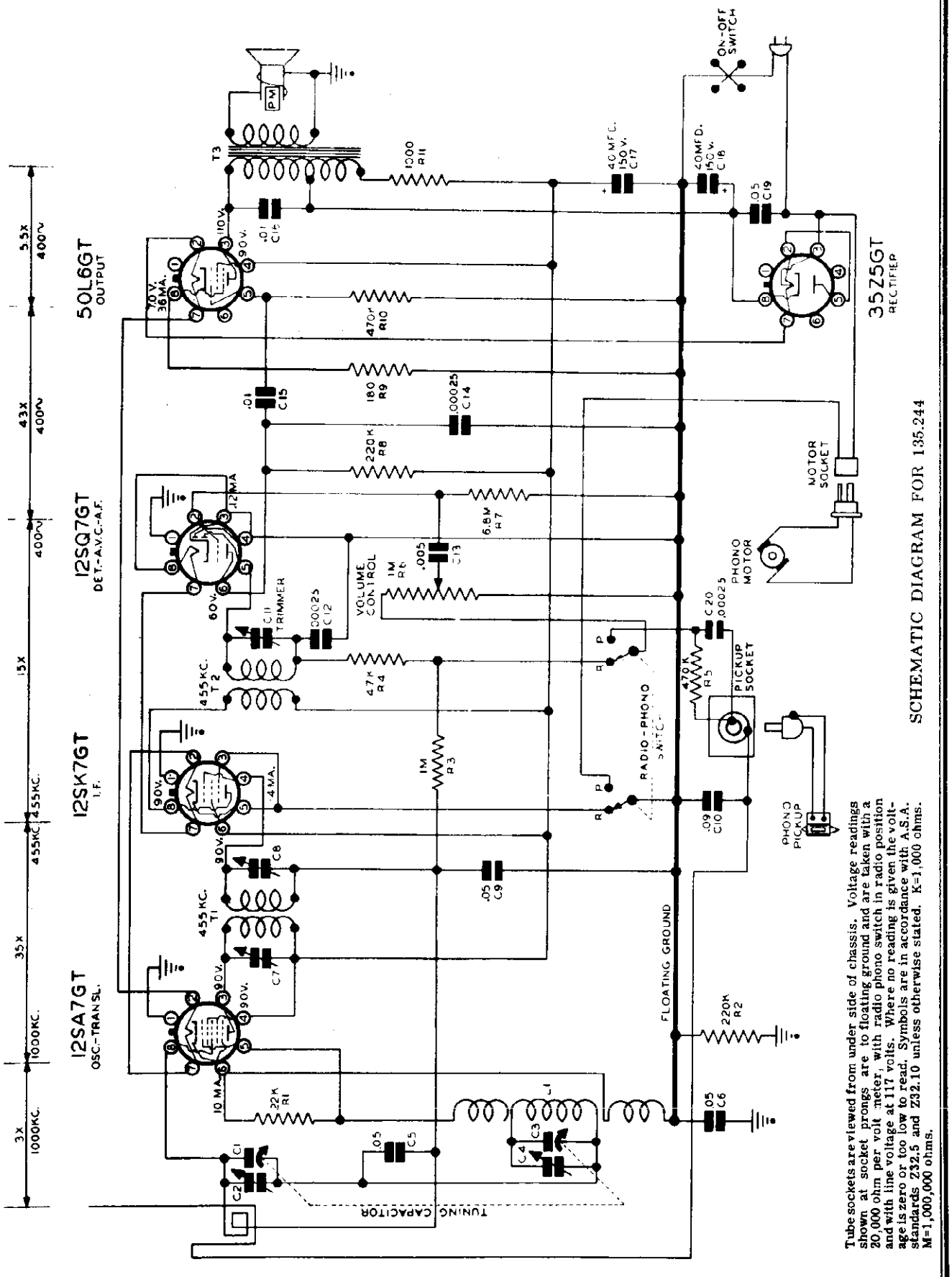

SCHEMATIC DIAGRAM FOR 135.244

Tube sockets are viewed from under side of chassis. Voltage readings shown at socket prongs are to floating ground and are taken with a 20,000 ohm per volt meter, with radio phono switch in radio position and with line voltage at 117 volts. Where no reading is given the voltage is zero or too low to read. Symbols are in accordance with A.S.A. standards Z32.5 and Z32.10 unless otherwise stated. K=1,000 ohms. M=1,000,000 ohms.

© John F. Rider

MODEL 9270,
Ch. 547.245

SPECIFICATIONS

Power Supply: . . . . . 117 Volts, DC or 50-60 Cycles AC, 15 Watts or Catalog No. 6404 Battery Pack.

Power Output:
Undistorted . . . . . 0.15 Watt (min.)
Maximum . . . . . 0.30 Watt (min.)

Frequency Range:
Broadcast . . . . . .540-1600 KC

REPAIR PARTS LIST

Schematic Location	Part Number	Description	MU Code
		CHASSIS PARTS	
	V4169-1	Base, miniature tube shield	
	V3449	Bearing, tuning shaft. . .	
	V6554-1	Cable Assembly, battery .	
C1,C2, C3,C4	V6552	Capacitor, electrolytic.	AAO
C5,C6, C7,C8,C9	V6556	Capacitor, variable (3 gang).	A5
C10,C11, C12,C13, C14,C15	V6066-2503M	Capacitor, .05 mfd 200 v .	
C16,C17	V6066-4202M	Capacitor, .002 mfd 400 v .	
C18	V6066-3502M	Capacitor, .005 mfd 499 v .	
C19,C20	V6066-2154M	Capacitor, .15 mfd 200 v .	
C21	V6066-4503M	Capacitor, .05 mfd 400 v .	
C22,C23	RCM20A221M	Capacitor, 220 mmfd. mica	
C24	RCM20A101M	Capacitor, 100 mmfd. mica	
L1	V5661	Coil, oscillator.	
R1,SW1	V5666-3	Control, volume	
	V4349-6	Cord, power A-C	
	V4304-25	Cord Assembly, dial . . .	
C25,C26, R2	V6232-2	Filter, diode	
	V6563	Insulator, A-C cord . . .	
	V3359	Insulator, electrolytic capacitor	
L2,C27	V6952	Loop, antenna.	
	V6568	Pointer	
	V5398-2	Pulley, dial cord	
	V6558-1	Rectifier, selenium. . . .	
R3	RC20AE220M	Resistor, 22 ohms 1/2 w. (carbon).	
R4	RC20AE474M	Resistor, 470,000 ohms 1/2 w. (carbon).	
R5	RC20AE273M	Resistor, 26,000 ohms 1/2 w. (carbon).	
R6	RC20AE104M	Resistor, 100,000 ohms 1 1/2 w. (carbon).	
R7	RC20AE103M	Resistor, 10,000 ohms 1/2 w. (carbon).	
R8,R9	RC20AE225M	Resistor, 2.2 meg. 1/2 w. (carbon).	
R10	RC20AE105M	Resistor, 1 meg. 1/2 w. (carbon).	
R11	RC20AE106M	Resistor, 10 meg. 1/2 w. (carbon).	
R12,R18	RC20AE685M	Resistor, 6.8 meg. 1/2 w. (carbon).	
R13	RC20AE155M	Resistor, 1.5 meg. 1/2 w. (carbon).	
R14	RC20AE224M	Resistor, 220,000 ohms 1/2 w. (carbon).	
R15,R16	RC20AE102K	Resistor, 1000 ohms 1/2 w. (carbon).	
R17	RC20AE222K	Resistor, 2200 ohms 1/2 w. (carbon).	
R19	RC20AE222K	Resistor, 2200 ohms 1 w. (carbon).	
R20	V6559	Resistor, ballast, 2470 ohms plus or minus 5% 10 w.	
R21	RC20AE101M	Resistor, 100 ohms 1/2 w. (carbon).	
	V9015-1	Shaft, tuning	
	V4169-2	Shield, miniature tube . .	
	V4292S-1	Socket, min. molded (3V4)	
	V6295-3	Socket, min. wafer (1U4, 1R5)	
	V6295-4	Socket, min. wafer (1U5) .	
	V4057	Spring, dial cord	
	V6555	Speaker, 5" PM	AO
SW2	V6565	Switch, line-battery . . .	
L3	V6561	Transformer, RF.	
T3	V6567	Transformer, audio output	
T1	V6972-3	Transformer, 1st IF . . .	
T2	V6972-4	Transformer, 2nd IF . . .	
	V3436	"C" Washer, tuning shaft .	
		CABINET PARTS	
	V6944-1	Baffle and Grille Cloth Assembly.	
	V6945	Bracket (on chassis for mtg.)	
	V6946	Bracket (on cabinet for mtg. chassis).	
	V4836-2	Button, plug (trimmer hole)	
	V1186-1	Cabinet	B5
	V6947-1	Catch, friction	
	V8162	Cover, back (less loop and hardware	A5
	V6951	Dial.	
	V5569	Escutcheon	
	V5829-1	Eyelet	
	V6432-2	Feet, cabinet	
	V4828	Handle	
	V5630-2	Hinge	
	V6146-8	Knob	
	V5920	Nut, #8-32 wing.	
	V5052S-62	Screw, #6 hex. hd. self tapping.	
	V6661-2	Screw, #8 self retaining (chassis mtg. brkts.). .	
	V6661-3	Screw, #8 self retaining (mtg. batt. shield) . . .	
	V6954	Shield Assembly, battery.	
	V6569-1	Strike (for V6967-1 catch)	
	V6949	Stud, (mtg. handle)	
	V3668S	Washer, felt (knobs) . .	

ALIGNMENT PROCEDURE

Output meter reading to indicate 0.05 watt across voice coil	0.4 v.
Generator ground lead connected	To B- through 0.1 mfd capacitor
Generator modulation	30%, 400 cycles
Position of volume control	Fully on
Position of pointer with tuner fully closed . . .	Center of pointer lined up with left edge of dial opening

©John F. Rider

MODEL 9270,
Ch. 547.245

Position of tuner	Generator Freq.	Dummy Antenna	Generator Connection	Adjustments (in order shown)	Function	Max. Microvolts Input to Produce .05 W. Output
Min. Cap.	455 kc.	0.1 mfd.	Pin #6 of 1U4 I-F Amp.	T2 (top and bottom)	I.F.	5000
Min. Cap.	455 kc.	0.1 mfd.	Pin #6 of 1R5 Conv.	T1 (top and bottom)	I.F.	250
Min. Cap.	1615 kc.	0.1 mfd.	Stator of Ant. Tuner (C9)	C8	Osc.	
1400 kc.	1400 kc.	0.1 mfd.	"	C6	R.F.	30
600 kc.	600 kc.	0.1 mfd.	"	L3	R.F.	40
1400 kc.	1400 kc.		Hazeltine Test Loop	C27	Loop	100

ALIGNMENT NOTES:

1. It is recommended that this set be connected to an isolation transformer when aligning on AC.
2. The alignment must be done in the order given above.
3. While making the above adjustments, keep the volume control set for maximum output and the signal generator output attenuated to avoid AVC action.

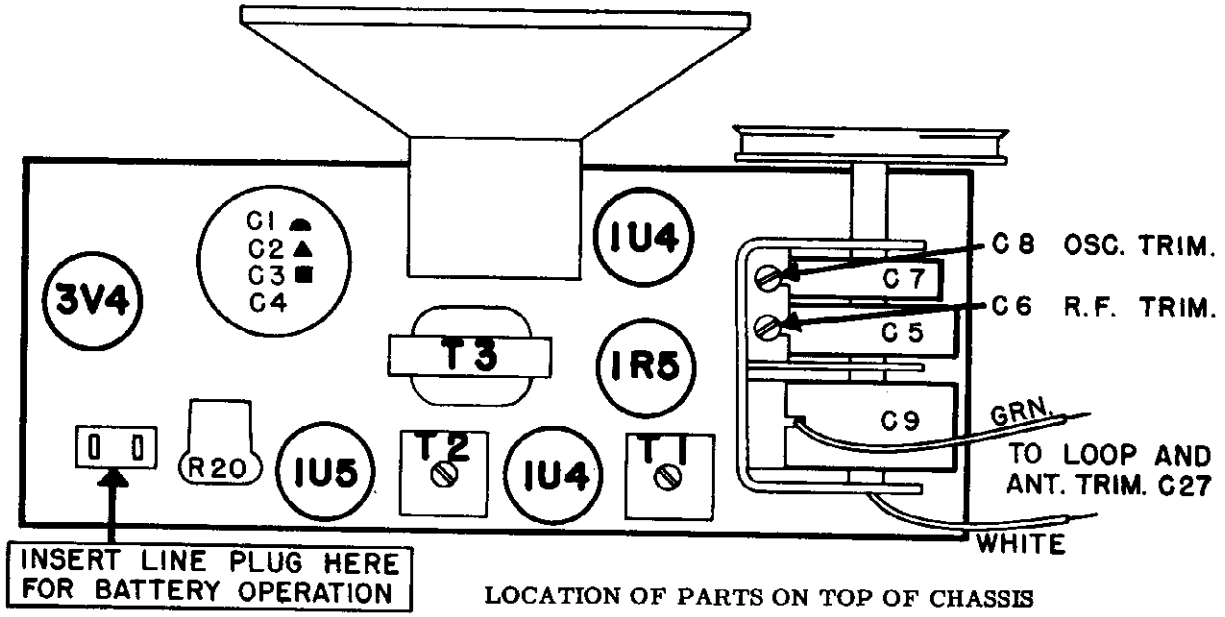

LOCATION OF PARTS ON TOP OF CHASSIS

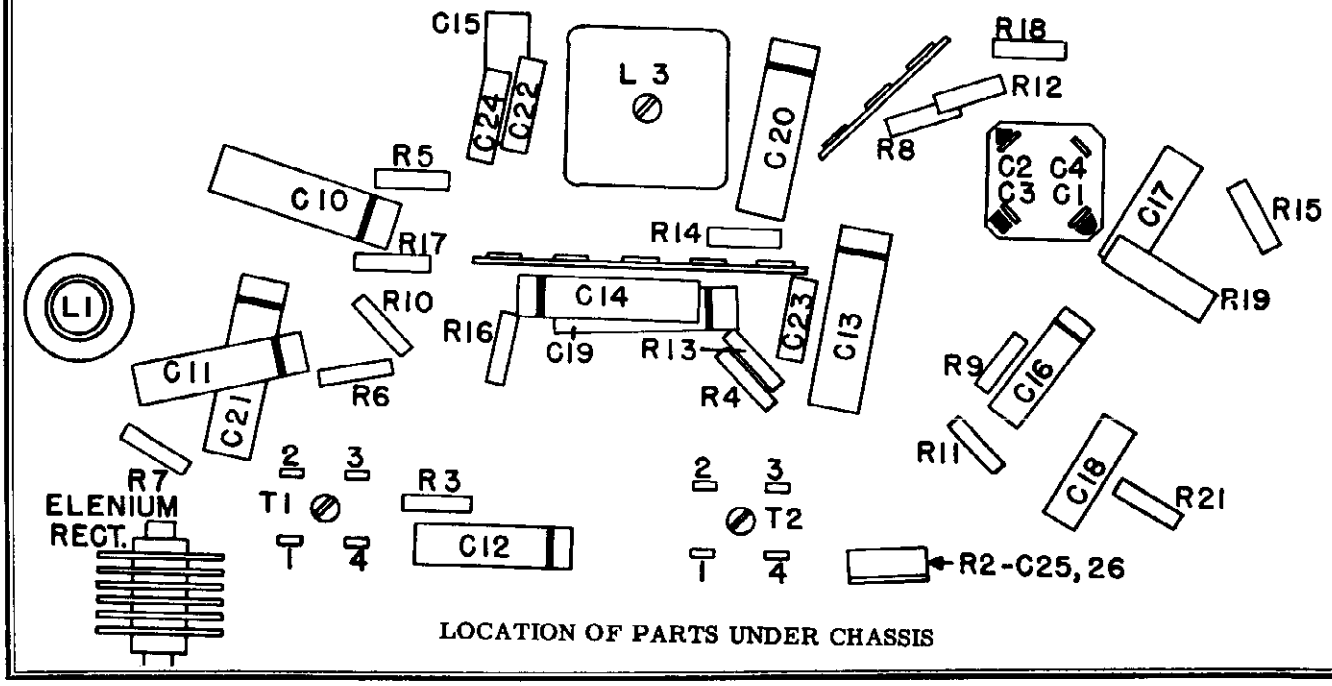

LOCATION OF PARTS UNDER CHASSIS

©John F. Rider

MODEL 9270,
Ch. 547.243

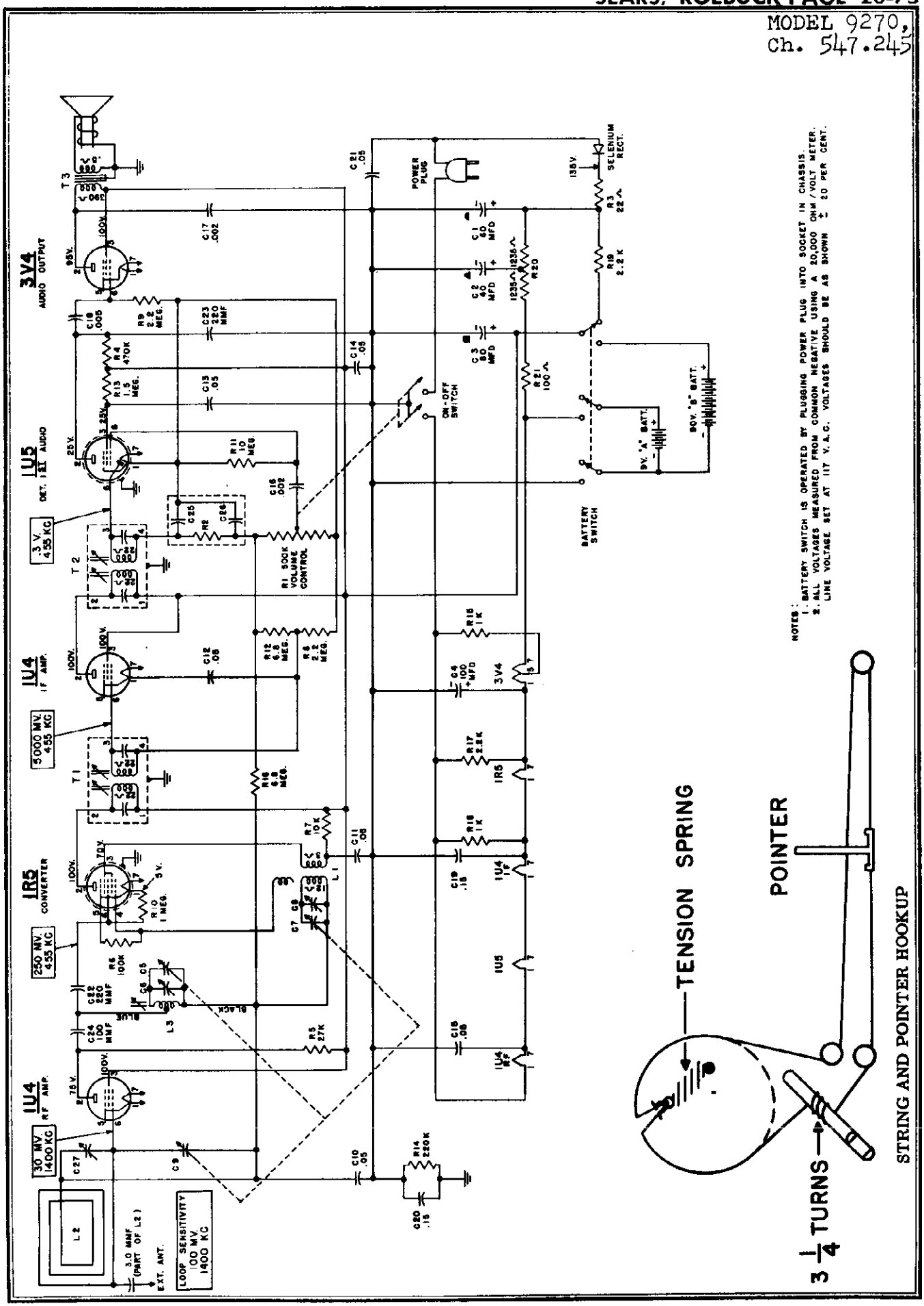

©John F. Rider

©John F. Rider

ALIGNMENT PROCEDURE

For Alignment procedure read tabulations from left to right, and make the adjustment marked (1) first, (2) next, (3) third.
IMPORTANT: BEFORE ALIGNING, HAVE LOOP ANTENNA IN THE SAME POSITION IT WILL BE IN WHEN THE SET IS IN THE CABINET. BE SURE THAT IT DOES NOT MOVE WHILE ALIGNING.

When adjusting 1650 kilocycle oscillator trimmer, 455 K.C. R.F. trimmer and 1400 kilocycle antenna trimmer, connect test oscillator to loop external antenna and ground connections with a .0002 Mfd. capacitor in series with antenna lead.

Steps	Set receiver dial to:	TEST OSCILLATOR: Adjust test oscillator frequency to:	TEST OSCILLATOR: Use dummy antenna in series with output of test oscillator consisting of:	TEST OSCILLATOR: Attach output of test oscillator to	Refer to parts layout diagram for location of trimmers mentioned below:
	Any point where no interfering signal is received	Exactly 455 K. C.	0.2 Mfd. Condenser	High side to grid of 6SA7 Tube. Low side to chassis.	Adjust each of the 2nd I.F. transformer trimmer adjustment screws for maximum output, then adjust each of the 1st I.F. transformer trimmer adjustment screws for maximum output.
1	Rotate gang condenser to maximum capacity	Exactly 455 K. C.	.0002 Mfd. Condenser	To loop external antenna and ground connections	Adjust R.F. coil trimmer for minimum 455 K. C. signal.
2	Rotate gang condenser to minimum capacity	Exactly 1650 K. C.	.0002 Mfd. Condenser	To loop external antenna and ground connections	Adjust 1650 K. C. oscillator trimmer for maximum output.
3	Approximately 1400 K. C.	Approx. 1400 K. C.	.0002 Mfd. Condenser	To loop external antenna and ground connections	Adjust 1400 K. C. antenna trimmer for maximum output.

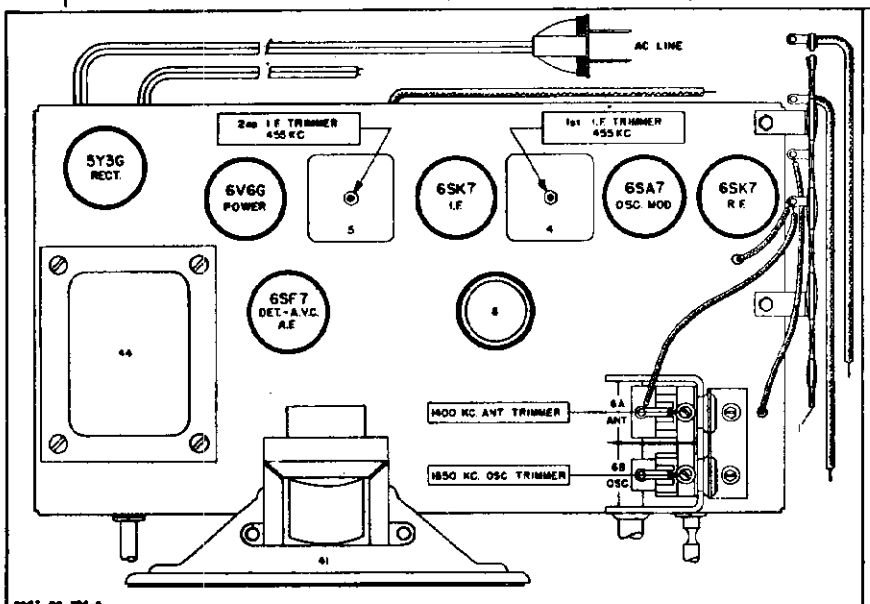

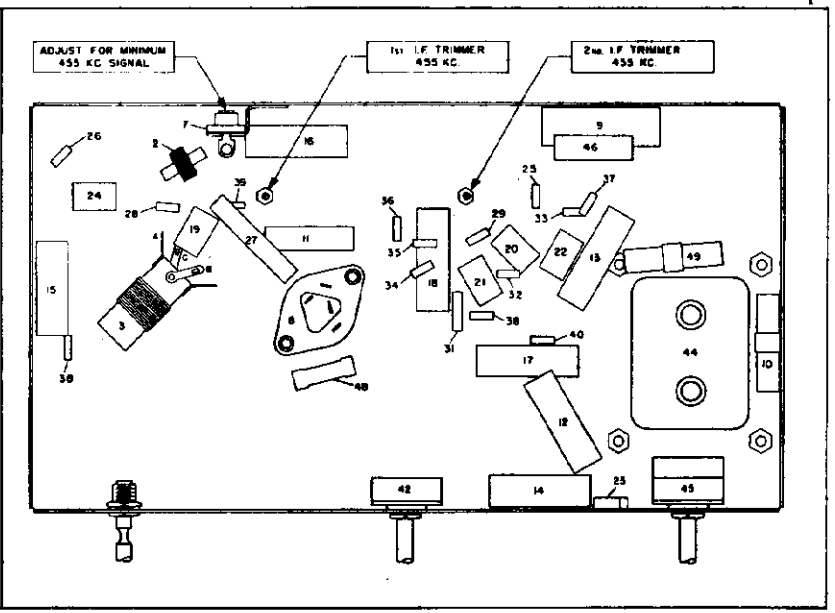

MODEL 292-K

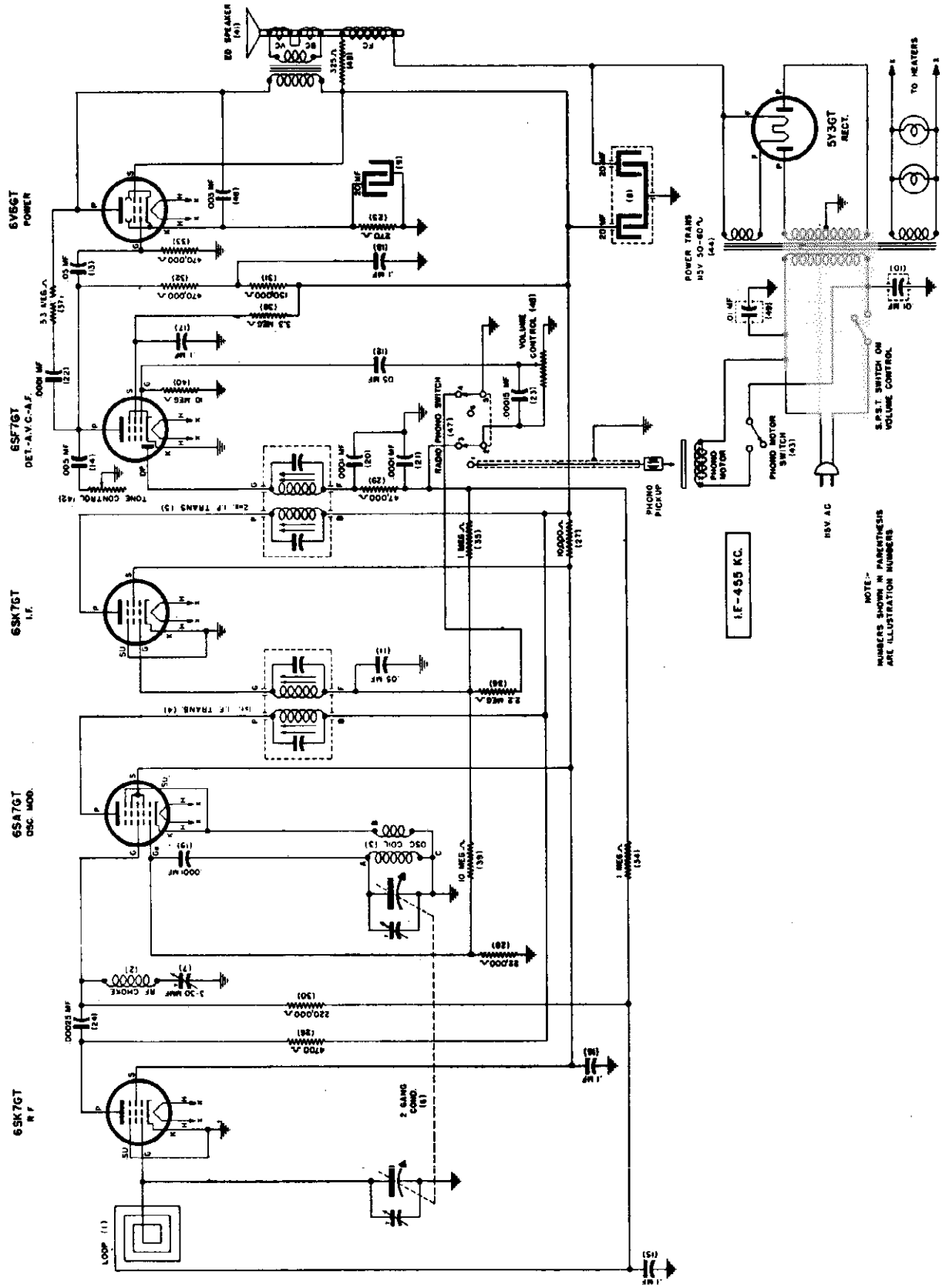

©John F. Rider

PARTS LIST

Illus. No.	Part No.	Part Name	Description
1	28E51	Antenna	Loop
2	2E19	Coil	R. F. Choke
3	28E38	Coil	Oscillator
4	28E41	Coil	1st I. F. Transformer
5	28E42	Coil	2nd I. F. Transformer
6	24E6	Condenser	2 Gang Tuning
7	24E30	Condenser	Trimmer 3-30 MMF
8	25E2	Condenser	Dry Electrolytic 20-20 Mfd. 450 V.
9	25E3	Condenser	Dry Electrolytic 20 Mfd. 25 V.
10	23E250	Condenser	.01 Mfd. 220 V. In Metal Can
11	23E216	Condenser	Tubular .05 Mfd. 200 V.
12	23E416	Condenser	Tubular .05 Mfd. 400 V.
13	23E416	Condenser	Tubular .05 Mfd. 400 V.
14	23E408	Condenser	Tubular .005 Mfd. 400 V.
15	23E218	Condenser	Tubular .1 Mfd. 200 V.
16	23E418	Condenser	Tubular .1 Mfd. 400 V.
17	23E418	Condenser	Tubular .1 Mfd. 400 V.
18	23E418	Condenser	Tubular .1 Mfd. 400 V.
19	23E39	Condenser	Mica .0001 Mfd.
20	23E39	Condenser	Mica .0001 Mfd.
21	23E39	Condenser	Mica .0001 Mfd.
22	23E39	Condenser	Mica .0001 Mfd.
23	23E40	Condenser	Mica .00015 Mfd.
24	23E42	Condenser	Mica .00025 Mfd.

Illus. No.	Part No.	Part Name	Description
25	27E271-2	Resistor	Carbon 270 Ohm, 1/2 W.
26	27E472	Resistor	Carbon 4700 Ohm, 1/3 W.
27	27E103-3	Resistor	Carbon, 10,000 Ohm. 1 W.
28	27E223	Resistor	Carbon, 22,000 Ohm, 1/3 W.
29	27E473	Resistor	Carbon, 47,000 Ohm, 1/3 W.
30	27E224	Resistor	Carbon, 220,000 Ohm, 1/3 W.
31	27E154	Resistor	Carbon, 150,000 Ohm. 1/3 W.
32	27E474	Resistor	Carbon, 470,000 Ohm, 1/3 W.
33	27E474	Resistor	Carbon, 470,000 Ohm, 1/3 W.
34	27E105	Resistor	Carbon, 1 Megohm, 1/3 W.
35	27E105	Resistor	Carbon, 1 Megohm, 1/3 W.
36	27E225	Resistor	Carbon, 2.2 Megohm, 1/3 W.
37	27E335	Resistor	Carbon, 3.3 Megohm, 1/3 W.
38	27E335	Resistor	Carbon, 3.3 Megohm, 1/3 W.
39	27E106	Resistor	Carbon, 10 Megohm, 1/3 W.
40	27E106	Resistor	Carbon, 10 Megohm, 1/3 W.
41	1E10	Speaker	8" Electro Dynamic
42	28E18	Tone Control	500,000 Ohm
44	22E5	Transformer	Power 115 Volt, 50-60 Cycles
45	28E4	Volume Control	500,000 Ohm with S.P.S.T. Switch
46	23E606	Condenser	Tubular, .003 Mfd. 600 Volt
47	20E203	Switch Assembly	D.P.D.T. (Radio-Phono)
48	27E1004	Resistor	Wire Wound 525 Ohm 5 Watt

MISCELLANEOUS PARTS

Part No.	Part Name	Description
7E39	Cabinet	Complete Cabinet and Lid
7E103	Cabinet Back	Back for Cabinet
7E104	Cabinet Bottom	Bottom for Cabinet
58E12	Dial Scale	Calibrated Glass Scale
4E1	Dial Cord	18 Lb. Drive Cord
35E8-2	Dial Pointer	Dial Indicator

Part No.	Part Name	Description
65E2	Dial Spring	Tension Spring for Dial Cord
68E3	Dial Shaft	Drive Shaft Assembly
37E25-5	Knob	Walnut
40E2	Pilot Lamp	6-8 Volt, .250 Amp. Type No. 47
17E5	Plug	2 Prong for Meter
17E7	Plug	4 Prong for Phono

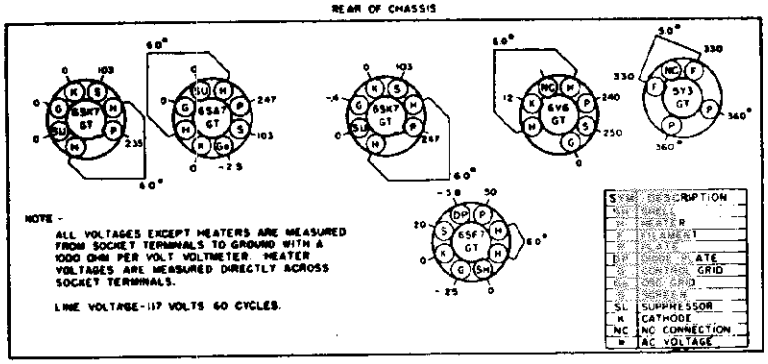

VOLTAGE TABLE
(BOTTOM VIEW OF CHASSIS)

NO. 292-D

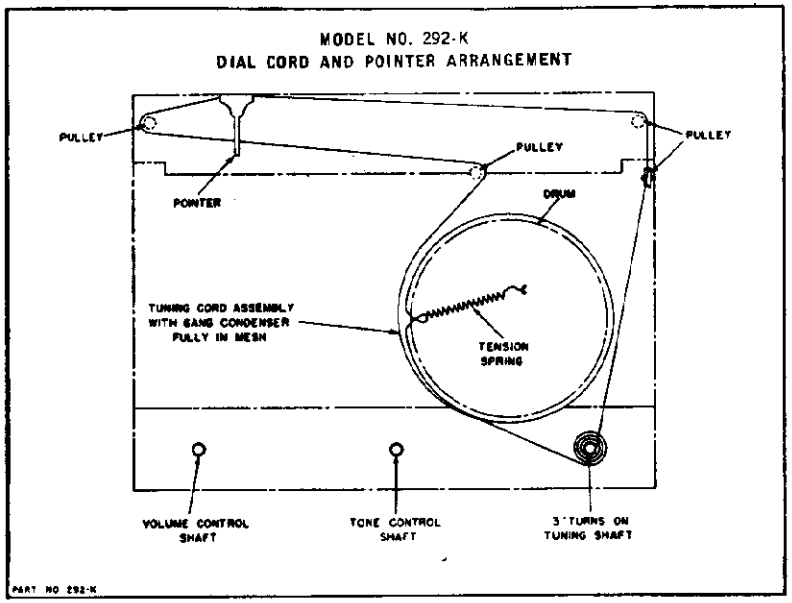

PART NO 292-K

VOLTAGE RATING

THIS RADIO IS DESIGNED FOR USE ON 110-120 VOLT, 50-60 CYCLE, ALTERNATING CURRENT (AC) OR 110-120 VOLT DIRECT CURRENT (DC).

SPECIAL INSTRUCTIONS FOR "DIRECT CURRENT" OPERATION:

If the current supply is DIRECT CURRENT, and the radio does not play after it has been turned on for approximately one minute, simply reverse radio power cord plug in electric power receptacle.

THE AM AND FM AERIALS FURNISHED WITH THIS RECEIVER ARE MOUNTED AS AN INTEGRAL PART OF THE RADIO. THEY REQUIRE NO INSTALLATION AND IN AVERAGE LOCATIONS THEY WILL PROVIDE SATISFACTORY RECEPTION.

Only when the radio is located a considerable distance from desired stations or is operated under unusual conditions, such as in steel constructed buildings, etc., will it be necessary to use another aerial.

See the following "AM STANDARD BROADCAST AERIAL" and "FM AERIAL" paragraphs for special aerial instructions.

AM STANDARD BROADCAST AERIAL

The AM Standard Broadcast Aerial, mounted inside of the rear of the cabinet is a loop-type antenna. Because loop aerials are directional, the volume of a weak station, operating in the 535-1730 KC Band, may be improved, or undesired electrical noise may be reduced by placing the radio in a different position. A trial will reveal position for best reception with least interference.

When the volume of the AM Broadcast stations is not satisfactory, improved results can be obtained by attaching a 50 ft. to 75 ft. Outdoor Aerial to the BLUE wire coming out of the rear of the cabinet and a ground to the BLACK wire.

WARNING — DO NOT CONNECT A GROUND TO ANY METAL PART OF THE CHASSIS BECAUSE THIS WILL CAUSE A SHORT AND POSSIBLE DAMAGE.

FM AERIAL

Due to the high frequencies used by FM stations, signals from these stations reach only to the "line of sight." This means that reliable FM reception can usually be expected only when the radio is within 20 to 30 miles from the station transmitter. The actual area serviced by FM stations depends on the height of the station aerial and receiver aerial.

If the radio happens to be located on the edge or just outside of the FM station service area, satisfactory FM reception may not be obtained with the self contained FM aerial furnished with the radio, in which case it will be necessary to install a suitable outdoor FM aerial. This should be the type having a 300 Ohm transmission line, and it must be erected as high as possible.

If an outdoor aerial is required, consult your Sentinel dealer—he can furnish a satisfactory outdoor FM aerial.

TO CONNECT AN OUTDOOR "FM" AERIAL TO THE RADIO:

(1) Disconnect the wire attached to posts marked #1 and #2 mounted on back of loop aerial.

(2) Attach outdoor FM aerial transmission leads to the posts marked #1 and #3.

IMPORTANT — WHEN THE RADIO IS LOCATED TOO CLOSE TO AN FM STATION, the volume may be ample but the signal may be distorted. An outdoor FM aerial would only aggravate this condition. Usually, disconnecting the jumper wire connecting posts #1 and #2 on back of loop will eliminate the distortion.

FUNCTION OF CONTROLS ON RADIO

THE LEFT HAND KNOB is the Volume Control and Off-On Switch.

THE CENTER KNOB is the AM-FM Band Selector Switch.

THE RIGHT HAND KNOB is the Station Selector Knob.

AM STANDARD BROADCAST OPERATING INSTRUCTIONS

Turn "AM-FM" Band Selector Switch Knob to RIGHT hand position. Use section of dial that is calibrated from 535 to 1730 K. C.

FM FREQUENCY MODULATION OPERATING INSTRUCTIONS

Turn "FM-AM" Band Selector Switch Knob to LEFT hand position. Place Volume Control Knob in maximum volume position. Use section of dial that is calibrated from 88 to 108 M.C.

WHEN TUNING FOR FM STATIONS, care must be taken to tune properly, otherwise the brilliant tone and noise-free reception possible from FM stations will not be fully realized. Always carefully tune to the point where the volume is greatest with clearest tone and least background noise.

It will be noticed that FM stations will be heard at two positions that are close together on the dial scale, with a distortion point between the two. As these two clear-tone signals will be substantially equal in tone and volume, either one may be used.

ALIGNMENT PROCEDURE

BE SURE TO MAKE THE ADJUSTMENTS IN THE ORDER GIVEN BELOW.

(A) Connect Output Meter across voice coil of speaker.

(B) Remove jumper wire from terminals #1 and #2 on loop terminal strip.

(C) Connect the hot Signal Generator lead through a 300 Ohm Resistor to the #1 post on terminal strip and the other lead to the post marked #3.

27.75 MC PLATE COIL ADJUSTMENT

(A) Set Signal Generator to deliver a modulated 27.75 MC Signal.

(B) Adjust 27.75 MC Plate Coil Trimmer for maximum reading on Output Meter.

108 MC and 105 MC ADJUSTMENT

(A) Set Signal Generator to deliver a modulated 108 MC signal.

(B) Tune receiver dial to MINIMUM CAPACITY STOP.

(C) Adjust 108 MC Oscillator Trimmer for maximum reading on Output Meter.

(D) Tune receiver dial and Signal Generator to 105 MC.

(E) Adjust 105 MC Antenna Trimmer for maximum reading on the Output Meter.

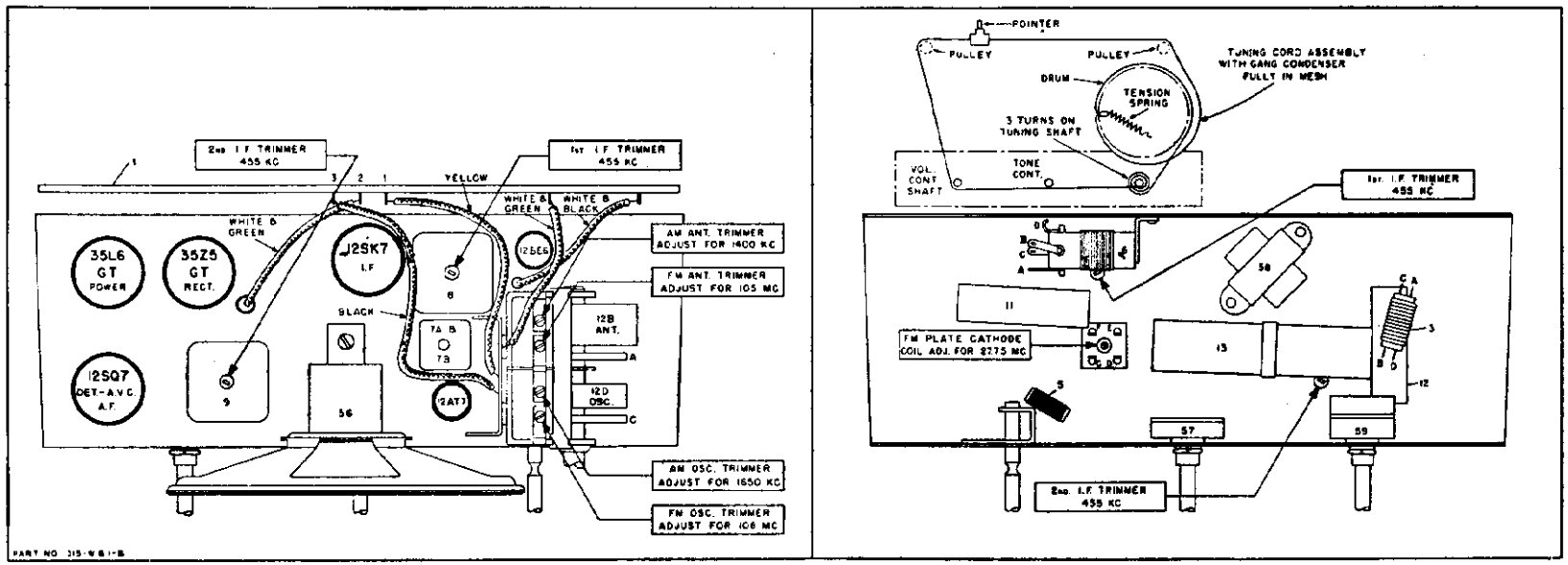

©John F. Rider

AM ALIGNMENT PROCEDURE

Be sure to follow procedure carefully and in the order given—otherwise the receiver will be insensitive and the dial calibration incorrect. For alignment procedure read tabulations from left to right. Make the adjustment marked (1) first, (2) next, (3) third.

Before starting alignment:

(a) Check tuning dial adjustment by tuning gang condenser until plates touch maximum capacity stop (completely in mesh) at which point the dial pointer must be exactly even with the last line at the low frequency end of the AM dial calibration. If dial needle does not point exactly to last line move to correct position.

(b) Use an accurately calibrated test oscillator with some type of output measuring device.

(c) Place loop antenna in the same position it will be in when set is in the cabinet.

Steps	Place band switch for operation on:	Set receiver dial to:	TEST OSCILLATOR			Refer to parts layout diagram for location of trimmers mentioned below:
			Adjust test oscillator frequency to:	Use dummy antenna in series with output of test oscillator consisting of:	Attach output of test oscillator to:	
1	AM Band position	Any point where no interfering signal is received	Exactly 455 K. C.	0.2 Mfd. Condenser	High side to AM-Osc. stator plates of tuning condenser (10D). Low side to frame of condenser through .01 Mfd. condenser.	Adjust each of the 2nd 455 K. C. AM I. F. transformer trimmers for maximum output, then adjust each of the 1st 455 K. C. AM I. F. transformer trimmers for maximum output.
2	AM Band position	Exactly 1730 K.C.	Exactly 1730 K.C.		Receiver blue antenna lead Receiver black ground lead	Adjust 1730 K. C. oscillator trimmer for maximum output.
3	AM Band position	Approx. 1400 K. C.	Approx. 1400 K. C.		Receiver blue antenna lead Receiver black ground lead	Adjust 1400 K. C. AM Ant. trimmer for maximum output.

FM ALIGNMENT

The only portion of this receiver which is used during FM reception, other than the AF and Power Supply, is the 12AT7 Dual Triode tube and its associated circuits. One triode of the tube is used for HF Oscillator and covers a band 27.75 MC above the 88 to 108 FM Band. The other triode is used for RF Input, Super-regenerator and Detector. This triode oscillates at 27.75 MC and is quenched by an RC network at about 25 KC.

In tuning this receiver on FM, it will be noticed that two signals will be received with a null point between them. These two signals will be substantially equal in tone and volume and either one can be used. They represent the frequency discrimination which takes place due to the receiver being tuned to one side of the carrier center frequency and this, therefore, is not the spot of greatest quieting. Greatest quieting is found at the null point, at which no frequency discrimination takes place and therefore no audio signal is produced.

The equipment necessary for FM alignment consists of the following:

(A) An Audio Output Meter.

(B) An AM or FM Signal Generator that will supply a 27.75 MC, 105 MC and 108 MC signal. A Signal Generator that only goes up to 30 MC but which has sufficient fourth harmonic present in the carrier could be used for this purpose.

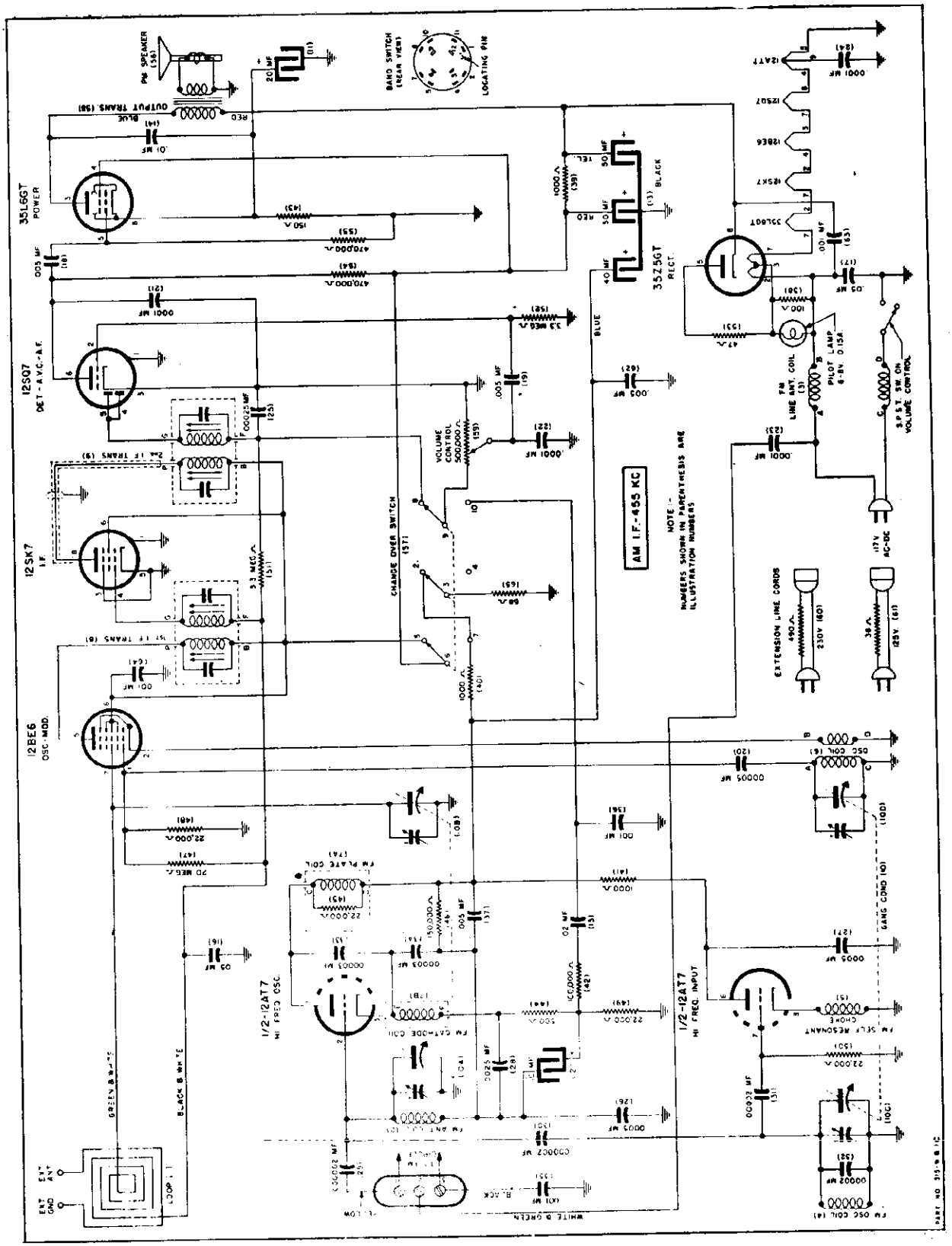
35L6GT POWER
12SQ7 DET.-AVC.-A.F.
12SK7 I.F.
12BE6 OSC.-MOD.
1/2-12AT7 HI FREQ OSC.
1/2-12AT7 HI FREQ. INPUT
35Z5GT RECT.
AM I.F.-455 KC
NOTE:- NUMBERS SHOWN IN PARENTHESIS ARE ILLUSTRATION NUMBERS
CHANGE OVER SWITCH
VOLUME CONTROL
PILOT LAMP
EXTENSION LINE CORDS
GANG COND.
FM OSC. COIL
FM SELF RESONANT CHOKE
FM ANT. COIL
FM CATHODE COIL
FM PLATE COIL
BAND SWITCH (REAR VIEW)
LOCATING PIN
OUTPUT TRANS.
EXT. ANT.
EXT. GND.
LOOP

©John F. Rider

MODELS 315-I, 315-W

REAR OF CHASSIS

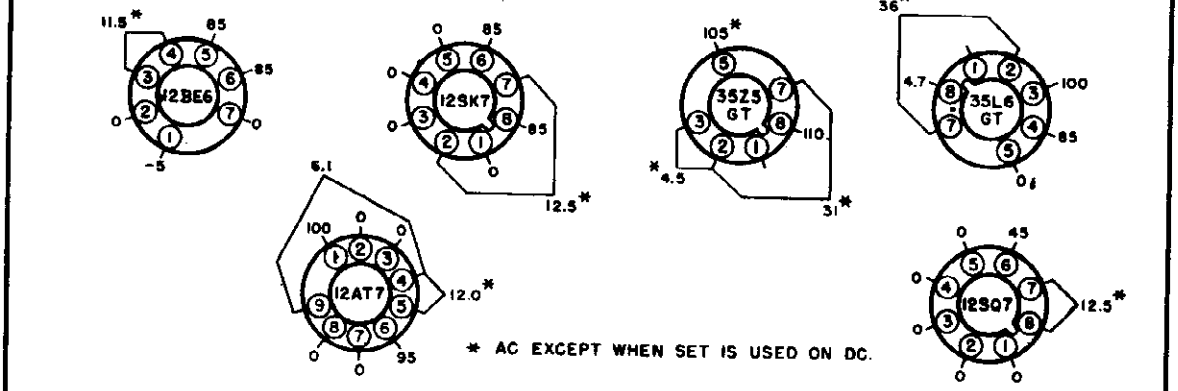

NOTE:— ALL VOLTAGES EXCEPT HEATERS ARE MEASURED FROM SOCKET CONTACTS TO CHASSIS WITH A 20,000 OHM PER VOLT VOLTMETER. HEATER VOLTAGES ARE MEASURED DIRECTLY ACROSS SOCKET CONTACTS.

PART NO. 315-W & I

VOLTAGE TABLE

(BOTTOM VIEW OF CHASSIS)

PARTS LIST

Illus. No.	Part No.	Part Name	Description
1	20E315	*Antenna	Loop (Not interchangeable)
	or		
1	20E346	**Antenna	Loop (Not interchangeable)
2	2E71	Coil	FM Antenna
3	2E69	Coil	FM Line Antenna
4	2E70	Coil	FM Oscillator
5	2E68	Coil	FM Self Resonant Choke
6	20E312	Coil	Oscillator Coil
7	20E313	Coil	FM Plate Cathode
8	20E261	Coil	1st I. F. Transformer
	or		
8	20E307	Coil	1st I. F. Transformer
9	20E261-2	Coil	2nd I. F. Transformer
	or		
9	20E307-2	Coil	2nd I. F. Transformer
10	24E38	Condenser	Tuning, 2 Gang
11	25E3	Condenser	Dry Elect. 20 Mfd. 25 V.
12	25E8	Condenser	Dry Elect. 10 Mfd. 25 V.
13	25E26	Condenser	Dry Elect. 50-50-40 Mfd. 150 V.
14	23E411	Condenser	Tubular, .01 Mfd. 400 V.
15	23E413	Condenser	Tubular, .02 Mfd. 400 V.
16	23E216	Condenser	Tubular, .05 Mfd. 200 V.
17	23E416	Condenser	Tubular, .05 Mfd. 400 V.
18	23E408	Condenser	Tubular, .005 Mfd. 400 V.
19	23E408	Condenser	Tubular, .005 Mfd. 400 V.
20	23E37	Condenser	Mica, .00005 Mfd.
21	23E39	Condenser	Mica, .0001 Mfd.
22	23E39	Condenser	Mica, .0001 Mfd.
23	23E39	Condenser	Mica, .0001 Mfd.
24	23E39	Condenser	Mica, .0001 Mfd.
25	23E42	Condenser	Mica, .00025 Mfd.
26	23E45	Condenser	Mica, .0005 Mfd.
27	23E45	Condenser	Mica, .0005 Mfd.
28	23E53	Condenser	Mica, .0025 Mfd.
29	23E21	Condenser	Ceramic, .000002 Mfd. 500 V.
30	23E21	Condenser	Ceramic, .000002 Mfd. 500 V.
31	23E22	Condenser	Ceramic, .00002 Mfd. 500 V.
32	23E22	Condenser	Ceramic, .00002 Mfd. 500 V.
33	23E23	Condenser	Ceramic, .00003 Mfd. 500 V.
34	23E23	Condenser	Ceramic, .00003 Mfd. 500 V.
35	23E2012	Condenser	Ceramic, .001 Mfd. 350 V.
36	23E2012	Condenser	Ceramic, .001 Mfd. 350 V.
37	23E2012-4	Condenser	Ceramic, .005 Mfd. 350 V.
38	27E101-2	Resistor	Carbon, 100 Ohm 1/2 Watt
39	27E102-3	Resistor	Carbon, 1000 Ohm 1 Watt
40	27E102	Resistor	Carbon, 1000 Ohm 1/3 Watt
41	27E102	Resistor	Carbon, 1000 Ohm 1/3 Watt
42	27E104	Resistor	Carbon, 100,000 Ohm 1/3 Watt
43	27E151	Resistor	Carbon, 150 Ohm 1/3 Watt
44	27E152	Resistor	Carbon, 1500 Ohm 1/3 Watt
45	27E223	Resistor	Carbon, 22,000 Ohm 1/3 Watt
46	27E154	Resistor	Carbon, 150,000 Ohm 1/3 Watt
47	27E206	Resistor	Carbon, 20 Meg Ohm 1/3 Watt
48	27E223	Resistor	Carbon, 22,000 Ohm 1/3 Watt
49	27E223	Resistor	Carbon, 22,000 Ohm 1/3 Watt
50	27E223	Resistor	Carbon, 22,000 Ohm 1/3 Watt
51	27E335	Resistor	Carbon, 3.3 Meg Ohm 1/3 Watt
52	27E335	Resistor	Carbon, 3.3 Meg Ohm 1/3 Watt
53	27E470-2	Resistor	Carbon, 47 Ohm 1/2 Watt
54	27E474	Resistor	Carbon, 470,000 Ohm 1/3 Watt
55	27E474	Resistor	Carbon, 470,000 Ohm 1/3 Watt
56	1E1	Speaker	P.M. 4"x6"
57	29E8	Switch	FM-AM Selector
58	22E8	Transformer	Output
59	28E7	Volume Control	500,000 Ohm
62	23E2012-4	Condenser	Ceramic, .005 Mfd. 350 V.
63	23E2012	Condenser	Fixed Ceramic .001 MF 350 V.
64	23E2012	Condenser	Fixed Ceramic .001 MF 350 V.
65	27E680	Resistor	Carbon, 68 Ohm 1/3 W.

MISCELLANEOUS PARTS

Part No.	Part Name	Description
*7E48-2	Cabinet Back	Back for Cabinet
7E46-1	Cabinet	Walnut Plastic
7E46-2	Cabinet	Ivory Plastic
65E2	Dial Cord Spring	Dial Cord Tension Spring
20E253-16	Dial Cord	Drive Cord
40E1	Dial Light	6-8 Volt .150 Amp. Type No. 47
20E270-5	Dial Shaft Assem.	Drive Shaft Assembly
20E65-2	Dial Back Plate	Backplate Assembly less Calibrated Scale
36E38	Dial Scale	Calibrated Glass Scale
35E8-9	Dial Pointer	Dial Indicator
37E27-11	Knob	Walnut
37E27-36	Knob	Ivory

*Used with chassis having serial number below 10,000.
**Used with chassis having serial number above 10,000.

©John F. Rider

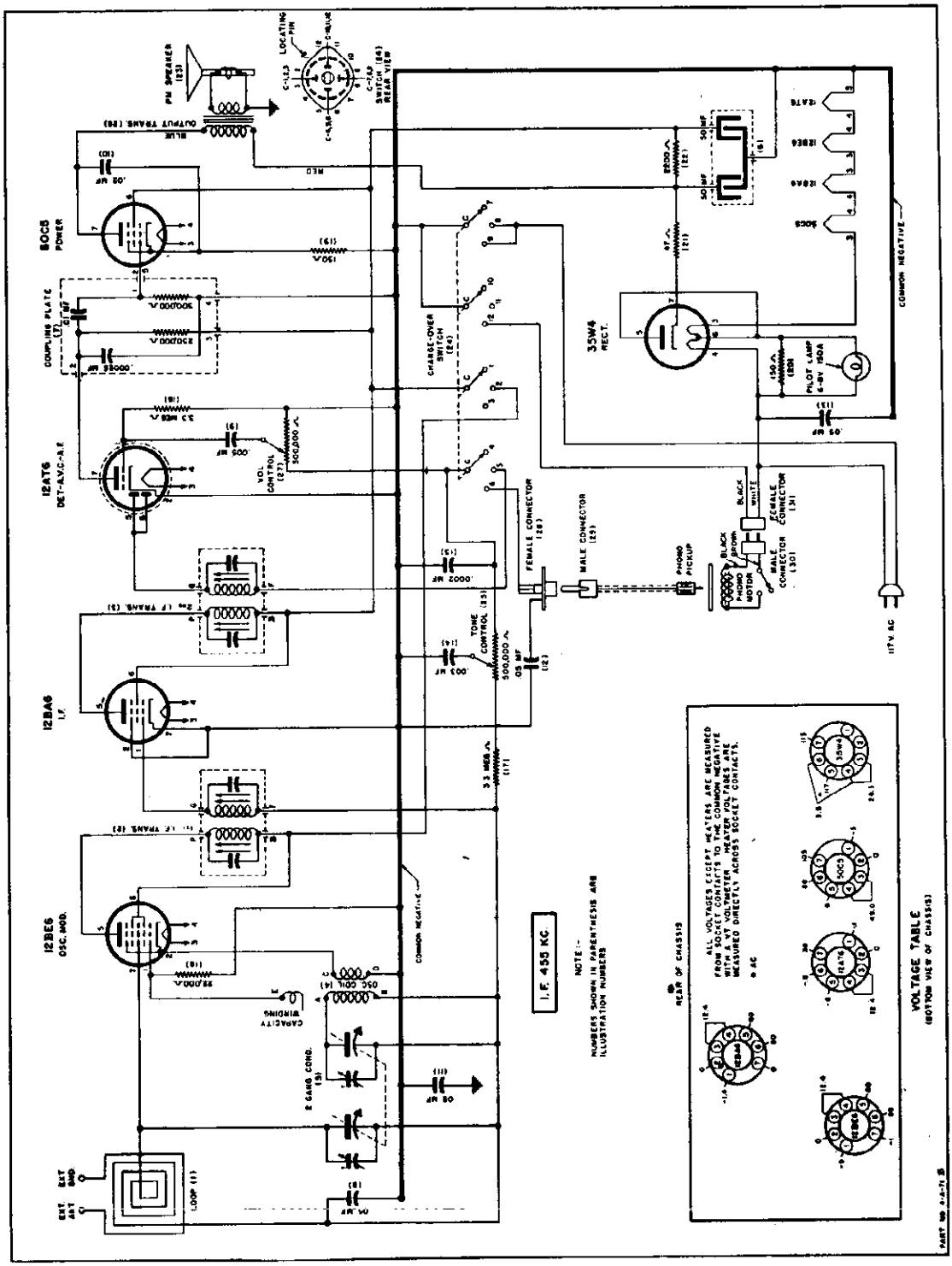
I.F. 455 KC
VOLTAGE TABLE
(BOTTOM VIEW OF CHASSIS)
REAR OF CHASSIS
ALL VOLTAGES EXCEPT HEATERS ARE MEASURED FROM SOCKET CONTACTS TO THE COMMON NEGATIVE WITH A VT VOLTMETER. HEATER VOLTAGES ARE MEASURED DIRECTLY ACROSS SOCKET CONTACTS.
* AC
NOTE:-
NUMBERS SHOWN IN PARENTHESIS ARE ILLUSTRATION NUMBERS
COMMON NEGATIVE
PM SPEAKER (23)
OUTPUT TRANS. (28)
LOCATING PIN
C-1123
C-1150
C-1149 SWITCH (26) REAR VIEW
80C5 POWER
12AT6 DET-AVC-A.F.
12BA6 I.F.
12BE6 OSC. MOD.
35W4 RECT.
COUPLING PLATE (7)
VOL CONTROL (23) 500,000Δ
TONE CONTROL (15) 500,000Δ .05 MF (12)
CHARGE-OVER SWITCH (24)
FEMALE CONNECTOR (28)
MALE CONNECTOR (29)
PHONO PICKUP
BLACK PHONO MOTOR
BLACK WHITE
FEMALE CONNECTOR (31)
MALE CONNECTOR (30)
PILOT LAMP 6-8V 150A (25)
117V AC
CAPACITY WINDING
B GANG COND. (5)
LOOP (1)
EXT. BND
EXT. ANT
50 MF (21)
50 MF (21)
8200Δ (21)
47Δ (21)
150Δ (6)
33 MEG Δ (17)
1250Δ (6)
300,000Δ (6)
300,000Δ (6)
35,000Δ (6)
.05 MF (9)
.05 MF (10)
.05 MF (11)
.05 MF (8)
.05 MF (6)
.0002 MF (6)
.005 MF (6)
.005 MF (6)
.05 MF (6)
.05 MF (6)
.05

©John F. Rider

ALIGNMENT PROCEDURE

For alignment procedure read tabulations from left to right, and make the adjustment marked (1) first, (2) next, (3) third.

Before starting alignment:

(A) Check tuning dial adjustment by tuning gang condenser until plates touch maximum capacity stop (completely in mesh) at which point the dial needle must be exactly even with the last line at the low frequency end of the dial calibration. If the dial needle does not point exactly to the last line move to correct position by holding dial needle shank at the point where it attaches to its drum while turning the drum on the gang condenser.

(B) Use an accurately calibrated test oscillator with some type of output measuring device.

(C) THE LOOP MAY BE LEFT IN THE CABINET and the chassis with its mounting board pulled out of the cabinet just far enough for adjustment of the trimmers, or the loop and chassis may be removed from the cabinet and the loop placed in the same position and plane it will be in when both are mounted in cabinet—approximately 1" space between receiver loop and chassis. Couple test oscillator to receiver loop by: (1) make loop consisting of 5 to 10 turns of No. 20 to No. 30 size wire, wound on a 2" or 3" form; (2) connect this loop across output of test oscillator; (3) place test oscillator loop near radio loop. BE SURE THAT NEITHER LOOP MOVES WHILE ALIGNING.

Steps	Set receiver dial to:	TEST OSCILLATOR			Refer to parts layout diagram for location of trimmers mentioned below:
		Adjust test oscillator frequency to:	Use dummy antenna in series with output of test oscillator consisting of:	Attach output of test oscillator to:	
1	Any point where no interfering signal is received	455 K. C.	.02 MFD. See Paragraph (C) Above	High side to rear stator plates of tuning condenser. Low side to frame of condenser through a .02 Mfd. blocking condenser.	Adjust each of the second I. F. transformer trimmers for maximum output—then adjust each of the first I. F. trimmers for maximum output.
2	Exactly 1650 K. C.	Exactly 1650 K. C.	See Paragraph (C) Above	See Paragraph (C) Above	Adjust 1650 K. C. oscillator trimmer for maximum output.
3	Approx. 1400 K. C.	Approx. 1400 K. C.	See Paragraph (C) Above	See Paragraph (C) Above	Adjust 1400 K. C. antenna trimmer for maximum output.

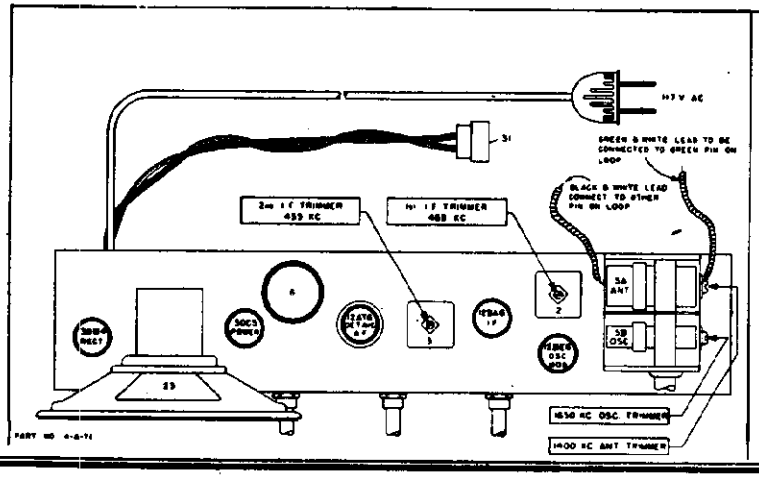

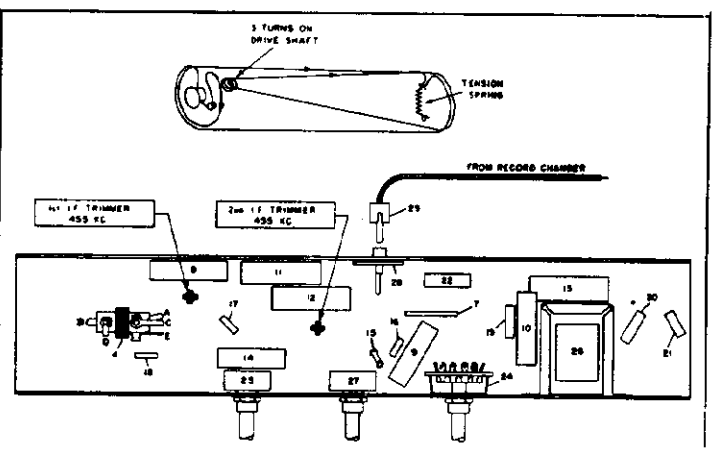

RADIO PARTS LIST

Illus. No.	Part No.	Part Name	Description
1	64E21	Antenna	Loop
2	20E378	Coil	1st I. F. Transformer
	OR		
2	20E402	Coil	1st I. F. Transformer
3	20E378	Coil	2nd I. F. Transformer
	OR		
3	20E402	Coil	2nd I. F. Transformer
4	20E397	Coil	Oscillator
5	24E47	Condenser	2 Gang, Tuning
*6	25E16	**Condenser**	**Dry Elect. 50-50 MFD. 150 V.**
7	23E2023	Condenser	Ceramic Coupling Plate
8	23E216	Condenser	Paper .05 MF. 200 V.
9	23E208	Condenser	Paper .005 MF. 200 V.
10	23E413	Condenser	Paper .02 MF. 400 V.
11	23E416	Condenser	Paper .05 MF. 400 V.
12	23E416	Condenser	Paper .05 MF. 400 V.
13	23E416	Condenser	Paper .05 MF. 400 V.
14	23E406	Condenser	Paper .003 MF. 400 V.

Illus. No.	Part No.	Part Name	Description
15	23E41	Condenser	Mica, .0002 MF.
	OR		
15	23E2027-3	Condenser	Ceramic, .0002 MF
16	27E335	Resistor	Carbon, 3.3 MEG OHM 1/3 W.
17	27E335	Resistor	Carbon, 3.3 MEG OHM 1/3 W.
18	27E223	Resistor	Carbon, 22,000 OHM 1/3 W.
19	27E151	Resistor	Carbon, 150 OHM 1/3 W.
20	27E151	Resistor	Carbon, 150 OHM 1/3 W.
21	27E470-2	Resistor	Carbon, 47 OHM 1/2 W.
22	27E222-3	Resistor	Carbon, 2200 OHM 1 W.
23	1E33	Speaker	5" PM
24	29E23	Switch	"Off-Radio-Phono"
*25	28E41	**Tone Control**	**500,000 Ohm**
26	22E8-2	Transformer	Output
*27	28E41	**Vol. Control**	**500,000 Ohm**
28	17E21-5	Connector	Female, for Pickup
29	47E9	Plug	Male Phono Plug for Pickup
30	17E21-3	Plug	Male, Attached to Phono Motor
31	20E184-1	Socket	Female, 4 Contact, for Phono Motor

*Fast Moving Items.

MISCELLANEOUS PARTS

Part No.	Part Name	Description
7E185	Cabinet	Cabinet only, less Frontplate Bezel Assembly
20E428	Cabt. Frontplate	Bezel, Frontplate with crystal
7E171-2	Cabinet Bottom	Cardboard Cabinet Bottom
41E8-2	Cord	8 Ft. Rubber Line Cord
30E116	Dial Plate Assembly	Dial Back Plate Assembly less Scale
20E253-1	Dial Cord	Dial Drive Cord
36E46	Dial Scale	Calibrated Scale

Part No.	Part Name	Description
20E394	Dial Shaft & Pulley	Drive Shaft & Pulley Assembly with Mounting Bracket
68E16	Dial Shaft	Drive Shaft only with 12E124 "C" Washer
35E25	Dial Pointer	Dial Indicator with Set Screw
65E2	Dial Spring	Tension Spring for Drive Cord
37E21-22	Knob	
37E21-23	Knob	With Dot, for "Off-Radio-Phono" Switch
17E34	Pilot Lamp Socket	Pilot Lamp Socket Assembly
40E1	Pilot Lamp	6-8 Volt, .150 Amp., Type 47

MOUNTING HARDWARE

Part No.	Part Name	Description
P-122	Lid Stop	Cabinet Lid Stop
13E103-1	Speed Nut	For Mounting Front Plate Bezel to Cabt.
10E41	Stud	Trimount, for Mtg. Dial Scale to Back Plate
82E1111-F10	Screw	6x7/8 Hx Hd—no slot—for holding Chassis to Mounting Board

Part No.	Part Name	Description
71E162	Screw	3-48x3/8" for Dial Pointer
86E227-F43	Screw	6x7/8 Rd Hd Copper Colored Iron Wood Screw for attaching Chassis Mtg. Board to Cabt.
86E183-F49	Screw	4x3/8 Rd Hd Iron Wood Screw for Mtg. Cardboard to Cabinet Bottom
12E124	Washer	"C" Washer for Dial Drive Shaft

©John F Rider

ALIGNMENT PROCEDURE

For alignment procedure read tabulations from left to right, and make the adjustment marked (1) first, (2) next, (3) third.

Before starting alignment:

(A) Check tuning dial adjustment by tuning gang condenser until plates touch maximum capacity stop (completely in mesh) at which point the dial needle must be exactly even with the last line at the low frequency end of the dial calibration. If dial needle does not point exactly to last line move to correct position.

(B) Use an accurately calibrated test oscillator with some type of output measuring device.

(C) WHEN ADJUSTING THE 1650 KC OSCILLATOR TRIMMER, remove chassis from cabinet and disconnect the loop connection wires from the loop. Attach a 1 megohm resistor across these connections and feed output of test oscillator across the 1 megohm resistor.

(D) THE 1400 KC LOOP ANTENNA TRIMMER should be adjusted only after all other adjustments have been made. PLACE LOOP ANTENNA IN THE SAME POSITION IT WILL BE IN WHEN THE SET IS IN THE CABINET — APPROXIMATELY 5/8" SPACE BETWEEN LOOP AND CHASSIS.

When aligning the 1400 KC Antenna Trimmer, couple test oscillator to receiver loop by: (1) make loop consisting of five to ten turns of No. 20 to No. 30 size wire, wound on a 2" or 3" form; (2) connect this loop across output of test oscillator; (3) place test oscillator loop near radio loop. BE SURE THAT NEITHER LOOP MOVES WHILE ALIGNING.

Steps	Set receiver dial to:	TEST OSCILLATOR: Adjust test oscillator frequency to:	TEST OSCILLATOR: Use dummy antenna in series with output of test oscillator consisting of:	TEST OSCILLATOR: Attach output of test oscillator to:	Refer to parts layout diagram for location of trimmers mentioned below:
1	Any point where no interfering signal is received.	455 K. C.	.02 MFD. condenser	High side to rear stator plates of tuning condenser. Low side to frame of condenser through a .02 Mfd. blocking condenser.	Adjust each of the second I.F. transformer trimmers for maximum output—then adjust each of the first I.F. trimmers for maximum output.
2	Exactly 1650 K. C.	Exactly 1650 K. C.	See paragraph (C) above	See paragraph (C) above	Adjust 1650 K. C. oscillator trimmer for maximum output.
3	Approx. 1400 K. C.	Approx. 1400 K. C.	See paragraph (D) above	See paragraph (D) above	Adjust 1400 K. C. antenna trimmer for maximum output.

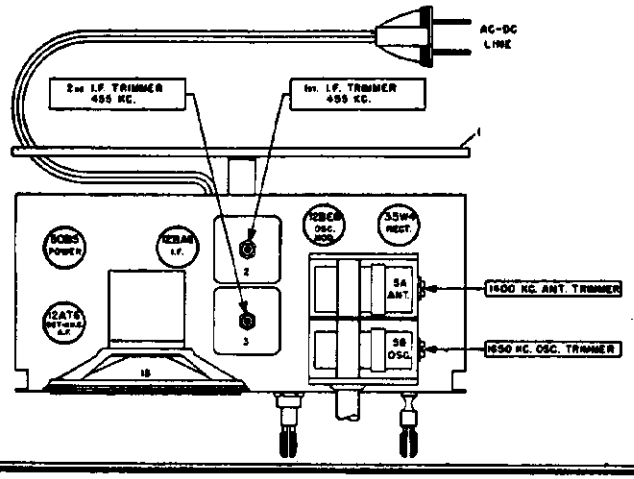

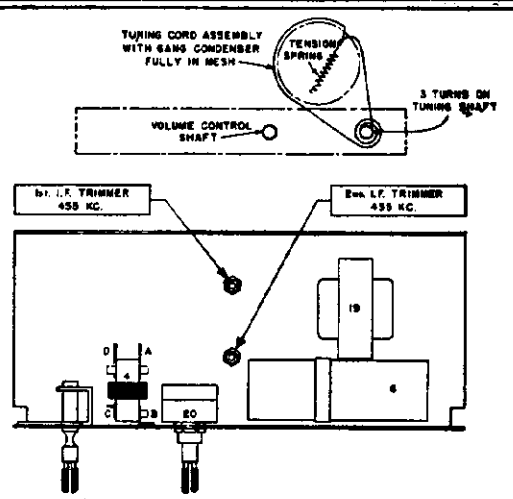

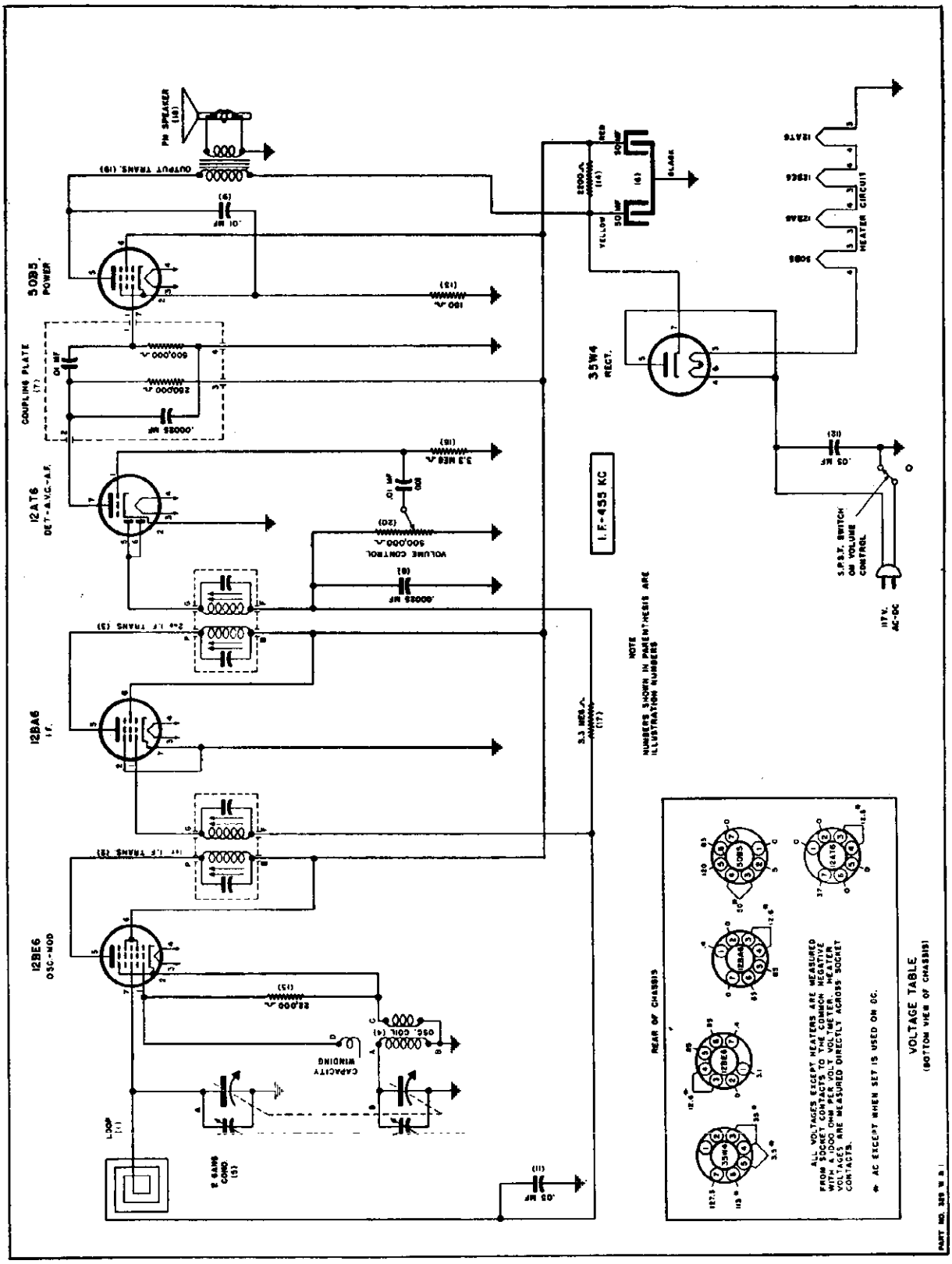
I.F. 455 KC
NOTE
NUMBERS SHOWN IN PARENTHESES ARE ILLUSTRATION NUMBERS
VOLTAGE TABLE
(BOTTOM VIEW OF CHASSIS)
REAR OF CHASSIS
ALL VOLTAGES EXCEPT HEATERS ARE MEASURED FROM SOCKET CONTACTS TO THE COMMON NEGATIVE WITH A 1000 OHM PER VOLT VOLTMETER. HEATER VOLTAGES ARE MEASURED DIRECTLY ACROSS SOCKET CONTACTS.
* AC EXCEPT WHEN SET IS USED ON DC.
PART NO. 329 W & I
HEATER CIRCUIT
S.P.S.T. SWITCH ON VOLUME CONTROL
117 V. AC-DC
VOLUME CONTROL
500,000 Δ
COUPLING PLATE
OUTPUT TRANS. (19)
P.M. SPEAKER (18)
5085 POWER
35W4 RECT.
I2AT6 DET.-A.V.C.-A.F.
I2BA6 I.F.
I2BE6 OSC.-MOD.
OSC. COIL (4)
CAPACITY WINDING
R. GANG COND. (2)
LOOP (1)
2nd I.F. TRANS. (3)
1st I.F. TRANS. (3)

©John F. Rider

Series A & B
PARTS LIST

Illus. No.	Part No.	Part Name	Description
1	64E12	Antenna	Loop and cabinet back
2	20E378	Coil	1st I. F. Transformer
	OR		
2	20E402	Coil	1st I. F. Transformer
3	20E378	Coil	2nd I. F. Transformer
	OR		
3	20E402	Coil	2nd I. F. Transformer
4	20E333	Coil	Oscillator
5	24E45	Condenser	Two Gang, Tuning
6	25E24	Condenser	Dry Electrolytic, 50-50 Mfd. 150 Volt
7	23E2023	Condenser	Ceramic, Coupling Plate
8	23E42	Condenser	Mica, .00025 Mfd. 500 V.
	OR		
8	23E2027	Condenser	Ceramic, .00025 Mfd. 500 V.
9	23E411	Condenser	Tubular, .01 Mfd. 400 V.
10	23E211	Condenser	Tubular, .01 Mfd. 200 V.
11	23E216	Condenser	Tubular, .05 Mfd. 200 V.
12	23E416	Condenser	Tubular, .05 Mfd. 400 V.
13	27E151	Resistor	Carbon, 150 Ohm, 1/3 W.
14	27E222-3	Resistor	Carbon, 2200 Ohm, 1 W.
15	27E223	Resistor	Carbon, 22,000 Ohm, 1/3 W.
16	27E335	Resistor	Carbon, 3.3 Megohm, 1/3 W.
17	27E335	Resistor	Carbon, 3.3 Megohm, 1/3 W.
18	1E32	Speaker	3½" P.M.
19	22E23	Transformer	Output
20	28E27	Volume Control	500,000 Ohm, with Switch

Series A
MISCELLANEOUS PARTS

Part No.	Part Name	Description
7E168-2	Cabinet	Walnut Plastic with Dial Scale
7E168-3	Cabinet	Ivory Plastic with Dial Scale
7E168-6	Cabinet	Red Plastic with Dial Scale
41E13	Cord	5 Ft. Rubber Line Cord
20E253-14	Dial Cord	Dial Drive Cord
36E41	Dial Scale	Calibrated Dial Scale
20E348-3	Dial Shaft Assembly	Dial Drive Shaft with Bracket
35E24	Dial Pointer	Dial Indicator
65E2	Dial Spring	Tension Spring for Dial Cord
37E52-10	Knob	For Walnut Cabinet
37E52-11	Knob	For Ivory and Red Cabinet
10E42	Stud	Trimount Stud for Loop & Back
13E105	Nut	Used to hold chassis in Cabinet
12E123	Washer	Fibre Cushion, used with 13E105 Nut

Misc. Series B
MISCELLANEOUS PARTS

Part No.	Part Name	Description
7E134-2	Cabinet	Walnut Plastic with Dial Scale
7E134-3	Cabinet	Ivory Plastic with Dial Scale
7E134-4	Cabinet	Red Plastic with Dial Scale
41E13	Cord	5 Ft. Rubber Line Cord
20E253-14	Dial Cord	Dial Drive Cord
36E48	Dial Scale	Calibrated Dial Scale
20E348-3	Dial Shaft Assembly	Dial Drive Shaft with Bracket
35E27	Dial Pointer	Dial Indicator cements on type
35E27	Dial Pointer	Dial Indicator snaps on type
65E2	Dial Spring	Tension Spring for Dial Cord
37E47-11	Knob	For Walnut Cabinet
37E47-2	Knob	For Ivory and Red Cabinet
10E42	Stud	Trimount Stud for Loop & Back
13E105	Nut	Used to hold chassis in Cabinet
12E123	Washer	Fibre Cushion, used with 13E105 Nut

VOLTAGE RATING

THIS RADIO IS DESIGNED FOR USE ON EITHER:
110-120 VOLTS 50-60 CYCLES ALTERNATING CURRENT (AC)
OR
110-120 VOLTS DIRECT CURRENT (DC)

ALIGNMENT PROCEDURE

For alignment procedure read tabulations from left to right, and make the adjustment marked (1) first, (2) next, (3) third.

Before starting alignment:

(A) Check tuning dial adjustment by tuning gang condenser until plates touch maximum capacity stop (completely in mesh) at which point the dial needle must be exactly even with the last line at the low frequency end of the dial calibration. If dial needle does not point exactly to last line move to correct position.

(B) Use an accurately calibrated test oscillator with some type of output measuring device.

(C) WHEN ADJUSTING THE 1650 KC OSCILLATOR TRIMMER, remove chassis from cabinet and disconnect the loop connection wires from the loop. Attach a 1 megohm resistor across these connections and feed output of test oscillator across the 1 megohm resistor.

(D) THE 1400 KC LOOP ANTENNA TRIMMER should be adjusted only after all other adjustments have been made. PLACE LOOP ANTENNA IN THE SAME POSITION IT WILL BE IN WHEN THE SET IS IN THE CABINET — APPROXIMATELY 5/8" SPACE BETWEEN LOOP AND CHASSIS.

When aligning the 1400 KC Antenna Trimmer, couple test oscillator to receiver loop by: (1) make loop consisting of five to ten turns of No. 20 to No. 30 size wire, wound on a 2" or 3" form; (2) connect this loop across output of test oscillator; (3) place test oscillator loop near radio loop. BE SURE THAT NEITHER LOOP MOVES WHILE ALIGNING.

Steps	Set receiver dial to:	TEST OSCILLATOR			Refer to parts layout diagram for location of trimmers mentioned below:
		Adjust test oscillator frequency to:	Use dummy antenna in series with output of test oscillator consisting of:	Attach output of test oscillator to:	
1	Any point where no interfering signal is received.	455 K. C.	.02 MFD. condenser	High side to rear stator plates of tuning condenser. Low side to frame of condenser through a .02 Mfd. blocking condenser.	Adjust each of the second I.F. transformer trimmers for maximum output—then adjust each of the first I.F. trimmers for maximum output.
2	Exactly 1650 K. C.	Exactly 1650 K. C.	See paragraph (C) above	See paragraph (C) above	Adjust 1650 K. C. oscillator trimmer for maximum output.
3	Approx. 1400 K. C.	Approx. 1400 K. C.	See paragraph (D) above	See paragraph (D) above	Adjust 1400 K. C. antenna trimmer for maximum output.

MODELS 331-I,
331-R, 331-W

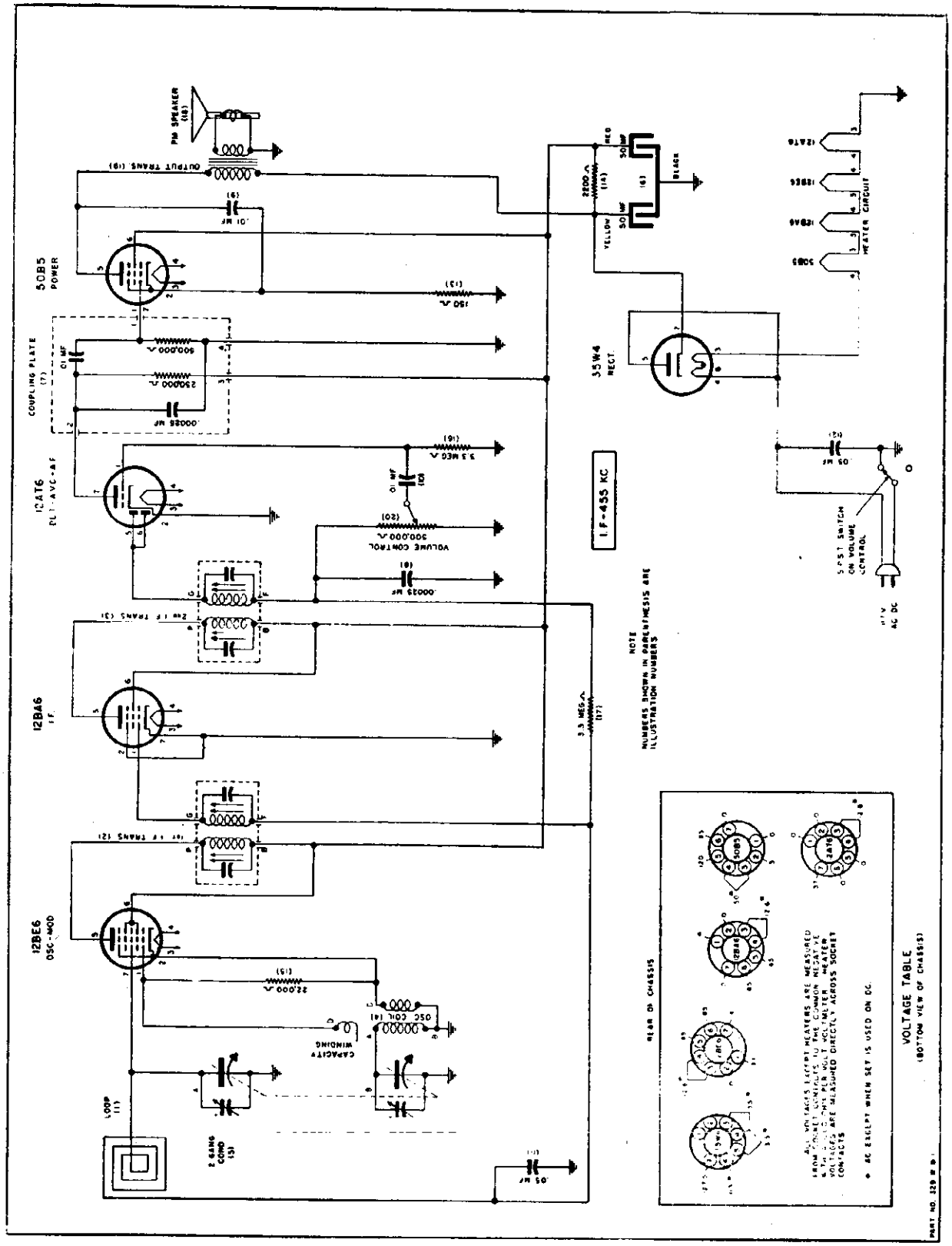

©John F. Rider

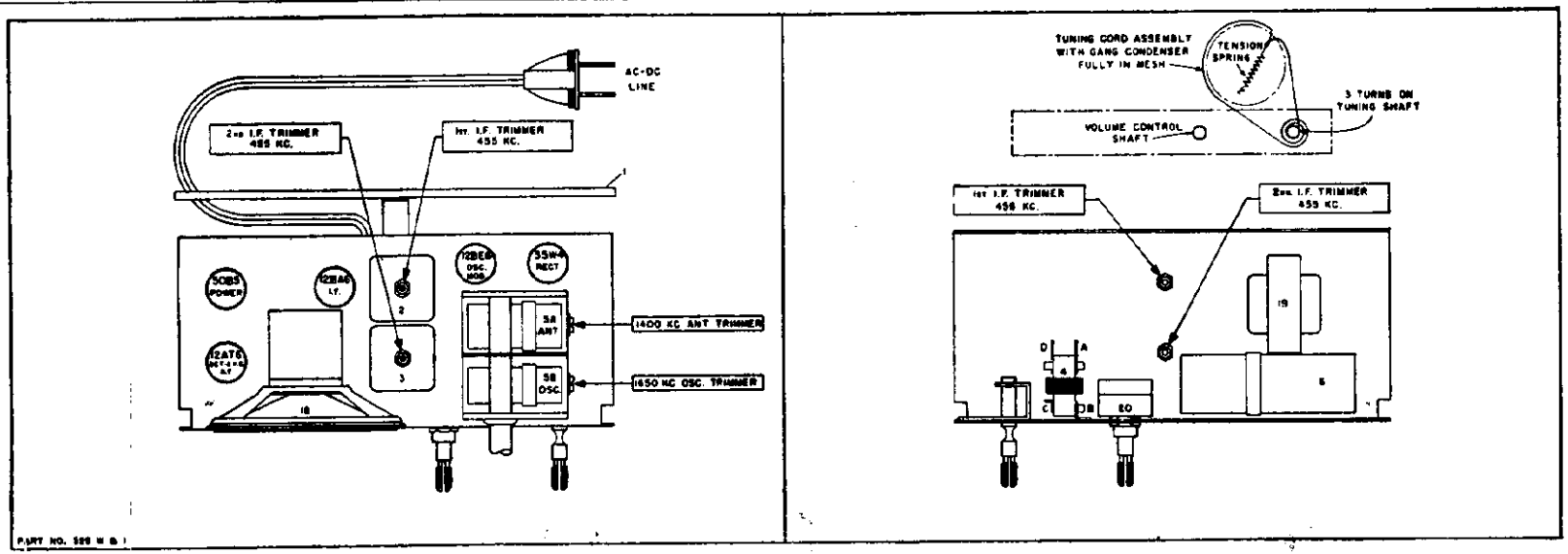

PARTS LIST

Illus. No.	Part No.	Part Name	Description
1	64E27	Antenna	Loop and cabinet back
2	20E378	Coil	1st I. F. Transformer
	OR		
2	20E402	Coil	1st I. F. Transformer
3	20E378	Coil	2nd I. F. Transformer
	OR		
3	20E402	Coil	2nd I. F. Transformer
4	20E333	Coil	Oscillator
5	24E45	Condenser	Two Gang, Tuning
6	25E24	Condenser	Dry Electrolytic, 50-50 Mfd. 150 Volt
7	23E2023	Condenser	Ceramic, Coupling Plate
8	23E42	Condenser	Mica, .00025 Mfd. 500 V.
	OR		
8	23E2027	Condenser	Ceramic, .00025 Mfd. 500 V.

Illus. No.	Part No.	Part Name	Description
9	23E411	Condenser	Tubular, .01 Mfd. 400 V.
10	23E211	Condenser	Tubular, .01 Mfd. 200 V.
11	23E216	Condenser	Tubular, .05 Mfd. 200 V.
12	23E416	Condenser	Tubular, .05 Mfd. 400 V.
13	27E151	Resistor	Carbon, 150 Ohm, 1/3 W.
14	27E222-3	Resistor	Carbon, 2200 Ohm, 1 W.
15	27E223	Resistor	Carbon, 22,000 Ohm, 1/3 W.
16	27E335	Resistor	Carbon, 3.3 Megohm, 1/3 W.
17	27E335	Resistor	Carbon, 3.3 Megohm, 1/3 W.
18	1E32	Speaker	3½" P.M.
19	22E23	Transformer	Output
20	28E27	Volume Control	500,000 Ohm, with Switch

MISCELLANEOUS PARTS

Part No.	Part Name	Description
7E196-2	Cabinet	Walnut Plastic
7E196-9	Cabinet	Ivory Plastic
7E196-6	Cabinet	Red Plastic
41E13	Cord	5 Ft. Rubber Line Cord
20E253-14	Dial Cord	Dial Drive Cord
36E50	Dial Scale	Calibrated Dial Scale

Part No.	Part Name	Description
20E348-3	Dial Shaft Assembly	Dial Drive Shaft with Bracket
35E27-2	Dial Pointer	Dial Indicator
65E2	Dial Spring	Tension Spring for Dial Cord
37E52-12	Knob	For Walnut Cabinet
37E52-14	Knob	For Ivory and Red Cabinet
10E42	Stud	Trimount Stud for Loop & Back

ALIGNMENT PROCEDURE

For alignment procedure read tabulations from left to right, and make the adjustment marked (1) first, (2) next, (3) third.
IMPORTANT: BEFORE ALIGNING, PLACE LOOP ANTENNA IN THE SAME POSITION IT WILL BE IN WHEN THE SET IS IN THE CABINET. BE SURE THAT IT DOES NOT MOVE WHILE ALIGNING.

When adjusting 1650 kilocycle oscillator trimmer, 455 K.C. R.F. trimmer and 1400 kilocycle antenna trimmer, connect test oscillator to loop external antenna and ground connections with a .0002 Mfd. capacitor in series with antenna lead.

Steps	Set receiver dial to:	TEST OSCILLATOR			Refer to parts layout diagram for location of trimmers mentioned below:
		Adjust test oscillator frequency to:	Use dummy antenna in series with output of test oscillator consisting of:	Attach output of test oscillator to:	
	Any point where no interfering signal is received	Exactly 455 K. C.	0.2 Mfd. Condenser	High side to grid of 12SA7 tube. Low side to chassis. (To Common Negative in UND Models.)	Adjust each of the 2nd I.F. transformer trimmer adjustment screws for maximum output, then adjust each of the 1st I.F. transformer trimmer adjustment screws for maximum output.
1	Rotate gang condenser to maximum capacity	Exactly 455 K. C.	.0002 Mfd. Condenser	To loop external antenna and ground connections	Adjust R. F. coil trimmer for **minimum** 455 K. C. signal.
2	Rotate gang condenser to minimum capacity	Exactly 1650 K. C.	.0002 Mfd. Condenser	To loop external antenna and ground connections	Adjust 1650 K. C. oscillator trimmer for maximum output.
3	Approximately 1400 K. C.	Approx. 1400 K. C.	.0002 Mfd. Condenser	To loop external antenna and ground connections	Adjust 1400 K. C. antenna trimmer for maximum output.

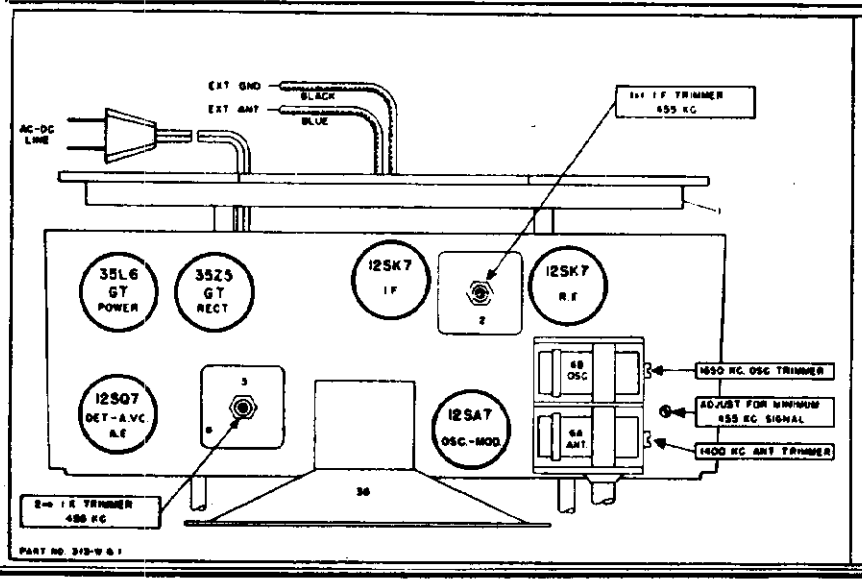

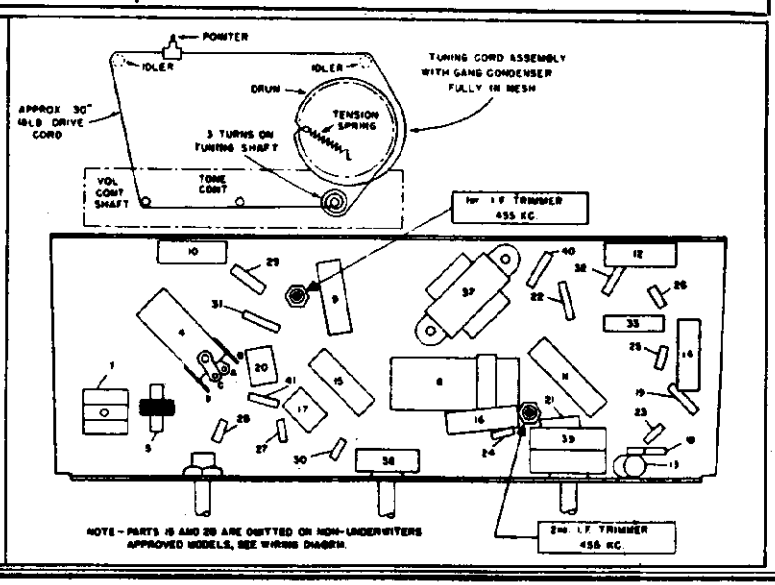

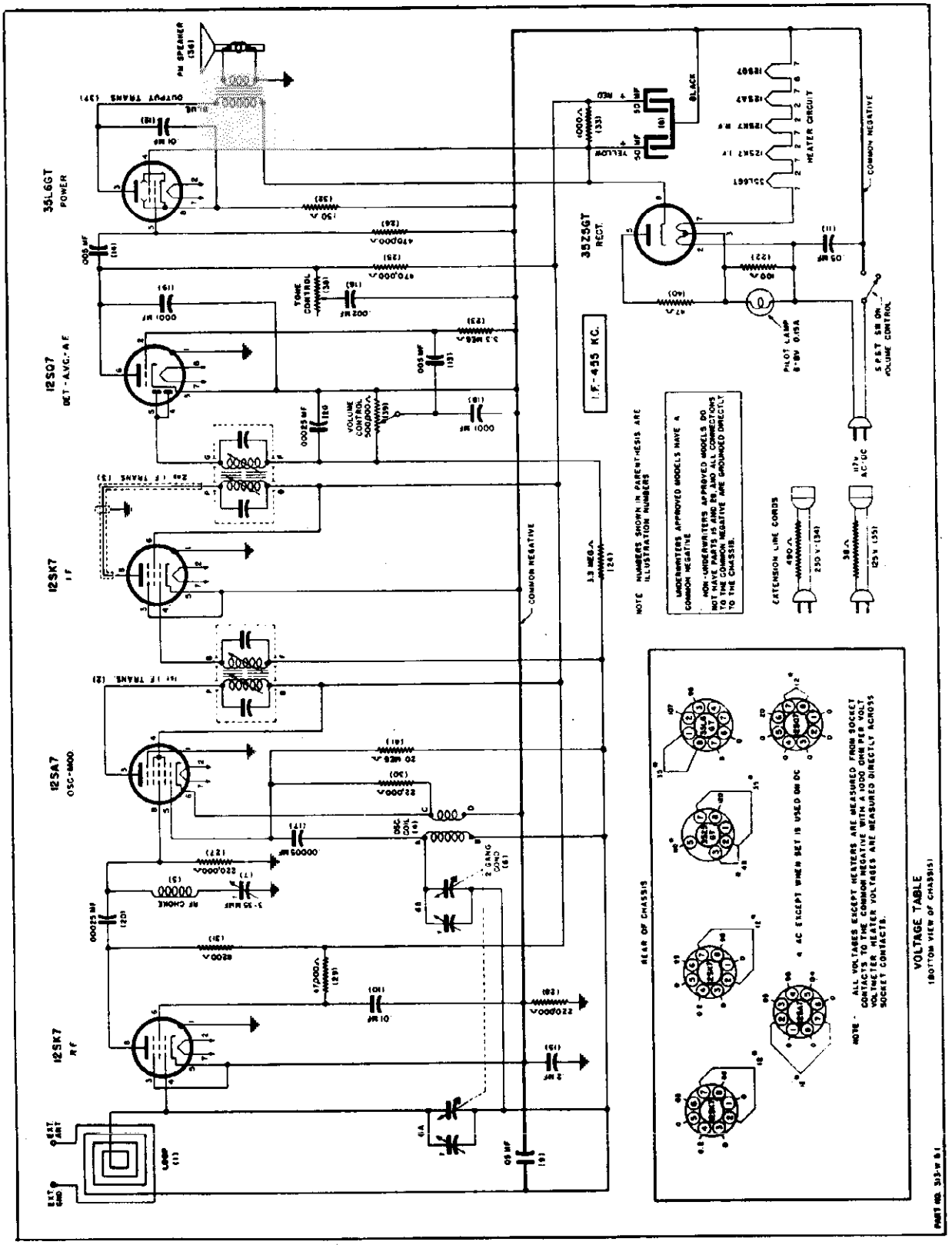
35L6GT
POWER
12SQ7
DET - AVC - AF
12SK7
IF
12SA7
OSC-MIXER
12SK7
RF
35Z5GT
RECT.
I.F. - 455 KC.
VOLTAGE TABLE
(BOTTOM VIEW OF CHASSIS)
REAR OF CHASSIS
HEATER CIRCUIT
COMMON NEGATIVE
SPST SW ON VOLUME CONTROL
PILOT LAMP 6-8V 0.15A
EXTENSION LINE CORDS
NOTE - ALL VOLTAGES EXCEPT HEATERS ARE MEASURED FROM SOCKET CONTACTS TO THE COMMON NEGATIVE WITH A 1000 OHMS PER VOLT VOLTMETER. HEATER VOLTAGES ARE MEASURED DIRECTLY ACROSS SOCKET CONTACTS.
* AC EXCEPT WHEN SET IS USED ON DC

©John F. Rider

©John F. Rider

OUTSIDE AERIAL

If the radio is used in shielded areas or located a great distance from broadcast stations, the volume of some or all stations may not be ample, in which case it would be necessary to ATTACH A 25-50 ft. OUTDOOR AERIAL TO THE BLUE LEAD COMING OUT OF THE REAR OF THE CHASSIS.

GROUND

When a regular aerial is used, best results will be obtained with a ground attached to the black lead coming out of the rear of the chassis. WARNING — DO NOT ATTACH A GROUND DIRECT TO THE RADIO CHASSIS — ANY EXTERNAL GROUND CONNECTION TO ANY METAL PART OF THE CHASSIS WILL CAUSE A SHORT AND POSSIBLE DAMAGE.

DIAL LIGHT

It is normal for the dial light to be dim for approximately 60 seconds after set is turned "on" and then attain normal brilliance—also, on very loud signals the light may fluctuate.

Always use a 6.3 volt .150 ampere dial light, Mazda type 47.

VOLTAGE RATING

THIS RADIO IS DESIGNED FOR USE ON EITHER:

110-120 VOLTS 50-60 CYCLES ALTERNATING CURRENT (AC)

OR

110-120 VOLTS DIRECT CURRENT (DC)

PARTS LIST

Illus. No.	Part No.	Part Name	Description
1	7E149	Antenna	Loop & Cabinet Back
	or		
1	7E150	Antenna	Loop & Cabinet Back
2	20E261	Coil	1st I. F. Transformer
	or		
2	20E307	Coil	1st I. F. Transformer
3	20E261-2	Coil	2nd I. F. Transformer
	or		
3	20E307-2	Coil	2nd I. F. Transformer
4	20E64	Coil	Oscillator
5	2E19	Coil	R. F. Choke
6	24E8	Condenser	Tuning, 2 Gang
7	24E3	Condenser	Trimmer (3-35 MMF)
8	25E6	Condenser	Tubular, Dry Elect. 50-50 Mfd. 150 V.
9	23E216	Condenser	Tubular, .05 Mfd. 200 V.
10	23E211	Condenser	Tubular, .01 Mfd. 200 V.
11	23E416	Condenser	Tubular, .05 Mfd. 400 V.
12	23E411	Condenser	Tubular, .01 Mfd. 400 V.
13	23E408	Condenser	Tubular, .005 Mfd. 400 V.
14	23E408	Condenser	Tubular. .005 Mfd. 400 V.
15	23E421	Condenser	Tubular, .2 Mfd. 400 V. (UND. Models Only)
16	23E405	Condenser	Tubular, .002 Mfd. 400 V.
17	23E37	Condenser	Mica, .00005 Mfd.
18	23E39	Condenser	Mica, .0001 Mfd.
19	23E39	Condenser	Mica, .0001 Mfd.
20	23E42	Condenser	Mica, .00025 Mfd.
21	23E42	Condenser	Mica, .00025 Mfd.
22	27E101-2	Resistor	Carbon, 100 Ohm 1/2 Watt
23	27E335	Resistor	Carbon, 3.3 Meg Ohm 1/3 Watt
24	27E335	Resistor	Carbon, 3.3 Meg Ohm 1/3 Watt
25	27E474	Resistor	Carbon, 470,000 Ohm 1/3 Watt
26	27E474	Resistor	Carbon, 470,000 Ohm 1/3 Watt
27	27E224	Resistor	Carbon, 220,000 Ohm 1/3 Watt
28	27E224	Resistor	Carbon, 220,000 Ohm 1/3 Watt (UND. Models Only)
29	27E473	Resistor	Carbon, 47,000 Ohm 1/3 Watt
30	27E223	Resistor	Carbon, 22,000 Ohm 1/3 Watt
31	27E822	Resistor	Carbon, 8,200 Ohm 1/3 Watt
32	27E151	Resistor	Carbon, 150 Ohm 1/3 Watt
33	27E102-3	Resistor	Carbon, 1,000 Ohm 1 Watt
36	1E1	Speaker	4" x 6" Elliptical P.M.
37	22E8	Transformer	Output
38	28E8	Tone Control	
39	28E7	Volume Control	500,000 Ohm with S.P.S.T. Switch
40	27E470-2	Resistor	Carbon, 47 Ohm 1/2 Watt
41	27E206	Resistor	Carbon, 20 Megohm 1/3 Watt

MISCELLANEOUS PARTS

Part No.	Part Name	Description
40E1	Bulb	6-8 Volt, .150 Amp. Type 47
7E149	Cabinet Back	With Loop Antenna
or		
7E150	Cabinet Back	With Loop Antenna
7E195-2	Cabinet	Walnut Plastic
7E195-9	Cabinet	Ivory Plastic
65E2	Dial Cord Spring	Tension Spring
20E253-18	Dial Cord	30" of 18 lb. Drive Cord
20E348-2	Dial Shaft Assem.	Drive Shaft Assembly
20E65-5	Dial Back Plate	Backplate Assembly, less scale
36E53	Dial Scale	Calibrated Glass Scale
35E8-4	Dial Pointer	Dial Indicator
37E27-11	Knob	For Walnut Cabinet
37E27-36	Knob	For Ivory Cabinet
17E22	Socket	Dial Light Socket Assembly
10E42	Studs	Trimount for Mounting Back to Cabinet

©John F. Rider

VOLTAGE RATING

THIS RADIO IS DESIGNED FOR USE ON 110-120 VOLT, 50-60 CYCLE, ALTERNATING CURRENT (AC) OR 110-120 VOLT DIRECT CURRENT (DC).

AM STANDARD BROADCAST AERIAL

The AM Standard Broadcast Aerial, mounted inside of the rear of the cabinet is a loop-type antenna. Because loop aerials are directional, the volume of a weak station, operating in the 535-1730 KC Band, may be improved, or undesired electrical noise may be reduced by placing the radio in a different position. A trial will reveal position for best reception with least interference.

When the volume of the AM Broadcast stations is not satisfactory, improved results can be obtained by attaching a 50 ft. to 75 ft. Outdoor Aerial to the BLUE wire coming out of the rear of the cabinet and a ground to the BLACK wire.

WARNING — DO NOT CONNECT A GROUND TO ANY METAL PART OF THE CHASSIS BECAUSE THIS WILL CAUSE A SHORT AND POSSIBLE DAMAGE.

FM AERIAL

Due to the high frequencies used by FM stations, signals from these stations reach only to the "line of sight." This means that reliable FM reception can usually be expected only when the radio is within 20 to 30 miles from the station transmitter. The actual area serviced by FM stations depends on the height of the station aerial and receiver aerial.

If the radio happens to be located on the edge or just outside of the FM station service area, satisfactory FM reception may not be obtained with the self contained FM aerial furnished with the radio, in which case it will be necessary to install a suitable outdoor FM aerial. This should be the type having a 300 Ohm transmission line, and it must be erected as high as possible.

If an outdoor aerial is required, consult your Sentinel dealer—he can furnish a satisfactory outdoor FM aerial.

TO CONNECT AN OUTDOOR "FM" AERIAL TO THE RADIO:

(1) Disconnect the wire attached to posts marked #1 and #2 mounted on back of loop aerial.

(2) Attach outdoor FM aerial transmission leads to the posts marked #1 and #3.

IMPORTANT — WHEN THE RADIO IS LOCATED TOO CLOSE TO AN FM STATION, the volume may be ample but the signal may be distorted. An outdoor FM aerial would only aggravate this condition. Usually, disconnecting the jumper wire connecting posts #1 and #2 on back of loop will eliminate the distortion.

AM STANDARD BROADCAST OPERATING INSTRUCTIONS

Turn "AM-FM" Band Selector Switch Knob to RIGHT hand position.
Use section of dial that is calibrated from 535 to 1730 K. C.

FM FREQUENCY MODULATION OPERATING INSTRUCTIONS

Turn "FM-AM" Band Selector Switch Knob to LEFT hand position.
Place Volume Control Knob in maximum volume position.
Use section of dial that is calibrated from 88 to 108 M.C.

WHEN TUNING FOR FM STATIONS, care must be taken to tune properly, otherwise the brilliant tone and noise-free reception possible from FM stations will not be fully realized. Always carefully tune to the point where the volume is greatest with clearest tone and least background noise.

It will be noticed that FM stations will be heard at two positions that are close together on the dial scale, with a distortion point between the two. As these two clear-tone signals will be substantially equal in tone and volume, either one may be used.

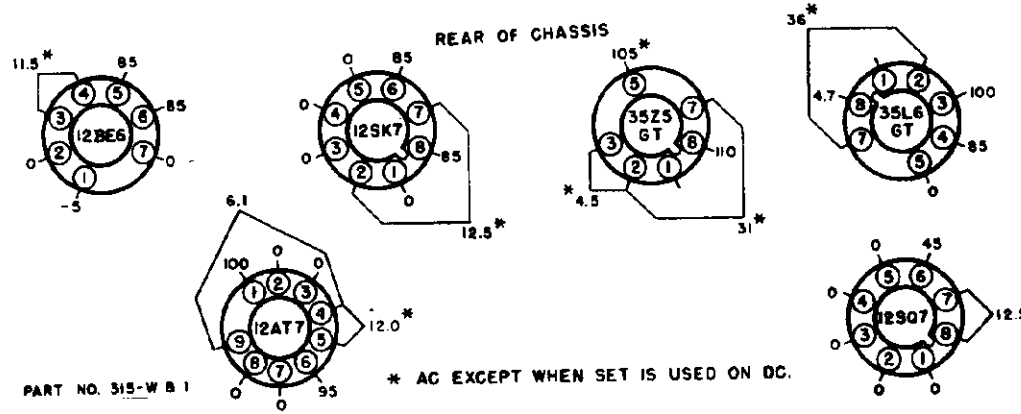

NOTE:- ALL VOLTAGES EXCEPT HEATERS ARE MEASURED FROM SOCKET CONTACTS TO CHASSIS WITH A 20,000 OHM PER VOLT VOLTMETER. HEATER VOLTAGES ARE MEASURED DIRECTLY ACROSS SOCKET CONTACTS.

VOLTAGE TABLE
(BOTTOM VIEW OF CHASSIS)

©John F. Rider

AM ALIGNMENT PROCEDURE

Be sure to follow procedure carefully and in the order given—otherwise the receiver will be insensitive and the dial calibration incorrect. For alignment procedure read tabulations from left to right. Make the adjustment marked (1) first, (2) next, (3) third.

Before starting alignment:

(a) Check tuning dial adjustment by tuning gang condenser until plates touch maximum capacity stop (completely in mesh) at which point the dial pointer must be exactly even with the last line at the low frequency end of the AM dial calibration. If dial needle does not point exactly to last line move to correct position.

(b) Use an accurately calibrated test oscillator with some type of output measuring device.

(c) Place loop antenna in the same position it will be in when set is in the cabinet.

Steps	Place band switch for operation on:	Set receiver dial to:	TEST OSCILLATOR			Refer to parts layout diagram for location of trimmers mentioned below:
			Adjust test oscillator frequency to:	Use dummy antenna in series with output of test oscillator consisting of:	Attach output of test oscillator to:	
1	AM Band position	Any point where no interfering signal is received	Exactly 455 K. C.	0.2 Mfd. Condenser	High side to AM-Osc. stator plates of tuning condenser (10D). Low side to frame of condenser through .01 Mfd. condenser.	Adjust each of the 2nd 455 K. C. AM I. F. transformer trimmers for maximum output, then adjust each of the 1st 455 K. C. AM I. F. transformer trimmers for maximum output.
2	AM Band position	Exactly 1730 K.C.	Exactly 1730 K.C.		Receiver blue antenna lead Receiver black ground lead	Adjust 1730 K. C. oscillator trimmer for maximum output.
3	AM Band position	Approx. 1400 K. C.	Approx. 1400 K. C.		Receiver blue antenna lead Receiver black ground lead	Adjust 1400 K. C. AM Ant. trimmer for maximum output.

FM ALIGNMENT

The only portion of this receiver which is used during FM reception, other than the AF and Power Supply, is the 12AT7 Dual Triode tube and its associated circuits. One triode of the tube is used for HF Oscillator and covers a band 27.75 MC above the 88 to 108 FM Band. The other triode is used for RF Input, Super-regenerator and Detector. This triode oscillates at 27.75 MC and is quenched by an RC network at about 25 KC.

In tuning this receiver on FM, it will be noticed that two signals will be received with a null point between them. These two signals will be substantially equal in tone and volume and either one can be used. They represent the frequency discrimination which takes place due to the receiver being tuned to one side of the carrier center frequency and this, therefore, is not the spot of greatest quieting. Greatest quieting is found at the null point, at which no frequency discrimination takes place and therefore no audio signal is produced.

The equipment necessary for FM alignment consists of the following:

(A) An Audio Output Meter.

(B) An AM or FM Signal Generator that will supply a 27.75 MC, 105 MC and 108 MC signal. A Signal Generator that only goes up to 30 MC but which has sufficient fourth harmonic present in the carrier could be used for this purpose.

@John F Rider

ALIGNMENT PROCEDURE

BE SURE TO MAKE THE ADJUSTMENTS IN THE ORDER GIVEN BELOW.

(A) Connect Output Meter across voice coil of speaker.

(B) Remove jumper wire from terminals #1 and #2 on loop terminal strip.

(C) Connect the hot Signal Generator lead through a 300 Ohm Resistor to the #1 post on terminal strip and the other lead to the post marked #3.

27.75 MC PLATE COIL ADJUSTMENT

(A) Set Signal Generator to deliver a modulated 27.75 MC Signal.

(B) Adjust 27.75 MC Plate Coil Trimmer for maximum reading on Output Meter.

108 MC and 105 MC ADJUSTMENT

(A) Set Signal Generator to deliver a modulated 108 MC signal.

(B) Tune receiver dial to MINIMUM CAPACITY STOP.

(C) Adjust 108 MC Oscillator Trimmer for maximum reading on Output Meter.

(D) Tune receiver dial and Signal Generator to 105 MC.

(E) Adjust 105 MC Antenna Trimmer for maximum reading on the Output Meter.

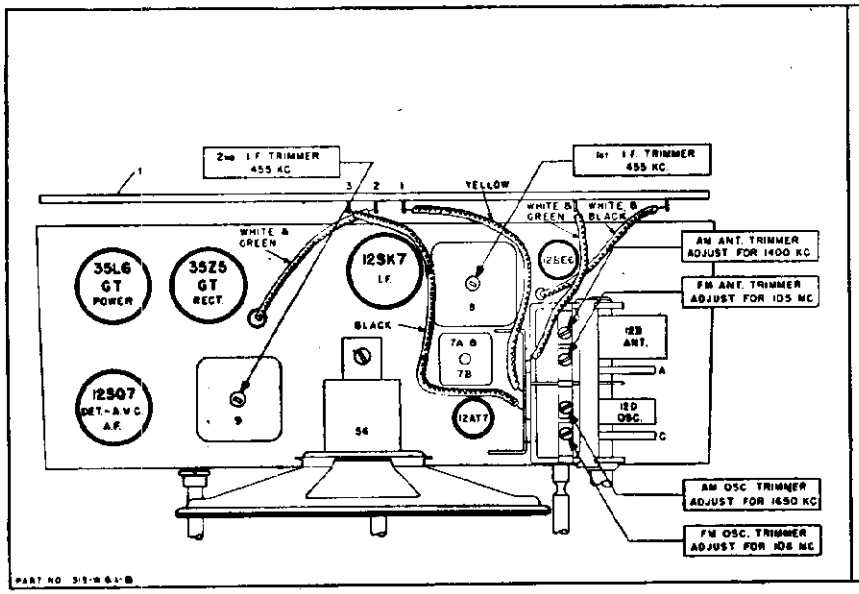

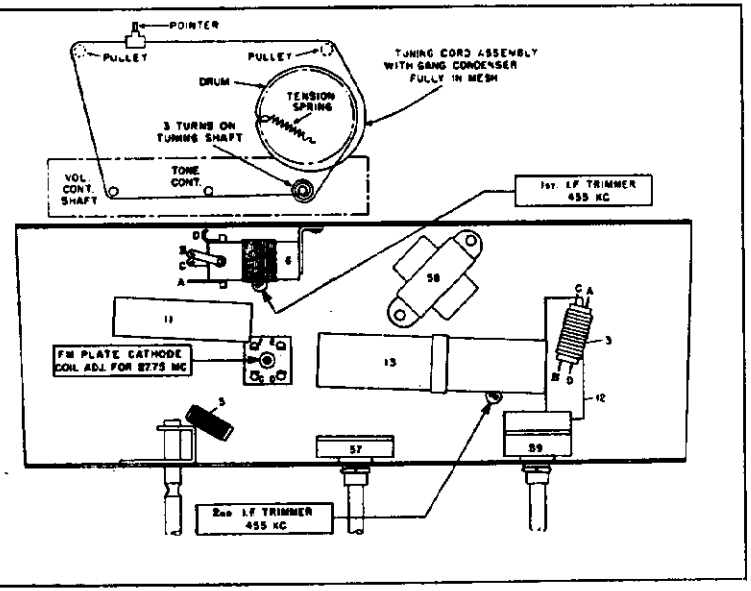

MODELS 333-I, 333-W

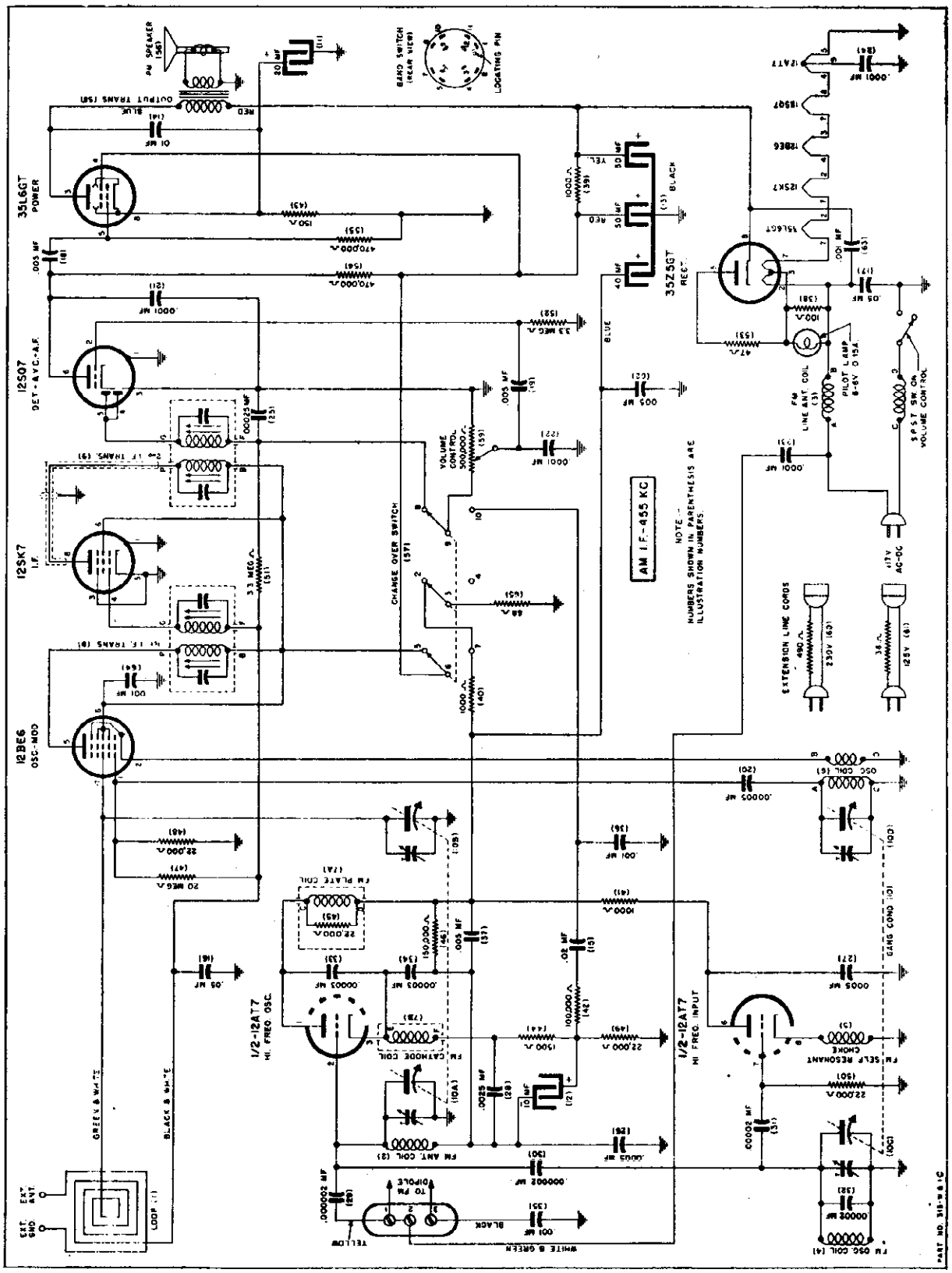

©John F. Rider

©John F. Rider

PARTS LIST

Illus. No.	Part No.	Part Name	Description
1	20E436	Antenna	Loop with Back (Not interchangeable)
2	2E71	Coil	FM Antenna
3	2E69	Coil	FM Line Antenna
4	2E70	Coil	FM Oscillator
5	2E68	Coil	FM Self Resonant Choke
6	20E312	Coil	Oscillator Coil
7	20E313	Coil	FM Plate Cathode
8	20E261	Coil	1st I. F. Transformer
	or		
8	20E307	Coil	1st I. F. Transformer
9	20E261-2	Coil	2nd I. F. Transformer
	or		
9	20E307-2	Coil	2nd I. F. Transformer
10	24E38	Condenser	Tuning, 2 Gang
11	25E3	Condenser	Dry Elect. 20 Mfd. 25 V.
12	25E8	Condenser	Dry Elect. 10 Mfd. 25 V.
13	25E26	Condenser	Dry Elect. 50-50-40 Mfd. 150 V.
14	23E411	Condenser	Tubular, .01 Mfd. 400 V.
15	23E413	Condenser	Tubular, .02 Mfd. 400 V.
16	23E216	Condenser	Tubular, .05 Mfd. 200 V.
17	23E416	Condenser	Tubular, .05 Mfd. 400 V.
18	23E408	Condenser	Tubular, .005 Mfd. 400 V.
19	23E408	Condenser	Tubular, .005 Mfd. 400 V.
20	23E37	Condenser	Mica, .00005 Mfd.
21	23E39	Condenser	Mica, .0001 Mfd.
22	23E39	Condenser	Mica, .0001 Mfd.
23	23E39	Condenser	Mica, .0001 Mfd.
24	23E39	Condenser	Mica, .0001 Mfd.
25	23E42	Condenser	Mica, .00025 Mfd.
26	23E45	Condenser	Mica, .0005 Mfd.
27	23E45	Condenser	Mica, .0005 Mfd.
28	23E53	Condenser	Mica, .0025 Mfd.
29	23E21	Condenser	Ceramic, .000002 Mfd. 500 V.
30	23E21	Condenser	Ceramic, .000002 Mfd. 500 V.
31	23E22	Condenser	Ceramic, .00002 Mfd. 500 V.
32	23E22	Condenser	Ceramic, .00002 Mfd. 500 V.
33	23E23	Condenser	Ceramic, .00003 Mfd. 500 V.
34	23E23	Condenser	Ceramic, .00003 Mfd. 500 V.
35	23E2012	Condenser	Ceramic, .001 Mfd. 350 V.
36	23E2012	Condenser	Ceramic, .001 Mfd. 350 V.
37	23E2012-4	Condenser	Ceramic, .005 Mfd. 350 V.
38	27E101-2	Resistor	Carbon, 100 Ohm 1/2 Watt
39	27E102-3	Resistor	Carbon, 1000 Ohm 1 Watt
40	27E102	Resistor	Carbon, 1000 Ohm 1/3 Watt
41	27E102	Resistor	Carbon, 1000 Ohm 1/3 Watt
42	27E104	Resistor	Carbon, 100,000 Ohm 1/3 Watt
43	27E151	Resistor	Carbon, 150 Ohm 1/3 Watt
44	27E152	Resistor	Carbon, 1500 Ohm 1/3 Watt
45	27E223	Resistor	Carbon, 22,000 Ohm 1/3 Watt
46	27E154	Resistor	Carbon, 150,000 Ohm 1/3 Watt
47	27E206	Resistor	Carbon, 20 Meg Ohm 1/3 Watt
48	27E223	Resistor	Carbon, 22,000 Ohm 1/3 Watt
49	27E223	Resistor	Carbon, 22,000 Ohm 1/3 Watt
50	27E223	Resistor	Carbon, 22,000 Ohm 1/3 Watt
51	27E335	Resistor	Carbon, 3.3 Meg Ohm 1/3 Watt
52	27E335	Resistor	Carbon, 3.3 Meg Ohm 1/3 Watt
53	27E470-2	Resistor	Carbon, 47 Ohm 1/2 Watt
54	27E474	Resistor	Carbon, 470,000 Ohm 1/3 Watt
55	27E474	Resistor	Carbon, 470,000 Ohm 1/3 Watt
56	1E1	Speaker	P.M. 4"x6"
57	29E8	Switch	FM-AM Selector
58	22E8	Transformer	Output
59	28E7	Volume Control	500,000 Ohm
62	23E2012-4	Condenser	Ceramic, .005 Mfd. 350 V.
63	23E2012	Condenser	Fixed Ceramic .001 MF 350 V.
64	23E2012	Condenser	Fixed Ceramic .001 MF 350 V.
65	27E680	Resistor	Carbon, 68 Ohm 1/3 W

MISCELLANEOUS PARTS

Part No.	Part Name	Description
*7E48-2	Cabinet Back	Back for Cabinet
7E195-2	Cabinet	Walnut Plastic
7E195-9	Cabinet	Ivory Plastic
65E2	Dial Cord Spring	Dial Cord Tension Spring
20E253-16	Dial Cord	Drive Cord
40E1	Dial Light	6-8 Volt .150 Amp. Type No. 47
20E270-5	Dial Shaft Assem.	Drive Shaft Assembly
20E65-4	Dial Back Plate	Backplate Assembly less Calibrated Scale.
36E52	Dial Scale	Calibrated Glass Scale
35E8-9	Dial Pointer	Dial Indicator
37E27-11	Knob	Walnut
37E27-36	Knob	Ivory

©John F. Rider

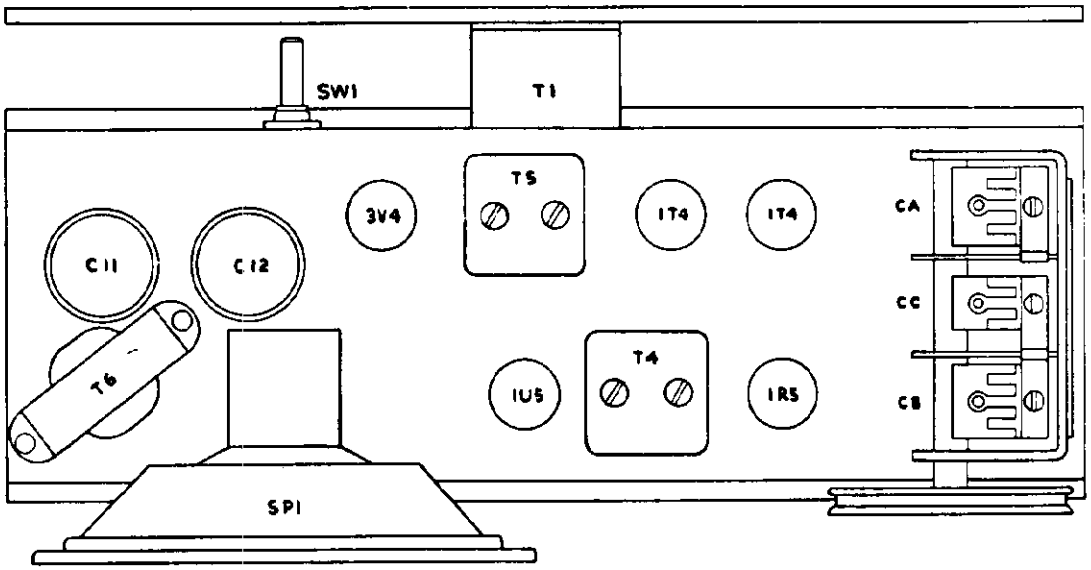

TOP VIEW

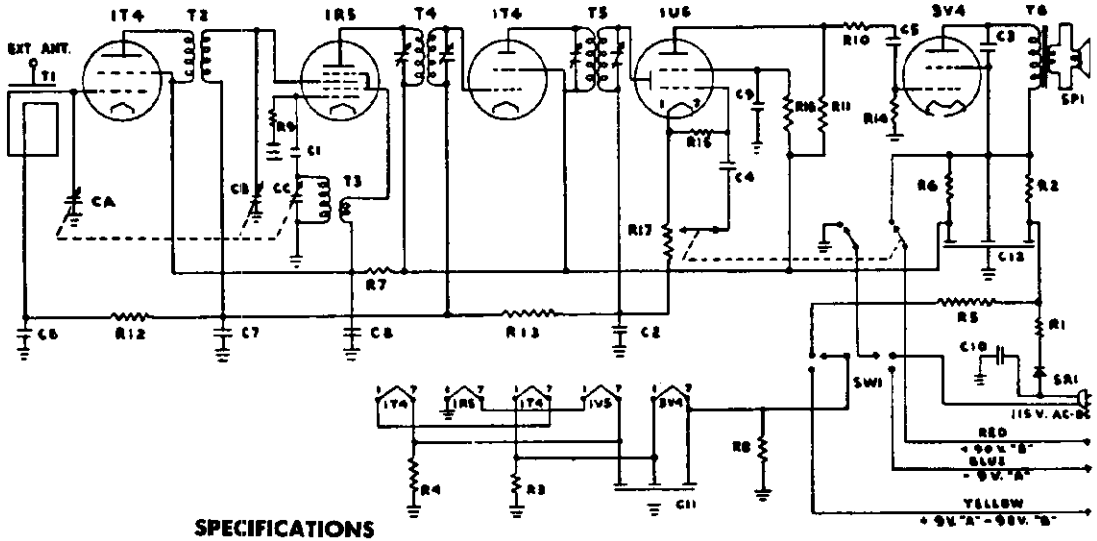

CIRCUIT DIAGRAM

SPECIFICATIONS

- Super-het circuit—455 KC I. F.
- Band coverage: 540 KC to 1700 KC.
- Five miniature tubes—plus selenium rectifier 1—1T4 R. F., 1—1R5 Mixer, 1—1T4 I. F., 1—1U5 Det. and 1st audio, 1—3V4 Pr. output (6-tube performance).
- Battery life—approximately 170 hours. Burgess No. F6A60, Eveready No. 753, Ray-O-Vac No. AB994.
- Five-inch P. M. dynamic speaker—1.47 oz. Alnico 5.

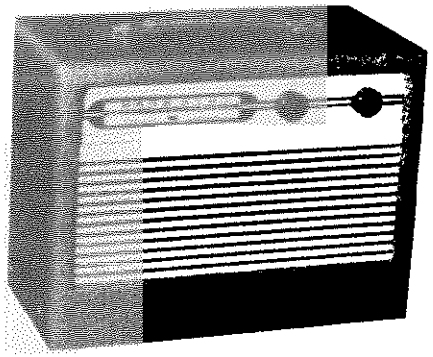

MODEL 449

C1 —.0001 MFD. 400 V. CONDENSER
C2 —.0001 MFD. 400 V. CONDENSER
C3 —.006 MFD. 400 V. CONDENSER
C4 —.01 MFD. 400 V. CONDENSER
C5 —.01 MFD. 400 V. CONDENSER
C6 —.05 MFD. 200 V. CONDENSER
C7 —.05 MFD. 200 V. CONDENSER
C8 —.05 MFD. 200 V. CONDENSER
C9 —.05 MFD. 200 V. CONDENSER
C10—.1 MFD. 400 V. CONDENSER
C11—50+50+50 MFD. 150V. COND.
C12—50+50+50 MFD. 150 V. COND.
C A-B-C — 3-GANG. CONDENSER

R1 —100 OHM — 5 W. RESISTOR
R2 —150 OHM — 1/2 W. RESISTOR
R3 —500 OHM — 1/3 W. RESISTOR
R4 —1200 OHM — 1/3 W. RESISTOR
R5 —2000 OHM — 10 W. RESISTOR
R6 —3000 OHM — 1/3 W. RESISTOR
R7 —5000 OHM — 1/3 W. RESISTOR
R8 —25M OHM — 1/3 W. RESISTOR
R9 —100M OHM — 1/3 W. RESISTOR
R10—100M OHM — 1/3 W. RESISTOR
R11—1Meg. OHM — 1/3 W. RESISTOR
R12—2Meg. OHM — 1/3 W. RESISTOR
R13—2Meg. OHM — 1/3 W. RESISTOR
R14—2Meg. OHM — 1/3 W. RESISTOR
R15—5Meg. OHM — 1/3 W. RESISTOR
R16—5Meg. OHM — 1/3 W. RESISTOR
R17—500M OHM POT.—1/3 WITH SWITCH

T1—LOOP ANT.
T2—RF COIL
T3—OSC. COIL
T4—455 KC INPUT I.F. COIL
T5—455 KC OUTPUT I.F. COIL
T6—OUTPUT TRANSFORMER
SW1—2 POLE 2 POS. SWITCH
SP1—5" PM. SPEAKER
SR1—SELENIUM RECTIFIER

ALIGNMENT PROCEDURE
I. F. Alignment 455 KC (Connect to 1R5 Grid) Loop and R. F. Alignment — 1400, 1000 and 600 KC. Dial Pointer Setting—535 KC with fully closed condenser.

MODEL 458RD,
Dor-A-fone

The Model 458 Radio Dor-A-fone is a combination radio and communication system. It employs quick heating tubes, making it ready for instant use.

The radio circuit is a straight-forward four-tube superhetrodyne, using the conventional tube lineup; namely, a mixer tube, I. F. tube, detector first audio tube and power output tube. It uses a selenium rectifier which supplies DC voltage to the filaments as well as the plate and screen circuits.

The communication system uses the audio section of the radio in conjunction with a special input transformer and switch. The gain or sensitivity of the communication circuit is fixed at the factory and is not altered by the setting of the volume control located on the front panel.

The extension unit uses a standard 3.2 ohm voice coil speaker housed in a baffle. This extension unit is connected to the master unit by means of a two-conductor cable and the distance between these two units, should be sufficient to eliminate feedback, howl, etc. A 50-foot coil of wire is furnished with each unit which is sufficient for many installations. Additional length of wire can be used, but it should be remembered that the sensitivity or volume output of the set will be reduced when too long a wire is used or if the wire is too small which increases the resistance.

Below is pictured the Model 458RD showing the functions of the four push buttons. Figure 2 shows the chassis and tube layout.

Caution, do not change tubes when set is turned on.

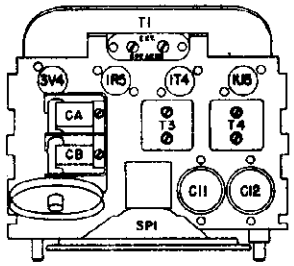

Fig. 2

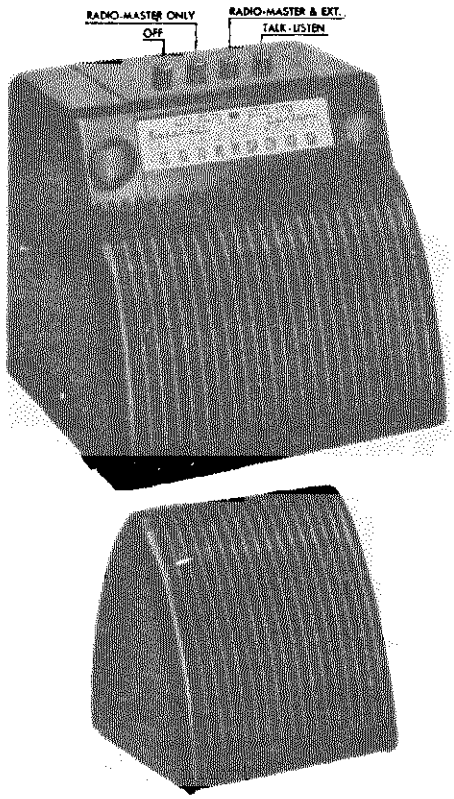

Fig. 1

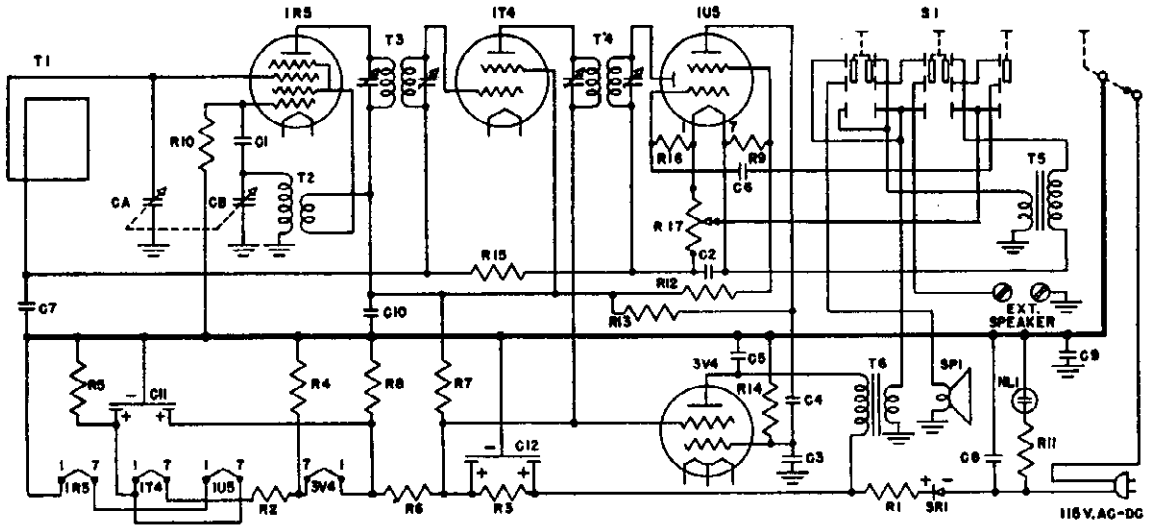

Circuit Diagram

PARTS

R 1— 15 Ohms 1/2 Watt Resistor
R 2— 24 Ohms 1/2 Watt Resistor
R 3— 500 Ohms 5 Watt Resistor
R 4— 500 Ohms 1/2 Watt Resistor
R 5— 1200 Ohms 1/2 Watt Resistor
R 6— 2000 Ohms 10 Watt Resistor
R 7— 5000 Ohms 1/2 Watt Resistor
R 8— 25M Ohms 1/2 Watt Resistor
R 9—100M Ohms 1/2 Watt Resistor
R 10—100M Ohms 1/2 Watt Resistor
R 11—100M Ohms 1/2 Watt Resistor
R 12—200M Ohms 1/2 Watt Resistor
R 13—500M Ohms 1/2 Watt Resistor
R 14—2MEG Ohms 1/2 Watt Resistor
R 15—5MEG Ohms 1/2 Watt Resistor
R 16—5MEG Ohms 1/2 Watt Resistor
R 17—500M Ohms Pot. Resistor.
C 1—.0001 Mfd. 400 V. Condenser
C 2—.0001 Mfd. 400 V. Condenser
C 3—.0001 Mfd. 400 V. Condenser
C 4—.004 Mfd. 400 V. Condenser
C 5—.004 Mfd. 400 V. Condenser
C 6—.004 Mfd. 400 V. Condenser
C 7—.05 Mfd. 200 V. Condenser
C 8—.05 Mfd. 400 V. Condenser
C 9—.1 Mfd. 400 V. Condenser
C 10—.25 Mfd. 200 V. Condenser
C 11—75+75 Mfd. 150 V. Condenser
C 12—75+75 Mfd. 150 V. Condenser
C A and B Gang Condenser
T 1—Loop Antenna
T 2—Osc. Coil 458C
T 3—Input IF Coil 621
T 4—Output IF Coil 622
T 5—Input Trans. N458
T 6—Output Trans. 0458
S 1—Push Button Switch
SP 1—5 Inch PM Speaker
SR 1—Selenium Rect.
NL 1—Neon Lamp G. E. NE2

© John F. Rider

MODEL 469

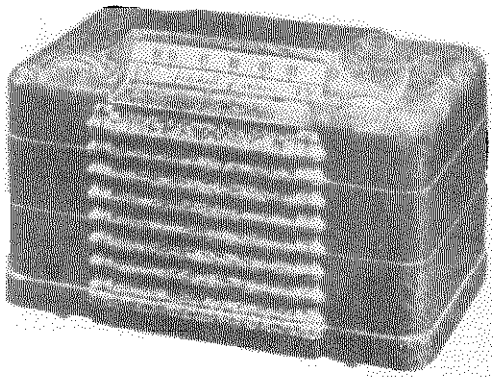

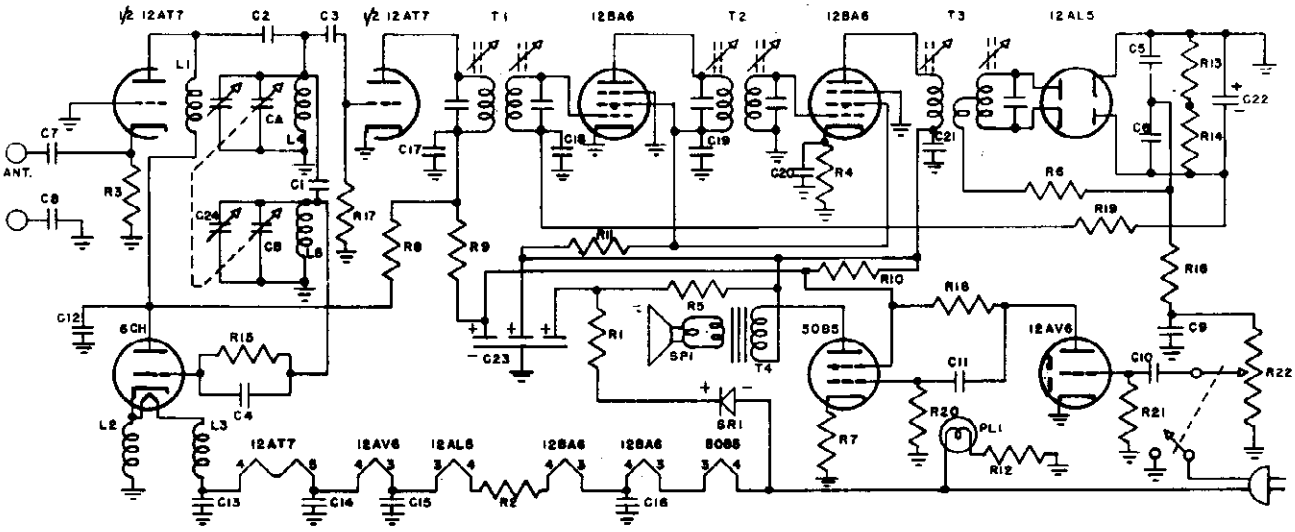

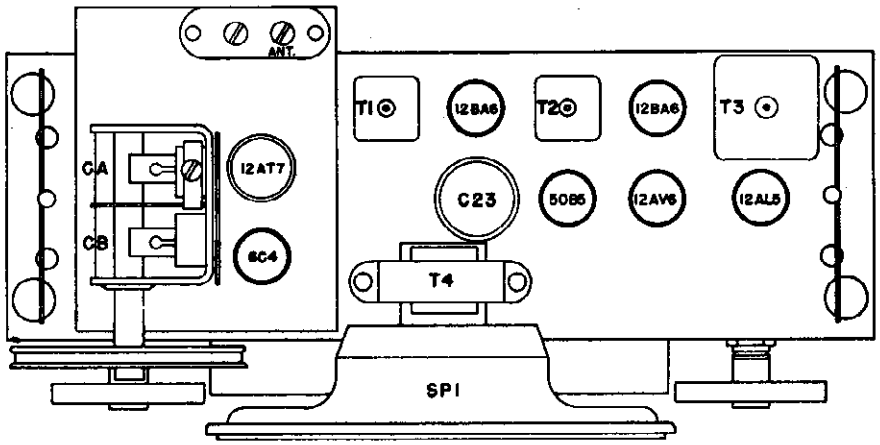

R 1— 15 ohm ½ W. Resistor
R 2— 50 ohm 2 W.W.W. "
R 3— 80 ohm 2 W.W.W. "
R 4— 68 ohm ½ W. "
R 5— 100 ohm 5 W. "
R 6— 180 ohm ½ W. "
R 7— 180 ohm ½ W. "
R 8— 500 ohm ½ W. "
R 9— 500 ohm ½ W. "
R10— 500 ohm ½ W. "
R11—1200 ohm ½ W. "
R12— 2M ohm 10 W. "
R13—6800 ohm ½ W. "
R14—6800 ohm ½ W. "
R15—50M ohm ½ W. "
R16—25M ohm ½ W. "
R17—500M ohm ½ W. "
R18—500M ohm ½ W. "
R19—500M ohm ½ W. "
R20—1 Megohm ½ W. "
R21—5 Megohm ½ W. "
R22—500M ohm Pot. with switch

L1—2 UH Choke
L2—2 UH "
L3—2 UH "
L4—RF Coil
L5—Oscillator Coil

T1—10.7MC 1. F. Transformer
T2—10.7 MC 1. F. "
T3—10.7 Ratio Detector Transformer
T4—Audio O. P. Transformer

C 1— 1.5 mmf. 400 V. Condenser
C 2—100 mmf. 400 V. Ceramic Cond.
C 3—100 mmf. 400 V. " "
C 4—100 mmf. 400 V. " "
C 5—100 mmf. 400 V. " "
C 6—100 mmf. 400 V. " "
C 7—500 mmf. 400 V. Mica "
C 8—500 mmf. 400 V. " "
C 9— .002 mf. 400 V. Paper "
C10— .004 mf. 400 V. " "
C11— .01 mf. 400 V. " "
C12— .01 mf. 400 V. Ceramic Disc Cond.
C13— .01 mf. 400 V. " " "
C14— .01 mf. 400 V. " " "
C15— .01 mf. 400 V. " " "
C16— .01 mf. 400 V. " " "
C17— .01 mf. 400 V. " " "
C18— .01 mf. 400 V. " " "
C19— .01 mf. 400 V. " " "
C20— .01 mf. 400 V. " " "
C21— .01 mf. 400 V. " " "
C22— 4 mf. 50 V. Electrolytic " "
C23— 50+50+50 mfd. 150 V. " "
CA&B—Gang Condenser

C24—Ceramic Trimmer

SP1—6-inch P. M. Speaker
PL1—120 V.—6 W. Pilot Lamp
SR1—Selenium Rectifier

To align I. F.'s, connect standard R. F. oscillator—unmodulated—direct to antenna and grd. posts. Set oscillator at 10.7 M. C. Connect negative terminal of 0-1 Milliameter in series with a 5000 ohm resistor to junction point of Resistors R13 and R14. Connect positive terminal of meter in series with 5000 ohm resistor to chassis. Adjust all coils—except top of Ratio Detector Coil T3—to highest meter reading. (AVC Voltage)

For top adjustment of Radio Detector Coil (T3), connect positive meter terminal, in series with a 5000 ohm resistor, to junction point of Resistors R6 and R18 and leave negative meter connection as is. Adjust or balance for Zero Voltage.

Adjust gang trimmers for calibration and maximum sensitivity to F. M. oscillator or F. M. station.

©John F. Rider

MODEL 4182

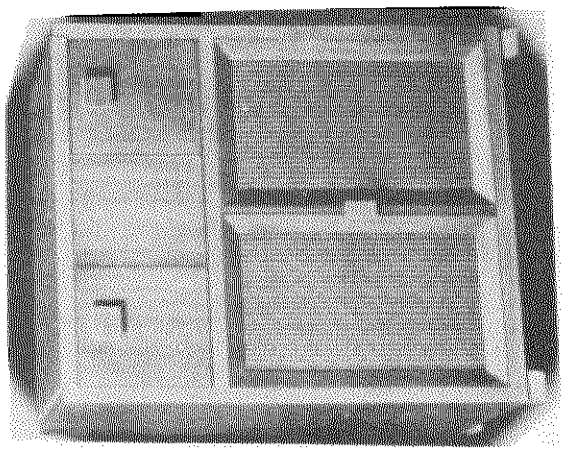

TABLE OF PARTS RADIO RECEIVER MODEL 4182

R1	25 Ohm	1/3 Watt Resistor	C1	.0001 Mfd.	400 Volt Condenser
R2	360	" " "	C2	.0001	" " "
R3	500	" " "	C3	.0001	" " "
R4	2000	" " "	C4	.0001	" " "
R5	5000	" " "	C5	.0005	" " "
R6	25M	" " "	C6	.01	" " "
R7	25M	" " "	C7	.01	" " "
R8	25M	" " "	C8	.02	" " "
R9	50M	" " "	C9	.05	" " "
R10	50M	" " "	C10	.05	" " "
R11	100M	" " "	C11	.1	" " "
R12	200M	" " "	C12	.1	" " "
R13	200M	" " "	C13	.1	" " "
R14	470M	" " "	C14	20 + 20 Mfd.	475 " "
R15	50M	" " "	C-AB&C	Gang Condenser	
R16	500M	" " "			
R17	500M	" " "			
R18	5 Meg.	" " "	T1	- Power Transformer P-4182	
R19	15 Meg	" " "	T2	- Loop Antenna	
R20	50M	Audio Taper Pot.	T3	- R. F. Coil	
R21	50M	Reverse Taper Pot.	T4	- Oscillator Coil	
			T5	- Input I. F. Coil	
			T6	- Output I. F. Coil	
			T7	- Output Transformer O-4182	
			SW1	- 2-Pole 2-Position Switch	
			PL1	- #44 or #47 Pilot Lamp	
			PL2	- #44 or #47 Pilot Lamp	
			PC1	- Phono Connector	
			SP1	- 10-Inch P. M. Speaker	

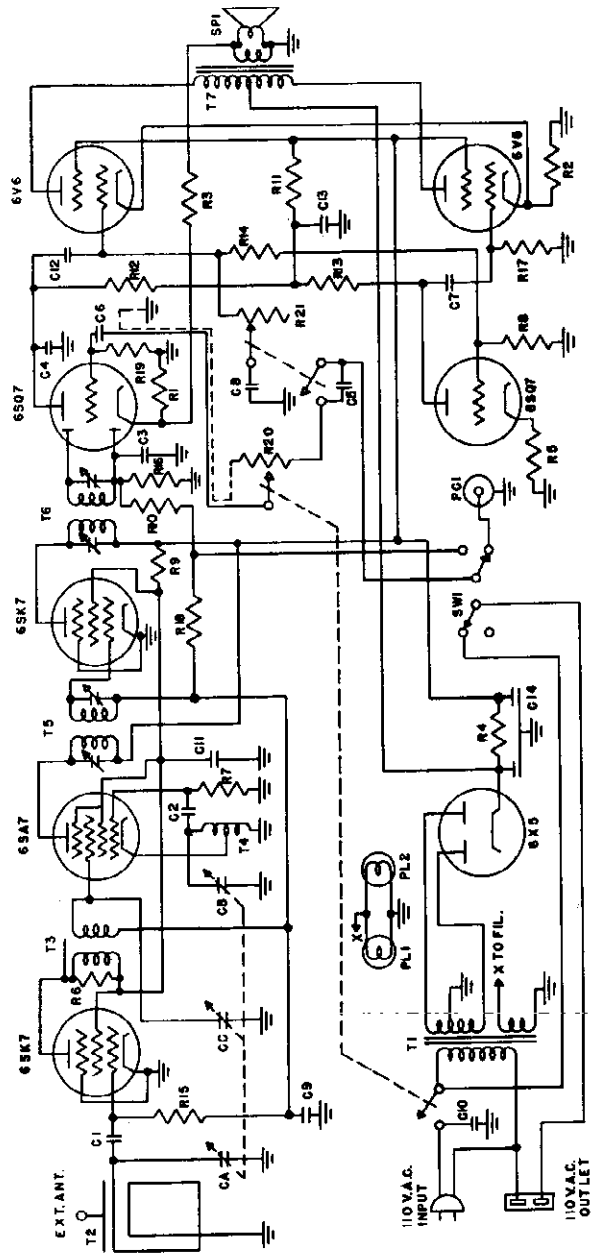

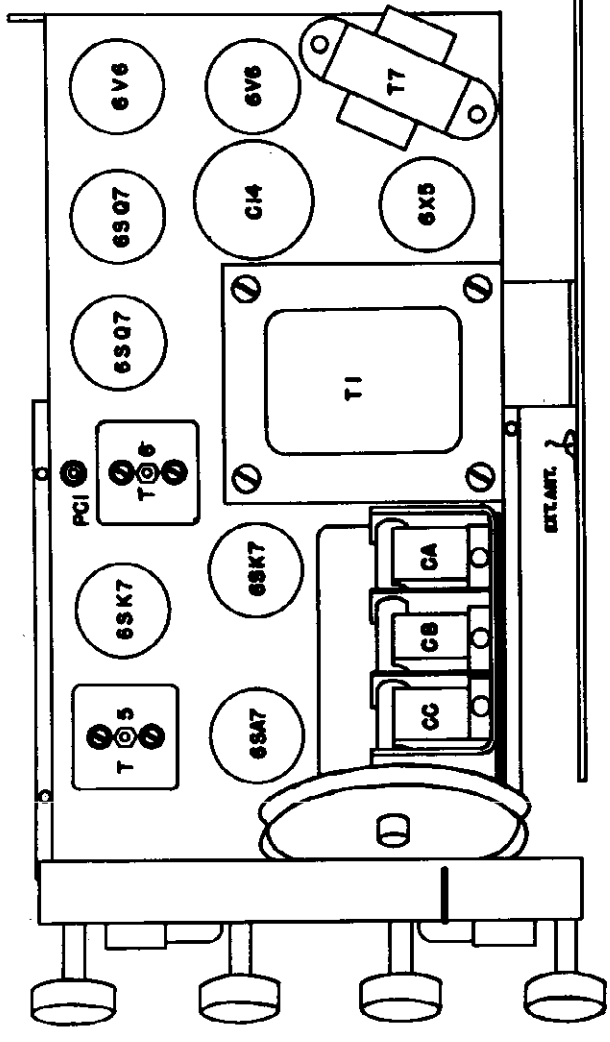

©John F. Rider

MODEL 4382

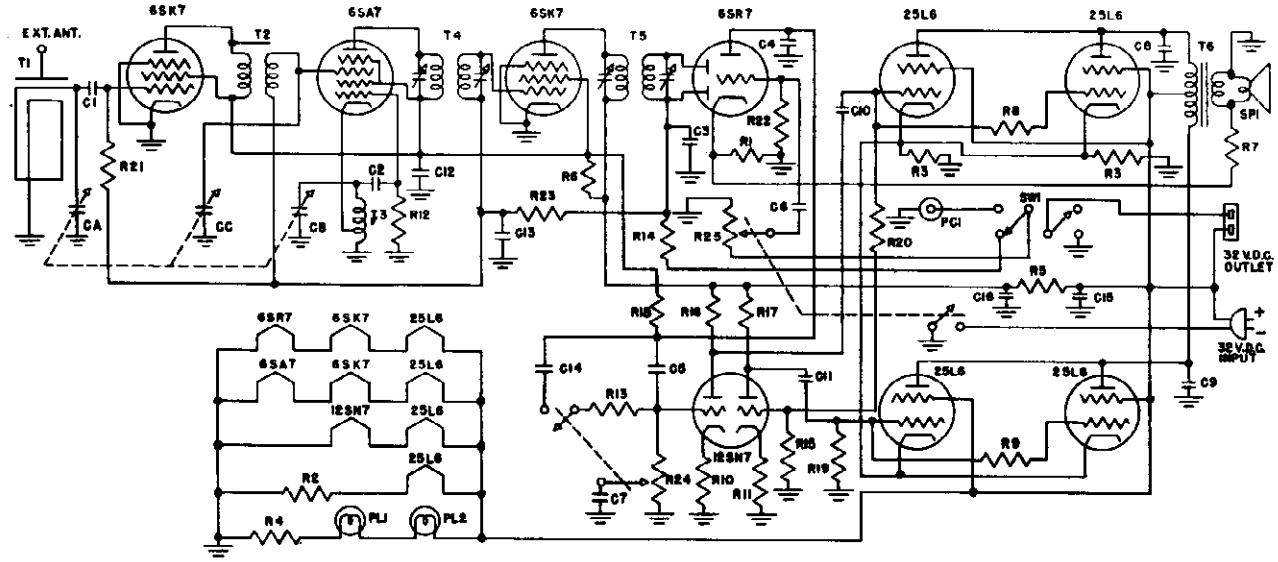

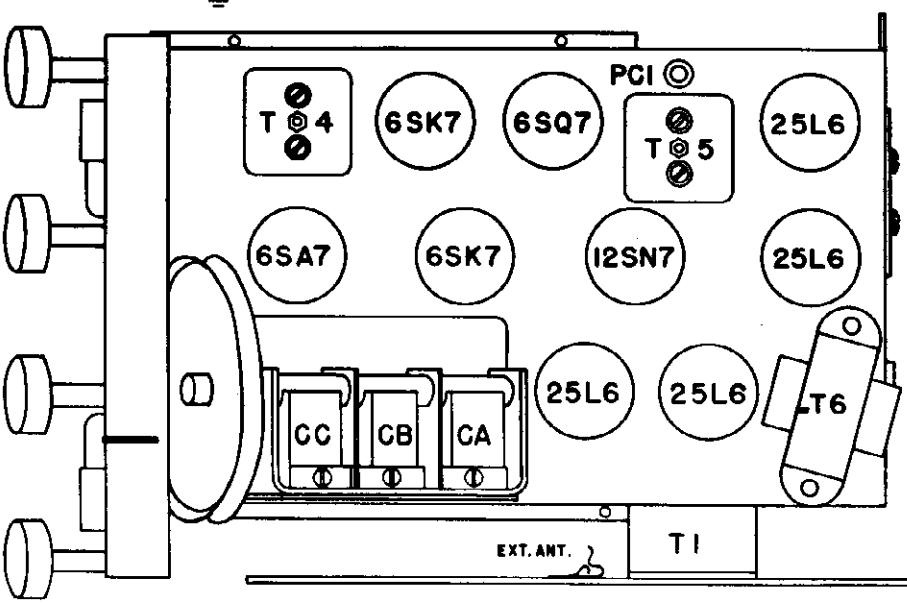

MODEL 32-110 32 VOLT CONVERTER

C1 - .02 Mfd. 400 Volt Condenser
C2 - .25 " 200 " "
C3 - .25 " 200 " "
C4 - .25 " 200 " "
C5 - 4 " 330 " AC "
S1 - Vibrator Socket
Use A.T.R., 3210 or equivalent
T1 - Power Transformer P32-110
L1 - #20 Wire A Choke

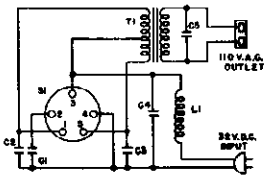

TABLE OF PARTS MODEL 4382 — 32 VOLT RADIO RECEIVER

R1 - 24 Ohm 1/2 Watt Resistor
R2 - 50 " 10 " "
R3 - 150 " 1/2 " "
R4 - 175 " 5 " "
R5 - 500 " 1/3 " "
R6 - 500 " 1/3 " "
R7 - 1500 " 1/3 " "
R8 - 2M " 1/3 " "
R9 - 2M " 1/3 " "
R10 - 8M " 1/3 " "
R11 - 8M " 1/3 " "
R12 - 25M " 1/3 " "
R13 - 50M " 1/3 " "
R14 - 50M " 1/3 " "
R15 - 50M " 1/3 " "
R16 - 100M " 1/3 " "
R17 - 100M " 1/3 " "
R18 - 200M " 1/3 " "
R19 - 200M " 1/3 " "
R20 - 200M " 1/3 " "
R21 - 500M " 1/3 " "
R22 - 1 Meg" 1/3 " "
R23 - 5 Meg" 1/3 " "
R24 - 500M " Reverse Taper Pot.
R25 - 500M " Audio Taper Pot.

C1 - .0001 Mfd. 400 Volt Condenser
C2 - .0001 " 400 " "
C3 - .0001 " 400 " "
C4 - .0001 " 400 " "
C5 - .00025 " 400 " "
C6 - .01 " 400 " "
C7 - .01 " 400 " "
C8 - .01 " 400 " "
C9 - .01 " 400 " "
C10 - .02 " 400 " "
C11 - .02 " 400 " "
C12 - .05 " 200 " "
C13 - .05 " 200 " "
C14 - .1 " 400 " "
C15 - .25 " 200 " "
C16 -50 " 150 " "
C A, B&C Gang Condenser
T1 - Loop Antenna
T2 - R. F. Coil
T3 - Oscillator Coil
T4 - Input I. F. Coil
T5 - Output I. F. Coil
T6 - Output Transformer
SP1- 10" P.M. 1" V. C. Speaker
PL1- #47 Pilot Lamp
PL2- #47 Pilot Lamp
SW1- 2-Pole 2-Position Switch
PC1- Phono Connector

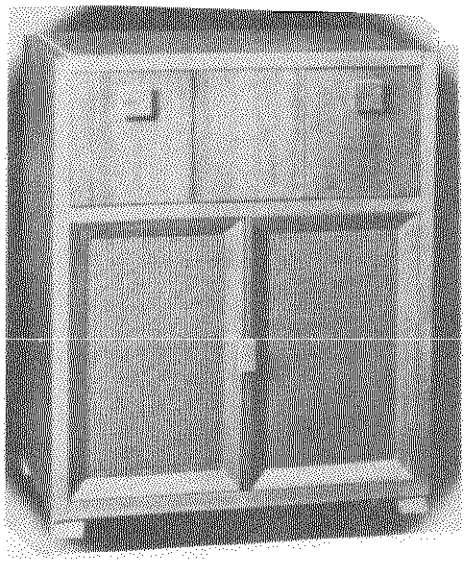

©John F. Rider

MODEL AF252

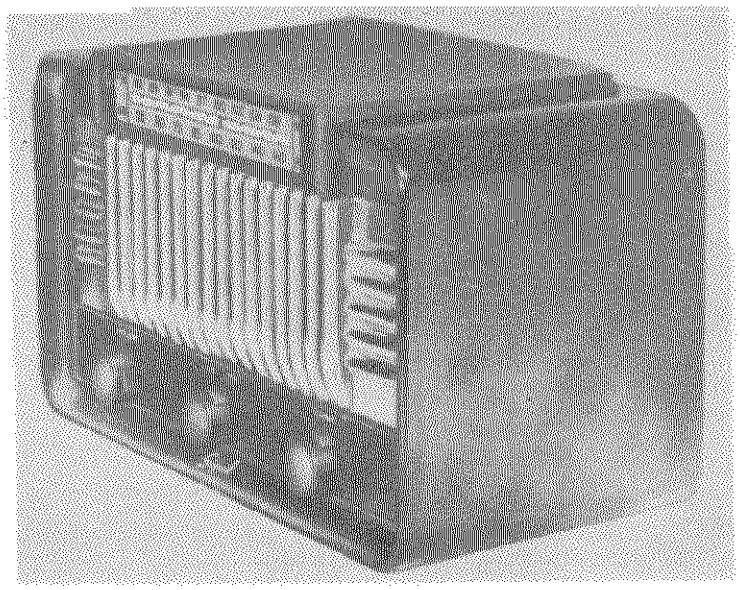

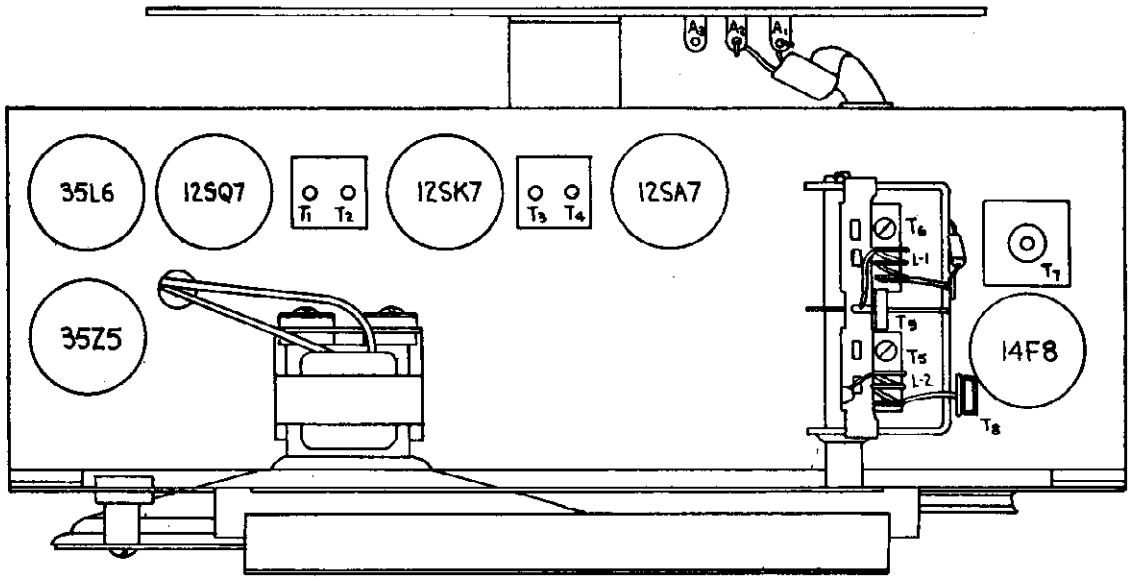

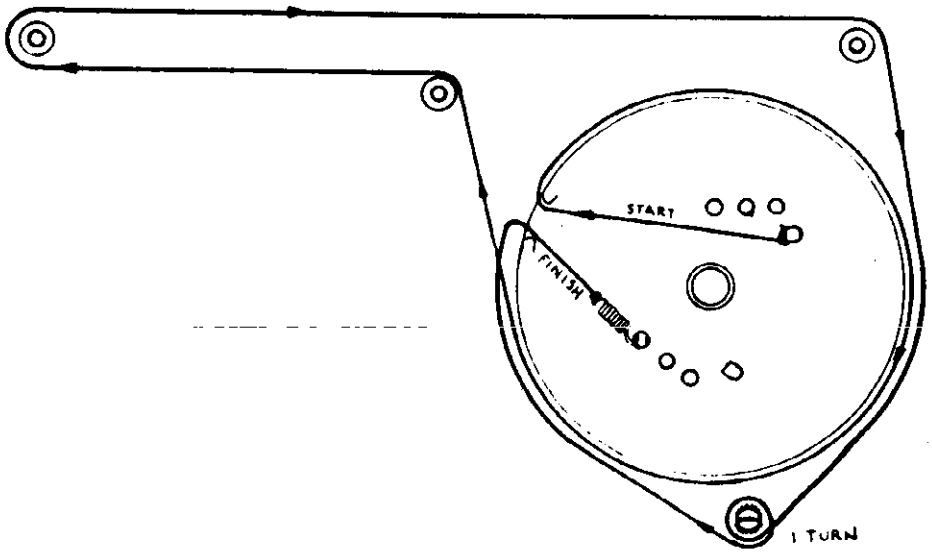

©John F. Rider

MODEL AF252

Lack of sensitivity and poor tone quality may be due to any one or a combination of causes such as weak or defective tubes or speaker, open resistors or shorted condensers, etc. DO NOT ATTEMPT TO REALIGN THIS RECEIVER UNTIL ALL OTHER POSSIBLE SOURCES OF TROUBLE HAVE BEEN FIRST THOROUGHLY INVESTIGATED AND DEFINITELY PROVED NOT TO BE THE CAUSE.

EQUIPMENT NECESSARY

ALIGNMENT PROCEDURE

1. Signal generator-accurately calibrated that will cover the following frequencies:
   AM BAND - 455 KC, 1400 KC, 1620 KC.
   FM BAND - 21.75 MC, 88 MC, 103 MC, 108 MC.

2. Output indicator; to be connected across the voice coil or primary of the output transformer.

BROADCAST BAND ALIGNMENT - (AM)

1. Set signal generator at 455 KC. Receiver variable condenser plates completely unmeshed.
2. Connect generator to grid of convertor tube through a .1 mfd. condenser.
3. Adjust trimmers T1, T2, T3, and T4 in order for maximum output.
4. Connect generator to external antenna lead on loop.
5. Set generator at 1620 KC. Receiver variable condenser completely unmeshed.
6. Adjust oscillator trimmer T5 for maximum output.
7. Set generator and receiver at 1400 KC.
8. Adjust RF trimmer T6 for maximum output.

FREQUENCY MODULATION BAND ALIGNMENT (FM)

NOTES:- The average noise output of this receiver, when no FM signal is present is approximately 150 milliwatts in 3.2 ohms (4 volts across 3.2 ohms). The output meter range should be set accordingly.

1. Set generator at 21.75 MC, with modulation off.
2. Couple generator to RF grid (pin #8) of 14F8 through a 2 mmfd. condenser.
3. Adjust T7 on IF can for minimum output.
4. Remove jumper between terminals A2 and A3 on loop and connect generator to terminals A1 and A2 through a 300 ohm resistor, ground lead of generator to A1.
5. Set RF trimmer T9 to 1/2 capacity, (lettering on the trimmer should be at right angles to its length.)
6. Turn receiver dial to the market on the extreme right side of the dial back. This corresponds to 108 mc.
7. Set generator at 108 mc.
8. Adjust oscillator trimmer T8 for minimum output.
9. Set generator at 88 mc.
10. Set receiver dial to second marker from the extreme left side of the dial back. This corresponds to 88 mc.
11. Adjust oscillator coil for minimum output. Squeeze turns together to bring frequency lower, separate turns to bring frequency higher. Care must be exercised in this adjustment as a slight movement of the turns of the coil will change the frequency of the oscillator a few magacycles. Make certain that the turns do not touch each other.
12. Repeat steps 6 to 11 inclusive as the adjustment at 88 mc. will affect the adjustment at 108 mc and vice versa.
13. Set generator at 103 mc.
14. Tune receiver to 103 mc.
15. Adjust RF trimmer T9 for minimum output while rocking the variable condenser.

©John F. Rider

MODEL AF252

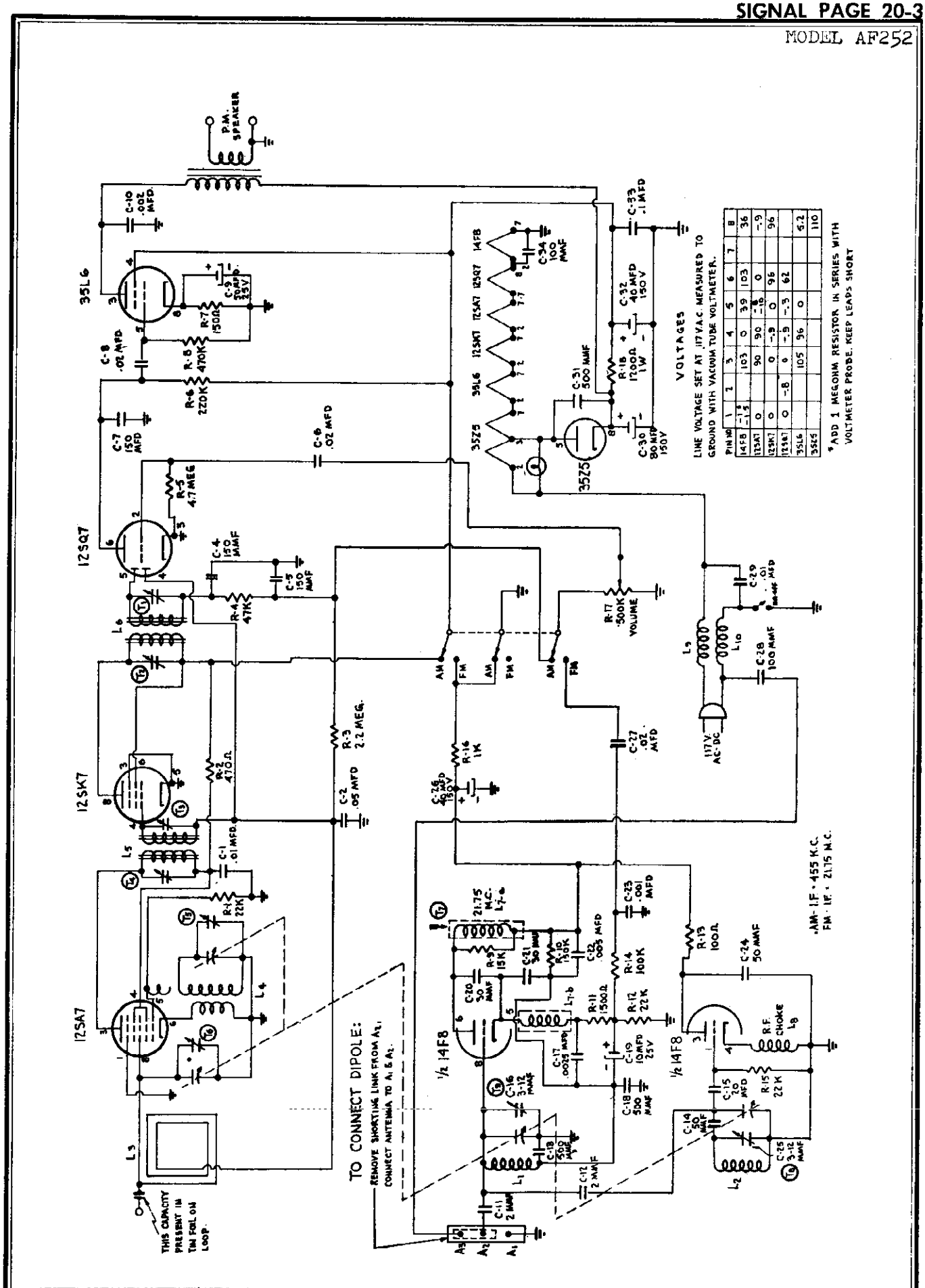

VOLTAGES

LINE VOLTAGE SET AT 117 VAC MEASURED TO GROUND WITH VACUUM TUBE VOLTMETER.

PIN NO	1	2	3	4	5	6	7	8
14F8	-1.8	-1.5		103	0	39	103	36
12SA7	0			90	90	-8	0	-9
12SK7	0			0	-.9	0	96	96
12SQ7	0	-8	0	-5	-.5	62		
35L6			105	96	0			6.2
3525								110

*ADD 1 MEGOHM RESISTOR IN SERIES WITH VOLTMETER PROBE. KEEP LEADS SHORT

©John F. Rider

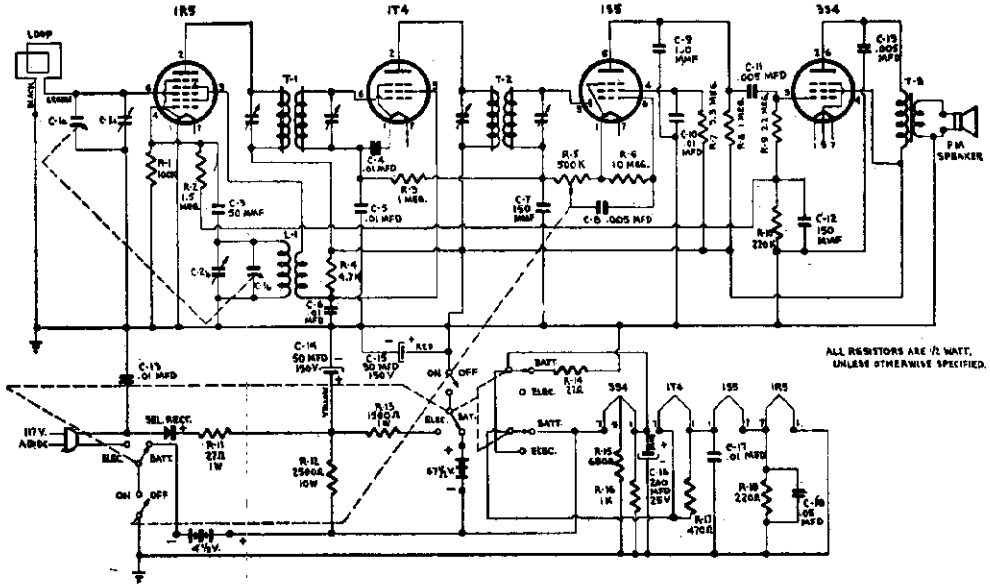

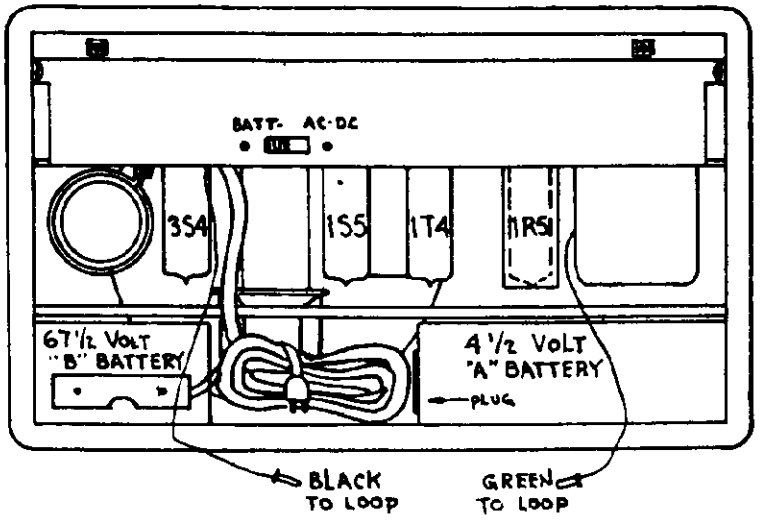

Voltage Measurements

1. All measurements with respect to pin #1 of each tube.
2. Line E set at 117 V AC.
3. Battery E -"A"=4.4V "B"=65volts.
4. B+ at rectifier after 27Ω resistor=132 volts.
5. A volts at pin 7 of 3S4 with respect to ground = 7.4 volts.

	E P		E S G		E G I		E F	
	Batt	Elec	Batt	Elec	Batt	Elec	Batt	Elec
1R5	70	91	55	75	-10 -14	-15 -20	1.6	1.7
1T4	65	91	50	75	-.5	-.6	1.4	1.4
1S5	12	14	15	18	-1.5	-1.7	1.4	1.55
3S4	57	82	65	100	-2.7 -3.2	-6.5 -7.2	2.8	2.8

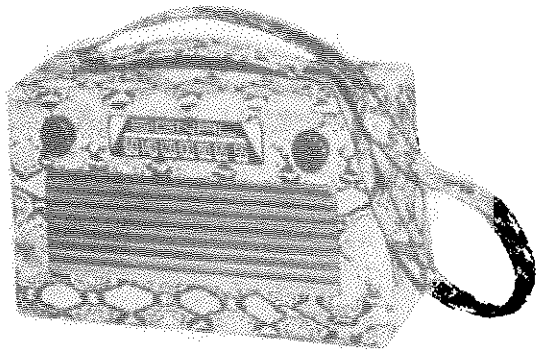

In later productions of this model, C16, the 200 μμf. capacitor is connected to pin 7 of the 3S4 output tube instead of to pin 1.

MODELS 121, 1058, 1059, 1060, 1061, 1064, 1072 Ch. 8L9, 8L9A

MODELS 122, 141, 142, 1071MGP, 1072MGP; Ch. 8L9A

STEP BY STEP ALIGNMENT PROCEDURE

OPERATION	ALIGNMENT OF	GENERATOR CONNECTED TO	DUMMY ANT.	GENERATOR FREQUENCY	BAND SWITCH SETTING	TUNING COND. SETTING	TRIMMER	REMARKS
1.	Set dial pointer even with left-hand stop line with condenser gang closed.							
2.	Connect output meter across speaker terminals.							
3.	A.M. - I.F.	Pin #7 of 6BE6 Conv. Tube	.02 MFD. Cond.	456 KC.	A.M.	Open	T4 Sec. Slug	Max. Reading
							T4 Pri. Slug	Max. Reading
							T2 Sec. Slug	Max. Reading
							T2 Pri. Slug	Max. Reading
4.	Repeat operation #3.							
5.	A.M. - R.F.	A.M. Ant. On Cabinet	*	1500 KC.	A.M.	1500 KC.	C2B Osc. Tri.	Peak Accurately
6.				1500 KC.		1500 KC.	C2D Ant. Tri.	Peak Accurately
7.	Repeat operations #5 and #6.							
8.	Check Calibrations at 600, 1000 and 1500 KC.							
9.	SPECIAL NOTE: For complete F.M. - I.F. Visual alignment instructions please refer to pages 4, 5, 6, 7, 8 and 9 of this bulletin.							
10.	F.M. - I.F. Alignment using an A.M. Generator and Output Meter.							
11.	T5 F.M. Ratio Det.	Pin #1 of 2nd 6BA6 Tube	.02 MFD. Cond.	10.7 MC.	F.M.	Open	T5 Sec. Slug	Max. Reading
							T5 Pri. Slug	Max. Reading
12.	NOTE: Operations 11, 13, 14, 15, 18 and 19 must be made with generator output as low as possible, consistent with a usable output meter reading.							
13.	T3 2nd F.M. - I.F.	Pin #1 1st 6AB6 Tube	.02 MFD. Cond.	10.7 MC.	F.M.	Open	T3 Sec. Slug	Max. Reading
							T3 Pri. Slug	Max. Reading
14.	T1 1st F.M. - I.F.	Pin #8 on 7F8 Conv. Tube	.02 MFD. Cond.	10.7 MC.	F.M.	Open	T1 Sec. Slug	Max. Reading
							T1 Pri. Slug	Max. Reading
15.	Adjust secondary slug on T5 ratio detector transformer to minimum deflection or dip on output meter. Under certain conditions it is possible to adjust T5 sec. slug to minimum noise with the receiver tuned to a weak station. This operation is very critical and the receiver must be tuned to the center response only.							
16.	F.M. - R.F. alignment using an A.M. generator with frequencies of 88 to 108 MC. and a vacuum tube voltmeter, or D.C. voltmeter. (20,000 OHMS per volt).							
17.	Place meter across C32 elect. condenser. (Meter reading approx. 1 volt.)							
18.	F.M. - R.F.	F.M. Ant.	Match Gen. to 300 OHMS	106 MC.	F.M.	106MC.	C3G Osc. Tri.	Max. A.V.C.V.
							C2C Ant. Tri.	Peak Accurately
19.	Check calibration at 88 MC.							

* Use standard dummy antenna

DUMMY ANTENNA

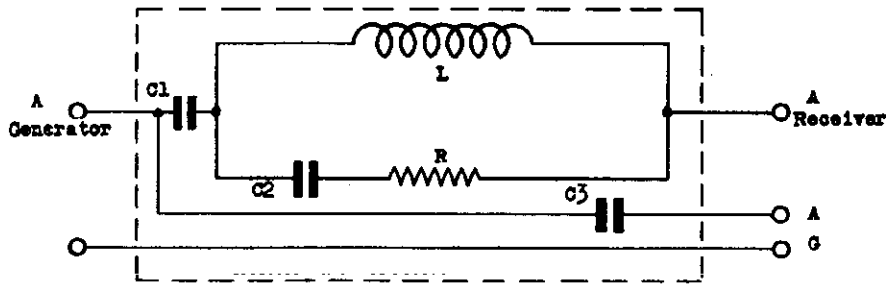

C1 - 200 mmf. Condenser 400 V.D.C.
C2 - 400 mmf. Condenser 400 V.D.C.
C3 - .02 mmf. Condenser 400 V.D.C.
R - 100 Ohms Resistor 1/4 Watt
L - Choke Coil

----Case Shield
Choke Coil Specification
Tubing - 3/8" Diameter Bakelite
Wire - No. 38 Enameled
Turns - 59 closely wound (Impregnated)

NOTE: When using this dummy antenna the generator output impedance should be 10 ohms or lower.

©John F. Rider

VOLTAGE CHART

Line Voltage: 117 Volts AC		Position of volume control: Full with set tuned to quiet channel. Position of Band Switch: B.C. - A.M. ***								
TUBE	FUNCTION	Voltage of Sockets Prongs to Ground See Prong Nos. on Schematic.								
		No. 1	No. 2	No. 3	No. 4	No. 5	No. 6	No. 7	No. 8	No. 9
6BE6	A.M. Conv. & F.M. Osc.	-5.2	0	6.3*	0	100	100	-0.5		
6BA6	I.F. Amp.	-0.2	0	6.3*	0	225	100	1.0		
6AT6	A.M. Det., AVC. & 1st Audio	-0.8	0	6.3*	0	-0.3	-0.3	60		
6BA6	Ratio Det. Driver ***	-0.2	0	6.3*	0	80	80	1.2		
6AL5	Ratio Detector ***	**	-0.3	6.3*	0	0	0	**		
6V6	Power Amplifier	0	6.4*		240	0	110	0	14	
5Y3G	Rectifier	0	270	0	257*	0	257*	0	270	
7F8	F.M. - R.F. Mixer ***	**	0	105	0	0	100	6.3*	-0.25	
12AT7	F.M. - R.F. Mixer ***	100	-.25	0	0	0	105	0	0	6.3*

NOTES: Voltage readings are for schematic diagram in this bulletin. Allow 15% + or - on all measurements. Always use meter scale which will give greatest deflection within scale limits. All DC measurements made with 20,000 ohms per volt voltmeter. All AC voltages made with rectifier type voltmeter.

* AC Volts

** Cannot be measured with 20,000 Ohms per volt voltmeter.

*** Band switch on F.M.

SPECIAL NOTE: F.M. - R.F. mixer may be either 7F8 or 12AT7 tubes.

VISUAL I. F.-F. M. ALIGNMENT DATA

WARNING: Do not proceed with any of the following alignment instructions unless it is certain that the AM-IF is in accurate alignment. If not, align the AM-IF system according to the step by step alignment procedure.

1. DESCRIPTION OF CIRCUIT USED:

A 6AL5 is employed as a ratio detector. This tube is preceded by a 6BA6 ratio detector driver and a stage of amplification at 10.7 Mc. also utilizing a 6BA6 tube. The 2nd section of the 7F8 tube is used as the FM mixer. All IF coupling uses individual slug tuned transformers.

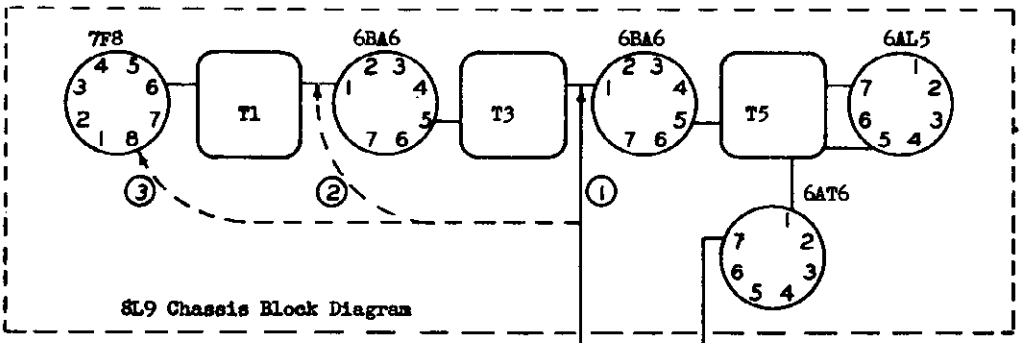

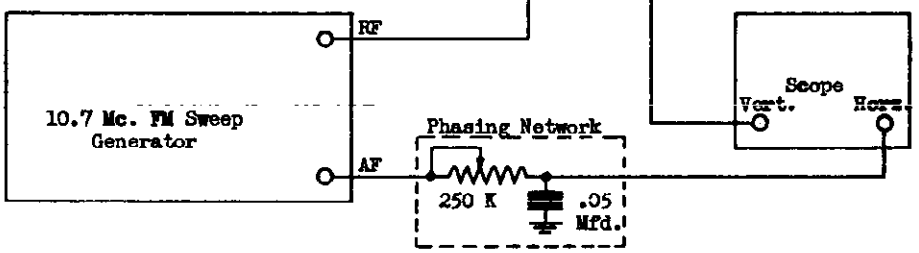

Gen. & Scope Position	Adjust
1	T-5
2	T-3
3	T-1

2. THEORY OF VISUAL ALIGNMENT.

One of the characteristics of a tuned circuit is the fact that when it is excited or driven by a generator such as a vacuum tube or another tuned circuit, the voltage developed across it will vary with slight changes in frequency. This voltage will be greatest when the frequency is equal to the resonant frequency of the circuit and will be less if the frequency is higher or lower than the resonant frequency.

CHASSIS DIAGRAM

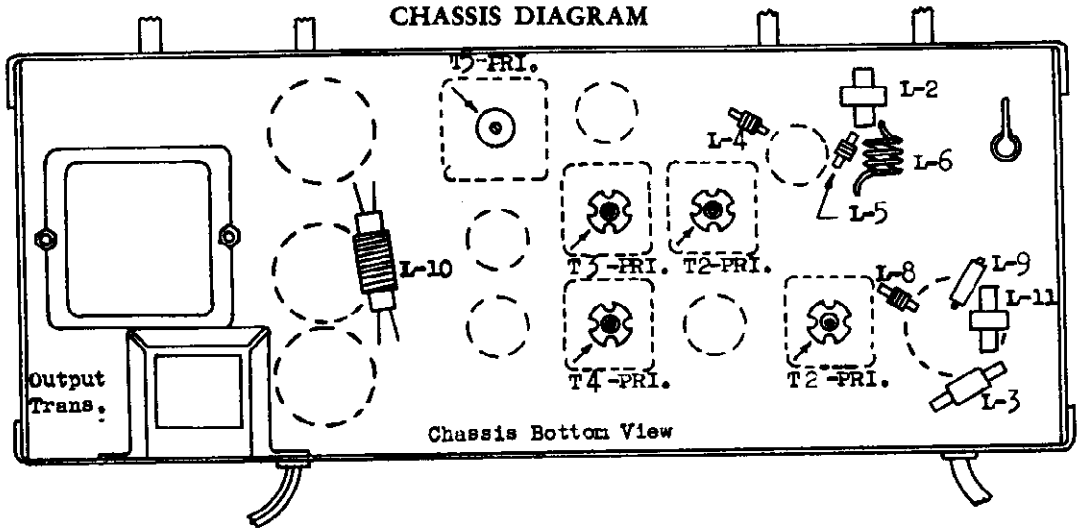

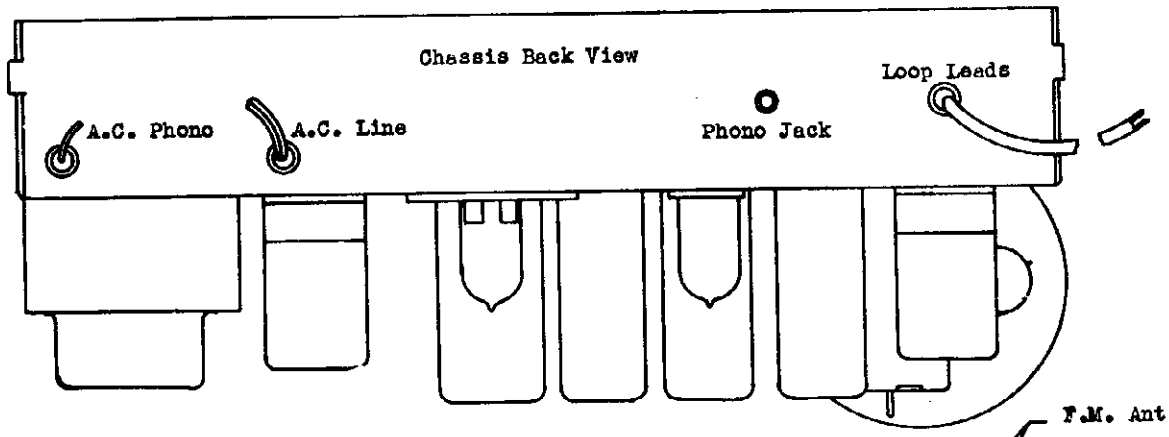

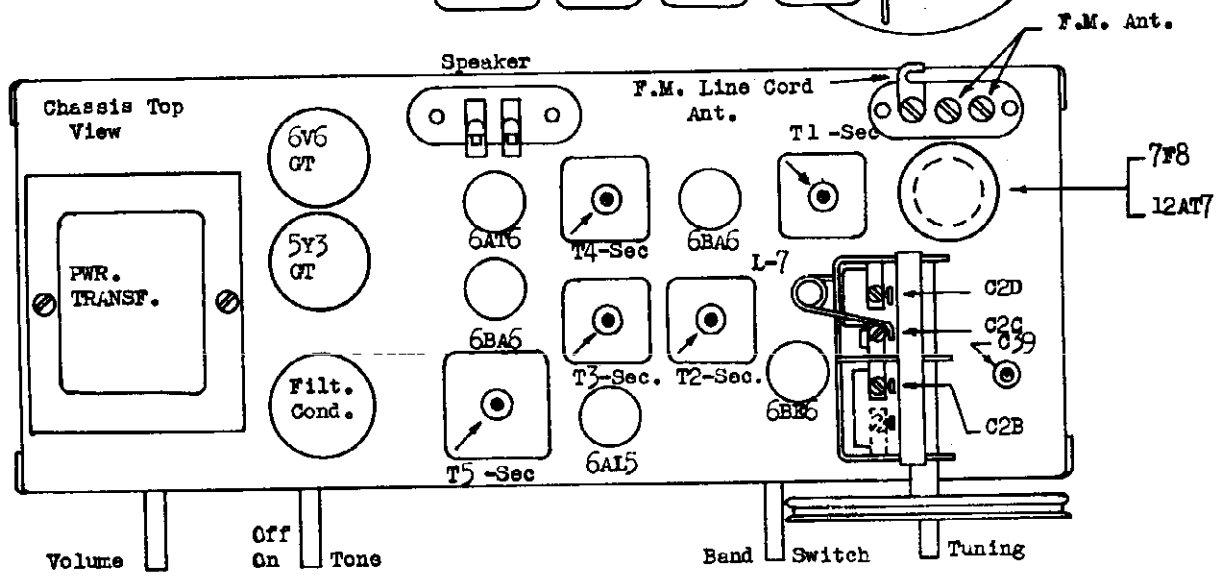

©John F. Rider

VISUAL I. F.-F. M. ALIGNMENT DATA

Thus if we were to shift the frequency from high to low or low to high across the resonant frequency and make a record of the voltage across the tuned circuit, we could plot the voltage against frequency and obtain a curve which might look like Fig. 1.

Fig. 1

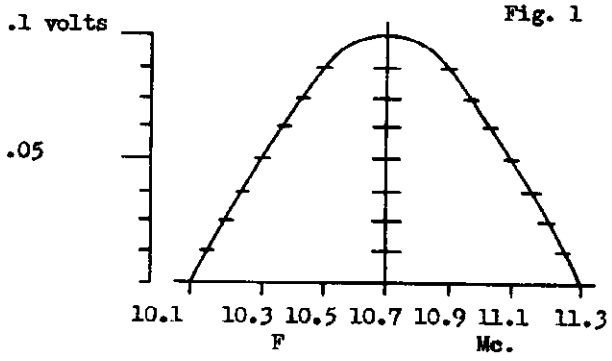

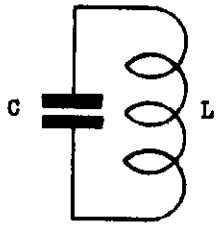

This is the selectivity curve or response curve for the circuit under discussion. This type of circuit may be aligned or adjusted to resonance by simply changing either L or C until maximum voltage is obtained at the resonant frequency. Now if another circuit tuned to the same resonant frequency is coupled to the simple case above, a number of things can happen. First current flowing in one circuit will induce current in the second circuit, the magnitude of this current depending on the degree or amount of coupling between the two circuits. This coupling may be in the form of mutual inductance, mutual capacitance or any impedance common to the two circuits. Now if we repeat the proceedure outlined for obtaining the response curve of a single tuned circuit using the voltage developed across the secondary of the coupled circuit while driving the primary, we may get either of two types of curves depending on the magnitude of the coupling, (a) in Fig. 2 is a typical curve for two circuits coupled below critical coupling and (b) is a representation of the curve for an over coupled circuit.

Fig. 2

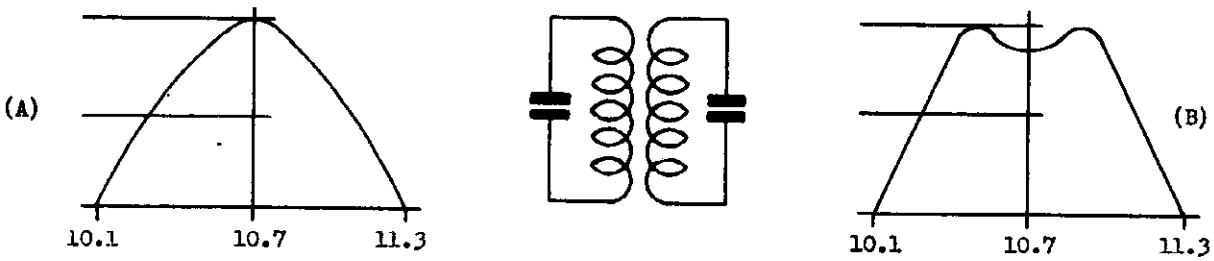

Overcoupled circuits producing a response curve like (b) Fig. 2 are often employed where it is important that the response curve remain approximately flat over a narrow band of frequencies near the resonant frequency. They are also frequently combined with single peaked circuits to produce a response curve like Fig. 3.

Fig. 3

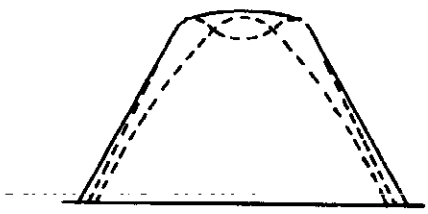

The dotted lines indicate the curves of the individual circuits and the solid curve shows the overall response of the two or more pairs of coupled circuits. Circuits like the above or approaching them in form are desirable in an FM receiver where the pass band should be of the order of 200 Kc. Now from the above it is evident that simple peaking both sides of a circuit coupled below critical for maximum voltage will provide optimum alignment but if this proceedure is followed with an overcoupled circuit it is almost a certainty that the two circuits will not be tuned to the resonant frequency but will instead be aligned so that either one or the other is accentuated. The response curve will then look like Fig. 4 (a) or (b).

©John F. Rider

VISUAL I. F.-F. M. ALIGNMENT DATA

Fig. 4

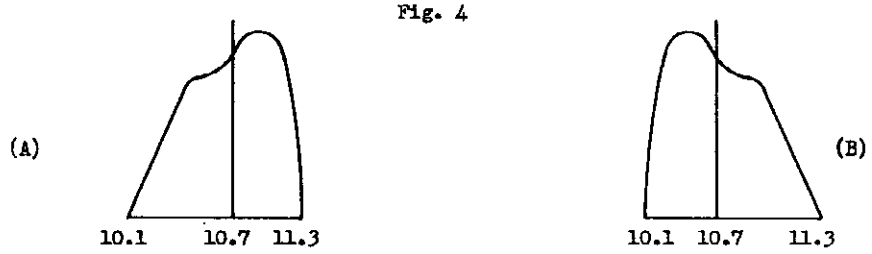

Now if this overcoupled circuit is combined with a single peaked circuit (where the coupling is below critical), the misalignment becomes worse, something like Fig. 5.

Fig. 5

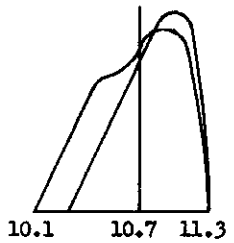

This control should be adjusted so that the dual trace observed on the oscilloscope will blend into a single trace and thereby eliminate any confusion due to the two traces.

(b) An Oscilloscope with either a 3" or 5" tube equipped with both vertical and horizontal amplifiers.

4. ALIGNMENT OF THE 10.7 I.F.

Turn the wave band switch to F.M. and the generator to 10.7 Mc. Connect the F.M. signal generator output lead to the grid of the ratio detector driver tube and the scope to the 1st audio plate. Now proceed to align the ratio detector transformer for maximum linearity and output, being careful to maintain as symmetrical a trace as possible. Note that the adjustment of the secondary circuit, controls to a large extent, the linearity and symmetry of the pattern, and adjustment of the primary will influence the gain of the circuit. Fig. 6 represents a linear detector curve properly aligned.

It is important that the generator sweep a sufficiently wide band of frequencies so that the curves on both ends of the straight portion can be seen. Maximum linearity of alignment will result when these curves are symmetrically shaped and as previously stated this will result in minimum distortion and noise.

Fig. 6

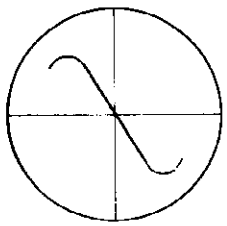

Connect the generator output lead to the grid of the I.F. amplifier. Align primary and secondary of the I.F. transformer being careful to maintain the same basic ratio detector trace as just described.

Observe that by alternately adjusting the primary and secondary, the vertical amplitude can be increased without the response curve becoming distorted. At all times it is important to reduce the signal generator output to maintain the scope picture on the screen. This will avoid overload and possible misalignment therefrom.

Move the generator lead to the grid of the converter tube and align No. 1 I.F. transformer following the same proceedure as above.

Fig. 7, (A), (B), (C), and (D) represent typical selectivity curves of an overall I.F. Amplifier.
Fig. 7, (AA), (BB), (CC), and (DD) represent the corresponding ratio detector curves.

©John F. Rider

VISUAL I. F.-F. M. ALIGNMENT DATA

From the above it appears that to properly align a receiver using overcoupled IF transformers it will be necessary to take a response curve of each stage and align the circuit so that the two peaks are symmetrical, that is, approximately equal in amplitude and displaced equally from the center frequency. To do this with a CW or AM signal would be laborious and time consuming whereas the use of visual equipment makes it nearly as simple as adjusting a simple single peaked amplifier.

Visual alignment test equipment performs the operation of plotting the response curve almost exactly as described above except that instead of manually changing the generator frequency, recording the voltage and then plotting the results, these operations are performed automatically and simultaneously by a combination of electronic circuits. The operation is briefly as follows.

In the signal generator a low AC voltage is applied to a reactance tube modulator which shifts the oscillator frequency from low to high or from high to low at a rate determined by the frequency of the AC voltage and by an amount determined by the AC voltage. The frequency at any instant is dependant on the AC voltage present at that instant of time. An oscilloscope is provided which may be considered a voltmeter used to read the voltage across the tuned circuit, provided a detector is used to convert the RF to a low audio frequency. This voltage is then applied to the vertical plates and results in a vertical displacement of the spot on the screen. Some of the voltage used to shift the oscillator frequency is also applied to the horizontal plates of the oscilloscope providing a means of displacing the spot horizontally. It is now evident that since for any given AC voltage only one frequency may be obtained and since that AC voltage will result in an exact amount of spot deflection on the scope we can read the voltage across the circuit under examination by noticing the position of the spot at this exact instant.

Now if we consider the frequency as shifting from low to high 60 times per second and remember that the spot is moving across the screen of the scope 60 times per second at exact synchronization with the change in frequency it is only necessary to apply the voltage from our circuit to the vertical plates to obtain a replica of the response curve on the face of the cathode ray tube. This curve will be repeated 60 times per second if our sweep frequency is 60 cycles. Adjustments to the circuit may now be made and the effect on the response curve noted instantaneously.

Although it is possible to observe the selectivity curves as shown in Fig. 1, 2, and 3 on the scope by the use of an auxiliary special detector coupled to the plate of the last IF tube, it is much more convenient to observe the effects of IF alignment upon the shape of the ratio detector output trace. When this is done the auxiliary detector is not necessary and a direct connection of the scope into the receiver circuits will provide all the necessary connections.

If the overall selectivity curve is not "flat-topped" (solid line in Fig. 3) the ratio detector curve cannot be linear (straight) throughout the center section, symmetrical and have sufficient band width (Fig. 6).

Under these conditions it would not be possible to receive a signal without distortion and higher than normal noise, the degree of distortion and abnormal noise dependent upon the extent to which the center of the ratio detector trace departs from a straight line and the extent to which the entire trace departs from true symmetry.

After a pattern similar to Fig. 6 is obtained with connection #1 shown in the block diagram, the generator lead may be moved ahead through the IF system one tube at a time and the intervening transformer aligned for maximum output but at all times a curve very similar to Fig. 6 must be maintained.

3. EQUIPMENT REQUIRED.

(a) A sweep signal generator with a center frequency of 10.7 Mc. and a total sweep width of at least 400 Kc. Examination of the block diagram will reveal a variable resistor-capacitor circuit inserted in the lead between the FM sweep generator and the horizontal amplifier of the oscilloscope.

©John F. Rider

VISUAL I. F.-F. M. ALIGNMENT DATA

Fig. 7

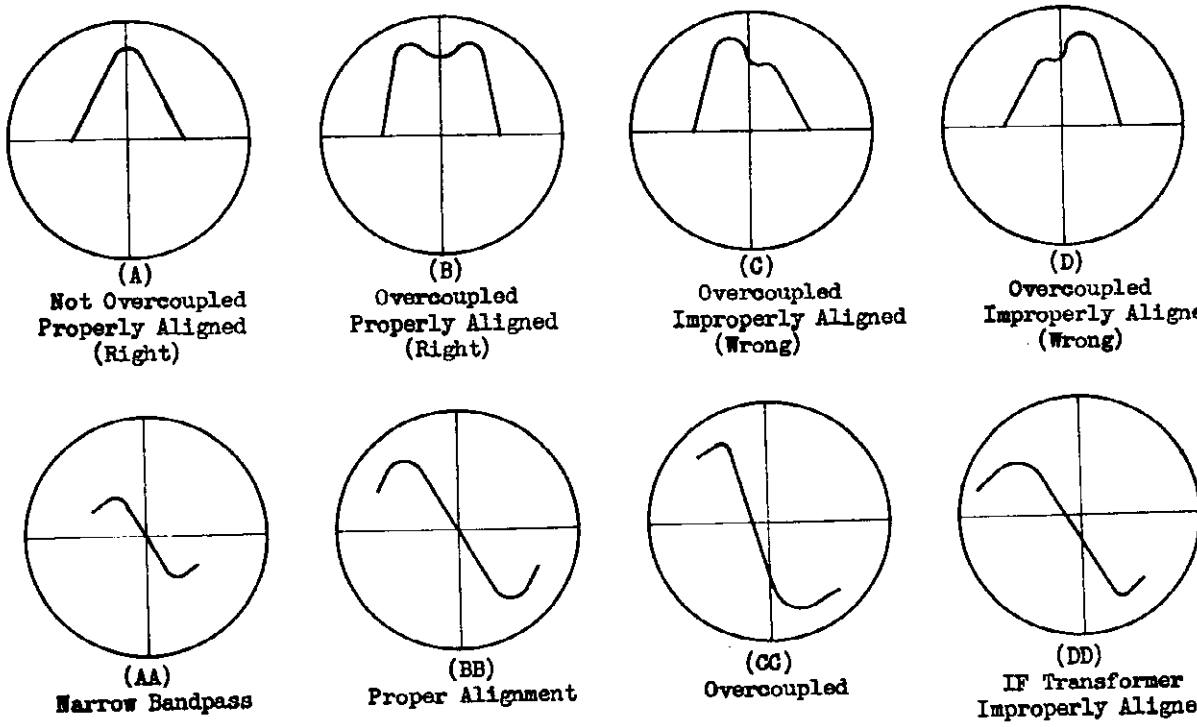

(A) Not Overcoupled Properly Aligned (Right)

(B) Overcoupled Properly Aligned (Right)

(C) Overcoupled Improperly Aligned (Wrong)

(D) Overcoupled Improperly Aligned (Wrong)

(AA) Narrow Bandpass

(BB) Proper Alignment

(CC) Overcoupled

(DD) IF Transformer Improperly Aligned

Should the trace appear unsatisfactory, a very slight readjustment of the detector secondary alignment may be made at this time as the need for any but a slight correction is an indication of incorrect alignment in one of the other stages. This is permissible only if the degree of correction necessary is slight. If this is not the case the entire alignment procedure should be repeated.

	DESCRIPTION	PART NO
C1A,C	F.M. GANG CONDENSER	PC65002
C1B,D	A.M. " " "	
C2C	F.M. TRIMMER ON GANG	
C2B,D	A.M. " " "	
C3	30 MMF. CERAMIC	CC30H-300K
C4	2 MMF. "	CC30H-020K
C5	.02 MFD. "	HK35G-203
C6	110 MMF. CERAMIC	CC30H-111A
C7	110 MMF. "	CC30H-111A
C8	510 MMF. "	HK35G-511
C9	5000 MMF "	HK35G-502
C10	2 MMF. "	CC30H-020K
C11	110 MMF "	CC30H-111A
C12	110 MMF "	CC30H-111A
C13	510 MMF "	HK35G-511
C14	110 MMF "	CC30H-111A
C15	10,000 MMF "	HK35G-103
C16A	(F.M PRI) & C16B (F.M SEC) I.F. TRIMMERS	*
C17	.01 MFD. C&R UNIT	PA4330-10
C18	.02 MMF. CERAMIC	HK35G-203
C19	.01 MFD. DISC TYPE	PA4334-2
C20A	(F.M PRI) C20B (F.M SEC) I.F. TRIMMERS	*
C21A	(A.M PRI) C21B (A.M SEC) I.F. TRIMMERS	*
C22	.01 MFD. DISC TYPE	PA4334-2
C23A	100 MMF C&R UNIT	PA4329-1
C23B	100 MMF C&R UNIT	
C24	.01 MFD C&R UNIT	PA4330-11
C25	.01 MFD. C&R UNIT	PA4330-13
C26	10,000 MMF C&R UNIT	PA4330-14
C27	33 MMF. MICA	*
C28	1000 MMF. CERAMIC	HK35G-102
C29	1000 MMF "	HK35G-102
C30	10,000 MMF "	HK35G-103
C31	10000 MMF "	HK35G-103
C32	3 MFD. 50V. ELECT.	PA4308-1
C33	10-40-40-50 MFD. ELECT.	PA4307-4
C34	100 MMF. CERAMIC	HK35F-101
C35	.02 MFD. C&R UNIT	PA4330-15
C36	10,000 MMF. CERAMIC	HK35G-103
C37	.002 MFD. 1000 V.	PC40GN-202
C38	5 MMF. MICA	MC60F-050
C39	TRIMMER F.M OSC.	PA4366

	DESCRIPTION		PART NO
R1	22,000 OHMS	½ W.	BR125-223
R2	470,000 "	" "	BR125-474
R3	470 "	" "	BR125-471
R4	470,000 "	" "	BR125-474
R5	470,000 "	" "	BR125-474
R6	2.2 MEGOHM	" "	BR125-225
R7	470 OHMS C&R UNIT		PA4330-10
R8	68 "	" "	BR125-680
R9	1000 "	" "	BR125-102
R10	1000 " C&R UNIT		PA4330-12
R11	1 MEGOHM		BR125-105
R12	47000 OHMS C&R UNIT		PA4329-1
R13	1 MEGOHM	½ W	BR125-105
R14	68 OHMS C&R UNIT		PA4330-11
R15	1000 " " "		PA4330-13
R16	47,000 OHMS	" "	BR125-473
R17	VOLUME CONTROL (1 MEG)		PA4408-2
R18	15 MEGOHM	½ W	BR125-156
R19	220 OHMS	" "	BR125-221
R20	15,000 "	" "	BR125-153
R21	470 "	" "	BR125-471
R22	3500 "	10 "	PA4200-8
R23	470 "	2 "	BR125-471
R24	220,000 OHMS	½ W	BR125-224
R25	330 "	" "	CR125-331
R26	220,000 " C&R UNIT		PA4330-12
R27	1 MEG TONE CONTROL		PA4400-10
R28	2.2 MEGOHM	½ W	BR125-225
R29	33 "	" "	BR125-335
R30	1500 OHMS (IN L-3)	2 "	DR125-152
R31	22 " (IN L-5)	½ "	BR125-220
R32	22 " (IN L-4)	" "	BR125-220
R33	820 " (IN L-8)	" "	BR125-821
R34	22000 OHMS C&R UNIT		PA4330-14
R35	3300 "	½ W	BR125-332

	DESCRIPTION	PART NO
L1	LOOP ANTENNA	AC67020-1
L2	B.C OSC COIL	AA6686-1
L3	100 MC. CHOKE COIL (1500 OHM FORM)	AA6798-3
L4	" " (22 " ")	AA 6798-5
L5	" " (22 " ")	AA6798-5
L6	F.M. OSC. COIL	PA5200-4
L7	F.M. R.F. COIL	PA5200-5
L8	CHOKE COIL (820 OHM FORM)	AA6798-4
L9	" "	AA6795-2
L10	LINE CORD ANT. CHOKE	AA6684-1
L11	ANT. CHOKE COIL	AA6686-5
T1	NO 1 F.M.-I.F. TRANS.	AA6667-2
T2	NO 1 A.M.-I.F. "	AA6668-5
T3	NO 2 F.M.-I.F. "	AA6667-4
T4	NO 2 A.M.-I.F. "	AA6668-2
T5	RATIO DET.	AA6684-1
T6	OUTPUT TRANS.	AB44061-1
T7	POWER "	AB44013-1

CHASSIS 8L9

©John F. Rider

© John F. Rider

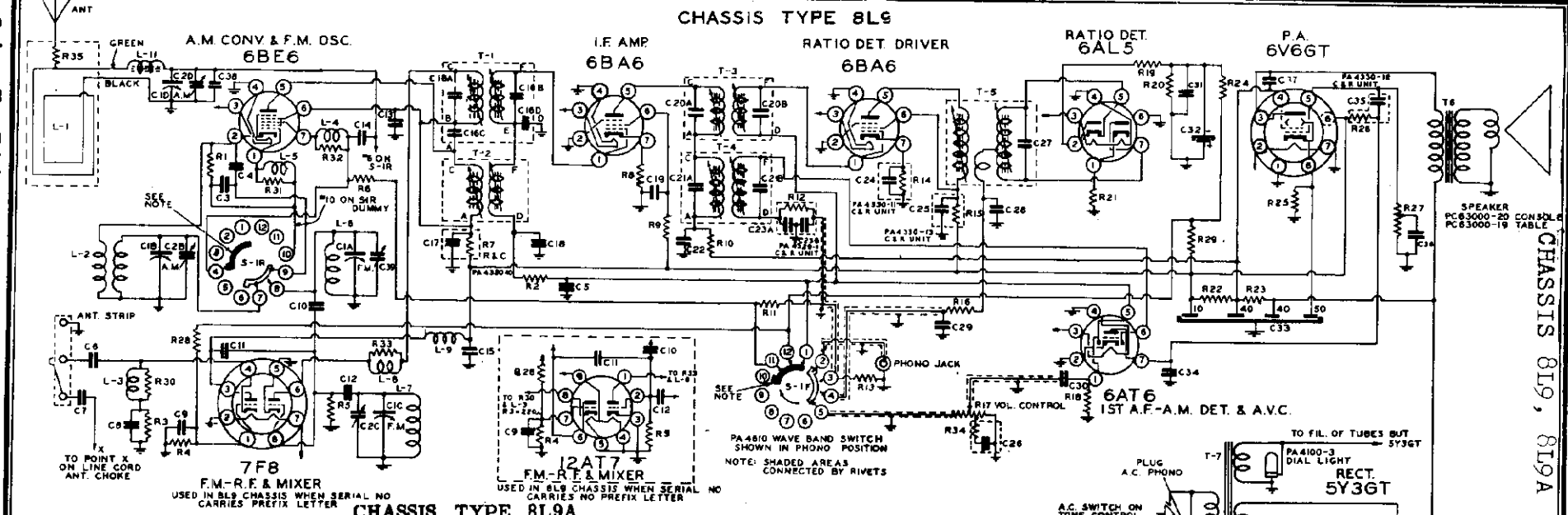

CHASSIS TYPE 8L9A

USED IN MODELS 121, 122, 141, 142, 1058, 1059, 1060, 1061, 1064, 1072, 1071MGP AND 1072MGP.

The 8L9 chassis with the following mechanical and electrical revisions was released and run in production and was designated chassis type 8L9A. This chassis was used in the models as listed above and differs from chassis type 8L9 as follows:

MECHANICAL CHANGE

1. The dial light assembly has been designed to travel with the pointer across and in back of the dial scale.

ELECTRICAL CHANGES

1. Resistor R23, 470 Ohm. 2 Watt removed from circuit.
2. Filter choke T-8 is connected across same terminals where R23 resistor was removed.
3. Red lead from putput transformer disconnected and tied into B + after passing through filter choke T-8.

Receiver alignment and other specification was not affected by this circuit revision.

INTERMEDIATE FREQUENCY A.M. 456 Kc.
F.M. 10.7 Mc.

BOTTOM VIEW OF ALL SOCKET CONNECTIONS SHOWN

(ORIGINAL) SEPT. 10, 1948

© John F. Rider

Effective May 15, 1949

SCHEMATIC DIAGRAM
SPARTON SUPERHETERODYNE CHASSIS TYPE 8L9A
INTERMEDIATE FREQUENCY A.M. 456 Kc. F.M. 10.7 Mc.

BOTTOM VIEW OF ALL SOCKET CONNECTIONS SHOWN

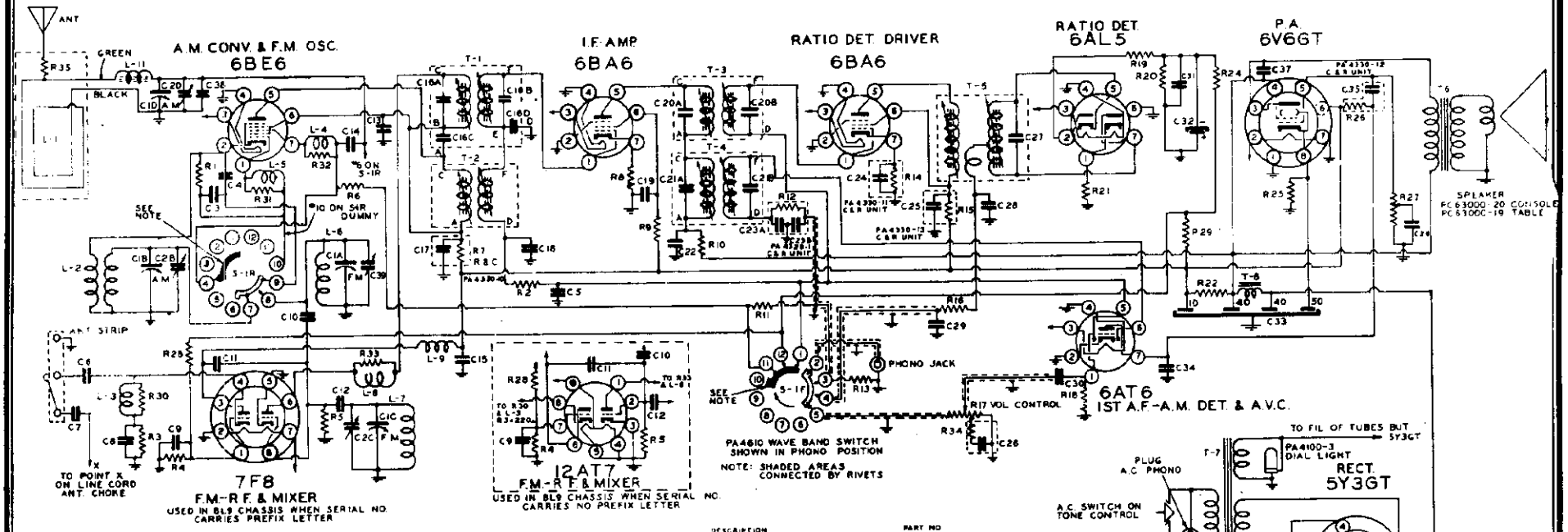

DESCRIPTION	PART NO
C1A,C F.M. GANG CONDENSER	PC65002
C1B,D A.M. " "	
C2C F.M. TRIMMER ON GANG	
C2B,D A.M. " "	
C3 33 MMF CERAMIC	CC30H-330K
C4 2 MMF "	CC30H-020K
C5 .02 MFD "	HK35G-203
C6 110 MMF CERAMIC	CC30H-111A
C7 110 MMF "	CC30H-111A
C8 510 MMF "	HK35G-511
C9 5000 MMF "	HK35G-502
C10 2 MMF "	CC30H-020K
C11 110 MMF "	CC30H-111A
C12 110 MMF "	CC30H-111A
C13 510 MMF "	HK35G-511
C14 110 MMF "	CC30H-111A
C15 10,000 MMF "	HK35G-103
C16A (F.M. PRI.) & C16B (F.M. SEC.) I.F. TRIMMERS	*
C17 .0 MFD C & R UNIT	PA4330-10
C18 .02 MMF CERAMIC	HK35G-203
C19 .01 MFD DISC TYPE	PA4334-2
C20A (F.M. PRI.) C20B (F.M. SEC.) I.F. TRIMMERS	*
C21A (A.M. PRI.) C21B (A.M. SEC.) I.F. TRIMMERS	*
C22 .01 MFD DISC TYPE	PA4334-2
C23A 100 MMF C & R UNIT	PA4329-1
C23B 100 MMF C & R UNIT	
C24 .01 MFD C & R UNIT	PA4330-11
C25 .0 MFD C & R UNIT	PA4330-13
C26 10,000 MMF C & R UNIT	PA4330-14
C27 .35 MMF MICA	*
C28 1000 MMF CERAMIC	HK35G-102
C29 1000 MMF "	HK35G-102
C30 10,000 MMF "	HK35G-103
C31 10,000 MMF "	HK35G-103
C32 8 MFD 50V ELECT	PA4303-7
C33 10-40-40-50 MFD. ELECT	PA4307-4
C34 100 MMF CERAMIC	HK35F-101
C35 .02 MFD C & R UNIT	PA4330-12
C36 10000 MMF CERAMIC	HK35G-103
C37 .002 MFD 1000 V	PC40GN-202
C38 5 MMF MICA	MC607-050
C39 TRIMMER F.M. OSC.	PA4366

DESCRIPTION	PART NO
R1 22,000 OHMS ½ W	BR12S-223
R2 470,000 " "	BR12S-474
R3 470 " "	BR12S-471
R4 470,000 " "	BR12S-474
R5 470,000 " "	BR12S-474
R6 2.2 MEGOHM "	BR12S-225
R7 470 OHMS C & R UNIT	PA4330-10
R8 68 " "	BR12S-680
R9 1000 " ½ W	BR12S-102
R10 1000 " "	BR12S-102
R11 1 MEGOHM "	BR12S-105
R12 47000 OHMS C & R UNIT	PA4329-1
R13 1 MEGOHM ½ W	BR12S-105
R14 68 OHMS C & R UNIT	PA4332-11
R15 1000 " "	PA4330-13
R16 .41000 OHMS "	BR12S-473
R17 VOLUME CONTROL (1 MEG)	PA4408-2
R18 15 MEGOHM ½ W	BR12S-156
R19 220 OHMS "	BR12S-221
R20 15000 " "	BR12S-153
R21 470 " "	BR12S-471
R22 3500 " 10 "	PA4200-5
R24 220,000 OHMS ½ W	BR12S-224
R25 330 " "	CR12S-331
R26 20,000 " C & R UNIT	PA4330-12
R27 1 MEG. TONE CONTROL	PA4400-10
R28 2.2 MEGOHM ½ W	BR12S-225
R29 3.3 " "	BR12S-335
R30 1500 OHMS (IN L-3) 2 "	DR12S-152
R31 22 " (IN L-5) ½ "	BR12S-220
R32 22 " (IN L-8) "	BR12S-220
R33 820 " (IN L-8) "	BR12S-821
R34 22000 OHMS C & R UNIT	PA4330-14
R35 3300 " ½ W	BR12S-332

	DESCRIPTION	PART NO
T1	NO. 1 F.M.-I.F. TRANS.	AA8667-2
T2	NO. 1 A.M.-I.F. "	AA8666-5
T3	NO. 2 F.M.-I.F. "	AA8667-4
T4	NO. 2 A.M.-I.F. "	AA8668-2
T5	RATIO DET. "	AA8684-1
T6	OUTPUT TRANS	AB44061-2
T7	POWER "	AB44013-1
T8	FILTER CHOKE	AB47004-1

	DESCRIPTION	PART NO
L1	LOOP ANTENNA	AC67020-1
L2	B.C. OSC. COIL	AA8665-2
L3	100 MC. CHOKE COIL (1500 OHM FORM)	AA8798-3
L4	" " " (22 " ")	AA8798-5
L5	" " " (22 " ")	AA8798-5
L6	F.M. OSC. COIL	PA5200-4
L7	F.M. R.F. COIL	PA5200-5
L8	CHOKE COIL (820 OHM FORM)	AA8798-4
L9	" "	AA8769-2
L10	LINE CORD ANT. CHOKE	AA8664-1
L11	ANT. CHOKE COIL	AA8888-6

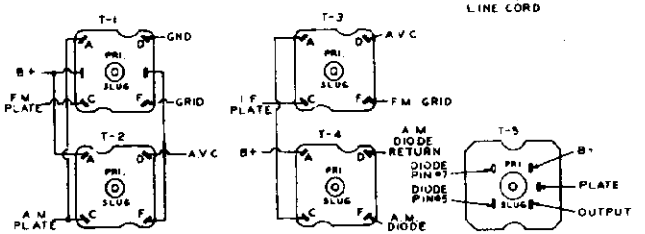

BOTTOM VIEW, TERMINAL HOOKUP FOR T-1, T-2, T-3, T-4, T-5

SPECIAL SERVICE NOTE: THESE TRANSFORMERS SUPPLIED IN COMPLETE ASSEMBLIES ONLY

MODELS 130, 132, 135, 139; Ch. 5A10

Due to mechanical design of the tuning mechanism in this Sparton model, the receiver chassis cannot be removed from the cabinet without removing the dial scale and pointer. When chassis removal becomes necessary, the serviceman will experience little if any difficulty in chassis removal or installtion if the following procedure is adhered to.

CHASSIS REMOVAL

1. Remove both control knobs.
2. The dial scale is held into position by flanges on the outer edge directly above and below the calibration numbers 1600KC and 5.50KC respectively and a small tab under the metal grill at approximately the 900KC mark. Using a small screwdriver, snap out the ends of the scale from under the cabinet front panel and slide the dial scale to the right and out of position. Sliding scale to the right prevents the holding tab at 900KC point from being broken off.
3. Remove the (3) rubber footed chassis mounting screws.
4. Remove the (2) fasteners which hold the back cover at top corners. Do not remove the (2) hex-head screws at the bottom corners.
5. At this point proceed to remove pointer from tuning shaft and to slide receiver chassis out of the cabinet simultaneously. When the dial pointer has been removed from the tuning shaft, the receiver chassis is free and may be removed from the cabinet.

CHASSIS INSTALLATION

1. Turn tuning condenser to the fully closed position (550KC).
2. Slide receiver chassis into cabinet until the tuning shaft starts to enter the clearance hole in grill. At this point, place the dial pointer over the end of the tuning shaft between the metal grill and the Bakelite panel and continue to slide the chassis forward and at the same time push the pointer onto the shaft until the pointer seats into position on the planetary drive collar of the tuning condenser and the chassis has reached its mounting position in the cabinet.
3. At this point turn the dial pointer counter-clockwise to the straight down position. (Approximately the 550KC position).
4. Install the (3) rubber footed chassis mounting screws and the (2) snap fasteners for back cover.
5. Install the dial scale by sliding the holding tab in and under the slot in the metal grill. Snap the end into position in the cabinet front panel.
6. At this point, turn receiver on and air check for pointer calibration. Should the pointer be slightly past the stop mark on dial scale, the pointer may be moved slightly forward or back with a small pointed instrument through the opening between dial scale and cabinet panel until pointer calibration is correct.
7. Install control knobs.

VOLTAGE CHART

Line Voltage: 117 Volts AC — Position of volume control: Full with set tuned to quiet channel.

TUBE	FUNCTION	Voltage of Sockets Prongs to B- See Prong Nos. on Schematic.							
		No. 1	No. 2	No. 3	No. 4	No. 5	No. 6	No. 7	No. 8
12BE6	Converter	**	0	23*	11.5*	95	95	**	
12BA6	I.F. Amp.	**	0	23*	34.5*	95	93	0.55	
12AV6	2nd Det. & Audio Amp.	**	0	11.5*	0	**	0	48	
50L6GT	Power Amp.	0	34.5*	115	95	0	0	84.5*	6.3
35W4	Rectifier	0	118	84.5*	117*	117*	108*	120	

NOTES: Voltage readings are for schematic diagram in this bulletin. Allow 15% + or - on all measurements. Always use meter scale which will give greatest deflection within scale limits. All DC measurements made with 20,000 ohms per volt voltmeter. All AC voltages made with rectifier type voltmeter.

* AC Volts.

** Cannot be measured with 20,000 ohms per volt voltmeter.

© John F. Rider

MODELS 130, 132, 135, 139; Ch. 5A10

STEP BY STEP ALIGNMENT PROCEDURE

OPERATION	ALIGNMENT OF	GENERATOR CONNECTED TO	DUMMY ANTENNA	GENERATOR FREQUENCY	TUNING COND. SETTING	TRIMMER	REMARKS
1.	See instructions for chassis removal and installation						
2.	I.F.	Pin #7 on 12BE6	.02 MFD. Cond.	456 KC.	Fully Open	Slug T-2 Top & Bottom	Peak Accurately
						Slug T-1 Top & Bottom	Peak Accurately
3.	Broadcast	*	Driver Loop	1500 KC.	1500 KC.	C2A Osc. Tr.	Peak Accurately
						C2D Osc. Tr.	* *
						C2B Ant. Tr.	* * *
4.	Repeat operations 2 and 3.						
5.	Check calibrations at 600, 1000 and 1500 KC.						

* Use driver loop as shown in this bulletin.
* * Trimmer C2D as sown on schematic is preset at factory and only on certain conditions will have to be re-adjusted in the field.
* * * Rock dial while adjusting for maximum output.

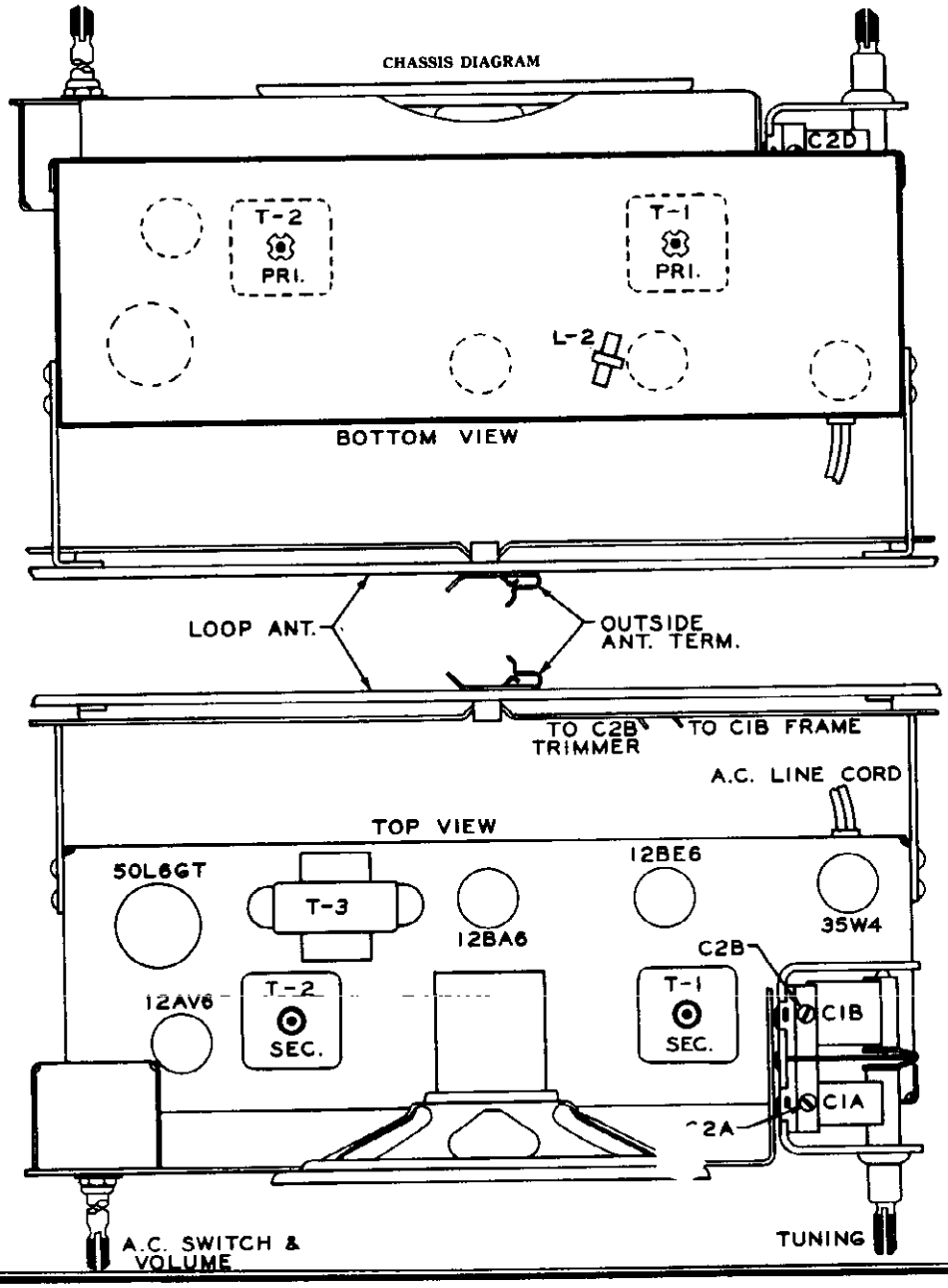

MODELS 130, 132,
135, 139; Ch. 5A10

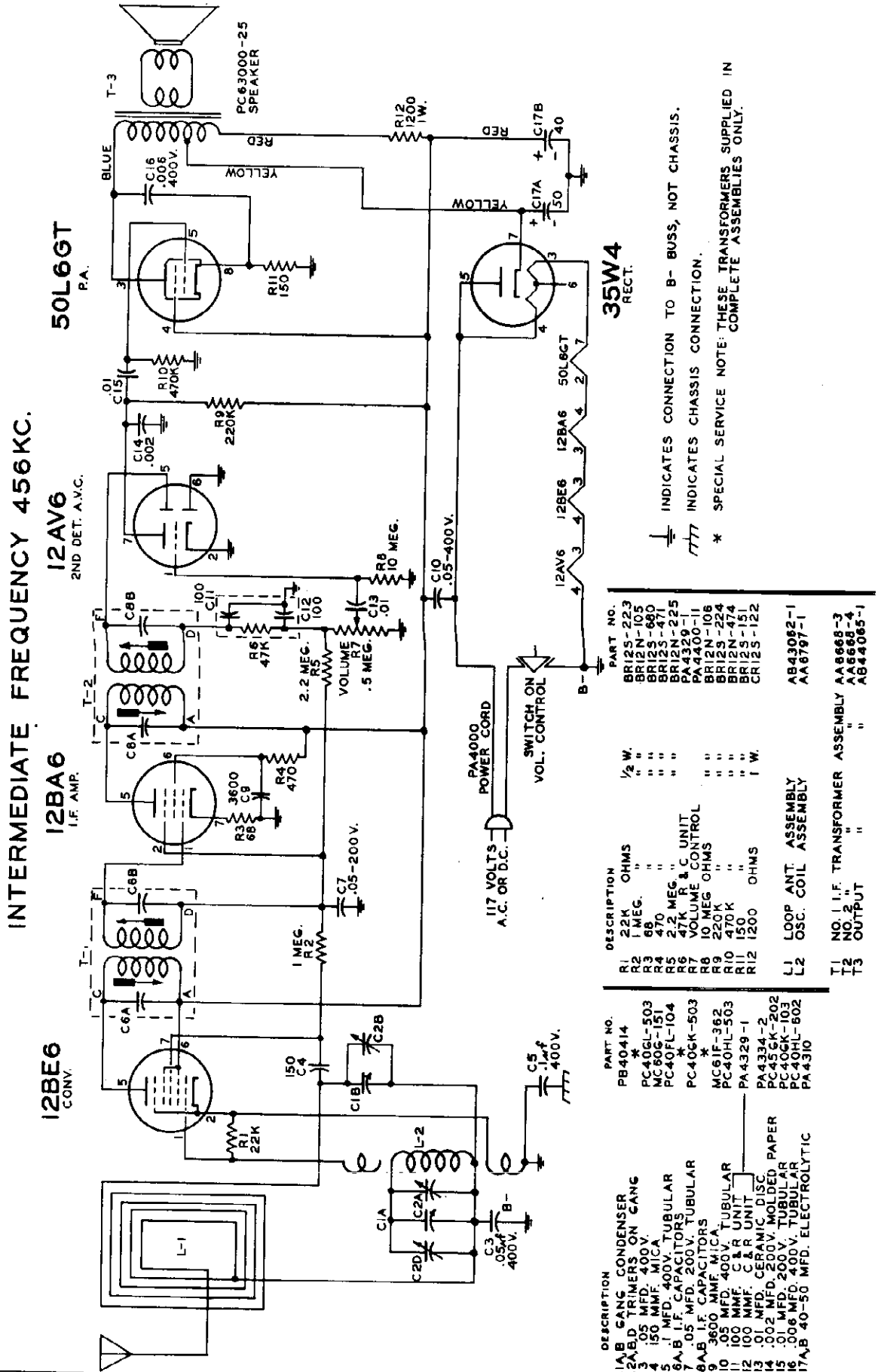

DESCRIPTION	PART NO.
C1A,B GANG CONDENSER	PB40414
C2A,B,D TRIMERS ON GANG	*
C3 .05 MFD. 400V.	PC406L-503
C4 150 MMF. MICA	MC606-151
C5 .1 MFD. 400V. TUBULAR	PC40FL-104
C6A,B I.F. CAPACITORS	*
C7 .05 MFD. 200V. TUBULAR	PC406K-503
C8A,B I.F. CAPACITORS	*
C9 3600 MMF. MICA	MC61F-362
C10 .05 MFD. 400V. TUBULAR	PC40HL-503
C11 100 MMF. C & R UNIT	
C12 100 MMF. C & R UNIT	PA4329-1
C13 .01 MFD. CERAMIC DISC	
C14 .002 MFD. 200V. MOLDED PAPER	PA4334-2
C15 .01 MFD. 200V. TUBULAR	PC456K-202
C16 .006 MFD. 400V. TUBULAR	PC406K-103
C17A,B 40-50 MFD. ELECTROLYTIC	PC40HL-602
	PA4310

DESCRIPTION			PART NO.
R1	22K OHMS	½ W.	BR12S-223
R2	1 MEG. "	" "	BR12N-105
R3	68 "	" "	BR12S-680
R4	470 "	" "	BR12S-471
R5	2.2 MEG. "	" "	BR12N-225
R6	47K R & C UNIT		PA4329-1
R7	VOLUME CONTROL		PA4400-11
R8	10 MEG OHMS	" "	BR12N-106
R9	220K "	" "	BR12S-224
R10	470K "	" "	BR12N-474
R11	150 "	" "	BR12S-151
R12	1200 OHMS	1 W.	CR12S-122
L1	LOOP ANT. ASSEMBLY		AB43062-1
L2	OSC. COIL ASSEMBLY		AA8797-1

T1 NO. 1 I.F. TRANSFORMER ASSEMBLY AA8668-3
T2 NO. 2 " " " AA8668-4
T3 OUTPUT " " AB44065-1

© John F. Rider

DRIVER LOOP

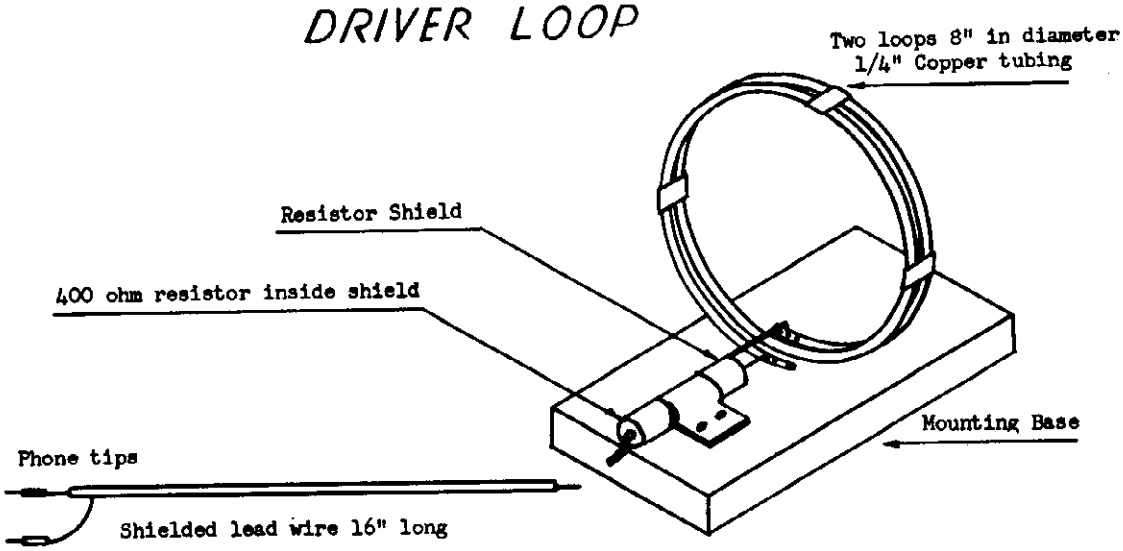

SPECIFICATIONS

Two loops of 1/4" copper tubing 8" in diameter spaced 1/4" apart with 400 ohms resistor in series. Connecting cable and resistor must be shielded.
The loop should be spaced twice the diameter of the loop from the receiver being aligned to prevent an over modulated signal and poor alignment of the receiver.

DESCRIPTION	PART NUMBER
COILS	
L-1 Loop Antenna Ass'y	AB43062-1
L-2 Osc. Coil Assembly	AA6797-2
CONDENSERS AND CONTROL	
Condenser - 2 Gang Variable	PB40414
Condenser - (C17A & B) 40-50 Mfd. Elect.	PA4310
Condenser - C & R Unit (C11 & 12 with R6)	PA4329-1
Control - (R7) .5 Megohm Volume & A.C. Switch	PA4400-11
CABINET & ACCESSORIES	
Cabinet - (Black)	PD90032-1
Cabinet - (Red)	PD90032-2
Cabinet -(Green)	PD90032-3
Cabinet - (Ivory)	PD90032-4
Knob - (Black)	PA5643-1
Knob - (Red)	PA5643-2
Knob -(Green)	PA5642-3
Knob - (Ivory)	PA5643-4
Cabinet Grill	PB40317
Escutcheon - Dial	PB30014
Escutcheon - On-Off Volume	PA5506
Dial Pointer	PA5410
TRANSFORMERS	
T1-Transformer, No. 1 I.F.	AA6618-3
T2-Transformer, No. 2 I.F.	AA6668-4
T3-Transformer, Output	AB44065-1
*Speaker-5-Inch P.M.	PC63000-18

* Complete speakers may be returned to factory Service Department for repair or replacement.

©John F. Rider

MODELS 150, 151,
152, 155; Ch. 4E10

SPARTON SUPERHETERODYNE RECEIVERS

CHASSIS TYPE 4E10
MODELS 150, 151, 152 & 155

VOLTAGE CHART

Line Voltage: 117 Volts AC		Position of volume control: Full with set tuned to quiet channel.						
TUBE	FUNCTION	Voltage of Sockets Prongs to -B See Prong Nos. on schematic.						
		No. 1	No. 2	No. 3	No. 4	No. 5	No. 6	No. 7
1R5	Osc. Converter	1.37	93	60	**	1.37	0	2.7
1U4	I.F. Amplifier	2.7	93	93	0	2.7	0	4.1
1U5	Det. A.V.C. & 1st Audio	1.37	15	11.5	0	0	0	0
3V4	Output	4.1	93	93	0	5.9	0	7.5

NOTES: Voltage readings are for schematic diagram in this bulletin. Allow 15% + or - on all measurements. Always use meter scale which will give greatest deflection within scale limits. All DC measurements made with 20,000 ohms per volt voltmeter. All AC voltages made with rectifier type voltmeter.

** Cannot be measured with 20,000 Ohms per volt voltmeter.

STEP BY STEP ALIGNMENT PROCEDURE

OPERATION	ALIGNMENT OF	GENERATOR CONNECTED TO	DUMMY ANTENNA	GENERATOR FREQUENCY	TUNING COND. SETTING	TRIMMER	REMARKS
1.	Set stop line on dial drum even with marker line on frame assembly with condenser gang fully closed.						
2.	I.F.	Pin #6 1R5 Tube	.1 Mfd. Cond.	456 KC.	Open	Slug T-2 Top & Bottom	Peak Accurately
						Slug T-1 Top & Bottom	Peak Accurately
3.	R.F.	SEPARATE LOOP	*	1500 KC.	1500 KC.	C2B Osc. Tr.	Peak Accurately
						C2A Ant. Tr.	Peak Accurately
4.	Repeat operation #3.						
5.	Check calibration at 600 KC., 1000 KC. and 1500 KC.						
6.	Check operations #1 to #6 inclusive.						

* Use driver loop as shown in this bulletin.
The generator must be connected to the dummy loop antenna and not to the loop of the receiver for R.F. alignments.
Trimmer C2C as shown on schematic is preset at factory and only on certain conditions will have to be moved. However, should it become necessary to adjust this trimmer on the bottom of the gang a cutout in the chassis base has been provided.

©John F. Rider

MODELS 150, 151, 152, 155; Ch. 4E1C

CHASSIS DIAGRAM

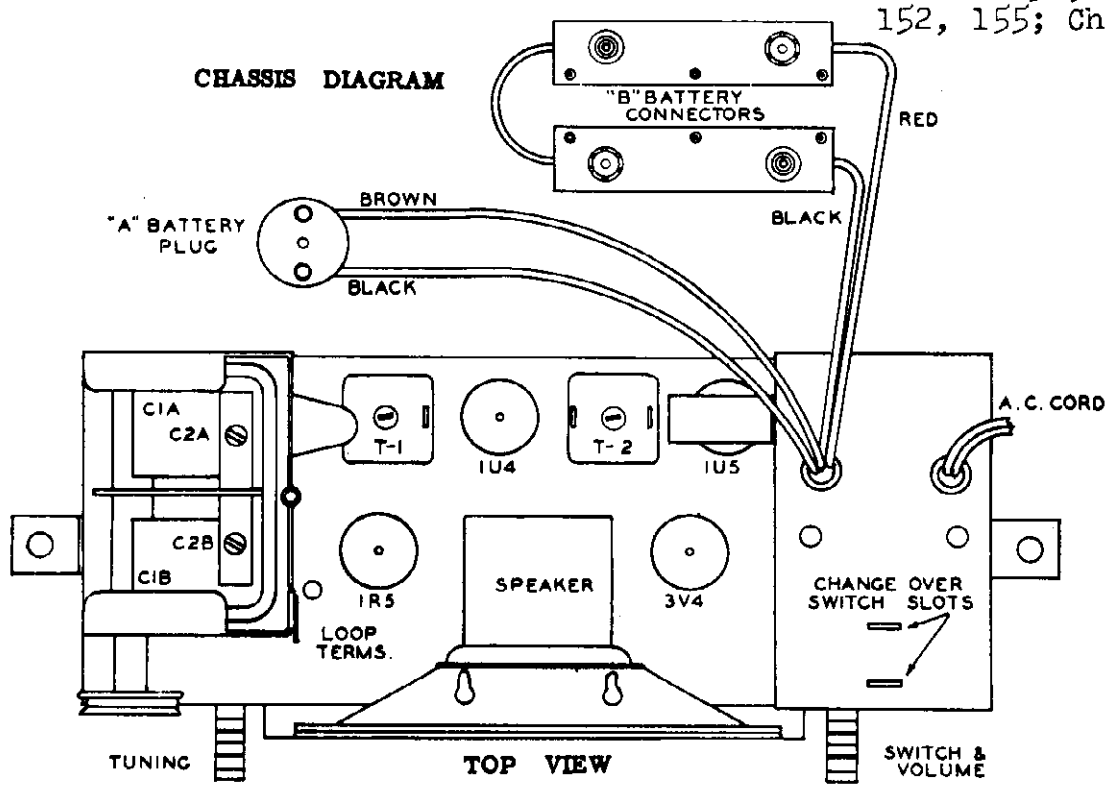

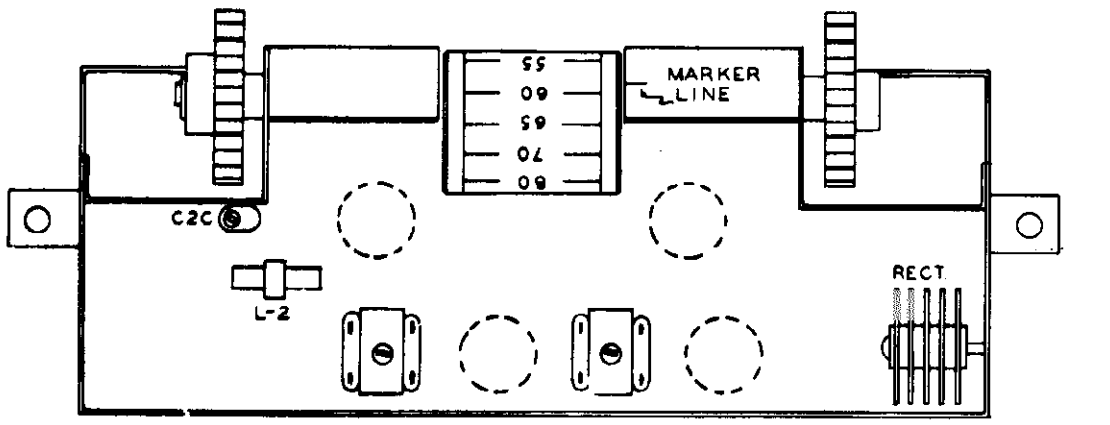

BOTTOM VIEW

DRIVER LOOP

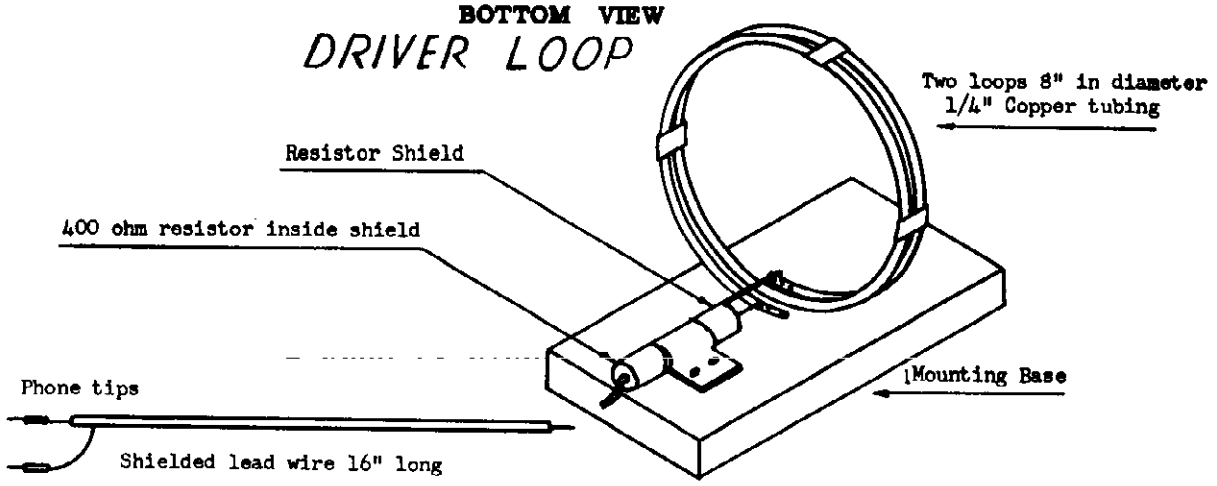

SPECIFICATIONS

Two loops of 1/4" copper tubing 8" in diameter spaced 1/4" apart with 400 ohms resistor in series. Connecting cable and resistor must be shielded.
The loop should be spaced twice the diameter of the loop from the receiver being aligned to prevent an over modulated signal and poor alignment of the receiver.

© John F. Rider

MODELS 150, 151,
152, 155; Ch. 4E10

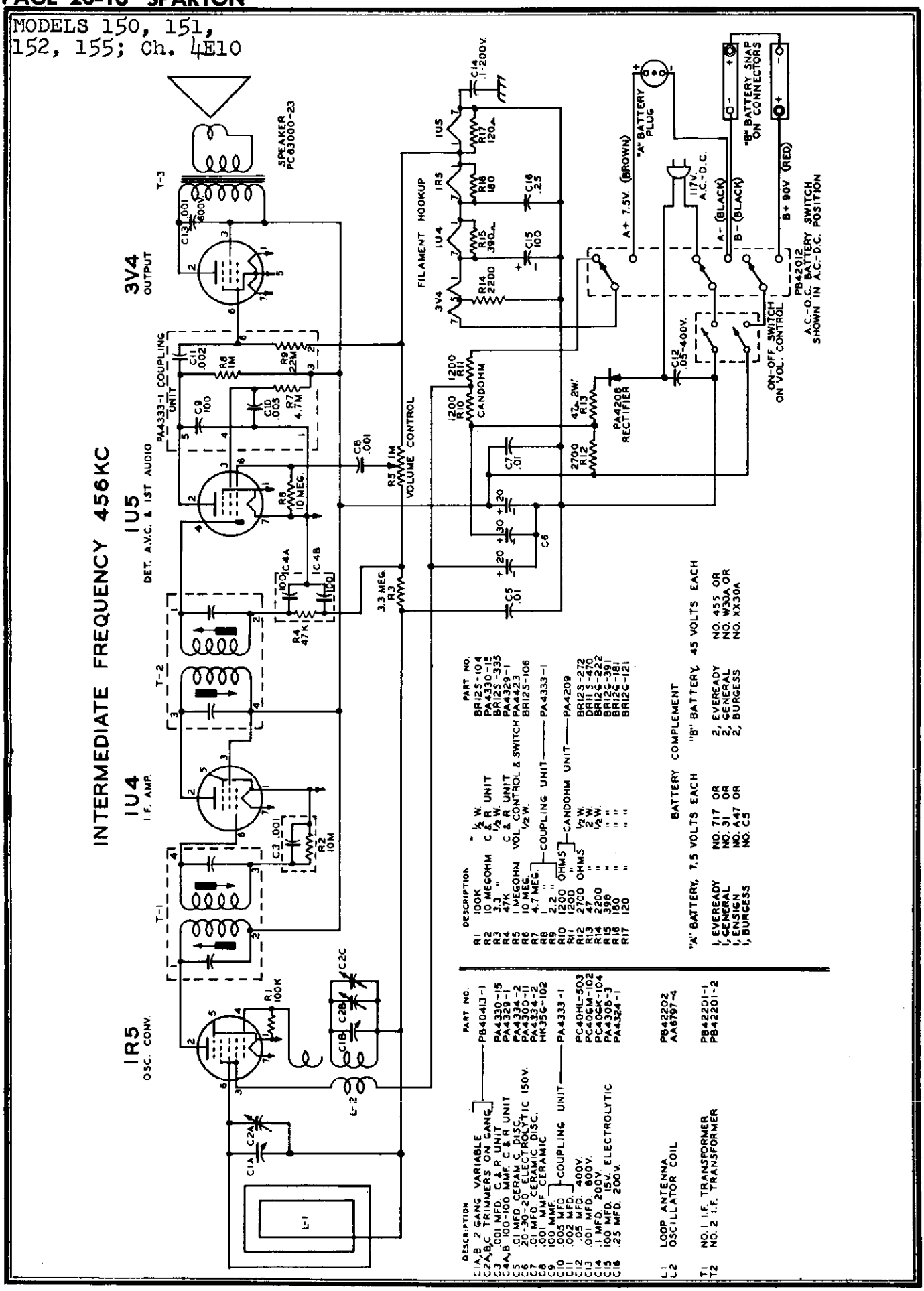

© John F. Rider

MODEL SC-448,
FM Tuner

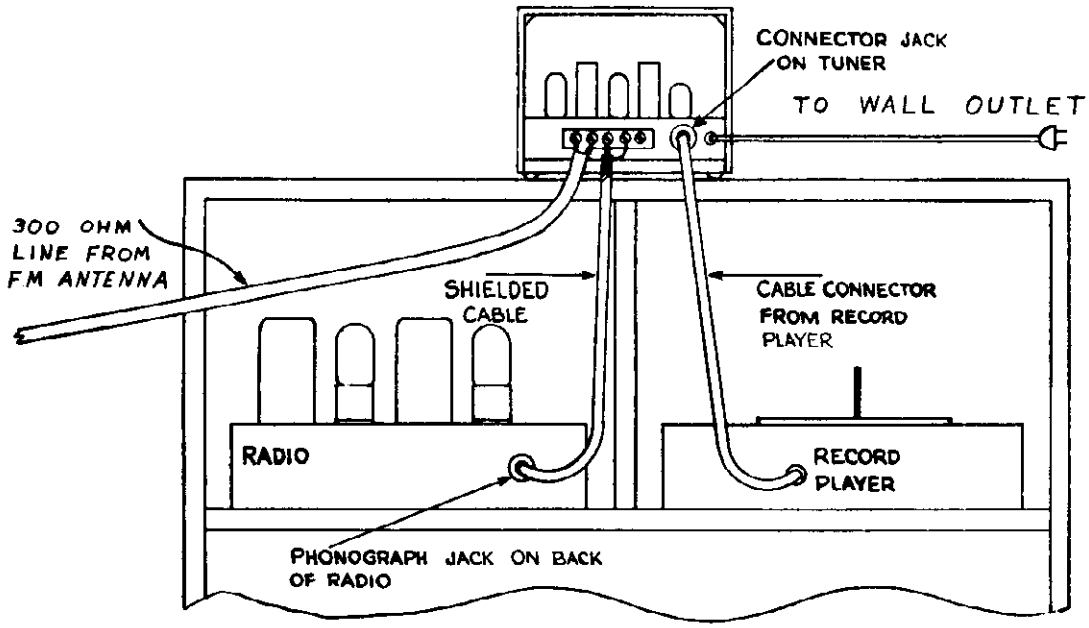

Figure 1—Console Installation

DESCRIPTION

Your FM tuner is a four-tube (plus rectifier) superheterodyne designed to cover the frequency range of the FM broadcast band from 88 to 108 megacycles. It must be operated in conjunction with a broadcast receiver or other audio amplifier. It requires a power source of from 105 to 125 volts, alternating current (AC).

WARNING: Do not connect to any other source.

INSTALLATION

The tuner must be connected to the audio or phonograph circuit of your standard broadcast receiver or to a separate audio amplifier. This can be done in several ways, depending on the type of set. Some of the methods are outlined below. Determine the type of installation you require and proceed as directed.

WARNING: Before proceeding with installation, make certain that the tuner and the radio or amplifier are both disconnected from the power outlet.

NOTE—In every case, the output of the tuner will come from terminals No. 3 and No. 4 at the rear of the tuner. Connections to these terminals should be made with a single conductor shielded cable, with the center conductor connected to No. 3 and the outer shield to No. 4. A length of this cable is packed with your tuner. This cable has a phonograph plug connected to one end which will simplify most installations.

1. If your radio is of the combination type, that is, it also plays records, it probably has the record pickup connected to the radio chassis with a shielded cable and plug like that supplied with your tuner. To connect the tuner to this type of set, pull out the record player plug and plug in the tuner output cable, connected as above. Plug the record player cable into the receptacle at the rear of the tuner. This method of connection is shown in Fig. 1.

2. If your radio is of the combination type but does not have the above type of plug on the record pickup cable, or has no plug connection at all, it will be necessary to disconnect the pickup cable where it connects to the radio. This cable is then connected to terminals No. 4 and No. 5 on the tuner. The shield or ground connection should be made to No. 4 and the center conductor to No. 5. Then connect the tuner output cable to the points where the pickup cable was removed. In order to do this, it will be necessary to cut off the plug at the end of the cable. This connection could best be made by your radio service man.

3. If your radio does not have a record player, the tuner output lead will have to be connected to the audio amplifier portion of your radio. This connection will vary with the type of set that you have, and it is best that this be done by your radio service man.

4. If you are going to use your tuner with an audio amplifier, terminals No. 3 and No. 4 should be connected to the input of the amplifier. If you have a choice of inputs, use the one intended for use with a phonograph.

For best operation, your tuner should be connected to an FM antenna, preferably located out-of-doors. (Select an Aircastle FM Antenna from your big Spiegel catalog.) The tuner is designed for an antenna of the folded-dipole type that uses 300 ohm parallel-line lead-in. Make the lead-in connections to terminals No. 1 and No. 2.

In many cases, you can get satisfactory reception with a short piece of wire (6 to 8 feet long) connected to terminal No. 1.

OPERATION

Insert the tuner power cord into the power receptacle. Turn on your radio or amplifier and switch it to phonograph (if necessary). Your tuner has three conditions of operation, as follows:

1. With the left-hand knob in extreme counter-clockwise or left position the phonograph of your set is connected for normal phonograph operation, and the tuner is off.

2. With this knob in the center position, the tuner power is on, but the phonograph of your set is still connected for normal operation. This standby position allows you to switch from phonograph to tuner without waiting for the tuner to warm up.

3. In the extreme clockwise or right position, the tuner is on and the phonograph off. This is the position in which the tuner makes it possible for you to pick up FM stations on your AM radio.

With the tuner on (and after about a 30 second warm-up) turn the right-hand knob slowly until a station is heard clearly and adjust the volume control on your broadcast receiver or amplifier to the desired intensity. Do not reduce the volume by tuning the unit off station.

©John F. Rider

MODEL SC-448,
FM Tuner

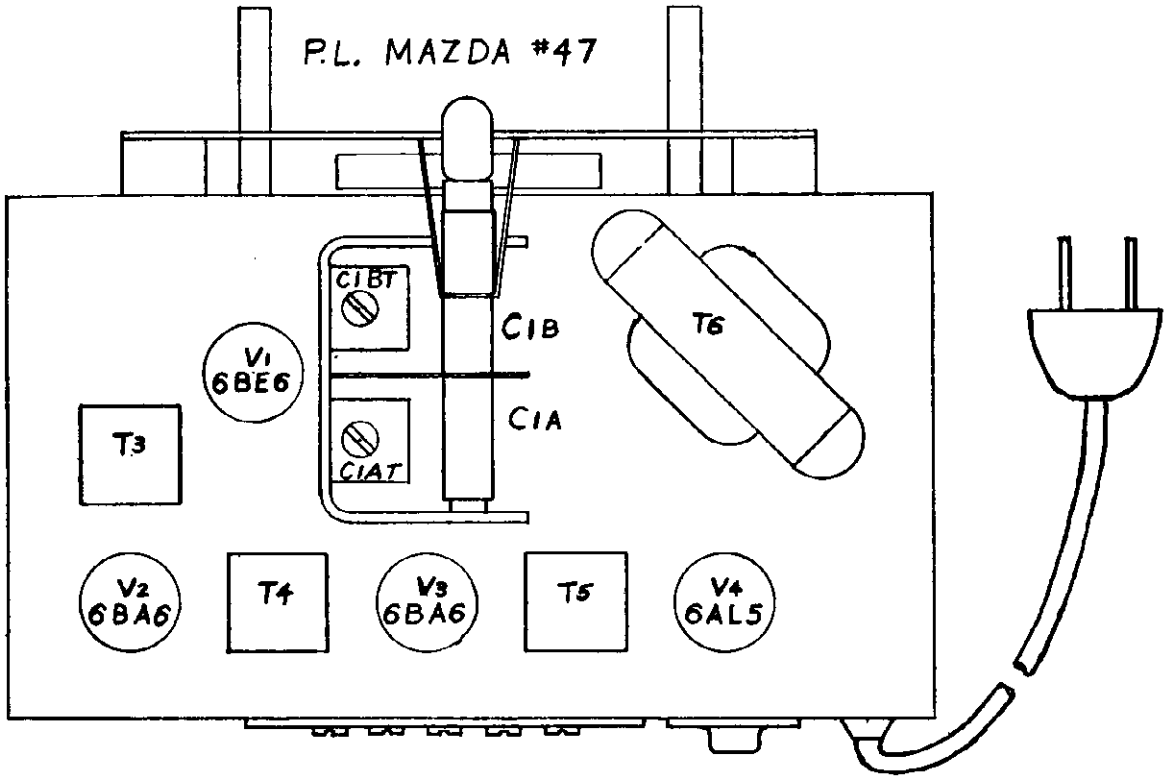

Figure 2—Location Diagram

Alignment Procedure

I. F. ALIGNMENT

An unmodulated or AM signal generator set at 10.7 Mc. is required. For each step, the generator output should be adjusted to give from 1 to 5 volts on the vacuum tube voltmeter as connected below. For best results a VTVM employing a probe should be used. Refer to Fig. 2 and Fig. 3 for symbol numbers.

1. Connect generator to pin 1 of V_3 and ground. Using a VTVM connected from V_4 pin 7 to ground, tune T_5 top to maximum reading.

2. Connect a 200,000 ohm center-tapped resistor from V_4 pin 2 to ground. Connect the VTVM ground lead to the resistor center-tap and the probe to the junction of R_7 and C_{10}. With the generator connected as in (1.) above, tune T_5 bottom for 0 volts.

3. Move the generator connections to V_2 pin 1 and ground. Connect VTVM as in step (1.). Shunt T_4 secondary with a 1000 ohm resistor and tune primary (bottom) to peak reading on the VTVM. Move shunting resistor to primary and tune secondary in like manner.

4. Move generator connections to V_1 pin 7 and ground. Repeat the operations of step (3.) on I. F. transformer T_3.

R. F. ALIGNMENT

A signal generator of good frequency accuracy and low leakage is required. For all of the following adjustments, the signal generator is connected to terminals No. 1 and No. 2 through two 120 ohm resistors (one resistor on each terminal).

1. Set the signal generator at 90 Mc. and tune to 90 on the dial. Adjust the spacing of the turns on T_2 for maximum output. For best results on output indication, use a VTVM connected to pin 7 of V_4 and ground.

2. Set the signal generator at 106 Mc. and tune to 106 on the dial. Alternately adjust C1B trimmer and C1A until no further increase in output can be obtained.

3. Repeat Step (1.), then repeat step (2.). If necessary, go back and forth between step (1.) and step (2.) until no further improvement is obtained.

HOW TO ORDER PARTS

Always give part number (and number printed on part if different from number shown on parts list), and name of part. When this information is not available, give complete description of part. Be sure to give Model and Catalog number.

The Model number will be found stamped on the rear of the chassis.

© John F. Rider

©John F. Rider

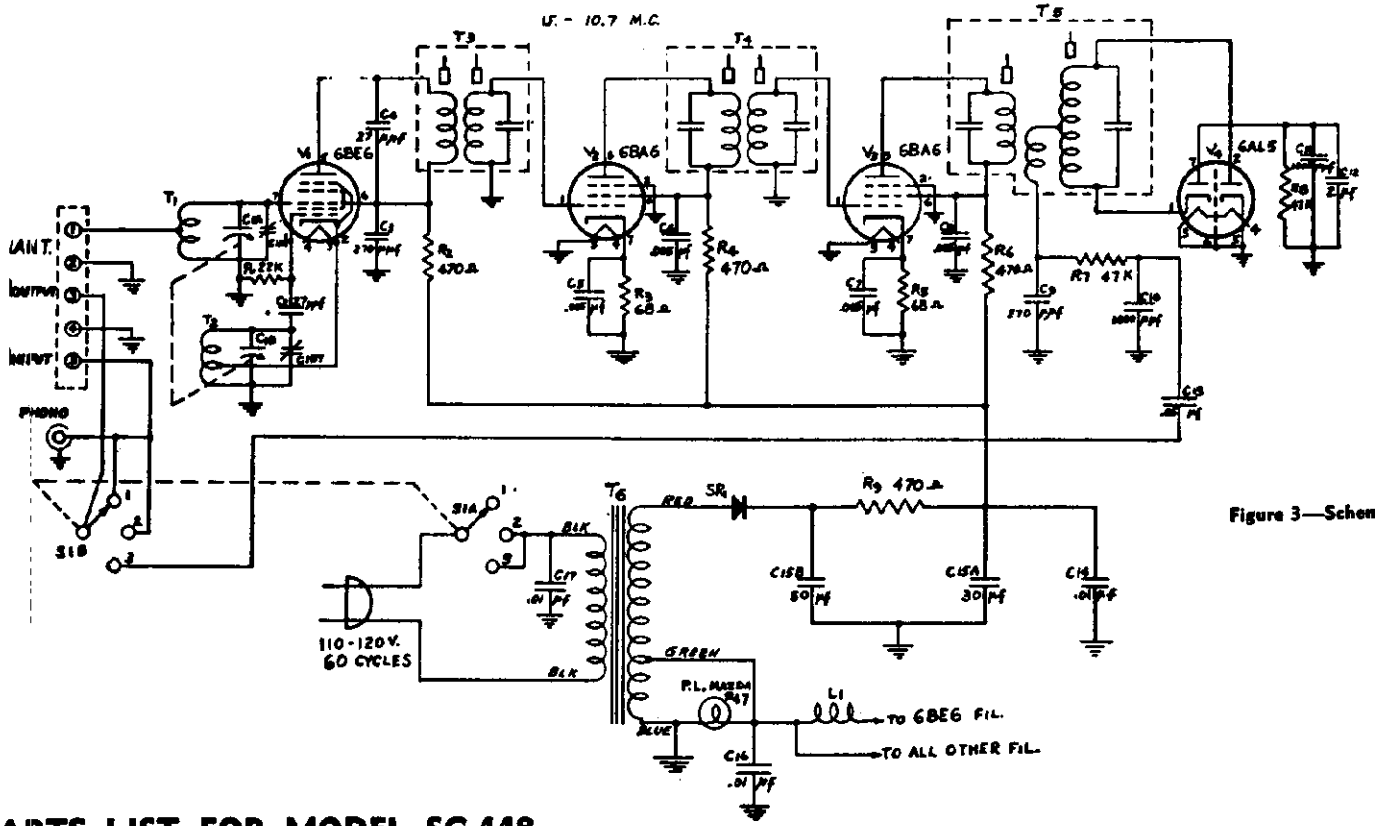

Figure 3—Schematic Diagram

PARTS LIST FOR MODEL SC-448

Schematic Symbol	Part No.	Description
CONDENSERS		
C1A, C1B	2004	Variable Condenser with Pulley
C2, C4	ESC270	27 MMFD Ceramic Condenser
C3, C9	ESM271	270 MMFD Mica Condenser
C5, C7	3006	.005 MFD, 68 Ohm Capristor
C6, C8	BBP502	.005 MFD, 200 Volt Condenser
C10, C11	EBC102	1000 MMFD Ceramic Condenser
C12	3005	2 MFD 50 Volt Electrolytic Condenser
C13	DBP503	.05 MFD, 400 Volt Condenser
C14, C16, C17	DBP103	.01 MFD, 400 Volt Condenser
C15A, C15B	3003	50-30 MFD, 150 Volt Electrolytic Condenser
RESISTORS		
R1	XS223	22K Ohm ½ Watt Resistor
R2, R4, R6, R9	XB471	470 Ohm ½ Watt Resistor
R3, R5		See C5, C7 above
R7, R8	XS473	47K Ohm ½ Watt Resistor

COILS AND TRANSFORMERS		
T1	4017	Antenna Coil
T2	4018	Oscillator Coil
T3	4015	First I. F. Transformer
T4	4014	Second I. F. Transformer
T5	4016	Ratio Detector Transformer
T6	4013	Power Transformer
L1	4005	Filament Choke
MISCELLANEOUS PARTS		
SR1	3004	Selenium Rectifier
S1A, S1B	1004	AC Phono Switch
	6034	Knob, Off-On and Tuning
	6035	Terminal Board, 5 Binderhead Terminals
	6036	Tuning Shaft, with Bushing
	6037	Dial Face
	6039	Dial Window
	6040	Dial Pointer
	3007	Pilot Lamp Socket
	5003	Power Cord
	6041	Cabinet, Mahogany
	6043	Phonograph Receptacle
	5004	Output Cable
	6042	Dial Cord and Spring

MODEL 201

The tuning range of this receiver is 550 to 1600 kilocycles. The dial has the last 0 omitted so that 55 is 550 Kc. and 160 is 1600 Kc.

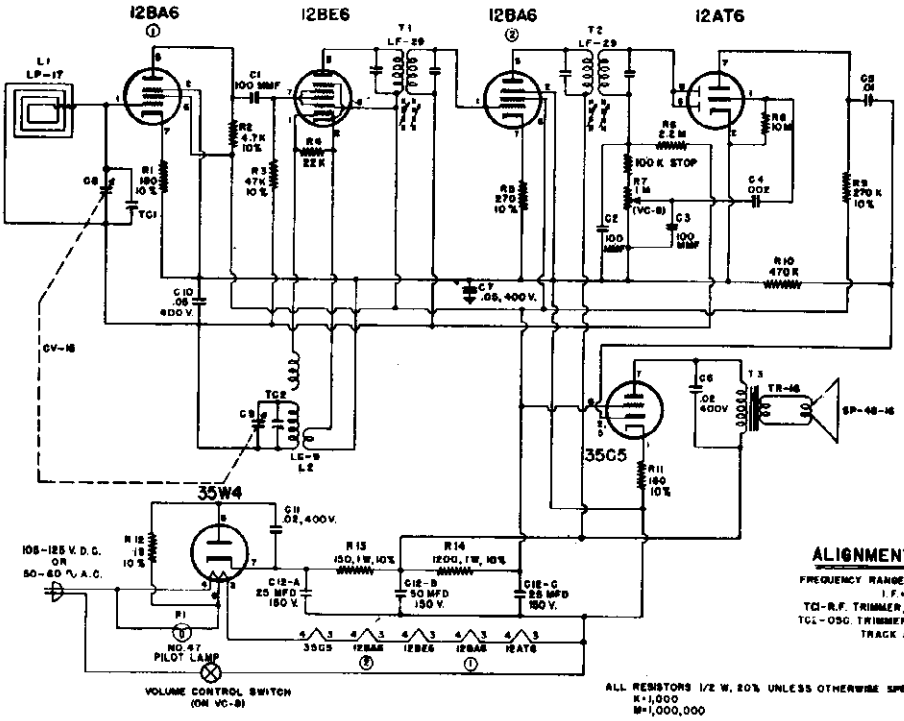

PARTS PRICE LIST

DIAGRAM LETTER	PART NO.	DESCRIPTION
	MS-65	PILOT LIGHT BRACKET
PI	BU-47	PILOT LAMP #47
	SP-48-16	SPKR. 4PM 1 .02 MAG W/O.T. TR-16
C 8,9	CV-15	VARIABLE CONDENSER
L 2	LC-9	OSCILLATOR COIL
TI-2	LF-29	I. F. TRANSFORMER
R 7	VC-8	VOLUME CONTROL
C12,A.B.C.	CE-21	25-50-25 MFD 150 V. ELECT. COND.
	PN-18	POINTER
	LP-17	ANTENNA LOOP
	LD-61	6FT. LINE CORD U.L. APPROVED
C 6, 11	CP-203-1	.02 MFD 400 V. PAPER COND. 7/16X1¼
C 7, 10	CP-503-1	.05 MFD 400 V. PAPER COND. 7/16X1½
C 4	CP-202-2	.002 MFD 400 V. PAPER COND. 3/8X1-3/16
C 5	CP-103-1	.01 MFD 400 V. PAPER COND. 3/8X1¼
C 1,2,3	CM-101-1	100 MMF MICA COND.
R 2	RC-472-2	4700 OHM ½W -10% RESISTOR
R 1, 11	RC-181-2	180 OHM ½W - 10% RESISTOR
R 4	RC-223-1	22,000 OHM ½W -20% RESISTOR
R 12	RC-180-2	18 OHM ½W -10% RESISTOR
R 10	RC-474-1	470,000 OHM ½W -20% RESISTOR
	RC-274-1	270,000 OHM ½W-20% RESISTOR
R 8	RC-106-1	10 MEG ½W -20% RESISTOR
R 6	RC-225-1	2.2 MEG ½W -20% RESISTOR
R 13	RC-151-5	150 OHM 1W -10% RESISTOR
R 5	RC-271-2	270 OHM ½W -10% RESISTOR
R 3	RC-473-2	47,000 OHM ½W-10% RESISTOR
R 14	RC-122-5	1200 OHM 1W -10% RESISTOR
	CB-105	CABINET PLASTIC
	GR-22	PLASTIC GRILLE
	DL-31	PLASTIC DIAL
	KN-20	KNOB

TUBE LOCATION CHART

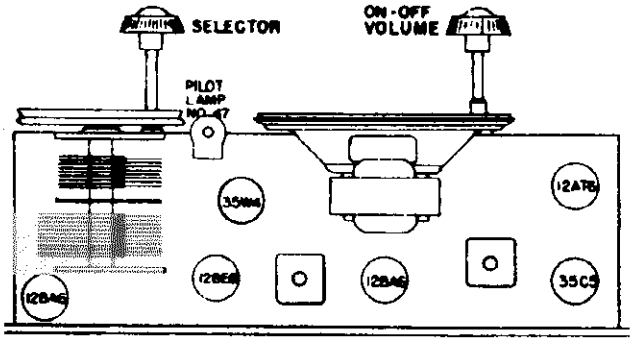

ALIGNMENT PROCEDURE

1. Connect a suitable signal generator to the R.F. section of the tuning condenser. Connect the ground side of the generator to the frame of the condenser Use a .05 condenser to isolate the generator from the R.F. section.
2. Connect a suitable output meter to the voice coil leads of the speaker.
3. With the variable condenser open, apply a 455 Kc. signal. Use the lowest level consistent with good output indication.
4. Adjust I.F. transformer trimmers to this frequency.
5. Apply a 1620 Kc. signal to loop and adjust trimmer to maximum.
6. Set the signal generator to 1400 Kc. Tune the receiver dial to maximum response, then adjust R.F. trimmer to maximum response. This completes the alignment.

©John F. Rider

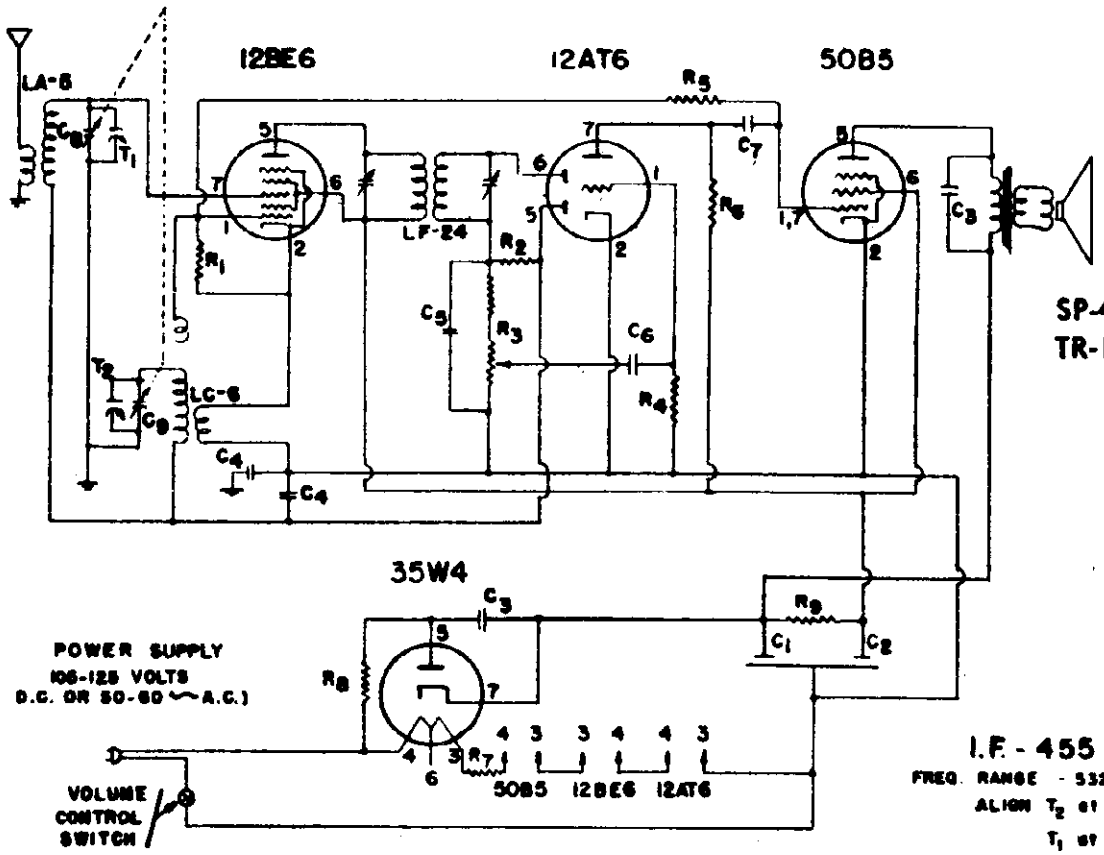

ELECTRICAL SPECIFICATIONS

Power Supply	105–125 Volts D.C. or 50–60 Cycles A.C. 30 Watts	Power Output	1 watt undistorted 1.5 watt maximum
Frequency Range	530 to 1620 kc.	Sensitivity	800 Microvolts at 50 milliwatts Output
Intermediate Freq.	455 kc.	Selectivity	120 kc broad at 1000 times signal at 1000 kc.
Tuning	Two gang capacitor		
Speaker	4 inch PM 3.5 ohm voice coil impedance		

ALIGNMENT PROCEDURE

- Output meter across 3.5 ohm output load.
- Volume control at maximum for all adjustments.
- Align for maximum output. Reduce input as needed to keep output near 0.4 volts.

SIGNAL GENERATOR				SETTING Tuner	ADJUST TRIMMERS TO MAXIMUM OUTPUT (in order shown)
Frequency	Coupling Factor	Connection to Receiver	Ground Connection		
455 kc	.1 mfd	12BE6 Grid	B—	Rotor full open (Plates out of mesh)	Input and output trimmers on IF cans
1620 kc	.1 mfd	12BE6 Grid	B—	Rotor full open (Plates out of mesh)	Oscillator trimmer T2
1400 kc	75 mmf	Hank	B—	1400 kc	Antenna trimmer T1

©John F. Rider

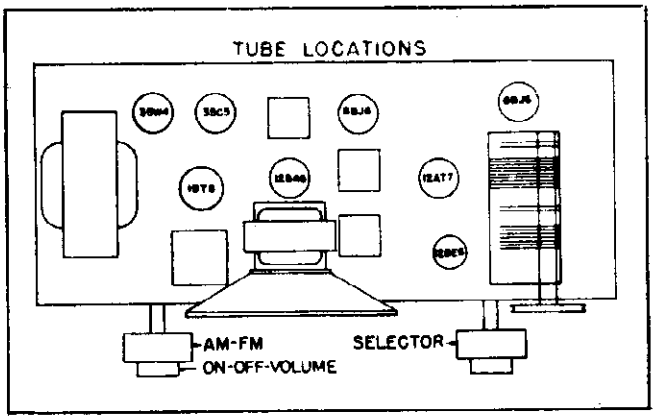

POWER SUPPLY

This receiver is designed to operate on A.C. only. The following operation ratings should be observed:

Voltages.....105 - 125 Volts, A.C.

Frequency.....60 cycles

FREQUENCY RANGES

AM.....535-1620 KC

FM.....87.5-109 MC

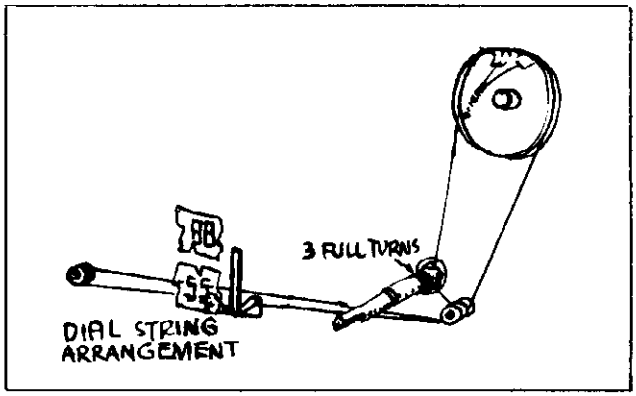

Replacement of Drive Cord

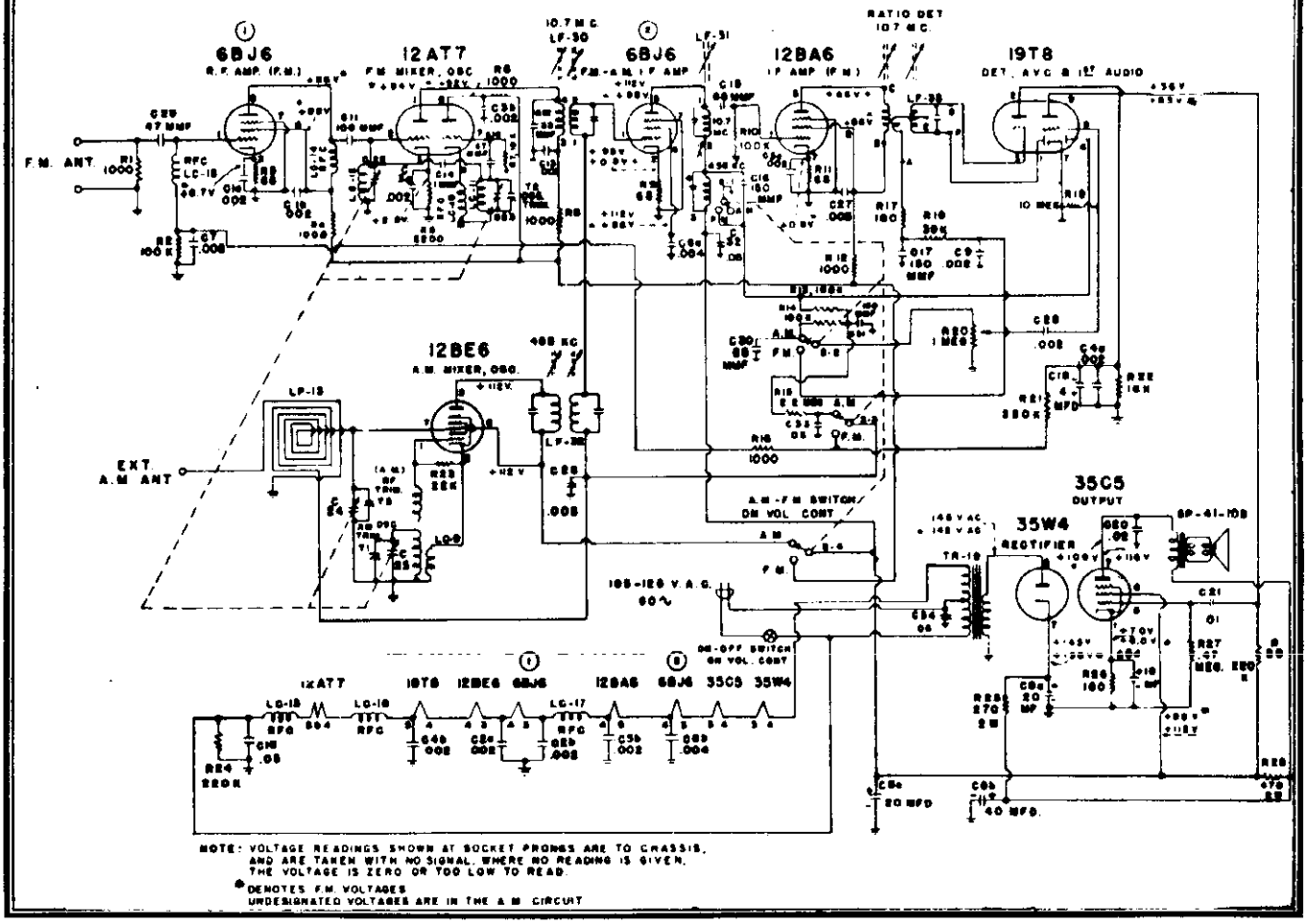

NOTE: VOLTAGE READINGS SHOWN AT SOCKET PRONGS ARE TO CHASSIS, AND ARE TAKEN WITH NO SIGNAL. WHERE NO READING IS GIVEN, THE VOLTAGE IS ZERO OR TOO LOW TO READ.

* DENOTES F.M. VOLTAGES
UNDESIGNATED VOLTAGES ARE IN THE A.M. CIRCUIT

©John F. Rider

MODEL 212

PARTS LIST

SCHEMATIC DIAGRAM REFERENCE	PART NUMBER	DESCRIPTION
	SP-41-108	4" PM SPKR. 1 OZ. MEG. TR-108 MOUNTED TO SPKR.
	SA-24	DRIVE SHAFT
	PN-17	DIAL POINTER
	LF-33	RATIO DETECTOR TRANSFORMER
	LF-30	F.M. I.F. TRANSFORMER
	LF-31	F.M. I.F. TRANSFORMER
	LF-32	A.M. I.F. TRANSFORMER
	LC-12	R.F. COIL - F.M.
	LC-11	OSCILLATOR COIL - F.M.
	LC-13	FILAMENT CHOKE
	LC-14	PLATE CHOKE
	LC-15	GRID CHOKE
	LC-16	CATHODE CHOKE
	LC-9	BROADCAST OSCILLATOR COIL
	TA-2	CERAMIC TRIMMER ASSEMBLY
C-7, C-26, C-27	CC-1-1	CAPACITOR .005 MFD CERAMIC
C3-A, 3-B, C4-A, 4-B, C5-A, 5-B, C2-A, 1-B, C2-A, 2-B	CC-2-1	CAPACITOR 2X.002 MFD CERAMIC
C6-A, 6-B	CC-2-2	CAPACITOR 2X.004 MFD CERAMIC
C-13	CM-102	CAPACITOR .001 MFD MICA
C-12	CMS-033-9	33 MMF SILVER MICA + - 5%
C-16, C-31	CM-151-1	150 MMF MICA + - 20%
C-15, C-30	CC-068-7	68 MMF MICA + - 20%
C-11	CC-101-7	100 MMF INSULATED CERAMIC-20%
C-10, C-29	CC-047-8	47 MMF INSULATED CERAMIC-10%
C-17	CM-151-2	150 MMF MICA - 10%
C-14	CSP-1	CAPACITOR 1 MMF
R-19	RC-106-1	10 MEG. ½W - 20% RESISTOR
R-15	RC-225-1	2.2 MEG. ½W - 20% RESISTOR
R-29	RW-271-8	270 OHMS 2W - 10% RESISTOR
R-29	RW-475-8	470 - 2W -10%
R-21, R-2 R-28	RC-224-1	220,000 ½W - 20%
R-2, R-10, R-13, R-14	RC-104-1	100,000 ½W - 20%
R-1, R-4, R-6, R-18, R-12 R-16	RC-102-1	1000 ½W - 20%
R-3, R-9, R-11	RC-680-2	68 ½W - 10%
R-5	RC-222-2	2200 ½W - 10%
R-7	RC-103-2	10,000 ½W - 10%
R-23	RC-223-1	22,000 ½W - 20%
R-18	RC-393-2	39,000 ½W - 10%
R-27	RC-474-1	470,000 ½W - 20%
R-22	RC-163-3	16,000 ½W - 5%
R-17, R-26	RC-181-2	180 ½W - 10%
C-9, C-28	CP-202-2	.002 MFD 400V PAPER COND.
C-21	CP-103-1	.01 MFD 400V PAPER COND.
C-20	CP-203-20	.02 MFD 800V PAPER COND.
C-18, C-32, C-33, C-34	CP-503-1	.05 MFD 400V PAPER COND.
C-19	CE-19	4 MFD 50 W.V. ELECTROLYTIC COND.
C-8A, B, C, D	CE-18	ELECTROLYTIC COND.
	TR-19	TRANSFORMER ISOLATION
	LP-13	ANTENNA LOOP
	LD-84	2 CONDUCTOR LINE COR. 6 FT.
	MS-15	K TRAN. MOUNTING CLIP
R-20, S-1, S-2, S-3, S-4	VC-17	VOLUME CONTROL & AM FM SWITCH
C-22, 23, 24, 25	CV-17	VARIABLE CONDENSER
	50-17	MIN. WAFER SOCKET WITHOUT SHIELD 7 PINS
	50-17-S	MIN. WAFER SOCKET WITH SHIELD 7 PINS
	50-19-S	MIN. WAFER SOCKET WITH SHIELD 9 PINS
	CB-158	BAKELITE CABINET
	KN-28	KNOB ASSEMBLY
	KN-26	LARGE KNOB
	KN-27	SMALL KNOB
	DL-26	DIAL PLATE
	GR-27	GRILLE (SILK CLOTH ON CARDBOARD)

©John F Ridar

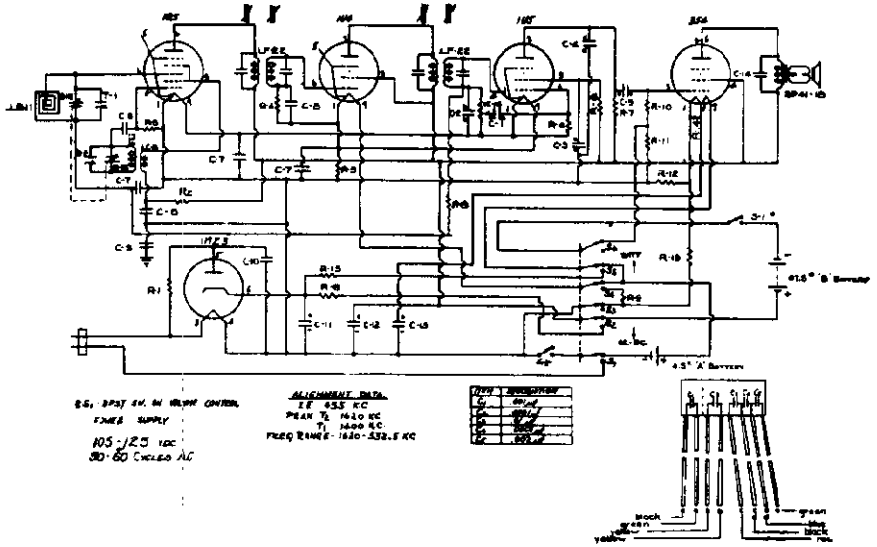

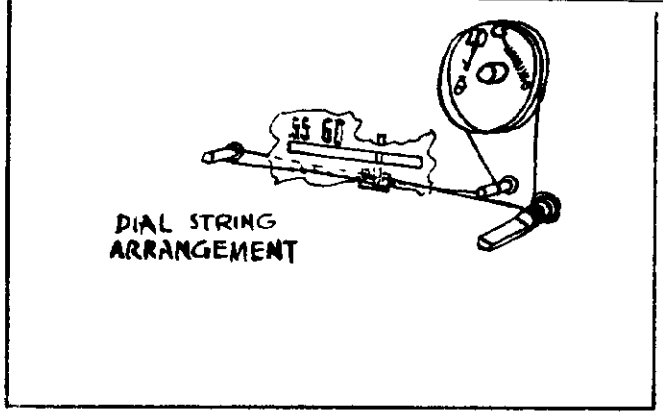

Replacement of Drive Cord

ELECTRICAL SPECIFICATIONS

Power supply	105–125 volts DC or 50–60 cycles AC 15 watts	Antenna	Built-in loop
		Speaker	4 inch PM; voice coil impedance 3.5 ohms.
Batteries	A–4½ volts. 100 ma. B–67½ volts. 8 ma. average	Power Output	80 milliwatts undistorted 140 milliwatts maximum
Frequency Range	535 to 1620 kc.	Sensitivity	500 microvolts per meter for 50 milliwatt output
Intermediate Freq.	455 kc.	Selectivity	55 kc broad at 1000 times signal at 1000 kc.
Tuning	Two-gang capacitor		

ALIGNMENT PROCEDURE

- Output meter across 3.5 ohm output load.
- Volume control at maximum for all adjustments.
- Align for maximum output. Reduce input as needed to keep output near 0.4. volts.

SIGNAL GENERATOR				SETTING TUNER	ADJUST TRIMMERS TO MAXIMUM OUTPUT (in order shown)
Frequency	Coupling Factor	Connection to Receiver	Ground Connection		
455 kc	.1 mfd	1R5 Grid	B—	Rotor full open (Plates out of mesh)	Input and output trimmers on IF cans
1620 kc	.1 mfd	1R5 Grid	B—	Rotor full open (Plates out of mesh)	Oscillator trimmer T2
1500 kc		Radiating Loop		1500 kc●	Antenna trimmer T1

MODEL 213

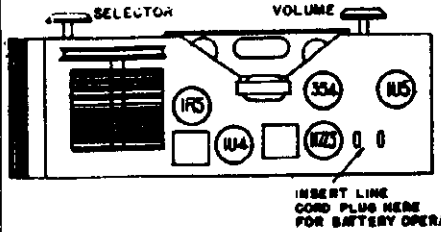

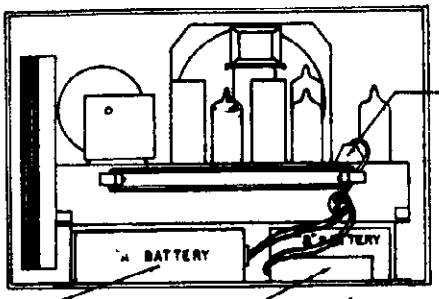

POWER SUPPLY

This receiver is designed to operate on either an A.C. or D.C. power supply. The following operation ratings should be observed:

Voltages.....105-125 Volts, A.C. or D.C.

Frequency ..... 50 to 60 cycles on A.C.

If in doubt as to the voltage and frequency supplied to your home, telephone your local Power Company.

When operating on a D.C. source, it is necessary to insert the power plug with the proper polarity. If the set fails to function after an interval sufficient for the tubes to reach their operating temperature, reverse the power plug in the outlet.

The battery supply to be used with this receiver is as follows:

"A" supply.....4½ volts. Use Aircastle No. 1512; Eveready No. 746; RCA VS 002, Rayovac P-83A; SEARS-6440 or equivalent. Eveready No. 736 or equivalent.

"B" supply.....67½ volts. Use Aircastle No. 1523 or Burgess No. XX45 or Eveready No. 467 or RCA-VS-016 or equivalent.

SCHEMATIC DIAGRAM REFERENCE	PART NUMBER	DESCRIPTION
	IM-10	Bottom Cover
	SP-41-18	4" Spkr. 1 oz. Magnet with Output Trans.
	MS-90	Dial Plate
	SO-17-S	Min. Socket with Shield
	SO-17	Min. Socket without Shield
	VC-16	Vol. Control 1 Meg. with OPST switch
C-15, C-16	CV-15	Variable Cond. with 2½" pulley (Trimmers on variable)
	SA-23	Drive Shaft Assembly
S-2,3,4,5,6,7	SW-11	Battery Switch-6 Pole D.T.
	LP-11	Antenna Loop
	LF-22	IF Transformer
	MS-15	IF Mtg. Clip
	FA-12	"A" Battery Cable
	FA-15	"B" Battery Cable
	LD-83	Line Cord
	LC-8	OSC. Coil
C11,C-12,C-13	CE-17	Elect. Cond. 40-40 MF 150V 200 MF 10V
C-14	CP-502-2	.005 MFD. 400V Paper Plus 40% Minus 15%
C-7	CP-503-2	.05 MFD. 150V Paper Plus 60% Minus 25%
C-9	CP-104-1	.1 MFD. 200V Paper Plus 20% Minus 10%
C-10	CP-503-1	.05 MFD. 400V Paper Plus 60% Minus 25%
C-8	CP-103-2	.01 MFD. 150V Paper Plus 60% Minus 25%
C-6	CM-470-1	.00047 MFD. Mica Cond. Plus/Minus 20%
R-6	RC-682-5	6800 OHMS 1W Plus/Minus 10% Car. Res.
R-14	RC-391-2	390 OHMS ½W Plus/Minus 10% Car. Res.
R-12	RC-152-2	1500 OHMS ½W Plus/Minus 10% Car. Res.
R-5	RC-222-2	2200 OHMS ½W Plus/Minus 10% Car. Res.
R-9	RC-390-2	39 OHMS ½W Plus/Minus 10% Car. Res.
R-13	RC-270-3	27 OHMS ½W Plus/Minus 5% Car. Res.
R-4	RC-106-1	10 Meg. ½W Plus/Minus 20% Car. Res.
R-8	RC-335-1	3.3 Meg. ½W Plus/Minus 20% Car. Res.
R-10	RC-225-1	2.2 Meg. ½W Plus/Minus 20% Car. Res.
R-7	RC-105-1	1W ½W Plus/Minus 20% Car. Res.
R-2	RC-153-1	15000 OHMS ½W Plus/Minus 20% Car. Res.
R-3	RC-104-1	10000 OHMS ½W Plus/Minus 20% Car. Res.
R-11	RC-681-2	680 OHMS ½W Plus/Minus 10% Car. Res.
R-1	RC-180-1	18 OHMS ½W Plus/Minus 20% Car. Res.
	PM-16	Dial Pointer
	BK-25	Back cover with Wire Hinge
	FA-13	Fuse Clip
	EY-10 or EY-7	Eyelet - Stimpson A 526
	HA-5	Handle Assembly (with 2 Springs 2 Cotter pins)
	KN-24	Knobs
	CB-113-A	Plastic Cabinet
	BK-25	Cabinet Back
	HA-2	Molded Handle
	SG-4	Spring
	EY-10	Eyelet

© John F. Rider

ALIGNMENT AND SERVICE DATA

Remove chassis from cabinet for alignment.

A Signal Generator is required having the following frequencies: 455 KC, 1400 KC, 1620 KC. An output meter should be connected across the speaker.

The receiver volume control should be turned to maximum during the I.F. and all subsequent alignments to keep the AVC from working and giving false readings. Keep the generator output as low as possible to prevent overloading.

FIRST STEP: Connect the hot lead from the generator to the ANT. section of the gang condenser, through a .1 MFD condenser. The ground lead from the generator must be connected to the floating ground buss under the chassis. Turn the gang condenser to complete minimum capacity. Adjust the generator to 455KC and adjust the trimmers of the 1st and 2nd I.F. transformers until a maximum reading is noted on the output meter.

SECOND STEP: With the leads from the generator still connected in the same manner, adjust the Signal Generator to 1620 KC. The OSC. trimmer is located on the front of the chassis. Adjust this trimmer until the 1620 KC signal is tuned in.

THIRD STEP: Remove the hot lead of the generator from the ANT section of the gang condenser. Connect this lead to the primary of the antenna coil through a 200 MMFD condenser. Adjust the Signal Generator to 1400 KC. Rotate the tuning control until this signal is tuned in. The ANT trimmer is located on the top of the ANT. section of the gang condenser. Adjust this trimmer until a maximum reading is noted on the output meter. No further adjustment should be necessary, unless the set has been damaged, as the coils and condenser in this receiver have been specially handled at the factory to insure proper alignment at the lower frequencies.

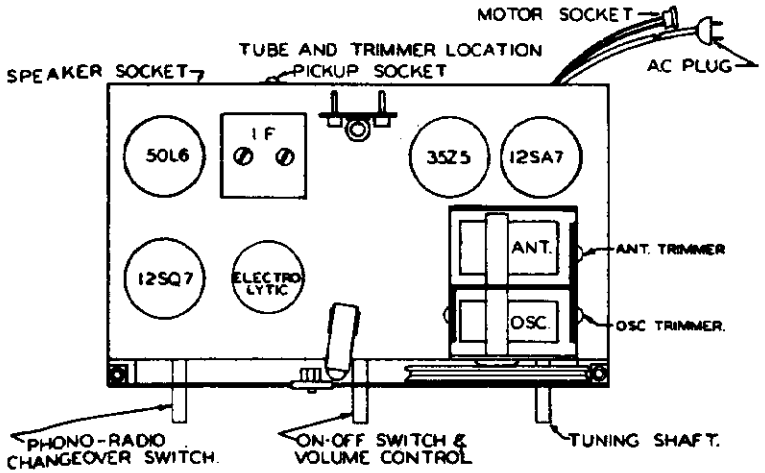

POWER SOURCES: This combination will operate on alternating (AC) current only, of 110 to 125 volts at 60 cycles.

MODEL 5036

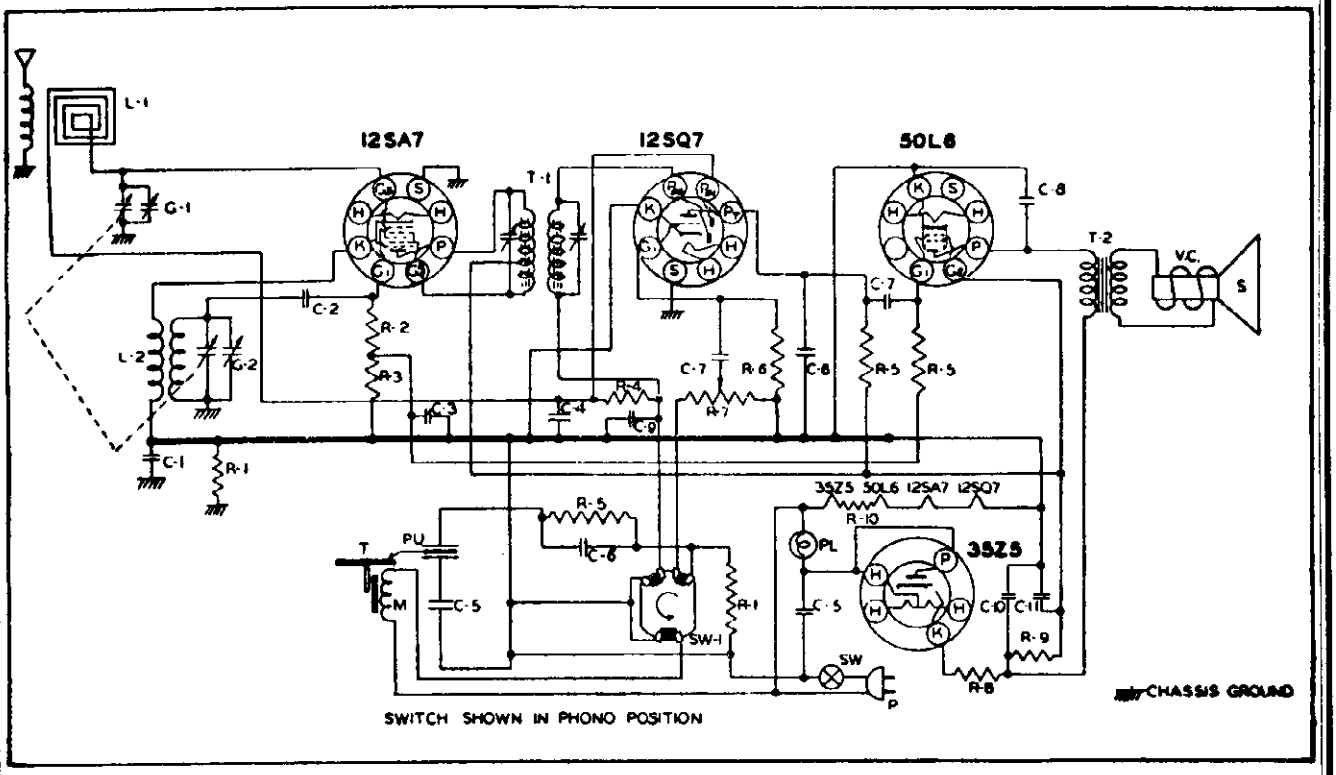

PARTS LIST

PART NO.	SCHEMATIC LOCATION	DESCRIPTION
IR-20	R-1	220M ~ RESISTOR 1/2W 20%
IR-9	R-2	22M ~ RESISTOR 1/2W 20%
IR-10	R-3	47M ~ RESISTOR 1/2W 20%
IR-23	R-4	33MEG ~ RESISTOR 1/2W 20%
IR-11	R-5	470M ~ RESISTOR 1/2W 20%
IR-3	R-6	10MEG ~ RESISTOR 1/2W 20%
VC-4	R-7	1 MEG. VOLUME CONTROL
IR-17	R-8	33 ~ RESISTOR 1/2 W 20%
IR-25	R-9	2200 ~ RESISTOR 1 W 10%
IR-41	R-10	47 ~ RESISTOR 1 W 10%
PC-8	C-1	.1MFD. CONDENSER 400V
MC-4	C-2	50MMFD MICA
PC-4	C-3	.25MFD. CONDENSER 200V
PC-2	C-4	.05MFD. CONDENSER 200V
PC-5	C-5	.05MFD. CONDENSER 400V
MC-5	C-6	500MMFD. MICA

PART NO.	SCHEMATIC LOCATION	DESCRIPTION
PC-10	C-7	.005 MFD. CONDENSER 400V
PC-7	C-8	.01MFD. CONDENSER 400V
MC-2	C-9	100MMFD. MICA
EC-12	C-10	40MFD.
	C-11	20MFD. ELECTROLYTIC
	SW	SWITCH ON VOLUME CONTROL
SW-1	SW-1	RADIO-PHONO. SWITCH
LI-8	T-1	I.F. TRANSFORMER
SPK-10	T-2	OUTPUT TRANSFORMER
	VC	VOICE COIL
	S	4" PM SPEAKER
LL-19	L-1	LOOP ANT.
LO-14	L-2	OSC: COIL
M-2	M-2	110V 60 CYCLES MOTOR
PU-5	PU	TONE ARM WITH L-75 CARTRIDGE
PB-1	PL	#47 PILOT BULB
CO-1A	P	LINE CORD
TT-2	T	8" TURNTABLE
GC-6	G-1	GANG CONDENSER
	G-2	

©John F. Rider

ALIGNMENT DATA

Remove the chassis from the cabinet. A Signal Generator with the following frequencies is required: 455 KC, 1400 KC and 1720 KC.

The receiver volume control should be turned to maximum during the I.F. and all subsequent alignments to keep the A.V.C. from working and giving false readings. Turn the tone control to complete left hand position. Keep the generator output as low as possible to prevent overloading.

Connect an output meter across the voice coil of the speaker.

Connect a 20,000 ohm resistor across the loop connector terminals to reflect the proper loop impedance.

FIRST STEP: Connect the hot lead from the generator to the "ANT." section of the gang condensor through a .1 MFD. condensor. The ground lead must be connected to the floating ground buss under the chassis. Turn the gang condenser to complete minimum capacity. Adjust the generator to 455 KC and adjust the trimmers of the 1st and 2nd I.F. transformers until a maximum reading is noted on the output meter.

SECOND STEP: With the leads from the generator connected in the same manner as in I.F. alignment, adjust the signal generator to 1720 KC. The "OSC." trimmer is located on the front section of the gang condenser. Adjust this trimmer until the signal is tuned in. The gang condenser should be at complete minimum capacity for this setting.

THIRD STEP: Remove the generator leads from the chassis. Remove the 20,000 ohm resistor from the loop connector terminals. Reinstall the chassis in the cabinet, connect the loop leads, motor plug and phono pickup leads.

Connect the generator leads to a transmitting loop, made of a few turns of wire, and loosely couple to the receiver loop antenna which is located on the back end of the cabinet. Adjust the generator to 1400 KC. Rotate the tuning control until this signal is tuned in. The "ANT." trimmer is located on the rear section of the gang condenser. Adjust this trimmer until a maximum signal is noted on the output meter.

No further adjustment should be necessary, unless the receiver has been damaged, as the coils and tuning condenser have been specially handled at the factory to insure proper alignment at the lower frequencies.

HOW TO ORDER REPAIR PARTS

Always give the part No. (No. printed on the part if different from that shown on list), and the name of the part. When No. is not available, give complete description of part. Be sure to always give the Model No. and Catalog No. The Model No. will be found on either the metal plate at the rear of the chassis or on a printed label which may be on the chassis or cabinet.

MODEL-6042 SD-77 U

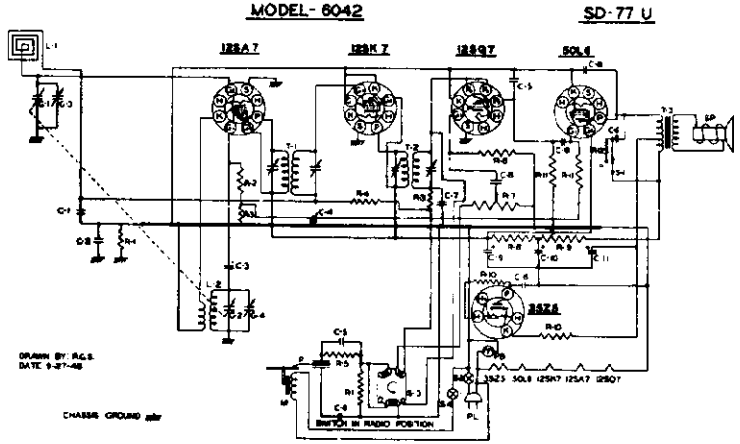

TUBE AND TRIMMER LOCATION

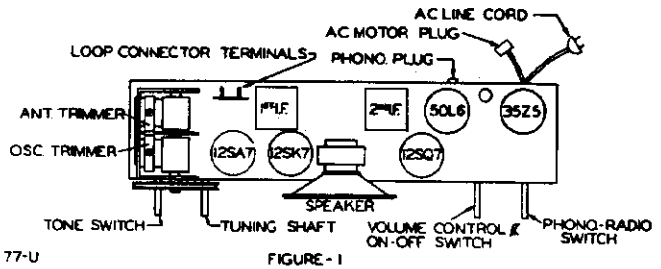

TL-77-U FIGURE-1

Schematic Location	Part No.	Description
C-1	PC-2	.05 MFD. COND. 200 V.
C-2	PC-8	.1 MFD. COND. 400 V.
C-3	MC-4	.00005 MFD. MICA COND.
C-4	PC-4	.25 MFD. COND. 200 V.
C-5	MC-5	.0005 MFD. MICA COND.
C-6	PC-5	.05 MFD. COND. 400 V.
C-7	MC-2	.0001 MFD. MICA COND.
C-8	PC-7	.01 MFD. COND 400 V.
C-9) C-10)	EC-14	20 MFD.) 40 MFD.) 150 W.V. ELECTROLYTIC
C-11)		40 MFD.)
R-1	IR-20	220,000 OHM RESISTOR 1/2 W 20%
R-2	IR-9	22,000 OHM RESISTOR 1/2 W 20%
R-3	IR-10	47,000 OHM RESISTOR 1/2 W 20%
R-4	IR-23	3.3 MEG OHM RESISTOR 1/2 W 20%
R-5	IR-12	1 MEG OHM RESISTOR 1/2 W 20%
R-6	IR-13	2.2 MEG OHM RESISTOR 1/2 W 20%
R-7	VC-4	1 MEG VOLUME CONTROL

Schematic Location	Part No.	Description
R-8	IR-1	470 OHM RESISTOR 1/2 W 20%
R-9	IR-42	1000 OHM RESISTOR 1 W 10%
R-10	IR-17	33 OHM RESISTOR 1/2 W 20%
R-11	IR-11	470,000 OHM RESISTOR 1/2 W 20%
R-12	IR-15	2,200 OHM RESISTOR 1/2W20%
G1) G2)	GC-5	GANG CONDENSER
T1	LI-6	INPUT IF TRANSFORMER
T2	LI-7	OUTPUT IF TRANSFORMER
L1	LL-17	LOOP ANT.
L2	LO-14	OSC. COIL
SP	SPK-12	5" P.M. SPEAKER
S-1	SW-2	TONE SWITCH
S-3	SW-1	PHONO. RADIO SWITCH
M	AC-M-7	RECORD CHANGER MOTOR
P	AC-PU-7	CRYSTAL PICKUP ARM WITH CARTRIDGE S-1
PB	PB-2	110 V. 7½ W. PILOT BULB
PL	CO-2	LINE CORD (9 FT. LONG)

MODEL 10003

ALIGNMENT PROCEDURE

1. Connect a suitable signal generator to the R.F. section of the tuning condenser. Connect the ground side of the generator to the frame of the condenser. Use a .05 condenser to isolate the generator from the R.F. section.
2. Connect a suitable output meter to the voice coil leads of the speaker.
3. With the variable condenser open, apply a 455 Kc. signal. Use the lowest level consistent with good output indication.
4. Adjust trimmers A, B, C, and D for maximum response, reducing the input signal as required to keep the output meter on scale.
5. Connect the generator to terminals A & G through a 400 ohm dummy antenna. Apply a 1720 Kc. signal and adjust trimmer E to maximum.
6. Set the signal generator to 1400 Kc. Tune the receiver dial to maximum response, then adjust trimmer F to maximum response. This completes the alignment.

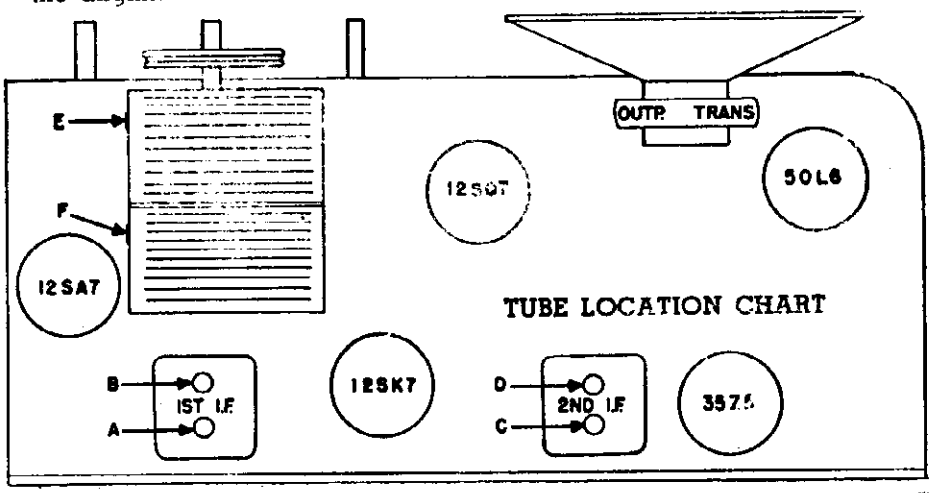

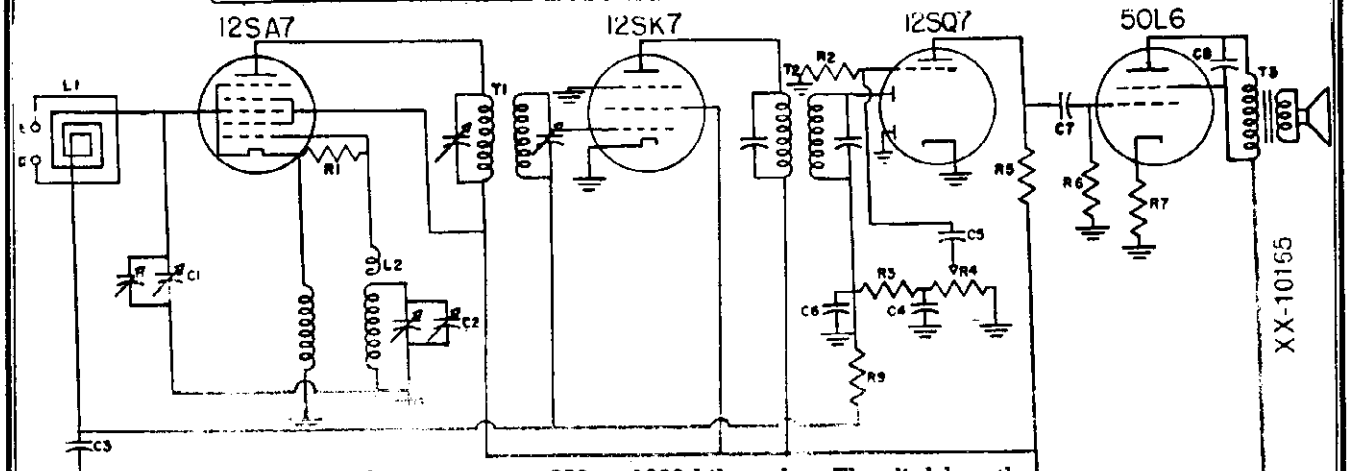

The tuning range of this receiver is 550 to 1600 kilocycles. The dial has the last 0 omitted so that 55 is 550 Kc. and 160 is 1600 Kc.

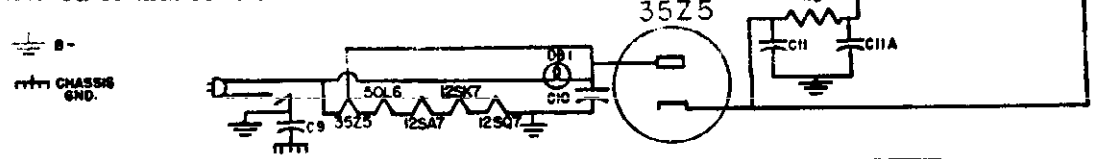

CIR. SYM	PART NO.	DESCRIPTION
C1-7	CV-10022	CONDENSER VARIABLE
C3	CP-12503	" PAPER .05 MFD 200 VOLTS.
C4-6	CM-15251	" MICA 250 MMF
C8-7	CP-12502	" PAPER .005 MFD 200 VOLTS.
C8	CP-12203	" " .02 MFD 200 VOLTS.
C9	CP-14154	" " .15 MFD 400 VOLTS.
C10	CP-14503	" " .05 MFD 400 VOLTS.
C11-11A	CL-10010	" ELECT. 50-50 MFD 150 VOLTS.
DB1	DB-10000	DIAL LIGHT BULB NO. 47
L1	AL-10021	ANTENNA LOOP
L2	TRC-10013	OSCILLATOR COIL

CIR. SYM	PART NO.	DESCRIPTION
R1	RC-12202	RESISTOR CARBON 22,000 OHM 1/4 W.
R2	RC-11005	" " 10 MEG OHM 1/4 W.
R3	RC-11003	" " 10,000 OHM 1/4 W.
R4	VC-12110	VOLUME CONTROL 1 MEG
R5	RC-12203	RESISTOR CARBON 220,000 OHM 1/4 W.
R6	RC-14703	" " 470,000 OHM 1/4 W.
R7	RC-31500	" " 150 OHM 1/2 W.
R8	RC-41001	" " 1000 OHM 1 W.
R9	RC-12204	" " 2.2 MEG OHM 1/4 W.
T1	TS-10020	TRANSFORMER I.F. 1ST.
T2	TS-10021	" I.F. 2ND.
T3	TO-10000	" OUTPUT

© John F. Rider

MODEL 10005

ALIGNMENT PROCEDURE

1. Connect suitable signal generator to AM R.F. section of the tuning condenser. Connect ground side of generator to chassis. Isolate the generator with .05 condenser from AM R.F. section.

2. Connect a suitable output meter to the voice coil loads of the speaker.

3. With the band switch in AM or counter clockwise position and the gang open, apply a 455 Kc signal. Use the lowest level consistent with good output indication.

4. Adjust slugs E-F-I-J for maximum response reducing the input signal as required to keep the output meter on scale.

5. Connect a vacuum tube voltmeter from test point "A" to chassis -- isolate both sides with 1 meg resistor.

6. Turn band switch to FM or clockwise position. Connect generator to FM mixer grid. Apply a 10.7 Mc signal. Use the lowest level consistent with good output indication.

7. Adjust slugs G-H-K-L-N for maximum output as indicated on vacuum tube voltmeter.

8. Across "A" and "C" (test points indicated on schematic) balance M (top slug) to zero voltage on meter.

9. Return band switch to AM position and connect generator to Terminals "A" "G" (on rear of chassis). Apply a 1720 signal and set trimmer "B" to maximum; set signal generator to 1400 Kc and tune set to maximum response, adjust trimmer "D" to maximum response.

10. Return band switch to FM position and open gang. Connect suitable generator to Terminals #2 and #3 (use 300 ohm dummy).

11. Adjust trimmer "A" for maximum response.

12. Set generator to 105 Mc and tune set to maximum response. Adjust trimmer "C" to maximum by rocking gang as the trimmer is adjusted. This completes alignment.

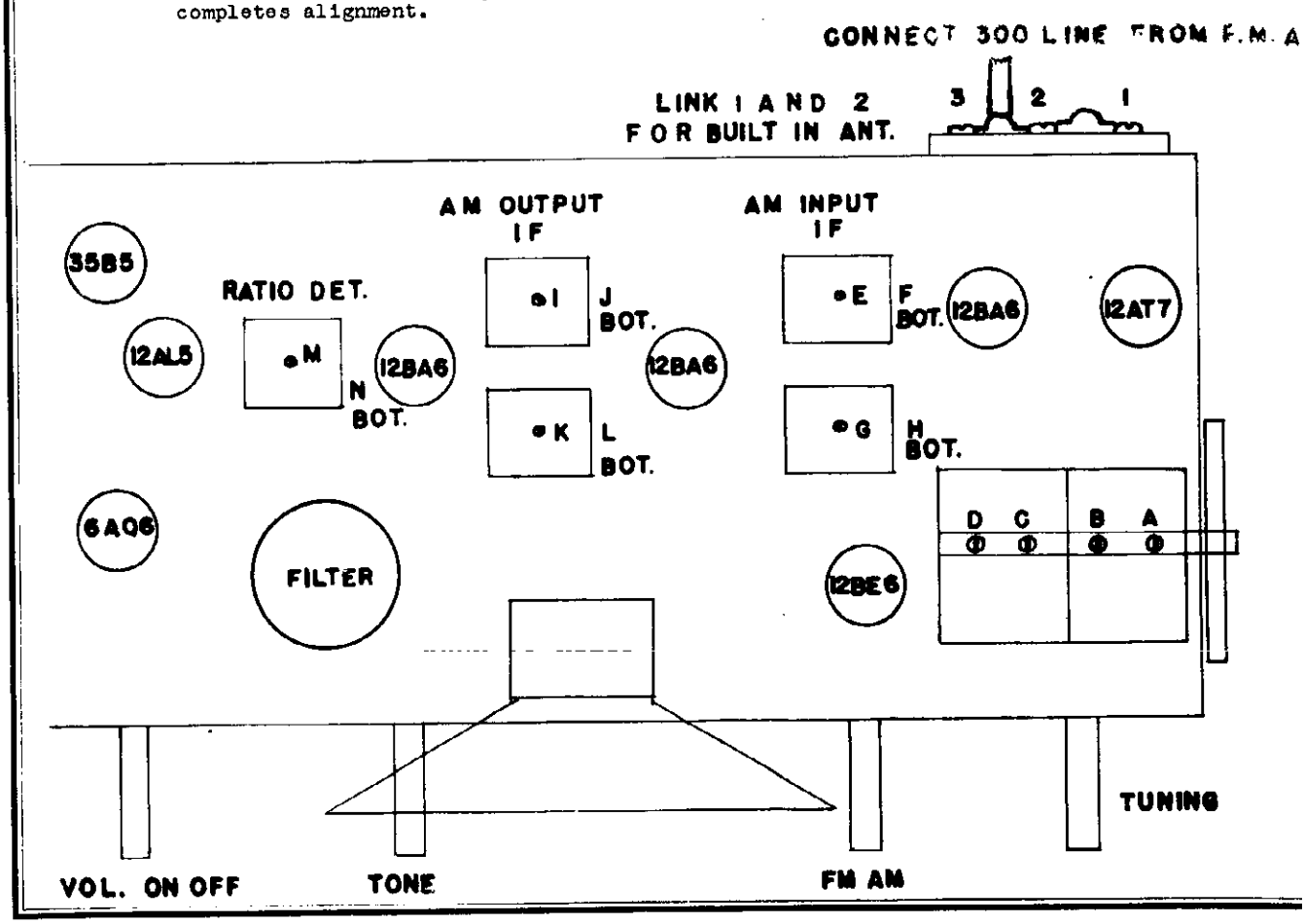

©John F. Rider

MODEL 10005

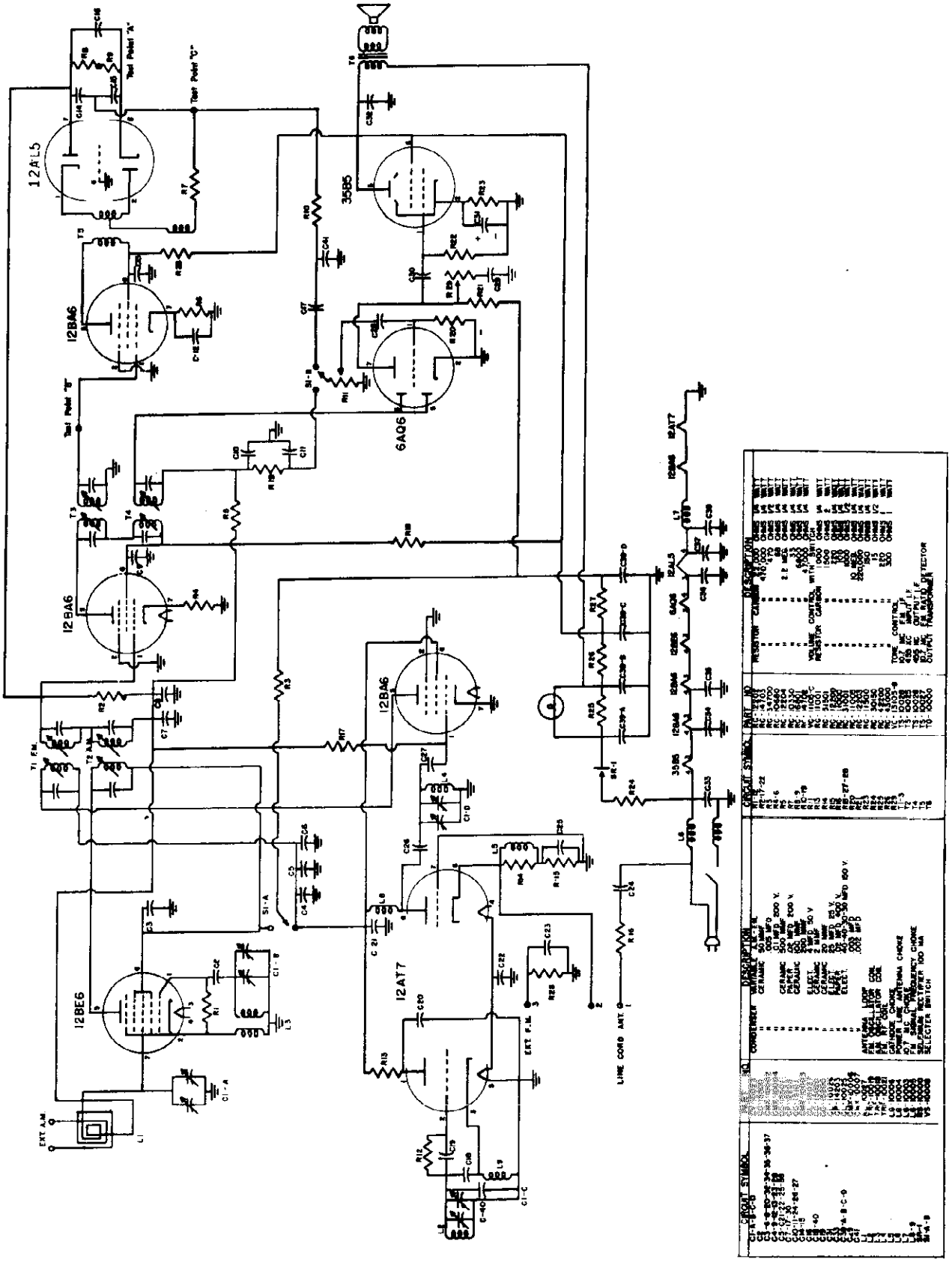

©John F. Rider

©John F. Rider

OPERATION

Insert the power cord plug into the AC outlet receptacle. Turn knob "A" to the right until a click is heard. After a warm-up period of approximately 30 seconds, the set will be in operating condition. Advance the Volume Control (Knob A) to the right until the desired volume level is attained. Tuning knob (Knob D) setting is indicated by means of a beam of light through the translucent knob. Tone of the set is varied by turning knob "B", to the left for more bass, and to the right for more treble tones. The phono will be put in operation by setting knob "C" to its extreme right hand position. Never carry the set by its handle without first locking tone arm to the stand provided for it.

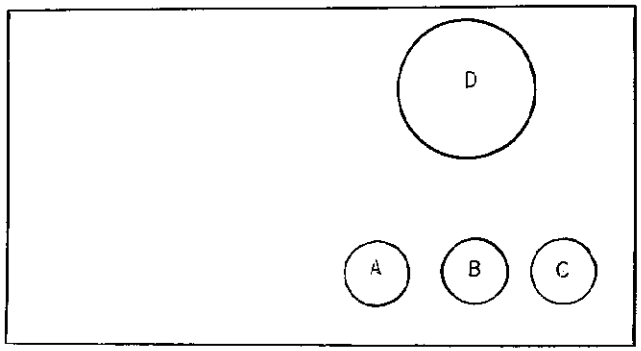

CIR. SYM.	PART NO.	DESCRIPTION
C1, A–B	CV-10010	CONDENSER VARIABLE
C2	CPP-12103	" PAPER .01 MFD 200 V.
C3	CMP-15251	" MICA 250 MMF 500 V.
C4 C10	CPP-14308	" PAPER .05 MFD 400 V.
C5	CPP-12202	" " .002 MFD 200 V.
C6 C12	CPP-14103	" " .01 MFD 400 V.
C7 C11	CPP-12802	" " .005 MFD 200 V.
C9	CL-10007	" ELECTROLYTIC 50/30MFD 150 V.
L1	ALP-10004A	ANTENNA LOOP
L2	TRO-10014	OSCILLATOR COIL
L3	TRF-10020	INTERSTAGE I.F. COIL
R1 R11	RC-12002	RESISTOR CARBON 20,000 OHM 1/4 WATT
R2	VC-11107	TONE CONTROL 1 MEGOHM
R3	RC-12204	RESISTOR CARBON .22 MEGOHM 1/4 WATT
R4	RC-11500	" " 150 OHMS 1/4 WATT
R5	RC-11803	" " 180,000 OHM 1/4 WATT
R6	RC-31001	" " 1000 OHM 1/2 WATT
R7	RC-11005	" " 10 MEGOHM 1/4 WATT
R8	RC-12201	" " 220,000 OHM 1/4 WATT
R9	RC-14703	" " 470,000 OHM 1/4 WATT
R10	VC-10105	VOLUME CONTROL WITH SWITCH
T1	TS-10017X	IF TRANSFORMER
T2	TO-10000	OUTPUT TRANSFORMER

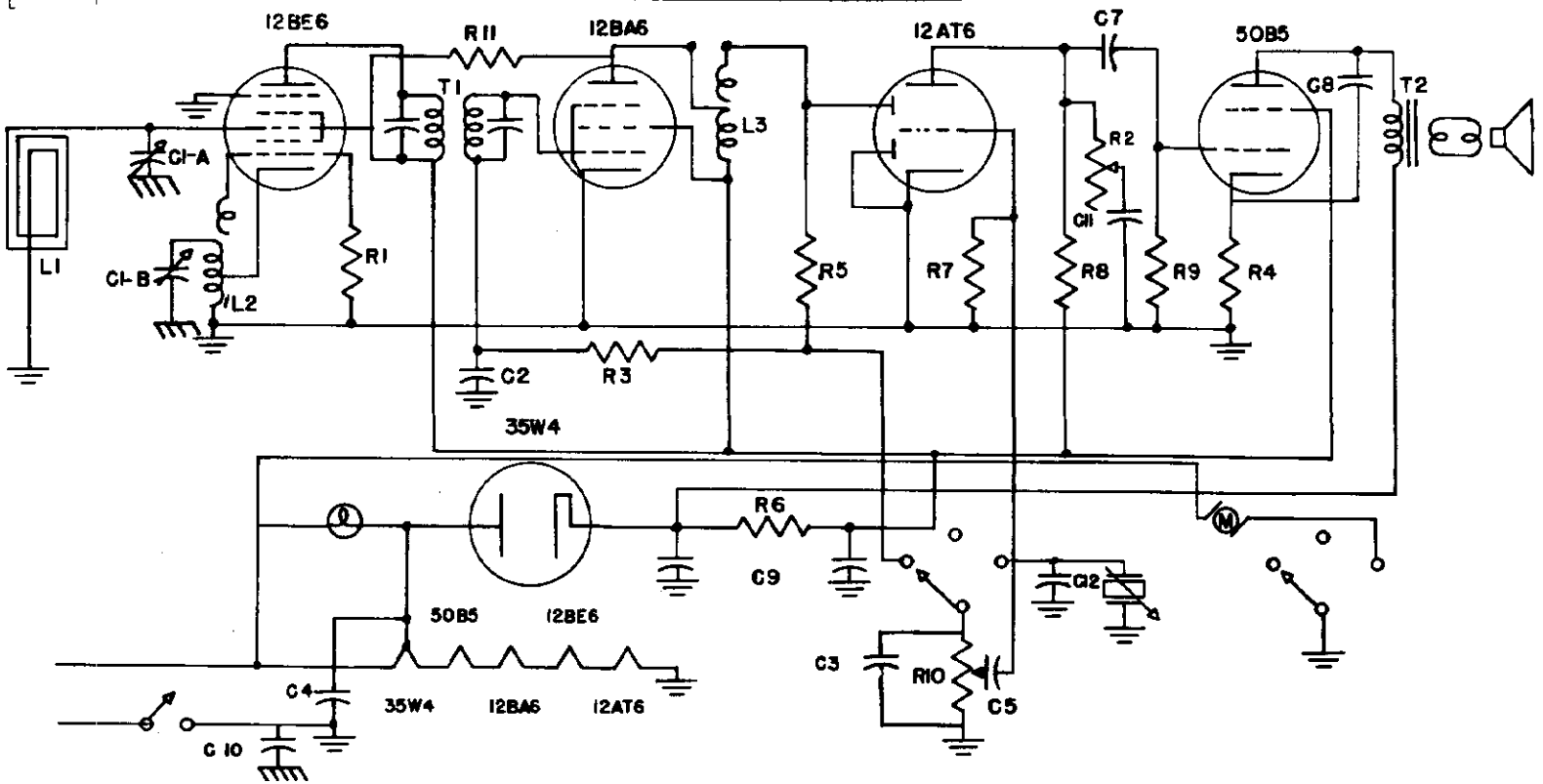

©John F Rider

It covers the standard AM broadcast frequency range, 540-1600 kilocycles (KC) and the FM frequency range from 88 to 108 megacycles (MC) and comes to you equipped with a built-in loop antenna for use on AM reception. Also included is a flexible folded dipole antenna attached to the inside of the cabinet for use on FM reception.

SPECIFICATIONS

Power Supply	117 volts AC 60 cycle
Power Consumption	95 Watts
Frequency Range FM	88 to 108 MC.
Frequency Range AM	540 to 1600 KC.
I.F. frequency FM	10.7 MC.
I.F. frequency AM	455 KC.
Band width, FM, Ratio detector	360 KC.
Band width, FM, 2nd I.F.	280 KC.
Band width, FM, 1st I.F.	240 KC.
Band width, FM, Converter	180 KC.
Tubes	10
Rectifiers	Selenium, 150 ma.
Speaker	10" P.M.

The tubes used are as follows:

12BA6	FM, R.F. Amplifier
12BE6	FM, Converter
12BA6	FM, 1st I.F. Amplifier
12BA6	FM, 2nd I.F. Amplifier
12BA6	FM, 3rd I.F. Amplifier
6AL5	FM, Ratio detector
12BE6	AM, Converter
12BA6	AM, I.F. Amplifier
12AT6	AM, Detector-AVC-1st audio
50L6GT	Power output
A83-463	Selenium rectifier (2)
No. 47	Pilot lights (2)

SERVICE NOTES

GENERAL

Due to the high frequencies at which FM signals are received the service man must use great care when servicing these sets. Extreme caution must be used regarding the moving of component parts in the R.F. and oscillator circuits of the receiver as those circuits can be detuned in this manner.

If it becomes necessary to replace components such as resistors and condensers they must be replaced with parts of the same size, type, voltage rating and tolerance as called for in the parts list.

When installing new parts they should be placed in the same position as the original, and the leads should be cut to the same length.

ALIGNMENT NOTES

This receiver has been thoroughly inspected and tested at the factory, using the most modern test equipment available, such as FM sweep generators and Oscilloscopes. All I.F. circuit adjustments have been sealed at the factory and no attempt should be made to realign these circuits unless it is absolutely necessary.

CAUTION: If realignment is necessary be sure the proper test equipment is available, as listed below, before proceeding with the alignment procedure as given on page 5. This receiver employs the "double peak" type of I.F. circuits, and can not be satisfactorily aligned with conventional AM equipment. Visual alignment procedures must be used.

EQUIPMENT USED FOR ALIGNMENT

AM Signal generator

FM Sweep generator.

Oscilloscope.

Vacuum tube voltmeter.

Insulated screw driver.

Dummy antenna:
- .1 MFD condenser
- .00025 MFD mica condenser
- 150 ohm resistor (2)

Output meter.

ALIGNMENT PROCEDURE

STEPS	RECEIVER DIAL SETTING	BAND SWITCH POSITION	SIGNAL GENERATOR FREQUENCY	DUMMY ANTENNA	SIGNAL GENERATOR CONNECTIONS	OUTPUT INDICATOR	TRIMMER ADJUSTMENT	TRIMMER FUNCTION	REMARKS
1	Minimum capacity	AM	455 KC 400 cycle AM	.1 MFD	High side—Grid of AM converter tube (12BE6) Low side—Chassis	Output Meter across voice coil	T5A, T5B T6A, T6B	AM I.F.	Adjust for maximum output
2	"	"	1600 KC 400 cycle AM	.00025 MFD	"	"	C2C	AM Oscillator	Adjust for maximum output
3	1400 KC	"	1400 KC 400 cycle AM	"	High side—One ant. terminal Low side—Other ant. terminal	"	C36 (on back)	AM Antenna	Adjust for maximum output
4	Any position where there is no station interference.	FM	10.7 MC unmodulated .1 volt output.	.1 MFD	High side—Grid of 3rd I.F. amplifier tube (12BA6) Low side—Chassis	Connect V.T.V.M. to plate of Ratio detector tube, pin 2 (6AL5)	T4B	Ratio detector primary	Adjust for maximum negative voltage, about —5 volts
5	"	"	10.7 MC 400 cycle 30% Modulation. (See note A)	"	"	Connect scope to audio take off point (across C30)	T4A	Ratio detector secondary	Adjust for a balanced pattern on scope. See Fig. 4.
6	"	"	"	"	High side—Grid of 2nd I.F. amplifier tube (12BA6) Low side—Chassis	Connect scope across 100K ohm grid return resistor of 3rd I.F. (R16)	T3A, T3B	FM 3rd I.F.	Adjust for maximum gain and best pattern on scope. See Fig. 5 (See note "B" below)
7	"	"	"	"	High side—Grid of 1st I.F. amplifier tube (12BA6) Low side—Chassis	"	T2A, T2B	FM 2nd I.F.	Adjust for maximum gain and best pattern on scope. See Fig. 6.
8	"	"	"	"	High side—Plate of FM R.F. tube, pin 5 (12BA6) Low side—Chassis	"	T1A, T2B	FM 1st I.F.	Adjust for maximum gain and best pattern on scope. See Fig. 7.
9	109 MC	"	109 MC 400 cycle 30% modulation. (22.5 KC Deviation)	150 ohms in each lead.	High side—One ant. terminal Low side—Other ant. terminal	Connect output meter across voice coil	C2B	FM Oscillator	Adjust for maximum output (remove AVC ground)
10	103 MC	"	103 MC 400 cycle 30% modulation. (22.5 KC Deviation)	"	"	"	C2A	FM R.F.	Adjust for maximum output
11	100 MC	"	100 MC 400 cycle 30% modulation. (22.5 KC Deviation)	"	"	"	L1	FM Antenna	Adjust for maximum output

NOTE A: When aligning the FM I.F. circuits, keep the out put from the signal generator as low as possible.

NOTE B: The AVC circuit must be grounded to the chassis when aligning the FM I.F. circuits.

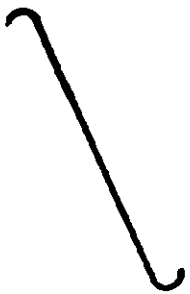

FIGURE 4

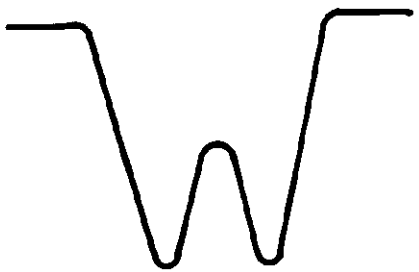

FIGURE 5

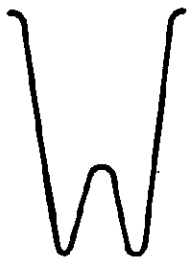

FIGURE 6

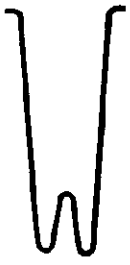

FIGURE 7

MODEL 121104

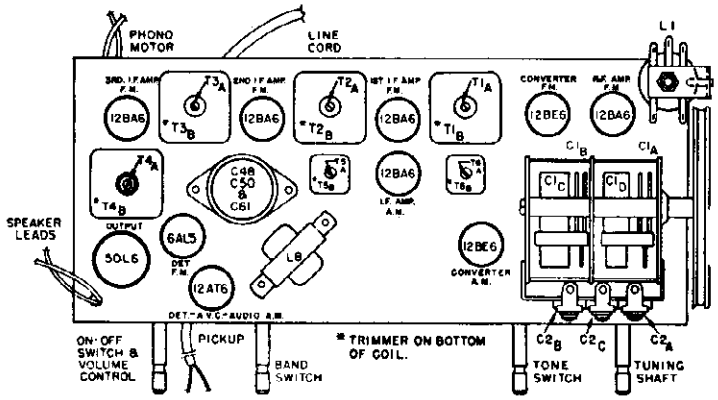

FIG. 1 TUBE AND TRIMMER LOCATIONS

VOLTAGE CHART

TUBE No.	PIN 1	PIN 2	PIN 3	PIN 4	PIN 5	PIN 6	PIN 7	PIN 8
12BE6 AM—Converter	—6	0	29ac	17ac	100	100	0	
12BA6 AM—I.F. Amp.	0	0	75ac	63ac	100	100	1	
12AT6 AM—Det.-AVC-Audio	0	0	17ac	6ac	0	0	30	
12BA6 FM—R.F. Amp.	0	0	29ac	39ac	100	95	1	
12BE6 FM—Converter	0	0	6ac	18ac	95	95	0	
12BA6 FM—1st I.F. Amp.	0	0	39ac	50ac	95	95	1	
12BA6 FM—2nd I.F. Amp.	0	0	50ac	63ac	95	95	1	
12BA6 FM—3rd I.F. Amp.	0	0	18ac	31ac	95	95	1	
6AL5 FM—Ratio detector	0	—3	0	6ac	—4	0	0	
50L6GT Power output	0	31ac	225	100	0	30	80ac	6.5

All voltage readings are taken from tube pin to chassis.

All measurements are made with no signal, using a 20,000 ohm per volt meter.

AC input voltage must be maintained at 117 volts for accurate readings.

AC voltages shown are at 1000 ohms per volt.

All voltages shown are approximate.

RESISTANCE CHART

TUBE No.	PIN 1	PIN 2	PIN 3	PIN 4	PIN 5	PIN 6	PIN 7	PIN 8
12BE6 AM—Converter	20K	1	27	18	25K	25K	3 meg.	
12BA6 AM—I. F. Amp.	2 meg.	0	70	62	25K	25K	70	
12AT6 AM—Det.-AVC-Audio	10 meg.	0	18	5	470K	120K	540K	
12BA6 FM—R.F. Amp.	1 meg.	0	27	40	25K	25K	70	
12BE6 FM—Converter	20K	0	5	18	25K	25K	22K	
12BA6 FM—1st I.F. Amp.	220K	0	40	50	25K	25K	70	
12BA6 FM—2nd I.F. Amp.	220K	0	50	62	25K	25K	70	
12BA6 FM—3rd I.F. Amp.	100K	0	18	28	25K	25K	70	
6AL5 FM—Ratio Detector	0	25K	0	5	750K	0	750K	
50L6GT Power output	0	28	25K	25K	450K	250K	70	150

All resistance readings are taken from tube pin to chassis.

Due to manufacturing tolerance on component parts, resistance readings may vary as much as 20%.

All readings are shown in ohms unless otherwise noted.

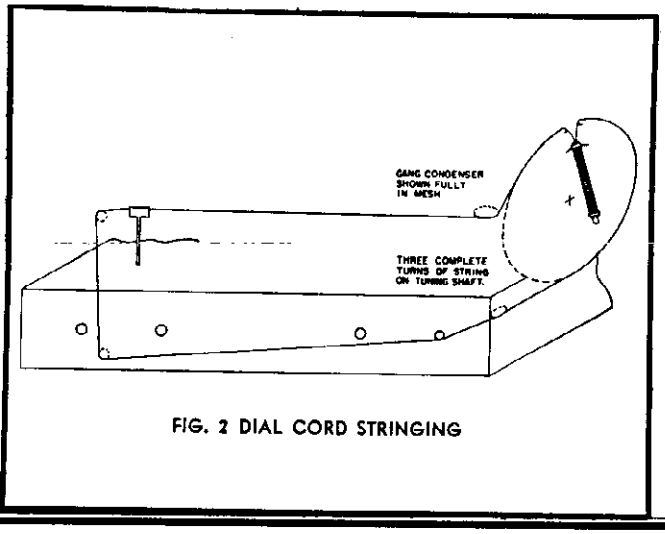

FIG. 2 DIAL CORD STRINGING

©John F. Rider

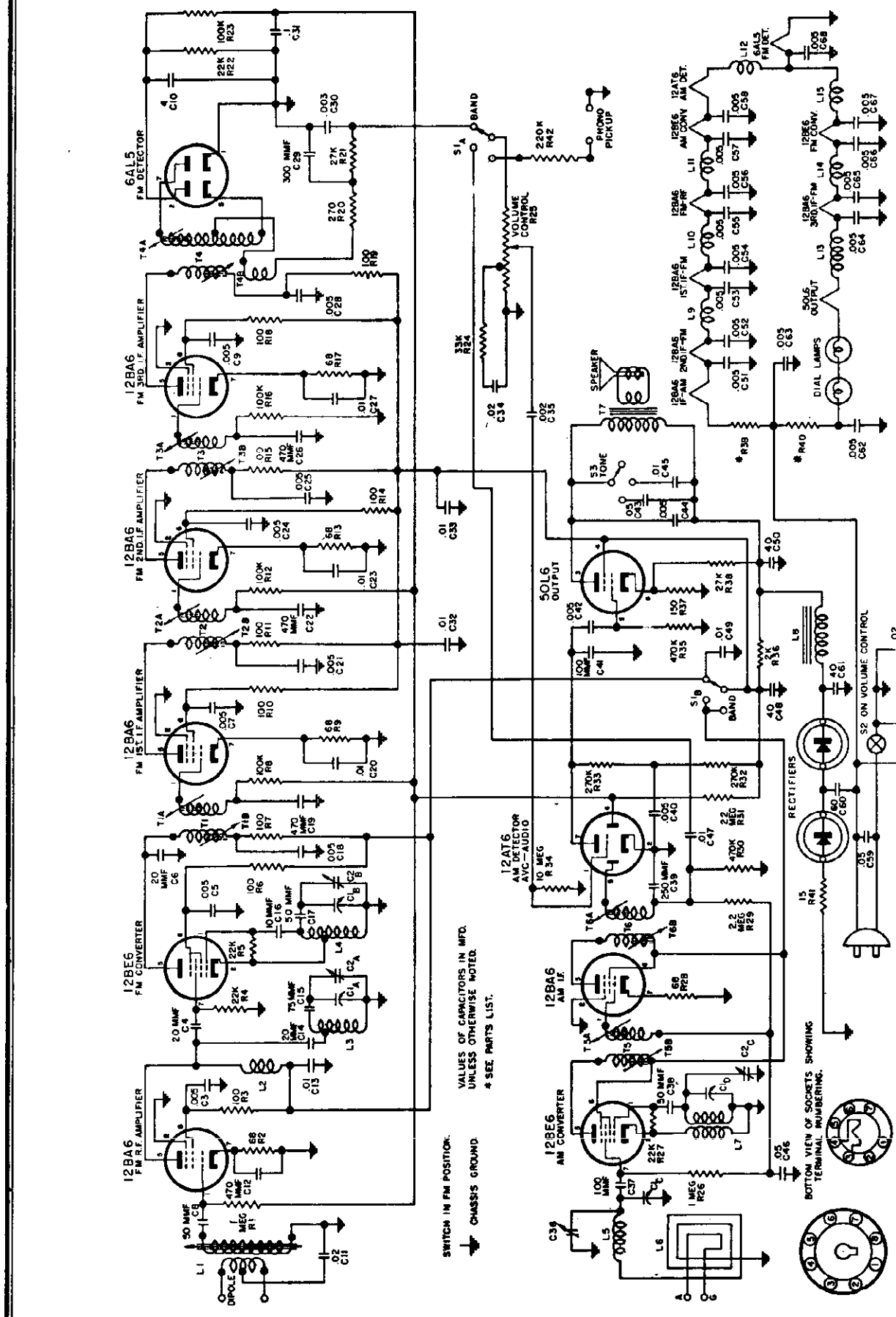

FIG. 3 SCHEMATIC DIAGRAM

RECORD CHANGER: See Milwaukee Model 11200, Page RCD.CH. 20-1

© John F. Rider

PARTS LIST

Schematic Diagram Reference	Part No.	Description
C1A, C1B		
C1C, C1D	C19-191	Variable Condenser
C2A	A20-144	FM—R.F. Trimmer
C2B		FM—Oscillator Trimmer
C2C		AM—Oscillator Trimmer
C3, C5, C7, C9, C18, C21, C23, C24, C25, C28, C40, C51 C52, C53, C54 C55, C56, C57 C58, C62, C64 C65, C66, C67	A16-177	035 MFD Ceramic Condenser (Centralab No. DA048 or Equiv.)
C68		
C4, C14	A15-198	20 MMF 20% Ceramic Condenser (Erie Style "A" or Equiv.)
C6	A15-193	20 MMF 20% Ceramic Condenser (Erie Style K or Equiv.)
C8, C17	A15-194	50 MMF 10% Ceramic Condenser (Erie Style K or Equiv.)
C10	A18-273	4 MFD 150 Volt Elec. Condenser
C34, C69	A16-150	.02 MFD 400 Volt Tubular Condenser
C12, C19 C22, C26	A15-200	470 MMF 20% Mica Condenser
C13, C32, C33 C47 C49	A16-165	.01 MFD 200 V Tubular Condenser
C15	A15-195	75 MMF 10% Ceramic Condenser (Erie Style K or Equiv.)
C16	A15-197	10 MMF 10% Ceramic Condenser (Erie Style A or Equiv.)
C20, C23, C27	A16-163	.01 MFD 120 V Molded Paper Condenser
C42, C44	A16-153	.005 MFD 600 Volt Tubular Condenser
C29	A15-199	300 MMF 20% Mica Condenser
C30	A16-180	.003 MFD 200 V Molded Paper Condenser
C31	A16-157	.1 MFD 200 V Tubular Condenser
C35	A16-178	.002 MFD 200 V Molded Paper Condenser
C36	A20-139	AM Antenna Trimmer
C37	A15-190	100 MMF 20% Mica Condenser
C38	A15-191	50 MMF 20% Mica Condenser
C39	A15-176	250 MMF 20% Mica Condenser
C41	A15-196	100 MMF 20% Ceramic Condenser (Erie Style K or Equiv.)
C46 C69, C43, C59	A16-158	.05 MFD 400 V Tubular Condenser
C45	A16-156	.01 MFD 400 V Tubular Condenser
C48	A18-284	40 MFD 150 Volt Electrolytic Condenser
C50		40 MFD 300 Volt Electrolytic Condenser
C61		40 MFD 300 Volt Electrolytic Condenser
C60	A18-285	60 MFD 150 Volt Electrolytic Condenser
R1, R26	A60-668	1 Megohm Resistor 20% ½ Watt
R2, R13, R17, R28, R9	A60-742	68 Ohm Resistor 10% ½ Watt
R3, R6, R7, R10, R19, R11 R14, R15, R18	A60-743	100 Ohm Resistor 20% ½ Watt
R4, R5, R22 R27	A60-744	22 K Ohm Resistor 10% ½ Watt
R8, R12, R16 R23	A60-727	100 K Ohm 20% ½ Watt
R20	A60-723	270 Ohm 20% ½ Watt Resistor
R21	A60-745	27 K Ohm 10% ½ Watt Resistor
R24	A60-748	33 K Ohm 10% ½ Watt Resistor
R25	B24-173	Volume Control with Switch
R29, R31	A60-726	2.2 Megohm 20% ½ Watt
R30, R35	A60-731	47OK Ohm ½ Watt Resistor 20%
R32, R33	A60-747	27OK Ohm 20% ½ Watt
R34	A60-728	10 Megohm 20% ½ Watt
R36	A60-739	2K Ohm Resistor 5% 10 Watt
R37	A60-741	150 Ohm 10% 1 Watt Resistor
R38	A60-740	27K Ohm Resistor 10% 2 Watt
R39	A60-734	Special Compensating Resistor (Order from Spiegel)
R40	A60-735	Special Compensating Resistor (Order from Spiegel)
R41	A60-738	15 Ohm — Glassohm 10% 3 Watt Resistor
R42	A60-667	220K Ohm Resistor 20% ½ Watt
L1	SB10-488	Antenna Coil, FM
L3	B10-489	R. F. Coil, F.M.
L4	B10-490	Oscillator Coil, F. M.
L5	A10-504	Antenna Loading Coil
L6	S84-245	Loop Antenna Assembly
L7	B10-491	Oscillator Coil, A. M.
L8	A33-225	Filter Choke
L2, L9, L10 L11, L12, L14 L15	A33-226	Filament Choke, 11 mh.
L13	A33-227	Filament Choke
S1A, S1B	A69-178	Switch, FM-AM-PHONO
S2		Switch, ON-OFF, (on volume control)
S3	A26-125	Tone Control
T1	SA10-493	1st I. F. Transformer, F. M.
T2 T3	SC10-494	2nd & 3rd I. F. Transformer, F.M.
T4	SC10-492	Ratio detector transformer, F.M.
T5	A10-499	1st I. F. transformer, A. M.
T6	A10-500	2nd I. F. transformer, A. M.
T7	A80-241	Output Transformer
	B39-285	Drum, for Variable Condenser
	A23-153	Line Cord
	A83-463	Selenium rectifier, 150 ma.
	A75-63	Tuning shaft
	C79-358	Speaker, 10" P.M.
	A21-111	Cover, for Compensating Resistors
	SB82-53	FM Antenna Assembly, Dipole
	C67-532	Dial Scale
	C83-471	Retainer, Dial Scale
	B83-482	Dial Diffusing Plate
	A58-68	Dial Pointer
	A52-263	Knob, Tuning
	A52-260	Knob, Tone
	A52-261	Knob, ON-OFF-VOLUME
	A52-262	Knob, PH-AM-FM
	11200	Milwaukee Automatic Record Changer

©John F. Rider

©John F. Rider

117 volts 60 cycles AC current.

It covers the standard AM broadcast frequency range, 540-1600 kilocycles (KC) and the FM frequency range from 88 to 108 megacycles (MC) and comes to you equipped with a built-in loop antenna for use on AM reception. Also included is a flexible folded dipole antenna attached to the inside of the cabinet for use on FM reception.

SPECIFICATIONS

Power Supply	117 volts AC 60 cycle
Power Consumption	95 Watts
Frequency Range FM	88 to 108 MC.
Frequency Range AM	540 to 1600 KC.
I.F. frequency FM	10.7 MC.
I.F. frequency AM	455 KC.
Band width, FM, Ratio detector	360 KC.
Band width, FM, 2nd I.F.	280 KC.
Band width, FM, 1st I.F.	240 KC.
Band width, FM, Converter	180 KC.
Tubes	10
Rectifiers	Selenium, 150 ma.
Speaker	10" P.M.

The tubes used are as follows:

12BA6	FM, R.F. Amplifier
12BE6	FM, Converter
12BA6	FM, 1st I.F. Amplifier
12BA6	FM, 2nd I.F. Amplifier
12BA6	FM, 3rd I.F. Amplifier
6AL5	FM, Ratio detector
12BE6	AM, Converter
12BA6	AM, I.F. Amplifier
12AT6	AM, Detector-AVC-1st audio
50L6GT	Power output
A83-463	Selenium rectifier (2)
No. 47	Pilot lights (2)

SERVICE NOTES

GENERAL

Due to the high frequencies at which FM signals are received the service man must use great care when servicing these sets. Extreme caution must be used regarding the moving of component parts in the R.F. and oscillator circuits of the receiver as those circuits can be detuned in this manner.

If it becomes necessary to replace components such as resistors and condensers they must be replaced with parts of the same size, type, voltage rating and tolerance as called for in the parts list.

When installing new parts they should be placed in the same position as the original, and the leads should be cut to the same length.

ALIGNMENT NOTES

This receiver has been thoroughly inspected and tested at the factory, using the most modern test equipment available, such as FM sweep generators and Oscilloscopes. All I.F. circuit adjustments have been sealed at the factory and no attempt should be made to realign these circuits unless it is absolutely necessary.

CAUTION: If realignment is necessary be sure the proper test equipment is available, as listed below, before proceeding with the alignment procedure as given on page 5. This receiver employs the "double peak" type of I.F. circuits, and can not be satisfactorily aligned with conventional AM equipment. Visual alignment procedures must be used.

EQUIPMENT USED FOR ALIGNMENT

AM Signal generator

FM Sweep generator.

Oscilloscope.

Vacuum tube voltmeter.

Insulated screw driver.

Dummy antenna:
- .1 MFD condenser
- .00025 MFD mica condenser
- 150 ohm resistor (2)

Output meter.

MODEL 121124

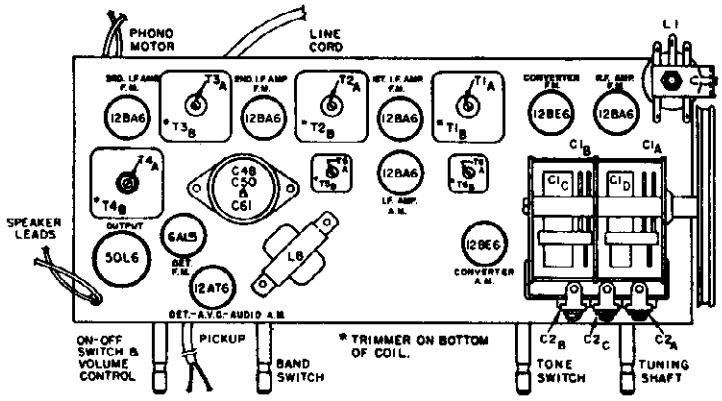

FIG. 1 TUBE AND TRIMMER LOCATIONS

VOLTAGE CHART

TUBE No.	PIN 1	PIN 2	PIN 3	PIN 4	PIN 5	PIN 6	PIN 7	PIN 8
12BE6 AM—Converter	—6	0	29ac	17ac	100	100	0	
12BA6 AM—I.F. Amp.	0	0	75ac	63ac	100	100	1	
12AT6 AM—Det.-AVC-Audio	0	0	17ac	6ac	0	0	30	
12BA6 FM—R.F. Amp.	0	0	29ac	39ac	100	95	1	
12BE6 FM—Converter	0	0	6ac	18ac	95	95	0	
12BA6 FM—1st I.F. Amp.	0	0	39ac	50ac	95	95	1	
12BA6 FM—2nd I.F. Amp.	0	0	50ac	63ac	95	95	1	
12BA6 FM—3rd I.F. Amp.	0	0	18ac	31ac	95	95	1	
6AL5 FM—Ratio detector	0	—3	0	6ac	—4	0	0	
50L6GT Power output	0	31ac	225	100	0	30	80ac	6.5

All voltage readings are taken from tube pin to chassis.

All measurements are made with no signal, using a 20,000 ohm per volt meter.

AC input voltage must be maintained at 117 volts for accurate readings.

AC voltages shown are at 1000 ohms per volt.

All voltages shown are approximate.

RESISTANCE CHART

TUBE No.	PIN 1	PIN 2	PIN 3	PIN 4	PIN 5	PIN 6	PIN 7	PIN 8
12BE6 AM—Converter	20K	1	27	18	25K	25K	3 meg.	
12BA6 AM—I. F. Amp.	2 meg.	0	70	62	25K	25K	70	
12AT6 AM—Det.-AVC-Audio	10 meg.	0	18	5	470K	120K	540K	
12BA6 FM—R.F. Amp.	1 meg.	0	27	40	25K	25K	70	
12BE6 FM—Converter	20K	0	5	18	25K	25K	22K	
12BA6 FM—1st I.F. Amp.	220K	0	40	50	25K	25K	70	
12BA6 FM—2nd I.F. Amp.	220K	0	50	62	25K	25K	70	
12BA6 FM—3rd I.F. Amp.	100K	0	18	28	25K	25K	70	
6AL5 FM—Ratio Detector	0	25K	0	5	750K	0	750K	
50L6GT Power output	0	28	25K	25K	450K	250K	70	150

All resistance readings are taken from tube pin to chassis.

Due to manufacturing tolerance on component parts, resistance readings may vary as much as 20%.

All readings are shown in ohms unless otherwise noted.

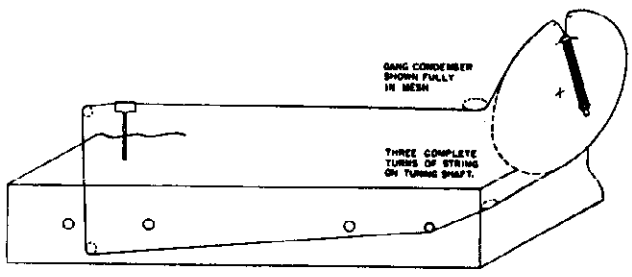

FIG. 2 DIAL CORD STRINGING

©John F. Rider

MODEL 121124

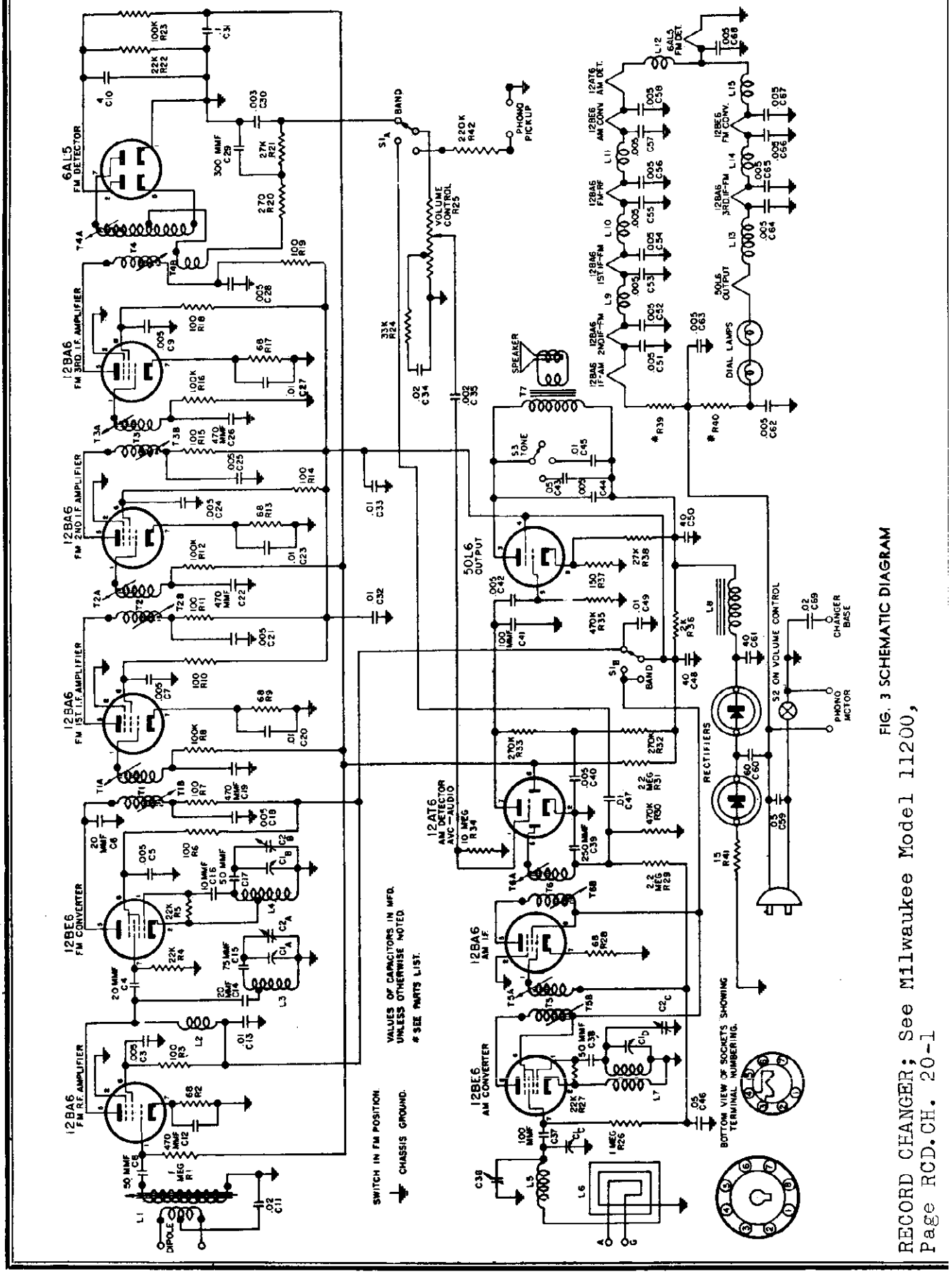

FIG. 3 SCHEMATIC DIAGRAM

RECORD CHANGER; See Milwaukee Model 11200, Page RCD.CH. 20-1

© John F. Rider

©John F. Rider

ALIGNMENT PROCEDURE

STEPS	RECEIVER DIAL SETTING	BAND SWITCH POSITION	SIGNAL GENERATOR FREQUENCY	DUMMY ANTENNA	SIGNAL GENERATOR CONNECTIONS	OUTPUT INDICATOR	TRIMMER ADJUSTMENT	TRIMMER FUNCTION	REMARKS
1	Minimum capacity	AM	455 KC 400 cycle AM	.1 MFD	High side—Grid of AM converter tube (12BE6) Low side—Chassis	Output Meter across voice coil	T5A, T5B T6A, T6B	AM I.F.	Adjust for maximum output
2	"	"	1600 KC 400 cycle AM	.00025 MFD	"	"	C2C	AM Oscillator	Adjust for maximum output
3	1400 KC	"	1400 KC 400 cycle AM	"	High side—One ant. terminal Low side—Other ant. terminal	"	C36 (on back)	AM Antenna	Adjust for maximum output
4	Any position where there is no station interference.	FM	10.7 MC unmodulated .1 volt output.	.1 MFD	High side—Grid of 3rd I.F. amplifier tube (12BA6) Low side—Chassis	Connect V.T.V.M. to plate of Ratio detector tube, pin 2 (6AL5)	T4B	Ratio detector primary	Adjust for maximum negative voltage, about —5 volts
5	"	"	10.7 MC 400 cycle 30% Modulation. (See note A)	"	"	Connect scope to audio take off point (across C30)	T4A	Ratio detector secondary	Adjust for a balanced pattern on scope. See Fig. 4.
6	"	"	"	"	High side—Grid of 2nd I.F. amplifier tube (12BA6) Low side—Chassis	Connect scope across 100K ohm grid return resistor of 3rd I.F. (R16)	T3A, T3B	FM 3rd I.F.	Adjust for maximum gain and best pattern on scope. See Fig. 5 (See note "B" below)
7	"	"	"	"	High side—Grid of 1st I.F. amplifier tube (12BA6) Low side—Chassis	"	T2A, T2B	FM 2nd I.F.	Adjust for maximum gain and best pattern on scope. See Fig. 6.
8	"	"	"	"	High side—Plate of FM R.F. tube, pin 5 (12BA6) Low side—Chassis	"	T1A, T2B	FM 1st I.F.	Adjust for maximum gain and best pattern on scope. See Fig. 7.
9	109 MC	"	109 MC 400 cycle 30% modulation. (22.5 KC Deviation)	150 ohms in each lead.	High side—One ant. terminal Low side—Other ant. terminal	Connect output meter across voice coil	C2B	FM Oscillator	Adjust for maximum output (remove AVC ground)
10	103 MC	"	103 MC 400 cycle 30% modulation. (22.5 KC Deviation)	"	"	"	C2A	FM R.F.	Adjust for maximum output
11	100 MC	"	100 MC 400 cycle 30% modulation. (22.5 KC Deviation)	"	"	"	L1	FM Antenna	Adjust for maximum output

NOTE A: When aligning the FM I.F. circuits, keep the output from the signal generator as low as possible.

NOTE B: The AVC circuit must be grounded to the chassis when aligning the FM I.F. circuits.

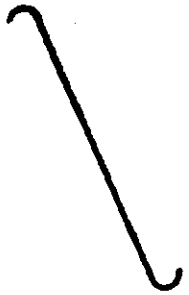

FIGURE 4

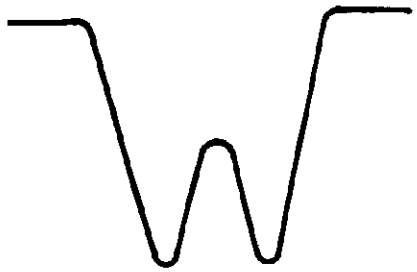

FIGURE 5

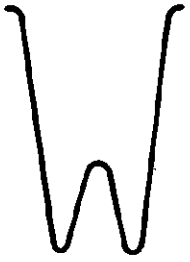

FIGURE 6

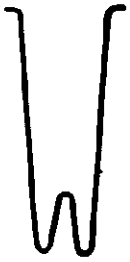

FIGURE 7

PARTS LIST

Schematic Diagram Reference	Part No.	Description
R4, R5, R22 R27	A60-744	22 K Ohm Resistor 10% ½ Watt
R8, R12, R16 R23	A60-727	100 K Ohm 20% ½ Watt
R20	A60-723	270 Ohm 20% ½ Watt Resistor
R21	A60-745	27 K Ohm 10% ½ Watt Resistor
R24	A60-748	33 K Ohm 10% ½ Watt Resistor
R25	B24-173	Volume Control with Switch
R29, R31	A60-726	2.2 Megohm 20% ½ Watt
R30, R35	A60-731	470K Ohm ½ Watt Resistor 20%
R32, R33	A60-747	270K Ohm 20% ½ Watt
R34	A60-728	10 Megohm 20% ½ Watt
R36	A60-739	2K Ohm Resistor 5% 10 Watt
R37	A60-741	150 Ohm 10% 1 Watt Resistor
R38	A60-740	27K Ohm Resistor 10% 2 Watt
R39	A60-734	Special Compensating Resistor (Order from Spiegel)
R40	A60-735	Special Compensating Resistor (Order from Spiegel)
R41	A60-738	15 Ohm — Glassohm 10% 3 Watt Resistor
R42	A60-667	220K Ohm Resistor 20% ½ Watt
L1	SB10-488	Antenna Coil, FM
L3	B10-489	R. F. Coil, F.M.
L4	B10-490	Oscillator Coil, F. M.
L5	A10-504	Antenna Loading Coil
L6	S84-236	Loop Antenna Assembly
L7	B10-491	Oscillator Coil, A. M.
L8	A33-225	Filter Choke
L2, L9, L10 L11, L12, L14 L15	A33-226	Filament Choke, 11 mh.
L13	A33-227	Filament Choke
S1A, S1B	A69-178	Switch, FM-AM-PHONO
S2		Switch, ON-OFF, (on volume control)
S3	A26-125	Tone Control
T1	SA10-493	1st I. F. Transformer, F. M.
T2, T3	SC10-494	2nd & 3rd I. F. Transformer, F.M.
T4	SC10-492	Ratio detector transformer, F.M.
T5	A10-499	1st I. F. transformer, A. M.
T6	A10-500	2nd I. F. transformer, A. M.
T7	A80-241	Output Transformer
	B39-285	Drum, for Variable Condenser
	A23-153	Line Cord
	A83-463	Selenium rectifier, 150 ma.
	A75-63	Tuning shaft
	C79-358	Speaker, 10" P.M.
	A21-111	Cover, for Compensating Resistors
	SB82-53	FM Antenna Assembly, Dipole
	C67-527	Dial Scale
	A83-537	Retainer, Dial Scale
	B83-536	Dial Diffusing Plate
	A58-67	Dial Pointer
	A52-263	Knob, Tuning
	A52-260	Knob, Tone
	A52-261	Knob, ON-OFF-VOLUME
	A52-262	Knob, PH-AM-FM
	11200	Milwaukee Automatic Record Changer

Schematic Diagram Reference	Part No.	Description
C1A, C1B	C19-191	Variable Condenser
C1C, C1D	A20-144	FM—R.F. Trimmer FM—Oscillator Trimmer AM—Oscillator Trimmer
C2A, C2B, C2C	A16-177	035 MFD Ceramic Condenser (Centralab No. DA048 or Equiv.)
C3, C5, C7, C9, C18, C21, C23, C24, C25, C28, C40, C51 C52, C53, C54 C55, C56, C57 C58, C62, C64 C65, C66, C67	A15-198	20 MMF 20% Ceramic Condenser (Erie Style "A" or Equiv.)
C68	A15-193	20 MMF 20% Ceramic Condenser (Erie Style K or Equiv.)
C4, C14	A15-194	50 MMF 10% Ceramic Condenser (Erie Style K or Equiv.)
C6	A18-273	4 MFD 150 Volt Elec. Condenser
C8, C17	A16-150	.02 MFD 400 Volt Tubular Condenser
C10	A15-200	470 MMF 20% Mica Condenser
C34, C69	A16-165	.01 MFD 200 V Tubular Condenser
C12, C19 C22, C26	A15-195	75 MMF 10% Ceramic Condenser (Erie Style K or Equiv.)
C13, C32, C33 C47 C49	A15-197	10 MMF 10% Ceramic Condenser (Erie Style A or Equiv.)
C15	A16-163	.01 MFD 120 V Molded Paper Condenser
C16	A16-153	.005 MFD 600 Volt Tubular Condenser
C20, C23, C27 C42, C44	A15-199	300 MMF 20% Mica Condenser
C29	A16-180	.003 MFD 200 V Molded Paper Condenser
C30	A16-157	.1 MFD 200 V Tubular Condenser
C31	A16-178	.002 MFD 200 V Molded Paper Condenser
C35	A20-139	AM Antenna Trimmer
C36	A15-190	100 MMF 20% Mica Condenser
C37	A15-191	50 MMF 20% Mica Condenser
C38	A15-176	250 MMF 20% Mica Condenser
C39	A15-196	100 MMF 20% Ceramic Condenser (Erie Style K or Equiv.)
C41	A16-158	.05 MFD 400 V Tubular Condenser
C46 C69, C43, C59 C45	A16-156	.01 MFD 400 V Tubular Condenser
C48 C50 C61	A18-284	40 MFD 150 Volt Electrolytic Condenser 40 MFD 300 Volt Electrolytic Condenser 40 MFD 300 Volt Electrolytic Condenser
C60	A18-285	60 MFD 150 Volt Electrolytic Condenser
R1, R26	A60-668	1 Megohm Resistor 20% ½ Watt
R2, R13, R17, R28, R9	A60-742	68 Ohm Resistor 10% ½ Watt
R3, R6, R7, R10, R19, R11 R14, R15, R18	A60-743	100 Ohm Resistor 20% ½ Watt

MODEL 139144

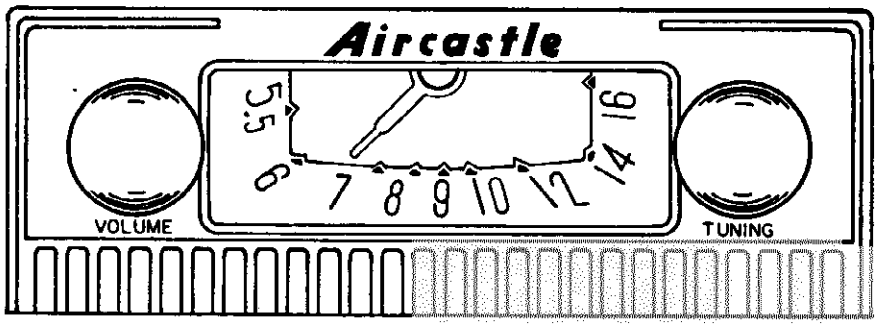

Fig. 1 Front View

INSTALLATION

This radio comes to you complete with all hardware necessary for mounting, and also with a distributor suppressor, ammeter condenser and generator condenser. By referring to Figures 1 and 2, and following the instructions outlined below, you will find that it is very simple to install.

First determine where the receiver is to be mounted by holding it with the hands in the approximate location in the car. Using the front mounting bracket as a template, mark and drill two $\frac{5}{8}$" holes in the instrument panel flange. Now secure the mounting bracket to the radio receiver with the screws provided, and then mount the front of the radio to the instrument panel, using the bolts, lock washers and nuts provided for this purpose. The back of the radio is supported by means of the rear mounting strap. The mounting strap should be formed to the correct angles, as illustrated in Figure 2, so that it can then be fastened to the fire wall. After marking and center-punching the fire wall at the correct location, drill with a $\frac{3}{8}$" drill. The mounting strap is then secured to the radio and fastened to the fire wall of the car with the $\frac{1}{4}$" bolt, lock washer and nut furnished with the receiver.

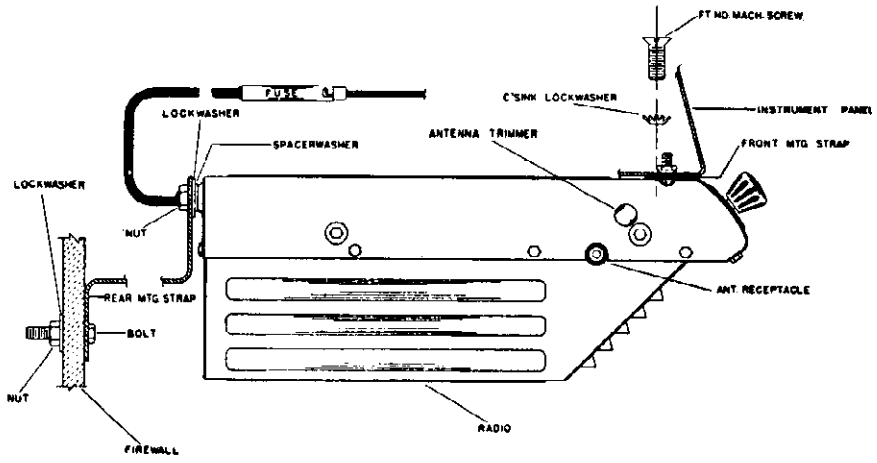

Fig. 2 Side View, Showing Mounting

CONNECTING THE RADIO

The antenna cable should be connected to the radio by inserting the jack into the socket provided on the side of the radio. Connect the battery cable to the hot side of the ammeter behind the instrument panel. The fuse should then be inserted into the cable receptor.

FINAL ADJUSTMENTS

The input circuit has been especially designed to be used with a low capacity antenna, of the fish pole or whip type.

To adjust the antenna trimmer condenser, carefully tune the receiver to a weak station at approximately 600 kilocycles (K.C.). Remove the snap button covering the antenna trimmer (See Figure 2) and adjust the trimmer for maximum volume. A small screw driver will be needed for this purpose.

©John F. Rider

SUGGESTIONS FOR ELIMINATING POSSIBLE MOTOR NOISE

IMPORTANT: Special care should be taken when mounting the radio to make sure all paint, grease, rust, etc., is removed from all three mounting points. A good electrical contact at these points will aid materially in eliminating motor noise. (The following steps may not be necessary in all cases. Install your radio and operate it before making changes.)

GENERATOR CONDENSER

The generator condenser must be connected to the battery terminal of the generator in all cases. If your car is equipped with a generator using an automatic regulator, make sure the condenser IS NOT fastened to the field winding terminal. If in doubt, your local car dealer can advise you as to where the car manufacturer recommends connecting it.

AMMETER CONDENSER

A .5 MFD bypass condenser is furnished for attaching to the ammeter. This should be connected to either side of the ammeter with the ground lug fastened to a good ground nearby. In most cases the use of this condenser, the distributor suppressor, and the generator condenser, will eliminate all objectionable ignition interference.

DISTRIBUTOR SUPPRESSOR

Detach the high tension wire where it goes into the top of the distributor cap and cut two inches off the end. Screw the piece you cut off into one end of the distributor suppressor and then screw the other end of the suppressor on the long wire which leads to the coil. Insert the wire back into the distributor cap.

IGNITION COILS

In cars where the ignition coil is located on the back side of the instrument panel it is often necessary to use an additional .5 MFD condenser. It must be installed from the battery side of the ignition coil to the closest ground on the instrument panel.

Short wires are very important. Where coils are mounted either on the instrument panel or in the driver's compartment, it may be necessary to shield the high tension wire from the coil to the distributor.

HIGH AND LOW TENSION WIRES

In many cases the low tension battery wires, etc., are grouped together with the high tension wires. These wires will very often pick up motor noise and feed it into the receiver through the battery circuit. In cases such as these it will be necessary to separate the low tension from the high tension wires and run them through another hole if they run from the engine compartment up to the instrument panel. These wires should be placed in a flexible wire shield and the shield grounded to frame or motor. This condition is particularly true on the V-8 Ford, as the battery and primary leads run through a special tube which also houses the high tension wires.

BONDING OF FIRE WALL

Bonding the steering column to the fire wall with a short braid may also be effective. Clean the paint from the steering column at the fire wall where the column enters the motor compartment, and solder on a short piece of braid. Ground the end of the braid to the fire wall.

In some cases it may be necessary to ground the cables and rods coming through the fire wall in order to reduce the interference. Clean them with emery cloth and spot-solder the braid, fastening the end under a convenient screw. A 1/4" piece of wire braid 20 inches long is furnished in the suppression kit assembly for this purpose.

WHEEL STATIC

Wheel Static is a form of interference caused by the rotation of the front wheels of the car, and it is, of course, only noticed when the car is in motion. If this form of interference is present it can be eliminated by installing wheel static collector springs between the inner hub cap and the spindle shaft.

ELECTRICAL ACCESSORIES

In some cases, it may be found that car accessories such as electric heaters, lighters, automatic relays, or gauges, may cause interference while in operation. Proper procedure in such cases is to connect a .5 MFD by-pass condenser from ground to the suspected accessory until the source of the interference is found. The condenser then should be permanently mounted in this location.

ACCESSORIES FURNISHED FOR INSTALLATION

All of the parts that are needed for installing this receiver are furnished in the Mounting Parts Kit, part No. S84-192, and the Supression & Misc. Parts Kit, part No. S84-228, as listed below. Also supplied are the rear mounting strap, part No. B31-134, and the front mounting plate, part No. A31-137.

NOTE: For shipping, the two control knobs have been removed from the tuning and volume control shafts. To install the knobs, line up the flat side of the knob spring, (inside knob) with the flat side of the control shaft and push the knob forward until it stops.

S84-192 MOUNTING PARTS KIT

- 1 1/4" Bolt
- 2 1/4" Lock Washers
- 2 1/4" Hexagon Nuts
- 2 10-32 x 5/8" Screws
- 2 External Tooth Lock Washers
- 2 Internal Tooth Lock Washers
- 2 10-32 Hexagon Nuts

S84-228 SUPPRESSION KIT & MISC. PARTS ASSEMBLY

- 1—S84-233 "A" lead assembly
- 1—A43-10 Fuse
- 2—A52-258 Control knobs
- 1—A81-13 Sleeve (for fuse)
- 1—S84-193 Suppression Kit consisting of:
  - 2—.5 MFD Condensers
  - 1—Distributor Suppressor
  - 20"—Wire Braid

©John F. Rider

MODEL 1391/44

ELECTRICAL SPECIFICATIONS

Power Supply	6.3 volts DC
Current	4.8 amp. average
Frequency Range	540 to 1600 KC
I. F. Frequency	455 KC
Speaker	4" P. M.
Power Output	1.2 watts, undistorted 2.5 watts, maximum
Sensitivity	10 microvolts average for 1 watt output
Selectivity	20 KC broad at 1000 times signal, at 1000 KC

The tube compliment of this receiver is as follows:

1—6SK7GT—R. F. Amplifier.

1—6SA7GT—Converter.

1—6SK7GT—I.F. Amplifier.

1—6SQ7—Detector—AVC—1st audio.

1—6V6GT—Power output.

1—6X5GT—Rectifier.

SERVICE NOTES

Voltages taken from the different points of the circuit to the chassis are measured with volume control in maximum position, all tubes in their sockets, no signal applied, and with a volt meter having a resistance of 20,000 ohms per volt. These voltages are clearly shown on the voltage chart, (Fig. 4).

All voltages should be measured with an input voltage of 6.3 volts DC.

To check for open by-pass condensers, shunt each condenser with another one having the same capacity and voltage rating which is known to be good until the defective unit is located.

ALIGNING INSTRUCTION

Never attempt any adjustments on this receiver unless it becomes necessary to replace a coil or transformer, or the adjustments have been tampered with in the field. Always make certain that other circuit components, such as tubes, condensers, resistors, etc., are normal before proceeding with realignment.

If realignment is necessary follow the instructions given under the heading "ALIGNMENT PROCEDURE". After realignment has been completed repeat the procedure as a final check.

INSTRUCTIONS FOR REMOVING CHASSIS FROM THE CASE

The bottom cover (the one with the speaker louvers) can be removed to permit servicing of major components, such as tubes and vibrator, by removing the eight (8) screws holding it to the top cover. There are three (3) screws on each side, one (1) in the rear, and one (1) in the front.

CAUTION: Before attempting to remove the top cover, to service condensers, resistors, etc., the screw connecting the spark plate to the "A" terminal (inside case) must be removed. This is a round head screw, and is located on the rear of the case, close to the mounting stud bolt. It is recessed in a ½ inch hole in the case itself, thereby permitting contact with the spark plate.

After removing the spark plate screw, remove the two knobs by pulling forward and remove the eight (8) screws securing the cover to the chassis. Lift the chassis at the rear, at the same time moving it away from the front of the case so that the volume and tuning shafts will clear the holes in the cover.

NOTE: When reinstalling the chassis into the case, be sure the screw connecting the spark plate to the "A" terminal (inside case) is tightened very securely, otherwise the receiver will not operate properly.

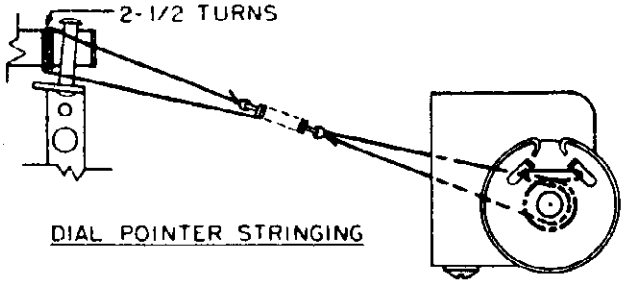

DIAL POINTER STRINGING

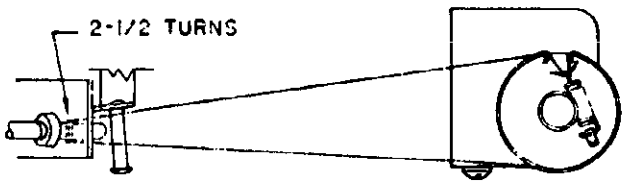

DIAL DRIVE STRINGING

© John F. Rider

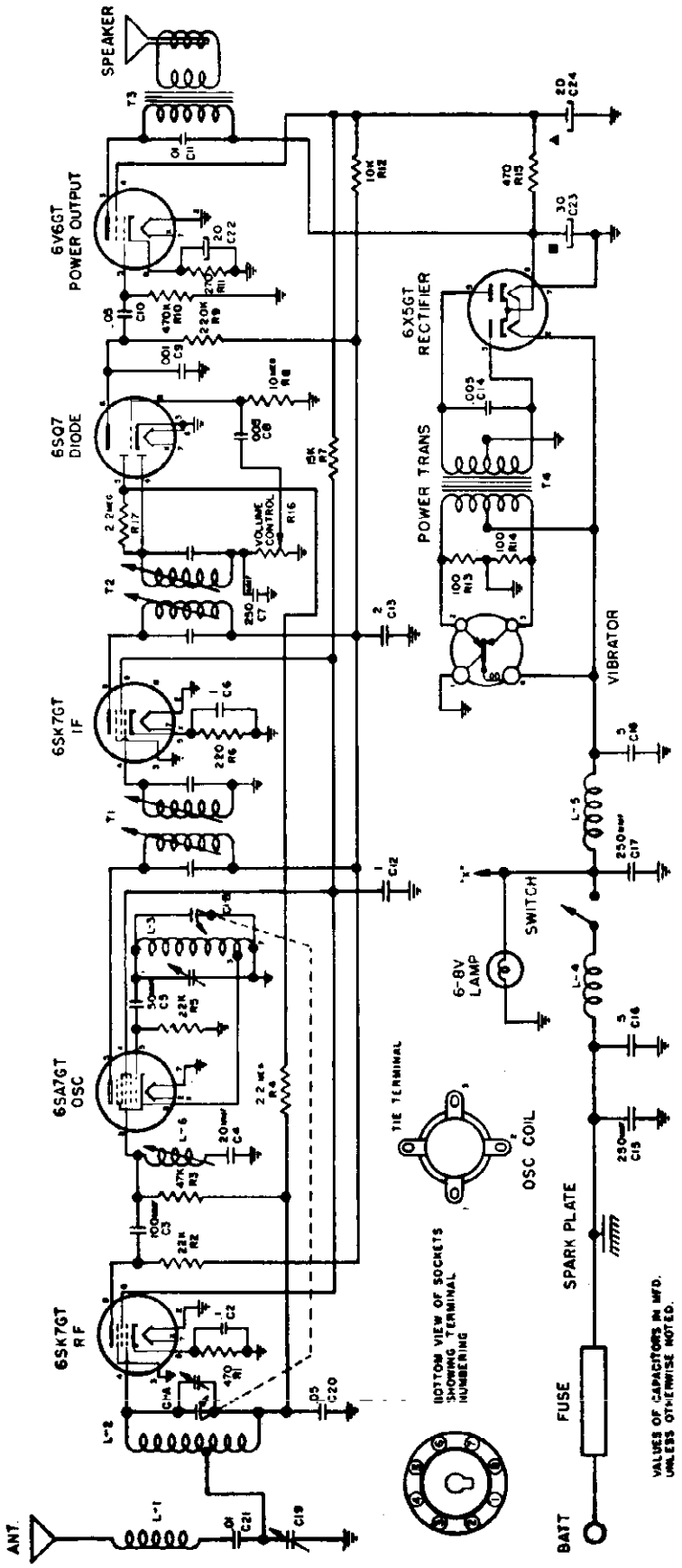

Fig. 3 Schematic Diagram

©John F Rider

ALIGNMENT PROCEDURE

Volume control—Maximum, all adjustments.

No signal applied to antenna.

Power input—6.3 volts.

Connect dummy antenna in series with output lead of signal generator.

Connect output meter across voice coil.

Connect ground lead of signal generator to chassis.

Repeat alignment procedure as a final check.

The following equipment is necessary for proper alignment:

Signal generator that will provide the test frequencies as listed.

Non-metallic screwdriver.

Output meter.

Dummy antennas—.1 MFD., .00025 MFD.

For alignment points refer to Figures 4 ad 5.

Dial Setting	Generator Frequency	Dummy Ant.	Generator Connections	Trimmer Reference	Trimmer Adjustment	Trimmer Function
Fully Open	455 KC	.1 MFD.	6SA7 Grid	T2	Maximum	Output I.F.
Fully Open	455 KC	.1 MFD.	6SA7 Grid	T1	Maximum	Input I.F.
Fully Open	455 KC	.00025 MFD.	Ant. lead	L6	Minimum	Wave trap
Fully Open	1600 KC	.00025 MFD.	Ant. lead	C1B	Maximum	Oscillator
Tune in signal from generator	1400 KC	.00025 MFD.	Ant. lead	C1A	Maximum	Antenna

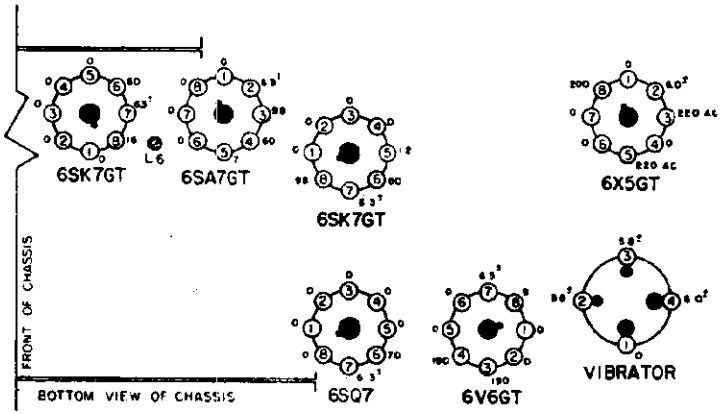

Fig. 4 Socket Voltages

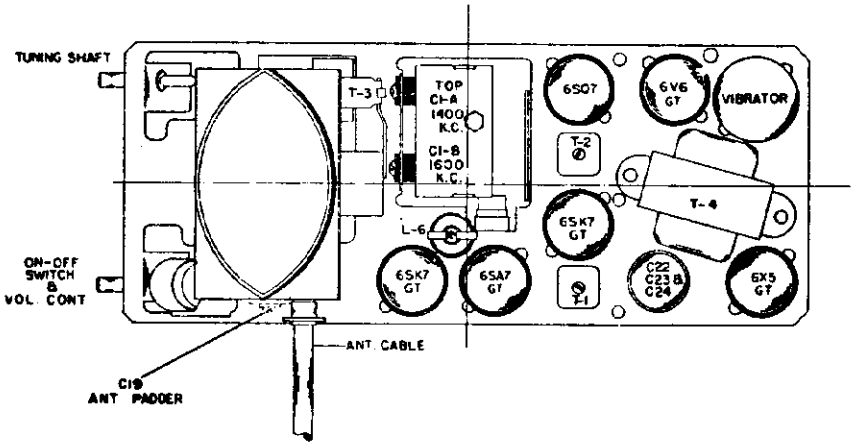

Fig. 5 Tube and Trimmer Locations

MODEL 139144

PARTS LIST

Schematic Diagram Reference	Part No.	Description
CONDENSERS		
C1A, C1B	B19-196	Variable Condenser
C2, C6, C12	A16-187	.1 MFD. 400 Volt Condenser
C3	A15-196	100 MMFD Ceramic Condenser
C4	A15-202	20 MMFD Ceramic Condenser
C5	A15-204	50 MMFD Ceramic Condenser
C7, C15, C17	A15-176	250 MMFD Mica Condenser
C8	A16-190	.005 MFD. 600 Volt Condenser
C9	A16-195	.001 MFD. Ceramic Condenser
C10	A16-193	.05 MFD. 600 Volt Condenser
C11, C21	A16-192	.01 MFD. 400 Volt Condenser
C13	A16-188	.2 MFD. 400 Volt Condenser
C14	A16-185	.005 MFD. 1600 Volt Oil Filled Condenser
C16, C18	A16-184	.5 MFD. 100 Volt Condenser
C19	A20-145	Trimmer Condenser
C20	A16-189	.05 MFD. 400 Volt Condenser
C22	A18-289	20 MFD 25 Volt Electrolytic Condenser
C23		30 MFD 350 Volt Electrolytic Condenser
C24		20 MFD. 350 Volt Electrolytic Condenser
RESISTORS		
R1	A60-722	470 Ohm ½ Watt 20% Resistor
R13, R14	A60-752	100 Ohm ½ Watt 10% Resistor
R2, R5	A60-744	22K Ohm ½ Watt 10% Resistor
R3	A60-685	47K Ohm ½ Watt 20% Resistor
R4, R17	A60-726	2.2 Megohm ½ Watt 20% Resistor
R6	A60-753	220 Ohm ½ Watt 10% Resistor
R7	A60-716	15K Ohm 1 Watt 10% Resistor
R8	A60-728	10 Megohm ½ Watt 20% Resistor
R9	A60-667	220K Ohm ½ Watt 20% Resistor
R10	A60-731	470K Ohm ½ Watt 20% Resistor
R11	A60-754	270 Ohm 1 Watt 10% Resistor
R12	A60-698	10K Ohm 1 Watt 10% Resistor
R15	A60-694	470 Ohm 1 Watt 10% Resistor
R16	A24-177	Volume Control, 500,000 Ohms, with Switch
COILS		
L1	A10-513	Antenna Loading Coil
L2	B10-511	Antenna Coil
L3	A10-512	Oscillator Coil
L4	A33-229	Choke, "A" Line
L5	A33-228	Choke, Vibrator Hash
L6	A10-510	I.F. Trap Coil
T1	A10-508	1st I.F. Transformer
T2	A10-509	2nd I.F. Transformer
TRANSFORMERS		
T3	B80-242	Output Transformer (Part of Speaker, not furnished separately)
T4	B80-243	Power Transformer
DIAL PARTS		
	A11-303	Bracket, Dial Scale
	A11-304	Bracket, String Guide
	A72-29	Bushing, Tuning Shaft Bearing
	A70-130	Clip, Spring, for Tuning Shaft
	A40-143	Dial Escutcheon
	A58-55	Dial Pointer
	B67-523	Dial Scale
	A28-101	Gasket for Speaker
	A52-258	Knob
	A89-10	Pilot Light, Type G.E. No. 422
	A65-37	Rivet, Shoulder, for String Guide Bracket
	A75-68	Shaft, Tuning
	A75-67	Shaft, for Dial Pointer
	A70-132	Spring, for Pilot Light Socket
	A70-133	Spring, String Tension, Pointer Drive and Tuning
MISCELLANEOUS		
	A83-421	Clip, I.F. Transformer Mounting
	A83-517	Clip, Oscillator Coil Mounting
	A43-10	Fuse, 15 Amp.
	A47-112	Grommet, Rubber (for Mounting Speaker and Variable Condenser)
	B31-134	Mounting Strap, Rear
	A31-137	Mounting Plate, Front
	S84-192	Mounting Parts Kit
	A87-38	Receptacle, Antenna Cable
	B79-362	Speaker, 4" P.M. (includes Output Transformer)
	S84-193	Suppression Kit Assembly
	A34-105	Vibrator
	A83-519	Wiper, Grounding, for Case Covers

© John F. Rider

MODEL 149654

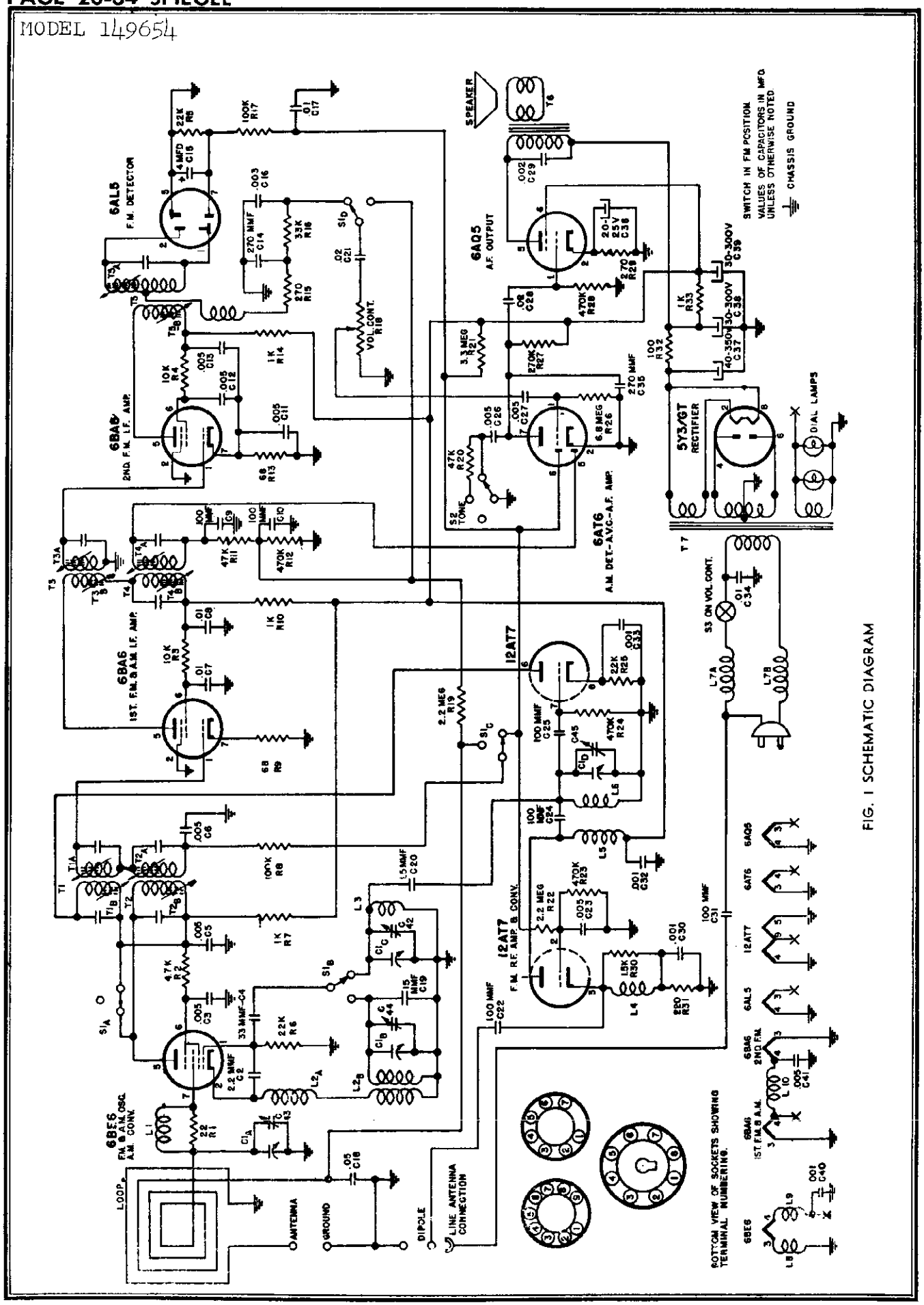

FIG. 1 SCHEMATIC DIAGRAM

©John F. Rider

©John F. Rider

ALIGNMENT PROCEDURE

STEPS	RECEIVER DIAL SETTING	BAND SWITCH POSITION	SIGNAL GENERATOR FREQUENCY	DUMMY ANTENNA	SIGNAL GENERATOR CONNECTIONS	OUTPUT INDICATOR	TRIMMER ADJUSTMENT	TRIMMER FUNCTION	REMARKS
1	Minimum capacity	AM	455 KC 400 cycle AM	.1 MFD	High side—grid of AM converter tube (6BE6) Low side—chassis	Output Meter across voice coil	T4A, T4B T2A, T2B	AM I.F.	Adjust for maximum output
2	"	"	1600 KC 400 cycle AM	"	"	"	C44	AM Oscillator	"
3	1400 KC	"	1400 KC 400 cycle AM	.00025 MFD	High side—One ant. terminal Low side—Other ant. terminal	"	C43	AM Antenna	"
4	Any position where there is no station interference.	FM	10.7 MC unmodulated .1 volt output.	.1 MFD	High side—grid of 2nd I.F. amplifier tube (6BA6) Low side—chassis	Connect V.T.V.M. to plate of Ratio Detector tube, pin 7 (6AL5)	T5B	Ratio detector primary	Adjust for maximum negative voltage, about —5 volts
5	"	"	10.7 MC 400 cycle 30% Modulation. (See note A)	"	"	Connect scope to audio take-off point (across C16)	T5A	Ratio detector secondary	Adjust for a balanced pattern on scope. See Fig. 2
6	"	"	"	"	High side—grid of 1st I.F. amplifier tube (6BA6) Low side—chassis	"	T3A T3B	FM 2nd I.F.	Adjust for maximum gain and best pattern on scope. See Fig. 2
7	"	"	"	"	High side—grid (pin 7) of FM converter tube (12AT7) Low side—chassis	"	T1A T1B	FM 1st I.F.	"
8	108.5 MC	"	108.5 MC 400 cycle 30% modulation (22.5 KC deviation)	300 ohms in high side	High side—ant. terminal Low side—chassis	Connect output meter across voice coil	C42	FM oscillator	Adjust for maximum output
9	105 MC	"	105 MC 400 cycle 30% modulation (22.5 KC deviation)	"	"	"	C45	FM R.F.	"

NOTE A: When aligning the FM I.F. circuits, keep the out put from the signal generator as low as possible.

EQUIPMENT USED FOR ALIGNMENT

Vacuum tube voltmeter.
AM Signal generator
FM Sweep generator.
Oscilloscope.
Insulated screw driver.
Dummy antenna:
.1 MFD condenser
.00025 MFD mica condenser
150 ohm resistor (2)
Output meter.



FIGURE 2

SPECIFICATIONS

Power Supply	105-125 volts 60 cycle AC only.
Power Consumption	65 Watts
Frequency Range FM	88 to 108 MC.
Frequency Range AM	540 to 1600 KC.
I.F. Frequency FM	10.7 MC.
I.F. Frequency AM	455 KC.
Band width, FM, Ratio Detector	330 KC.
Band width, FM, 1st I.F.	280 KC.
Band width, FM, Converter	220 KC.
Speaker	6¼" P.M.

The tubes used are as follows:

12AT7	FM RF Amplifier, Converter
6BE6	FM Osc, Am Osc, Converter
6BA6	FM-AM, 1st I.F. Amplifier
6BA6	FM-AM, 2nd I.F. Amplifier
6AL5	FM Detector
6AT6	AM Detector, AVC, Audio
6AQ5	Power Output
5Y3	Power Rectifier
No. 47	Pilot Lights (2)

VOLTAGE CHART

	PIN 1	PIN 2	PIN 3	PIN 4	PIN 5	PIN 6	PIN 7	PIN 8	PIN 9
6BE6 FM & AM OSC AM CONV	0	0	0	6 AC	155	125	0		
12AT7 FM RF AMP & CONV	170	0	1.5	0	0	155	0	1	6 AC
6BA6 1st IF AM & FM	0	0	0	6 AC	150	100	0		
6BA6 2nd IF AM & FM	0	0	0	6 AC	155	110	1		
6AL5 FM DETECTOR	0	0	6 AC	0	0	0	0		
6AT6 AM DETECTOR, AVC, AUDIO	—.5	0	0	6	0	0	60		
6AQ5 POWER OUTPUT	0	7.5	6 AC	0	215	170	0		
5Y3 POWER RECTIFIER		235		230 AC		230 AC		235	

All voltage readings are taken from tube pin to chassis.

All measurements are made with no signal, using a 20,000 ohm per volt meter.

AC input voltage must be maintained at 117 volts for accurate readings.

AC voltages shown are at 1000 ohms per volt.

All voltages shown are approximate.

RESISTANCE CHART

	PIN 1	PIN 2	PIN 3	PIN 4	PIN 5	PIN 6	PIN 7	PIN 8	PIN 9
6BE6 FM & AM OSC AM CONV	22K	1.5	.5	.5	3.5M	3.5M	2.5M		
12AT7 FM RF AMP & CONV	3.3M	500K	250	0	0	3.5M	500K	2K	0
6BA6 1st IF AM & FM	200K	0	0	0	3.5M	3.5M	70		
6BA6 2nd IF AM & FM	0	0	0	0	3.5M	3.5M	70		
6AL5 FM DETECTOR	OPEN	OPEN	0	0	0	0	22K		
6AT6 AM DETECTOR, AVC, AUDIO	7M	0	0	0	500K	120K	3.5M		
6AQ5 POWER OUTPUT	470K	300	0	0	3.5M	3.5M	0		
5Y3 POWER RECTIFIER		3.5M		0		0		3.5M	

All resistance readings are taken from tube pin to chassis.

Due to manufacturing tolerance on component parts, resistance readings may vary as much as 20%.

All readings are shown in ohms unless otherwise noted.

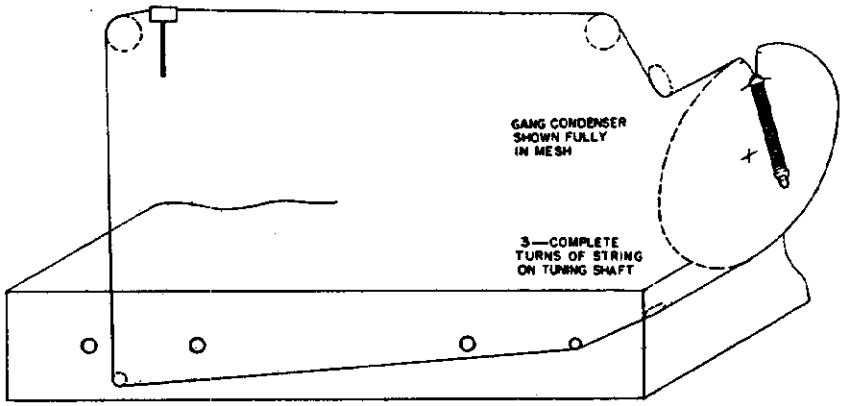

FIG. 4 DIAL CORD STRINGING

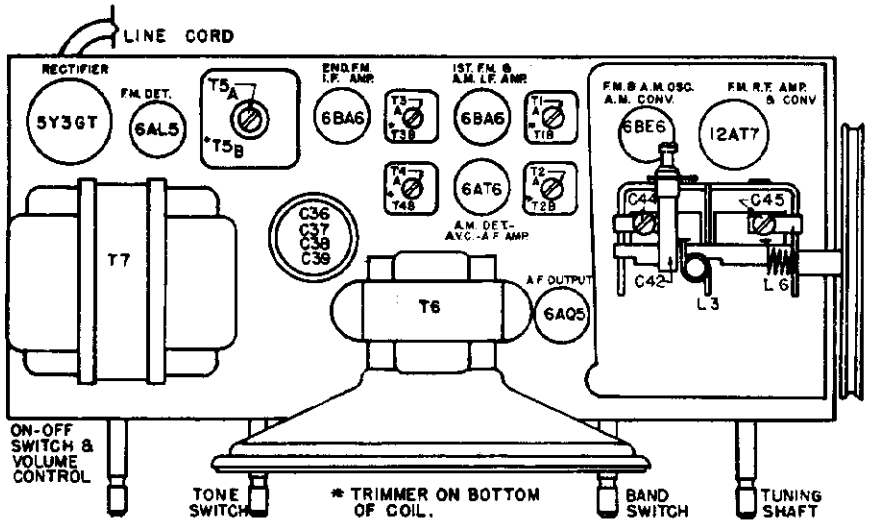

FIG. 3 TUBE AND TRIMMER LOCATIONS

© John F. Rider

PARTS LIST

Schematic Diagram Reference	Part No.	Description
C1A, C1B, C1C, C1D	C19-200	Variable Condenser
C2	A83-376	2.2 MMF, gimmick
C3, C5, C6, C23, C41	A16-177	.005 MFD ceramic (Centralab NO. DAO48 or equiv.)
C4	A15-210	33 MMF ceramic, 20%, (Erie Style "A" N1400)
C7, C8, C34	A16-192	.01-400 volts, paper tubular
C9, C10, R11	A17-101	100 MMF, 100 MMF, 47K ohms (Diode filter unit, Herlec F06-001)
C11, C12, C13	A17-102	3 x .005 MFD Herlec B34-005
C14, C35	A15-208	270 MMF ceramic, 20%, (Erie Style "K" or equiv.)
C15	A18-292	4 MFD—50 volt electrolytic
C16	A16-180	.003-200 volts, paper tubular
C17	A16-165	.01-200 volts, paper tubular
C18	A16-197	.05-200 volts, paper tubular
C19	A15-209	15 MMF ceramic, 10%, (Erie Style "A" or equiv.)
C20	A15-206	1.5 MMF ceramic, 33%, (Erie Style "A" or equiv.)
C21, C28	A16-196	.02-400 volts, paper tubular
C22, C24, C25, C31	A15-196	100 MMF 20% Ceramic Condenser (Erie Style K or Equiv.)
C26, C27	A16-199	.005-400 volts, paper tubular
C29	A16-198	.002-600 volts, paper tubular
C30, C32, C33, C40	A16-195	.001 MMF ceramic (Centralab NO. BC20A or equiv.)
C36, C37	A18-291	20-25 volts, 40-350 volts electrolytic
C38, C39		30-300 volts, 30-300 volts
C42	A20-146	FM oscillator trimmer
R1	A33-231	See L1.
R2	A60-759	4.7 K ohms, ½ watt, 10%
R3, R4	A60-760	10 K ohms, ½ watt, 10%
R5, R6	A60-744	22 K ohms, ½ watt, 10%
R7, R10, R14	A60-675	1 K ohms, ½ watt, 20%
R8, R17	A60-727	100 K ohms, ½ watt, 20%
R9, R13	A60-742	68 ohms, ½ watt, 10%
R11, C9, C10	A17-101	47 K ohms, 100 MMF, 100 MMF (Diode filter unit, Herlec FO6-001)
R12, R23, R24, R28	A60-731	470 K ohms, ½ watt, 20%
R15	A60-723	270 ohms, ½ watt, 20%
R16	A60-748	33 K ohms, ½ watt, 10%
R18	824-181	Volume control and switch S3
R19, R22	A60-726	2.2 Megohms, ½ watt, 20%
R20	A60-730	47 K ohms, ½ watt, 20%
R21	A60-761	3.3 Megohms, ½ watt, 20%
R25	A60-714	2.2 K ohms, ½ watt, 10%
R26	A60-762	6.8 Megohms, ½ watt, 20%
R27	A60-747	270 K ohms, ½ watt, 20%
R29	A60-754	270 ohms, ½ watt, 10%
R30	A10-516	See L4
R31	A60-753	220 ohms, ½ watt, 10%
R32	A60-755	100 ohms, 1 watt, 10%
R33	A60-763	1 K ohms, 4 watts, 10%
L1	A33-231	Choke, wound on R1, 22 ohms
L2A, L2B	A10-515	Oscillator coil, AM
L3	A10-517	Oscillator coil, FM
L4	A10-516	Antenna coil, FM, wound on R30, 1.5 K ohms
L5	A33-233	Plate choke, FM RF
L6	A10-518	RF coil, FM
L7A, L7B	A33-230	Line choke
L8, L9	A33-232	FM oscillator filament choke
L10	A33-227	Filament choke
S1A, S1B, S1C, S1D	A69-183	Band switch
S2	A26-125	Tone control
S3	B24-181	ON-OFF SWITCH, on volume control
T1	A10-519	1st I.F., FM
T2	A10-521	1st I.F., AM
T3	A10-520	2nd I.F., FM
T4	A10-522	2nd I.F., AM
T5	SC10-492	Ratio detector, FM
T6	A80-247	Output transformer
T7	C80-246	Power transformer
	A23-151	Line cord and plug
	B79-351	Speaker, 6¼", P.M.
	B79-342	Speaker, 6¼", P.M. Alternate
	B79-341	Speaker, 6¼", P.M. Alternate
	D42-379	Cabinet, walnut
	C67-536	Dial scale
	SD84-291	Loop and back
	A52-284	Knob, FM-AM
	A52-253	Knob, ON-OFF-VOLUME
	A52-254	Knob, TONE 1-2-3
	A52-255	Knob, TUNING
	A83-293	Retainer, dial scale, LH
	A83-292	Retainer, dial scale, RH
	A58-65	Dial pointer
	A70-122	Spring, string tension
	A51-105	String, pointer travel, 42"
	A87-31	Socket, pilot light

Power Supply	105-125 volts 60 cycle AC only.
Power Consumption	65 Watts
Frequency Range FM	88 to 108 MC.
Frequency Range AM	540 to 1600 KC.
I.F. Frequency FM	10.7 MC.
I.F. Frequency AM	455 KC.
Band width, FM, Ratio Detector	330 KC.
Band width, FM, 1st I.F.	280 KC.
Band width, FM, Converter	220 KC.
Speaker	6¼" P.M.

The tubes used are as follows:

12AT7	FM RF Amplifier, Converter
6BE6	FM Osc, Am Osc, Converter
6BA6	FM-AM, 1st I.F. Amplifier
6BA6	FM-AM, 2nd I.F. Amplifier
6AL5	FM Detector
6AT6	AM Detector, AVC, Audio
6AQ5	Power Output
5Y3	Power Rectifier
No. 47	Pilot Lights (2)

GENERAL

Due to the high frequencies at which FM signals are received the service man must use great care when servicing these sets. Extreme caution must be used regarding the moving of component parts in the R.F. and oscillator circuits of the receiver as those circuits can be detuned in this manner.

If it becomes necessary to replace components such as resisters and condensers they must be replaced with parts of the same size, type, voltage rating and tolerance as called for in the parts list.

When installing new parts they should be placed in the same position as the original, and the leads should be cut to the same length.

ALIGNMENT NOTES

This receiver has been thoroughly inspected and tested at the factory, using the most modern test equipment available, such as FM sweep generators and oscilloscopes. All R.F. and I.F. circuits have been accurately adjusted at the factory and no attempt should be made to realign these circuits unless it is absolutely necessary.

CAUTION: If realignment is necessary be sure the proper test equipment is available, as listed below, before proceeding with the alignment procedure as given on page 5.

EQUIPMENT USED FOR ALIGNMENT

Vacuum tube voltmeter.
AM Signal generator
FM Sweep generator.
Oscilloscope.
Insulated screw driver.
Dummy antenna:
.1 MFD condenser
.00025 MFD mica condenser
150 ohm resistor (2)
Output meter.

ALIGNMENT PROCEDURE

STEPS	RECEIVER DIAL SETTING	BAND SWITCH POSITION	SIGNAL GENERATOR FREQUENCY	DUMMY ANTENNA	SIGNAL GENERATOR CONNECTIONS	OUTPUT INDICATOR	TRIMMER ADJUSTMENT	TRIMMER FUNCTION	REMARKS
1	Minimum capacity	AM	455 KC 400 cycle AM	.1 MFD	High side—grid of AM converter tube (6BE6) Low side—chassis	Output Meter across voice coil	T4A, T4B T2A, T2B	AM I.F.	Adjust for maximum output
2	"	"	1600 KC 400 cycle AM	"	"	"	C44	AM Oscillator	"
3	1400 KC	"	1400 KC 400 cycle AM	.00025 MFD	High side—One ant. terminal Low side—Other ant. terminal	"	C43	AM Antenna	"
4	Any position where there is no station interference.	FM	10.7 MC unmodulated .1 volt output.	.1 MFD	High side—grid of 2nd I.F. amplifier tube (6BA6) Low side—chassis	Connect V.T.V.M. to plate of Ratio Detector tube, pin 7 (6AL5)	T5B	Ratio detector primary	Adjust for maximum negative voltage, about —5 volts
5	"	"	10.7 MC 400 cycle 30% Modulation. (See note A)	"	"	Connect scope to audio take-off point (across C16)	T5A	Ratio detector secondary	Adjust for a balanced pattern on scope. See Fig. 2
6	"	"	"	"	High side—grid of 1st I.F. amplifier tube (6BA6) Low side—chassis	"	T3A T3B	FM 2nd I.F.	Adjust for maximum gain and best pattern on scope. See Fig. 2
7	"	"	"	"	High side—grid (pin 7) of FM converter tube (12AT7) Low side—chassis	"	T1A T1B	FM 1st I.F.	"
8	108.5 MC	"	108.5 MC 400 cycle 30% modulation (22.5 KC deviation)	300 ohms in high side	High side—ant. terminal Low side—chassis	Connect output meter across voice coil	C42	FM oscillator	Adjust for maximum output
9	105 MC	"	105 MC 400 cycle 30% modulation (22.5 KC deviation)	"	"	"	C45	FM R.F.	"

MODEL 150084

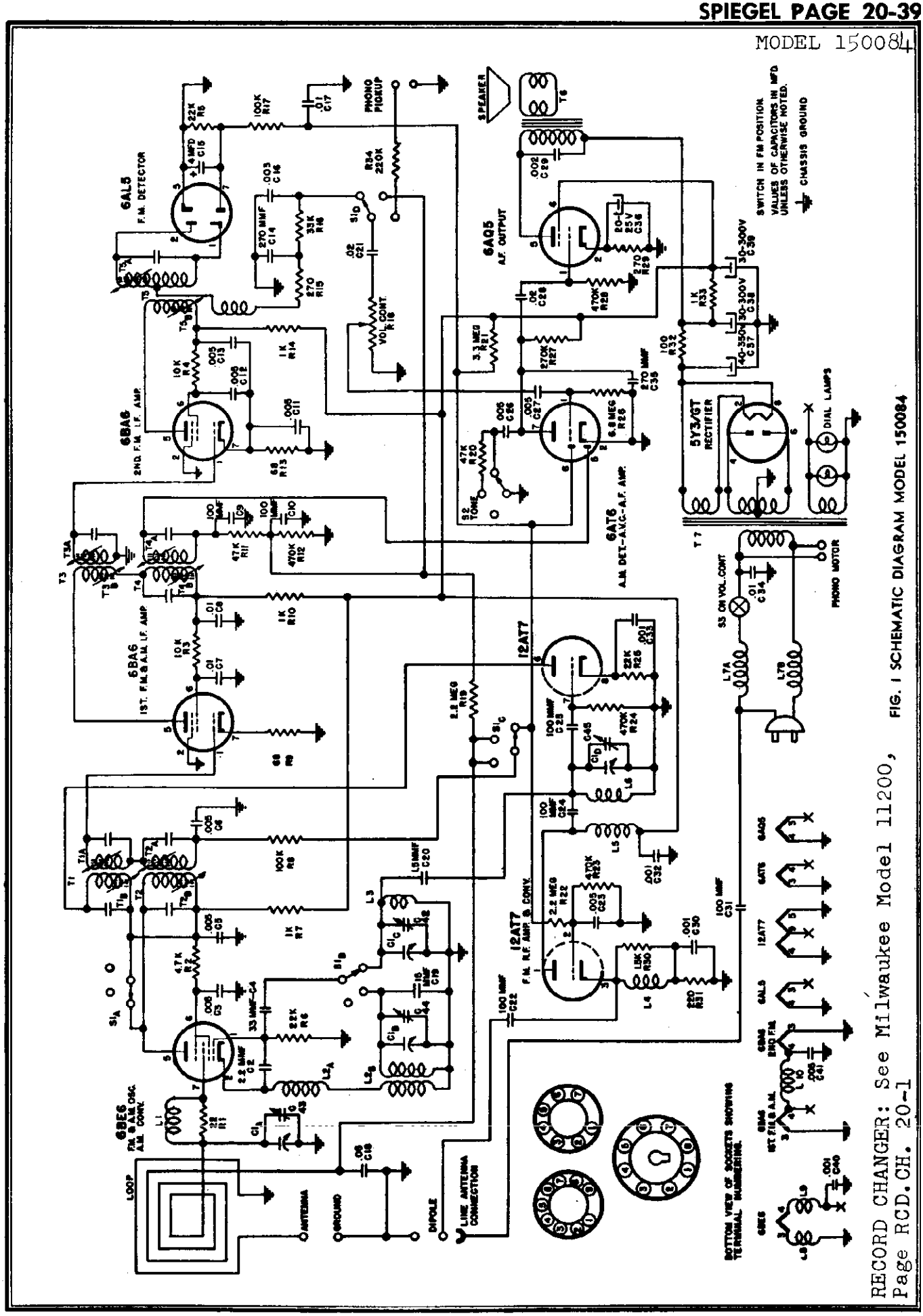

FIG. 1 SCHEMATIC DIAGRAM MODEL 150084

RECORD CHANGER: See Milwaukee Model 11200,
Page RCD.CH. 20-1

©John F. Rider

MODEL 150084

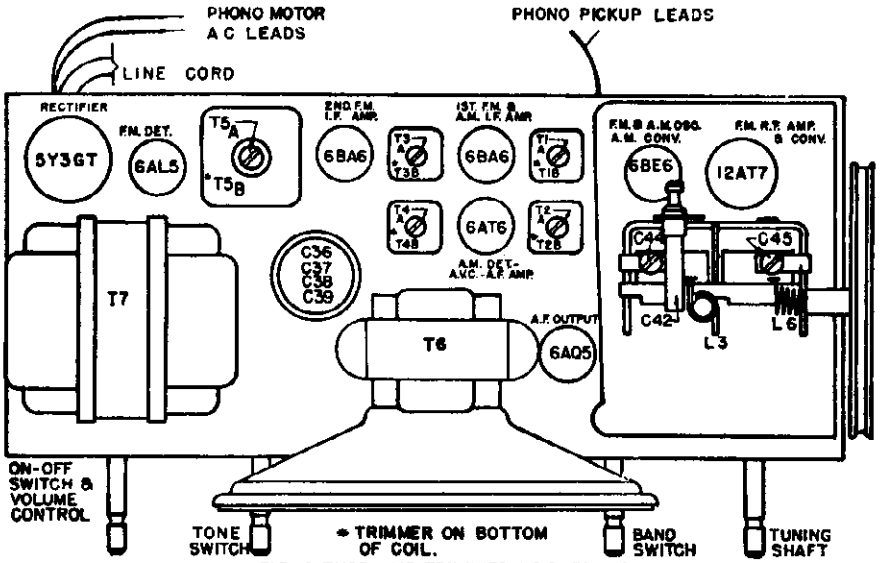

FIG. 3 TUBE AND TRIMMER LOCATIONS

VOLTAGE CHART

	PIN 1	PIN 2	PIN 3	PIN 4	PIN 5	PIN 6	PIN 7	PIN 8	PIN 9
6BE6 FM & AM OSC AM CONV	0	0	0	6 AC	155	125	0		
12AT7 FM RF AMP & CONV	170	0	1.5	0	0	155	0	1	6 AC
6BA6 1st IF AM & FM	0	0	0	6 AC	150	100	0		
6BA6 2nd IF AM & FM	0	0	0	6 AC	155	110	1		
6AL5 FM DETECTOR	0	0	6 AC	0	0	0	0		
6AT6 AM DETECTOR, AVC, AUDIO	—.5	0	0	6	0	0	60		
6AQ5 POWER OUTPUT	0	7.5	6 AC	0	215	170	0		
5Y3 POWER RECTIFIER		235		230 AC		230 AC		235	

All voltage readings are taken from tube pin to chassis.

All measurements are made with no signal, using a 20,000 ohm per volt meter.

AC input voltage must be maintained at 117 volts for accurate readings.

AC voltages shown are at 1000 ohms per volt.

NOTE A: When aligning the FM I.F. circuits, keep the out put from the signal generator as low as possible.

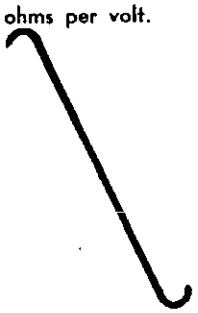

FIGURE 2

HOW TO ORDER REPAIR PARTS

Always give the part No. (No. printed on the part if different from that shown on the parts list), and the name of the part. When No. is not available, give complete description of part. Be sure to always give the Model No. and Catalog No. The Model No. will be found on either the metal plate at the rear of the chassis or on a printed label which may be on the chassis or cabinet.

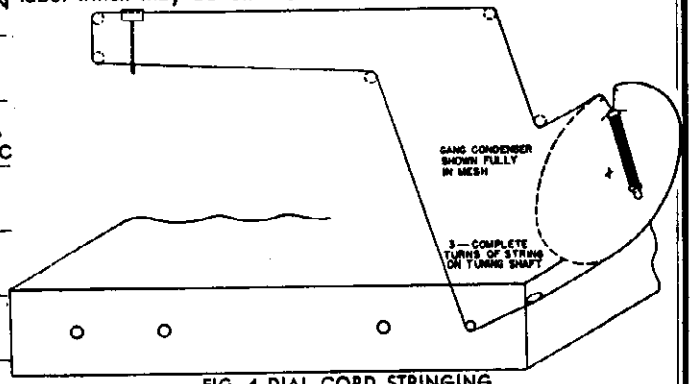

FIG. 4 DIAL CORD STRINGING

RESISTANCE CHART

	PIN 1	PIN 2	PIN 3	PIN 4	PIN 5	PIN 6	PIN 7	PIN 8	PIN 9
6BE6 FM & AM OSC AM CONV	22K	1.5	.5	.5	3.5M	3.5M	2.5M		
12AT7 FM RF AMP & CONV	3.3M	500K	250	0	0	3.5M	500K	2K	0
6BA6 1st IF AM & FM	200K	0	0	0	3.5M	3.5M	70		
6BA6 2nd IF AM & FM	0	0	0	0	3.5M	3.5M	70		
6AL5 FM DETECTOR	OPEN	OPEN	0	0	0	0	22K		
6AT6 AM DETECTOR, AVC, AUDIO	7M	0	0	0	500K	120K	3.5M		
6AQ5 POWER OUTPUT	470K	300	0	0	3.5M	3.5M	0		
5Y3 POWER RECTIFIER		3.5M		0		0		3.5M	

All voltages shown are approximate.

All resistance readings are taken from tube pin to chassis.

Due to manufacturing tolerance on component parts, resistance readings may vary as much as 20%.

All readings are shown in ohms unless otherwise noted.

©John F. Rider

PARTS LIST FOR MODEL 150084

Schematic Diagram Reference	Part No.	Description
C1A, C1B, C1C, C1D	C19-200	Variable Condenser
C2	A83-376	2.2 MMF, gimmick
C3, C5, C6, C23, C41	A16-177	.005 MFD ceramic (Centralab NO. DAO48 or equiv.)
C4	A15-210	33 MMF ceramic, 20%, (Erie Style "A" N1400)
C7, C8, C34	A16-192	.01-400 volts, paper tubular
C9, C10, R11	A17-101	100 MMF, 100 MMF, 47K ohms (Diode filter unit, Herlec F06-001)
C11, C12, C13	A17-102	3 x .005 MFD Herlec B34-005
C14, C35	A15-208	270 MMF ceramic, 20%, (Erie Style "K" or equiv.)
C15	A18-292	4 MFD—50 volt electrolytic
C16	A16-180	.003-200 volts, paper tubular
C17	A16-165	.01-200 volts, paper tubular
C18	A16-197	.05-200 volts, paper tubular
C19	A15-209	15 MMF ceramic, 10%, (Erie Style "A" or equiv.)
C20	A15-206	1.5 MMF ceramic, 33%, (Erie Style "A" or equiv.)
C21, C28	A16-196	.02-400 volts, paper tubular
C22, C24, C25, C31	A15-196	100 MMF 20% Ceramic Condenser (Erie Style K or Equiv.)
C26, C27	A16-199	.005-400 volts, paper tubular
C29	A16-198	.002-600 volts, paper tubular
C30, C32, C33, C40	A16-195	.001 MMF ceramic (Centralab NO. BC20A or equiv.)
C36, C37, C38, C39	A18-291	20-25 volts, 40-350 volts 30-300 volts, 30-300 volts electrolytic
C42	A20-146	FM oscillator trimmer
R1	A33-231	See L1.
R2	A60-759	4.7 K ohms, 1/2 watt, 10%
R3, R4	A60-760	10 K ohms, 1/2 watt, 10%
R5, R6	A60-744	22 K ohms, 1/2 watt, 10%
R7, R10, R14	A60-675	1 K ohms, 1/2 watt, 20%
R8, R17	A60-727	100 K ohms, 1/2 watt, 20%
R9, R13	A60-742	68 ohms, 1/2 watt, 10%
R11, C9, C10	A17-101	47 K ohms, 100 MMF, 100 MMF (Diode filter unit, Herlec FO6-001)
R12, R23, R24, R28	A60-731	470 K ohms, 1/2 watt, 20%
R15	A60-723	270 ohms, 1/2 watt, 20%
R16	A60-748	33 K ohms, 1/2 watt, 10%
R18	B24-181	Volume control and switch S3
R19, R22	A60-726	2.2 Megohms, 1/2 watt, 20%
R20	A60-730	47 K ohms, 1/2 watt, 20%
R21	A60-761	3.3 Megohms, 1/2 watt, 20%
R25	A60-714	2.2 K ohms, 1/2 watt, 10%
R26	A60-762	6.8 Megohms, 1/2 watt, 20%
R27	A60-747	270 K ohms, 1/2 watt, 20%
R29	A60-754	270 ohms, 1/2 watt, 10%
R30	A10-516	See L4
R31	A60-753	220 ohms, 1/2 watt, 10%
R32	A60-755	100 ohms, 1 watt, 10%
R33	A60-763	1 K ohms, 4 watts, 10%
R34	A60-667	220 K ohms 1/2 watt 20%
L1	A33-231	Choke, wound on R1, 22 ohms
L2A, L2B	A10-515	Oscillator coil, AM
L3	A10-517	Oscillator coil, FM
L4	A10-516	Antenna coil, FM, wound on R30, 1.5 K ohms
L5	A33-233	Plate choke, FM RF
L6	A10-518	RF coil, FM
L7A, L7B	A33-230	Line choke
L8, L9	A33-232	FM oscillator filament choke
L10	A33-227	Filament choke
S1A, S1B, S1C, S1D	A69-184	Band switch
S2	A26-125	Tone control
S3	B24-181	ON-OFF SWITCH, on volume control
T1	A10-519	1st I.F., FM
T2	A10-521	1st I.F., AM
T3	A10-520	2nd I.F., FM
T4	A10-522	2nd I.F., AM
T5	SC10-492	Ratio detector, FM
T6	A80-247	Output transformer
T7	C80-246	Power transformer
	A23-153	Line cord and plug
	B79-351	Speaker, 6 1/4", P.M.
	B79-342	Speaker, 6 1/4", P.M. Alternate
	B79-341	Speaker, 6 1/4", P.M. Alternate
	S84-296	Back and loop
	C67-538	Dial scale, glass
	A52-286	Knob, mahogany, FM-AM-PH
	A52-261	Knob, mahogany, ON-OFF-VOL
	A52-260	Knob, mahogany, TONE 1-2-3
	A52-263	Knob, mahogany, TUNING
	A58-54	Pointer, slide type
	A83-429	Retainer, dial scale
	A87-29	Socket, pilot light
	A70-122	Spring, string tension
	A51-105	String, pointer travel, 42"
	B59-24	Record changer, MILWAUKEE-ERWOOD No. 11200

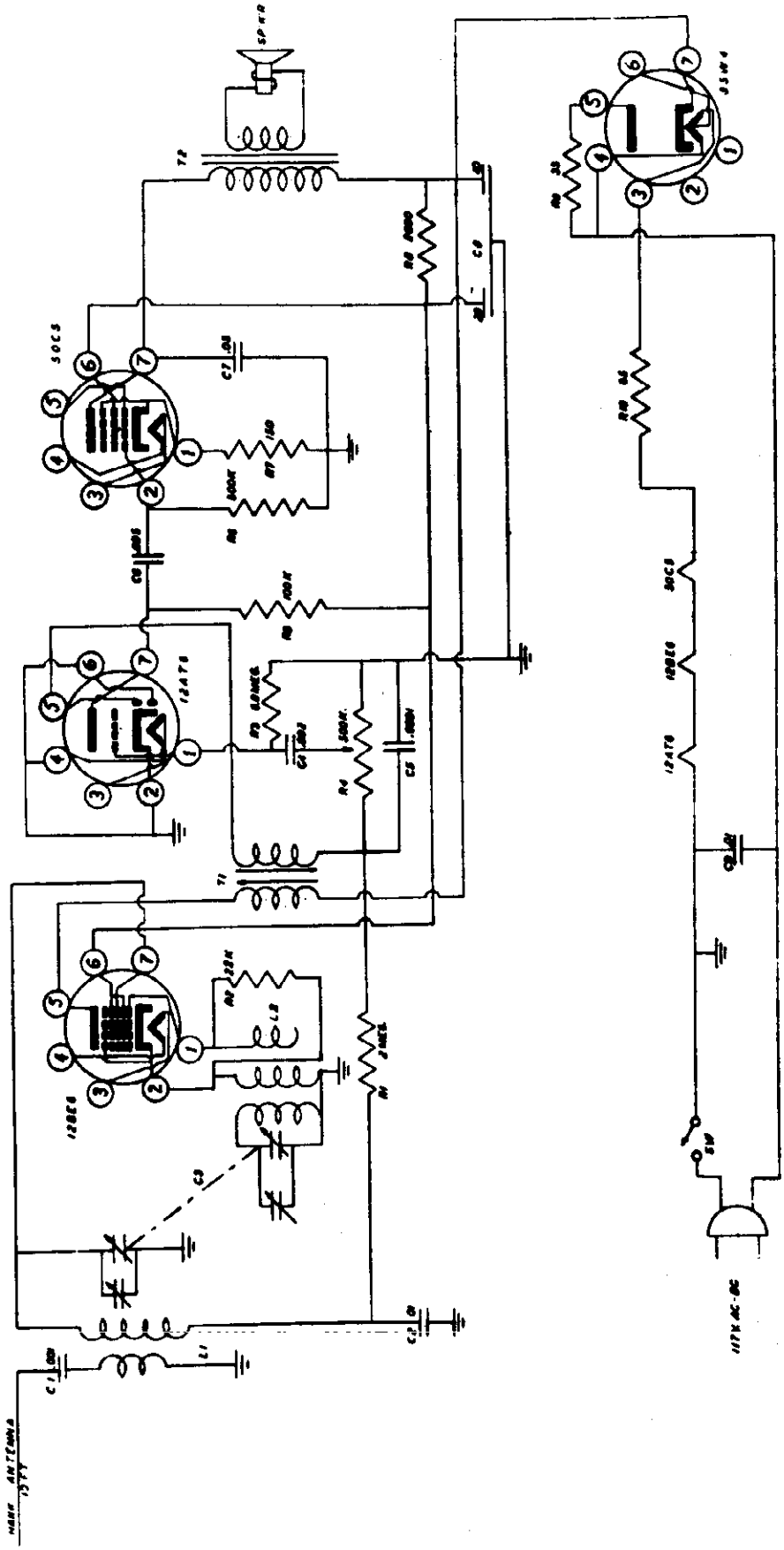

©John F. Rider

MODEL 1010

ANTENNA	GEN. COUPLING	GEN. FREQ.	RADIO DIAL	OUTPUT METER	ADJUST
1. .02mfd	Hi side to front section of tuning condenser	455 kcs	closed max. cap.	across V.C.	T1 bottom slug first for max. output T1 top slug for max. output.
2. 50mmf	Ant. coil Ant. input Remove hank	545 kcs	closed max. cap.	across V.C.	adjust osc. trimmer (front section tuning condenser) for max. output
3. 50mmf	same as No. 2	1500 kcs.	1500 kcs.	across V.C.	adjust rear section tuning condenser trimmer for uniform output between 545kc and 1500 kc

Circuit Location	Part No.	Description
C1		Condenser, paper tubular, .001mfd., 400v
C3	29A002	Condenser, variable 2 gang
C2		Condenser, paper tubular, .01 mfd., 400v
C4		Condenser, paper tubular, .002mfd., 400v
C5		Condenser, mica, .0001mfd., 600v
C6		Condenser, paper tubular, .005 mfd., 400v
C7		Condenser, paper tubular, .03 mfd., 400v
C8	31E003	Condenser, tubular cardboard, 40X20mfd, 150v
C9		Condenser, paper tubular, .01 mfd., 400v
R1		Resistor, composition, 2 meg., ½ watt
R2		Resistor, composition, 22k., ½ watt
R3		Resistor, composition, 6.8 meg., ½ watt
R4	26G008	Resistor, variable, 500k ohms
R5		Resistor, composition, 100k., ½ watt
R6		Resistor, composition, 500k., ½ watt
R7		Resistor, composition, 150 ohms, 1 watt
R8		Resistor, composition, 2k., 1 watt
R9		Resistor, composition, 33 ohms, ½ watt
R10		Resistor, wire wound, 65 ohms, 5 watts
L1	35D004	Coil, antenna
L2	35C002	Coil, oscillator
T1	18A005	Transformer, I.F. 455 KCS.
T2	15D001	Transformer, audio output
SP'K'R	19H100	Speaker, 4" P. M.
12BE6		Tube, 12BE6
12AT6		Tube, 12AT6
50C5		Tube, 50C5
35W4		Tube, 35W4
	5D004	Knob, pointer, walnut, split spline
	5D005	Knob, pointer, ivory, split spline
	5D006	Knob, walnut, split spline
	5D007	Knob, ivory, split spline
	11G007	Cover, back, chipboard
	40B011	Cabinet, model 1010 walnut
	40B010	Cabinet, model 1010 ivory

©John F. Rider

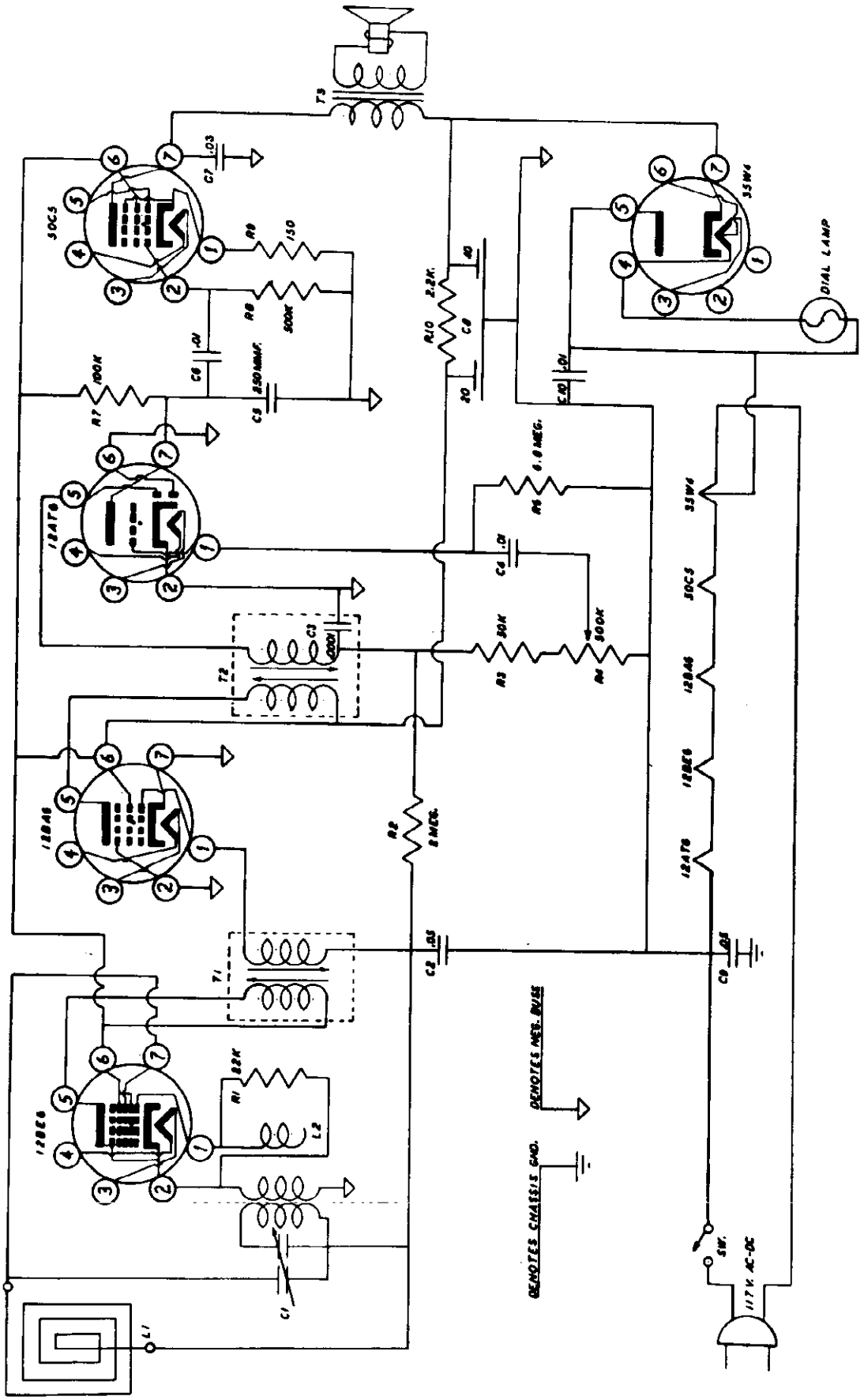

©John F. Rider

MODEL 1020

	ANTENNA	GEN. COUPLING	GEN. FREQ.	RADIO DIAL	OUTPUT METER	ADJUST
1.	.02mfd.	Connect gen. hi side to osc. section of tuning condenser. Connect gen. gnd. to radio neg. buss.	455 kcs.	open min. cap.	across V.C.	Adjust T2 top & bottom slug for max output. Adjust T1 top and bottom slugs for max. output
2.	50mmf	Connect gen. Hi side to antenna lead. (rear section tuning condenser) Connect gen. gnd. to radio neg. buss.	1400 kcs.	1400 kcs.	Across V.C.	Tune osc. trimmer for max output.
3.	50mmf	same as No. 2.	600 kcs.	600 kcs.	across V.C.	adjust for uniform output between 1400 kc and 600 kc.

Circuit Location	Part No.	Description
R1		Resistor, composition, 22k, ½ w.
R2		Resistor, composition, 2 meg., ½ w.
R3		Resistor, composition, 50k, ½ w.
R4	26G009	Resistor, variable, 500k, w/switch
R6)		
C4)	40L103	Caprister, 6.8 meg., ½w. .01 mfd, 400v
R7&C5	40L101	Caprister, 100k, ½ w., 250mmf., 400v.
R8&C6	40L102	Caprister, 500k, ½w., .01 mfd., 400v.
C1	29A003	Condenser, variable 2 gang
R9		Resistor, 150 ohms, 1 watt
R10		Resistor, composition, 2.2k., 1 watt
C5-C9		Condenser, paper tubular, .05mfd., 400v.
C3		Condenser, ceramic, 100mmf., 400v., (inT2)
C7		Condenser, paper tubular, .03mfd., 400v.
C8	31E003	Condenser, electrolytic, 40X20mfd, 150v.
C10		Condenser, paper tubular, .01mfd., 400v.
L1	35D003	Loop, antenna
L2	35C001	Coil, oscillator, with capacity winding 50mmf
T1	18A005	Transformer, I.F. 455 kc.
T2	18A006	Transformer, I.F. 455 kc. with 100mmf. diode filter
T3	15D001	Transformer, audio output
S'P'KR	19H101	Speaker, 4" P.M.
Dial Lamp		Lamp, dial. miniature bayonet No. 47
Sw.		Switch, off-on, on vol. cotrol R4
	40B008	Cabnet, plastic, walnut
	40B009	Cabinet, plastic, ivory
	2R100	inter, dial
	2Q103	Glass, dial plate with calibration
	5D008	Knob, push on, split knurl
1 2BE6		12BE6
12BA6		L 12BA6
12AT6		12AT6
		50C5
50C5		35W4
35W4		
	11G006	Cover, back, chipboard

©John F. Rider

© John F. Rider

MODELS B51T1, Code 9044-A; B51T2, Code 9044-B; B51T3, Code 9044-C; B51T4, Code 9044-D

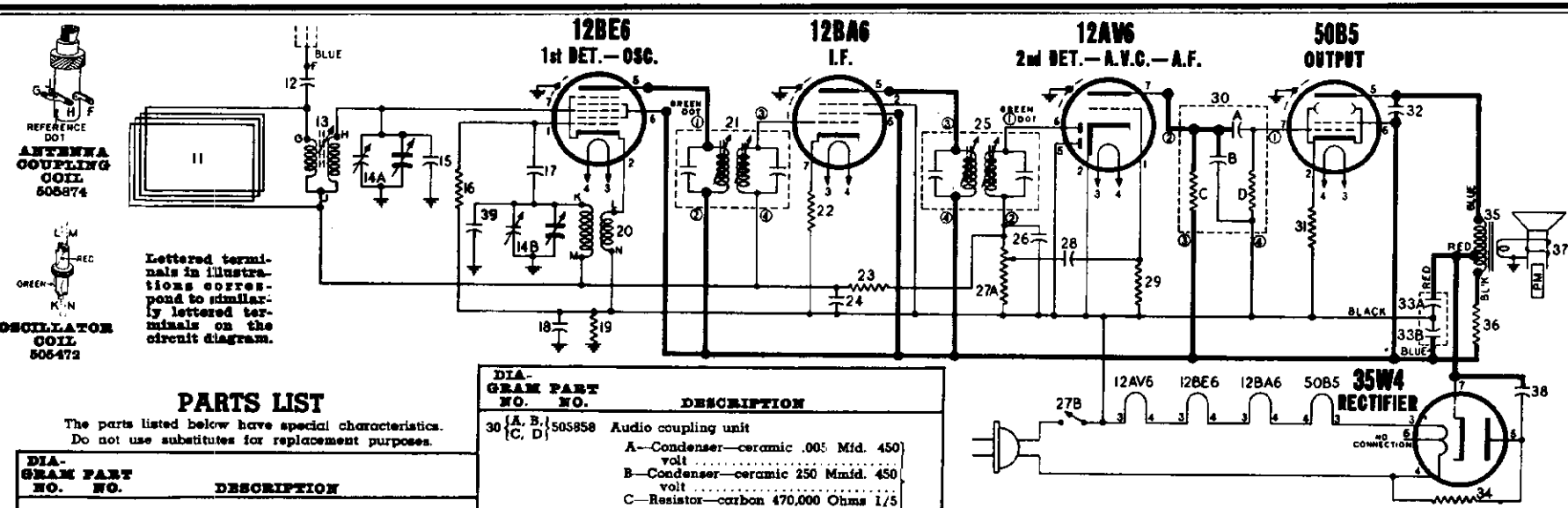

PARTS LIST

The parts listed below have special characteristics. Do not use substitutes for replacement purposes.

DIAGRAM NO.	PART NO.	DESCRIPTION
		CONDENSERS
12	505873	Condenser—ceramic .005 Mfd. 450 volt
14-A, B	505490	Condenser—variable gang (with drum)
15	505475	Condenser—ceramic 7 Mmfd. 500 volt
17	504434	Condenser—ceramic 50 Mmfd. 500 volt
18	512157	Condenser—.15 Mfd. 400 volt
24	504444	Condenser—.05 Mfd. 400 volt
26	502271	Condenser—mica 260 Mmfd. 500 volt
28	505873	Condenser—ceramic .005 Mfd. 450 volt
30-A	505858	Condenser—ceramic .005 Mfd. 450 volt (part of audio coupling unit)
30-B	505858	Condenser—ceramic 250 Mmfd. 450 volt (part of audio coupling unit)
32	505873	Condenser—ceramic .005 Mfd. 450 volt
33-A, B	503655	Condenser—electrolytic (includes shield) A—30 Mfd. 150 volt; B—20 Mfd. 150 volt
38	504444	Condenser—.05 Mfd. 400 volt
39	505475	Condenser—ceramic 7 Mmfd. 500 volt
		RESISTORS
16	510061	Resistor—carbon 22,000 Ohms ¼ watt
19	510079	Resistor—carbon 220,000 Ohms ¼ watt
22	510016	Resistor—carbon 68 Ohms ¼ watt
23	510093	Resistor—carbon 2.2 Meg. ¼ watt
27-A, B	505871	Volume control 1 Meg. (with switch)
29	510094	Resistor—carbon 3.3 Meg. ¼ watt
30-C, D	505858	Resistor—carbon 470,000 Ohms 1/5 watt (part of audio coupling unit)
31	510421	Resistor—wire wound 150 Ohms ½ watt ±10%
34	510510	Resistor—wire wound 33 Ohms 1 watt
36	510239	Resistor—carbon 1,500 Ohms 1 watt ±10%
		OTHER ELECTRICAL PARTS
11	505865	Loop antenna
13	505874	Coil—antenna (includes slug)
	505894	Slug core for antenna coil
20	505472	Coil—oscillator
21	505867	Transformer—I. F.
25	505867	Transformer—I. F.

DIAGRAM NO.	PART NO.	DESCRIPTION
30 (A, B, C, D)	505858	Audio coupling unit: A—Condenser—ceramic .005 Mfd. 450 volt; B—Condenser—ceramic 250 Mmfd. 450 volt; C—Resistor—carbon 470,000 Ohms 1/5 watt; D—Resistor—carbon 470,000 Ohms 1/5 watt
35	505869	Transformer—output
37	505868	Speaker—P.M. dynamic (3½ inch) includes output transformer
		MISCELLANEOUS
	505878	Baffle and grill cloth for Models B51T1 and B51T2
	505879	Baffle and grill cloth for Model B51T3
	504389	Bottom plate
	503647	Cabinet—ivory; Model B51T1 (includes baffle and metal grill)
	503648	Cabinet—mahogany; Model B51T2 (includes baffle and metal grill)
	503649	Cabinet—black; Model B51T3 (includes baffle and metal grill)
	———	Cabinet—College colors; Model B51T4—specify name of college when ordering replacement cabinet
	113019	Clip—retains dial scale
	114955	Clip—retainer on end of dial cord
	505101	Clip for mounting I. F. transformers
	506902	College letters for Model B51T4 ea.
	117057	Cord—dial drive (2 ft. required) per ft.
	505884	Dial scale for Models B51T1 and B51T2
	505885	Dial scale for Model B51T3
	505103	Insulating sheet on bottom of cabinet
	504470	Knob—black; Model B51T3
	504474	Knob—ivory; Model B51T1
	504541	Knob—mahogany; Model B51T2
	———	Knob—College colors; Model B51T4—specify name of college when ordering replacement knob
	505877	Metal grill and "S-W" name plate
	505886	Pointer
	119087	Ring for dial cord
	116584	Rubber feet
	12531	Screw—No. 8-32 x ⅜; retains bottom plate to cabinet
	17861	Screw—Set No. 4-40; shaft extension
	83624	Screw—No. 6 x ¼; retains chassis to bottom plate
	504721	Shaft extension for tuning gang
	505894	Slug core for antenna coil
	504397	Socket—miniature
	505299	Spring; dial cord tension
	504472	Window for dial

NOTE

Condenser #39 was added to improve frequency stability. Chassis incorporating this change are stamped with the letter "S".

I. F. 455 KC.

SOCKET VOLTAGES

Measured with voltmeter having sensitivity of 1000 ohms per volt except where indicated by (*). The (*) symbol designates a vacuum tube voltmeter measurement.

VOLUME ON FULL WITH NO SIGNAL **DIAL TUNED TO 540 KC.**

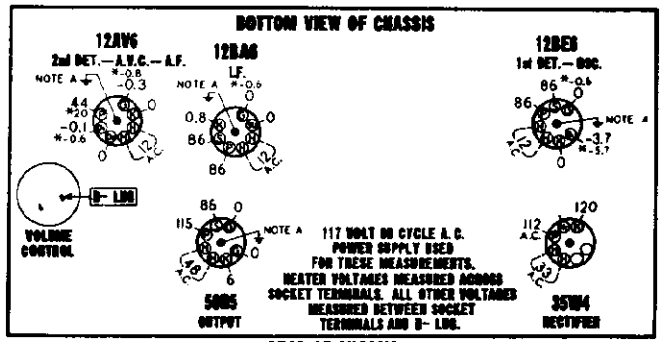

NOTE A: Grounding of center stud on tube socket is necessary to reduce capacity coupling between other pins. Oscillation may result if this ground is omitted.

MODELS B51T1, Code 9044-A; B51T2, Code 9044-B; B51T3, Code 9044-C; B51T4, Code 9044-D

ALIGNMENT PROCEDURE

1. To remove chassis from cabinet lift edge of insulating sheet at bottom of cabinet and take out mounting screws at each corner. Then remove bottom plate by taking out screws at each end holding it to chassis. Solder approximately 8" of insulated wire to any B— connection (see voltage chart on opposite side for convenient B — location).
2. With the gang condenser fully meshed, dial pointer should be in the position indicated by the last division below 55 on the dial. If it is set incorrectly, release pointer clip on dial cord and reposition pointer.
3. Connect ground lead of signal generator to B— lug.
   CAUTION: If your test oscillator is designed with an AC-DC power supply, connect ground lead of signal generator to B— lug through a .25 mfd. condenser.
4. Connect output meter from plate of 50B5 tube to B through a 0.1 Mfd condenser.
5. Set volume control at maximum volume position and use a weak signal from the signal generator.

DUMMY ANT. IN SERIES WITH SIGNAL GENERATOR	CONNECT HIGH SIDE OF GENERATOR TO	SIGNAL GENERATOR FREQUENCY	RECEIVER DIAL SETTING	TRIMMER OR SLUG NUMBER	TRIMMER DESCRIPTION	TYPE OF ADJUSTMENT
200 MMFD. Mica Condenser	Lug on trimmer No. 6 at bottom section of gang (see figure below for location of trimmer).	455 KC	Any point where it does not affect the signal.	1-2	2nd I.F.	Adjust for maximum output. Then repeat adjustment.
				3-4	1st I.F.	
200 MMFD. Mica Condenser	External antenna lead	1500 KC	1500 KC	5	Broadcast Oscillator	Adjust for maximum output.
200 MMFD. Mica Condenser	External antenna lead	1500 KC	Tune to 1500 KC generator signal.	6	Broadcast Antenna	Adjust for maximum output.
200 MMFD. Mica Condenser	External antenna lead	600 KC	Tune to 600 KC generator signal.	7	Broadcast Antenna (shunt)	Adjust for maximum output.

Repeat Adjustment of Trimmers 6 and 7 Until One No Longer Detunes the Other.

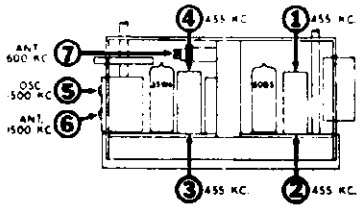

REAR VIEW OF CHASSIS

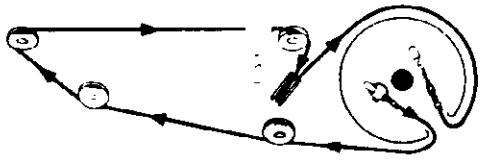

DIAL AND POINTER DRIVE CORD ARRANGEMENT

To string dial cord, turn the drive drum to maximum clockwise position and use the following parts:

114955	Clip on end of cord	119087	Ring for dial cord
117057	Cord (2 feet required)	505299	Tension Spring

STAGE GAIN MEASUREMENT PROCEDURE

REQUIRED INSTRUMENTS: The amount of amplification or "gain" of each of the stages of this receiver may be measured with an A.C. Vacuum Tube Voltmeter or a "channel" type instrument containing a tuned and calibrated amplifier.

PROCEDURE: It is exceedingly important to adhere to the procedure outlined below since the accuracy of these measurements will be affected to a considerable extent by the failure to establish proper operating conditions.

1. Be sure that R.F. and I.F. stages are carefully and accurately aligned by utilizing the alignment procedure given above.
2. Connect Signal Generator as shown below.
3. The values of stage gain which are given here were measured with a fixed bias of 3 volts on the control grids of all R.F. and I.F. tubes which are connected to the A.V.C. circuit. Therefore, these values are not intended to indicate the full capability of a stage but they will serve as a convenient basis for determining proper operation. In order to duplicate the fixed bias voltage, connect the negative terminal of a 3 volt battery to A.V.C. at terminal "J" of antenna coupling coil and connect the positive battery lead to B— in receiver chassis.
4. Set Signal Generator for operation at 600 Kc with 400 cycle modulation and carefully tune radio receiver to this signal by using an output meter to indicate peak output. If a local station interferes, set generator to a nearby frequency and re-tune the receiver.
5. R.F. and I.F. circuits are slightly de-tuned when contact is made with an instrument probe and this action, which is indicated by a change in the output meter reading, may seriously affect the gain measurement. Therefore, it is important to adjust the associated circuit trimmer for a maximum output meter reading and to set the input signal level to a convenient reference point on the gain measuring instrument while the probe is making contact. After removing the probe it is again necessary to adjust the trimmer so as to obtain the same output meter reading and thereby assure that the signal voltage at the specified point has not changed as a result of circuit de-tuning.
6. When using a "channel" type instrument, carefully tune it for maximum output at desired frequency before making measurements.

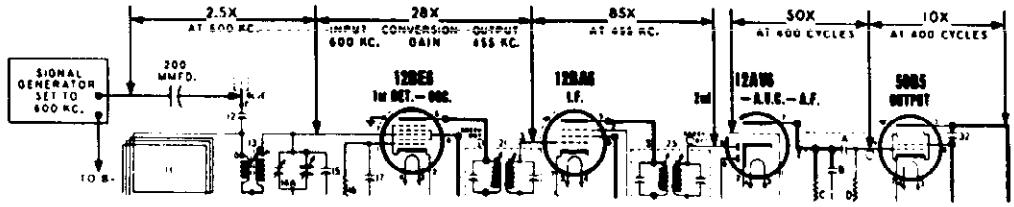

DIFFERENCES in tube characteristics, tolerance of parts, adjustment of tuned circuits and variations in line voltage will influence stage gain. These factors should be given due attention in event the gain of a stage varies extensively from the values shown above.

©John F. Rider

©John F. Rider

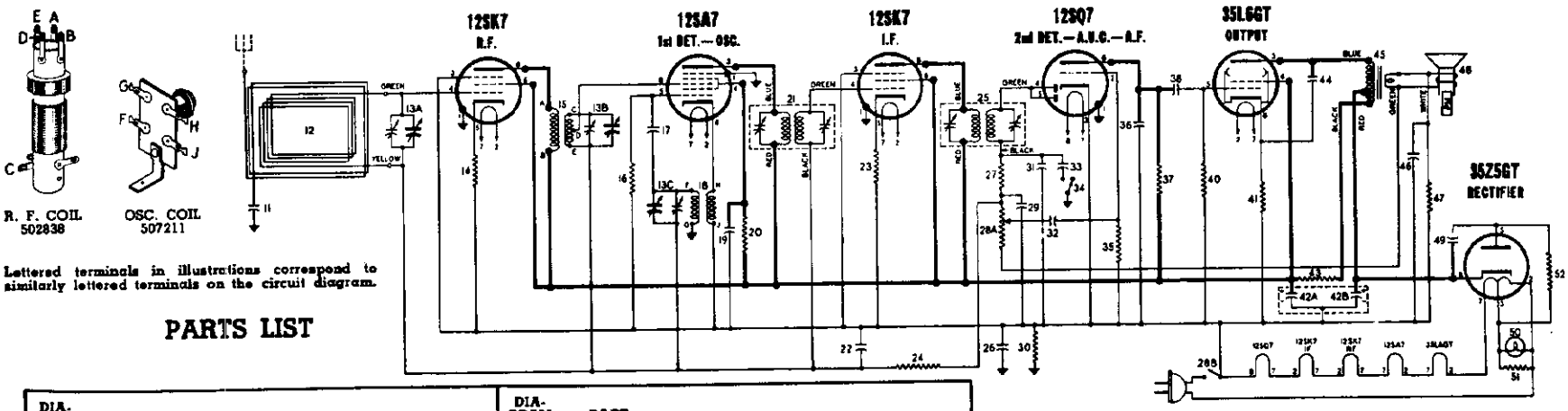

PARTS LIST

DIA-GRAM NO.	PART NO.	DESCRIPTION
		CONDENSERS
11	502152	Condenser—.02 Mfd. 400 volt
13-A, B, C	502123	Condenser—variable gang (with drum)
17	502159	Condenser—mica 50 Mmfd. 500 volt
19	502262	Condenser—.25 Mfd. 200 volt
22	502155	Condenser—.1 Mfd. 200 volt
26	502158	Condenser—.15 Mfd. 400 volt
29	505026	Condenser—ceramic 150 Mmfd. 350 volt
31	505026	Condenser—ceramic 150 Mmfd. 350 volt
32, 33	504977	Condenser—ceramic .002 Mfd. 150 volt
36	502160	Condenser—mica 110 Mmfd. 500 volt
38	505028	Condenser—.05 Mfd. 150 volt
42-A, B	500256	Condenser—electrolytic A—20 Mfd. 150 volt B—40 Mfd. 150 volt
44	502151	Condenser—.01 Mfd. 400 volt
46	505071	Condenser—.2 Mfd. 400 volt
49	502157	Condenser—.05 Mfd. 400 volt
		RESISTORS
14	510025	Resistor—carbon 220 Ohms ⅛ watt
16	510061	Resistor—carbon 22,000 Ohms ¼ watt
20	510049	Resistor—carbon 4700 Ohms ¼ watt
23	510021	Resistor—carbon 150 Ohms ¼ watt + 10%
24	510091	Resistor—carbon 1 Meg. ¼ watt
27	510064	Resistor—carbon 33,000 Ohms ¼ watt
28-A, B	504967	Volume control 1 Meg. (with switch)
30	510079	Resistor—carbon 220,000 Ohms ¼ watt
35	510097	Resistor—carbon 10 Meg. ¼ watt
37	510085	Resistor—carbon 470,000 Ohms ¼ watt
40	510085	Resistor—carbon 470,000 Ohms ¼ watt
41	510121	Resistor—carbon 150 Ohms ½ watt + 10%
43	510239	Resistor—carbon 1,500 Ohms 1 watt + 10%
47	510073	Resistor—carbon 100,000 Ohms ¼ watt
51	510029	Resistor—carbon 390 Ohms ¼ watt + 10%
52	510210	Resistor—carbon 33 Ohms 1 watt
		COILS AND TRANSFORMERS
12	506282	Loop Antenna
15	502838	Coil—R.F.
18	507211	Coil—oscillator
21	502102	Transformer—1st I.F.
25	502103	Transformer—2nd I.F.

DIA-GRAM NO.	PART NO.	DESCRIPTION
		COILS AND TRANSFORMERS—Cont'd
45	502904	Transformer—output for A-502998 speaker
	504781	Transformer—output for C-502998 speaker
	502213	Transformer—output for R-502998 speaker
	504244	Transformer—output for W-502998 speaker
	504756	Transformer—ouput for Y-502998 speaker
	504758	Transformer—output for Z-502998 speaker
		OTHER ELECTRICAL PARTS
34	500546	Switch—tone control
48	502998	Speaker—P. M. dynamic (5 inch) includes transformer
50	118921	Lamp—dial (Mazda No. 47) 6-8V. 150 Ma.
		MISCELLANEOUS PARTS
	506329	Back for cabinet
	116467	Base for mtg. electrolytic condenser
	502665	Cabinet—Ivory for Model B61T1
	502668	Cabinet—Mahogany for Model B61T2
	502506	Clamp—dial scale mtg.
	112745	Clip—coil mounting
	500497	Clip—retainer for cabinet back
	114955	Clip—retainer on end of dial cord
	113019	Clip—retains light shield
	117057	Cord—dial drive (5 ft. required)—per ft.
	500324	Cover—cardboard for elect. cond.
	506294	Dial scale—glass
	502564	Knob—for Model B61T1
	502563	Knob—for Model B61T2
	506285	Light diffusing strip
	502690	Pointer
	81145	Retaining ring for tuning shaft
	17063	Screw—No. 6 x ¼; holds dial clamp
	114628	Screw—No. 8 x ½; chassis mounting
	79805	Screw—No. 8 x 1½; loop mounting
	502173	Shaft—tuning control
	506284	Shield—light
	500499	Socket—dial lamp (with leads)
	116690	Socket—octal base
	160392	Socket—octal (rectifier)
	161384	Spring—dial cord tension
	111456	Washer—spring washer for tuning shaft

NOTE

Condenser #39 (22 Mmfd.), formerly connected between pins 3 and 5 of the 35L6GT output tube, has been omitted to eliminate tone distortion at high volume levels in a small percentage of receivers. Chassis incorporating this change are stamped with the letter "S".

I. F. 455 KC.

SOCKET VOLTAGES

Measured with voltmeter having sensitivity of 1000 ohms per volt except where indicated by (*). The (*) symbol designates a vacuum tube voltmeter measurement.

VOLUME ON FULL WITH NO SIGNAL — **DIAL TUNED TO 540 KC.**

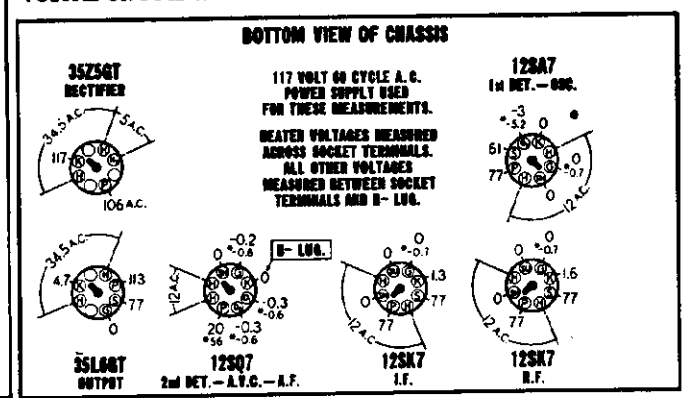

MODELS B61T1, Code 9046-A;
B61T2, Code 9046-B

ALIGNMENT PROCEDURE

1. Remove chassis from cabinet—allow loop antenna to remain attached to chassis.
2. Note that there are four calibrating lines stamped into front edge of the metal dial frame. When gang condenser is fully meshed, dial pointer should be in the position indicated by first line at the left. If it is set incorrectly, release pointer clip on dial cord and reposition pointer.
3. Connect an output meter across the speaker voice coil or from plate of 35L6GT tube to B— through a .1 Mfd. condenser (see voltage chart for convenient B— connection).
4. Connect ground lead of signal generator to B— lug. CAUTION: If your test oscillator is designed with an AC-DC power supply, connect ground lead of signal generator to B— lug through a .25 Mfd. condenser.
5. Set volume control to maximum volume position and use a weak signal from the signal generator.

DUMMY ANT. IN SERIES WITH SIGNAL GENERATOR	CONNECTION OF SIG. GENERATOR OUTPUT TO RECEIVER	SIGNAL GENERATOR FREQUENCY	RECEIVER DIAL SETTING	TRIMMER NUMBER	TRIMMER DESCRIPTION	TYPE OF ADJUSTMENT
200 MMFD. Mica Condenser	Control Grid of 12SA7	455 KC	Any point where it does not affect the signal.	1-2	2nd I.F.	Adjust for maximum output. Then repeat adjustment.
				3-4	1st I.F.	
200 MMFD. Mica Condenser	External Antenna Terminal on Loop Frame	1650 KC	Gang condenser fully open.	5	Broadcast Oscillator (Shunt)	Adjust for maximum output.
200 MMFD. Mica Condenser	External Antenna Terminal on Loop Frame	1500 KC	Tune to 1500 KC generator signal	6	Broadcast R.F.	Adjust for maximum output.
200 MMFD. Mica Condenser	External Antenna Terminal on Loop Frame	1500 KC	Tune to 1500 KC generator signal	7	Broadcast Antenna	Adjust for maximum output.

TOP VIEW OF CHASSIS

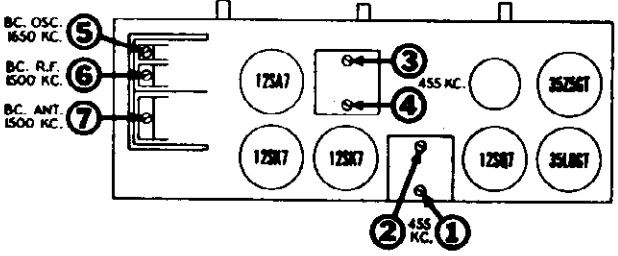

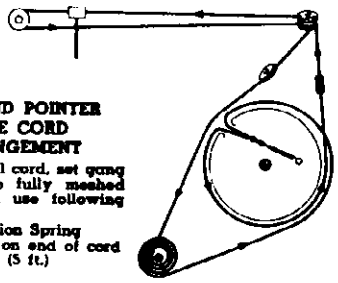

DIAL AND POINTER DRIVE CORD ARRANGEMENT

To string dial cord, set gang condenser to fully meshed position and use following parts:

161384 Tension Spring
114855 Clip on end of cord
117057 Cord (5 ft.)

STAGE GAIN MEASUREMENT PROCEDURE

REQUIRED INSTRUMENTS: The amount of amplification or "gain" of each of the stages of this receiver may be measured with an A.C. Vacuum Tube Voltmeter or a "channel" type instrument containing a tuned and calibrated amplifier.

PROCEDURE: It is exceedingly important to adhere to the procedure outlined below since the accuracy of these measurements will be affected to a considerable extent by the failure to establish proper operating conditions.

1. Be sure that R.F. and I.F. stages are carefully and accurately aligned by utilizing the alignment procedure given above.
2. Connect Signal Generator as shown below.
3. The values of stage gain which are given here were measured with a fixed bias of 3 volts on the control grids of all R.F. and I.F. tubes which are connected to the A.V.C. circuit. Therefore, these values are not intended to indicate the full capability of a stage but they will serve as a convenient basis for determining proper operation. In order to duplicate the fixed bias voltage, connect the negative terminal of a 3 volt battery to A.V.C. at terminal "E" of the R.F. coil and connect the positive battery lead to B— in receiver chassis.
4. Set Signal Generator for operation at 600 Kc with 400 cycle modulation and carefully tune radio receiver to this signal by using an output meter to indicate peak output. If a local station interferes set generator to a nearby frequency and re-tune the receiver.
5. R.F. and I.F. circuits are slightly de-tuned when contact is made with an instrument probe and this action, which is indicated by a change in the output meter reading, may seriously affect the gain measurement. Therefore, it is important to adjust the associated circuit trimmer for a maximum output meter reading and to set the input signal level to a convenient reference point on the gain measuring instrument while the probe is making contact. After removing the probe it is again necessary to adjust the trimmer so as to obtain the same output meter reading and thereby assure that the signal voltage at the specified point has not changed as a result of circuit de-tuning.
6. When using a "channel" type instrument carefully tune it for maximum output at desired frequency before making measurements.

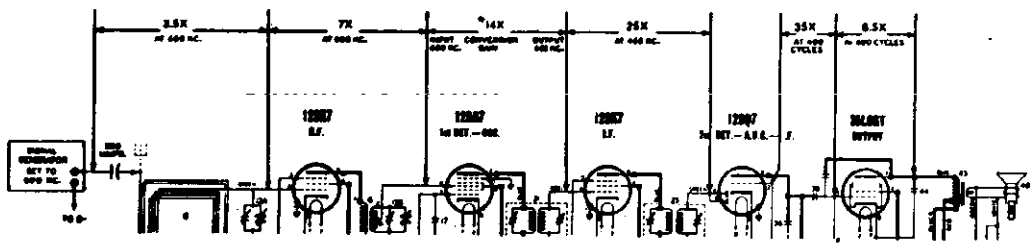

*When measuring the gain of this stage use a "channel" type instrument or a signal generator with calibrated output voltage.

DIFFERENCES in tube characteristics, tolerance of parts, adjustment of tuned circuits and variations in line voltage will influence stage gain. These factors should be given due attention in event the gain of a stage varies extensively from the values shown above.

©John F. Rider

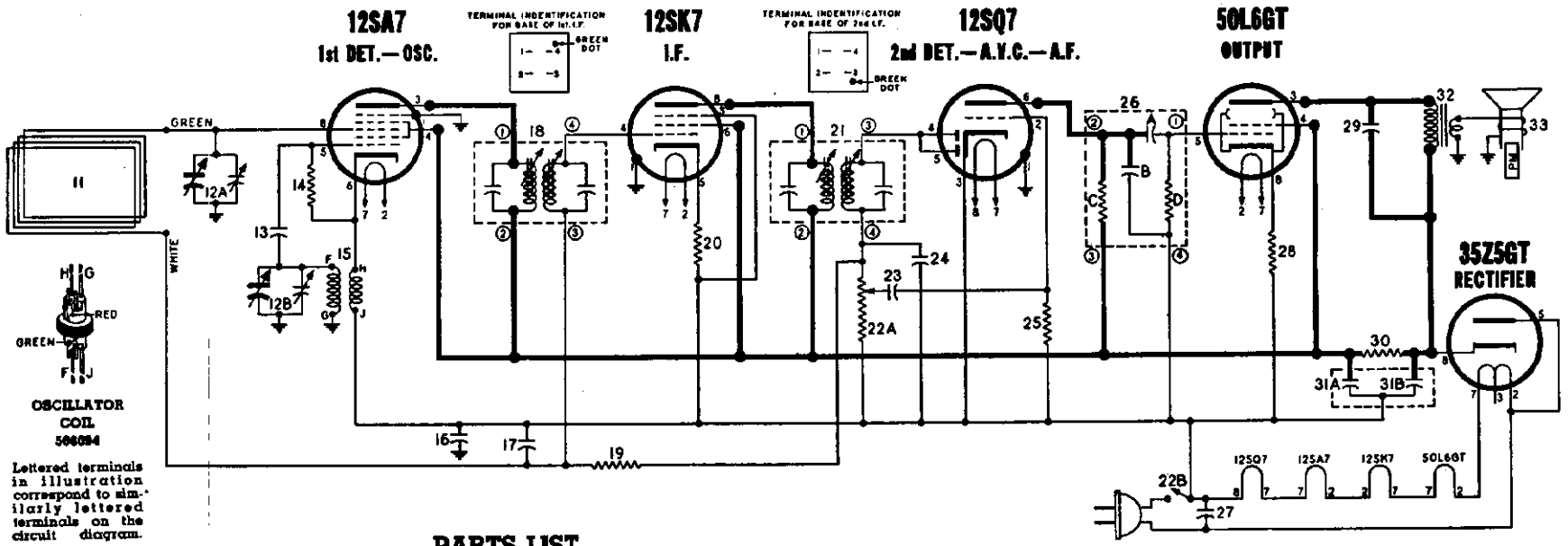

PARTS LIST

DIA-GRAM NO.	PART NO.	DESCRIPTION
		CONDENSERS
12-A, B..	506081	Condenser—variable gang (with drum)..
13	502931	Condenser—mica 100 Mmfd. 500 volt.....
16	502158	Condenser—.15 Mfd. 400 volt.....
17	502153	Condenser—.05 Mfd. 200 volt.....
23	504726	Condenser—.01 Mfd. 200 volt.....
24	502931	Condenser—mica 100 Mmfd. 500 volt.....
26-A	505858	Condenser—ceramic .005 Mfd. 450 volt (part of audio coupling unit).....
26-B	505858	Condenser—ceramic 250 Mmfd. 450 volt (part of audio coupling unit).....
27	502154	Condenser—.05 Mfd. 600 volt.....
29	504726	Condenser—.01 Mfd. 200 volt.....
31-A, B..	506090	Condenser—electrolytic A—20 Mfd. 150 volt } B—30 Mfd. 150 volt } .....
		RESISTORS
14	510061	Resistor—carbon 22,000 Ohms ¼ watt...
19	510094	Resistor—carbon 3.3 Meg. ¼ watt.....
20	510022	Resistor—carbon 150 Ohms ¼ watt.....
22-A, B..	506087	Volume control 1 Meg. (with switch)....
25	510097	Resistor—carbon 10 Meg. ¼ watt.....
26-C, D..	505858	Resistor—carbon 470,000 Ohms 1/5 watt (part of audio coupling unit).....
28	510128	Resistor—carbon 330 Ohms ½ watt.....
30	510243	Resistor—carbon 2,200 Ohms 1 watt....
		OTHER ELECTRICAL PARTS
11	506088	Loop antenna and cabinet back.....
15	506094	Coil—oscillator .....
18	506083	Transformer—1st I.F. .....
21	506084	Transformer—2nd I.F.....

DIA-GRAM NO.	PART NO.	DESCRIPTION
26	505858	Audio coupling unit A—Condenser—ceramic .005 Mfd. 450 volt B—Condenser—ceramic 250 Mmfd. 450 volt C—Resistor—carbon 470,000 Ohms 1/5 watt D—Resistor—carbon 470,000 Ohms 1/5 watt
32	506089	Transformer—output .....
33	506079	Speaker—P.M. dynamic (4 inch).....
		MISCELLANEOUS
	505165	"C" washer—retains tuning shaft.....
	505901	Cabinet—ivory; Model C51T1.....
	505902	Cabinet—mahogany; Model C51T2.....
	117057	Cord-dial drive (2 ft. required)....per ft.
	114955	Clip—retainer on end of dial cord.....
	160326	Clip—retains dial scale.....
	506092	Clip—retains loop and cabinet back to chassis .....
	506096	Clip—retains loop and cabinet back to cabinet .....
	506082	Dial Pointer disc.....
	506085	Dial scale .....
	502563	Knob—volume or tuning for Model C51T2
	502564	Knob—volume or tuning for Model C51T1
	119087	Ring for dial cord.....
	18785	Screw—#8 x ⅞" chassis mounting.....
	506085	Shaft—tuning .....
	116690	Socket—octal base .....
	160392	Socket—octal (rectifier) .....
	505161	Spring—tension .....

I.F. 455 KC.

SOCKET VOLTAGES

Measured with voltmeter having sensitivity of 1000 ohms per volt except where indicated by (*). The (*) symbol designates a vacuum tube voltmeter measurement.

VOLUME ON FULL WITH NO SIGNAL — DIAL TUNED TO 540 KC.

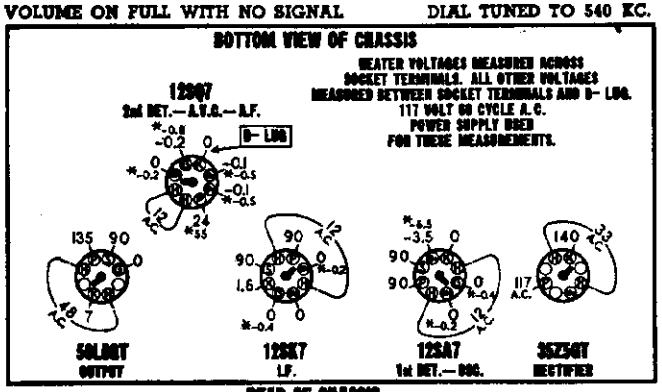

MODELS C51T1, Code 9045-A;
C51T2, Code 9045-B

ALIGNMENT PROCEDURE

1. Remove chassis and loop antenna (on cabinet back) from cabinet—allow loop to remain attached to chassis.
2. With the gang condenser fully meshed, the dial indicator should be pointing horizontally to the left. If it is set incorrectly, reposition by firmly holding the gang condenser shaft while rotating the indicator. Then check to see that the dial indicator is pointing horizontally to the right when the gang condenser is fully open.
3. Couple the signal generator to the receiver by connecting its output to several turns of wire formed in a circular shape so that it may be placed adjacent and parallel to the receiver loop antenna.
4. Connect an output meter across the speaker voice coil or from the plate of the 50L6GT tube to B— through a 0.1 Mfd. condenser.
5. Set volume control at maximum volume position and use a weak signal from the signal generator.

DUMMY ANT. IN SERIES WITH SIGNAL GENERATOR	SIGNAL GENERATOR CONNECTION	SIGNAL GENERATOR FREQUENCY	RECEIVER DIAL SETTING	TRIMMER OR SLUG NUMBER	TRIMMER DESCRIPTION	TYPE OF ADJUSTMENT
None	Connect directly to coupling turn as instructed in Step 3 above.	455 KC	Any point where it does not affect the signal.	1-2	2nd I.F.	Adjust for maximum output. Then repeat adjustment.
				3-4	1st I.F.	
None	Connect directly to coupling turn as instructed in Step 3 above.	1400 KC	1400 KC	5	Broadcast Oscillator	Adjust for maximum output.
None	Connect directly to coupling turn as instructed in Step 3 above.	1400 KC	Tune to 1400 KC generator signal	6	Broadcast Antenna	Adjust for maximum output.

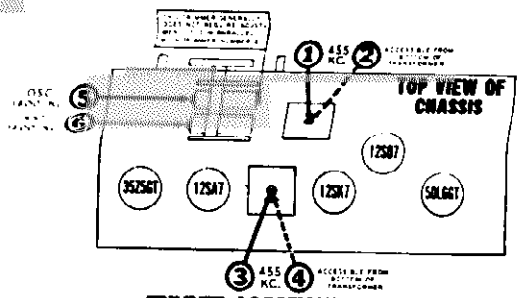

TRIMMER LOCATIONS

DIAL AND POINTER DRIVE CORD ARRANGEMENT

For wiring dial cord turn the main drive drum to maximum counter - clockwise position and use following parts.

114955 Clip on end of cord
117057 Cord (2 feet)
119087 Ring for dial cord
505161 Tension Spring

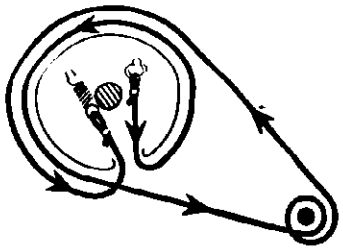

STAGE GAIN MEASUREMENT PROCEDURE

REQUIRED INSTRUMENTS: The amount of amplification or "gain" of each of the stages of this receiver may be measured with an A.C. Vacuum Tube Voltmeter or a "channel" type instrument containing a tuned and calibrated amplifier.

PROCEDURE: It is exceedingly important to adhere to the procedure outlined below since the accuracy of these measurements will be affected to a considerable extent by the failure to establish proper operating conditions.

1. Be sure that R.F. and I.F. stages are carefully and accurately aligned by utilizing the alignment procedure given above.
2. Connect Signal Generator as shown below.
3. The values of stage gain which are given here were measured with a fixed bias of 3 volts on the control grids of all R.F. and I.F. tubes which are connected to the A.V.C. circuit. Therefore, these values are not intended to indicate the full capability of a stage but they will serve as a convenient basis for determining proper operation. In order to duplicate the fixed bias voltage, connect the negative terminal of a 3 volt battery to A.V.C. at terminal #3 of the 1st I.F. transformer and connect the positive battery lead to B— in receiver chassis.
4. Set Signal Generator for operation at 600 Kc with 400 cycle modulation and carefully tune radio receiver to this signal by using an output meter to indicate peak output. If a local station interferes, set generator to a nearby frequency and re-tune the receiver.
5. R.F. and I.F. circuits are slightly de-tuned when contact is made with an instrument probe and this action, which is indicated by a change in the output meter reading, may seriously affect the gain measurement. Therefore, it is important to adjust the associated circuit trimmer for a maximum output meter reading and to set the input signal level to a convenient reference point on the gain measuring instrument while the probe is making contact. After removing the probe it is again necessary to adjust the trimmer so as to obtain the same output meter reading and thereby assure that the signal voltage at the specified point has not changed as a result of circuit de-tuning.
6. When using a "channel" type instrument, carefully tune it for maximum output at desired frequency before making measurements.

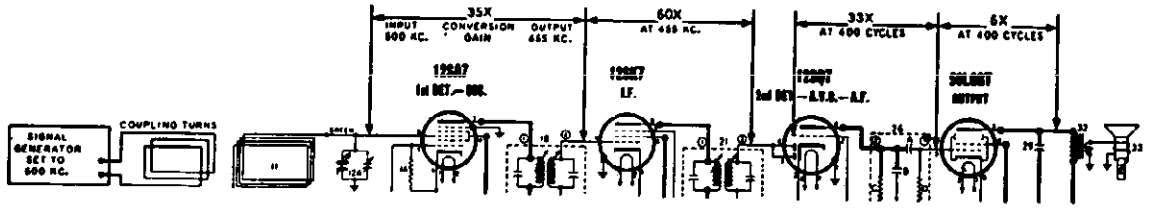

DIFFERENCES in tube characteristics, tolerance of parts, adjustment of tuned circuits and variations in line voltage will influence stage gain. These factors should be given due attention in event the gain of a stage varies extensively from the values shown above.

©John F. Rider

©John F. Rider

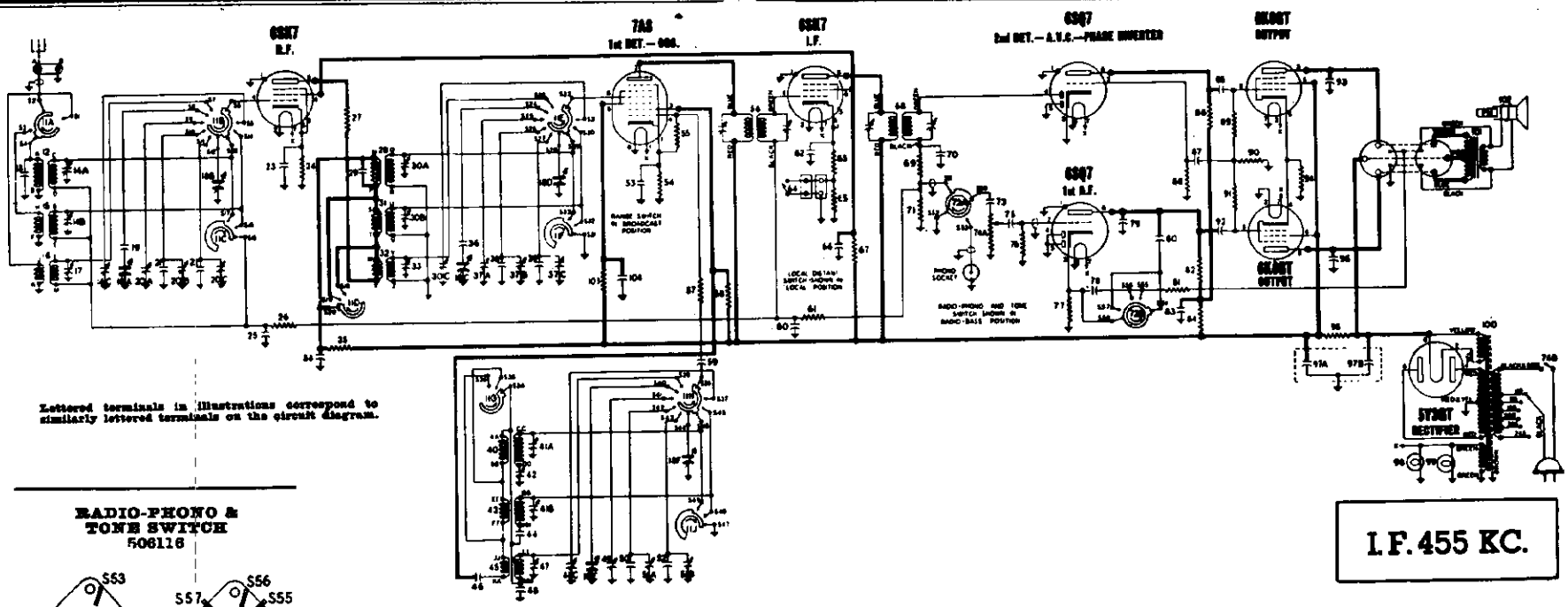

Lettered terminals in illustrations correspond to similarly lettered terminals on the circuit diagram.

I.F. 455 KC.

RADIO-PHONO & TONE SWITCH 506116

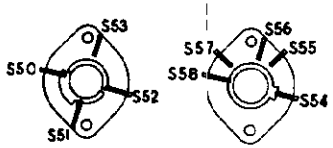

FRONT VIEW REAR VIEW

BAND SWITCH 506106

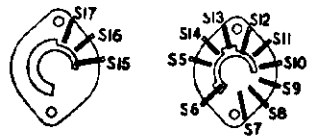

SECTION 1 FRONT VIEW SECTION 1 REAR VIEW

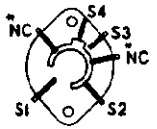

SECTION 2 FRONT VIEW

*Not used; may serve as wiring junction point.

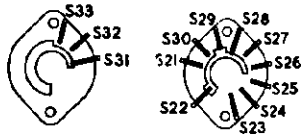

SECTION 3 FRONT VIEW SECTION 3 REAR VIEW

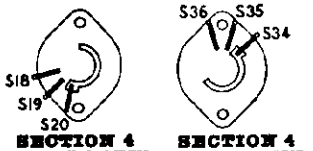

SECTION 4 FRONT VIEW SECTION 4 REAR VIEW

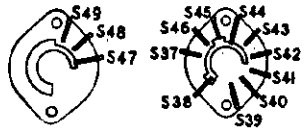

SECTION 5 FRONT VIEW SECTION 5 REAR VIEW

AUDIO OSCILLATION

The audio system of this receiver utilizes a two stage type of inverse feed-back arrangement and should it ever be necessary to replace the speaker or output transformer it is important to maintain a definite phase relationship in the feed-back circuit. If the connections to the output transformer are reversed or if the feed-back connection is made to the wrong side of the output transformer secondary, the system will become regenerative instead of degenerative. Under those conditions audio oscillation may result. If that occurs, oscillation may be prevented by reversing the connections to the primary of the output transformer.

TUNING DIAL AND POINTER DRIVE CORD ARRANGEMENT

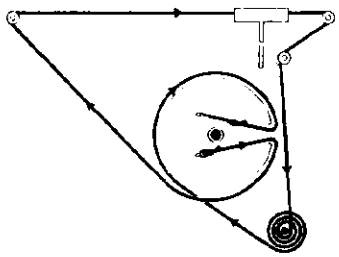

To string tuning dial drive cord, set gang condenser to fully open position.

To string band switch drive cord, turn "Band Selector" knob to its extreme counter-clockwise position.

When stringing drive cord, use the following parts:

113177 Tension Spring
114955 Clip on end of cord
119087 Ring
502773 Cord (9 feet)
5 ft. for tuning drive
4 ft. for band switch drive

BAND SWITCH INDICATOR DRIVE CORD ARRANGEMENT

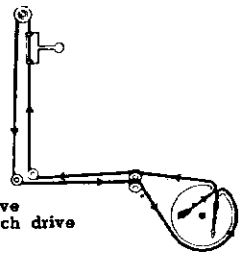

MODEL 9041-A

ALIGNMENT PROCEDURE

1. Remove chassis and speaker from cabinet.
2. When gang condenser is fully meshed, dial pointer should be in the position indicated by the left hand starting edge of the dial scale. If it is set incorrectly, release pointer clip on dial cord and reposition pointer.
3. Connect an output meter across the speaker voice coil or from the plate of the 6K6GT tube to chassis through a 0.1 Mfd. condenser.
4. Connect the ground lead of the signal generator to the receiver chassis.
5. Set volume control to maximum volume position and use a weak signal from the signal generator.
6. Set Radio-Phono and Tone switch to "Radio-Bass" position.
7. Set Local-Distant switch to "Distant" position.

IMPORTANT: Align this receiver in exactly the order shown below. The 13-16 Meter band must be aligned before any of the other short wave bands.

DUMMY ANT. IN SERIES WITH SIGNAL GENERATOR	CONNECT HIGH SIDE OF SIGNAL GENERATOR TO	SIGNAL GENERATOR FREQUENCY	BAND SWITCH POSITION	RECEIVER DIAL SETTING	TRIMMER NUMBER	TRIMMER DESCRIPTION	TYPE OF ADJUSTMENT
200 MMFD. Mica Condenser	Lug on RF section of gang; see point "X" in chart on next page.	455 KC	Broadcast (*Position 1)	Any point where it does not affect the signal.	1-2	2nd I.F.	Adjust for maximum output. Then repeat adjustment.
					3-4	1st I.F.	
200 MMFD. Mica Condenser	"A" terminal at rear of chassis.	1500 KC	Broadcast (*Position 1)	1500 Kc.	5	Broadcast Oscillator (Shunt)	Adjust for maximum output.
200 MMFD. Mica Condenser	"A" terminal at rear of chassis.	1500 KC	Broadcast (*Position 1)	Tune to 1500 Kc. generator signal.	6	Broadcast Antenna	Adjust for maximum output.
					7	Broadcast R.F.	
200 MMFD. Mica Condenser	"A" terminal at rear of chassis.	600 KC	Broadcast (*Position 1)	Tune to 600 Kc. generator signal.	8	Broadcast Oscillator (Series Pad)	Adjust for maximum output. Try to increase output by detuning trimmer and retuning receiver dial until maximum output is obtained.
200 MMFD. Mica Condenser	"A" terminal at rear of chassis.	Repeat adjustment of trimmers 5, 6, and 7 at 1500 Kc. Then re-check adjustment of trimmer 8 at 600 Kc.					
400 OHM Carbon Resistor	"A" terminal at rear of chassis.	5 MC	Intermediate (*Position 2)	5 Mc.	9	Intermediate Oscillator	Adjust for maximum output. Check to see if proper peak was obtained by tuning in image at approx. 4.1 Mc. If image does not appear, realign at 5 Mc, with trimmer screw further out. Recheck image.
400 OHM Carbon Resistor	"A" terminal at rear of chassis.	5 MC	Intermediate (*Position 2)	Tune to 5 Mc. generator signal.	10	Intermediate Antenna	Adjust for maximum output. Try to increase output by detuning trimmer and retuning receiver dial until maximum output is obtained.
					11	Intermediate R.F.	
400 OHM Carbon Resistor	"A" terminal at rear of chassis.	21 MC	13-16 Meter (*Position 4)	21 Mc.	12	13-16 Meter Oscillator	Adjust for maximum output. Check to see if proper peak was obtained by tuning in image at approx. 21.9 Mc. If image does not appear, realign at 21 MC. with trimmer screw further in. Recheck image.
400 OHM Carbon Resistor	"A" terminal at rear of chassis.	21 MC	13-16 Meter (*Position 4)	Tune to 21 Mc. generator signal.	13	13-16 Meter Antenna	Adjust for maximum output. Try to increase output by detuning trimmer and retuning receiver dial until maximum output is obtained.
					14	13-16 Meter R.F.	
400 OHM Carbon Resistor	"A" terminal at rear of chassis.	15.5 MC	19 Meter (*Position 5)	15.5 Mc.	15	19 Meter Oscillator	Adjust for maximum output. Check to see if proper peak was obtained by tuning in image at approx. 16.4 Mc. If image does not appear, realign at 15.5 Mc, with trimmer screw further in. Recheck image.
400 OHM Carbon Resistor	"A" terminal at rear of chassis.	15.5 MC	19 Meter (*Position 5)	Tune to 15.5 Mc. generator signal.	16	19 Meter Antenna	Adjust for maximum output. Try to increase output by detuning trimmer and retuning receiver dial until maximum output is obtained.
					17	19 Meter R.F.	
400 OHM Carbon Resistor	"A" terminal at rear of chassis.	11.5 MC	25 Meter (*Position 6)	11.5 Mc.	18	25 Meter Oscillator	Adjust for maximum output. Check to see if proper peak was obtained by setting signal generator to 10.6 Mc. and tuning radio in vicinity of 11.5 Mc. If signal is not heard, realign at 11.5 Mc. with trimmer screw further in. Recheck.
400 OHM Carbon Resistor	"A" terminal at rear of chassis.	11.5 MC	25 Meter (*Position 6)	Tune to 11.5 Mc. generator signal.	19	25 Meter Antenna	Adjust for maximum output. Try to increase output by detuning trimmer and retuning receiver dial until maximum output is obtained.
					20	25 Meter R.F.	

(Continued on next page)

* Position 1 corresponds to extreme counter-clockwise setting of band switch. Succeeding positions are numbered in ascending order as switch is rotated clockwise.

©John F. Rider

400 OHM Carbon Resistor	"A" terminal at rear of chassis.	9.6 MC	31 Meter (*Position 7)	9.6 Mc.	21	31 Meter Oscillator	Adjust for maximum output. Check to see if proper peak was obtained by setting signal generator to 8.7 Mc. and tuning radio in vicinity of 9.6 Mc. If signal is not heard realign at 9.6 Mc. with trimmer screw further in. Recheck.
400 OHM Carbon Resistor	"A" terminal at rear of chassis.	9.6 MC	31 Meter (*Position 7)	Tune to 9.6 Mc. generator signal.	22	31 Meter Antenna	Adjust for maximum output. Try to increase output by detuning trimmer and retuning receiver dial until maximum output is obtained.
					23	31 Meter R.F.	
400 OHM Carbon Resistor	"A" terminal at rear of chassis.	15 MC	S.W. (*Position 3)	15 Mc.	24	S.W. Oscillator	Adjust for maximum output. Check to see if proper peak was obtained by tuning in image at approx. 14.1 Mc. If image does not appear, realign at 15 Mc., with trimmer screw further out. Recheck image.
400 OHM Carbon Resistor	"A" terminal at rear of chassis.	15 MC	S.W. (*Position 3)	Tune to 15 Mc. generator signal.	25	S.W. Antenna	Adjust for maximum output. Try to increase output by detuning trimmer and retuning receiver dial until maximum output is obtained.
					26	S.W. R.F.	

* Position 1 corresponds to extreme counter-clockwise setting of band switch. Succeeding positions are numbered in ascending order as switch is rotated clockwise.

TOP VIEW OF CHASSIS

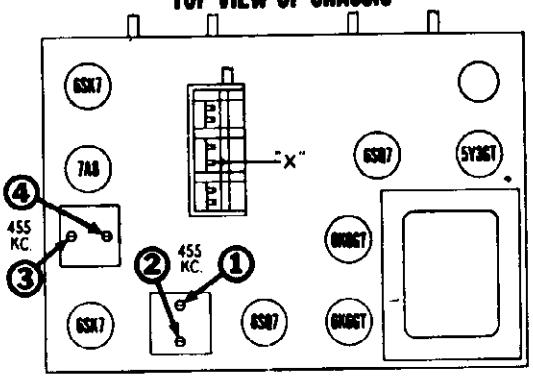

BOTTOM VIEW OF CHASSIS

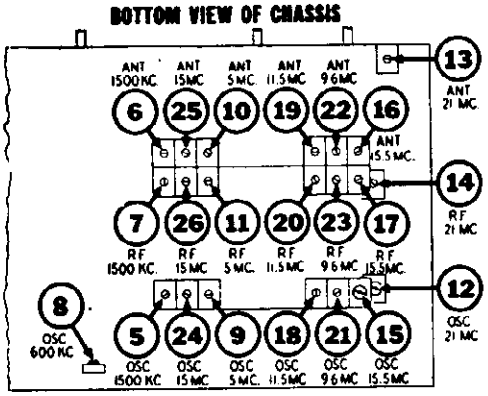

STAGE GAIN MEASUREMENT PROCEDURE

REQUIRED INSTRUMENTS: The amount of amplification or "gain" of each of the stages of this receiver may be measured with an A.C. Vacuum Tube Voltmeter or a "channel" type instrument containing a tuned and calibrated amplifier.

PROCEDURE: It is exceedingly important to adhere to the procedure outlined below since the accuracy of these measurements will be affected to a considerable extent by the failure to establish proper operating conditions.

1. Be sure that R.F. and I.F. stages are carefully and accurately aligned by utilizing the alignment procedure given above.
2. Connect Signal Generator as shown below.
3. The values of stage gain which are given here were measured with a fixed bias of 3 volts on the control grids of all R.F. and I.F. tubes which are connected to the A.V.C. circuit. Therefore, these values are not intended to indicate the full capability of a stage but they will serve as a convenient basis for determining proper operation. In order to duplicate the fixed bias voltage, connect the negative terminal of a 3 volt battery to A.V.C. at the black lead of the 1st I.F. transformer and connect the positive battery lead to the receiver chassis.
4. Set Signal Generator for operation at 600 Kc with 400 cycle modulation and carefully tune radio receiver to this signal by using an output meter to indicate peak output. If a local station interferes, set generator to a nearby frequency and re-tune the receiver.
5. R.F. and I.F. circuits are slightly de-tuned when contact is made with an instrument probe and this action, which is indicated by a change in the output meter reading, may seriously affect the gain measurement. Therefore, it is important to adjust the associated circuit trimmer for a maximum output meter reading and to set the input signal level to a convenient reference point on the gain measuring instrument while the probe is making contact. After removing the probe it is again necessary to adjust the trimmer so as to obtain the same output meter reading and thereby assure that the signal voltage at the specified point has not changed as a result of circuit de-tuning.
6. When using a "channel" type instrument, carefully tune it for maximum output at desired frequency before making measurements.

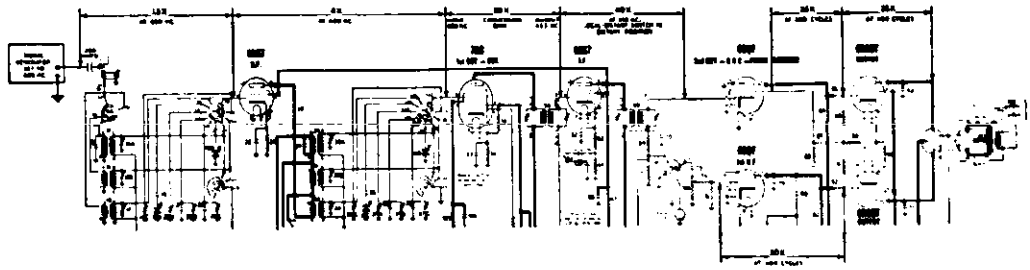

DIFFERENCES in tube characteristics, tolerance of parts, adjustment of tuned circuits and variations in line voltage will influence stage gain. These factors should be given due attention in event the gain of a stage varies extensively from the values shown above.

©John F. Rider

MODEL 9041-A

SOCKET VOLTAGES

Measured with voltmeter having sensitivity of 1000 ohms per volt except where indicated by (*). The (*) symbol designates a vacuum tube voltmeter measurement.

BE SURE THAT SWITCH ON POWER TRANSFORMER IS SET TO POSITION WHICH MOST NEARLY MATCHES LINE VOLTAGE

RADIO-PHONO AND TONE SWITCH IN "RADIO-BASS" POSITION
VOLUME ON FULL WITH NO SIGNAL — DIAL TUNED TO 540 KC
BAND SWITCH IN BROADCAST POSITION
ANTENNA TERMINAL GROUNDED
LOCAL-DISTANT SWITCH
IN "LOCAL" POSITION UNLESS OTHERWISE INDICATED

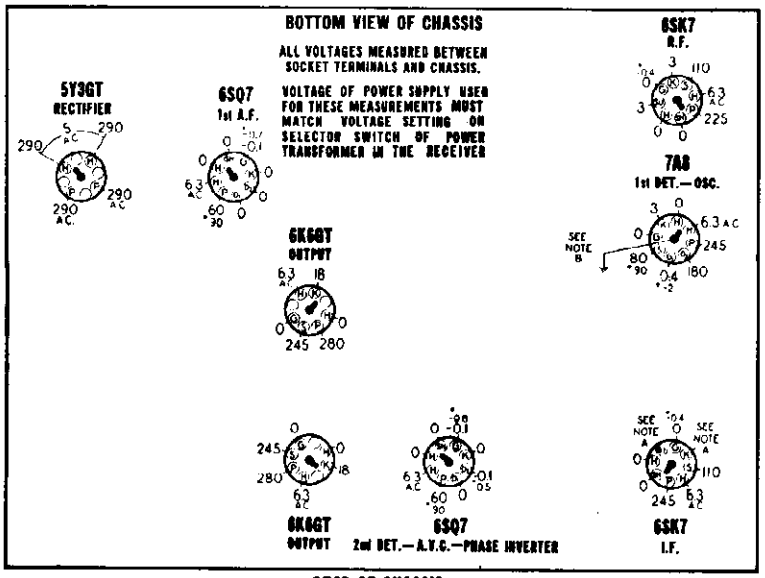

NOTE A: The voltage at the cathode or suppressor terminals of this tube is 13 volts when Local-Distant switch is in "Local" position and 2 volts when switch is set to "Distant" position.

NOTE B: Grounding of center stud on tube socket is necessary to reduce capacity coupling between other pins. Oscillation may result if this ground is omitted.

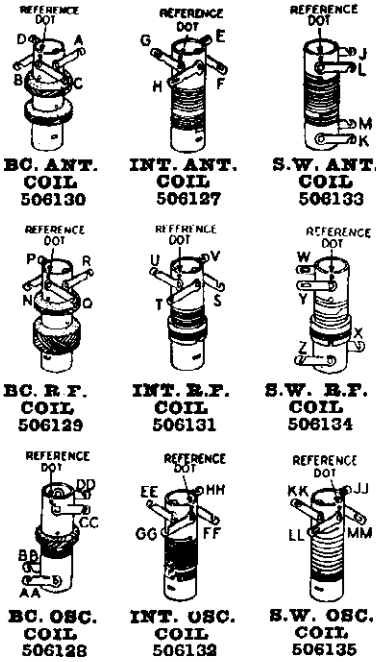

DIA. GRAM NO.	PART NO.	DESCRIPTION
		CONDENSERS
13	504434	Condenser ceramic 50 Mmfd. 500 volt
14A, B, C	506121	Condenser trimmer assembly { A 1.6 to 18 Mmfd. / B 1.6 to 18 Mmfd. / C 4 to 70 Mmfd. }
17	502758	Condenser trimmer: 1.6 to 18 Mmfd.
18A to F	506104	Condenser variable gang
19	506124	Condenser ceramic 250 Mmfd. 500 v. ±2%
20A, B, C	502754	Condenser trimmer assembly { A 3 to 35 Mmfd. / B 3 to 35 Mmfd. / C—1.6 to 18 Mmfd. }
21	502779	Condenser ceramic 56 Mmfd. 500 v. ±2%
22	503824	Condenser ceramic 120 Mmfd. 500 v. ±2%
23	502807	Condenser .05 Mfd. 400 volt
25	502807	Condenser .05 Mfd. 400 volt
29	504434	Condenser ceramic 50 Mmfd. 500 volt
30A, B, C	506121	Condenser trimmer assembly { A 1.6 to 18 Mmfd. / B 1.6 to 18 Mmfd. / C— 4 to 70 Mmfd. }
33	502758	Condenser trimmer: 1.6 to 18 Mmfd.
34	502807	Condenser .05 Mfd. 400 volt
36	506124	Condenser ceramic 250 Mmfd. 500 v. ±2%
37A, B, C	502754	Condenser trimmer assembly { A— 3 to 35 Mmfd. / B 3 to 35 Mmfd. / C 1.6 to 18 Mmfd. }
38	502779	Condenser ceramic 56 Mmfd. 500 v. ±2%
39	503824	Condenser ceramic 120 Mmfd. 500 v. ±2%
41A, B, C	506122	Condenser trimmer assembly { A 4 to 70 Mmfd. / B 1.6 to 18 Mmfd. / C 4 to 70 Mmfd. }
42	502822	Condenser trimmer: 300 to 600 Mmfd.
44	502791	Condenser mica 1600 Mmfd. 500 v. ±5%
45	502792	Condenser mica 4000 Mmfd. 500 volt
47	504954	Condenser trimmer: 3 to 12 Mmfd.
48	502793	Condenser mica 5600 Mmfd. 500 v. ±2%
49	506120	Condenser trimmer: 5 to 30 Mmfd.
50	502167	Condenser ceramic 68 Mmfd. 500 v. ±2%
51A, B	502755	Condenser trimmer assembly { A 3 to 35 Mmfd. / B 1.6 to 18 Mmfd. }
52	505822	Condenser ceramic 160 Mmfd. 500 v. ±2%
53	502807	Condenser .05 Mfd. 400 volt
59	502931	Condenser ceramic 100 Mmfd. 500 volt
60	502805	Condenser .02 Mfd. 400 volt
62	502807	Condenser .05 Mfd. 400 volt
66	502807	Condenser .05 Mfd. 400 volt
70	502931	Condenser ceramic 100 Mmfd. 500 volt
73	502802	Condenser .004 Mfd. 600 volt
75	502802	Condenser .004 Mfd. 600 volt
78	502880	Condenser .1 Mfd 400 volt
79	502931	Condenser ceramic 100 Mmfd. 500 volt
80	502803	Condenser .006 Mfd. 600 volt
83	502809	Condenser .25 Mfd. 400 volt
85	502804	Condenser .01 Mfd. 400 volt
87	502804	Condenser .01 Mfd. 400 volt
92	502804	Condenser .01 Mfd. 400 volt
93	506125	Condenser .001 Mfd 600 volt
95	506125	Condenser .001 Mfd 600 volt
97A, B	506118	Condenser electrolytic { A 15 Mfd. 450 volt / B 20 Mfd. 450 volt }
104	502809	Condenser .25 Mfd. 400 volt
		RESISTORS
24	510025	Resistor carbon 220 Ohms ¼ watt
26	510085	Resistor carbon 470,000 Ohms ¼ watt
27	510031	Resistor carbon 470 Ohms ¼ watt
35	510140	Resistor carbon 1,500 Ohms ½ watt
54	510028	Resistor carbon 330 Ohms ¼ watt
55	510067	Resistor carbon 47,000 Ohms ¼ watt
57	510016	Resistor carbon 68 Ohms ¼ watt
58	510157	Resistor carbon 15,000 Ohms ½ w. ±10%
61	510092	Resistor—carbon 1.5 Meg. ¼ watt
63	510025	Resistor carbon 220 Ohms ¼ watt
65	510053	Resistor carbon 8,200 Ohms ¼ w. ±10%
67	510363	Resistor carbon 33,000 Ohms 2 w. ±10%
69	510067	Resistor—carbon 47,000 Ohms ¼ watt
71	510085	Resistor carbon 470,000 Ohms ¼ watt
74A, B	506115	Volume control 2 Meg. (with switch)
76	510097	Resistor—carbon 10 Meg. ¼ watt
77	510016	Resistor carbon 68 Ohms ¼ watt
81	510031	Resistor—carbon 470 Ohms ¼ watt
82	510079	Resistor carbon 220,000 Ohms ¼ watt
84	510073	Resistor carbon 100,000 Ohms ¼ watt
86	510079	Resistor carbon 220,000 Ohms ¼ watt
88	510097	Resistor carbon 10 Meg. ¼ watt
89, 90, 91	510079	Resistor carbon 220,000 Ohms ¼ watt
94	510628	Resistor wire wound 270 Ohms 2 w. ±10%
96	510638	Resistor wire wound 1200 Ohms 2 w. ±10%
103	510168	Resistor carbon 56,000 Ohms ½ w. ±10%
		COILS AND TRANSFORMERS
12	506130	Coil BC. Antenna
15	506127	Coil—Int. Antenna
16	506133	Coil S.W. Antenna
28	506129	Coil—BC. R.F.
31	506131	Coil Int. R.F.
32	506134	Coil S.W. R.F.
40	506128	Coil—BC. Oscillator
43	506132	Coil—Int. Oscillator
45	506135	Coil S.W. Oscillator
56	502725	Transformer—1st I.F.
68	502726	Transformer 2nd I.F.
100	506103	Transformer—power
101	506911	Transformer—output for T-506173 speaker
		OTHER ELECTRICAL PARTS
11A to J	506106	Switch—band
64	506174	Switch—local-distant
72A, B	506116	Switch—"RADIO-PHONO and TONE"
98, 99	110629	Lamp—dial (Mazda No. 44) 8.3 v., 0.25 A.
102	506173	Speaker P.M. dynamic; 8 inch (includes output transformer)
		MISCELLANEOUS
	506175	Back for cabinet
	506137	Background for dial
	160026	Base for mtg. electrolytic condenser
	505165	"C" washer for tuning shaft
	500420	Clamp—for dial glass
	112743	Clip coil mounting
	114955	Clip retainer on end of dial cord
	502773	Cord tuning & band switch drive (9 ft. req'd.) per ft.
	506164	Dial scale glass
	503628	Drum for band indicator
	503629	Drum for dial drive
	506172	Knob "BAND SELECTOR"
	506171	Knob "RADIO-PHONO and TONE"
	505848	Knob "TUNE"
	505845	Knob "VOLUME"
	502762	Plug for local-distant switch
	500966	Plug for phono pick-up cable
	502984	Plug—Speaker
	506169	Pointer—band indicator
	506139	Pointer—tuning
	119087	Ring for dial cord
	505944	Rubber pad for mounting chassis
	116584	Rubber spacer for mtg. dial scale
	506149	Rubber washer for mtg. chassis
	85827	Screw No. 8-32 for Dial Drum
	501777	Screw No. 4x1/4" for mtg. back
	170038	Screw—No. 8x1/4"; for mtg. chassis
	506117	Shaft—tuning
	502770	Socket—for dial lamp
	502761	Socket local-distant switch
	505783	Socket loktal base
	114875	Socket octal base
	160039	Socket phono input
	502769	Socket speaker
	113177	Spring dial cord tension
	502787	Terminal strip "GND-ANT"
	505022	Washer—felt; for knobs

©John F. Rider

MODEL 9042-A

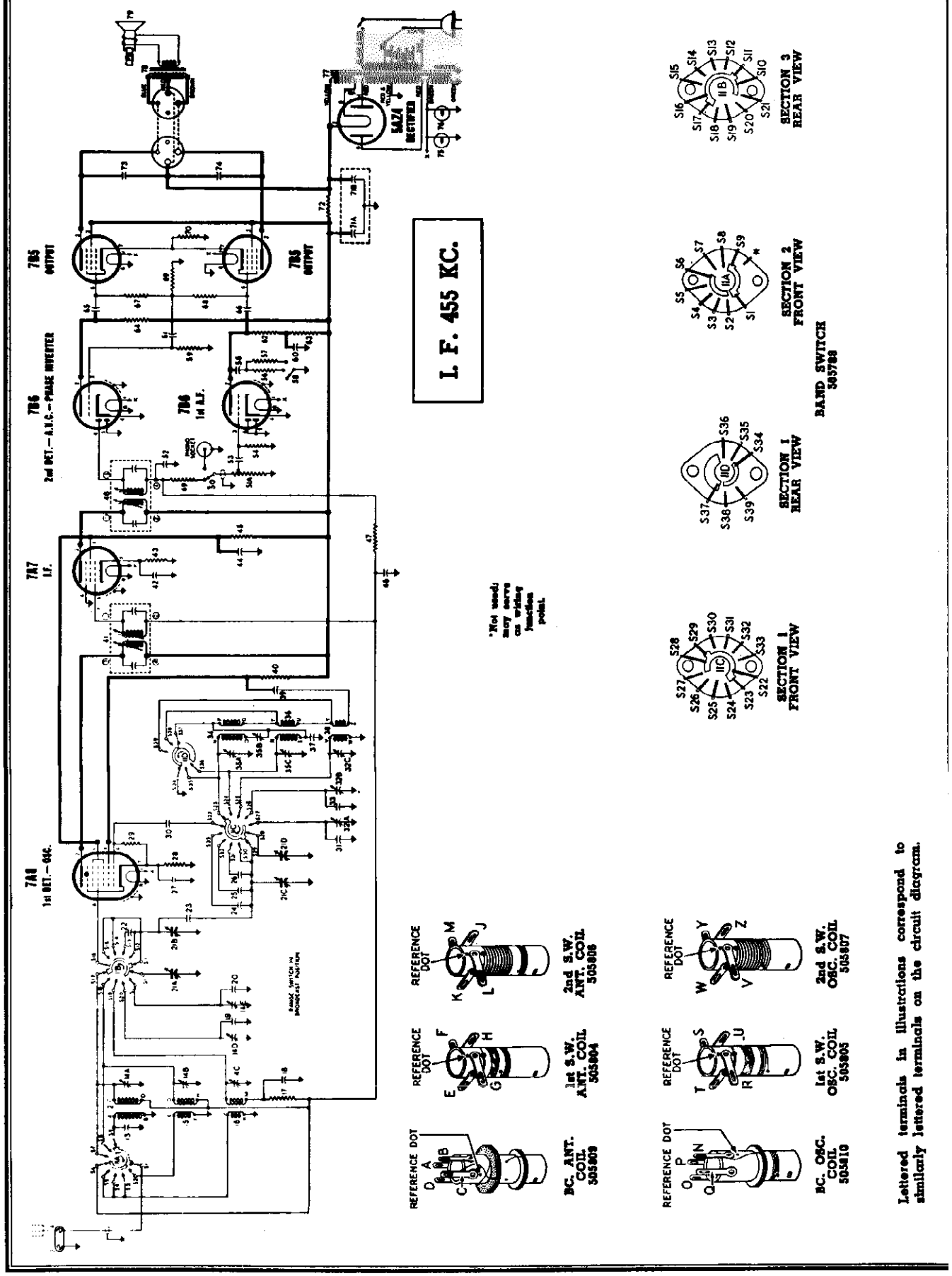

©John F. Rider

MODEL 9042-A

ALIGNMENT PROCEDURE

1. Remove chassis and speaker from cabinet.
2. When gang condenser is fully meshed, dial pointer should be in the position indicated by the left hand starting edge of the dial scale. If it is set incorrectly, release pointer clip on dial cord and reposition pointer.
3. Connect an output meter across the speaker voice coil or from the plate of a 7B5 tube to chassis through a 0.1 Mfd. condenser.
4. Connect the ground lead of the signal generator to the receiver chassis.
5. Set volume control to maximum volume position and use a weak signal from the signal generator.

IMPORTANT: Align this receiver in exactly the order shown below.

DUMMY ANT. IN SERIES WITH SIGNAL GENERATOR	CONNECT HIGH SIDE OF SIGNAL GENERATOR TO	SIGNAL GENERATOR FREQUENCY	BAND SWITCH POSITION	RECEIVER DIAL SETTING	TRIMMER NUMBER	TRIMMER DESCRIPTION	TYPE OF ADJUSTMENT
200 MMFD. Mica Condenser	Lug on Antenna section of gang; see point "X" in chart on next page.	455 KC	Broadcast (*Position 1)	Any point where it does not affect the signal.	1-2	2nd I.F.	Adjust for maximum output. Then repeat adjustment.
					3-4	1st I.F.	
200 MMFD. Mica Condenser	"A" terminal at rear of chassis.	1500 KC	Broadcast (*Position 1)	1500 Kc.	5	Broadcast Oscillator (Shunt)	Adjust for maximum output.
200 MMFD. Mica Condenser	"A" terminal at rear of chassis.	1500 KC	Broadcast (*Position 1)	Tune to 1500 Kc. generator signal.	6	Broadcast Antenna	Adjust for maximum output.
200 MMFD. Mica Condenser	"A" terminal at rear of chassis.	600 KC	Broadcast (*Position 1)	Tune to 600 Kc. generator signal.	7	Broadcast Oscillator (Series Pad)	Adjust for maximum output. Try to increase output by detuning trimmer and retuning receiver dial until maximum output is obtained.
200 MMFD. Mica Condenser	"A" terminal at rear of chassis.	Repeat adjustment of trimmers 5 and 6 at 1500 Kc. Then re-check adjustment of trimmer 7 at 600 Kc.					
400 OHM Carbon Resistor	"A" terminal at rear of chassis.	8 MC	Short Wave 1 (*Position 2)	8 Mc.	8	Short Wave 1 Oscillator	Adjust for maximum output. Check to see if proper peak was obtained by tuning in image at approx. 7.1 Mc. If image does not appear, realign at 8 Mc. with trimmer screw further out. Recheck image.
400 OHM Carbon Resistor	"A" terminal at rear of chassis.	8 MC	Short Wave 1 (*Position 2)	Tune to 8 Mc. generator signal.	9	Short Wave 1 Antenna	Adjust for maximum output. Try to increase output by detuning trimmer and retuning receiver dial until maximum output is obtained.
400 OHM Carbon Resistor	"A" terminal at rear of chassis.	21 MC	Short Wave 2 (*Position 3)	21 Mc.	10	Short Wave 2 Oscillator	Adjust for maximum output. Check to see if proper peak was obtained by tuning in image at approx. 21.9 Mc. If image does not appear, realign at 21 Mc. with trimmer screw further in. Recheck image.
400 OHM Carbon Resistor	"A" terminal at rear of chassis.	21 MC	Short Wave 2 (*Position 3)	Tune to 21 Mc. generator signal.	11	Short Wave 2 Antenna	Adjust for maximum output. Try to increase output by detuning trimmer and retuning receiver dial until maximum output is obtained.
400 OHM Carbon Resistor	"A" terminal at rear of chassis.	15 MC	Short Wave 3 (*Position 4)	15 Mc.	12	Short Wave 3 Oscillator	Adjust for maximum output. Check to see if proper peak was obtained by setting signal generator to 14.1 Mc. and tuning radio in vicinity of 15 Mc. If signal is not heard realign at 15 Mc. with trimmer screw further in. Recheck.
400 OHM Carbon Resistor	"A" terminal at rear of chassis.	15 MC	Short Wave 3 (*Position 4)	Tune to 15 Mc. generator signal.	13	Short Wave 3 Antenna	Adjust for maximum output. Try to increase output by detuning trimmer and retuning receiver dial until maximum output is obtained.
400 OHM Carbon Resistor	"A" terminal at rear of chassis.	11 MC	Short Wave 4 (*Position 5)	11 Mc.	14	Short Wave 4 Oscillator	Adjust for maximum output. Check to see if proper peak was obtained by setting signal generator to 10.1 Mc. and tuning radio in vicinity of 11 Mc. If signal is not heard, realign at 11 Mc. with trimmer screw further in. Recheck.
400 OHM Carbon Resistor	"A" terminal at rear of chassis.	11 MC	Short Wave 4 (*Position 5)	Tune to 11 Mc. generator signal.	15	Short Wave 4 Antenna	Adjust for maximum output. Try to increase output by detuning trimmer and retuning receiver dial until maximum output is obtained.

* Position 1 corresponds to extreme counter-clockwise setting of band switch. Succeeding positions are numbered in ascending order as switch is rotated clockwise.

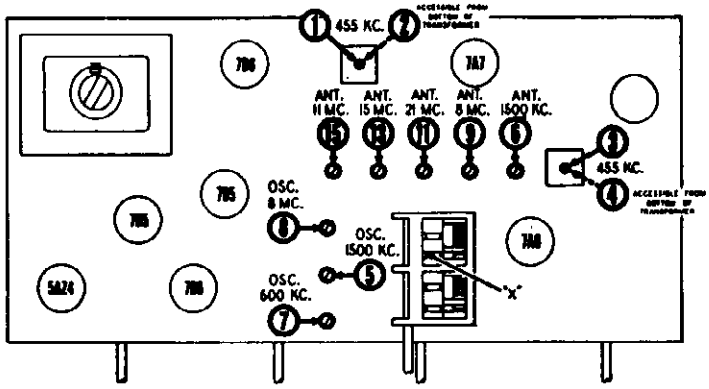

TOP VIEW OF CHASSIS

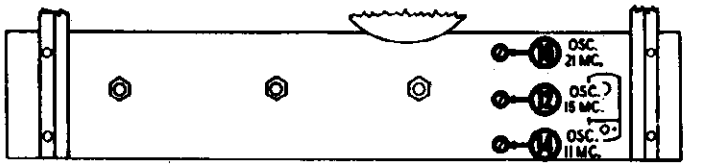

FRONT VIEW OF CHASSIS

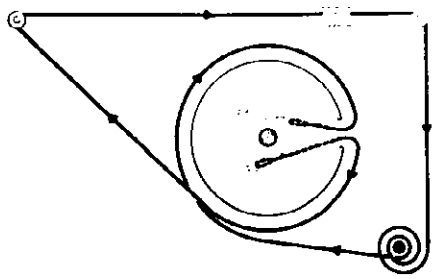

DIAL AND POINTER DRIVE CORD ARRANGEMENT

To string dial cord, set gang condenser to fully open position and use following parts:

113177	Tension Spring
114955	Clip on end of cord
119087	Ring
502773	Cord (4 ft.)

STAGE GAIN MEASUREMENT PROCEDURE

REQUIRED INSTRUMENTS: The amount of amplification or "gain" of each of the stages of this receiver may be measured with an A.C. Vacuum Tube Voltmeter or a "channel" type instrument containing a tuned and calibrated amplifier.

PROCEDURE: It is exceedingly important to adhere to the procedure outlined below since the accuracy of these measurements will be affected to a considerable extent by the failure to establish proper operating conditions.

1. Be sure that R.F. and I.F. stages are carefully and accurately aligned by utilizing the alignment procedure given on preceding page.
2. Connect Signal Generator as shown below.
3. The values of stage gain which are given here were measured with a fixed bias of 3 volts on the control grids of all R.F. and I.F. tubes which are connected to the A.V.C. circuit. Therefore, these values are not intended to indicate the full capability of a stage but they will serve as a convenient basis for determining proper operation. In order to duplicate the fixed bias voltage, connect the negative terminal of a 3 volt battery to A.V.C. at terminal No. 2 of the 1st I.F. transformer and connect the positive battery lead to the receiver chassis.
4. Set Signal Generator for operation at 600 Kc with 400 cycle modulation and carefully tune radio receiver to this signal by using an output meter to indicate peak output. If a local station interferes, set generator to a nearby frequency and re-tune the receiver.
5. R.F. and I.F. circuits are slightly de-tuned when contact is made with an instrument probe and this action, which is indicated by a change in the output meter reading, may seriously affect the gain measurement. Therefore, it is important to adjust the associated circuit trimmer for a maximum output meter reading and to set the input signal level to a convenient reference point on the gain measuring instrument while the probe is making contact. After removing the probe it is again necessary to adjust the trimmer so as to obtain the same output meter reading and thereby assure that the signal voltage at the specified point has not changed as a result of circuit de-tuning.
6. When using a "channel" type instrument, carefully tune it for maximum output at desired frequency before making measurements.

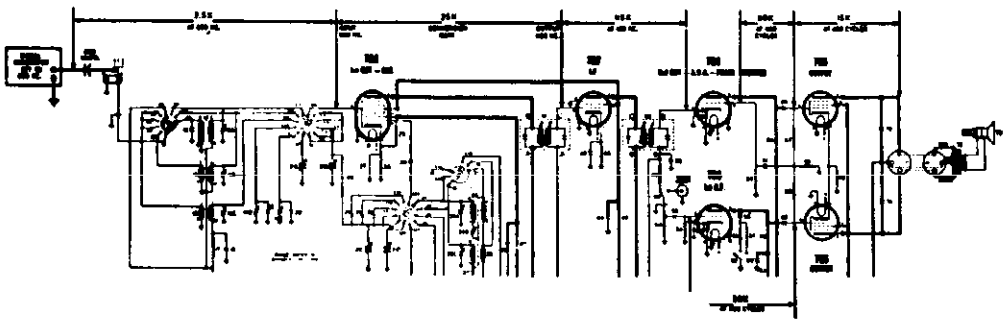

DIFFERENCES in tube characteristics, tolerance of parts, adjustment of tuned circuits and variations in line voltage will influence stage gain. These factors should be given due attention in event the gain of a stage varies extensively from the values shown above.

MODEL 9042-A

SOCKET VOLTAGES

Measured with voltmeter having sensitivity of 1000 ohms per volt except where indicated by (*). The (*) symbol designates a vacuum tube voltmeter measurement.

BE SURE THAT SWITCH ON POWER TRANSFORMER IS SET TO POSITION WHICH MOST NEARLY MATCHES LINE VOLTAGE
RADIO-PHONO SWITCH IN "RADIO" POSITION
TONE SWITCH IN FULLY COUNTER-CLOCKWISE POSITION
BAND SWITCH IN BROADCAST POSITION
VOLUME ON FULL WITH NO SIGNAL **DIAL TUNED TO 540 KC.**
ANTENNA TERMINAL GROUNDED

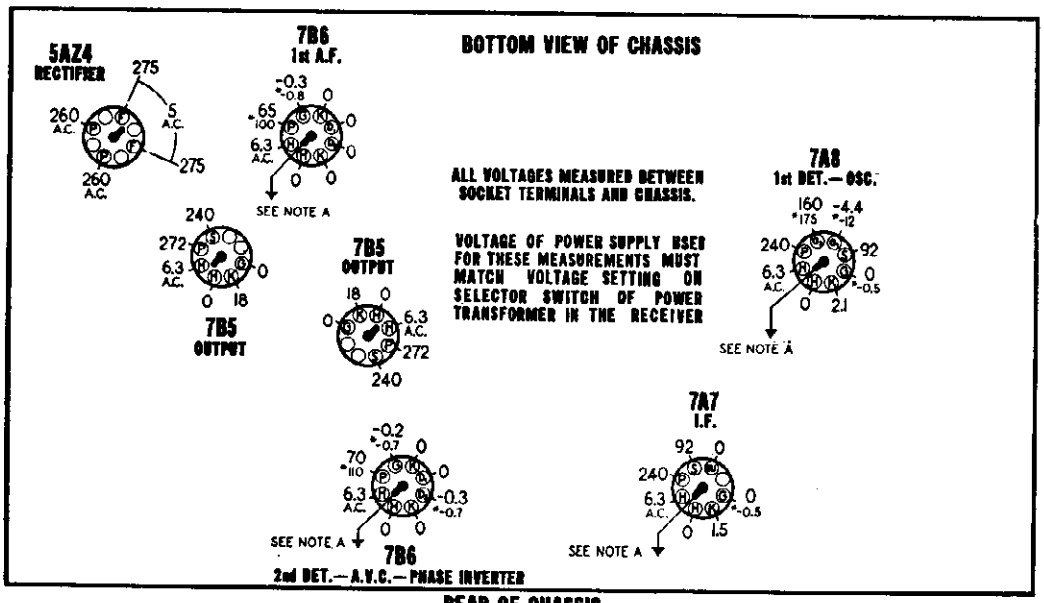

REAR OF CHASSIS

NOTE A: Grounding of center stud on tube socket is necessary to reduce capacity coupling between other pins. Oscillation may result if this ground is omitted.

PARTS LIST

DIAGRAM NO.	PART NO.	DESCRIPTION
		CONDENSERS
13	504434	Condenser-ceramic 50 Mmfd. 500 volt
14A. to E.	505785	Condenser-trimmer assembly A—1.6 to 18 Mmfd. B—1.6 to 18 Mmfd. C— 3 to 35 Mmfd. D—1.6 to 18 Mmfd. E—1.6 to 18 Mmfd.
18	502905	Condenser—.02 Mfd. 400 volt
19	505825	Condenser-ceramic 47 Mmfd. 500 v. ± 5%
20	505826	Condenser-ceramic 125 Mmfd. 500 v. ± 2%
21A. to D.	505793	Condenser-variable gang (with drum)
22	505821	Condenser-ceramic 180 Mmfd. 500 v. ± 2%
23	504983	Condenser-ceramic 1.0 Mmfd. 500 volt
24	505820	Condenser-mica 1600 Mmfd. 500 v. ± 2%
25	505819	Condenser-mica 1200 Mmfd. 500 v. ± 2%
26	505822	Condenser-ceramic 160 Mmfd. 500 v. ± 2%
27	502807	Condenser—.05 Mfd. 400 volt
30	502931	Condenser-ceramic 100 Mmfd. 500 volt
31	505824	Condenser-ceramic 120 Mmfd. 500 v. ± 2%
32A. to C.	505786	Condenser-trimmer assembly A—1.6 to 18 Mmfd. B—1.6 to 18 Mmfd. C—1.6 to 18 Mmfd.
33	505823	Condenser-ceramic 43 Mmfd. 500 v. ± 5%
35 A. to C.	505784	Condenser-trimmer assembly A— 3 to 35 Mmfd. B—440 to 660 Mmfd. C— 1.6 to 18 Mmfd.
37	505818	Condenser-mica 3300 Mmfd. 500 v. ± 2%
39	502804	Condenser—.01 Mfd. 400 volt
42	502807	Condenser—.05 Mfd. 400 volt
44	502807	Condenser—.05 Mfd. 400 volt
46	502807	Condenser—.05 Mfd. 400 volt
52	502931	Condenser-ceramic 100 Mmfd. 500 volt
53	502802	Condenser—.004 Mfd. 600 volt
55	502802	Condenser—.004 Mfd. 600 volt
60	502809	Condenser—.25 Mfd. 400 volt
61	502804	Condenser—.01 Mfd. 400 volt
65, 66	502805	Condenser—.02 Mfd. 400 volt
71	502720	Condenser-electrolytic A—15 Mfd. 400 volt B—20 Mfd. 400 volt
73, 74	502802	Condenser—.004 Mfd. 600 volt
		RESISTORS
17	502134	Resistor-carbon 470,000 Ohms ¼ watt
28	502125	Resistor-carbon 220 Ohms ¼ watt
29	510165	Resistor-carbon 29,000 Ohms ½ w. ± 10%
40	505681	Resistor-carbon 12,000 Ohms ½ w. ± 10%
43	502138	Resistor-carbon 130 Ohms ½ watt ± 10%
45	502512	Resistor-carbon 22,000 Ohms 1 w. ± 10%
47	502135	Resistor-carbon 2.2 Meg. ¼ watt
49	502131	Resistor-carbon 47,000 Ohms ¼ watt
51A, B.	505789	Volume control 1 Meg. (with switch)
54	502136	Resistor-carbon 10 Meg. ¼ watt
56	502131	Resistor-carbon 47,000 Ohms ¼ watt
57	502291	Resistor-carbon 4,700 Ohms ¼ watt
59	502136	Resistor-carbon 10 Meg. ¼ watt
62	502133	Resistor-carbon 220,000 Ohms ¼ watt
63	502132	Resistor-carbon 100,000 Ohms ¼ watt
64	502133	Resistor-carbon 220,000 Ohms ¼ watt
67, 68, 69	502133	Resistor-carbon 220,000 Ohms ¼ watt
70	502289	Resistor-wire wound 430 Ohms 2 w ± 5%
72	505817	Resistor-wire wound 1,200 Ohms 2w ± 10%
		COILS AND TRANSFORMERS
12	505809	Coil-BC. antenna
15	505804	Coil-1st S.W. antenna
16	505806	Coil-2nd S.W. antenna
34	505810	Coil-BC. oscillator
36	505805	Coil-1st S.W. oscillator
38	505807	Coil-2nd S.W. oscillator
41	505797	Transformer-1st I.F.
48	505798	Transformer-2nd I.F.
77	505797	Transformer-power
78	505837	Transformer-output for T-505836 speaker
		OTHER ELECTRICAL PARTS
11A to D	505788	Switch-band
50	116896	Switch-"Phono-Radio"
58	505790	Switch-tone
75, 76	118821	Lamp-dial (Mazda No. 47) 6-8V. 150 Ma.
79	505836	Speaker-P.M. dynamic (8 inch) includes output transformer
		MISCELLANEOUS
	505843	Back for cabinet
	505839	Background for dial
	180025	Base for mtg. electrolytic condenser
	505314	"C" Washer-tuning shaft
	119989	Clamp for dial glass
	112745	Clip-coil mounting
	505101	Clip-mtg. I.F. transformer
	114955	Clip-retainer on end of dial cord
	502773	Cord-dial drive (4 ft. required) per ft.
	505840	Dial scale-glass
	505782	Flywheel
	505847	Knob-"4-3-2-1-BC"
	505846	Knob-"Tone"
	505848	Knob-"Tune"
	505845	Knob-"Volume"
	500966	Plug-phono pick-up cable
	504108	Plug-speaker
	505841	Pointer
	119087	Ring for dial cord
	505944	Rubber pad for mtg. chassis
	116584	Rubber spacer for mtg. dial scale
	506149	Rubber washer for mtg. chassis
	501777	Screw-No. 4 x ½"; for mtg. back
	170038	Screw-No. 8 x ¼"; for mtg. chassis
	170020	Screw-Set. #6-32 x ¼"; for mtg. flywheel
	505791	Shaft-tuning
	505796	Socket-dial lamp (with leads)
	505783	Socket-loktal base
	180039	Socket-phono input
	504035	Socket-speaker
	113177	Spring-dial cord tension
	502767	Terminal strip-"GND-ANT"
	505022	Washer-felt; for knobs

©John F. Rider

MODEL 9050-A

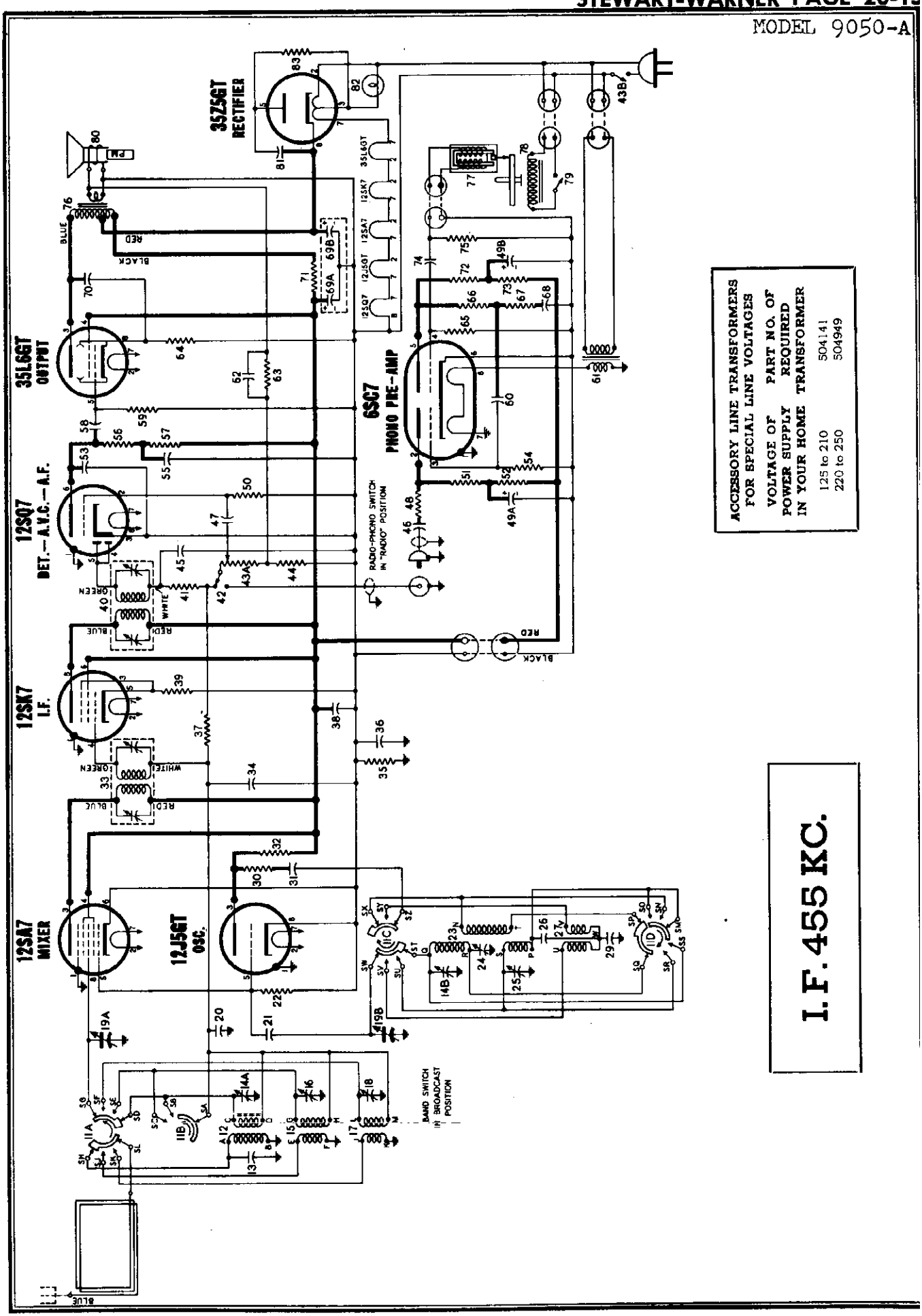
35Z5GT
RECTIFIER
35L6GT
OUTPUT
12SQ7
DET.—A.V.C.—A.F.
12SK7
I.F.
12SA7
MIXER
12J5GT
OSC.
6SC7
PHONO PRE-AMP
RADIO-PHONO SWITCH IN "RADIO" POSITION
BAND SWITCH IN BROADCAST POSITION
BLUE
RED
BLACK
GREEN
WHITE
ACCESSORY LINE TRANSFORMERS FOR SPECIAL LINE VOLTAGES
VOLTAGE OF POWER SUPPLY IN YOUR HOME
PART NO. OF REQUIRED TRANSFORMER
125 to 210 504141
220 to 250 504949
I.F. 455 KC.

MODEL 9050-A

ALIGNMENT PROCEDURE

1. With the gang condenser fully meshed, the dial pointer should be in the position indicated by the last mark below 55 on the dial. If it is set incorrectly, release the pointer clip on the dial cord and reposition pointer.
2. During the alignment of this receiver it will be necessary to set the dial pointer to the following frequencies: 1500 Kc., 600 Kc., 6 Mc., 5.1 Mc., 20 Mc., and 19.1 Mc. In order to avoid replacing the chassis in the cabinet each time a dial setting is required, it will be found more convenient to mark the required frequency points on the white dial background plate before starting the alignment.
3. Connect an output meter across the speaker voice coil or from plate of 35L6GT tube to B- lug through a .1 Mfd. condenser (see voltage chart for convenient B— connection).
4. Connect ground lead of signal generator to B— lug.
   CAUTION: If your test oscillator is designed with an AC-DC power supply, connect ground lead of signal generator to B— lug through a .25 mfd. condenser.
5. Set volume control at maximum volume position and use a weak signal from the signal generator.

IMPORTANT: Align this receiver in exactly the order shown below. Broadcast band should be aligned before short wave bands.

DUMMY ANT. IN SERIES WITH SIGNAL GENERATOR	CONNECT HIGH SIDE OF SIGNAL GENERATOR TO	SIGNAL GENERATOR FREQUENCY	BAND SWITCH POSITION	RECEIVER DIAL SETTING	TRIMMER NUMBER	TRIMMER DESCRIPTION	TYPE OF ADJUSTMENT
200 MMFD. Mica Condenser	Lug on front section of gang.	455 KC	Broadcast (counter-clockwise)	Any point where it does not affect the signal.	1-2	2nd I.F.	Adjust for maximum output. Then repeat adjustment.
					3-4	1st I.F.	
200 MMFD. Mica Condenser	External antenna lead (blue)	1500 KC	Broadcast (counter-clockwise)	1500 KC	5	Broadcast Oscillator (Shunt)	Adjust for maximum output.
200 MMFD. Mica Condenser	External antenna lead (blue)	1500 KC	Broadcast (counter-clockwise)	Tune to 1500 KC Generator Signal	6	Broadcast Antenna	Adjust for maximum output.
200 MMFD. Mica Condenser	External antenna lead (blue)	600 KC	Broadcast (counter-clockwise)	Tune to 600 KC Generator Signal	7	Broadcast Oscillator (Series Pad)	Adjust for maximum output. Try to increase output by detuning trimmer and retuning receiver dial until maximum output is obtained.
200 MMFD. Mica Condenser	External antenna lead (blue)	Repeat adjustment of trimmers 5 and 6 at 1500 Kc. Then re-check adjustment of trimmer 7 at 600 Kc.					
400 OHM Carbon Resistor	External antenna lead (blue)	6 MC	Intermediate (middle)	6 MC	8	Intermediate Oscillator	Adjust for maximum output. Check to see if proper peak was obtained by tuning in image at approx. 5.1 MC. If image does not appear, realign at 6 MC. with trimmer screw farther out. Recheck image.
400 OHM Carbon Resistor	External antenna lead (blue)	6 MC	Intermediate (middle)	Tune to 6 MC Generator Signal	9	Intermediate Antenna	Adjust for maximum output. Try to increase output by detuning trimmer and retuning receiver dial until maximum output is obtained.
400 OHM Carbon Resistor	External antenna lead (blue)	20 MC	Short wave (Clockwise)	Tune to 20 MC Generator Signal	10	S.W. Antenna	Adjust for maximum output. Try to increase output by detuning trimmer and retuning receiver dial until maximum output is obtained.

BOTTOM VIEW

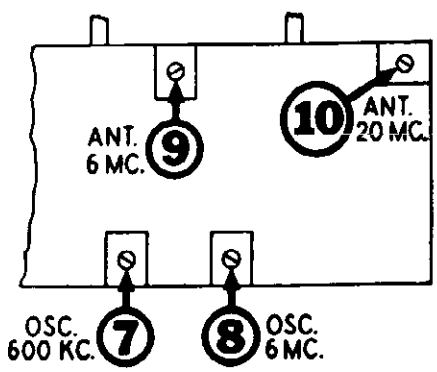

TOP VIEW OF CHASSIS

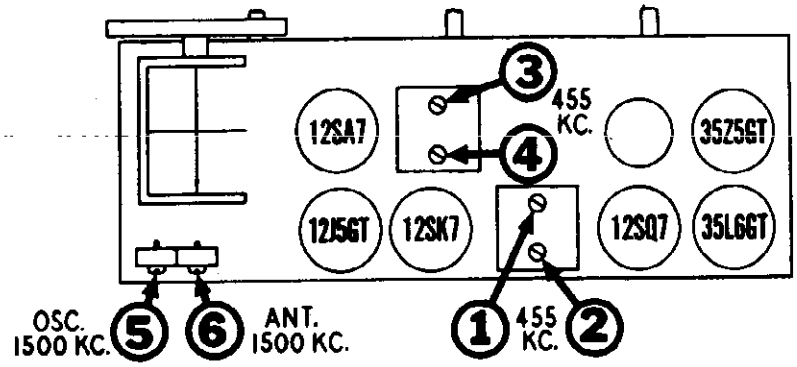

©John F. Rider

MODEL 9050-A

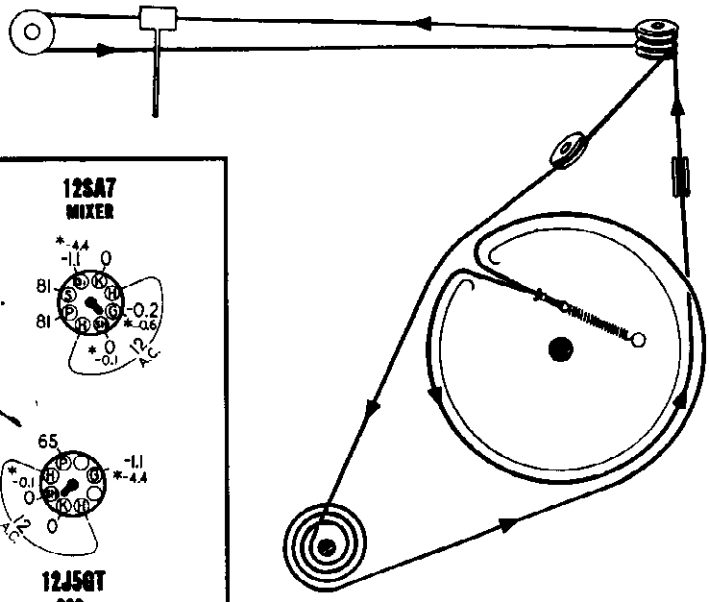

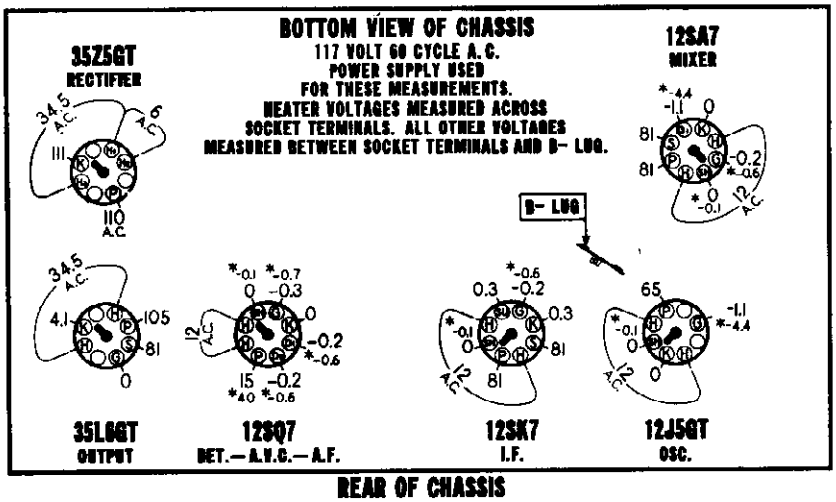

REAR OF CHASSIS

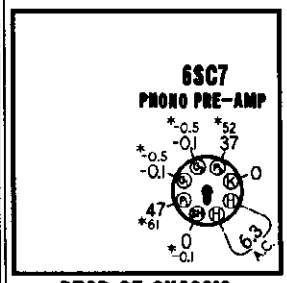

REAR OF CHASSIS

SOCKET VOLTAGES

Measured with voltmeter having sensitivity of 1000 ohms per volt except where indicated by (*). The (*) symbol designates a vacuum tube voltmeter measurement.

DIAL TUNED TO 540 KC.

VOLUME ON FULL WITH NO SIGNAL

BAND SWITCH IN BROADCAST POSITION

RADIO-PHONO SWITCH IN "RADIO" POSITION

DIAL AND POINTER DRIVE CORD ARRANGEMENT

To string dial cord, set gang condenser to fully meshed position and use following parts:

161384	Tension Spring
114955	Clip on end of cord
502773	Cord (60 inches)

STAGE GAIN MEASUREMENT PROCEDURE

REQUIRED INSTRUMENTS: The amount of amplification or "gain" of each of the stages of this receiver may be measured with an A.C. Vacuum Tube Voltmeter or a "channel" type instrument containing a tuned and calibrated amplifier.

PROCEDURE: It is exceedingly important to adhere to the procedure outlined below since the accuracy of these measurements will be affected to a considerable extent by the failure to establish proper operating conditions.

1. Be sure that R.F. and I.F. tuned circuits are carefully and accurately aligned by utilizing the alignment procedure given above.
2. Connect Signal Generator as shown below.
3. The values of stage gain which are given here were measured with a fixed bias of 3 volts on the control grids of all R.F. and I.F. tubes which are connected to the A.V.C. circuit. Therefore, these values are not intended to indicate the full capability of a stage but they will serve as a convenient basis for determining proper operation. In order to duplicate the fixed bias voltage, connect the negative terminal of a 3 volt battery to A.V.C. at terminal "M" of Short wave Band Antenna Coil (17) and connect the positive battery lead to B- in receiver chassis.
4. Set Signal Generator for operation at 600 Kc with 400 cycle modulation and carefully tune radio receiver to this signal by using an output meter to indicate peak output. If a local station interferes set generator to a nearby frequency and re-tune the receiver.
5. R.F. and I.F. circuits are slightly de-tuned when contact is made with an instrument probe and this action, which is indicated by a change in the output meter reading, may seriously affect the gain measurement. Therefore, it is important to adjust the associated circuit trimmer for a maximum output meter reading and to set the input signal level to a convenient reference point on the gain measuring instrument while the probe is making contact. After removing the probe it is again necessary to adjust the trimmer so as to obtain the same output meter reading and thereby assure that the signal voltage at the specified point has not changed as a result of circuit de-tuning.
6. When using a "channel" type instrument carefully tune it for maximum output at desired frequency before making measurements.

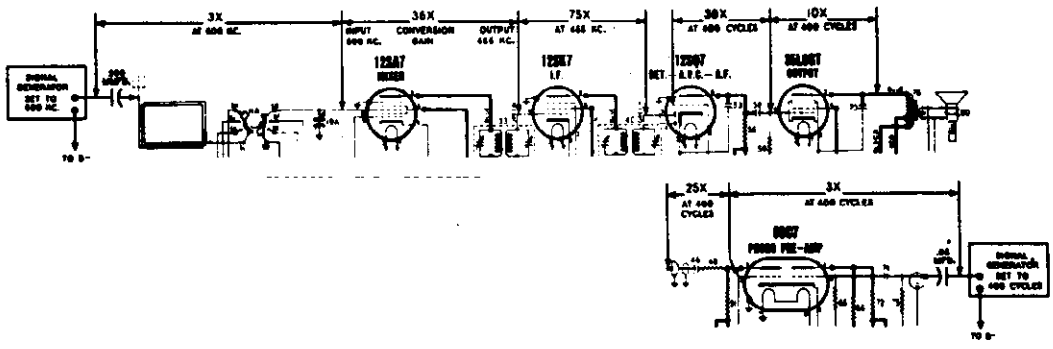

DIFFERENCES in tube characteristics, tolerance of parts, adjustment of tuned circuits and variations in line voltage will influence stage gain. These factors should be given due attention in event the gain of a stage varies extensively from the values shown above.

©John F. Rider

©John F. Rider

Lettered terminals in illustrations correspond to similarly lettered terminals on the circuit diagram

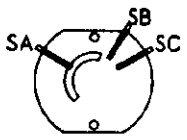

FRONT SECTION FRONT VIEW

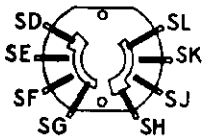

FRONT SECTION REAR VIEW

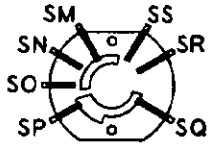

REAR SECTION FRONT VIEW

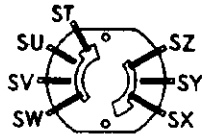

REAR SECTION REAR VIEW

BAND SWITCH 506426

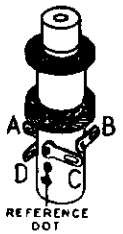

BC. ANTENNA COIL

505751

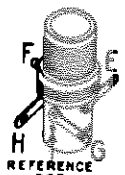

INT. ANTENNA COIL

506366

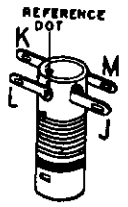

S.W. ANTENNA COIL

505753

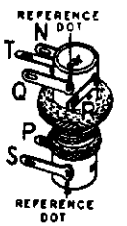

BC. & INT. OSCILLATOR COIL

506752

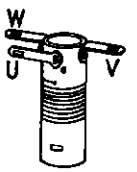

S.W. OSCILLATOR COIL

506364

PARTS LIST

DIA. GRAM NO.	PART NO.	DESCRIPTION
		CONDENSERS
13	502931	Condenser—ceramic 100 Mmfd. 500 volt
14-A, B	504067	Condenser—trimmer assembly. A-1.6 to 18 Mmfd. B-3 to 35 Mmfd.
16	504069	Condenser—trimmer; 3 to 35 Mmfd
18	504069	Condenser—trimmer; 3 to 35 Mmfd
19-A, B	504064	Condenser—variable gang with drum
20	512213	Condenser—.05 Mfd. 200 volt
21	502929	Condenser—mica 47 Mmfd. 500 volt
24	504068	Condenser—trimmer; 300 to 600 Mmfd.
25	502758	Condenser—trimmer; 1.6 to 18 Mmfd
26	512522	Condenser—Mica 4300 Mmfd. 500 volt ±2%
29	512522	Condenser—Mica 4300 Mmfd. 550 volt ±2%
31	512205	Condenser—.01 Mfd. 400 volt
34	512213	Condenser—.05 Mfd. 200 volt
36	512223	Condenser—.25 Mfd. 400 volt
38	512214	Condenser—.05 Mfd. 400 volt
45	502931	Condenser—ceramic 100 Mmfd. 500 volt
46	512208	Condenser—.02 Mfd. 400 volt
47	512203	Condenser—.005 Mfd. 600 volt
49-A, B	506466	Condenser—electrolytic A—15 Mfd. 150 volt B—15 Mfd. 150 volt
53	502931	Condenser—ceramic 100 Mmfd. 500 volt
55	512214	Condenser—.05 Mfd. 400 volt
58	512203	Condenser—.005 Mfd. 600 volt
60	512214	Condenser—.05 Mfd. 400 volt
62	512216	Condenser—.1 Mfd. 200 volt
68	512205	Condenser—.01 Mfd. 400 volt
69-A, B	506286	Condenser—electrolytic A—40 Mfd. 150 volt B—40 Mfd. 150 volt
70	512205	Condenser—.01 Mfd. 400 volt
74	512214	Condenser—.05 Mfd. 400 volt
81	512214	Condenser—.05 Mfd. 400 volt
		RESISTORS
22	510061	Resistor—carbon 22,000 Ohms ½ watt
30	510014	Resistor—carbon 56 Ohms ½ watt ± 10%
32	510151	Resistor—carbon 6800 Ohms ½ watt ± 10%
35	510079	Resistor—carbon 220,000 Ohms ½ watt
37	510093	Resistor—carbon 2.2 Meg. ½ watt
39	510008	Resistor—carbon 27 Ohms ½ watt ± 10%
41	510067	Resistor—carbon 47,000 Ohms ½ watt
43-A, B	506428	Volume control—500,000 Ohms (with switch)
44	510026	Resistor—carbon 270 Ohms ½ watt ± 10%
48	510170	Resistor—carbon 68,000 Ohms ½ watt
50	510094	Resistor—carbon 3.3 Meg. ½ watt
51, 52	510164	Resistor—carbon 33,000 Ohms ½ watt
54	510194	Resistor—carbon 3.3 Meg. ½ watt
56, 57	510079	Resistor—carbon 220,000 Ohms ½ watt
59	510085	Resistor—carbon 470,000 Ohms ½ watt
63	510042	Resistor—carbon 2200 Ohms ½ watt ± 10%
64	510120	Resistor—carbon 120 Ohms ½ watt ± 10%
65	510194	Resistor—carbon 3.3 Megohms ½ watt
66	510178	Resistor—carbon 220,000 Ohms ½ watt ± 10%
67	510162	Resistor—carbon 27,000 Ohms ½ watt ± 10%
71	510238	Resistor—carbon 1200 Ohms 1 watt ± 10%
72, 73	510170	Resistor—carbon 68,000 Ohms ½ watt
75	510151	Resistor—carbon 6800 Ohms ½ watt ± 10%
83	510410	Resistor—wire wound 33 Ohms ½ watt
		COILS AND TRANSFORMERS
12	505751	Coil—Bc. antenna
15	506366	Coil—Int. antenna
17	505753	Coil—S.W. antenna
23	505752	Coil—Bc. and Int. oscillator
27	506364	Coil—S.W. oscillator
33	504065	Transformer—1st I.F.
40	504066	Transformer—2nd I.F.
61	506467	Transformer—filament
76	506425	Transformer—output
		OTHER ELECTRICAL PARTS
11-A, B, C, D	506426	Switch—band
42	116896	Switch—"Phono-Radio"
77	506707	Pick-up Cartridge (includes sapphire point)
78	506705	Motor for Record Changer, 115 volt 60 cycle
79	506704	Switch—"ON-OFF" for record changer
80	506437	Speaker—P.M. dynamic (10 inch)
82	118921	Lamp-dial (Mazda 47) 6-8 V. 150 Ma.

DIA. GRAM NO.	PART NO.	DESCRIPTION
		MISCELLANEOUS PARTS
	506443	Back for cabinet
	506446	Background for dial
	504034	Base for mtg. electrolytic condenser
	112745	Clip-coil mounting
	113019	Clip—retains light shield and insulator on speaker
	506431	Clip—retains "Radio-Phono" sleeve
	114955	Clip-retainer on end of dial cord
	502773	Cord—dial drive (5 ft. required). Per ft.
	500324	Cover—cardboard for elect. cond.
	506442	Dial scale
	506481	Drawer-record changer (less hardware)
	505666	Emblem-plastic
	506380	Fastener for loop antenna
	506408	Handle for drawer
	506438	Knob—"RADIO-PHONO"
	506439	Knob—"SW-INT-BC"
	505935	Knob—"TUNING"
	505936	Knob—"VOLUME"
	506285	Light diffusing strip
	506635	Plug for pre-amp power cable
	500966	Plug for phono input to receiver
	506795	Plug for phono pick-up cable
	501031	Plug for phono-motor and filament transformer cables
	506435	Pointer
	81145	Retaining ring for tuning shaft
	506234	Rail for drawer (supplied in sets)
	505944	Rubber pad for mtg. chassis
	113463	Rubber stop for drawer
	506149	Rubber washer for mtg. chassis
	114914	Screw—No. 2 x 3/8" for mtg. dial scale
	170038	Screw—No. 8 x 1 1/2" for mtg. chassis
	501777	Screw—No. 4 x 1/2" for mtg. cabinet back
	506427	Shaft-tuning control
	503826	Sleeve and arm for "Radio-Phono" switch
	160392	Socket—octal
	506469	Socket—octal (for 6SC7 tube)
	506307	Socket and filament cable
	505307	Socket and phono motor cable
	504099	Socket for dial lamp (with leads)
	160039	Socket for phono input to pre-amp
	506470	Socket for phono pick-up input to receiver
	502761	Socket for pre-amp power cable
	161384	Spring—dial cord tension
	506277	Trim strip for dial

TO REPLACE BATTERIES

Unscrew the two bolts holding the loop to the chassis and loosen the metal bar holding the "B" batteries in place. Pull the battery out and replace new batteries in the same relative position. Use 2 Eveready #746 (or equivalent) and 2 Eveready #482 (or equivalent)

Batteries are considered to be poor or defective when they measure 1/3 less terminal voltage than the normal voltage than the normal value thus the 90 volt "B" batteries should read better than 60 volts and the 9 volts "A" batteries should read better than 6 volts. These voltage measurements are to be taken after the set has been playing in the battery position for approximately one quarter hour. Use a voltmeter with low drain to read voltages (a 1000 ohm per volt meter or better)

TO OPERATE THIS SET ON A 120 VOLT POWER LINE.

Disconnect the set from the power line. Take voltage selector plug (behind loop under loop mounting bracket) and insert into the 120 volt jack (red).

TO OPERATE THIS SET ON A 220 VOLT POWER LINE

Disconnect the set from the power line. Take voltage selector plug (behind loop under loop mounting bracket) and insert it into the 220 volt jack (red).

CAUTION:

NEVER PLUG THIS SET INTO A 220 VOLT POWER LINE WHEN THE VOLTAGE SELECTOR PLUG IS IN THE 120 VOLT POSITION (BLACK JACK) OTHERWISE PERMANENT DAMAGE WILL RESULT. DO NOT CUT THE LINE CORD OR OTHERWISE CHANGE IT'S CHARACTERISTICS OR DAMAGE WILL OCCUR. DO NOT CHANGE TUBES WHILE THE SET IS TURNED ON SINCE DAMAGE CAN BE CAUSED BY SO DOING.

Step	Set Gen at	Connect Gen to	Set Bandswitch	Set dial At	Vary	For	Check for
#1	455KC	R.F. Sec of Variable	BC	Min cap	I.F. Trimmer	Max. response	Max. sensitivity
#2	18MC	Antenna terminal	SW (6-18MC)	18MC	Variable osc. trimmer	gen. sig.	To make sure not image frequency (image should appear in frequency)
#3	16MC	"	"	16MC	Variable RF trimmer	Max. response	Check entire band for good sensitivity
#4	6MC	"	PB (2-6MC)	6MC	P.B. osc trimmer	Gen. signal	To make sure not on image frequency
#5	5MC	"	"	5MC	P.B. ant trimmer	Max. resp.	Check entire band for good sensitivity
#6	1600KC	"	B.C.	1600KC	B.C. ant trimmer	Gen. signal	
#7	1600KC	"	"	"	"	Max. response	
#8	600KC	"	"	600KC	B.C. Padder	Gen. Signal	
#9		Recheck all steps					

©John F. Rider

MODEL 653

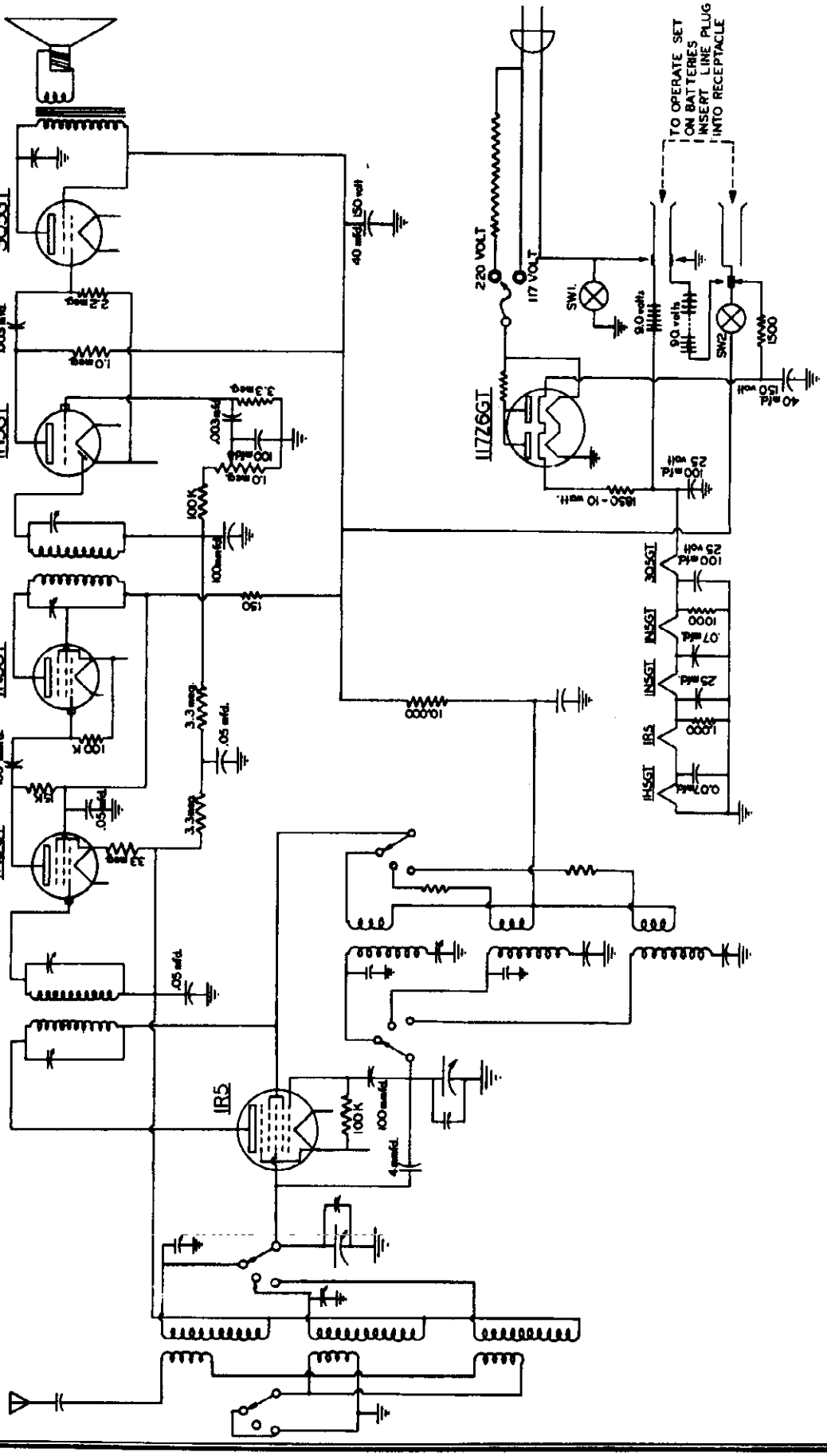
TO OPERATE SET ON BATTERIES INSERT LINE PLUG INTO RECEPTACLE
220 VOLT
117 VOLT
SW1
SW2
1500
1850 - 10 watt
3.3 meg
.003 mfd
100 mfd
100K
.05 mfd
.07 mfd
25 mfd
1000
.01
150
33
1 mfd
40 mfd 150 volt
100 mfd 25 volt
3.3 meg
.05 mfd
100 K
100 mfd
.05 mfd
100K
100 mfd
1 mfd
.01
.07 mfd
25 mfd
1000
.05 mfd
.05 mfd
.05 mfd

© John F. Rider

Operating Instructions

POWER SOURCES: This combination will operate on an alternating (AC) current only, of 110 to 125 volts at 60 cycles.

CAUTION: Always predetermine voltage of power source. Never try to plug this combination into a 220 volt line, as this will cause serious damage.

Never try to operate this combination on 50 cycle current, as this will cause the motor to rotate at an incorrect speed. The normal speed is 78 R.P.M., (revolutions per minute) and to insure proper reproduction of recordings 60 cycle current must be used.

This receiver is equipped with a sensitive bank antenna and under ordinary conditions no external antenna would be required. However, in steel constructed buildings or in distant isolated locations, the reception may be improved by using an outside antenna. This should be a single wire not more than 50 feet long and should be connected to the antenna lead that projects from the back of the receiver. No ground wire is required at any time.

INSTALLATION: Unwind power cord and plug into a convenient power outlet. Follow instructions under "Controls" to operate receiver.

CONTROLS: Three controls are provided on the front panel for operation of this combination. The right hand control is the station selector which is used only in "Radio" operation. The left hand control is a switch which selects operation of either "Radio" or "Phonograph". The center control is used to adjust volume on either "Radio" or "Phonograph" and is also used as a power switch to turn the combination "On" or "Off."

RADIO RECEPTION: After the power cord plug has been connected to your power outlet, turn the center control to the right in a clockwise direction and a click will be heard. This indicates that the power is turned on, and the pilot light in the dial should begin to glow. After about 30 seconds, the set will be ready for operation.

Make sure that the left hand control is turned to the left, in "Radio" position. Turn the center control about halfway on, in a clockwise direction to increase volume. Rotate the right hand control to the right or left to select the desired station. By mentally adding a zero to the figures on the upper half of the dial, the result will be read directly in kilocycles (i.e., 60 plus 0 equals 600KC or 140 plus 0 equals 1400KC). After a station has been tuned in, adjust the center control to your desired volume.

PHONOGRAPH REPRODUCTION: To operate the phonograph, be sure that the left hand control is turned to the right. This puts the circuit in "Phonograph" position and also turns on the power for the motor. The center control must also be turned on (as in Radio instructions) as it is the master control for power to the radio receiver and phonograph motor.

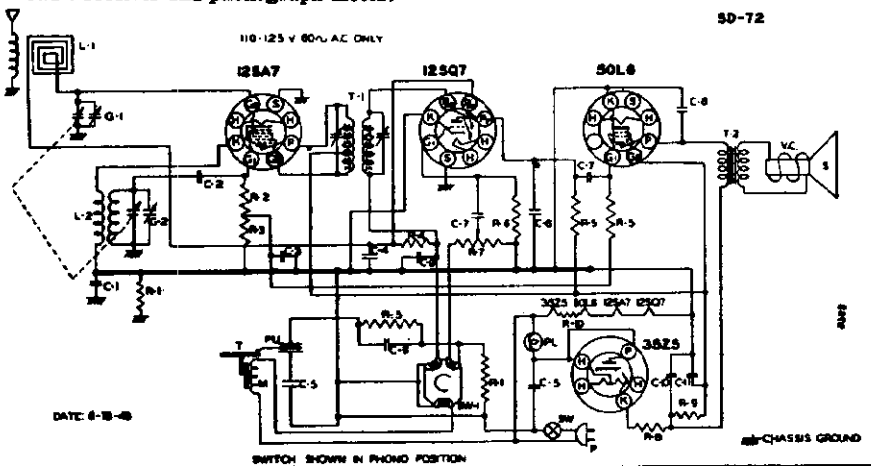

ALIGNMENT AND SERVICE DATA

Remove chassis from cabinet for alignment.

A Signal Generator is required having the following frequencies: 455 KC, 1400 KC, 1720 KC. An output meter should be connected across the speaker.

The receiver volume control should be turned to maximum during the I.F. and all subsequent alignments to keep the AVC from working and giving false readings. Keep the generator output as low as possible to prevent overloading.

FIRST STEP: Connect the hot lead from the generator to the ANT. section of the gang condenser, through a .1 MFD condenser. The ground lead from the generator must be connected to the floating ground buss under the chassis. Turn the gang condenser to complete minimum capacity. Adjust the generator to 455KC and adjust the trimmers of the 1st and 2nd I.F. transformers until a maximum reading is noted on the output meter.

SECOND STEP: With the leads from the generator still connected in the same manner, adjust the Signal Generator to 1720 KC. The OSC. trimmer is located on the front of the chassis. Adjust this trimmer until the 1720 KC signal is tuned in.

THIRD STEP: Remove the hot lead of the generator from the ANT section of the gang condenser. Connect this lead to the primary of the loop antenna through a 200 MMFD condenser. Adjust the Signal Generator to 1400 KC. Rotate the tuning control until this signal is tuned in. The ANT trimmer is located on the top of the ANT. section of the gang condenser. Adjust this trimmer until a maximum reading is noted on the output meter. No further adjustment should be necessary, unless the set has been damaged, as the coils and condenser in this receiver have been specially handled at the factory to insure proper alignment at the lower frequencies.

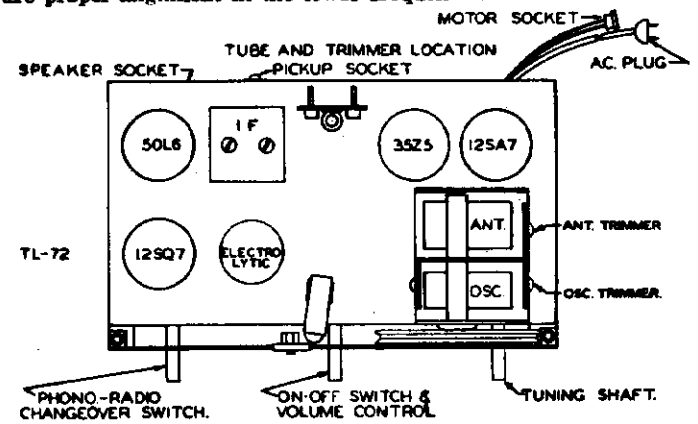

PART NO.		DESCRIPTION		PART NO.		DESCRIPTION
1R-20	R-1	220M Ω RESISTOR 1/2W 20%		SW	SW	SWITCH ON VOLUME CONTROL
1R-9	R-2	22M Ω RESISTOR 1/2W 20%	SW-1	SW-1	RADIO-PHONO SWITCH
1R-10	R-3	47M Ω RESISTOR 1/2W 20%	LT-6	T-1	I.F. TRANSFORMER
1R-23	R-4	3.3MEG Ω RESISTOR 1/2W 20%		T-2	OUTPUT TRANSFORMER
1R-11	R-5	470M Ω RESISTOR 1/2W 20%	SPK-10	VC	VOICE COIL
1R-5	R-6	10MEG Ω RESISTOR 1/2W 20%		S	4" PM SPEAKER
VC-4	R-7	1 MEG. VOLUME CONTROL	LL-16	L-1	LOOP ANT
1R-17	R-8	33 Ω RESISTOR 1/2 W 20%	LO-14	L-2	OSC COIL
1R-25	R-9	2200 Ω RESISTOR 1 W 10%	M-2	M-2	110 V 60 CYCLES MOTOR
1R-41	R-10	47 Ω RESISTOR 1 W 10%	PU-5	PU	TONE ARM WITH L-75 CARTRIDGE
MC-6	C-1	.1 MFD. CONDENSER 400 V	PB-1	PL	#47 PILOT BULB
MC-4	C-2	50MMFD. MICA	CO-1A	P	LINE CORD
MC-2	C-3	.25MFD. CONDENSER 200 V.	TT-2	T	8" TURNTABLE
MC-2	C-4	.025MFD. CONDENSER 200 V.			
MC-5	C-5	.05MFD. CONDENSER 400 V	GC-18	C-1	GANG CONDENSER
MC-6	C-6	500MMFD. MICA		C-2	
MC-10	C-7	.002 MFD. CONDENSER 400 V			
MC-7	C-8	.01 MFD. CONDENSER 400 V			
MC-2	C-9	100MMFD. MICA			
EC-12	C-10	40MFD. ELECTROLYTIC			
	C-11	20MFD.			

MODELS 6050, 6053

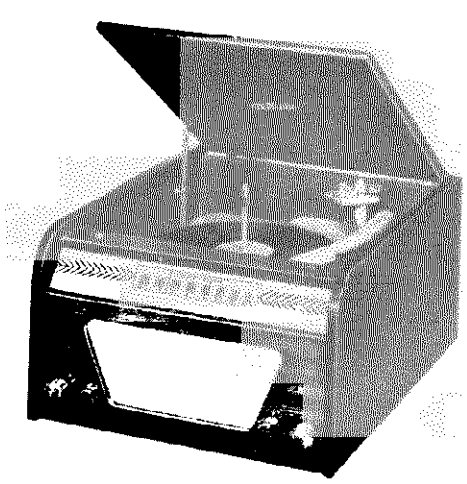

No. 6050



No. 6053

SCHEMATIC DIAGRAM — MODELS 6050 & 6053

SD-77 U

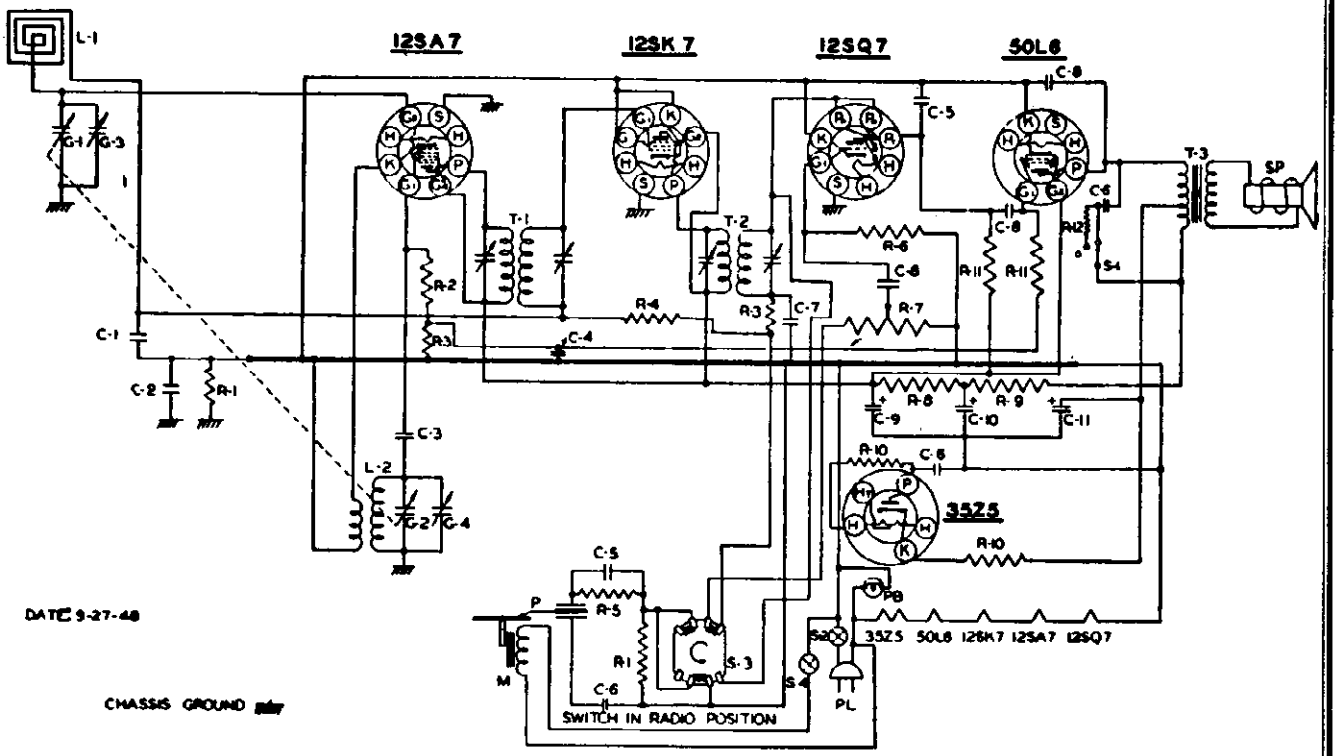

PART NO.		DESCRIPTION	PART NO.		DESCRIPTION	PART NO.		DESCRIPTION
PC-2	C-1	.05MFD. CONDENSER 200 V.	IR-1	R-8	470Ω RESISTOR 1/2W. 20 %	SW-2	S-1	TONE SWITCH
PC-6	C-2	1 MFD. CONDENSER 400 V.	IR-42	R-9	1000Ω RESISTOR 1 W. 10 %		S-2	SWITCH ON VOLUME CONTROL
MC-4	C-3	.00005MFD. MICA	IR-17	R-10	33 Ω RESISTOR 1/2 W. 20 %	SW-1	S-3	PHONO-RADIO SWITCH
PC-4	C-4	.25MFD. CONDENSER 200 V.	IR-11	R-11	470M Ω RESISTOR 1/2 W. 20 %		S-4	SWITCH ON RECORD CHANGER
MC-5	C-5	.0005MFD. MICA	IR-15	R-12	2200Ω RESISTOR 1/2 W. 20%	AC-M-7	M	RECORD CHANGER MOTOR
PC-5	C-6	.05MFD. CONDENSER 400 V.	GC-3	G-1	GANG CONDENSER	AC-PU-7	P	CRYSTAL PICKUP ARM, CARTRIDGE S-1
MC-2	C-7	.0001MFD. MICA		G-2		PB-2	PB	110 V. 7½ W. PILOT BULB
PC-7	C-8	.01MFD. CONDENSER 400 V.		G-3	ANT. TRIMMER	CO-2	PL	LINE CORD
EC-14	C-9	20MFD.		G-4	OSC. TRIMMER			
	C-10	40MFD. 150 WV ELECTROLYTIC						
	C-11	40MFD.		T-1	INPUT I.F. TRANSFORMER			
IR-20	R-1	220M Ω RESISTOR 1/2W. 20 %	LI-6	T-2	OUTPUT I.F. TRANSFORMER			
IR-9	R-2	22 M Ω RESISTOR 1/2 W. 20%	LI-7	T-3	OUTPUT TRANSFORMER			
IR-10	R-3	4.7 M Ω RESISTOR 1/2W. 20%						
IR-23	R-4	.33MEG Ω RESISTOR 1/2 W. 20%	LL-17	L-1	LOOP ANT.			
IR-12	R-5	1MEG Ω RESISTOR 1/2 W. 20%	LO-44	L-2	OSC. COIL			
IR-13	R-6	2.2MEG Ω RESISTOR 1/2 W. 20%						
VC-4	R-7	1 MEG. VOLUME CONTROL	SPK-12	SP	5" P.M. SPEAKER			

©John F. Rider

ALIGNMENT DATA

Remove the chassis from the cabinet. A Signal Generator with the following frequencies is required: 455 KC, 1400 KC and 1720 KC.

The receiver volume control should be turned to maximum during the I.F. and all subsequent alignments to keep the A.V.C. from working and giving false readings. Turn the tone control to complete left hand position. Keep the generator output as low as possible to prevent overloading.

Connect an output meter across the voice coil of the speaker.

Connect a 20,000 ohm resistor across the loop connector terminals to reflect proper loop impedance.

FIRST STEP: Connect the hot lead from the generator to the "ANT." section of the gang condenser through a .1 MFD. condenser. The ground lead must be connected to the floating ground buss under the chassis. Turn the gang condenser to complete minimum capacity. Adjust the generator to 455 KC and adjust the trimmers of the 1st and 2nd I.F. transformers until a maximum reading is noted on the output meter.

SECOND STEP: With the leads from the generator connected in the same manner as in I.F. alignment, adjust the signal generator to 1720 KC. The "O.S.C." trimmer is located on the front section of the gang condenser. Adjust this trimmer until the signal is tuned in. The gang condenser should be at complete minimum capacity for this setting.

THIRD STEP: Remove the generator leads from the chassis. Remove the 20,000 ohm resistor from the loop connector terminals. Reinstall the chassis in the cabinet, connect the loop leads, motor plug and phono pickup leads.

Connect the generator leads to a transmitting loop, made of a few turns of wire, and loosely couple to the receiver loop antenna which is located on the back end of the cabinet. Adjust the generator to 1400 KC. Rotate the tuning control until this signal is tuned in. The "ANT." trimmer is located on the rear section of the gang condenser. Adjust this trimmer until a maximum signal is noted on the output meter.

No further adjustment should be necessary, unless the receiver has been damaged, as the coils and tuning condenser have been specially handled at the factory to insure proper alignment at the lower frequencies.

HOW TO INSTALL THE RADIO

POWER SUPPLY: This receiver is designed to operate from a power source of 110 to 125 volts AC current at 60 cycles only.

Always predetermine the type of power in your location by consulting the local power company for this information.

CAUTION: Never plug this unit into a 220 Volt or a DC power source as you will seriously damage the component parts, which have been designed for 110 to 125 volts AC current at 60 cycles only.

ANTENNA: This receiver is equipped with a sensitive loop antenna and will require no external antenna or ground. However, due to the directional qualities of the loop antenna, the reception of some stations may be improved by turning the receiver in different directions.

CONTROL KNOBS: This instrument is equipped with four knobs to control the operation. The extreme left knob is the "Tone" control. This control has three positions. The left hand position is "Normal" usually used for speech. The center position is "Medium" and is used for music. The right hand position is "Low" and is used to attenuate the high notes and increase the low notes. The second knob is the "Tuning" selector. This knob may be moved to the right or left to select the desired station. By mentally adding a zero to the numbers on the dial, the result will be read directly in kilocycles, i. e. 60 + 0 = 600 KC or 170 + 0 = 1700 KC.

The first knob to the right of the speaker opening is the "Volume" control and also the "OFF-ON" switch. In the extreme left hand position the switch is in "OFF" position. Turn this knob to the right and a click will be heard. This indicates that the power has been turned on. Allow about 30 seconds for the tubes to heat up and the instrument will be ready for operation. To increase volume, turn this knob to the right.

The extreme right hand knob is the "Radio-Phono" switch. The right hand position is for "Radio" operation and the left hand position is for "Phono" operation.

TUBE AND TRIMMER LOCATION

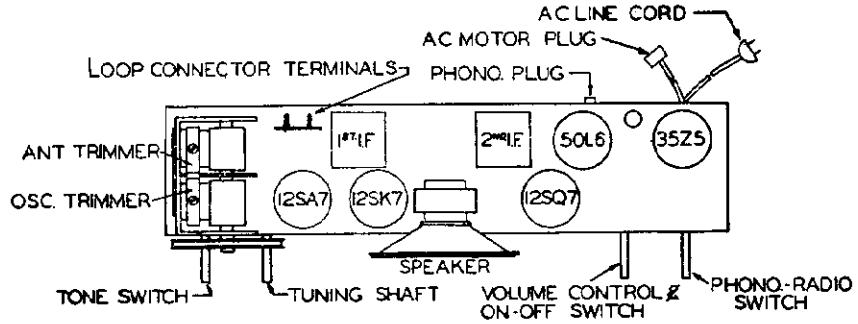

TL-77-U

FIGURE-1

©John F. Rider

SERVICE PARTS LIST

Illus. No. (On Illus. 11)	Part No.	Description
1	(See Radio Bulletin)	Backplate - Pointer
	115529	Ball Bearing Pkg.
2	(See Radio Bulletin)	Bushing and Manual Drive Shaft
3	*	Clutch Cam Assembly
4	7258072	Clutch Disc - Driven
5	*	Clutch Lever
6	*	Coil Housing
7	(See Radio Bulletin)	Core Guide Bar-Parallel
8	(See Radio Bulletin)	Core Bar Connecting Link
9	(See Radio Bulletin)	Core - Powdered Iron
10	(See Radio Bulletin)	Escutcheon Assembly
	(See Radio Bulletin)	Dial
	(See Radio Bulletin)	Dial Backplate
13	*	Front Bearing Plate
14	(See Radio Bulletin)	Gear and Bushing
15	*	Grommet
16	(See Radio Bulletin)	Pointer Assembly
	(See Radio Bulletin)	Pointer Tip
	7256271	Pointer Connecting Link
19	(See Radio Bulletin)	Push Button and Slide Assembly
20	(See Radio Bulletin)	Spring - Clutch
	7257415	Spring - Core Bar Connecting Link
	7255992	Spring - Pointer Connecting Link
23	7255984	Spring - Slide Return
	*	Treadle
25	*	Tuner Mounting Plate
26	(See Radio Bulletin)	Worm Gear and Bracket

* These parts are not normally required for service but can be ordered by specifying the model radio, and the Illustration number and description as shown in this parts list.

GENERAL:

Push-Pull Lockup Tuners are used on the following radios:

Buick Model
980782 — 1949

Cadillac Models
7256609 — 1948
7258155 — 1949

Chevrolet Models
986067 — 1947-48-49
986240 — 1949

GMC Truck Model
2233029 — 1947-48-49

Oldsmobile Models
982454 — 1948
982455 — 1948
982400 — 1949
982421 — 1949

Pontiac Model
984296 — 1949

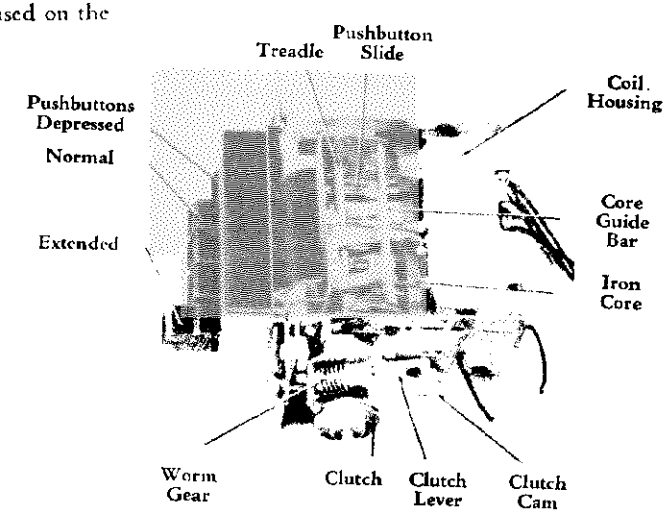

The service bulletin for any radio using this type of tuner, and not listed above, will refer to this bulletin for tuner service.

The push-pull lockup tuner is a mechanism used to tune the radio through the broadcast band. This tuner uses permeability tuning. The tuning is done either with the manual tuning control or any of five push buttons.

TUNER OPERATION

MANUAL TUNING MECHANISM

In a permeability tuned radio the tuning is done by moving powdered iron cores in and out on the tuning coils. Therefore, the manual drive mechanism connects the rotary motion of the manual tuning knob to the straight line motion of the iron cores. This is done as follows: (See Illustration #1)

1. The manual knob (1) and shaft (2) turn the worm gear (3) in its bracket.
2. The worm gear (3) then turns at a slower speed the flat anti-backlash gear (4) which is fastened through the clutch (5) to the treadle shaft (6).
3. As the treadle (7) rotates it moves the

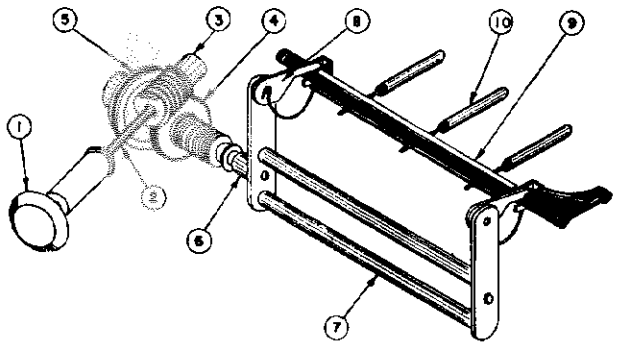

Illustration #1

core guide bar (9) which is connected to it by the links (8), in or out along the slots in the tuner side plates (not shown).

4. The iron cores (10) are fastened to the core guide bar (9) and move in or out of the coil forms (not shown).

The worm gear drive acts as a positive brake to hold the tuning cores in position even though the radio is jarred. A worm gear drive can only be turned from the worm gear (manual tuning knob) end of the drive. This brake eliminates any mechanical drift of the tuner.

PUSH BUTTON OPERATION

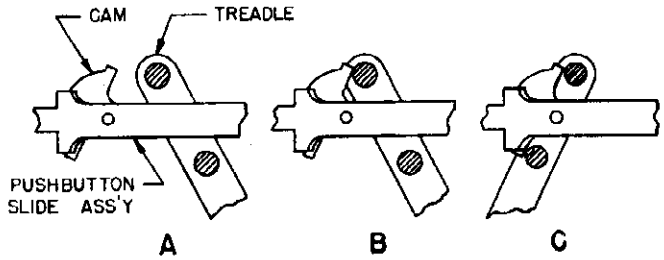

Illustration #2

The push button is operated by pushing the button all the way in and releasing. The sequence of operation is as follows: (See Illustration #2)

1. The push button is in its normal position and the relationship between the push button slide assembly and the treadle is shown in Illustration 2, Figure A.
2. As the push button is pushed in to the position shown in Illustration 2, Figure B, the clutch is disengaged (see clutch operation) allowing the treadle to move easily.
3. When the push button is pushed all the way in, the treadle takes a position in accordance with the setting of the cam on the push button slide assembly, (See Illustration 2, Figure C) thereby changing the frequency to which the radio is tuned.
4. The push button is released allowing the button slide assembly to return to its normal position shown in Illustration 2, Figure A. During this operation the clutch is re-engaged.

PUSH BUTTON SET UP PROCEDURE

1. Tune the desired station in manually.
2. Select the button to be set up and push it to the side or down (see bulletin for radio involved) and pull all the way out (about ½ inch).
3. Push the button all the way in.

How It Works:

To set up the push buttons to tune in a station it is necessary to position the cam on the push button slide assembly so that when the push button is depressed it will move the treadle to the correct position to tune the radio to the desired frequency. This is done as follows:

1. The desired station is tuned in manually. This positions the treadle correctly for the desired frequency and holds it securely in position.
2. The push button is moved to the side. This moves the black portion of the push button slide away from the white portion (See Illustration 3, Step 1) disengaging the pip from the hole.
3. The push button is pulled all the way out to the extended position as shown in Step 1. In this position the locking lever exerts no pressure on the cam, allowing the cam to move freely.
4. As the push button slide assembly is pushed in, it remains extended until the cam is positioned against the treadle as shown in Illustration 3, Step 2. This places the cam in a position so that when the cam is locked, the push button will return the treadle to the same position whenever it is operated.
5. As the push button is pushed further in, the white portion remains stationary while the black portion moves forward past the white portion as shown in Step 3. During this part of the operation the collar slides along the inclined plane of the locking lever causing the locking lever to exert pressure on the cam to hold it securely in position thus setting up the push button. Immediately after the cam has been locked the clutch tab operates the clutch mechanism. (See "Clutch Operation"). This clutch action has nothing to do with the push button set up operation.
6. The push button is released and assumes its normal position as shown in Illustration 3, Step 4.

The push button is now set up and any time the push button is operated it will tune the radio to the frequency for which it has been set.

©John F. Rider

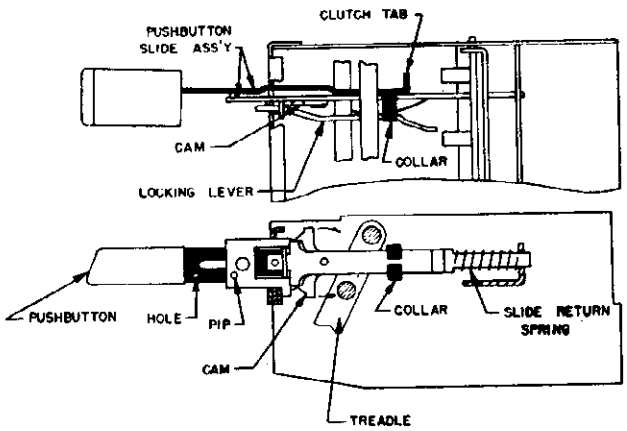

STEP 1- BUTTON EXTENDED-CAM FREE

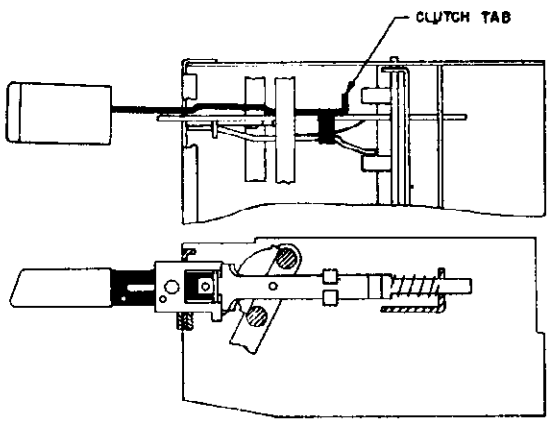

STEP 2- BUTTON EXTENDED-CAM ALIGNED

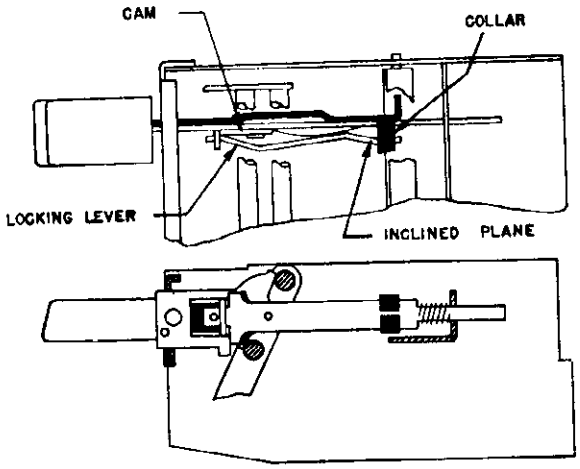

STEP 3- BUTTON LOCKED-CAM LOCKED IN POSITION

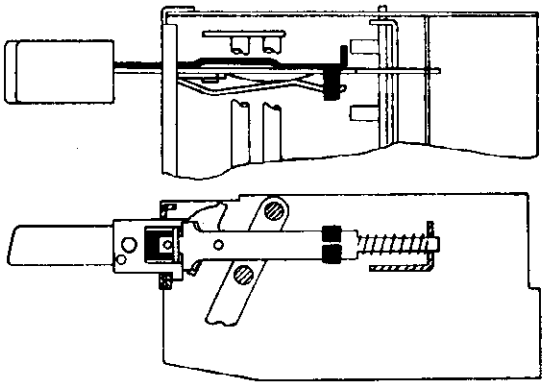

STEP 4- CAM LOCKED-BUTTON IN NORMAL POSITION

Illustration #3

CLUTCH OPERATION

The clutch in this tuner is used to release the braking action of the manual tuning mechanism by completely disengaging the manual drive mechanism from the treadle while the push button is operated. The clutch operates as follows:

1. As the push button is depressed the clutch operating tab "B" (See Illustration 4) pushes the finger "C" on the clutch cam assembly "D."

2. This rotates the clutch cam "D", causing the roller on the clutch lever "E" to move toward the tuner.

3. This lever "E" is fastened to the inside face of the clutch "A" and moves the inside face away from the outer face of the clutch "A."

4. The inside face of the clutch "A" is fastened to the flat anti-backlash gears and therefore to the manual drive. The outer face of the clutch is fastened to the shaft of the treadle and when the faces of the clutch "A" are separated the treadle is free to move easily.

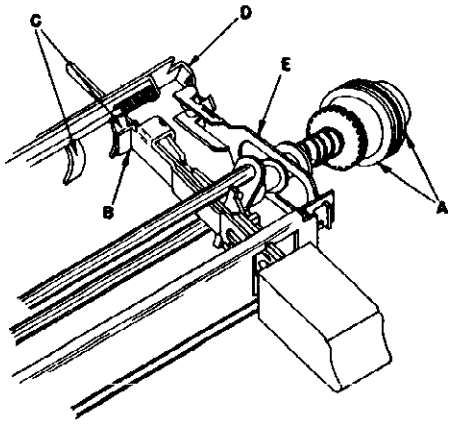

Illustration #4

©John F. Rider

TUNER ADJUSTMENTS

No tuner adjustments should be necessary unless some parts have been changed in the tuner. The factory makes all adjustments with precision equipment. Always be sure an adjustment is necessary before it is made.

POINTER CALIBRATION ADJUSTMENT

The procedure for calibrating the pointer is as follows:

1. Connect the signal lead of a signal generator to the antenna connector of the radio and the return lead to chassis.
2. Tune the signal generator to the frequency specified under "Alignment Procedure" in the service bulletin for the radio involved. (This is important because the adjustment screw is not accessible at all frequencies)
3. The pointer should then be adjusted by turning the pointer adjustment screw (See Illustration 5) until the pointer indicates the correct frequency on the dial. Any special instructions for this adjustment will be included in the service bulletin for the particular radio.

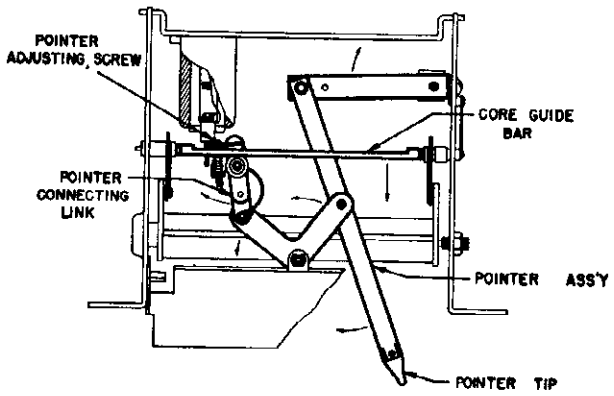

Illustration #5

ANTI-BACKLASH GEAR ADJUSTMENT

An anti-backlash gear is a special gear used to take out any looseness or "play" in the mesh of two gears. The anti-backlash gear of this tuner consists of two flat gears, side by side. One of these gears is fastened to the shaft on which it is mounted while the other is free to rotate around the shaft. These gears are spring loaded against each other so their teeth will completely fill the space between the teeth of the mating gear (worm gear) even though this space may vary. The anti-backlash gear is adjusted as follows:

1. Loosen or remove the worm gear and bracket assembly.
2. Turn the part of the gear that is free to rotate against the spring tension between the halves of the gear a distance of five teeth.
3. Replace the worm gear and bracket assembly, being careful not to lose the spring tension between the anti-backlash gears.

CLUTCH ADJUSTMENT

The only clutch adjustment on this tuner controls the amount of pressure between the faces of the clutch and the timing of the clutch operation. It must be made anytime the clutch disc driven is removed and is made as follows:

1. Place a 20 to 30 thousandth shim between the clutch lever roller and the clutch cam assembly (See Illustration 6).
2. Push the outer clutch disc on the treadle shaft up snug to the other face of the clutch. Do not use force.

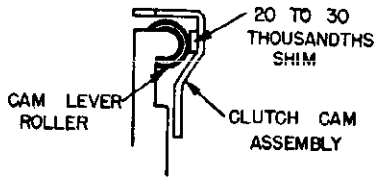

Illustration #6

3. Tighten the set screws on the clutch disc and remove the shim.

TUNER PARTS REPLACEMENTS

The replacement of most of the tuner parts is straight forward, in accordance with the blown up view shown in the Illustration 11. The tuners used on the various models listed in this bulletin will vary in detail from this illustration, but their operation is identical and the replacing of parts is very similar. Whenever parts are replaced on a tuner, careful consideration should be given to the removal of the tuner from the radio. Many times this removal is made when it is not necessary.

The procedure for making some special replacements is described below to aid in a speedy and efficient replacement..

REPLACING TUNING COILS — ALL RADIOS USING SHEET METAL COIL HOUSINGS

Before attempting the replacement of the tuning coils examine the radio involved carefully to determine the necessity of removing the complete tuner from the radio. Whenever possible leave the tuner in the radio.

1. Dissolve the cement from the iron tuning core stud at the core guide bar with acetone and remove the iron core from the core bar and coil.
2. Remove the fiber board support at the front of the shield cans.
3. Remove the nuts which hold the sheet metal can in place (on the rear of the tuner) and remove the can from the coil.
4. Remove the defective coil from the rubber grommet to which it is mounted and replace with a new coil.
5. Reassemble the parts that have been removed and realign the radio in accordance with the alignment instructions in the Radio Service Bulletin.

REPLACING TUNING COILS — ALL RADIOS USING DIE CAST COIL HOUSINGS

It is necessary to remove only the rear cover of the radio to make this replacement on all tuners using the die cast coil housing with the exception of the Chevrolet model 986240. On this model it is necessary to remove the rear cover and wraparound from the R.F. unit and to loosen the R.F. chassis enough to have free access to the coil mounting strip. The procedure for making this replacement on these tuners is as follows:

1. Remove the four screws holding the coil mounting strip to the die cast coil housing.
2. Remove the coil assembly from the housing.
3. Remove the defective coil from the rubber grommet to which it is mounted and replace with a new coil.
4. Reassemble all the parts and realign the radio in accordance with the alignment instructions in the Radio Service Bulletin.

CLUTCH REASSEMBLY

When the clutch is reassembled the clutch operating lever must be in the position shown in the Illustration 7. The procedure for positioning this lever is as follows:

1. Depress the clutch spring until the assembly bottoms.
2. Assemble the clutch lever on the side of the clutch operating collar toward the gears and slide the lever into its fulcrum as shown.
3. Release the clutch face and adjust the clutch in accordance with "Clutch Adjustment."

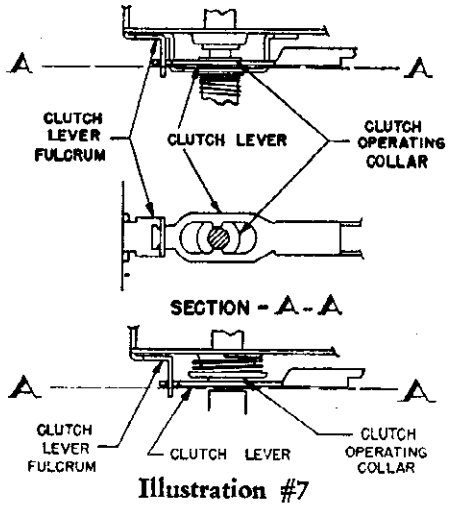

Illustration #7

Note: Both of the above types of clutch assemblies have been used. The only difference is in the position of the spring.

BEARING REPLACEMENTS

This tuner uses ball bearings on the treadle and worm gear. A small amount of grease will hold these bearings in place during assembly and will also provide lubrication for the bearings.

REPLACING THE POINTER ASSEMBLY

Use the following procedure to replace the complete pointer assembly. On radios having plastic pointers it is not necessary to replace the complete pointer assembly to replace the pointer tip. In such cases the pointer tip will be listed separately in the service parts list.

1. Remove the tuner from the radio.
2. Unfasten the pointer connecting link from the pointer assembly by removing the pointer connecting link spring. (See Illustration #5)
3. Remove the screw which fastens the pointer assembly to the tuner side plate.
4. Remove the "C" washer holding the pointer to the dial light shield.
5. Remove the pointer from the tuner.
6. Mount the new pointer assembly by making the same connections that were removed.

REPLACING PUSH BUTTON AND SLIDE ASSEMBLIES

In this bulletin the replacement of push button and slide assemblies in the 1949 or later model radios (assemblies using the cam that has an ear on each end) is described. For the replacement of this assembly in earlier models see the December 1947, Volume 4, No. 5 issue of "Testing Tips." The procedures are similar in both cases.

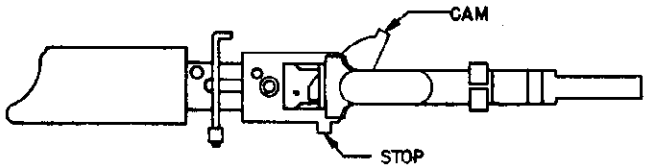

Illustration #8

1. Remove the tuner from the radio and tear it down as shown in the Illustration 11 until you have the front bearing plate and the five push button and slide assemblies.
2. Place the push button and slide assembly that is to be removed in the extended position as shown in Illustration 8 (move the button to the side or down and pull all the way out).
3. Position the slide with respect to the holes in the front bearing plate as shown in Illustration 9.

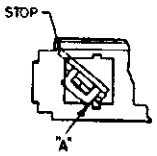

Illustration #9

4. Pull the slide in the direction of the button until the stop hits the front bearing plate. Work this stop through the bearing plate.
5. Turning the slide slightly, guide point "A" through the notch in the hole of the front bearing plate. (See Illustration 9)
6. Pull the slide on through the front bearing plate until the cam hits the front bearing plate. One end of the cam should readily pass through the bearing plate when this is done.
7. Maneuver the cam with your fingers until it is roughly perpendicular to the center line of the slide assembly and work the cam through the hole.
8. Pull the slide the rest of the way out of the front bearing plate. NO EXCESSIVE FORCE IS NECESSARY IN ANY OF THIS PROCEDURE.

The new push button and slide assembly can be put in the front bearing plate by using the exact reverse of this procedure.

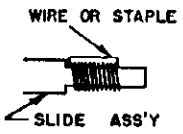

Illustration #10

When the bearing plate and the five push button and slide assemblies are put back in the tuner the slide return springs may make the reassembly difficult. However, this can be avoided by holding these springs in a compressed position on the ends of the slides with a paper staple or piece of wire during the assembly operation as shown in the Illustration 10. Be sure to remove the staple or wire before returning the tuner to the radio.

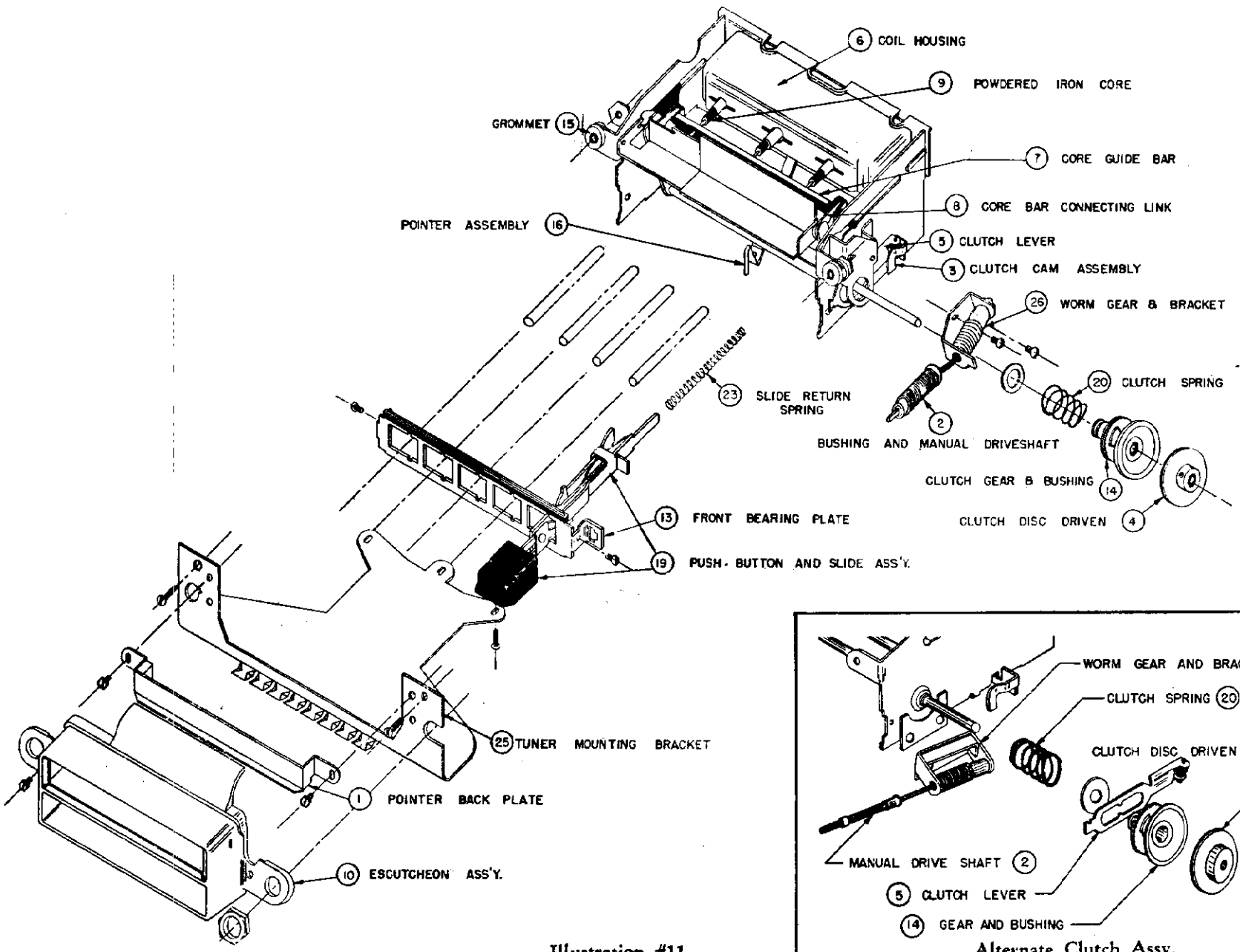

Illustration #11

Alternate Clutch Assy.

MODEL R-1236

GENERAL:

Tubes	6
Speaker	5" PM
Tuning	Manual and 5 Pushbuttons
Tuning Range	540 to 1720 KC
Intermediate Frequency	456 KC
Power Supply	105/125 volts AC-DC
Power Consumption	35 Watts
Cabinet	Ivory Plastic

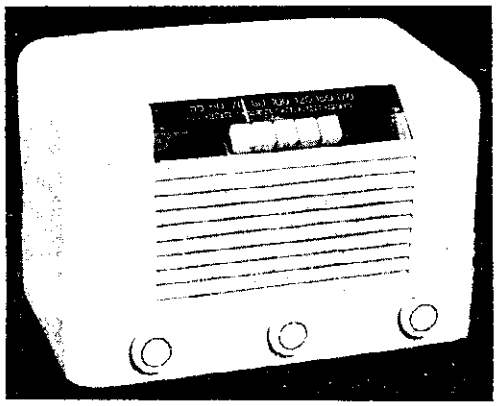

Model R-1236

PUSHBUTTON SETUP PROCEDURE

1. Remove button from pushbutton shaft.
2. Loosen exposed screw by means of screwdriver.
3. Push shaft all the way in and hold in this position with screwdriver.
4. Tune in desired station manually.
5. Release shaft carefully and tighten shaft screw.
6. Replace button over shaft and push all the way in to be sure the pushbutton is set up accurately.

ALIGNMENT PROCEDURE

Output Meter Connections	Across Voice Coil Winding
Generator Ground	To Chassis through .01 MFD
Dummy Antenna	In Series with generator
Volume Control Position	Fully on

Steps	Series Condenser or Dummy Antenna	Connect Signal Generator To	Adjust Signal Generator To	Turn Radio Dial To	Adjust Trimmers
1	.02 Mfd.	12SA7 Grid (Pin #8)	456 KC	Quiet point near H. F. end	A-B (2nd IF Trans) C-D (1st IF Trans)
2	.000200 Mfd.	Ant. lead	1720 KC	1720 KC	E (Osc.)
3	.000200 Mfd.	Ant. lead	1400 KC	1400 KC	F (Ant.)

©John F. Rider

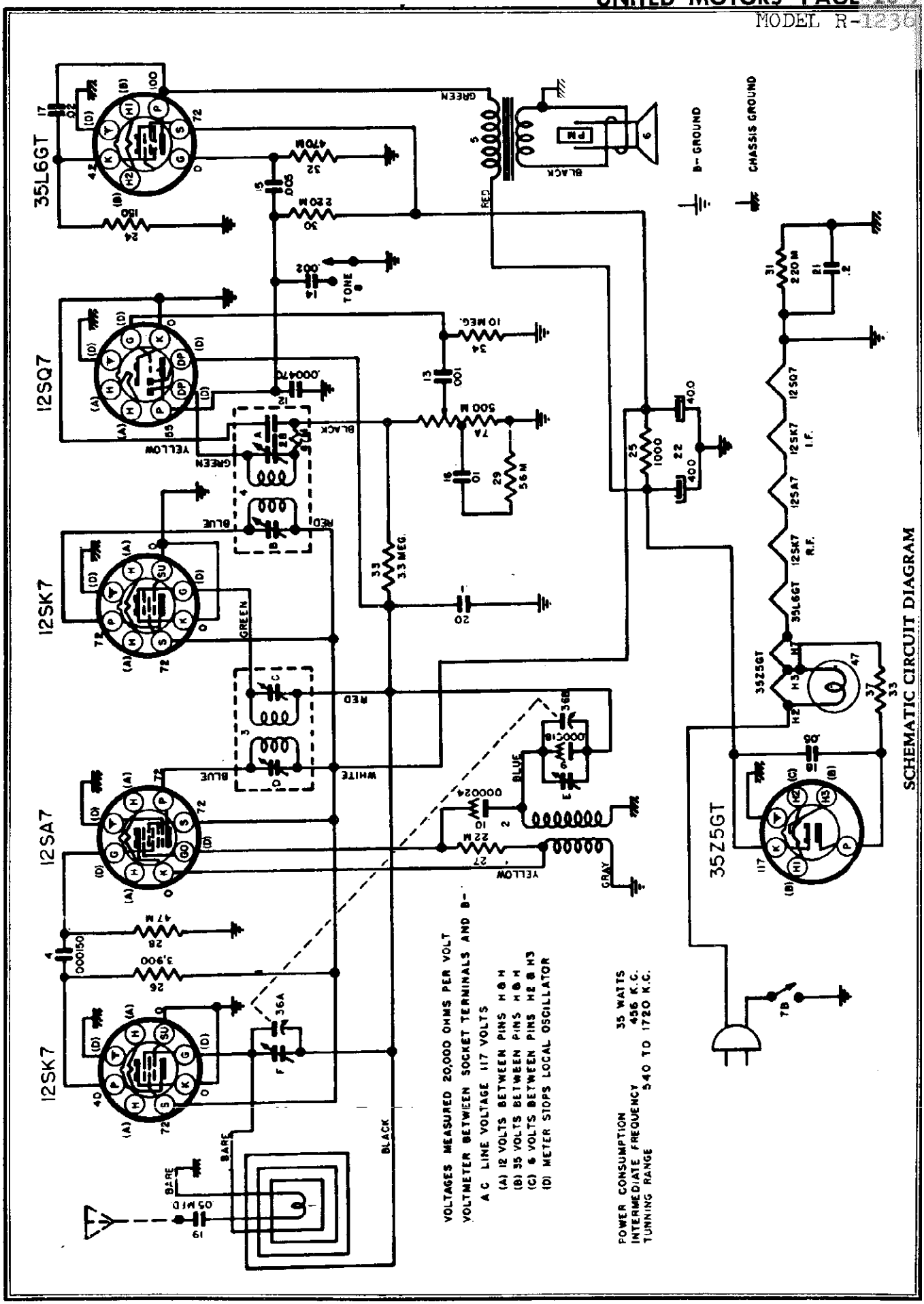
SCHEMATIC CIRCUIT DIAGRAM
35L6GT
12SQ7
12SK7
12SA7
12SK7
35Z5GT
3525GT
12SK7 R.F.
12SA7
12SK7 I.F.
12SQ7
B- GROUND
CHASSIS GROUND
TONE
BLACK
GREEN
RED
BLUE
WHITE
YELLOW
GRAY
BARE
VOLTAGES MEASURED 20,000 OHMS PER VOLT
VOLTMETER BETWEEN SOCKET TERMINALS AND B-
A C LINE VOLTAGE 117 VOLTS
(A) 12 VOLTS BETWEEN PINS H & H
(B) 35 VOLTS BETWEEN PINS H & H
(C) 6 VOLTS BETWEEN PINS H2 & H3
(D) METER STOPS LOCAL OSCILLATOR
POWER CONSUMPTION 35 WATTS
INTERMEDIATE FREQUENCY 456 K.C.
TUNNING RANGE 540 TO 1720 K.C.

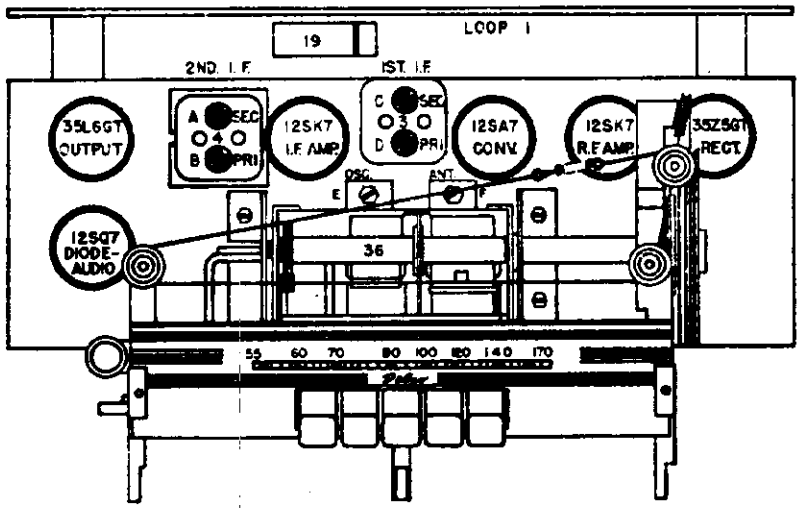

PARTS LAYOUT - TUBE VIEW

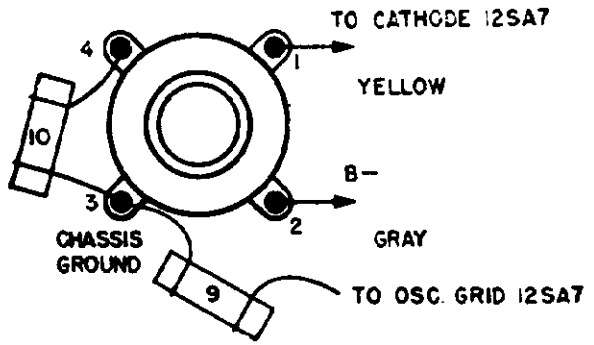

OSCILLATOR COIL ASSY.
Chassis View

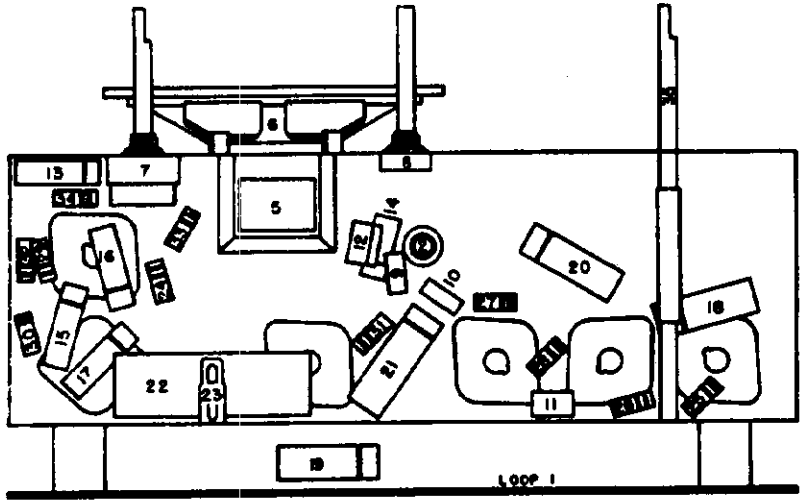

PARTS LAYOUT - CHASSIS VIEW

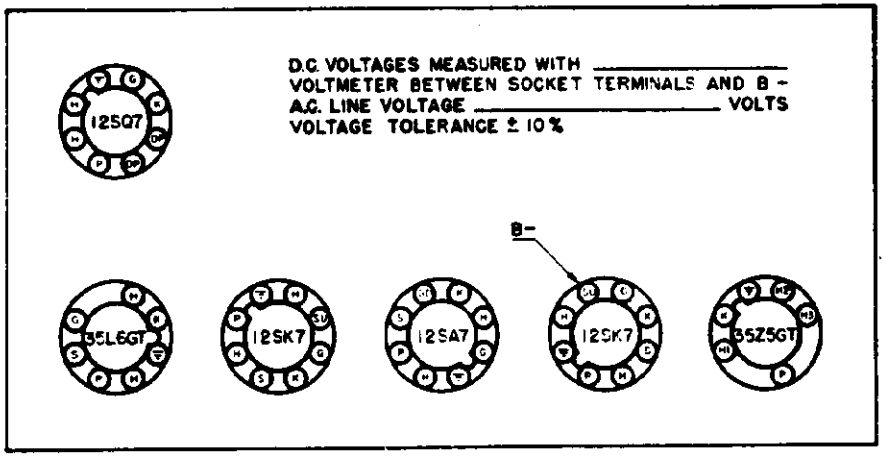

VOLTAGE CHART
(Socket View)

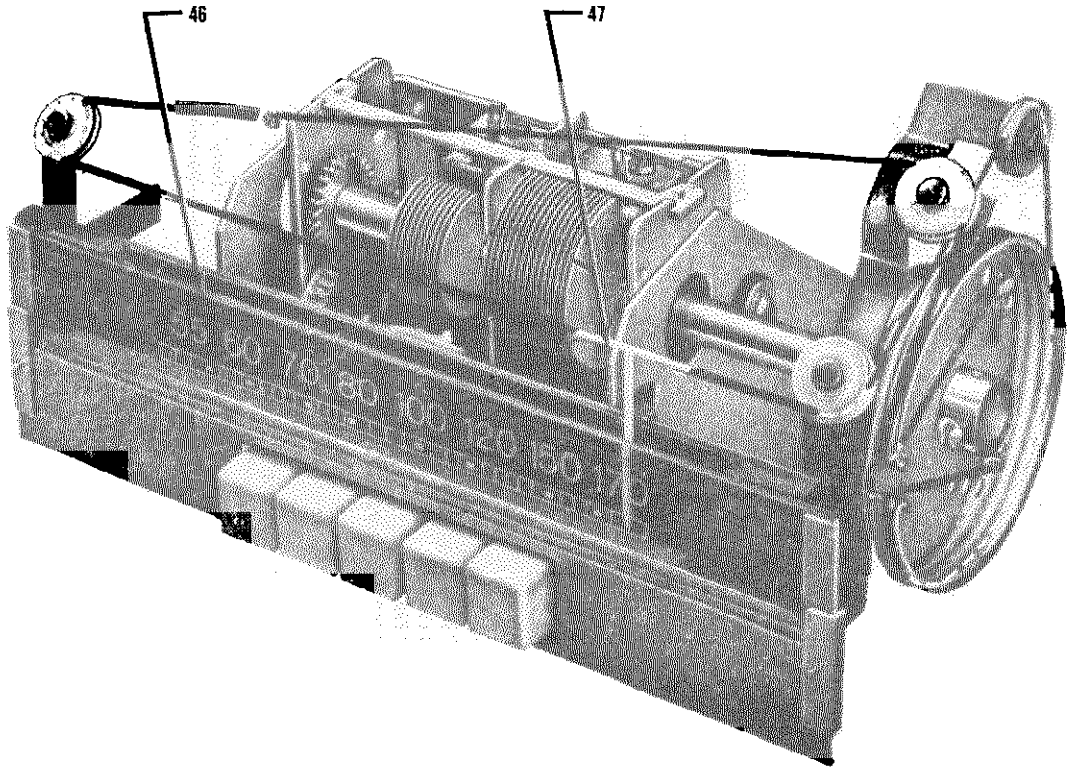

TUNER ASSEMBLY - FRONT

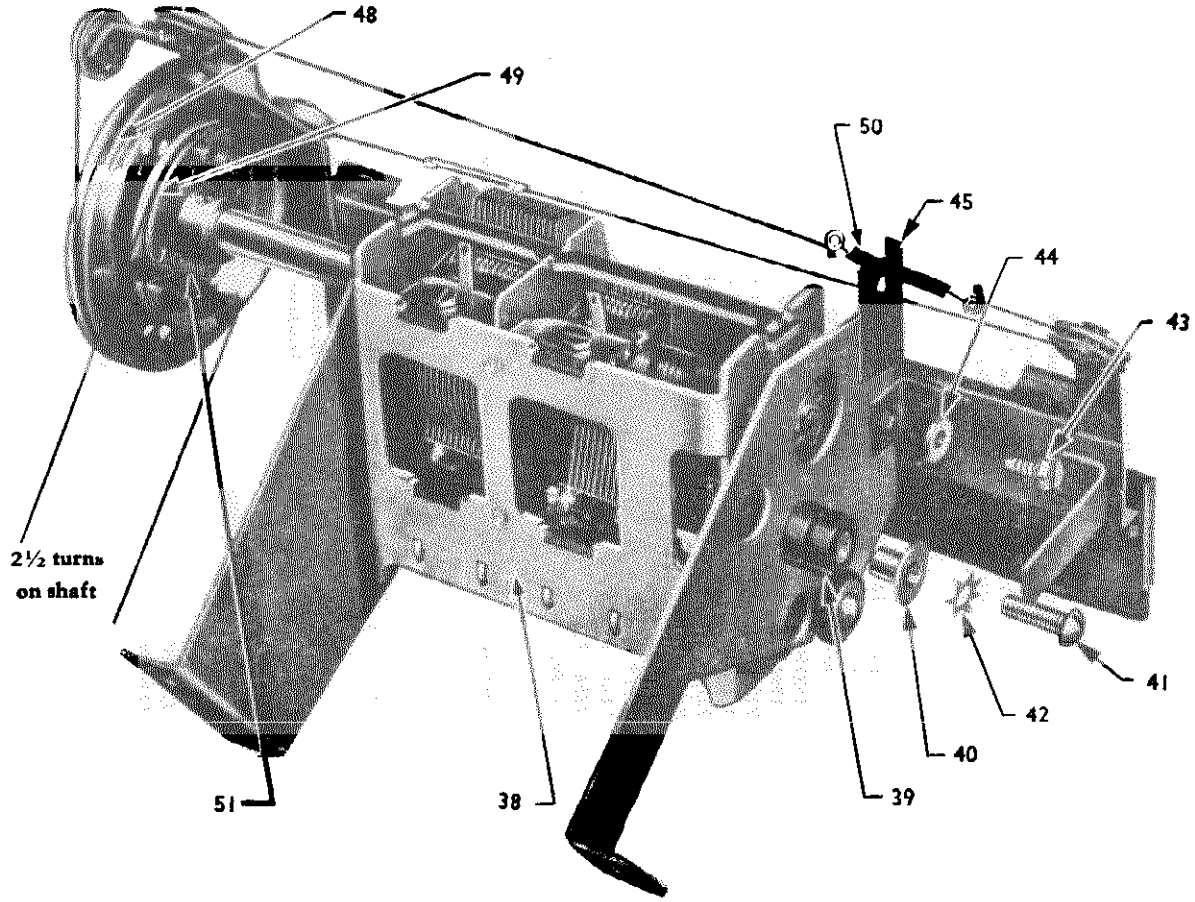

TUNER ASSEMBLY - REAR

©John F. Rider

© John F. Rider

SERVICE PARTS LIST

Illus. No.	Production Part No.	Service Part No.	Description
			ELECTRICAL PARTS
			COILS
1	1216621	1216621	Antenna-Loop and Back Cover
2	1216572	1216572	Oscillator
3	1216605	1216605	1st I.F. Assy.
4	1217973	1217973	2nd I.F. Assy.
			CONDENSERS
9	1216659	1216659	0.000018 mfd compensating
10	7239153	7239153	0.000024 mfd compensating
11	7230721	G 151	0.000150 mfd molded
12	7232958	G 471	0.000470 mfd molded
13	7239188	E 102	0.001 mfd 600 V. Tubular
14	7236756	E 202	0.002 mfd 600 V. Tubular
15	7230767	E 502	0.005 mfd 600 V. Tubular
16	7237957	E 103	0.01 mfd 400 V. Tubular
17	7237720	E 203	0.02 mfd 400 V. Tubular
18	7230592	E 503	0.05 mfd 600 V. Tubular
19	7236842	E 503	0.05 mfd 200 V. Tubular
20	7238789	E 104	0.1 mfd 400 V. Tubular
21	7238787	E 204	0.2 mfd 400 V. Tubular
22	1217026	J 907	2 Section Electrolytic
22A			40 mfd 150 V.
22B			40 mfd 150 V.
36	1217399	1217399	Gang Condenser Package
38			Gang Condenser
39			Grommet
40			Spacer Sleeve
41			Screw
42			Lockwasher
43			Screw
44			Shoulder Washer
45			Insulator
			RESISTORS
24	1213220	A 151	150 ohms ½ W Insulated
25	1211037	B 102	1000 ohms 1 W Insulated
26	1214546	A 392	3900 ohms ½ W Insulated
27	1211192	A 223	22,000 ohms ½ W Insulated
28	7240731	A 473	47,000 ohms ½ W Insulated
29	1213267	A 563	56,000 ohms ½ W Insulated
30	1214479	A 224	220,000 ohms ½ W Insulated
31	1214479	A 224	220,000 ohms ½ W Insulated
32	1211196	A 474	470,000 ohms ½ W Insulated
33	1211150	A 335	3.3 megohms ½ W Insulated
34	1212980	A 106	10 megohms ½ W Insulated
37	1214538	A 330	33 ohms ½ W Insulated

Illus. No.	Production Part No.	Service Part No.	Description
			MISCELLANEOUS ELECTRICAL PARTS
8	1216544	1216544	Control - Tone
7	1216505		Control - Volume and Switch
7A		6242	Volume Control
7B		6200	Switch
	435433	47	Lamp - Dial
	1216563	6102	Speaker - 5" PM
5	1216557	1216557	Transformer - Output
			MECHANICAL PARTS
			Chassis
	1217307	1217307	Backplate - Dial (Includes dial glass)
	1216458	1216458	Bracket - Gang Mtg - R.H.
	1216459	1216459	Bracket - Gang Mtg - L.H.
	1216559	1216559	Clip - Condenser
		6040	Cord - Pointer Drive
	1216512	1216512	Cord - Power
46	1216578	1216578	Dial Glass
47	1216498	1216498	Pointer
48	1216705	1216705	Pulley - Large
49	1216704	1216704	Pulley - Small
35	1216650	1216650	Shaft - Manual Tuning
	1217839	1217839	Socket - Dial Light
	7236279	7236279	Socket - Octal Tube
50	1217422	1217422	Spring - Cord Tension
51	7238950	7238950	Spring - Cord Tension
	7245333	7245333	Washer "C" Manual Shaft
			Cabinet
	1216657	1216657	Cabinet
	1216878	1216878	Knob
	1216877	1216877	Pushbutton - Ivory
	1217752	1217752	Pushbutton - Maroon

TUBE COMPLEMENT

1213848	5408	35Z5GT Rectifier
1213818	5405	35L6GT
1213812	5348	12SK7
1213809	5341	12SA7
1213813	5350	12SQ7

©John F. Rider

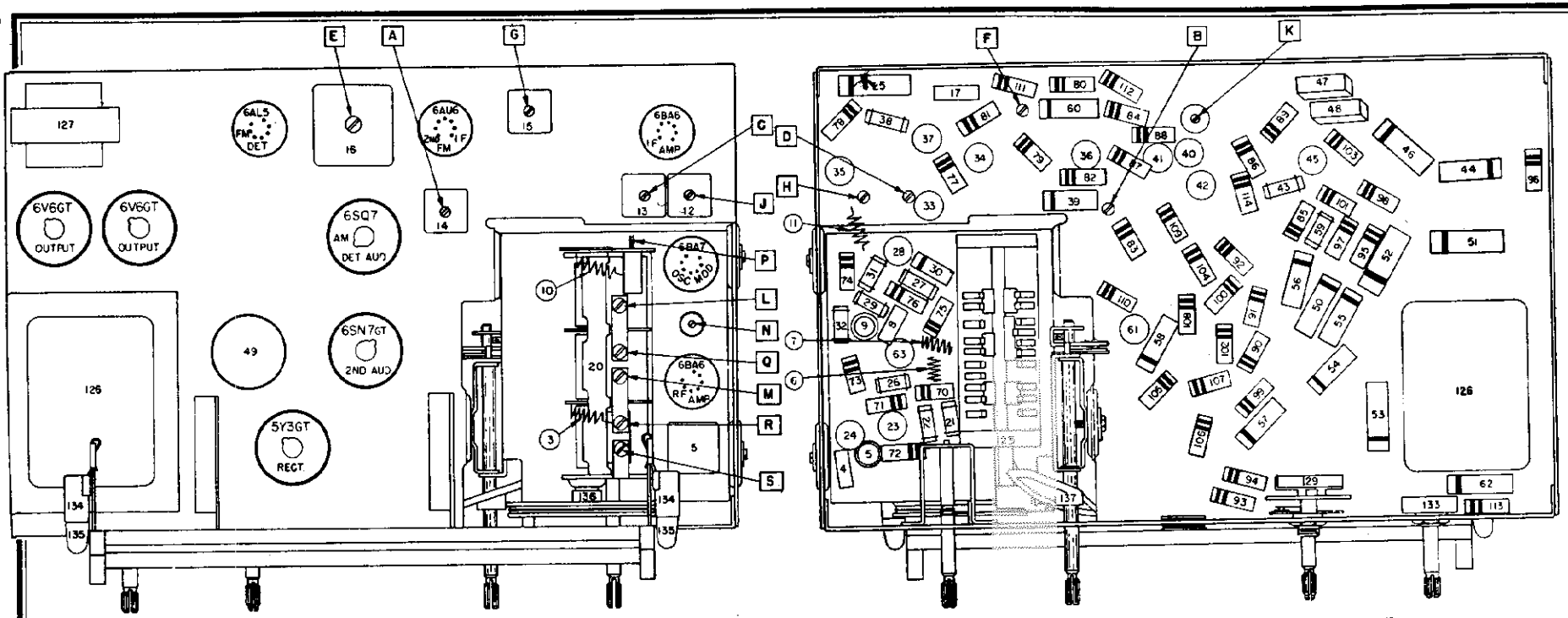

PARTS LAYOUT — TUBE VIEW

PARTS LAYOUT — CHASSIS VIEW

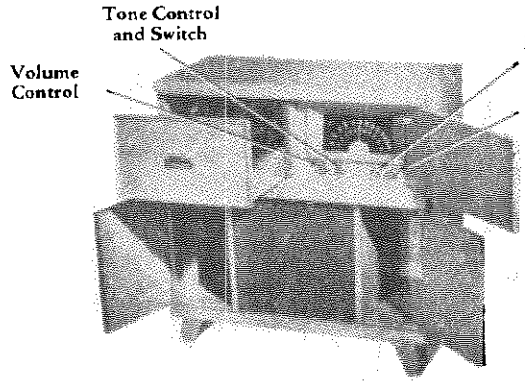

MODEL R-1250 - MODERN

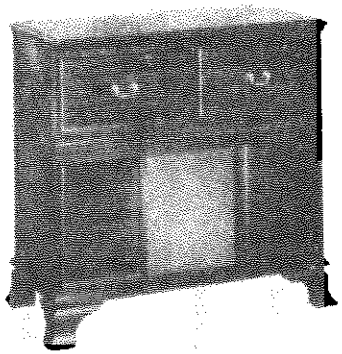

MODEL R-1248 - WALNUT
MODEL R-1249 - MAHOGANY

GENERAL SPECIFICATIONS

TUBES: Nine, plus rectifier

SPEAKER: 12" Electro-magnetic

TUNING: Manual

TUNING RANGE: AM - 550 - 1600 KC
FM - 88 - 108 MC

POWER SUPPLY: 105/125 Volts, 60 Cycle AC

NOTE: When servicing this receiver, special care must be taken to replace some parts with identical parts only. These parts are marked with an asterisk in the service parts list. Also, the position of the replacement should be as close as possible that of the original part.

MODELS R-1248, R-1249, R-1250

ALIGNMENT PROCEDURE

CAUTION: Be sure to have speaker plugged in before turning receiver power on.

Generator Return ..... To Receiver Chassis

Dummy Antenna ..... In Series With Generator

Volume Control Position ..... Maximum Volume

Tone Control Position ..... Treble

Generator Output ..... Minimum for Readable Indication

Steps	Dummy Antenna	Connect Generator to	Signal Generator Freq.	Band Switch Pos.	Tune Receiver to	Adjust	Meter Connection for
1	.0002 Mfd.	Stator lug AM-RF section of gang	455 KC	AM	Quiet point on dial	A, B, C, D	Adjust for maximum with output meter across voice coil
2	.0002 Mfd.	Stator lug FM-RF section of gang	10.7 MC	FM	Quiet point on dial	E*, F G, H, J	Adjust for maximum AVC with output meter from junction of Illus.#78 and #103 to ground
3	.0002 Mfd.	Stator lug FM-RF section of gang	10.7 MC	FM	Quiet point on dial	K	Adjust for Min. Audio output measured from junction of Ills. #85 and #44 to ground.
4	.0002 Mfd.	External loop ant. connection	1615 KC	AM	High Freq. stop	L	Adjust for max. with output meter across voice coil.
5	.0002 Mfd.	External loop ant. connection	1380 KC	AM	1380 KC	M	Adjust for max. with output meter across voice coil.
6	.0002 Mfd.	External loop ant. connection	600 KC	AM	600 KC	N**	Adjust for max. with output meter across voice coil.
7	300 ohm ½W resistor	External dipole ant. connection	106 MC	FM	106 MC	P	Adjust for max. AVC with output meter from junction of Ills. #78 and #103 to ground.
8	300 ohm ½W resistor	External dipole ant. connection	90 MC	FM	90 MC	Ill. #10***	Adjust for maximum AVC with output meter from junction of Ills. #78 and #103 to ground.
9	300 ohm ½W resistor	External dipole ant. connection	106 MC	FM	106 MC	Q, **** R	Adjust for maximum AVC with output meter from junction of Ills. #78 and #103 to ground.
10	300 ohm ½W resistor	External dipole ant. connection	90 MC	FM	90 MC	Ills. #6 #3*****	Adjust for maximum AVC with output meter from junction of Ills. #78 and #103 to ground.
11	None	Test loop******	1380 KC	AM	1380 KC	S	Adjust for maximum with output meter across voice coil.

*Completely misalign the secondary of the ratio detector before proceeding with step 2.

**Rock in oscillator.

***Distort oscillator coil for maximum AVC voltage and repeat steps 7 and 8 until dial calibration is correct at 106 and 90 MC. This is done by physically compressing or lengthening the coil as the need may be. WARNING!! Do not bend FM gang condenser plates.

****Rock in Trimmer.

*****Distort RF and antenna coils for Maximum AVC voltage and repeat steps 9 and 10 for correct dial calibration.

******The Signal generator may be coupled to the receiver by placing a loop electrically across the output of the signal generator and physically near the receiver loop. This loop may be a loop from another radio, a home made loop of 10 or 15 turns, or other similar devices.

©John F. Rider

©John F. Rider

The tube socket voltages, as measured at the factory and under the conditions shown on the schematic diagram, are shown here. The blank spaces are provided so the service man may fill in actual voltage readings as measured with his own equipment. A normal operating radio should be used for these measurements.

VOLTMETER RESISTANCE .....Ohms Per Volt

LINE VOLTAGE .....Volts

VOLTAGE TOLERANCE .....± 10%

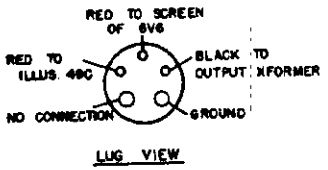

SPEAKER SOCKET

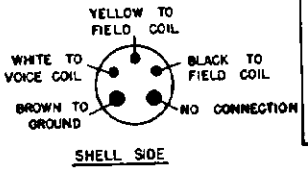

SPEAKER PLUG

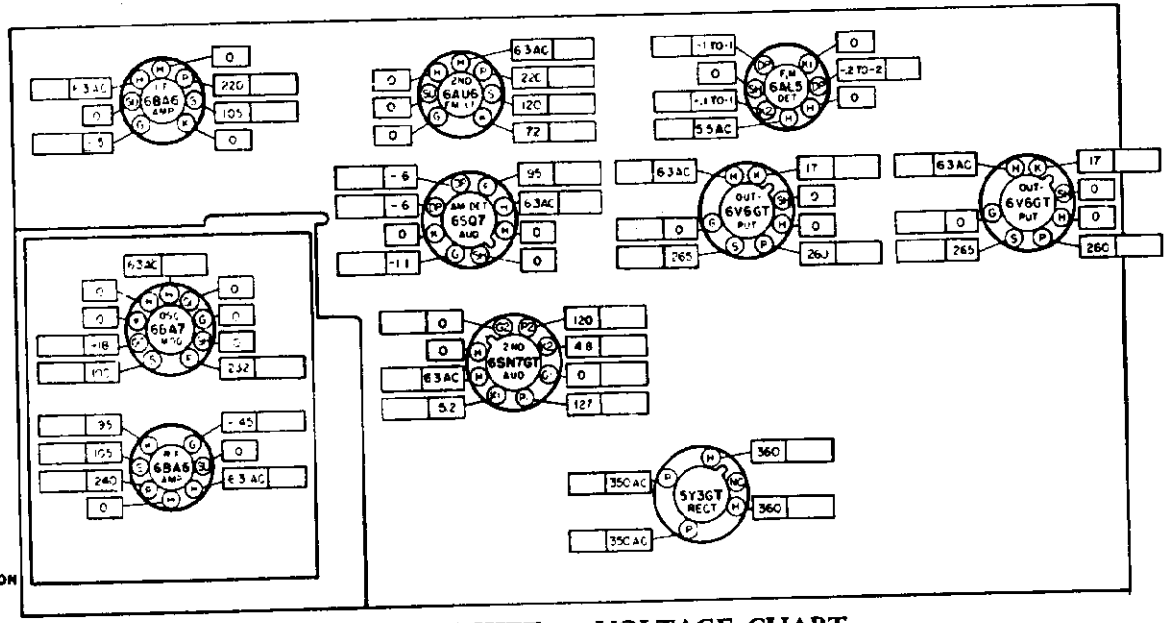

TUBE SOCKET — VOLTAGE CHART

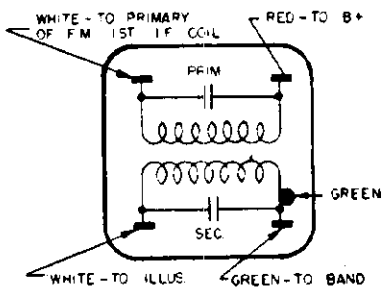

1 ST AM I.F. COIL

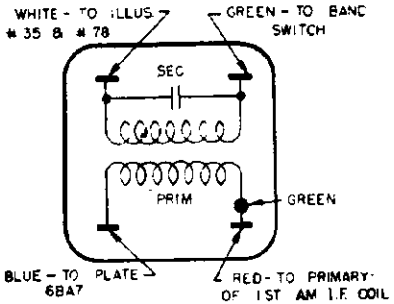

1 ST FM I.F. COIL

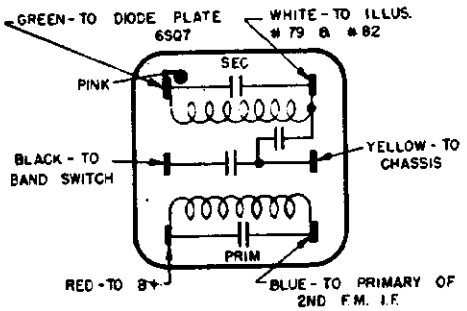

2ND AM I.F. COIL

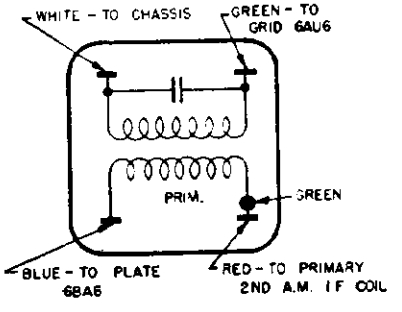

2ND FM I.F. COIL

MODELS R-1248,
R-1249, R-1250

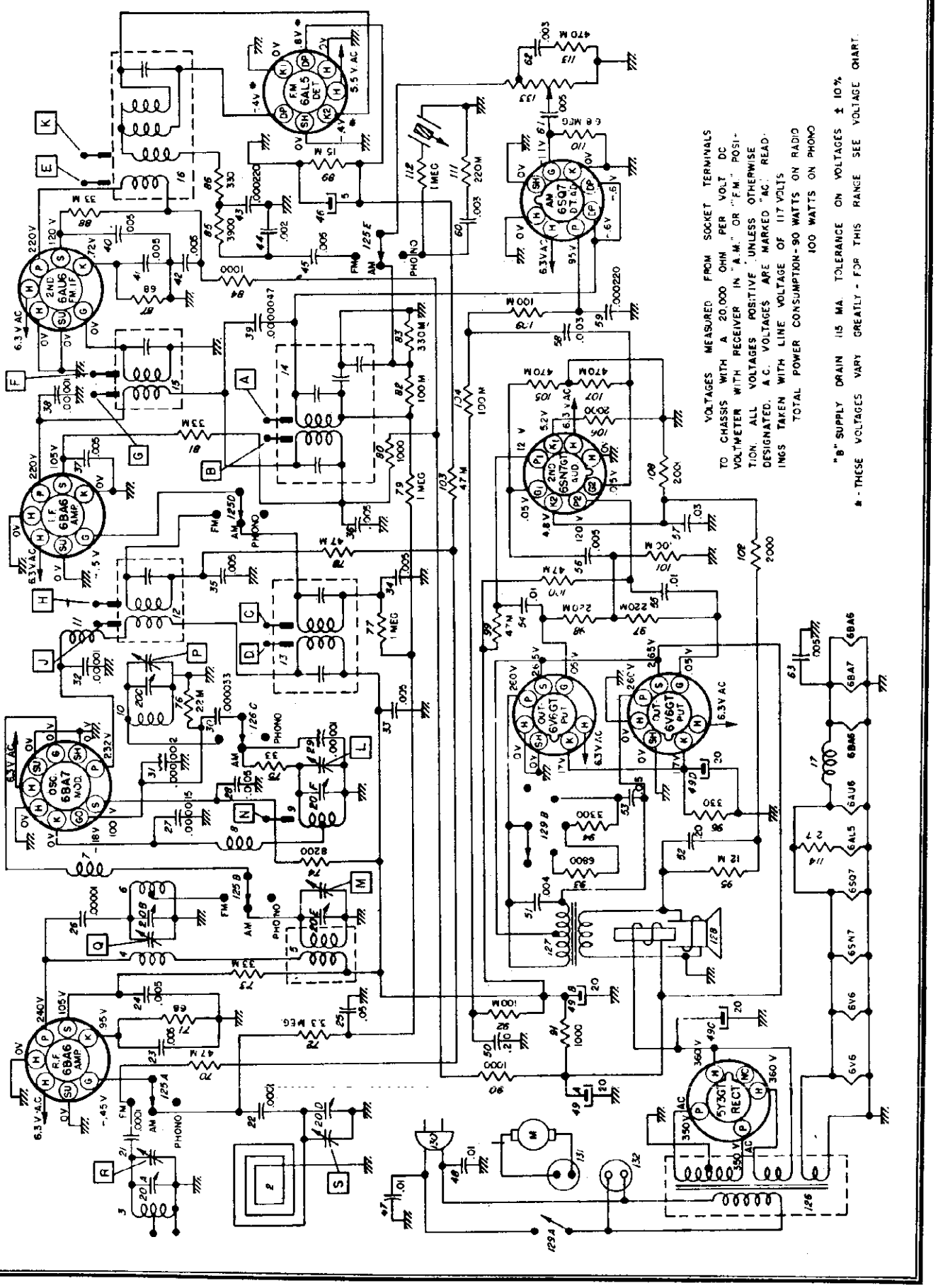

©John F. Rider

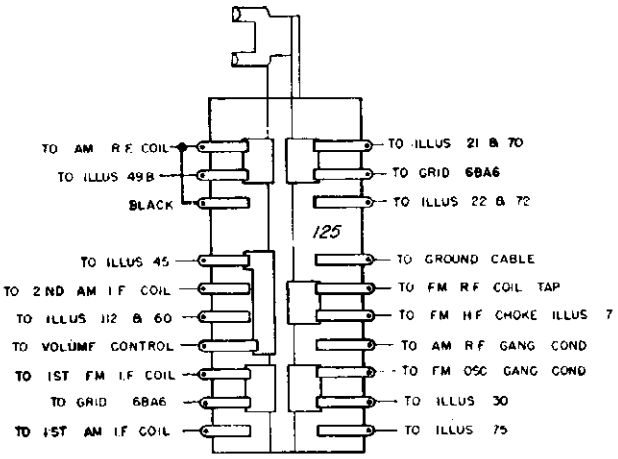

BAND SLIDE SWITCH CONNECTIONS

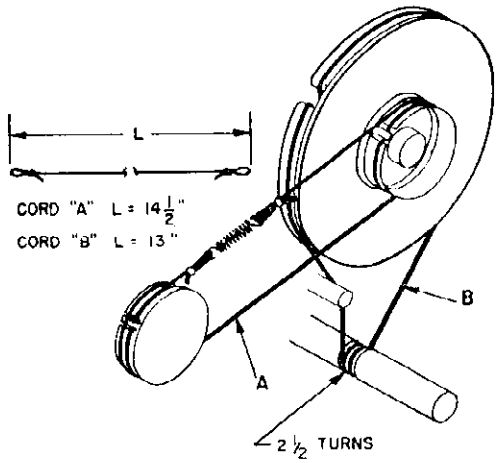

DIAL CORD DRAWING

SERVICE PARTS LIST

R-1248, R-1249, R-1250

Illus. No.	Production Part No.	Service Part No.	Description
			ELECTRICAL PARTS
			Coils
1	1218462	1218462	FM Folded Dipole Antenna
2	1218391	1218391	AM Loop Antenna
3	1219075	1219075	FM - Antenna Coil
4	1218838	1218838	FM-RF Choke Coil
5	1218176	1218176	AM-RF Coil
6	1219074	1219074	FM-RF Coil
7	1219145	1219145	FM-HF Choke Coil
8	1218838	1218838	RF-RF Choke Coil
9	1218171	1218171	AM Oscillator Coil
10	1219073	1219073	FM - Oscillator Coil
11			Approx. 2½ turns #22 wire
12	1218832	1219197	FM 1st I.F. Transformer (10.7 MC)
13	1218830	1219195	AM 1st I.F. Transformer (456 KC)
14	1218831	1219196	AM 2nd I.F. Transformer (456 KC)
15	1218832	1219197	FM 2nd I.F. Transformer (10.7 MC)
16	1218813	1218813	Ratio Detector
17	1218319	1218319	Filament Choke
			Condensers
20	1218801	1218801	Variable Condenser
21	1217925	G 101	.0001 mfd ceramic
22	1217925	G 101	.0001 mfd ceramic
23	1218298	1218298	.005 mfd Hi Cap. (Disc type)*
24	1218298	1218298	.005 mfd Hi Cap. (Disc type)*
25	7236842	E 503	.05 mfd 200 V tubular
26	1218328	G 100	.00001 mfd ceramic
27	1218845	G 150	.000015 mfd ceramic
28	1218298	1218298	.005 mfd Hi Cap (Disc type)*
29	1219072	1219072	.00001 mfd Temp. Comp.*
30	1218348	G 330	.000033 mfd ceramic
31	1219071	1219071	.000002 mfd Temp. Comp.*
32	1218328	G 100	.00001 mfd ceramic
33	1218298	1218298	.005 mfd Hi Cap (Disc type)*
34	1218298	1218298	.005 mfd Hi Cap (Disc type)*
35	1218298	1218298	.005 mfd Hi Cap (Disc type)*
36	1218298	1218298	.005 mfd Hi Cap (Disc type)*
37	1218298	1218298	.005 mfd Hi Cap (Disc type)*
38	1218328	G 100	.00001 mfd ceramic

©John F. Rider

MODELS R-1248, R-1249, R-1250

SERVICE PARTS LIST (Cont.)

Illus. No.	Production Part No.	Service Part No.	Description
		Condensers	
39	1218408	1218408	.0000047 mfd*
40	1218298	1218298	.005 mfd Hi Cap (Disc type)*
41	1218298	1218298	.005 mfd Hi Cap (Disc type)*
42	1218298	1218298	.005 mfd Hi Cap (Disc type)*
43	1218846	G 221	.00022 mfd ceramic
44	7237836	E 202	.002 mfd 600 V tubular
45	1218298	1218298	.005 mfd Hi Cap (Disc type)*
46	1218842	J 051	5 mfd 50 V Electrolytic
47	1217227	1217227	.01 mfd 600 V Molded mica
48	1217227	1217227	.01 mfd 600 V Molded mica
49	1218843	1218843	Electrolytic
49A			20 mfd 450 Volt
49B			20 mfd 450 Volt
49C			20 mfd 450 Volt
49D			20 mfd 25 Volt
50	1217876	E 204	.2 mfd 200 V Tubular
51	1217875	H 402	.004 mfd 1600 V Tubular
52	7240579	E 204	.2 mfd Tubular 400 Volt
53	7230592	E 503	.05 mfd 600 V Tubular
54	1209309	E 103	.01 mfd 400 V Tubular
55	1209309	E 103	.01 mfd 400 V Tubular
56	7230767	E 502	.005 mfd 600 V Tubular
57	1218844	E 303	.03 mfd 200 V Tubular
58	7257699	E 302	.003 mfd 600 V Tubular
59	1218846	G 221	.00022 mfd ceramic
60	7257699	E 302	.003 mfd 600 V Tubular
61	1218298	1218298	.005 mfd Hi Cap (Disc type)*
62	7257699	E 302	.003 mfd 600 V Tubular
63	1218298	1218298	.005 mfd Hi Cap (Disc type)*
		Resistors	
70	7240731	A 473	47,000 ohms ½ W
71	1215558	A 680	68 ohms ½ W
72	1211150	A 335	3.3 Megohm ½ W
73	1213484	A 333	33,000 ohms ½ W
74	1216155	B 822	8200 ohms 1 W
75	1214538	A 330	33 ohms ½ W
76	1211192	A 223	22,000 ohms ½ W
77	7238873	A 105	1 Megohm ½ W
78	1216157	B 473	47,000 ohms 1 W
79	7238873	A 105	1 Megohm ½ W
80	1211037	B 102	1,000 ohms 1 W
81	1213484	A 333	33,000 ohms ½ W
82	1211118	A 104	100,000 ohms ½ W
83	7240732	A 334	330,000 ohms ½ W
84	1211037	B 102	1,000 ohms 1 W
85	1214546	A 392	3900 ohms ½ W
86	1213224	A 331	330 ohms ½ W
87	1215558	A 680	68 ohms ½ W
88	1213484	A 333	33,000 ohms ½ W
89	1213257	A 153	15,000 ohms ½ W
90	121518?	C 102	1,000 ohms 2 W
91	121103?	B 102	1,000 ohms 1 W
92	121111?	A 104	100,000 ohms ½ W
93	1215315	A 682	6800 ohms ½ W
94	1216127	B 332	3300 ohms 1 W
95	1213254	A 123	12,000 ohms ½ W
96	1214572	C 331	330 ohms 2 W
97	1213479	A 224	220,000 ohms ½ W
98	1213479	A 224	220,000 ohms ½ W
99	724073?	A 473	47,000 ohms ½ W
100	7240731	A 473	47,000 ohms ½ W
101	1211118	A 104	100,000 ohms ½ W
102	1213238	A 182	2,000 ohms ½ W
103	1216157	B 473	47,000 ohms 1 W
104	1211118	A 104	100,000 ohms ½ W
105	1211196	A 474	470,000 ohms ½ W
106	1213238	A 182	2,000 ohms ½ W
107	1211196	A 474	470,000 ohms ½ W
108	1213238	A 182	2,000 ohms ½ W
109	1211118	A 104	100,000 ohms ½ W
110	7241937	A 685	6.8 Megohm ½ W

©John F. Rider

SERVICE PARTS LIST (Cont.)

Illus. No.	Production Part No.	Service Part No.	Description
111	1213479	A 224	220,000 ohms ½ W
112	7238873	A 105	1 Megohm ½ W
113	1211196	A 474	470,000 ohms ½ W
114	1219144	1219144	2.7 Ohms 1 W
		Miscellaneous Electrical Parts	
125	1218729	1218729	Slide Switch Assy.
126	1218230	1218230	Transformer - Power
127	1218320	1218320	Transformer - Output
128	1218219	1218219	Speaker - 12" Electro Magnetic - DC Resistance Field Coil - 650 ohms - Voice Coil - 5 ohms
129	1218494	1218494	Control - Tone and Switch Tone Control Power on-off Switch
133	1218228	1218228	Volume Control
	115273	51	Lamp - Jewel
135	435433	47	Lamp - Dial
		Tubes	
	1217690	5252	6BA6
	1218849	5267	6BA7
	1218106	5260	6AU6
	1217689	5251	6AL5
	7237753	5231	6SQ7
	1217376	5258	6SN7GT
	1213793	5241	6V6GT
	1216134	5123	5Y3GT
		MISCELLANEOUS MECHANICAL	
		Chassis	
130	1218334	1218334	Cord - Power
		6040	Cord - Pointer drive
	1219190	1219190	Socket - Jewel light assy.
134	1218340	1218340	Socket and clamp assy. - Dial light
	7236279	7236279	Socket - Octal Tube
	1218170	1218170	Socket - Nine pin miniature tube
	1218071	1218071	Socket - Seven pin miniature tube
	1851850	1851850	Plug - Pick-up arm
	1217515	1217515	Plug and Shell - Phono motor
136	1218968	1218968	Pulley and hub assy.
	7242189	7242189	Spring - Pointer cord tension
	1218169	1218169	Socket - Speaker
132	1216925	1216925	Socket - Phono power
	1216747	1216747	Socket - Phono pick-up arm
	1218785	1218785	Shaft - Manual tuning
	1218786	1218786	Shaft - Slide switch
	1219179	1219179	Pointer, pulley, and backplate assy.
137	1219189	1219189	Cam and set screws
	1219188	1219188	Switch latch Yoke and clip
	169066	169066	Ball bearing
		Cabinet Parts	
	1218466	1218466	Dial glass
	1218229	1218229	Knobs
	1218854	1218854	Cabinet (R-1250) Modern
	1218453	1218453	Cabinet (R-1249) Mahogany
	1218452	1218452	Cabinet (R-1248) Walnut

*Service with identical parts only.

©John F. Rider

MODEL 808

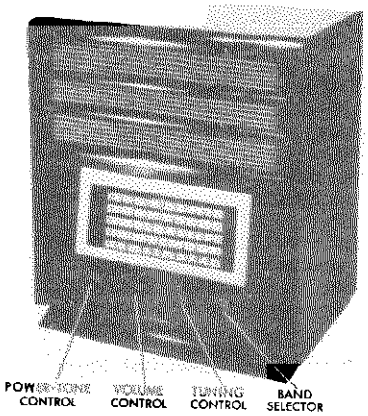

POWER SUPPLY:

CAUTION: This receiver must be operated from a 105-125 V. or 210-250 V. 50/60 cycle AC supply. The receiver will not function on direct current (DC). If you are in doubt as to the voltage and frequency of the power supplied to your home, consult the local power company representative. Before plugging the power cord plug into the wall outlet, check to see that the line voltage switch, located on the chassis, is set for the source available. Refer to Fig. 5 for the location of this switch. The power receptacle provided for the record player supplies 115 V. regardless of the setting of the "110/220 V." switch on the receiver or the source to which the receiver has been connected.

ANTENNA:

A loop antenna has been installed inside the cabinet of the receiver and for reception of local stations no other additional antenna is usually required.

Metal structures concealed in walls, radiators, or other large metal objects near the receiver prevent best possible pickup of radio signals. Locate your receiver as far as possible from such objects.

For best results, especially at remote points from broadcast stations, an outside antenna about 25 to 100 feet long, including lead-in, may be necessary. The lead-in wire is connected to the terminal marked "A" located on the rear apron of the chassis. To avoid excessive electrical noise, erect the antenna so that its length runs at right angles to nearby power lines, streetcar lines, and other similar types of electrical apparatus. For some installations it will be found desirable to connect a ground wire between the "G" terminal and a suitable ground such as a water pipe or radiator.

LOCATION:

Do not place the radio in a warm location, such as on a radiator or over a hot air register. When placing the radio against a wall, leave sufficient clearance for the circulation of air.

BAND SELECTOR - The band selector knob has six positions which perform the following functions in the order of its rotation from left to right. The position of the band selector knob is indicated by the illumination of the particular band being tuned. When operating in the "phono" position, the whole dial will be illuminated.

Position 1 - Phono - With the record player connected to power and pick-up receptacles on the rear apron of the receiver, the reciever operates as a phonograph. The volume and tone controls function as they do for radio reception.

Position 2 - BROADCAST Band - The receiver will tune the standard broadcast band in this position. The receiver frequency is read from the dial scale marked BROADCAST.

Positions 3, 4, 5, 6 - SHORTWAVE Bands - The receiver tunes the shortwave ranges (A - 2.2 to 7 mc), (B - 7 to 22 mc), (C - 9 to 12 mc) and (D - 15 to 18 mc) on these last four positions and dial scales SHORTWAVE A, B, C and D respectively indicating the receiver frequency directly in megacycles.

DAY AND NIGHT RECEPTION:

You will notice that you are able to receive several more stations during the night than during the day. This is a phenomenon due to the sun's effect on the ionosphere. It is not a peculiairty of your receiver.

FADING:

Fading will be encountered only on distant stations. It will be recognized by a gradual diminishing of volume, sometimes to a point where the signal is no longer heard, followed by a gradual return to normal volume. This happens without any change of the controls of the radio. It is often accompanied by distortion or "garbling" of the signal. By means of the automatic volume control in your receiver this effect is reduced considerably. In severe cases it will be necessary to tune to some other station.

STATIC:

Static, like fading, is not attributable to a defective receiver. It is caused by electrical disturbances in the atmosphere (lightning flashes will be heard as severe static) and the more sensitive the receiver the more static will be heard. It us usually most prevalent in the summer and during storm periods.

STATION INTERFERENCE:

Because of the limited number of channels to which broadcasting stations can be assigned it has been necessary to assign more than one station to a channel. This results in interference between the stations particularly if the desired station is not powerful or if it tends to fade. The interference will take the form of whistles or growls and in some cases the interfering station will actually be louder than the desired station. There is no remedy for this other than to tune to a different station at another point on the dial.

LOCAL INTERFERENCE:

Interference caused by electrical apparatus is known as local or "man made" static. Though somewhat similar to static it can usually be distinguished by its regularity or by some peculiar tone. It is caused by arcing or leaking of current in industrial equipment, appliances, high tension power lines, automobile ignition systems, electric razors, etc. It is usually much more prevalent in cities or industrial areas although rural power lines are a common source.

Local interference can be controlled to some extent by proper filtering of appliances and equipment and to this end present day manufacturers of such equipment are contributing a great deal in improved designs. Power companies are also helpful and cooperative in seeking out and eliminating interference where their equipment is at fault.

©John F. Rider

TUBE AND DIAL LAMP REPLACEMENT:

The types of tubes required and their relative position in the receiver are shown in Fig. 5. When installing a replacement tube, insert the center guide pin into the center hole of the tube socket. Rotate the tube until the key on the guide pin drops into the notch in the socket hole. Push down until the base of the tube rests firmly on the socket.

To replace two of the dial lamps, it will be necessary to remove the chassis from the cabinet. To replace the dial lamps for the individual bands, unclip the socket by pinching the side springs of the socket together and withdrawing them from their light shield.

SOCKET VOLTAGES:

The socket voltages shown in the voltage chart were obtained with a 20,000 ohm per volt meter while operating the receiver from a 117-volt a-c source. All voltages are to be measured between the tube pin and receiver chassis. Blanks are provided for your meter readings to establish an average set of readings for this receiver as measured with your test equipment. The normal power consumption for the receiver is 85 watts.

ALIGNMENT:

All connections and adjustments necessary for alignment are accessible from the top of the chassis. The output transformer is located on the under side of the chassis, hence, the output meter connection should be made at the speaker socket. The speaker voice coil impedance is 3 ohms.

All alignment adjustments are made at maximum volume. Refer to the alignment chart for the dial and bandswitch settings.

The standard RMA dummy antenna specified in the alignment chart consists of a 200 mmf condenser in series with a 20 uh r-f choke which is shunted by a 400 mmf condenser in series with a 400 ohm carbon resistor.

CAUTION: The loop antenna must be connected during alignment.

ALIGNMENT CHART

Step	Dummy Antenna	Signal Generator Coupling	Signal Generator Frequency	Band Switch Setting	Receiver Dial Setting	Adjust
1	.01 mfd capacitor	Connect to rear section stator of tuning cap.	455 kc	BC	1000 kc	ABCD
2	Std RMA dummy	Connect to terminals A and G of ant. term. strip TS_1.	1500 kc	BC	1500 kc	E*FG
			600 kc		600 kc	H*
3	Std RMA dummy	See step 2.	6 mc	SW (A)	6 mc	I*JK
4	Std RMA dummy	See step 2.	20 mc	SW (B)	20 mc	L*MN
5	Std RMA dummy	See step 2.	11.5 mc	SW (C)	11.5 mc	O*PQ
			9.2 mc		9.2 mc	R*ST
6	Std RMA dummy	See step 2.	17.5 mc	SW (D)	17.5 mc	U*VW
			15.1 mc		15.1 mc	X*YZ

* Note - Calibration adjustment.

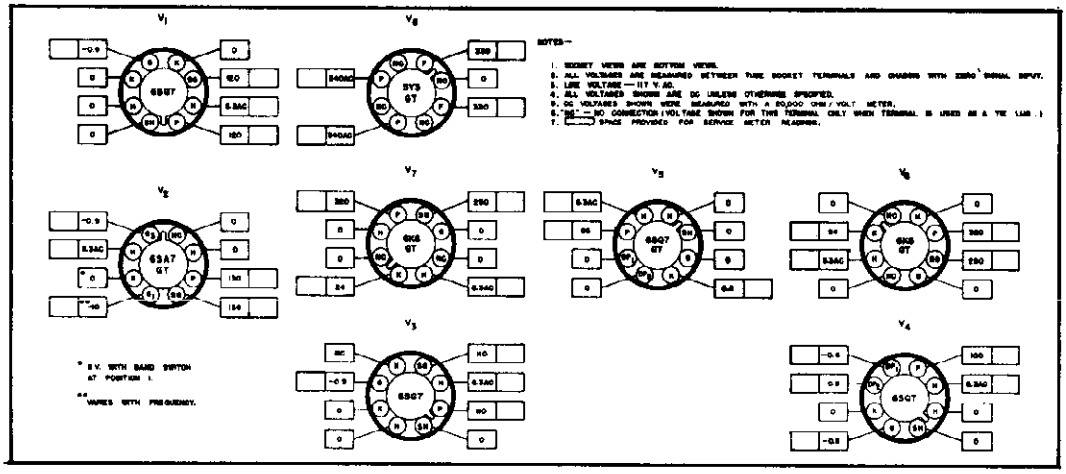

Voltage Chart.

©John F. Rider

©John F. Rider

Alignment Points.

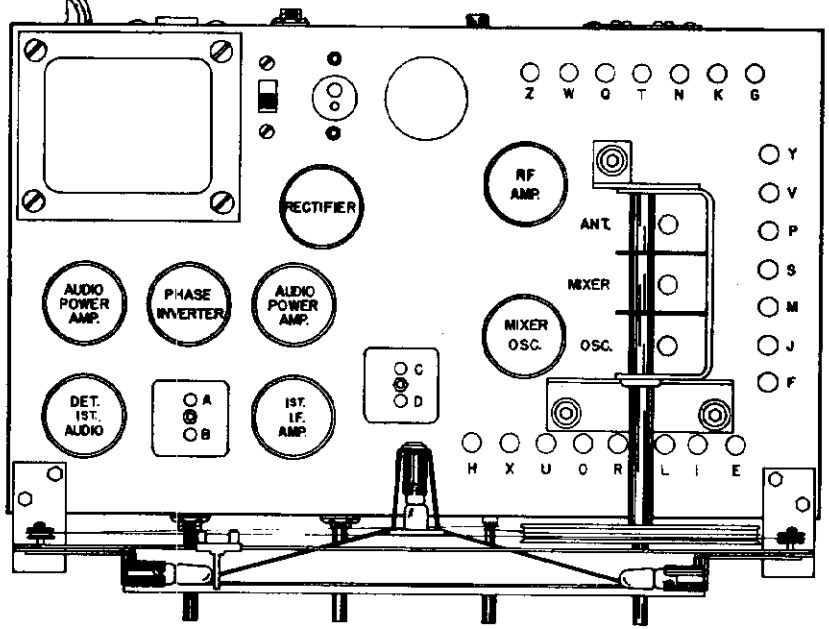

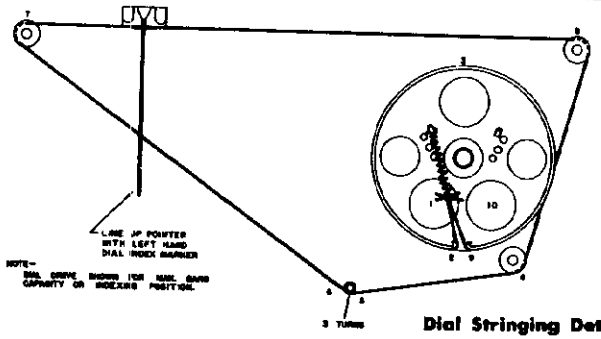

Dial Stringing Detail.

Restring the dial drive with 30 lb. test dial cord. Tie one end to the tension spring and follow the sequence outlined in Fig. 4. Stretch the tension spring and tie the end of the cord securely to the spring as shown. Set the tuning condenser at maximum capacity (closed), attach the pointer to the string and line it up with the left hand index mark on the dial scale.

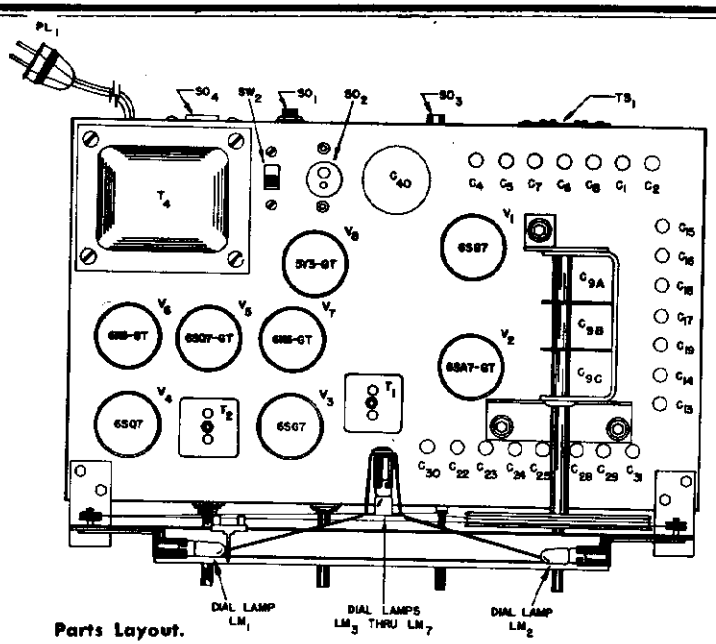

Parts Layout.

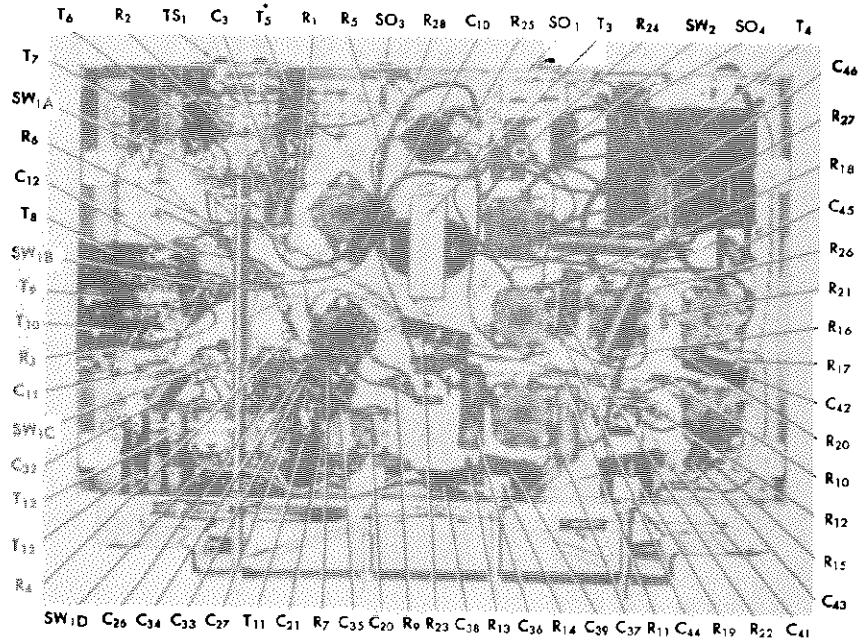

Parts Layout.

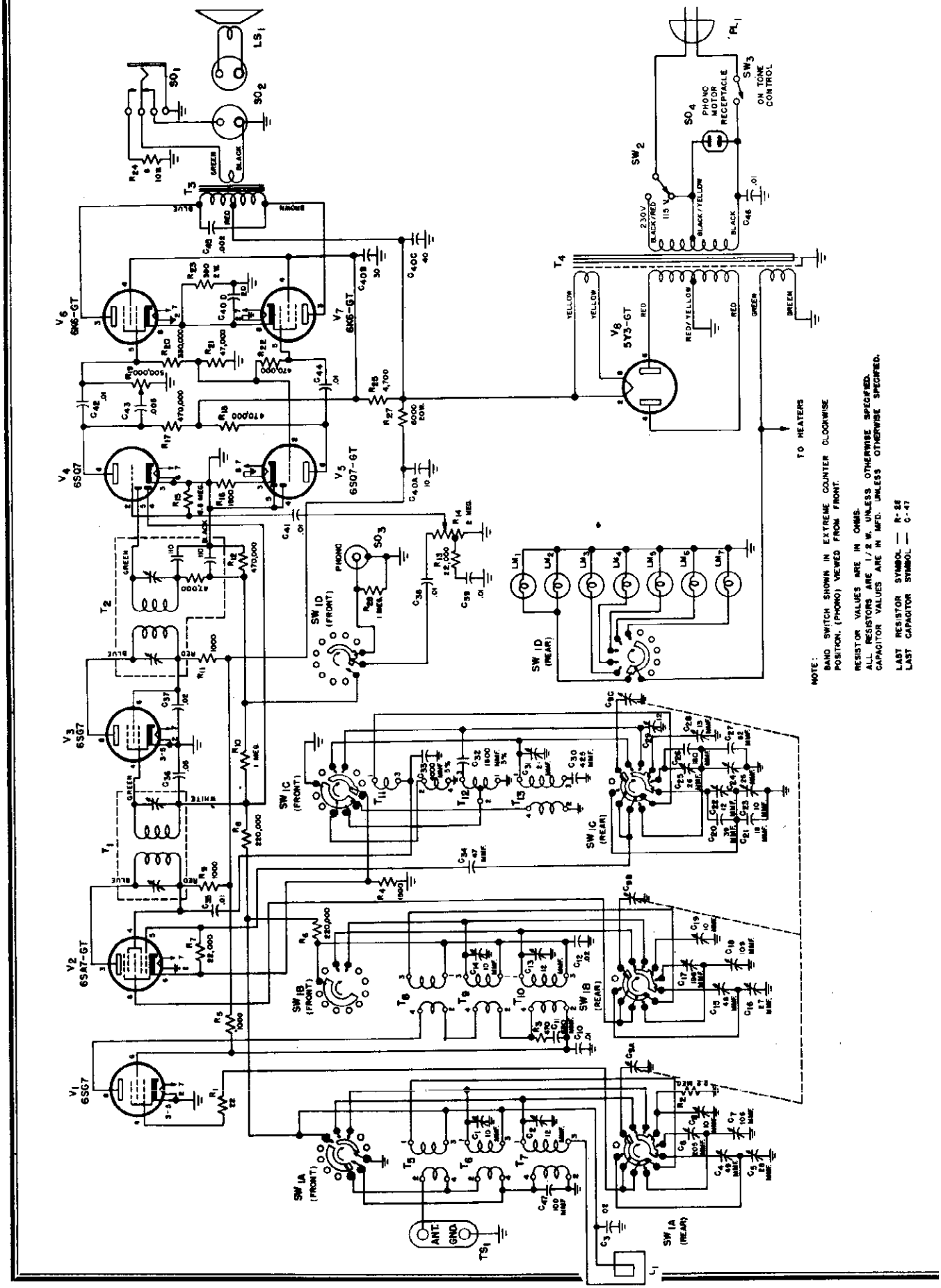
NOTE:
BAND SWITCH SHOWN IN EXTREME COUNTER CLOCKWISE POSITION. (PHONO) VIEWED FROM FRONT.
RESISTOR VALUES ARE IN OHMS.
ALL RESISTORS ARE 1/2 W. UNLESS OTHERWISE SPECIFIED.
CAPACITOR VALUES ARE IN MFD. UNLESS OTHERWISE SPECIFIED.
LAST RESISTOR SYMBOL — R-28
LAST CAPACITOR SYMBOL — C-47
TO HEATERS
PHONO MOTOR RECEPTACLE
ON TONE CONTROL
V1 6SG7
V2 6SA7-GT
V3 6SG7
V4 6SQ7
V5 6SQ7-GT
V6 6K6-GT
V7 6K6-GT
V8 5Y3-GT
SW 1A (FRONT)
SW 1A (REAR)
SW 1B (FRONT)
SW 1B (REAR)
SW 1C (FRONT)
SW 1C (REAR)
SW 1D (FRONT)
SW 1D (REAR)
ANT.
GND.

© John F. Rider

Illustration No.	Production Part No.	Service Part No.	Description
	ELECTRICAL PARTS		
	COILS AND TRANSFORMERS		
T-1	50C365		Transformer, 1st I.F.
T-2	50C364		Transformer, detector stage
T-3	55B098		Transformer, audio output
T-4	52C146		Transformer, power
T-5	51B959		Transformer, antenna stage, SW bands (B) (C) (D)
T-6,9	51B960		Transformer, antenna and mixer stages SW band A
T-7	51B1060		Transformer, antenna stage, BC band
T-8	51B961		Transformer, mixer stage, SW bands (B) (C) (D)
T-10	51B957		Transformer, mixer stage, BC band
T-11	51B964		Transformer, oscillator stage, SW bands (B) (C) (D)
T-12	51B963		Transformer, oscillator stage, SW band A
T-13	51B962		Transformer, oscillator stage, BC band
	CONDENSERS		
C-1,2,4,5,6,7,8, 13,14,15,16,17, 18,19	44B209		Trimmer assembly, 7 section, antenna stage and mixer stage
C-3,12,37	46AY203F	E203	.02 mfd. 600 V., tubular
C-9	48B183		Tuning condenser, 3 section
C-10,35,38,39, 41,42,44	46AZ103F	E103	.01 mfd. 600 V., tubular
C-11	CM20A681M	G681	680mmf. 500 V., mica
C-20	CM20A390K		39 mmf. 500 V., mica
C-21	CM20A180J		18 mmf. 500 V., mica
C-22,23,24,25, 28,29,30,31	44B208		Trimmer assembly, 8 section, oscillator stage
C-26	CM20A181J		180 mmf. 500 V., mica
C-27	CM20A820J		82 mmf. 500 V., mica
C-32	CM30C162G	G162	1600 mmf. 500 V., silver mica
C-33	CM35A402J	G402	4000 mmf. 500 V., mica
C-34	CM20A470M	G470	47 mmf. 500 V., mica
C-36	46AY503F	E503	.05 mfd. 600 V., tubular
C-40	45B112		40-30-10 mfd. 450 V., 20 mfd. 25 V., electrolytic
C-43	46AZ502J	E502	.005 mfd. 600 V., tubular
C-45	46AZ202J	E202	.002 mfd. 600 V., tubular
C-46	46AG103J		.01 mfd. 600 V., molded
C-47	CM20A101M	G101	100 mmf. 500 V., mica
	RESISTORS		
R-1	RC20AE220M	A220	22 ohms 1/2 watt, insulated
R-2	RC20AE225M	A225	2.2 megohms 1/2 watt, insulated
R-3	RC20AE471M	A471	470 ohms 1/2 watt, insulated
R-4,16	RC20AE152M	A152	1500 ohms 1/2 watt, insulated
R-5,9,11	RC20AE102M	A102	1000 ohms 1/2 watt, insulated
R-6,8	RC20AE224M	A224	220,000 ohms 1/2 watt, insulated
R-7,13	RC20AE223M	A223	22,000 ohms 1/2 watt, insulated
R-10,28	RC20AE105M	A105	1 megohm 1/2 watt, insulated
R-12,17,18,22	RC20AE474M	A474	470,000 ohms 1/2 watt, insulated
R-15	RC20AE685M	A685	6.8 megohms 1/2 watt, insulated
R-20	RC20AE334M	A334	330,000 ohms 1/2 watt, insulated
R-21	RC20AE473M	A473	47,000 ohms 1/2 watt, insulated
R-23	RC40AE391K	C391	390 ohms 2 watts, insulated
R-24	24BG060E		6 ohms 10 watts, WW
R-25	RC20AE472M	A472	4700 ohms 1/2 watt, insulated
R-27	24BH602E		6000 ohms 20 watts, WW
	TUBES AND RECTIFIER COMPLEMENT		
V-1,3	90X6SG7	5226	6SG7, antenna and 1st I.F.
V-2	90X6SA7GT	5223	6SA7GT, mixer
V-4	90X6SQ7	5231	6SQ7, detector and 1st audio amp.
V-5	90X6SQ7GT	5232	6SQ7GT, phase inverter
V-6,7	90X6K6GT	5196	6K6GT, power amp.
V-8	90X5Y3GT	5123	5Y3GT, rectifier
	MISCELLANEOUS ELECTRICAL PARTS		
R-14	25B621		Volume control
R-19	25B640		Tone control, includes power switch SW-3
SW-1	60C295		Band switch assembly
SW-2	60A228		Line voltage switch (SPDT)
LM-1,2,3,4,5,6,7	39A003	44	Lamp 6-8 V., 250 Ma., Mazda #44
PL-1	87A078		Line cord and plug
LS-1	85C074		Speaker, P.M.
	MECHANICAL PARTS		
	CHASSIS PARTS		
SO-1	36A036-1		Receptacle, headphone jack
SO-2	88A072		Receptacle, speaker
SO-3	36A029		Receptacle, phono
SO-4	10A015	1217633	Receptacle, phono motor
	6A256		Socket, octal (tube)
	86A054		Socket, dial light (General illumination)
	86A055		Socket, dial light (Individual bands)
TS-1	88A327		Terminal strip, antenna
	76A299	1217671	Lock, line cord
	38A001		Cable, dial drive
	75A012	1217624	Spring, dial drive
	67B727		Rail, pointer
	82A135		Pointer
	63C325-1		Plate, dial
	69B188		Shield, light
	83C336		Dial scale
	5A006		Trimount stud (dial scale mtg)
	15B068-3		Knob

SUBJECT: SERVICE INSTRUCTIONS - BUICK MODEL 980851

GENERAL

MOUNTING—All 1949 Buick Cars.

TUBES—Six, Plus Rectifier.

SPEAKER—8" Round, Permanent Magnet.

TUNING—Manual and 5 P. B. Mechanical.

ANTENNA TRIMMER COMPENSATION—For Antennas Between 0.000052 — 0.000068 Mfd.

TUNING RANGE—550-1600 KC.

PUSH BUTTON SETUP PROCEDURE

Pull Push Button to the left and out. Tune in desired station manually. Push button all the way in.

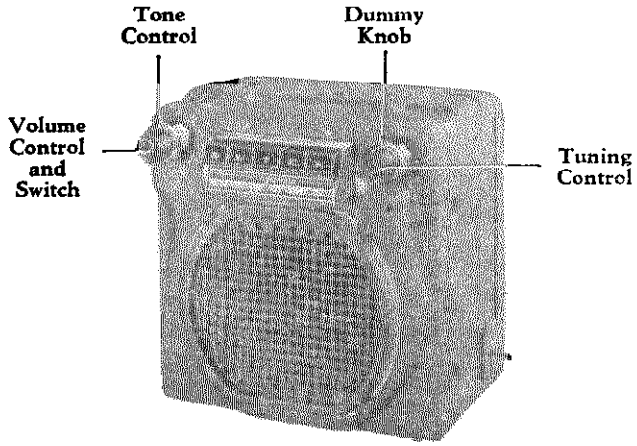

MODEL 980851

ALIGNMENT PROCEDURE

Output Meter Connections ..... Across Voice Coil
Generator Return ..... To Receiver Chassis
Dummy Antenna ..... In Series With Generator
Volume Control Position ..... Maximum Volume
Tone Control Position ..... Treble
Generator Output ..... Minimum for Readable Indication

Steps	Series Condenser or Dummy Antenna	Connect Signal Generator to	Signal Generator Frequency	Tune Receiver to	Adjust in Sequence For Max. Output
1	0.1 Mfd.	6SA7 Grid (Pin #8)	260 KC	High Frequency Stop	A, B, C, D
2	0.000056 Mfd.	Antenna Connector	1615 KC	High Frequency Stop	*E, F, G
3	0.000056 Mfd.	Antenna Connector	1000 KC	Signal Generator Signal	J, K
4	0.000056 Mfd.	Antenna Connector	1615 KC	High Frequency Stop	F, G
5	0.000056 Mfd.	Antenna Connector	1000 KC	Signal Generator Signal	L**

*Before making this adjustment check mechanical setting of oscillator core "H." The rear of the core should be 1 25/32" from the mounting end of the coil form. (This measurement is readily made by inserting a suitable plug in the mounting end of the coil form.) Core adjustments should be made with an insulated screw driver, and core studs should be cemented in place with glyptal or household cement after alignment.

**L is the pointer adjustment screw which is on the connecting link, between the pointer assembly and the parallel guide bar. It should be adjusted so that the dial pointer corresponds with the 1000 KC mark on the dial. (On first "0" of "100.")

With the radio installed and the car antenna plugged in adjust the antenna trimmer "G" for maximum volume with the radio tuned to a weak station near 1400 KC (see sticker on case).

©John F. Rider

MODELS 980851,980868

MODEL 980851

NOTE: This set is identical to the Buick Model 980868 covered in Bulletin 6D-928 except for the following Service Parts:

SERVICE PARTS LIST

Illus. No.	Production Part No.	Service Part No.	Description
60	7256847	7256847	Control - Volume Tone and Switch
81	7257606	7257606	Backplate - Pointer
82	7256874	7256874	Bushing - Manual Drive
89	7256871	7256871	Drive Shaft - Manual
90	7256861	7256861	Pointer Assembly
92	7256883	7256883	Escutcheon Assy.
98	1219150	1219150	Push Button and Slide Assy. "B"
99	1219151	1219151	Push Button and Slide Assy. "U"
101	1219152	1219152	Push Button and Slide Assy. "I"
102	1219153	1219153	Push Button and Slide Assy. "C"
103	1219154	1219154	Push Button and Slide Assy. "K"
	1334393	1334393	Knob - Control
	1320577	1320577	Knob - Dummy
	1320576	1320576	Knob - Tone Control

MODEL 980868

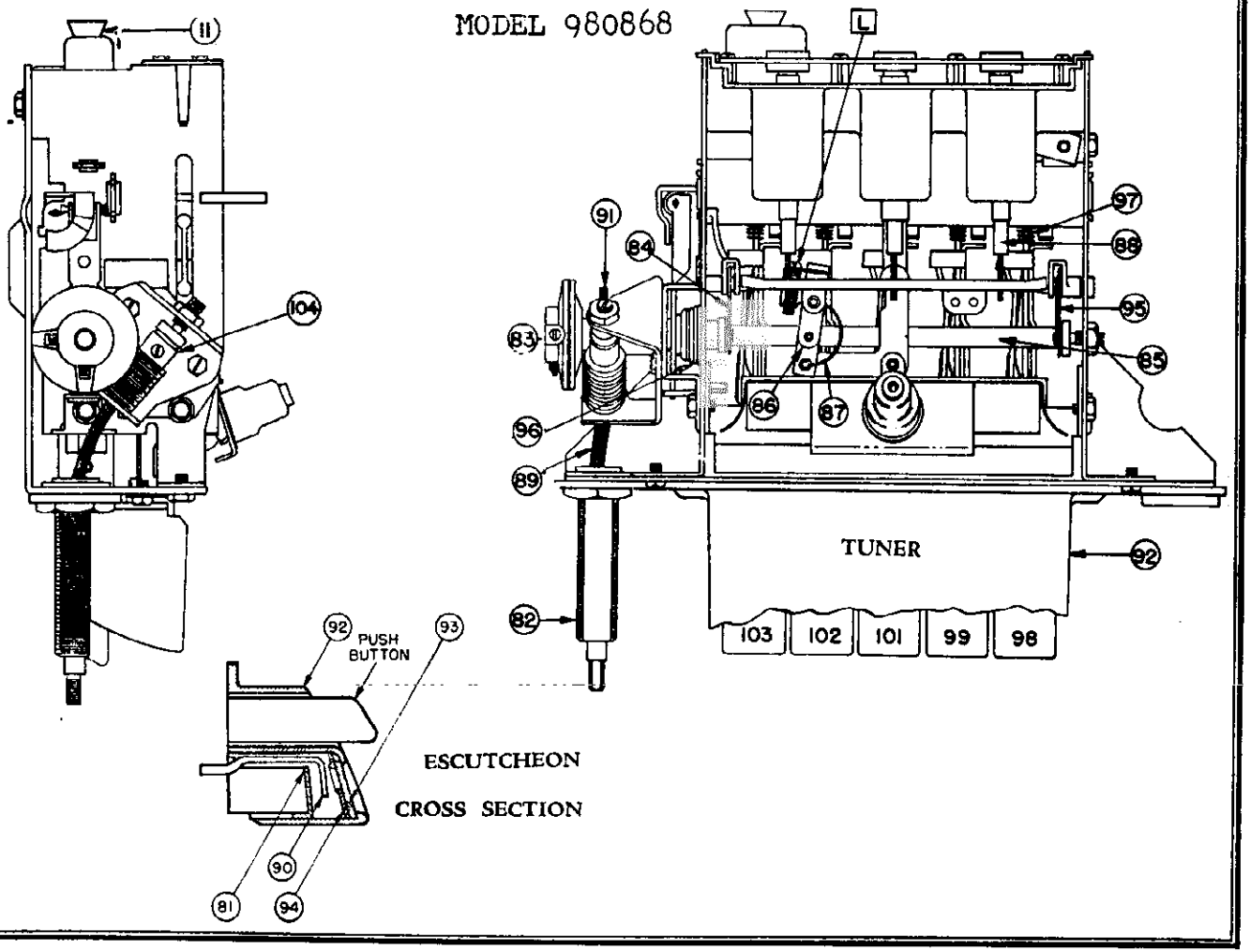

©John F. Rider

SUBJECT: SERVICE INSTRUCTIONS - BUICK MODEL 980868

GENERAL

MOUNTING—All 1950 Buick Cars.

TUBES—Six, Plus Rectifier.

SPEAKER—8" Round, Permanent Magnet.

TUNING—Manual and 5 P. B. Mechanical.

ANTENNA TRIMMER COMPENSATION—For Antennas Between 0.000072 - 0.000088 Mfd.

TUNING RANGE—550-1600 KC.

PUSH BUTTON SETUP PROCEDURE

Pull Push Button to the left and out. Tune in desired station manually. Push button all the way in.

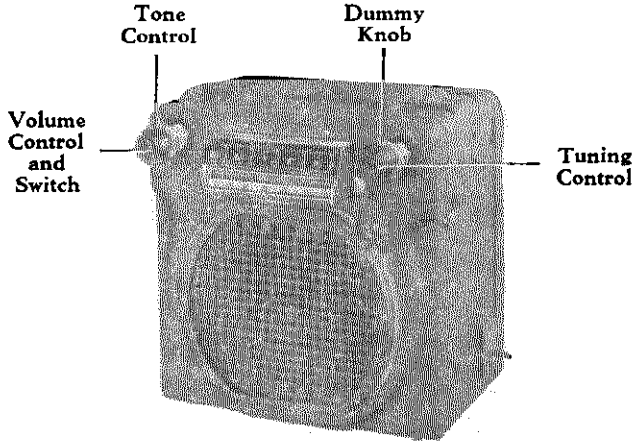

MODEL 980868

ALIGNMENT PROCEDURE

Output Meter Connections ..... Across Voice Coil
Generator Return ..... To Receiver Chassis
Dummy Antenna ..... In Series With Generator
Volume Control Position ..... Maximum Volume
Tone Control Position ..... Treble
Generator Output ..... Minimum for Readable Indication

Steps	Series Condenser or Dummy Antenna	Connect Signal Generator to	Signal Generator Frequency	Tune Receiver to	Adjust in Sequence For Max. Output
1	0.1 Mfd.	6SA7 Grid (Pin #8)	260 KC	High Frequency Stop	A, B, C, D
2	0.000082 Mfd.	Antenna Connector	1615 KC	High Frequency Stop	*E, F, G
3	0.000082 Mfd.	Antenna Connector	1000 KC	Signal Generator Signal	J, K
4	0.000082 Mfd.	Antenna Connector	1615 KC	High Frequency Stop	F, G
5	0.000082 Mfd.	Antenna Connector	1000 KC	Signal Generator Signal	L**

*Before making this adjustment check mechanical setting of oscillator core "H." The rear of the core should be 1 25/32" from the mounting end of the coil form. (This measurement is readily made by inserting a suitable plug in the mounting end of the coil form.) Core adjustments should be made with an insulated screw driver, and core studs should be cemented in place with glyptal or household cement after alignment.

**L is the pointer adjustment screw which is on the connecting link, between the pointer assembly and the parallel guide bar. It should be adjusted so that the dial pointer corresponds with the 1000 KC mark on the dial. (On first "0" of "100.")

With the radio installed and the car antenna plugged in adjust the antenna trimmer "G" for maximum volume with the radio tuned to a weak station near 1400 KC (see sticker on case).

©John F. Rider

©John F. Rider

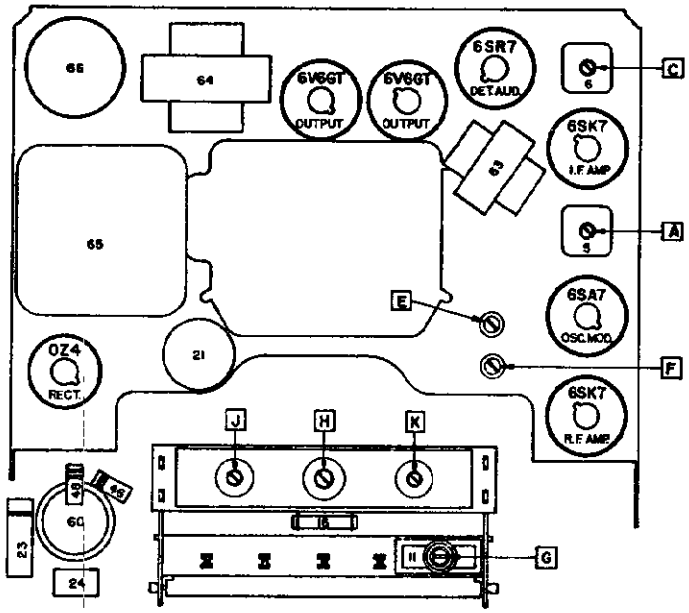

PARTS LAYOUT — TUBE VIEW

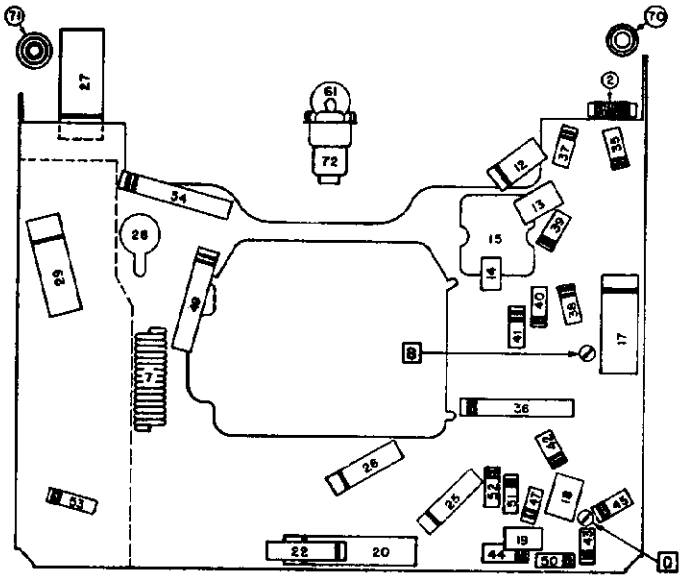

PARTS LAYOUT — CHASSIS VIEW

TUBE SOCKET VOLTAGE CHART

The tube socket voltages, as measured at the factory and under the conditions shown on the schematic diagram on Page 3 are shown.

The blank spaces are provided so the service man may fill in the actual voltage readings as taken with his own equipment. A normal operating radio should be used for these measurements.

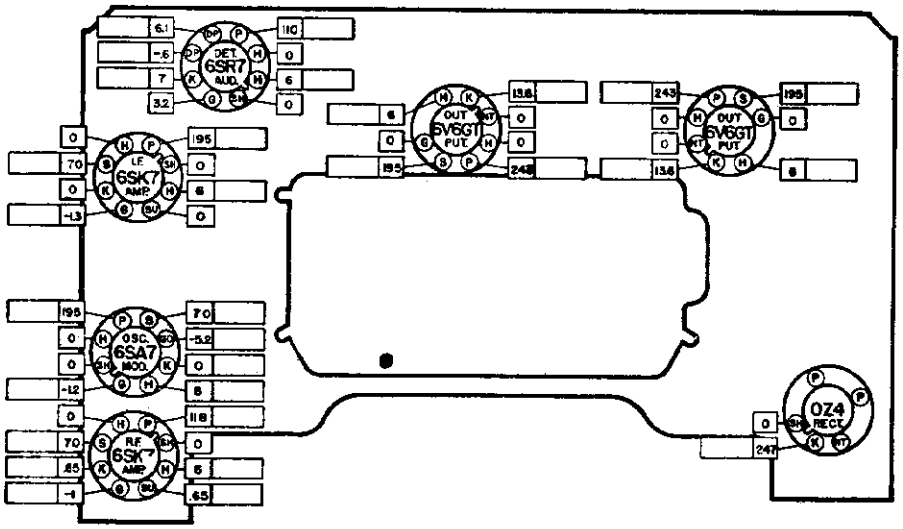

VOLT METER RESISTANCE _____ OHMS PER VOLT. READINGS TAKEN WITH _____ VOLTS AT SPARK PLATE. VOLTAGES MEASURED FROM SOCKET TERMINALS TO CHASSIS AND ARE POSITIVE UNLESS MARKED OTHERWISE.

MODEL 980868, Buick

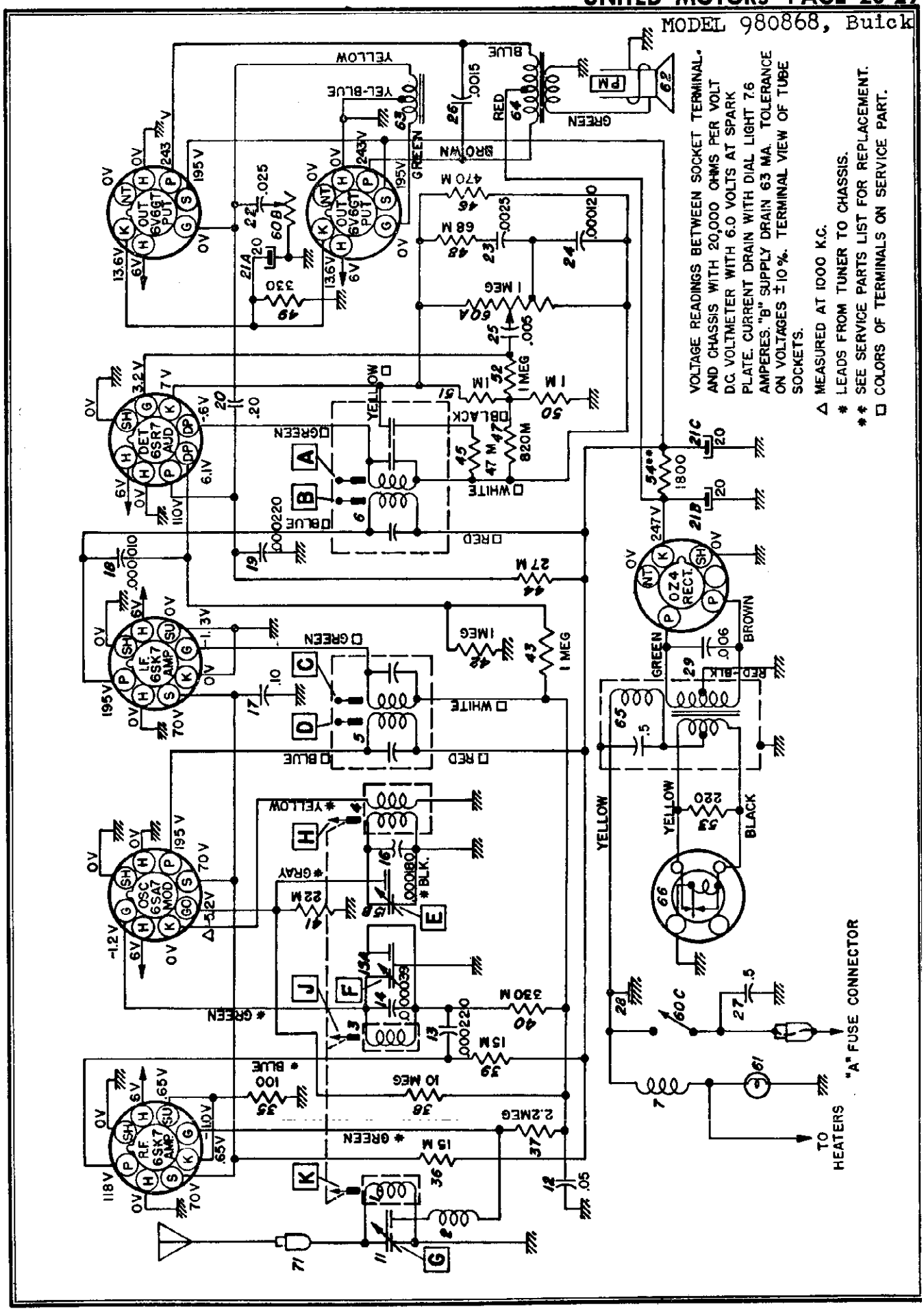

©John F. Rider

MODEL 980868, Buick

SERVICE PARTS LIST

Illus. No.	Production Part No.	Service Part No.	Description
			ELECTRICAL PARTS
			COILS
1	7258914	7258914	Antenna
2	7240251	7240251	Antenna Spark Choke
3	7258914	7258914	R.F.
4	7258911	7258911	Oscillator
5	1219508	1219508	1st I.F.
6	1219509	1219509	2nd I.F.
7	1217846	1217846	"A" Spark Choke
			CONDENSERS
11	7258733	7258733	Antenna Trimmer
12	7236842	E 503	.05 mfd. 200 Volt Tubular
13	7238792	G 221	.000220 mfd Mica
14	7258221	G 390	.000039 mfd Ceramic
15	7242454	7242454	Dual Trimmer
15A			R.F. Section
15B			Oscillator Section
16	7257424	G 181	.000180 mfd Ceramic
17	7238788	E 104	.1 mfd 400 Volt Tubular
18	1215189	G 100	.000010 mfd Mica
19	7238792	G 221	.000220 mfd Mica
20	7240579	E 204	.2 mfd 400 Volt Tubular
21	7240724	M 908	Electrolytic
21A			20 mfd 25 Volt
21B			20 mfd 400 Volt
21C			20 mfd 400 Volt
22	1211232	1211232	.025 mfd 400 Volt Tubular
23	7240578	7240578	.002500 mfd 400 Volt Tubular
24	7240577	G 121	.000120 mfd Mica
25	7232956	E 502	.005 mfd 600 Volt Tubular
26	7236134	7236134	.001500 mfd 800 Volt Tubular
27	7236621	E 504	.5 mfd 200 Volt Tubular
28	1217848	1217848	Chassis Plate Condenser
29	7240906	H 602	.006 mfd 1600 Volt Tubular
			RESISTORS
35	1213217	A 101	100 ohms ½ Watt Insulated
36	7233653	C 153	15,000 ohms 2 Watt Insulated
37	1211147	A 225	2.2 Megohms ½ Watt Insulated
38	1215564	A 106	10 Megohms ½ Watt Insulated
39	7237595	B 153	15,000 ohms 1 Watt Insulated
40	7240732	A 334	330,000 ohms ½ Watt Insulated
41	1211192	A 223	22,000 ohms ½ Watt Insulated
42	7238873	A 105	1 Megohm ½ Watt Insulated
43	7238873	A 105	1 Megohm ½ Watt Insulated
44	7236080	B 273	27,000 ohms 1 Watt Insulated
45	7240731	A 473	47,000 ohms ½ Watt Insulated
46	1214559	A 474	470,000 ohms ½ Watt Insulated
47	1214561	A 824	820,000 ohms ½ Watt Insulated
48	1213844	A 683	68,000 ohms ½ Watt Insulated
49	1214572	C 331	330 ohms 2 Watt Insulated
50	1213235	A 102	1,000 ohms ½ Watt Insulated
51	1213235	A 102	1,000 ohms ½ Watt Insulated
52	7238873	A 105	1 Megohm ½ Watt Insulated
53	7237994	~~B 221~~	220 ohms 1 Watt Insulated
54	1214573	(C 272 B 562)	1800 ohms 2 Watt { Replace with 2700 ohms 2 W and 5600 ohms 1 W in parallel
			TUBES
	1211924	5003	OZ4
	7237751	5229	6SK7
	7237752	5222	6SA7
	1218107	5233	6SR7
	1213793	5241	6V6

©John F. Rider

SERVICE PARTS LIST

Illus. No.	Production Part No.	Service Part No.	Description
			MISCELLANEOUS ELECTRICAL
60	7258683	7258683	Control-Volume-Tone and Switch
60A			Volume Control
60B			Tone Control
60C			Switch
61	125588	55	Lamp - Dial Light
62	7255895	7255895	Speaker - 8" Round PM
63	7258941	7258941	Transformer - Input
64	7258945	7258945	Transformer - Output
65	7258941	6060	Transformer - Power
66	7239124	8542	Vibrator - Non-Synchronous
			MECHANICAL PARTS
70	7242034	7242034	Connector - "A" Lead
71	7242035	7242035	Connector - Antenna
72	1219547	1219547	Socket - Dial Light
73	7236279	7236279	Socket - Octal Tube
74	7239125	7239125	Socket - Vibrator
			TUNER
81	7258679	7258679	Backplate - Pointer
82	7258675	7258675	Bushing - Manual Drive
83	7258072	7258072	Clutch Disc - Driven
84	7258203	7258203	Connecting Link - Core Bar
85	7258211	7258211	Core Guide Bar - Parallel
86	7256271	7256271	Pointer Connecting Link
87	7255992	7255992	Spring - Pointer Connecting Iink
88	7258468	7258468	Core - Powdered Iron
89	7258673	7258673	Drive Shaft - Manual
90	7258678	7258678	Pointer Assembly
	1219093	1219093	Pointer Tip Package
91	7256102	7256102	Gear and Bushing - Clutch
92	7258676	7258676	Escutcheon Assy.
93	7256885	7256885	Dial
94	7256886	7256886	Dial Backplate
95	7257415	7257415	Spring - Core Bar Connecting Link
96	7258756	7258756	Spring - Clutch
97	7255984	7255984	Spring - Slide Return
98	1219455	1219455	Push Button and Slide Assy. "B"
99	1219456	1219456	Push Button and Slide Assy. "U"
101	1219457	1219457	Push Button and Slide Assy. "I"
102	1219458	1219458	Push Button and Slide Assy. "C"
103	1219459	1219459	Push Button and Slide Assy. "K"
	1219124	1219124	Push Button Insert "B"
	1219125	1219125	Push Button Insert "U"
	1219126	1219126	Push Button Insert "I"
	1219127	1219127	Push Button Insert "C"
	1219128	1219128	Push Button Insert "K"
104	7256866	7256866	Worm Gear and Bracket Assy.
			INSTALLATION PARTS
	1321178	1321178	"A" Lead and Fuse Connector
	1336763	6015	Condenser - Generator
	1910147	6015	Condenser - Ignition Coil
	120151	120151	Fuse - 15 Amps
	1341566	1341566	Knob - Control
	1341535	1341535	Knob - Dummy
	1341536	1341536	Knob - Tone Control
	1853686	6008	Suppressor Adaptor
	1207820	6001	Suppressor - Distributor

©John F. Rider

MODEL 982375,
Above Ser. No. 700C001,
Oldsmobile

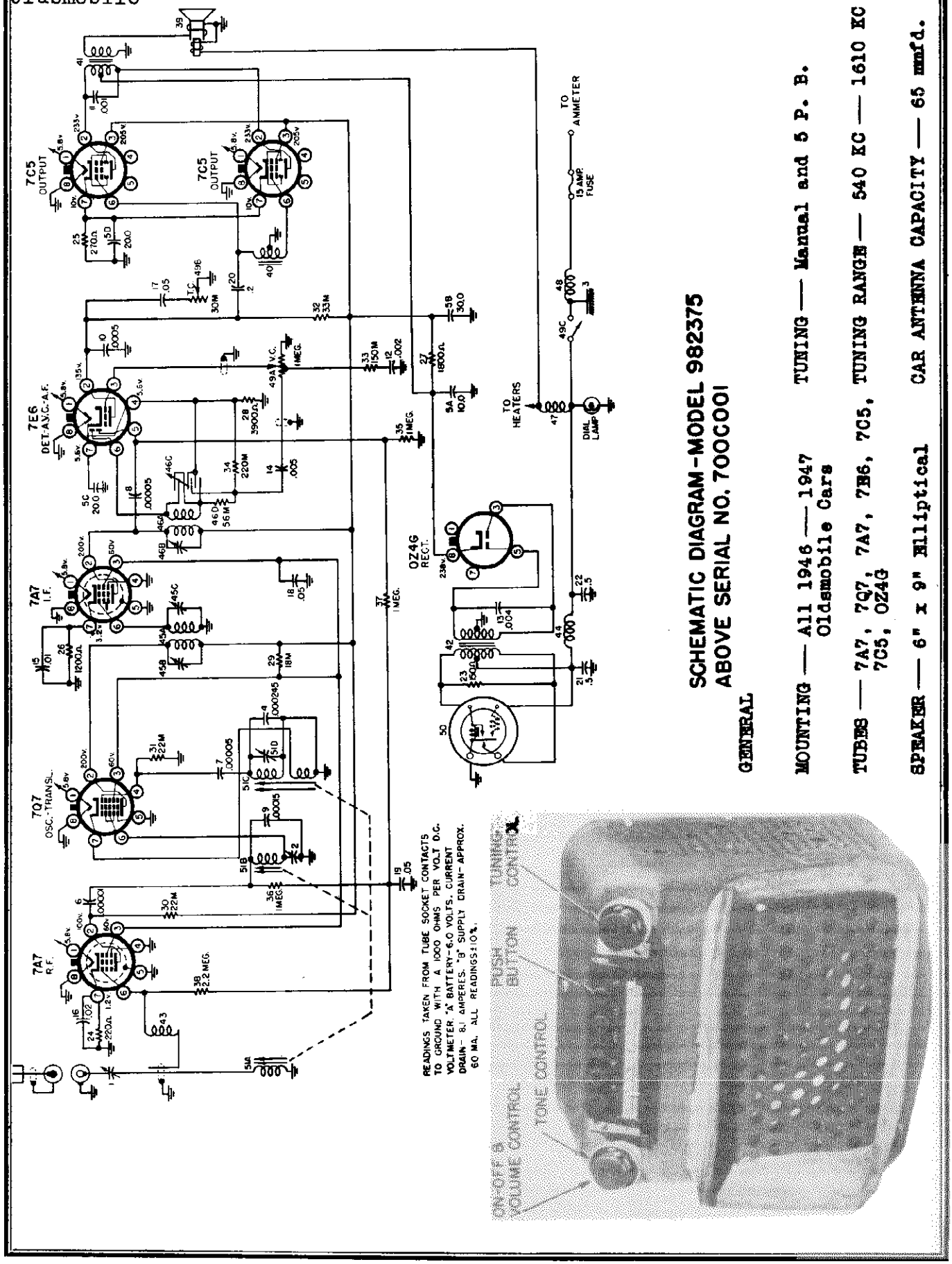

SCHEMATIC DIAGRAM-MODEL 982375
ABOVE SERIAL NO. 700C001

GENERAL

MOUNTING — All 1946 — 1947 Oldsmobile Cars

TUNING — Manual and 5 P. B.

TUBES — 7A7, 7Q7, 7A7, 7B6, 7C5, 7C5, 0Z4G

TUNING RANGE — 540 KC — 1610 KC

SPEAKER — 6" x 9" Elliptical

CAR ANTENNA CAPACITY — 65 mmfd.

© John F. Rider

©John F. Rider

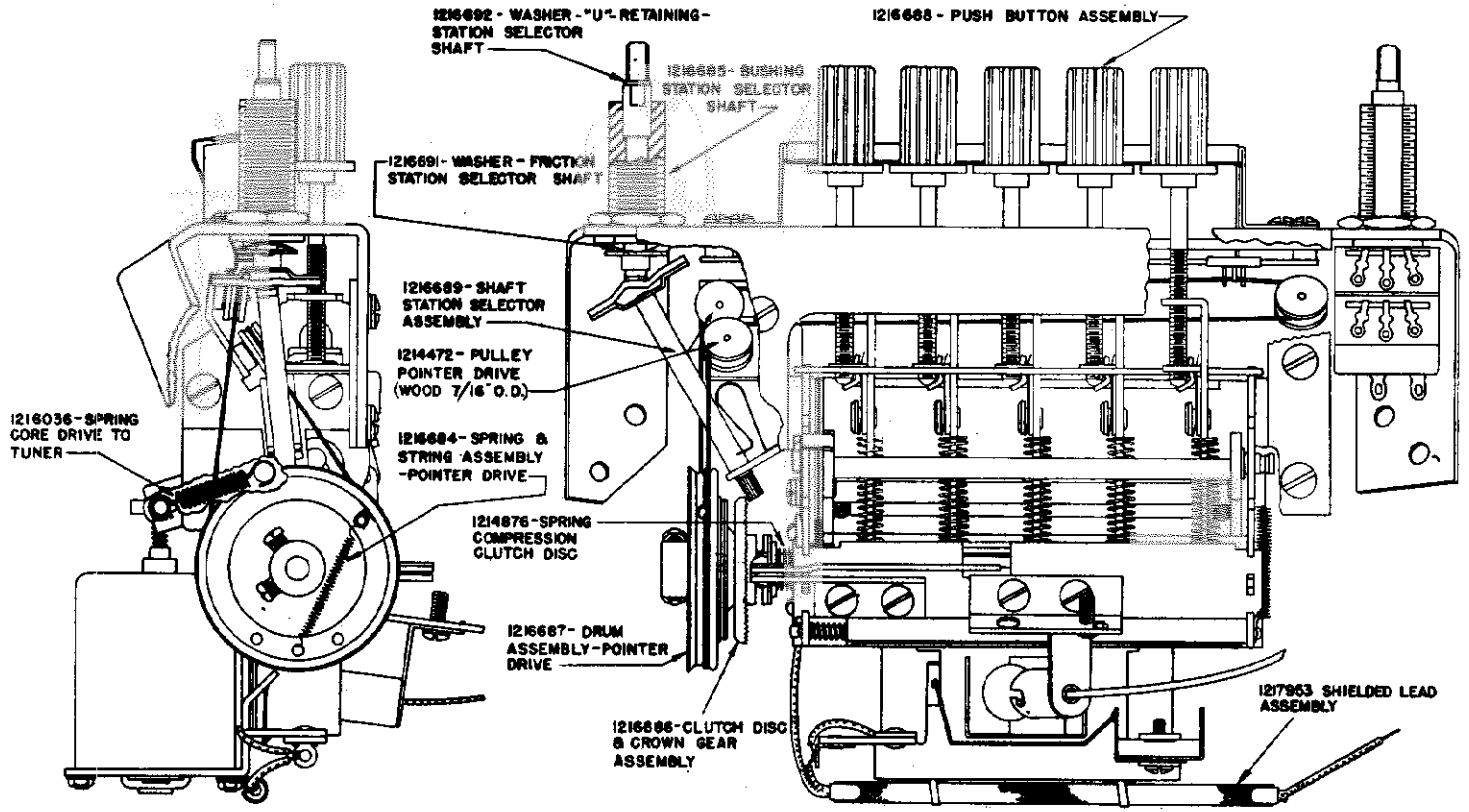

TUNER UNIT

ALIGNMENT PROCEDURE

Volume Control maximum.
Tone Control on high position.
Signal Generator Output minimum for satisfactory output indication.

Series Capacitor Or Dummy Antenna	Connect To	Signal Generator Frequency	Adjust Screws In Order
0.1 mfd.	Terminal X (See Parts Layout)	257.5 KC	A, B, C, D
.000065 mfd.	Antenna Terminal	1610 KC	E, F, G

Low frequency alignment not required.
Adjust Trimmer F to match car antenna (1400 KC) when radio is installed.

PUSH BUTTON SET-UP

Turn counter clockwise - tune in manually - depress loosened button - turn button clockwise to tighten.

MODEL 982375, Above Ser. No. 700C001, Oldsmobile

MODEL 982375,
Above Ser. No. 700C001,
Oldsmobile

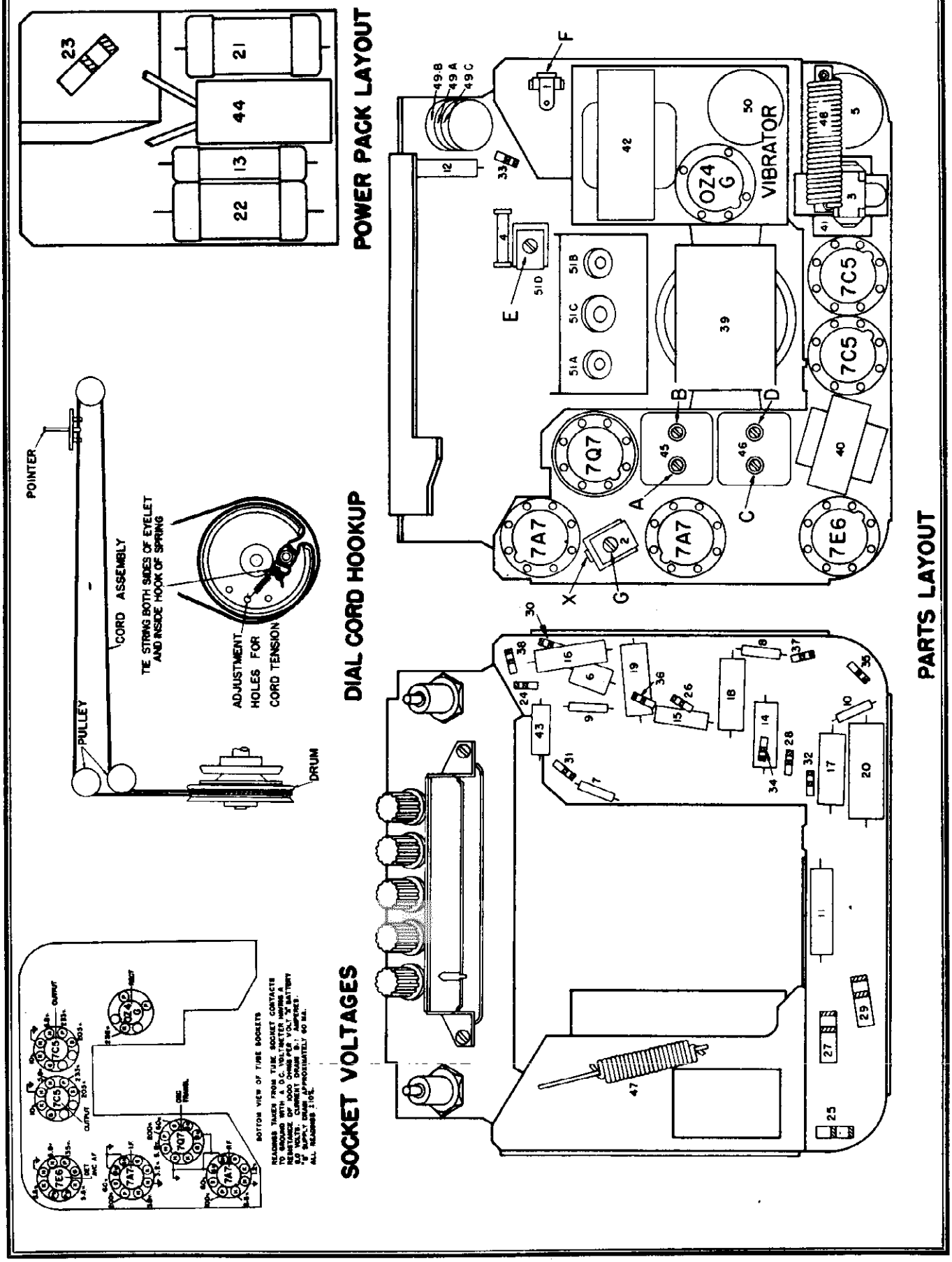

©John F. Rider

MODEL 982375, Above Ser. No. 700C001, Oldsmobile

Illus. No.	Service * Part No.	Production Part No.	Description
			CAPACITORS
1		1216671	Antenna Trimmer Capacitor
2		1216672	R. F. Trimmer Capacitor
3		1212278	Spark Capacitor
4		1217522	.000245 Mfd. Compensating
5		1214417	Electrolytic
5A			10 Mfd. 350 Volt
5B			30 Mfd. 300 Volt
5C			20 Mfd. 25 Volt
5D			20 Mfd. 25 Volt
6	G100	1215189	.00001 Mfd. Moulded
7	G470	1207625	.00005 Mfd. Moulded
8	G470	1207625	.00005 Mfd. Moulded
9	G151	7230893	.00015 Mfd. Moulded
10	G471	7238879	.0005 Mfd. Moulded
11	M102	7239186	.001 Mfd. 600 Volt
12	M202	7237954	.002 Mfd. 600 Volt
13	M402	1217875	.004 Mfd. 1500 Volt
14	M502	7230912	.005 Mfd. 600 Volt
15	M103	1208600	.01 Mfd. 600 Volt
16	M203	7233770	.02 Mfd. 600 Volt
17	M503	7230892	.05 Mfd. 600 Volt
18	M503	7230892	.05 Mfd. 600 Volt
19	M503	7230892	.05 Mfd. 600 Volt
20	M204	1217876	.2 Mfd. 200 Volt
21		7236621	.5 Mfd. 100 Volt
22		7236621	.5 Mfd. 100 Volt
			RESISTORS
23	B151	1211005a	150 Ohm 1 Watt
24	A221	7237835	220 Ohm 1/2 Watt
25	B271	1213846	270 Ohm 1 Watt
26	B122	1211040	1200 Ohm 1 Watt
27	C182	1214573	1800 Ohm 2 Watt
28	A392	1214546	3900 Ohm 1/2 Watt
29	C183	7239157	18,000 Ohm 2 Watt
30	A223	1214550	22,000 Ohm 1/2 Watt
31	A223	1214550	22,000 Ohm 1/2 Watt
32	A333	1213845	33,000 Ohm 1/2 Watt
33	A154	1213272	150,000 Ohm 1/2 Watt
34	A224	1214555	220,000 Ohm 1/2 Watt
35	A105	7238873	1 Megohm 1/2 Watt
36	A105	7238873	1 Megohm 1/2 Watt
37	A105	7238873	1 Megohm 1/2 Watt
38	A225	1211147	2.2 Megohm 1/2 Watt
			MISCELLANEOUS ELECTRICAL PARTS
39		1216674	Speaker - 6" x 9" Elliptical Electro-Dynamic
39		1217874	Speaker - 6" x 9" Elliptical Permanent-Dynamic
40		1214405	Transformer - Audio Input
41		1216675	Transformer - Audio Output
42		1214411	Transformer - Power
43		1214382	Antenna Choke
44		1213663	Hash Choke
			MOUNTING AND INSTALLATION PARTS
	414997		Washer - Flat 33/64" I. D.
	419522		Nut - 1/2 - 28 Hex
	419512		Washer - Rubber - 9/32" I. D. (Anti-Rattle) Dummy Control
	419511		Washer - Felt - 9/32" I. D. (Anti-Rattle) Tone Control
	419509		Knob - Tone & Dummy
	1562090		Washer - Felt 3/16" I. D. (Anti-Rattle) Tuning & Volume Control
	419499		Knob (Tuning & Volume Control) Includes Set Screw
	419497		Bracket - Receiver Mounting
	121797		Bolt - 1/4-20 x 3/8" Long - Hex Head
	419498		Bolt - 1/4-20 x 1/2" Long - Wing Head
	120386		Washer - Lock (Internal Tooth)
	103319		Washer - Lock 1/4" (Split)
	415640		"A" Lead Connector and Filter Capacitor Assembly
	120151		Fuse - "A" Lead 15 Amp. 25 Volt
	1545913		Tube - Fuse Insulator
6015	1866865		Capacitor - Generator - .5 Mfd.
6000	1207821		Distributor Suppressor - 15,000 Ohm
6008	1853686		Distributor Suppressor Adaptor
6013	415823		Static Collector (Front Wheel)

Illus. No.	Service * Part No.	Production Part No.	Description
			MISCELLANEOUS ELECTRIC PARTS - Continued
45		1217955	1st I. F. Transformer Assy.
45A			I. F. Coil Assembly
45B			Primary Trimmer
45C			Secondary Trimmer
46		1217956	2nd I. F. Transformer Assy.
46A			I. F. Coil Assembly
46B			Primary Trimmer
46C			Secondary Trimmer
46D			Resistor 68,000 Ohm
47		1216668	Filament Choke
48		1216669	Spark Choke Assembly
49		1216673	Control - Volume - Tone - On-Off Switch
49A			Volume Control 1 Megohm
49B			Tone Control 30,000 Ohm
49C			On-Off Switch
50		8638	Vibrator
			TUNER UNIT & PARTS
51		1216665	Unit - Perm Tuning Coils
51A			Antenna Coil
51B			R. F. Coil
51C			Osc. Coil
51D			Osc. Trimmer
		1216685	Bushing - Station Selector Shaft
		1217953	Lead Assembly - Shielded
		1214472	Pulley - Pointer Drive, Wood 7/16" O. D.
		1216689	Shaft - Station Selector Assy. (Includes Coupling & Pinion Gear)
		1216036	Spring - Core Drive to Tuner
		1216684	Spring & String Assembly
		1216691	Washer Friction - Station Selector Shaft
		1216692	Washer - "U" Retaining - Station Selector Shaft
		1216690	Tuner Unit Assembly
		1216688	Button Assembly - Push
		1216686	Clutch Disc & Crown Gear Assy.
		1216687	Drum - Pointer Drive Assy.
		1214876	Spring - Compression - Clutch Disc
			TUBES
5290		1213583	7A7 - R. F. Amplifier
5301		1213853	7Q7 - Oscillator - Translator
5290		1213583	7A7 - I. F. Amplifier
5298		1213582	7B6 - Detector AVC - 1st Audio
5295		1213586	7C5 - Audio Output
5295		1213586	7C5 - Audio Output
5004		7231596	0Z4G - Rectifier
			MISCELLANEOUS CHASSIS PARTS
		1213684	Socket - Vibrator
		7238455	Socket - Tube, 6 Prong Lock-in
		1214420	Socket - Tube, 4 Prong Octal
		1216585	Socket Assembly - Pilot Light
		125588	Lamp #55 Mazda - Pilot Lamp
		1216676	Clip - Dial Retaining - L. H.
		1216677	Clip - Dial Retaining - R. H.
		1216678	Cover - Case Back
		1217954	Cover Assy. - Power Supply
		1216679	Dial Glass - Calibrated
		1216680	Escutcheon - Including Dial
		1216681	Gasket - Rubber - Speaker Seal
		1216682	Pointer - Dial
		1216684	String Assembly - Pointer Drive

* Order parts, using service part number where shown, otherwise use production part number for service.

©John F. Rider

MODEL 982420, Oldsmobile,
Starting with Serial No.
B59-40001

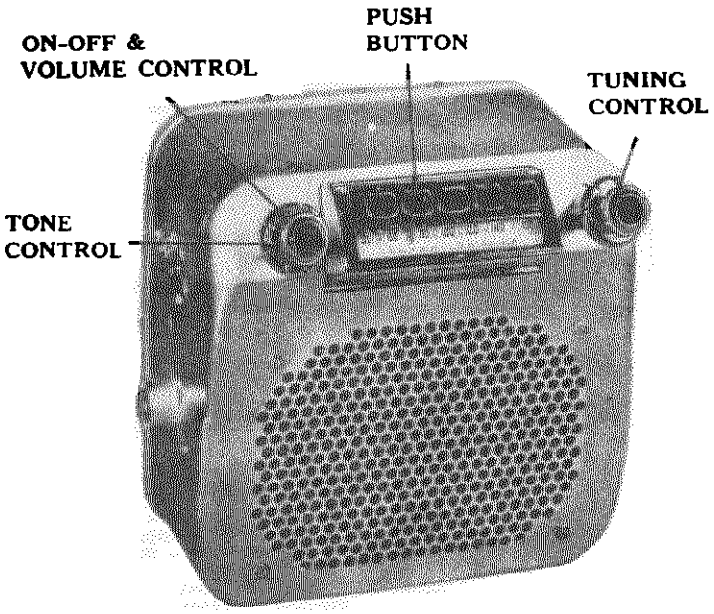

MODEL 982420
(Starting with serial number B59-40001).

PUSHBUTTON SET-UP

Pull pushbutton to the left and then out. Tune in desired station manually. Push button all the way in.

GENERAL

MOUNTING ...All 1949 Oldsmobile Cars
TUBES.....Six, Plus Rectifier
SPEAKER.....
..6" x 9" Elliptical Permanent Magnetic
TUNING . Manual and 5 P.B. Mechanical
ANTENNA TRIMMER COMPENSATION—For Antennas between
0.000055—0.000090 Mfd.
TUNING RANGE.....535 - 1610 KC.

ALIGNMENT PROCEDURE

Output Meter Connection.....Across Voice Coil
Generator Return.....To Receiver Chassis
Dummy Antenna.....In Series with Generator
Volume Control Position.....Maximum Volume
Tone Control Position.....Treble
Generator Output.....Minimum for Readable Indication

Steps	Series Condenser or Dummy Antenna	Connect to	Signal Generator Frequency	Tune Receiver To	Adjust In Sequence For Max. Output
1	0.1 Mfd.	7Q7 Grid (Pin #6)	257.5 KC.	High Frequency Stop	A, B, C, D
2	0.000070 Mfd.	Antenna Connector	1610 KC.	High Frequency Stop	E, F, G, H

Low frequency alignment not required.

With the radio installed, and the car antenna plugged in, adjust the antenna trimmer "H" for maximum volume with the radio tuned in to a weak station near 1400 KC.

©John F. Rider

MODEL 982420, Oldsmobile,
Starting with Serial No.
B59-40001

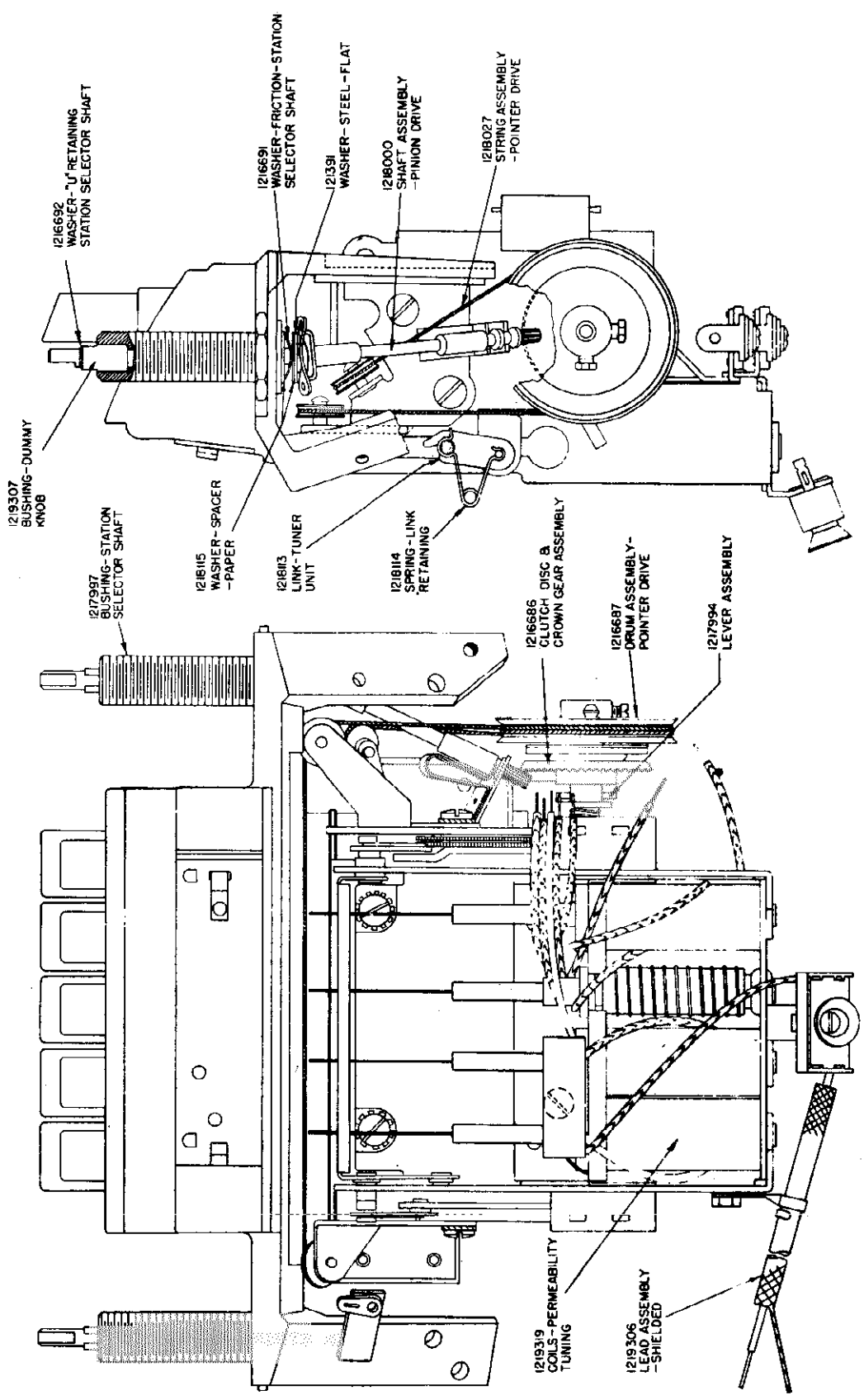

TUNER

©John F. Rider

MODEL 982420, Oldsmobile,
Starting with Serial No.
B59-40001

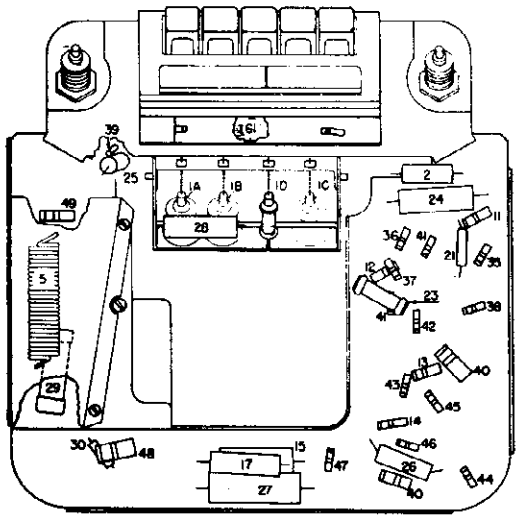

PARTS LAYOUT—CHASSIS VIEW

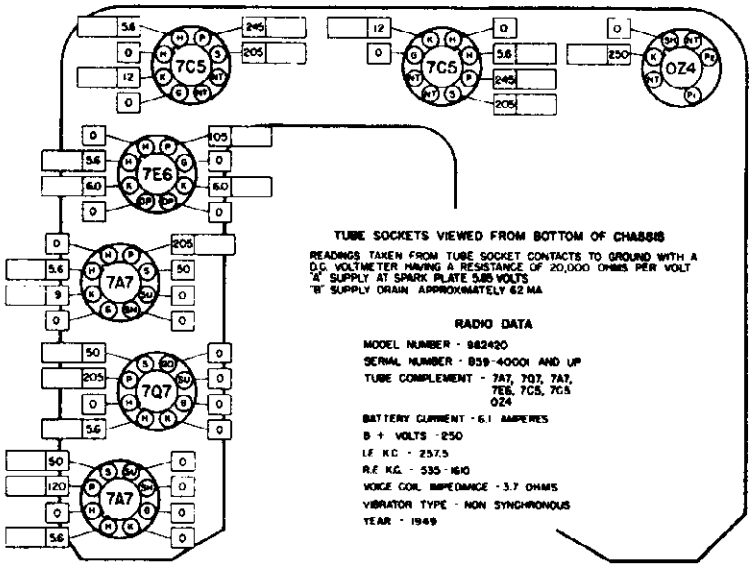

TUBE SOCKET VOLTAGE CHART

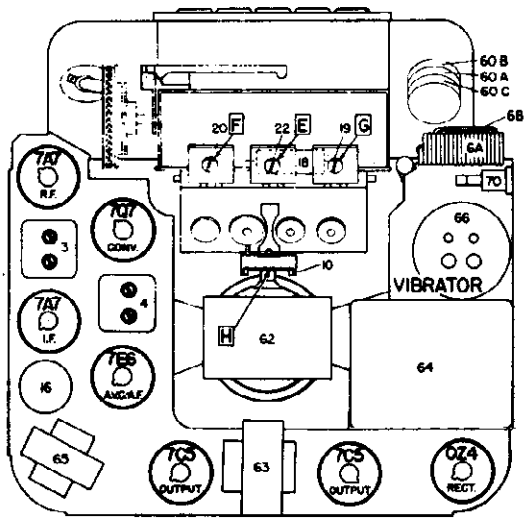

PARTS LAYOUT—TUBE VIEW

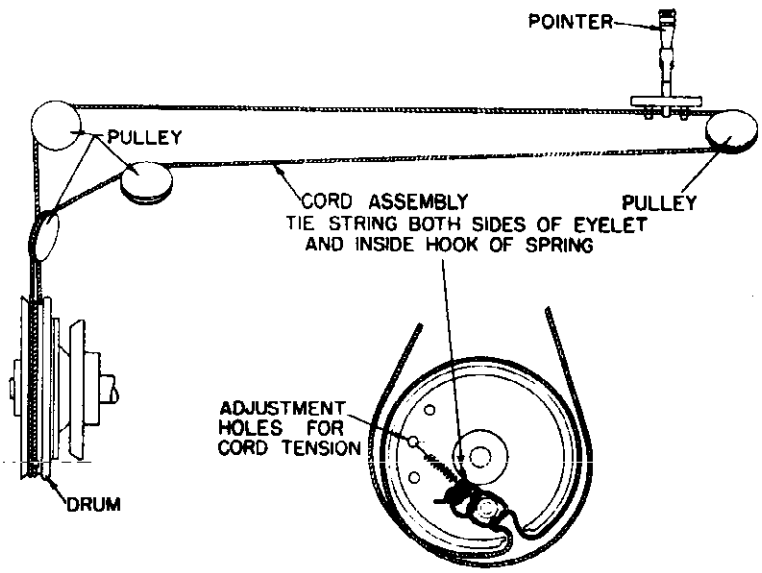

POINTER STRING HOOKUP

©John F. Rider

MODEL 982420, Oldsmobile,
Starting with Serial No.
B59-40001

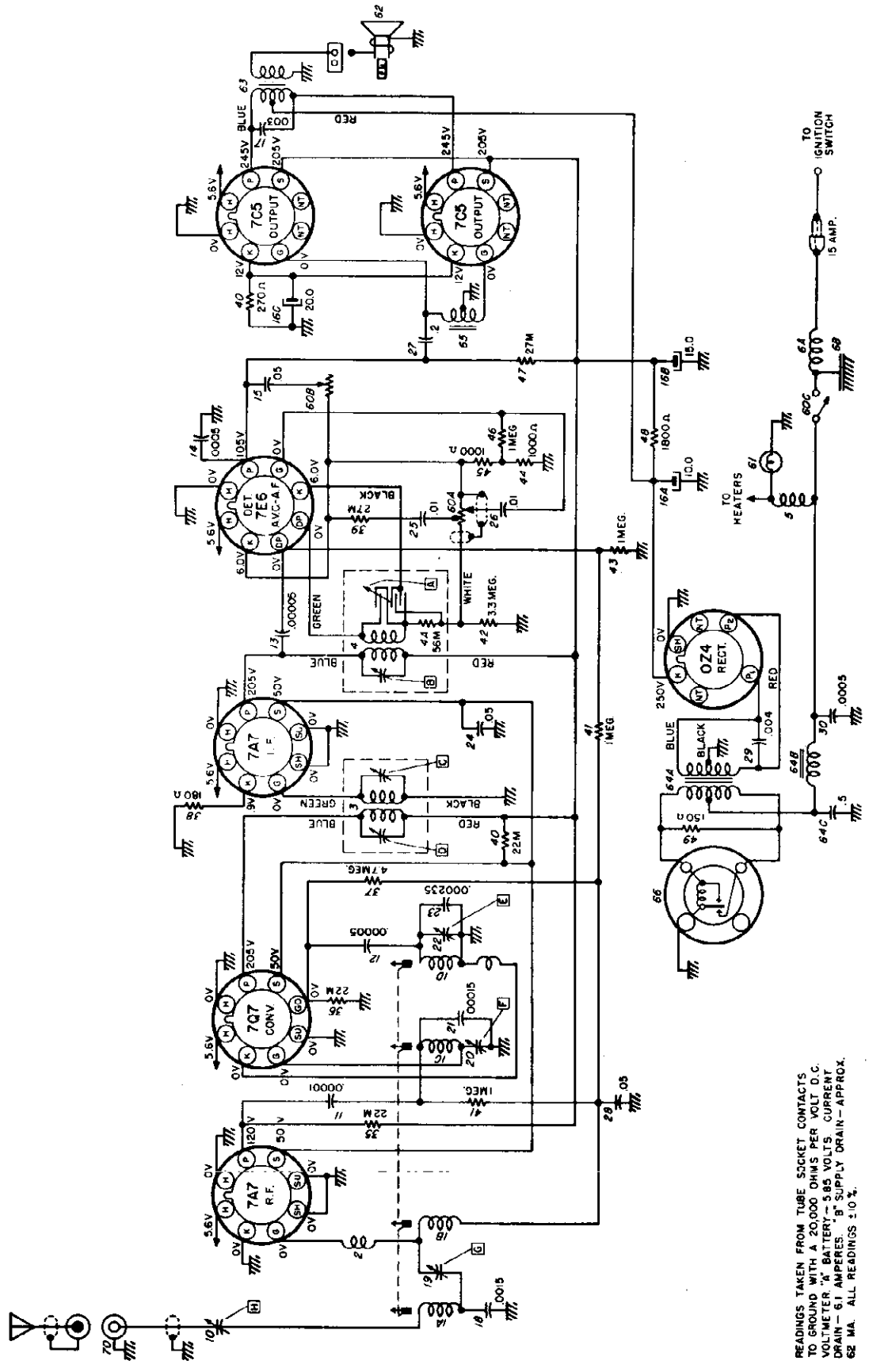

©John F. Rider

MODEL 982420, Oldsmobile,
Starting with Serial No.
B59-40001

SERVICE PARTS LIST

Illus. No.	Service Part No.	Production Part No.	Description
			ELECTRICAL PARTS
			COILS
1		1219319	Coils—Permeability Tuning
1A			Antenna Coil
1B			Preselector Coil
1C			R. F. Coil
1D			Oscillator Coil
2		1214382	Antenna Choke
3		1218033	1st I. F. Assembly
4		1218035	2nd I.F. Assembly
4A			56,000 Ohm 1/2 Watt
5		1217996	Filament Choke
6		1219310	Spark Filter & "A" Connector Assembly
6A			Spark Choke
6B			Spark Plate
			CONDENSERS
10		1219312	Antenna Trimmer
11	G-100	7234242	.00001 Mfd. Molded
12	G-470	1207625	.00005 Mfd. Molded
13	G-470	1207625	.00005 Mfd. Molded
14	G-471	7238879	.0005 Mfd. Molded
15	E-503	7236350	.05 Mfd. 200 V. Tubular
16		1218009	Electrolytic Condenser
16A			10 Mfd. 350 V.
16B			15 Mfd. 350 V.
16C			20 Mfd. 25 V.
17		1219301	.003 Mfd. 800 V. Tubular
18		1219302	.0015 Mfd. 200 V. Tubular
19		1218047	Grid Trimmer
20		1218046	R. F. Trimmer
21		7230893	.00015 Mfd. Molded
22		1218043	Oscillator Trimmer
23		1219305	.000235 Mfd. Temperature Compensator
24		7236350	.05 Mfd. 200 V. Tubular
25	E-103	7237957	.01 Mfd. 400 V. Tubular
26	E-103	7237957	.01 Mfd. 400 V. Tubular
27		1217876	.2 Mfd. 200 V. Tubular
28		7236350	.05 Mfd. 200 V. Tubular
29	H-402	1219303	.004 Mfd. 1500 V. Tubular
30	G-471	7238879	.0005 Mfd. Molded
			RESISTORS
35	A-223	1214550	22,000 Ohm ½ W. Insulated
36	A-223	1214550	22,000 Ohm ½ W. Insulated
37	A-475	1214566	4.7 Megohm ½ W. Insulated
38	A-181	1215559	180 Ohm ½ W. Insulated
39	A-273	1214551	27,000 Ohm ½ W. Insulated
40	C-223	7240590	22,000 Ohm 2 W. Insulated
41	A-105	1213282	1 Megohm ½ W. Insulated
42	A-335	1214564	3.3 Megohm ½ W. Insulated
43	A-105	1213282	1 Megohm ½ W. Insulated
44	A-102	1213235	1,000 Ohm ½ W. Insulated
45	A-102	1213235	1,000 Ohm ½ W. Insulated
46	A-105	1213282	1 Megohm ½ W. Insulated
47	A-273	1214551	27,000 Ohm ½ W. Insulated
48	C-182	1214573	1,800 Ohm 2 W. Insulated
49	B-151	1211005	150 Ohm 1 W. Insulated
			TUBES
	5290	1213562	7A7—R. F. Amplifier
	5301	1213981	7Q7—Oscillator—Translator
	5290	1213562	7A7—I. F. Amplifier
	5298	1213980	7E6—Detector AVC—1st Audio
	5295	1213568	7C5—Audio Output
	5295	1213568	7C5—Audio Output
	5003	1211924	OZ4—Rectifier

©John F. Rider

MODEL 982420, Oldsmobile, Starting with Serial No. B59-40001

MISCELLANEOUS ELECTRICAL PARTS

60	1219313	Control—Volume, Tone and Switch
60A		Volume Control
60B		Tone Control
60C		On-Off Switch
61	125588	Lamp, Dial (Mazda #51)
62	1219291	Speaker—6" x 9" Elliptical Permanent Magnetic
63	1219314	Transformer—Output
64	1219316	Power Transformer and Filter Assembly
64A		Transformer—Power
64B		Hash Choke
64C		Capacitor—.5 Mfd. 100 V.
65	1219315	Transformer—Audio Input
66	8542	Vibrator

MECHANICAL PARTS

CHASSIS

Illus. No.	Service Part No.	Production Part No.	Description
70		1218651	Socket—Antenna Connector
		1214420	Socket—Rectifier Tube
		1213684	Socket—Vibrator
		1218013	Socket—Loctal Tube
		1218007	Cover Assembly—Case Back
		1217991	Shield—Tube
		1219311	Antenna Connector Assembly

INSTALLATION PARTS

41497	Washer—Flat 33/64 I.D.
7255287	Nut—½—28 Hex.
419512	Washer—Rubber—9/32 I.D. (Anti-Rattle) Dummy Control
7257400	Washer—Wave—3/16 I.D. (Anti-Rattle) Tuning and Volume Control
554515	Knob—Tone and Dummy
7256702	Knob—(Tuning and Volume Control) Includes Set Screw
7256654	Bracket—Receiver Mounting
554519	Bracket—Side Mounting
554690	Bolt—¼—20 x ⅜ Long Truss Head
120706	Bolt—¼—20 x ½ Long—Hex. Head
121797	Bolt—¼—20 x ⅜ Long—Hex. Head
120392	Washer—Flat—17/64 I.D. ⅝ O.D.
120423	Washer—Lock—¼ (Internal Tooth type "B")
103319	Washer—Lock—¼ (Split)
554691	"A" Lead Connector and Filter Condenser Assembly
120151	Fuse—"A" Lead 15 Amp. 25 Volt
555437 or	Condenser—Ignition Coil
1912757	Condenser—Ignition Coil
1911095	Condenser—Generator—.5 Mfd.
7257239	Distributor Suppressor—T5,000 Ohm
414237	Grommet—Distributor Suppressor
415823	Static Collector (Front Wheel)
164349	Screw—#8-32 x¼ Cross Recessed Self-Tapping
554339	Panel—Radio Control
7256684	Gasket—Speaker Baffle
7256717	Spacer—Instrument Panel to Gasket
555348	Clip—Hood Grounding
1912900	Condenser—Voltage Regulator
557531	Condenser—Voltage Regulator

TUNER PARTS

1217997	Bushing—Station Selector Shaft
1219309	Tuner Unit Assembly—Mechanical Portion only—Includes Push Buttons, Clutch Disc And Crown Gear Assembly
1216686	Clutch Disc and Crown Gear Assembly
1219317	Dial Glass—Calibrated
1219318	Escutcheon without Dial
1216687	Drum Assembly—Pointer Drive
1219306	Lead Assembly—Shielded
1218000	Shaft Assembly—Drive Pinion
1219308	Pointer and Slide Assembly
1216692	Washer—"U" Retaining—Station Selector Shaft.
1219307	Bushing—Dummy Knob
1216691	Washer—Friction—Station Selector Shaft
1217999	Lever Actuating Plate Assembly
1217994	Lever Assembly
1217992	Screw—#10-32 Special
1218027	String Assembly—Pointer Drive
1218115	Washer—Spacing—Paper
121391	Washer—Steel—Flat
1218113	Link—Tuner Unit
1218114	Spring—Link Retaining

MODEL 984570,
Pontiac

SUBJECT: SERVICE INSTRUCTIONS - PONTIAC CHIEFTAIN MODEL 984570

GENERAL

MOUNTING—All 1950 Pontiac Cars.

TUBES—Seven, Plus Rectifier.

SPEAKER—6" x 9" Elliptical, Permanent Magnet.

TUNING—Manual and 5 Push Button Mechanical.

ANTENNA TRIMMER COMPENSATION — For Antennas Between 0.000060 - 0.000090 Mfd.

TUNING RANGE — 550-1600 KC.

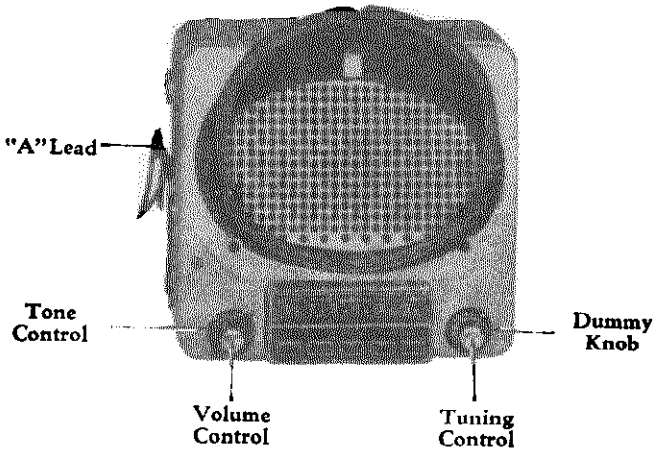

MODEL 984570

PUSHBUTTON SET-UP

Pull button to the right and out. Tune in desired station manually. Push button in as far as it will go.

ALIGNMENT PROCEDURE

Output Meter Connections ..... Across Voice Coil

Generator Ground ..... Receiver Chassis

Dummy Antenna ..... In Series With Generator

Volume Control Position ..... Maximum Volume

Tone Control Position ..... Treble

Generator Output ..... Minimum for Readable Indication

Steps	Series Condenser or Dummy Antenna	Connect to	Signal Generator Frequency	Tune Receiver To	Adjust in Sequence for Max. Output
1	0.1 Mfd.	6SA7 Grid (Pin #8)	260 KC	High Freq. Stop	A, B, C, D
2	0.000068 Mfd.	Antenna Connector	1615 KC	High Freq. Stop	*E, F, G
3	0.000068 Mfd.	Antenna Connector	1000 KC	Signal Gen. Signal	J, K
4	0.000068 Mfd.	Antenna Connector	1615 KC	High Freq. Stop	F, G
5	0.000068 Mfd.	Antenna Connector	1000 KC	Signal Gen. Signal	L**

*Before making this adjustment check the mechanical setting of the oscillator core "H." The slotted end of the core should be 1 25/32" from the mounting end of the coil form. (This measurement is readily made by inserting a suitable plug in the mounting end of the coil form). If adjustment is necessary be sure to first dissolve the glyptal seal on the core studs. Core adjustments are made from the mounting end of the coil form with an insulated screwdriver, and core studs should be resealed with glyptal or household cement after alignment.

**"L" is the pointer adjustment screw on the pointer connecting link (see tuner drawing). Adjust so pointer reads 1000 KC.

With the radio installed and the car antenna plugged in adjust antenna trimmer "G" (see sticker on case) for maximum volume with the radio tuned to a weak station near 1400 KC.

©John F. Rider

©John F. Rider

TUBE SOCKET VOLTAGE CHART

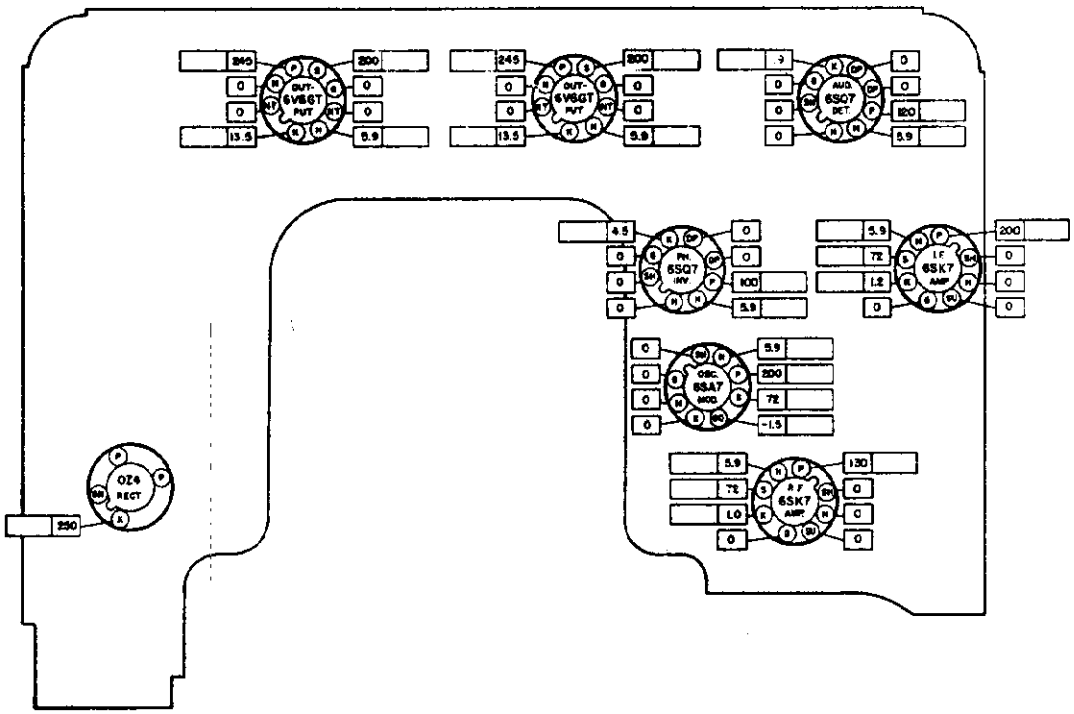

The tube socket voltages, as measured at the factory and under the conditions shown on the Schematic Diagram on Page 3, are shown above. The blank spaces are provided so the serviceman may fill in actual voltage readings as taken with his own equipment. A normal operating radio should be used for these measurements.

Voltmeter resistance is ..... ohms per volt. Voltages taken with ..... volts at the spark plate. Tolerance on voltages is ± 10%. All readings are taken from socket terminals to chassis.

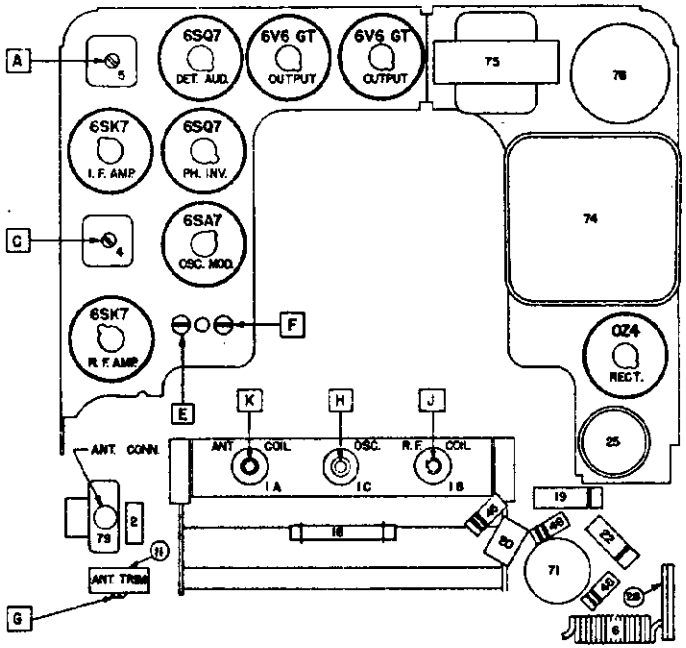

PARTS LAYOUT — TUBE VIEW

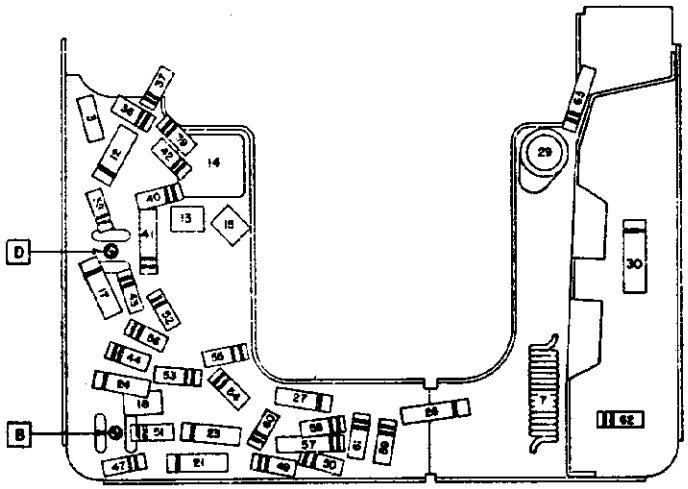

PARTS LAYOUT — CHASSIS VIEW

MODEL 984570, Pontiac

MODEL 984570,
Pontiac

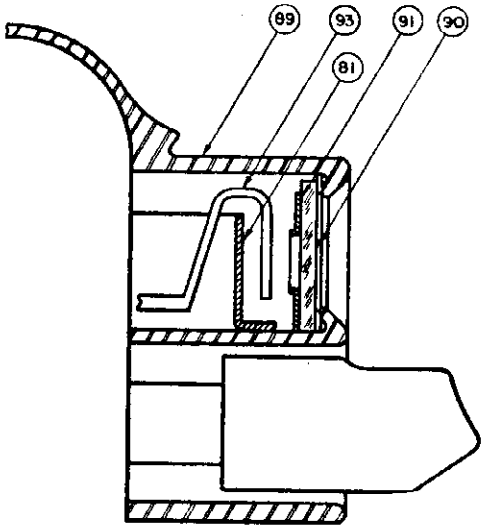

ESCUTCHEON CROSS SECTION

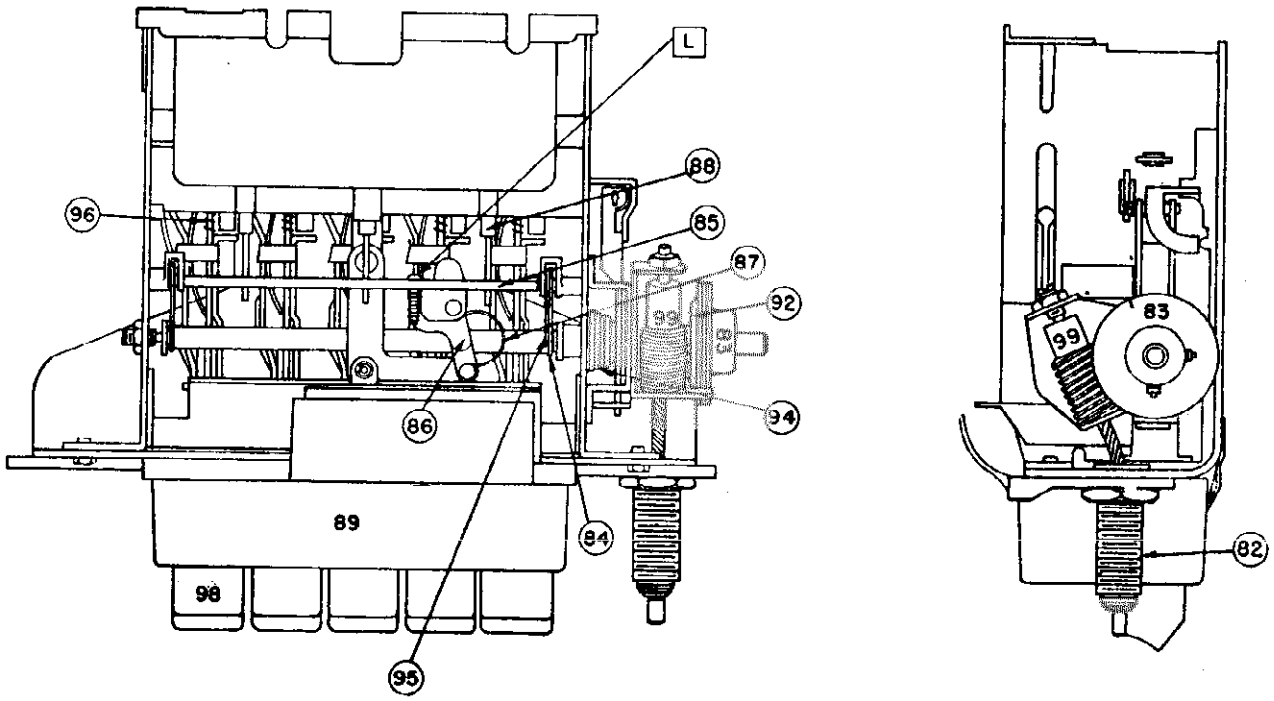

TUNER

©John F. Rider

MODEL 984570,
Pontiac

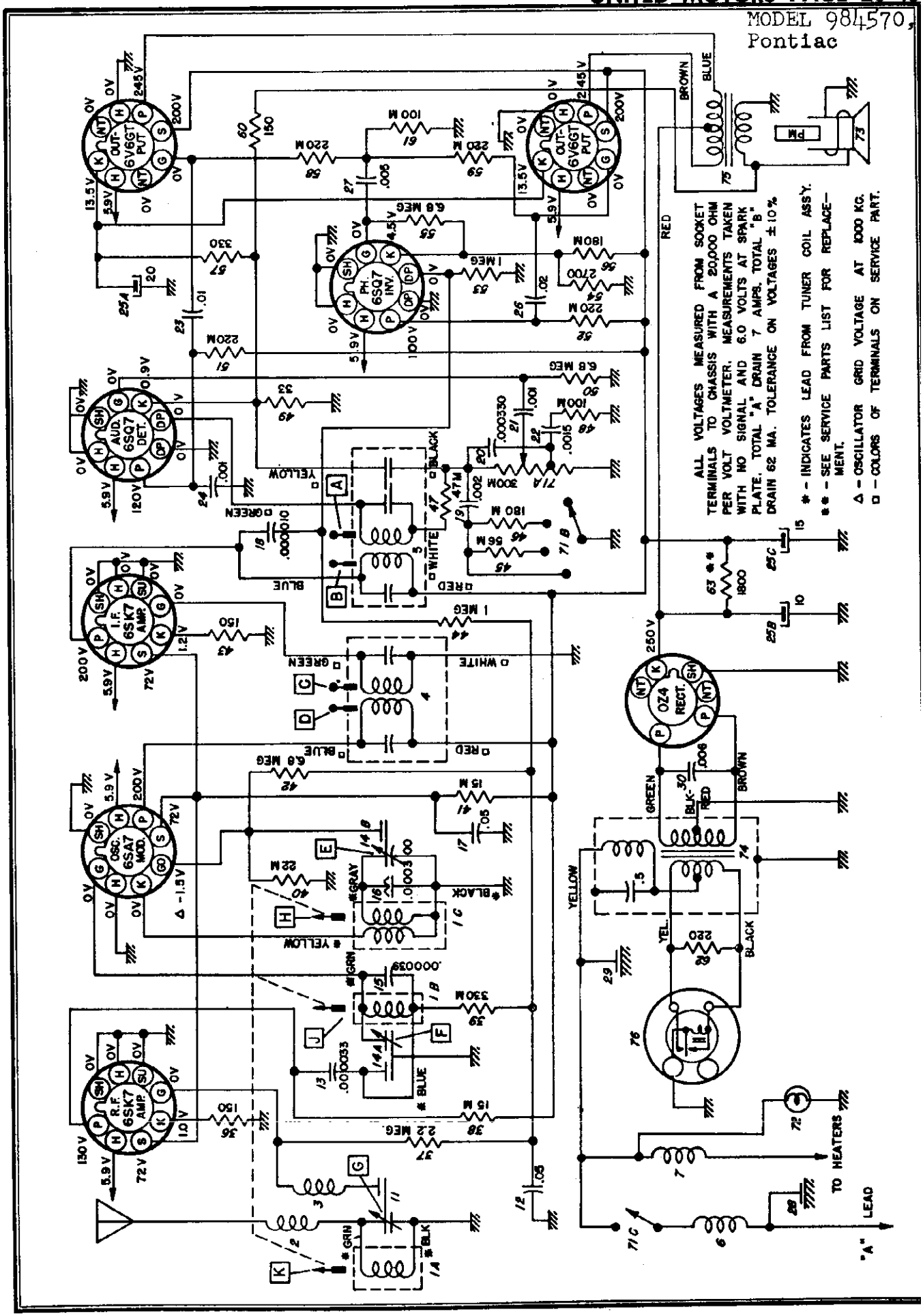

MODEL 984570,
Pontiac

SERVICE PARTS LIST

Illus. No.	Production Part No.	Service Part No.	Description
			ELECTRICAL PARTS
			Coils
1	7257956	7257956	Coil Assy. - Tuning
1 A			Antenna
1 B			R.F.
1 C			Oscillator
2	7255738	7255738	Antenna Series Choke
3	7240251	7240251	Antenna Spark Choke
4	1219508	1219508	1st IF
5	1219509	1219509	2nd IF
6	1217846	1217846	"A" Spark Choke
7	7241708	7241708	Hash Choke
			Condensers
11	7257959	7257959	Antenna Trimmer
12	7236842	E 503	.05 mfd 200 V Tubular
13	1218348	G 330	.000033 mfd Ceramic
14	7242454	7242454	Dual Trimmer
14 A			RF Section
14 B			Oscillator Section
15	7258221	G 390	.000039 mfd Ceramic
16	7258445	7258445	.000300 mfd Temp. Comp.
17	7258125	E 503	.05 mfd 400 V Tubular
18	1215189	G 100	.000010 mfd Mica
19	7237954	E 202	.002 mfd 600 V Tubular
20	7232957	G 331	.000330 mfd Mica
21	7239188	E 102	.001 mfd 600 V Tubular
22	1218499	1218499	.0015 mfd 200 V Tubular
23	1208600	1208600	.01 mfd 600 V Tubular
24	7239188	7239188	.001 mfd 600 V Tubular
25	7238830	M 908	Electrolytic
25 A			20 mfd 25 V
25 B			10 mfd 400 V
25 C			15 mfd 400 V
26	7258124	7258124	.02 mfd 400 V Tubular
27	7230767	7230767	.005 mfd 600 V Tubular
28	7241259	7241259	Spark Plate
29	1217848	1217848	Chassis Plate
30	7240906	H 602	.006 mfd 1600 V Tubular
			Resistors
36	1213220	A 151	150 Ohms ½ W Insulated
37	1211147	A 225	2.2 Megohms ½ W Insulated
38	7237595	B 153	15,000 Ohms 1 W Insulated
39	7240732	A 334	330,000 Ohms ½ W Insulated
40	1211192	A 223	22,000 Ohms ½ W Insulated
41	7233653	C 153	15,000 Ohms 2 W Insulated
42	1215563	A 685	6.8 Megohms ½ W Insulated
43	1213220	A 151	150 Ohms ½ W Insulated
44	7238873	A 105	1 Megohm ½ W Insulated
45	1213267	A 563	56,000 Ohms ½ W Insulated
46	1215560	A 184	180,000 Ohms ½ W Insulated
47	7240731	A 473	47,000 Ohms ½ W Insulated
48	1213270	A 104	100,000 Ohms ½ W Insulated
49	1214538	A 330	33 Ohms ½ W Insulated
50	7241937	A 685	6.8 Megohm ½ W Insulated
51	1214555	A 224	220,000 Ohms ½ W Insulated
52	1214555	A 224	220,000 Ohms ½ W Insulated
53	7238873	A 105	1 Megohm ½ W Insulated
54	1213240	A 272	2700 Ohms ½ W Insulated
55	7241937	A 685	6.8 Megohms ½ W Insulated
56	1215560	A 184	180,000 Ohms ½ W Insulated
57	7233773	B 331	330 Ohms 1 W Insulated
58	1214555	A 224	220,000 Ohms ½ W Insulated
59	1214555	A 224	220,000 Ohms ½ W Insulated
60	1213220	A 151	150 Ohms ½ W Insulated
61	1213270	A 104	100,000 Ohms ½ W Insulated
62	7237994	B 221	220 Ohms 1 W Insulated
63	1214573	C 272 / B 562	1800 Ohms 2 W — Replace with 2700 2 W and 5600 1 W resistor in parallel

©John F. Rider

SERVICE PARTS LIST

Illus. No.	Production Part No.	Service Part No.	*Description*
		Tubes	
	7237751	5229	6SK7
	7237753	5231	6SQ7
	7237752	5222	6SA7
	1213793	5241	6V6GT
	1211924	5003	OZ4
		Miscellaneous Electrical	
71	7257708	7257708	Control - Volume, Tone and Switch
71 A			Volume Control
71 B			Tone Control
71 C			*Switch*
72	187189	44	Lamp - Dial Light
73	7259381	7259381	Speaker 6 x 9 Elliptical, P.M.
74	7255881	7255881	Transformer - Power
75	7240453	7240453	Transformer - Output
76	7239124	8542	Vibrator - Nonsynchronous
		MECHANICAL PARTS	
		Chassis	
79	7257746	7257746	Socket - Antenna
	7236279	7236279	Socket - Octal Tube
	7239125	7239125	Socket - Vibrator
		Tuner	
81	7257722	7257722	Backplate - Pointer
82	7258494	7258494	Bushing and Manual Drive Shaft
83	7258072	7258072	Clutch Disc - Driven
84	7258203	7258203	Conn. Link - Core Bar
85	7258210	7258210	*Core Guide Bar - Parallel*
86	7256271	7256271	Pointer Conn. Link
87	7255992	7255992	Spring - Pointer Conn. Link
88	7258468	7258468	Core - Powdered Iron
89	7257717	7257717	Escutcheon Assy.
90	7257721	7257721	Dial
91	7257719	7257719	Backplate - Dial
	7257718	7257718	Spring Dial Retainer
92	7256495	7256495	Gear and Bushing - Clutch
93	7257742	7257742	Pointer Assy.
	1219120	1219120	Pointer Tip Pkg.
94	7258756	7258756	Spring - Clutch
95	7257415	7257415	Spring - Core Bar Conn. Link
96	7255984	7255984	Spring - Slide Return
	1218884	1218884	Socket - Dial Light
98	1218885	1218885	Push Button and Tuner Slide
99	7257711	7257711	Worm Gear and Bracket
		INSTALLATION PARTS	
	1911095	6015	Condenser - Generator
	1913140	1913140	Condenser - Voltage Regulator
	147685	147685	Fuse 14 Amps
	511834	511834	Knob - Control
	511831	511831	Knob - Dummy
	511833	511833	Knob - Tone Control
	511836	511836	*Trim Plate - Radio*
	513486	513486	Washer - Anti Rattle

©John F. Rider

MODEL 986240,
Chevrolet

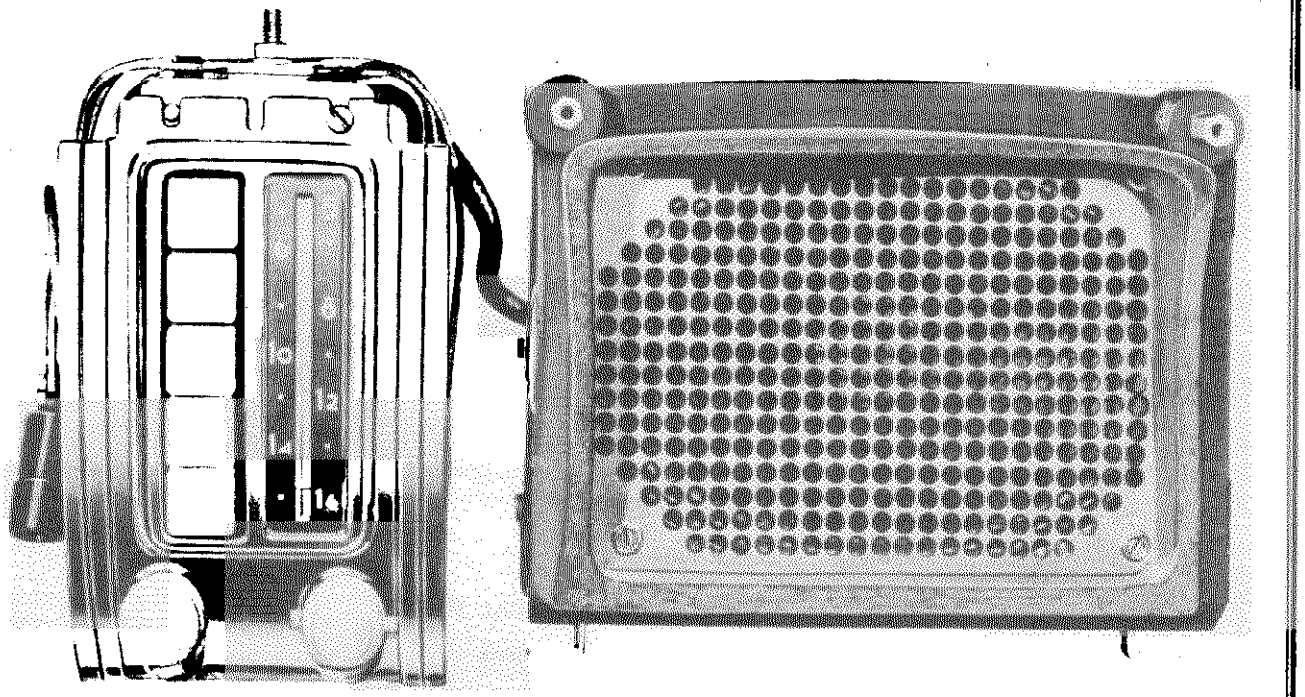

1949 PASSENGER CAR-RADIO 986240

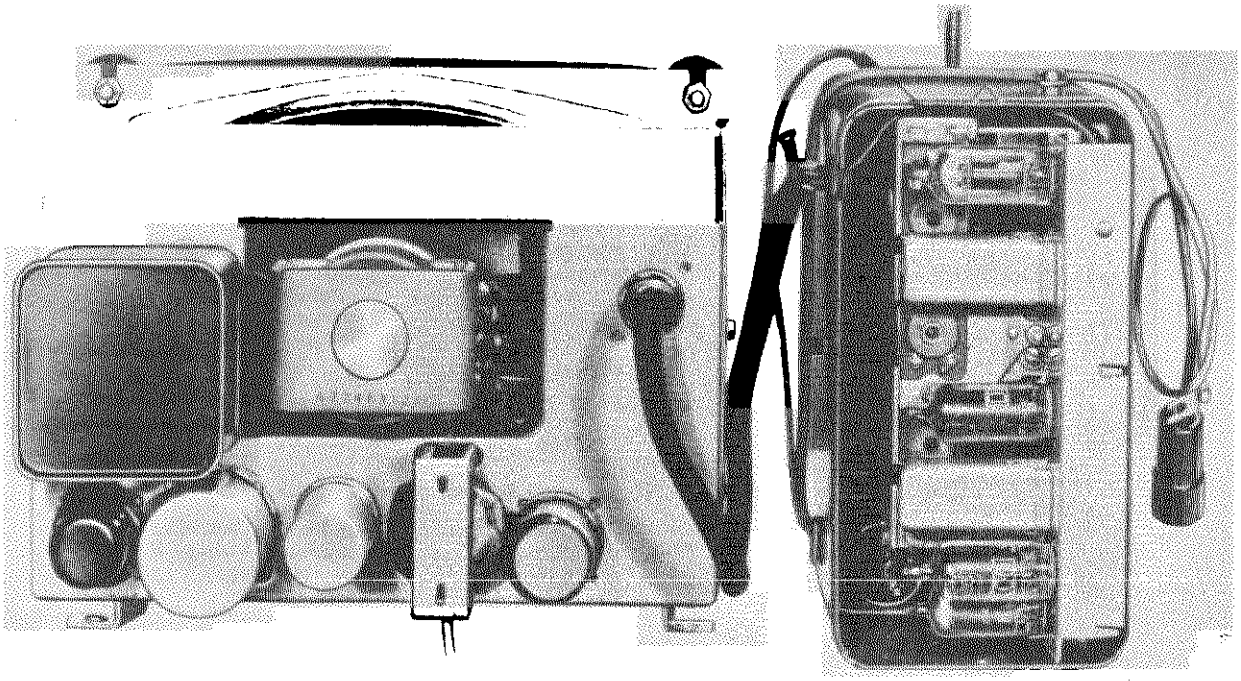

REAR VIEW COMPLETE

©John F. Rider

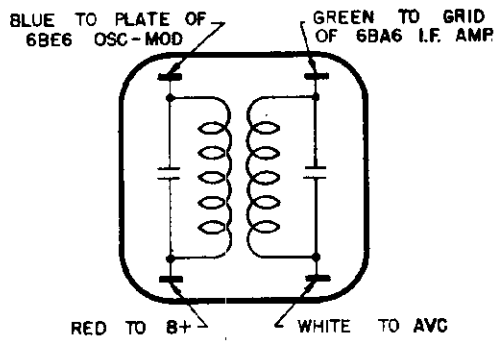

1ST I.F. COIL CONNECTIONS

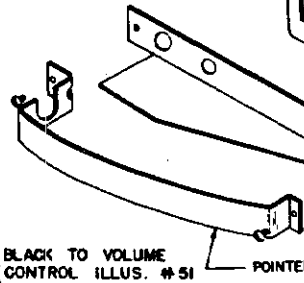

2ND I.F. COIL CONNECTIONS

EXPLODED VIEW—TUNER UNIT

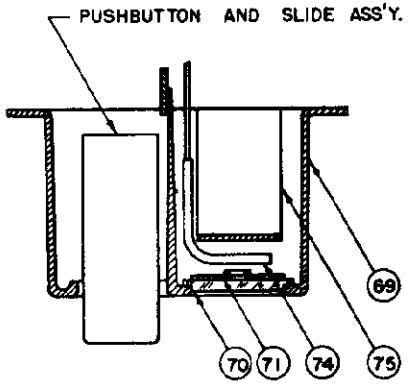

ESCUTCHEON CROSS-SECTION

MODEL 986240,
Chevrolet

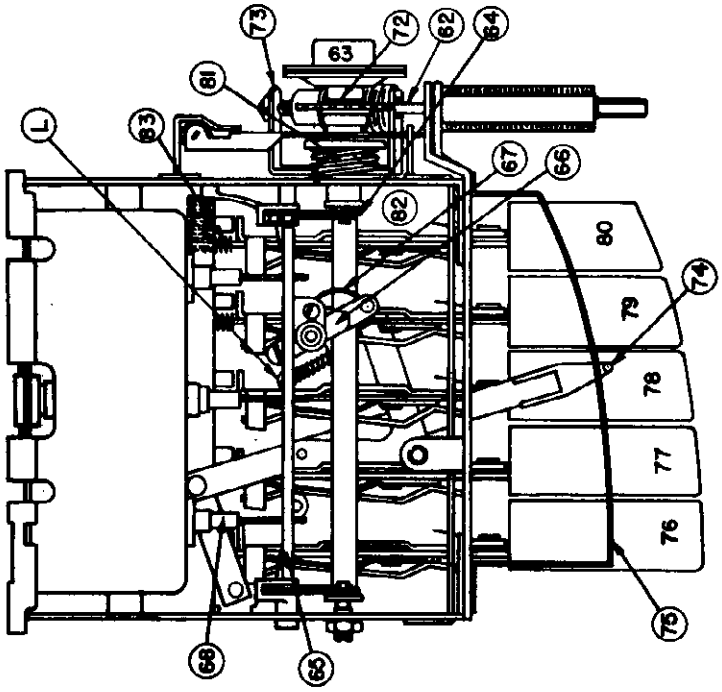

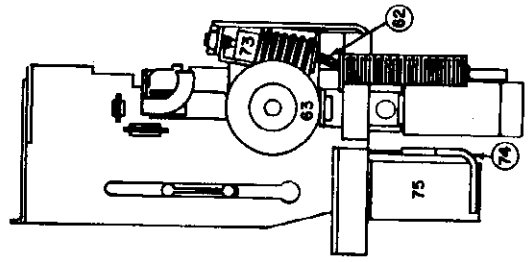

TUNER UNIT

TUNER UNIT—SIDE VIEW

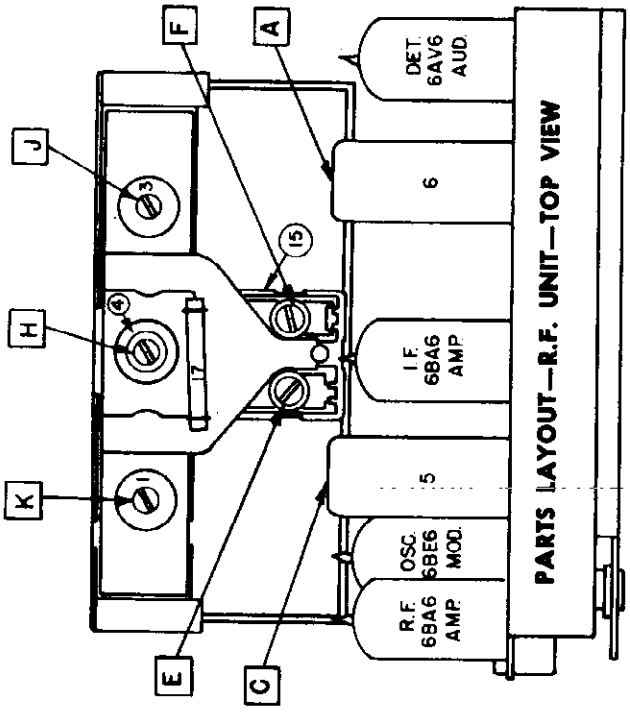

PARTS LAYOUT—R.F. UNIT—TOP VIEW

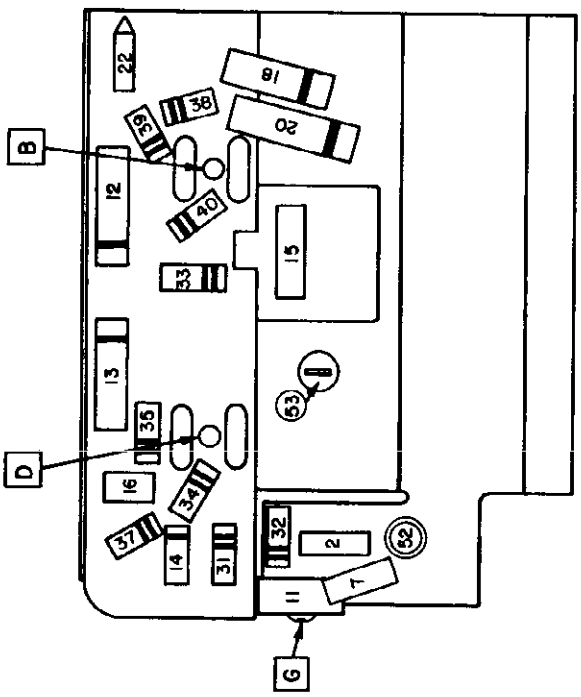

PARTS LAYOUT—R.F. UNIT—BOTTOM VIEW

©John F. Rider

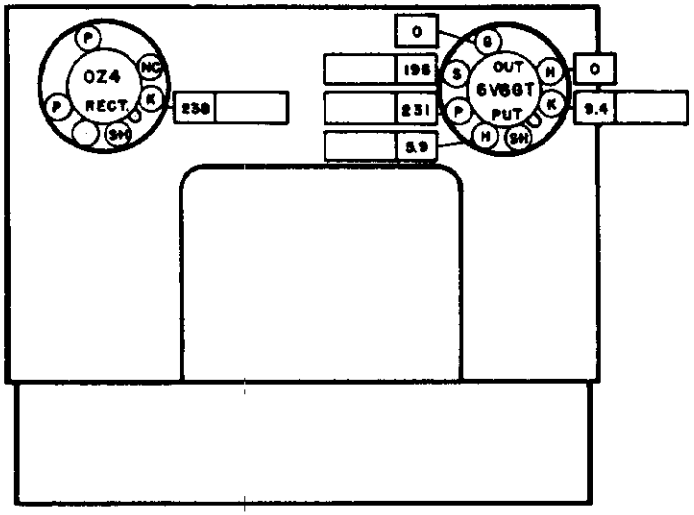

AUDIO UNIT

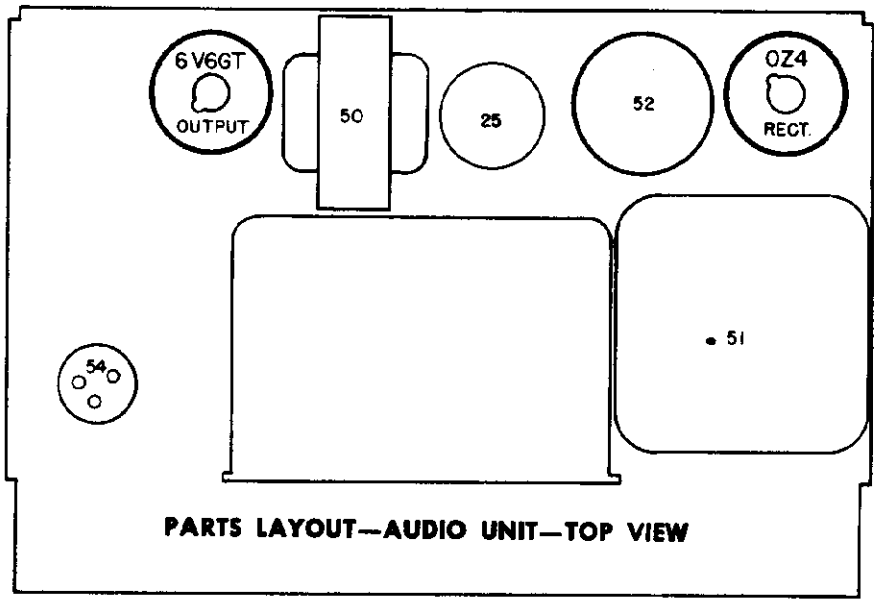

PARTS LAYOUT—AUDIO UNIT—TOP VIEW

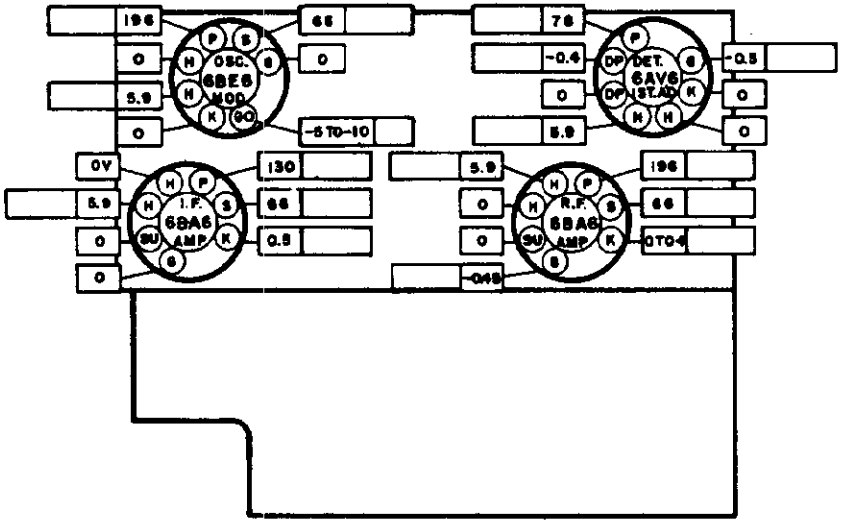

R.F. UNIT

VOLTAGE CHART

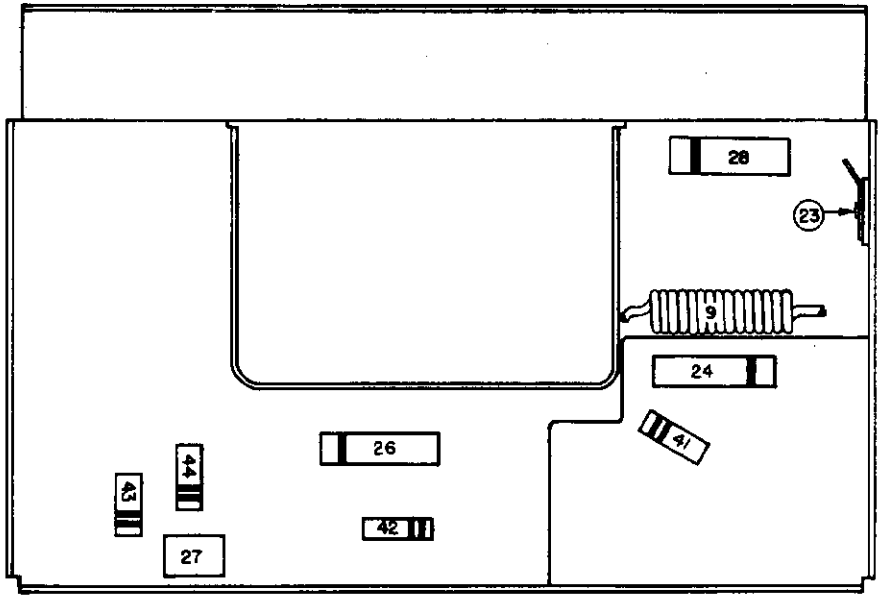

PARTS LAYOUT—AUDIO UNIT—BOTTOM VIEW

MODEL 986240,
Chevrolet

ALIGNMENT

Trimmer condensers in this receiver have been carefully adjusted at the factory and should require no further adjustment (except antenna trimmer) unless a coil or iron core has been replaced. It is advisable not to attempt any adjustment unless it is definitely known that alignment is necessary. Since the iron cores of the tuning unit are set at the factory, only the trimmer adjustments as outlined under "Alignment Procedure" should be made. A signal generator and an output meter must be used to align the receiver circuits correctly. All alignment adjustments must be made with radio frequency unit removed from the car.

1. I.F. Alignment at 262 Kilocycles

Note: The signal generator output should be as low as possible to give a readable indication on the output meter for all adjustments.

(a) Connect one lead from the output meter in parallel with speaker voice coil, other lead to chassis ground.
(b) Connect the ground lead of the signal generator to chassis ground.
(c) Connect the signal lead of the signal generator to the grid (G) prong of the 6BE6 tube socket through a .02 mfd. condenser.
(d) Turn the set volume control on full and rotate the tone control knob to center of its range. Set the signal generator to 262 kilocycles and tune the receiver to a frequency where no squeals or beat notes may be heard and so when tuning control is moved through narrow limits no appreciable change in output is noticeable.
(e) Adjust I.F. trimmers A, B, C and D for maximum output.

2. Alignment at 1615 Kilocycles

(a) Connect the signal lead of the signal generator to the antenna connection through a .000075 mfd. condenser.
(b) Turn the manual tuning control of the receiver to stop at the high frequency end of the dial.
(c) Set signal generator to 1615 kilocycles.
(d) Adjust oscillator trimmer "E" for maximum output.

3. Alignment at 1400 Kilocycles

(a) Set the signal generator to 1400 kilocycles and tune the receiver to 1400 kilocycles.
(b) Adjust R.F. trimmer "F" for maximum output.
(c) Adjust Antenna trimmer "G" for maximum output.

4. Alignment with Car Antenna

Antenna trimmer "G" must be adjusted to match the car antenna when receiver is installed. With antenna fully extended, tune in a weak station around 1400 kilocycles and adjust antenna trimmer "G" for maximum volume.

CAPACITY AND INDUCTANCE ALIGNMENT

This alignment should be used only when there is definite evidence that the iron cores are out of adjustment or coils have been changed.

1. I.F. Alignment at 262 Kilocycles

The same procedure as outlined in Alignment Procedure.

2. Alignment at 1615 Kilocycles

(a) Connect signal lead of signal generator to receiver antenna connection of the set through a .000075 mfd. condenser.
(b) Set signal generator to 1615 kilocycles.
(c) Turn manual tuning knob of receiver to the high frequency end of dial.

© John F. Rider

CAPACITY AND INDUCTANCE ALIGNMENT—(Cont'd)

(d) Mechanically align the oscillator, R.F., and antenna iron core "H" "J" "K" so that slotted end of iron cores is 1 25/32 inches from mounting end of coil form.
(e) Adjust oscillator trimmer "E" for maximum output.
(f) Adjust R.F. trimmer "F" for maximum output.
(g) Adjust antenna trimmer "G" for maximum output.

3. Alignment at 1400 Kilocycles

(a) Adjust signal generator to 1400 kilocycles.
(b) Tune manual tuning knob until dial pointer is at 1400 kilocycles.
(c) Adjust R.F. core "J" for maximum output.
(d) Adjust antenna core "K" for maximum output.

Note: The rear end of iron cores are slotted so these adjustments can be made with a non-metallic screw driver that fits loosely in coil form. (No inward force should be used)

4. Realignment at 1615 and 1400 Kilocycles

(a) Repeat alignment procedure as noted in paragraphs 2 and 3 under Capacity and Inductance (except oscillator core "E") until adjustment for maximum output at 1615 and 1400 kilocycles coincides with 1400 kilocycles alignment.

5. Alignment with Car Antenna

With antenna fully extended tune in a weak station around 1400 kilocycles, volume on full, adjust antenna trimmer "G" for maximum volume.

COIL REPLACEMENT PROCEDURE

To replace the Antenna, R.F. or Oscillator Coil proceed as follows:

(a) Remove rear cover of set.
(b) Remove "PK" screws holding center section of receiver case and remove.
(c) Remove tubes and spring clips holding 1st and 2nd I.F. coils in place.
(d) Remove 4 screws on coil assembly mounting strip.
(e) Pull coil mounting strip towards the I.F. coils, until antenna, R.F. and oscillator coils are exposed.
(f) Unsolder leads to coil being replaced.
(g) Remove coil from mounting grommet.

TO REASSEMBLE COIL ASSEMBLY

(a) Place coil on mounting grommet.
(b) Solder coil leads to proper terminals.
(c) Place coil assembly mounting strip in to shield.
(d) Replace 4 screws holding mounting strip.
(e) Replace springs holding I.F. coils in place, replace tubes.
(f) Replace center case section.
(g) Realign receiver as outlined under "Capacity and Inductance Alignment."

NEW COMPONENT

This component is a condenser and resistor in one unit, and will be known as a capristor.

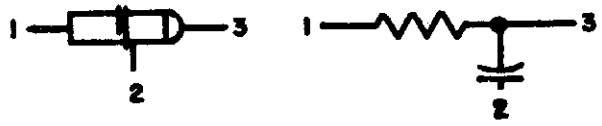

MODEL 986240,
Chevrolet

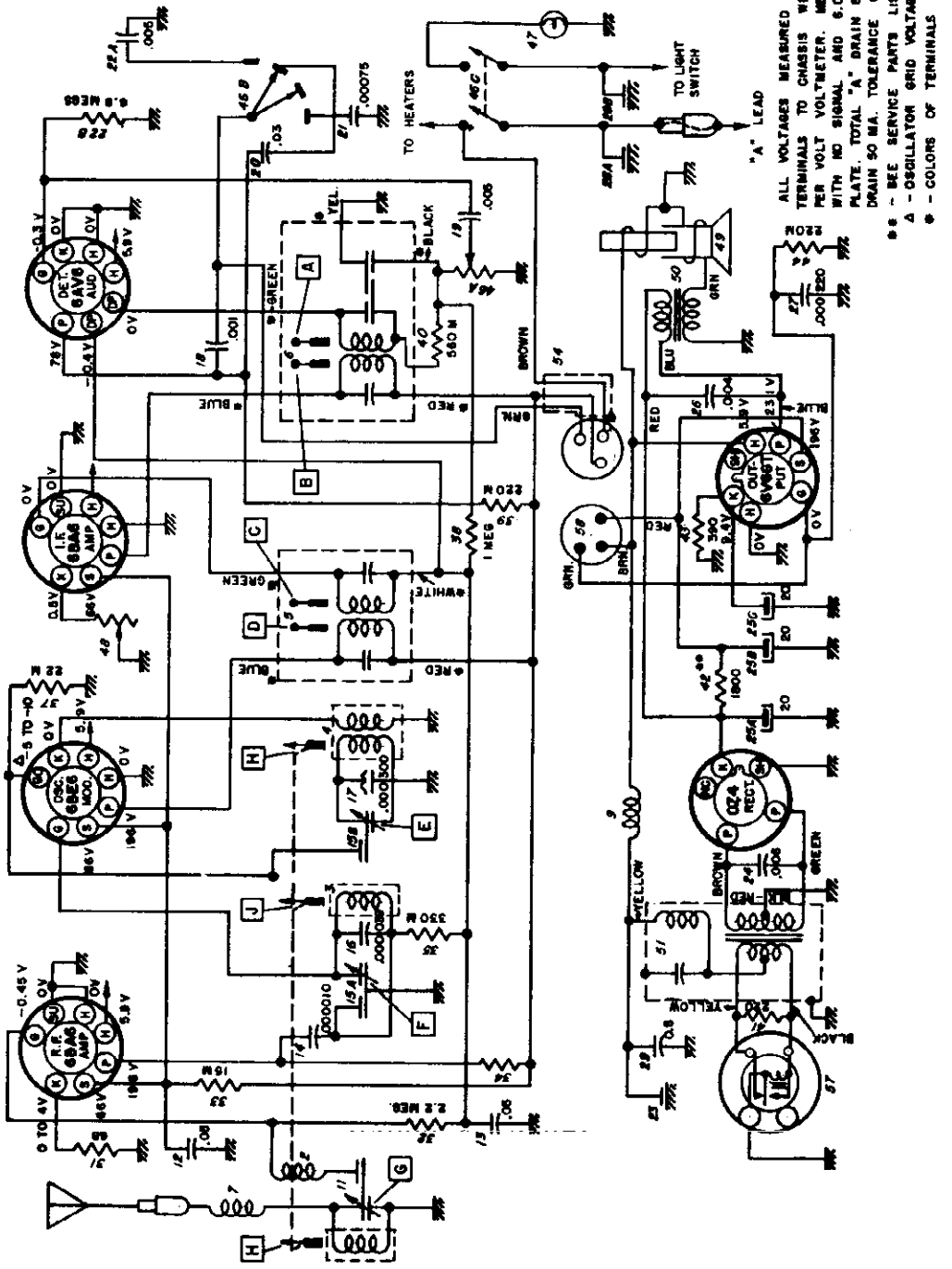

CIRCUIT DESCRIPTION

The circuit used in this receiver is the conventional superheterodyne type and uses no regeneration. Tuning circuits are tuned by varying the inductance of the antenna, R. F. and Oscillator coils by means of iron cores which slide in and out of the coils like pistons. . The alignment of iron cores has been set at the factory and further adjustment should not be required unless the coils or iron cores have been replaced. A special tone control circuit is employed to give the desired tone without distortion.

©John F. Rider

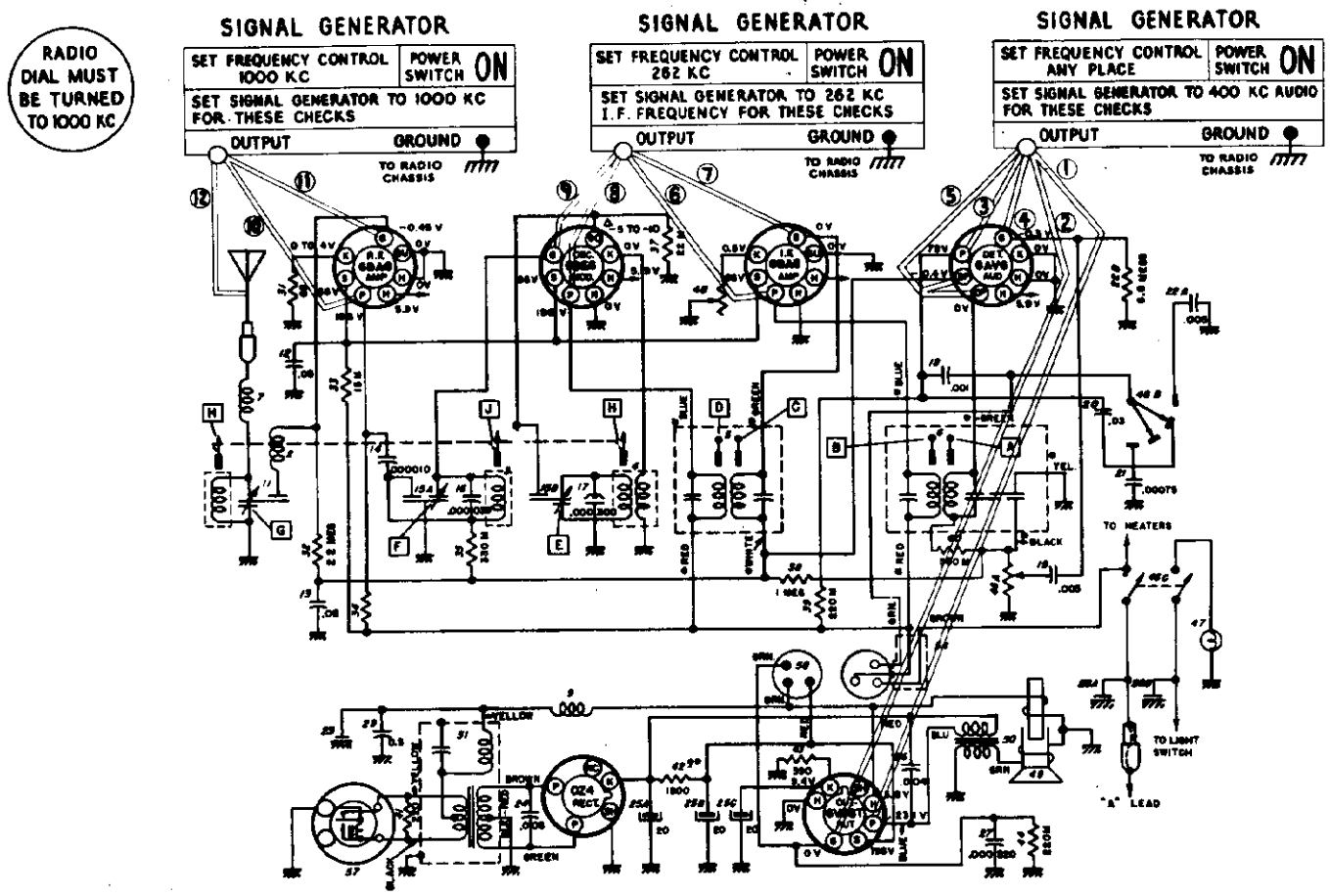

AT POINT SIGNAL STOPS CHECK OR REPLACE ITEMS LISTED.	
NO SIGNAL AT POINT ①	CHECK OR REPLACE ITEMS * 26-49-50
" " " " ②	" " " " 6V6 GT TUBE
" " " " ③	" " " " *18-20-21-22A-46B-54-58
" " " " ④	" " " " 6AV6 TUBE
" " " " ⑤	" " " " 6AV6 TUBE
" " " " ⑥	" " " " *6-19-40-46A
" " " " ⑦	" " " " 6BA6
" " " " ⑧	" " " " *5-38-48
" " " " ⑨	" " " " 6BE6
" " " " ⑩	" " " " *3-14-15A-16-35
" " " " ⑪	" " " " 6BA6 TUBE
" " " " ⑫	" " " " *1-2-7-11-13-32

SIGNAL TRACING SEQUENCE

MODEL 986240,
Chevrolet

SERVICE PARTS LIST

Production Part No.	Service Part No.	Part Name	Description—Function	Illus. No.
	7257979	Coil	Coil, Antenna	1
	7240251	Coil	Choke, Antenna Spark	2
	7257979	Coil	Coil, R.F.	3
	7257977	Coil	Coil, Oscillator	4
	1218725	Coil	Coil, 1st I.F.	5
	1218726	Coil	Coil, 2nd I.F.	6
	7258502	Coil	Choke, Antenna Series	7
	7241708	Coil	Choke, Hash	9
	7258000	Condenser	Trimmer, Antenna	11
7236841 use	7230592	Condenser	Tubular, .05 mfd., 400 volts, Screen By-pass	12
7236842 use	7230592	Condenser	Tubular, .05 mfd., 200 volts, A.V.C. By-pass	13
1218737 use	1215189	Condenser	Ceramic, .000010 mfd., Coupling	14
	7242454	Condenser	Trimmer Dual	15
			Sec. A. R.F. Trimmer	15A
			Sec. B. Oscillator Trimmer	15B
	1217736	Condenser	Ceramic, .000039 mfd., Image Trap	16
	7258162	Condenser	Compensating, .000300 mfd., Temperature	17
7242942 use	1217790	Condenser	Tubular, .001 mfd., 600 volts, Output Coupling	18
	1218298	Condenser	Disc, .005 mfd., Audio Coupling	19
	7242448	Condenser	Tubular, .03 mfd., 400 volts, Tone Control, Voice	20
	1218372	Condenser	Ceramic, .000750 mfd., Tone Control, Music	21
	1218258	Capristor	Capristor	22
			Sec. A. .005 mfd., Condenser Tone Control, Bass	22A
			Sec. B. 6.8 megohm, ½ watt resistor Grid Leak	22B
	1217848	Condenser	Condenser, Chassis Plate Noise Filter	23
	7240906	Condenser	Tubular, .006 mfd., 1600 volts, Buffer	24
	7240724	Condenser	Electrolytic	25
			Sec. A. 20 mfd., 400 bolts, "B" Voltage Filter (Plate)	25A
			Sec. B. 20 mfd., 400 volts, "B" Voltage Filter (Screen)	25B
			Sec. C. 20 mfd., 25 volt, Cathode By-pass	25C
	7233243	Condenser	Tubular, .004 mfd., 800 volts, Output Padder	26
	7236105	Condenser	Mica, .000220 mfd., R.F. & I.F. By-pass	27
	7258332	Condenser	Spark Plate Dual—Ripple Filter	28
			Sec. A. "A" Lead Section	28A
			Sec. B. Dial Light Section	28B
7242885 use	7232403	Condenser	Tubular, .5 mfd., 100 volts, Noise Filter	29
	1215558	Resistor	Insulated, 68 ohm, ½ watt, R.F. Amplifier Bias	31
	1214563	Resistor	Insulated, 2.2 megohm, ½ watt, Isolating	32
	7233653	Resistor	Insulated, 15,000 ohm, 2 watt, Screen Dropping	33
	7237595	Resistor	Insulated, 15,000 ohm, 1 watt, Plate Dropping	34
	1214557	Resistor	Insulated, 330,000 ohm, ½ watt, Isolating	35
	1214550	Resistor	Insulated, 22,000 ohm, ½ watt, Oscillator Grid Leak	37
	1213282	Resistor	Insulated, 1 megohm, ½ watt, A.V.C., Isolating	38
	1214555	Resistor	Insulated, 220,000 ohm, ½ watt, Plate Dropping	39
	1214560	Resistor	Insulated, 560,000 ohm, ½ watt, Tweet Filter	40
	7237994	Resistor	Insulated, 220 ohm, 1 watt, Power Transformer Primary Load	41
	1214573	Resistor	Insulated, 1800 ohm, 2 watt, "B+" Filter	42
	1216149	Resistor	Insulated, 390 ohm, 1 watt, 6V6GT Cathode Bias	43

©John F. Rider

MODEL 986240,
Chevrolet

SERVICE PARTS LIST—(Cont'd)

Production Part No.	Service Part No.	Part Name	Description—Function	Illus. No.
	1214555	Resistor	Insulated, 220,000 ohm, ½ watt, 6V6GT Grid Leak	44
	7258084	Control	Control, Volume, Tone and Switch	46
			Sec. A. Volume Control	46A
			Sec. B. Tone Control	46B
			Sec. C. Switch on and off	46C
	125588	Lamp	Lamp, Dial #55	47
	7242204	Control	Control, Sensitivity	48
	7241312	Speaker	Speaker, 6" x 9" Electro-Dynamic	49
	7256355	Speaker	Permanent Magnet 6" x 9" optional with 7241312	49
	7256009	Transformer	Transformer, Output	50
	7255881	Transformer	Transformer, Power	51
	7239124	Vibrator	Vibrator, Non-Synchronous	52
	7258022	Cable	Cable, R.F.	54
	7239475	Socket	Socket, Antenna	55
	1218724	Socket	Socket, Dial Light	56
	7258111	Plug	Plug, Cable, Audio	58
	7236279	Socket	Socket, Octal, Tube	
	7239125	Socket	Socket, Vibrator	
	7258073	Socket	Socket, Tube 7 Pin Miniature	
			TURNER UNIT	
115529	Not Serviced	Bearing	Ball, Bearing Tuner (10 used)	
	7258054	Shaft	Shaft, Manual Drive Shaft	62
	7258072	Clutch	Clutch Disc, Driven	63
	7258203	Link	Connecting Link, Core Bar	64
	7258206	Bar	Core Guide Bar, Parallel	65
	7256271	Link	Connecting Link, Pointer	66
	7255992	Spring	Spring, Pointer Connecting Link	67
	7258468	Core	Core, Iron (Tuning)	68
	7258151	Escutcheon	Escutcheon, Dial	69
	7258002	Dial	Dial	70
	7258003	Plate	Dial Backplate	71
	7258042	Gear&Bush.	Gear and Bushing	72
	7258052	Gear	Gear and Bracket (Worm)	73
	7258059	Pointer	Pointer Assembly	74
	1218848	Tip	Pointer Tip Package	
	7258004	Plate	Pointer Backplate	75
	1218731	Slide	Push Button and Slide #1	76
	1218732	Slide	Push Button and Slide #2	77
	1218733	Slide	Push Button and Slide #3	78
	1218734	Slide	Push Button and Slide #4	79
	1218735	Slide	Push Button and Slide #5	80
	7258043	Spring	Spring, Clutch	81
	7257415	Spring	Spring, Core Bar Connecting Link	82
	7255984	Spring	Spring, Push Button Return	83
			TUBES	
	1213793	Tube	Tube, 6V6GT, Output	
	1211924	Tube	Tube, 0Z4, Rectifier	
	1217690	Tube	Tube, 6BA6, R.F. & I.F. Amplifier	
	1217691	Tube	Tube, 6BE6, Oscillator, Modulator	
	1218506	Tube	Tube, 6AV6, Detector and 1st Audio	

©John F. Rider

MODEL 986240,
Chevrolet

Service Part No.	Part Name	Description—Function	Illus. No.

INSTALLATION PARTS

7257917	Condenser	Condenser, Ammeter .5 mfd.	
1911095	Condenser	Condenser, Generator .3 mfd.	
1910147	Condenser	Condenser, Ignition Coil .3 mfd.	
1887829	Suppressor	Suppressor, Distributor	
7257928	Knob	Knob, Control	
7257929	Knob	Knob, Dummy	
7257930	Knob	Knob, Tone Control	
7257918	Nut	Nut, Speed	
1888204	Nipple	Nipple, Rubber, Distributor Suppressor	
7257920	Spacer	Spacer, R.F. Unit Mtg. (small)	
7257922	Spacer	Spacer, R.F. Unit Mtg. (outer)	
7257925	Shroud	Shroud, Speaker (rubber)	
494786	Collector	Collector, Static Front Wheel	
7257917	Stud	Stud, Audio Unit Mtg.	
7257924	Plate	Plate, Trim, Instrument Panel	
1912900	Condenser	Condenser, Voltage Regulator .5 mfd.	
7257921	Holder	Holder, Fuse Body, Male	
1216212	Holder	Holder, Fuse Body, Female	
1219181	Ferrule Assy.	Fuse Ferrule, Spring and Tip	

PROCEDURE FOR SETTING PUSH BUTTONS

Turn on the receiver for 10 minutes or longer to allow circuits to stabilize.

1. Select five good stations in order of their frequency.
2. Pull top push button slightly down and out as far as it will go.
3. With manual tuning knob tune-in desired station.
4. Push button in firmly to end of its travel.
5. Repeat same procedure for remaining four buttons.

ANTENNA SYSTEM

An 80-inch fully extended (25⅝ inches collapsed) fender type antenna is furnished with this receiver, designed expressly for use on the 1949 Chevrolet passenger car and will operate very efficiently with this Chevrolet radio.

ANTENNA CIRCUIT

The antenna circuit is directly coupled to the antenna. The antenna, oscillator and R.F. circuit are tuned by means of iron cores. The antenna circuit is adjusted for slight variations in antenna by means of an antenna trimmer located on the bottom of the radio frequency unit.

©John F. Rider

SCHEMATIC DIAGRAM

UST SUPERHETERODYNE 5-66 SERIES
INTERMEDIATE FREQUENCY 455 K.C.

BOTTOM VIEWS OF ALL SOCKET CONNECTIONS

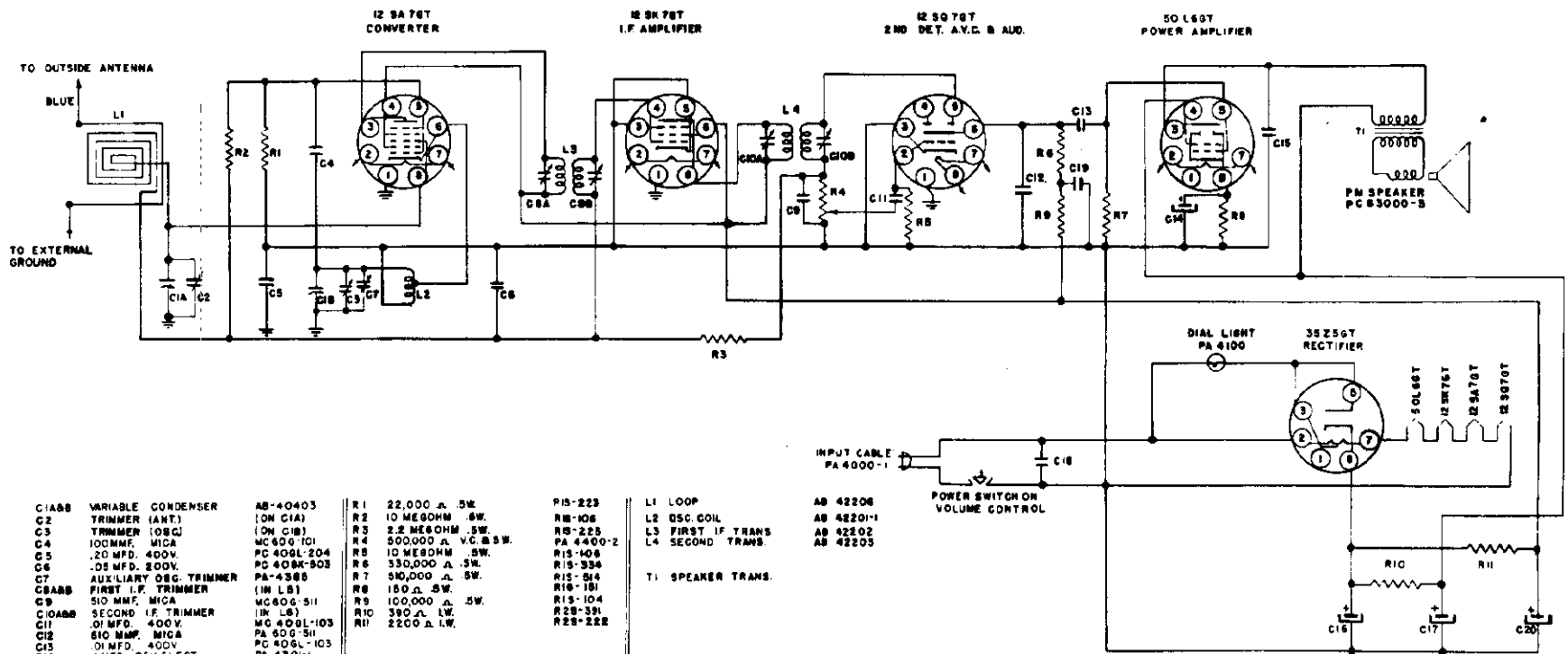

C1A&B	VARIABLE CONDENSER	AB-40403
C2	TRIMMER (ANT.)	(ON C1A)
C3	TRIMMER (OSC)	(ON C1B)
C4	100MMF. MICA	MC60G-101
C5	.20 MFD. 400V.	PC 40GL-204
C6	.05 MFD. 200V.	PC 40GK-503
C7	AUXILIARY OSC. TRIMMER	PA-4385
C8A&B	FIRST I.F. TRIMMER	(IN L8)
C9	510 MMF. MICA	MC60G-511
C10A&B	SECOND I.F. TRIMMER	(IN L6)
C11	.01 MFD. 400V.	MC 40GL-103
C12	510 MMF. MICA	PA 60G-511
C13	.01 MFD. 400V	PC 40GL-103
C14	4 MFD. 25V ELECT.	PA 4301-1
C15	.01 MFD. 400V	PC 40GL-103
C16	40 MFD. 150V. ELECT.	PA 4300-1
C17	40 MFD. 150V. ELECT.	PA 4300-1
C18	.05 MFD. 500V.	PC 40GM-503
C19	.05 MFD. 200V	PC 40GK-503
C20	10 MFD. 150V. ELECT.	PA 4300-5

R1	22,000 Ω .5W.	R1S-223
R2	10 MEGOHM .5W.	R1S-106
R3	2.2 MEGOHM .5W.	R1S-225
R4	500,000 Ω V.C. & 5W.	PA 4400-2
R5	10 MEGOHM .5W.	R1S-106
R6	330,000 Ω .5W.	R1S-334
R7	510,000 Ω .5W.	R1S-514
R8	150 Ω .5W.	R1S-151
R9	100,000 Ω .5W.	R1S-104
R10	390 Ω 1W.	R2S-391
R11	2200 Ω 1W.	R2S-222

L1	LOOP	AB 42206
L2	OSC. COIL	AB 42201-1
L3	FIRST IF TRANS	AB 42202
L4	SECOND TRANS.	AB 42203
T1	SPEAKER TRANS.	

©John F. Rider

MODEL 8-16X

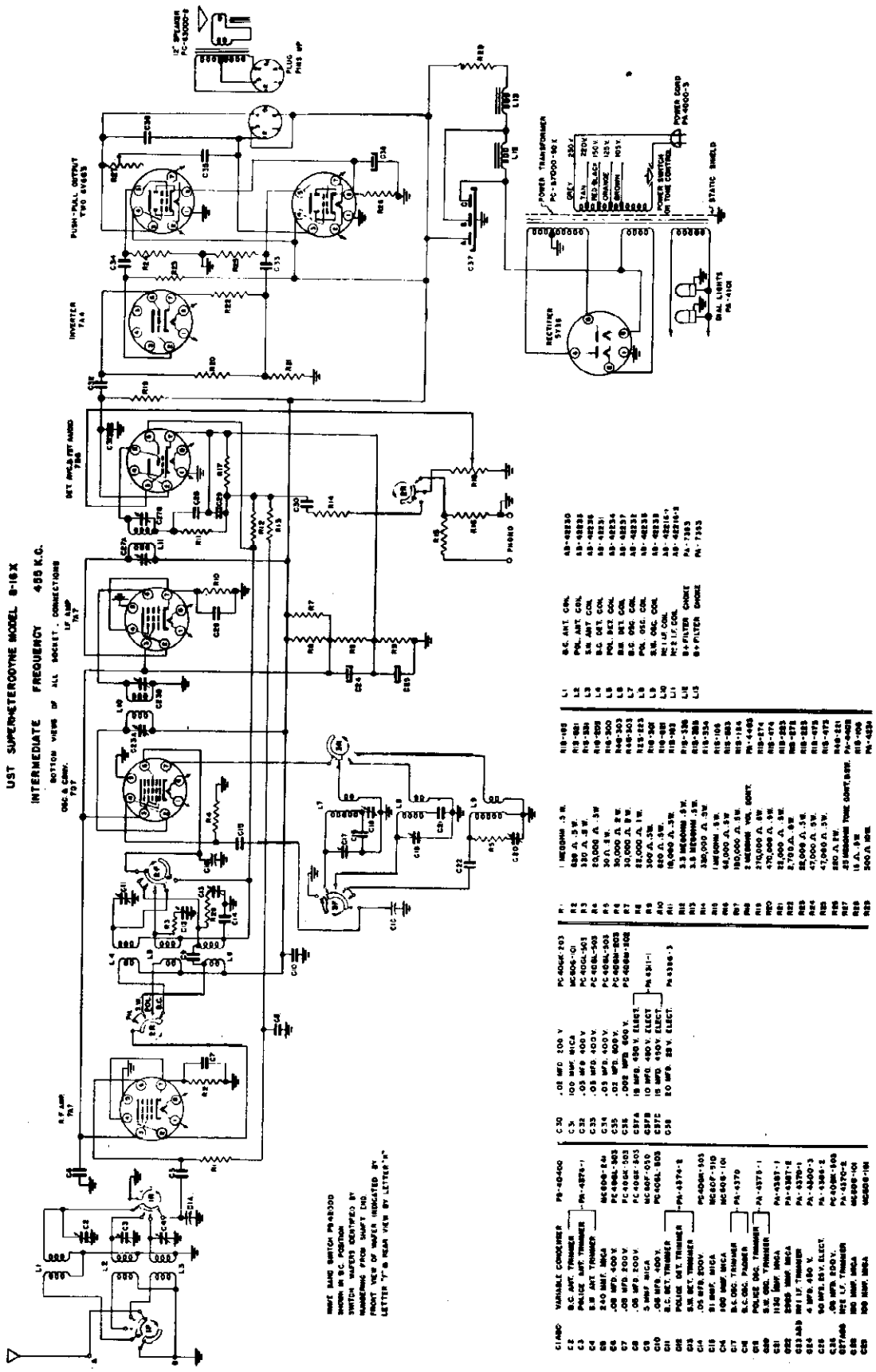

CIRCUIT	VARIABLE CONDENSER	PA-4040
C2	B.C. ANT. TRIMMER	PA-4574-1
C3	POLICE ANT. TRIMMER	
C4	S.W. ANT. TRIMMER	MC608-24
C5	240 MMF. MICA	
C6	.02 MFD. 400 V.	PC-4084-503
C7	.02 MFD. 200 V.	PC-4084-503
C8	.05 MFD. 200 V.	PC-4085-503
C9	5 MMF. MICA	MC60F-050
C10	.05 MFD. 400 V.	PC-4085-503
C11	B.C. DET. TRIMMER	PA-4574-2
C12	POLICE DET. TRIMMER	
C13	S.W. DET. TRIMMER	PC-4084-503
C14	.05 MFD. 200 V.	MC60F-310
C15	81 MMF. MICA	MC608-101
C16	100 MMF. MICA	PA-4570
C17	B.C. OSC. TRIMMER	PA-4573-1
C18	B.C. OSC. PADDER	
C19	POLICE OSC. TRIMMER	PA-4587-1
C20	S.W. OSC. TRIMMER	PA-4587-2
C21	1150 MMF. MICA	PA-4570-1
C22	2950 MMF. MICA	PA-4000-3
C23 A&B	981 I.F. TRIMMER	PA-4569-2
C24	.1 MFD. 400 V.	PC-4084-105
C25	.05 MFD. 25 V. ELECT.	PC-4070-2
C26	.05 MFD. 200 V.	MC605-104
C27	250 MMF. MICA	MC608-101
C28	900 MMF. MICA	

CIRCUIT		
C30	.05 MFD. 200 V.	PC-4084-503
C31	100 MMF. MICA	MC608-101
C32	.05 MFD. 400 V.	PC-4084-503
C33	.05 MFD. 400 V.	PC-4084-503
C34	.05 MFD. 400 V.	PC-4084-503
C35	.02 MFD. 600 V.	PC-4084-503
C36	.002 MFD. 600 V.	PC-4084-302
C37A	15 MFD. 450 V. ELECT.	PA-4311-1
C37B	10 MFD. 450 V. ELECT.	
C37C	15 MFD. 450 V. ELECT.	
C38	20 MFD. 25 V. ELECT.	PA-4306-3

CIRCUIT		
R1	1 MEGOHM .5 W.	RS-105
R2	820 Ω .5 W.	RS-101
R3	330 Ω .5 W.	RS-331
R4	22,000 Ω .5 W.	RS-223
R5	30 Ω .5 W.	RS-300
R6	30,000 Ω 2 W.	RS-303
R7	30,000 Ω 2 W.	RS-303
R8	82,000 Ω 1 W.	RS-823
R9	100 Ω .5 W.	RS-100
R10	18,000 Ω .5 W.	RS-183
R11	820 Ω .5 W.	RS-821
R12	3.3 MEGOHM .5 W.	RS-336
R13	3.3 MEGOHM .5 W.	RS-335
R14	330,000 Ω .5 W.	RS-334
R15	1 MEGOHM .5 W.	RS-105
R16	68,000 Ω .5 W.	RS-683
R17	180,000 Ω .5 W.	RS-184
R18	2 MEGOHM VOL. CONT.	PA-4405
R19	270,000 Ω .5 W.	RS-274
R20	470,000 Ω .5 W.	RS-474
R21	22,000 Ω .5 W.	RS-223
R22	2,700 Ω .5 W.	RS-272
R23	82,000 Ω .5 W.	RS-823
R24	47,000 Ω .5 W.	RS-473
R25	47,000 Ω .5 W.	RS-473
R26	220 Ω 1 W.	RS-221
R27	25 MEGOHM TONE CONT. SWR.	PA-4402
R28	15 Ω .5 W.	RS-150
R29	240 Ω WW.	PA-4231

CIRCUIT		
L1	B.C. ANT. COIL	AB-48230
L2	PWL. ANT. COIL	AB-48233
L3	S.W. ANT. COIL	AB-48236
L4	B.C. DET. COIL	AB-48231
L5	PWL. DET. COIL	AB-48234
L6	S.W. DET. COIL	AB-48237
L7	B.C. OSC. COIL	AB-48232
L8	PWL. OSC. COIL	AB-48235
L9	S.W. OSC. COIL	AB-48238
L10	2ND I.F. COIL	AB-48216-2
L11	1ST I.F. COIL	AB-48216-1
L12	R-F FILTER CHOKE	PA-7303
L13	R-F FILTER CHOKE	PA-7303

©John F. Rider

©John F. Rider

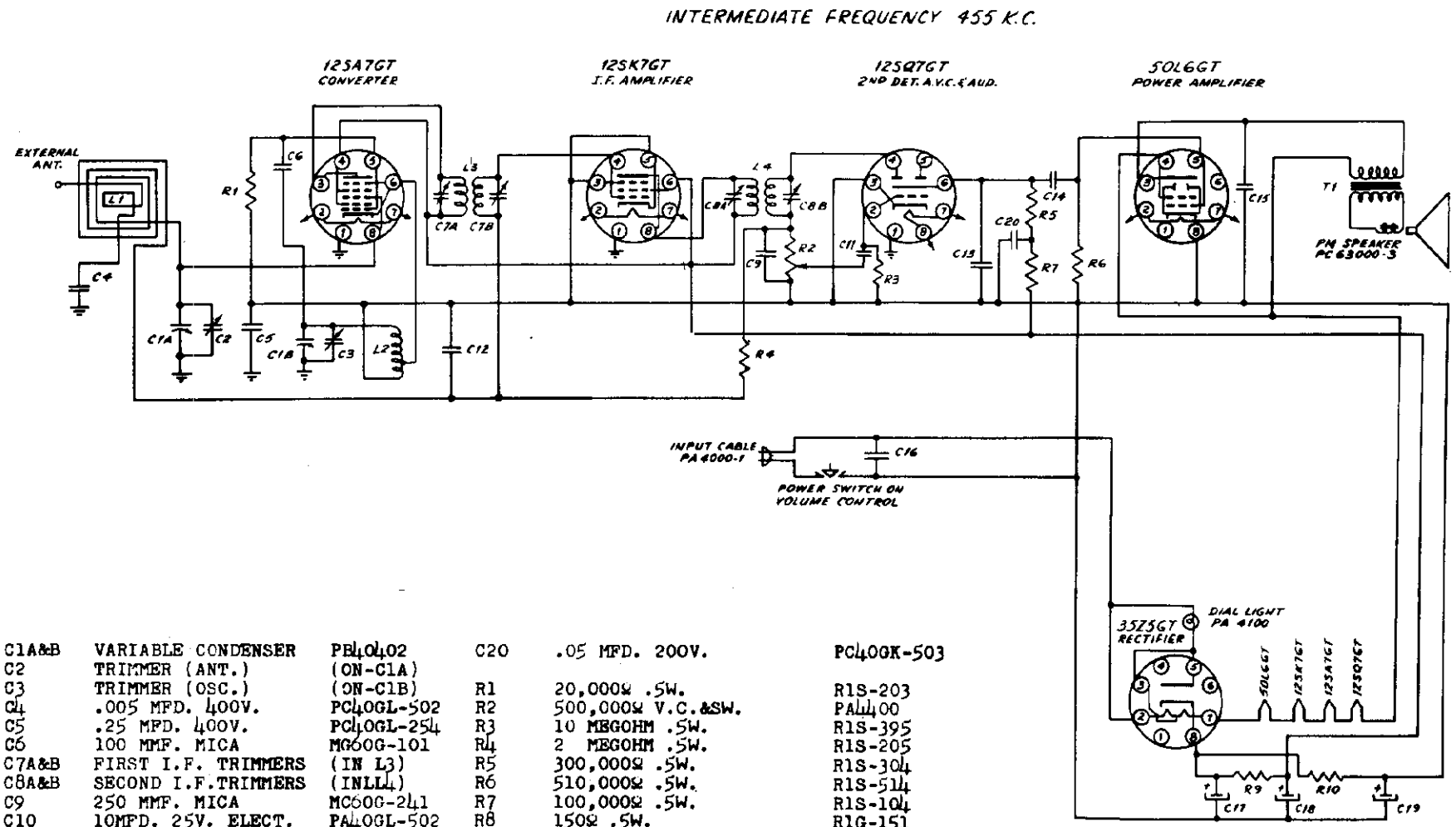

C1A&B	VARIABLE CONDENSER	PB40402	C20	.05 MFD. 200V.	PC40GK-503
C2	TRIMMER (ANT.)	(ON-C1A)			
C3	TRIMMER (OSC.)	(ON-C1B)	R1	20,000Ω .5W.	R1S-203
C4	.005 MFD. 400V.	PC40GL-502	R2	500,000Ω V.C.&SW.	PA4400
C5	.25 MFD. 400V.	PC40GL-254	R3	10 MEGOHM .5W.	R1S-395
C6	100 MMF. MICA	MC60G-101	R4	2 MEGOHM .5W.	R1S-205
C7A&B	FIRST I.F. TRIMMERS	(IN L3)	R5	300,000Ω .5W.	R1S-304
C8A&B	SECOND I.F.TRIMMERS	(IN L4)	R6	510,000Ω .5W.	R1S-514
C9	250 MMF. MICA	MC60G-241	R7	100,000Ω .5W.	R1S-104
C10	10MFD. 25V. ELECT.	PA40GL-502	R8	150Ω .5W.	R1G-151
C11	.005 MFD. 400V.	PC40GL-502	R9	390Ω 1.W.	R2S-391
C12	.05 MFD. 200V	PC40GK-503	R10	2200Ω 1.W.	R2S-222
C13	500 MMF. MICA	MC60G-511			
C14	.01 MFD. 400V.	PC40GL-103	L1	LOOP	AB42200
C15	.01 MFD. 400V.	PC40GL-103	L2	OSCILLATOR COIL	AB42201
C16	.05 MFD. 600V.	PC40GM-103	L3	FRIST I.F.	AB42202
C17	40 MFD. 150V. ELECT.	PA-4300-1	L4	SECOND I.F.	AB42203
C18	40 MFD. 150V. ELECT.	PA-4300-1			
C19	10 MFD. 150V. ELECT.	PA-4300-5	T1	SPEAKER TRANS.	

MODEL 2001

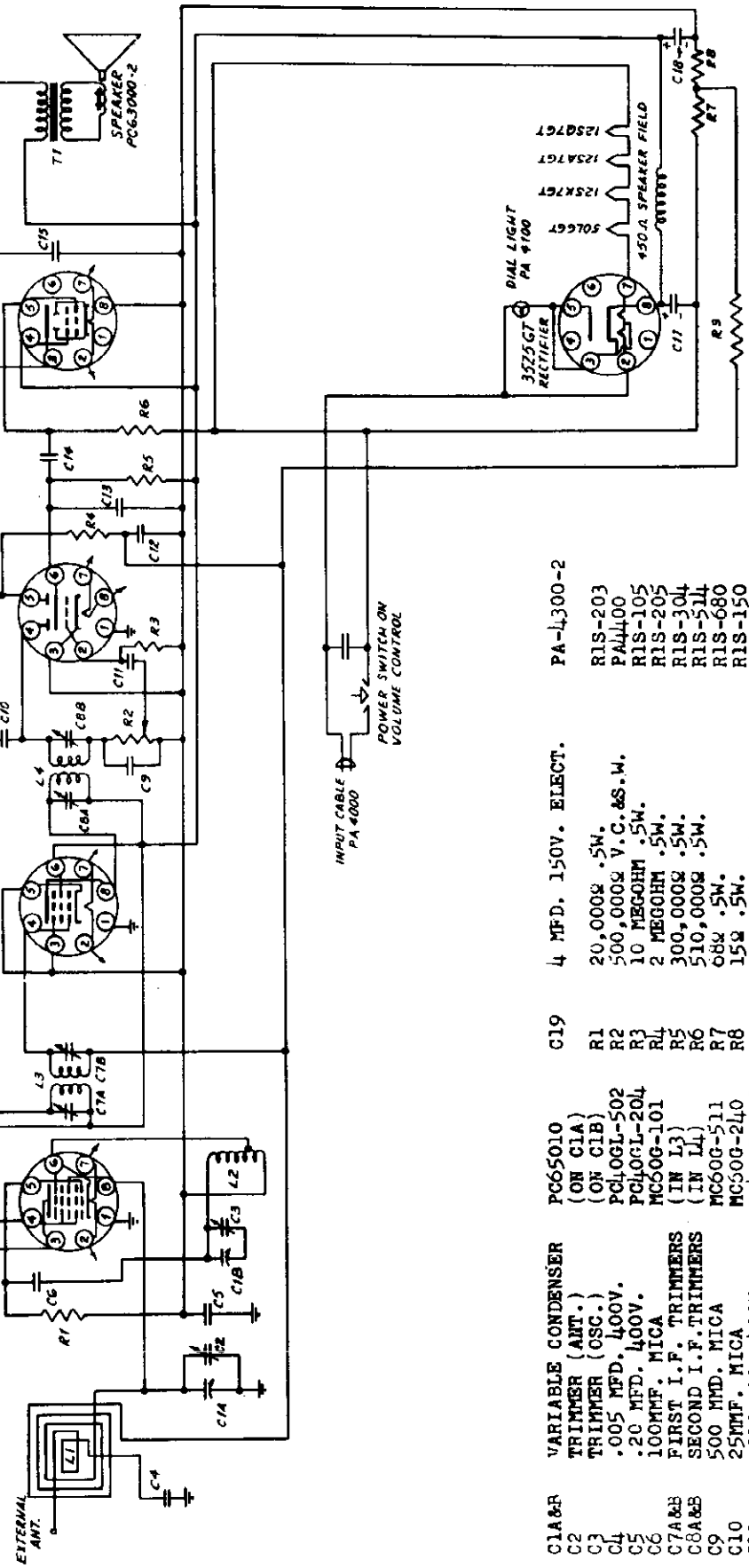

C1A&B	VARIABLE CONDENSER	PC65010	C19	4 MFD. 150V. ELECT.	PA-4300-2
C2	TRIMMER (ANT.)	(ON C1A)	R1	20,000Ω .5W.	RIS-203
C3	TRIMMER (OSC.)	(ON C1B)	R2	500,000Ω V.C. &S.W.	PA4400
C4	.005 MFD. 400V.	PC40GL-502	R3	10 MEGOHM .5W.	RIS-105
C5	.20 MFD. 400V.	PC40GL-204	R4	2 MEGOHM .5W.	RIS-205
C6	100MMF. MICA	MC50G-101	R5	300,000Ω .5W.	RIS-304
C7A&B	FIRST I.F. TRIMMERS	(IN L3)	R6	510,000Ω .5W.	RIS-514
C8A&B	SECOND I.F.TRIMMERS	(IN L4)	R7	68Ω .5W.	RIS-680
C9	500 MMD. MICA	MC60G-511	R8	15Ω .5W.	RIS-150
C10	25MMF. MICA	MC50G-240	R9	2 MEGOHM .5W.	RIS-205
C11	.010 MFD. 400V.	PC40GL-103			
C12	.05 MFD. 200V	PC40GK-503	L1	LOOP	ABL2200
C13	500 MMF. MICA	MC50G-511	L2	OSCILLATOR	ABL2201
C14	.01 MFD. 400V.	PC40GL-103	L3	FIRST I.F.	ABL2202
C15	.01 MFD. 400V.	PC40GL-103	L4	SECOND I.F.	ABL2203
C16	.05 MFD. 600V.	PC40GM-103			
C17	40MFD. 150V. ELECT.	PA-4300-1	T1	SPEAKER TRANS.	
C18	40MFD. 150V. ELECT.	PA-4300-1			

©John F. Rider

MODEL D1949

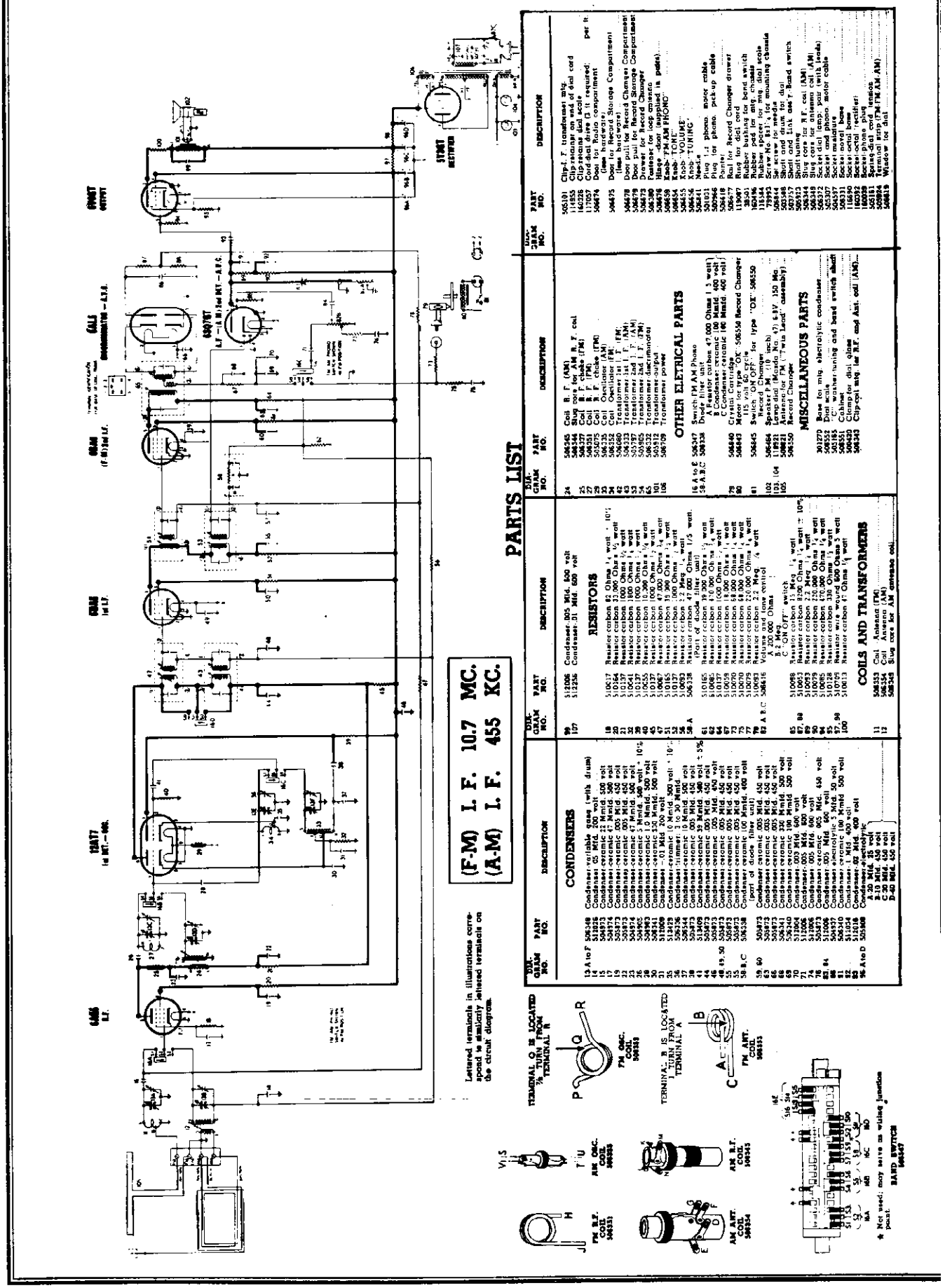

PARTS LIST

DIA. GRAM NO.	PART NO.	DESCRIPTION
		CONDENSERS
13 A to F	506348	Condenser, variable gang (with drum)
14	513825	Condenser, ceramic 15 Mmfd. 500 volt
15	504973	Condenser, ceramic 33 Mmfd. 500 volt
17	504974	Condenser, ceramic 47 Mmfd. 500 volt
19	505873	Condenser, ceramic 000 Mfd. 450 volt
21	505873	Condenser, ceramic 000 Mfd. 450 volt
23	504974	Condenser, ceramic 47 Mmfd. 500 volt
25	504905	Condenser, ceramic 5 Mmfd. 500 volt ± 10%
28	504963	Condenser, ceramic 10 Mmfd. 500 volt
30	513824	Condenser, ceramic 15 Mmfd. 500 volt
31	513824	Condenser, ceramic 10 Mmfd. 500 volt ± 10%
35	513825	Condenser, ceramic 15 Mmfd. 500 volt
36	506326	Condenser, trimmer, 3 to 30 Mmfd.
37	506344	Condenser, ceramic 10 Mmfd. 500 volt
38	504972	Condenser, ceramic 33 Mmfd. 500 volt
41	513908	Condenser, ceramic 39 Mmfd. 500 volt ± 5%
44	505873	Condenser, ceramic 000 Mfd. 450 volt
46	505873	Condenser, ceramic 000 Mfd. 450 volt
49, 50	504973	Condenser, ceramic 33 Mmfd. 500 volt
55	505873	Condenser, ceramic 000 Mfd. 450 volt
58	505873	Condenser, ceramic 000 Mfd. 450 volt
58 B, C	506338	Condenser, ceramic 100 Mmfd. 400 volt
59, 60	505873	Condenser, ceramic 000 Mfd. 450 volt
63	505873	Condenser, ceramic 000 Mfd. 450 volt
65	505873	Condenser, ceramic 000 Mfd. 450 volt
68	506340	Condenser, ceramic 100 Mmfd. 500 volt
69	506340	Condenser, ceramic 100 Mmfd. 500 volt
70	512004	Condenser, 003 Mfd. 600 volt
71	512006	Condenser, 005 Mfd. 600 volt
74	512004	Condenser, 003 Mfd. 600 volt
76	505875	Condenser, ceramic 005 Mfd. 450 volt
82, 84	512006	Condenser, 005 Mfd. 600 volt
86	504937	Condenser, electrolytic 5 Mfd. 50 volt
87	504970	Condenser, 1 Mfd. 400 volt
92	511034	Condenser, 1 Mfd. 400 volt
93	512018	Condenser, 02 Mfd. 600 volt
96 A to D	505868	Condenser, electrolytic A-10 Mfd. 450 volt B-10 Mfd. 450 volt C-30 Mfd. 150 volt D-40 Mfd. 150 volt

DIA. GRAM NO.	PART NO.	DESCRIPTION
		RESISTORS
18	510017	Resistor, carbon 82 Ohms ½ watt ± 10%
20	510164	Resistor, carbon 12,000 Ohms ½ watt
22	510041	Resistor, carbon 1800 Ohms ½ watt
24	510041	Resistor, carbon 1800 Ohms ½ watt
26	510127	Resistor, carbon 1000 Ohms ½ watt
27	510155	Resistor, carbon 10,000 Ohms ½ watt
29	510155	Resistor, carbon 10,000 Ohms ½ watt
32	510067	Resistor, carbon 47,000 Ohms ¼ watt
33	510165	Resistor, carbon 15,300 Ohms ½ watt
34	510037	Resistor, carbon 22,000 Ohms ½ watt
39 A	506338	Resistor, carbon 47,000 Ohms 1/5 watt (Part of diode filter unit)
42	510165	Resistor, carbon 15,300 Ohms ½ watt
43	510165	Resistor, carbon 15,300 Ohms ½ watt
45	510127	Resistor, carbon 1000 Ohms ½ watt
47	510059	Resistor, carbon 18,000 Ohms ½ watt
48	510059	Resistor, carbon 18,000 Ohms ½ watt
52	510070	Resistor, carbon 68,000 Ohms ½ watt
53	510070	Resistor, carbon 68,000 Ohms ½ watt
54	510075	Resistor, carbon 220,000 Ohms ½ watt
56	510093	Resistor, carbon 2.2 Meg. ¼ watt
57 A, B, C	506416	Volume control, tone control & 2 Meg. ¼ watt
61	510085	Resistor, carbon 33,000 Ohms ½ watt
62	510085	Resistor, carbon 33,000 Ohms ½ watt
64	510137	Resistor, carbon 1000 Ohms ½ watt
67	510059	Resistor, carbon 18,000 Ohms ½ watt
73	510070	Resistor, carbon 68,000 Ohms ½ watt
75	510070	Resistor, carbon 68,000 Ohms ½ watt
77	510075	Resistor, carbon 220,000 Ohms ½ watt
78 A, B, C	510093	Resistor, carbon 2.2 Meg. ¼ watt
79	506416	Volume control, tone control & C "ON-OFF" switch & 2 Meg.
85	510085	Resistor, carbon 33,000 Ohms ½ watt
89	510085	Resistor, carbon 33,000 Ohms ½ watt ± 10%
90	510093	Resistor, carbon 2.2 Meg. ¼ watt
94	510075	Resistor, carbon 220,000 Ohms ½ watt
95	510075	Resistor, carbon 220,000 Ohms ½ watt
97, 98	510795	Resistor, wire wound 600 Ohms 5 watt
100	510013	Resistor, carbon 47 Ohms ½ watt
		COILS AND TRANSFORMERS
11	506353	Coil, Antenna (FM)
12	506354	Coil, Antenna (AM)
	506345	Slug core for AM antenna coil

DIA. GRAM NO.	PART NO.	DESCRIPTION
24	506345	Coil, R. F. (AM)
25	506277	Coil, R. F. (FM)
27	506351	Coil, R. F. (FM)
28	504975	Coil, Oscillator (AM)
33	506352	Coil, Oscillator (FM)
42	506660	Transformer, 1st I. F. (FM)
43	506323	Transformer, 1st I. F. (AM)
53	506324	Transformer, 2nd I. F. (AM)
54	506325	Transformer, 2nd I. F. (FM)
63	506322	Transformer, discriminator
101	505512	Transformer, output
105	506709	Transformer, power
		OTHER ELECTRICAL PARTS
16 A to E	506347	Switch, FM-AM, Phono
39 A, B, C	506338	Diode, filter unit A-Resistor, carbon 47,000 Ohms 1/5 watt) B-Condenser, ceramic 100 Mmfd. 400 volt) C-Rectifier, crystal
79	506640	Cross-over network for type "OK" 506550 Record Changer
80	506843	Motor, for type "OK" 506550 Record Changer 115 volt 60 cycle
81	506845	Switch, ON-OFF, for type "OK" 506550 Record Changer
102	506464	Speaker, P.M., 10 inch
103, 104	511821	Lamp, dial (Mazda No. 47) 6.3V .150 Ma.
105	506821	Antenna, for FM ("Twin Lead" assembly)
	506550	Record Changer
		MISCELLANEOUS PARTS
	301270	Base, for mtg. electrolytic condenser
	506552	Dial, scale
	502185	Gear, worm, tuning and band switch
	506551	Cabinet
	506553	Escutcheon, dial plate
	506343	Clip-coil mtg. for R.F. and Ant. coil (AM)

DIA. GRAM NO.	PART NO.	DESCRIPTION
	505101	Clip-I. F. transformer mtg.
	114355	Clip-retainer, on end of dial cord
	162226	Clip-retainer, dial scale
	117057	Cord, dial drive (1 ft required) per ft
	506476	Door, for hardware compartment
	506475	Door, for Record Storage Compartment (less hardware)
	506478	Door, pull for Record Changer Compartment
	506479	Door, push for Record Changer Compartment
	506479	Door, pull for Record Changer
	506380	Fastener, for loop antenna
	506476	Hinge, -door (supplied in pairs)
	506858	Knob, "FM-AM PHONO"
	506454	Knob, "VOLUME"
	506455	Knob, "TONE"
	506456	Knob, "TUNING"
	506841	Needle
	506966	Plug, 1-2 phono. motor cable
	506967	Plug, for phono. pick-up cable
	506477	Rail, for Record Changer drawer
	119097	Ring, for dial cord
	38501	Rubber bushing, for band switch
	162496	Rubber pad, for mtg. dial scale
	115455	Rubber pad, for mtg. chassis
	73995	Screw, No. 8-32 x ¾ for mounting chassis
	506844	Set screw, for needle
	505348	Shaft and drum, for dial
	505347	Shaft and gear, for band switch
	506913	Shaft, tuning
	506344	Slug core, for R.F. coil (AM)
	506344	Slug core, for antenna coil (AM)
	506348	Slug core, for antenna coils (FM)
	505307	Socket, for phono. motor cable
	505337	Socket, miniature
	506331	Socket, novar base
	115693	Socket, octal base
	180792	Socket, octal rectifier
	180088	Socket, phone plug
	505181	Spring, dial cord (FM-FM-AM-AM)
	506914	Spring, for tuning drive
	504818	Window, for dial

©John F. Rider

STAGE GAIN MEASUREMENT PROCEDURE

REQUIRED INSTRUMENTS: The amount of amplification or "gain" of most of the stages of this receiver can be measured with an A.C. Vacuum Tube Voltmeter of the high frequency type. An AM (600 KC.) as well as an FM (98 MC.) signal source is required. For gain measurements in the FM antenna—FM converter—FM 1st I.F. stages, a microvolt calibrated FM signal generator should preferably be used.

PROCEDURE: It is exceedingly important to adhere to the procedure outlined below since the accuracy of these measurements will be affected to a considerable extent by the failure to establish proper operating conditions.

1. Be sure that R.F., I.F. and Discriminator stages are carefully and accurately aligned by utilizing the alignment procedure given in this manual.
2. Connect Signal Generator as shown below. Note that generator connections differ for "AM" and "FM" measurements.
3. For "AM" measurements, set signal generator to 600 KC. (400 cycle modulation) and then carefully tune radio receiver to this signal by using an output meter to indicate peak output. If a local station interferes, set generator to a nearby frequency and re-tune the receiver.
4. For "FM" measurements, set signal generator to 98 MC. (400 cycle modulation with 22½ KC. deviation) and then carefully tune radio receiver to this signal by using a D.C. Vacuum Tube Voltmeter as an output indicator—meter must be connected between pin No. 7 of 6AL5 tube and chassis. If a local station interferes, set generator to a nearby frequency and re-tune the receiver.
5. The values of stage gain which are given here were measured with a fixed bias of —3 volts on the control grids of all R.F. and I.F. tubes which are connected to the A.V.C. system. Therefore, these values are not intended to indicate the full capability of a stage but they will serve as a convenient basis for determining proper operation. In order to duplicate the fixed bias voltage, connect the negative terminal of a 3 volt battery to both A.V.C. supply lines by effecting a common connection to terminal 4 of 2nd FM-I.F. transformer and terminal 2 of 1st AM-I.F. transformer. Then connect the positive battery lead to the receiver chassis.
6. R.F. and I.F. circuits are slightly de-tuned when contact is made with an instrument probe and this action, which is indicated by a change in the output meter reading, may seriously affect the gain measurement. Therefore, it is important to adjust the associated circuit trimmer for a maximum output meter reading and to set the input signal level to a convenient reference point on the gain measuring instrument while the probe is making contact. After removing the probe it is again necessary to adjust the trimmer so as to obtain the same output meter reading and thereby assure that the signal voltage at the specified point has not changed as a result of circuit de-tuning.

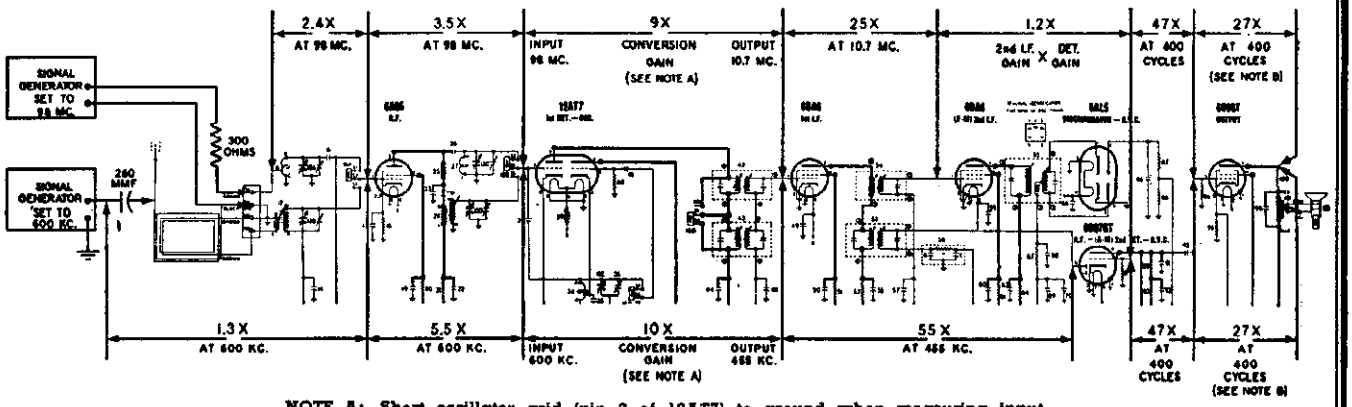

NOTE A: Short oscillator grid (pin 2 of 12AT7) to ground when measuring input voltage at signal grid (pin 7) of 12AT7 tube.

NOTE B: Measured with input voltage of 0.3.

DIFFERENCES in tube characteristics, tolerance of parts, adjustment of tuned circuits and variations in line voltage will influence stage gain. These factors should be given due attention in event the gain of a stage varies extensively from the values shown above.

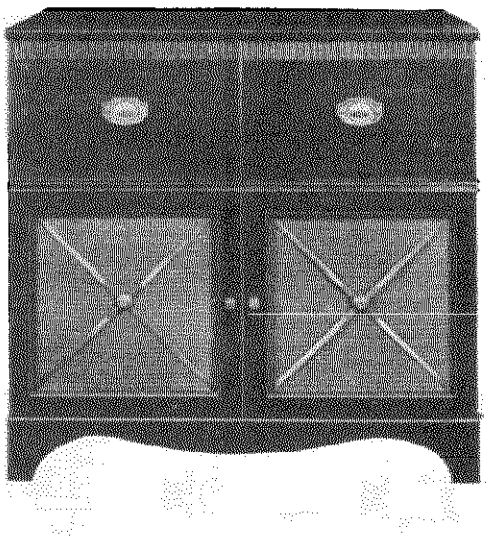

DIAL AND POINTER DRIVE CORD ARRANGEMENT

SIDE VIEW

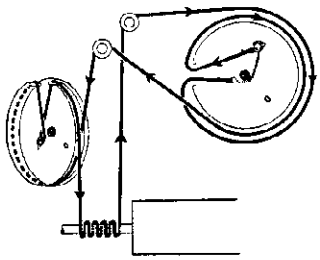

To string dial cord, set gang condenser to fully open position and use the following parts:

114955 Clip on end of cord
117057 Cord (3 feet)
119087 Ring for dial cord
505161 Tension spring

Do not connect to a Direct Current (D. C.) or to a 50 cycle A.C. power supply.

© John F. Rider

BROADCAST BAND —"AM"—ALIGNMENT PROCEDURE

1. Disconnect leads from FM-AM antenna terminal strip (labeled FM-FM-AM-AM) at back of chassis; also disconnect speaker leads and phono plugs. Remove chassis and speaker. If desired, allow speaker to remain in cabinet and connect to receiver by extension leads.
2. Stand chassis on one edge so that all trimmers are accessible.
3. Loop antenna leads (on cabinet) do not have to be connected to terminal strip on chassis while I. F. stages are being aligned. Before starting alignment of Ant., R.F., and Osc. stages, reconnect all antenna leads to chassis—do not attempt to use extension leads; place chassis as close as required to cabinet so that connections may be made direct to antenna terminal strip at back.
4. With the gang condenser fully meshed, dial pointer should be in the position indicated by the last division below 55 on the dial. If it is set incorrectly, hold tuning shaft steady and reposition pointer.
5. Connect an output meter across speaker voice coil, or from plate of 6V6GT tube to chassis through a 0.1 Mfd. condenser.
6. Connect ground lead of signal generator to the receiver chassis.
7. Set volume control of maximum volume position and use a weak signal from the signal generator.

DUMMY ANT. IN SERIES WITH SIGNAL GENERATOR	CONNECT HIGH SIDE OF SIGNAL GENERATOR TO	SIGNAL GENERATOR FREQUENCY	BAND SWITCH POSITION	RECEIVER DIAL SETTING	TRIMMER OR SLUG NUMBER	TRIMMER DESCRIPTION	TYPE OF ADJUSTMENT
.1 MFD. Condenser	Lug on trimmer No. 6 at top of gang (see figure below for location of trimmer).	455 KC	AM Broadcast (Middle)	Any point where it does not affect the signal.	1-2	2nd I.F.	Adjust for maximum output. Then repeat adjustment.
					3-4	1st I.F.	
260 MMFD. Mica Condenser	External Antenna Clip on Cabinet	1500 KC	AM Broadcast (Middle)	1500 KC	5	Broadcast Oscillator	Adjust for maximum output.
260 MMFD. Mica Condenser	External Antenna Clip on Cabinet	1500 KC	AM Broadcast (Middle)	Tune to 1500 Kc. generator signal.	6	Broadcast R.F.	Adjust for maximum output.
					7	Broadcast Antenna	Adjust for maximum output.
260 MMFD. Mica Condenser	External Antenna Clip on Cabinet	600 KC	AM Broadcast (Middle)	Tune to 600 Kc. generator signal.	8	Adjustable core of Broadcast R.F. Coil.	Adjust for maximum output.
					9	Adjustable core of Broadcast Antenna Coil.	Adjust for maximum output.
Repeat adjustment of trimmers 6 & 7 and slugs 8 & 9 until one no longer detunes the other.							

NOTE: It is preferable to check the alignment of the I.F. stages in the FM channel after completing AM alignment.

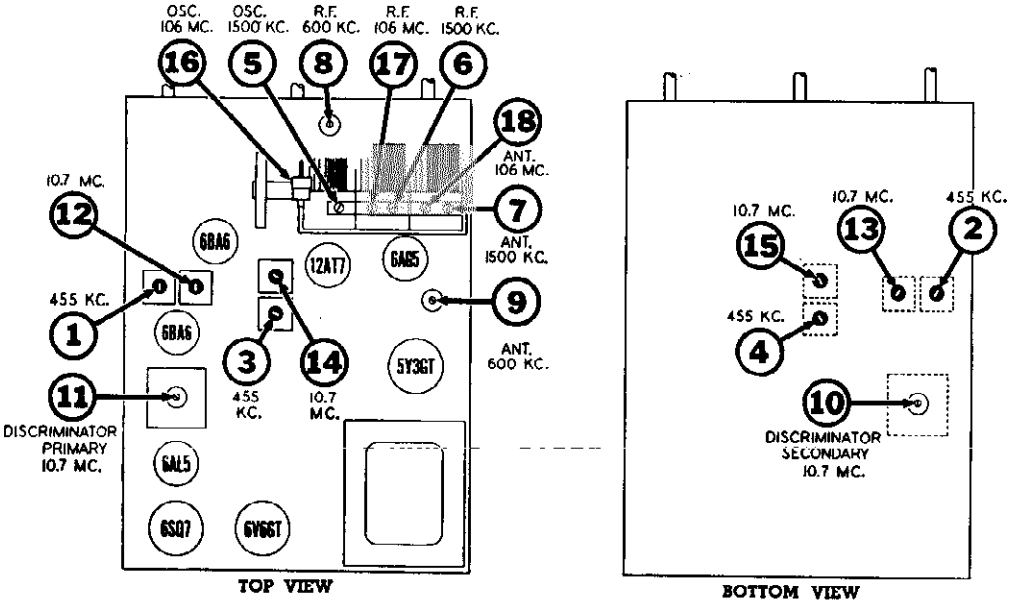

Fig. 1
TRIMMER LOCATION CHART

This single "S" curve pattern results when 'scope uses properly phased "sine wave" horizontal deflection voltage.

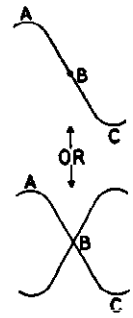

This double "S" curve pattern results when 'scope uses properly phased "Sawtooth" horizontal deflection voltage whose frequency is twice the modulation frequency of signal generator.

FIG. 2

MODEL D1949

FREQUENCY MODULATION—"FM"—ALIGNMENT PROCEDURE
(USING A VACUUM TUBE VOLTMETER AND AM SIGNAL GENERATOR)

INSTRUMENTS: Although it is preferable to use on FM generator and an oscilloscope, reasonably accurate alignment is obtainable when using a conventional AM generator and vacuum tube voltmeter providing proper care is exercised in adjusting the discriminator circuit trimmer.

IMPORTANT: When using an AM signal generator, it should be capable of producing fundamental frequencies of 10.7 MC and 88 to 108 MC — avoid using an AM generator which produces signals in the 88 to 108 MC range by using harmonics higher than the second. Generators which are dependent upon third, fourth or fifth harmonics for output frequencies of 88 to 108 MC will generally produce undesirable spurious beat signals with the local oscillator in the receiver and alignment will be exceedingly difficult.

1. If alignment of both AM and FM channels is required it is necessary to align the AM channel first, then align the FM channel as instructed in chart below (AM alignment procedure is given on the preceding page).
2. Disconnect leads from FM-AM aerial terminal strip (labelled FM-FM-AM-AM) at back of chassis; also disconnect speaker leads and phono plugs. Remove chassis and speaker. If desired, allow speaker to remain in cabinet and connect to receiver by extension leads.
3. With the gang condenser fully meshed, dial pointer should be in the position indicated by the last division below 88 on the dial. If it is set incorrectly, hold tuning shaft steady and reposition pointer.
4. A specific setting of the receiver volume control is not required. However, it will be found convenient to leave it in the maximum volume position so that alignment signals will be audible even though the output indication is obtained by a V-T voltmeter connected to points in the discriminator circuit.
5. Dress FM circuit leads as short and straight as possible, particularly those in the oscillator circuit. I.F. plate and grid leads should also be kept short and straight.
6. Set band switch to the FM (extreme counter-clockwise) position.

SIGNAL GENERATOR CONNECTIONS	FREQUENCY & TYPE OF MODULATION	VACUUM TUBE VOLTMETER CONNECTIONS	RECEIVER DIAL SETTING	TRIMMER OR SLUG NUMBER	TRIMMER DESCRIPTION	TYPE OF ADJUSTMENT AND OUTPUT INDICATION
Connect high side in series with an .01 Mfd condenser to lug on trimmer No. 17 at top of gang (see illustration on page 8 for location of trimmer). Connect ground lead to receiver chassis in vicinity of 12AT7 tube.	**10.7 MC** AM signal may be 400 cycle modulated.	Connect common (or ground) terminal of meter to receiver chassis. D.C. probe lead of meter is then connected to pin No. 7 of the 6AL5 tube.	Any position where it does not affect the signal.	11	Discriminator Primary	Adjust these trimmers for maximum meter reading -the output voltage will be of negative polarity.
				12 and 13	2nd I.F.	
				14 and 15	1st I.F.	
Same as above	Same as above	Connect common (or ground) terminal of V-T voltmeter to the junction of resistors 87 and 88 in the discriminator circuit. D.C. probe lead of meter is then connected to junction of resistor No. 67 (18,000 ohms) and condenser No. 70 (.003 MFD.) which are in the discriminator output circuit. Set meter for operation on its lowest D.C. voltage range.	Same as above	10	Discriminator Secondary	Note that as trimmer No. 10 is rotated a point will be found where voltmeter will swing from a positive to a negative reading or vice versa. Correct setting of trimmer No. 10 is obtained when meter reads zero as trimmer is moved through this point. The adjustment is somewhat critical and considerable care must be exercised to set the trimmer for a zero meter indication.
Recheck adjustment of trimmers No. 10 and No. 11 to be sure that both are set as accurately as possible to obtain the specified output indication.						
Connect generator "high" side in series with a 300 ohm carbon resistor to end terminal marked "FM" on strip at back of chassis. Generator ground lead must connect to next terminal marked "GND".	**106 MC** AM signal may be 400 cycle modulated.	Connect common (or ground) terminal of meter to receiver chassis. D.C. probe lead of meter is then connected to Pin No. 7 of the 6AL5 tube.	106 MC	16	Oscillator Trimmer	Set trimmer No. 16 to receive 106 MC. signal as indicated by maximum meter reading. IMPORTANT: It will be noted that there are two different settings of trimmer No. 16 at which the 106 MC. signal will be received—always select the trimmer setting which is nearest to the low capacity end of its range.
Same as above	Same as above	Same as above	Tune to 106 MC. generator signal.	17	R.F. Trimmer	Adjust trimmer No. 17 for maximum meter reading.
				18	Antenna Trimmer	Adjust trimmer No. 18 for maximum meter reading.
				14 and 15	1st I.F.	Recheck adjustment of these trimmers for maximum meter reading.

Check calibration and tracking of receiver with input signals of 90 and 98 MC. If difference between dial pointer setting and 90 or 98 MC. calibration mark does not exceed ± 0.3 MC. and antenna and R.F. circuits are tracking properly, then alignment may be considered satisfactory and no further adjustment is necessary.

Where the calibration error is greater than ± 0.3 MC. it is advisable to make the following adjustments:

1. If pointer falls above the 90 MC. calibration point, it will be necessary to slightly spread the windings of the FM oscillator coil. Then repeat the two preceding adjustments of trimmers 16, 17 and 18 at 106 MC. Should it be found impossible to obtain the 106 MC. signal at the proper point on the dial by adjustment of the trimmers it will then be necessary to adjust the spacing of the gang condenser plates.
2. If pointer falls below the 90 MC. calibration point, it will be necessary to push the windings together on the FM oscillator coil. Then repeat the two preceding adjustments of trimmers 16, 17 and 18 at 106 MC. Should it be found impossible to obtain the 106 MC. signal at the proper point on the dial by adjustment of the trimmers it will then be necessary to adjust the spacing of the gang condsenser plates.
3. Correction for mistracking of antenna and R.F. may be accomplished by adjusting coil turns and gang plate spacing in the same manner as outlined above for the oscillator stage.

FREQUENCY MODULATION—"FM"—ALIGNMENT PROCEDURE

(USING AN OSCILLOSCOPE AND FM "SWEEP" GENERATOR)

INSTRUMENTS: Alignment of the FM circuits in this receiver can be most conveniently accomplished with an FM signal generator. When using this type generator, the output indicator must be an oscilloscope.

1. If alignment of both AM and FM channels is required it is necessary to align the AM channel first, then align the FM channel as instructed in chart below (AM alignment procedure is given on page 8).
2. Disconnect leads from FM-AM aerial terminal strip (labelled FM-FM-AM-AM) at back of chassis; also disconnect speaker leads and phono plugs. Remove chassis and speaker. (If desired, allow speaker to remain in cabinet and connect to receiver by extension leads.)
3. With the gang condenser fully meshed, dial pointer should be in the position indicated by the last division below 88 on the dial. If it is set incorrectly, hold tuning shaft steady and reposition pointer.
4. A specific setting of the receiver volume control is not required, however, it will be found convenient to leave it in the maximum volume position so that alignment signals will be audible even though the output indication is obtained by an oscilloscope connected to points in the discriminator circuit.
5. Dress FM circuit leads as short and straight as possible, particularly those in the oscillator circuit. I.F. plate and grid leads should also be kept short and straight.
6. **Set band switch to the FM (extreme counter-clockwise) position.**
7. Set tone control to fully counter-clockwise position.

SIGNAL GENERATOR CONNECTIONS	FREQUENCY & TYPE OF MODULATION	OSCILLOSCOPE CONNECTIONS	RECEIVER DIAL SETTING	TRIMMER OR SLUG NUMBER	TRIMMER DESCRIPTION	TYPE OF ADJUSTMENT AND OUTPUT INDICATION
Connect high side in series with an .01 Mfd condenser to lug on trimmer No. 17 at top of gang (see illustration on page 8 for location of trimmer). Connect ground lead to receiver chassis in vicinity of 12AT7 tube.	**10.7 MC** FM signal should preferably be modulated ±400 KC.	Connect vertical amplifier "high" lead to junction of resistor No. 67 (18000 ohms) and condenser No. 70 (.003 Mfd.) which are in discriminator output circuit. Connect scope ground lead to receiver chassis. Set vertical amplifier of scope for maximum amplification. Where FM signal generator provides an output voltage for synchronization, connect this voltage to "sync" terminals of the scope.	Any position where it does not affect the signal.	10	Discriminator Secondary	Before attempting to adjust trimmer No. 10, set trimmers No. 11, 12, 13, 14 and No. 15 for approximately maximum sound output from the speaker (output meter not required). This is done to obtain sufficient signal for an oscilloscope pattern of desirable amplitude when making the following discriminator trimmer adjustment. Adjust setting of trimmer No. 10 until a pattern similar to that shown in Fig. 2 appears on the screen. If pattern does not remain stationary operate sweep frequency control on 'scope and also "sync" control until desired result is obtained. Correct setting of trimmer No. 10 is obtained when crossover point "B" (Fig. 2) is centrally located in both the horizontal and vertical directions; in addition that portion of the curve between "A" and "C" should be as linear (straight) as possible.
Same as above	Same as above	Same as above	Same as above	11	Discriminator Primary	Adjust these trimmers for maximum amplitude and steepness of that portion of the pattern between "A" and "C" (see Fig. 2).
				12 and 13	2nd I.F.	
				14 and 15	1st I.F.	
Recheck adjustments of trimmers No. 10 and No. 11 to be sure that both are set as accurately as possible to obtain correct cross-over point or symmetry of pattern.						
Connect generator "high" side in series with a 300 ohm carbon resistor to end terminal marked "FM" on strip at back of chassis. Generator ground lead must connect to next terminal marked "GND"	**106 MC** FM signal should preferably be modulated ±400 KC.	Same as above	**106 MC**	16	Oscillator Trimmer	Adjust trimmer No. 16 to obtain the symmetrical pattern shown in Fig. 2. Correct setting of trimmer No. 16 is obtained when cross-over point in pattern is centrally located. **IMPORTANT:** It will be noted that there are two different settings of trimmer No. 16 at which the desired 'scope pattern can be obtained—always select the trimmer setting which is nearest to the low capacity end of its range.
Same as above	Same as above	Same as above	Tune to 106 MC. generator signal.	17	R.F. Trimmer	Adjust trimmer No. 17 for maximum amplitude of pattern.
				18	Antenna Trimmer	Adjust trimmer No. 18 for maximum amplitude of pattern.
				14 and 15	1st I.F.	Recheck adjustment of these trimmers for maximum amplitude of pattern.

Check calibration and tracking of receiver with input signals of 90 and 98 MC. If difference between dial pointer setting and 90 or 98 MC. calibration mark does not exceed ± 0.3 MC. and antenna and R.F. circuits are tracking properly, then alignment may be considered satisfactory and no further adjustment is necessary.

Where the calibration error is greater than ± 0.3 MC. it is advisable to make the following adjustments:

1. If pointer falls above the 90 MC. calibration point, it will be necessary to slightly spread the windings of the FM oscillator coil. Then repeat the two preceding adjustments of trimmers 16, 17 and 18 at 106 MC. Should it be found impossible to obtain the 106 MC. signal at the proper point on the dial by adjustment of the trimmers it will then be necessary to adjust the spacing of the gang condenser plates.
2. If pointer falls below the 90 MC. calibration point, it will be necessary to push the windings together on the FM oscillator coil. Then repeat the two preceding adjustments of trimmers 16, 17 and 18 at 106 MC. Should it be found impossible to obtain the 106 MC. signal at the proper point on the dial by adjustment of the trimmers it will then be necessary to adjust the spacing of the gang condenser plates.
3. Correction for mistracking of antenna and R.F. may be accomplished by adjusting coil turns and gang plate spacing in the same manner.

©John F. Rider

MODEL D1952

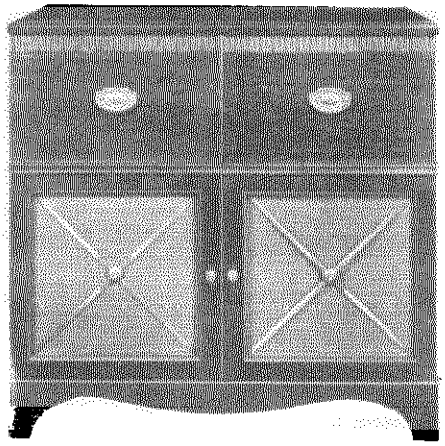

This radio receiver and phonograph combination must be connected to 60 cycle Alternating Current (A.C.) at 105 to 125 volts.

Do not connect to a Direct Current (D.C.) or to a 50 cycle A.C. power supply.

STAGE GAIN MEASUREMENT PROCEDURE

REQUIRED INSTRUMENTS: The amount of amplification or "gain" of most of the stages of this receiver can be measured with an A.C. Vacuum Tube Voltmeter of the high frequency type. An AM (600 KC.) as well as an FM (98 MC.) signal source is required. For gain measurements in the FM antenna—FM converter—FM 1st I.F. stages, a microvolt calibrated FM signal generator should preferably be used.

PROCEDURE: It is exceedingly important to adhere to the procedure outlined below since the accuracy of these measurements will be affected to a considerable extent by the failure to establish proper operating conditions.

1. Be sure that R.F., I.F. and Discriminator stages are carefully and accurately aligned by utilizing the alignment procedure given in this manual.
2. Connect Signal Generator as shown below. Note that generator connections differ for "AM" and "FM" measurements.
3. For "AM" measurements, set signal generator to 600 KC. (400 cycle modulation) and then carefully tune radio receiver to this signal by using an output meter to indicate peak output. If a local station interferes, set generator to a nearby frequency and re-tune the receiver.
4. For "FM" measurements, set signal generator to 98 MC. (400 cycle modulation with 22½ KC. deviation) and then carefully tune radio receiver to this signal by using a D.C. Vacuum Tube Voltmeter as an output indicator—meter must be connected between pin No. 7 of 6AL5 tube and chassis. If a local station interferes, set generator to a nearby frequency and re-tune the receiver.
5. The values of stage gain which are given here were measured with a fixed bias of —3 volts on the control grids of all R.F. and I.F. tubes which are connected to the A.V.C. system. Therefore, these values are not intended to indicate the full capability of a stage but they will serve as a convenient basis for determining proper operation. In order to duplicate the fixed bias voltage, connect the negative terminal of a 3 volt battery to both A.V.C. supply lines by effecting a common connection to terminal 4 of 2nd FM-I.F. transformer and terminal 2 of 1st AM-I.F. transformer. Then connect the positive battery lead to the receiver chassis.
6. R.F. and I.F. circuits are slightly de-tuned when contact is made with an instrument probe and this action, which is indicated by a change in the output meter reading, may seriously affect the gain measurement. Therefore, it is important to adjust the associated circuit trimmer for a maximum output meter reading and to set the input signal level to a convenient reference point on the gain measuring instrument while the probe is making contact. After removing the probe it is again necessary to adjust the trimmer so as to obtain the same output meter reading and thereby assure that the signal voltage at the specified point has not changed as a result of circuit de-tuning.

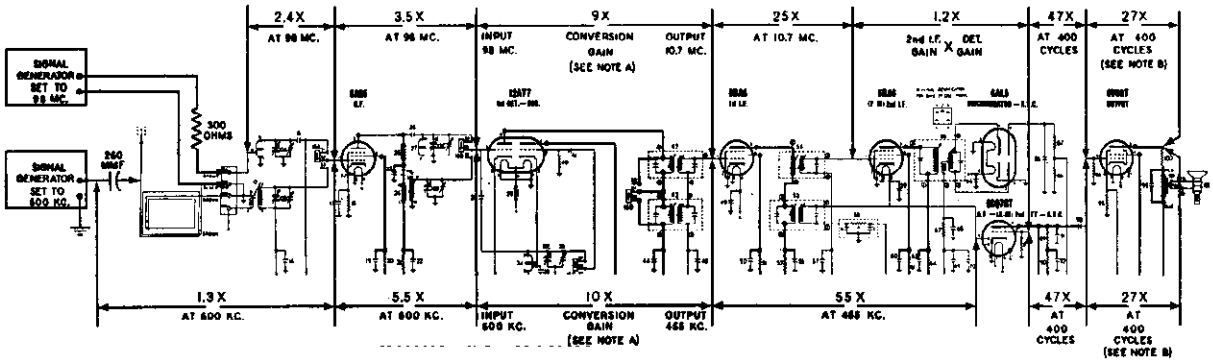

NOTE A: Short oscillator grid (pin 2 of 12AT7) to ground when measuring input voltage at signal grid (pin 7) of 12AT7 tube.

NOTE B: Measured with input of 0.3 volt.

DIFFERENCES in tube characteristics, tolerance of parts, adjustment of tuned circuits and variations in line voltage will influence stage gain. These factors should be given due attention in event the gain of a stage varies extensively from the values shown above.

©John F. Rider

HOW TO OPERATE THE CONTROLS

THE DIAL has two separate scales. **UPPER SCALE** covers standard "Broadcast" band frequencies between 540 and 1700 Kc.; add a zero to the dial numbers on this scale to obtain frequency in kilocycles (Kc.). **BOTTOM SCALE** covers frequencies between 88 and 108 Mc. (Megacycles). All of the new Frequency Modulation ("FM") stations are located in this tuning range.

TONE CONTROL

Use this control (large knob) to select most pleasing tone. Extreme clockwise setting is recommended for speech and settings in the middle range are suggested for music. If a mellow tone with reduced high note content is desired, turn knob fully counter-clockwise.

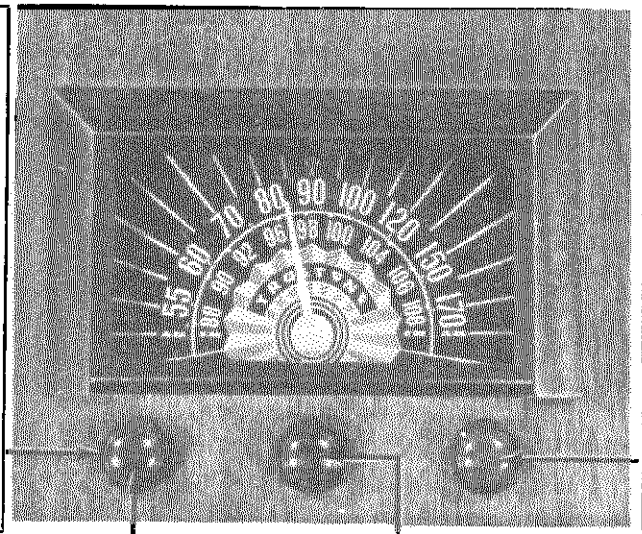

FM-AM-PHONO SWITCH

For Standard Broadcast stations, turn knob to center position (AM). For FM stations, turn knob counter-clockwise to position marked (FM). For PHONO operation, turn knob to clockwise position marked (PHONO).

ON-OFF SWITCH AND VOLUME CONTROL

Turn this (small) knob clockwise to turn set on. Continuing to turn clockwise will increase volume.

TUNING CONTROL

Use this control to tune receiver to the desired station.

TUBES USED

The tubes used in this receiver are arranged on the chassis as shown in illustration at the right.

NOTE: IF TUBES ARE REMOVED FOR TEST OR REPLACEMENT, MAKE CERTAIN THAT EACH TUBE IS PLACED IN ITS PROPER SOCKET WHEN REPLACING THE TUBES IN THE SET.

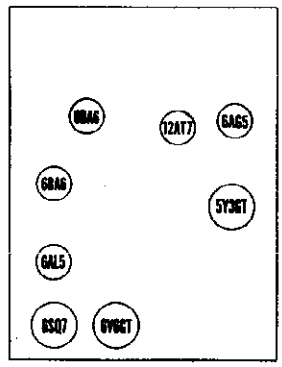

REAR OF CHASSIS

©John F. Rider

MODEL D1952

SOCKET VOLTAGES

Measured with voltmeter having sensitivity of 1000 ohms per volt except where indicated by (*). The (*) symbol designates a vacuum tube voltmeter measurement.

ALL MEASUREMENTS MADE WITH BAND SWITCH IN "FM" POSITION UNLESS OTHERWISE INDICATED

DIAL TUNED TO 88 MC. FOR "FM" MEASUREMENTS

DIAL TUNED TO 540 KC. FOR "AM" MEASUREMENTS

VOLUME CONTROL SET TO MINIMUM WITH NO SIGNAL

GROUND ALL ANTENNA TERMINALS

BOTTOM VIEW OF CHASSIS

117 VOLT 60 CYCLE A. C. POWER SUPPLY USED FOR THESE MEASUREMENTS.

ALL VOLTAGES MEASURED BETWEEN SOCKET TERMINALS AND CHASSIS.

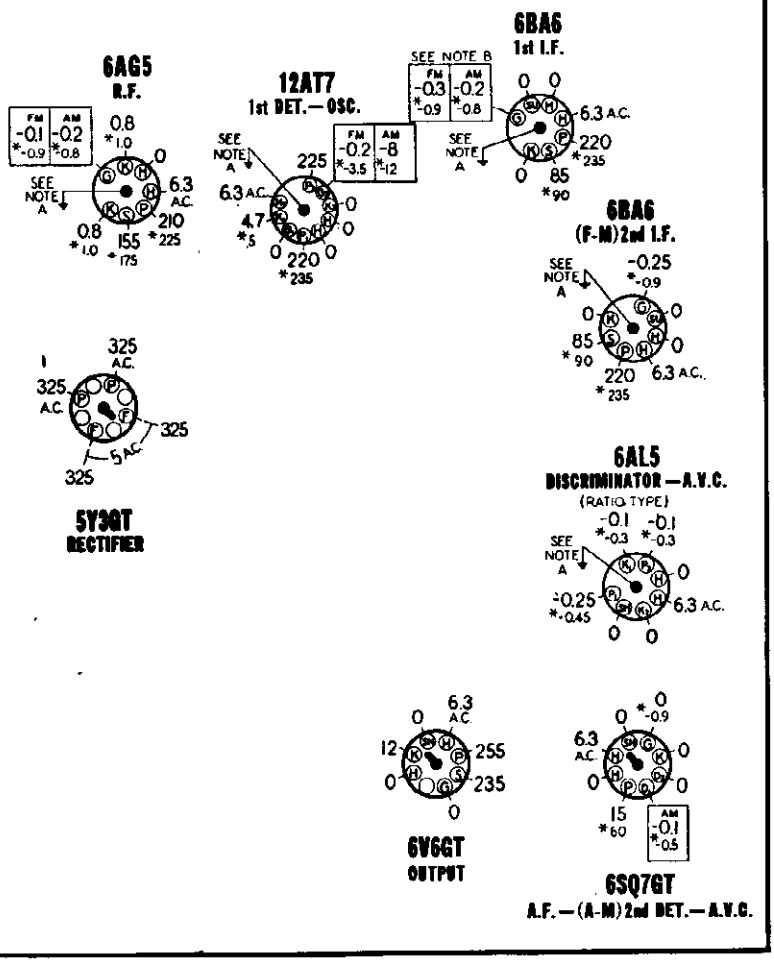

REAR OF CHASSIS

NOTE A: Grounding of center stud on tube socket is necessary to reduce capacity coupling between other pins. Oscillation may result if this ground is omitted.

NOTE B: Oscillation may occur when meter probe contacts this tube pin. In that event, the vacuum tube voltmeter measurement will be approximately -4.5 volts.

DIAL AND POINTER DRIVE CORD ARRANGEMENT

SIDE VIEW

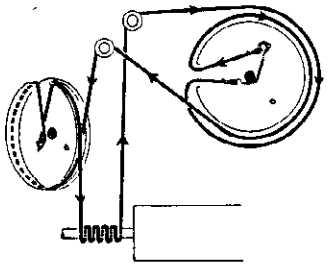

To string dial cord, set gang condenser to fully open position and use the following parts:

114955 Clip on end of cord
117057 Cord (3 feet)
119087 Ring for dial cord
505161 Tension spring

©John F. Rider

BROADCAST BAND —"AM"—ALIGNMENT PROCEDURE

1. Disconnect leads from FM-AM antenna terminal strip (labeled FM-FM-AM-AM) at back of chassis; also disconnect speaker leads and phono plugs. Remove chassis and speaker. If desired, allow speaker to remain in cabinet and connect to receiver by extension leads.
2. Stand chassis on one edge so that all trimmers are accessible.
3. Loop antenna leads (on cabinet) do not have to be connected to terminal strip on chassis while I. F. stages are being aligned. Before starting alignment of Ant., R.F., and Osc. stages, reconnect all antenna leads to chassis—do not attempt to use extension leads; place chassis as close as required to cabinet so that connections may be made direct to antenna terminal strip at back.
4. With the gang condenser fully meshed, dial pointer should be in the position indicated by the last division below 55 on the dial. If it is set incorrectly, hold tuning shaft steady and reposition pointer.
5. Connect an output meter across speaker voice coil, or from plate of 6V6GT tube to chassis through a 0.1 Mfd. condenser.
6. Connect ground lead of signal generator to the receiver chassis.
7. Set volume control of maximum volume position and use a weak signal from the signal generator.

DUMMY ANT. IN SERIES WITH SIGNAL GENERATOR	CONNECT HIGH SIDE OF SIGNAL GENERATOR TO	SIGNAL GENERATOR FREQUENCY	BAND SWITCH POSITION	RECEIVER DIAL SETTING	TRIMMER OR SLUG NUMBER	TRIMMER DESCRIPTION	TYPE OF ADJUSTMENT
.1 MFD. Condenser	Lug on trimmer No. 6 at top of gang (see figure below for location of trimmer).	455 KC	AM Broadcast (Middle)	Any point where it does not affect the signal.	1-2	2nd I.F.	Adjust for maximum output. Then repeat adjustment.
					3-4	1st I.F.	
260 MMFD. Mica Condenser	External Antenna Clip on Cabinet	1500 KC	AM Broadcast (Middle)	1500 KC	5	Broadcast Oscillator	Adjust for maximum output.
260 MMFD. Mica Condenser	External Antenna Clip on Cabinet	1500 KC	AM Broadcast (Middle)	Tune to 1500 Kc. generator signal.	6	Broadcast R.F.	Adjust for maximum output.
					7	Broadcast Antenna	Adjust for maximum output.
260 MMFD. Mica Condenser	External Antenna Clip on Cabinet	600 KC	AM Broadcast (Middle)	Tune to 600 Kc. generator signal.	8	Adjustable core of Broadcast R.F. Coil.	Adjust for maximum output.
					9	Adjustable core of Broadcast Antenna Coil.	Adjust for maximum output.

Repeat adjustment of trimmers 6 & 7 and slugs 8 & 9 until one no longer detunes the other.

NOTE: It is preferable to check the alignment of the I.F. stages in the FM channel after completing AM alignment.

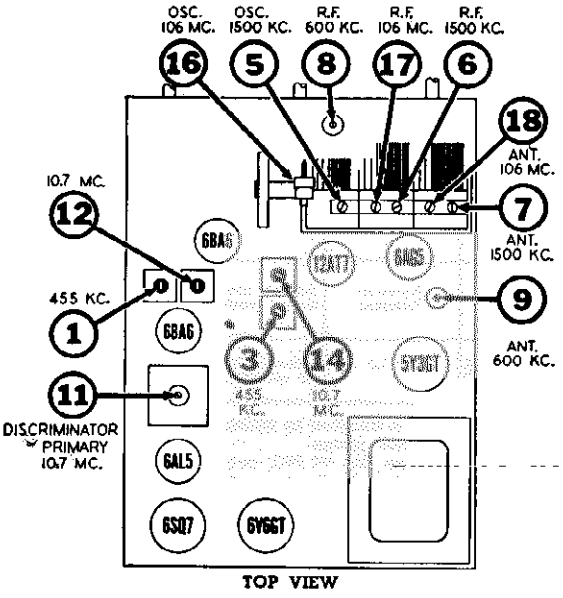

Fig. 1
TRIMMER LOCATION CHART

This single "S" curve pattern results when 'scope uses properly phased "sine wave" horizontal deflection voltage.

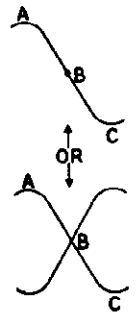

This double "S" curve pattern results when 'scope uses properly phased "Sawtooth" horizontal deflection voltage whose frequency is twice the modulation frequency of signal generator.

FIG. 2

©John F. Rider

MODEL D1952

FREQUENCY MODULATION—"FM"—ALIGNMENT PROCEDURE
(USING A VACUUM TUBE VOLTMETER AND AM SIGNAL GENERATOR)

INSTRUMENTS: Although it is preferable to use an FM generator and an oscilloscope, reasonably accurate alignment is obtainable when using a conventional AM generator and vacuum tube voltmeter providing proper care is exercised in adjusting the discriminator circuit trimmer.

IMPORTANT: When using an AM signal generator, it should be capable of producing fundamental frequencies of 10.7 MC and 88 to 108 MC — avoid using an AM generator which produces signals in the 88 to 108 MC range by using harmonics higher than the second. Generators which are dependent upon third, fourth or fifth harmonics for output frequencies of 88 to 108 MC will generally produce undesirable spurious beat signals with the local oscillator in the receiver and alignment will be exceedingly difficult.

1. If alignment of both AM and FM channels is required it is necessary to align the AM channel first, then align the FM channel as instructed in chart below (AM alignment procedure is given on the preceding page).
2. Disconnect leads from FM-AM aerial terminal strip (labelled FM-FM-AM-AM) at back of chassis; also disconnect speaker leads and phono plugs. Remove chassis and speaker. If desired, allow speaker to remain in cabinet and connect to receiver by extension leads.
3. With the gang condenser fully meshed, dial pointer should be in the position indicated by the last division below 88 on the dial. If it is set incorrectly, hold tuning shaft steady and reposition pointer.
4. A specific setting of the receiver volume control is not required. However, it will be found convenient to leave it in the maximum volume position so that alignment signals will be audible even though the output indication is obtained by a V-T voltmeter connected to points in the discriminator circuit.
5. Dress FM circuit leads as short and straight as possible, particularly those in the oscillator circuit. I.F. plate and grid leads should also be kept short and straight.
6. Set band switch to the FM (extreme counter-clockwise) position.

SIGNAL GENERATOR CONNECTIONS	FREQUENCY & TYPE OF MODULATION	VACUUM TUBE VOLTMETER CONNECTIONS	RECEIVER DIAL SETTING	TRIMMER OR SLUG NUMBER	TRIMMER DESCRIPTION	TYPE OF ADJUSTMENT AND OUTPUT INDICATION
Connect high side in series with an .01 Mfd condenser to lug on trimmer No. 17 at top of gang (see illustration on page 9 for location of trimmer). Connect ground lead to receiver chassis in vicinity of 12AT7 tube.	**10.7 MC** AM signal may be 400 cycle modulated.	Connect common (or ground) terminal of meter to receiver chassis. D.C. probe lead of meter is then connected to pin No. 7 of the 6AL5 tube.	Any position where it does not affect the signal.	11	Discriminator Primary	Adjust these trimmers for maximum meter reading—the output voltage will be of negative polarity.
				12 and 13	2nd I.F.	
				14 and 15	1st I.F.	
Same as above	Same as above	Connect common (or ground) terminal of V-T voltmeter to the junction of resistors 87 and 88 in the discriminator circuit. D.C. probe lead of meter is then connected to junction of resistor No. 67 (18,000 ohms) and condenser No. 70 (.003 MFD.) which are in the discriminator output circuit. Set meter for operation on its lowest D.C. voltage range.	Same as above	10	Discriminator Secondary	Note that as trimmer No. 10 is rotated a point will be found where voltmeter will swing from a positive to a negative reading or vice versa. Correct setting of trimmer No. 10 is obtained when meter reads zero as trimmer is moved through this point. The adjustment is somewhat critical and considerable care must be exercised to set the trimmer for a zero meter indication.
Recheck adjustment of trimmers No. 10 and No. 11 to be sure that both are set as accurately as possible to obtain the specified output indication.						
Connect generator "high" side in series with a 300 ohm carbon resistor to end terminal marked "FM" on strip at back of chassis. Generator ground lead must connect to next terminal marked "GND".	**108 MC** AM signal may be 400 cycle modulated.	Connect common (or ground) terminal of meter to receiver chassis. D.C. probe lead of meter is then connected to Pin No. 7 of the 6AL5 tube.	106 MC	16	Oscillator Trimmer	Set trimmer No. 16 to receive 106 MC. signal as indicated by maximum meter reading. IMPORTANT: It will be noted that there are two different settings of trimmer No. 16 at which the 106 MC. signal will be received—always select the trimmer setting which is nearest to the low capacity end of its range.
Same as above	Same as above	Same as above	Tune to 106 MC. generator signal.	17	R.F. Trimmer	Adjust trimmer No. 17 for maximum meter reading.
				18	Antenna Trimmer	Adjust trimmer No. 18 for maximum meter reading.
				14 and 15	1st I.F.	Recheck adjustment of these trimmers for maximum meter reading.

Check calibration and tracking of receiver with input signals of 90 and 98 MC. If difference between dial pointer setting and 90 or 98 MC. calibration mark does not exceed ± 0.3 MC. and antenna and R.F. circuits are tracking properly, then alignment may be considered satisfactory and no further adjustment is necessary.

Where the calibration error is greater than ± 0.3 MC. it is advisable to make the following adjustments:

1. If pointer falls above the 90 MC. calibration point, it will be necessary to slightly spread the windings of the FM oscillator coil. Then repeat the two preceding adjustments of trimmers 16, 17 and 18 at 106 MC. Should it be found impossible to obtain the 106 MC. signal at the proper point on the dial by adjustment of the trimmers it will then be necessary to adjust the spacing of the gang condenser plates.
2. If pointer falls below the 90 MC. calibration point, it will be necessary to push the windings together on the FM oscillator coil. Then repeat the two preceding adjustments of trimmers 16, 17 and 18 at 106 MC. Should it be found impossible to obtain the 106 MC. signal at the proper point on the dial by adjustment of the trimmers it will then be necessary to adjust the spacing of the gang condsenser plates.
3. Correction for mistracking of antenna and R.F. may be accomplished by adjusting coil turns and gang plate spacing in the same manner as outlined above for the oscillator stage.

FREQUENCY MODULATION—"FM"—ALIGNMENT PROCEDURE

(USING AN OSCILLOSCOPE AND FM "SWEEP" GENERATOR)

INSTRUMENTS: Alignment of the FM circuits in this receiver can be most conveniently accomplished with an FM signal generator. When using this type generator, the output indicator must be an oscilloscope.

1. If alignment of both AM and FM channels is required it is necessary to align the AM channel first, then align the FM channel as instructed in chart below (AM alignment procedure is given on page 8).
2. Disconnect leads from FM-AM aerial terminal strip (labelled FM-FM-AM-AM) at back of chassis; also disconnect speaker leads and phono plugs. Remove chassis and speaker. (If desired, allow speaker to remain in cabinet and connect to receiver by extension leads.)
3. With the gang condenser fully meshed, dial pointer should be in the position indicated by the last division below 88 on the dial. If it is set incorrectly, hold tuning shaft steady and reposition pointer.
4. A specific setting of the receiver volume control is not required, however, it will be found convenient to leave it in the maximum volume position so that alignment signals will be audible even though the output indication is obtained by an oscilloscope connected to points in the discriminator circuit.
5. Dress FM circuit leads as short and straight as possible, particularly those in the oscillator circuit. I.F. plate and grid leads should also be kept short and straight.
6. Set band switch to the FM (extreme counter-clockwise) position.
7. Set tone control to fully counter-clockwise position.

SIGNAL GENERATOR CONNECTIONS	FREQUENCY & TYPE OF MODULATION	OSCILLOSCOPE CONNECTIONS	RECEIVER DIAL SETTING	TRIMMER OR SLUG NUMBER	TRIMMER DESCRIPTION	TYPE OF ADJUSTMENT AND OUTPUT INDICATION
Connect high side in series with an .01 Mfd condenser to lug on trimmer No. 17 at top of gang (see illustration on page 8 for location of trimmer). Connect ground lead to receiver chassis in vicinity of 12AT7 tube.	10.7 MC FM signal should preferably be modulated ±400 KC.	Connect vertical amplifier "high" lead to junction of resistor No. 67 (18,000 ohms) and condenser No. 70 (.003 Mfd.) which are in discriminator output circuit. Connect scope ground lead to receiver chassis. Set vertical amplifier of scope for maximum amplification. Where FM signal generator provides an output voltage for synchronization, connect this voltage to "sync" terminals of the scope.	Any position where it does not affect the signal.	10	Discriminator Secondary	Before attempting to adjust trimmer No. 10, set trimmers No. 11, 12, 13, 14 and No. 15 for approximately maximum sound output from the speaker (output meter not required). This is done to obtain sufficient signal for an oscilloscope pattern of desirable amplitude when making the following discriminator trimmer adjustment. Adjust setting of trimmer No. 10 until a pattern similar to that shown in Fig. 2 appears on the screen. If pattern does not remain stationary operate sweep frequency control on 'scope and also "sync" control until desired result is obtained. Correct setting of trimmer No. 10 is obtained when crossover point "B" (Fig. 2) is centrally located in both the horizontal and vertical directions; in addition that portion of the curve between "A" and "C" should be as linear (straight) as possible.
Same as above	Same as above	Same as above	Same as above	11	Discriminator Primary	Adjust these trimmers for maximum amplitude and steepness of that portion of the pattern between "A" and "C" (see Fig. 2).
				12 and 13	2nd I.F.	
				14 and 15	1st I.F.	
Recheck adjustments of trimmers No. 10 and No. 11 to be sure that both are set as accurately as possible to obtain correct cross-over point or symmetry of pattern.						
Connect generator "high" side in series with a 300 ohm carbon resistor to end terminal marked "FM" on strip at back of chassis. Generator ground lead must connect to next terminal marked "GND".	106 MC FM signal should preferably be modulated ±400 KC.	Same as above	106 MC	16	Oscillator Trimmer	Adjust trimmer No. 16 to obtain the symmetrical pattern shown in Fig. 2. Correct setting of trimmer No. 16 is obtained when cross-over point in pattern is centrally located. IMPORTANT: It will be noted that there are two different settings of trimmer No. 16 at which the desired scope pattern can be obtained—always select the trimmer setting which is nearest to the low capacity end of its range.
Same as above	Same as above	Same as above	Tune to 106 MC. generator signal.	17	R.F. Trimmer	Adjust trimmer No. 17 for maximum amplitude of pattern.
				18	Antenna Trimmer	Adjust trimmer No. 18 for maximum amplitude of pattern.
				14 and 15	1st I.F.	Recheck adjustment of these trimmers for maximum amplitude of pattern.

Check calibration and tracking of receiver with input signals of 90 and 98 MC. If difference between dial pointer setting and 90 or 98 MC. calibration mark does not exceed ± 0.3 MC. and antenna and R.F. circuits are tracking properly, then alignment may be considered satisfactory and no further adjustment is necessary.

Where the calibration error is greater than ± 0.3 MC. it is advisable to make the following adjustments:

1. If pointer falls above the 90 MC. calibration point, it will be necessary to slightly spread the windings of the FM oscillator coil. Then repeat the two preceding adjustments of trimmers 16, 17 and 18 at 106 MC. Should it be found impossible to obtain the 106 MC. signal at the proper point on the dial by adjustment of the trimmers it will then be necessary to adjust the spacing of the gang condenser plates.
2. If pointer falls below the 90 MC. calibration point, it will be necessary to push the windings together on the FM oscillator coil. Then repeat the two preceding adjustments of trimmers 16, 17 and 18 at 106 MC. Should it be found impossible to obtain the 106 MC. signal at the proper point on the dial by adjustment of the trimmers it will then be necessary to adjust the spacing of the gang condenser plates.
3. Correction for mistracking of antenna and R.F. may be accomplished by adjusting coil turns and gang plate spacing in the same manner.

©John F. Rider

©John F. Rider

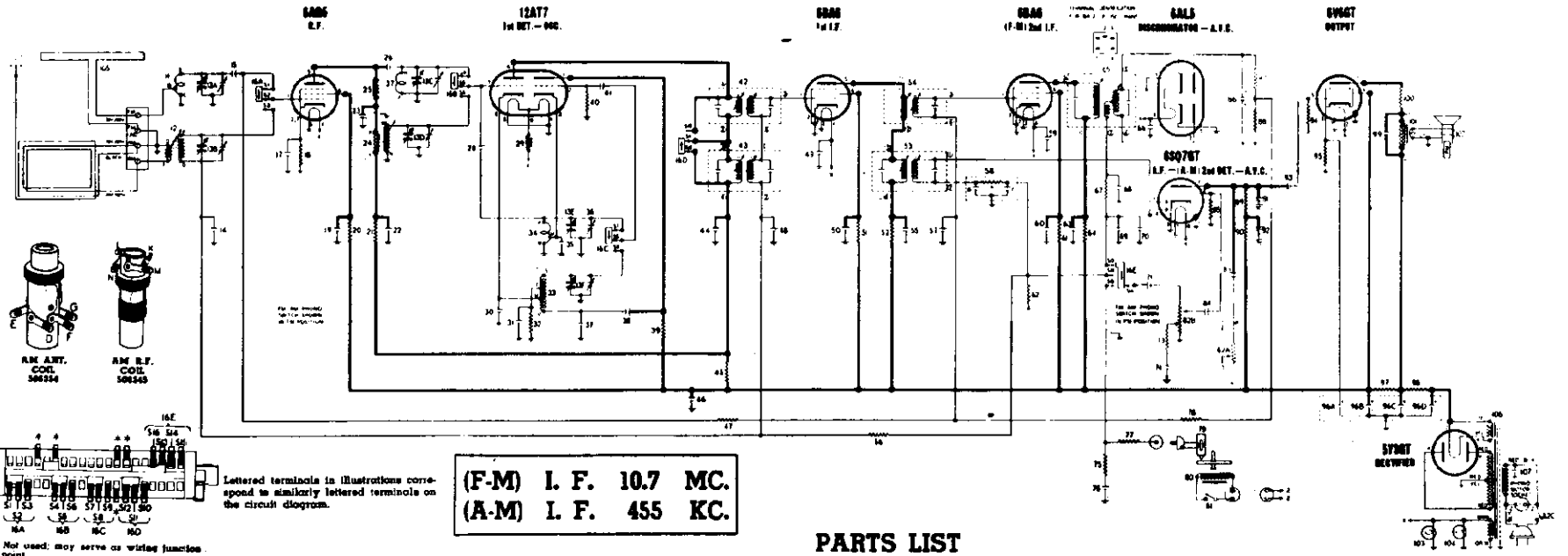

Lettered terminals in illustrations correspond to similarly lettered terminals on the circuit diagram.

★ Not used; may serve as wiring junction point.

(F-M) I. F.	10.7 MC.
(A-M) I. F.	455 KC.

PARTS LIST

CONDENSERS

DIA. GRAM NO.	PART NO.	DESCRIPTION
13-A to F	506348	Condenser-variable gang (with drum)
14	512026	Condenser-.05 Mfd. 200 volt
15	504973	Condenser-ceramic 22 Mmfd. 500 volt
17	504974	Condenser-ceramic 47 Mmfd. 500 volt
19	505873	Condenser-ceramic .005 Mfd. 450 volt
22	505873	Condenser-ceramic .005 Mfd. 450 volt
23	504874	Condenser-ceramic 47 Mmfd. 500 volt
28	504905	Condenser-ceramic 5 Mmfd. 500 volt ± 10%
29	504983	Condenser-ceramic 1.0 Mmfd. 500 volt
30	506341	Condenser-ceramic 330 Mmfd. 500 volt
31	513008	Condenser—.01 Mfd. 200 volt
35	513428	Condenser ceramic 10 Mmfd 500 volt ± 10%
36	506336	Condenser-trimmer; 3 to 30 Mmfd.
37	506544	Condenser-ceramic 1C Mmfd. 500 volt
38	505873	Condenser-ceramic .005 Mfd. 450 volt
41	513408	Condenser-ceramic 28 Mmfd. 500 volt ± 5%
44	505873	Condenser-ceramic .005 Mfd. 450 volt
46	505873	Condenser-ceramic .005 Mfd. 450 volt
48, 48, 50	505873	Condenser-ceramic .005 Mfd. 450 volt
55	505873	Condenser-ceramic .005 Mfd. 450 volt
57	505873	Condenser-ceramic .005 Mfd. 450 volt
58-B, C	506338	Condenser-ceramic 100 Mmfd. 400 volt (part of diode filter unit)
59, 60	505873	Condenser-ceramic .005 Mfd. 450 volt
62	505873	Condenser-ceramic .005 Mfd. 450 volt
66	505873	Condenser-ceramic .005 Mfd. 450 volt
68	506341	Condenser-ceramic 330 Mmfd. 500 volt
69	506340	Condenser-ceramic 10C Mmfd. 500 volt
70	513004	Condenser-.003 Mfd. 600 volt
71	512006	Condenser .005 Mfd. 500 volt
74	512008	Condenser-.005 Mfd. 600 volt
78	505873	Condenser-ceramic .005 Mfd. 450 volt
83, 84	512006	Condenser .005 Mfd. 600 volt
86	504937	Condenser-electrolytic 5 Mfd. 50 volt
91	506340	Condenser-ceramic 100 Mmfd. 500 volt
92	512004	Condenser-.1 Mfd. 400 volt
93	512016	Condenser-.02 Mfd. 400 volt
98-A to D	505908	Condenser-electrolytic A-20 Mfd. 25 volt; B-10 Mfd. 450 volt; C-30 Mfd. 450 volt; D-40 Mfd. 450 volt

DIA. GRAM NO.	PART NO.	DESCRIPTION
99	512006	Condenser-.005 Mfd. 600 volt
107	512256	Condenser-.01 Mfd. 600 volt

RESISTORS

18	510017	Resistor carbon 82 Ohms ½ watt ± 10%
20	510184	Resistor carbon 33,000 Ohms ½ watt
21	510137	Resistor carbon 1000 Ohms ½ watt
32	510041	Resistor carbon 1800 Ohms ½ watt
39	510137	Resistor carbon 1000 Ohms ½ watt
40	510053	Resistor carbon 10,000 Ohms ½ watt
45	510137	Resistor carbon 1000 Ohms ½ watt
47	510087	Resistor carbon 47,000 Ohms ½ watt
51	510165	Resistor carbon 39,000 Ohms ½ watt
53	510137	Resistor carbon 1000 Ohms ½ watt
54	510093	Resistor carbon 2.2 Meg. 1 watt
58-A	506338	Resistor carbon 47,000 Ohms 1/5 watt. (Part of diode filter unit)
61	510165	Resistor carbon 39,000 Ohms ½ watt
62	510095	Resistor carbon 470,000 Ohms ½ watt
64	510137	Resistor carbon 1000 Ohms ½ watt
67	510053	Resistor carbon 10,000 Ohms ½ watt
73	510070	Resistor carbon 68,000 Ohms ½ watt
75	510070	Resistor carbon 68,000 Ohms ½ watt
77	510078	Resistor carbon 220,000 Ohms ½ watt
78	510093	Resistor carbon 2.2 Meg. ½ watt
82-A, B, C	506418	Volume and tone control A-200,000 Ohms; B-2 Meg.; C-"ON-OFF" switch
85	510098	Resistor carbon 15 Meg. ½ watt
87, 88	510099	Resistor carbon 9200 Ohms ½ watt ± 10%
89	510099	Resistor carbon 2.2 Meg. ½ watt
90	510099	Resistor carbon 220,000 Ohms ½ watt
94	510099	Resistor carbon 470,000 Ohms ½ watt
95	510139	Resistor carbon 330 Ohms ½ watt
97, 98	510199	Resistor carbon wound 800 Ohms 5 watt
100	510017	Resistor carbon 47 Ohms ½ watt

COILS AND TRANSFORMERS

11	508353	Coil—Antenna (FM)
12	508354	Coil—Antenna (AM)
	508348	Slug core for AM antenna coil
24	508345	Coil R. F. (AM)
	508344	Slug core for AM R. F. coil
25	508337	Coil R. F. choke (FM)
27	508351	Coil R. F. (FM)
28	505075	Coil R. F. choke (FM)
33	506335	Coil Oscillator (AM)
34	506352	Coil Oscillator (FM)
42	506000	Transformer 1st I. F. (FM)
43	506335	Transformer 1st I. F. (AM)
53	505797	Transformer 2nd I. F. (AM)
54	505905	Transformer 2nd I. F. (FM)
65	506332	Transformer discriminator
101	505912	Transformer-output
106	506709	Transformer power

OTHER ELECTRICAL PARTS

16-A to E	506347	Switch-FM AM Phono
58-A, B, C	506338	Diode filter unit A-Resistor carbon 47,000 Ohms 1/5 watt; B-Condenser-ceramic 100 Mmfd. 400 volt; C-Condenser-ceramic 100 Mmfd. 400 volt
79	507451	Crystal Cartridge (includes needles)
80	507462	Motor for type "OK" 507236 Record Changer 115 volt 60 cycle
81	506845	Switch-"ON OFF" for type "OK" 507236 Record Changer
102	506464	Speaker-P M (10 inch)
103, 104	116821	Lamp dial (Mazda No. 47) 6.8V. 150 Ma.
105	506821	Antenna-for FM ("Twin Lead" assembly)
	507236	Record Changer

RECORD CHANGER PARTS

See page 15 for complete list

MISCELLANEOUS PARTS

	301270	Base for mtg. electrolytic condenser
	508552	Dial scale
	505185	"O" washer-tuning and band switch shaft
	508551	Cabinet
	500420	Clamp-for dial glass
	508349	Clip-coil mtg. for R.F. and Ant. coil (AM)
	505101	Clip-I. F. transformer mtg.
	114953	Clip-retainer on end of dial cord
	160328	Clip-setscrew dial scale
	117057	Cord-dial drive (3 ft. required) per ft.
	508574	Door for Radio compartment (less hardware)
	508675	Door for Record Storage Compartment (less hardware)
	508878	Door pull for Record Changer Compartment
	508879	Door pull for Record Storage Compartment
	508873	Drawer for Record Changer
	505300	Fastener for loop antenna
	508876	Hinge-door (supplied in pairs)
	508858	Knob-"FM-AM-PHONO"
	508634	Knob-"TONE"
	508855	Knob-"VOLUME"
	508856	Knob-"TUNING"
	507454	Needle, standard
	507455	Needle "Long Playing"
	501031	Plug for phono. motor cable
	500984	Plug for phono. pick-up cable
	508618	Painter
	508877	Rail for Record Changer drawer
	119087	Ring for dial cord
	38501	Rubber bushing for band switch
	160496	Rubber pad for mtg. chassis
	118584	Rubber spacer for mtg. dial scale
	78993	Screw-No. 8x1½ for mounting chassis
	507446	Set Nut for Needle
	503588	Shaft and drum for dial
	503757	Shaft and Link ass'y.-Band switch
	505921	Shaft-tuning
	508344	Slug core for R.F. coil (AM)
	508349	Slug core for antenna coil (AM)
	508372	Socket-dial lamp pair (with leads)
	508307	Socket and phono motor cable
	504597	Socket-miniature
	508331	Socket-novel base
	116490	Socket-octal base
	160392	Socket-octal (rectifier)
	160038	Socket-phono. plug
	505161	Spring-dial cord tension
	505834	Terminal strip (FM-FM-AM-AM)
	506819	Window for dial

©John F Rider

Instructions for Using Your RADIO-ALARM CLOCK Combination Receiver

This skillfully designed and carefully constructed combination will give you long and enjoyable service. This Receiver can perform the following services for the user:

1. Provide accurate time.
2. Receive broadcast programs being transmitted and within range—at any time.
3. Turn off radio program at will of user up to 60 minute interval or less.
4. Turn on radio program for awakening.
5. Turn buzzer Alarm on 10 minutes after Radio starts playing.
6. Turn on buzzer Alarm for awakening—with Radio silenced.

INSTALLATION—Check the voltage and cycles of the electric power supplied to your home. This combination will operate ONLY on 60 cycle alternating current (a-c), from 105 to 125 volts. THIS SET WILL NOT OPERATE ON ANY OTHER TYPE OF CURRENT OR CYCLES. Your electric company will help you make certain that you have the correct kind of power.

This combination includes a sensitive five multi-purpose tube superheterodyne radio including a rectifier tube. Your radio has a self contained duro-loop antenna capable of supplying sufficient volume in areas of normal reception. If you live in an area where radio reception is poor, you can improve the performance by connecting an outside antenna to the screw marked EXT. ANT. which you will find on the right hand side of the rear of the cabinet.

1.

TO SET THE CLOCK

Your self-starting TELECHRON movement will begin operating when the set is plugged into the proper outlet and your sweep second hand begins to rotate. Set the correct time by means of the small knob at the right REAR of the cabinet. Turn ONLY in the direction shown on the back cover.

2.

TO TURN ON RADIO MANUALLY

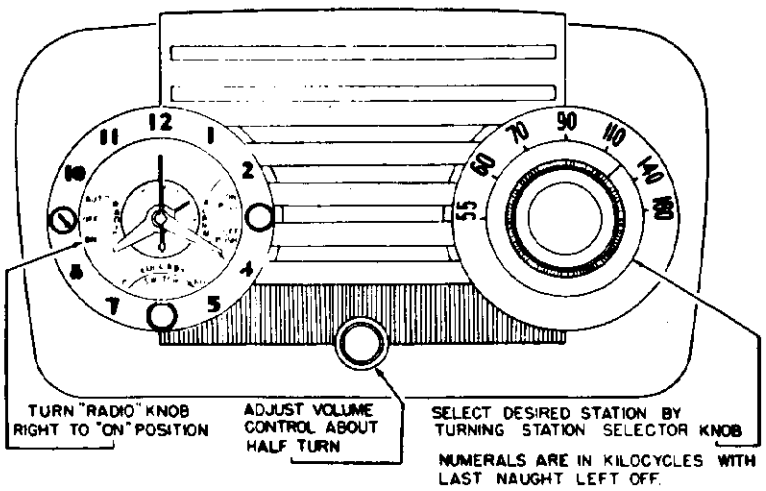

3.

TO TURN OFF RADIO MANUALLY

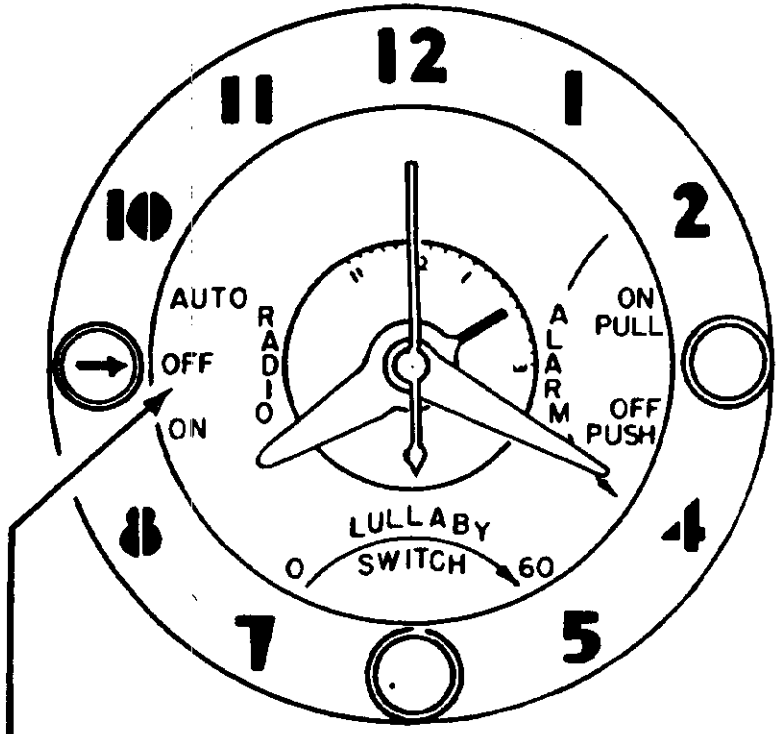

TURN "RADIO" KNOB LEFT TO "OFF"

4.

TO AWAKE TO MUSIC

Select station and adjust volume to level sufficient to awaken you (as indicated in Illustration 2)

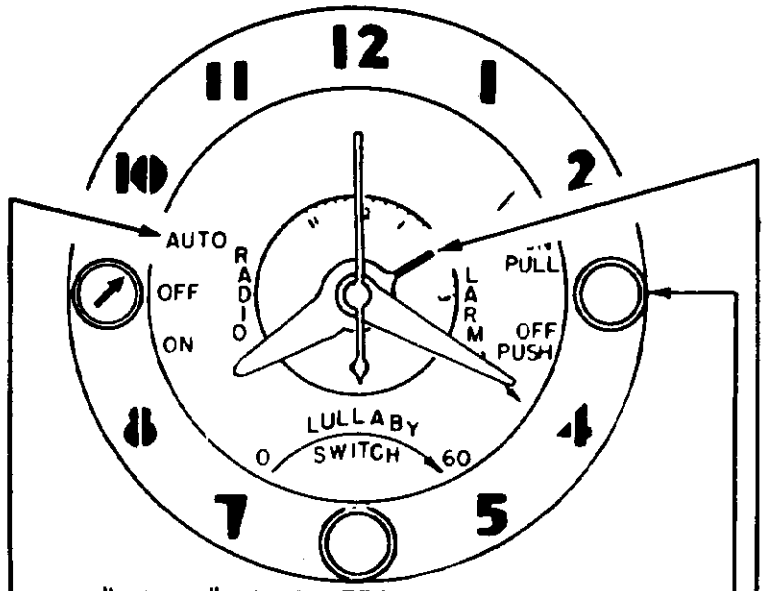

TURN "RADIO" KNOB LEFT TO "AUTO" POSITION

PULL OUT "ALARM" KNOB AND TURN IN COUNTER CLOCKWISE (ARROW) DIRECTION UNTIL POINTER IS OVER HOUR FIGURE AND MINUTE MARKS DESIRED FOR AWAKENING

THIS TIME SETTING MAY BE 11 HOURS IN ADVANCE OR LESS. AFTER HAVING SET AWAKENING HOUR PUSH IN "ALARM" KNOB.

©John F. Rider

5.

TO AWAKE TO BUZZER ALARM

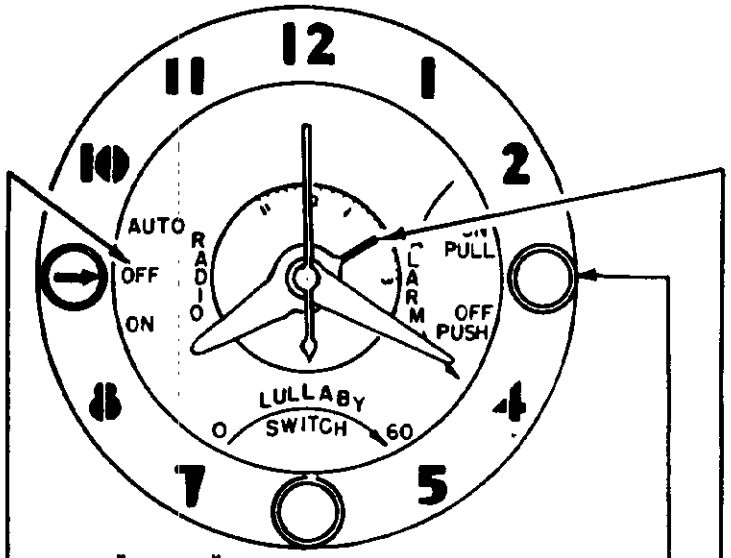

TURN "RADIO" KNOB LEFT TO MID "OFF" POSITION

PULL OUT "ALARM" KNOB AND TURN IN COUNTER CLOCKWISE (ARROW) DIRECTION UNTIL POINTER IS SET TEN MINUTES AHEAD OF HOUR FIGURE AND MINUTE MARKS DESIRED FOR AWAKENING

THIS TIME SETTING MAY BE 11 HOURS IN ADVANCE OR LESS.

FOR EXAMPLE :- SHOULD YOU DESIRE TO AWAKEN AT 7, SET ALARM POINTER TO 6:50

TO SHUT OFF BUZZER PUSH IN "ALARM" KNOB

6.

TO AWAKE TO MUSIC AND BUZZER ALARM

Select station and adjust volume to level sufficient to awaken you (as indicated in Illustration 2)

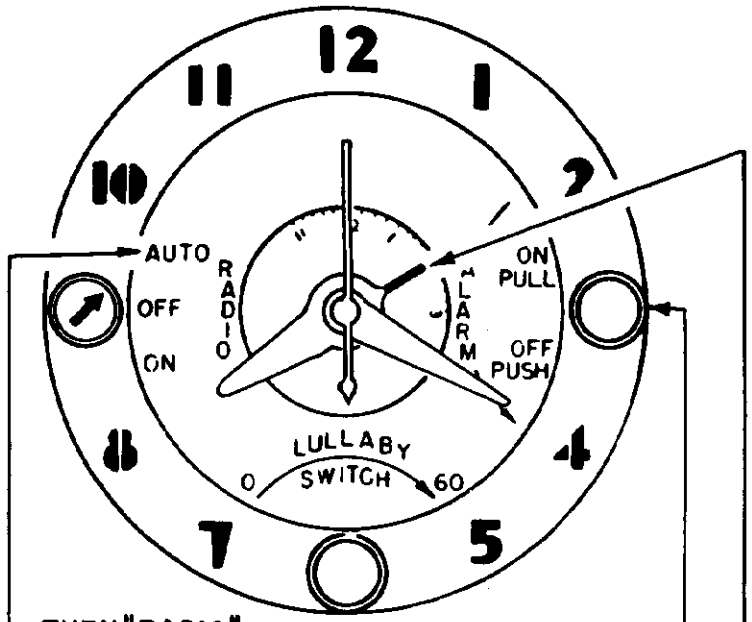

TURN "RADIO" KNOB LEFT TO "AUTO" POSITION

PULL OUT "ALARM" KNOB AND TURN IN COUNTER CLOCKWISE (ARROW) DIRECTION UNTIL POINTER IS OVER HOUR FIGURE AND MINUTE MARKS DESIRED FOR AWAKENING.

THIS TIME SETTING MAY BE 11 HOURS IN ADVANCE OR LESS.

Buzzer sounds as a reminder approximately 10 minutes after radio comes on. To shut off buzzer push in "Alarm" Knob.

©John F Dixon

7.
TO TURN RADIO OFF AUTOMATICALLY WHEN RETIRING

This receiver can be adjusted to play for a period of 60 or fewer minutes before retirement if desired by the listener.

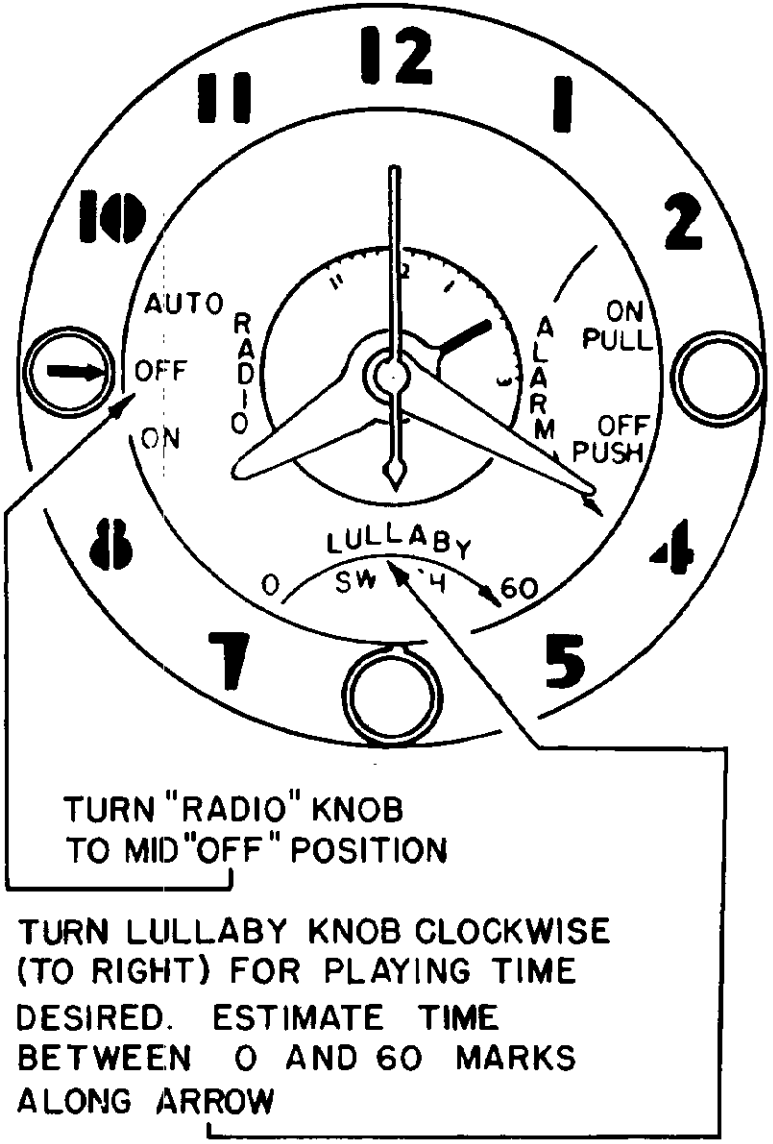

8.—To Turn Radio Off Automatically When Retiring and Awaken to Music

Set "Radio" Control as in Illustration 4,
Set "Lullaby" Knob as in Illustration 7.

9.—To Turn Radio Off Automatically When Retiring and Awaken to Buzzer Alarm

Set Controls as in Illustration 5.
Set "Lullaby" Knob as in Illustration 7.

10.—To Turn Radio Off Automatically When Retiring, Awaken to Music and Buzzer Alarm

Set "Radio" Control as in Illustration 6.
Set "Lullaby" Knob as in Illustration 7.

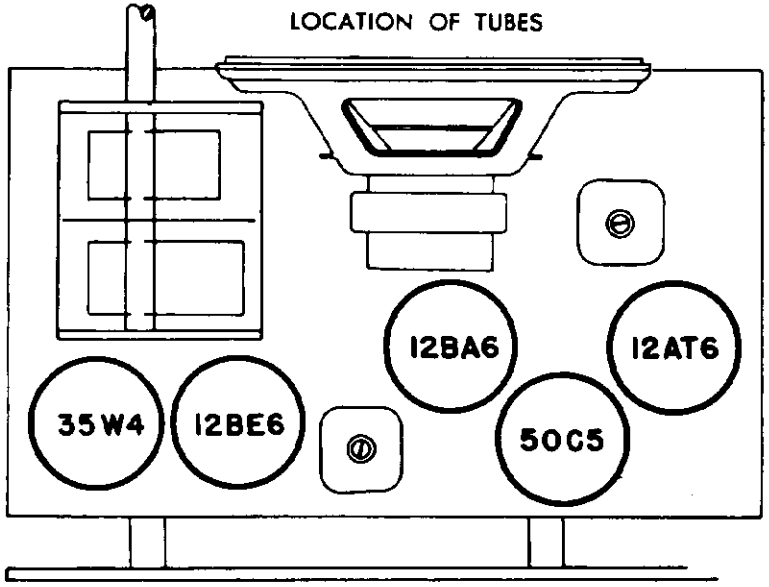

© John F. Rider

ALIGNMENT PROCEDURE

- Output meter across voice coil (3.2 ohm)
- Volume control at maximum for all adjustments.
- Align for maximum output. Reduce input as needed to keep output near 1.28 volts (0.5 watt).

SIGNAL GENERATOR				*TUNER SETTING*	*ADJUST TRIMMERS TO MAXIMUM OUTPUT (in order shown)*
Frequency	*Coupling Capacitor*	*Connections to Receiver*	*Ground Connection*		
455 kc	0.1 mfd.	12BE6 grid	B—	Rotor full open (Plates out of mesh)	Input and output slugs of IF cans
1650 kc	0.1 mfd.	12BE6 grid	B—	Rotor full mesh (Plates out of mesh)	Oscillator trimmer A2
1500 kc		Radiating Loop		1500 kc*	Antenna trimmer A1

* Seven markings on the dial bracket represent respectively 550 kc, 600 kc, 700 kc, 900 kc, 1100 kc, 1400 kc, and 1600 kc reading from left to right. These points are to be used for the alignment of the receiver.

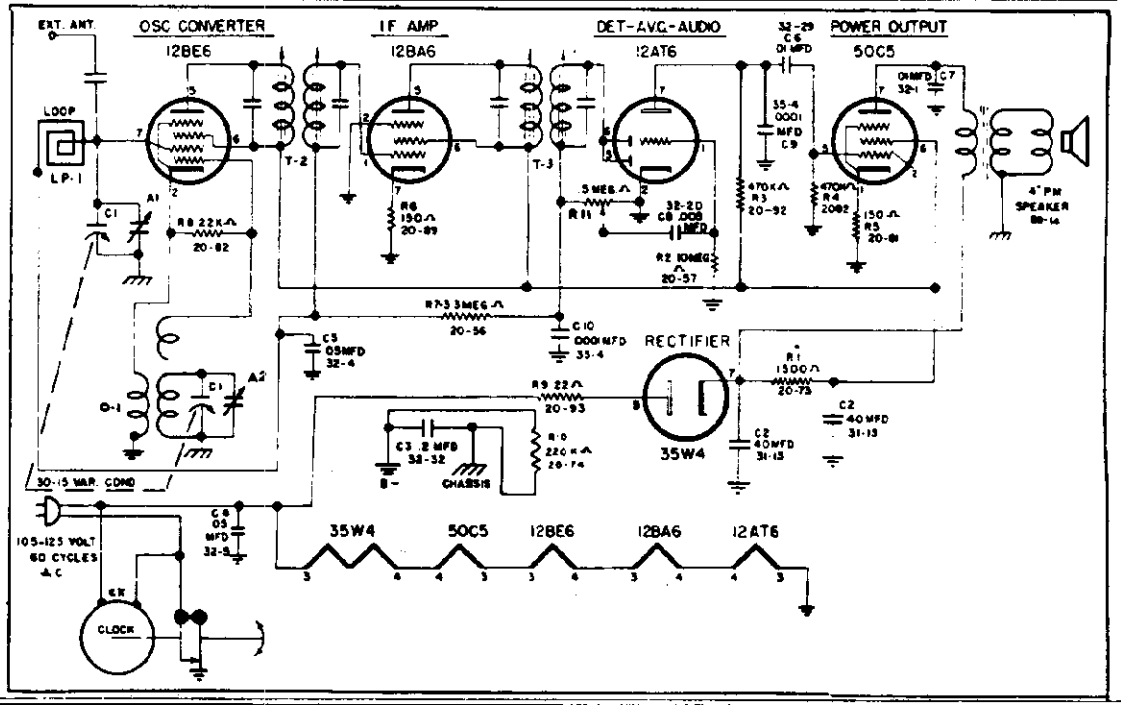

REPLACEMENT PARTS LIST

Ref. No.	*Part No.*	*DESCRIPTION*
		CAPACITATORS
C1	30-15	Variable Condenser, 2 gang
C2	31-13	40 mfd.—40 mfd., 150 volt dual electrolytic condenser
C3	32-32	.2 mfd., 200 volt, paper
C4	32-5	.05 mfd., 400 volt, paper
C5	32-4	.05 mfd., 200 volt, paper
C6	32-1	.01 mfd., 400 volt, paper
C7	32-1	.01 mfd., 400 volt, paper
C8	32-20	.005 mfd., 600 volt, paper
C9	35-4	.0001 mfd., 500 volt, mica
C10	35-4	.0001 mfd., 500 volt, mica
		RESISTORS
R1	20-73	1500 ohm, 1 watt 20%
R2	20-57	10 megohm, ¼ watt 20%
R3	20-92	470,000 ohm, ¼ watt 20%
R4	20-92	470,000 ohm, ¼ watt 20%
R5	20-81	150 ohm, ½ watt 20%
R6	20-89	150 ohm, ¼ watt 20%
R7	20-56	3.3 megohm, ¼ watt 20%
R8	20-82	22,000 ohm, ¼ watt 20%
R9	20-93	22 ohm, ½ watt 20%
R10	20-74	220,000 ohm, ¼ watt 20%
R11	50-15B	½ meg. volume control with switch
		COILS AND TRANSFORMERS
O-1	60-9	Oscillator coil
T-2	61-11	Input IF transformer
T-3	61-11	Output IF transformer
LP-1	62-15	Loop antenna
		MISCELLANEOUS
80-14	80-14	4 inch P.M. speaker with output transformer
	122-19	Selector knob
	122-15	Volume knob
	120-33	Cabinet—walnut
CK	140-6	Clock

MODEL D2025A

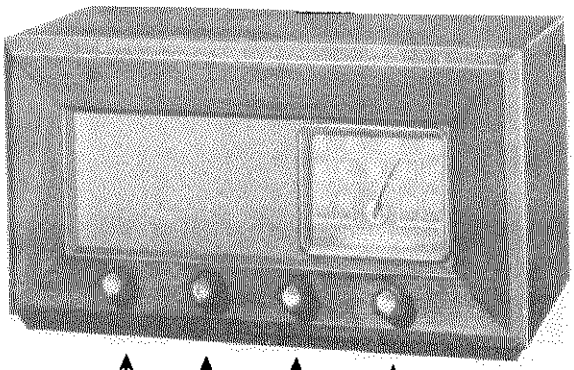

CHECK YOUR LINE VOLTAGE

Unless otherwise marked this radio must be operated on a supply of 105-125 volts AC, 50 to 60 cycles only. Do not connect the radio to a wall outlet unless certain that the power supply is correct for the receiver. If in doubt, telephone your local power company before inserting the plug. Radios of this model which are to be used on other power supplies are marked accordingly.

NOTE: An external ground should not be used at any time.

GENERAL INFORMATION

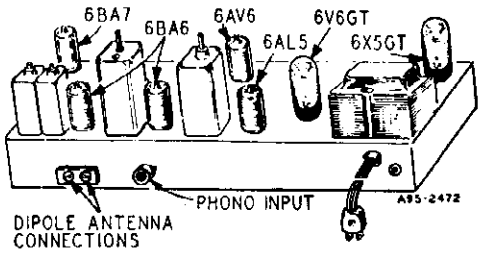

TUBES AND DIAL LAMP

The type designation of each tube is stamped on the tube and the radio chassis base. The correct positions in which the tubes must be installed are shown in the tube position illustration.

The tubes in the radio should be checked periodically by taking them out and having them tested. To reach the tubes for servicing, remove the cabinet back from the rear of the receiver. See instructions on cabinet back.

When replacing the tubes, be sure that they are inserted in the proper sockets. To install a tube, insert the center guide pin into the center hole of the tube socket and turn the tube until the key drops into position. Then push the tube down until it is held firmly in the socket. All tubes must be in their sockets to operate the radio. Use only No. 47 dial lamps.

Refasten the cabinet back in place before operating the radio.

IF THE RADIO FAILS TO OPERATE SATISFACTORILY

Recheck the foregoing instructions. If the radio still does not appear to operate satisfactorily, proceed as follows:

FIRST—Check Power Supply. Be sure there is power at the convenience outlet to which the radio is connected. To determine this, connect a lamp to the outlet and see whether or not the lamp lights.

Check the voltage and frequency of the power supply with that shown on the power rating label on the radio. If there is any doubt concerning the power supply, withdraw the plug from the outlet and consult the local power company before reinserting the plug.

SECOND — Check Tube Positions. See that the tubes are in the correct sockets as shown in the illustration.

Make certain that the tubes are operating. (Glass tubes will light very dimly).

THIRD — Check Antenna. If an outside antenna is being used, inspect the antenna system to see that it is in good condition and not grounded at any point.

FOURTH—Test Tubes. Remove the tubes from the radio, take them to your local radio dealer and have them tested either by means of a tube tester or by inserting them in a radio that is operating satisfactorily.

FAULTY FM RECEPTION

The requirements for FM reception are more critical than for Standard band broadcast or short wave reception. This includes the area in which the receiver is located, the type of antenna used, the distance the receiver is located from the station to be received and other factors not encountered in Standard band broadcast reception. It is to be noted that reception in the high frequency FM band is usually limited to "line of sight" distances or up to about 45 miles. Also tall buildings or other structures between the transmitter and the receiver may be found to affect reception. Reception under these conditions will sometimes be helped by the addition of an external folded dipole antenna with a 300 ohm line lead-in. Information concerning this is given in the Antenna paragraph.

© John F. Rider

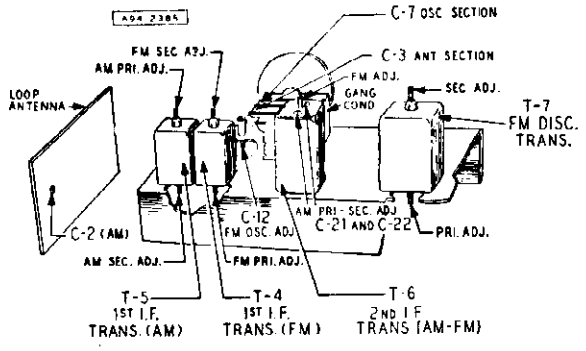

DRIVE CORD REPLACEMENT

Replacement of the drive cord may be accomplished as shown in the illustration. For this purpose use the new drive cord assembly listed in the Replacement Parts List. Turn the gang condenser until the plates are fully meshed Then install the string as shown, winding three turns counter-clockwise around the tuning shaft with the turns progressing away from the chassis. After the cord is installed, rotate the tuning shaft several times in order to take up any slack in the cord.

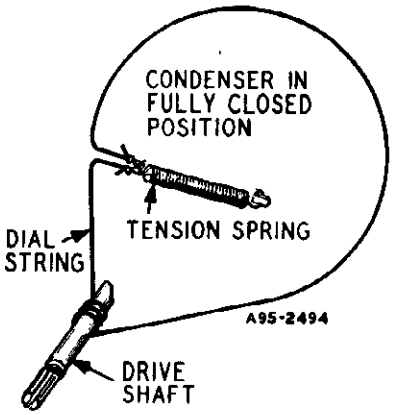

RECORD PLAYER AND TELEVISION SOUND CONNECTIONS

For models not equipped with built-in record player, a socket marked PHONO is provided on the back of the chassis for connections to an external record player or automatic record changer. When it is desired to play records through the radio, insert the connector on the cable of any standard record player into this socket. Turn the phono-radio switch to the phono position and use the volume control to adjust the sound level.

When television programs become available in your community, the audio amplifier and speaker of this radio may be used in conjunction with a Television Picture Receiver and sound converter to reproduce the sound portion of the television programs. Simply insert the connector on the cable of the Television Converter into the socket marked PHONO and operate the receiver in the same manner as described in the foregoing paragraph.

ELECTRICAL SPECIFICATIONS

Power Consumption—
117 volts AC—35 watts

Power Output—
1.5 watts maximum
.9 watts 10% distortion

Speaker—5¼ inch PM dynamic

Frequency Ranges—
Broadcast 540-1600 KC
Frequency modulation 88-108 MC

Intermediate Frequency—
AM 455 KC — FM 10.7 MC

Selectivity — AM — 60 KC broad at 1000 times signal, measured at 1000 KC
I.F. FM—200 KC broad at 2 times down
I.F. FM—700 KC broad at 200 times down

AM Sensitivity—(For .5 watt output with external antenna)
10 microvolts average

FM Sensitivity—(For .5 watt output)
100 microvolts average

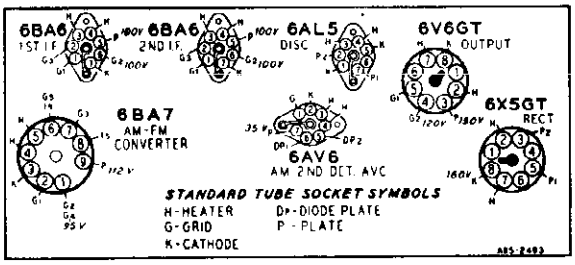

TUBE SOCKET VOLTAGES

Socket voltages are shown on the Bottom Socket diagram at the tube socket terminals. All voltages are between the socket terminal and chassis ground. Plate, screen and cathode voltages were taken with a 1000 ohm-per-volt meter with a 300 volt scale used for plate and screen voltages. Audio grid voltages were read with a vacuum tube volt-meter. Conditions of measurement are:

Line voltage .....117 Volts AC
Signal Input .....None
A Variation of ±10% is usually permissible.

© John F. Rider

ALIGNMENT PROCEDURES

AM STAGES

Volume Control Maximum all Adjustments.

Connect Radio Chassis to Ground Post of Signal Generator with a Short Heavy Lead.

Allow Chassis and Signal Generator to "Heat Up" for Several Minutes.

The following is required for aligning:

An All Wave Signal Generator Which Will Provide an Accurately Calibrated Signal at the Test Frequencies as Listed.

Output Indicating Meter, Non-Metallic Screwdriver, Dummy Antennas — .1 mf, and 50 mmf.

SIGNAL GENERATOR					
FREQUENCY SETTING	CONNECTION AT RADIO	GROUND CONNECTION	DUMMY ANTENNA	GANG CONDENSER SETTING	ADJUST TUNING SLUGS AND TRIMMERS
455 KC	Control Grid 1st 6BA6 Pin No. 1	Chassis Base	.1 mf	Turn Rotor to Full Open	2nd I.F. C-21 & C-22
455 KC	Control Grid 6BA7 Pin No. 7 1st Det.	Same as above	.1 mf	Turn Rotor to Full Open	1st I.F. Pri. & Sec.
1620 KC	Control Grid 6BA7 Pin No. 7	Same as above	.1 mf	Turn Rotor to Full Open	Oscillator C-7
1400 KC	External Antenna Clip	Same as above	50 mmf	Turn Dial to 1400 KC. See Note A	Antenna C-2

NOTE A—Set pointer at the 1400 KC mark on the dial scale. Attach pointer to drive cord.

FM STAGES

Allow chassis and signal generator to warm up for several minutes. The following equipment is required for aligning:

An accurately calibrated signal generator providing unmodulated signals at the test frequencies listed below.

Non-metallic screwdriver.

Dummy Antennas and I-F Loading Resistor—2500 mmf, 300 ohms and a 3300 ohm .5 watt resistor with short leads.

Zero center scale DC vacuum tube voltmeter having a range of approximately 3 volts.

(If a zero center scale meter is not available, a standard scale vacuum tube voltmeter may be used by reversing the meter connections for negative readings.)

	SIGNAL GENERATOR					
	FREQUENCY SETTING	CONNECTION AT RADIO	DUMMY ANTENNA	BAND SWITCH SETTING	CONDENSER SETTING	ADJUSTMENT FOR MAX. METER DEFLECTION
Discriminator	10.7 MC	6BA6 2nd I-F Pin 1 & Chassis	2500 mmf.	FM	Rotor Fully Open	Disc. Pri. Note A
	10.7 MC	Same as above	2500 mmf	FM	Rotor Fully Open	Disc. Sec. Note B
	10.7 MC	Same as above	2500 mmf	FM	Rotor Fully Open	Disc. Pri. Note A
	10.7 MC	Same as above	2500 mmf	FM	Rotor Fully Open	Disc. Sec. Note B
I-F	10.7 MC Note E	6BA6 1st I-F Pin 1 & Chassis	2500 mmf	FM	Rotor Fully Open	2nd I-F Note C
Discriminator	10.7 MC	6BA6 2nd I-F Pin 1 & Chassis	2500 mmf	FM	Rotor Fully Open	Disc. Pri. Note A
I-F	10.7 MC	Antenna and Chassis	2500 mmf	FM	Rotor Fully Open	1st. I-F Pri. and Sec. and Note C
	10.7 MC	Antenna and Chassis Solder a 3300 ohm resistor across terminals 3 and 4 of 1st. I-F trans.	2500 mmf	FM	Rotor Fully Open	1st. I-F Pri. Note C
	10.7 MC	Antenna and Chassis Note D	2500 mmf	FM	Rotor Fully Open	1st. I-F Sec. Note C
	RECHECK I-F ADJUSTMENTS IN ORDER GIVEN					
Oscillator	108.4 Note F	Disconnect hank antenna and connect generator to dipole terminals with resistor in series	300 ohms	FM	Rotor Fully Open	Osc. C-12
Antenna	104.5	Same as above	300 ohms	FM	Tune rotor for max. AVC voltage	Ant. C-3
	RECHECK ANTENNA & OSC. ADJUSTMENTS IN ORDER GIVEN					

FM ALIGNMENT NOTES

NOTE A—The zero center scale DC vacuum tube voltmeter is to be connected between chassis ground and the AVC line. A signal of .1 volt must be fed into the receiver for this adjustment.
Note output voltage on the zero center DC vacuum tube voltmeter.

NOTE B—Disconnect zero center DC vacuum tube voltmeter from AVC and connect it to the audio takeoff point at the 27 K ohm resistor (R-11) and its junction with the terminal strip. Adjust for zero voltage indication.

NOTE C—Connect zero center DC vacuum tube voltmeter as in Note A. Adjust input to give same output on the zero center DC vacuum tube voltmeter as in Note A.

NOTE D—Unsolder 3300 ohm resistor from terminals 3 and 4 of 1st I-F transformer and resolder across terminals 1 and 2.

NOTE E—2nd I-F Trimmers (AM) must be aligned before attempting to adjust 2nd I-F (FM) tuning slug.

NOTE F—Remove the 3300 ohm load resistor before attempting to check the antenna and oscillator adjustments.

© John F. Rider

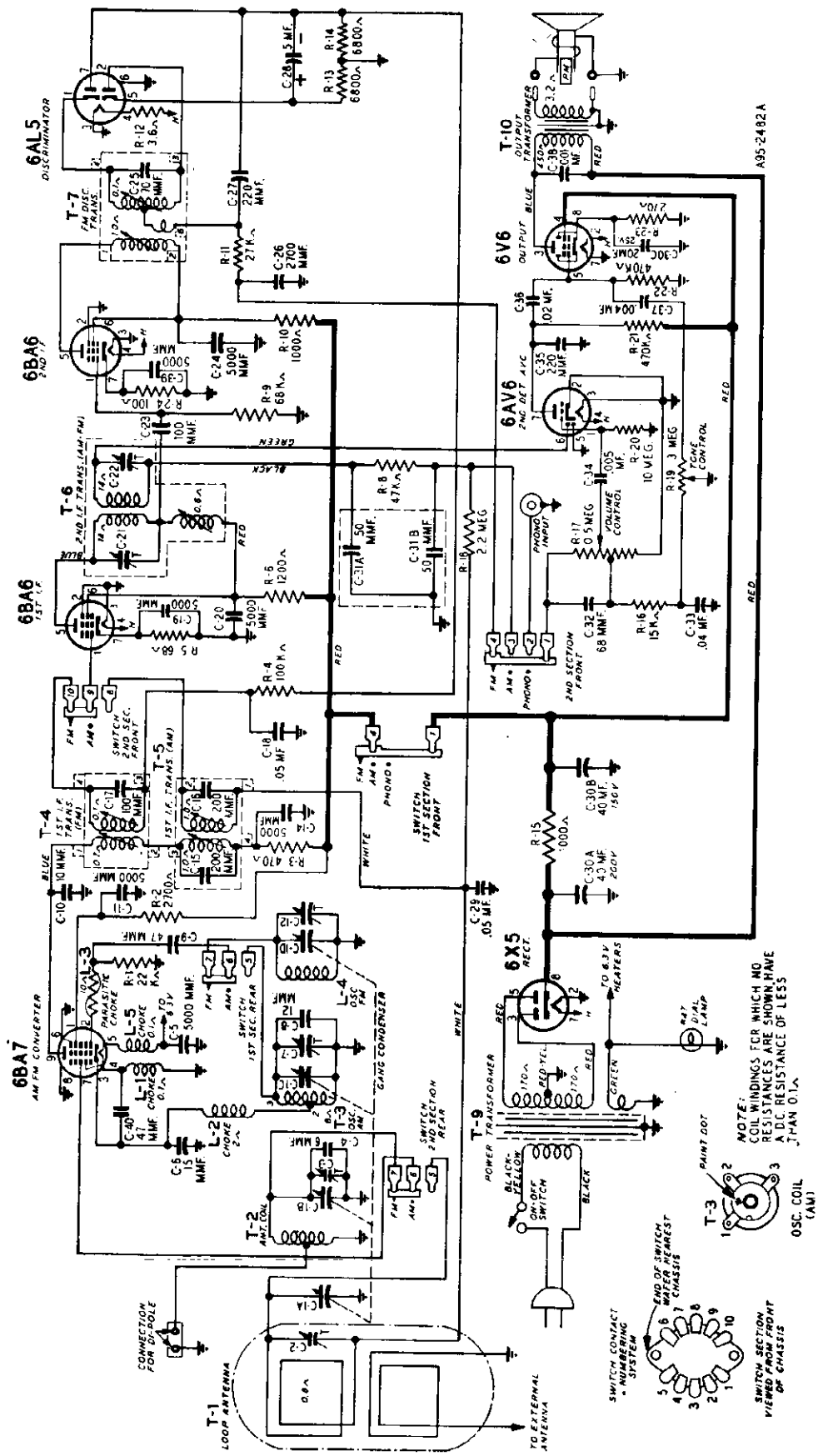
6AL5
DISCRIMINATOR
6BA6
2ND I.F.
6BA6
1ST I.F.
6BA7
AM FM CONVERTER
6V6
OUTPUT
6AV6
2ND DET AVC
6X5
RECT.
T-1
LOOP ANTENNA
T-2
ANT. COIL
T-3
OSC. COIL
(AM)
T-4
1ST I.F. TRANS. (FM)
T-5
1ST I.F. TRANS. (AM)
T-6
2ND I.F. TRANS. (AM-FM)
T-7
FM DISC. TRANS.
T-9
POWER TRANSFORMER
T-10
OUTPUT TRANSFORMER
L-1
CHOKE
L-2
CHOKE
L-3
PARASITIC CHOKE
L-4
OSC FM
L-5
CHOKE
GANG CONDENSER
SWITCH 1ST SEC. REAR
SWITCH 2ND SEC. REAR
SWITCH 1ST SECTION FRONT
SWITCH 2ND SEC. FRONT
SWITCH 2ND SECTION FRONT
PHONO INPUT
VOLUME CONTROL
TONE CONTROL
ON-OFF SWITCH
BLACK-YELLOW
TO 6.3V HEATERS
RAY DIAL LAMP
CONNECTION FOR DI-POLE
TO EXTERNAL ANTENNA
SWITCH CONTACT NUMBERING SYSTEM
END OF SWITCH WAFER NEAREST CHASSIS
SWITCH SECTION VIEWED FROM FRONT OF CHASSIS
PAINT DOT
NOTE:
COIL WINDINGS FOR WHICH NO RESISTANCES ARE SHOWN, HAVE A D.C. RESISTANCE OF LESS THAN 0.1Ω
A95-2482A

© John F. Rider

MODEL D2025A

REPLACEMENT PARTS LIST

NOTICE: There is a model number label on the chassis. This label identifies the radio as to chassis, dial and issue letter. When ordering parts or writing, give ALL information on this label.

MISCELLANEOUS

12A494	5¼" P.M. Speaker
4X1055	Escutcheon
10A734	Knob
13X546	Line Cord & Plug Assembly
2A375	Band Change Switch
3A303	Molded Octal Tube Socket
3A305	Phono Socket
3A426	Tube Socket (Miniature)
3A443	Tube Socket (For 6BA7 Tube)
14X466	Speaker Baffle
14X467	Grille Cloth
20X1551	Stud (Mtg. Speaker to Baffle)
	Mahogany Cabinet No. 906

CAPACITORS

C-1	14A208	Gang Condenser & Pulley		
C-2	17A256	2-24 mmf		Trimmer
C-3, C-7	Part of C-1 (Gang Condenser)			
C-4	47X521	6 mmf		Ceramic
C-5, C-11, C-14, C-19, C-20, C-24, C-39	47X507	5000 mmf		Ceramic
C-6	47X552	15 mmf		Ceramic
C-8	47X522	12 mmf		Ceramic
C-9	47X517	47 mmf		Ceramic
C-10	47X512	10 mmf		Ceramic
C-12	17A255	1-8 mmf		Trimmer
C-15, C-16	Part of T-5 (1st I-F Trans. AM)			
C-17	Part of T-4 (1st I-F Trans. FM)			
C-18, C-29	B66503	.05 mf	200 V	Tubular
C-21, C-22	Part of T-6 (2nd I-F Trans. AM-FM)			
C-23	47X476	100 mmf		Ceramic
C-25	Part of T-7 (FM-Disc. Trans.)			
C-26	47X492	2700 mmf		Molded Mica
C-27, C-35	47X468	220 mmf		Ceramic
C-28	45X361	5 mf	100 V	Dry Electrolytic
C-30A		40 mf	200 V	
C-30B	45X360	40 mf	150 V	Dry Electrolytic
C-30C		20 mf	25 V	
C-31A, C-31B	47X112	50-50 mmf		Dual Mica
C-32	47X471	68 mmf		Molded Mica
C-33	B66403	.04 mf	200 V	Tubular
C-34	D66502	.005 mf	400 V	Tubular
C-36	D66203	.02 mf	400 V	Tubular
C-37	B66402	.004 mf	200 V	Tubular
C-38	H66102	.001 mf	800 V	Tubular
C-40	47X509	47 mmf		Ceramic

RESISTORS

		Ohms	Watts	
R-1	B84223	22K	0.5	Carbon
R-2	B84272	2700	0.5	Carbon
R-3	B84471	470	0.5	Carbon
R-4	B85104	100K	0.5	Carbon
R-5	B83680	68	0.5	Carbon
R-6	B85122	1200	0.5	Carbon
R-8	B85473	47K	0.5	Carbon
R-9	B84683	68K	0.5	Carbon
R-10	B85102	1000	0.5	Carbon
R-11	B85273	27K	0.5	Carbon
R-12	43X233	3.6	0.5	Wirewound
R-13, R-14	B84682	6800	0.5	Carbon
R-15	D84102	1000	2.0	Carbon
R-16	B85153	15K	0.5	Carbon
R-17	36X372	.5 meg.	Volume Control & Switch	
R-18	B85225	2.2 meg.	0.5	Carbon
R-19	40X285	3 meg.		Tone Control
R-20	B85106	10 meg.	0.5	Carbon
R-21, R-22	B85474	470K	0.5	Carbon
R-23	B84271	270	0.5	Carbon
R-24	B84101	100	0.5	Carbon

TRANSFORMERS AND COILS

L-1, L-5	9A2044	Filament Choke
L-2	35A5	Insulated Choke 2 uh
L-3	9A1940	Parasitic Choke
L-4	9A2021	Oscillator Coil (FM)
T-1	9A2046	"B" Range Loop Antenna
T-2	9A1956	Antenna Coil
T-3	9A1997	Oscillator Coil (AM)
T-4	9A2037	1st I-F Trans. (FM)
T-5	9A2038	1st I-F Trans. (AM)
T-6	9A1999	2nd I-F Trans. (AM-FM)
T-7	9A2036	Discriminator Coil Assembly
T-9	53X291	Power Transformer
T-10	51X144	Output Transformer

DIAL AND DRIVE ASSEMBLY

58X724	Dial Glass	
15X250	Pointer	
19X192	"C" Washer (Mtg. Drive Shaft)	
20X260	Condenser Cushions Stud	Mounting Gang Condenser
6X67	Rubber Grommet	
25X1636	Dial Bracket	
26X486	Drive Shaft	
28X113	Drive Cord Tension Spring	
7A103	No. 47 Pilot Light	
7A225	Pilot Light Socket Assembly	
10X71	Drive Cord Assembly	

©John F. Rider

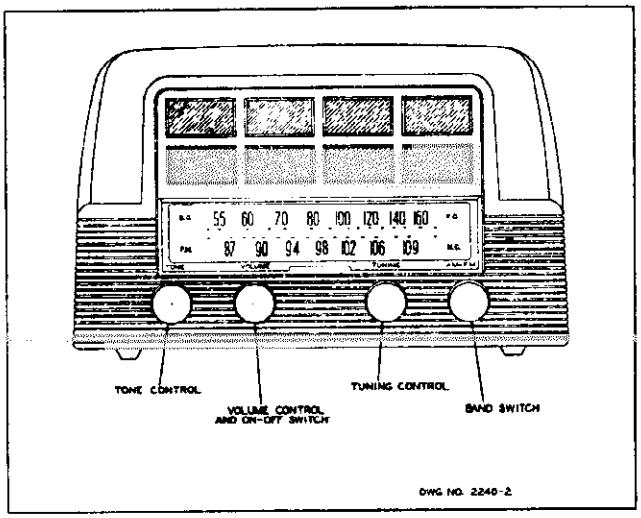

APPLYING POWER TO RADIO

This receiver, unless otherwise marked must be operated on an AC voltage of 105 to 125 volts, 50 to 60 cycles, or on a DC voltage of 105 to 125 volts.

BROADCAST BAND

This is the tuning band in which the standard broadcast stations operate. The upper scale on the dial covers the broadcast range of 535-1620 Kc., and is calibrated in channel numbers. To obtain the kilocycle reading, multiply the number on the dial by 10; thus 80 on the dial corresponds to 800 kilocycles.

FM BAND

The FM tuning range covers the newly allocated frequency-modulation band of 88 to 108 megacycles

REPLACEMENT OF DIAL CORDS

REPLACEMENT OF DIAL CORDS

GENERAL—A dual track drum pulley and two individual cords are used on this model.

The rear track on the drum carries the *Drive String* (see illustration) while the front track carries the *Pointer String*.

DRIVE STRING 1. To replace the *Drive String*, take approximately 20 inches of dial cord and wrap three times around *Tuning Shaft* as shown.

2. Pass ends of cord around drum and through the hole in the rear track, then through loop in end of tension spring (not shown, inside drum).

3. Hook other end of tension spring over ear near center of drum. Draw string through spring loop until spring is extended 1/4 inch. Tie string to loop.

POINTER STRING 4. To replace the *Pointer String* take approximately 40 inches of dial cord and place across inside of *Dial Plate Brackets* at each end.

5. Pass around idler pulleys from front to rear and cross directly under drum pulley.

6. Rotate drum pulley so that hole in the front track is uppermost. Pass cord end from right hand idler pulley around left side of front track of drum pulley. Pass cord end from left hand idler pulley around right hand side of front track. Drop ends through hole in front track then through loop in end of pointer tension spring (not shown, inside drum).

7. Hook other end of tension spring over ear near center of drum. Draw string through spring loop until spring is extended 1/4 inch. Tie string to loop.

8. Rotate drum so that gang is closed. Slide *Pointer* to left end of *Pointer Bar* so that right edge of pointer coincides with right edge of first calibration marker (low frequency end of dial). Loop *Pointer String* once around upright ear on *Pointer* carriage.

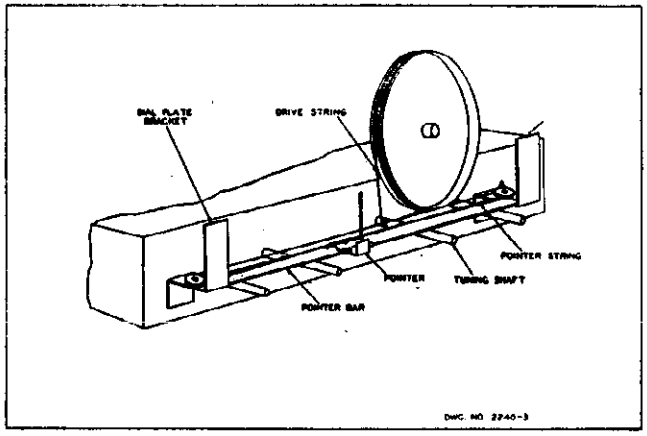

Pointer Stringing and Alignment

© John F. Rider

MODEL D2919

It has been found that in some instances instability has developed in the FM band in these receivers, which may cause distorted reception and in extreme cases loss of reception entirely. In practically every case the trouble lies in the lead length on condenser C29. Aging of this condenser may cause a change in value upsetting circuit conditions. It is recommended that C29 be replaced with a .0068 mf mica condenser, ± 10% tolerance. These may be obtained by ordering part number C-8F9-135. Condenser must be installed with approximately 7/8 in. lead length from chassis lug to condenser body. Other lead length approximately 3/4 in. (to be adjusted as per following procedure).

ADJUSTMENT USING OSCILLOSCOPE

To make the adjustment, remove the chassis from the cabinet and lay on its back flange on bench. Locate the condenser indicated in figure #1. (This is shown as C29 in the service manual schematic) Carefully remove the lead connecting the condenser at the terminal strip.

FIGURE 1

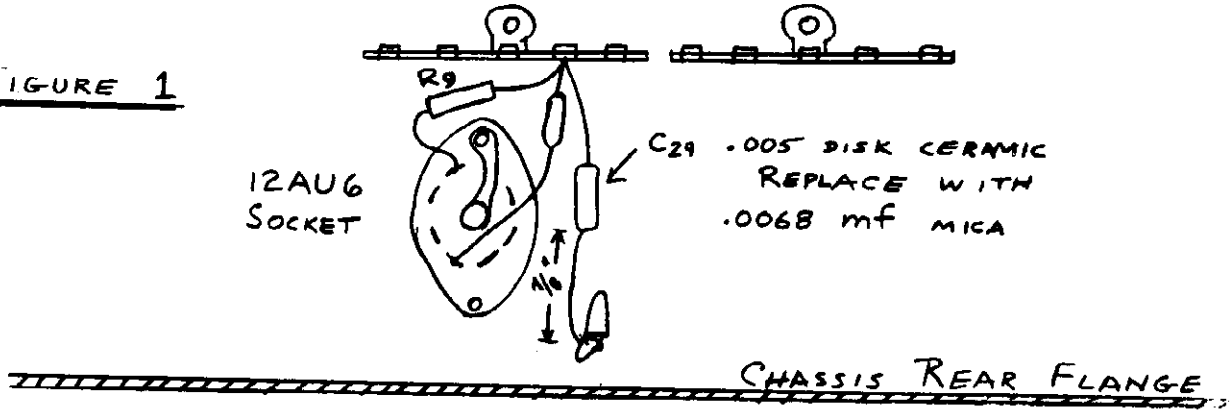

Connect signal generator thru a 300 ohm resistor to "dipole 300Ω" FM antenna terminals. Connect vertical deflection amplifier of scope to end terminals of volume control (black wire ground and white wire high). Set oscilloscope amplifier for maximum gain and generator to 10.7 MC with approximately 150 KC FM deviation.

Temporarily reconnect condenser C29 using maximum length of wire available. If part of lead has broken off, splice on an additional one-half inch. Adjust generator output until a response is seen. If necessary slightly readjust frequency. Figure #2 shows a correct response, figure #3 a poor response, and figure #4 one very poor. Observe response and if not correct shorten condenser lead by one-eighth inch. Repeat this in steps of one-eighth inch until a response like figure #2 is obtained. This lead length is fairly critical and if the lead is either too long or too short distortion will result. After finding the best lead length permanently solder wire at this point.

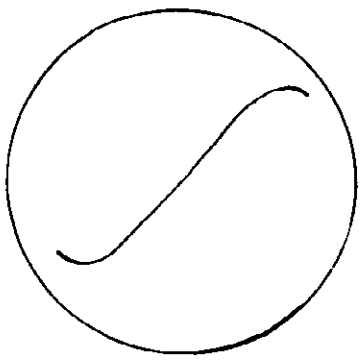

FIGURE 2

PROPER RESPONSE

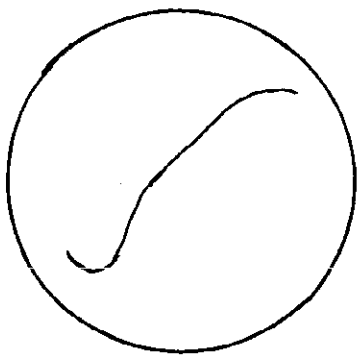

FIGURE 3

SLIGHTLY UNSTABLE

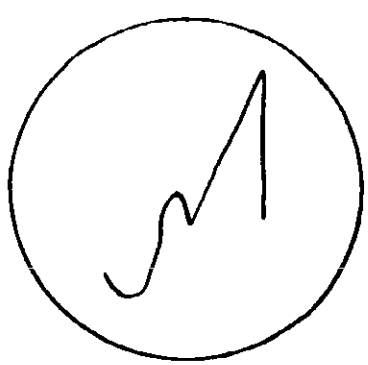

FIGURE 4

VERY UNSTABLE

©John F. Rider

ADJUSTMENT ON FM BROADCAST STATION
(If Oscillescope & Signal Generator are not available)

Remove chassis from cabinet and lay on its back flange. Connect speaker and antenna and tune in any FM station. If distortion is severe only a slight disturbance may be heard. Locate the condenser indicated in Figure #1. This is shown as C29 in the service manual. Carefully remove the lead connecting the condenser at the terminal strip.

Temporarily reconnect condenser C29 using maximum length of wire available. If part of lead has broken off, splice on an additional one-half inch. Retune station and observe results. Reduce lead length by one-eighth inch and repeat . Find the length that produces the lowest back ground noise, clearest response and easiest tuning and permanently solder condenser lead at this point. The exact length is fairly critical and distortion will result if it is either too long or too short.

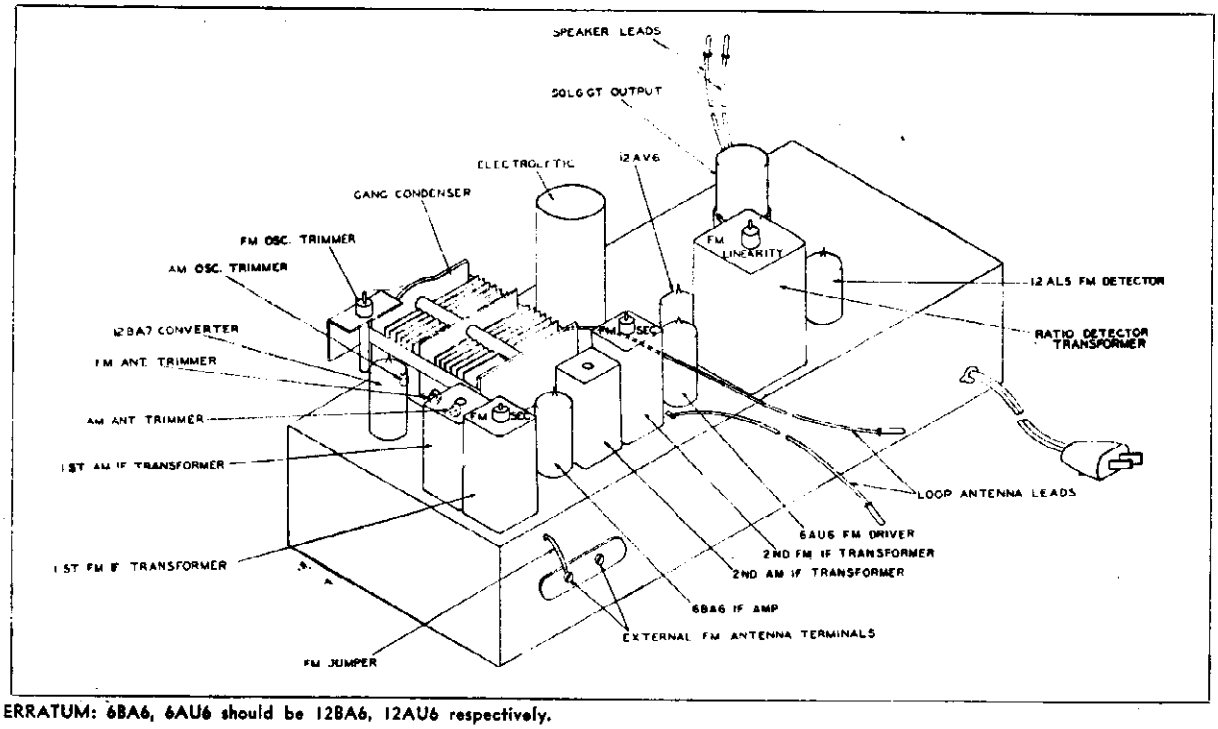

ERRATUM: 6BA6, 6AU6 should be 12BA6, 12AU6 respectively.

ALIGNMENT PROCEDURE

Broadcast Band Section I. F. and R. F.

The alignment procedure below includes the sensitivities at the inputs of various stages. All signal input values are based on an output of 50 milliwatts. This may be measured by disconnecting the speaker voice coil and substituting a 3.2-ohm resistor across the secondary winding of the output transformer. A reading of .40 volts AC across this resistor will be approximately equivalent to 50 milliwatt output with the speaker connected. The volume control must be set at maximum. The tone control must be set for maximum treble.

The signal source must be an accurately calibrated signal generator capable of supplying the frequencies designated, modulated 30% with a 400-cycle audio signal. A 400 cycle audio signal is required for the audio measurement. Variations in sensitivities of plus or minus 25% are usually permissable.

AM - I. F. ALIGNMENT

Band Switch in AM Position, Gang Open, Dummy Antenna .1 Mfd.

SIGNAL GENERATOR FREQENCY	*CONNECTION TO RADIO*	*ADJUSTMENTS TO BE MADE*	*ADUST FOR*
455 Kc. Use 1000 microvolts	Pin 1 of 12BA6 I.F. Amp. and B minus	Primary and Secondary of T8. See chassis view.	Maximum output Should be 50 Milliwatts
455 Kc. Use 30 microvolts	Pin 7 of 12BA7 Converter and B minus	Primary and Secondary of T6. See chassis view.	Maximum output Should be 50 Milliwatts
400 cycles. Use 17 millivolts	High Side of Volume Control and B minus	None	Maximum output Should be 50 Milliwatts

©John F. Rider

BROADCAST BAND–R. F. ALIGNMENT

Check pointer so that the right hand edge of the pointer skirt coincides with the right hand edge of marker to the extreme left when gang is closed.
For Adjustment, see dial mechanism illustration.

SIGNAL GENERATOR FREQUENCY	SET POINTER AT	CONNECT TO RADIO	ADJUST
1620 Kc.	Extreme Right Calibration Marker	AM Antenna Clip and B minus	Oscillator trimmer C17 for maximum
1400 Kc.	Second Calibration from Left	AM Antenna Clip and B minus	Antenna trimmer C3 for maximum

Check tracking at 1000 Kc, 600 Kc, and 535 Kc to be sure oscillator is set correctly.
NOTE: A special fibre alignment tool having a hex end (similar to an Allen wrench) is required for adjusting the 455 Kc. IF transformers.

ALIGNMENT PROCEDURE

FM Band Section I. F. and R. F.

A non-metallic alignment tool must be used.

IMPORTANT

No alignment of the FM section of this radio should be attempted unless you are positive that the circuits are in need of adjustment and you have the necessary equipment.

All components used in this radio are extremely stable and the tuned circuits should require no adjustment over a long period of time.

NOTE

The following alignment is based in the use of the new Simpson vacuum tube voltmeter which has a "floating ground". In other words, the meter, when used as a vacuum tube voltmeter, can have both the positive and negative sides connected to points above ground and still give true readings.

A standard AM signal generator is required.

FM–I. F. ALIGNMENT

Band Switch in FM Position. Dummy Antenna .1 Mfd.

SIGNAL GENERATOR FREQUENCY	CONNECTION TO RADIO	VACUUM TUBE VOLT METER CONNECTION TO RADIO	ADJUSTMENTS TO BE MADE	ADJUST FOR
10.7 Mc. Use about .1 volt	Pin No. 1 of 12AU6	Pin No. 7 of 12AL5 and B minus	Top Core Primary of T9	Resonance should be about 3 volts
10.7 Mc. Use about .1 volt	Pin No. 1 of 12AU6	Pin No. 7 of 12AL5 and B minus	Bottom Core Secondary of T9	Zero. Use zero center scale See note "B"
10.7 Mc. Use about 3300 microvolts	Pin No. 1 of 12BA6	See note "A"	Primary and Secondary of T7 See chassis view.	Resonance should be about 3 volts
10.7 Mc. Use about 200 microvolts	Pin No. 7 of 12BA7	Pin No. 7 of 12AL5 and B minus	Primary and Secondary of T5 See chassis view.	Resonance should be about 3 volts

NOTES ON FM — I. F. ALIGNMENT

NOTE "A"—Connect two resistors in series, 100K OHMS each, from Pin No.7 of 12AL5 to B minus (pin no.1). These resistors must be matched within 5%. Connect vacuum tube voltmeter between the midpoint of the resistors and point zz.

NOTE "B"—If T9 has been tampered with, it is possible that no crossover point will be found at first. Careful adjustment of both primary and secondary is necessary.

NOTE "C"—To use a VTVM which does not have the "floating ground" feature, in step 2 above connect "ground" side of VTVM to B minus and "high" side to midpoint of 100K resistors (Note A). Adjust bottom core of T9 for zero reading.

GENERAL—Input signals should be adjusted to give approximately 3 volts. The ratio detector is operating at a resonable level at this point and will give the truest indication of correct alignment with the procedure specified.

© John F. Rider

FM - R.F. ALIGNMENT

Check pointer so that the right hand edge of the pointer skirt coincides with the right hand edge of marker to the extreme left when gang is closed.
For Adjustment, see dial mechanism illustration.

SIGNAL GENERATOR FREQUENCY	POINTER	CONNECTION TO RADIO	ADJUST	V T V M CONNECTIONS
108 MC.	108 MC. Marker	FM antenna terminals	FM Osc C13 for maximum	Pin No. 7 of 12AL5 to B minus
98 MC.	Tune in Gen. Signal	See Note "B" below	FM Ant. C6 for maximum	

NOTE "A"—If a signal generator with the above fundamental frequency is not available, it is sometimes possible to use harmonics. Use extreme care in picking harmonics. An alternate procedure is to use a local station carrier of known frequency to align the FM Band and to use the vacuum tube volt-meter as above for resonance indication. A weak carrier, however, will not produce 3 volts.

NOTE "B"—Connect 300 ohms in series with "hot" side of generator and connect to left hand screw of external FM Antenna Terminals. Connect cold side of generator to right hand screw.

REPLACEMENT PARTS LIST

Ref. No.	Part No.	Description	Qty. Used
		Condensers	
C1, 25, 35, 49, 27	C-8G-11733	220 mmf, ceramic	5
C2	C-8G-12199	10 mmf, ceramic	1
C3	On gang	Trimmer, Antenna AM	
C4, A,B,C,D	B-8A-15843	Gang Condenser	1
C5, 7, 14	C-8F3-124	820 mmf, mica	3
C6	On gang	Trimmer, Antenna FM	
C8, 18, 19, 21, 22, 24, 26, 29, 40, 42, 44	A-8G-13962	.005 mf, ceramic	11
C9, 45	C-8D-10813	.05 mf, 400 volts, tubular	2
C10	C-8D-10770	.05 mf, 200 volts, tubular	1
C11, 46	C-8F3-113	100 mmf, mica	2
C12, 16	C-8G-12198	47 mmf, ceramic	2
C13	On gang	Trimmer, Oscillator AM	
C15	A-8G-12495-6	4.7 mmf, ceramic	1
C17	A-201-15142	Trimmer, Oscillator FM	1
C20	C-8G-12159	30 mmf, ceramic	1
C23, 28, 33	C-8G-16049	.002 mf, ceramic	3
C30	C-8F3-120	390 mmf, mica	1
C31	C-8D-16013	5 mf, 100 volts, electrolytic	1
C32	C-8F3-11	330 mmf, mica	1
C34, 36, 37, 38	C-8D-10761	.01 mf, 400 volts, tubular	4
C41	C-8D-10953	.15 mf, 400 volts, tubular	1
C43	C-8G-10648	68 mmf, ceramic	1
C48, A,B,C,D	B-8C-15880	40-20-20-20 mf, electrolytic	1
		Resistors	
R1, 15	C-9B1-78	22K ohms, ½ watt, 10%	2
R2	A-16M-16035	Suppressor	1
R3	C-9B1-61	820 ohms, ½ watt, 10%	1
R4, 7, 13	C-9B1-58	470 ohms, ½ watt, 10%	3
R5	C-9B1-34	3.3 megohms, ½ watt, 20%	1
R6, 9	C-9B1-48	68 ohms, ½ watt, 10%	2
R8	C-9B1-82	47K ohms, ½ watt, 10%	1
R10	C-9B1-33	2.2 megohms, ½ watt, 20%	1
R11	C-9B1-26	150K ohms, ½ watt, 20%	1
R12	C-9B1-79	27K ohms, ½ watt, 10%	1
R14	A-10A-15853	1 megohm, volume control and switch	1
R16	C-9B1-36	6.8 megohm, ½ watt, 20%	1
R17, 19	C-9B1-94	470K ohms, ½ watt, 10%	2
R18	A-11B-15852	1 megohm tone control	1
R20	C-9B1-52	150 ohms, ½ watt, 10%	1
R21	C-9B1-27	220K ohms, ½ watt, 10%	1
R22	C-9B1-65	1800 ohms, ½ watt, 10%	1
R23	C-9C4-1084	56 ohms, 2 watts, 10%	1
R24	C-9C4-1079	22 ohms, 2 watts, 10%	1
R25	C-9B2-53	180 ohms, 1 watt, 10%	1
R26	C-9B4-63	1200 ohms, 2 watts, 10%	1
		Coils and Transformers	
L3, L4, L5	A-16B-16023	Choke	1
T1	C-13E-16028	Loop antenna	1
T2	A-13E-16032	FM antenna coil	1
T3	A-13D-16031	FM oscillator coil	1
T4	B-13D-16002	AM oscillator coil	1
T5	B-13A-15999	FM input IF transformer	1
T6	B-13A-16301	AM input IF transformer	1
T7	B-13B-16000	FM driver IF transformer	1
T8	B-13B-16302	AM output IF transformer	1
T9	B-13M-16001	Ratio detector transformer	1
T10	B-12C-16014	Output transformer	1
		Dial Parts	
	B-2C-16063	Dial plate	1
	B-6A-16062	Dial crystal	1
	A-2M-16034	Clip for crystal	2
	A-3A-16004	Tuning shaft	1
	B-29C-15876	"C" washer	1
	B-2M-15992	Pointer bar	1
	A-2D-15991	Dial bracket	2
	A-53A-10989	Dial string, 60" reg.	
	B-2G-16005	Dial Pointer	1
	A-49A-10078	Tension spring	2
	A-3H-10299	Idler pulley	2
		Miscellaneous	
	B-18A-16024	PM speaker, 4"x6", oval	1
	A-15B-13430	Socket, miniature, 9 pin	1
	A-15B-16297	Socket, miniature, 7 pin	4
	A-15B-10440	Socket, octal	1
	B-15B-13785	Lytic mounting plate	1
	B-14M-16251	Line cord and plug, 3-wire	1
	5C-13180-36	Cabinet	1
	A-2M-10096	Snap pins for back	2
	B-5B-11131-41	Knob, plain	3
	B-5B-16057-41	Knob, with dot	1
	A-21J-12775	Selenium rectifier	1
	A-3B-16009	Bushing for tuning shaft	1
	A-7B-13050	FM dipole terminal strip	1
	B-2D-15432	Loop mounting bracket	1
	B-29J-13364	Rubber washer	3
	42A-10874	¾" chassis mtg. screws	3
	B-29A-2104	Steel washers for above	3
	B-23K-13191	Grill screens	1
	A-19A-15257	Pin for speaker leads	2
	B-20A-16003	Band change switch	1

© John F. Rider

MODEL D2919

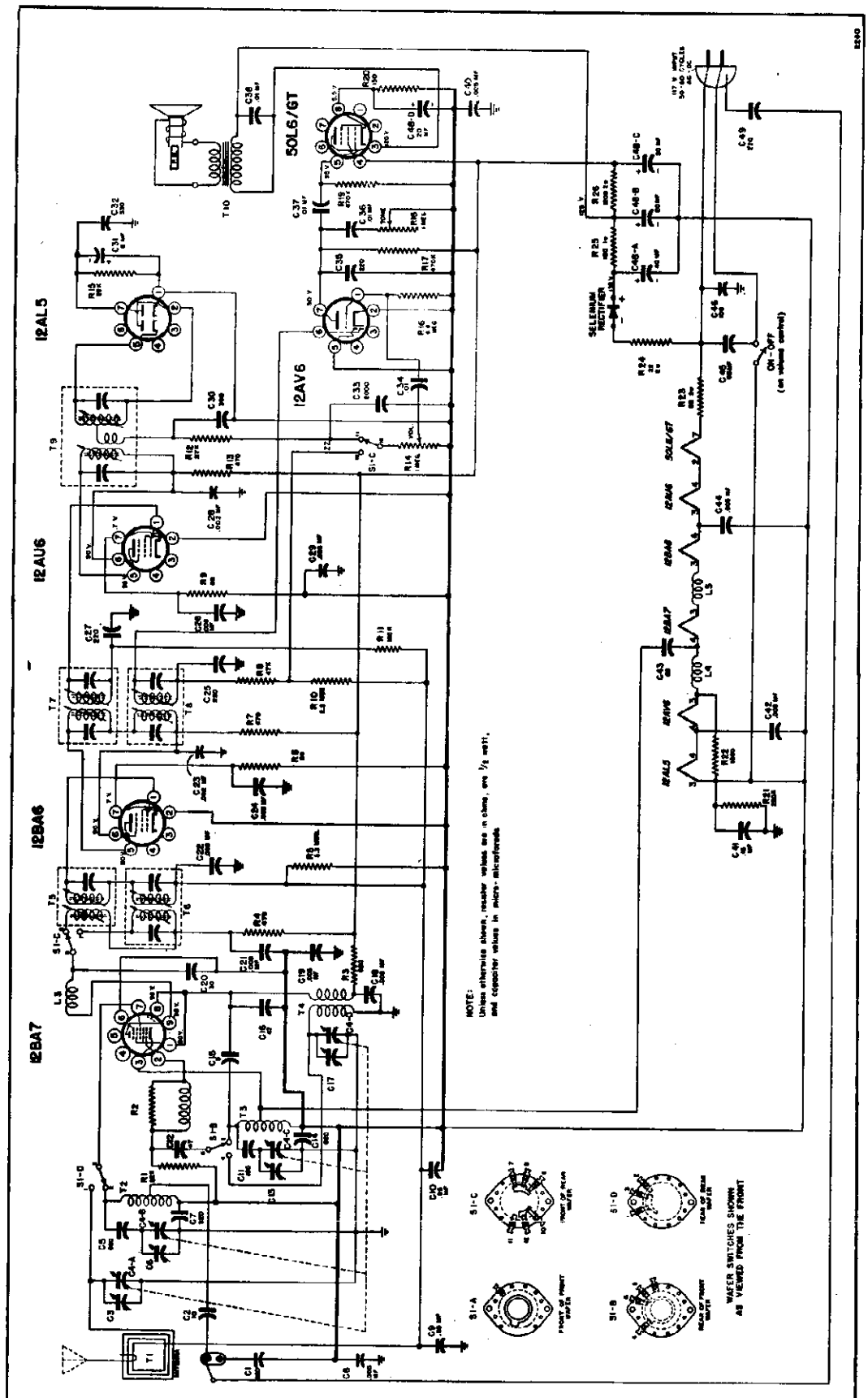

NOTE: At 50L6GT socket the "95 v." should refer to pin 4 rather than pin 5.

©John F. Rider

MODEL D3615

SPECIFICATIONS

Power Supply.....“A” Battery Supply—7½ volts 50 Ma.
“B” Battery Supply—90 volts 13 Ma.
or
105-125 volts AC, 50-60 cycles 25 watts
or
105-125 volts DC

Frequency Range..540-1600 KC

Intermediate Frequency.....455 KC

Selectivity.....at 1000 KC, 41 KC wide at 1000 times signal

Sensitivity.....(for .05 watt output with external antenna)
50. microvolts average

Power Output.....280 watt maximum
.130 watt 10% harmonics

Speaker.....5” P.M.

ALIGNMENT PROCEDURE

Volume Control—Maximum All Adjustments.

Allow Chassis and Signal Generator to “Heat Up” for several minutes.

The equipment in column at right is required for aligning.

A Signal Generator which will provide an accurately calibrated signal at the test frequencies as listed.

Output Indicating Meter—Non-Metallic Screwdriver.

Dummy Antennas—.1 mf., 100 mmf.

SIGNAL GENERATOR FREQUENCY SETTING	CONNECTION AT RADIO	GROUND CONNECTION	DUMMY ANTENNA	CONDENSER SETTING	ADJUST TRIMMERS TO MAXIMUM
	Remove chassis from cabinet				
455 KC	Signal Grid of 1st Det. (1R5 Pin 6)	Chassis base thru .1 mf Condenser	.1 mf.	Turn Rotor to Full Open	2nd I.F. (C-13A) & (C-13B) 1st I.F. (C-8A) & (C-8B)
1600 KC	Signal Grid of 1st Det. (1R5 Pin 6)	Chassis base thru .1 mf Condenser	.1 mf.	Turn Rotor to Full Open	Oscillator (C-5)
	Reassemble chassis in cabinet.				
1400 KC	External Antenna Clip	External Ground Clip on Antenna	100 mmf.	Turn Rotor to Max. Output	Antenna (C-1)

CAUTION—As the metal chassis is connected to one side of the line, in any service work keep it on a wood or other insulated surface to avoid contact with ground.

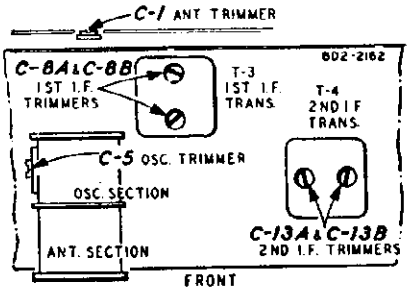

REMOVAL OF CHASSIS FROM CABINET

To remove the chassis from the cabinet, it will be necessary to pull off the 2 control knobs and then unscrew the 2 screws fastening the chassis to the cabinet. See the tube position illustration for the location of these screws. After these screws have been removed, carefully pull out the chassis taking care not to damage the connections to the loop antenna.

REPLACEMENT PARTS LIST

NOTICE: There is a model number label on the chassis. This label identifies the radio as to model and issue letter. When ordering parts or writing, give ALL information appearing on this label.

MISCELLANEOUS

12A446	5” P.M. Speaker
	Cone and Voice Coil Assembly (Specify Part Number and Letters Stamped on Speaker)
14X291	Metal Grille
	Grille Cloth (4¼” x 7¾” Color 426 W Beige)
4A952	Escutcheon
	No. 6 x ¼” R.H. Wood Screw, Steel Cad. Plated (Mtg. escutcheon)
3A303	Socket—Octal (8 prong) Molded
3A312	Miniature Tube Socket
32X221	Tube Shield
25X840	Volume Control Mtg. Bracket
28X329	Cond. Cushion Stud. } Mtg. Gang Capacitor
6X21	Rubber Grommet }
2A183	Changeover Switch
13X328	Line Cord and Plug Assembly
13X544	“A” and “B” Battery Cable Assembly
10A586	Knob (Tuning)
10A587	Knob (Volume, On-Off)
15X233	Pointer

TRANSFORMERS AND COILS

T-1	9A1447	“B” Range Loop Antenna
T-2	9A1836	Oscillator Coil Assembly
T-3	9A1837	1st I-F Transformer and Can Assembly
T-4	9A1838	2nd I-F Transformer and Can Assembly
T-5	51X126	Output Transformer

CAPACITORS

C-1	17A123	1.0-12 mmf	Trimmer
C-2A, C-2B	14A183	Gang Capacitor	
C-3	47X476	100 mmf	Moulded
C-4	47X463	47 mmf	Moulded
C-5		Part of C-2 (Gang Capacitor)	
C-6, C-7	B66403	.04 mf 200V	Tubular
C-8A, C-8B		Part of T-3 (1st I-F Transformer)	
C-9	B66104	.1 mf 200 V	Tubular
C-10	B66254	.25 mf 200 V	Tubular
C-11, C-17	B66503	.05 mf 200 V	Tubular
C-13A, C13B		Part of T-4 (2nd I-F Transformer)	
C-14A, C-14B	47X112	50 mmf	Dual mica
C-15, C-19	B66502	.005 mf 200 V	Tubular
C-16A }		40 mf 150 V }	Dry
C-16B }	45X349	40 mf 150 V }	Electrolytic
C-16C		200 mf 35 V }	
C-18	47X480	150 mmf	Moulded
C-20	D66502	.005 mf 400 V	Tubular
C-21	D67104	.10 mf 400 V	Tubular

RESISTORS

		Ohms	Watts	Material
R-1	B84104	100 K	0.5	Carbon
R-2	B84221	220	0.5	Carbon
R-3	B84271	270	0.5	Carbon
R-4	C83201	200	1.0	Carbon
R-5	B83242	2400	0.5	Carbon
R-6	B84102	1 K	0.5	Carbon
R-7, R-8	B85225	2.2 meg	0.5	Carbon
R-9	B85473	47 K	0.5	Carbon
R-10	36X310	500 K		Volume control and switch
R-11	B85475	4.7 meg	0.5	Carbon
R-12	43X216	2050	7.0	Wire wound
R-13	B84222	2200	0.5	Carbon
R-14, R-16	B85335	3.3 meg	0.5	Carbon
R-15	B85105	1 meg	0.5	Carbon
R-17	C84270	27	1.0	Carbon
R-18	B84223	22 K	0.5	Carbon

© John F. Rider

MODEL D3615

BATTERY OPERATION

The following size battery pack, consisting of a 90 volt "B" section and a 7½ volt "A" section is required:

10¼ x 3¼ x 4 inches high.

To install a battery pack, remove the wooden block at the bottom of the cabinet by taking out the two screws. Place the battery in the cabinet with the socket facing upward and near the front of the cabinet under the speaker. Note the position of the prongs on the battery cable plug and the holes in the socket on the battery. Then insert the plug into the socket. Place the wooden block flush against the battery pack. It may not always be possible to use the original holes when replacing the screws, as battery packs will vary in size. Wind the power line cord around the two hooks just above the battery.

CAUTION — Secure the power line plug in position so that it cannot move around the cabinet.

AC-DC — BATTERY SWITCH — Push the switch at the back of the chassis to the "BATT" position. (See illustration on page 2).

AC-DC OPERATION

Unless otherwise marked, this radio must be operated on a power supply of 105-125 volts AC, 50-60 cycles only or 105-125 volts DC. Do not connect the radio to a power outlet until certain that the power supply is correct for the receiver. If in doubt, check with your local power company before connecting the radio.

To connect the radio for AC-DC operation, open the cabinet back and unwind the power line cord from the hooks at the sides of the cabinet and pass the cord through one of the lower openings in the back. Push the switch at the back of the chassis to the AC-DC position. (see illustration on page 2).

CAUTION: Never open the back of the cabinet or allow the metal chassis to come in contact with any ground while the power line plug is inserted in the power outlet. If excessive hum is encountered while using the radio on an AC power supply, reverse the plug. Leave the plug inserted in the position that results in the least hum.

110 VOLT DC OPERATION

Insert the plug so that the red mark on the side of the plug is on the positive side of the line. CAUTION—If polarity of line is not known, insert plug; if set does not operate after one minute, reverse plug.

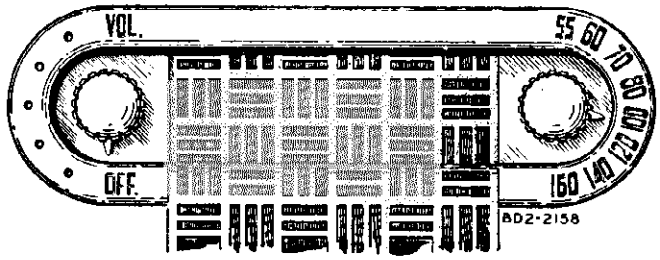

ON-OFF SWITCH AND VOLUME CONTROL

TUNING KNOB

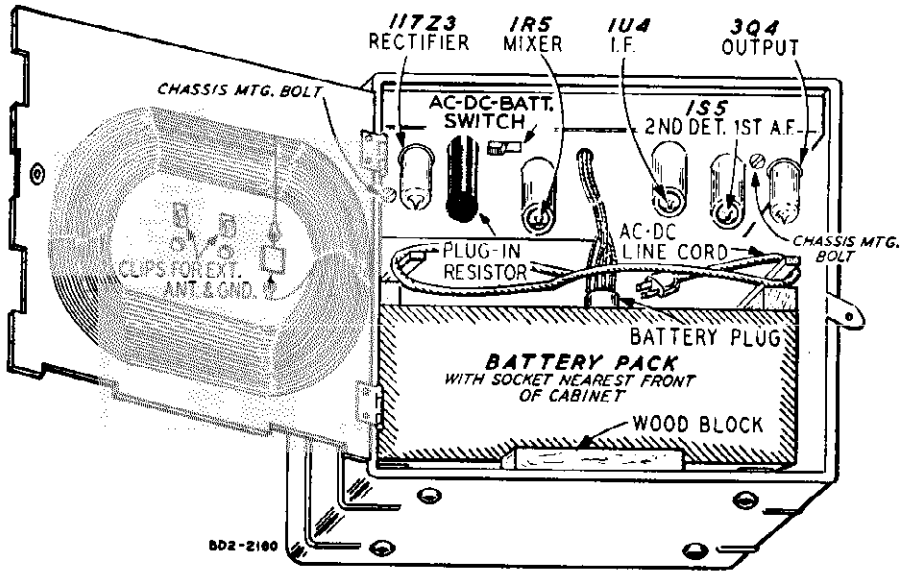

© John F. Rider

MODEL D3615

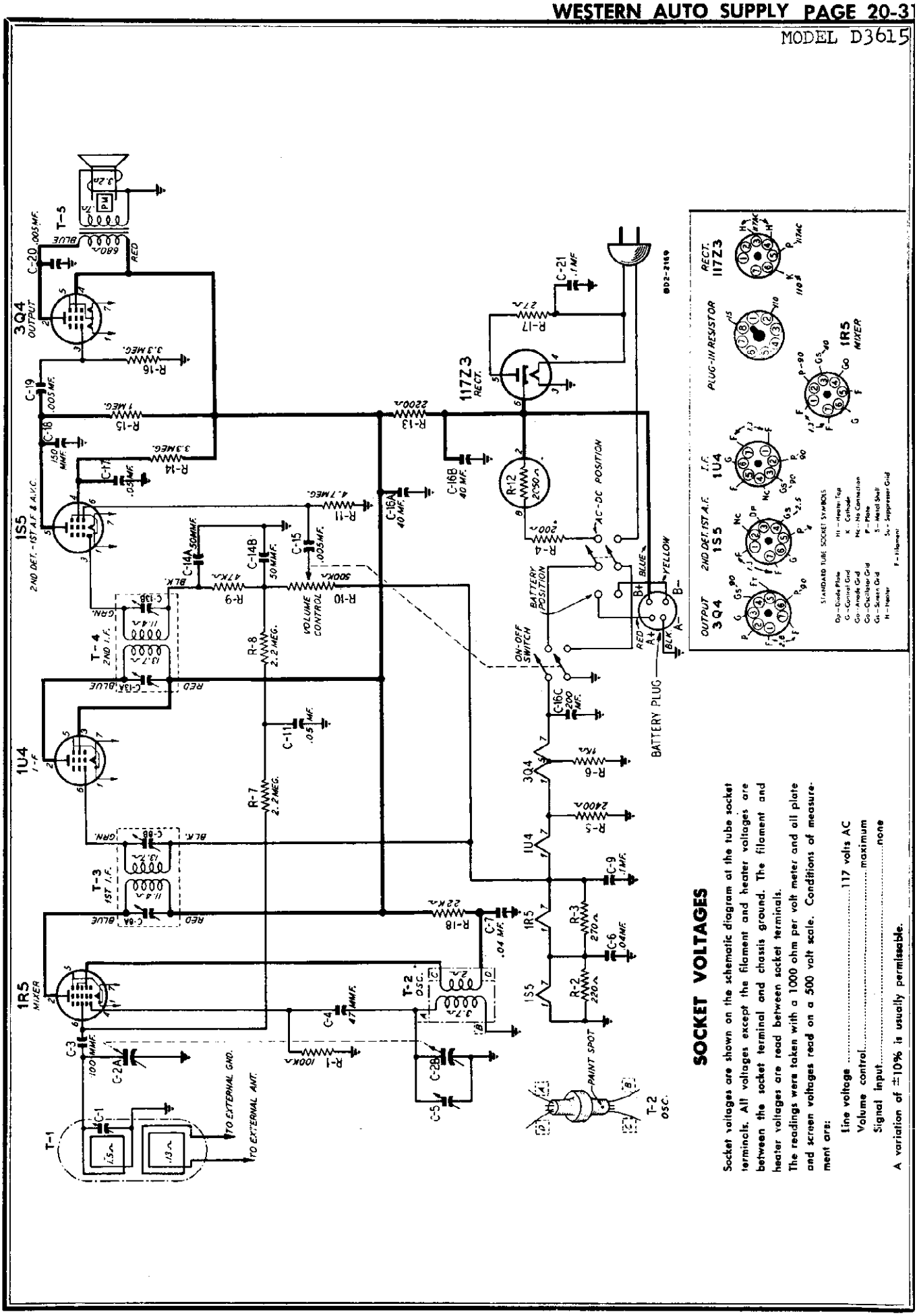

SOCKET VOLTAGES

Socket voltages are shown on the schematic diagram at the tube socket terminals. All voltages except the filament and heater voltages are between the socket terminal and chassis ground. The filament and heater voltages are read between socket terminals.

The readings were taken with a 1000 ohm per volt meter and all plate and screen voltages read on a 500 volt scale. Conditions of measurement are:

Line voltage ..... 117 volts AC
Volume control ..... maximum
Signal input ..... none

A variation of ±10% is usually permissible.

©John F. Rider

MODEL D3809

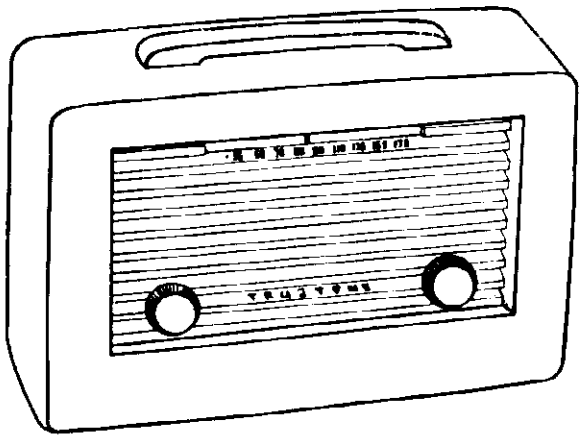

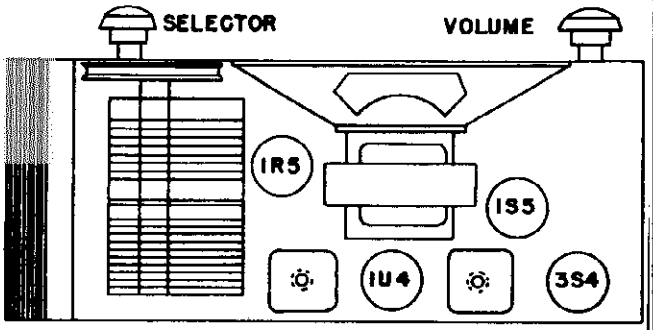

POWER SUPPLY

The battery supply to be used with this receiver is as follows:

"A" supply ..... 1½ volts. Use three type "D" flashlight cells; Wizard No. B-6722, B-6740, or B-6745, or Burgess No. 2, or Winchester No. 1511, or Eveready No. 950 or equivalent.

Use Wizard No. B-6258 or Burgess No. XX45 or Winchester No. 1710 or Eveready No. 467 or equivalent.

REPLACEMENT OF CELLS

The three "D" cells are inserted so that the brass caps on the positive terminals fit snugly into the holes provided in the contact strip. The contact strip is held in place with the two wing nuts provided.

Clip the fastener to the terminals on the "B" battery so that they snap tight, and place the battery in the space provided.

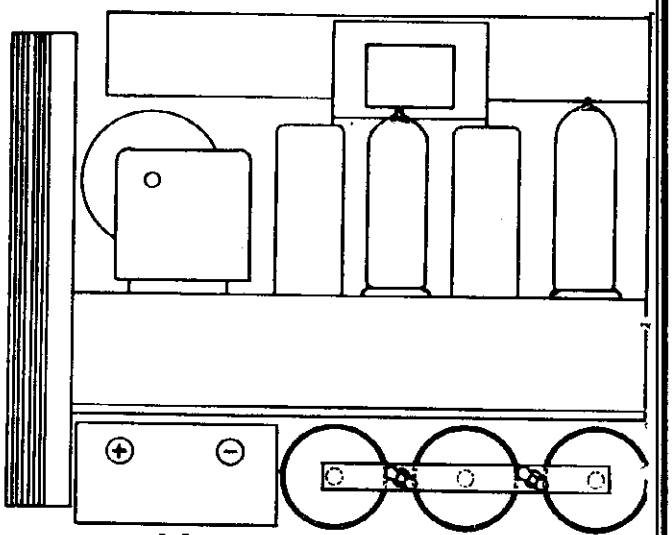

ELECTRICAL SPECIFICATIONS

Batteries	A—1½ volts. 250 ma. B—67½ volts. 8 ma. average.
Frequency Range	530 to 1700 kc.
Intermediate Freq.	455 kc.
Tuning	Two-gang capacitor
Antenna	Built-in loop
Speaker	4 inch PM; voice coil Impedance 3.5 ohms.
Power Output	80 milliwatts undistorted 140 milliwatts maximum
Sensitivity	800 microvolts per meter for 50 milliwatt output
Selectivity	55 kc broad at 1000 times signal at 1000 kc.

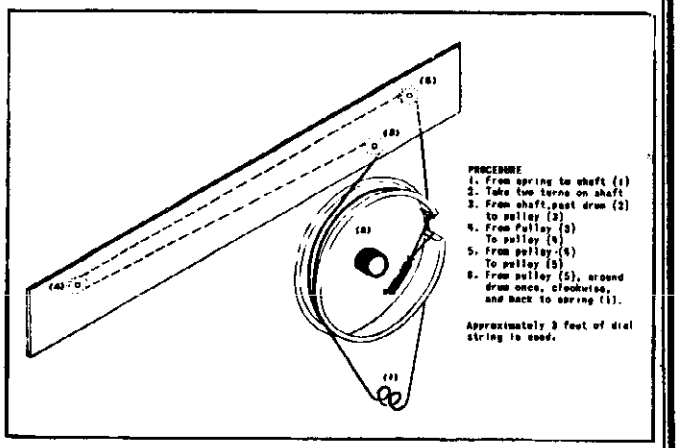

Replacement of Drive Cord

© John F. Rider

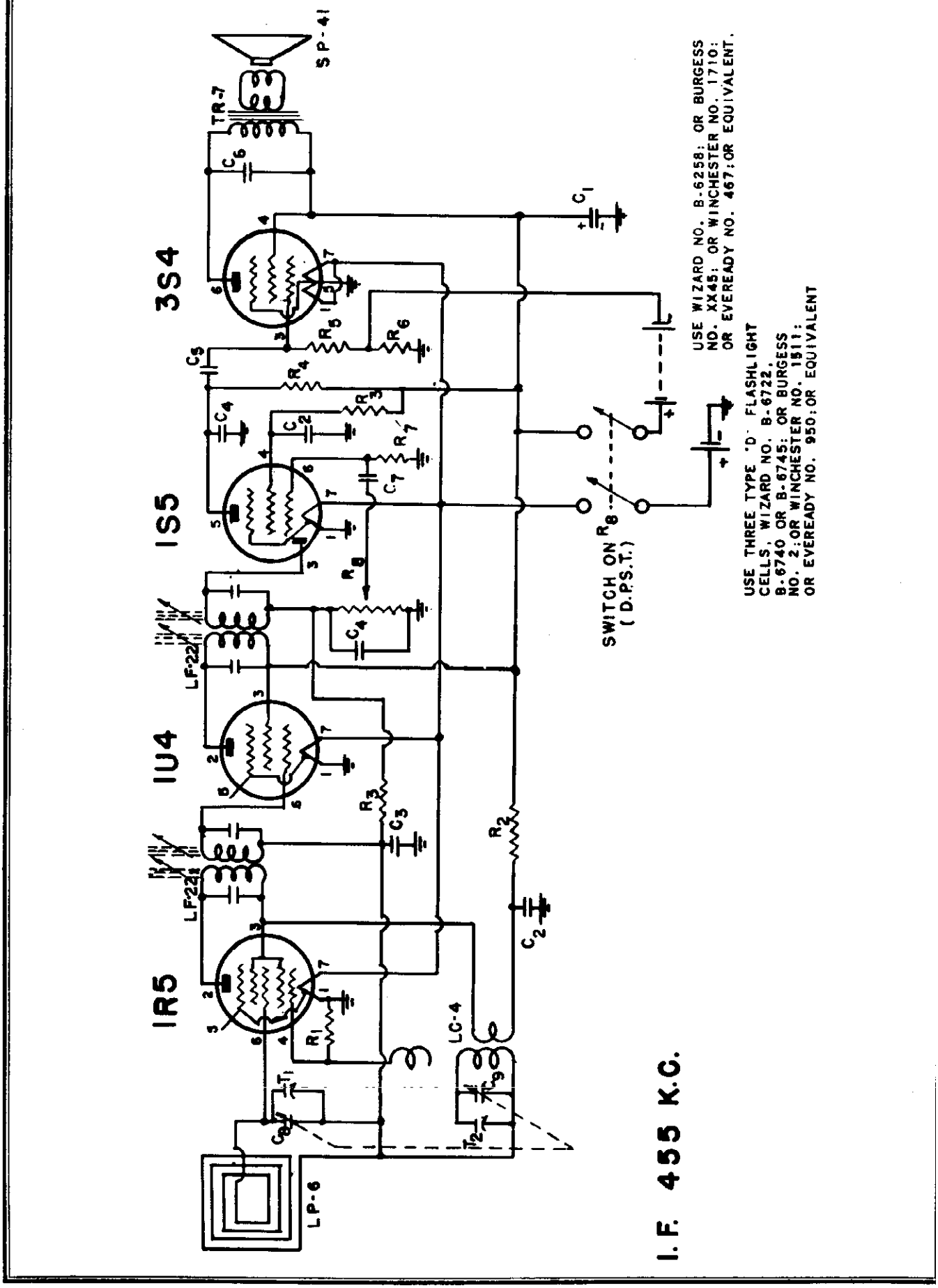
I.F. 455 K.C.
1R5
1U4
LF-22
1S5
3S4
SP-41
TR-7
LP-6
LC-4
SWITCH ON R8 (D.P.S.T.)
USE WIZARD NO. B-6258; OR BURGESS NO. XX45; OR WINCHESTER NO. 1710; OR EVEREADY NO. 467; OR EQUIVALENT.
USE THREE TYPE 'D' FLASHLIGHT CELLS, WIZARD NO. B-6722, B-6740 OR B-6745; OR BURGESS NO. 2; OR WINCHESTER NO. 1511; OR EVEREADY NO. 950; OR EQUIVALENT

MODEL D3809

ALIGNMENT PROCEDURE

- Output meter across 3.5 ohm output load.
- Volume control at maximum for all adjustments.
- Align for maximum output. Reduce input as needed to keep output near 0.4 volts.

SIGNAL GENERATOR				*SETTING TUNER*	*ADJUST TRIMMERS TO MAXIMUM OUTPUT (in order shown)*
Frequency	*Coupling Factor*	*Connection to Receiver*	*Ground Connection*		
455 kc	.1 mfd	1R5 Grid	B—	Rotor full open (Plates out of mesh)	Input and output trimmers on IF cans
1700 kc	.1 mfd	1R5 Grid	B—	Rotor full open (Plates out of mesh)	Oscillator trimmer T2
1500 kc		Radiating Loop		1500 kc*	Antenna trimmer T1

* Five markings on the dial bracket represent respectively 530 kc., 600 kc., 1000 kc., 1500 kc., and 1700 kc., reading from left to right. These points are to be used for the alignment of the receiver.

REPLACEMENT PARTS LIST

Ref. No.	*Part No.*	*Description*
CAPACITORS		
C1	CE-14	16 mfd, 100 volt, Electrolytic
C2	CP-103-3	.01 mfd, 200 volt, paper
C3	CP-503-4	.05 mfd, 200 volt, paper
C4	CM-101-2	100 mmf, 500 volt, mica
C5	CP-202-2	.002 mfd, 200 volt, paper
C6	CP-502-1	.005 mfd, 400 volt, paper
C7	CP-102-3	.001 mfd, 200 volt, paper
C8, C9	CV-10	Variable condenser, two gang
RESISTORS		
R1	RC-104-1	100,000 ohms ½ watt 20%
R2	RC-153-1	15,000 ohms ½ watt 20%
R3	RC-335-1	3.3 megohms ½ watt 20%
R4	RC-105-1	1 megohm ½ watt 20%
R5	RC-225-1	2.2 megohms ½ watt 20%
R6	RC-821-2	820 ohms ½ watt 10%
R7	RC-106-1	10 megohms ½ watt 20%
R8	VC-6	1 meg. Vol. control with switch

Ref. No.	*Part No.*	*Description*
COILS AND TRANSFORMERS		
	LC-4	Oscillator Coil
	LF-22	I.F. Transformer
	LP-6	Loop Antenna
	TR-7	Output Transformer
MISCELLANEOUS		
	SP-41	4 inch P.M. Speaker
	PN-6	Pointer (Specify Color)
	CR-2	Drive Cord
	SG-1	Spring for Drive Cord
	KN-20-4	Knob
	BK-20	Cabinet Back with Hardware (Specify Color)
	CB-104A	Assembled Cabinet without Back and Handle (Specify Color)
	HA-2	Handle for Cabinet with Springs and Pins (Specify Color)
	AS-3	Battery Holder

© John F. Rider

©John F. Rider

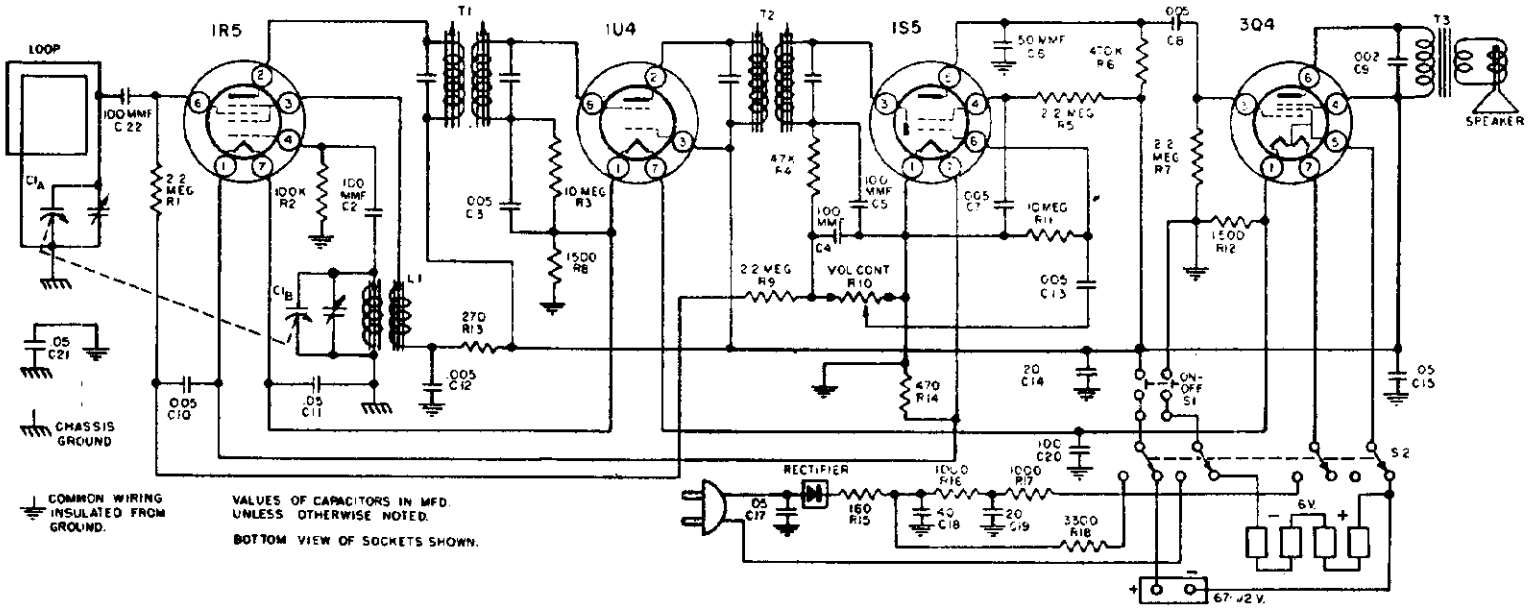

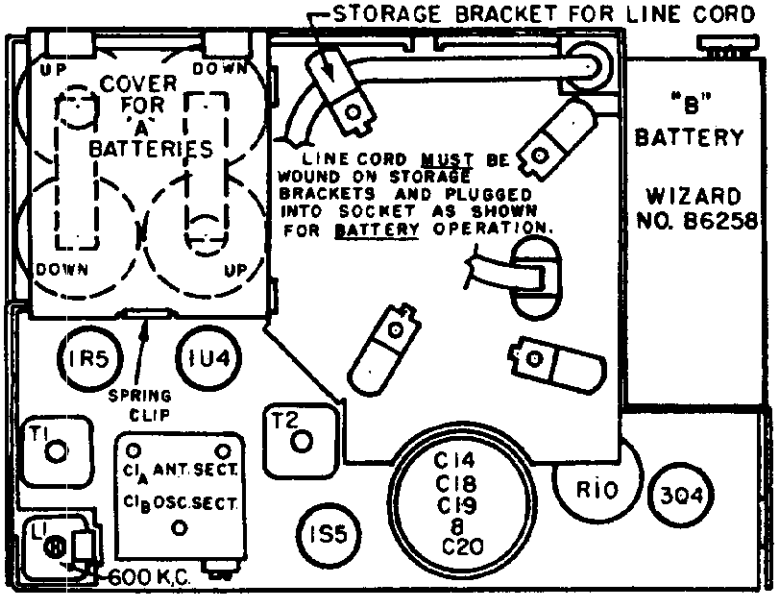

FIG. 2 PICTORIAL DIAGRAM

TUBE COMPLEMENT

The tube complement of this receiver consists of the following:

1—1R5—Mixer Osc.

1—1U4—I.F. Amplifier

1—1S5—Detector and 1st Audio

1—3Q4—Power Output

No Rectifier Tube is needed since a Selenium Rectifier is used for this purpose when the radio is operated on AC current.

MODEL D3811

POWER SUPPLY

This receiver is designed to operate from self contained batteries, or from 105-125 volt AC or DC power supply. One 67½ volt "B" battery, Wizard No. B6258, and four "A" batteries, either Wizard No. B6722, B6732, B6740 or B6745 are used for battery operation. If Truetone batteries are not available Eveready No. 467, Burgess No. XX45, Ray-O-Vac No. 4367 or similar "B" battery may be used. Any standard No. 2 flash light dry cells can be used as "A" batteries.

SERVICE NOTES

Voltages taken from the different points of the circuit to common "B" are measured with volume control in maximum position, all tubes in their sockets and with a volt meter having a resistance of 20,000 ohms per volt. These voltages are clearly indicated on the voltage chart.

All voltages should be measured with a line voltage of 117 volts.

To check for open by-pass condensers, shunt each condenser with another one having the same capacity and voltage rating which is known to be good until the defective unit is located.

ALIGNING INSTRUCTIONS

Never attempt any adjustments on this receiver unless it becomes necessary to replace a coil or transformer, or the adjustments have been tampered with in the field. Always make certain that other circuit components, such as tubes, condensers, resistors, etc., are normal before proceeding with realignment.

If realignment is necessary follow the instructions given below in the order listed. After realignment has been completed repeat the procedure as a final check.

ALIGNMENT PROCEDURE

Volume control—Maximum: all adjustments.

Connect ground lead of signal generator to common "B."

Connect dummy antenna in series with output lead of signal generator.

Connect output meter across voice coil of speaker.

The following equipment is necessary for proper alignment:

Signal generator that will provide the test frequencies as listed, 30% modulated, 400 c.p.s.

Output meter.

Non-metallic screwdriver.

Dummy antennas— .1 mfd., .00025 mfd.

For alignment points refer to Figure No. 2.

CAUTION: This is an A.C.-D.C. receiver and if alignment is made with the receiver connected to 117 volts A.C. or D.C., it is necessary to isolate the signal generator or the receiver from the line by use of a transformer, or place a .2 M.F.D. condenser in both test leads of the Signal Generator.

Position of Variable	Generator Frequency	Dummy Ant. Mfd.	Generator Connections	Trimmer Adjustment	Trimmer Function
Fully open	455 KC	.1	*1R5 Grid (Stator of C1A)	T2	Output I.F.
Fully open	455 KC	.1	*1R5 Grid (Stator of C1A)	T1	Input I.F.
Fully open	1600 KC	.00025	*1R5 Grid (Stator of C1A)	C1B	Oscillator
Tune in signal from generator	1400 KC	—	Loosely coupled to loop	C1A	Antenna
**Tune in signal from generator	600 KC	—	Loosely coupled to loop	L1	600 KC Padder

*Connect ground lead of signal generator to chassis.

**When making this adjustment the variable should be rocked back and forth.

VOLTAGE CHART

All voltages are measured from minus "B" with a 20,000 ohm per volt meter, volume control at maximum, no signal applied, and the radio operating from a 117 volt AC power supply.

NOTE: Normal tolerance on component values may cause a plus or minus of 10% in voltage readings.

TUBE	Pin Numbers						
	1	2	3	4	5	6	7
1R5	1.6	65	67	—8	1.5	0	2.8
1U4	2.8	65	65	0	2.8	0	4.2
1S5	0	0	0	18	20	0	1.5
3Q4	4.2	64	0	65	5.9	64	6.8

©John F. Rider

PARTS LIST

Circuit Diagram Reference	Part No.	Description
		CONDENSERS
C2, C4, C5, C22	A15-190	100 MMF Mica condenser
C1A, C1B	B19-190	Variable condenser
C3, C7, C8	A16-181	.005 MFD 150 volt condenser
C10, C12, C13		
C6	A15-191	50 MMF mica condenser
C11, C17, C21	A16-172	.05 MFD 400 volt condenser
C14, C19		
C18	A18-282	20 MFD 150 volt Electrolytic condenser 40 MFD 150 volt Electrolytic condenser 100 MFD 25 volt Electrolytic condenser
C20		
C15	A16-171	.05 MFD 200 volt condenser
C9	A16-182	.002 MFD 200 volt condenser
		RESISTORS
R1, R5, R7, R9	A60-726	2.2 Megohm ½ watt resistor
R2	A60-727	100K ohm ½ watt resistor
R3, R11	A60-728	10 Megohm ½ watt resistor
R4	A60-730	47K ohm ½ watt resistor
R6	A60-731	470K ohm ½ watt resistor
R8, R12	A60-729	1500 ohm ½ watt resistor
R10	A24-172	Volume control, 1 megohm
R13	A60-723	270 ohm ½ watt resistor
R14	A60-722	470 ohm ½ watt resistor
R15	A60-725	160 ohm 3 watt resistor
R16, R17	A60-713	2000 ohm 10 watt resistor (1000 ohms each
R18	A60-724	3300 ohm 1 watt resistor
		COILS
T1, T2	C10-475	1st and 2nd I.F. Transformer
T3	A80-231	Output transformer
L1	B10-477	Oscillator coil
		MISCELLANEOUS
	S84-112	Cover assembly for "A" batteries
	S84-207	Front cover assembly for case, with loop.
	S84-169	Rear cover assembly for case
	S84-111	Hub and Pointer assembly
	A52-227	Knob, On-Off switch
	A52-229	Knob, tuning
	A52-232	Knob, volume control
	A83-391	Selenium Rectifier
	B79-353	Speaker, P.M.
	A69-174	Switch, AC-DC—Battery
	A69-175	Switch, On-Off
	A76-34	Terminal for "B" battery
	B23-156	Line cord
	D21-108	End Cap, for handle
	A83-494	Handle

©John F. Rider

© John F. Rider

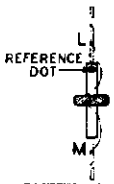

ANTENNA COIL 506511

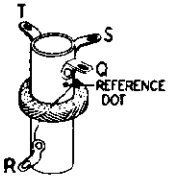

OSCILLATOR COIL 506509

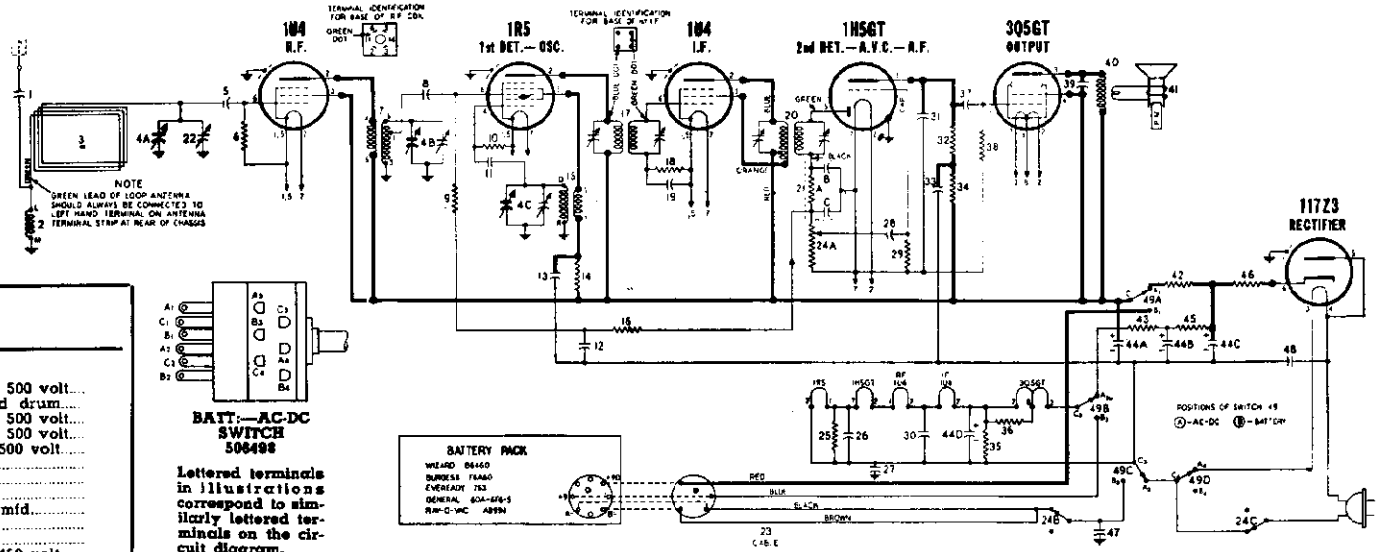

PARTS LIST

DIA-GRAM NO.	PART NO.	DESCRIPTION
		CONDENSERS
1	506340	Condenser—ceramic 100 Mmfd. 500 volt
4-A, B, C	506496	Condenser—variable gang and drum
5	506340	Condenser—ceramic 100 Mmfd. 500 volt
8	506340	Condenser—ceramic 100 Mmfd. 500 volt
11	504973	Condenser—ceramic 22 Mmfd. 500 volt
12	512026	Condenser—.05 Mfd. 200 volt
13	512008	Condenser—.01 Mfd. 200 volt
19	512014	Condenser—.02 Mfd. 200 volt
22	119132	Condenser—trimmer 2 to 15 Mmfd.
26	512044	Condenser—.25 Mfd. 200 volt
27	512040	Condenser—.15 Mfd. 400 volt
28	505873	Condenser—ceramic .005 Mfd. 450 volt
30	512044	Condenser—.25 Mfd. 200 volt
30-B, C	506338	Condenser—ceramic 100 Mmfd. 400 volt (part of diode filter unit)
31	506340	Condenser—ceramic 100 Mmfd. 500 volt
33	512032	Condenser—.1 Mfd. 200 volt
37	512008	Condenser—.01 Mfd. 200 volt
39	512002	Condenser—.002 Mfd. 600 volt
44-A to D	506492	Condenser—electrolytic: A— 20 Mfd. 150 volt; B— 20 Mfd. 150 volt; C— 40 Mfd. 150 volt; D—100 Mfd. 25 volt
47	512026	Condenser—.05 Mfd. 200 volt
48	512028	Condenser—.05 Mfd. 400 volt
		RESISTORS
6	510193	Resistor—carbon 2.2 Meg. ½ watt
9	510193	Resistor—carbon 2.2 Meg. ½ watt
10	510173	Resistor—carbon 100,000 ohms ½ watt
14	510152	Resistor—carbon 6800 ohms ½ watt
16	510194	Resistor—carbon 3.3 Meg. ½ watt
18	510193	Resistor—carbon 2.2 Meg. ½ watt
24-A, B, C	506497	Resistor—volume control 1 Meg. (with switch)
25	510127	Resistor—carbon 330 ohms ½ watt ± 10%
29	510194	Resistor—carbon 3.3 Meg. ½ watt
30-A	506338	Resistor—carbon 47,000 ohms 1/5 watt (part of diode filter unit)
32	510191	Resistor—carbon 1 Meg. ½ watt
34	510185	Resistor—carbon 470,000 ohms ½ watt
35	510132	Resistor—carbon 560 ohms ½ watt ± 10%
36	510123	Resistor—carbon 180 ohms ½ watt ± 10%
38	510193	Resistor—carbon 2.2 Meg. ½ watt
42	510711	Resistor—carbon 750 ohms ½ watt ± 5%
43	510710	Resistor—wire wound 1700 ohms 10 watt ± 5%
45	510119	Resistor—carbon 100 ohms ½ watt
46	510210	Resistor—carbon 33 ohms 1 watt
		COILS AND TRANSFORMERS
2	506511	Coil—antenna (series)
3	506512	Loop antenna
7	506510	Coil R. F. (with shield)
15	506509	Coil—BC Oscillator
17	506493	Transformer—1st I. F.
20	506494	Transformer—2nd I. F.
40	502902	Transformer—output for A-506495 speaker

BATT.—AC-DC SWITCH 506498

Lettered terminals in illustrations correspond to similarly lettered terminals on the circuit diagram.

DIA-GRAM NO.	PART NO.	DESCRIPTION
		OTHER ELECTRICAL PARTS
23	506507	Battery cable
30-A, B, C	506338	Diode filter unit: A—Resistor—carbon 47,000 ohms 1/5 watt; B—Condenser—ceramic 100 Mmfd. 400 volt; C—Condenser—ceramic 100 Mmfd. 400 volt
41	506495	Speaker—P.M. Dynamic (5 inch) includes output transformer
49-A to D	506498	Switch—"BATT.—AC-DC"
		MISCELLANEOUS PARTS
	504981	Base for mtg. electrolytic condenser
	506423	Cabinet—black (for Model D3840)
	505451	Catch and latch for rear door
	506343	Clip—coil mtg.
	505101	Clip—mtg. I. F. transformer
	114955	Clip—retainer on end of dial cord
	117057	Cord—dial drive (3 ft. required) per ft.
	505400	Door—front for Model D3840
	505441	Door—rear for Model D3840
	506424	Escutcheon plate for Model D3840
	505453	Handle and mtg. clips for Model D3840
	505711	Hinge for front door
	505452	Hinge (pair) for rear door
	506514	Knob—"BATT.—AC-DC"
	506515	Knob—"Tune"
	506513	Knob—"Volume-Off"
	131575	Plug Button
	502537	Plug for battery cable (fits batt. pack)
	506516	Pointer
	81145	Retaining ring for tuning shaft
	119087	Ring for dial cord
	79894	Screw—No. 8 x 5/8"; for mtg. chassis
	502524	Shaft—tuning control
	505367	Shield—tube (miniature)
	117716	Shield—tube
	504397	Socket—miniature
	506491	Socket—octal
	505161	Spring; dial cord tension
	506506	Terminal strip—(ANT-EXT-ANT)

I.F. 455 KC.

SOCKET VOLTAGES

Measured with voltmeter having sensitivity of 1000 ohms per volt except where indicated by (*). The (*) symbol designates a vacuum tube voltmeter measurement.

VOLUME ON FULL WITH NO SIGNAL — DIAL TUNED TO 540 KC.

"BATT.—AC-DC" SWITCH IN "AC-DC" POSITION

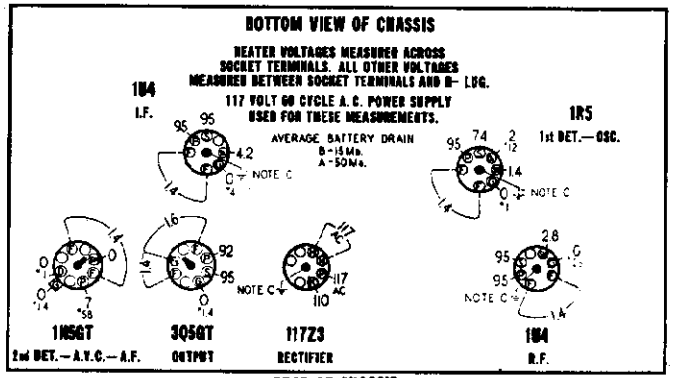

NOTE C: Grounding of center stud on tube socket is necessary to reduce capacity coupling between other pins. Oscillation may result if this ground is omitted.

GROUND: Do not connect a ground wire to this receiver while it is connected to the electric power supply. Failure to observe this caution may result in damage to the receiver.

When connecting the radio to the electric power outlet be sure that outlet will supply the proper current and voltage. This radio may be connected to either 50 or 60 cycle Alternating Current (A.C.) at 105 to 125 volts or Direct Current (D.C.) at 105 to 125 volts.

The bottom compartment of the cabinet provides adequate space to accommodate a single unit battery pack. **Any of the following single unit type battery packs may be used as a suitable power supply for this receiver.**

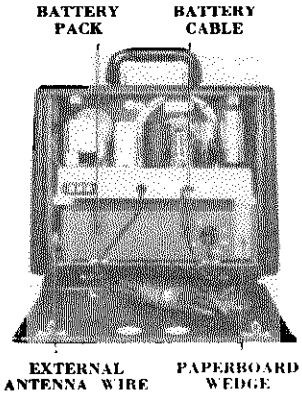

FIG. 1

WIZARD B6460
EVEREADY 753
GENERAL 60A-6F6-5
RAY-O-VAC AB-994
BURGESS F6A60

HOW TO OPERATE THE CONTROLS

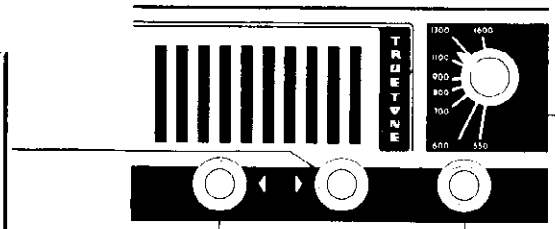

SELECTOR SWITCH

AC-DC (counter-clockwise position): Use this position when receiver power cord is connected to an electric power outlet.

BATTERY (clockwise position): Use this position when operating the receiver on the self-contained battery.

ON-OFF SWITCH AND VOLUME CONTROL Turn this knob clockwise to turn set on. Continuing to turn clockwise will increase volume.

TUNING CONTROL Use this control to tune receiver to the desired station.

THE DIAL SCALE is calibrated to cover standard "broadcast" band frequencies between 540 Kc and 1600 Kc.

TUBES USED

The tubes used in this receiver are arranged on the chassis as shown in illustration at the right.

IMPORTANT: DISCONNECT POWER CORD FROM WALL OUTLET BEFORE ATTEMPTING TO REMOVE TUBES FOR TEST OR REPLACEMENT. MAKE CERTAIN THAT EACH TUBE IS INSTALLED IN ITS PROPER SOCKET WHEN REPLACING THE TUBES IN THE SET.

TUBE LOCATIONS

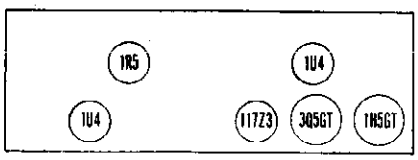

REAR OF CHASSIS

© John F. Rider

MODEL D3840

ALIGNMENT PROCEDURE

1. Disconnect and remove battery from cabinet. Then remove the two plug buttons which are located at bottom of cabinet so that a long blade screwdriver may be inserted to remove chassis holddown screws. After removing these screws be sure to replace and reconnect the battery as battery position affects alignment of loop antenna circuit.
2. Partially withdraw the chassis from cabinet so as to obtain access to trimmer adjustments—**do not completely remove the chassis from the cabinet** as position of chassis relative to loop antenna is important.
3. In order to provide a means of coupling the signal generator to the antenna, wind approximately two turns of insulated wire around outside of cabinet so that its position corresponds to that of the built-in loop. Then connect both leads of this coupling to signal generator.
4. Connect an output meter across voice coil of speaker or between plate of 3Q5GT output tube and chassis through a 0.1 mfd. condenser.
5. Set the volume control at maximum volume position and use a weak signal from the signal generator.
6. Set "BATT.--AC-DC" Switch in "AC-DC" position.

DUMMY ANT. IN SERIES WITH SIGNAL GENERATOR	SIGNAL GENERATOR CONNECTION	SIGNAL GENERATOR FREQUENCY	RECEIVER DIAL SETTING	TRIMMER OR SLUG NUMBER	TRIMMER DESCRIPTION	TYPE OF ADJUSTMENT
None	Connect directly to coupling turn around cabinet.	455 KC	Any point where it does not affect the signal.	1-2	2nd I.F.	Adjust for maximum output. Then repeat adjustment.
				3-4	1st I.F.	
None	Connect directly to coupling turn around cabinet.	1620 KC	Set so that gang condenser is in fully open position.	5	Broadcast Oscillator	Adjust for maximum output.
None	Connect directly to coupling turn around cabinet.	1400 KC	Tune to 1400 KC generator signal	6	Broadcast R. F.	Adjust for maximum output.
None	Connect directly to coupling turn around cabinet.	1400 KC	Tune to 1400 KC generator signal	7	Broadcast Antenna	Adjust for maximum output. Slide chassis all the way into cabinet when making this adjustment.

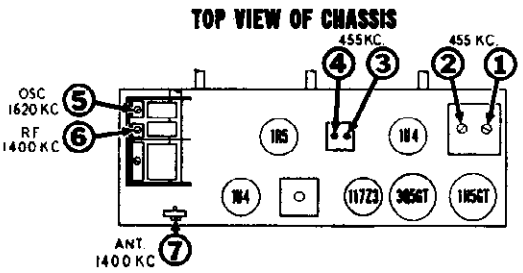

TRIMMER LOCATIONS

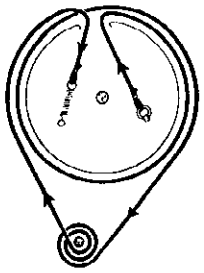

DIAL DRIVE CORD ARRANGEMENT

To string dial cord, set gang condenser to fully open position and use following parts:

114955 Clip on end of cord
117057 Cord (3 feet)
119087 Ring for dial cord
505161 Tension Spring

STAGE GAIN MEASUREMENT PROCEDURE

REQUIRED INSTRUMENTS: The amount of amplification or "gain" of each of the stages of this receiver may be measured with an A.C. Vacuum Tube Voltmeter or a "channel" type instrument containing a tuned and calibrated amplifier.

PROCEDURE: It is exceedingly important to adhere to the procedure outlined below since the accuracy of these measurements will be affected to a considerable extent by the failure to establish proper operating conditions.

1. Be sure that R.F. and I.F. stages are carefully and accurately aligned by utilizing the alignment procedure given above.
2. Connect Signal Generator as shown below.
3. The values of stage gain which are given here were measured with a fixed bias of 1½ volts on the control grids of all R.F. and I.F. tubes which are connected to the A.V.C. circuit. Therefore these values are not intended to indicate the full capability of a stage but they will serve as a convenient basis for determining proper operation. In order to duplicate the fixed bias voltage, connect the negative terminal of a 1½ volt battery to A.V.C. at junction of resistors No. 9 and 16 and connect the positive battery to B—
4. Set Signal Generator for operation at 600 Kc with 400 cycle modulation and carefully tune radio receiver to this signal by using an output meter to indicate peak output. If a local station interferes, set generator to a nearby frequency and re-tune the receiver.
5. R.F. and I.F. circuits are slightly de-tuned when contact is made with an instrument probe and this action, which is indicated by a change in the output meter reading, may seriously affect the gain measurement. Therefore, it is important to adjust the associated circuit trimmer for a maximum output meter reading and to set the input signal level to a convenient reference point on the gain measuring instrument while the probe is making contact. After removing the probe it is again necessary to adjust the trimmer so as to obtain the same output meter reading and thereby assure that the signal voltage at the specified point has not changed as a result of circuit de-tuning.
6. When using a "channel" type instrument, carefully tune it for maximum output at desired frequency before making measurements.

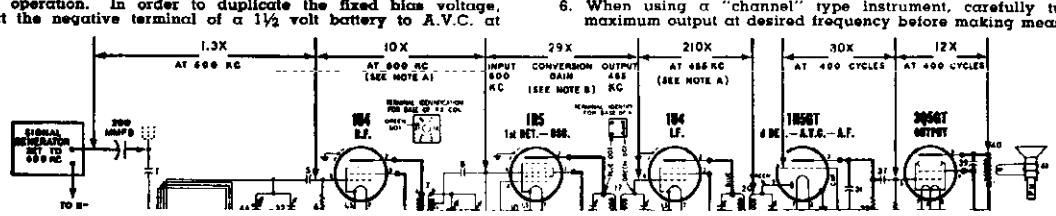

NOTE A: Measured with input voltage of 0.1.
NOTE B: Measured with input voltage of 0.2.

DIFFERENCES in tube characteristics, tolerance of parts, adjustment of tuned circuits and variations in line voltage will influence stage gain. These factors should be given due attention in event the gain of a stage varies extensively from the values shown above.

©John F. Rider

SPECIFICATIONS

Power Supply
105, 125 volt AC-DC or Batteries

Batteries
Five 1½ volt "A" Wizard B6722, B6732, B6740 or B6745
One 67½ volt "B" Wizard B6258

Tuning Range
545 to 1610 KC

I.F. Frequency
455 KC

Loud Speaker
4 inch P.M.

Voice Coil Impedence
3.2 ohms at 400 cycles

Power Output
Maximum 100 milliwatts

Tube Complement
1R5—Oscillator Conv.
1U4—I.F. Amplifier
1S5—AVC, Detector, 1st Audio
3V4—Power Output

CAUTION: This is an AC-DC receiver and if alignment is made with the receiver connected to 117 volts AC or DC, it is necessary to isolate the signal generator or the receiver from the line by use of a transformer, or place a .2 M F D condenser in both test leads of the Signal Generator.

Position of Variable	*Generator Frequency*	*Dummy Ant. Mfd.*	*Generator Connections*	*Trimmer Adjustment*	*Trimmer Function*
Fully open	455 KC	.1	*1R5 Grid (Stator of C1A)	T2	Output I.F.
Fully open	455 KC	.1	*1R5 Grid (Stator of C1A)	T1	Input I.F.
Fully open	1610 KC	.00025	*1R5 Grid (Stator of C1A)	C1B	Oscillator
Tune in signal from generator	1400 KC	—	Loosely coupled to loop	C1A	Antenna

*Connect ground lead of signal generator to common "B" negative.

ALIGNMENT PROCEDURE

ALIGNING INSTRUCTIONS

Never attempt any adjustments on this receiver unless it becomes necessary to replace a coil or transformer, or the adjustments have been tampered with in the field. Always make certain that other circuit components, such as tubes, condensers, resistors, etc., are normal before proceeding with realignment.

If realignment is necessary follow the instructions given below in the order listed. After realignment has been completed repeat the procedure as a final check. For alignment points refer to Figure No. 2.

Volume control—Maximum: all adjustments.
Connect ground lead of signal generator to common "B." negative.
Connect dummy antenna in series with output lead of signal generator.
Connect output meter across voice coil of speaker.

The following equipment is necessary for proper alignment:
Signal generator that will provide the test frequencies as listed, 30% modulated, 400 c.p.s.
Output meter.
Non-metallic screwdriver.
Dummy antennas— .1 mfd., .00025 mfd.

© John F. Rider

MODEL D3910

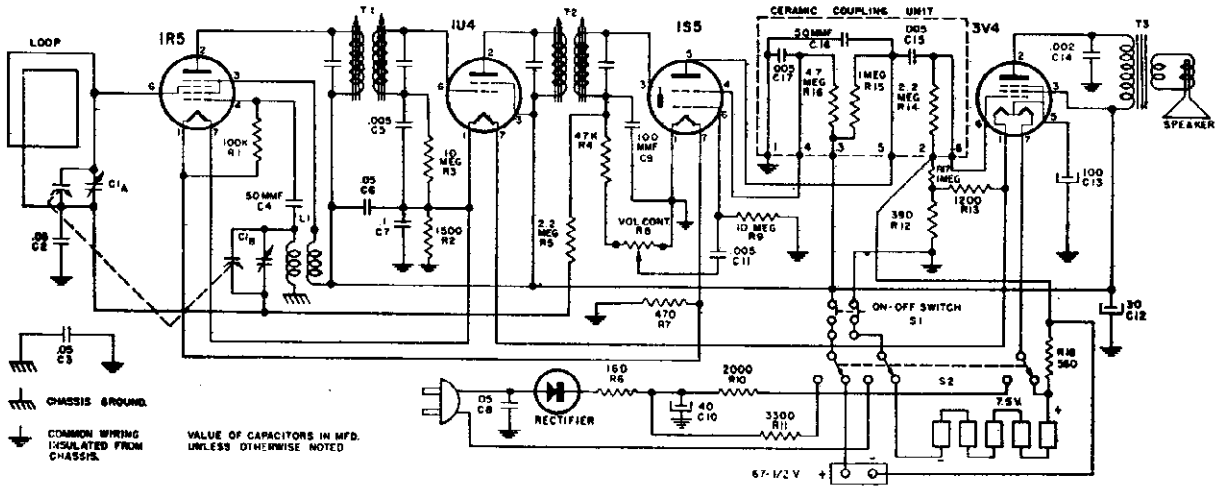

Fig. 1 Schematic Diagram

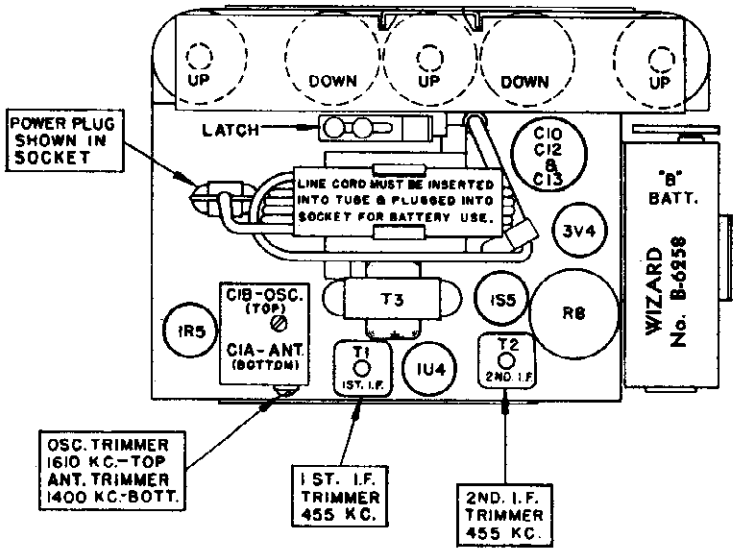

Fig. 2. Tube, Trimmer and Battery Locations

All voltages are measured from tube pin to common "B" negative with a 20,000 ohm per volt voltmeter.

Voltages shown in circles are obtained when set is operated on 117 volt current.

Voltages shown outside the circles are obtained when the set is operated on batteries. New batteries in good condition should be used for these measurements.

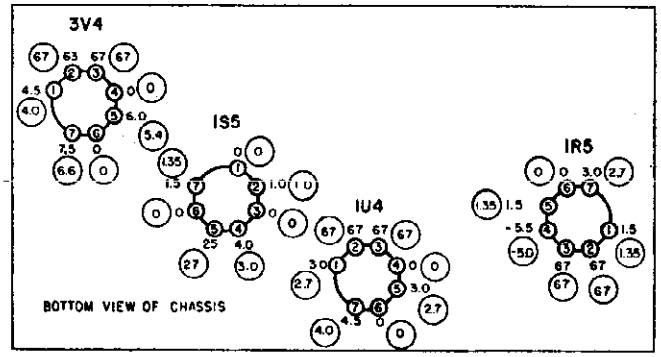

Fig. 3 Voltage Chart

©John F. Rider

PARTS LIST

CONDENSERS

Circuit Diagram Reference	Part No.	Description
C1A, C1B	B19-197	Variable condenser
C2, C6	A16-152	.05 MFD 200 volt condenser
C3, C8	A16-158	.05 MFD 400 volt condenser
C4	A15-175	50 MMF mica condenser
C5, C11	A16-153	.005 MFD 600 volt condenser
C7	A16-157	.1 MFD 200 volt condenser
C9	A15-188	100 MMF mica condenser
C10	A18-290	40 MFD 150 volt electrolytic condenser
C12		30 MFD 150 volt electrolytic condenser
C13		100 MFD 10 volt electrolytic condenser
C14	A16-182	.002 MFD 200 volt condenser
C15	*A17-100	.005 MFD — See Note Below
C16		50 MMF — See Note Below
C17		.005 MFD — See Note Below

RESISTORS

R1	A60-671	100K ohm ½ watt 20% resistor
R2	A60-680	1500 ohm ½ watt 10% resistor
R3, R9	A60-663	10 megohm ½ watt 20% resistor
R4	A60-685	47K ohm ½ watt 20% resistor
R5	A60-684	2.2 megohm ½ watt 20% resistor
R6	A60-725	160 ohm 5 watt 10% resistor
R7	A60-722	470 ohm ½ watt 10% resistor
R8	A24-178	Volume control, with switch
R10	A60-757	2000 ohm 10 watt 10% resistor
R11	A60-724	3300 ohm 1 watt, 10% resistor
R12	A60-665	390 ohm ½ watt 10% resistor
R13	A60-756	1200 ohm ½ watt 10% resistor
R14	*A17-100	2.2 megohm — See Note Below
R15		1 megohm — See Note Below
R16		4.7 megohm — See Note Below
R17	A60-668	1 megohm ½ watt 20% resistor
R18	A60-758	560 ohm ½ watt 10% resistor

COILS

L1	A10-514	Oscillator coil
T1, T2	C10-475	1st and 2nd I.F. transformer
T3	B80-245	Output transformer

MISCELLANEOUS

A11-320	Bracket, handle, mounting
S84-242	Bracket, "A" battery retainer
A72-32	Bushing, thimble, chassis mounting
D42-442	Cabinet, (includes back cover)
A83-421	Clip, I.F. transformer mounting
B67-530	Dial, tuning
B67-531	Dial, volume
C83-559	Handle, molded
S84-243	Hub and pointer assembly
C52-268	Knob, tuning
B52-269	Knob, volume
A83-568	Rectifier, selenium
A71-38	Retainer, paper tube, for line cord
A68-35	Socket, tube
B79-364	Speaker, 4" P.M.
A70-141	Spring, compression, for handle
A76-49	Terminal, for "B" battery
B82-58	Loop Antenna

* NOTE: C15, C16, C17, R14, R15, R16, are contained in the Ceramic Coupling Unit, Part No. A17-100,

MODEL D4818

ELECTRICAL SPECIFICATIONS

Power Supply.....6.3 volts DC
Current.....4.8 amp. average
Frequency Range.....540 to 1600 KC
I. F. Frequency.....455 KC
Speaker.....4" P. M.
Power Output.....1.2 watts, undistorted
2.5 watts, maximum
Sensitivity.....10 microvolts average for 1 watt output
Selectivity...20 KC broad at 1000 times signal, at 1000 KC

The tube compliment of this receiver is as follows:

1—6SK7GT—R. F. Amplifier.

1—6SA7GT—Converter.

1—6SK7GT—I.F. Amplifier.

1—6SQ7—Detector—AVC—1st audio.

1—6V6GT—Power output.

1—6X5GT—Rectifier.

SERVICE NOTES

Voltages taken from the different points of the circuit to the chassis are measured with volume control in maximum position, all tubes in their sockets, no signal applied, and with a volt meter having a resistance of 20,000 ohms per volt. These voltages are clearly shown on the voltage chart. (Fig. 4).

All voltages should be measured with an input voltage of 6.3 volts DC.

To check for open by-pass condensers, shunt each condenser with another one having the same capacity and voltage rating which is known to be good until the defective unit is located.

ALIGNING INSTRUCTION

Never attempt any adjustments on this receiver unless it becomes necessary to replace a coil or transformer, or the adjustments have been tampered with in the field. Always make certain that other circuit components, such as tubes, condensers, resistors, etc., are normal before proceeding with realignment.

If realignment is necessary follow the instructions given under the heading "ALIGNMENT PROCEDURE". After realignment has been completed repeat the procedure as a final check.

INSTRUCTIONS FOR REMOVING CHASSIS FROM THE CASE

The bottom cover (the one with the speaker louvers) can be removed to permit servicing of major components, such as tubes and vibrator, by removing the eight (8) screws holding it to the top cover. There are three (3) screws on each side, one (1) in the rear, and one (1) in the front.

CAUTION: Before attempting to remove the top cover, to service condensers, resistors, etc., the screw connecting the spark plate to the "A" terminal (inside case) must be removed. This is a round head screw, and is located on the rear of the case, close to the mounting stud bolt. It is recessed in a ½ inch hole in the case itself, thereby permitting contact with the spark plate.

After removing the spark plate screw, remove the two knobs by pulling forward and remove the eight (8) screws securing the cover to the chassis. Lift the chassis at the rear, at the same time moving it away from the front of the case so that the volume and tuning shafts will clear the holes in the cover.

NOTE: When reinstalling the chassis into the case, be sure the screw connecting the spark plate to the "A" terminal (inside case) is tightened very securely, otherwise the receiver will not operate properly.

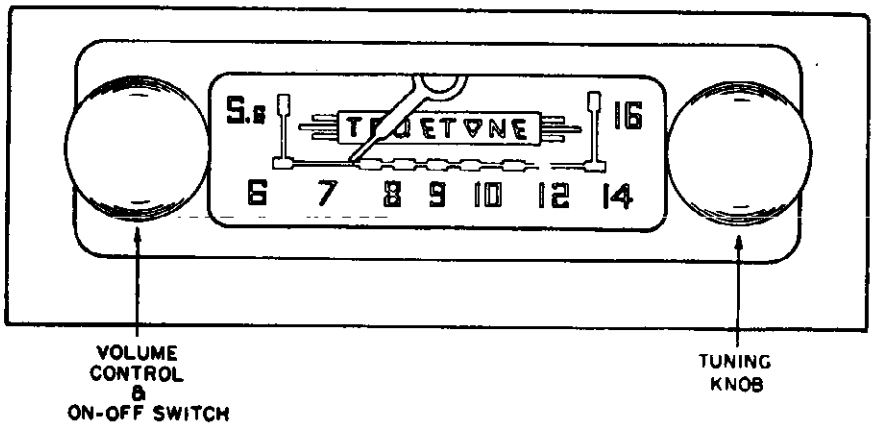

Fig. 1 Front View

© John F. Rider

© John F Rider

ALIGNMENT PROCEDURE

Volume control—Maximum, all adjustments.

No signal applied to antenna.

Power input—6.3 volts.

Connect dummy antenna in series with output lead of signal generator.

Connect output meter across voice coil.

Connect ground lead of signal generator to chassis.

Repeat alignment procedure as a final check.

The following equipment is necessary for proper alignment:

Signal generator that will provide the test frequencies as listed.

Non-metallic screwdriver.

Output meter.

Dummy antennas—.1 MFD., .00025 MFD.

For alignment points refer to Figures 4 ad 5.

Dial Setting	*Generator Frequency*	*Dummy Ant.*	*Generator Connections*	*Trimmer Reference*	*Trimmer Adjustment*	*Trimmer Function*
Fully Open	455 KC	.1 MFD.	6SA7 Grid	T2	Maximum	Output I.F.
Fully Open	455 KC	.1 MFD.	6SA7 Grid	T1	Maximum	Input I.F.
Fully Open	455 KC	.00025 MFD.	Ant. lead	L6	Minimum	Wave trap
Fully Open	1600 KC	.00025 MFD.	Ant. lead	C1B	Maximum	Oscillator
Tune in signal from generator	1400 KC	.00025 MFD.	Ant. lead	C1A	Maximum	Antenna

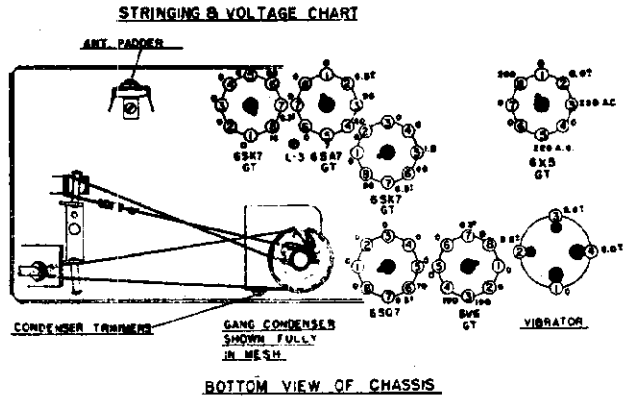

Fig. 4 Dial Stringing and Socket Voltages

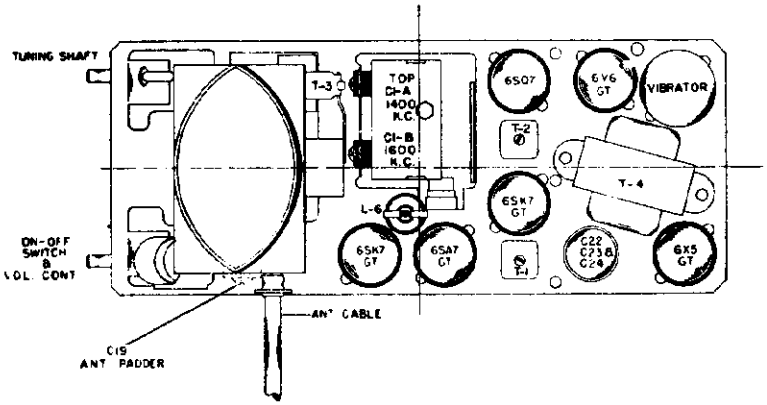

Fig. 5 Tube and Trimmer Locations

MODEL D4818

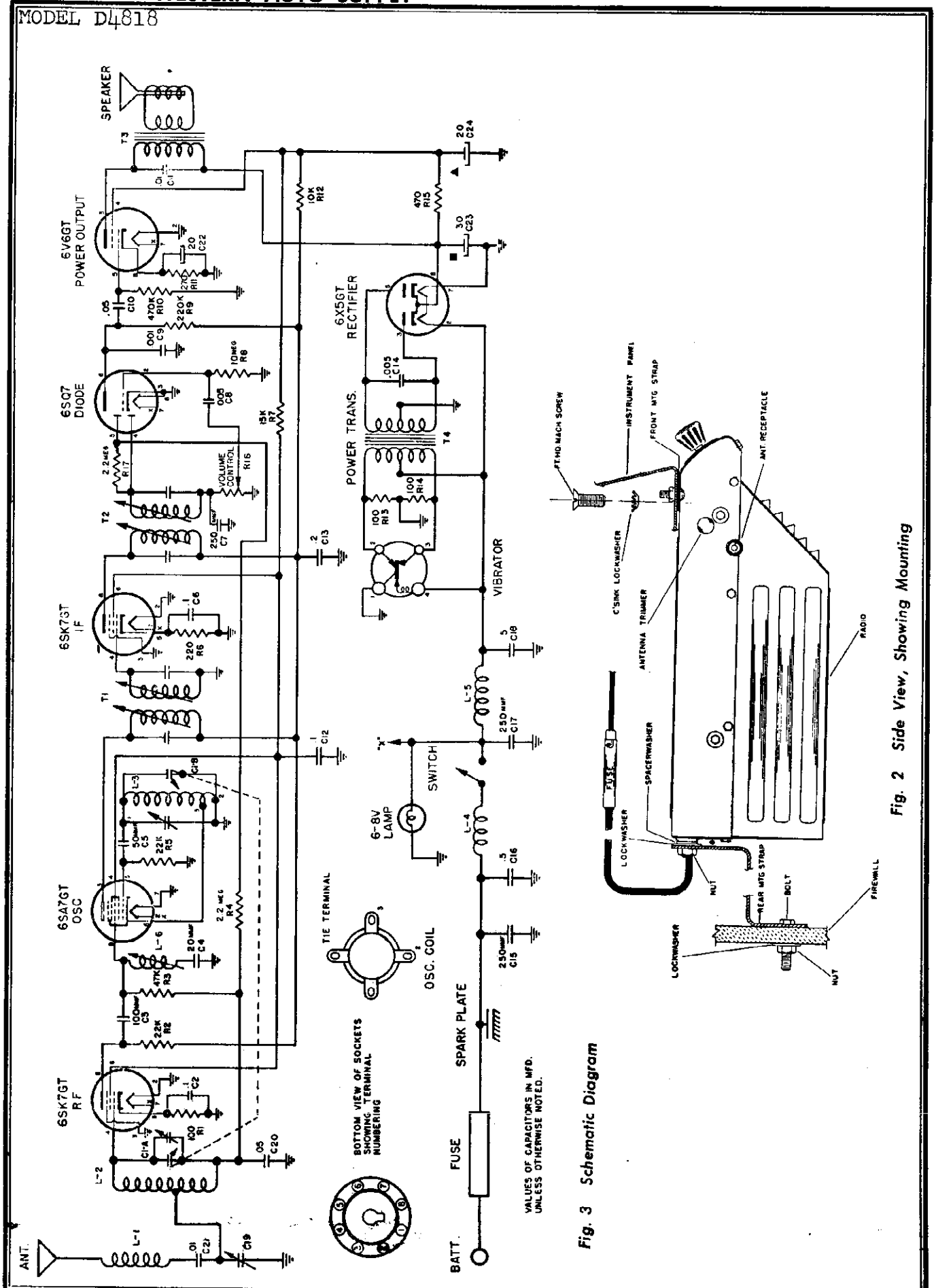

Fig. 3 Schematic Diagram

Fig. 2 Side View, Showing Mounting

© John F. Rider

PARTS LIST

Schematic Diagram Reference	Part No.	Description
CONDENSERS		
C1A, C1B	B19-196	Variable Condenser
C2, C6, C12	A16-187	.1 MFD. 400 Volt Condenser
C3	A15-196	100 MMFD Ceramic Condenser
C4	A15-202	20 MMFD Ceramic Condenser
C5	A15-204	50 MMFD Ceramic Condenser
C7, C15, C17	A15-176	250 MMFD Mica Condenser
C8	A16-190	.005 MFD. 600 Volt Condenser
C9	A16-191	.001 MFD. 400 Volt Condenser
C10	A16-193	.05 MFD. 600 Volt Condenser
C11, C21	A16-192	.01 MFD. 400 Volt Condenser
C13	A16-188	.2 MFD. 400 Volt Condenser
C14	A16-185	.005 MFD. 1600 Volt Oil Filled Condenser
C16, C18	A16-184	.5 MFD. 100 Volt Condenser
C19	A20-145	Trimmer Condenser
C20	A16-189	.05 MFD. 400 Volt Condenser
C22	A18-289	20 MFD 25 Volt Electrolytic Condenser
C23		30 MFD 350 Volt Electrolytic Condenser
C24		20 MFD. 350 Volt Electrolytic Condenser
RESISTORS		
R1, R13, R14	A60-752	100 Ohm ½ Watt 10% Resistor
R2, R5	A60-744	22K Ohm ½ Watt 10% Resistor
R3	A60-685	47K Ohm ½ Watt 20% Resistor
R4, R17	A60-726	2.2 Megohm ½ Watt 20% Resistor
R6	A60-753	220 Ohm ½ Watt 10% Resistor
R7	A60-716	15K Ohm 1 Watt 10% Resistor
R8	A60-728	10 Megohm ½ Watt 20% Resistor
R9	A60-667	220K Ohm ½ Watt 20% Resistor
R10	A60-731	470K Ohm ½ Watt 20% Resistor
R11	A60-754	270 Ohm 1 Watt 10% Resistor
R12	A60-698	10K Ohm 1 Watt 10% Resistor
R15	A60-694	470 Ohm 1 Watt 10% Resistor
R16	A24-176	Volume Control, 500,000 Ohms, with Switch
COILS		
L1	A10-513	Antenna Loading Coil
L2	B10-511	Antenna Coil
L3	A10-512	Oscillator Coil
L4	A33-229	Choke, "A" Line
L5	A33-228	Choke, Vibrator Hash
L6	A10-510	I.F. Trap Coil
T1	A10-508	1st I.F. Transformer
T2	A10-509	2nd I.F. Transformer
TRANSFORMERS		
T3	B80-242	Output Transformer (Part of Speaker)
T4	B80-243	Power Transformer
DIAL PARTS		
	A11-303	Bracket, Dial Scale
	A11-304	Bracket, String Guide
	A72-29	Bushing, Tuning Shaft Bearing
	A70-130	Clip, Spring, for Tuning Shaft
	A48-43	Dial Crystal
	A58-55	Dial Pointer
	B67-516	Dial Scale
	A28-101	Gasket for Speaker
	A52-247	Knob
	A89-10	Pilot Light, Type G.E. No. 422
	A65-37	Rivet, Shoulder, for String Guide Bracket
	A75-66	Shaft, Tuning
	A75-67	Shaft, for Dial Pointer
	A70-132	Spring, for Pilot Light Socket
	A70-133	Spring, String Tension, Pointer Drive
	A70-135	Spring, String Tension, Tuning
MISCELLANEOUS		
	A83-421	Clip, I.F. Transformer Mounting
	A83-517	Clip, Oscillator Coil Mounting
	A43-10	Fuse, 15 Amp.
	A47-112	Grommet, Rubber (for Mounting Speaker and Variable Condenser)
	B31-134	Mounting Strap, Rear
	B31-133	Mounting Plate, Front
	S84-192	Mounting Parts Kit
	A87-38	Receptacle, Antenna Cable
	B79-362	Speaker, 4" P.M. (includes Output Transformer)
	S84-193	Suppression Kit Assembly
	A34-105	Vibrator
	A83-519	Wiper, Grounding, for Case Covers

© John F. Rider

MODEL D4620

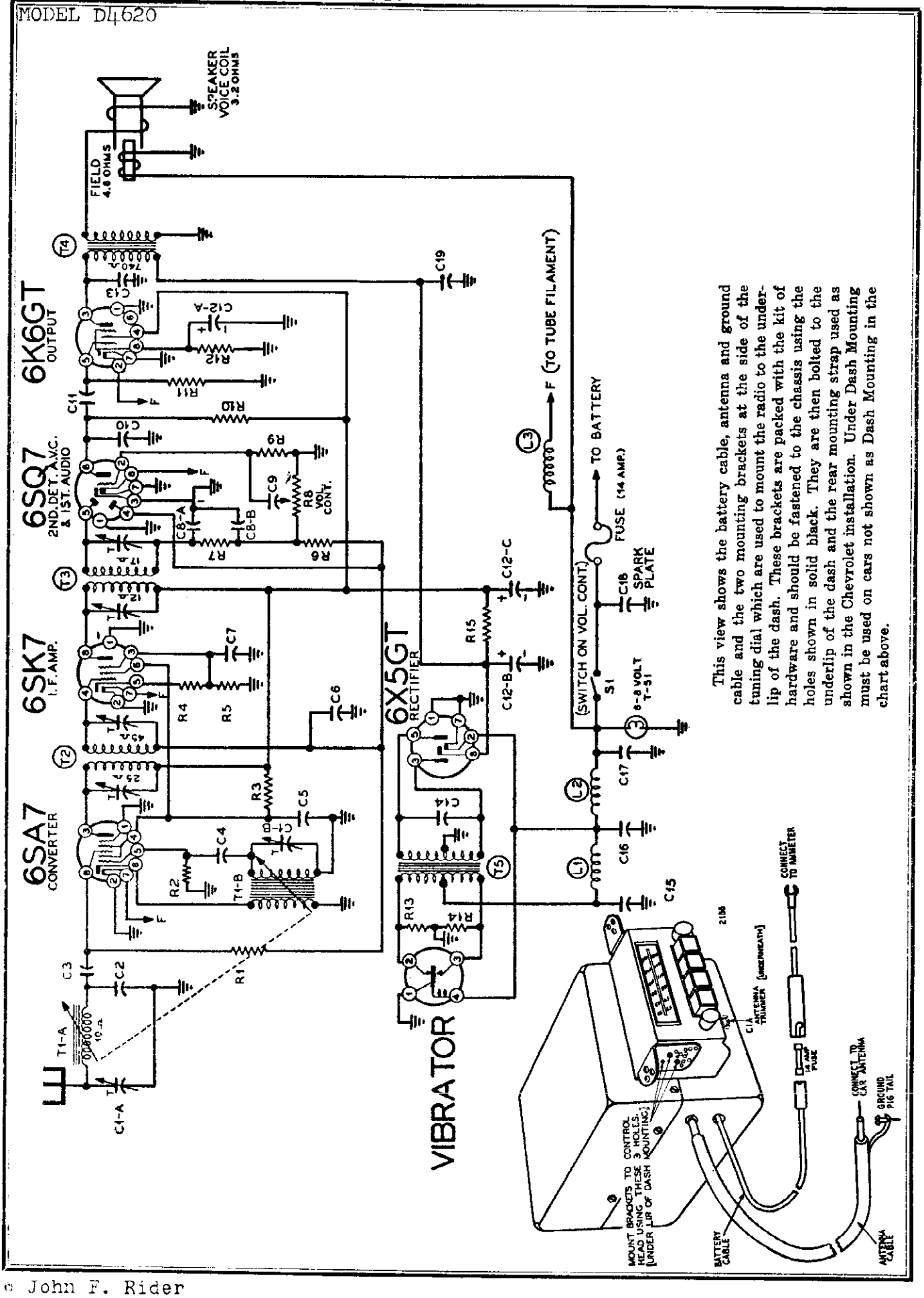

This view shows the battery cable, antenna and ground cable and the two mounting brackets at the side of the tuning dial which are used to mount the radio to the underlip of the dash. These brackets are packed with the kit of hardware and should be fastened to the chassis using the holes shown in solid black. They are then bolted to the underlip of the dash and the rear mounting strap used as shown in the Chevrolet installation. Under Dash Mounting must be used on cars not shown as Dash Mounting in the chart above.

© John F. Rider

FINAL CONNECTIONS

The antenna cable should be connected and the shield grounded to the car body.

Connect the battery cable to the hot side of the ammeter behind the instrument panel and then insert the fuse in the cable receptor.

ANTENNA TRIMMER
(See Chassis View)

The input circuit has been especially designed to be used with a low capacity antenna of the fish pole or whip type.

Truetone antennas are especially designed to be used with this radio.

Tune in a station on the high frequency end of the dial and adjust the antenna trimmer for maximum volume. A weak station which does not fade is best for this adjustment.

ELIMINATING MOTOR NOISE

GENERATOR CONDENSER

A Generator Condenser must be connected in all cases from the battery terminal of the generator to the Generator frame.

This condenser must not be connected across the field winding terminal on late cars which use Automatic Cutouts.

It is advisable that you find out from your local car dealers where the manufacturer recommends the condenser be connected for each make of car.

DISTRIBUTOR SUPPRESSOR

A Distributor Suppressor is required in practically all cases, except Ford V8's where none is used. The high tension lead must be removed from the distributor head and the suppressor inserted in its place. The high tension lead is then plugged into the suppressor.

AMMETER CONDENSER

A .5 Mfd. by pass condenser should be connected from one ammeter terminal to a good ground on the instrument panel. Usually this condenser plus the generator condenser and distributor suppressor will remove all objectionable ignition noise.

ELECTRICAL ACCESSORIES

If the above procedure has not reduced the noise sufficiently, it will be necessary to continue by passing sources of noise.

Accessories such as lighters, electric motor heaters, horns, light switches, automatic relays, electrical gauges such as oil, water and gas are often a source of interference. In these cases the procedure is to try a condenser from ground to various accessories until the interference is eliminated, then install the condensers in those places permanently. Spark intensifiers should not be used.

HIGH AND LOW TENSION LEADS

In many cars the low tension battery leads, etc., are grouped together with the high tension wires. These leads will very often pick up motor noise and feed it into the receiver through the battery circuit. In cases such as these it will be necessary to separate the low tension from the high tension wires and run them through another hole if they run from the engine compartment up to the instrument panel. This condition is particularly true on the V-8 Ford as the battery and primary leads run through a special tube which also houses the high tension leads. Shield and ground these leads.

IGNITION COILS

In cars where the ignition coil is located on the back side of the instrument panel it is often necessary to use an additional condenser. It must be installed from the battery side of the ignition coil to the closest ground on the instrument panel.

Short leads are very important. Where coils are mounted either on the instrument panel or in the driver's compartment, it may be necessary to shield the high tension lead from the coil to the distributor.

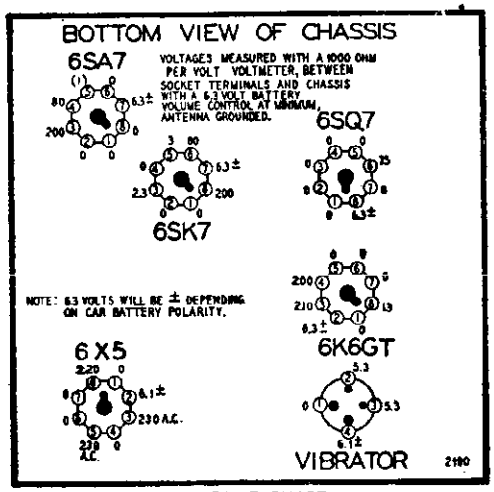

VOLTAGE CHART

©John F. Rider

ELECTRICAL SPECIFICATIONS

Power Supply	6 volts D.C.
Frequency Range	530 to 1600 kc.
Intermediate Freq.	455 kc.
Tuning	Two permeability-tuned circuits.
Antenna System	Adjustable to accommodate various car antennae capacities.
Speaker	5-inch; electro dynamic voice coil impedance 3.2 ohms.
Power Output	1 watt undistorted; 1.6 watts maximum.
Sensitivity	20 microvolts average for 500-milliwatt output.
Selectivity	50 kc broad at 1000 times signal at 1000 kc.

ALIGNMENT PROCEDURE

(Refer to Chassis View)

- Output meter across 3.2-ohm output load.
- Align for maximum output. Reduce input as needed to keep output near 0.4 volts.
- Volume control at maximum for all adjustments.
- Connect ground post of signal generator to radio chassis.

BAND	*SIGNAL GENERATOR*				*ADJUSTMENT Adjust for Max. Output*
	Frequency	*Dummy Antenna*	*Connection to Radio*	*Ground Connection*	
I.F.	455 kc	.1 mfd.	Pin #4 Grid 6SK7 Tube	Chassis	Adjust Trimmers of T3 output I.F.
I.F.	455 kc	.1 mfd.	Pin #8 Grid 6SA7 Tube	Chassis	Adjust Trimmers of T2 input I.F.
Broadcast Band	1600 kc	30 mmfd.	Antenna Lead	Chassis	Adjust Trimmers C1-B Oscillator and C1-A Antenna.
Broadcast Band	1400 kc	30 mmfd.	Antenna Lead	Chassis	*Slide Antenna Coil lengthwise for max. output by means of a screw driver.
Broadcast Band	1600 kc	30 mmfd.	Antenna Lead	Chassis	**Adjust Antenna Trimmer C1-A to maximum output.

*This adjustment will seldom be necessary in service work as the Antenna Coil is adjusted and sealed in place at the factory. The necessity of this adjustment can be checked quickly by tuning set to a 1400 kc. signal and adjusting C1-A. If a large increase in output is noted the Antenna Coil should be adjusted.

**If Antenna Coil is adjusted, C1-A should be readjusted at 1600 kc. These two adjustments (Antenna Trimmer C1-A and Antenna Coil) should be repeated until no further improvement is noted.

NOTE: At 1600 kc., the Oscillator Core should extend 31/32 inch from the edge of the Coil Form.

1941, 1942 and 1946 Chevrolet

This view shows how the chassis is mounted to the dash. The rear mounting strap (in the kit of hardware) should be bent as shown and used to support the chassis at the back. The two front mounting brackets should be fastened to the chassis using the solid black holes as shown. Lay the bracket on the left hand drawing and the black circles will show through the holes to be used. The two holes marked No. 1 in the front brackets, as shown in the Dial View Drawing, should be used to bolt the chassis to the dash.

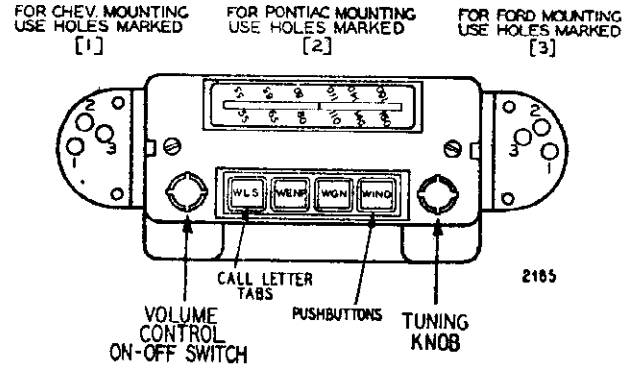

DIAL VIEW WHEN MOUNTED

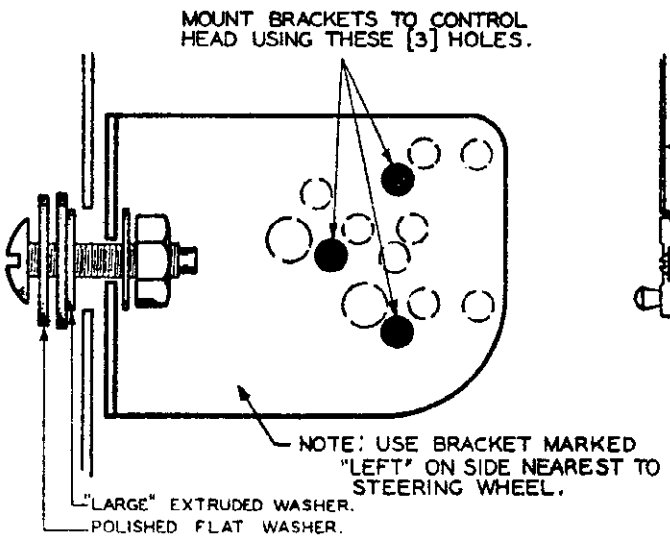

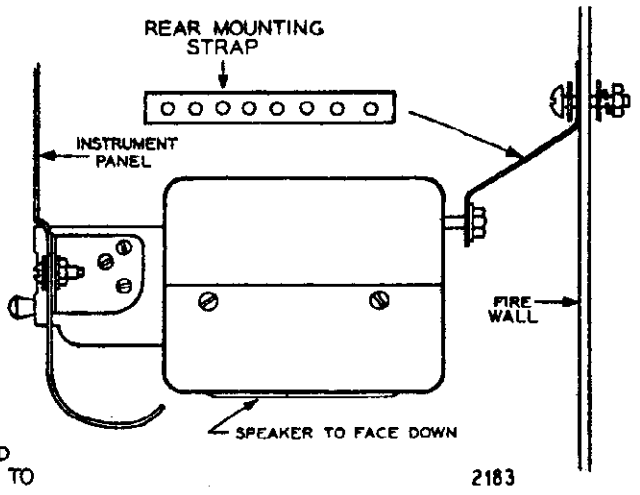

NOTE: Mount Chassis as shown with the speaker face down. Be sure to use rear mounting strap.

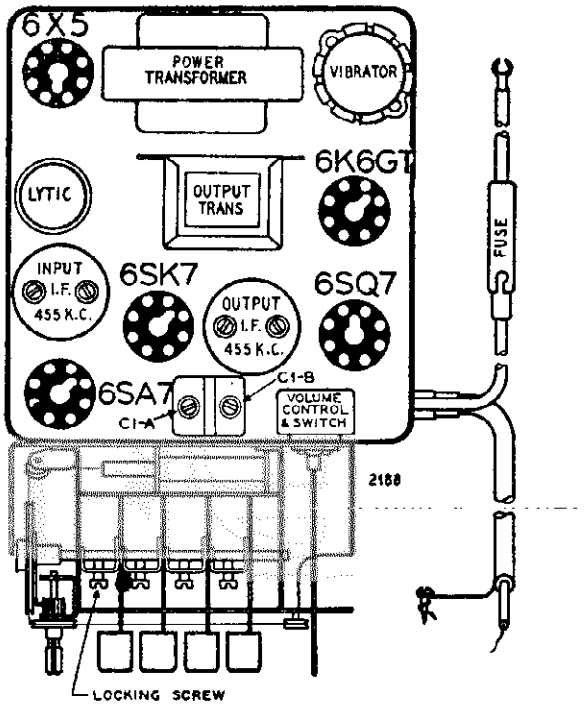

CHASSIS VIEW—Showing tube location, trimmers, and the push-button locking-screws.

1941 and 1942 Americar Models (Willys)

Remove the panel from the left side of the dash and cut an opening, using the dimensions below. Mount the chassis the same as in the Chevrolet installation.

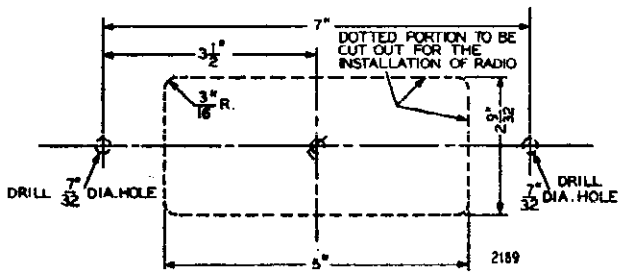

©John F. Rider

MODEL D4620

IMPORTANT (ALL INSTALLATIONS)

1. Two universal mounting brackets are supplied with the kit of hardware and are mounted in various positions on the chassis for installation in or under the dash of different cars.
2. In all installations it is very important that the black metal spacers be used between the front mounting brackets and the side of the chassis. The spacers must fit into the holes in the side of the chassis. They are packed in the kit of hardware.
3. Be sure to draw the rear mounting strap up tight so that it holds the chassis rigid.
4. In some installations it may be necessary to adjust the antenna trimmer before bolting the chassis to the dash.
5. Two pairs of extruded washers are supplied for use when bolting the chassis to the dash. Be sure the washers seat properly in the dash mounting holes and use the pair which fits the holes snugly.

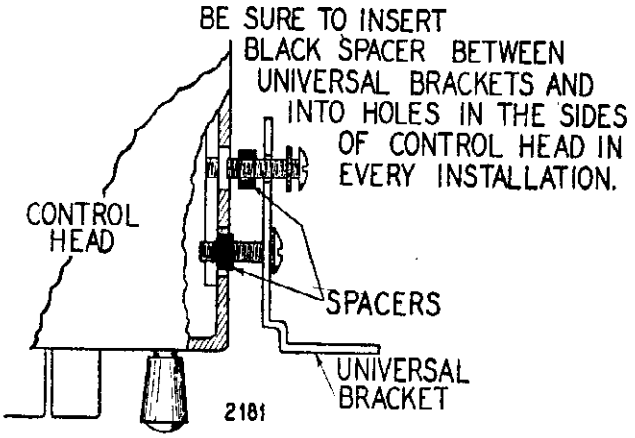

Dash Panel Mounting

1940, 1941, 1942 and 1946 Models of Chrysler, De Soto, Dodge, Plymouth

Mount the chassis as shown with the dial vertical. A special bracket marked "short" is supplied with the kit of hardware. Mount this bracket to the chassis, using the solid black holes shown in the left hand drawing. Note that the chassis should be mounted with the tuning knob at the top. It may be necessary in some installations to reverse the bolt in the cowl lever to prevent it from hitting the speaker grill. On Plymouth cars remove Pal nut behind dash at top of dial opening so the dial will come up flush.

The call letters must be carefully trimmed to fit the push-buttons horizontally. Be sure to use the black spacers pictured above when mounting the front (short) bracket.

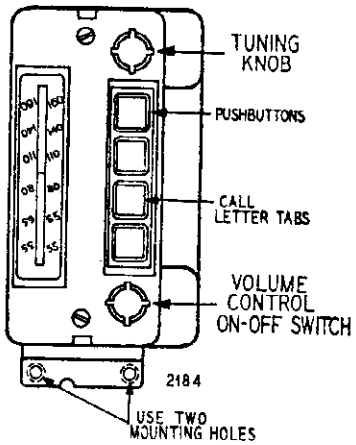

DIAL VIEW WHEN MOUNTED

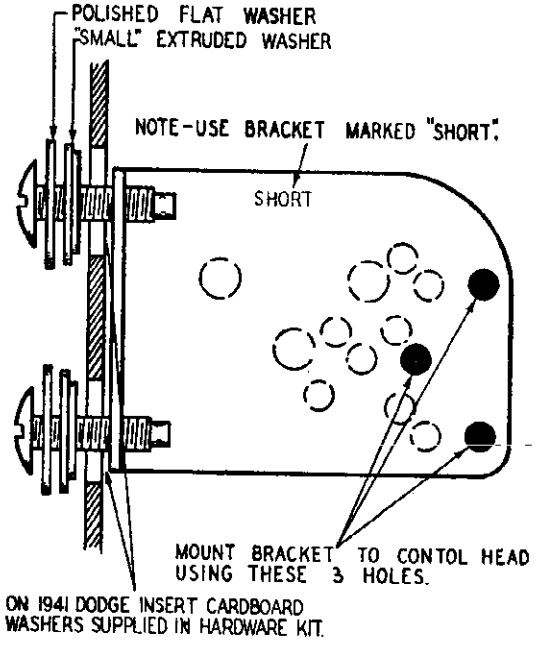

NOTE: Lay the bracket on drawing above to identify holes. Bracket when mounted will of course be at bottom of tuner.

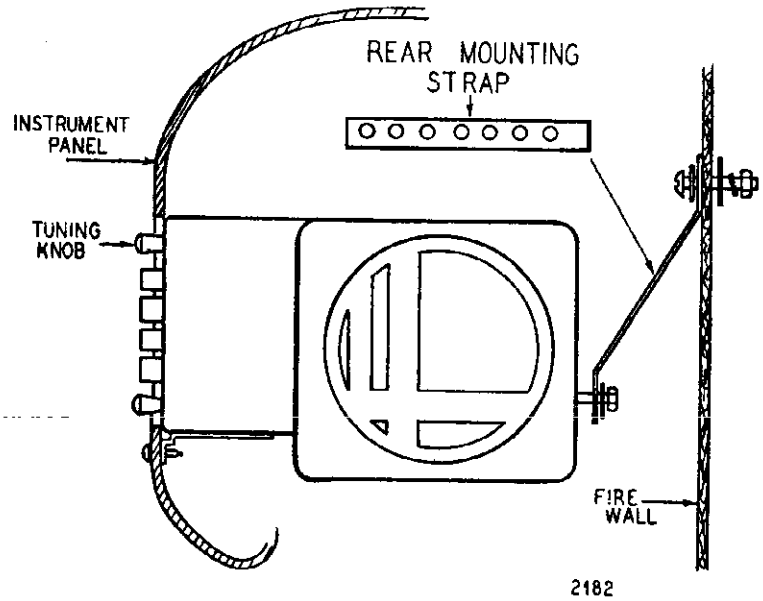

NOTE: Mount Chassis as shown — Be sure to use Rear Mounting Strap.

©John F. Rider

REPLACEMENT PARTS LIST

When ordering, specify part number, model number, and manual issue

Part No.	Schematic Diagram Reference	Description	No. Used in Set
		CONDENSERS	
100-26	C9	.02 x 400 Volt Tubular	1
100-87	C13	.01 x 600 Volt Tubular	1
100-13	C6	.05 x 400 Volt Tubular	1
100-20	C7	.1 x 200 Volt Tubular	1
100-9	C5	.05 x 200 Volt Tubular	1
100-125	C14	.0035 x 1600 Volt Tubular	1
100-25	C11	.002 x 600 Volt Tubular	1
100-31	C15, C16, C17	.5 x 120 Volt Oval Type	3
100-81		.5 Mfd. Generator Cond.	1
100-82		.5 Mfd. Ammeter Cond.	1
119-105	C12 A-B-C	Electrolytic Filter Condenser—20 Mfd. x 25 Volt; 15 Mfd. x 350 Volt; 15 Mfd. x 350 Volt	1
124-187	C1-A-B	Ant. and Osc. Dual Trimmer	1
129-161	C8A-B	.0001 Dual Mica—10%	1
129-2	C3, C10	.0005 Mica Type—20%	2
129-183	C2	.00008 Mica Type—3%	1
129-21	C4	.0002 Mica Type—20%	1
129-12	C19	.00025 Mica Type—20%	1
11749B	C18	Spark Plate	1
		RESISTORS	
C-9B1-35	R9	4.7 Megohm, ½ Watt—20%	1
C-9B1-27	R10	220K Ohm, ½ Watt—20%	1
C-9B1-29	R11	470K Ohm, ½ Watt—20%	1
C-9B1-60	R12	680 Ohm, ½ Watt—10%	1
C-9B1-34	R6	3.3 Megohm, ½ Watt—20%	1
C-9B1-23	R7	47K Ohm, ½ Watt—20%	1
C-9B1-31	R1	1 Megohm, ½ Watt—20%	1
C-9B1-22	R2	33K Ohm, ½ Watt—20%	1
C-9B2-76	R3	15K Ohm, 1 Watt—10%	1
C-9B2-64	R15	1500 Ohm, 1 Watt—10%	1
C-9B1-50	R13, R14	100 Ohm, ½ Watt—10%	2
C-9B1-52	R4	150 Ohm, ½ Watt—10%	1
C-9B1-56	R5	330 Ohm, ½ Watt—10%	1
		COILS	
108139B	T2	Input I.F. Coil	1
108211	T3	Output I.F. Coil	1
C-211-10961 T1-A; T1-B		Permeability Tuning Unit Complete with Ant. and Osc. Coils	1
10566	L3	"A" Choke No. 16 Wire	1
10568	L1-L2	"A" Choke No. 18 Wire	2
		TRANSFORMERS	
104295	T5	Power Transformer	1
B-12C-10235	T4	Output Transformer for Speaker	1

Part No.	Schematic Diagram Reference	Description	No. Used in Set
		SPEAKER	
B-18B10236		Five Inch Electrodynamic Speaker. Less Output Transformer	1
		VIBRATOR UNIT	
12629		Plug-in Vibrator Unit	1
		DIAL AND TUNER PARTS	
A-6D-10740		Dial Scale	1
D-4B-10750		Escutcheon	1
1121029		Set of Station Call Letters	1
128773-45		Knob—For Tuning and Volume	2
115860		Shaft for Volume Control	1
128766-45		Pushbuttons	4
1121027		Pointer	1
A-53A-10989		String for Pointer	1
120442		Tension Spring for Pointer String	1
1121026		Diffuser for Dial	1
A-2M-7758		Snap-in Rivet to Fasten Diffuser	2
107400		Socket Assembly for Pilot Lite	1
10797		6-8 Volt Lite. Type T-51	1
115807		Pushrod—For Pushbuttons	4
115799		"U" Cam—With Set Screw	4
120-184		Return Spring—For Pushrods	4
117924		Tuning Shaft	1
117311		Pinion Gear—Drives Crown Gear	1
13623		Drum Assembly Complete with 115800 Crown Gear	1
120441		Tension Spring for Slug String	1
		MISCELLANEOUS	
107360B		Antenna Cable	1
107244		Ammeter Cable	1
131225		Fuse—14 Amp.—Type SFE	1
115713		Mounting Strap Bracket	1
115808		Case Mounting Bracket—Left	1
115809		Case Mounting Bracket—Right	1
115810		Case Mounting Bracket—Short Left	1
117929		Mounting Spacer	6
132293		No. 10-32 x ¾ Fancy Head Screw	2
131145		Flat Steel Washer—For Above Screw	2
131403		Extruded Washer for Chevrolet 1941-42-46	2
131397		Extruded Washer for Dodge—DeSoto—Plymouth—Chrysler 1940-41-42-46	2
13625		Complete Kit of Mounting Hardware Including Brackets, Condensers, Screws, etc.	
131-50		Buzz. Clips—for case	10

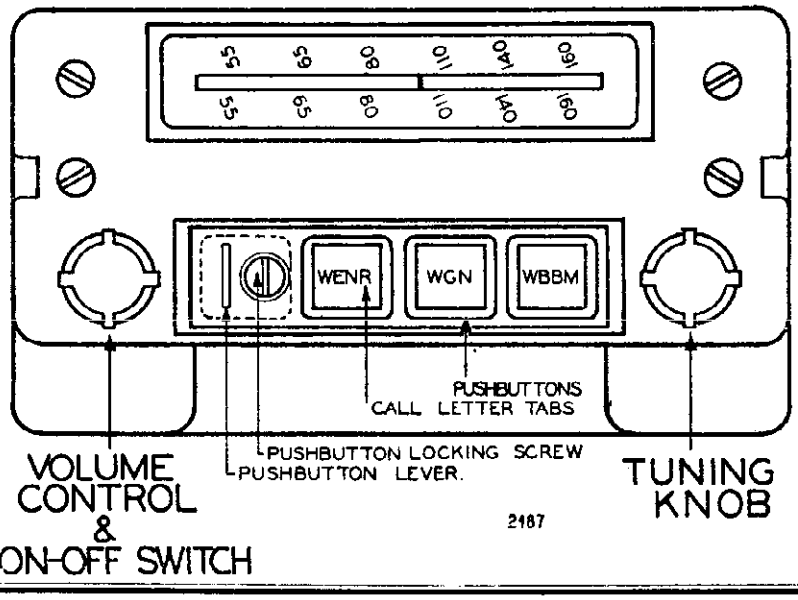

© John F. Rider

MODELS D4842A, D4842B

SPECIFICATIONS

Power Consumption	6.5 Amperes at 6.6 Volts
Power Output (6.6 Volts)	6.5 Watts 10% Distortion 9.0 Watts Maximum
Sensitivity	2 Microvolts at 1 Watt Output
Selectivity	40 KC Broad at 1000 Times Signal
Tuning Frequency Range	540 to 1600 KC
Intermediate Frequency	455 KC
Speaker	6" PM Dynamic

ALIGNMENT PROCEDURE

Volume Control—Maximum All Adjustments.

Connect Radio Chassis to Ground Post of Signal Generator with a Short Heavy Lead.

Allow Chassis and Signal Generator to "Heat Up" for several minutes.

The following equipment is required for aligning:

A Signal Generator which will provide an accurately calibrated signal at the test frequencies as listed.

Output Indicating Meter—Non-Metallic Screwdriver.

Dummy Antenna—.05 mf., See Note A.

SIGNAL GENERATOR FREQUENCY SETTING	SIGNAL GENERATOR CONNECTION AT RADIO	DUMMY ANTENNA	IRON CORE SETTING	ADJUST TUNING SLUGS (IF) AND TRIMMERS TO MAXIMUM (See Fig. 4)
I.F.	Control Grid (prong No. 7)		Extreme Position	1st I.F. PRI. & SEC. ADJ
455 KC	6BE6 Mixer Tube	.05 mf.	out of Coil	2nd I.F. PRI. & SEC. ADJ
OSCILLATOR				
1600 KC	Antenna Cable See Note A	See Note A	Extreme Position out of Coil	Oscillator (C1C)
1400 KC ADJUSTMENT				
1400 KC	Antenna Cable	See Note A	Tune to Max. Output with Tuning Knob	RF (C1B) Ant. (C1A)

Reassemble Radio—Install in Car—Connect Car Antenna to Radio.

Car Antenna Readjustment—Tune in weak signal near 1400 KC—Readjust Antenna Trimmer C1A for maximum output.

Attenuate the signal from the signal generator to prevent the leveling-off action of the AVC.

NOTE A—Insert the antenna cable plug in the antenna socket on the chassis. The total capacity of the antenna cable and dummy antenna should be 60 mmf. If the cable, for example, has a capacity of 30 mmf., use a 30 mmf. condenser for a dummy antenna. Connect the other end of the antenna cable through the dummy antenna capacity to the output of the signal generator.

CALIBRATION—To calibrate the radio see article "Calibrating the Radio"

ANTENNA

A shielded antenna cable (30 mmf. capacity) with bayonet connector plug is required.

The plug on the antenna cable is inserted in the socket at the side of the radio case as shown in Fig. 3. The wire at the other end of the cable is connected to the antenna.

LOW CAPACITY ANTENNA

This radio is designed for a low capacity car antenna. The total capacity of antenna and shielded cable should be 40 to 200 mmf.

Types of Low Capacity Antennas—"Fishpole" type, such as door hinge and cowl; over-the-roof types which are short and are mounted quite a distance from the metal roof of the car.

Mount the antenna on the same side of the car as the radio.

HIGH CAPACITY ANTENNA

If this radio is to be installed with a high capacity car antenna (200 to 500 mmf. total capacity of antenna and shielded cable), a 24 inch shielded adapter extension cable is necessary. The adapter is inserted in the socket at the side of the radio case. Then the antenna cable plug is inserted in the socket at the other end of the adapter.

Types of High Capacity Antennas—Over-the-roof types which are long and are mounted close to the metal roof of the car; ordinary built-in roof antennas (not metal roof). Under-car antennas (these are usually high capacity) are not recommended for this radio.

ANTENNA CABLE

CAUTION—Be careful not to bend the antenna cable too sharply or to clamp it tightly as the small wire inside the cable may be broken.

Keep the antenna cable as far away from car wiring as possible and ground the pigtail of the antenna cable shield at the antenna end, otherwise ignition noise may be picked up. The length of the pigtail from the grounding point to the end of the antenna cable should be kept as short as possible, preferably not over one inch.

For the "fish pole" and over-the-roof type antennas, the antenna lead must be shielded the entire distance from the radio to the point where the lead goes through the car body to the outside.

When the antenna cable is connected to an antenna lead coming down the pillar post, the shielded cable should be pushed several inches up into the pillar post.

© John F. Rider

©John F. Rider

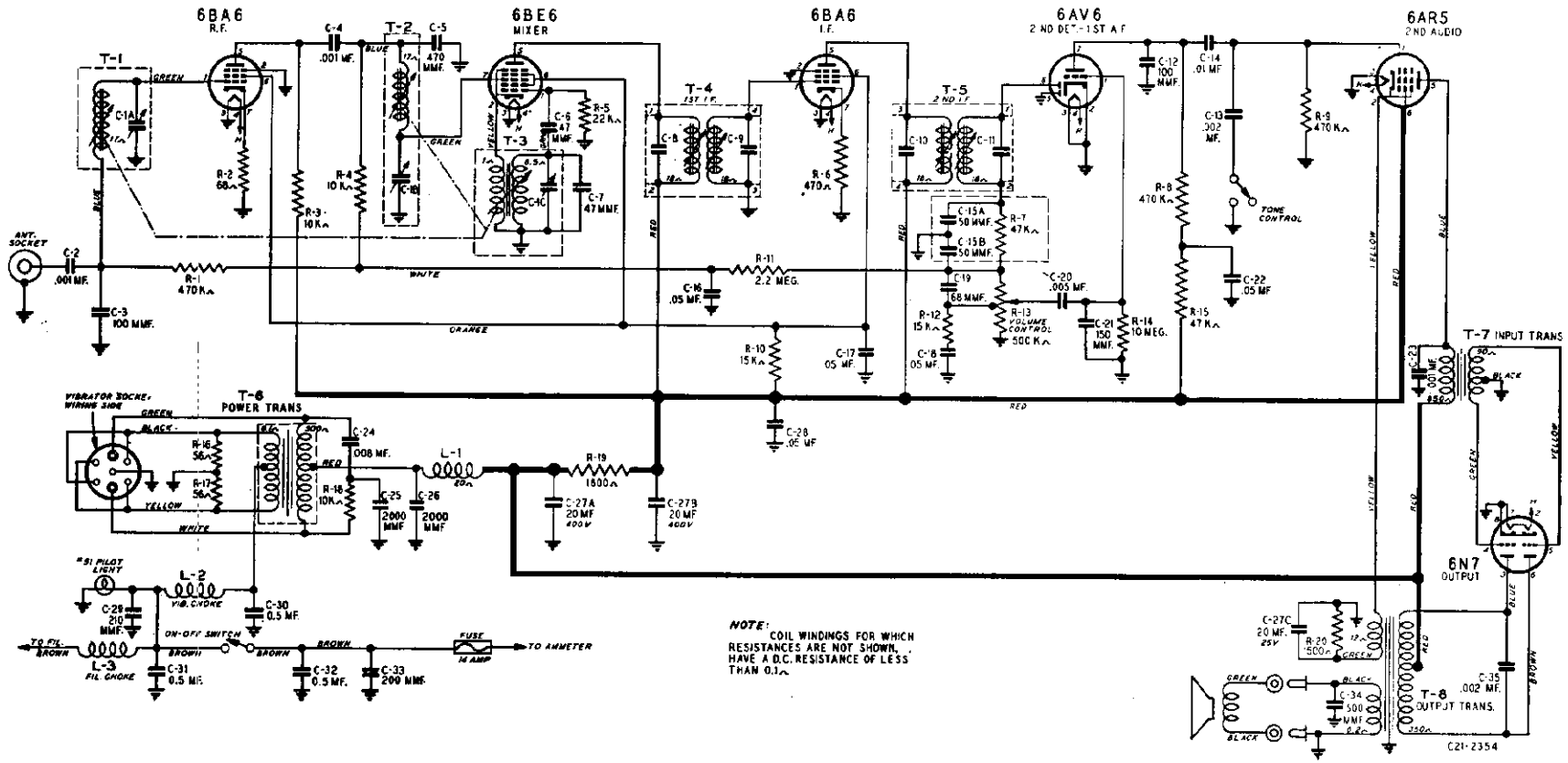

NOTE: COIL WINDINGS FOR WHICH RESISTANCES ARE NOT SHOWN, HAVE A D.C. RESISTANCE OF LESS THAN 0.1Ω.

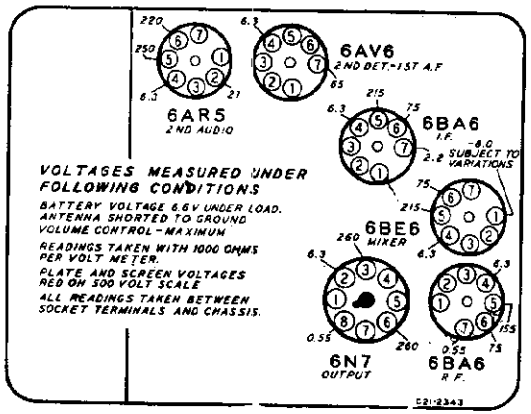

Calibrating the Radio

To calibrate the radio, tune in a station of known frequency, loosen the knurled nut at the tuning control clamp fitting and turn the flexible shaft with the fingers until the dial pointer indicates the frequency of the station being received.

Slide the flexible shaft in or out of the tuning control clamp fitting until a smooth action with a minimum of backlash is obtained.

The knurled nut should then be tightened with the fingers.

Fig. 4—Location of Tubes and Vibrator

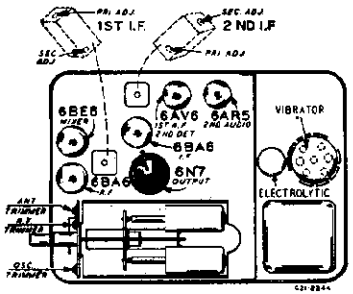

Adjusting Antenna Trimmer

After the antenna is connected, tune in a weak signal at approximately 1400 KC with the volume control about three-fourths on. Turn the adjusting screw of the antenna trimmer (C1A) in or out until maximum output is obtained. See Fig. 3 for location of this trimmer.

MODELS D4842A, D4842B

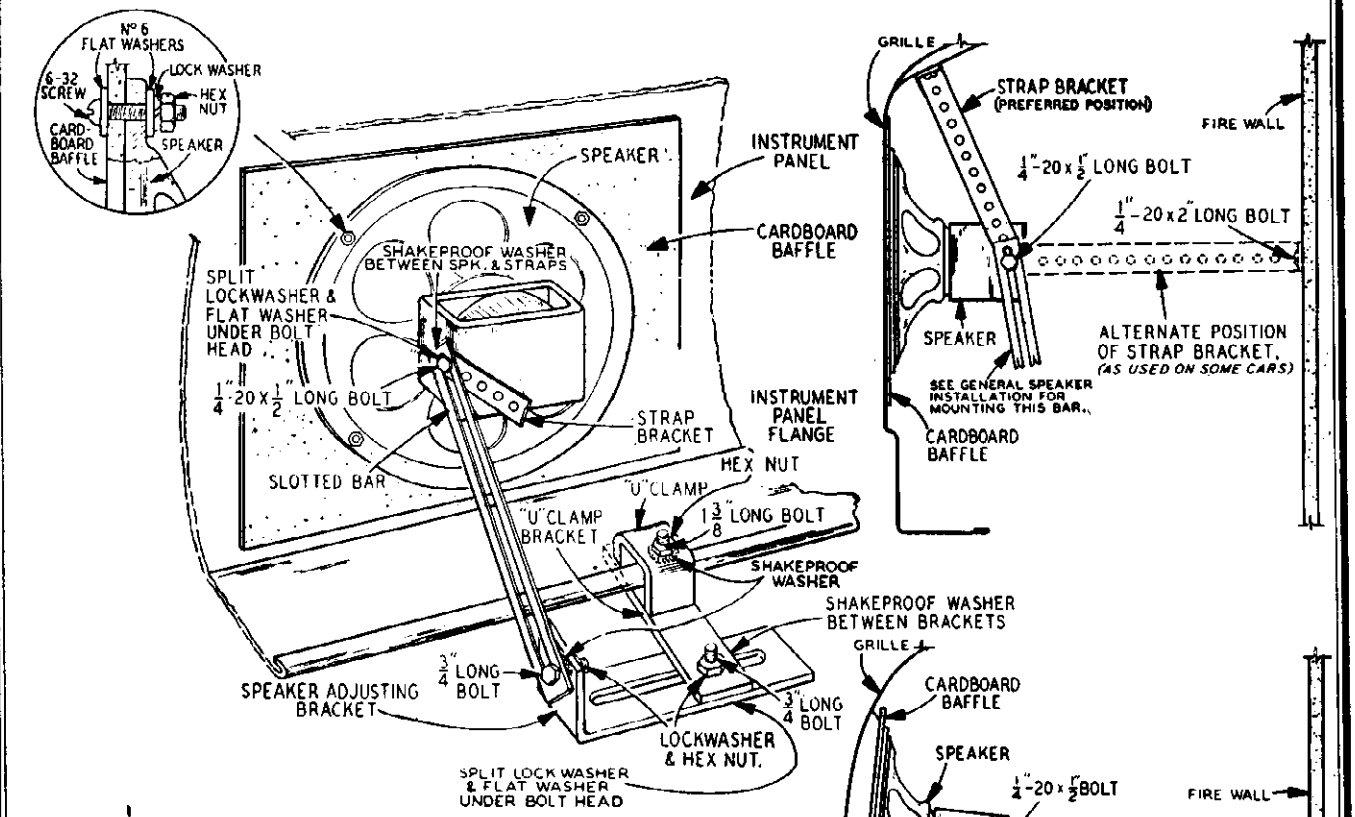

Fig. 2—Typical Methods of Mounting Speaker Behind Instrument Panel Grille

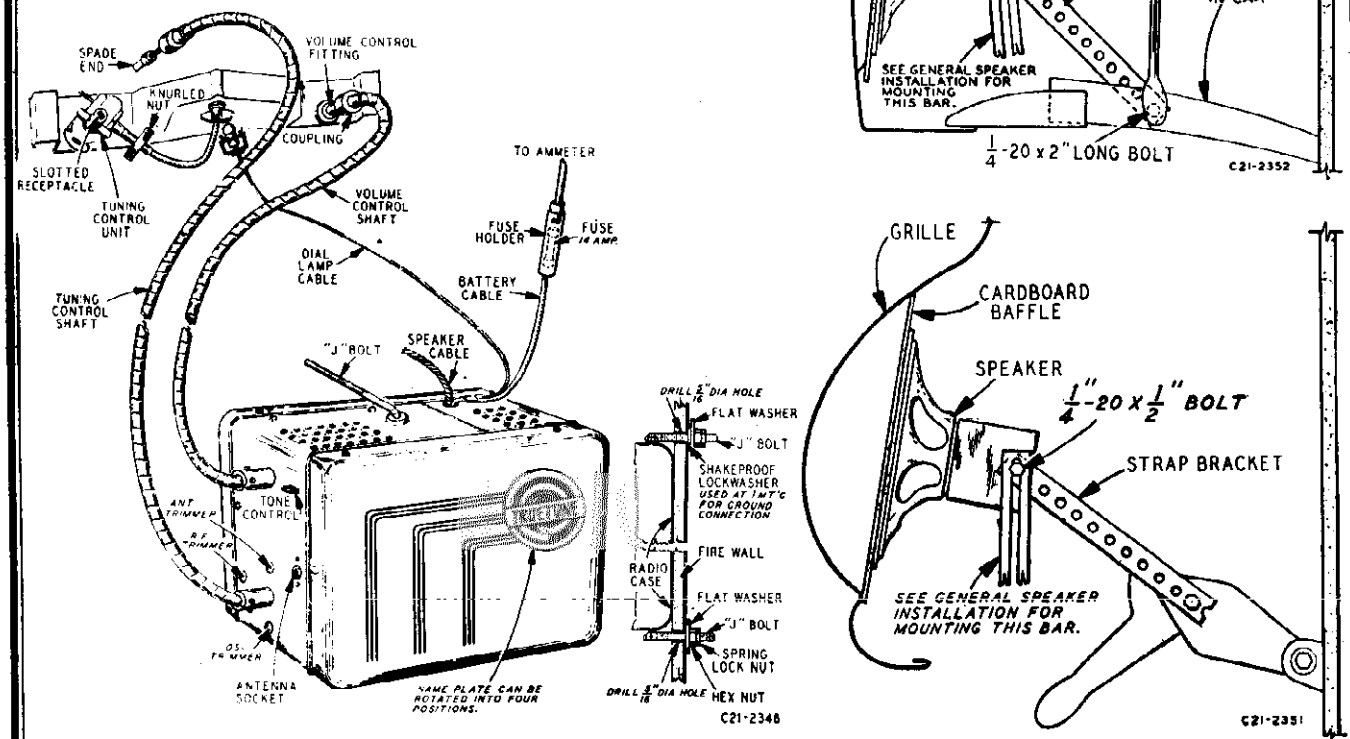

Fig. 3—General Installation View

©John F. Rider

MODELS D4842A, D4842B

REPLACEMENT PARTS LIST

NOTICE: There is a Model Number label on the chassis. This label identifies the radio as to chassis, dial and issue letter. When ordering parts or writing, give ALL information appearing on this label.

MISCELLANEOUS

12A487	6" P.M. Speaker	
76X1	Resistor Capacitor Combination	
20A100	Iron Core Tuning Assembly, complete with Coils, Trimmers, etc.	
32X390	Tube Shield (miniature)	
3A303	Tube Socket Octal (8 prong) Molded	
3A442	Tube Socket (miniature)	
2A175	Tone Control Switch	
3A440	Vibrator Socket (7 prong) Molded	
19A42	Vibrator Unit	
28X52	Spring Clamp for Vibrator	
34X540	Top Cover for Chassis Case, Less Nameplate	
4X1018	Name Plate	
34X541	Bottom Cover for Chassis Case	
28X48	Spring Clip to Ground Covers to Case	

TRANSFORMERS AND COILS

L-1	9A1964	R.F. Choke Assembly
L-2, L-3	9A1958	Choke Assembly
T-1, T-2, T-3		Antenna, R-F, Oscillator Coils and Iron Cores are a part of the 20A100 Tuning Assembly. Entire Assembly must be ordered. (See Miscellaneous).
T-4, T-5	9A1963	1st and 2nd I.F. Transformer
T-6	53X295	Power Transformer
T-7	50X47	Input Transformer
T-8	51X138	Output Transformer

CAPACITORS

		CAPACITY	VOLTAGE	
C-1A, C-1B, C-1C		Part of Iron Core Tuning Assembly (See Miscellaneous)		
C-2, C-4	46X399	.001 mf	400 V	Tubular
C-3	47X526	100 mmf		Mica
C-5	47X525	470 mmf		Mica
C-6	47X495	47 mmf		Ceramic
C-7	47X517	47 mmf		Ceramic
C-8, C-9		Part of T-4, 1st I.F. Transformer		
C-10, C-11		Part of T-5, 2nd I.F. Transformer		
C-12	47X497	100 mmf		Ceramic
C-13	46X407	.002 mf	600 V	Molded
C-14	46X401	.01 mf	400 V	Molded
C-15A, C-15B		50-50 mmf		Part of 76X1 Res. Cap. Combination (See Miscellaneous)
C-16, C-22, C-28	46X397	.05 mf	400 V	Molded
C-17, C18	46X398	.05 mf	200 V	Molded
C-19	46X471	68 mmf		Mica
C-20	46X400	.005 mf	200 V	Molded
C-21	47X527	150 mmf		Ceramic
C-23	46X406	.001 mf	1000 V	Molded
C-24	P54802	.008 mf	1600 V	Tubular
C-25, C-26	47X520	2000 mmf		Ceramic
C-27A		20 mf	450 V	
C-27B, C-27C	45X366	20 mf	400 V	Dry Electrolytic
		20 mf	25 V	
C-29	47X114	210 mmf		Mica
C-30, C-31, C-32	46X395	.5 mf	100 V	Tubular
C-33	47X129	200 mmf		Mica
C-34	47X496	500 mmf		Ceramic
C-35	46X405	.002 mf	1000 V	Molded

RESISTORS

		OHMS	WATTS	
R-1, R-8, R-9	B85474	470 K	0.5	Carbon
R-2	B85680	68	0.5	Carbon
R-3	C85103	10 K	1.0	Carbon
R-4, R-18	B85103	10 K	0.5	Carbon
R-5	B85223	22 K	0.5	Carbon
R-6	B84471	470	0.5	Carbon
R 7		47 K		Part of 76X1 Res. Cap. Combination (See Miscellaneous)
R-10	D84153	15 K	2.0	Carbon
R-11	B85225	2.2 Meg.	0.5	Carbon
R-12	B85153	15 K	0.5	Carbon
R-13	36X377	.5 Meg.		Volume Control
R-14	B85106	10 Meg.	0.5	Carbon
R-15	B85473	47 K	0.5	Carbon
R-16, R-17	C85560	56	1.0	Carbon
R-19	D84182	1800	2.0	Carbon
R-20	C84152	1500	1.0	Carbon

CONTROL UNIT ASSEMBLY PARTS

	Quantity Used	
*20A92	1	Tuning Control Unit
*20A91	1	Volume Control Fittings
†	2	Control Knobs, Specify Name of Car, Year, and Model. Molded Type. Chromium Type.

* Shipped with each radio. † Shipped with each panel kit.

INSTALLATION ITEMS

CABLE AND FLEXIBLE SHAFT ASSEMBLIES

	Quantity Used	
18A53	2	27" Tuning Control and Volume Control Flexible Drive Shafts
18A54	2	20" Same as above
18A55	2	36" Same as above
13X390	1	Battery Cable (long section with Fuse Receptacle)
7A162	1	Dial Lamp Socket and Cable Assembly
13X336	1	"A" Cable (Short Section connected to Chassis)
13X582	1	Speaker Cable Assembly (on chassis)

INSTRUMENT PANEL SPEAKER MOUNTING PARTS

26A493	1	Speaker Mounting Kit (For mounting speaker on Instrument Panel) complete with Speaker Baffle, Brackets, Clamps, Nuts, Bolts, and Washers
25X789	1	Strap Bracket
25X787	1	Speaker Adjusting Bracket ("L" Shaped)
30X154	1	"U" Clamp
25X786	1	Bracket for "U" Clamp
25X785	1	9" Slotted Speaker Bar
14X437	1	Cardboard Speaker Baffle
8X108	1	Sponge Rubber Strip

FIRE WALL SPEAKER MOUNTING PARTS

26A380	1	Speaker Mounting Kit (for mounting speaker on Fire Wall) complete with Speaker Housing, Grille Cloth, Speaker Screen, Washers, and Nuts
14X321	1	Speaker Housing only
14X322	1	Grille Cloth
14X320	1	Speaker Screen

MISCELLANEOUS ITEMS

26A492	1	Radio Mounting Bolt Kit complete with "J" Bolts, Nuts, and Washers
20X1549	2	"J" Bolts only
16X27	1	14 Ampere Fuse
21A6	1	Distributor Suppressor
48X27	1	Generator Condenser
7A32	1	No. 51 Pilot Light Bulb
21A7		Spark Plug Suppressors (Not shipped with Radio)
21A5	1	Choke-Condenser Unit (Not shipped with Radio)

©John F. Rider

MODEL H-198,
Ch. V-2137-2

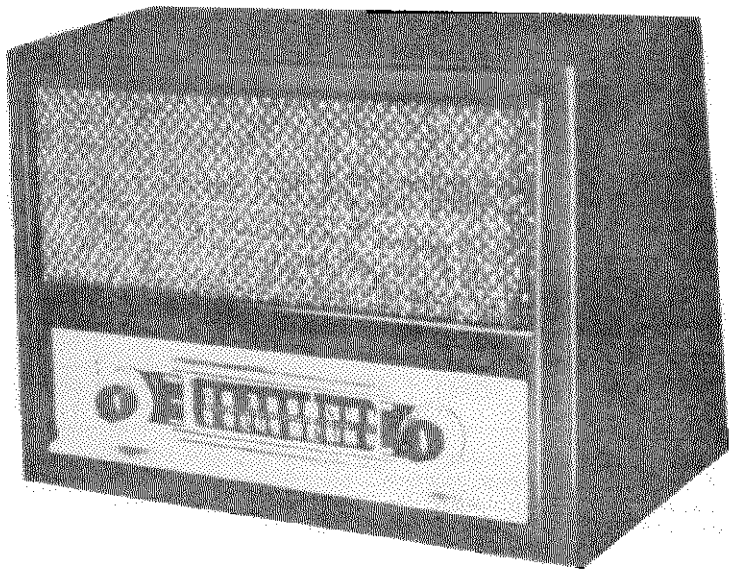

SPECIFICATIONS

FREQUENCY RANGES:

Amplitude Modulation ..... 540 to 1600 kc.
Frequency Modulation ..... 88 to 108 mc.

INTERMEDIATE FREQUENCIES:

Amplitude Modulation ..... 455 kc.
Frequency Modulation ..... 10.7 mc.

TUBE COMPLEMENT:

1 12AT7 ..... R-F Amp. and Mixer (FM)
1 6BE6 H-F Osc. (AM/FM) and converter (AM)
1 6BA6 ..... I-F Amp.
1 6BA6 ..... I-F Driver (FM)
1 6AL5 ..... Ratio Det. and AVC (FM)
1 6AV6 ..... Det. & AVC (AM) and A-F Amp.
1 6V6GT ..... Output Amp.
1 5Y3GT ..... Rectifier

PILOT LAMPS:

2 Westinghouse No. 47 .... 6.3 v., 0.15 a.

POWER OUTPUT:

Undistorted ..... 3.5 watts
Maximum ..... 6 watts

LOUDSPEAKER: ..... 6" P.M.

OPERATING VOLTAGE: .... 105 to 120 volts, 60 cycles A-C

POWER CONSUMPTION: ..... 85 watts

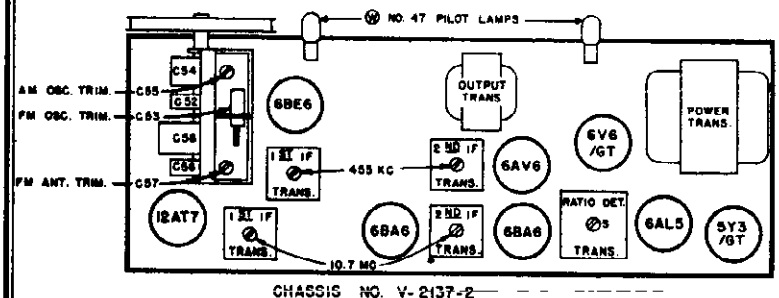

CHASSIS NO. V-2137-2

FIG. 1 — TOP VIEW

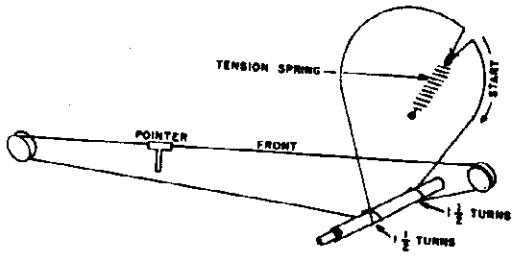

FIG. 2 — DIAL DRIVE

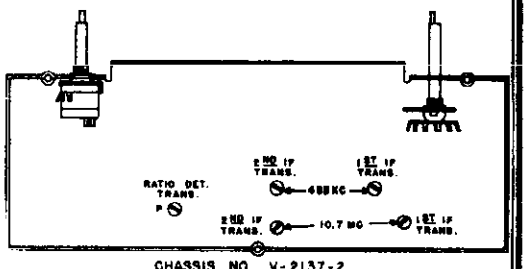

CHASSIS NO. V-2137-2

FIG. 3 — BOTTOM VIEW

©John F. Rider

MODEL H-198,
Ch. V-2137-2

ALIGNMENT
Broadcast Band

Connect an output meter across the speaker voice coil.

While making the following adjustments, keep the volume control set for maximum output, the tone control set for maximum treble, and the signal generator output attenuated to avoid A.V.C. action.

Step	Connect Signal Generator to —	Signal Generator Frequency	Radio Dial Setting	Adjust
1	Set the band switch to AM.			
2	Stator of tuning capacitor (C58) through a 0.1 mfd capacitor	455 kc.	maximum capacity	455 kc. pri. and sec. of 1st and 2nd I-F trans. for max. output
	NOTE: If the I-F transformers are badly mis-aligned, it may be impossible to obtain sufficient output using the above system. In this event, it will be necessary to align each transformer separately. Start with the last I-F transformer and work forward, connecting the signal generator through a 0.1 mfd capacitor to the control grid of the tube preceding the transformer under alignment.			
3	Radiated signal (no actual connection)	1600 kc.	1600 kc.	AM osc. trimmer (C55) for max. output
4	Radiated signal (no actual connection)	1400 kc.	tune to signal	AM ant. trimmer (C10, located on rear cover) for max. output (rock-in adjustment)

FM Band

Do not align the FM circuits until all AM adjustments have been completed.

Step	Connect Signal Generator to —	Signal Generator Frequency	Radio Dial Setting	Adjust
1	Set the band switch to FM.			
2	Connect two 100,000 ohm resistors (the resistances must be equal within 5 percent) between pin #7 of the 6AL5 tube and ground as shown on the schematic diagram.			
3	Connect a V.T.V.M. between points "X" and "Y" (see schematic diagram).			
4	Stator of FM conv. section (C56) of tuning capacitor through a .01 mfd mica capacitor	10.7 mc.	maximum capacity	Sec. of ratio det. trans. for *zero* (use medimum strength signal)
5	Connect the V.T.V.M. between point "Z" and ground.			
6	Same as step 4	10.7 mc.	maximum capacity	Pri. of ratio det. trans. and pri. and sec. of 10.7 mc. 1st and 2nd I-F trans. for max.
	NOTE: The pri. of the ratio det. trans. peaks in two places. Use the peak with the slug farthest out.			
7	Reconnect the V.T.V.M. between point "X" and "Y", and increase the signal strength 2 times.			
8	Same as step 4	10.7 mc.	maximum capacity	Recheck sec. of ratio det. trans. for *zero* voltage
9	Reconnect the V.T.V.M. between point "Z" and ground.			
10	Same as step 4	10.7 mc.	maximum capacity	Pri. of ratio det. trans. for maximum voltage
11	Remove the two 100,000 ohm resistors that were inserted in step 2.			
12	FM ant. terminal through a 300 ohm non-inductive resistor	105 mc.	105 mc.	FM osc. trimmer (C53) for maximum output
13	Same as step 12	105 mc.	105 mc.	FM ant. trimmer (C57) for maximum output

© John F. Rider

MODEL H-198,
Ch. V-2137-2

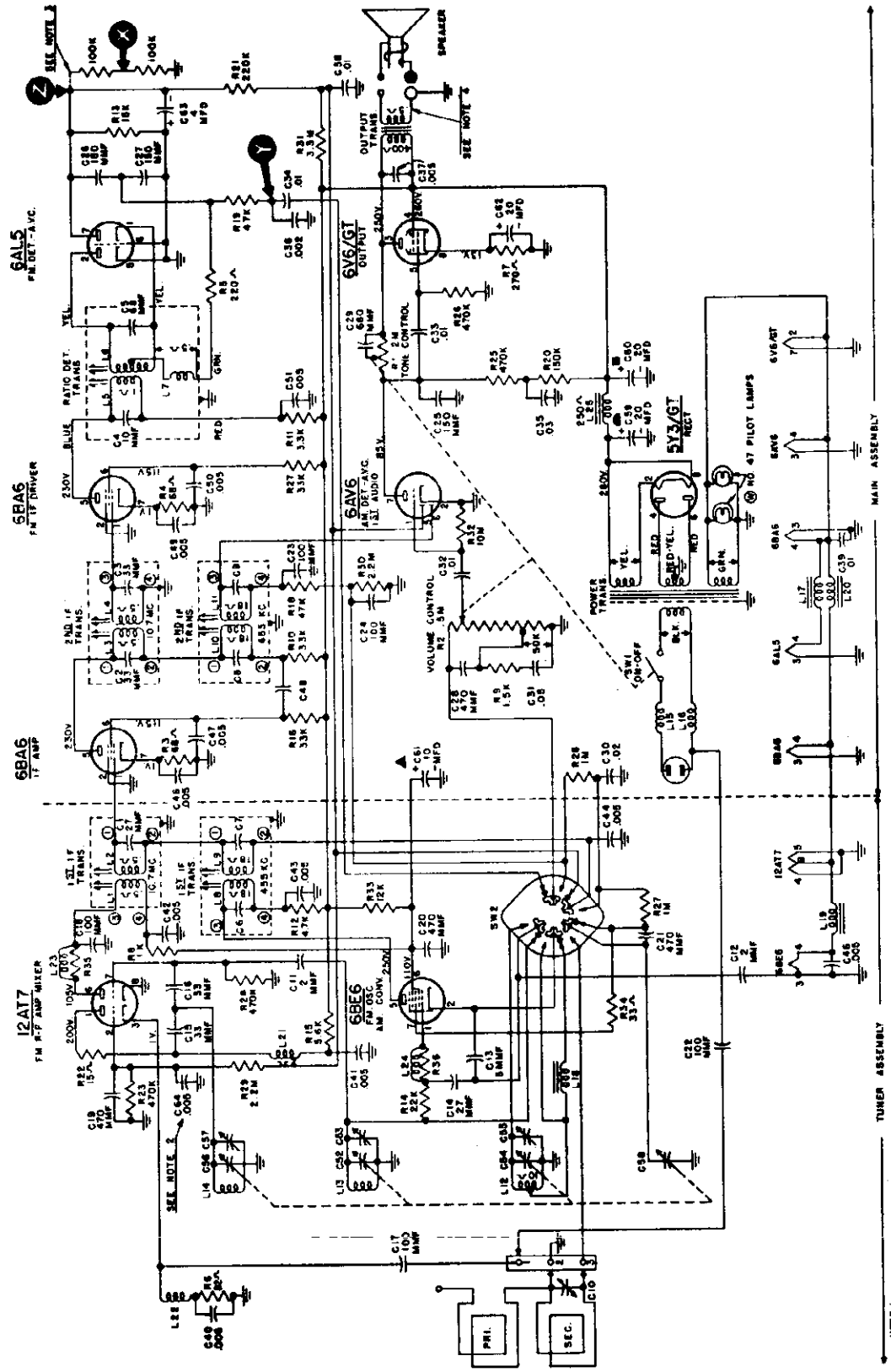

NOTE:
1. SELECTOR SWITCH SW2 IS SHOWN IN EXTREME COUNTER CLOCKWISE POSITION OR FM BAND FIRST POSITION CLOCKWISE IS AM BAND.
2. NOT USED IN EARLY CHASSIS.
3. TO BE INSTALLED FOR ALIGNMENT ONLY.
4. VOICE COIL DISCONNECTED FROM CHASSIS (GND.) USING A 20,000 OHM/VOLT METER.
5. ALL VOLTAGES MEASURED LINE VOLTAGE 117 V A C VOLTAGES SHOULD BE AS SHOWN ± 20 PER CENT.

FIG. 4 — SCHEMATIC DIAGRAM

©John F. Rider

MODEL H-198,
Ch. V-2137-2

PARTS LIST FOR MODEL H-198

When ordering parts, specify model number of set in addition to part number and description of part.

CABINET

Part No.	Description
V-6021-6	Bumper
V-1175-1	Cabinet
V-5860-5	Cable Assembly, speaker
V-6447	Cover Rivet Assembly, back
V-6432-2	Feet, cabinet
V-6611-1	Grille Cloth
V-6146-1	Knob, off-on-tone
V-6146-2	Knob, band
V-6147-1	Knob, rear (volume)
V-6147-2	Knob, rear (tuning)
V-6448	Loop, AM antenna and trimmer (C10)
V-6043-3	Panel Assembly, control
V-6449	Speaker, 6" P.M.
V-3267S-6	Washer, flat (chassis mounting)
V-5421-5	Washer, felt (knob)

CHASSIS

V-6120	Background, dial
R2CC30CK020D	Capacitor, ceramic, 2 mmf (C11)
R2CC30UK020D	Capacitor, ceramic, 2 mmf (C12)
R2CC30CK050D	Capacitor, ceramic, 5 mmf (C13)
R3CC30CK270K	Capacitor, ceramic, 27 mmf (C14)
R3CC26CK330M	Capacitor, ceramic, 33 mmf (C15, 16)
R3CC30SL101M	Capacitor, ceramic, 100 mmf (C17)
R3CC30SL101J	Capacitor, ceramic, 100 mmf (C18)
R5CC21ZY471M	Capacitor, ceramic, 470 mmf (C19, 20, 21)
RCM20A101M	Capacitor, 100 mmf (C22, 23, 24)
RCM20A151M	Capacitor, 150 mmf (C25)
RCM20A151J	Capacitor, 150 mmf (C26, 27)
RCM20A471M	Capacitor, 470 mmf (C28)
RCM20A681M	Capacitor, 680 mmf (C29)
RCP10W2203A	Capacitor, .02 mfd 200 v.(C30)
RCP10W2503A	Capacitor, .05 mfd 200 v.(C31)
RCP10W4103A	Capacitor, .01 mfd 400 v. (C32, 33, 34)
RCP10W4303A	Capacitor, .03 mfd 400 v. (C35)
RCP10W6202A	Capacitor, .002 mfd 600 v. (C36)
RCP10M6502A	Capacitor, .005 mfd 600 v. (C37)
V-5040-13	Capacitor, .01 mfd 200 v. (C38, 39)
V-5596	Capacitor, Hi Kap .005 mfd (C40, 41, 42, 43, 44, 45, 46, 47, 48, 49, 50, 51, 64)
V-6442	Capacitor, variable (C52, 53, 54, 55, 56, 57)
V-8139	Capacitor, trimmer-FM osc. (C53)
V-6121	Capacitor, electrolytic, 20-20 mfd 400 v., 10 mfd 350 v., 20 mfd 25 v. (C59, 60, 61, 62)
V-6638	Capacitor, electrolytic, 4 mfd 150 v. (C63)
V-5426	Clip, I-F mounting
V-6164	Coil, AM osc. (L12)
V-6138	Coil, FM osc. (L13)
V-6806	Coil, FM antenna (L14)
V-6122	Control, volume 0.5 meg. (R2), tone 2 meg. (R1), SW1
V-6123	Dial
No. 47	Lamp, pilot
V-6125	Pointer
V-3166S	Pulley, 7/16" diameter
V-4886-11	Reactor, RF (L15, 16)
V-4886-1	Reactor, RF 14 microhenries (L17)
V-4886-2	Reactor, RF 1.1 microhenries (L18, 19, 20)
V-4886-4	Reactor, RF (L21)
V-4886-10	Reactor, RF (L22)
V-4886-6	Reactor, RF (L23, R35)
V-4886-7	Reactor, RF (L24, R36)
V-6161	Reactor, filter choke (L25)
RC10AE680K	Resistor, 68 ohms ½ w. (R3, 4)
RC10AE221M	Resistor, 220 ohms ½ w. (R5)
RC10AE820K	Resistor, 82 ohms ½ w. (R6)
RC30AE271K	Resistor, 270 ohms 1 w. (R7)
RC10AE102K	Resistor, 1000 ohms ½ w. (R8)
RC10AE152M	Resistor, 1500 ohms ½ w. (R9)
RC30AE332K	Resistor, 3300 ohms 1 w. (R10, 11)
RC10AE472K	Resistor, 4700 ohms ½ w. (R12)
RC10AE153K	Resistor, 15,000 ohms ½ w. (R13)
RC10AE223K	Resistor, 22,000 ohms ½ w. (R14)
RC30AE562K	Resistor, 5600 ohms 1 w. (R15)
RC30AE333K	Resistor, 33,000 ohms 1 w. (R16, 17)
RC10AE473M	Resistor, 47,000 ohms ½ w. (R18, 19)
RC10AE154M	Resistor, 150,000 ohms ½ w. (R20)
RC10AE224M	Resistor, 220,000 ohms ½ w. (R21)
RC10AE150M	Resistor, 15 ohms ½ w. (R22)
RC10AE474M	Resistor, 470,000 ohms ½ w. (R23, 24, 25, 26)
RC10AE105M	Resistor, 1.0 megohm ½ w. (R27, 28)
RC10AE225M	Resistor, 2.2 megohms ½ w. (R29, 30)
RC10AE335M	Resistor, 3.3 megohms ½ w. (R31)
RC10AE106M	Resistor, 10.0 megohms ½ w. (R32)
RC41AE123K	Resistor, 12,000 ohms 2 w. (R33)
RC10AE330K	Resistor, 33 ohms ½ w. (R34)
V-6127	Sleeve, dial drive
V-4195	Socket, molded octal (6V6G, 5Y3GT)
V-5673	Socket, miniature wafer (unshielded) (6AV6)
V-6072-1	Socket, miniature wafer (12AT7)
V-6163-1	Socket, miniature (6BE6)
V-6165-2	Socket, dial light
V-6295-1	Socket, miniature wafer (6BA6, 6AL5)
V-3248S	Spring, dial drive
V-3167S-2	Stud, pulley (threaded)
V-6607-1	Switch, selector (SW2)
V-5808	Terminal board, speaker
V-6606	Terminal board, ANT.-GND.
V-6142	Transformer, FM 1st I-F (C1, L1, 2)
V-6129	Transformer, FM 2nd I-F (C2, 3, L3, 4)
V-6128	Transformer, ratio detector (C4, 5, L5, 6, 7)
V-6199-2	Transformer, AM 1st and 2nd I-F (C6, 7, 8, 9, L8, 9, 10, 11)
V-5798	Transformer, audio output
V-6667	Transformer, power

© John F. Rider

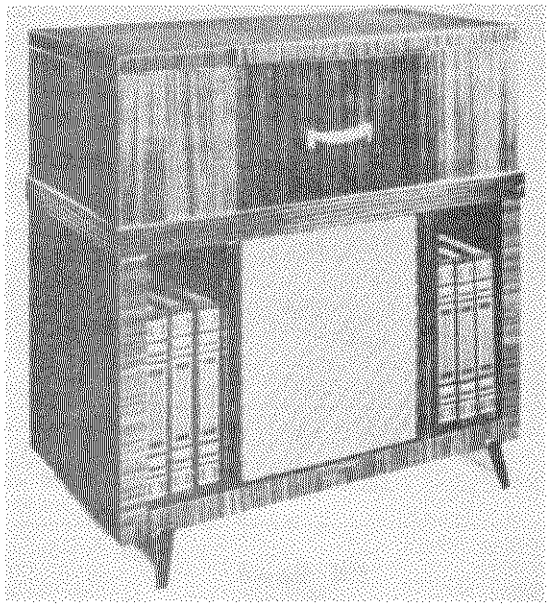

MODEL H-199

SPECIFICATIONS

FREQUENCY RANGES:

Amplitude Modulation ..... 540 to 1600 kc.
Frequency Modulation ..... 88 to 108 mc.

INTERMEDIATE FREQUENCIES:

Amplitude Modulation ..... 455 kc.
Frequency Modulation ..... 10.7 mc.

TUBE COMPLEMENT:

1 12AT7 ..... R-F Amp. and Mixer (FM)
1 6BE6 H-F Osc. (AM/FM) and converter (AM)
1 6BA6 ..... I-F Amp.
1 6BA6 ..... I-F Driver (FM)
1 6AL5 ..... Ratio Det. (FM)
1 6AV6 ..... Det. & AVC (AM) and A-F Amp.
1 6V6GT ..... Output Amp.
1 5Y3GT ..... Rectifier

PILOT LAMPS:

2 Westinghouse No. 47 ..... 6.3 v., 0.15 a.

POWER OUTPUT:

Undistorted ..... 3.5 watts
Maximum ..... 6 watts

LOUDSPEAKER: ..... 10" P.M.

OPERATING VOLTAGE: .... 105 to 120 volts, 60 cycles A-C

POWER CONSUMPTION: ..... 110 watts

©John F. Rider

MODEL H-199,
Ch. V-2137-1

ALIGNMENT

Broadcast Band

Connect an output meter across the speaker voice coil.

While making the following adjustments, keep the volume control set for maximum output, the tone control set for maximum treble, and the signal generator output attenuated to avoid A.V.C. action.

Step	Connect Signal Generator to —	Signal Generator Frequency	Radio Dial Setting	Adjust
1	Set the band switch to AM.			
2	Stator of tuning capacitor (C53) through a 0.1 mfd capacitor	455 kc.	maximum capacity	455 kc. pri. and sec. of 1st and 2nd I-F trans. for max. output
NOTE: If the I-F transformers are badly mis-aligned, it may be impossible to obtain sufficient output using the above system. In this event, it will be necessary to align each transformer separately. Start with the last I-F transformer and work forward, connecting the signal generator to the control grid of the tube preceding the transformer under alignment.				
3	Radiated signal (no actual connection)	1600 kc.	1600 kc.	AM osc. trimmer (C55) for max. output
4	Radiated signal (no actual connection)	1400 kc.	tune to signal	AM ant. trimmer (C57) for max. output (rock-in adjustment)

FM Band

Do not align the FM circuits until all AM adjustments have been completed.

Step	Connect Signal Generator to —	Signal Generator Frequency	Radio Dial Setting	Adjust
1	Set the band switch to FM.			
2	Connect two 100,000 ohm resistors (the resistances must be equal within 5 percent) between pin #7 of the 6AL5 tube and ground as shown on the schematic diagram.			
3	Connect a V.T.V.M. between points "X" and "Y" (see schematic diagram).			
4	Stator of FM ant. section (C52) on tuning capacitor through a .01 mfd mica capacitor	10.7 mc.	maximum capacity	Sec. of ratio det. trans. for *zero* (use medium strength signal)
5	Connect the V.T.V.M. between point "Z" and ground.			
6	Same as step 4	10.7 mc.	maximum capacity	Pri. of ratio det. trans. and pri. and sec. of 10.7 mc. 1st and 2nd I-F trans. for max.
NOTE: The pri. of the ratio det. trans. peaks in two places. Use the peak with the slug farthest out.				
7	Reconnect the V.T.V.M. between points "X" and "Y", and increase the signal strength 2 times.			
8	Same as step 4	10.7 mc.	maximum capacity	Recheck sec. of ratio det. trans. for *zero* voltage
9	Reconnect the V.T.V.M. between point "Z" and ground.			
10	Same as step 4	10.7 mc.	maximum capacity	Pri. of ratio det. trans. for maximum voltage
11	Remove the two 100,000 ohm resistors that were inserted in step 2.			
12	FM ant. terminal through a 300 ohm non-inductive resistor	105 mc.	105 mc.	FM osc. trimmer (C54) for maximum output
13	Same as step 12.	105 mc.	105 mc.	FM ant. trimmer (C56) for maximum output

PARTS LIST FOR MODEL H-199

When ordering parts, specify model number of set in addition to part number and description of part.

Part No.	Description	Part No.	Description
V-5982-2	Antenna Assembly, AM loop .	V-6415-1	Cable, phono .....
V-5986-5	Antenna Assembly, FM dipole	V-5860-4	Cable Assembly, speaker
V-6120	Background, dial	R2CC30CK020D	Capacitor, 2 mmf (C10)
V-6253-1	Bracket, chassis support ..	R2CC30UK020D	Capacitor, 2 mmf (C11)
V-1172-1	Cabinet, mahogany	R2CC30CK050D	Capacitor, 5 mmf (C12)

© John F. Rider

©John F Rider

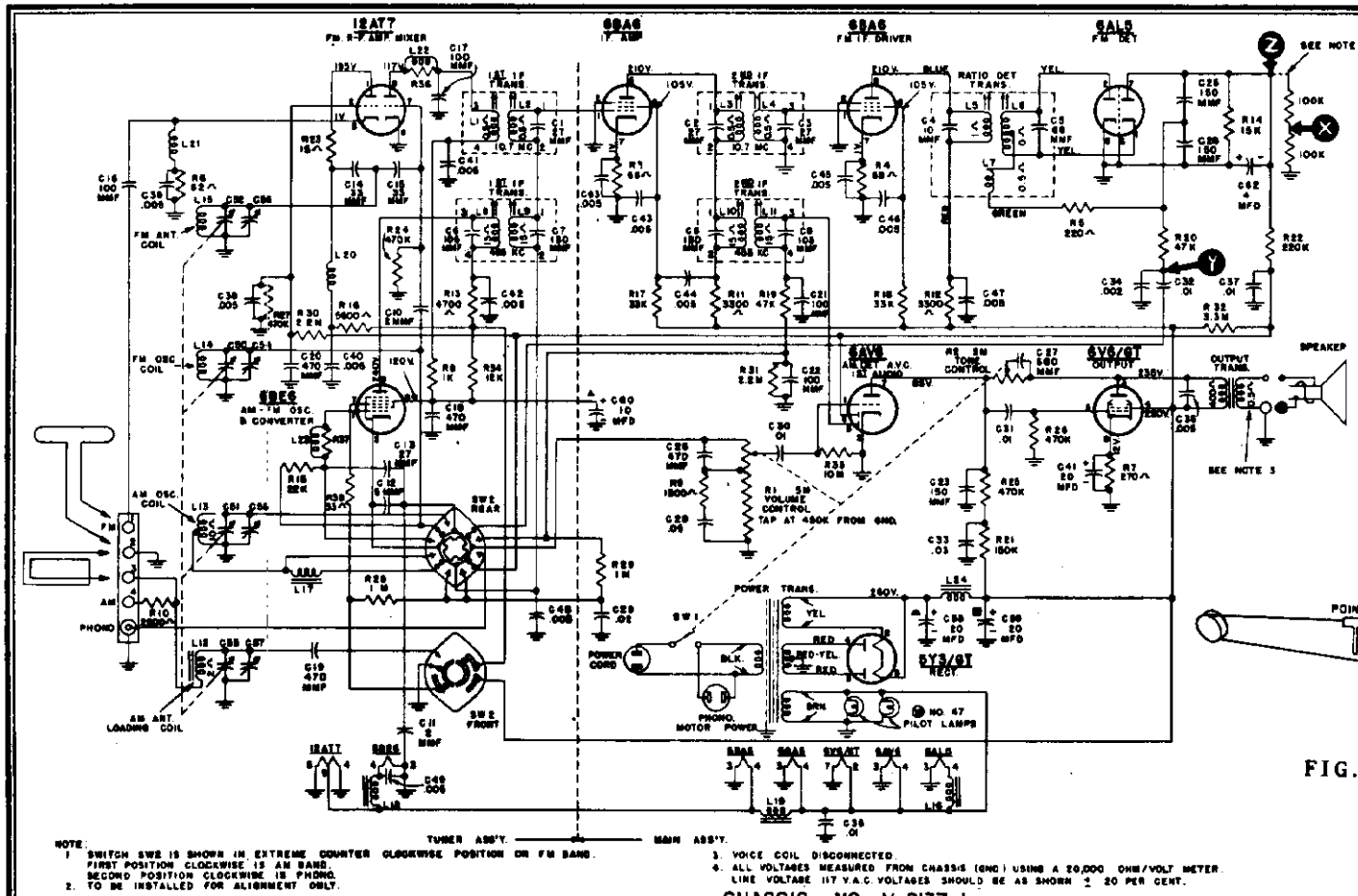

FIG. 4 — SCHEMATIC DIAGRAM

FIG. 3 — DIAL DRIVE

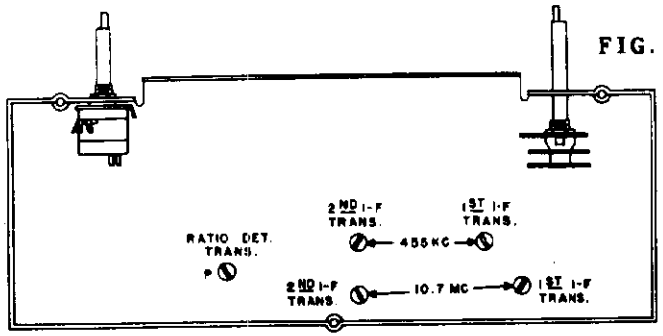

CHASSIS NO. V-2137-1

FIG. 2 — BOTTOM VIEW

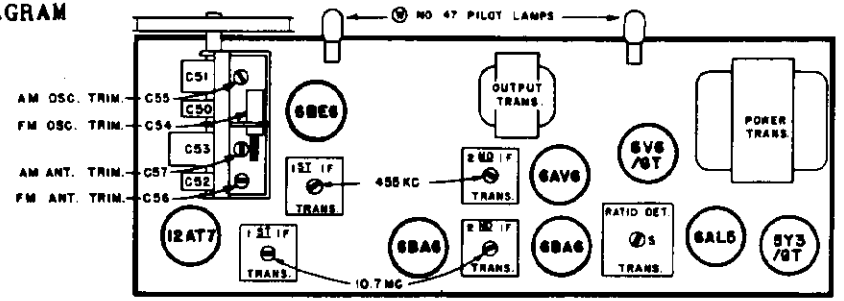

CHASSIS NO. V-2137-1

FIG. 1 — TOP VIEW

PARTS LIST FOR MODEL H-199

Part No.	Description
RC10AE221M	Resistor, 220 ohms ¼ w. (R5)
RC10AE820K	Resistor, 82 ohms ¼ w. (R6)
RC30AE271K	Resistor, 270 ohms 1 w. (R7)
RC10AE102K	Resistor, 1000 ohms ¼ w. (R8) .....
RC10AE152M	Resistor, 1500 ohms ¼ w.. (R9) .....
RC10AE222K	Resistor, 2200 ohms ¼ w. (R10) .....
RC30AE332K	Resistor, 3300 ohms 1 w. (R11, 12) .....
RC10AE472K	Resistor, 4700 ohms ¼ w.(R13)
RC10AE153K	Resistor, 15,000 ohms ¼ w. (R14) .....
RC10AE223K	Resistor, 22,000 ohms ¼ w. (R15) .....
RC30AE562K	Resistor, 5600 ohms 1 w.(R16)
RC30AE333K	Resistor, 33,000 ohms 1 w. (R17, 18) .....
RC10AE473M	Resistor, 47,000 ohms ¼ w. (R19, 20) .....
RC10AE154M	Resistor, 150,000 ohms ¼ w. (R21) .....
RC10AE224M	Resistor, 220,000 ohms ¼ w. (R22) .....
RC10AE150M	Resistor, 15 ohms ¼ w. (R23)
RC10AE474M	Resistor, 470,000 ohms ¼ w. (R24, 25, 26, 27) .....
RC10AE105M	Resistor, 1.0 megohm ¼ w. (R28, 29) .....
RC10AE225M	Resistor, 2.2 megohms ¼ w. (R30, 31) .....
RC10AE335M	Resistor, 3.3 megohms ¼ w. (R32) .....
RC10AE106M	Resistor, 10.0 megohms ¼ w. (R33) .....
RC41AE123K	Resistor, 12,000 ohms, 2 w. (R34) .....
RC10AE330K	Resistor, 33 ohms ¼ w. (R38)
V-6126-1	Shockmount, tuner assembly
V-6127	Sleeve, dial drive .....
V-6300-1	Slide, mechanism (upper L.H.)
V-6300-2	Slide, mechanism (lower L.H.)
V-6300-3	Slide, mechanism (upper R.H.)
V-6300-4	Slide, mechanism (lower R.H.)
V-4195	Socket, molded octal tube (6V6, 5Y3) .....
V-5405	Socket, molded (phono AC)
V-5673	Socket, miniature wafer (unshielded) (6AV6) .....
V-6072-1	Socket, miniature wafer(12AT7)
V-6163-1	Socket, miniature wafer(6BE6)
V-6165-2	Socket, dial light, 7" leads
V-6295-1	Socket, miniature wafer (6BA6, 6AL5) .....
V-5571	Speaker, 10" P.M. .....
V-3248S	Spring, dial drive .....
V-6140	Switch, selector (V-6132-1 tuner assembly) Front wafer - SW2 Rear wafer - SW3 .....
V-6136	Terminal board, phono-ant. -GND .....
V-5798	Transformer, audio output
V-6128	Transformer, ratio detector (L5, 6, 7, C4, 5) .....
V-6129	Transformer, FM 2nd I-F (L3, 4, C3, 4) .....
V-6130	Transformer, AM 1st and 2nd I-F (L8, 9, 10, 11, C6, 7, 8, 9) .....
V-6131	Transformer, power .....
V-6142	Transformer, FM 1st I-F (L1, 2, C1, 2) .....
V-5421-5	Washer, felt (knobs) ....
R3CC30CK270K	Capacitor, 27 mmf (C13) ..
R3CC26CK330M	Capacitor, 33 mmf (C14, 15)
R3CC30SL101M	Capacitor, 100 mmf (C16)
R3CC30SL101J	Capacitor, 100 mmf (C17) .
R5CC21ZY471M	Capacitor, 470 mmf (C18, 19, 20) .....
RCM20A101M	Capacitor, 100 mmf (C21, 22)
RCM20A151M	Capacitor, 150 mmf (C23) .
RCM20A151J	Capacitor, 150 mmf (C24, 25)
RCM20A471M	Capacitor, 470 mmf (C26) .
RCM20A681M	Capacitor, 680 mmf (C27) .
RCP10W2203A	Capacitor, .02 mfd 200 v. (C28) .....
RCP10W2503A	Capacitor, .05 mfd 200 v. (C29) .....
RCP10W4103A	Capacitor, .01 mfd 200 v. (C30, 31, 32) .....
RCP10W4303A	Capacitor, .03 mfd 400 v. (C33) .....
RCP10W6202A	Capacitor, .002 mfd 600 v. (C34) .....
RCP10M6502A	Capacitor, .005 mfd 600 v. (C35) .....
V-5040-13	Capacitor, molded paper .01 mfd 200 v. (C36, 37) .....
V-5596	Capacitor, hi Kaps .005 mfd (C38, 39, 40, 41, 42, 43, 44 45, 46, 47, 48, 49, 63) ..
V-6137	Capacitor, variable (C50, 51, 52, 53, 54, 55, 56, 57)
V-6121	Capacitor, electrolytic 20 mfd 400 v. (C58) 20 mfd 400 v. (C59) 10 mfd 350 v. (C60) 20 mfd 25 v. (C61) .....
V-4885	Capacitor, electrolytic, 4 mfd 450 v. (C62) .....
V-5426	Clip, I-F mounting .....
V-6157	Coil, antenna loading (L12)
V-6164	Coil, AM oscillator (L13)
V-6138	Coil, FM oscillator (L14)
V-6139	Coil, FM antenna (L15) ...
V-6122	Control, volume, 0.5 megohm (R1); tone, 2.0 megohms (R2) and switch (SW1) .....
V-6314	Dial .....
V-6155	Fastener, control panel ..
V-4902	Glide, furniture .....
V-6310-1	Grille Cloth, speaker ....
V-4852	Grommet, chassis mounting
V-4644	Grommet, chassis mounting
V-6298-1	Hinge Assembly, L.H. .....
V-6298-2	Hinge Assembly, R.H. .....
V-6146-1	Knob, off-on, tone .....
V-6146-2	Knob, band .....
V-6147-1	Knob, volume .....
V-6147-2	Knob, tuning .....
No. 47	Lamp, pilot .....
V-6160	Molding, control panel ...
V-6154-2	Panel, control .....
V-6043-2	Panel Assembly, control ..
V-6125	Pointer .....
V-6299-1	Pull, door .....
V-3166S	Pulley, 7/16" diameter ...
V-4886-1	Reactor, R-F 14 microhenries (L16) .....
V-4886-2	Reactor, R-F 1.1 microhenries (L17, 18, 19) .....
V-4886-4	Reactor, R-F (L20) .....
V-4886-10	Reactor, R-F (L21) .....
V-4886-6	Reactor, R-F (L22, R36) ..
V-4886-7	Reactor, R-F (L23, R37) ..
V-6161	Reactor, filter choke (L24)
RC10AE680K	Resistor, 68 ohms ¼ w. (R3, 4) .....

©John F. Rider

Part No.	Description
V-5268	Background, dial .....
V-7895	Board, phono (H-214) ....
V-7896	Board, phono (H-214A) ...
V-1173-1	Cabinet (H-214) .....
V-1173-5	Cabinet (H-214A) .....
V-6340-1	Cable and plug, phono A-C
V-6320-1	Cable and socket, phono A-C .....
V-6418	Capacitor, variable, two gang (C7, 8, 9) .....
V-3423-1	Capacitor, antenna trimmer (C10) .....
V-3304	Capacitor, electrolytic, 30 mfd, 130 v., 50 mfd, 95 v. (C11, 12) .....
RCM20A680M	Capacitor, 68 mmfd mica (C13) .....
RCM20A301M	Capacitor, 300 mmfd mica (C14) .....
RCP10W6502A	Capacitor, .005 mfd 400 v. (C15) .....
RCP10W4103A	Capacitor, .01 mfd 400 v. (C16, 17, 18, 19, 20) ...
RCP10W4503A	Capacitor, .05 mfd 400 v. (C21, 22, 23, 24) .....
RCP10W4104A	Capacitor, 0.1 mfd 400 v. (C25, 26, 27) .....
RCP10W4153A	Capacitor, .015 mfd 400 v. (C28) .....
V-5618-1	Capacitor, .05 mfd 400 v. (C29) .....
V-6321-1	Capacitor, electrolytic, 8 mfd 150 v. (C30) .....
RCM20A221M	Capacitor, 220 mmfd mica (C31) .....
V-3382	Coil, oscillator (L5) ...
V-5585	Connector, phono pickup cable .....
V-6341	Connector, phono .....
V-6443	Control, volume, tone, and switch (R2, R3, SW1) ....
V-3219S-1	Cord, dial .....
V-4983	Dial .....
V-7897	Drawer .....
V-4902	Glide, furniture .....
V-6330-1	Grille cloth .....
V-4362-3	Knob Assembly, tone and switch .....

Part No.	Description
V-4362-6	Knob Assembly, radio-phono
V-5028-1	Knob, volume and tuning .
#47	Lamp, pilot .....
V-6338-1	Loop, antenna .....
V-5022	Nameplate, stations .....
V-5023	Nameplate, volume .....
V-5632-1	Nameplate .....
V-3712	Needle, phonograph .....
V-5033	Plate, front glass .....
V-4986	Pointer .....
V-6309-1	Pull, drawer .....
V-3166S	Pulley, 7/16" diameter...
V-3311	Resistor, ballast (R4) ..
RC20AE220M	Resistor, 22 ohms ½ w. (R5)
RC30AE910J	Resistor, 91 ohms 1 w. (R6)
RC40AE152M	Resistor, 1500 ohms 2 w. (R7) .....
RC10AE332M	Resistor, 3300 ohms ¼ w. (R8) .....
RC10AE223M	Resistor, 22 K ¼ w. (R9,10)
RC10AE823K	Resistor, 82 K ¼ w. (R11)
RC20AE184K	Resistor, 180 K ½ w. (R12)
RC20AE224K	Resistor, 220 K ½ w. (R13)
RC10AE224M	Resistor, 220 K ¼ w. (R14)
RC10AE274K	Resistor, 270 K ¼ w. (R15)
RC10AE334K	Resistor, 330K ¼ w. (R16)
RC10AE225M	Resistor, 2.2 megohms ¼ w. (R17) .....
RC10AE106M	Resistor, 10 megohms ¼ w. (R18) .....
RC10AE474M	Resistor, 470 K ¼ w. (R19)
RC20AE103M	Resistor, 10 K ½ w. (R20)
RC20AE333M	Resistor, 33 K ½ w. (R21)
V-6323-1	Sleeve, dial drive .....
V-3353-3	Slide mechanism (L.H.) ..
V-3353-4	Slide mechanism (R.H.) ..
V-6325-1	Spacer, radio-phono switch mounting .....
V-6336	Speaker, 6½" P.M. .....
V-3258S	Spring, knob (tone and switch, radio-phono) ....
V-3248S	Spring, dial drive .....
V-6326-1	Switch, selector .....
V-3328	Transformer, 1st I-F (C1, C2, L1, L2) .....
V-3329	Transformer, 2nd I-F (C3, C4, C5, C6, L3, L4, R1) .
V-3297	Transformer, output .....



SPECIFICATIONS

FREQUENCY RANGE ..... 540 to 1600 kc.

INTERMEDIATE FREQUENCY ..... 455 kc.

TUBE COMPLEMENT:

1 6SA7 ..... Converter
1 6SF7 ..... I-F Amp., Det. and AVC
1 6SC7 ..... Audio Amp. and Phase Inverter
2 25L6GT ..... Power Output Amp.
1 25Z6GT ..... Rectifier

PILOT LAMP ..... Westinghouse No. 47, 6.3 v., 0.15 amp.

POWER OUTPUT:

Undistorted ..... 2.3 watts
Maximum ..... 3 watts

LOUDSPEAKER ..... 6½" PM

OPERATING VOLTAGE ..... 105 to 120 volts, 60 cycles A-C

POWER CONSUMPTION ..... 80 watts

MODELS H-214, H-214A,
Ch. V-2103-3

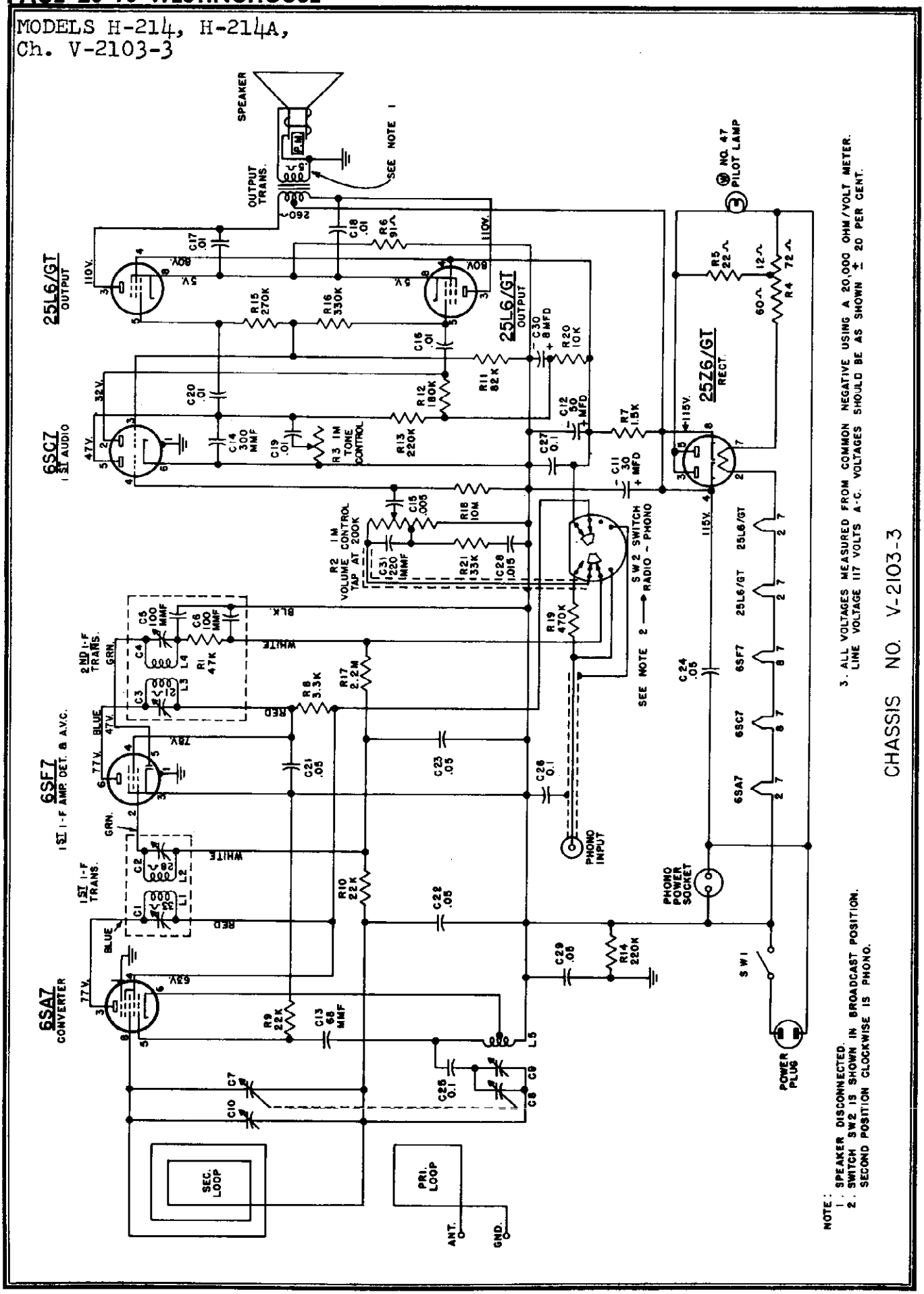

©John F. Rider

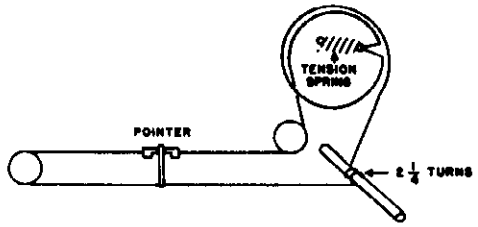

FIG. 2 — DIAL DRIVE

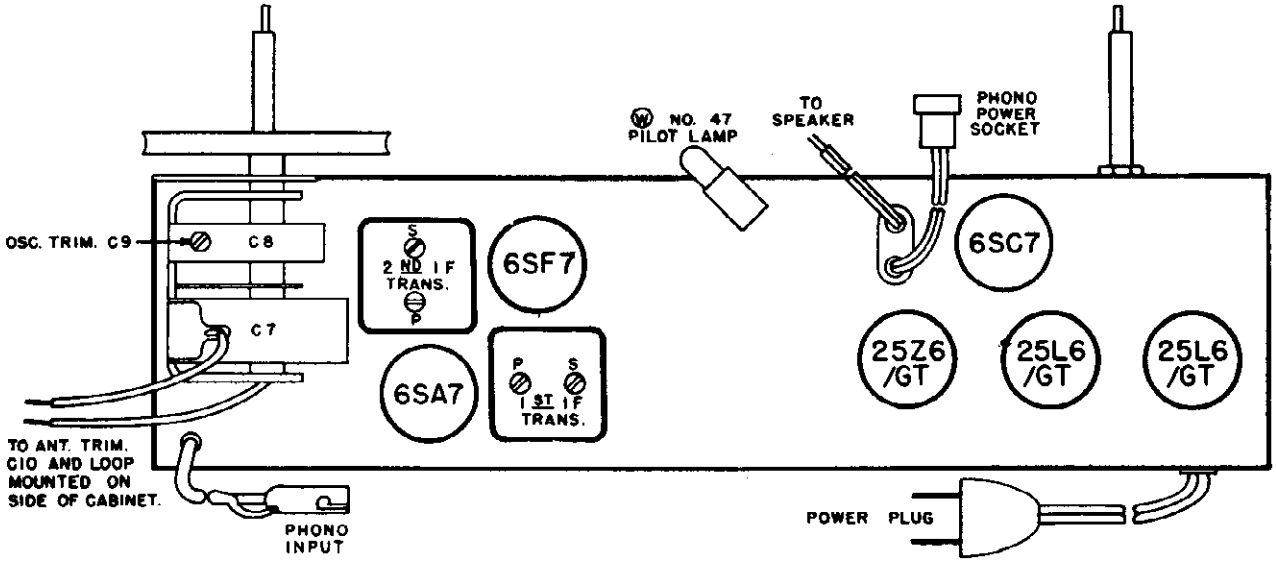

FIG. 3 — CHASSIS LAYOUT

ALIGNMENT PROCEDURE

The use of an isolation transformer in the power line is recommended.

Connect an output meter across the speaker voice coil.

While making the following adjustments, keep the volume control set for maximum output and the signal generator output attenuated to avoid A.V.C. action.

Step	Connect Signal Generator to —	Signal Generator Frequency	Radio Dial Setting	Adjust
1	Pin No. 2 of 6SF7 tube through a 200 mmf capacitor	455 kc	540 kc	Secondary and primary of 2nd I-F transformer for maximum output
2	Stator of tuning capacitor (C7) through a 200 mmf capacitor	455 kc	540 kc	Secondary and primary of 1st I-F transformer for maximum output
3	Recheck 1st and 2nd I-F transformers.			
4	Antenna terminal through a 200 mmf capacitor	1615 kc	1615 kc	Oscillator trimmer (C9) for maximum output
5	Radiated signal (no actual connection)	1400 kc	1400 kc	Antenna trimmer (C10) for maximum output

©John F. Rider

©John F. Rider

SPECIFICATIONS

H-303P4 LUGGAGE TAN

H-304P4 BLONDE

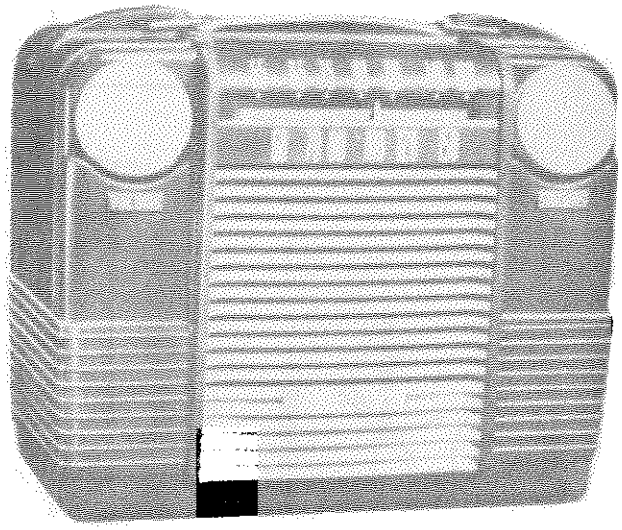

FREQUENCY RANGE: ..... 540 to 1615 kc.

INTERMEDIATE FREQUENCY: ..... 455 kc.

TUBE COMPLEMENT:

1 1R5 ..... Converter
1 1U4 ..... I-F Amp.
1 1U5 .... Det., AVC and 1st A-F Amp.
1 3V4 ..... Power Output Amp.

POWER OUTPUT:

Maximum ..... 0.23 watt
Undistorted ..... 0.12 watt

LOUDSPEAKER: ..... 4" P.M.

POWER SUPPLY:

Battery Operation:

1 Westinghouse V-9292 "A" battery (4.5 v.)
1 Westinghouse V-9293 "B" battery (90 v.)

Line Operation:

105 to 120 volts, 50 - 60 cycles A-C, or D-C

CURRENT CONSUMPTION (Battery Operation):

"A" Battery ..... 0.1 amp.
"B" Battery ..... 0.014 amp.

POWER CONSUMPTION (Line Operation): 15 watts

ALIGNMENT

It is recommended that the chassis be isolated from the power line by means of an isolation transformer.

While making the following adjustments, keep the volume control set for maximum output and the signal generator output attenuated to avoid AVC action.

Step	Connect Signal Generator to —	Signal Generator Frequency	Radio Dial	Adjust for Maximum Output —
1.	Stator of R-F tuning capacitor (C5) through a 200 mmf capacitor	455 kc.	minimum capacity	Top and bottom slugs in 2nd and 1st I-F trans. in order given*
2.	Same as step 1	1615 kc.	minimum capacity	Osc. trimmer (C8)
3.	Radiated signal	1400 kc.	1400 kc.	R-F trimmer (C6)

**It is recommended that a fiber aligning tool that snugly fits the slot in the powdered iron core be used to prevent chipping of the slot.*

BATTERY PLACEMENT NOTE: The batteries should be inserted in the relative positions shown in Fig. 2 with the connector end of the "B" battery facing the front of the receiver and the connector end of the "A" battery facing the side of the "B" battery.

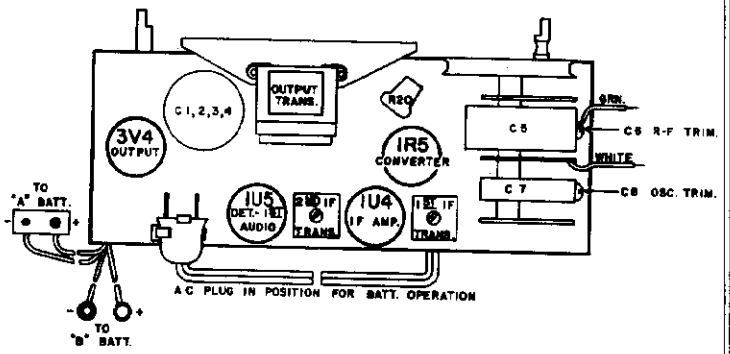

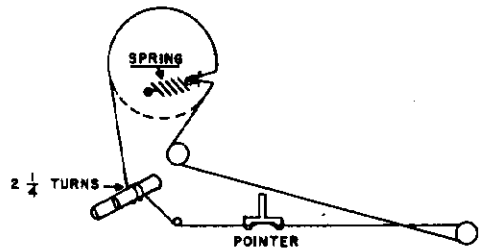

FIG. 3 — DIAL DRIVE

MODELS H-303P4,
H-304P4, Ch. V-2153

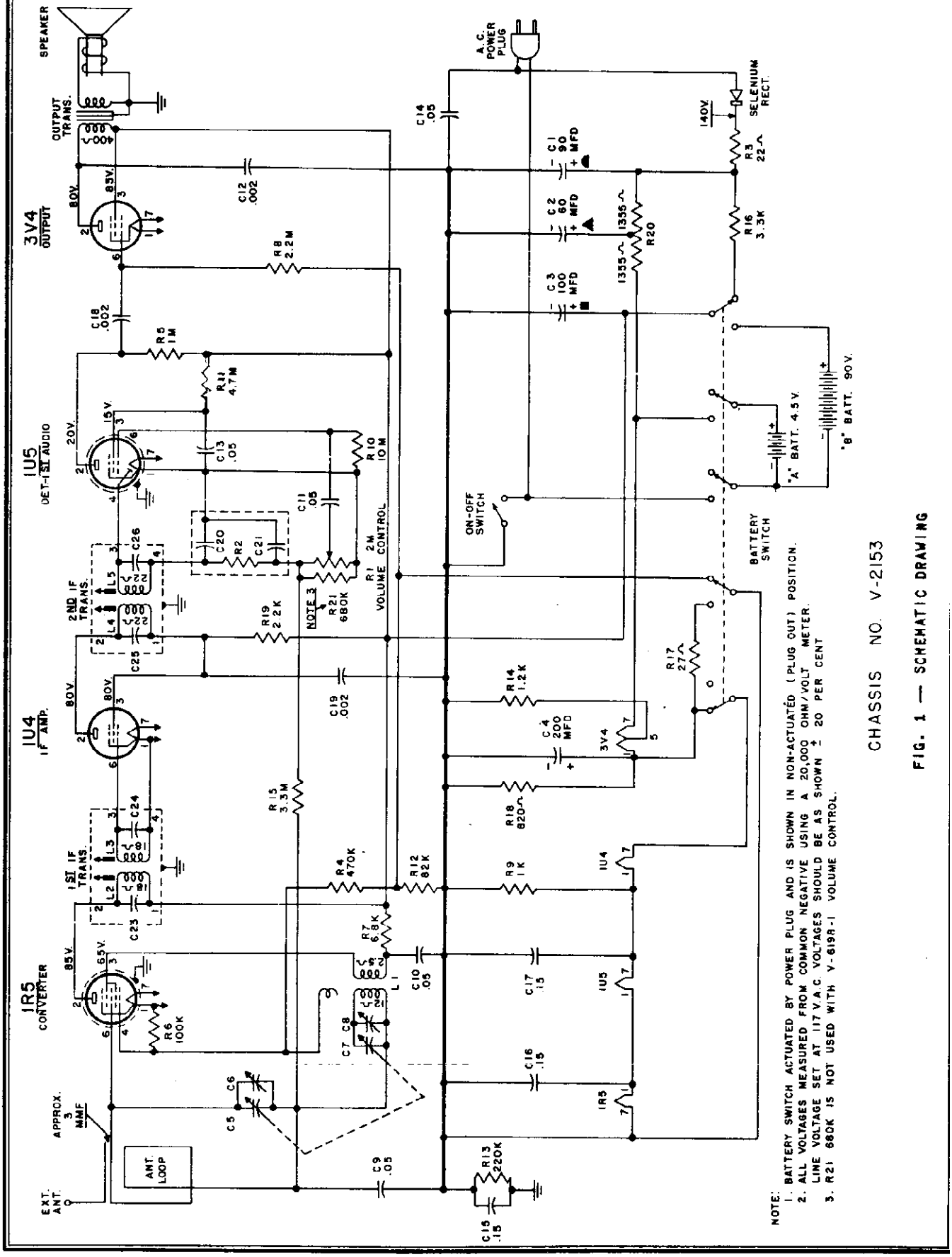

NOTE:
1. BATTERY SWITCH ACTUATED BY POWER PLUG AND IS SHOWN IN NON-ACTUATED (PLUG OUT) POSITION.
2. ALL VOLTAGES MEASURED FROM COMMON NEGATIVE USING A 20,000 OHM/VOLT METER. LINE VOLTAGE SET AT 117 V.A.C. VOLTAGES SHOULD BE AS SHOWN ± 20 PER CENT
3. R21 68OK IS NOT USED WITH V-6198-1 VOLUME CONTROL.

CHASSIS NO. V-2153

FIG. 1 — SCHEMATIC DRAWING

©John F. Rider

MODELS H-303P4,
H-304P4, Ch. V-2153

PARTS LIST

CABINET AND ACCESSORIES

Part No.	Description
V-5675-2	Baffle and grille cloth assembly
V-9292	Battery "A"
V-9293	Battery "B"
V-4836-8	Button, trimmer adj. hole (tan)
V-4836-9	Button, trimmer adj. hole (blonde)
V-1157-6	Cabinet (tan)
V-1157-7	Cabinet (blonde)
V-5684	Clip, tubular (back cover catch)
V-5678-2	Handle
V-5698-1	Knob
V-9405	Loop, antenna
V-5764	Shelf, battery support
V-5687	Spring, back cover hinge
V-4651	Stud, baffle and grille cloth mounting

V-2153 CHASSIS

V-5652	Background, dial
V-4169-1	Base (1R5, 1U5)
V-9415	Cable assembly, battery
V-9416	Capacitor, electrolytic , 90, 60 and 100 mfd at 150 v, 200 mfd 25 v. (C1, 2, 3, 4)
V-5651	Capacitor, variable (C5, 6, 7, 8)
RCP10W2503M	Capacitor, .05 mfd 200 v. (C9, 10, 11)
V-6066-4202M	Capacitor, .002 mfd 400 v. (C12)
V-6066-2503M	Capacitor, .05 mfd 200 v. (C13)
V-6066-4503M	Capacitor, .05 mfd 400 v. (C14)
RCP10W2154M	Capacitor, .15 mfd 200 v. (C15, 16, 17)
RCP10W4202M	Capacitor, .002 mfd 400 v. (C18)
RCP10W6202M	Capacitor, .002 mfd 600 v. (C19)
V-5426	Clip, I-F mounting
V-5661	Coil, oscillator (L1)
V-6198-1	Control, volume on-off (R1 - 2 megohms)
V-4349-8	Cord, A-C
V-3219S-1	Cord, dial drive
V-6232-2	Filter, diode (R2, C20, 21)
V-5398-1	Pulley
V-9446-1	Rectifier, selenium
RC30AE220M	Resistor, 22 ohms 1 w. (R3)
RC20AE474M	Resistor, 470,000 ohms ½ w. (R4)
RC20AE105M	Resistor, 1 megohm ½ w. (R5)
RC20AE104M	Resistor, 100,000 ohms ½ w. (R6)
RC20AE682M	Resistor, 6800 ohms ½ w. (R7)
RC20AE225M	Resistor, 2.2 megohms ½ w. (R8)
RC20AE102M	Resistor, 1000 ohms ½ w. (R9)
RC20AE106M	Resistor, 10 megohms ½ w. (R10)
RC20AE475M	Resistor, 4.7 megohms ½ w. (R11)
RC20AE823K	Resistor, 82,000 ohms ½ w. (R12)
RC20AE224M	Resistor, 220,000 ohms ½ w. (R13)
RC20AE122K	Resistor, 1200 ohms ½ w. (R14)
RC20AE335M	Resistor, 3.3 megohms ½ w. (R15)
RC20AE332K	Resistor, 3300 ohms ½ w. (R16)
RC20AE270K	Resistor, 27 ohms ½ w. (R17)
RC20AE821K	Resistor, 820 ohms ½ w. (R18)
RC20AE222M	Resistor, 2200 ohms ½ w. (R19)
V-9125-2	Resistor, filament dropping (R20)
RC20AE684M	Resistor, 680,000 ohms ½ w. (R21)
V-6191-1	Shaft, tuning
V-4169-2	Shield, tube (1R5, 1U5)
V-4292S-1	Socket, miniature molded
V-6295-3	Socket, miniature wafer
V-9419	Speaker, 4" P.M.
V-4057	Spring, dial drive
V-9420	Switch, line-battery
V-6972-3	Transformer, 1st I-F (L2, 3, C23, 24)
V-6972-4	Transformer, 2nd I-F (L4, 5, C25, 26)

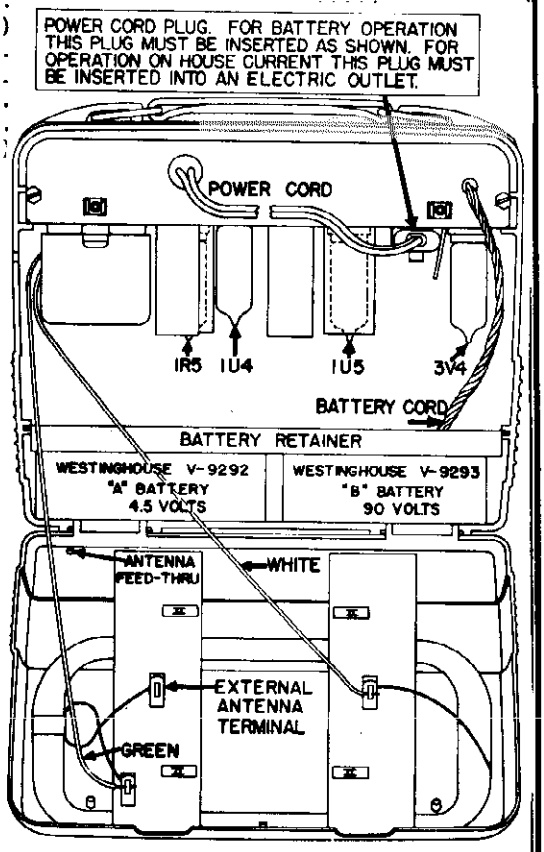

FIG. 2 — REAR VIEW WITH COVER OPEN

MODELS H-300T5,
H-301T5; Ch. V-214



H-300T5 AND H-301T5

(BROWN) (IVORY)

SERVICE NOTES

SPECIFICATIONS

FREQUENCY RANGE: ..... 540 to 1615 kc.

INTERMEDIATE FREQUENCY: ..... 455 kc.

TUBE COMPLEMENT:

1	12BE6	.....	Converter
1	12BA6	.....	I-F Amp.
1	12AT6	.....	Det., AVC, and 1st A-F Amp.
1	50C5	.....	Output Amp.
1	35W4	.....	Rectifier

PILOT LAMP: ..... Westinghouse No. 47

POWER OUTPUT:

Undistorted	.....	1.0 watt
Maximum	.....	1.9 watts

LOUDSPEAKER: ..... 5" P.M.

OPERATING VOLTAGE: ..... 105 to 120 volts 50 - 60 cycles A-C or D-C

POWER CONSUMPTION: ..... 35 watts

©John F. Rider

MODELS H-300T5,
H-301T5; Ch. V-2148

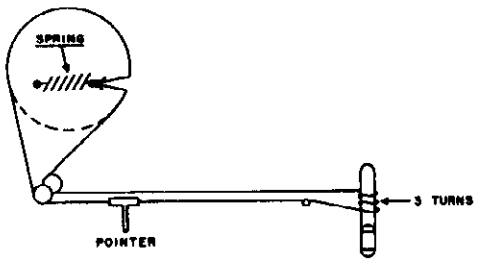

FIG. 1 — DIAL DRIVE

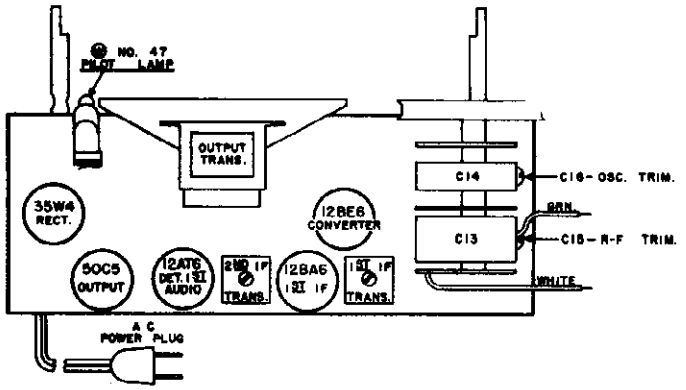

FIG. 2 — CHASSIS LAYOUT

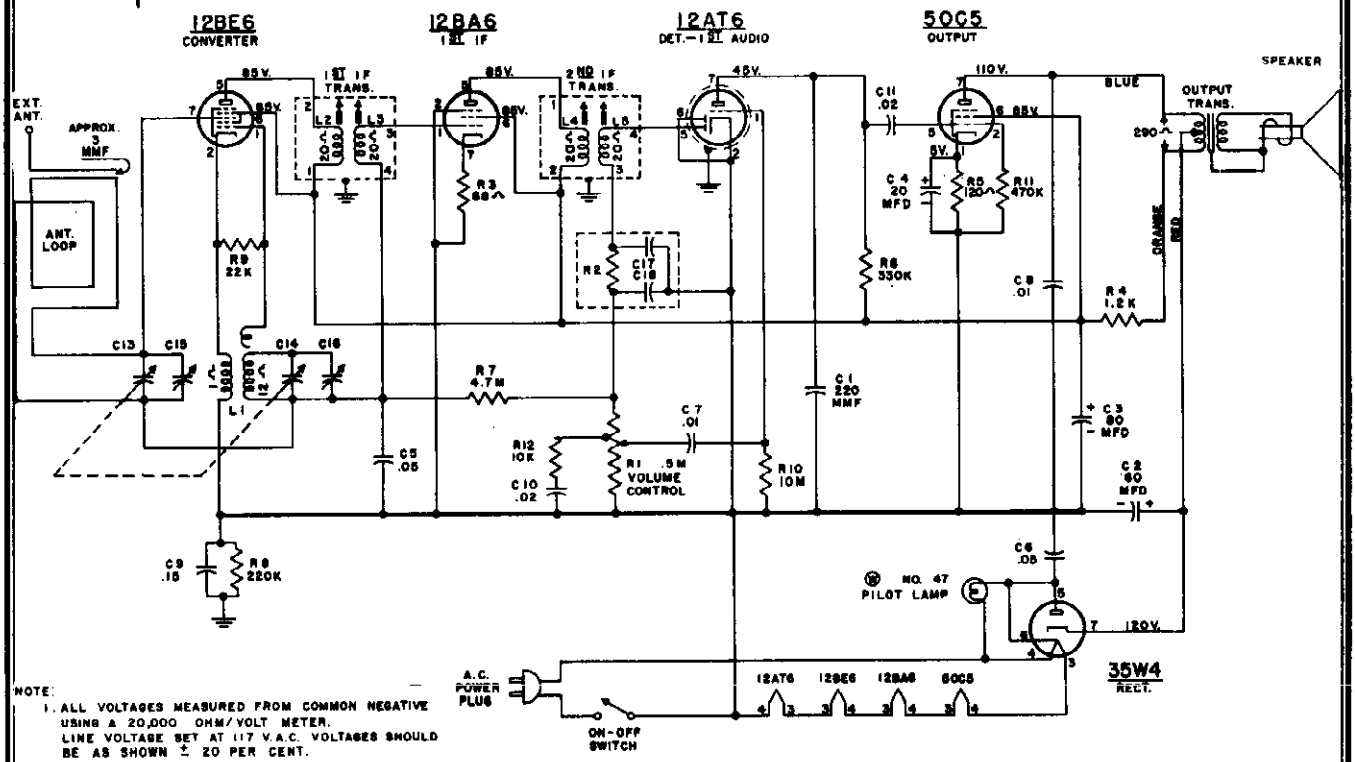

CHASSIS NO. V-2148

FIG. 3 — SCHEMATIC DIAGRAM

MODELS H-300T5,
H-301T5; Ch. V-2148

ALIGNMENT

It is recommended that the chassis be isolated from the power line by means of an isolation transformer.

Make certain that the dial pointer is correctly positioned with respect to the dial scale.

While making the following adjustments, keep the volume control set for maximum output and the signal generator output attenuated to avoid AVC action.

Step	Connect Signal Generator to —	Signal Generator Frequency	Radio Dial	Adjust for Maximum Output —
1.	Stator of R-F tuning capacitor (C13) through a 200 mmf capacitor	455 kc.	minimum capacity	Top and bottom slugs in 2nd and 1st I-F trans. in order given *
2.	Same as step 1	1615 kc.	minimum capacity	Osc. trimmer (C16)
3.	Radiated Signal	1400 kc.	1400 kc.	R-F trimmer (C15)

** It is recommended that a fiber aligning tool that snugly fits the slot in the powdered iron core be used to prevent chipping of the slot.*

H-300T5 AND H-301T5 PARTS LIST

When ordering parts, specify model number of set in addition to part number and description of part.

CABINET AND MISCELLANEOUS

Part No.	*Description*
V-6697-1	Baffle and grille cloth assembly
V-1181-5	Cabinet (Brown)
V-1181-6	Cabinet (Ivory)
V-6700-8	Knob, tuning, volume, on-off (Brown)
V-6700-9	Knob, tuning, volume, on-off (Ivory)
V-9397-2	Shield, mounting plate
V-4491-9	Strip, dial
V-3752S	Washer, felt (knobs)

V-2148 CHASSIS

R5CC20ZY221M	Capacitor, 220 mmf (C1)
V-9413-1	Capacitor, electrolytic, 60, 80 mfd 150 v., 20 mfd 25 v. (C2, 3, 4)
RCP10W4503M	Capacitor, .05 mfd 400 v. (C5, 6)
RCP10W4103M	Capacitor, .01 mfd 400 v. (C7, 8)
RCP10W2154M	Capacitor, .15 mfd 200 v. (C9)
RCP10W4203M	Capacitor, .02 mfd 400 v. (C10, 11)
V-9406	Capacitor, variable (C13, 14, 15, 16)
V-9450	Coil, oscillator (L1)
V-3219S-1	Cord, dial
V-6198-3	Control, volume, on-off (R1)
V-9412-1	Dial, background assembly
V-9407	Dial, glass
V-6232-2	Filter, diode (R2, C17, 18)
W #47	Lamp, pilot
V-9408-1	Loop, antenna
V-6690	Pointer
RC20AE680K	Resistor, 68 ohms ½ w. (R3)
RC30AE122K	Resistor, 1200 ohms ½ w. (R4)
RC20AE121M	Resistor, 120 ohms ½ w. (R5)
RC20AE334M	Resistor, 330,000 ohms ½ w. (R6)
RC20AE475M	Resistor, 4.7 megohms ½ w. (R7)
RC20AE224M	Resistor, 220,000 ohms ½ w. (R8)
RC20AE223M	Resistor, 22,000 ohms ½ w. (R9)
RC20AE106M	Resistor, 10 megohms ½ w. (R10)
RC20AE474M	Resistor, 470,000 ohms ½ w. (R11)
RC20AE103M	Resistor, 10,000 ohms ½ w. (R12)
V-6191-4	Shaft, tuning
V-4169-2	Shield, tube
V-4292S-1	Socket, miniature molded (12AT6)
V-5673	Socket, miniature wafer, unshielded (35W4, 50C5)
V-5852-1	Socket, miniature wafer (12BA6, 12BE6)
V-9122-1	Socket, pilot lamp
V-9410	Speaker, 5" P.M.
V-6199-2	Transformer, 1st and 2nd I-F (L2, 3, 4, 5)

©John F. Rider

MODEL H-302P5,
Ch. V-2151-1

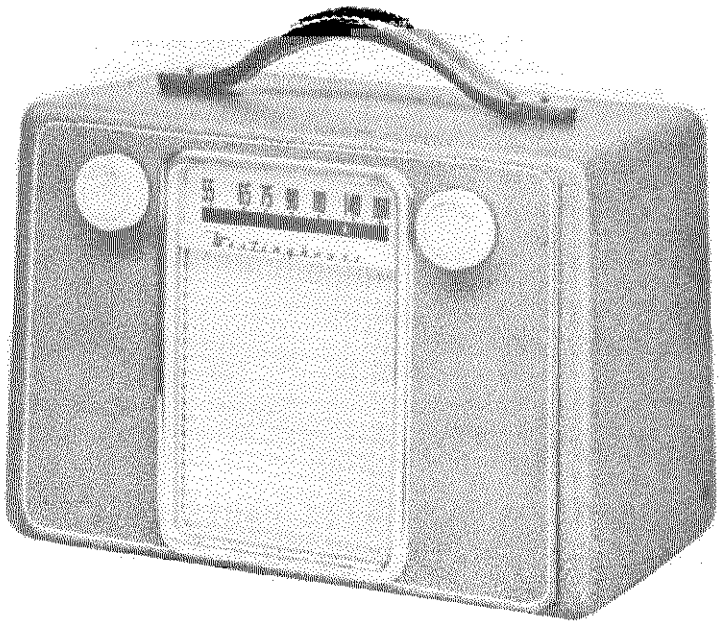

SPECIFICATIONS

FREQUENCY RANGE .....540 to 1615 kc.
INTERMEDIATE FREQUENCY .....455 kc.
TUBE COMPLEMENT:
1 1U4 .....R-F Amplifier
1 1R5 .....Converter
1 1U4 .....1-F Amplifier
1 1U5 .....Det., AVC, and 1st A-F Amp.
1 3V4 .....Output Amplifier
POWER OUTPUT:
Maximum .....0.38 watt
Undistorted .....0.18 watt

LOUDSPEAKER .....5" PM
POWER SUPPLY:
Battery Operation .....1 Westinghouse V-9291 "AB" Battery (9 v. "A" and 90 v. "B")
Line Operation .....105 to 120 volts, D-C or 50 to 60 cycles A-C
CURRENT CONSUMPTION (Battery Operation):
"A" section of "AB" battery .....05 amp.
"B" section of "AB" battery .....016 amp.
POWER CONSUMPTION (Line Operation)....15 watts

ALIGNMENT

It is recommended that the chassis be isolated from the power line by means of an isolation transformer.

While making the following adjustments, keep the volume control set for maximum output and the signal generator output attenuated to avoid AVC action.

Step	Connect Signal Generator to—	Signal Generator Frequency	Radio Dial Setting	Adjust for Maximum Output—
1	Pin No. 6 of the 1R5 converter through a 200 mmf capacitor	455 kc.	Minimum capacity	Top and bottom slugs in 2nd and 1st 1-F trans. in order given *
2	Stator of antenna tuning section of gang (C10) through a 200 mmf capacitor	1615 kc.	Minimum capacity	Osc. trimmer (C9)
3	Same as step 2	1400 kc.	1400 kc.	R-F trimmer (C7)
4	Same as step 2	600 kc.	600 kc.	Slug of R-F coil (L2) **
5	Recheck steps 3 and 4			
6	Radiated signal	1400 kc.	1400 kc.	Antenna trimmer (C32)

* It is recommended that a fiber aligning tool that snugly fits the slot in the powdered iron core be used to prevent chipping of the slot.

** A 10/32" Allen wrench can be used to adjust the slug in L2.

©John F. Rider

MODEL H-302P5,
Ch. V-2151-1

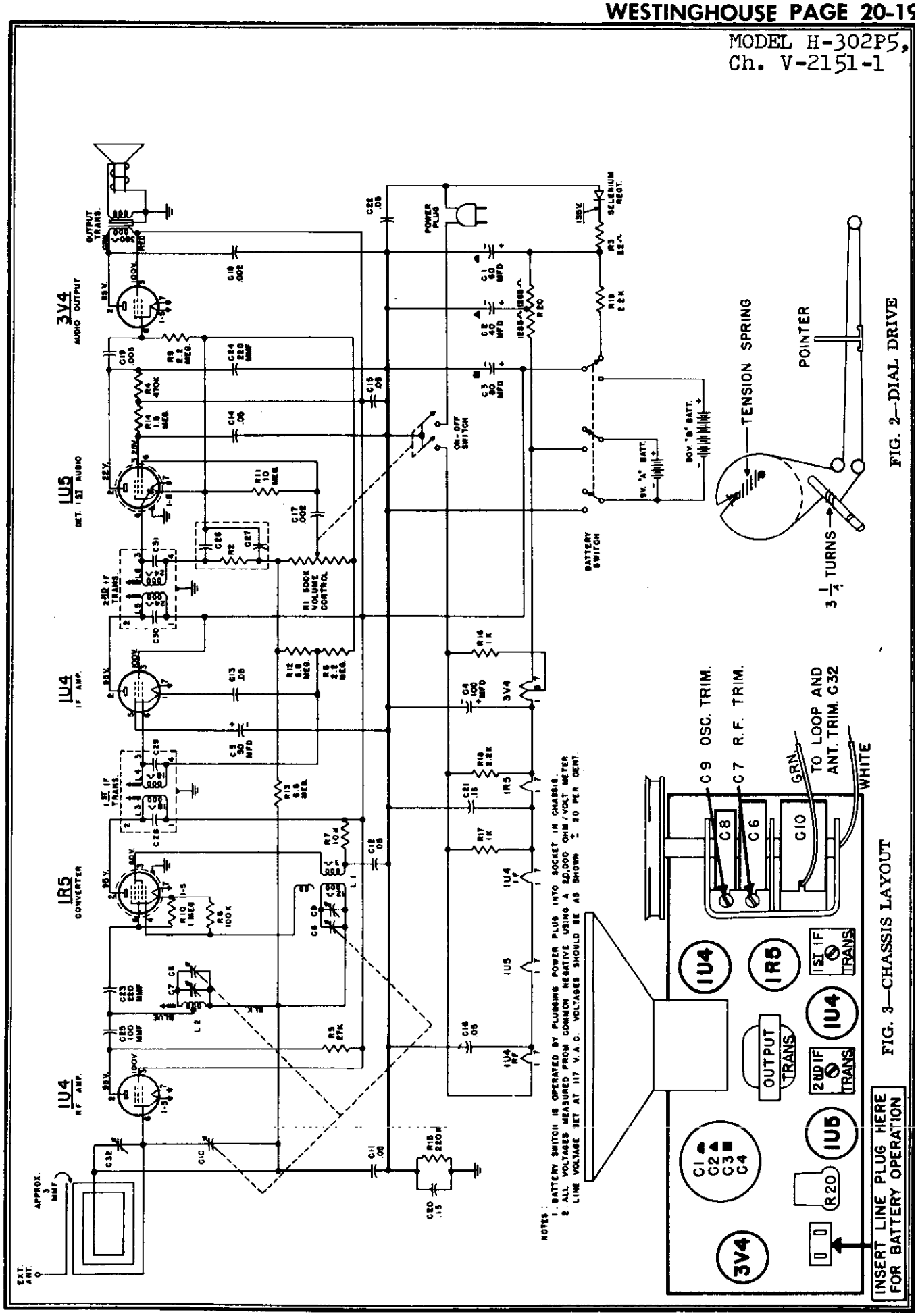

FIG. 2—DIAL DRIVE

FIG. 3—CHASSIS LAYOUT

©John F. Rider

MODEL H-302P5,
Ch. V-2151-1

PARTS LIST FOR MODEL H-302P5

When ordering parts, specify model number of set in addition to part number and description of part.

CABINET AND ACCESSORIES

Part No.	Description
V-9387-1	Baffle and grille cloth assembly
V-9291	Battery pack, "A-B" Portable
V-6945	Bracket (on chassis for mtg.)
V-6946	Bracket (on cabinet for mtg. chassis)
V-4836-2	Button, plug
V-1195-1	Cabinet (tan)
V-6947-1	Catch, friction (back cover)
V-9390	Dial
V-9388	Escutcheon
V-6432-2	Fleet, cabinet
V-9389	Handle
V-5630-2	Hinge
V-9391-1	Knob, volume
V-9391-2	Knob, tuning
V-9401	Loop, antenna (with trimmer capacitor C32)
V-6569-1	Strike, back cover
V-4491-9	Strip, dial
V-6949	Stud, handle
V-3668S	Washer, felt (knobs)

V-2151-1 CHASSIS

Part No.	Description
V-4169-1	Base, Miniature tube shield 1U5, 1R5
V-6554-1	Cable assembly, battery
V-6552	Capacitor, electrolytic 60, 40, 80 mfd at 150 v., 100 mfd at 25 v. (C1, C2, C3, C4)
V-4636	Capacitor, electrolytic, 50 mfd 25 v. (C5)
V-6556	Capacitor, variable (C6, C7, C8, C9, C10)
V-6066-2503M	Capacitor, .05 mfd 200 v. (C11, 12, 13, 14, 15, 16)
V-6066-4204M	Capacitor, .002 mfd 400 v. (C17, 18)
V-6066-4502M	Capacitor, .005 mfd 400 v. (C19)
V-6066-2154M	Capacitor, .15 mfd 200 v. (C20, 21)
V-6066-4503M	Capacitor, .05 mfd 400 v. (C22)
RCM20A221M	Capacitor, 220 mmf (C23, 24)
RCM20A101M	Capacitor, 100 mmf (C25)
V-5426	Clip, I-F mounting
V-5661	Coil, oscillator (L1)
V-5666-3	Control, volume, on-off, 500,000 ohms (R1)
V-4349-6	Cord, power A-C
V-3219S-1	Cord, dial drive
V-6232-2	Filter, diode (R2, C26, 27)
V-6568	Pointer
V-5398-1	Pulley
V-6558-1	Rectifier, selenium
RC30AE220M	Resistor, 220 ohms 1 w. (R3)
RC20AE474M	Resistor, 470,000 ohms ½ w. (R4)
RC20AE273M	Resistor, 27,000 ohms ½ w. (R5)
RC20AE104M	Resistor, 100,000 ohms ½ w. (R6)
RC20AE103M	Resistor, 10,000 ohms ½ w. (R7)
RC20AE225M	Resistor, 2.2 megohms ½ w. (R8, 9)
RC20AE105M	Resistor, 1 megohm ½ w. (R10)
RC20AE106M	Resistor, 10 megohm ½ w. (R11)
RC20AE685M	Resistor, 6.8 megohms ½ w. (R12, 13)
RC20AE155M	Resistor, 1.5 megohms ½ w. (R14)
RC20AE224M	Resistor, 220,000 ohms ½ w. (R15)
RC20AE102K	Resistor, 1000 ohms ½ w. (R16, 17)
RC20AE222K	Resistor, 2200 ohms ½ w. (R18)
RC30AE222K	Resistor, 2200 ohms ½ w. (R19)
V-9125	Resistor, ballas, 2570 ohms (R20)
V-9015-1	Shaft, tuning
V-4169-2	Shield, miniature tube, 1U5, 1R5
V-6295-3	Socket, miniature wafer, 1U4
V-4292S-1	Socket, miniature molded 3V4, 1U4, 1R5, 1U5
V-6555	Speaker, 5" P.M.
V-4057	Spring, dial cord
V-6565	Switch, line-battery
V-6561	Transformer, R-F (L2)
V-6972-3	Transformer, I-F slug tuned (L3, 4, C28, 29)
V-6972-4	Transformer, I-F slug tuned (L5, 6, C30, 31)
V-6567	Transformer, output

©John F. Rider

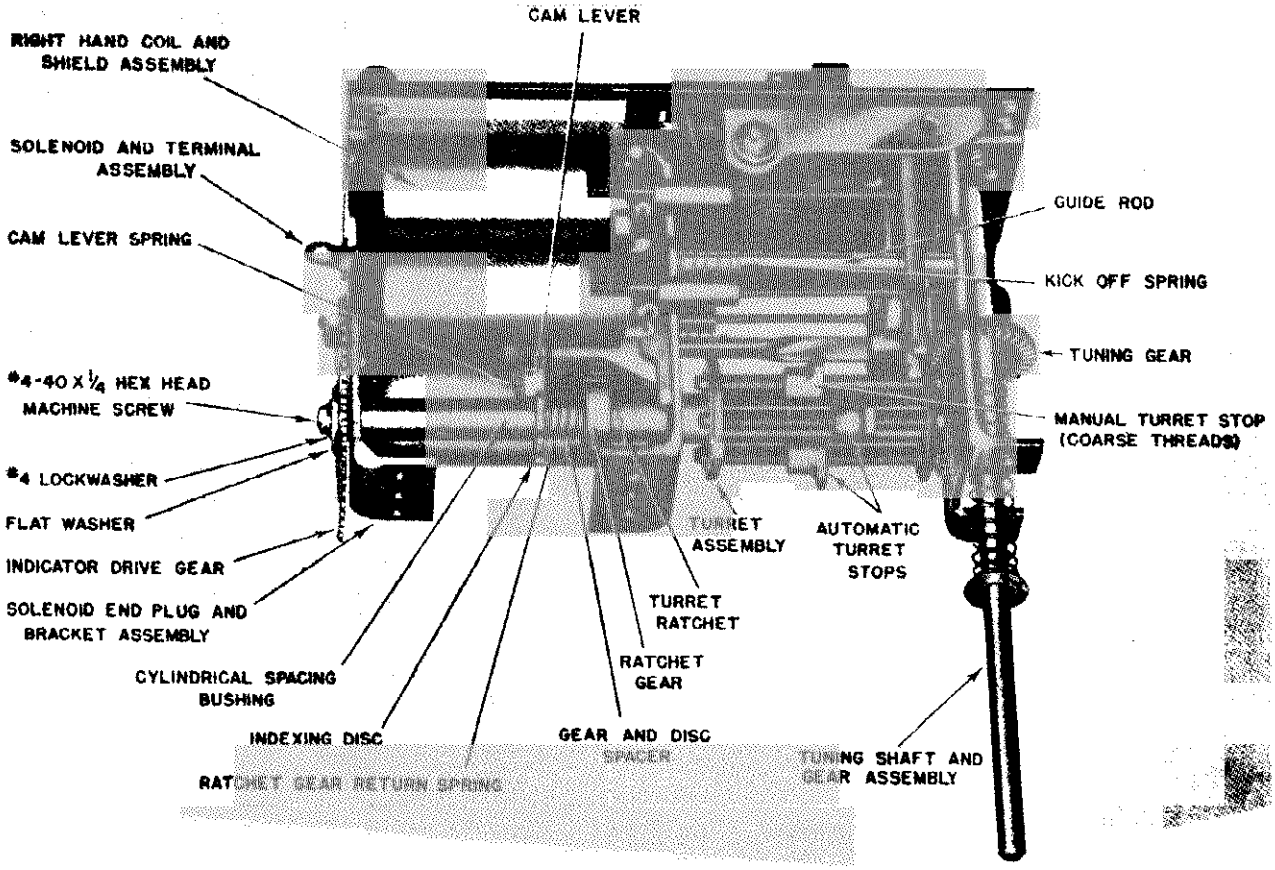

FIG. 1

OPERATING PRINCIPLE

When the station selector push button or foot switch is depressed all the way, the solenoid (Fig. 1) is energized by current from the car battery. The cross arm assembly is pulled from the right or resting position from any one of the six turret stops on the turret assembly to the left or closed position. As this assembly approaches the closed position, the ratchet cam shaft (Fig. 2) turns the ratchet drive gear clockwise. The ratchet drive gear turns the ratchet gear counter clockwise 60° or until it engages the ratchet teeth on the turret shaft. The detent lever (inset Fig. 2) prevents the turret assembly from turning counter clockwise during this operation. At the same time a cam on the hub of the ratchet drive gear lifts the cam lever from its locking position in the indexing disc (inset Fig. 2). This will allow the turret assembly (Fig. 2) to be turned clockwise. The tuning unit will remain in the closed position until the push button or foot switch is released.

When the push button or foot switch is released the cross arm return spring pulls the cross arm assembly back to the resting position. As this assembly starts the return stroke to the resting position, the ratchet camshaft turns the ratchet drive gear counter clockwise. The ratchet drive gear turns the ratchet gear clockwise 60°. As the ratchet gear turns it rotates the turret assembly clockwise 60°. When the turret assembly has been turned 60°, the cam lever is pulled into locking position in the indexing disc, preventing the turret assembly from moving farther.

There are six turret stops, one for each of the five automatic tuning positions, which may be adjusted to five desired stations, and one to be used for tuning the radio manually. For information concerning setting up the five automatic tuning positions refer to Owner's Manual or the Service Manual for the radio in question.

©John F. Rider

TUNER

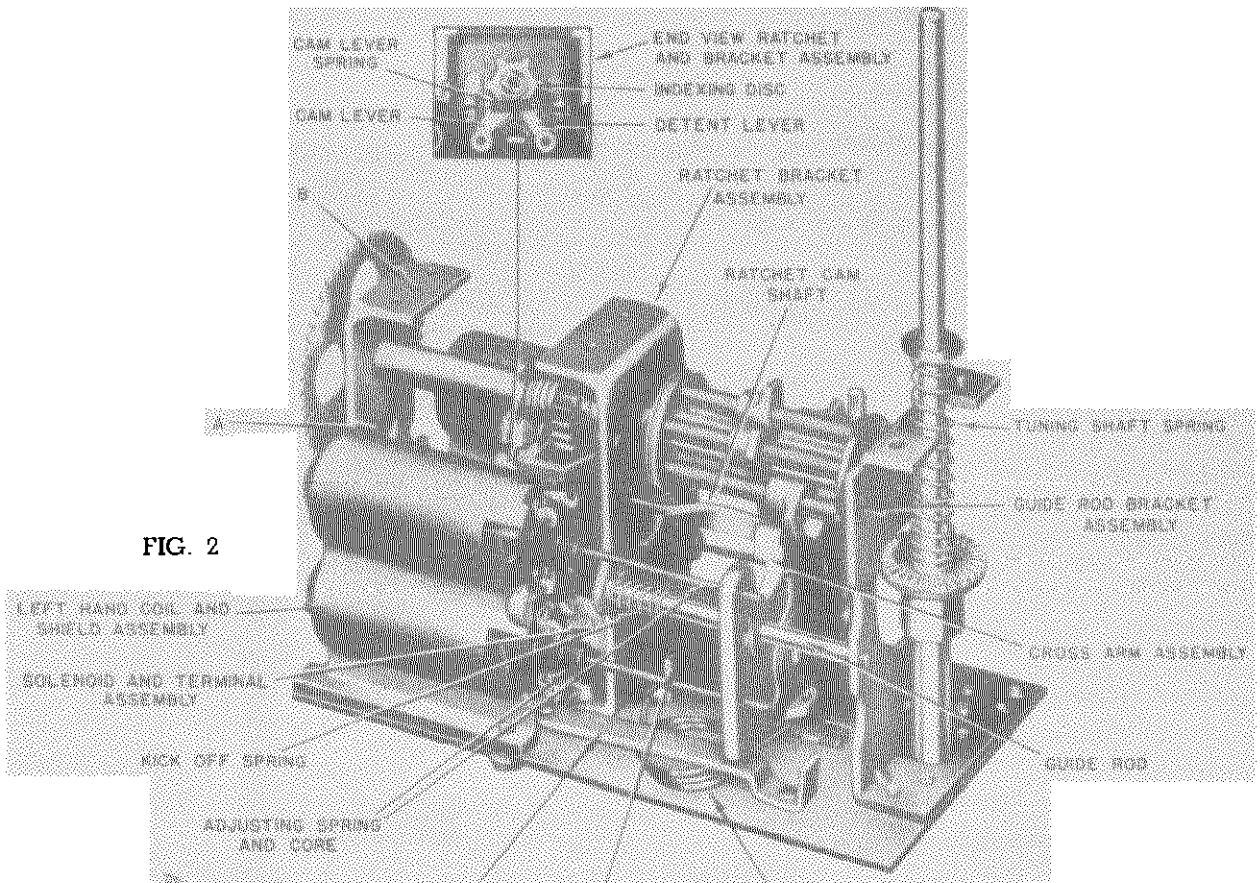

FIG. 2

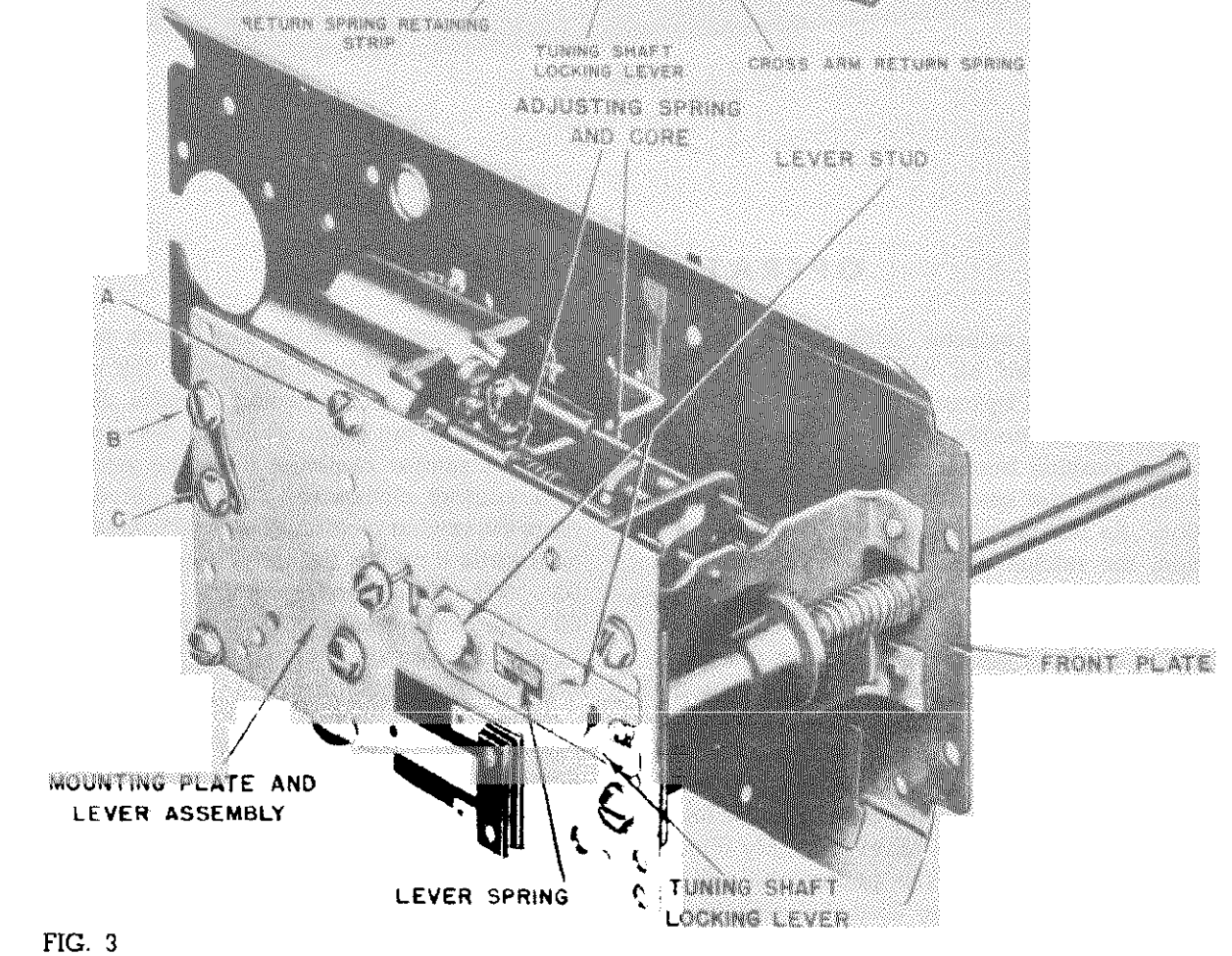

FIG. 3

© John F. Rider

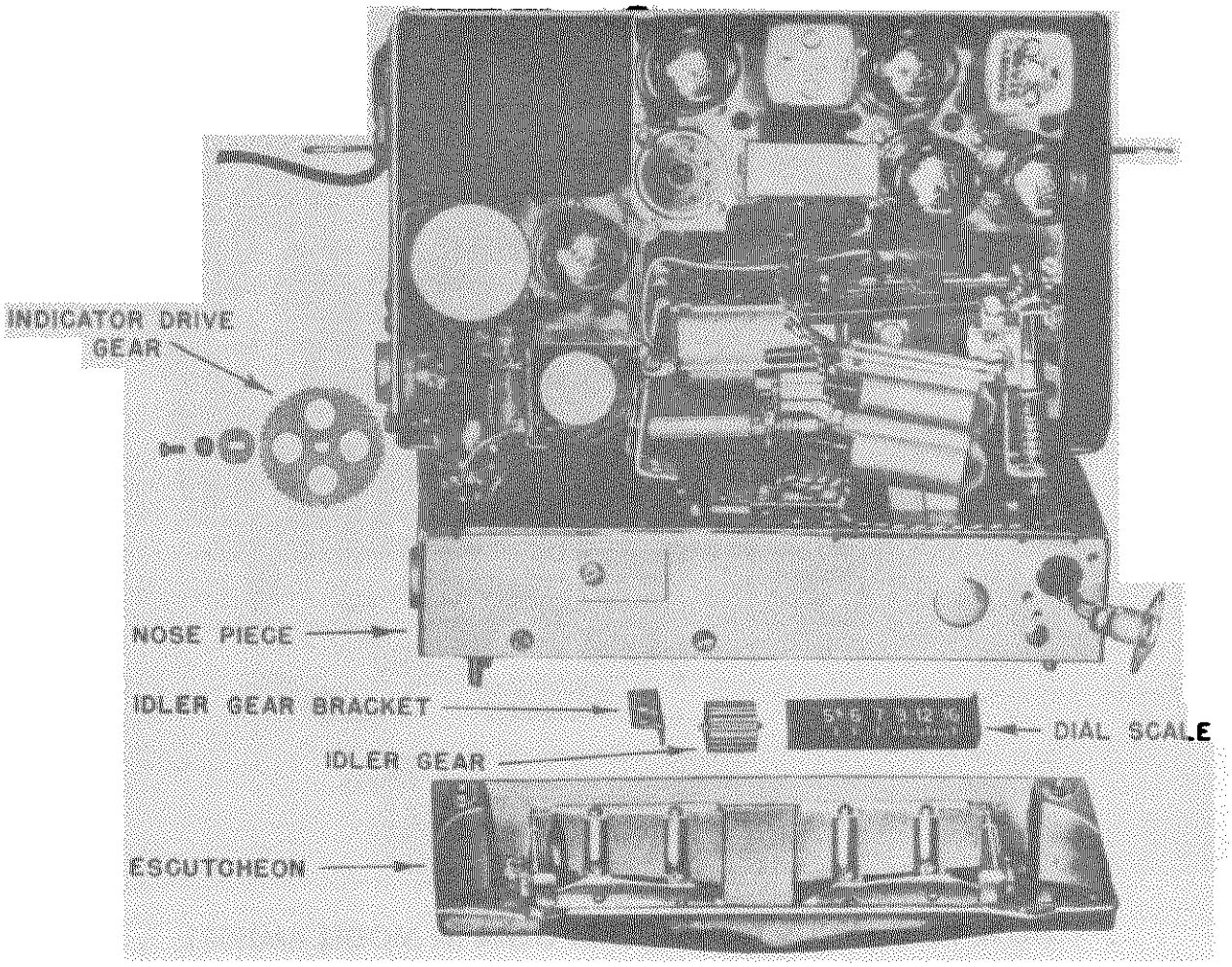

HOW TO CHANGE THE RATCHET GEAR IN MODEL 6MF080

Before starting the following operations BE SURE THE TUNER IS ON MANUAL. Set Dial at 16.

1—Remove the top and bottom covers of the receiver. Remove 7C5 and 7B6 tubes. Take off knobs.

2—Remove the complete escutcheon assembly.

3—Loosen the antenna socket and trimmer from the nose piece. NOTE: On this receiver the nose piece and front plate are welded together.

4—Loosen the speaker socket on the left hand of the nose piece.

5—Remove the drum dial idler gear and bracket, also the dial scale.

6—Loosen the tuner assembly from the front plate.

7—Loosen the front plate and nose piece from receiver.

8—Remove the two assembly screws in the back plate of the tuner holding the top right coil and shield assembly. Slip the coils toward the left end of the receiver until clear of the tuner slugs. This will allow access to the turret shaft and gear.

9—Remove the screw lock washer, flat washer and brass indicator drive gear from the end of turret shaft.

10—Remove the screw holding the solenoid end plug and bracket assembly to the back plate of the tuner. IMPORTANT: Remove only the one screw holding the bracket to the rear plate.

11—Disconnect one side of the small lever spring. Be careful not to lengthen or distort this spring. If the spring is distorted the detent and cam levers may not work properly after assembly.

12—Remove the long cylindrical brass spacer, indexing disc, ratchet return spring and short cylindrical spacer. IMPORTANT: Note the position of the teeth before removing the ratchet gear.

13—Replace the ratchet gear. Make sure the teeth are in exactly the same position as the original gears.

14—Be sure the tuning mechanism and indicator drum is in the "M" position when replacing the indicator idler gear.

15—Reassemble the tuner unit in reverse order. Replace front plate and dial scale.

©John F. Rider

TUNER

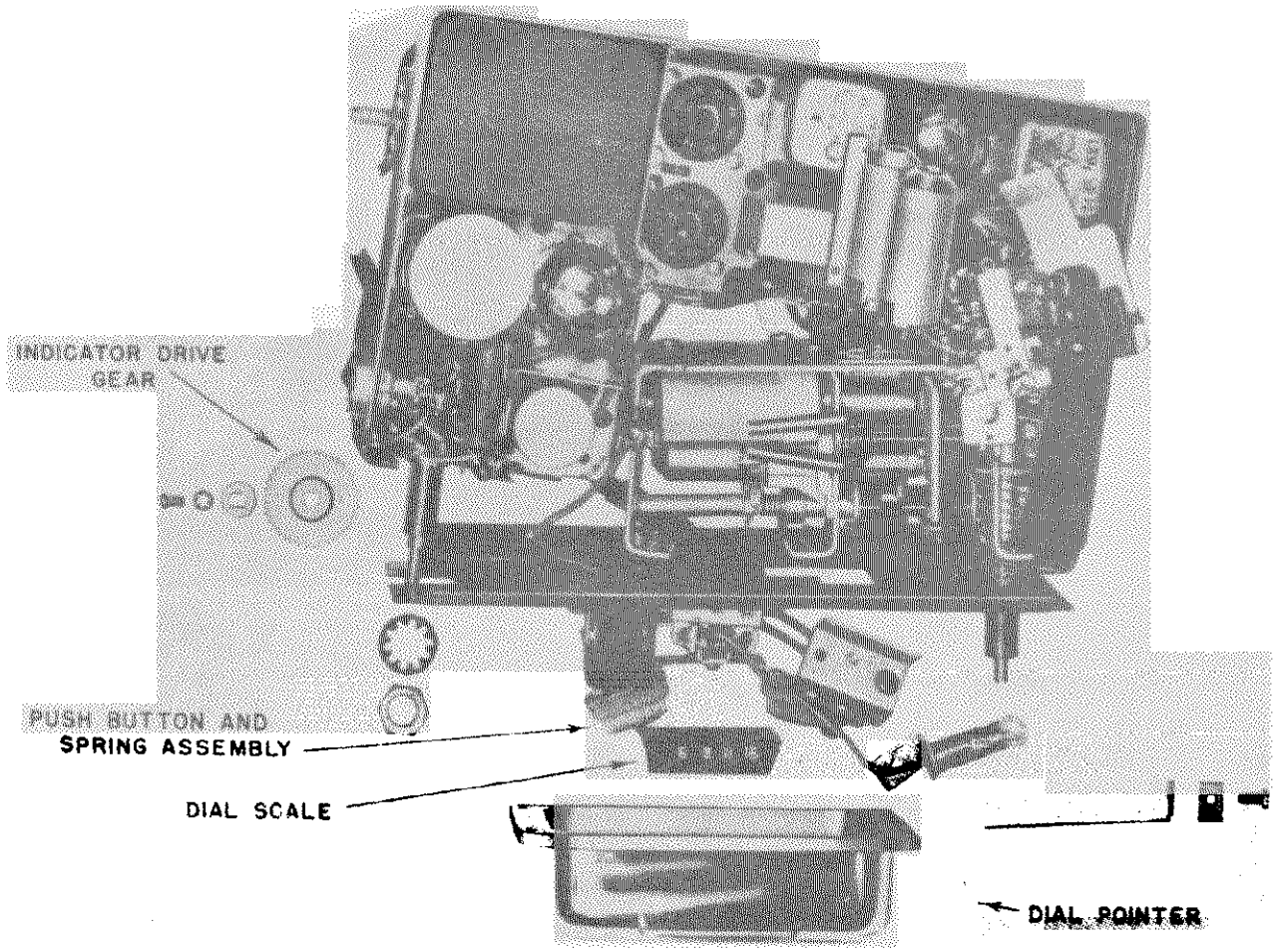

HOW TO CHANGE THE RATCHET GEAR IN MODEL 6MH081

BE SURE THE TUNER IS ON MANUAL. Set Dial at 16.

1—Remove the top and bottom covers of the receiver. Remove 7C5 and 7B6 tubes.

2—Remove the knobs and the complete escutcheon from the front plate.

3—Loosen the front plate from the receiver.

4—Remove the ⅜" nut and lock washer from the volume control shaft.

5—Remove the dial pointer from the tuner assembly.

6—Remove the automatic station selector switch, and pilot light bracket from the front plate.

7—Remove plastic push buttons and spring assembly.

8—Remove the screws holding the front plate to the tuner.

9—Remove the dial scale from its mounting to avoid scratching.

10—Remove front plate from receiver.

11—Pull the front plate from the left end of the receiver until it clears the volume control shaft.

12—Loosen the antenna socket and bracket from the tuning assembly.

13—Loosen the right hand top two turret coils. Slip the coils to the left end of the set until free of the tuning slugs. This will allow access to the turret shaft and gear.

14—Remove the screw and lock washer, and flat washer from the end of the turret shaft. Remove the brass indicator drive gear.

15—Remove the rear assembly screw from the solenoid end plug and bracket assembly.

16—Push the solenoid end plug and bracket assembly toward the left of the receiver until it clears the turret shaft.

17—Disconnect one side of the small lever spring. Be careful not to distort or lengthen this spring. The detent and cam levers may not operate properly when the unit is reassembled if this spring is bent or distorted.

18—Remove the long cylindrical brass spacer, indexing disc, spring and short cylindrical spacer. IMPORTANT: Note the position of the teeth before removing the ratchet gear.

19—Replace the racthet gear. Make sure the teeth are in exactly the same position as the original gear. The tuning mechanism and the indicator drum must be on "M" position when replacing the indicator drive gear.

20—Reassemble the tuner unit in reverse order. Replace the front plate, dial scale, automatic push button switch and pilot light bracket.

©John F. Rider

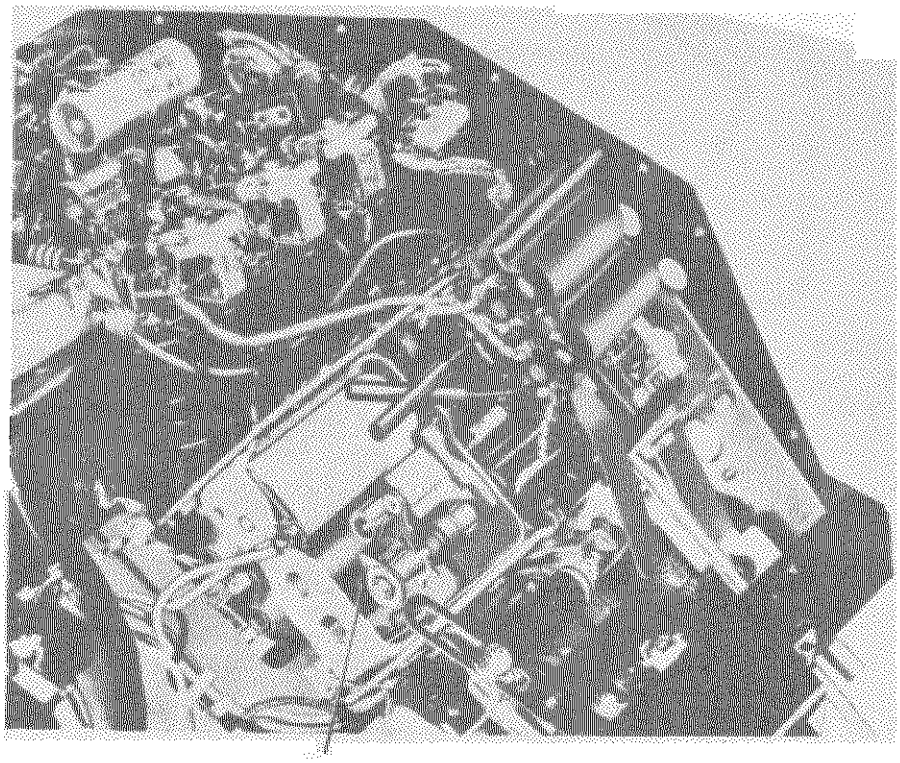

INDICATOR CAM

HOW TO CHANGE THE RATCHET GEAR IN MODEL 7ML080-7ML081

1—Remove the top cover of the receiver.

2—Remove the screw, lock washer and flat washer and indicator cam from the turret shaft. This can be accomplished by inserting a small screw driver through a hole in the solenoid end bracket.

3—Disconnect the cam lever spring. Be careful not to stretch or distort this spring. If this spring is distorted the detent and cam levers may not operate properly when tuner is reassembled.

4—Remove the brass cylindrical spacer, indexing disc, brass spacer and spring. IMPORTANT: Note the position of the teeth in the ratchet gear before it is removed.

5—Replace ratchet gear. Make sure the ratchet gear teeth engage exactly the same as the original gear.

6—Reassemble the brass spacer spring, long cylinder spacer, flat washer, etc., to turret shaft. Replace detent spring.

©John F. Rider

TUNER

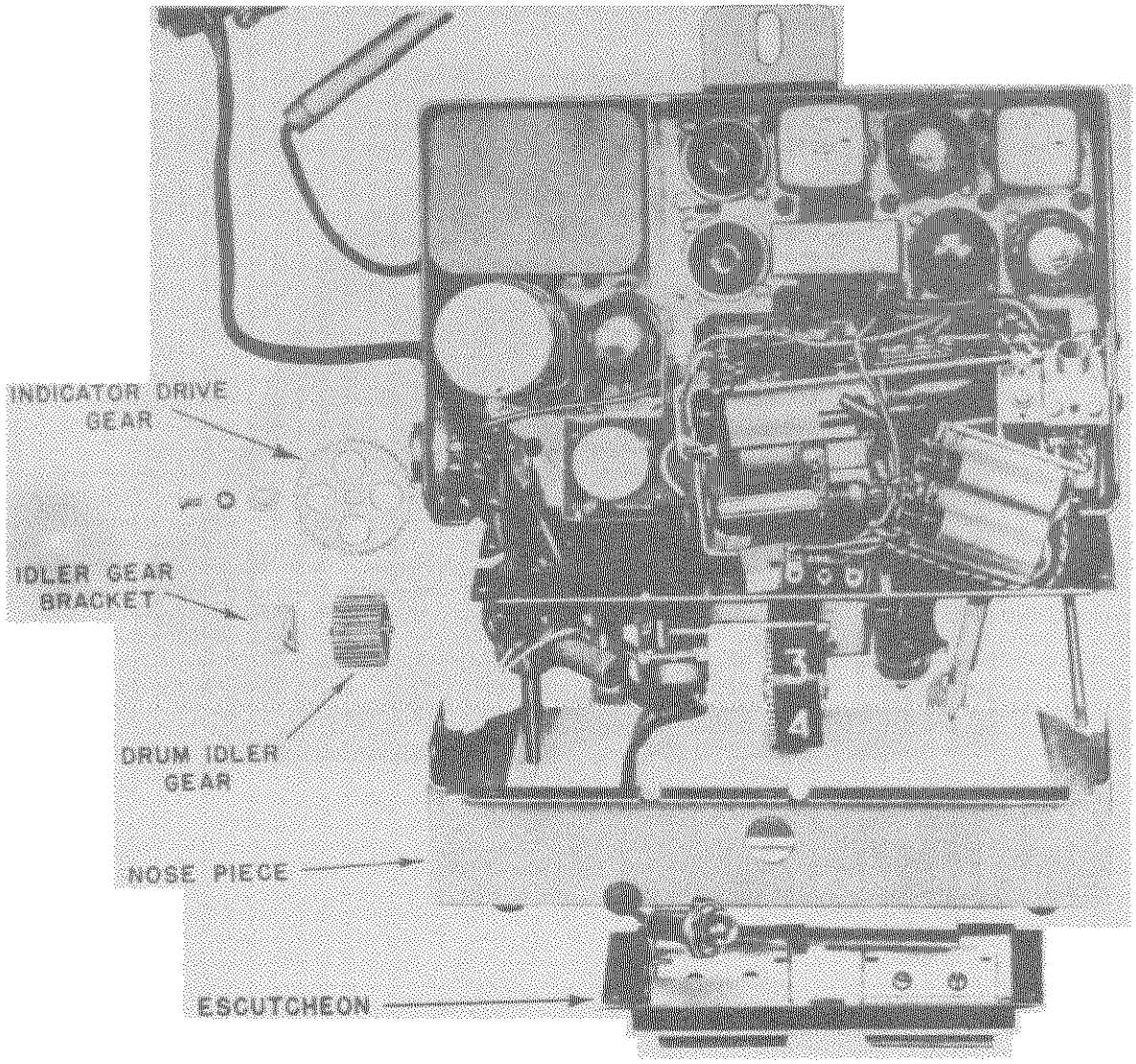

HOW TO CHANGE THE RATCHET GEAR IN MODEL 6MN082

BE SURE THE TUNER IS ON MANUAL. Set Dial at 16.

1—Remove the top and bottom covers. Loosen dial light from the nose piece. Remove 7C5 and 7B6 tubes.

2—Remove the escutcheon from the nose piece.

3—Remove the nose piece from the front plate. Remove dial scale from nose piece.

4—Remove the indicator dial idler gear and bracket. This is necessary to get at the solenoid bracket and plug front assembly screw.

5—Remove the two remaining assembly screws holding the tuner unit to the front plate.

6—Loosen the front plate from the receiver, and pull forward as far as possible.

7—Remove the brass drum indicator drive gear from the turret drive shaft.

8—Remove the rear assembly screw holding the solenoid end plug and bracket assembly to the back plate.

9—Push the solenoid end plug bracket assembly toward the left end of the receiver.

10—Remove the mounting screws from the top tuner coil assembly, and push the coil assembly toward the left end of the receiver until the coils are free of the tuner slug.

11—Disconnect one side of lever spring. Be careful not to distort or lengthen this spring. If the spring is distorted the detent and cam levers may not operate properly when reasssembled.

12—Remove the long brass cylindrical spacer, indexing disc, and ratchet return spring, and short brass spacer. IMPORTANT: Note the position of the teeth before removing the ratchet gear.

13—Replace the ratchet gear. Make sure the teeth are in exactly the same position as the original gear. Also be sure the tuning mechanism and the indicator drum is in the "M" position when replacing the idler gear and bracket.

14—Replace the ratchet gear. Reassemble tuner unit. Replace the front plate, nose piece, dial scale and escutcheon.

©John F. Rider

CHANGING THE SOLENOID IN MODELS 6MF080, 6MH081 AND 6MN082 AUTO RECEIVERS

1—(a) Nash—Perform operations 1 to 10 inclusive under changing ratchet gear in Model 6MN082.
(b) Ford—Perform operations 1 to 10 inclusive under changing ratchet gear in Model 6MF080.
(c) Hudson—Perform operations 1 to 16 inclusive under changing ratchet gear in Model 6MH081.

2—Unsolder the yellow wires from the solenoid and terminal assembly.

3—Remove the solenoid bracket and plug assembly.

4—Slide solenoid toward the left end of the receiver until free of the solenoid magnet core.

5—Replace solenoid and reassemble tuning unit. Be sure to check the position of the ratchet gear —one tooth engaging the ratchet drive gear. Also make sure the tuning mechanism and the indicator drum are in the "M" position.

CHANGING THE SOLENOID IN MODELS 7ML080 AND 7ML081 AUTO RECEIVERS

1—Remove top cover from the receiver.

2—Set the tuner to manual position and tune set to 16 on the dial.

3—Unsolder the yellow wires from the solenoid.

4—Remove solenoid end plug and bracket assembly.

5—Slide solenoid toward the left end of receiver until free of the solenoid magnet core.

6—Replace solenoid and reassemble tuning unit.

REPLACING THE RATCHET AND BRACKET ASSEMBLY

1—Loosen the left hand lower tuning coil assembly. Slip the assembly to the left of the set until free of the tuning slugs.

2—Follow the procedure outlined above for removing the solenoid.

3—Remove the ratchet and bracket assembly, held in place by one screw through the front plate, and one screw through the front plate.

4—With replacement ratchet and bracket assembly, reassemble the tuner in reverse order.

LUBRICATION

The ratchet gear must engage freely with the ratchet on the turret assembly. It, therefore, must be clean and lubricated with a good grade of clock oil. WARNING: Do not use a heavy grade of lubricant.

The points of friction on the guide rods, dial pointer, solenoid magnet core, and the hub of the station indicator drum must also be lubricated with clock oil.

All other points of friction should be lubricated with Texaco RCX-148 low temperature grease No. 67 or its equivalent.

TROUBLE SHOOTING

Mechanism fails to move from one position to the next or jams tightly between two positions

1—Be sure the "A" battery supply is capable of delivering 5.5 volts at 20 amperes.

2—Check lubrication of ratchet gear and guide rods.

3—Check dial pointer and indicator drum and drive gear assemblies for binding or warped parts.

4—Teeth on ratchet gear are worn or damaged. Replace gear.

5—Lever spring missing from ratchet and bracket assembly. Replace spring.

6—Detent lever or cam lever broken from ratchet and bracket assembly. Replace ratchet and bracket assembly.

©John F. Rider

Mechanism fails to return all the way to resting position or 16 on the dial when tuned manually

1—Check lubrication of guide rods.

2—Be sure pointer does not rub on dial glass or dial scale.

3—Be sure of proper distance between holes and slot in pointer.

Tuning knob will not remain in the "Out" position when it is pulled out to set up the stations or to tune manually

1—Tuning shaft locking lever bent. Bend lever back to original position. (Fig. 3).

2—Shoulder rivet pulled out. Replace rivet, or replace mounting plate and lever assembly.

Knob fails to return to the "In" position when the push button or foot switch is pressed

1—End broken from lever (Fig. 2). Replace lever or replace complete mounting plate and lever assembly.

Pointer sticks at the low frequency end of dial

1—Tuning knob too close to panel. Will not allow knob to rotate freely when it is in the "IN" position. Loosen knob, and re-fit. Allow approximately ⅛" clearance between knob and panel.

2—Plastic ring loosened from knob (Ford only) allowing same conditions as above. Replace knob.

3—Idler gear or indicator drum binding.
(a) Be sure drum does not rub on escutcheon.
(b) Remove escutcheon and check drive gear and indicator drum to make sure they do not bind against the idler gear or front plate.

4—Cross arm return spring broken. Replace spring. To replace spring, loosen left hand coil and shield assembly and pull loose end of return spring retaining strip upward. This will permit the easy removal of the spring. (Fig. 2.)

©John F. Rider

©John F. Rider

NOTE: MOUNTING PLATE AND LEVER ASSEMBLIES S-10834, S-12183 AND S-11494 INCLUDE PARTS NO. 97-193, 117-83, 80-340 AND 93-650. THESE CAN BE PURCHASED SEPARATELY.

NOTE: 6MN082 SAME AS 6MN088. 6MH081 SAME AS 6MH089.

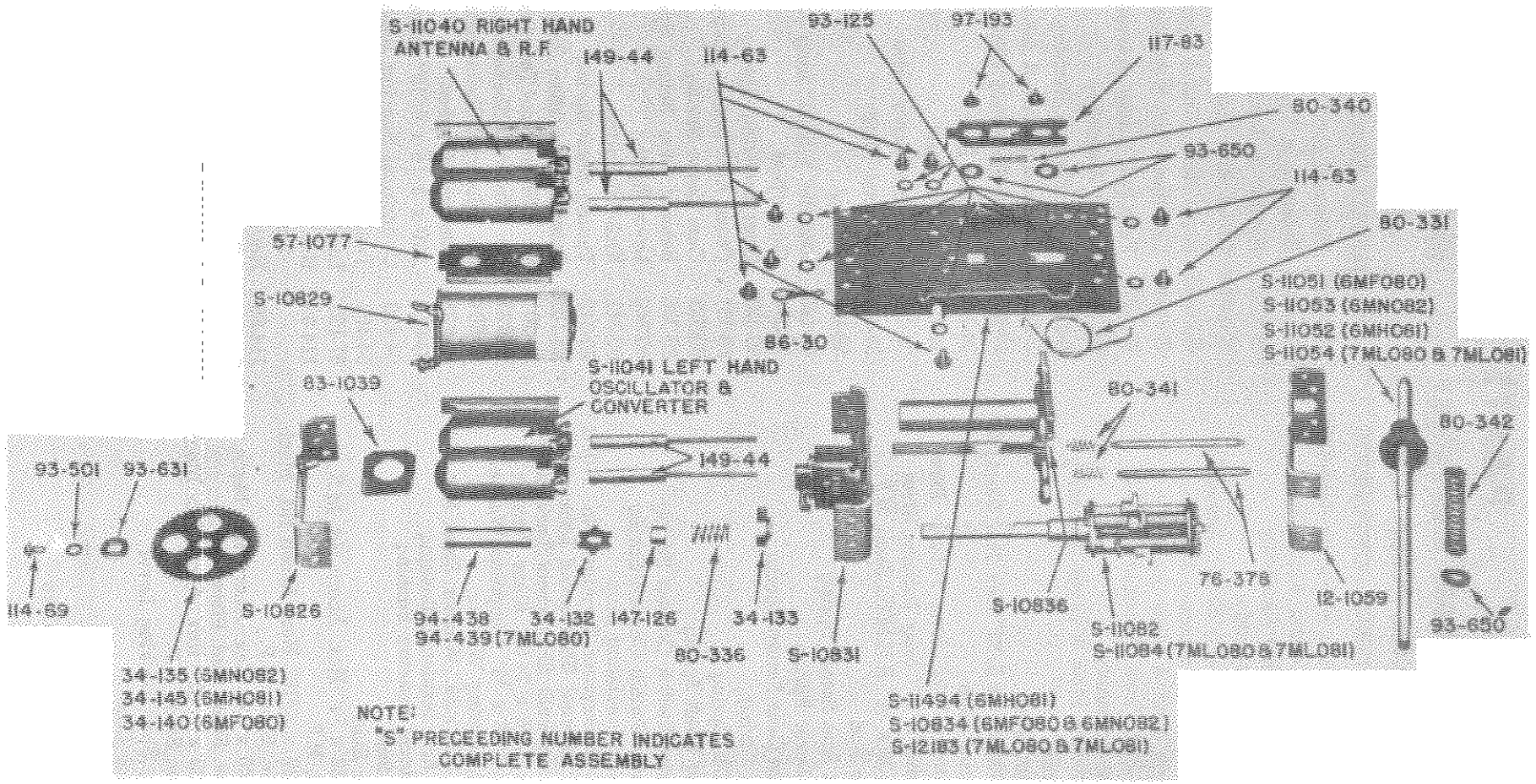

EXPLODED VIEW

PARTS LIST

LINCOLN MODELS 7ML080 AND 7ML081
(CHASSIS No. 7C80)

"PUSH-PULL" AUTO TUNER COMPONENTS

S-10826	Solenoid End Plug & Bracket Assembly
S-10829	Solenoid & Terminal Assembly
S-10831	Ratchet & Bracket Assembly
S-10836	Cross Arm Assembly
S-11040	Right Hand Coil & Shield Assembly
S-11041	Left Hand Coil & Shield Assembly
S-11054	Tuning Shaft & Gear Assembly
S-11074	Push-Pull Tuner Assembly (Final)
S-11084	Turret Assembly
S-12183*	Mounting Plate & Lever Assembly
34-132	Indexing Disc
34-133	Ratchet Gear
54-34	No. 6-32 x ¼ x 3/32" Hex. Nut, Steel, N.P.
57-1077	Protector Plate
64-146	.088 dia. x 5/32" long Tubular Rivet
64-315	.088 dia. x ⅜" long Tubular Rivet
69-163	No. 4-36 x ⅜" R.H.M.S., Steel, N.P.
76-378	Guide Rod
80-331	Cross Arm Return Spring
80-332	Cam Lever Spring
80-336	Ratchet Gear Return Spring
80-340	Lever Spring
80-341	Kick-Off Spring
80-342	Tuning Shaft Spring
80-429	Indicator Switch Contact Spring
80-430	Indicator Switch Contact Spring
83-1039	Solenoid Insulating Strip
86-30	No. 6 Shakeproof Terminal No. 2101-6
93-125	No. 6 Internal Shakeproof Lockwasher
93-501	No. 4 Internal Shakeproof Lockwasher
93-650	.010 x 3/16 x 7/16" Brass Washer
93-706	.020 x 7/16 x ¾" Neoprene Washer
93-715	Split Insulating Washer
93-748	.018 x .096 x ¼" Washer, Steel, N.P.
94-431	Cross Arm Insulating Bushing
94-439	Cylindrical Spacing Bushing
97-193	Lever Stud
97-220	Pointer Stud
114-48	No. 6-32 x ¼" Hex. Acorn Hd. M.S., Steel, N.P.
114-63	No. 6-32 x 3/16" Hex. Acorn Hd. Mach. Screw, Steel, N.P.
114-69	No. 4-40 x ¼" Hex. Acorn Hd. Mach. Screw, Steel, Cad. Plate
114-150	No. 6-32 x 5/32" Hex. Acorn Hd. Mach. Screw, Steel, N.P.
117-83	Tuning Shaft Locking Lever
128-22	Indicator Cam
147-126	Gear & Disc Spacer
148-45	Cross Arm
149-44	Adjusting Spring & Core

HUDSON MODEL 6MH081
(CHASSIS No. 6C81)

"PUSH-PULL" AUTO TUNER COMPONENTS

S-10826	Solenoid End Plug & Bracket Assembly
S-10829	Solenoid & Terminal Assembly
S-10831	Ratchet & Bracket Assembly
S-10836	Cross Arm Assembly
S-11040	Right Hand Coil & Shield Assembly
S-11041	Left Hand Coil & Shield Assembly
S-11072	Push-Pull Tuner Assembly (Final)
S-11082	Turret Assembly
S-11308	Front Plate & Bushing Assembly
S-11494*	Mounting Plate & Lever Assembly
17-69	Pointer Retaining Clip
34-132	Indexing Disc
34-133	Ratchet Gear
34-145	Indicator Drive Gear
57-1077	Protector Plate
59-158	Pointer
64-146	.088 dia. x 5/32" long — Tubular Rivet
76-378	Guide Rod
80-329	Gear Indexing Spring
80-331	Cross Arm Return Spring
80-332	Cam Lever Spring
80-336	Ratchet Gear Return Spring
80-340	Lever Spring
80-341	Kick-Off Spring
80-342	Tuning Shaft Spring
83-1039	Solenoid Insulating Strip
86-30	No. 6 Shakeproof Terminal Lug
93-125	No. 6 Internal Shakeproof Lockwasher
93-501	No. 4 Internal Shakeproof Lockwasher
93-631	Retaining Washer
93-650	.010 x 3/16 x 7/16" Brass Washer
94-438	Cylindrical Spacing Bushing
94-463	Tuning Shaft Bushing
97-193	Lever Stud
114-63	No. 6-32 x 3/16" Hex. Acorn Hd. Mach. Screw, Steel, N.P.
114-69	No. 4-40 x ¼" Hex. Acorn Hd. Mach. Screw, Steel, Cad. Plate
114-150	No. 6-32 x 5/32" Hex. Acorn Hd. Mach. Screw, Steel, N.P.
114-159	No. 6 x ¼" Hex. Hd. Self Tapping Screw, Steel, Cad. Plate
117-83	Tuning Shaft Locking Lever
147-126	Gear & Disc Spacer
149-44	Adjusting Spring & Core

NOTE: Parts marked * include Parts No. 97-193, 117-83, 80-340 and 93-650. These parts can be purchased separately.

© John F. Rider

PARTS LIST

FORD MODEL 6MF080
(CHASSIS No. 6C80)

"PUSH-PULL" AUTO TUNER COMPONENTS

S-10826	Solenoid End Plug & Bracket Assembly
S-10829	Solenoid & Terminal Assembly
S-10831	Ratchet & Bracket Assembly
S-10834*	Mounting Plate & Lever Assembly
S-10836	Cross Arm Assembly
S-11040	Right Hand Coil & Shield Assembly
S-11041	Left Hand Coil & Shield Assembly
S-11051	Tuning Shaft & Gear Assembly
S-11071	Push-Pull Tuner Assembly (Final)
S-11082	Turret Assembly
34-132	Indexing Disc
34-133	Ratchet Gear
34-140	Indicator Drive Gear
57-1077	Protector Plate
76-378	Guide Rod
80-331	Cross Arm Return Spring
80-332	Cam Lever Spring
80-336	Ratchet Gear Return Spring
80-340	Lever Spring
80-341	Kick-Off Spring
80-342	Tuning Shaft Spring
83-1039	Solenoid Insulating Strip
86-30	No. 6 Shakeproof Terminal
93-125	No. 6 Internal Shakeproof Lockwasher
93-501	No. 4 Internal Shakeproof Lockwasher
93-573	Shoulder Washer
93-631	Retaining Washer
93-650	.010 x 3/16 x 7/16" Brass Washer
94-431	Cross Arm Insulating Bushing
94-438	Cylindrical Spacing Bushing
97-193	Lever Stud
114-63	No. 6-32 x 3/16" Hex. Acorn Hd. Mach Screw, Steel, N.P.
114-69	No. 4-40 x ¼" Hex. Acorn Hd. Mach. Screw, Steel, Cad. Plate
114-150	No. 6-32 x 5/32" Hex. Acorn Hd. Mach. Screw, Steel, N.P.
117-83	Tuning Shaft Locking Lever
147-126	Gear & Disc Spacer
149-44	Adjusting Spring & Core

NASH MODEL 6MN082
(Chassis No. 6C82)

"PUSH-PULL" AUTO TUNER COMPONENTS

S-10826	Solenoid End Plug & Bracket Assembly
S-10829	Solenoid & Terminal Assembly
S-10831	Ratchet & Bracket Assembly
S-10834*	Mounting Plate & Lever Assembly
S-10836	Cross Arm Assembly
S-11040	Right Hand Coil & Shield Assembly
S-11041	Left Hand Coil & Shield Assembly
S-11053	Tuning Shaft & Gear Assembly
S-11073	Push-Pull Tuner Assembly (Complete)
S-11082	Turret Assembly
S-11180	Front Plate & Clamping Strip Assembly
34-132	Indexing Disc
34-133	Ratchet Gear
34-135	Indicator Drive Gear
57-1077	Protector Plate
76-378	Guide Rod
80-331	Cross Arm Return Spring
80-332	Cam Lever Spring
80-336	Ratchet Gear Return Spring
80-340	Lever Spring
80-341	Kick-Off Spring
80-342	Tuning Shaft Spring
83-1039	Solenoid Insulating Strip
86-30	No. 6 Shakeproof Terminal
93-125	No. 6 Internal Shakeproof Lockwasher
93-501	No. 4 Internal Shakeproof Lockwasher,
93-631	Retaining Washer
93-650	Brass Washer
94-431	Cross Arm Insulating Bushing
94-438	Spacing Bushing
97-193	Lever Stud
112-484	No. 6-32 x 3/16" B.H.M.S.
114-63	No. 6-32 x 3/16" Hex. Acorn Hd. M.S.
114-69	No. 4-40 x ¼" Hex Acorn Hd. M.S.
114-150	No. 6-32 x 5/32" Hex. Acorn Hd. M.S.
117-83	Tuning Shaft Locking Lever
147-126	Gear & Disc Spacer
149-44	Adjusting Spring & Core

NOTE: Parts marked * include Parts No. 97-193, 117-83, 80-340, and 93-650. These parts can be purchased separately.

©John F. Rider

©John F. Rider

TO THE SERVICE MAN:

Chassis 5G40 features a high gain tuned RF stage ahead of a conventional superheterodyne circuit with band spread tuning on the 49, 31, 25, 19 and 16 meter bands.

If removal of the chassis from the cabinet ever becomes necessary this should be done with care.

The alignment of chassis 5G40 is conventional. However, care must be exercised when making adjustments, and the alignment procedure must be followed exactly. Set the chassis over a metal plate approximately the same distance the battery pack is from the bottom of the chassis when it is in the cabinet. This procedure will introduce the approximate amount of metal in the field of the RF and oscillator coils as when the chassis is in the cabinet. A signal generator of reasonable accuracy and good attenuation must be used. An output meter (AC) of the copper oxide rectifier type with a range of 1 to 30 volts in several steps is necessary to get accurate output readings. Alignment wrenches should be of the non-metallic type, especially when making adjustments at the higher frequencies.

When reinstalling the chassis in the cabinet be careful not to disturb the cabling between the short wave coil assembly and chassis. Tune in a weak broadcast signal near 1400 Kc. and touch up trimmer C2. This will insure maximum performance after alignment.

The I.F. transformers incorporated in this receiver are of the new permeability tuned type. The advantage of an I.F. transformer of this type is its extreme stability under various humidity and temperature conditions. The upper coil is the secondary and the lower the primary. When adjusting these I.F. transformers the tuning wrench 68-7 can be inserted into the top slug, rotated until maximum output is obtained and then dropped down to the lower slug and the same operation repeated. The tuning wrench is so designed that turning one slug does not affect the adjustment of the other.

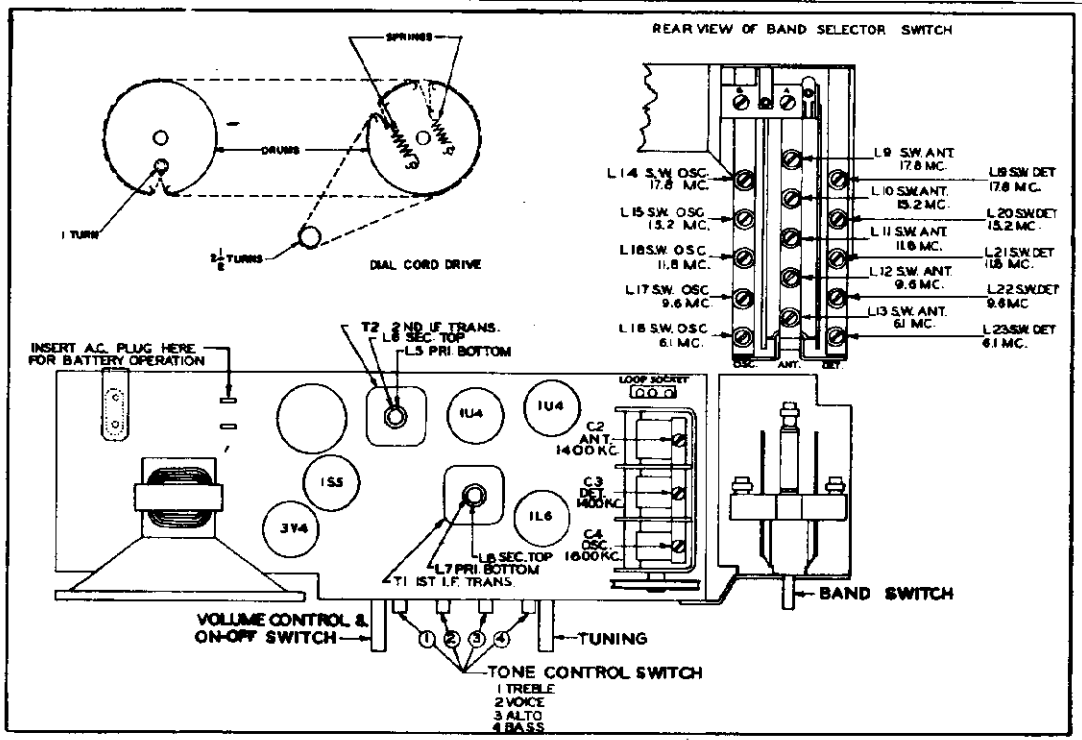

TUBE, TRIMMER LOCATION AND DIAL CABLE DRAWING

ALIGNMENT PROCEDURE

OPERATION	CONNECT OSCILLATOR TO	DUMMY ANTENNA	INPUT SIG. FREQUENCY	BAND	SET DIAL AT	TRIMMERS	PURPOSE
1	Converter Grid	.1 mfd.	455 Kc.	BC	600 Kc.	L5, 6, 7, 8	Align I.F.
2	One turn loop Coupled loosely to Broadcast Wavemagnet		1600 Kc.	BC	1600 Kc.	C4	Set Oscillator to Scale
3			1400 Kc.	BC	1400 Kc.	C3	Alignment of Detector
4			1400 Kc.	BC	1400 Kc.	C2	Alignment of B.C. Wavemagnet
5*	3 feet of wire Approx. 1 foot from Extended Waverod		6.1 Mc.	49 Met.	6.1 Mc.	L18, 23, 13	Alignment of S.W. Oscillator, detector and antenna
6*			9.6 Mc.	31 Met.	9.6 Mc.	L17, 22, 12	
7*			11.8 Mc.	25 Met.	11.8 Mc.	L16, 21, 11	
8*			15.2 Mc.	19 Met.	15.2 Mc.	L15, 20, 10	
9*			17.8 Mc.	16 Met.	17.8 Mc.	L14, 19, 9	

*NOTE: Rock Tuning Condenser When Making Alignment Under Operations 5,6,7, 8 and 9.

MODEL G500,
Ch. 5G40

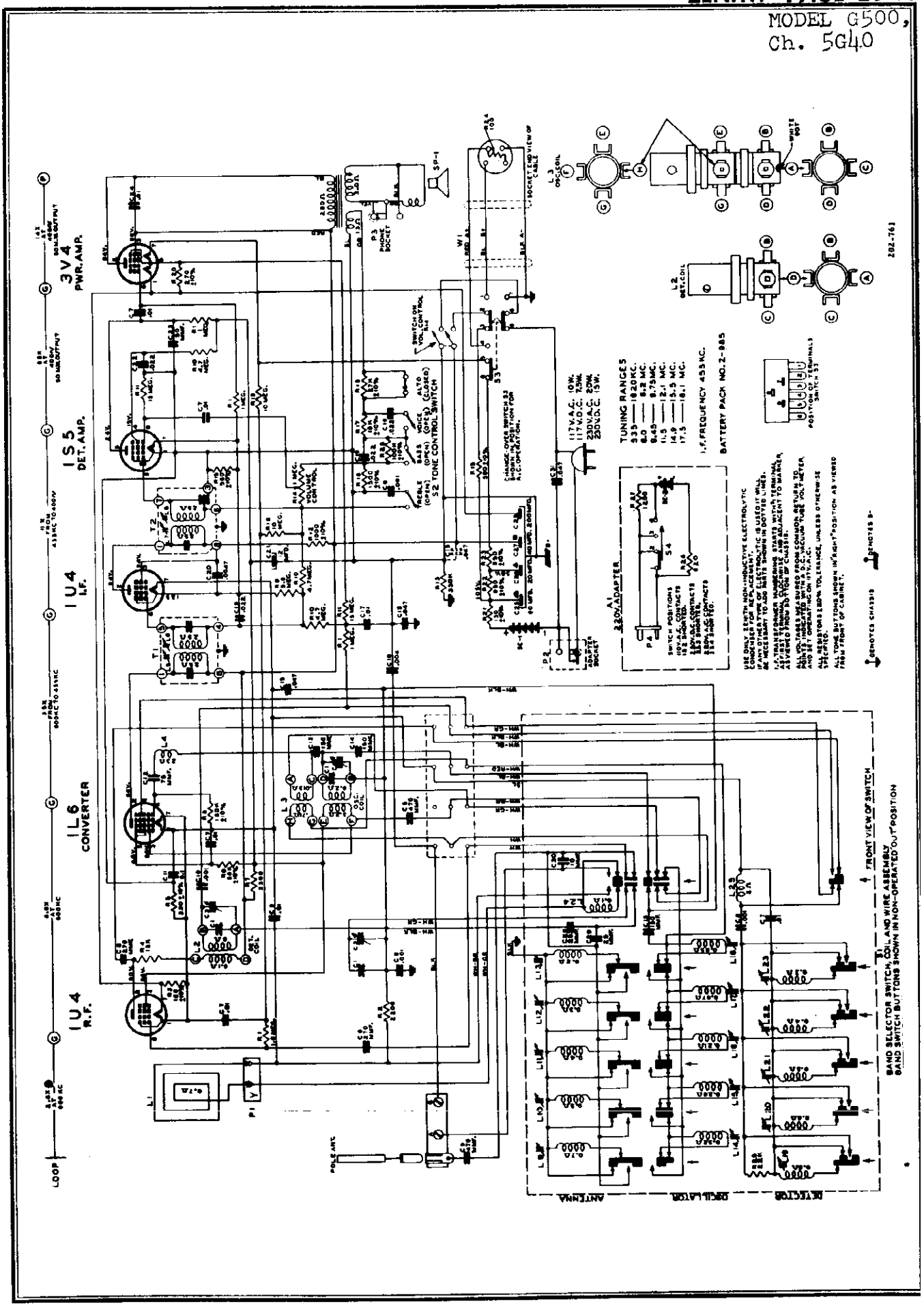

PARTS LIST

PART NO.	REF.NO.	DESCRIPTION
		DIAL ASSEMBLY
12-1079		Pointer Shaft Bracket
26-398		Dial Scale
46-539		Band Switch Knob (16M)
46-540		Band Switch Knob (19M)
46-541		Band Switch Knob (25M)
46-542		Band Switch Knob (31M)
46-543		Band Switch Knob (49M)
46-544		Band Switch Knob (BC)
46-546		Tuning & Volume Control Knob (2 used)
57-1053		Front Panel Escutcheon
59-155		Dial Pointer
59-195		"On-Off" Indicator
61-141		Pointer Pulley
73-113		#8-32 x 1/4 Slab. Head Set Screw (Used on S-11207)
76-415		Tuning Control Shaft
76-555		Pointer Drive Shaft
80-69		Dial Cord Tension Spring (2 used)
80-553		Indicator Tension Spring
83-1661		Rubber Strip (Used on 26-398)
93-470		1/64 x .136 x 5/16" Black Fibre Washer (Used on 59-195)
93-556		1/32 x .144 x 3/8 Washer Steel (2 used on 26-398)
188-32		Retaining Ring
S-11207		Indicator Lever & Bushing Assembly
S-15781		Drive Pulley Cord & Eyelet Assembly (short)
S-15782		Pointer Pulley Cord & Eyelet Assembly (long)
S-15784		Pointer Pulley & Shaft Assembly
		COILS & CHOKES
95-1148	T1	1st. I.F. Transformer
95-1149	T2	2nd. I.F. Transformer
S-11952	L25	R. F. Shunt Coil Assembly
S-14403	L4	R. F. Choke Coil Assembly
S-15886	L3	Oscillator Coil
S-15887	L2	Detector Coil Assembly
		CONDENSERS
22-3	C-7	.01 Mfd. Ceramic 500V
22-4	C16	.004 Mfd. Ceramic (or 22-1782) 500V
22-1390	C5	470 Mmfd. Mica 500V
22-1674	C23	50 Mmfd. Ceramic 500V
22-1739	C14	150 Mmfd. Ceramic 500V
22-1740	C13	150 Mmfd. Ceramic 500V
22-1741	C25, 26, 27 & 28	Elect. Cond. 60 Mfd. 150V x 40 Mfd. 150V 20 Mfd. 150V x 200 Mfd. 10V
22-1746	C12	75 Mmfd. Ceramic 500V
22-1775	C15	.047 Mfd. 400V
22-1777	C11	.1 Mfd. 200V
22-1779	C24	.01 Mfd. 600V
22-1783	C20	.0047 Mfd. 400V
22-1784	C9	.01 Mfd. 200V
22-1839	C8	.001 Mfd. 200V
22-1844	C31	.047 Mfd. 600V
22-1846	C17	.01 Mfd. 400V
22-1886	C10	.001 Mfd. Ceramic 500V
22-2056	C21	Elect. Cap. 12 Mfd. 150V
22-2058	C6	270 Mmfd. Mica 500V
22-2064	C1	Three Section Variable Cond. (Includes Drive Pulley)
22-2071	C19	.022 Mfd. 200V
22-2072	C22	.022 Mfd. 400V

PART NO.	REF.NO.	DESCRIPTION
		RESISTORS
63-1362	R22, 23	Two Section Candohm
63-1744	R24	100 Ohm 1/2W 20% Ins. Res.
63-1754	R3	180 Ohm 1/2W 10% Ins. Res.
63-1761	R20	270 Ohm 1/2W 10% Ins. Res.
63-1764	R5	330 Ohm 1/2W 10% Ins. Res.
63-1775	R15	560 Ohm 1/2W 10% Ins. Res.
63-1785	R12	1000 Ohm 1/2W 10% Ins. Res.
63-1792	R16	1500 Ohm 1/2W 10% Ins. Res.
63-1800	R2	2200 Ohm 1/2W 20% Ins. Res.
63-1807	R7	3300 Ohm 1/2W 20% Ins. Res.
63-1835	R4	15K Ohm 1/2W 20% Ins. Res.
63-1838	R17	18K Ohm 1/2W 10% Ins. Res.
63-1845	R18	27K Ohm 1/2W 10% Ins. Res.
63-1863	R6	68K Ohm 1/2W 20% Ins. Res.
63-1869	R28	100K Ohm 1/2W 10% Ins. Res.
63-1880	R8	180K Ohm 1/2W 10% Ins. Res.
63-1891	R13	330K Ohm 1/2W 20% Ins. Res.
63-1912	R1	1 Megohm 1/2W 20% Ins. Res.
63-1940	R10	4.7 Megohm 1/2W 20% Ins. Res.
63-1943	R9	5.6 Megohm 1/2W 10% Ins. Res.
63-1954	R19	10 Megohm 1/2W 20% Ins. Res.
63-1961	R11	15 Megohm 1/2W 20% Ins. Res.
63-2018	R21	130 Ohm (Zipohm) 3W 10% Ins. Res.
63-2037	R14	Volume Control & Switch
		MISCELLANEOUS
11-104		Line Cord & Plug
15-57		Cap. & Insulator (Batt. Cable)
44-17		Headphone Jack
49-668	SP-1	5 1/4" P. M. Speaker 208-668 Cone & Voice Coil 206-668 Output Trans.
54-34		#6-32 x 1/4" Hex. Nut Steel (2 am. used on I.F.'s 1 used on 212-5)
78-274		Electrolytic Cond. Socket
78-543		Four Contact Socket (Batt. Cable)
78-802		Wavemagnet Socket
78-806		Miniature Tube Socket
78-817		Miniature Tube Socket
78-844		Adaptor Socket (220V)
78-845		Miniature Tube Socket (3 used)
83-1071		Threaded Core Retaining Strip (15 used)
83-1633		Ant., Gnd., Terminal Strip
83-1646		Speaker Gasket Support Strip
85-450	S3	Power Change-Over Switch
85-460	S2	Tone Control Switch
94-295		Gang Cond. & Speaker Mtg. Bushing (6 used)
149-86		Iron Core (15 used)
196-125		Speaker Gasket
212-5	SE-1	Selenium Rectifier
		BATTERIES
Z985		A-B Battery Pack
		CABINET PARTS
S-15635		Wavemagnet Suction Cup Assembly (2 used)
S-15797		Front Cover Hinge & Terminal Assembly (Right)
S-15798		Front Cover Hinge & Terminal Assembly (Left)
S-15799		Wavemagnet Cable Assembly
S-15802		Telescoping Ant. Assembly
S-15805		Wavemagnet Extension Cable Assembly
S-16027		Wavemagnet Assembly
S-16035		Grille Cloth & Baffle Assembly

PART NO.	REF.NO.	DESCRIPTION
		CABINET PARTS
12-1082		Telescoping Ant. Mtg. Brkt.
14-1203		Model G500 Portable Cab.
17-67		Telescoping Ant. Rod Retaining Clamp
19-134		Wavemagnet Cable Retaining Clip
36-42		Cab. Handle
46-806		Ant. Knob (part of S-15802)
54-211		Speed Nut (6 used)
54-295		Wavemagnet Retaining Nut (#6-32)
54-296		Wavemagnet Retaining Nut (#10-32)
57-1052		Cab. Front Panel
57-1495		Emblem Plate
70-6		#8 x 1 1/4 R.H. Wood Screw
70-131		#4 x 1/2 Phillips B.H. Wood Screw (4 used)
83-1122		Push Button Felt Strip
93-684		1/16 x 5/32 x 5/8 Black Felt Washer (2 used)
93-721		1/16 x 25/64 x 5/16 Black Felt Washer (2 used)
97-367		Handle Mouting Stud (2 used)
114-197		#10 x 3/4" Hex. Slotted Washer Hd. S.T. Screw (2 used)
156-22		Door Latch (Upper Half)
156-23		Door Latch (Lower Half)
157-7		Strike Fastener (2 used)
157-8		Strike Fastener (2 used)
159-48		Snap Button (2 used)
159-49		Snap Button (6 used)
192-129		Dial Crystal
199-119		Ant. Insulating Sleeve
202-734		Instruction Book & Station Log
		FREQUENCY BAND SWITCH ASSEMBLY
S-15786		Band Sw. Brkt., & Coil Assem. (Complete)
S-15871	L23	R. F. Coil Assembly (16M)
S-15872	L22	R. F. Coil Assembly (19M)
S-15873	L21	R. F. Coil Assembly (25M)
S-15874	L20	R. F. Coil Assembly (31M)
S-15875	L19	R. F. Coil Assembly (49M)
S-15876	L13	Antenna Coil Assembly (16M)
S-15877	L12	Antenna Coil Assembly (19M)
S-15878	L11	Antenna Coil Assembly (25M)
S-15879	L10	Antenna Coil Assembly (31M)
S-15880	L9	Antenna Coil Assembly (49M)
S-15881	L18	Oscillator Coil Assembly (16M)
S-15882	L17	Oscillator Coil Assembly (19M)
S-15883	L16	Oscillator Coil Assembly (25M)
S-15884	L15	Oscillator Coil Assembly (31M)
S-15885	L14	Oscillator Coil Assembly (49M)
S-16047	L24	Antenna Loading Coil Assembly
12-1616		Band Switch Mounting Bracket
22-3		.01 Mfd. Ceramic 500V
22-1390		470 Mmfd. Mica. 500V
22-1392		25 Mmfd. Ceramic 500V
22-1740		150 Mmfd. Ceramic 500V
22-1839		.001 Mfd. 200V
22-1953		10 Mmfd. Ceramic 500V
63-1842		22K Ohm 1/2W 20% Ins. Res.
85-459	S1	Band Switch
		VOLTAGE ADAPTOR
S-15715		Voltage Adaptor Assembly (Complete)
57-1564		Voltage Indicator Plate
58-182		Two Prong Plug
63-2020		620 Ohm W.W. 10% 15W Incl.
63-2021		1200 Ohm W.W. 10% 5W Incl.
85-473	S4	Three Position Sw.
112-784		Thumb Screw
212-9	SE-2	Selenium Rectifier

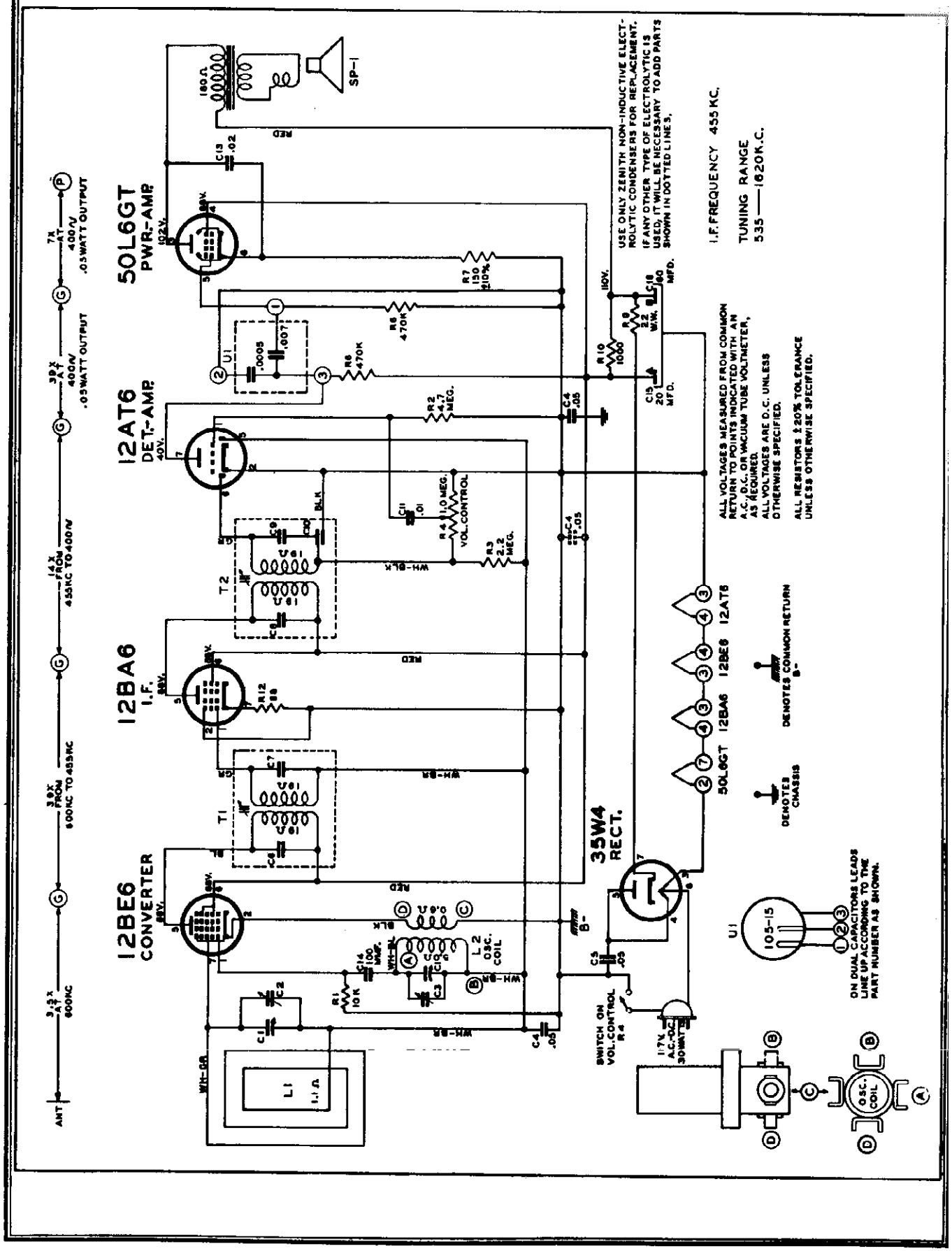
50L6GT
PWR-AMP
12AT6
DET.-AMP
12BA6
I.F.
12BE6
CONVERTER
35W4
RECT.
SP-1
180Ω
T1
T2
L1
L2
OSC. COIL
U1
105-15
SWITCH ON VOL. CONTROL R4
117V. A.C.-D.C. 30WATT
I.F. FREQUENCY 455 KC.
TUNING RANGE
535 — 1620 K.C.
ALL VOLTAGES MEASURED FROM COMMON RETURN TO POINTS INDICATED WITH AN A.C., D.C. OR VACUUM TUBE VOLTMETER, AS REQUIRED.
ALL VOLTAGES ARE D.C. UNLESS OTHERWISE SPECIFIED.
ALL RESISTORS ±20% TOLERANCE UNLESS OTHERWISE SPECIFIED.
USE ONLY ZENITH NON-INDUCTIVE ELECTROLYTIC CONDENSERS FOR REPLACEMENT. IF ANY OTHER TYPE OF ELECTROLYTIC IS USED, IT WILL BE NECESSARY TO ADD PARTS SHOWN IN DOTTED LINES.
ON DUAL CAPACITORS LEADS LINE UP ACCORDING TO THE PART NUMBER AS SHOWN.
DENOTES CHASSIS
DENOTES COMMON RETURN B-
ANT
3.3X AT 600KC
30X FROM 600KC TO 455KC
14X FROM 455KC TO 400KC
39X AT 400KC
7X AT 400KC
.05 WATT OUTPUT
.05 WATT OUTPUT
50L6GT 12BA6 12BE6 12AT6

©John F. Rider

PARTS LIST

PART NO.		DIAL ASSEMBLY
26-432		Dial Scale
59-236		Dial Pointer
78-515		Tuning Shaft
80-209		Dial Cord Tension Spring
188-32		Retaining Ring
S-14843		Dial Cord & Eyelet Assem.
		COILS & CHOKES
95-1101	T-1	1st I. F. Transformer
95-1102	T-2	2nd I. F. Transformer.
S-14842	L-2	Oscillator Coil Assem.
		CONDENSERS
22-5	C-14	110 MMfd. 500V
22-198	C-11	.01 Mfd. 600V
22-829	C-4	.05 Mfd. 200V
22-1379	C-13	.02 Mfd. 400V
22-1017	C-5	.05 Mfd. 400V
22-1804	C15, 16	Dry Electrolytic 60 x 20 Mfd. 150V
22-2152	C-1	Two Section Gang
105-15	U-1	Dual Ceramic
		RESISTORS
63-1977	R-7	150 Ohm W.W. Insl. . . . 1W
63-1218	R-9	22 Ohm W.W. Insl. . . . 1/2 W
63-1574	R-10	1 M Ohm Insl. 1W
63-1660	R-4	Vol. Con. & Sw.
63-1737	R-12	88 Ohm Insl. . . . . 1/2 W
63-1828	R-1	10M Ohm Insl. . . . . 1/2 W
63-1898	R-6	470M Ohm Insl. . . . . 1/2 W
63-1926	R-3	2.2 Megohm Insl. . . . . 1/2 W
63-1940	R-2	4.7 Megohm Insl. . . . . 1/2 W
		MISCELLANEOUS
11-79		Line Cord & Plug (6 Ft.)
14-1010		Model G510Y Plastic Cabinet
14-1209		Model G510 Plastic Cabinet
46-745		Tuning & Vol. Con. Knob (2 used) (Model G510)
46-745Y		Tuning & Vol. Con. Knob (2 used) (Model G510Y).
49-645	SP-1	4" P.M. Speaker.
		206-645 Output Trans.
		203-645 Cone & Voice Coil
54-139		#3/8-32 x 9/16 Palnut
54-211		Speed Nut
54-267		#6-32 x 5/16 Palnut
57-1614		Cabinet Front Grille.
78-275		Socket-Electrolytic
78-611		Socket - Octal Tube (8 Contact).
78-806		Socket - Miniature Tube.
78-807		Socket - Miniature Tube (3 Used).
83-1057		Line Cord Insulating Strip
94-334		Gang Cond. Mtg. Bushing
112-697		#6 x 7/16 Straight Side B.H.S.T. Screw
114-67		#6-32 x 7/16 Hex Acord Hd. M.S.
114-217		#8 x 1/4 Hex Hd. Slotted S.T. Screw
125-17		Rubber Grommet
139		Spk. Baffle.
159-69		Trimount Stud (Cab. Back Mtg.)
168-44		Rubber Bumper (or 166-41)
202-773		Instruction Book
S-14879	L-1	Wavemagnet Assem.
S-16474		Front Grille & Spk. Baffle Assem

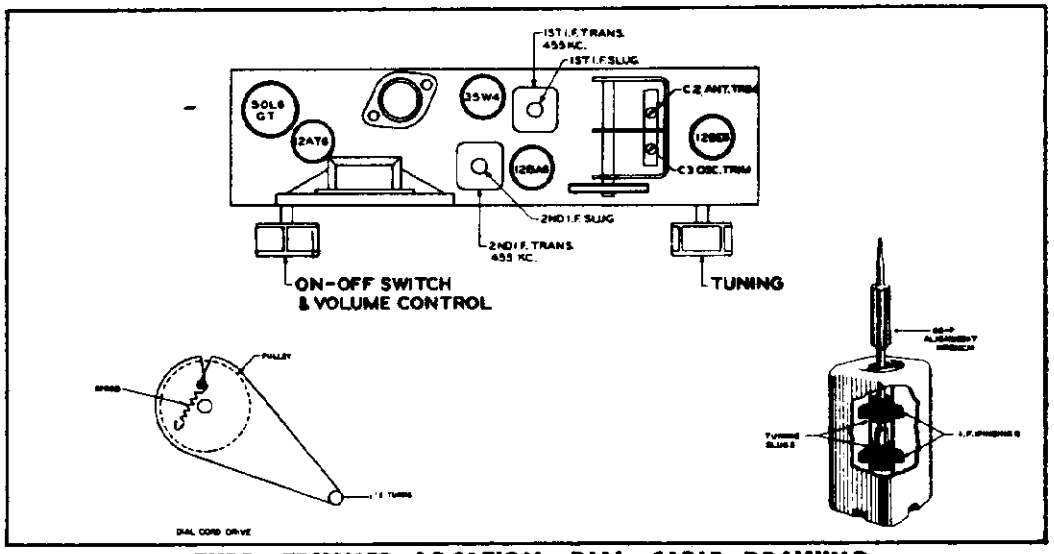

TUBE, TRIMMER LOCATION, DIAL CABLE DRAWING AND DETAILED VIEW OF I. F. TRANSFORMERS.

The I.F. transformers incorporated in this receiver are of the new permeability tuned type. The advantage of an I. F. transformer of this type is its extreme stability under various humidity and temperature conditions. The upper coil is the secondary and the lower the primary. When adjusting these I. F. transformers the tuning wrench 68-7 can be inserted into the top slug, rotated until maximum output is obtained and then dropped down to the lower slug and the same operation repeated. The tuning wrench is so designed that turning one slug does not affect the adjustment of the other.

ALIGNMENT PROCEDURE

OPERATION	CONNECT OSCILLATOR TO	DUMMY ANTENNA	INPUT SIG. FREQUENCY	SET DIAL AT	TRIMMERS	PURPOSE
1	Converter Grid	.5 Mfd.	455 Kc.	600 Kc.	Adjust Primary & Secondary Slugs	For I. F. Alignment
2	One Turn Loop Coupled Loosely to Wave Magnet	--	1600 Kc.	1600 Kc.	C-3	Set Oscillator to Dial Scale.
3		--	1400 Kc.	1400 Kc.	C-2	Align Antenna Stage

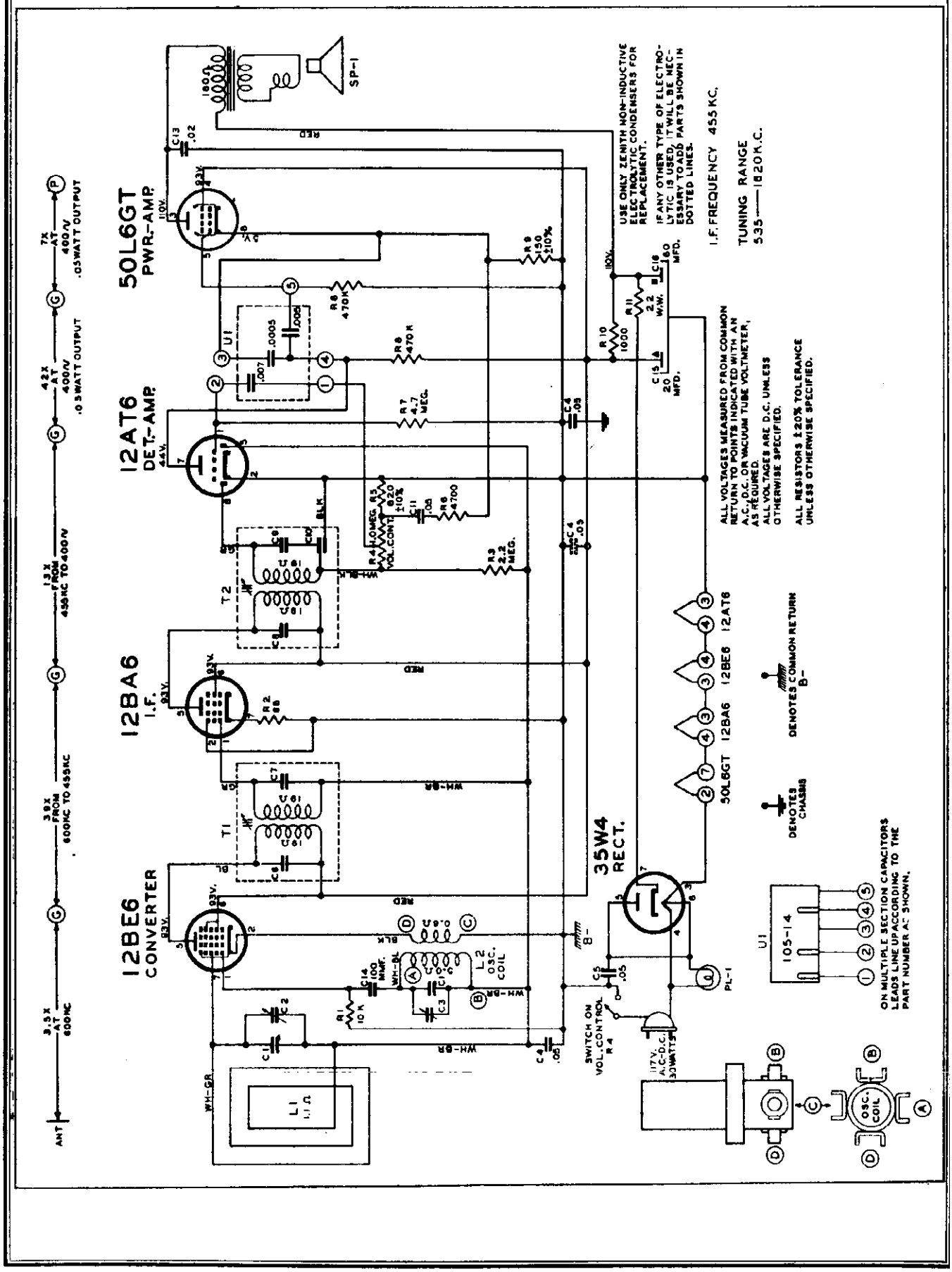
50L6GT
PWR.-AMP.
12AT6
DET.-AMP.
12BA6
I.F.
12BE6
CONVERTER
35W4
RECT.
SP-1
T1
T2
L1
L2
OSC. COIL
ANT
3.5X AT 600KC
3.9X FROM 600KC TO 455KC
1.3X FROM 455KC TO 400KC
4.2X AT 400KC
.05 WATT OUTPUT
7X AT 400KC
.05 WATT OUTPUT
I.F. FREQUENCY 455 KC.
TUNING RANGE 535 — 1620 K.C.
USE ONLY ZENITH NON-INDUCTIVE ELECTROLYTIC CONDENSERS FOR REPLACEMENT.
IF ANY OTHER TYPE OF ELECTROLYTIC IS USED, IT WILL BE NECESSARY TO ADD PARTS SHOWN IN DOTTED LINES.
ALL VOLTAGES MEASURED FROM COMMON RETURN TO POINTS INDICATED WITH AN A.C.-D.C. OR VACUUM TUBE VOLTMETER, AS REQUIRED.
ALL VOLTAGES ARE D.C. UNLESS OTHERWISE SPECIFIED.
ALL RESISTORS ±20% TOLERANCE UNLESS OTHERWISE SPECIFIED.
DENOTES CHASSIS
DENOTES COMMON RETURN B-
ON MULTIPLE SECTION CAPACITORS LEADS LINE UP ACCORDING TO THE PART NUMBER AS SHOWN.
SWITCH ON VOL. CONTROL R4
117V. A.C.-D.C. 30 WATTS
105-14
PL-1

©John F. Rider

PARTS LIST

PART NO.		DIAL ASSEMBLY
26-433		Dial Scale
59-236		Dial Pointer
76-515		Tuning Shaft
78-820		Pilot Light Socket & Wire
80-209		Dial Cord Tension Spring
100-67		Dial Light Bulb - 6.3V .15 amp.
188-32		Retaining Ring
S-14843		Dial Cord & Eyelet Assem.
		COILS & CHOKES
95-1101		1st I. F. Transformer
95-1102		2nd I. F. Transformer
S-14842		Osc. Coil Assem.
		CONDENSERS
22-5	C-14	110 Mmfd. 500V
22-829	C-4	.05 Mfd. 200V
22-1158	C-11	.05 Mfd. 200V
22-1379	C-13	.02 Mfd. 400V
22-1017	C-5	.05 Mfd. 400V
22-1804	C-15, 16	Dry Electrolytic 60 x 20 Mfd. 150V
22-2152	C-1	Two Section Gang
105-14	U-1	Dual Ceramic
		RESISTORS
63-1977	R-9	150 Ohm W.W. Insl. . . . . 1 W.
63-1219	R-11	22 Ohm W.W. Insl. . . . . 1/2 W
63-1574	R-10	10000 Ohm Insl. . . . . 1 W.
63-1660	R-4	Vol. Con. & Sw.
63-1737	R-2	68 Ohm Insl. . . . . 1/2 W
63-1762	R-5	820 Ohm Insl. . . . . 1/2 W
63-1814	R-6	4700 Ohm Insl. . . . . 1/2 W
63-1828	R-1	10M Ohm Insl. . . . . 1/2 W
63-1898	R-8	470M Ohm Insl. . . . . 1/2 W
63-1926	R-3	2.2 Megohm Insl. . . . . 1/2 W
63-1940	R-7	4.7 Megohm Insl. . . . . 1/2 W
		MISCELLANEOUS
11-79		Line Cord & Plug.(6 Ft.)
14-1011		Model G511 Plastic Cabinet
14-1011W		Model G511W Plastic Cabinet
14-1011Y		Model G511Y Plastic Cabinet
43-165		Handle Housing
45-744		Tuning or Vol. Con. Knob (2 used) (G511)
45-744Y		Tuning or Vol. Con. Knob (2 used) (G511W-G511Y)
49-645	SP-1	4" P.M. Speaker
		208-845 Output Trans.
		208-845 Cone & Voice Coil
54-211		Speed Nut
57-1614		Cabinet Front Grille
78-275		Socket - Electrolytic
78-611		Socket - Octal Tube (8 Contact)
78-806		Socket - Miniature Tube
78-807		Socket - Miniature Tube
83-1057		Line Cord Insulating Strip
83-1393		Rubber Strip (Handle)
93-487		1/16 x .144 x 3/8 Steel Washer
94-334		Gang Cond. Mtg. Bushing
112-697		#6 x 7/16 Straight Side H.H.S.T. Screw
114-67		#6-32 x 7/16 Hex Acorn Hd. M.S. (3 Used)
114-217		#8 x 1/4 Hex Hd. Slotted S.T. Screw (2 Used)
125-17		Rubber Grommet
139-83		Spk. Baffle
159-69		Trimount Stud (Cab. Back Mtg.)
166-44		Rubber Bumper (or 166-41)
199-103		Flexible Handle Sleeve (G511)
199-103Y		Flexible Handle Sleeve (G511W-511Y)
202-773		Instruction Book
S-13210		Strip & Rivet Assem. (Handle Strap)
S-16471		Front Grille & Spk. Baffle Assem.
S-14976	L-1	Wavemagnet Assem. (G511-G511Y)
S-14977	L-1	Wavemagnet Assem. (G511W)

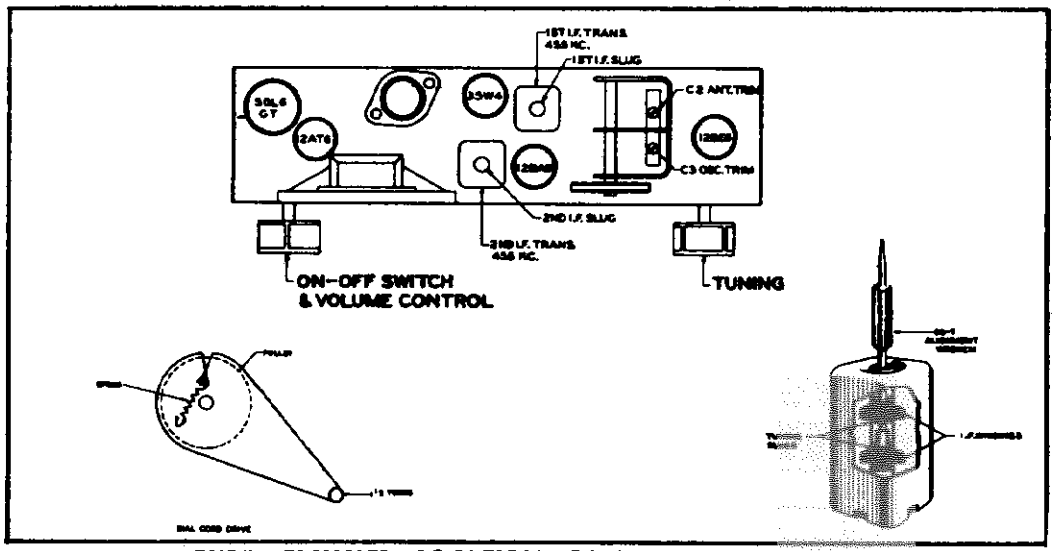

TUBE, TRIMMER LOCATION, DIAL CABLE DRAWING AND DETAILED VIEW OF I. F. TRANSFORMERS.

The I.F. transformers incorporated in this receiver are of the new permeability tuned type. The advantage of an I. F. transformer of this type is its extreme stability under various humidity and temperature conditions. The upper coil is the secondary and the lower the primary. When adjusting these I. F. transformers the tuning wrench 68-7 can be inserted into the top slug, rotated until maximum output is obtained and then dropped down to the lower slug and the same operation repeated. The tuning wrench is so designed that turning one slug does not affect the adjustment of the other.

ALIGNMENT PROCEDURE

OPERATION	CONNECT OSCILLATOR TO	DUMMY ANTENNA	INPUT SIG. FREQUENCY	SET DIAL AT	TRIMMERS	PURPOSE
1	Converter Grid	.5 Mfd.	455 Kc.	600 Kc.	Adjust Primary & Secondary Slugs	For I. F. Alignment
2	One Turn Loop Coupled Loosely to Wave Magnet	--	1600 Kc.	1600 Kc.	C-3	Set Oscillator to Dial Scale.
3		--	1400 Kc.	1400 Kc.	C-2	Align Antenna Stage

©John F. Rider

139-71	Speaker Baffle	199-103Y		Flexible Handle Sleeve (G615W & G615Y)
159-69	Trimount Stud (Cab Back Mtg.) (4 used)	202-793		Instruction Book
166-44	Rubber Bumper (or 166-41)	S-14888	L1	Wavemagnet Assembly
171-10	Pilot Light Lens	S-14978		Wavemagnet Assembly (G615W only)
199-103	Flexible Handle Sleeve			

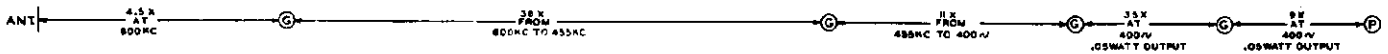

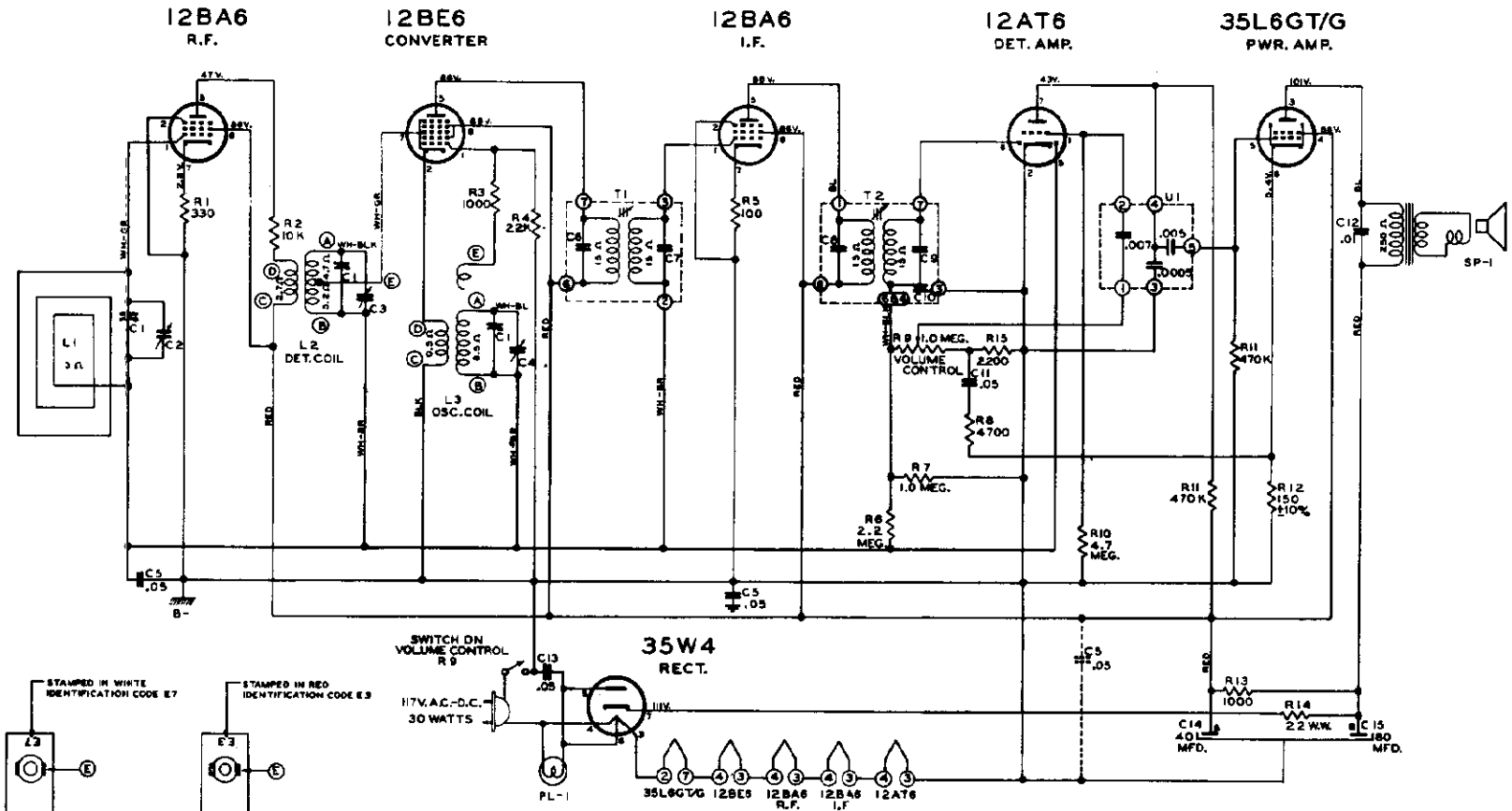

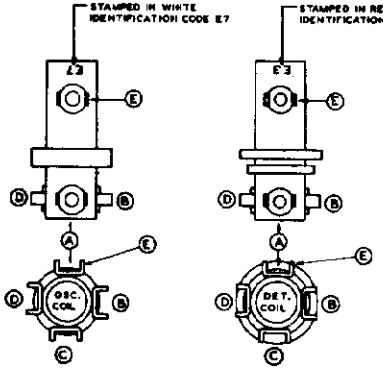

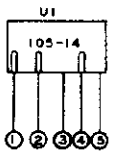

ON MULTIPLE SECTION CAPACITORS LEADS LINE UP ACCORDING TO THE PART NUMBER AS SHOWN.

ALL VOLTAGES MEASURED FROM COMMON RETURN TO POINTS INDICATED WITH AN A.C., D.C. OR VACUUM TUBE VOLTMETER.

ALL VOLTAGES ARE D.C. UNLESS OTHERWISE SPECIFIED.

ALL RESISTORS ±20% TOLERANCE UNLESS OTHERWISE SPECIFIED.

USE ONLY ZENITH NON-INDUCTIVE ELECTROLYTIC CONDENSERS FOR REPLACEMENT.

IF ANY OTHER TYPE OF ELECTROLYTIC IS USED, IT WILL BE NECESSARY TO ADD C5 SHOWN IN DOTTED LINES.

I.F. TRANSFORMER NUMBERING STARTS WITH #1 TERMINAL, AS FIRST TERMINAL CLOCKWISE AND ADJACENT TO MARKER AS VIEWED FROM BOTTOM OF CHASSIS.

I.F. FREQUENCY 455 KC.

TUNING RANGE
535 — 1620 KC.

DENOTES CHASSIS

DENOTES COMMON RETURN B-

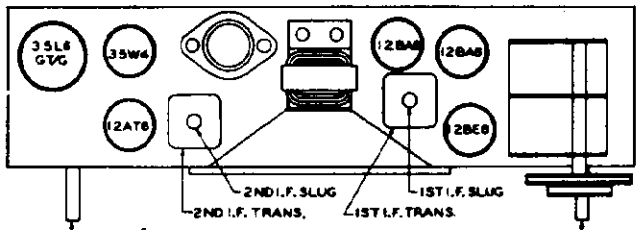

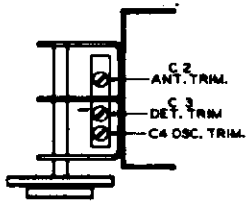

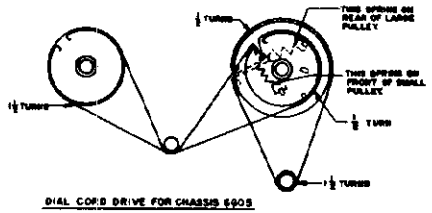

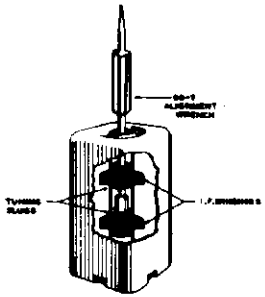

TUBE, TRIMMER LOCATION, DIAL CABLE DRAWING AND DETAILED VIEW OF I. F. TRANSFORMERS.

The I.F. transformers incorporated in this receiver are of the new permeability tuned type. The advantage of an I. F. transformer of this type is its extreme stability under various humidity and temperature conditions. The upper coil is the secondary and the lower the primary. When adjusting these I. F. transformers the tuning wrench 68-7 can be inserted into the top slug, rotated until maximum output is obtained and then dropped down to the lower slug and the same operation repeated. The tuning wrench is so designed that turning one slug does not affect the adjustment of the other.

ALIGNMENT PROCEDURE

OPERATION	CONNECT OSCILLATOR TO	DUMMY ANTENNA	INPUT SIG. FREQUENCY	SET DIAL AT	TRIMMERS	PURPOSE
1	Convertor Grid	.5 Mfd.	455 Kc.	600 Kc.	Adjust Primary & Secondary Slugs	For I.F. Alignment
2	Single Turn Loosely Coupled to Wave Magnet	--	1600 Kc.	1600 Kc.	C-4	Set Oscillator to Dial Scale.
3		--	1400 Kc.	1400 Kc.	C-3	Detector Alignment
4		--	1400 Kc.	1400 Kc.	C-2	Antenna Alignment

PARTS LIST

PART NO.	REF.NO.	DESCRIPTION	
		DIAL ASSEMBLY	
26-434		Dial Scale	
59-238		Dial Pointer	
76-519		Tuning Shaft	
78-822		Dial Light Socket and Wire	
80-69		Dial Cord Tension Spring	
80-209		Dial Cord Tension Spring	
97-284		Dial Cord Guide Stud	
100-67	PL-1	Dial Light Bulb - 6.3 VC .15 Amp.	
188-32		Retaining Ring	
188-60		Retaining Ring	
S-14834		Dial Cord and Eyelet Assy. (Short)	
S-16593		Dial Cord and Eyelet Assy. (Long)	
S-14867		Pointer Pulley and Bushing Assy.	
S-14868		Pointer Pulley Bracket and Stud Assy.	
		COILS & CHOKES	
95-1101	T1	1st I.F. Transformer	
95-1102	T2	2nd I.F. Transformer	
S-14832	L2	Detector Coil Assembly	
S-14833	L3	Oscillator Coil Assembly	
		CONDENSERS	
22-178	C-11	.05 Mfd.	200V
22-829	C-5	.05 Mfd.	200V
22-1182	C-12	.01 Mfd.	400V
22-1017	C-13	.05 Mfd.	400V
22-1805	C-1	Three Section Gang	
22-1808	C-14,15	Dry Electrolytic 80 x 40 Mfd.	150V
105-14	U-1	Multiple Capacitor Unit	
		RESISTORS	
63-1977	R12	150 Ohm Insulated	1W
63-1219	R14	22 Ohm W.W. Insulated	1/2W
63-1574	R13	1M Ohm Insulated	1W
63-1664	R9	Volume Control and Switch	
63-1744	R5	100 Ohm Insulated	1/2W
63-1765	R1	330 Ohm Insulated	1/2W
63-1786	R3	1M Ohm Insulated	1/2W
63-1814	R8	4700 Ohm Insulated	1/2W
63-1828	R2	10M Ohm Insulated	1/2W
63-1842	R4	22M Ohm Insulated	1/2W
63-1898	R11	470M Ohm Insulated	1/2W
63-1912	R7	1 Megohm Insulated	1/2W
63-1926	R6	2.2 Megohm Insulated	1/2W
63-1940	R10	4.7 Megohm Insulated	1/2W
63-1800	R15	2200 Ohm Insulated	1/2W
		MISCELLANEOUS	
11-85		Line Cord and Plug	
14-1015		Model G615 Plastic Cabinet	
14-1015W		Model G615W Plastic Cabinet	
14-1015Y		Model G615Y Plastic Cabinet	
43-165		Handle Housing	
46-744		Tuning & Vol. Con. Knob (2 used)	
46-744Y		Tuning & Vol. Con. Knob (2 used) (G615 & G615Y)	
49-643	SP-1	5 1/4" P. M. Speaker	
		206-643 Output Trans.	
		208-643 Cone and Voice Coil	
54-30		8-32 x 5/16 Hex Nut (Spk. Mtg.)	
54-129		Speed Nut (Used on 26-411 and 57-1409)	
57-1619		Cabinet Front Plate	
78-275		Socket Electrolytic	
78-611		Socket Octal Tube (8 Contact)	
78-806		Socket Miniature Tube	
78-807		Socket Miniature Tube (4 used)	
83-1057		Line Cord Insulating Strip	
83-1165		Handle Strap	
83-1166		Handle Strap (Slotted)	
83-1393		Handle Strip (Rubber)	
93-138		Black Felt Washer	
94-334		Gang Cond. Mtg. Bushing	
112-697		#6 x 7/16 Straight Side B.H.S.T. Screw	
114-291		#8-32 x 7/16 Hex Hd Slotted M.S. (Spk. Mtg.)	
125-17		Rubber Grommet	

©John F. Rider

©John F. Rider

TO THE SERVICE MAN:

The 4F40 chassis is an AC, DC or battery operated superheterodyne. The chassis is isolated from the DC circuit, and all measurements must be made from a common negative point. The most convenient place to reach this negative point is the terminal strip to which C17 is connected. When the change over Switch S1 is in AC position, the DC resistance from chassis to any circuit must be almost infinite. If any circuit becomes grounded a hum will result. Microphonic tubes will cause audio howl. Check the 1R5 and 1S5.

The wavemagnet is connected to the chassis by two wires that pass through the hollow dial pivots. If the R.F. becomes weak or dead, check the D.C. resistance of the wavemagnet. This D.C. resistance should be approximately .9 ohm. If it is open check the wavemagnet.

IF Alignment: Remove the chassis from the cabinet and arrange the units so that the wavemagnet can be connected. All the connections and adjustments can be made from the top of the chassis. Connect a signal generator, through a .1 mfd. dummy antenna, to the converter grid and B - (common return). Connect an output meter across the voice coil of the speaker (two lugs provided). Set the signal generator to 455 Kc. and adjust L3, L4, L5 and L6 for maximum indication on the output meter. Always keep the signal output from the generator just high enough to get an indication, otherwise excessive loading may result.

RF Alignment: Connect a two turn loop across the leads of the signal generator, loosely couple this loop to the wavemagnet. Set the signal generator and the dial pointer of the receiver to 1600 Kc. and adjust C3 oscillator trimmer to resonance. Set the signal generator and dial pointer to 1400 and adjust C2 antenna trimmer to resonance. These trimmers are on the top of gang condenser. Check operation and re-install set in cabinet. Tune in a weak station near 1400 Kc. or use background noise and readjust antenna trimmer for maximum sensitivity.

TUBE, TRIMMER LOCATION

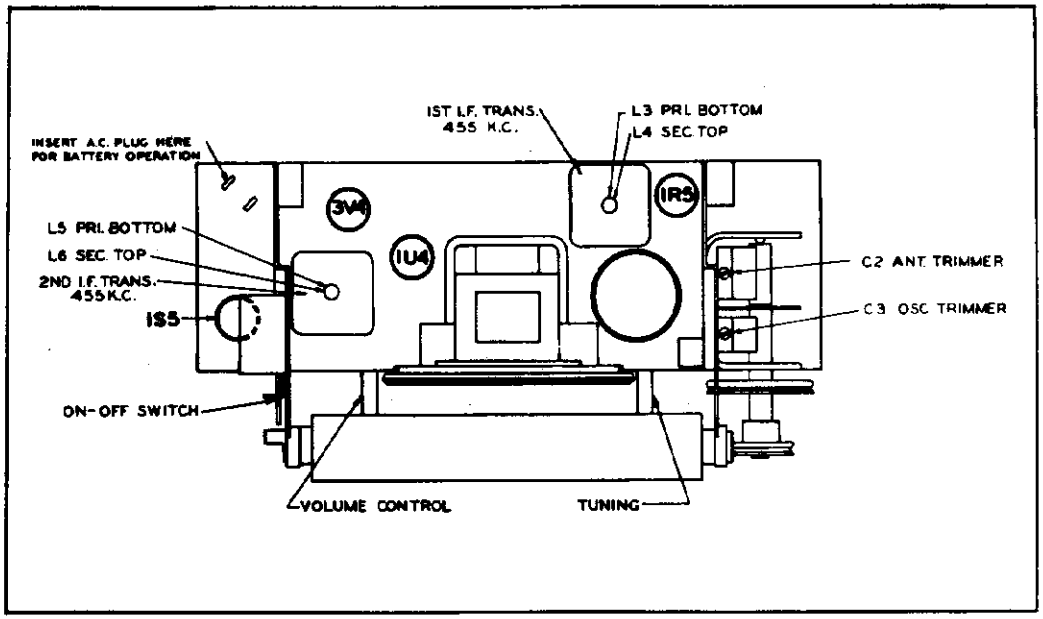

ALIGNMENT PROCEDURE

OPERATION	CONNECT OSCILLATOR TO	DUMMY ANTENNA	INPUT SIG. FREQUENCY	BAND	SET DIAL TO	TRIMMERS	PURPOSE
1	Converter Grid	.1 Mfd	455 Kc.	BC	600 Kc.	L3,4, 5 & 6	I.F. Alignment
2	Two turns loosely coupled to Wavemagnet		1600 Kc.	BC	1600 Kc.	Osc. Trim. C3	Set Oscillator to scale
3	Two turns loosely coupled to Wavemagnet		1400 Kc.	BC	1400 Kc.	Ant. Trim. C2	Align Wavemagnet

MODEL 4G903,
Ch. 4F40

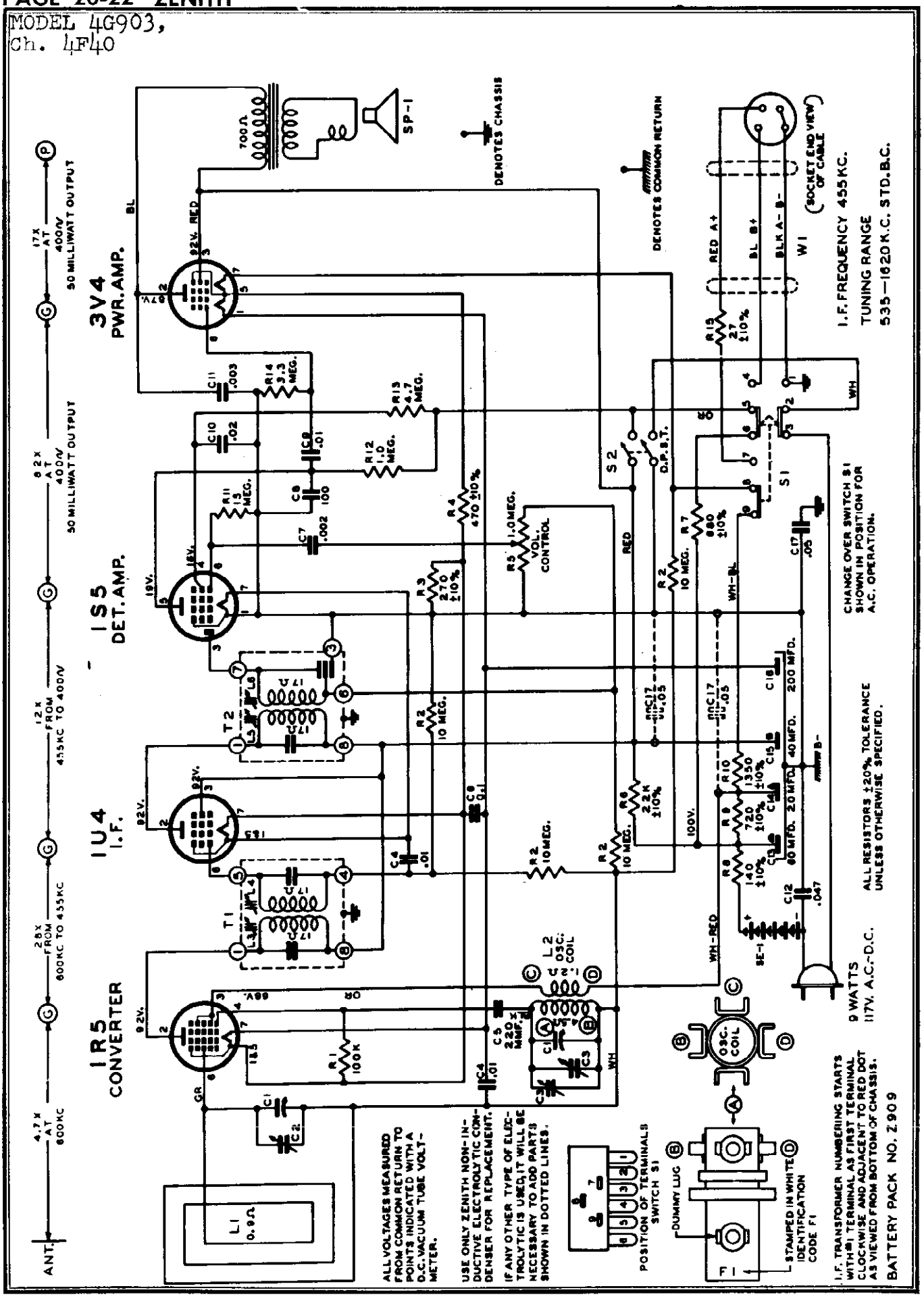

©John F. Rider

DIAL CABLE DRAWING

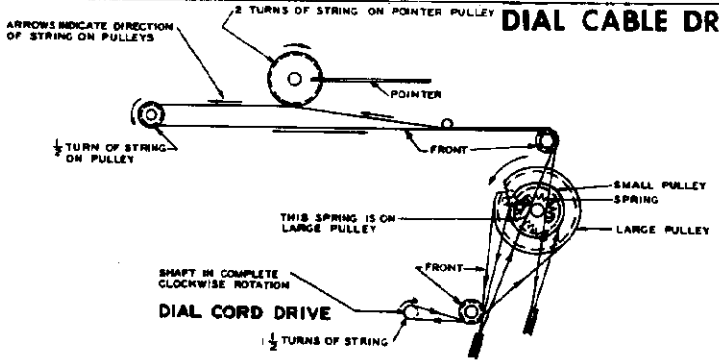

On receivers using Tuning Gang #22-2032, Dial String Assemblies #S-15440 (short) and #S-15441 (long) must be used.

DIAL CABLE DRAWING

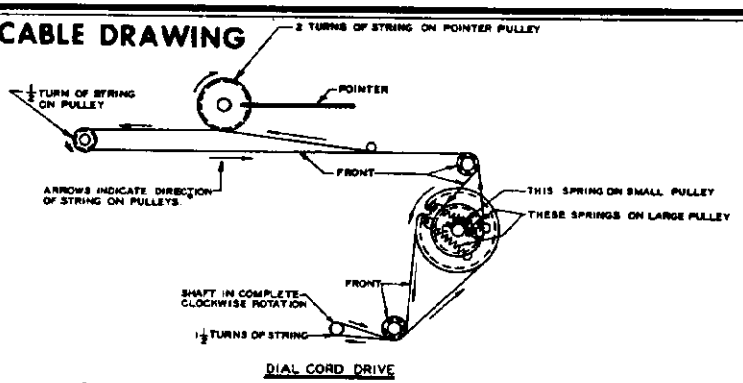

DIAL CORD DRIVE

On receivers using Tuning Gang #22-2108, Dial String Assemblies #S-15440 (short) and #S-16106 (long) must be used.

PARTS LIST

PART NO.	REF.NO.	DESCRIPTION	
		DIAL ASSEMBLY	
12-1554		Tuning Shaft Bracket	
26-420		Dial Scale	
46-785		Tuning & Vol. Control Knob (2 Used)	
57-1490		Emblem Plate	
57-1493		Trim Plate	
57-1513		Emblem Plate (Y Model only)	
57-1514		Trim Plate (Y Model only)	
76-540		Tuning Shaft	
80-209		Dial Cord Tension Spring (3 Used)	
93-978		Felt Washer (Used behind Pointer Assem.)	
188-32		Retaining Ring (Used on 76-540)	
S-15430		Pointer & Pulley Assem.	
S-15440		Dial Cord Assem. (Short)	
S-15441		Dial Cord Assem. (Long)	
S-16016		Dial Cord Assem. (Long)	
		COILS & CHOKES	
95-1132	T1	1st. I. F. Transformer	
95-1133	T2	2nd. I. F. "	
S-15429	L2	Osc. Coil Assem.	
		CONDENSERS	
22-3	C9	.01 Mfd. (Ceramic Disc.)	500V
22-182	C5	220 Mmfd. (Molded Mica)	500V
22-326	C11	.003 Mfd.	400V
22-492	C7	.002 "	600V
22-826	C4	.01 "	200V
22-827	C6	.1 "	200V
22-829	C17	.05 "	200V
22-1386	C10	.02 "	200V
22-1669	C8	100 Mmfd.	500V
22-1741	C13,14 15 & 16	Four Section Electrolytic	
22-1775	C12	.047 Mfd. (Molded) (or 22-1914)	400V
22-2032	C1	Two Section Gang	
22-2108	C1	Two Section Gang	
		RESISTORS	
63-1719	R15	27 Ohm 1/2W 10% Ins.	
63-1761	R3	270 " 1/2W 10% Ins.	
63-1771	R4	470 " 1/2W 10% Ins.	
63-1778	R7	680 " 1/2W 10% Ins.	
63-1841	R6	22K " 1/2W 10% Ins.	
63-1870	R1	100K Ohm 1/2W " "	
63-1912	R12	1 Meg Ohm 1/2W 20% Ins.	
63-1933	R14	3.3 Meg Ohm 1/2W 20% Ins.	
63-1940	R13	4.7 " " 1/2W 20% "	
63-1954	R2	10 " " 1/2W 20% "	
63-1961	R11	15 " " 1/2W 20% "	
63-1999	R8	140 Ohm 3W 10% (Zipohm) Ins. (or 63-2014)	
63-2010	R9,10	Two Section Candohm	
63-2013	R5	Volume Control	
		MISCELLANEOUS	
11-104		Line Cord & Plug	
12-1553		Chassis Mtg. Brkt. (2 Used)	
14-1103		Cabinet for 4G903 (Use S-15427)	
14-1103Y		Cabinet for 4G903Y (Use S-15631)	
15-51		Cable Socket Cap & Insulator	
19-99		Coil Mtg. Clip	
19-185		Speaker Baffle Retaining Clip (2 Used)	
24-481		Front Door	
24-482		On-Off Switch Cover	
24-495		Front Door (Y Model only)	
49-658	SP-1	4" P.M. Speaker	
		208-658 Cone & Voice Coil	
		206-658 Output Trans.	
54-30		#8-32 X 5/16" X 7/64" Hex Nut Steel N.P.	
54-34		#6-32 X 1/4" X 3/32 Hex Nut - Steel N.P. (Used on Rectifier)	
54-139		#3/8-32 X 9/16" Palnut-Type 9N Cad. Pl. (Used on Vol. Control)	
54-267		#6-32 X 5/16 Palnut Cad. Pl. (2 Used on I. F. Trans.)	
54-282		Spring Nut-Cad. Pl. (2 Used on Dial Scale & Pointer)	
54-283		Spring Nut Black Oxide (3 Used)	
54-284		Wavemagnet Lead Retaining Nut (2 Used)	
57-1480		Chassis Bottom Plate (Metal)	
57-1491		Latch Plate (Behind Latch)	
57-1494		Cabinet Reinforcing Plate	
61-71		Idler Pulley (6 Used)	
61-136		Idler Pulley (Black)	
64-288		Shoulder Rivet (2 Used on S-15595)	
64-290		Shoulder Rivet (1 Used on 61-71)	
64-303		Shoulder Rivet (1 Used on S-15433)	
78-274		Elect. Cond. Socket	
78-543		Battery Cable Socket (4 Contact)	
78-782		Miniature Tube Socket	
78-806		Miniature Tube Socket	
78-807		Miniature Tube Socket (2 Used)	
80-699		Latch Spring	
83-1600		Handle Strip (Slotted)	
83-1610		Wavemagnet Retaining Strip (2 Used)	
85-450	S1	Power Change-Over Switch	
85-451	S2	On-Off Switch	
94-472		Handle Mtg. Bushing (2 Used)	
112-761		#2 X 1/4" Phill. R.H.S.T. Type Z Steel N.P. (2 Used on Emblem Plate)	
113-18		#6-32 X 5/16 Hex. Hd. Slotted M.S. Steel Cad. Pl. Shakeprf. (2 Used on 85-450)	
113-23		#8-32 X 5/16 Hex Hd. Sl. M.S. Steel Cad. Pl. Int. Shakeprf. Lock (2 Used on S-15633)	
114-159		#6 X 1/4" Hex Hd. S.T. Screw Cad. Pl. (4 Used on S-15437)	
114-311		#6-32 X 1" Hex Hd. Slotted M.S. Steel N.P. (1 Used to Mt. Rectifier	
114-319		#8-32 X 11/16" Hex Hd. Slotted M.S. Steel Cad. Pl. (2 Used to Mt. Handle)	
147-156		Speaker Mtg. Spacer	
156-37		Door Latch	
156-38		Rear Cover Catch (2 Used-Black)	
156-39		Door Latch (Y Model only)	
166-44		Rubber Bumper (Speaker & Gang)	
192-124		Dial Glass	
199-115		Flexible Handle Sleeve (With Cardboard Strips)	
199-116		Paper Sleeve (Used on Wavemagnet Lead)	
202-689		Instruction Book	
212-5	SE-1	Selenium Rectifier (or 212-2)	
S-15427		Cabinet Front & Hinge Assem.	
S-15433		Support Brkt. & Idler Pulley Assem. (Gang & Door)	
S-15434		Wavemagnet Winding Assem.	
S-15438	W1	Battery Cable & Socket Assem.	
S-15473		Speaker Baffle & Grille Cloth Assem. (110-137)	
S-15548		Cabinet Rear Cover Assem.	
S-15549		Handle End Pieces Assem. (2 Used)	
S-15595		Brkt. & Idler Pulley Assem. (Lower)	
S-15631		Cabinet Front & Hinge Assem. (Y Model only)	
S-15632		Cabinet Rear Cover Assem. (Y Model only)	
S-15633		Handle End Pieces Assem. (Y Model only)	

MODELS 6MH889, Ch. 6E89;
DB-48, Hudson

SPECIFICATIONS AND CIRCUIT FEATURES

MODEL 6MH889—CHASSIS 6E89

TUBE COMPLEMENT: 7A7 R.F., 7B8 Converter, 6BA6 I.F., 7B6 Detector, A.V.C., 1st Audio, 6V6GT Beam Power Output, 7Y4 Rectifier.

TUNING RANGE: 540 to 1600 Kilocycles.

AUTOMATIC POSITIONS: 6.

SPEAKER: 6" x 9" Oval Permanent Magnet externally mounted behind instrument panel. Voice coil impedance 3.2 ohms at 400 cycles.

TONE CONTROL: Continuously variable.

POWER OUTPUT: Maximum 4.5 watts. Measured at voice coil.

VIBRATOR: Non-synchronous.

POWER RATING: Current drain 6 amperes.

FUSE: 14 amperes. Type SFE-14.

SENSITIVITY: 4 Microvolts at one watt output.

I.F. FREQUENCY: 265 Kilocycles.

WARRANTY AND SERVICE

The DB48 Hudson Receiver is covered by warranty against defect in material and workmanship for a period of 90 days after retail delivery.

This warranty covers a receiver installed at the factory or a receiver installed in the field as an accessory.

IMPORTANT

A warranty registration tag is furnished with each receiver. This tag must be filled in and attached to the unit at the time of retail delivery and must accompany the receiver when service during the warranty period is expected by the customer or dealer. Otherwise regular charges for labor and material prevail. All warranty labor claims must be made to the Hudson Dealer. Do NOT send claims to the radio manufacturer. Defective parts in warranty will be replaced, no charge to you, by the nearest Zenith Distributor.

OPERATING INSTRUCTIONS

OFF-ON SWITCH AND VOLUME CONTROL

To turn the receiver on, turn the volume control knob to the right until it clicks and the dial is illuminated. Allow the receiver to reach operating temperature. (Approximately 20 seconds.) To increase the volume, continue to turn this control knob to the right. To turn the receiver off turn the volume control knob to the left until it clicks.

TONE CONTROL

The tone control is located directly behind the volume control knob (Fig. 1). Rotating this control to the right or left will change the tone of the receiver. Tuning to the right will emphasize the high notes, while turning to the left will emphasize the bass notes.

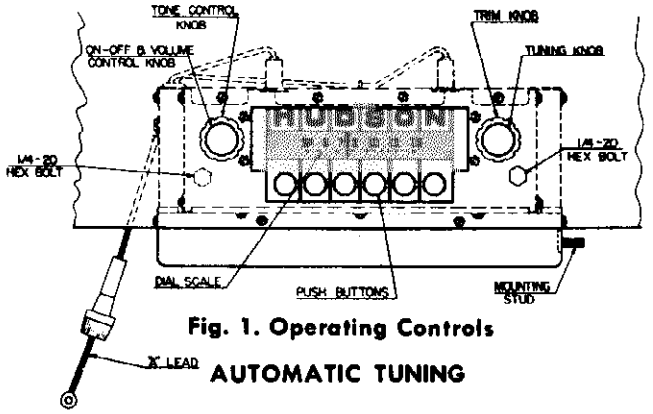

Fig. 1. Operating Controls

AUTOMATIC TUNING

There are six automatic tuning positions, each of which may be adjusted to any desired station. In order to simplify the identification of the stations, it is advisable to set the automatic tuning mechanism in sequence according to frequencies of the stations, beginning with the station broadcasting on the lowest frequency, and progressing to the station broadcasting on the highest frequency. If the positions have not been previously adjusted, proceed as follows:

1. Loosen the first push button by turning it counter-clockwise with your fingers, not more than two turns. If the push button is completely unscrewed, the plunger assembly, inside the receiver, may fall apart. Then it will be necessary to remove the radio from the car, open the case, and reassemble the plunger.

2. Turn the manual tuning control knob (Fig. 1) to tune in the desired station. Carefully tune to the middle of the signal for clearest reception.

3. Push the first push button in as far as it will go. Release the button, and tighten securely by turning it clockwise with the fingers.

4. Repeat the above procedure for the remaining five push buttons.

MANUAL TUNING

To tune manually it is only necessary to turn the manual tuning knob (on the right side of the receiver, see Fig. 1). Tune to exact frequency for the best tone quality. This can be done at any time without disturbing the automatic setting

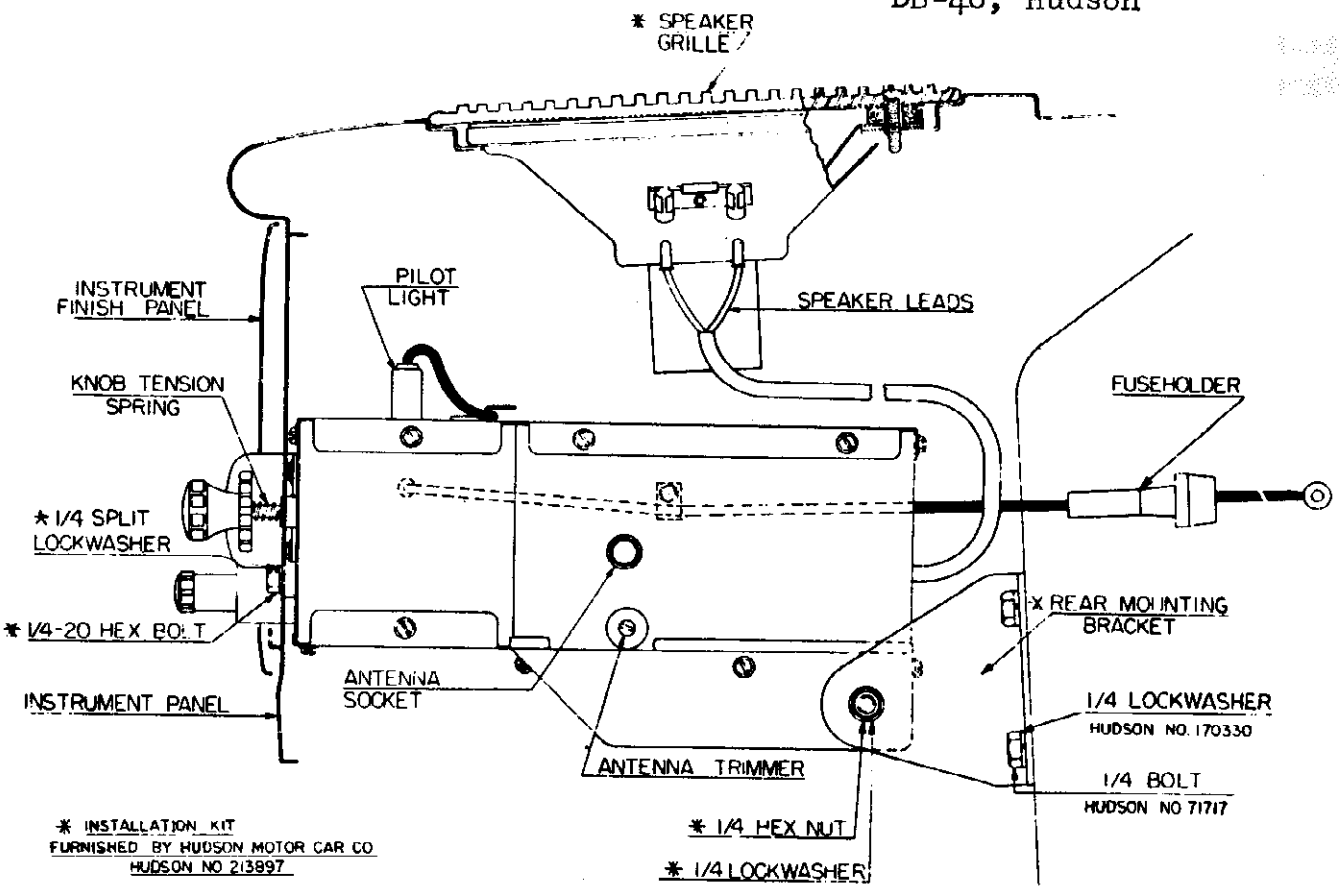

Fig. 2. Mounting Details and Connections

INSTALLATION INSTRUCTIONS

1. Install the antenna. (Complete instructions are furnished with each kit.)
2. Remove door on left hand side of instrument panel by removing the three screws from the back.
3. Remove ornament from center of trim panel above radio opening by means of removing the two face screws.
4. Remove the instrument finish panel and remove the escutcheon plug from the panel.
5. Remove the two bolts, Hudson No. 71717, from the fire wall and install the rear mounting bracket No. 12-1410. Do not tighten the bracket at this time. (Fig. 2.)
6. With the dial end of the receiver up, push the receiver up between the instrument panel and the air hopper. Turn the radio until the knob shafts slide through the openings in the instrument panel and the tapped spacers provided on the front plate of the set line up with the two corresponding holes in the instrument panel. Bring the receiver forward as far as it will go. (Fig. 2.)
7. With the receiver held in this position start the two ¼ x 20 x ½ fillister head screws, with lockwashers, into the holes.
8. Slip the elongated hole in mounting bracket over the stud on the set and install lockwasher and nut.
9. Before locking the receiver securely in position, place the instrument finish panel into position over the clock and speedometer and note whether or not the radio and trim panel are centered correctly. If not, move the radio until the dash trim panel and radio dial escutcheon assembly are in alignment. Then permanently fasten set in position by tightening the two front screws and the nut and bolts on the rear mounting bracket. Replace instrument finish panel and fasten securely.
10. Connect the "A" lead of the set to the battery terminal of the circuit breaker, mounted on the instrument panel brace over the steering column (Fig. 3).

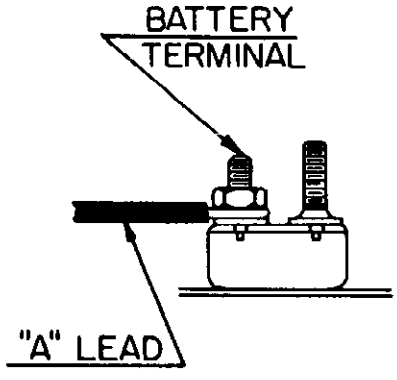

Fig. 3

MODELS 6MH889, Ch. 6E89;
DB-48, Hudson

11. Plug in antenna cable (Fig. 2).
12. Remove speaker cover plate, and pull speaker leads through opening in dash.
13. Plug speaker leads into pin jack mounted on speaker. Make sure green lead plugs into green spotted pin jack.
14. Lower speaker into position, and line up with holes in the instrument panel. Place speaker grille, included in radio package, over speaker, making sure the mounting holes line up, then fasten securely with the four chrome plated screws provided in kit.
15. Place tone control knob onto shaft, put on volume control knob, tighten set screw (Fig. 1). Be sure there is no binding.
16. Place knob tension spring No. 80-594 over the tuning shaft. Put on trim ring and press on tuning control knob as far as it will go. Tighten set screw (Fig. 1).
17. Replace ornament and door.
18. **IMPORTANT:** Turn the receiver on and allow it to operate for approximately fifteen minutes in order for it to reach normal operating temperature. Tune in a weak station near 1200 Kc. With a small screw driver adjust the antenna trimmer, located on the right side of the receiver for maximum volume (Fig. 2).

INTERFERENCE ELIMINATION

IMPORTANT: Use the utmost care in the following operations to insure freedom from motor noise. Be sure that good ground contacts are made between the interference condensers and the car body. If necessary, clean away paint or dirt with emery paper. Tighten all nuts and bolts securely.

1. Remove the mounting screw of the voltage regulator and under this screw mount the condenser No. 22-1537. Connect the lead to the voltage regulator "A" terminal. (Fig. 4.)
2. Install suppressor No. 63-1252 in center of hole of distributor cap. Place high tension lead in top of suppressor. Be sure the suppressor and the lead are fastened securely. (Fig. 5.)
3. Remove bolt on the right side of the ignition coil. Mount condenser No. 22-1537 under this bolt. Connect lead to coil terminal marked (—). (Fig. 6.)

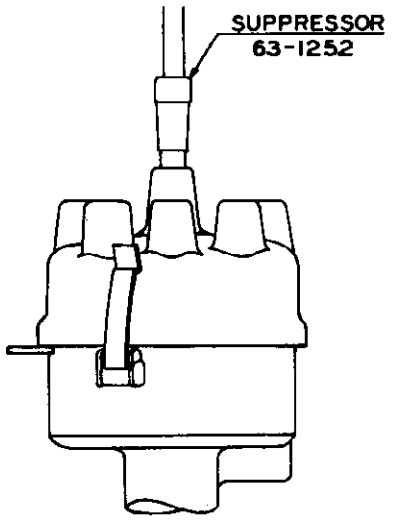

Fig. 5

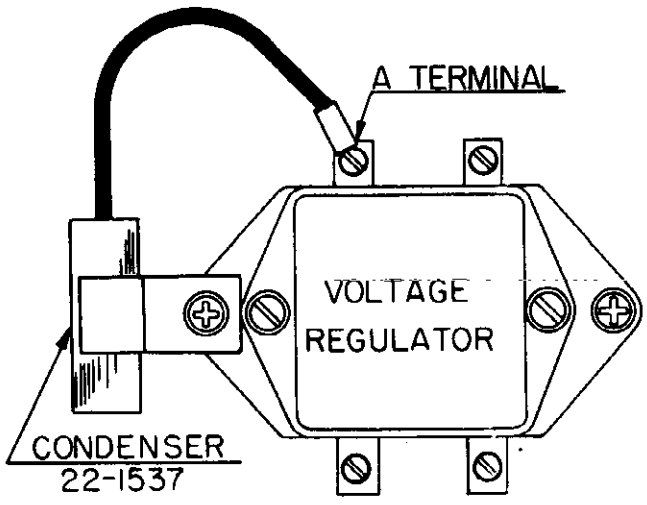

Fig. 4

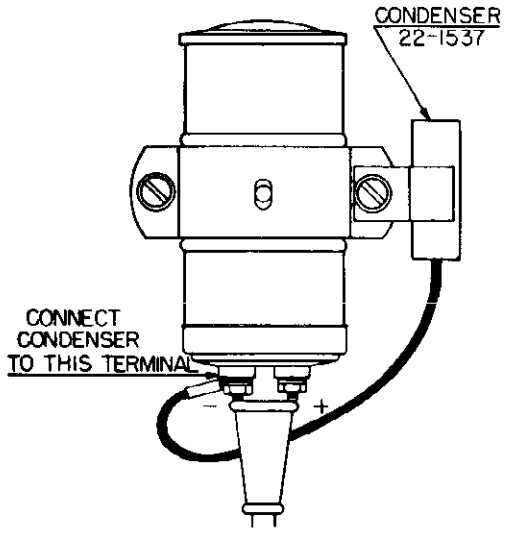

Fig. 6

© John F. Rider

MODELS 6MH689, Ch. 6E89
DB-48, Hudson

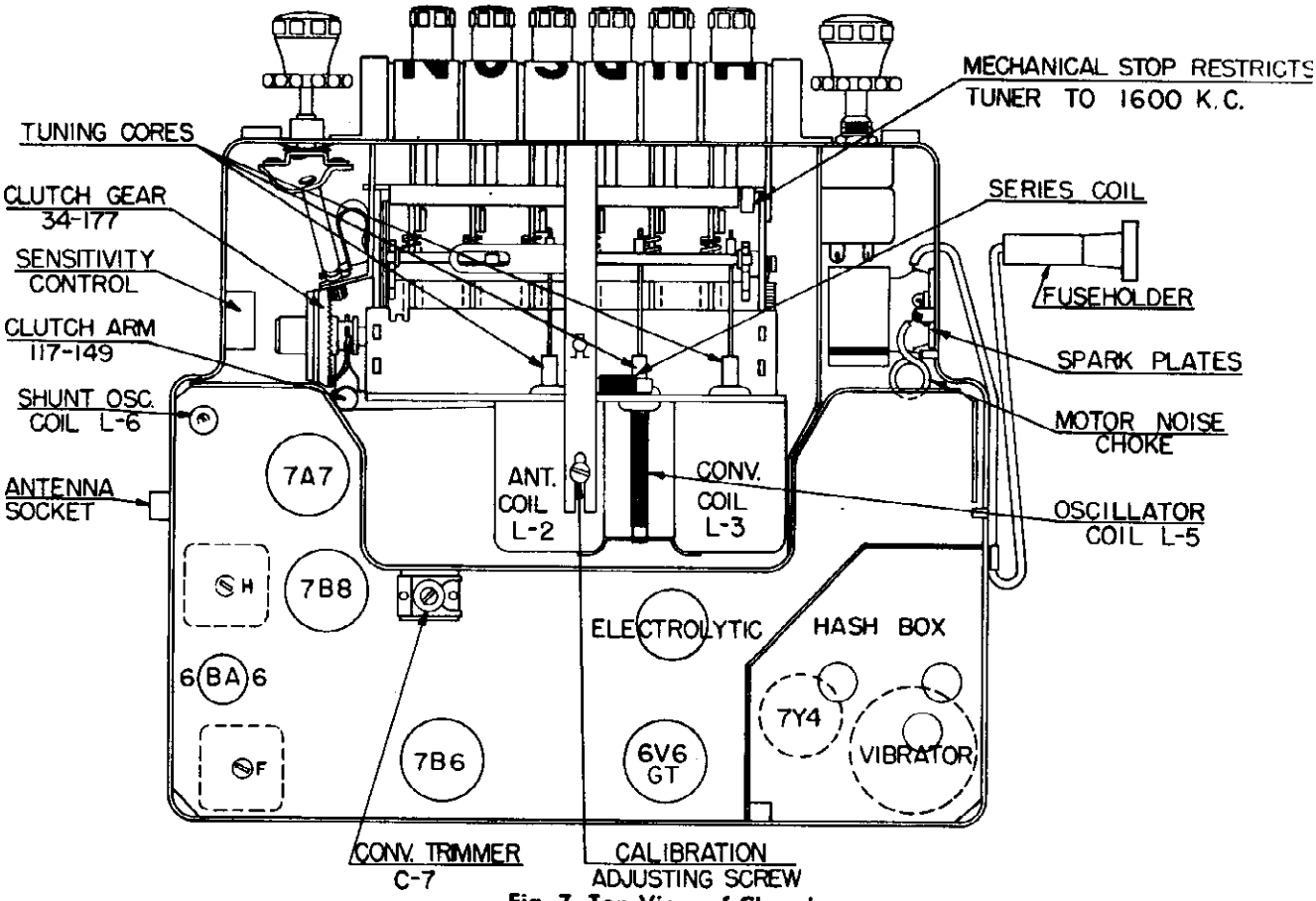

Fig. 7. Top View of Chassis

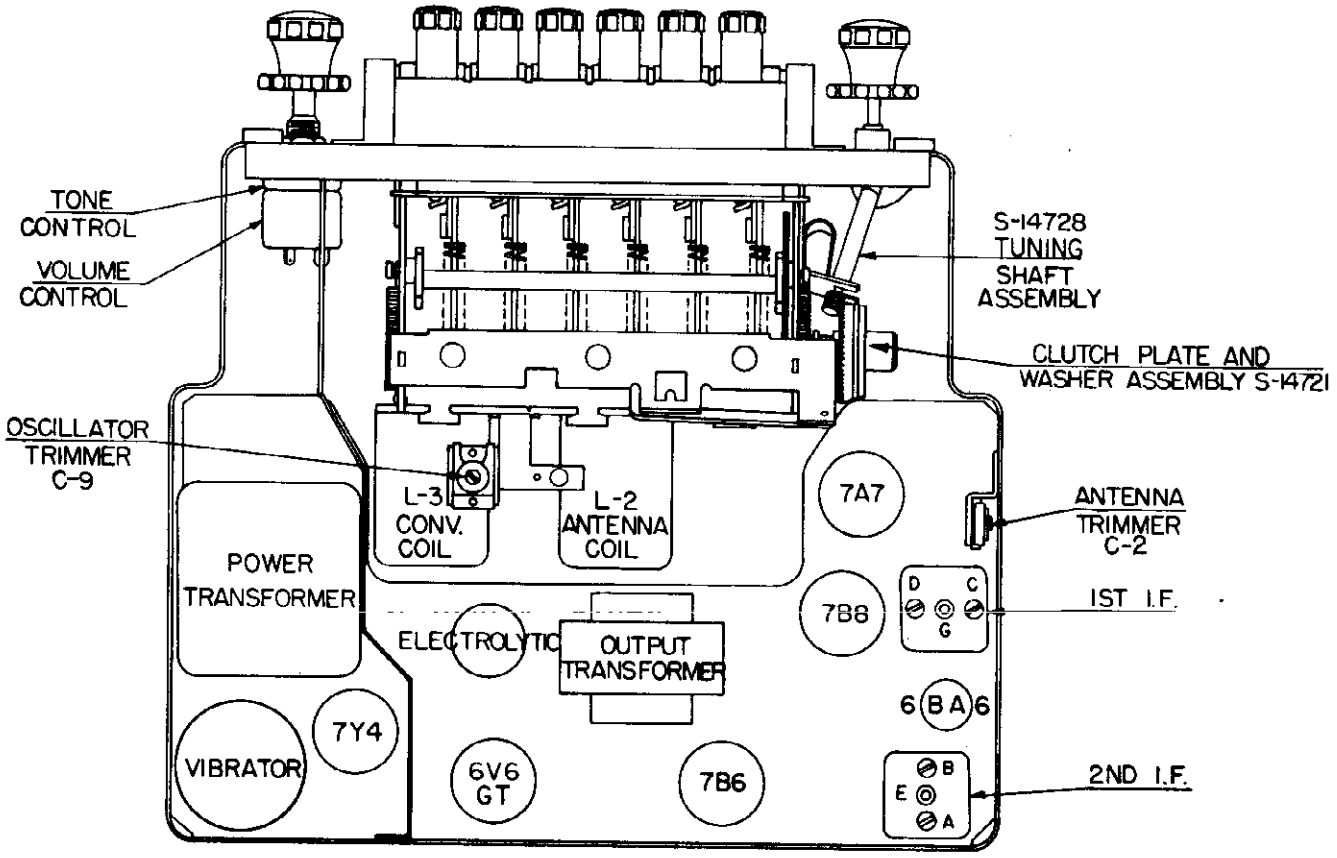

Fig. 8. Bottom View of Chassis

MODELS 6MH889, Ch. 6E89;
DB-48, Hudson

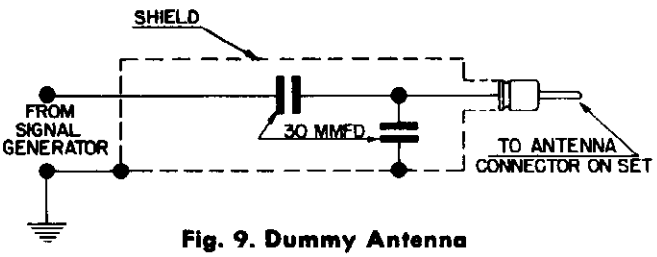

Fig. 9. Dummy Antenna

Fig. 9 shows the schematic of a recommended dummy antenna, closely resembling actual antenna capacity, to be used in series with signal generator leads when aligning the R.F. section of the receiver.

ALIGNMENT

Maximum performance depends on accurate alignment of the receiver; therefore follow these instructions carefully.

CAUTION: Make all alignment adjustment to the receiver with the volume control set at maximum, and the tone control in the treble position. Reduce the signal intensity as much as possible at the signal generator. Connect the output meter across the voice coil.

I.F. ALIGNMENT PROCEDURE

1. Remove top and bottom covers from receiver.
2. Set signal generator to 265 Kc.
3. Apply signal from generator through a .1 Mfd. dummy to 7B8 converter grid. (Pin No. 6 on socket.)
4. Adjust I.F. trimmers A, B, C, and D in order named for maximum output. Repeat the operation to assure accurate alignment. Some units have I.F. transformers that, are slug tuned. In this case adjust I.F. slugs E, F, G, and H in order named for maximum output and repeat the operation to assure accurate alignment. (Figs. 7-8.)

R.F. AND OSCILLATOR ALIGNMENT

1. Connect signal generator leads through dummy, illustrated in Fig. 9, to antenna lead in socket on receiver. This is important.
2. Set signal generator to 535 Kc.
3. Tune set to 535 Kc.
4. Adjust oscillator trimmer C-9 (Fig. 8) for maximum response.
5. Set signal generator to 1400 Kc.
6. Tune set to 1400 Kc.
7. Adjust converter trimmer C-7 (Fig. 8) and antenna trimmer C-2 (Fig. 7) for maximum response.
8. If dial calibration is off after making above adjustments, a correction can be made by tuning eccentric screw at fulcrum of dial pointer. (Fig. 7.)

CORE OR COIL REPLACEMENT ONLY

WARNING: The following adjustments are to be made ONLY if a core or coil is replaced.

The steel clamp collar normally grips the core spring and before a core is screwed in or out this tension must be released.

TO REMOVE CORE:

Remove the steel clamp collar using stubby nosed pliers by pressing the lugs of the collar together. Using core alignment tool, part number S-13064, screw the core spring down to the support bracket. With your fingers, screw the core spring past the bracket and lift out of the coil.

TO REPLACE CORE:

Place the core in the coil, screw the core spring into and past the support bracket. Use core tuning wrench, part number S-13064.

1. Set signal generator to 1675 Kc.
2. Connect signal generator leads through dummy, illustrated in Fig. 9, to antenna receptacle on the receiver.
3. Set receiver dial to 1600 Kc. (maximum high frequency end of dial).
4. Screw the cores completely out of the antenna coil, the converter coil, and the oscillator coil.
5. Adjust oscillator trimmer C-9 (Fig. 8) at 1675 Kc.
6. Adjust converter trimmer C-7, and antenna trimmer C-2 (Figs. 7 and 8) for maximum output reading.
7. Replace cores to their approximate original position.
8. Set signal generator dial and receiver dial to 1400 Kc.
9. Adjust oscillator core L-5 (Fig. 8) to scale at 1400 Kc.
10. Adjust the antenna core L-2, and converter core L-3 (Fig. 7) for maximum output reading.
11. Set signal generator to 600 Kc.
12. "Rock in" shunt oscillator coil L-6 (Fig. 8) for maximum output reading. This should be done only as a last resort. This is the same as rocking in the padder condenser on a general condenser receiver.
13. Check receiver at 1400 Kc. for calibration and gain. If the receiver is off scale or weak, repeat operations 9, 10 and 11.
14. After alignment is complete, the maximum high frequency tuning range should be checked. If the range is greater or less than 1605 Kc., the lug stop near the volume control should be bent to limit the frequency coverage to 1605 Kc.
15. Replace the steel clamp collar over the threaded insulating bushing.

IMPORTANT: After reinstalling the receiver in the car, allow it to operate for approximately 15 minutes to reach normal operating temperature. Extend antenna to maximum. Check the antenna trimmer alignment on a weak station at approximately 1400 Kc.

© John F. Rider

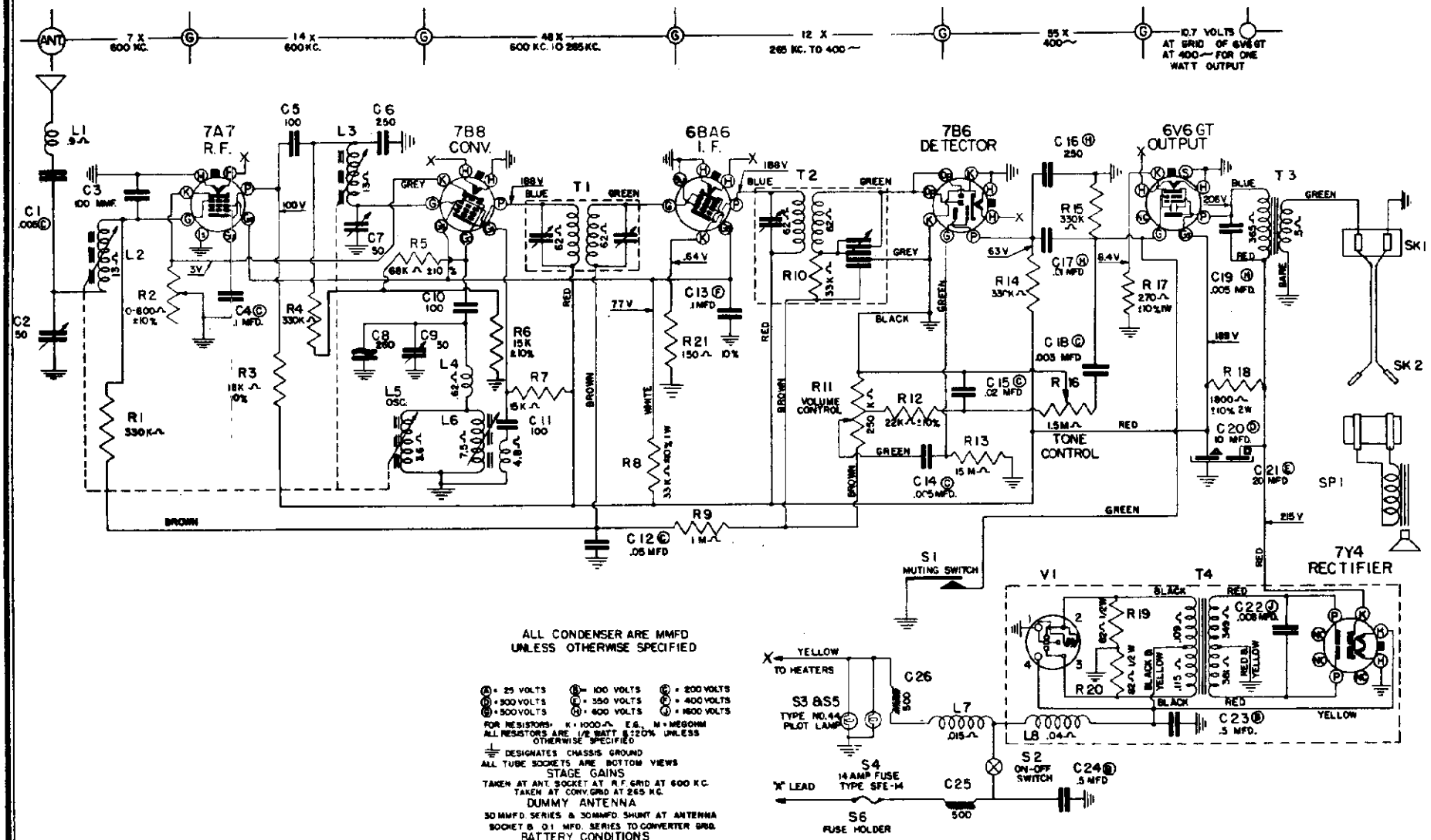

ALL CONDENSER ARE MMFD UNLESS OTHERWISE SPECIFIED

(A) = 25 VOLTS (B) = 100 VOLTS (E) = 200 VOLTS
(C) = 300 VOLTS (F) = 350 VOLTS (I) = 400 VOLTS
(G) = 500 VOLTS (H) = 600 VOLTS (J) = 1600 VOLTS

FOR RESISTORS- K = 1000~ E.G. M = MEGOHM
ALL RESISTORS ARE 1/2 WATT ±20% UNLESS OTHERWISE SPECIFIED

⏚ DESIGNATES CHASSIS GROUND

ALL TUBE SOCKETS ARE BOTTOM VIEWS

STAGE GAINS

TAKEN AT ANT. SOCKET AT R.F. GRID AT 600 KC.
TAKEN AT CONV. GRID AT 265 KC.

DUMMY ANTENNA

30 MMFD SERIES & 30 MMFD SHUNT AT ANTENNA SOCKET & 0.1 MFD. SERIES TO CONVERTER GRID.

BATTERY CONDITIONS

6.3 VOLTS AT STORAGE BATTERY TERMINALS WITH POSITIVE GROUNDED

TEST CONDITIONS

VOLUME CONTROL SET AT MAXIMUM TONE CONTROL SET ON "HIGH" WITH NO INCOMING SIGNAL

VOLTAGES TO READ FROM POINT SHOWN TO CHASSIS WITH 1000 OHM PER VOLT METER

SCHEMATIC DIAGRAM FOR 6 TUBE

HUDSON 6MH889

I.F. 265 KC.
TUNING RANGE 540 KC. TO 1600 KC.

MODELS 6MH889, Ch. 6E89
DB-48, Hudson

MODELS 6MH889,
Ch. 6E89; DB-48
Hudson

PARTS LIST

Diag. No.	Zenith Part No.	Hudson Part No.	Description
			COILS AND CHOKES
L8	20-213	204890	Main Hash Choke
T1	95-1087	215456	1st I.F. Transformer (or 95-1077)
T2	95-1088	215457	2nd I.F. Transformer (or 95-1060)
L1	S-8819	209741	Antenna Motor Noise Choke Assembly
L7	S-11232	209571	Motor Noise Choke Coil Assembly
L2, L3, L5	S-14219	215458	Tuner Coil Unit Assembly (Ant., R.F. and Osc.)
L6	S-14225	215459	Oscillator Shunt Coil Assembly
L4	S-14226	215460	Oscillator Series Coil Assembly
L2	S-14227	215462	Antenna Coil Assembly
L3	S-14227	215462	R.F. Coil Assembly
L5	S-14228	215461	Oscillator Coil Assembly
			CONDENSERS
C13	22-170	204901	.1 Mfd. 400 V.
C16	22-182	204902	250 Mmfd. 500 V.
C4	22-190	209577	.1 Mfd. 200 V.
C12	22-250	204904	.05 Mfd. 200 V.
C3	22-365	215465	100 Mmfd. 500 V.
C19	22-838	204905	.005 Mfd. 600 V.
C1, C14	22-906	204906	.005 Mfd. 200 V.
C6	22-1136	209505	250 Mmfd. 500 V.
C17	22-1170	204910	.01 Mfd. 600 V.
C18	22-1180	209587	.003 Mfd. 200 V.
C15	22-1270	215465	.02 Mfd. 200 V.
C22	22-1448	209579	.008 Mfd. 1600 V.
C20, C21	22-1644	215466	Electrolytic—20 Mfd. 350 V. x 10 Mfd. 300 V. (or 22-1554)
C8	22-1712	215467	260 Mmfd. Compensating
C2	22-1714	215468	Single Section Trimmer (Antenna—50 Mmfd.)
C7	22-1715	215469	Single Section Trimmer (Converter—50 Mmfd.)
C9	22-1716	215470	Single Section Trimmer (Oscillator—50 Mmfd.)
C23, C24	22-1728	215471	.5 Mfd. 100 V.
C5, C10, C11	22-1730	215472	100 Mmfd. (Ceramic) 500 V.

Dia. No.	Zenith Part No.	Hudson Part No.	Description
			RESISTORS
R2	63-1379	209877	Sensitivity Control (or 63-1267)
R8	63-1398	209929	33M Ohm 1 W.
S2, R11, R16	63-1587	215473	Volume Contol, Switch and Tone Control
R18	63-1620	215474	1800 Ohm 2 W.
R17	63-1621	215475	270 Ohm 1 W.
R19, R20	63-1740	215476	82 Ohm ½ W.
R21	63-1750	215477	150 Ohm ½ W.
R7	63-1835	215478	15M Ohm ½ W.
R3	63-1838	215479	18M Ohm ½ W.
R12	63-1841	215480	22M Ohm ½ W.
R10	63-1849	215481	33M Ohm ½ W.
R5	63-1862	215482	68M Ohm ½ W.
R1, R4, R14, R15	63-1891	215483	330M Ohm ½ W.
R9	63-1912	215484	1 Megohm ½ W.
R6	63-1834	215485	15M Ohm ½ W.
R13	63-1961	215486	15 Megohm. ½ W.
			MISCELLANEOUS
	19-158		I.F. Transformer Mtg. Clip
SP1	49-623	213880	P.M. Speaker (6" x 9" Oval Type) (S-14205)
	52-455	215489	Volume Control Cable
	52-452	213873	Battery Cable—Fuse to Ammeter (or 52-474)
	52-472	215488	Speaker Cable and Plug
	52-473	215487	Battery Cable—Fuse to Set
	74-49	213881	Speaker Screen
	78-596	215490	Loktal Tube Socket (4 used)
	78-782	215492	Miniature Tube Socket
	78-796	215493	Antenna Connector Socket
	78-801	215491	Octal Tube Socket
	78-804	215494	Vibrator Socket
	93-888	215486	Vibrator Cushion Washer
T3	95-1030	215497	Output Transformer
T4	95-1066	215498	Power Transformer
	125-16	171277	Rubber Grommet
	125-63	171273	Rubber Grommet (3 used on S-14219)
	114-199	171252	6-32 x 3/16" Hex. H.D. Slotted S.T. Screw

©John F. Rider

PARTS LIST (Continued)

Diag. No.	Zenith Part No.	Hudson Part No.	Description
	126-553	215499	Miniature Tube Shield
	138-24	211640	Speaker Grille (Hudson No. 211640)....Supplied by Hudson
	149-62	215436	Iron Core and Screw (used on S-14225)
V1	190-22	215495	Vibrator
	202-562	213879	Instruction Book (Owner's Manual)
	202-591	215438	Noise Suppression Supplement Sheet
	S-14205		Speaker and Screen Assembly
	S-14210	215439	Case Cover Set Mtg. Stud and Spring Assembly
	S-14458	213897	Installation Parts Kit (Hudson No. 213897). Supplied by Hudson
			INSTALLATION PARTS
	S-14203	213898	Installation Kit—Complete
	46-698	213896	Trim Knob
	46-699	213895	Tone Control Knob
	52-452	213873	Battery Cable—Fuse to Ammeter
	80-594	213894	Knob Tension Spring
S4	136-11	170480	14 Ampere Fuse—Type SFE-14
			DIAL AND TUNING MECHANISM ASSEMBLY
	S-14756	215434	Push Button Knob Assembly (6 required)
	26-391	215440	Dial Scale
	56-228	215442	Cross Arm Guide Rod
	57-1340	215443	Escutcheon
	57-1341	215445	Escutcheon Window Retaining Plate
	59-207	215446	Dial Pointer
	80-379	215447	Pointer Retaining Spring
	80-586	215455	Cross Arm Tension Spring (2 used)
	80-594	213894	Knob Tension Spring
	80-625	215448	Pointer Link Tension Spring

Diag. No.	Zenith Part No.	Hudson Part No.	Description
	93-885	215437	1/32 x .191 x 3/8" Bakelite Washer (2 used on S-14454)
S3 S5	100-36	171113	Dial Light Bulb—Mazda No. 44
	112-699	171251	No. 4-40 x 3/16" R.H.S.T. Screw—Stan-Tap-Cad Pl. (57-1341)
	149-63	215453	Iron Core and Screw (3 used)
	192-114	215444	Escutcheon Window
	S-14212	215449	Tuner Unit Assembly
	S-14215	215451	Pointer Bracket and Stud Assembly
	S-14216	215452	Pointer Drive Link and Stud Assembly
	S-14217	215453	Dial Light Socket and Wire Assembly
	S-14224	215454	Cross Arm and Bushing Assembly
	S-14721		Clutch Plate and Washer
	S-14728		Tuning Shaft, Pinion Gear and Coupling Assembly
S1	S-14733		Muting Switch Assembly
	17-102		Cam Lock
	34-177		Clutch Gear
	64-162		.088 D x 3/32" Rivet
	73-118		No. 6-32 x 1/4" Hex Head Slotted Set Screw
	80-640		Yoke Tension Spring
	80-641		Clutch Release Bar Spring
	80-642		Clutch Spring
	93-921		Tuning Shaft Steel Washer
	93-922		Tuning Shaft Spring Washer
	93-923		Fishpaper Washer
	97-305		Clutch Arm Stud
	117-149		Clutch Lever
	188-111		Retaining Ring

©John F. Rider

MODEL 6MN988, Nash

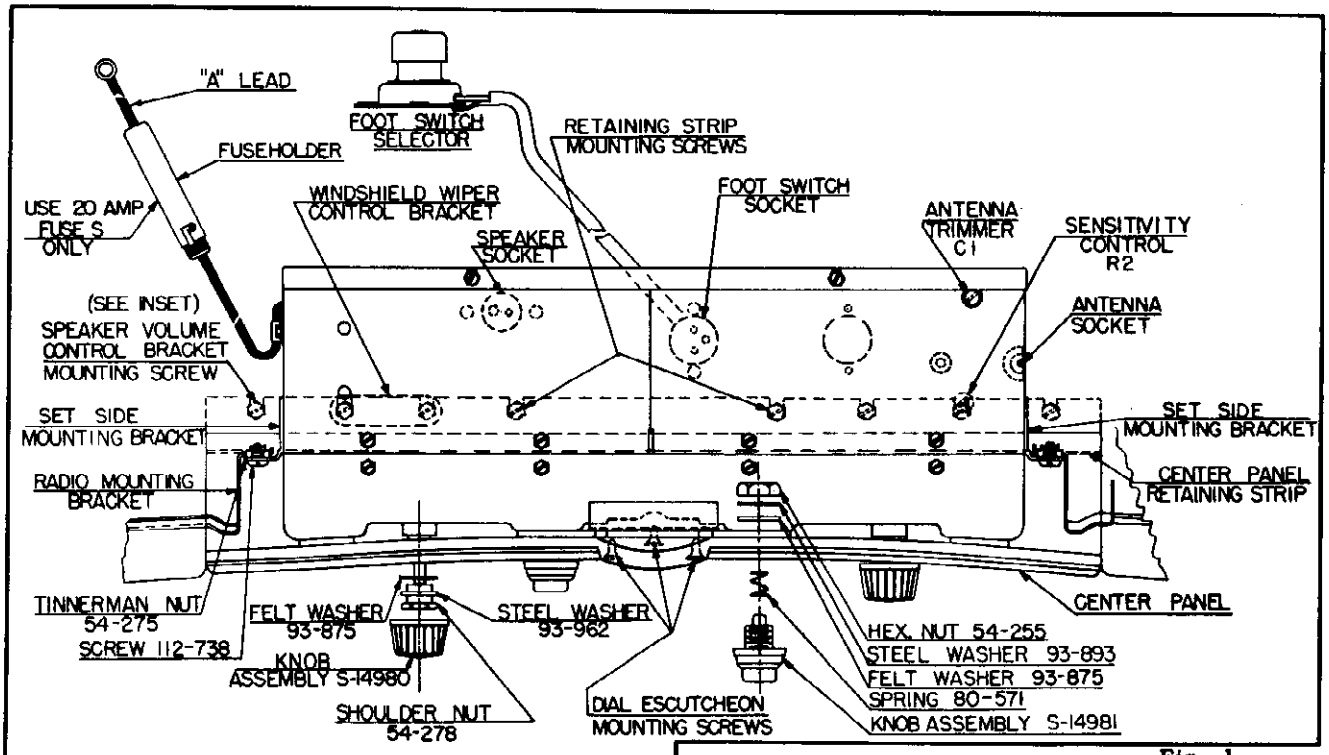

Fig. 1

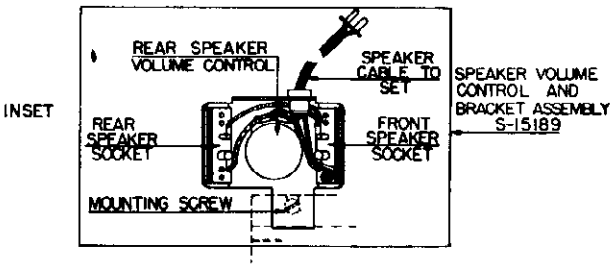

RECEIVER INSTALLATION

Figures 1 and 4, illustrating the installed receiver, the escutcheon plate, and the control knobs, are given here to facilitate removal and reinstallation of this receiver when service or repair is necessary.

To take the receiver from the car, disconnect the rear speaker control bracket, the 'A' lead, speaker cable, antenna cable, and foot switch control cable. Remove the control knobs and mounting nuts, and washers from the center panel. Loosen the 8/32 hex-head retaining strip mounting screws and remove the center panel. Remove the four #112-738 10/32 machine screws from the car radio mounting brackets. (Fig. 1)

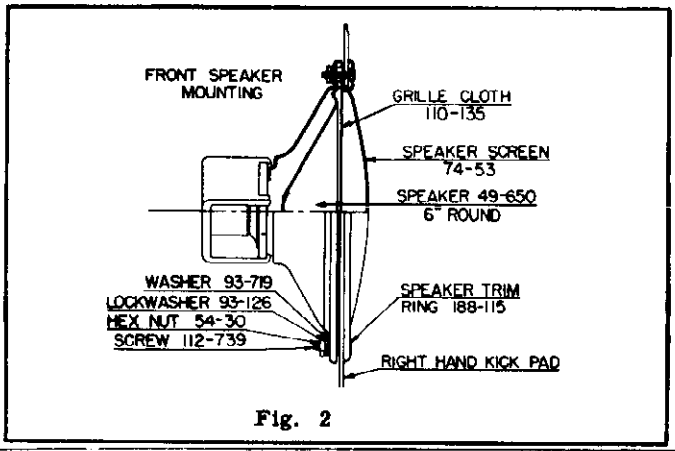

Fig. 2

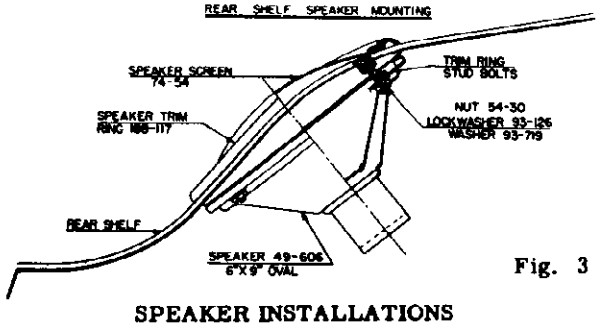

Fig. 3

SPEAKER INSTALLATIONS

To take out front speaker, remove the right side kick pad, and remove the four lock washers #93-126, four nuts #54-30, four screws #112-739, and trim ring #188-115, that holds the speaker to the kick pad. Figure 2.

To take out the rear speaker, remove the four flat washers #93-719, four lock-washers #93-126, and four hex-nuts #54-30, that holds the speaker to the underside of the rear shelf. Figure 3.

OPERATION

The purpose and position of each control is shown in Fig. 3. To turn the receiver on, turn the volume control knob to the right until it clicks and the dial is illuminated. Rotation of the knob to the right increases the volume. To turn the receiver off, turn the volume control knob to the left until it clicks.

©John F. Rider

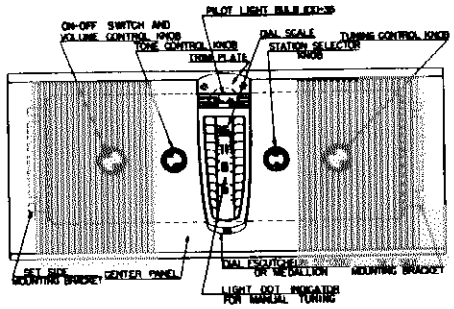

Fig. 4

MANUAL TUNING

To tune set manually, push the station selector knob until the light dot on the dial scale is illuminated. It is only necessary for the manual tuning knob to be turned to select stations.

TONE CONTROL

The tone control has four positions. Any one of these positions can be selected by pushing the tone control knob.

MUTING CIRCUIT

Lightly pressing either the station selector knob or the foot control switch mutes the receiver. This action is accomplished by shorting out the speaker voice coil.

REPLACEMENT OF DIAL LIGHT

NOTE: The top dial light can be replaced while the set is installed in the car by removing the escutcheon trim plate.

When replacing this light, be careful to adjust the black cardboard shield to a position where the slot directs the light on the dial pointer and not on the scale background. (Fig. 4)

AUTOMATIC TUNING

Pressing the station selector knob repeatedly will cause the tuning mechanism to change through a cycle of six positions. The five automatic positions may be set for favorite local stations, while the sixth position at which the light dot on the dial scale is illuminated, may be used for selecting stations manually.

Using the manual tuning position as a reference point, the remaining five positions may be adjusted in succession to any desired dial setting. However in order to simplify the identification of the stations, it is advisable to set the tuner in sequence according to the frequencies of the stations, beginning with the station broadcasting at the lowest frequency and progressing to the station broadcasting at the highest frequency.

Turn the receiver on and allow it to operate for at least 15 minutes in order for each part to reach normal operating temperature before making the proper setting.

1. Press the station selector knob repeatedly until the light dot on the dial scale appears. Press the station selector knob once more to get the tuner to the No. 1 position.

2. To select the station desired, pull the tuning control knob outward and turn at the same time. Tune very carefully for clearest reception.

3. Press station selector knob, pull and hold tuning control knob outward, and tune in station desired for No. 2 position. Use same proceedure for positions No. 3, 4, and 5.

INTERFERENCE ELIMINATION

There should be no motor noise or interference from the ignition circuit if the receiver has been installed in the car according to the instructions furnished with it. The interference suppression equipment may be checked for proper installation by referring to the following illustrations:

The "A" lead should be connected to the terminal block near the steering column behind instrument panel as shown in figure 5.

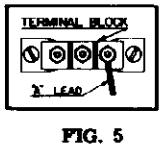

FIG. 6

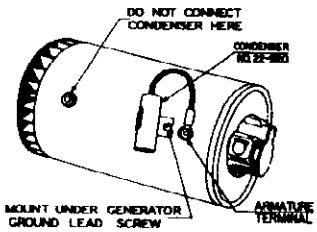

FIG. 7

FIG. 5

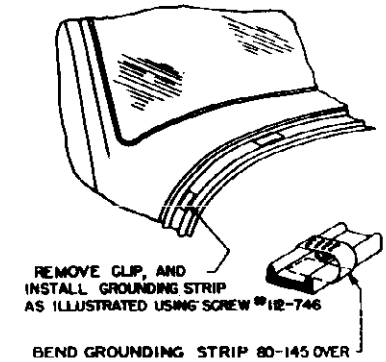

FIG. 8

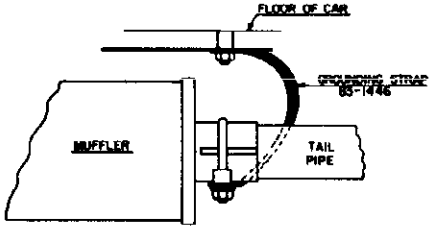

FIG. 10

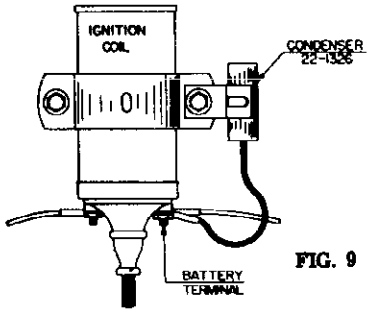

FIG. 9

©John F. Rider

MODEL 6MN988, Nash

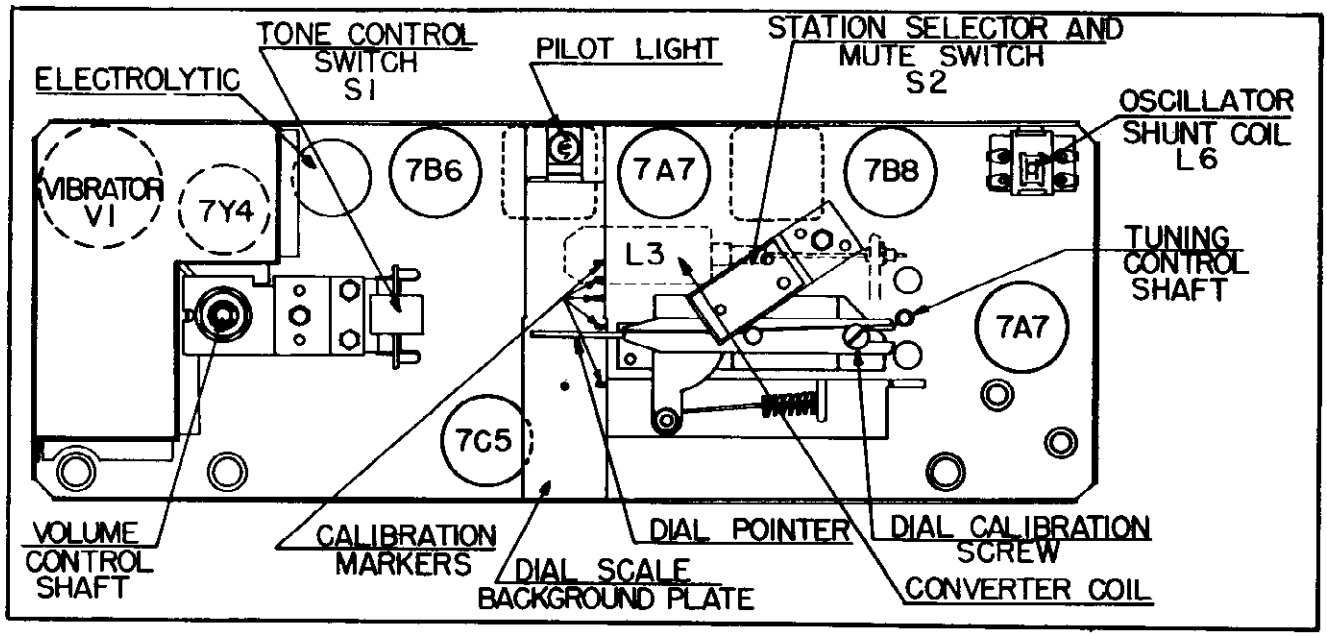

Fig. 11 Front View of Chassis

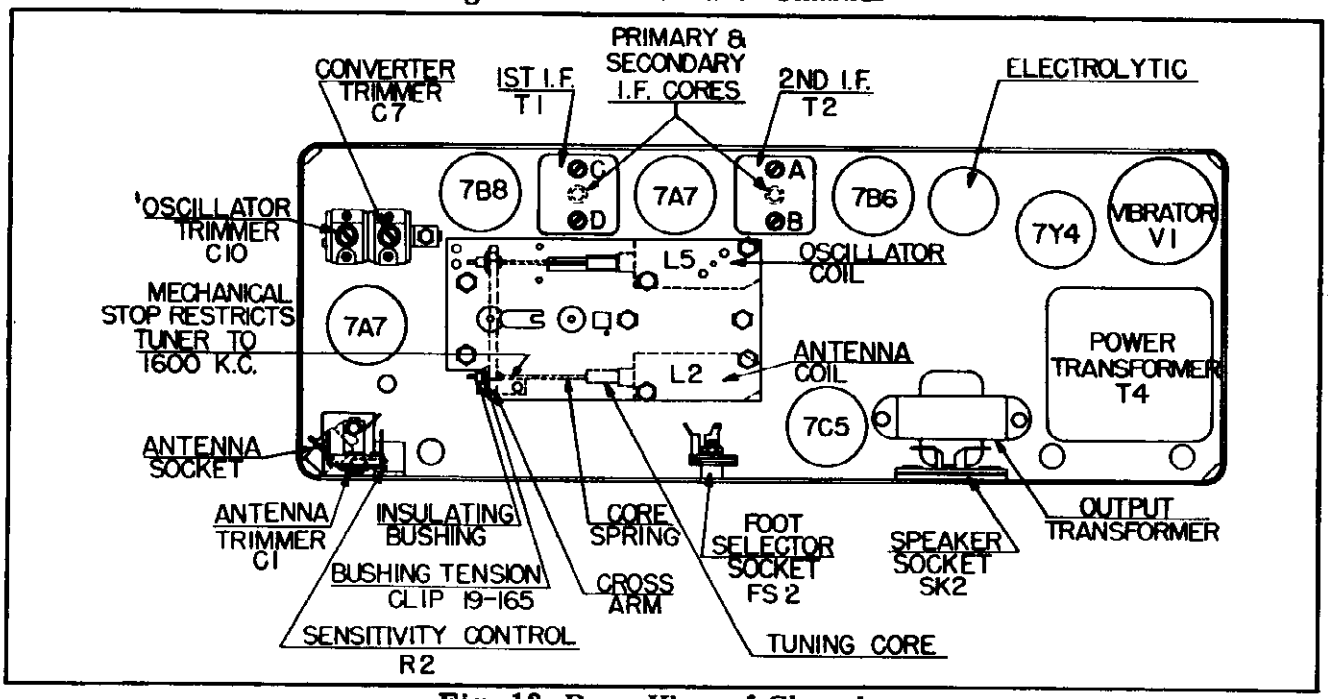

Fig. 12 Rear View of Chassis

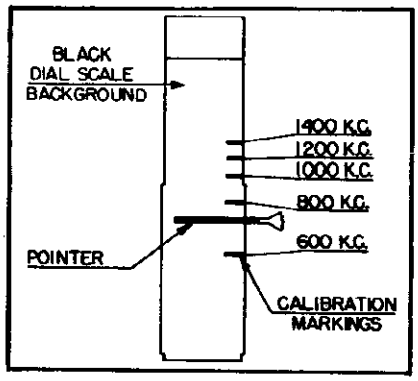

Fig. 13

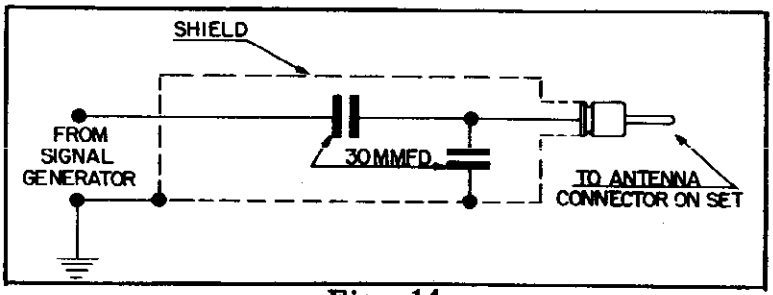

Fig. 14

©John F. Rider

Figure 14 shows the schematic of a recommended dummy antenna, closely resembling actual antenna capacity, to be used in series with signal generator leads when aligning the R. F. section of the receiver.

ALIGNMENT

Maximum performance depends on accurate alignment of the receiver, therefore follow these instructions carefully.

CAUTION: Make all alignment adjustments to the receiver with the volume control set at maximum. Reduce the signal intensity as much as possible at the signal generator. Connect the output meter across the voice coil.

I.F. ALIGNMENT PROCEDURE

1. Remove front and rear covers from receiver.
2. Set signal generator to 465 Kc.
3. Apply signal from generator through a .1 Mfd. dummy to 7B8 converter grid. (Pin No. 6 on socket)
4. Adjust I.F. trimmers, A, B, C, and D in order named for maximum output. (Fig. 12) Some units have I.F. transformers that are core tuned. In this case adjust primary and secondary I.F. cores from the top of the I.F. cans with core alignment tool 68-7. Repeat the operation to assure accurate alignment.

R.F. AND OSCILLATOR ALIGNMENT

Use the markings on the dial scale background as calibration points during alignment. Figure 13

1. Connect signal generator leads through dummy, illustrated in Fig. 14, to antenna lead in socket on receiver. This is important.
2. Set signal generator to 600 Kc.
3. Tune set to 600 Kc.
4. Adjust oscillator trimmer C-10 (Fig. 12), for maximum response.
5. Set signal generator to 1400 Kc.
6. Tune set to 1400 Kc.
7. Adjust converter trimmer C-7, and antenna trimmer C-1 (Fig. 12) for maximum response.
8. If dial calibration is off after making above adjustments, a correction can be made by tuning eccentric screw at fulcrum of dial pointer. (Fig. 11)

TO ADJUST OR REPLACE THE ADJUSTING SPRING AND CORE

1. Remove the top cover from the receiver.
2. Remove 7A7 R.F. tube, 7B8 converter tube, and 7A7 I.F. tube.
3. When bushing tension clips 19-165 are used, remove them from the cross arm insulating bushing with bent nose pliers. (Fig. 12)
4. Put automatic tuner in manual position and set the tuner carriage all the way out to the high frequency position or with the cores out of the coils.
5. With core alignment tool, No. S-13064, screw the antenna core back all the way, at the same time using the fingers to guide it out of the automatic unit. With the fingers, remove core by turning core spring past and through the cross arm insulating bushing.
6. Screw the converter and oscillator cores completely out of the coils. Set antenna tuner carriage to half way position. Screw the converter and oscillator cores back all the way, at the same time using the fingers to guide them between the I.F. cans and out of the tuner unit. With the fingers, remove the cores by turning them past and through the cross arm insulating bushing.
7. To replace cores, set tuner carriage at half way position. With the fingers, guide the oscillator and converter cores between the I.F. coils and screw the core springs through the cross arm insulating bushing. Set tuner carriage to high frequency position and also using the fingers, screw the antenna core spring through the cross arm insulating bushing. Use core alignment tool No. S 13064 for further adjustments.
8. Replace tubes and top cover.
9. After all adjustments or replacements are completed, be sure to replace the bushing tension clip. When bushing clips are not used, glue core springs with speaker cement.

ALIGNMENT PROCEDURE AFTER CORE OR COIL REPLACEMENT.

WARNING: The following adjustments are to be made only after a core or coil is replaced.

1. Set signal generator to 1675 Kc.
2. Connect signal generator leads through dummy, illustrated in Fig. 14 to antenna receptacle on the receiver.
3. Set receiver dial to 1600 Kc. (Maximum high frequency end of dial.)
4. Screw the cores completely out of the antenna coil, the converter coil, and the oscillator coil.
5. Adjust the oscillator trimmer C-10 (Fig. 12) at 1675 Kc.
6. Adjust the converter trimmer C-7, and antenna trimmer C-1 (Fig. 12) for maximum output reading.
7. Set signal generator dial and receiver dial to 1400 Kc.
8. Replace cores to their approximate original position (so that the cores project about 11/16 of an inch from the end of the coil form).
9. Adjust the oscillator core L-5 (Fig. 12) to scale at 1400 Kc.
10. Adjust the antenna core L-2, and converter core L-3 (Figs. 11 and 12) for maximum output reading.
11. Set signal generator at 600 Kc.
12. "Rock in" shunt oscillator coil L-6 (Fig. 11) for maximum output reading. This should be done only as a last resort. This is the same as rocking in the padder condenser on a gang condenser receiver.
13. Check receiver at 1400 Kc. for calibration and gain. If the receiver is off scale or weak, repeat operations 9, 10, and 11.
14. After alignment is complete, the maximum high frequency tuning range should be checked. If the range is greater or less than 1605 Kc., the lug stop should be bent to limit the frequency coverage to 1605 Kc. (Fig. 12)

IMPORTANT: After reinstalling the receiver in the car, allow it to operate for approximately 15 minutes to reach normal operating temperature. Extend antenna to maximum. Check the antenna trimmer alignment on a weak station at approximately 1400 Kc.

© John F. Rider

MODEL 6MN988, Nash

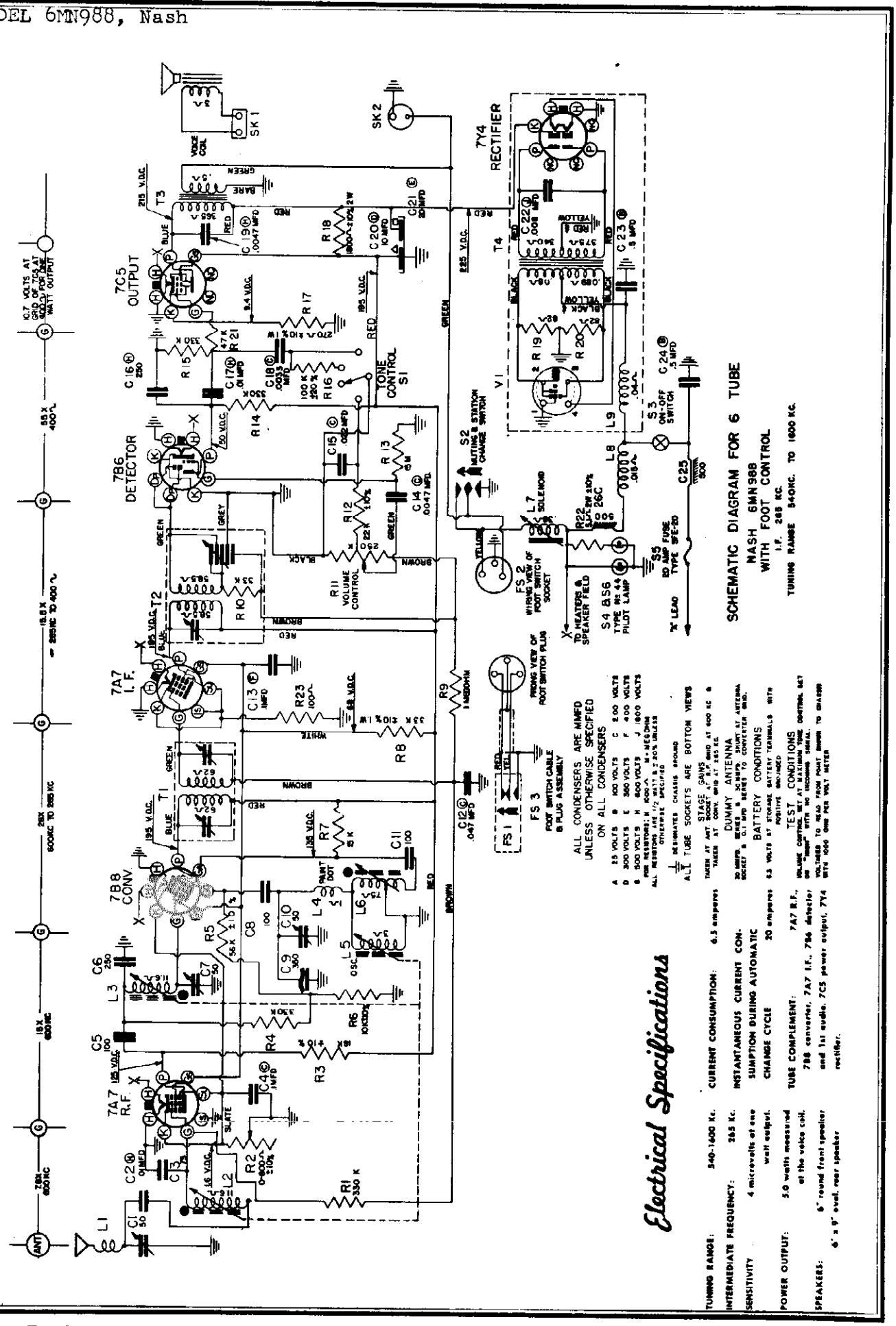

© John F. Rider

PARTS LIST MODEL 6MN988 NASH PART No. A. C. 149-1

Diag. No.	Part No.	Description
		COILS & CHOKES
L9	20-213	Main Hash Choke Coil
T1	95-1056	1st I.F. Transformer
T2	95-1057	2nd I.F. Transformer
L1	S-8819	Ant. Motor Noise Choke Assem.
L4	S-11229	Osc. Series Coil Assy.
L5	S-12053	Osc. Coil Assy.
L2	S-12060	R.F. Coil Assy. (2 used)
L6	S-13998	Osc. Shunt Coil Assy.
L8	S-13999	Motor Noise Choke Assy.
L2	S-14176	R.F. Coil & Shield Assy.
L3, L5	S-14177	Osc. & Converter Coil & Shield Assem.
		CONDENSERS
C16	22-182	250 MMFD 600 V.
C6	22-1136	250 MMFD 600 V.
C3	22-1256	75 MMFD 500 V.
C22	22-1448	.008 MFD 1600 V.
C9	22-1478	350 MMFD Compensator
C21	22-1644	Dry Electrolytic 10 MFD.
C10, C7	22-1680	300 V. X 20 MFD. 350 V. Trimmer (Osc. & Conv.)
C1	22-1704	Ant. Trimmer
C23, C24	22-1728	.5 MFD 100 V.
C5, C8, C11	22-1730	100 MMFD. Ceramicon 500 V. (or 22-162)
C13	22-1748	.1 MFD. 400 V. (or 22-170)
C14	22-1777	.1 MFD. 200 V. (or 22-190)
C12	22-1778	.047 MFD. 200 V. (or 22-250)
C2	22-1779	.01 MFD. 600 V. (or 22-1170)
C18	22-1780	.0033 MFD. 400 V. (or 22-1180)
C15	22-1781	.022 MFD. 200 V. (or 22-1270)
C19	22-1782	.0047 MFD. 600 V. (or 22-838)
C14	22-1783	.0047 MFD. 400 V. (or 22-906)
		RESISTORS
R22	63-1375	5.1 ohm W.W. 2 W. Insl. (10%)
R2	63-1379	Sensitivity Control
R8	63-1398	33 M ohm 1 W. Insl.
S3, R11	63-1586	Volume Control & Switch
R18	63-1620	1800 ohm 2 W. Insl.
R17	63-1621	270 ohm 1 W. Insl.
	63-1683	Vol. Control (Rear Spkr.)
R19, R20	63-1740	82 ohm 1/2 W. Insl.
R23	63-1744	100 ohm 1/2 W. Insl.
R6	63-1827	10M ohm 1/2 W. Insl. (10%)
R7	63-1835	15M ohm 1/2 W. Insl.
R3	63-1838	18M ohm 1/2 W. Insl.
R12	63-1841	22M ohm 1/2 W. Insl. (10%)
R10	63-1849	33M ohm 1/2 W. Insl.
R21	63-1856	47M ohm 1/2 W. Insl.
R5	63-1859	56M ohm 1/2 W. Insl.
R16	63-1870	100M ohm 1/2 W. Insl.
R1, R4, R14, R15	63-1891	330M ohm 1/2 W. Insl.
R9	63-1912	1 Megohm 1/2 W. Insl.
R13	63-1961	15 Megohm 1/2 W. Insl.
		MISCELLANEOUS
	19-87	Cable Retaining Clip
	19-165	Bushing Tension Clip
	46-485	Rear Spkr. Vol. Cont. Knob
	49-606	6" x 9" P.M. Speaker
	49-650	6" P.M. Speaker
	52-486	Bat. Cable (Set to Fuse)
	52-510	Rear Spkr. Cable & Plug
	52-511	Rear Spkr. Cont. Cable & Plug
	54-34	#6-32 X 1/4 X 3/32 Hex Nut
	57-1054	Spark Plate Capacitor
	73-36	8-32 X 3/8 Headless Set Screw
	74-53	Speaker Screen
	74-54	Rear Speaker Screen
FS2	78-406	Ft. Sw. Cable Plug Socket
	78-559	Ant. Connector Socket
	78-596	Loktal Base Tube Socket
	78-804	Vibrator Socket
SK2	78-833	Speaker Plug Socket
	80-232	Knob Retaining Spring
	80-276	Socket Ground Spring
	80-585	Pointer Overthrow Spring
	83-1437	Top Cover Spacer Strip
S1	85-414	Tone Control Switch
S2	85-415	Selector Switch
	93-125	6 Int. Lockwasher
	93-297	1/32 X .136 X 3/8 Steel Washer
	93-456	Vibrator Cushion Washer
	93-686	Bakelite Shoulder Washer
T3	95-1028	Output Transformer
T4	95-1065	Power Transformer
	110-135	Grille Cloth
	114-49	6-32 X 5/8 Acorn Hd. M.S.
	114-297	6-32 X 1/4 Hex.Hd.Slotted S.T. Screw (Used on 19-87)
	125-58	Strain Relief Grommet
	125-59	Strain Relief Grommet
	147-102	Socket Mtg. Spacer
	159-50	Plug Button
	188-30	Drive Arm Retaining Ring
	188-115	Speaker Trim Ring
	188-117	Speaker Trim Ring
V1	190-20	Vibrator
	193-31	Footswitch Template
	196-102	Rubber Gasket for Top Cover
	196-103	Felt Gasket for Top Cover
	202-556	Instruction Book(Owners Manual)
	S-13536	Turret Assem.

MODEL 6MN988, Nash

Diag. No.	Part No.	Description
	S-13926	Top Cover Assem.
	S-14144	Vol. Con. Brkt. & Lug Assy.
	S-14157	Vol. Con. Cable Assy.
	S-14158	Sensitivity Con.,Capacitor, Socket & Choke Assem.
	S-14166	Bottom Cover Assy.
FS3	S-14607	Footswitch Assem.
	S-15189	Rear Spkr. Vol. Con. Assy.

INSTALLATION KIT

	S-14162	Installation Kit Assy (Comp.)
	52-485	Battery Cable (Fuse to Ammeter)
	54-30	8-32 X 5/16 X 7/64 Hex. Nut
	54-278	3/8 - 32 X 9/16 Hex Shoulder Nut (2 used)
	69-260	12-24 X 1/2 R.H.M.S. Steel
	93-126	8 Int. Lockwasher
	93-719	.031 X 3/16 X 7/16 Steel Washer (8 used)
	93-875	.065 X 17/32 X 25/32 Felt Washer
	93-916	12 Split Lockwasher
	93-917	1/32 X .234 X 9/16 Steel Washer
	93-962	.020 X 33/64 X 3/4 Steel Washer
	112-310	10 X 1/2 R.H.S.M. Screw
	112-739	8-32 X 3/4 Countersunk Oval Hd. M.S. (4 used)
S5	136-12	20 Amp. Fuse

MOTOR NOISE SUPPRESSION KIT

	S-14822	Motor Noise Suppression Kit (Complete)
	22-920	.5 MFD. Generator Cond.
	22-1326	.5 MFD. Ignition Coil Cond.
	63-1046	Distributor Suppressor
	80-145	Motor Hood Bond Spring
	83-1446	Bonding Strip

KNOB KIT

	S-14982	Knob Kit Assy. (Complete)
	S-14980	Tuning & Vol. Cont. Knob
	S-14981	Tone Cont. & Sel. Switch Knob
	54-255	Switch Plunger Nut
	80-571	Switch Plunger Spring
	93-975	.065X17/32 X 25/32 Felt Washer
	93-893	3/64 X .504 X 7/8 Steel Washer

PUSH-PULL TUNER PARTS

	12-1489	Guide Rod Brkt.
	34-132	Indexing Disc.
	34-158	Ratchet Gear
	34-178	Tuning Gear
	56-127	1/16 X 3/8 Groove Pin
	57-1077	Protector Plate
	57-1327	Front Mtg. Plate
	76-378	Guide Rod (2 used)
	80-329	Gear Indexing Spring
	80-331	Cross Arm Return Spring
	80-332	Cam Lever Spring
	80-336	Ratchet Gear Return Spring
	80-341	Kick-off Spring
	80-552	Tuning Shaft Spring
	93-631	Retaining Washer
	94-438	Cylindrical Spacing Bushing
	S-14177	Osc. & Converter Coil & Shield Assy.
	S-14178	Push-Pull Tuner Assem. (Complete)

DIAL & TUNING MECHANISM

		Dial Scale furnished by Nash Motors
	57-1329	Dial Scale Background Plate
	57-1350	Dial Trim Plate (Escutcheon)
	78-818	Dial Light Socket Shell
	80-141	Dial Light Socket Spring
	80-583	Indicator Spring
	80-659	Light Shield Retaining Spring
	80-688	Pointer Retaining Spring
S4 S6	100-36	Dial Light Bulb-Mazda #44 (2 used)
	118-39	Pointer Drive Link
	126-585	Manual Indicator Light Shield
	126-586	Dial Light Shield
	148-86	Pointer Drive Arm
	S-13528	Tuning Shaft & Gear Assem.
	S-13918	Pointer & Arm Assem.
	S-13922	Indicator Flag Assem.
	S-14156	Dial Light Socket & Dial Plate Assem.
	S-14825	Dial Light Wire & Bushing Assy.
	S-14949	Dial Light Wire & Bushing Assy.
	S-15239	Pointer Drive Arm & Stud Assy.
	S-15241	Pointer Bracket & Stud Assy.
	94-601	Iron Core Insulating Bushing
	112-725	Automatic Turret Screw
	128-39	Indicator Cam
	147-126	Gear & Disc. Spacer
	149-70	Adjusting Spring & Core
	188-108	Retaining Spring
	197-20	Spring Retaining Cup
	S-10826	Solenoid End Plug & Brkt. Assy.
	S-10829	Solenoid & Terminal Assy.
	S-13528	Tuning Shaft & Gear Assy.
	S-13536	Turret Assy.
	S-13996	Ratchet & Brkt. Assy.
	S-14174	Mtg. Plate & Retaining Strip Assy.
	S-14175	Cross Arm Assem.
	S-14176	R.F. Coil & Shield Assy.

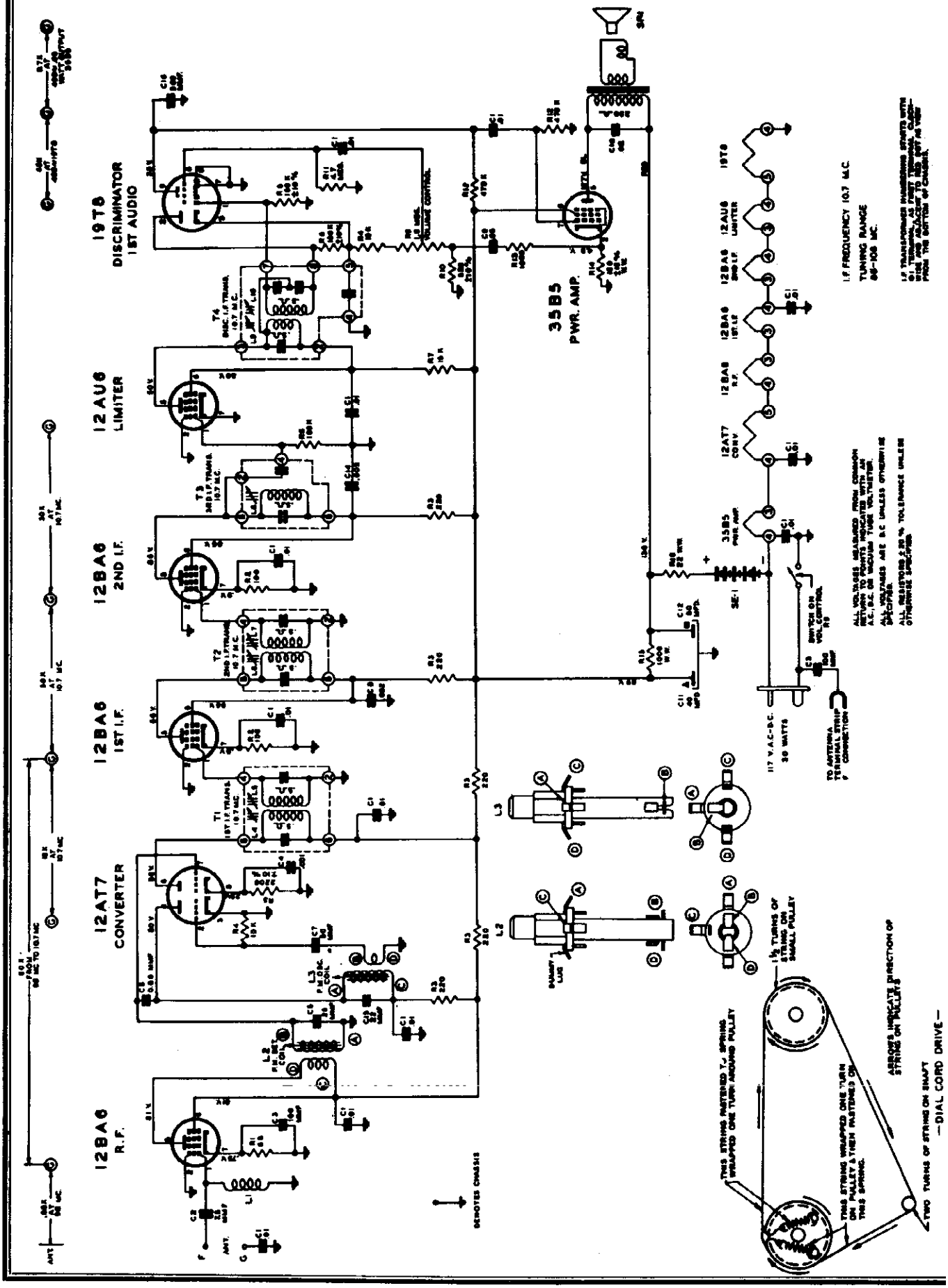
19T8
DISCRIMINATOR
1ST AUDIO
12AU6
LIMITER
12BA6
2ND I.F.
12BA6
1ST I.F.
12AT7
CONVERTER
12BA6
R.F.
35B5
PWR. AMP.
I.F. FREQUENCY 10.7 M.C.
TUNING RANGE
88-108 MC.
ALL VOLTAGES MEASURED FROM COMMON RETURN TO POINTS INDICATED WITH AN A.C.-D.C. OR VACUUM TUBE VOLTMETER.
ALL VOLTAGES ARE D.C. UNLESS OTHERWISE SPECIFIED.
ALL RESISTORS ±20% TOLERANCE UNLESS OTHERWISE SPECIFIED.
117 V.A.C.-D.C.
30 WATTS
TO ANTENNA TERMINAL STRIP "F" CONNECTION
SWITCH ON VOL. CONTROL R9
DENOTES CHASSIS
ARROWS INDICATE DIRECTION OF STRING ON PULLEYS
THIS STRING FASTENED TO SPRING WRAPPED ONE TURN AROUND PULLEY
THIS STRING WRAPPED ONE TURN ON PULLEY & THEN FASTENED ON THIS SPRING.
1½ TURNS OF STRING ON SMALL PULLEY
TWO TURNS OF STRING ON SHAFT
—DIAL CORD DRIVE—

© John F. Rider

ALIGNMENT PROCEDURE

Operation	Connect Oscillator To	Dummy Antenna	Input Signal Frequency	Band	Set Dial To	Adj. Trimmers	Purpose
1 (a)	Pin 1 (grid) on 12AU6 limiter	.05 Mfd.	10.7 Mc. Unmodulated	FM 100		L9 coil slug Primary discr.	Align primary of discriminator for maximum reading.
2 (b)	Pin 1 (grid) on 12AU6 limiter	.05 Mfd.	10.7 Mc. Unmodulated	FM 100		L10 coil slug sec. of discr.	Adjust secondary of discriminator for zero reading.
3 (c)	Pin 1 (grid) on 12BA6 2nd IF.	.05 Mfd.	10.7 Mc. Unmodulated	FM 100		L8 Prim. of 3rd IF trans.	Align 3rd IF transformer for maximum reading.
4 (c)	Pin 1 (grid) on 12BA6 1st IF.	.05 Mfd.	10.7 Mc. Unmodulated	FM 100		L6 and L7 Prim. and Sec. of 2nd IF trans.	Align 2nd IF transformer for maximum reading.
5 (c)	Pin 7 (grid) on 12AT7 converter tube socket	.05 Mfd.	10.7 Mc. Unmodulated	FM 100		L4 and L5 Prim. and Sec. of 1st IF transformer	Align 1st IF transformer for maximum reading.
6 (c) (d)	Antenna Post FM (Remove line ant)	270 ohms	98 Mc. Unmodulated	FM 100	98 Mc.	L3 Osc. Coil Slug	Set Oscillator to dial scale
7 (c) (d)		270 ohms	98 Mc. Unmodulated	FM 100	98 Mc.	L2 Det. Coil Slug	Align det. stage to maximum reading.

IMPORTANT

Alignment of this chassis will in most cases be unnecessary unless an IF or RF transformer is replaced or the adjustments have been tampered with.

Correct alignment can only be made if the following procedure is followed:

A vacuum tube voltmeter with an isolation resistor of 2,000,000 ohms in series with the hot lead will serve for FM adjustments. This lead should be shielded.

The signal generator output should be kept just high enough to get an indication on the meter.

(a) Vacuum Tube Voltmeter Lug 7 on discriminator transformer to chassis (half discriminator load).
(b) Vacuum Tube Voltmeter Lug 5 on discriminator transformer to chassis (full discriminator load).
(c) Vacuum Tube Voltmeter from Limiter Grid to Chassis.
(d) Loosen Slugs by applying a hot iron to the cement.

©John F. Rider

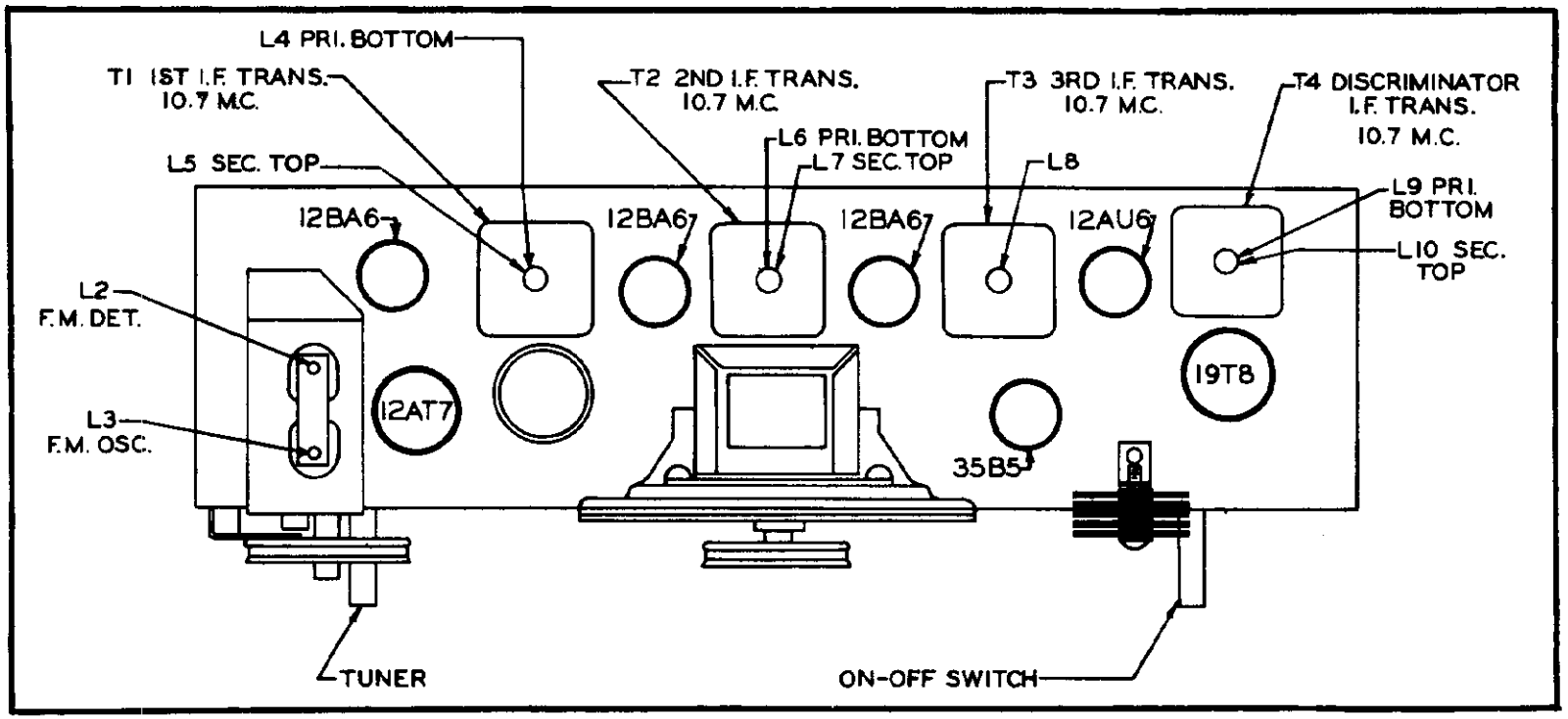

TUBE AND TRIMMER LOCATION

To The Service Man:

The 7F03 chassis incorporates a superheterodyne circuit with two stages of IF, on the FM Band. There is one stage of RF amplification on the FM Band.

When adjustments are made on the 7F03 or any AC-DC chassis, a line isolation transformer (110 V input to 110 V output) is recommended in order to avoid a "hot" chassis. If an isolation transformer is not available, check the AC voltage between chassis and bench ground, and if there is any indication of voltage, reverse the plug before handling the set.

RF Alignment: The tuning slugs are attached to threaded shafts and the slugs are varied in the field of the coils by turning the shafts clockwise or counter-clockwise. After adjustment the shafts must be secured with a drop of speaker cement.

IF Alignment: The alignment slugs in the IF transformers are threaded and screw into the coil forms. The slugs are slotted for a small size fiber screw driver. Do not press hard on the aligning tool or the threads in the coil forms will strip and adjustment will be impossible.

IF Alignment: Because of the wide band pass, it is desirable to use a FM signal generator and a cathode ray oscilloscope when aligning the IF channel. The instruction book for the Zenith Model 800 Signal Generator (Form Z8001) covers complete FM alignment procedure. If visual alignment equipment is unavailable, reasonably accurate alignment can be made by following the procedure outlined below.

Discriminator Alignment: When the secondary of the discriminator is aligned (operation 5) use sufficient signal input to get a good positive and negative indication before setting the slug for zero reading. A center zero indicating meter is recommended for this adjustment, but is not absolutely necessary. Reversing the leads of a non-zero center meter, or observing closely when the meter starts to go to the left (negative) of zero will give the same results.

MODEL 7H918, Ch. 7F03

PARTS LIST

PART NO.	REF. NO.	DESCRIPTION
		DIAL ASSEMBLY
12-1605		Tuner Mounting Bracket. . . . .
26-423		Dial Scale & Escutcheon . . . . .
46-805		Volume Control and Tuning Knob (2 used)
54-292		Speed Nut (Tinnerman) (Used on S-15686)
57-1522		Emblem Plate. . . . .
59-228		Dial Pointer. . . . .
76-549		Tuning Control Shaft. . . . .
76-552		Tension Shaft (used with S-15745) . . .
80-402		Dial Cord Tension Spring. . . . .
80-721		Shaft Tension Spring (used on S-15745).
83-1634		Pointer Pulley Mounting Strip . . . . .
93-992		Bakelite Washer (used on dial). . . . .
94-670		Tuner Shaft Bushing . . . . .
110-139		Grill Cloth . . . . .
114-39		#8x¼" Hex. Hd. S. T. Screw (used to mt. 12-1605). . . . .
188-32		Retaining Ring. . . . .
S-15686		Pointer Pulley & Shaft Assembly . . . .
S-15688		Dial Cord Assembly. . . . .
S-15745		Iron Core Drive Shaft & Pulley Assembly
		COILS AND CHOKES
95-1150	T1	1st and 2nd I. F. Transformer . . . . .
95-1152	T3	3rd I. F. Transformer . . . . .
95-1153	T4	Discriminator Transformer . . . . .
S-15690	L1	Antenna Choke Coil Assembly . . . . .
S-15691	L3	F. M. Oscillator Coil Assembly. . . . .
S-15743	L2	F. M. Detector Coil Assembly. . . . .
		RESISTORS
63-886	R14	150 Ohm (Wirewound) 10% Ins. Res. .½ W.
63-1450	R16	22 Ohm (Wirewound) 20% Ins. Res. .1 W.
63-1527	R15	1000 Ohm (Wirewound) 20% Ins. Res. .3 W.
63-1737	R1	68 Ohm 20% Ins. Res. .½ W.
63-1744	R2	100 Ohm 20% Ins. Res. .½ W.
63-1758	R3	220 Ohm 20% Ins. Res. .½ W.
63-1782	R10	820 Ohm 10% Ins. Res. .½ W.
63-1786	R13	1000 Ohm 20% Ins. Res. .½ W.
63-1799	R5	2200 Ohm 10% Ins. Res. .½ W.
63-1828	R4	10K Ohm 20% Ins. Res. .½ W.
63-1835	R7	15K Ohm 20% Ins. Res. .½ W.
63-1870	R6	100K Ohm 20% Ins. Res. .½ W.
63-1876	R8	150K Ohm 10% Ins. Res. .½ W.
63-1898	R12	470K Ohm 20% Ins. Res. .½ W.
63-1940	R11	4.7 Megohm 20% Ins. Res. .½ W.
63-2035	R9	Volume Control and Switch . . . . .

PART NO.	REF. NO.	DESCRIPTION
		CONDENSERS
22-3	C1	.01 Mfd. Ceramic. 500V
22-229	C14	.005 Mfd. 600V
22-1158	C9	.05 Mfd. 200V
22-1220	C8	.002 Mfd. 600V
22-1367	C7	50 Mmfd. 500V
22-1379	C10	.02 Mfd. 400V
22-1506	C15	22 Mmfd. Ceramic. 500V
22-1669	C3	.0001 Mfd. Ceramic. 500V
22-1676	C4	.001 Mfd. Ceramic 500V
22-1700	C16	500 Mmfd. Ceramic 500V
22-1757	C11, 12	40 Mfd. - 80 Mfd. Elect. 150V
22-1766	C6	.68 Mmfd. Molded. 500V
22-1852	C2	7.5 Mmfd. Ceramic 500V
22-2060	C5	25 Mmfd. Ceramic 500V
		MISCELLANEOUS
12-1612		Rectifier Mounting Bracket. . . . .
14-1118		Cabinet for 7H918 Plastic . . . . .
49-666	SP-1	4" P.M. Speaker . . . . .
		208-666 Cone & Voice Coil . . . . .
		206-666 Output Transformer. . . . .
54-139		#3/8-32x9/16" Palnut Steel Cad. (Used to Mt. 63-2035). . . . .
54-267		#6-32x5/16" Palnut Steel Cad. (Used to Mt. I.F. Trans) . . . . .
58-128		Two Prong Plug. . . . .
78-788		Noval Miniature Tube Socket . . . . .
78-806		Miniature Tube Socket . . . . .
78-807		Miniature Tube Socket (4 used) . . . . .
78-850		Noval Miniature Tube Socket . . . . .
83-1635		Insulating Strip (used behind 63-2035). . . .
93-35		.032x.144x3/8 Steel Washer (4 used on Mtg. Back) . . . . .
93-125		#6 Internal Shakeproof Lockwasher #1206 (used on 212-7) . . . . .
93-993		Volume Control Insulating Washer. . . . .
93-994		Insulating Shoulder Washer. . . . .
112-131		#8-32x1/4" B.H.M.S. Steel (2 used on Back Terminals). . . . .
112-697		#6x7/16" Straight Side B.H.S.T. (4 used to mt. Back) (2 used to Mt. chassis) . . . .
114-253		#6x3/8 Hex. Hd. Sl. S.T.Screw (2 used to Mt. Sprk to cabinet). . . . .
114-308		#6-32x1-1/8" Hex. Hd. Sl. M.S.Steel (used on 212-7). . . . .
125-73		Rubber Grommet (Coil Mtg.). . . . .
149-87		Iron Core & Spring (2 used) . . . . .
202-697		F.M. Instruction Book . . . . .
202-720		Instruction Book. . . . .
212-7	SE-1	Selenium Rectifier. . . . .
S-15682		Cabinet Back, Line Cord and Plug Assembly . .

©John F. Rider

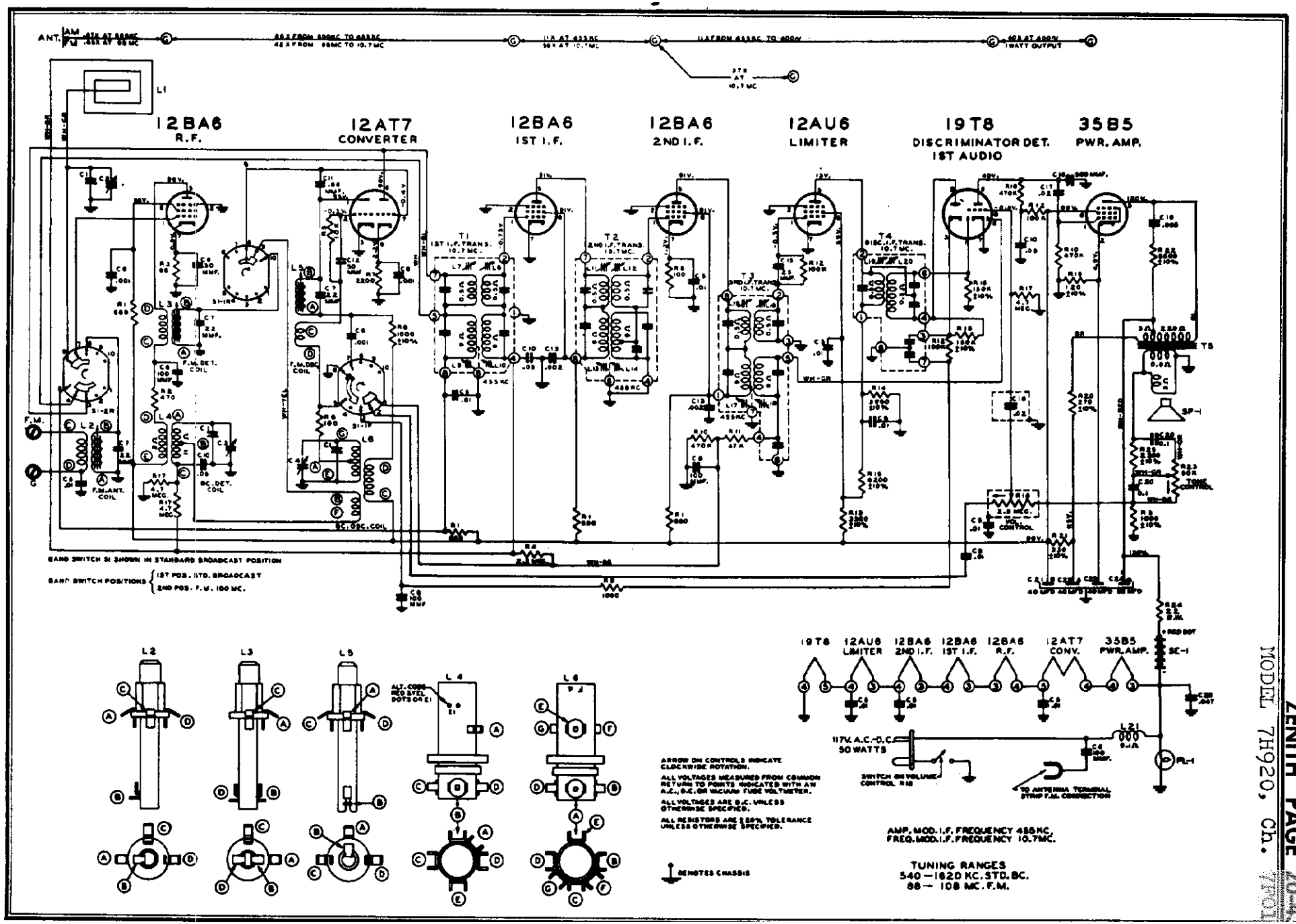

ZENITH PAGE 20-4
MODEL 7H920, Ch. 7H01

ALIGNMENT PROCEDURE

Operation	Connect Oscillator To	Dummy Antenna	Input Signal Frequency	Band	Set Dial To	Adj. Trimmers	Purpose
1	Pin 7 12AT7 Converter	.05 Mfd.	455 KC. Modulated	BC	600 Kc.	L-9, 10, 13, 14, 17 and 18	Align I. F. channel for maximum output.
2	2 turns loosely cpld. to wavemagnet		1600 Kc. Modulated	BC	1600 Kc.	C4	Set oscillator to dial scale.
3	2 turns loosely cpld. cpld. to wavemagnet		1400 Kc. Modulated	BC	1400 Kc.	C2 and C3	Align det. and ant. stages.
4 (a)	Pin 1 (grid) on 12AU6 limiter.	.05 Mfd.	10.7 Mc. Unmodulated	FM 100		L19 coil slug Primary discr.	Align primary of discriminator for maximum reading.
5 (b)	Pin 1 (grid) on 12AU6 limiter.	.05 Mfd.	10.7 Mc. Unmodulated	FM 100		L20 coil slug sec. of discr.	Adjust secondary of discriminator for zero reading.
6 (c)	Pin 1 (grid) on 12BA6 2nd. IF.	.05 Mfd.	10.7 Mc. Unmodulated	FM 100		L15 and L16 Prim. and Sec. of 3rd. IF transformer	Align 3rd. IF transformer for maximum reading.
7 (c)	Pin 1 (grid) on 12BA6 1st. IF.	.05 Mfd.	10.7 Mc. Unmodulated	FM 100		L11 and L12 Prim. and Sec. of 2nd. IF transformer	Align 2nd. IF transformer for maximum reading.
8 (c)	Pin 7 (grid) on 12AT7 converter tube socket	.05 Mfd.	10.7 Mc. Unmodulated	FM 100		L7 and L8 Prim. and Sec. of 1st. IF transformer	Align 1st. IF Transformer for maximum reading.
9 (c) (d)	Antenna Post F (Remove line ant.)	270 ohms	98 Mc. Unmodulated	FM 100	98 Mc.	L5 Osc. Coil Slug	Set Oscillator to dial scale.
10 (c) (d)		270 ohms	98 Mc. Unmodulated	FM 100	98 Mc.	L3 and L2 Det. and RF coil Slugs	Align det. and ant. stages to maximum reading.

IMPORTANT

Alignment of this chassis will in most cases be unnecessary unless an IF or RF transformer is replaced or the adjustments have been tampered with.

Correct alignment can only be made if the following procedure is followed:

A vacuum tube voltmeter with an isolation resistor of 2,000,000 ohms in series with the hot lead will serve for FM adjustments. This lead should be shielded.

An AC output meter connected across the primary or secondary of the output transformer will be satisfactory for all AM adjustments.

The signal generator output should be kept just high enough to get an indication on the meter.

(a) Vacuum Tube Voltmeter Lug 6 on discriminator transformer to chassis (half discriminator load).

(b) Vacuum Tube Voltmeter Lug 3 on discriminator transformer to chassis (full discriminator load).

(c) Vacuum Tube Voltmeter from Limiter Grid to Chassis.

(d) Loosen Slugs by applying a hot iron to the cement.

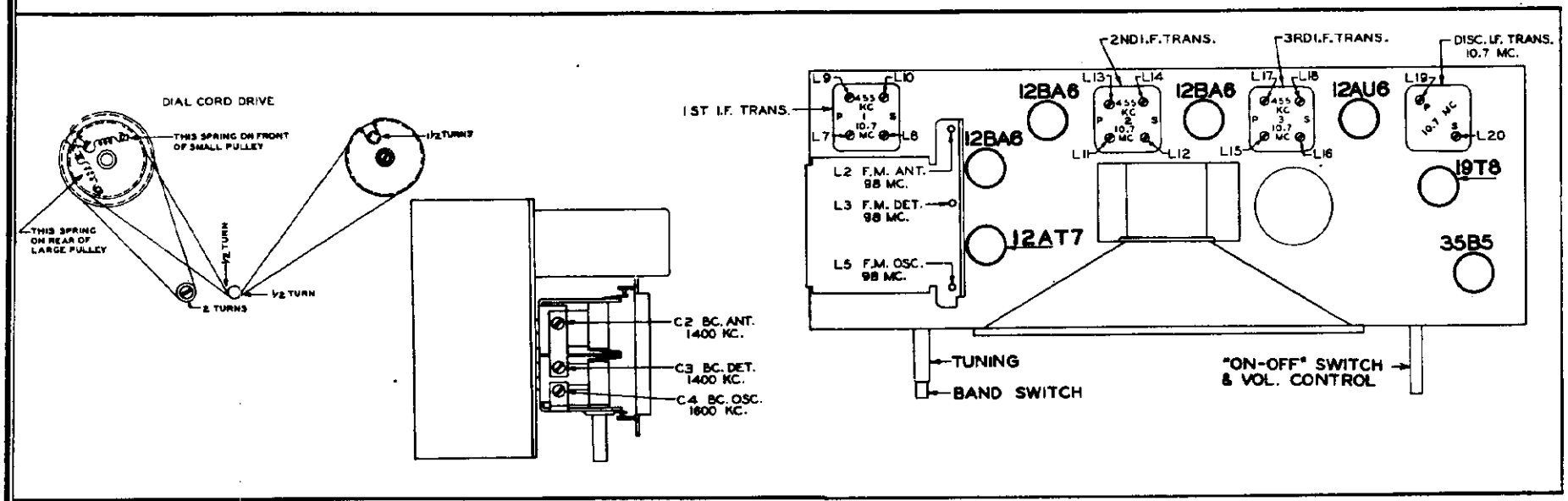

TUBE AND TRIMMER LOCATION

The 7F01 chassis incorporates a superheterodyne circuit with two stages of IF, and one stage of RF amplification on all bands.

When adjustments are made on the 7F01 or any AC-DC chassis, a line isolation transformer (110 V input to 110 V output) is recommended in order to avoid a "hot" chassis. If an isolation transformer is not available, check the AC voltage between chassis and bench ground, and if there is any indication of voltage, reverse the plug before handling the set.

AM Alignment: The alignment of this chassis on the standard broadcast band is conventional. The alignment slugs in the IF transformers are threaded and screw into the coil forms. The slugs are slotted for a small size fiber screw driver. Do not press hard on the aligning tool or the threads in the coil forms will strip and adjustment will be impossible.

FM RF Alignment: The tuning slugs are attached to threaded shafts and the slugs are varied in the field of the coils by turning the shafts clockwise or counter-clockwise. After adjustment the shafts must be secured with a drop of speaker cement.

FM IF Alignment: The same type of tuning slugs for aligning the AM IF Amplifier are used for the FM I.F.'s. Observe the same precautions when making adjustments.

FM Discriminator Alignment: When the secondary of the discriminator is aligned (operation 5) use sufficient signal input to get a good positive and negative indication before setting the slug for zero reading. A center zero indicating meter is recommended for this adjustment, but is not absolutely necessary. Reversing the leads of a non-zero center meter, or observing closely when the meter starts to go to the left (negative) of zero will give the same results.

MODEL 7H920, Ch. 7F01

PARTS LIST

PART NO.	REF.NO.	DESCRIPTION
		DIAL ASSEMBLY
12-1407		Dial Light Socket Mounting Bracket
26-389		Louvre Dial
46-538		Tuning Control Knob
46-688		Tone Control Knob
46-718		Band Switch Knob
54-211		Speed Nut (4 used on Dial Scale Mtg.)
57-1335		Tone Knob Esc.
76-493		Tuning Shaft
78-786		Dial Light Socket
80-69		Dial Cord Spring
80-209		Dial Cord Spring
80-444		Tuner Arm Tension Spring
80-580		Tuner Arm Stop Spring
80-581		Tuner Arm Pressure Spring
83-1504		Dial Light Shield
93-475		Felt Washer (S-14129)
93-690		Felt Washer (Used on S-13944)
94-371		Pointer Pulley Bushing
100-97		Dial Light Bulb
114-26		#8 x 1/4" Hex. Hd. S.T. Screw Type Z Cad. (Used on 12-1407)
188-30		Retaining Ring
188-102		Clamping Ring
S-13944		Pointer, Pulley & Bushing Assembly (59-205)
S-13945		Cam, Pulley and Bushing
S-13981		Tone Control Bracket & Lug Assembly
S-13982		Dial Cord & Eyelet Assembly
S-13983		Dial Cord & Eyelet Assembly
S-14129		Volume Control Knob Assembly
S-14429		Tuner Arm Assembly
		COILS & CHOKES
S-12256	L21	A.C. Line Choke Coil Assembly
S-13971	T2	2nd, I.F. Transformer Assembly
S-13972	T3	3rd. I.F. Transformer Assembly
S-13973	T4	Discriminator Transformer Assembly
S-13974	L4	Broadcast Detector Coil Assembly
S-14192	L2	F.M. Antenna Coil Assembly
S-15733	L5	F.M. Oscillator Coil Assembly
S-15743	L3	F.M. Detector Coil Assembly
S-15888	L6	Broadcast Osc. Coil Assembly
S-15981	T1	1st. I.F. Transformer Assembly
		CONDENSERS
22-3	C5	.01 Mfd. Ceramic (Disc.) 500 V.
22-829	C10	.05 Mfd. 200 V.
22-854	C18	.0005 Mfd. 600 V.
22-1220	C13	.002 Mfd. 600 V.
22-1367	C12	50 Mmfd. Ceramic 500 V.
22-1506	C7	22 Mmfd. Ceramic 500 V.
22-1507	C15	25 Mmfd. Ceramic 500 V.
22-1661	C21,22 23, & 24	Elect. 8-4-40 Mfd. 150V-40 Mfd. 25 V.
22-1669	C8	100 Mmfd. Ceramic 500 V.
22-1676	C6	.001 Mfd. Ceramic 500 V.
22-1677	C1	Three Gang Variable
22-1683	C16	.02 Mfd. (Shielded) 400 V.
22-1702	C19	.005 Mfd. 400 V.
22-1705	C9	30 Mmfd. Ceramic 500 V.
22-1766	C11	.68 Mmfd. (Molded) 500 V.
22-1775	C26	.047 Mfd. 400 V.
22-2084	C20	.1 Mfd. 200 V.
		RESISTORS
63-1202	R21	330 Ohm W.W. 2 W 10% Ins. Res.
63-1450	R24	22 Ohm W.W. 1 W 20% Ins. Res.
63-1452	R20	270 Ohm W.W. 2 W 10% Ins. Res.
63-1582	R23	Tone Control
63-1584	R18	Volume Control & Switch
63-1737	R3	68 Ohm 1/2 W. 20% Ins. Res.
63-1744	R6	100 Ohm 1/2 W. 20% Ins. Res.
63-1747	R19	120 Ohm 1/2 W. 10% Ins. Res.

PART NO.	REF.NO.	DESCRIPTION
		RESISTORS
63-1772	R2	470 Ohm 1/2 W. 20% Ins. Res.
63-1779	R1	680 Ohm 1/2 W. 20% Ins. Res.
63-1785	R8	1000 Ohm 1/2 W. 10% Ins. Res.
63-1786	R9	1000 Ohm 1/2 W. 20% Ins. Res.
63-1799	R25	2200 Ohm 1/2 W. 10% Ins. Res.
63-1800	R7	2200 Ohm 1/2 W. 20% Ins. Res.
63-1806	R13	3300 Ohm 1/2 W. 10% Ins. Res.
63-1810	R14	3900 Ohm 1/2 W. 10% Ins. Res.
63-1817	R22	5600 Ohm 1/2 W. 10% Ins. Res.
63-1824	R15	8200 Ohm 1/2 W. 10% Ins. Res.
63-1828	R5	10K Ohm 1/2 W. 20% Ins. Res.
63-1856	R11	47K Ohm 1/2 W. 20% Ins. Res.
63-1870	R12	100K Ohm 1/2 W. 20% Ins. Res.
63-1876	R16	150K Ohm 1/2 W. 10% Ins. Res.
63-1898	R10	470K Ohm 1/2 W. 20% Ins. Res.
63-1926	R4	2.2 Megohm 1/2 W. 20% Ins. Res.
63-1940	R17	4.7 Megohm 1/2 W. 20% Ins. Res.
		MISCELLANEOUS
12-1070		Wavemagnet Mounting Bracket (2 used)
14-851		Cabinet for 7H920W (or 14-848)
14-1020		Cabinet for 7H920 (or 14-850)
19-139		Cabinet Back Retaining Clip (4 used)
49-608	SP-1	7 1/2" P. M. Speaker 208-608 Cone & Voice Coil Assembly
54-139		#3/8-32 x 9/16" Palnut Type 9N Steel Cad. (Used to mount Volume Control)
54-140		#3/8-32 x 9/16" Hex. Nut Steel (Used to mount Tone Control)
54-226		Speed Nut Tinnerman (3 used to mount Tuning Cores)
57-1269		I.F. Transformer Terminal Plate
58-128		Two Prong Plug
74-52		Plastic Speaker Screen
78-782		Minature Tube Socket (7 contact)
78-788		Minature Tube Socket (9 contact)
78-794		Minature Tube Socket (3 used)
78-795		Minature Tube Socket (7 contact)
78-854		Minature Tube Socket (9 contact)
85-464		Band Switch
93-665		Fibre Washer (2 used on S-14385)
93-719		.031 x 5/16 x 7/16 Steel Washer Cad. Pl. (4 used on 74-52)
94-334		Speaker Mounting Bushing
94-485		Fibre Bushing (1 ea. used on 63-1584) and 63-1582)
94-598		R.F. Plate Mounting Bushing (4 used)
95-1035		Output
97-284		Dial Cord Guide Stud
97-293		Insulating Stud (4 used on Chassis Mtg.)
110-130		Grill Cloth
112-281		#10 x 3/4" Oval B.H.S.T. Stat. Bronze (4 used on chassis mounting)
112-697		#6 x 7/16" Straight Side B.H.S.T. Steel Cad. Pl. (4 used on back)
114-26		#8 x 1/4" Hex. Hd. S.T. Screw Steel Cad. Pl. (2 used on S-13977)
114-78		#6 x 32 x 5/16" Hex. Hd. Slotted S. T. (Wavemagnet Mtg.)
114-160		#6 x 7/8" Hex. Hd. S. T. Screw (1 used to Mt. 212-3)
114-292		#6 x 5/8" Hex. Hd. Sl. S. T. Screw (8 used)
114-319		#8-32 x 11/16" Hex. Hd. Slotted M.S. Steel (4 used)
125-17		Rubber Grommet (4 used on 49-608)
125-62		Rubber Grommet (4 used on R.F. Plate)
139-69		Speaker Baffle
149-64		Tuning Core (3 used)
188-34		Ring (Used on 63-1582)
202-697		F.M. Instruction Book
202-741		Instruction Book
212-3	SE-1	Selenium Rectifier
S-13977	L1	Wavemagnet Assembly
S-14128		Cabinet Back, A.C. Plug & Cord Assembly (Complete)
S-14358		Wavemagnet Cable Assembly
S-14562		Cabinet Back, A.C. Plug & Cord Assembly (W Model Only) (Complete)

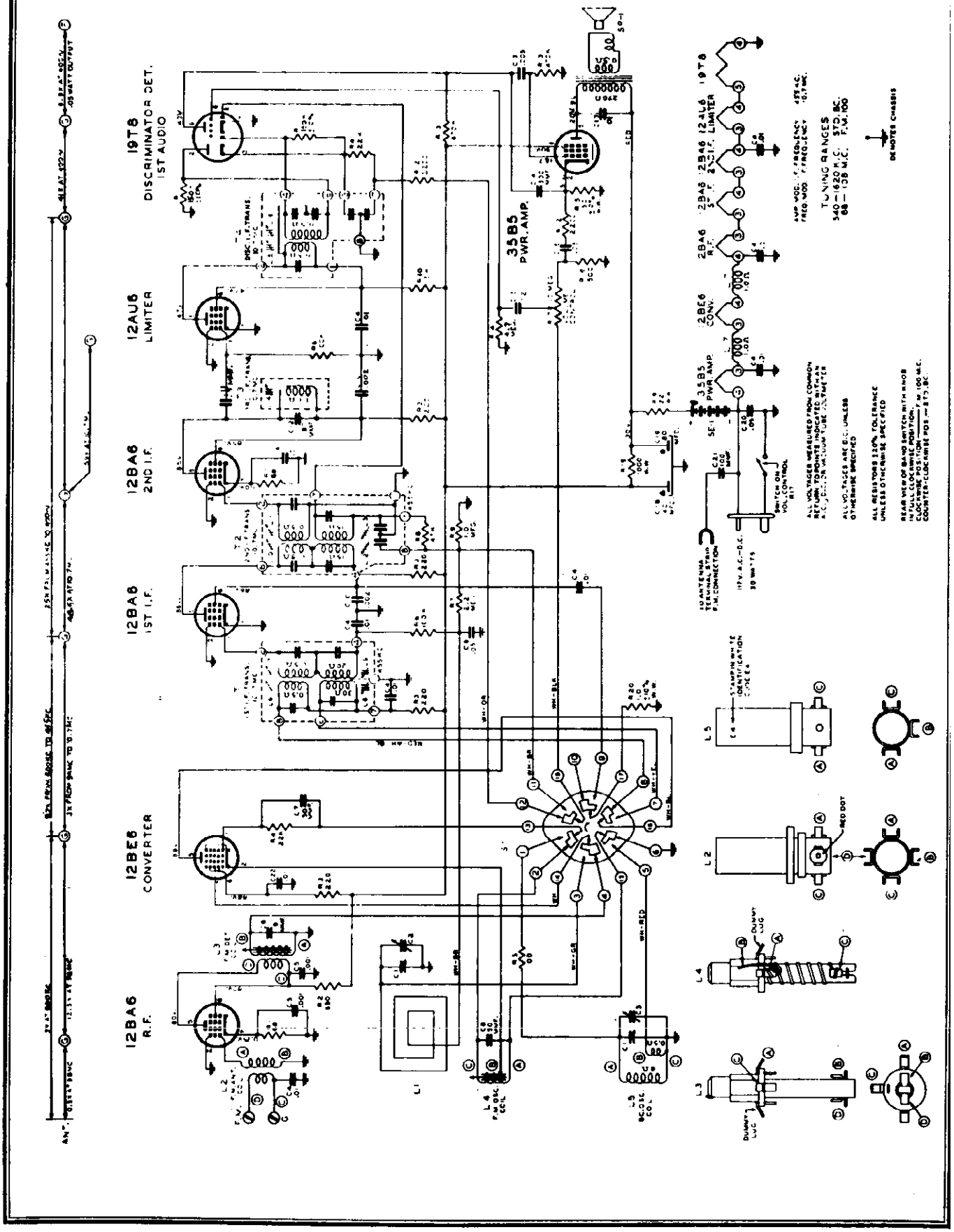
19T8
DISCRIMINATOR DET.
1ST AUDIO
12AU6
LIMITER
12BA6
2ND I.F.
12BA6
1ST I.F.
12BE6
CONVERTER
12BA6
R.F.
3S8S
PWR.AMP.
2BA6
R.F.
2BE6
CONV.
2BA6
2ND I.F.
12AL6
LIMITER
19T8
TUNING RANGES
540—1620 K.C. STD. BC.
88—108 M.C. F.M. 100
DENOTES CHASSIS

ALIGNMENT PROCEDURE

Operation	Connect Oscillator to	Dummy Antenna	Input Signal Frequency	Band	Set Dial To	Adj. Trimmers	Purpose
1	Pin 7 12BE6 Converter	.05 Mfd.	455 KC. Modulated	BC	600 Kc.	L8, 9, 12, 13	Align I. F. channel for maximum output.
2	2 turns loosely cpld. to wavemagnet		1600 Kc. Modulated	BC	1600 Kc.	C 3	Set oscillator to dial scale.
3	2 turns loosely cpld. to wavemagnet		1400 Kc. Modulated	BC	1400 Kc.	C 2	Align antenna stage.
4 (a)	Pin 1 (grid) on 12AU6 limiter.	.05 Mfd.	10.7 Mc. Unmodulated	FM 100		L15 coil slug Primary discr.	Align primary of discriminator for maximum reading.
5 (b)	Pin 1 (grid) on 12AU6 limiter.	.05 Mfd.	10.7 Mc. Unmodulated	FM 100		L16 coil slug sec. of discr.	Adjust secondary of discriminator for zero reading.
6 (c)	Pin 1 (grid) on 12BA6 2nd IF.	.05 Mfd.	10.7 Mc. Unmodulated	FM 100		L14 Prim. of 3rd IF trans.	Align 3rd IF transformer for maximum reading.
7 (c)	Pin 1 (grid) on 12BA6 1st IF.	.05 Mfd.	10.7 Mc. Unmodulated	FM 100		L10 and L11 Prim. and Sec. of 2nd IF transformer	Align 2nd IF transformer for maximum reading.
8 (c)	Pin 7 (grid) on 12BE6 converter tube socket.	.05 Mfd.	10.7 Mc. Unmodulated	FM 100		L6 and L7 Prim. and Sec. of 1st IF transformer.	Align 1st IF transformer for maximum reading.
9 (c)	Antenna Post FM (Remove line ant.)	270 ohms	98 Mc. Unmodulated	FM 100	98 Mc.	L3 Osc. Coil Slug	Set Oscillator to dial scale.
10 (c) (d)		270 ohms	98 Mc. Unmodulated	FM 100	98 Mc.	L4 Det. Coil Slug	Align det. stage to maximum reading.

IMPORTANT

Alignment of this chassis will in most cases be unnecessary unless an IF or RF transformer is replaced or the adjustments have been tampered with.

Correct alignment can only be made if the following procedure is followed:

A vacuum tube voltmeter with an isolation resistor of 2,000,000 ohms in series with the hot lead will serve for FM adjustments. This lead should be shielded.

An AC output meter connected across the primary or secondary of the output transformer will be satisfactory for all AM adjustments.

The signal generator output should be kept just high enough to get an indication on the meter.

(a) Vacuum Tube Voltmeter Lug 6 on discriminator transformer to chassis (half discriminator load).

(b) Vacuum Tube Voltmeter Lug 3 on discriminator transformer to chassis (full discriminator load).

(c) Vacuum Tube Voltmeter from Limiter Grid to Chassis.

(d) Loosen Slugs by applying a hot iron to the cement.

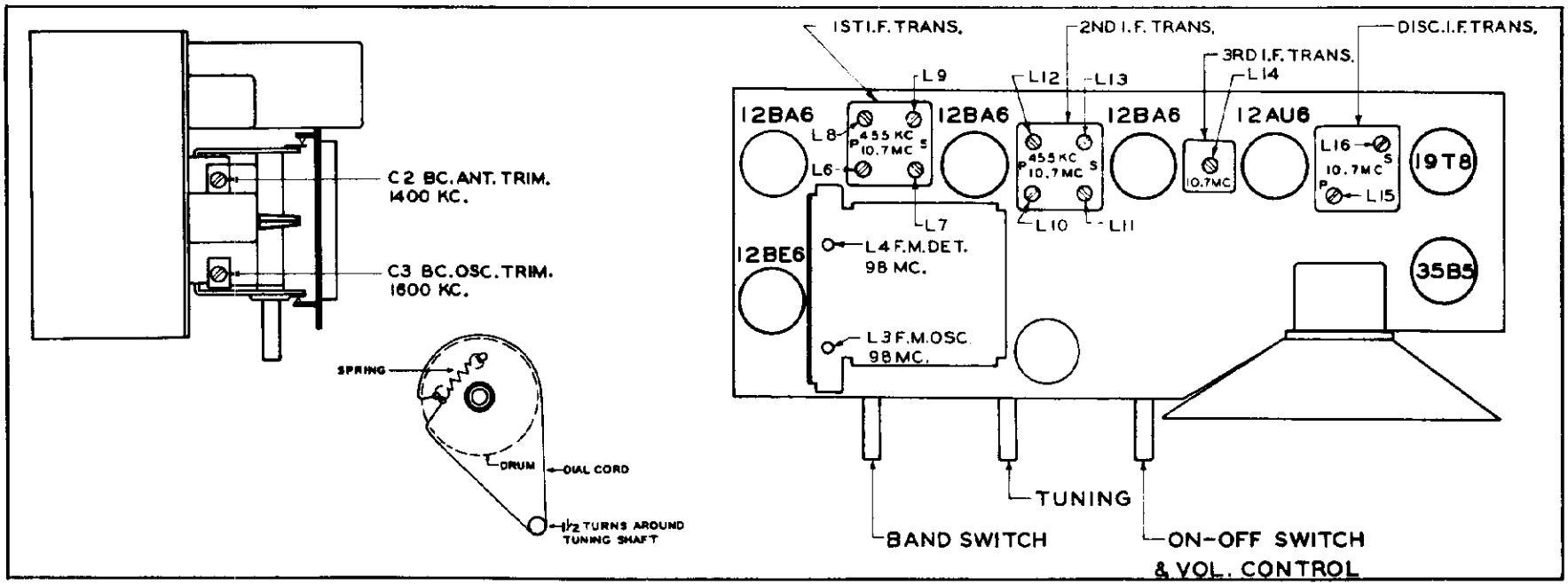

TUBE AND TRIMMER LOCATION

The 7F04 chassis incorporates a superheterodyne circuit with two stages of IF, on the FM Band, and one stage on the AM Band. There is one stage of RF amplification on the FM Band.

When adjustments are made on the 7F04 or any AC-DC chassis, a line isolation transformer (110 V input to 110 V output) is recommended in order to avoid a "hot" chassis. If an isolation transformer is not available, check the AC voltage between chassis and bench ground, and if there is any indication of voltage, reverse the plug before handling the set.

AM Alignment: The alignment of this chassis on the standard broadcast band is conventional. The alignment slugs in the IF transformers are threaded and screw into the coil forms. The slugs are slotted for a small size fiber screw driver. Do not press hard on the aligning tool or the threads in the coil forms will strip and adjustment will be impossible.

FM RF Alignment: The tuning slugs are attached to threaded shafts and the slugs are varied in the field of the coils by turning the shafts clockwise or counter-clockwise. After adjustment the shafts must be secured with a drop of speaker cement.

FM IF Alignment: The same type of tuning slugs for aligning the AM IF Amplifier are used for the FM IF's. Observe the same precautions when making adjustments.

FM IF Alignment: Because of the wide band pass, it is desirable to use a FM signal generator and a cathode ray oscilloscope when aligning the FM IF channel. The instruction book for the Zenith Model 800 Signal Generator (Form Z8001) covers complete FM alignment procedure. If visual alignment equipment is unavailable, reasonably accurate alignment can be made by following the procedure outlined below.

FM Discriminator Alignment: When the secondary of the discriminator is aligned (operation 5) use sufficient signal input to get a good positive and negative indication before setting the slug for zero reading. A center zero indicating meter is recommended for this adjustment, but is not absolutely necessary. Reversing the leads of a non-zero center meter, or observing closely when the meter starts to go to the left (negative) of zero will give the same results.

MODEL 7H921, Ch. 7F04

PARTS LIST

PART NO.	REF.NO.	DESCRIPTION
		DIAL ASSEMBLY
26-403		Dial Scale
46-734		Tuning & Vol. Control Knob (2 Used)
46-735		Band Switch Knob
46-769		Tuning & Vol. Control Knob (2 Used on W Model only)
46-770		Band Switch Knob (W Model only)
57-1486		Cabinet Emblem Plate
59-146		Dial Pointer
76-506		Tuning Control Shaft
80-402		Dial Cord Tension Spring
80-444		Tuner Arm Tension Spring
80-580		" " Stop "
80-581		" " Pressure "
93-956		1/16 X 9/32 X 3/4" Black Felt Washer (Used on 59-146)
114-271		#6 X 1/2" Hex Hd. Slotted S.T. Type Z N.P. (1 Used on 26-403)
188-32		Retaining Ring (76-506)
S-14523		Tuning Shaft Brkt. & Insulating Strip Assem.
S-14524		Condenser Pulley & Cam Assem.
S-14525		Tuner Arm Assem.
S-14526		Dial Cord & Eyelet Assem.
		COILS & CHOKES
S-13871	L3	F. M. Detector Coil Assem.
S-13973	T4	Discriminator Transformer Assem.
S-13997	L17	Filament Choke Coil Assem.
S-14480	L2	F. M. Antenna Coil Assem.
S-14481	L5	Broadcast Osc. Coil Assem.
S-14509	T3	3rd. I. F. Coil Assem.
S-14521	T1	1st. I. F. Trans. "
S-14522	T2	2nd. I. F. Trans. "
S-14695	L4	F. M. Osc. Coil Assem.
		CONDENSERS
22-3	C22	.01 Mfd. (Ceramic) 500V
22-162	C21	100 " (Mica) (or 22-1669) 500V
22-229	C13	.005 " 600V
22-829	C9	.05 " 200V
22-830	C15	.02 " 600V
22-854	C14	500 Mmfd. 600V
22-1017	C20	.05 Mfd. 400V
22-1126	C17	.01 " 400V
22-1158	C16	.05 " 200V
22-1220	C10	.002 " (2 Used) 600V
22-1385	C4	.01 Mfd. (9 Used) 200V
22-1492	C8	50 Mmfd. (Ceramic) 500V
22-1507	C11	25 " (") 500V
22-1511	C7	50 " (") 500V
22-1676	C5	.001 Mfd. (") 500V
22-1688	C6	19 Mmfd. (") 500V
22-1742	C1	Two Section Variable
22-1757	C18,19	Electrolytic Cond. 80-40 Mfd. 150V
22-1768	C12	30 Mmfd. (Ceramic) 500V
		RESISTORS
63-686	R15	150 Ohm W.W. 1/2W 10% Ins.
63-1223	R20	1 Ohm " " " "
63-1450	R19	22 Ohm " 1W 20% "
63-1527	R18	1000 Ohm " 3W " "
63-1646	R17	Volume Control & Switch
63-1737	R1	68 Ohm 1/2W 20% Ins.
63-1744	R5	100 " " " "
63-1758	R3	220 " " " " (4 Used)
63-1779	R2	680 " " " "
63-1793	R16	1500 Ohm " " "
63-1800	R12	2200 " " " " (2 Used)
63-1835	R10	15K " " " "
63-1842	R4	22K " " " " (2 Used)
63-1856	R8	47K " " " "
63-1870	R6	100K " " " " (2 Used)

PART NO.	REF.NO.	DESCRIPTION
		RESISTORS
63-1876	R11	150K " " " " (2 Used)
63-1898	R13	470K " " " "
63-1912	R9	1 Meg." " " "
63-1926	R7	2.2 Meg. Ohm " " "
63-1940	R14	4.7 " " " " "
		MISCELLANEOUS
12-1070		Wavemagnet Mtg. Brkt.
14-1022		Cabinet For Model 7H921
14-855		" " " 7H921 White
19-179		Coil Mtg. Clip (S-14509)
19-189		" Retaining Clip
49-667	SP-1	4" P.M. Speaker
		208-667 Cone & Voice Coil
		206-667 Output Trans.
54-139		3/8-32 X 9/16" Palnut-Type 9 N Cad. (1 Used on Vol. Cont. - 1 Used on 85-430)
54-266		Speed Nut (1 Used S-13871 & 1 Used on S-14695)
54-267		#6-32 X 5/16 Palnut Steel Cad. (Used on 26-403)
54-269		#8-32 X 5/16 " " " (1 Ea. Used on I. F.'s & Disc. Trans.)
54-271		#6-32 X 1/4" Palnut Steel Cad. (2 Used on S-14509)
57-1269		I.F. Trans. Terminal Plate (6 Used)
58-128		Two Prong Plug
73-30		#6-32 X 1/4" Hex. Hd. Slotted Set Screw Cuppoint (2 Used)
78-787		Two Contact Socket
78-788		Miniature Tube Socket (9 Contact)
78-806		" " "
78-807		" " " (5 Used)
83-1056		Wavemagnet Mtg. Strip
83-1090		Insulating Strip
83-1498		" " (3 hole strip over controls)
83-1520		Rectifier Insulating Strip
83-1545		Insulating Strip (1 Ea. Used on S-13973 - S-14521 & S-14522)
83-1593		Felt Strip (2 Used on Dial Glass)
85-430	S1	Band Switch
93-125		#6 Int. Shakeprf. Lockwasher #1206 (6 Used)
93-855		1/8" thick X 3/4" diameter Rubber Washer (mtg. on Speaker Flange)
93-910		Felt Washer - Brown (3 Used behind Knobs)
97-293		Chassis Mtg. Stud (2 Used)
112-281		#10 X 3/4" Oval Bind. Hd. S.T. Type Z Stat. (Bronze (2 Used to mount chassis)
112-697		#6 X 7/16" Straight Side B.H.S.T. Steel Cad. Pl. (4 Used on S-14549)
113-26		#6-32 X 1/4" Hex. Hd. Slotted M.S. Steel (Shakeprf. Lock (2 Used)
114-92		#6 X 1-1/8" Hex. Hd. S.T. Type Z Cad. Pl. (1 Used on 212-3)
114-293		#6 X 32 X 3/8" Hex Hd. Slotted M.S. Steel (1 Ea. Used on 26-403 & 139-79)
139-79		Speaker Baffle
149-64		Iron Core & Spring (2 Used)
149-65		" " " (1 Used on S-14509)
159-50		Cinch Plug Button-Black (4 Used to Mt. dial glass)
192-117		Dial Glass
196-111		Speaker Gasket
199-35		Dial Scale Spacer Sleeve
202-697		F.M. Instruction Book
202-721		Instruction Book
212-3	SE-1	Selenium Rectifier
S-14527		Wavemagnet Lead & Stop Assem.
S-14549		Cabinet Back, Socket & A.C. Cord Assem.
S-14957		Wavemagnet Assem.
S-15325		Cabinet Back, Socket & A.C. Cord Assem.
S-15739		Speaker Support Brkt. & Plate Assem.

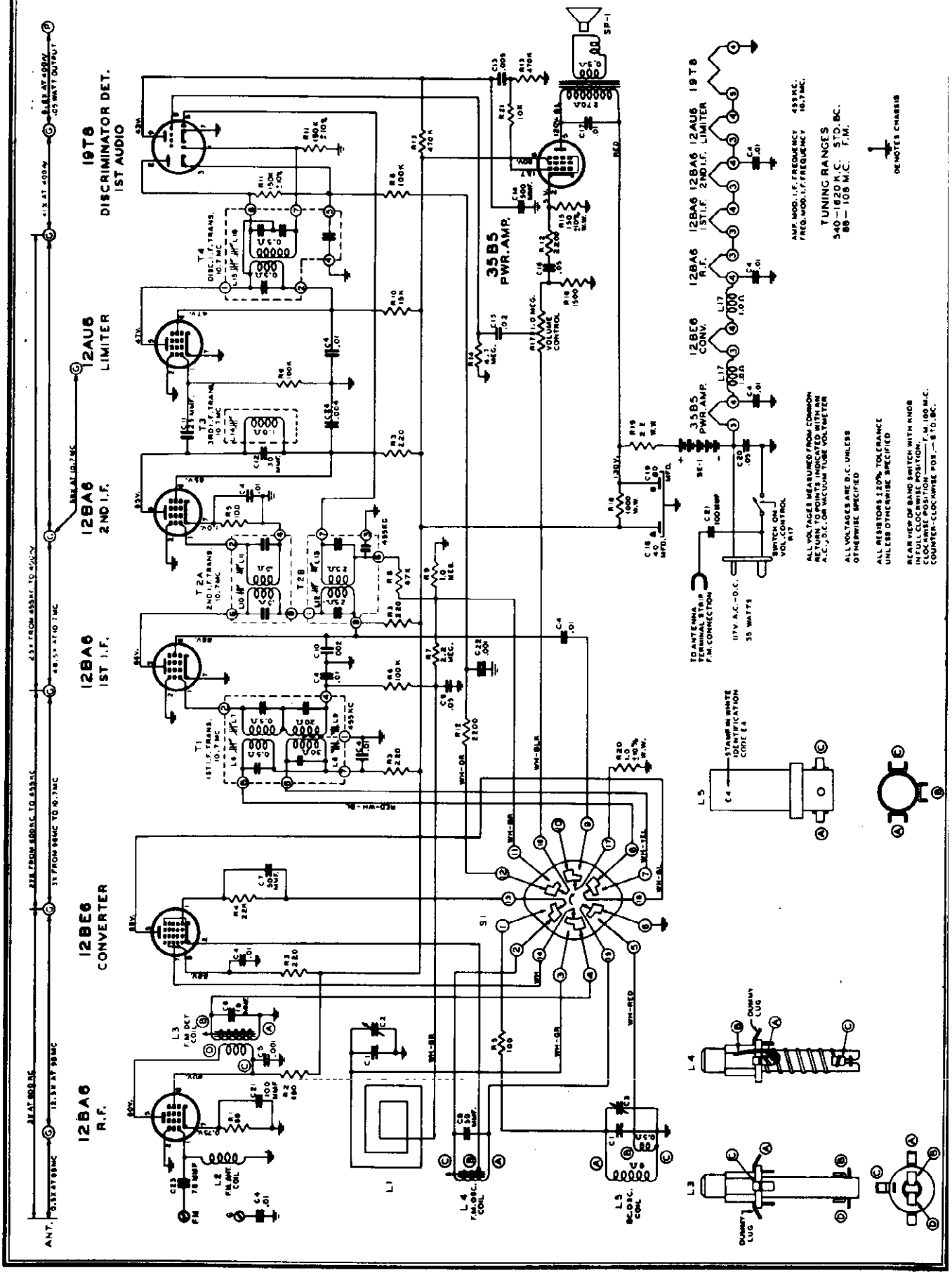
19T8
DISCRIMINATOR DET.
1ST AUDIO
12AU6
LIMITER
12BA6
2ND I.F.
12BA6
1ST I.F.
12BE6
CONVERTER
12BA6
R.F.
35B5
PWR.AMP.
35B5
PWR.AMP.
12BE6
CONV.
12BA6
R.F.
12BA6
1ST I.F.
12BA6
2ND I.F.
12AU6
LIMITER
19T8
TUNING RANGES
540—1620 K.C. STD. BC.
88— 108 M.C. F.M.
ANT.
SP-1
S1
L1
L3
L4
L5
T1
T2A
T2B
T3
T4
TO ANTENNA TERMINAL STRIP F.M. CONNECTION
117 V. A.C.—D.C.
35 WATTS
SWITCH ON VOL. CONTROL R17
ALL VOLTAGES MEASURED FROM COMMON RETURN TO POINTS INDICATED WITH AN A.C.-D.C. OR VACUUM TUBE VOLTMETER
ALL VOLTAGES ARE D.C. UNLESS OTHERWISE SPECIFIED
ALL RESISTORS ±20% TOLERANCE UNLESS OTHERWISE SPECIFIED
REAR VIEW OF BAND SWITCH WITH KNOB IN FULL CLOCKWISE POSITION
CLOCKWISE ROTATION: F.M. 100 M.C.
COUNTER-CLOCKWISE ROTATION: STD. BC.
DENOTES CHASSIS
DUMMY LUG
OMNI-V LUG

©John F. Rider

©John F. Rider

ALIGNMENT PROCEDURE

Operation	Connect Oscillator to	Dummy Antenna	Input Signal Frequency	Band	Set Dial To	Adj. Trimmers	Purpose
1	Pin 7 12BE6 Converter	.05 Mfd.	455 KC. Modulated	BC	600 Kc.	L8, 9, 12, 13	Align I. F. channel for maximum output.
2	2 turns loosely cpld. to wavemagnet		1600 Kc. Modulated	BC	1600 Kc.	C 3	Set oscillator to dial scale.
3	2 turns loosely cpld. to wavemagnet		1400 Kc. Modulated	BC	1400 Kc.	C 2	Align antenna stage.
4 (a)	Pin 1 (grid) on 12AU6 limiter.	.05 Mfd.	10.7 Mc. Unmodulated	FM 100		L15 coil slug Primary discr.	Align primary of discriminator for maximum reading.
5 (b)	Pin 1 (grid) on 12AU6 limiter.	.05 Mfd.	10.7 Mc. Unmodulated	FM 100		L16 coil slug sec. of discr.	Adjust secondary of discriminator for zero reading.
6 (c)	Pin 1 (grid) on 12BA6 2nd IF.	.05 Mfd.	10.7 Mc. Unmodulated	FM 100		L14 Prim. of 3rd IF trans.	Align 3rd IF transformer for maximum reading.
7 (c)	Pin 1 (grid) on 12BA6 1st IF.	.05 Mfd.	10.7 Mc. Unmodulated	FM 100		L10 and L11 Prim. and Sec. of 2nd IF transformer	Align 2nd IF transformer for maximum reading.
8 (c)	Pin 7 (grid) on 12BE6 converter tube socket.	.05 Mfd.	10.7 Mc. Unmodulated	FM 100		L6 and L7 Prim. and Sec. of 1st IF transformer.	Align 1st IF transformer for maximum reading.
9 (c)	Antenna Post FM (Remove line ant.)	270 ohms	98 Mc. Unmodulated	FM 100	98 Mc.	L4 Osc. Coil Slug	Set Oscillator to dial scale.
10 (c) (d)		270 ohms	98 Mc. Unmodulated	FM 100	98 Mc.	L3 Det. Coil Slug	Align det. stage to maximum reading.

IMPORTANT

Alignment of this chassis will in most cases be unnecessary unless an IF or RF transformer is replaced or the adjustments have been tampered with.

Correct alignment can only be made if the following procedure is followed:

A vacuum tube voltmeter with an isolation resistor of 2,000,000 ohms in series with the hot lead will serve for FM adjustments. This lead should be shielded.

An AC output meter connected across the primary or secondary of the output transformer will be satisfactory for all AM adjustments.

The signal generator output should be kept just high enough to get an indication on the meter.

(a) Vacuum Tube Voltmeter Lug 7 on discriminator transformer to chassis (half discriminator load).

(b) Vacuum Tube Voltmeter Lug 5 on discriminator transformer to chassis (full discriminator load).

(c) Vacuum Tube Voltmeter from Limiter Grid to Chassis.

(d) Loosen Slugs by applying a hot iron to the cement.

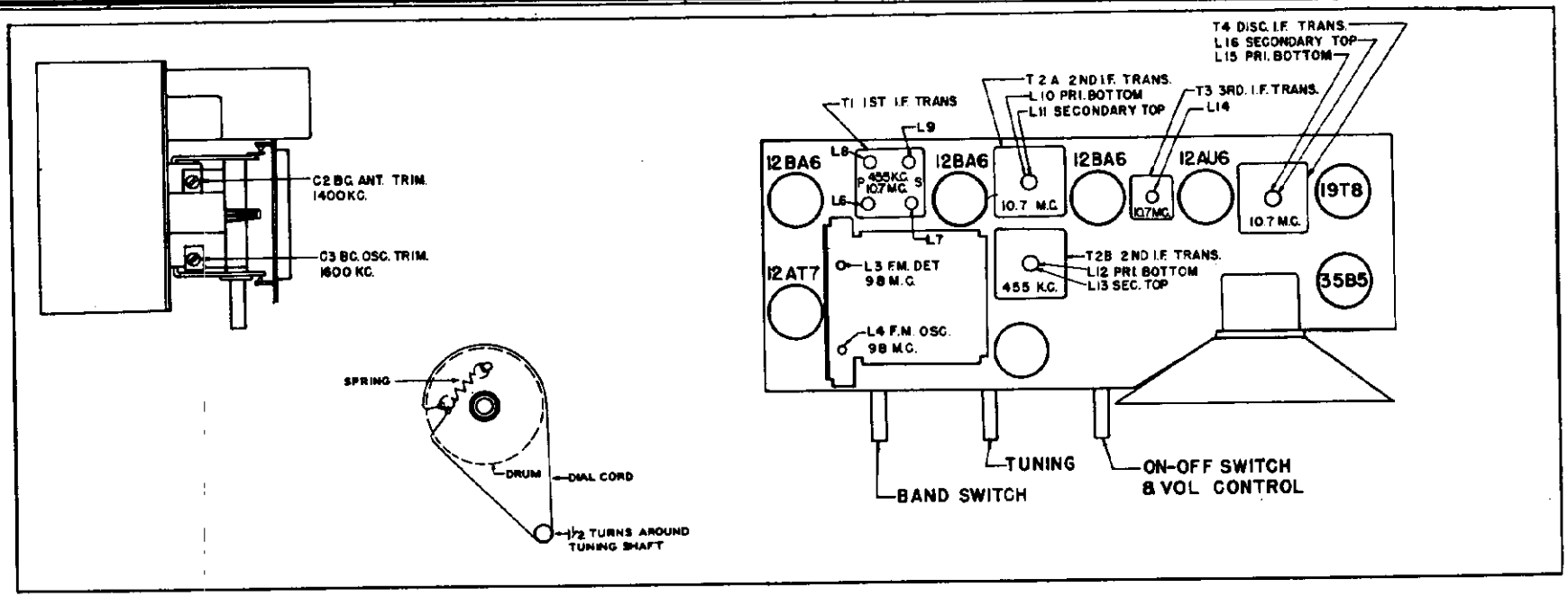

TUBE AND TRIMMER LOCATION

The 7F04Z chassis incorporates a superheterodyne circuit with two stages of IF, on the FM Band, and one stage on the AM Band. There is one stage of RF amplification on the FM Band.

When adjustments are made on the 7F04Z or any AC-DC chassis, a line isolation transformer (110 V input to 110 V output) is recommended in order to avoid a "hot" chassis. If an isolation transformer is not available, check the AC voltage between chassis and bench ground, and if there is any indication of voltage, reverse the plug before handling the set.

AM Alignment: The alignment of this chassis on the standard broadcast band is conventional. The alignment slugs in the 1st. IF transformer are threaded and screw into the coil form. The slug is slotted for a small size fiber screw driver. Do not press hard on the aligning tool or the threads in the coil forms will strip and adjustment will be impossible. The remaining IF transformers are of a different design in which the primary and secondary are stacked. The upper coil is the secondary and the lower the primary. When adjusting these I.F. transformers the tuning wrench 68-7 can be inserted into the top slug, rotated until maximum output is obtained and then dropped down to the lower slug and the same operation repeated. The tuning wrench is so designed that turning one slug does not affect the adjustment of the other.

FM RF Alignment: The tuning slugs are attached to threaded shafts and the slugs are varied in the field of the coils by turning the shafts clockwise or counter-clockwise. After adjustment the shafts must be secured with a drop of speaker cement.

FM IF Alignment: The same type of tuning slugs for aligning the AM IF Amplifier are used for the FM IF's. Observe the same precautions when making adjustments.

FM IF Alignment: Because of the wide band pass, it is desirable to use a FM signal generator and a cathode ray oscilloscope when aligning the FM IF channel. The instruction book for the Zenith Model 800 Signal Generator (Form Z8001) covers complete FM alignment procedure. If visual alignment equipment is unavailable, reasonably accurate alignment can be made by following the procedure outlined below.

FM Discriminator Alignment: When the secondary of the discriminator is aligned (operation 5) use sufficient signal input to get a good positive and negative indication before setting the slug for zero reading. A center zero indicating meter is recommended for this adjustment, but is not absolutely necessary. Reversing the leads of a non-zero center meter, or observing closely when the meter starts to go to the left (negative) of zero will give the same results.

MODEL 7H921Z,
Ch. 7F04Z

PARTS LIST

PART NO.	REF.NO.	DESCRIPTION
		DIAL ASSEMBLY
26-403		Dial Scale
46-734		Tuning & Volume Control Knob (2 Used)
46-735		Band Switch Knob
46-769		Tuning & Volume Control Knob (2 Used on W. Model only)
46-770		Band Switch Knob (W Model only)
57-148		Cabinet Emblem Plate
59-146		Dial Pointer
76-568		Tuning Control Shaft
80-402		Dial Cord Tension Spring
80-444		Tuner Arm Tension Spring
80-580		Tuner Arm Stop Spring
80-581		Tuner Arm Pressure Spring
93-956		1/16 x 9/32 x 3/4" Black Felt Washer (Used on 59-146)
114-271		#6 x 1/2" Hex Hd. Slotted S.T. Type Z N.P. (1 Used on 26-403)
188-32		Retaining Ring
S-14523		Tuning Shaft Bracket & Insulating Strip Assem.
S-14524		Condenser Pulley & Cam Assembly
S-14525		Tuner Arm Assembly
S-16153		Dial Cord & Eyelet Assembly
		COILS & CHOKES
95-1150		T2A 2nd. I.F. Trans. FM
95-1102		T2B 2nd. I.F. Trans. AM
95-1153		T4 Disc. I.F. Trans.
S-13871	L3	F.M. Detector Coil Assembly
S-13997	L17	Filament Choke Coil Assembly
S-15690	L2	F.M. Antenna Coil Assembly
S-14481	L5	Broadcast Osc. Coil Assembly
S-14509	T3	3rd. I.F. Coil Assembly
S-14521	T1	1st I.F. Trans. Assembly
S-14695	L4	F.M. Osc. Coil Assembly
		CONDENSERS
22-3	C4	.01 Mfd. (Ceramic) 500V
22-229	C13	.005 Mfd. 600V
22-448	C24	.004 Mfd. 600V
22-829	C9	.05 Mfd. 200V
22-830	C15	.02 Mfd. 600V
22-854	C14	500 Mmfd. 600V
22-887	C22	.001 Mfd. 600V
22-1017	C20	.05 Mfd. 400V
22-1126	C17	.01 Mfd. 400V
22-1158	C16	.05 Mfd. 200V
22-1220	C10	.002 Mfd. (2 Used) 600V
22-1492	C8	50 Mmfd. (Ceramic) 500V
22-1507	C11	25 Mmfd. (Ceramic) 500V
22-1511	C7	50 Mmfd. (Ceramic) 500V
22-1669	C21	100 Mfd. (Ceramic) 500V
22-1676	C5	.001 Mfd. (Ceramic) 500V
22-1688	C6	19 Mmfd. (Ceramic) 500V
22-1742	C1	Two Section Variable
22-1757	C18,19	Electrolytic Cond. 80-40 Mfd. 150V
22-1768	C12	30 Mmfd. (Ceramic) 500V
22-1852	C23	7.5 Mmfd. 500V
		RESISTORS
63-686	R15	150 Ohm W.W. 1/2W 10% Ins.
63-1223	R20	1 Ohm W.W. 1/2W 10% Ins.
63-1450	R19	22 Ohm W.W. 1W 20% Ins.
63-1527	R18	1000 Ohm W.W. 3W 20% Ins.
63-1646	R17	Volume Control and Switch
63-1737	R1	68 Ohm 1/2W 20% Ins.
63-1744	R5	100 Ohm " " "
63-1758	R3	220 " " " "
63-1779	R2	680 " " " "
63-1793	R16	1500 " " " "
63-1800	R12	2200 " " " "

PART NO.	REF.NO.	DESCRIPTION
		RESISTORS
63-1828	R21	10M Ohm 1/2W 20% Ins.
63-1835	R10	15K " " " "
63-1842	R4	22K " " " "
63-1856	R8	47K " " " "
63-1870	R6	100K " " " "
63-1876	R11	150K " " " "
63-1898	R13	470K " " " "
63-1912	R9	1 Megohm " " "
63-1926	R7	2.2 " " " "
63-1940	R14	4.7 " " " "
		MISCELLANEOUS
12-1070		Wavemagnet Mounting Bracket
14-1022		Cabinet for Model 7H921
14-855		Cabinet for Model 7H921 White
19-179		Coil Mounting Clip (S-14509)
19-189		Coil Retaining Clip
49-667	SP-1	4" P.M. Speaker 208-667 Cone & Voice Coil 206-667 Output Trans.
54-139		3/8-32 x 9/16" Palnut-Type 9 N. Cad. (1 used on Vol. Cont. - 1 used on 85-430)
54-266		Speed Nut (1 used S-13871 & 1 used on S-14695)
54-267		#6-32 x 5/16 Palnut Steel Cad. (Used on 26-403)
54-269		#8-32 x 5/16 Palnut Steel Cad. (1 ea. used on I.F.'s & Disc. Trans.)
54-271		#6-32 x 1/4" Palnut Steel Cad. (2 used on S-14509)
57-1269		I.F. Trans. Terminal Plate (6 used)
58-128		Two Prong Plug
73-30		#6-32 x 1/4" Hex. Hd. Slotted Set Screw Cuppoint (2 used)
78-787		Two Contact Socket
78-788		Miniature Tube Socket (9 Contact)
78-806		Miniature Tube Socket
78-807		Miniature Tube Socket (5 used)
83-1056		Wavemagnet Mounting Strip
83-1090		Insulating Strip
83-1498		Insulating Strip (3 hole strip over controls)
83-1520		Rectifier Insulating Strip
83-1545		Insulating Strip (1 ea. used on S-13973 - S-14521 & S-14522)
83-1593		Felt Strip (2 used on Dial Glass)
85-430	S1	Band Switch
93-125		#6 Int. Shakeproof Lockwasher #1206 (6 used)
93-910		Felt Washer - Brown (3 used behind knobs).
112-281		#10 x 3/4" Oval Bind. Hd. S. T. Type Z Stat. Bronze (2 used to mount chassis.)
114-92		#6 x 1-1/8" Hex. Hd. S. T. Type Z Cad. Pl. (1 used on 212-3)
114-293		#6 x 32 x 3/8" Hex. Hd. Slotted M.S. Steel (1 ea. used on 26-403 & 139-79)
139-79		Speaker Baffle
149-64		Iron Core & Spring (2 used)
149-65		Iron Core & Spring (1 used on S-14509)
159-50		Cinch Plug Button-Black (4 used to Mount dial glass)
192-117		Dial Glass
196-111		Speaker Gasket
199-35		Dial Scale Spacer Sleeve
202-697		F.M. Instruction Book
202-721		Instruction Book
212-3	SE-1	Selenium Rectifier
S-14527		Wavemagnet Lead & Stop Assembly
S-14549		Cabinet Back, Socket & A.C. Cord Assembly
S-14957	L1	Wavemagnet Assembly
S-14548		Cabinet Back, Socket & A.C. Cord Assembly
S-15739		Speaker Support Bracket & Plate Assembly

©John F. Rider

MODEL 7H922 , Ch. 7F02

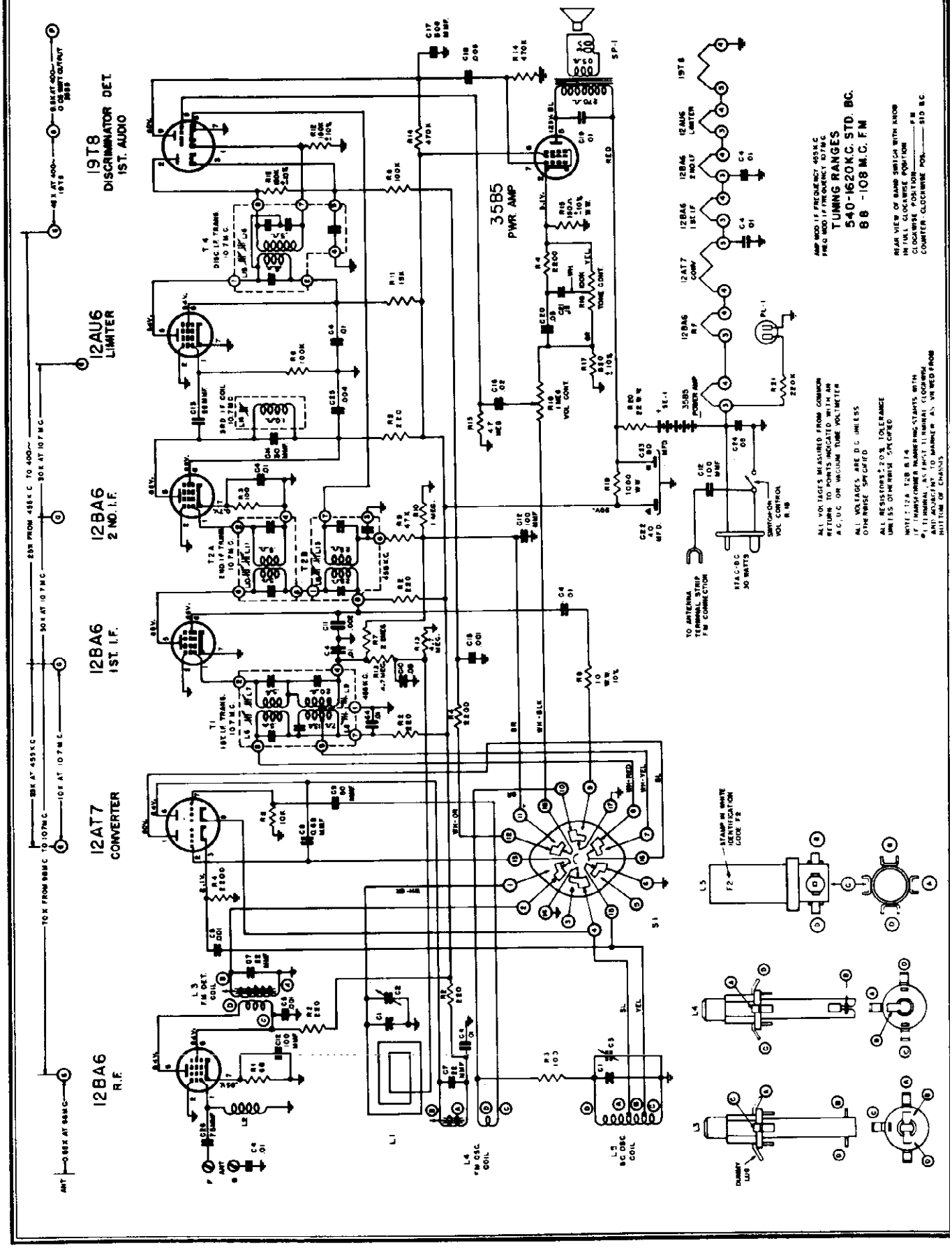

©John F. Rider

© John F. Rider

ALIGNMENT PROCEDURE

Operation	Connect Oscillator To	Dummy Antenna	Input Signal Frequency	Band	Set Dial To	Adj. Trimmers	Purpose
1	Pin 2 12AT7 Converter	.05 Mfd.	455 Kc. Modulated	BC	600 Kc.	L8, 9, 12, 13	Align I. F. channel for maximum output.
2	2 turns loosely cpld. to wavemagnet		1600 Kc. Modulated	BC	1600 Kc.	C3	Set oscillator to dial scale.
3	2 turns loosely cpld. to wavemagnet		1400 Kc. Modulated	BC	1400 Kc.	C2	Align antenna stage.
4 (a)	Pin 1 (grid) on 12AU6 limiter.	.05 Mfd.	10.7 Mc. Unmodulated	FM 100		L15 coil slug Primary discr.	Align primary of discriminator for maximum reading.
5 (b)	Pin 1 (grid) on 12AU6 limiter.	.05 Mfd.	10.7 Mc. Unmodulated	FM 100		L16 coil slug sec. of discr.	Adjust secondary of discriminator for zero reading.
6 (c)	Pin 1 (grid) on 12BA6 2nd. IF.	.05 Mfd.	10.7 Mc. Unmodulated	FM 100		L14 Prim. of 3rd. IF trans.	Align 3rd. IF transformer for maximum reading.
7 (c)	Pin 1 (grid) on 12BA6 1st. IF.	.05 Mfd.	10.7 Mc. Unmodulated	FM 100		L10 and L11 Prim. and Sec. of 2nd. IF transformer	Align 2nd IF transformer for maximum reading.
8 (c)	Pin 2 (grid) on 12AT7 converter tube socket.	.05 Mfd.	10.7 Mc. Unmodulated	FM 100		L6 and L7 Prim. and Sec. of 1st. IF transformer.	Align 1st. IF transformer for maximum reading.
9 (c)	Antenna Post FM (Remove line ant.)	270 ohms	98 Mc. Unmodulated	FM 100	98 Mc.	L4 Osc. Coil Slug	Set Oscillator to dial scale.
10 (c) (d)		270 ohms	98 Mc. Unmodulated	FM 100	98 Mc.	L3 Det. Coil Slug	Align det. stage to maximum reading.

IMPORTANT

Alignment of this chassis will in most cases be unnecessary unless an IF or RF transformer is replaced or the adjustments have been tampered with.

Correct alignment can only be made if the following procedure is followed:

A vacuum tube voltmeter with an isolation resistor of 2,000,000 ohms in series with the hot lead will serve for FM adjustments. This lead should be shielded.

An AC output meter connected across the primary or secondary of the output transformer will be satisfactory for all AM adjustments.

The signal generator output should be kept just high enough to get an indication on the meter.

(a) Vacuum Tube Voltmeter Lug 7 on discriminator transformer to chassis (half discriminator load).

(b) Vacuum Tube Voltmeter Lug 5 on discriminator transformer to chassis (full discriminator load).

(c) Vacuum Tube Voltmeter from Limiter Grid to Chassis.

(d) Loosen Slugs by applying a hot iron to the cement.

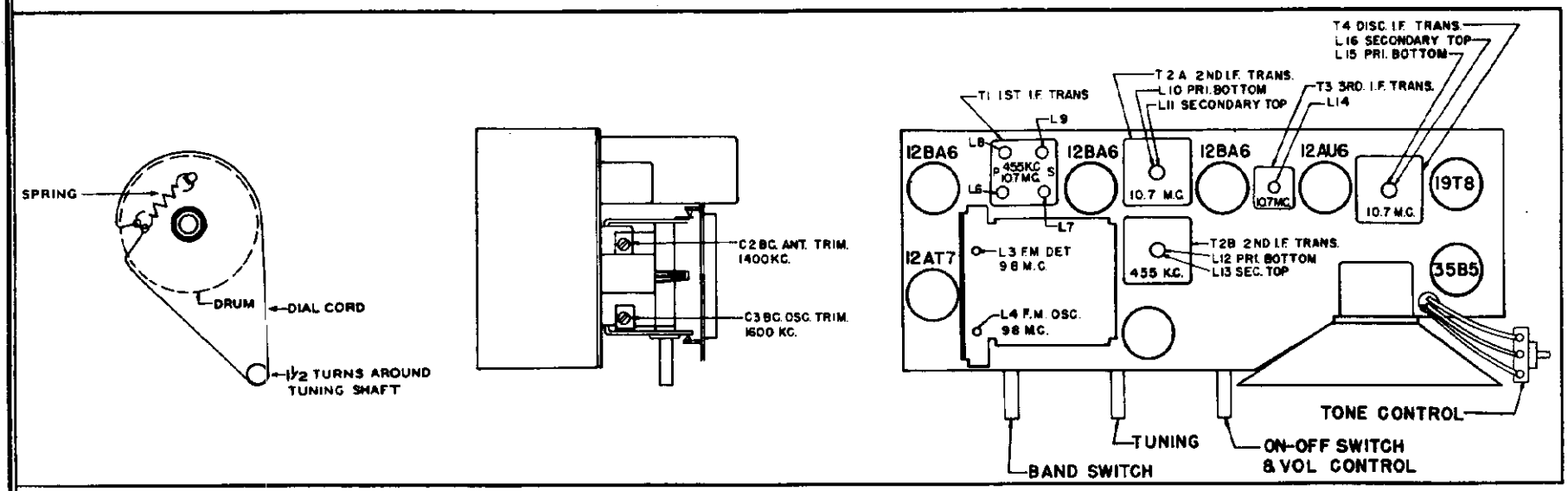

TUBE AND TRIMMER LOCATION

The 7F02 chassis incorporates a superheterodyne circuit with two stages of IF, on the FM Band, and one stage on the AM Band. There is one stage of RF amplification on the FM Band.

When adjustments are made on the 7F02 or any AC-DC chassis, a line isolation transformer (110 V input to 110 V output) is recommended in order to avoid a "hot" chassis. If an isolation transformer is not available, check the AC voltage between chassis and bench ground, and if there is any indication of voltage, reverse the plug before handling the set.

AM Alignment: The alignment of this chassis on the standard broadcast band is conventional. The alignment slugs in the IF transformers are threaded and screw into the coil forms. The slugs are slotted for a small size fiber screw driver. Do not press hard on the aligning tool or the threads in the coil forms will strip and adjustment will be impossible.

FM RF Alignment: The tuning slugs are attached to threaded shafts and the slugs are varied in the field of the coils by turning the shafts clockwise or counter-clockwise. After adjustment the shafts must be secured with a drop of speaker cement.

FM IF Alignment: The FM IF transformers in this receiver are of the new permeability tuned type. The advantage of an I.F. transformer of this type is its extreme stability under various humidity and temperature conditions. The upper coil is the secondary and the lower the primary. When adjusting these I.F. transformers the tuning wrench 68-7 can be inserted into the top slug, rotated until maximum output is obtained and then dropped down to the lower slug and the same operation repeated. The tuning wrench is so designed that turning one slug does not affect the adjustment of the other.

FM IF Alignment: Because of the wide band pass, it is desirable to use a FM signal generator and a cathode ray oscilloscope when aligning the FM IF channel. The instruction book for the Zenith Model 800 Signal Generator (Form Z8001) covers complete FM alignment procedure. If visual alignment equipment is unavailable, reasonably accurate alignment can be made by following the procedure outlined below.

FM Discriminator Alignment: When the secondary of the discriminator is aligned (operation 5) use sufficient signal input to get a good positive and negative indication before setting the slug for zero reading. A center zero indicating meter is recommended for this adjustment, but is not absolutely necessary. Reversing the leads of a non-zero center meter, or observing closely when the meter starts to go to the left (negative) of zero will give the same results.

MODEL 7H922, Ch. 7F02

PARTS LIST

PART NO.	REF.NO.	DESCRIPTION
		DIAL ASSEMBLY
12-1546		Indicator Socket Bracket
26-419		Dial Scale
46-780		Tone Control Knob
46-781		Tone Control Knob (W Model Only)
46-807		Band Switch Knob
46-808		Band Switch Knob (W Model Only)
46-809		Tuning & Volume Control Knob
46-810		Tuning & Volume Control Knob (W Model Only)
59-146		Dial Pointer
76-568		Tuning Control Shaft
78-585		Indicator Socket
80-402		Dial Cord Tension Spring
80-444		Tuner Arm Tension Spring
80-580		Tuner Arm Stop Spring
80-581		Tuner Arm Pressure Spring
93-35		.032 x .144 x 3/8 Steel Washer N. P. (2 Used on 26-419)
93-719		.031 x 3/16 x 7/16" Steel Washer Cad. (1 Used on 26-419)
93-729		.032 x .187 x 5/8" Steel Washer (1 Used on 26-419)
93-774		Felt Washer Brown (Used on Knobs)
93-956		1/16 x 9/32 x 3/4" Black Felt Washer (59-146)
100-105	PL-1	Neon Indicator Bulb
114-51		#6-32 x 1/2" Hex. Slotted Hd. M.S. Steel (1 Used on 26-419)
114-271		#6 x 1/2" Hex. Hd. Sl. S.T. (Used on 26-419)
188-32		Retaining Ring (Used on 76-568)
199-35		Dial Scale Spacer Sleeve
S-14523		Tuning Shaft Bracket & Insulator Strip Assem.
S-14524		Condenser Pulley & Cam Assembly
S-14525		Tuner Arm Assembly
S-16153		Dial Cord & Eyelet Assembly
		COILS & CHOKES
95-1102	T2B	2nd. I. F. Trans. (Broadcast)
95-1150	T2A	2nd. I. F. Trans. (F.M.)
95-1153	T4	Disc. Trans.
S-13871	L3	F.M. Detector Coil Assembly
S-14509	L14	3rd. I.F. Coil Assembly
S-15690	L2	F.M. Antenna Coil Assembly
S-15694	L5	Broadcast Osc. Coil Assembly
S-15695	T1	1st. I.F. Trans. Assembly
S-15733	L4	F.M. Osc. Coil Assembly
		CONDENSERS
22-3	C4	.01 Mfd. Ceramic 500 V.
22-229	C18	.005 Mfd. 600 V.
22-448	C25	.004 Mfd. 600 V.
22-829	C10	.05 Mfd. 200 V.
22-830	C16	.02 Mfd. 600 V.
22-854	C17	500 Mmfd. 600 V.
22-887	C15	.001 Mfd. 600 V.
22-1017	C24	.05 Mfd. 600 V.
22-1025	C21	.15 Mfd. 200 V.
22-1126	C19	.01 Mfd. 400 V.
22-1158	C20	.05 Mfd. 200 V.
22-1220	C11	.002 Mfd. 600 V.
22-1367	C9	50 Mmfd. Ceramic 500 V.
22-1506	C7	22 Mmfd. Ceramic 500 V.
22-1507	C13	25 Mmfd. Ceramic 500 V.
22-1669	C12	100 Mmfd. Ceramic 500 V.
22-1676	C5	.001 Mfd. Ceramic 500 V.
22-1742	C1	Two Section Variable
22-1757	C22,C23	Elect. 80-40 Mfd. 150 V.
22-1766	C8	.68 Mmfd. Ceramic 500 V.
22-1768	C14	30 Mmfd. Ceramic 500 V.
22-1852	C26	7.5 Mmfd. Ceramic 500 V.

PART NO.	REF.NO.	DESCRIPTION
		RESISTORS
63-686	R15	150 Ohm W.W. 1/2 W. 10% Ins. Res.
63-1223	R8	1.0 Ohm W.W. 1/2 W. 10% Ins. Res.
63-1450	R20	22 Ohm W.W. 1 W. 20% Ins. Res.
63-1527	R19	1000 Ohm W.W. 3 W. 20% Ins. Res.
63-1646	R18	Volume Control & Switch
63-1737	R1	68 Ohm 1/2 W. 20% Ins. Res.
63-1744	R3	100 Ohm 1/2 W. 20% Ins. Res.
63-1758	R2	220 Ohm 1/2 W. 20% Ins. Res.
63-1782	R17	820 Ohm 1/2 W. 10% Ins. Res.
63-1800	R4	2200 Ohm 1/2 W. 20% Ins. Res.
63-1828	R5	10K Ohm 1/2 W. 20% Ins. Res.
63-1835	R11	15K Ohm 1/2 W. 20% Ins. Res.
63-1856	R9	47K Ohm 1/2 W. 20% Ins. Res.
63-1870	R6	100K Ohm 1/2 W. 20% Ins. Res.
63-1876	R12	150K Ohm 1/2 W. 10% Ins. Res.
63-1884	R21	220K Ohm 1/2 W. 20% Ins. Res.
63-1898	R14	470K Ohm 1/2 W. 20% Ins. Res.
63-1912	R10	1 Megohm 1/2 W. 20% Ins. Res.
63-1926	R7	2.2 Megohm 1/2 W. 20% Ins. Res.
63-1940	R13	4.7 Megohm 1/2 W. 20% Ins. Res.
63-2008	R16	Tone Control
		MISCELLANEOUS
12-1070		Wavemagnet Mounting Bracket
14-861		Cabinet for 7H922 White
14-1122		Cabinet for 7H922
43-165		Handle Housing
49-634	SP-1	5 1/4" P.M. Speaker 208-634 Cone & Voice Coil Assembly 206-634 Output Trans.
54-139		3/8-32 x 9/16" Palnut Type 9N (1 ea. Used 63-1646 & 85-430)
54-226		Speed Nut-Tinnerman (1 ea. Used S-13871 & S-15733)
57-1269		I. F. Transformer Terminal Plate
57-1486		Cabinet Emblem Plate
58-128		Two Prong Plug
73-30		#6-32 x 1/4" Hex. Hd. Sl. Set Screw Cuppoint
78-787		Two Contact Socket
78-806		Minature Tube Socket
78-807		Minature Tube Socket (4 Used)
78-850		Minature Tube Socket (9 Contact)
78-868		Minature Tube Socket (9 Contact)
83-1393		Rubber Strip (Handle)
83-1593		Felt Strip (2 Used)
85-430	S-1	Band Switch
93-415		#6 Ext. Shakeproof Lockwasher (Used on 212-7)
93-961		Insulator Shoulder Washer (2 Used)
97-293		Chassis Mounting Stud (2 Used)
112-281		#10 x 3/4" Oval Binding Hd. S.T. Screw Stat. Bronze (2 Used)
112-697		#6 x 7/16" Straight Side B.H.S.T. Screw (4 Used on Back Mtg.)
114-92		#6 x 1 1/8" Hex. Hd. Sl. S. T. (1 Used on 212-7)
114-261		#6 x 3/8" Hex. Hd. Sl. S. T. Screw (2 Used on 43-165)
126-618		Tube Shield
149-64		Iron Core & Spring (2 Used)
149-65		Iron Core & Screw
159-50		Cinch Plug Button (4 Used to Mt. 192-117)
192-117		Dial Glass
196-111		Speaker Gasket
199-103		Flexible Handle Sleeve
199-103Y		Flexible Handle Sleeve (W Model Only)
202-697		F.M. Instruction Book
202-722		Instruction Book
212-7	SE-1	Selenium Rectifier
S-13210		Strip & Rivet Assembly
S-14527		Wavemagnet Lead & Stop Assembly
S-14548		Cabinet Back Assembly Complete
S-14957		Wavemagnet Assembly
S-15325		Cabinet Back Assembly Complete (W Model Only)

MODELS 8MF880, 8MF980, Ford

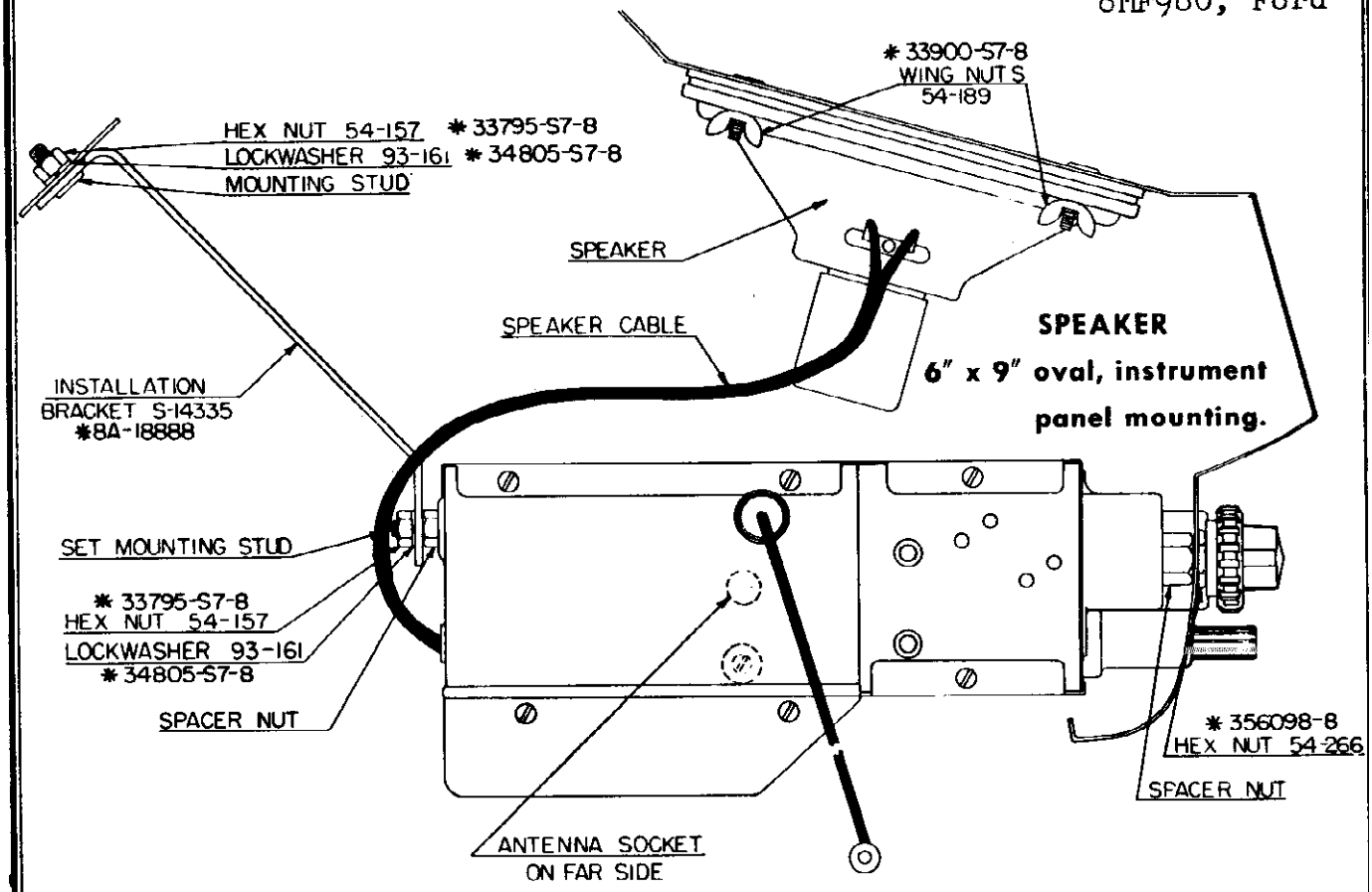

Fig. 1. Set Installed, Cut Away View

RECEIVER INSTALLATION

Figures 1 and 2, illustrating the escutcheon plate, control knobs and the installed receiver, are given here to facilitate removal and reinstallation of the receiver when service or repair is necessary.

1. Disconnect the "A" lead, the speaker cable, and the antenna from the receiver. (Fig. 1.)
2. Remove the volume control, tone control, trim and tuning knobs from the set. Remove the two front hex-nuts 54-266. Disconnect the bottom of the set rear mounting bracket S-14335 by removing the hex-nut 54-157, and lockwasher 93-161 from the set rear mounting stud, and take the set from its position behind the instrument panel. (Fig. 1.)
3. To take the speaker from behind the instrument panel remove the four 8-32 wing-nuts No. 54-189. (Fig. 1.)

OPERATING INSTRUCTIONS

TO TURN RADIO ON:

The radio is connected to the accessory terminal of the ignition switch, therefore, it is necessary to turn the ignition key to the left, if the engine is not running, before turning the radio on. Press any one of the five automatic push buttons. (Fig. 2.) Allow approximately 20 seconds for the receiver to reach operating temperature.

To turn the receiver off, press the "Off" push button (Fig. 2).

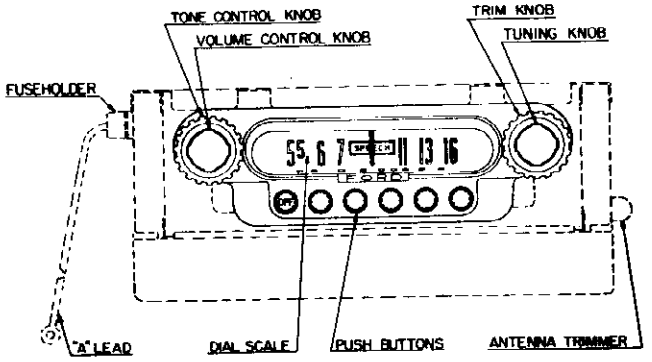

Fig. 2. Front Panel View

MANUAL TUNING:

To operate the manual tuning control simply turn the tuning knob. (Fig. 2.) When tuning in a station, be sure to tune to the exact frequency for the best tone quality.

VOLUME CONTROL:

Turn the volume control knob for the desired volume. (Fig. 2.)

TONE CONTROL:

The tone control knob is located directly behind the volume control knob. Turning this control to the right or left will change the tone of the receiver. The control has four positions. The position to which the control is set is indicated in the window in the center of the dial scale.

* Indicates Ford part number.

MODELS 8MF880, 8MF980, Ford

AUTOMATIC TUNING:

There are five automatic tuning push buttons located to the right of the "Off" push button. (Fig. 2.)

The five buttons may be adjusted in succession to any desired dial setting. To simplify the identification of the stations, it is advisable to set the buttons in sequence according to the frequencies of the stations, beginning with the station broadcasting at the lowest frequency and progressing to the station broadcasting at the highest frequency.

To adjust the automatic tuning push buttons:

1. Turn the receiver on and allow it to operate for at least 15 minutes in order for each part to reach normal operating temperature.
2. Tune in the station desired for number 1 position by turning the tuning knob. (Fig. 2.) Be sure to tune to the exact frequency to insure the best tone.
3. Loosen the number one push button, located nearest the "OFF" push button (Fig. 2) by turning it counterclockwise with your fingers not more than two turns. If the push button is completely unscrewed, the plunger assembly, inside the receiver, may come apart. Then it will be necessary to remove the radio from the car, open the case, and reassemble the plunger.
4. Press the button in as far as it will go.
5. Release the number 1 button and tighten it by turning it clockwise with your fingers.
6. Use the same procedure for adjusting positions 2, 3, 4, and 5. When the five automatic tuning push buttons have been adjusted to the five desired stations, any one of the five stations can be instantly tuned in by pressing the automatic push button that is adjusted to it.

INTERFERENCE SUPPRESSION

There should be no motor noise or interference from the ignition circuit if the receiver has been installed in the car according to the instructions furnished with it. The interference suppression equipment may be checked for proper installation by referring to the following illustrations:

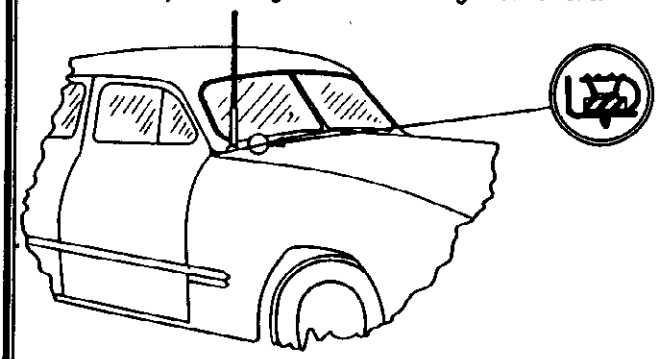

Fig. 3

The hood bonding spring No. 80-579 should be installed on the cowl at the location shown in Fig. 3.

The generator condenser, No. 22-1601, should be mounted under the top assembly bolt on the rear end plate of the generator, and the lead connected to the ARMATURE terminal of the generator. (Fig. 4.)

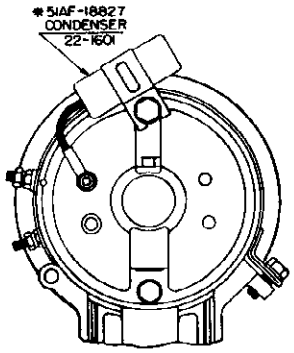

Fig. 4

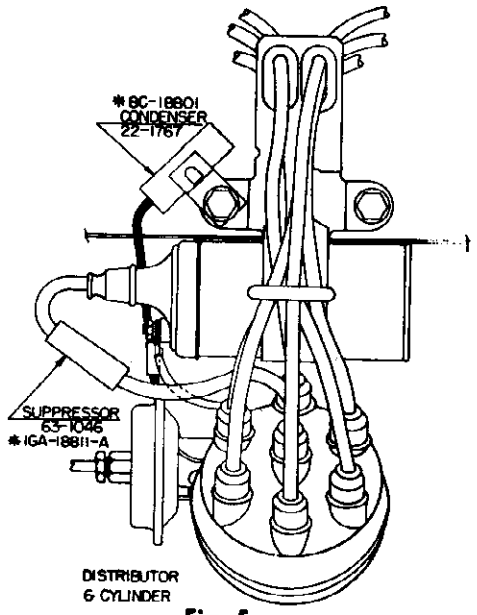

Fig. 5

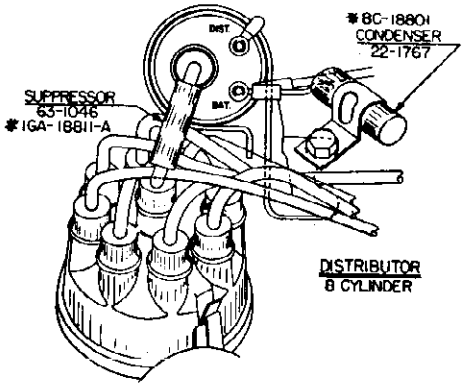

Fig. 6

The suppressor, No. 63-1046, should be in the high tension wire, approximately 1½ inches from the distributor cap. (Figs. 5 and 6.) The ignition coil condenser, No. 22-1767, should be connected to the BAT, terminal of the ignition coil. (Figs. 5 and 6.)

* Indicates Ford part number.

© John F. Rider

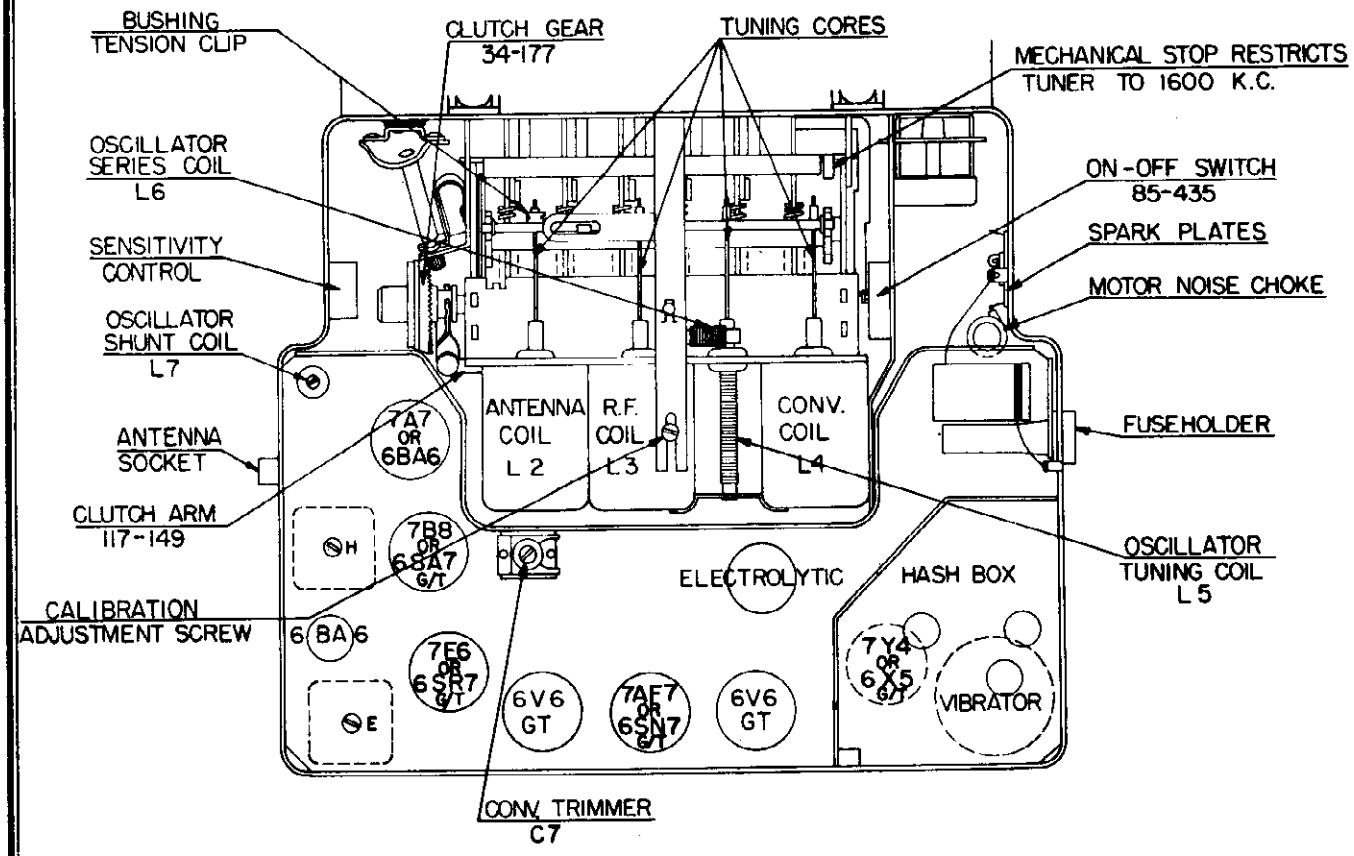

Fig. 7. Top View of Chassis

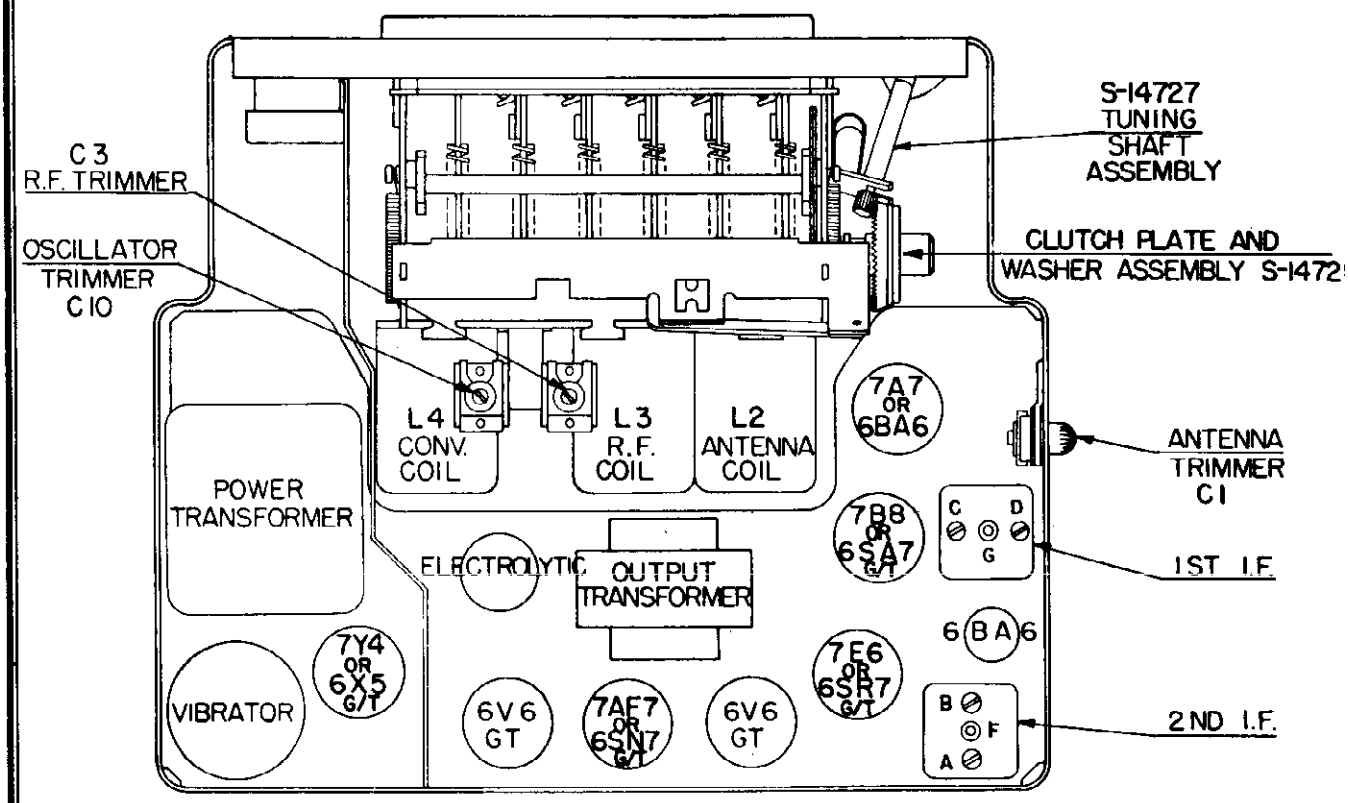

Fig. 8. Bottom View of Chassis

MODELS 8MF880, 8MF980, Ford

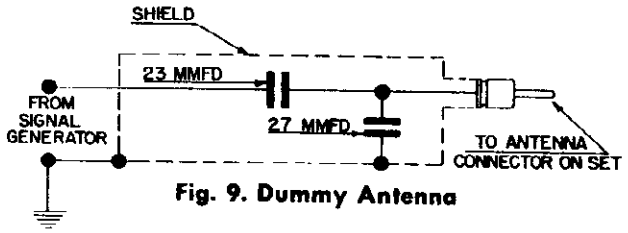

Fig. 9. Dummy Antenna

Figure 9 shows the schematic of a recommended dummy antenna, closely resembling actual antenna capacity, to be used in series with signal generator leads when aligning the R.F. section of the receiver.

ALIGNMENT

Maximum performance depends on accurate alignment of the receiver; therefore follow these instructions carefully.

CAUTION: Make all alignment adjustment to the receiver with the volume control set at maximum, and the tone control in the treble position. Reduce the signal intensity as much as possible at the signal generator. Connect the output meter across the voice coil.

I.F. ALIGNMENT PROCEDURE

1. Remove top and bottom covers from receiver.
2. Set signal generator to 265 Kc.
3. Apply signal from generator through a .1 Mfd. dummy to 7B8 converter grid. (Pin No. 6 on socket.)
4. Adjust I.F. trimmers A, B, C, and D in order named for maximum output. (Fig. 8.) Some units have I.F. transformers that are slug tuned. In this case adjust I.F. slugs E, F, G, and H in order named. Repeat the operation to assure accurate alignment. (Figs. 7 and 8.)

R.F. AND OSCILLATOR ALIGNMENT

1. Connect signal generator leads through dummy, illustrated in Fig. 9, to antenna lead in socket on receiver. This is important.
2. Set signal generator to 535 Kc.
3. Tune set to 535 Kc.
4. Adjust oscillator trimmer C-10 (Fig. 8), for maximum response.
5. Set signal generator to 1300 Kc.
6. Tune set to 1300 Kc.
7. Adjust converter trimmer C-7, R.F., trimmer C3 and antenna trimmer C-1 (Fig. 8) for maximum response (Figs. 7 and 8).
8. If dial calibration is off after making above adjustments, a correction can be made by tuning eccentric screw at fulcrum of dial pointer. (Fig. 7.)

TO ADJUST OR REPLACE THE ADJUSTING SPRING AND CORE

1. Remove the top and bottom covers from the receiver. Remove the escutcheon assembly.
2. With pliers remove the bushing tension clip from the cross arm insulating bushing.
3. With core alignment tool, part No. S-13064, screw the core in, or out, to the desired position.
4. After all adjustments or replacements are completed, be sure to replace the bushing tension clip.

ALIGNMENT PROCEDURE AFTER CORE OR COIL REPLACEMENT

WARNING: The following adjustments are to be made only after a core or coil is replaced.

1. Set signal generator to 1675 Kc.
2. Connect signal generator leads through dummy, illustrated in Fig. 9, to antenna receptacle on the receiver.
3. Set receiver dial to 1600 Kc. (Maximum high frequency end of dial.)
4. Screw the cores completely out of the antenna coil, the R.F. coil, the converter coil, and the oscillator coil.
5. Adjust the oscillator trimmer C-10 (Fig. 8) at 1675 Kc.
6. Adjust the converter trimmer C-7, R.F. trimmer C3, and antenna trimmer C-1 (Figs. 7 and 8) for maximum output reading.
7. Set signal generator dial and receiver dial to 1300 Kc.
8. Replace cores to their approximate original position (so that the cores project about 1/16 of an inch from the end of the coil form).
9. Adjust the oscillator core L-5 (Fig. 7) to scale at 1300 Kc.
10. Adjust the antenna core L-2, R.F. core L3, and converter core L-4 (Fig. 7) for maximum output reading.
11. Set signal generator to 600 Kc.
12. "Rock in" shunt oscillator coil L-7 (Fig. 7) for maximum output reading. This should be done only as a last resort. This is the same as rocking in the padder condenser on a gang condenser receiver.
13. Check receiver at 1300 Kc. for calibration and gain. If the receiver is off scale or weak, repeat operations 9, 10, and 11.
14. After alignment is complete, the maximum high frequency tuning range should be checked. If the range is greater or less than 1605 Kc., the lug stop near the volume control should be bent to limit the frequency coverage to 1605 Kc.

IMPORTANT: After reinstalling the receiver in the car, allow it to operate for approximately 15 minutes to reach normal operating temperature. Extend antenna to maximum. Check the antenna trimmer alignment on a weak station at approximately 1300 Kc.

© John F. Rider

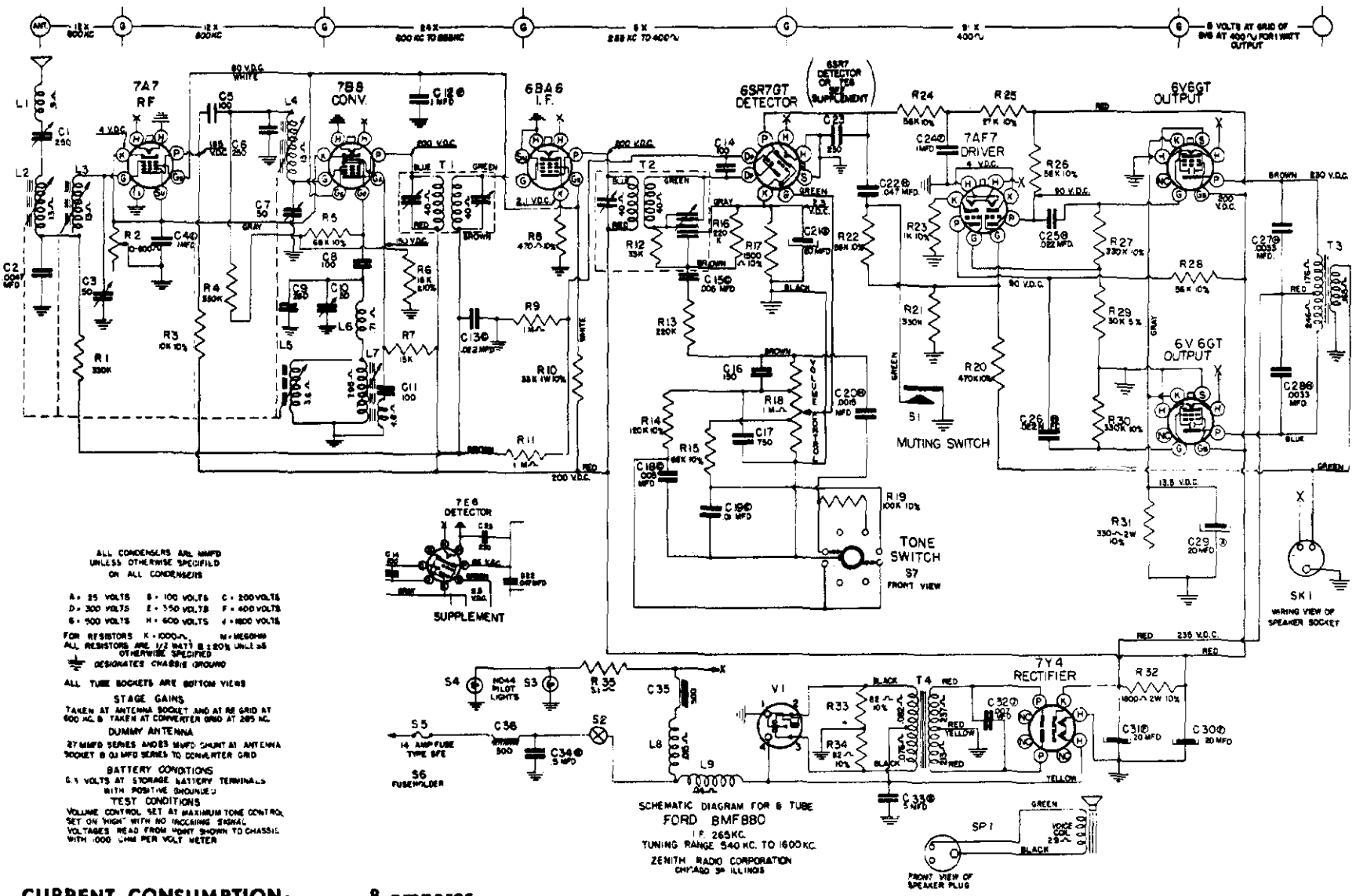

CURRENT CONSUMPTION: . . . . . 8 amperes

SENSITIVITY: . . . . . 5 microvolts at one

UNDISTORTED POWER OUTPUT: . . . . . 6 watts measured at the voice coil.

MODEL 8MF980, Ford

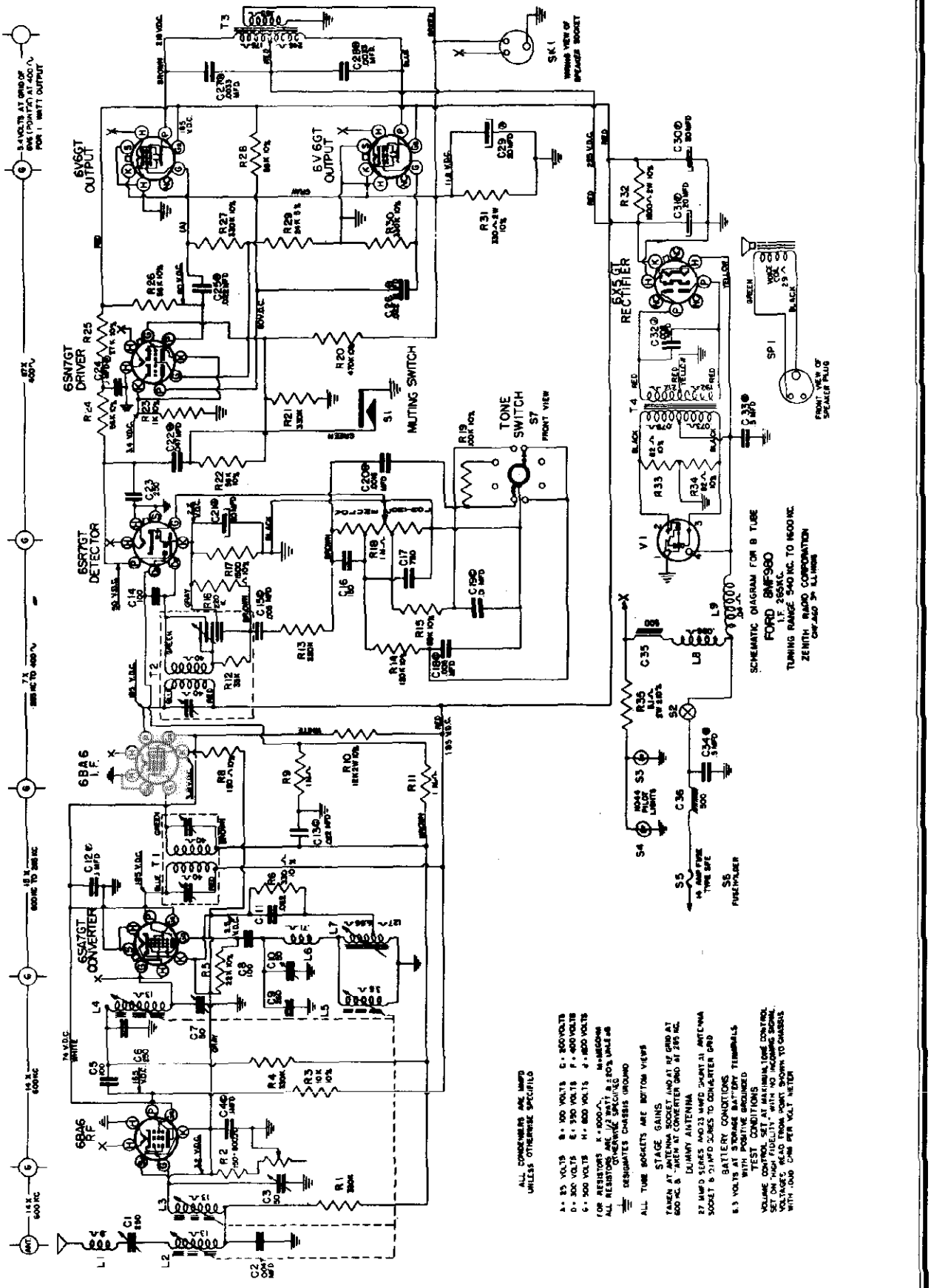

MODELS 8MF880, 8MF980, Ford

PARTS LIST FORD AUTOMOTIVE RECEIVER

Diagram No.	Part No.	Description
		COILS AND CHOKES
L 9	20-213	Main Hash Choke
T 1	95-1077	1st I.F. Transformer
T 2	95-1078	2nd I.F. Transformer
L 1	S-8819	Antenna Motor Noise Choke Assembly
L 8	S-11232	Motor Noise Choke Assembly
L 7	S-14225	Oscillator Shunt Coil Assembly
L 6	S-14226	Oscillator Series Coil Assembly
L 3	S-14227	RF Coil Assembly
L 2	S-14227	Antenna Coil Assembly
L 4	S-14227	Converter Coil Assembly
L 5	S-14228	Oscillator Coil Assembly
L 2, L 3, L 4, L 5	S-14295	Tuner Coil Unit Assembly
		CONDENSERS
C12	22-170	.1 Mfd. 400 V.
C23	22-182	250 Mmfd. 400 V.
C 4	22-190	.1 Mfd. 200 V.
C17	22-242	750 Mmfd. 500 V.
C15, C18	22-906	.005 Mfd. 200 V.
C 6	22-1136	250 Mmfd. 500 V.
C16	22-1137	150 Mmfd. 500 V.
C34	22-1238	.5 Mfd. 120 V.
C19	22-1466	.01 Mfd. 200 V.
C29, C30, C31	22-1484	Electrolytic 20 Mfd.—25 V. x20-20 Mfd. 400 V.
C21	22-1553	20 Mfd. Electrolytic 25 V.
C 9	22-1712	260 Mmfd. Compensating
C32	22-1713	.007 Mfd. 1600 V.
C 7	22-1715	Single Section Trimmer (Converter)
C 1	22-1721	Single Section Trimmer (Antenna)
C 3, C10	22-1722	Two Section Trimmer (R.F. and Osc.)
C33	22-1728	.5 Mfd. 100 V.
C 5, C11, C14	22-1730	100 Mmfd. Ceramic (or 22-162) 500 V.
C20	22-1743	.0015 Mfd. 600 V.
C27, C28	22-1747	.0033 Mfd. 600 V.
C24	22-1748	.1 Mfd. 400 V.
C22	22-1749	.047 Mfd. 600 V.
C25, C26	22-1750	.022 Mfd. 600 V.
C13	22-1751	.022 Mfd. 200 V.
C 2	22-1752	.0047 Mfd. (or 22-1022) 600 V.
		RESISTORS
R 2	63-1379	Sensitivity Control
R10	63-1398	33M Ohm (Insulated) 1 W.
S 7, R18	63-1590	Volume Control and Tone Switch
R32	63-1620	1800 Ohm (Insulated) 2 W.
R31	63-1622	330 Ohm (Insulated) 2 W.
R33, R34	63-1740	82 Ohm (Insulated) ½ W.
R 8	63-1771	470 Ohm (Insulated) ½ W.
R23	63-1785	1000 Ohm (Insulated) ½ W.
R17	63-1792	1500 Ohm (Insulated) ½ W.
R 3	63-1827	10M Ohm (Insulated) ½ W.
R 7	63-1835	15M Ohm (Insulated) ½ W.
R25	63-1845	27M Ohm (Insulated) ½ W.
R29	63-1846	30M Ohm (Insulated) ½ W.
R12	63-1849	33M Ohm (Insulated) ½ W.
R22, R24, R26, R28	63-1859	56M Ohm (Insulated) ½ W.
R 5	63-1862	68M Ohm (Insulated) ½ W.
R19	63-1869	100M Ohm (Insulated) ½ W.
R14	63-1873	120M Ohm (Insulated) ½ W.
R13, R16	63-1884	220M Ohm (Insulated) ½ W.
R27, R30	62-1890	330M Ohm (Insulated) ½ W.
R 1, R 4, R21	63-1891	330M Ohm (Insulated) ½ W.
R20	63-1897	470M Ohm (Insulated) ½ W.
R 9, R11	63-1912	1 Megohm (Insulated) ½ W.
R 6	63-1838	18M Ohm ½ W.
		MISCELLANEOUS
	46-715	Antenna Trimmer Knob (used on 22-1721)
SP 1	49-627	P.M. Speaker (6" x 9" Oval) (See S-14303)
S 6	52-451	Battery Cable—Fuse to Set—Fuse-holder
	52-455	Volume Control Cable
	52-470	Speaker Cable and Plug
	73-50	No. 6-32 x ¼" Headless Slotted Set Screw—Cuppoint
	78-596	Socket—Loktal Tube
SK 1	78-728	Socket—Speaker
	78-782	Socket—Miniature Tube
	78-796	Socket—Antenna Connector
	78-801	Socket—Octal Base Tube
	78-804	Socket—Vibrator
	93-888	Vibrator Cushion Washer
T 4	95-1071	Power Transformer
T 3	95-1079	Output Transformer
	125-63	Rubber Grommet (used on S-14295)
	126-553	Miniature Tube Shield
	149-62	Iron Core and Screw
	149-63	Iron Core and Spring (4 used)
V 1	190-22	Vibrator
	196-91	Speaker Gasket and Screen
	199-81	Tone Gear Sleeve
	202-575	Instruction Book (Owner's Manual)
	202-605	Interference Elimination Instruction Sheet

MODELS 8MF880, 8MF980, Ford

Diagram No.	Part No.	Description
	S-14303	Speaker and Gasket Assembly (use 49-627 and 196-91)
		INSTALLATION PARTS
	S-14330	Installation Kit Assembly (complete)
	52-458	Battery Cable—Fuse to Ammeter
	54-157	¼-20 x 7/16" x 3/16" Hex Nut—Steel—Cad. Pl. (4 used)
S 5	136-11	14 Ampere Fuse—Type S.F.E. No. 14
	54-266	½-28 x 11/16" x 1/8" Hex Nut
	54-189	No. 8-32 Wing Nut
	93-161	¼" External Lockwasher
	S-14335	Installation Bracket Assembly
		MOTOR NOISE SUPPRESSION KIT
	S-14331	Motor Noise Suppression Kit Assembly (complete)
	22-1110	Fuel Gauge Capacitor
	22-1601	Generator Capacitor
	22-1767	Ignition Coil Capacitor
	63-1046	Distributor Suppressor
	80-145	Motor Hood Bond Spring
	112-365	No. 8 x ½" B.H. Sheet Metal Screw
		DIAL ASSEMBLY
	12-1437	Dial Scale Retaining Bracket
	19-165	Insulating Bushing Tension Clip (4 used)
	19-167	Window Retaining Clip (R.H.)
	19-168	Window Retaining Clip (L.H.)
	26-397	Dial Scale
	46-711	Tone Control Knob
	46-714	"Off" Switch Knob
	56-228	Cross Arm Guide Rod
	57-1357	Escutcheon
	59-210	Dial Pointer
	80-232	Knob Retaining Spring
	80-651	Pointer Retaining Spring
	80-586	Cross Arm Tension Spring (2 used)
	80-625	Pointer Link Tension Spring
	83-1523	Light Diffusion Strip
	94-607	Tuning Shaft Bushing
	94-608	Volume Control Bushing
	94-609	Cross Arm Insulating Bushing

Diagram No.	Part No.	Description
S 3, S 4	100-36	Dial Light Bulb—Mazda No. 44
	112-699	No. 4-40 x 3/16" R.H. Self Tapping Screw—Stan Top—Steel—Cad
	114-294	No. 6-20 x ¼" Hex Hd. Self Tapping Screw Type No. 25 (Escutcheon Mtg.)
	192-116	Dial Window
	S-14215	Pointer Support Bracket and Stud Assembly
	S-14216	Pointer Drive Link and Stud Assembly
	S-14300	Cross Arm and Bushing Assembly
	S-14659	Dial Light Socket and Wire Assembly
	S-14660	Dial Light Socket and Wire Assembly
	S-14307	Tone Gear and Bushing Assembly
	S-14308	Tone Drum Shaft and Gear Assembly (26-390)
	S-14333	Tuning Control and Knob Assembly
	S-14334	Volume Control Knob and Spring Assembly
	S-14281	Tuner Unit Assembly
S 2	85-435	"On-Off" Switch (on Tuner)
	S-14754	Automatic Knob and Screw Assembly
	S-14721	Clutch Plate and Washer
	S-14727	Tuning Shaft, Pinion Gear and Coupling Assembly
	17-102	Cam Lock (5 used)
	34-177	Clutch Gear
	64-162	.088 D x 5/32" Rivet (2 used on S-14733)
	73-118	No. 6-32 x ¼" Hex Hd. Slotted Set Screw (2 used)
	80-640	Yoke Tension Spring (2 used)
	80-641	Clutch Release Bar Spring
	80-642	Clutch Spring
	93-921	Tuning Shaft Steel Washer
	93-922	Tuning Shaft Spring Washer
	93-923	Fishpaper Washer (2 used)
	97-305	Clutch Arm Stud
	117-149	Clutch Lever
	188-32	Retaining Ring
S 1	S-14733	Mute Switch Assembly

PARTS LIST MODEL 8MF980

The parts list for model 8MF980 is the same as for model 8MF880 with the following parts added and omitted:

ADD

Diag.No.	Part No.	Description
C 1	22-1812	Antenna Trimmer
C11	22-1751	.022Mfd Condenser
C32	22-1448	Buffer Condenser
R 2	63-1662	Sensitivity Control
R 5	63-1841	22K Ohm ½W.
R 6	63-1764	330 Ohm ½ W.
R 8	63-1750	150 Ohm ½ W.
R10	63-1623	12K Ohm 2W.
R29	63-1843	24K ½ W.
L 7	S-14846	Oscillator Shunt Coil
L 8	S-14761	Motor Noise Choke
T 4	95-1073	Power Transformer
	202-637	Instruction Book
S-14836		Tone Drum Shaft & Gear Assembly
26-409		Dial Scale
63-1375		5.1 ohm W. W. resistor

OMIT

Diag.No.	Part No.	Description
C 1	22-1721	Antenna Trimmer
C11	22-1730	100 Mmf Condenser
C32	22-1713	Buffer Condenser
R 2	63-1379	Sensitivity Control
R 5	63-1862	68K Ohm ½ W. Resistor
R 6	63-1838	18K Ohm ½ W. Resistor
R 7	63-1835	15K Ohm ½ W. Resistor
R 8	63-1771	470 Ohm ½ W. Resistor
R10	63-1398	33K Ohm 1 W. Resistor
R29	63-1846	30K Ohm ½ W. Resistor
L 7	S-14225	Oscillator Shunt Coil
L 8	S-11232	Motor Noise Choke
T 4	95-1071	Power Transformer
	202-575	Instruction Book
S-14308		Tone Drum Shaft & Gear Assembly
26-397		Dial Scale

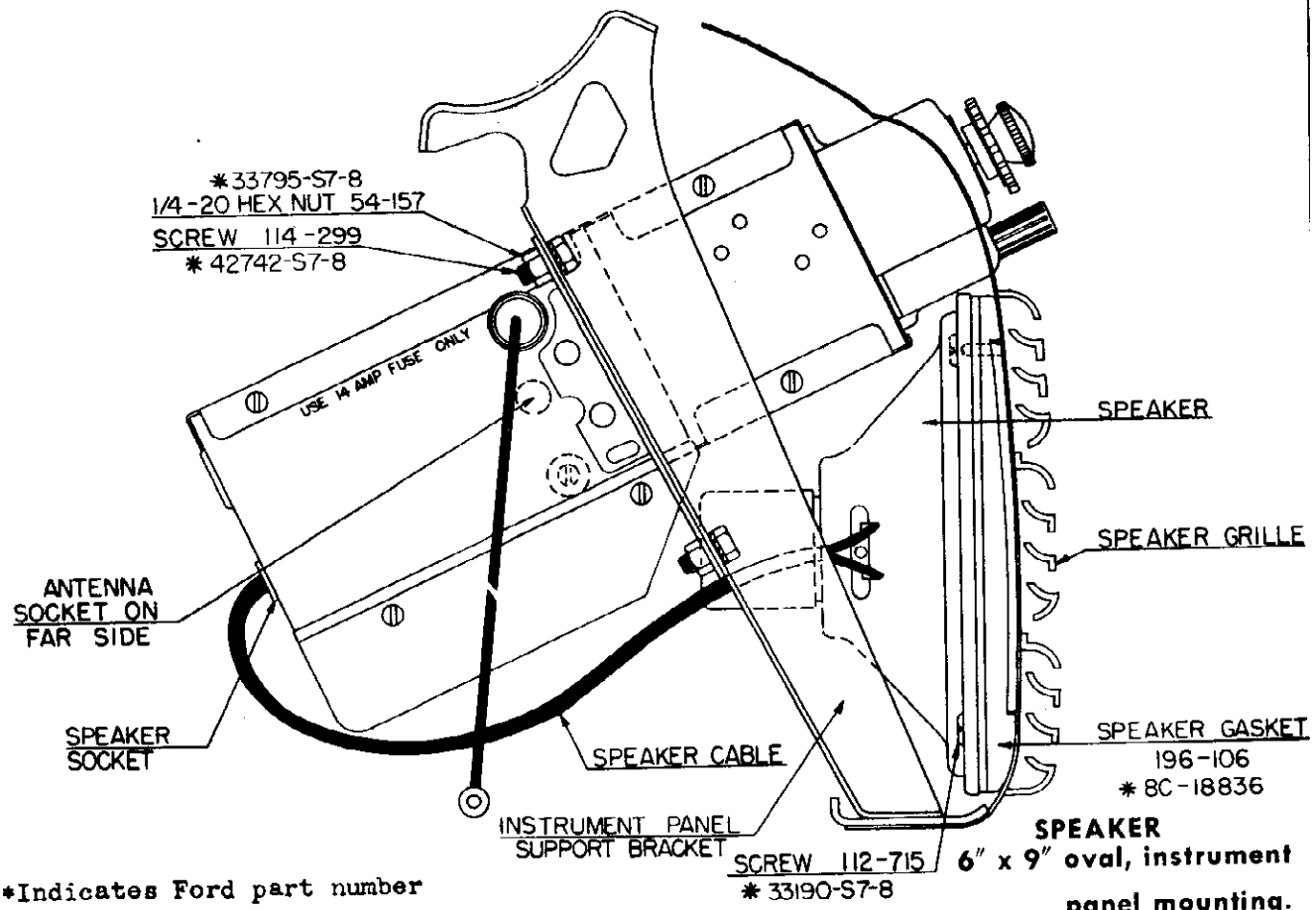

*Indicates Ford part number

Fig. 1. Set Installed, Cut Away View

RECEIVER INSTALLATION

Figures 1 and 2, illustrating the escutcheon plate, control knobs and the installed receiver, are given here to facilitate removal and reinstallation of the receiver when service or repair is necessary.

1. Disconnect the "A" lead, the speaker cable, and the antenna from the receiver. (Fig. 1.)
2. Remove the four ¼" screws No. 114-299, and take the set from its position behind the instrument panel. (Fig. 1.)
3. To take the speaker from behind the instrument panel remove the two screws No. 112-715. (Fig. 1.)

OPERATING INSTRUCTIONS

TO TURN RADIO ON:

The radio is connected to the accessory terminal of the ignition switch, therefore, it is necessary to turn the ignition key to the left, if the engine is not running, before turning the radio on. Press any one of the five automatic push buttons. (Fig. 2.) Allow approximately 20 seconds for the receiver to reach operating temperature.

To turn the receiver off, press the "Off" push button (Fig. 2.)

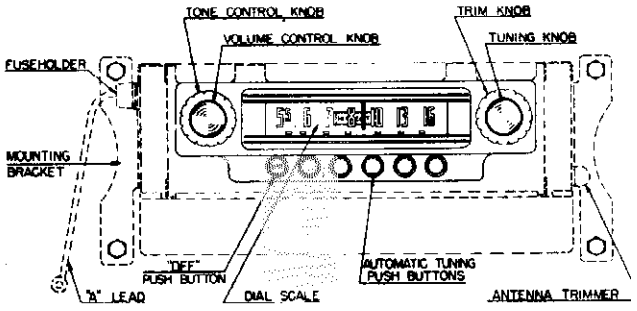

Fig. 2. Front Panel View

MANUAL TUNING:

To operate the manual tuning control simply turn the tuning knob. (Fig. 2.) When tuning in a station, be sure to tune t the exact frequency for the best tone quality.

VOLUME CONTROL:

Turn the volume control knob for the desired volume. (Fig. 2

TONE CONTROL:

The tone control knob is located directly behind the volum control knob. Turning this control to the right or left wi change the tone of the receiver. The control has four posi tions. The position to which the control is set is indicated i the window in the center of the dial scale.

© John F. Rider

MODEL 8MF881,
Ford

AUTOMATIC TUNING:

There are five automatic tuning push buttons located to the right of the "Off" push button. (Fig. 2.)

The five buttons may be adjusted in succession to any desired dial setting. To simplify the identification of the stations, it is advisable to set the buttons in sequence according to the frequencies of the stations, beginning with the station broadcasting at the lowest frequency and progressing to the station broadcasting at the highest frequency.

To adjust the automatic tuning push buttons:

1. Turn the receiver on and allow it to operate for at least 15 minutes in order for each part to reach normal operating temperature.
2. Tune in the station desired for number 1 position by turning the tuning knob. (Fig. 2.) Be sure to tune to the exact frequency to insure the best tone.
3. Loosen the number one push button, located nearest the "OFF" push button (Fig. 2) by turning it counterclockwise with your fingers not more than two turns. If the push button is completely unscrewed, the plunger assembly, inside the receiver, may fall apart. Then it will be necessary to remove the radio from the car, open the case, and reassemble the plunger.
4. Press the button in as far as it will go.
5. Release the number 1 button and tighten it by turning it clockwise with your fingers.
6. Use the same procedure for adjusting positions 2, 3, 4, and 5. When the five automatic tuning push buttons have been adjusted to the five desired stations, any one of the five stations can be instantly tuned in by pressing the automatic push button that is adjusted to it.

INTERFERENCE SUPPRESSION

There should be no motor noise or interference from the ignition circuit if the receiver has been installed in the car according to the instructions furnished with it. The interference suppression equipment may be checked for proper installation by referring to the following illustrations:

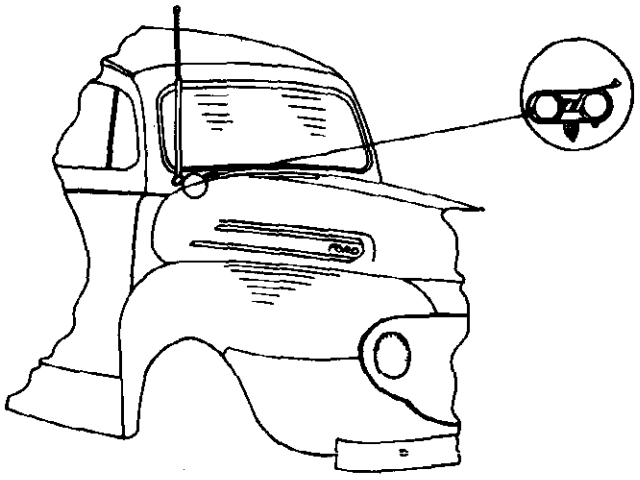

REMOVE SCREW FROM HOOD PAD ON COWL AT LOCATION SHOWN AND INSTALL HOOD BONDING SPRING 80-579 *51A-18870 WITH SCREW 112-365 *32923-S7-8

Fig. 3

The hood bonding spring No. 80-579 should be installed on the cowl at the location shown in Fig. 3.

The generator condenser, No. 22-1601, should be mounted under the top assembly bolt on the rear end plate of the generator, and the lead connected to the ARMATURE terminal of the generator. (Fig. 4.)

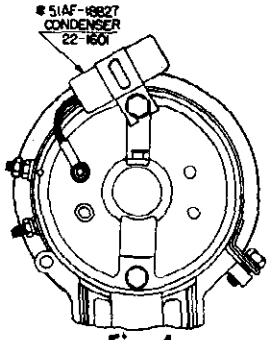

Fig. 4

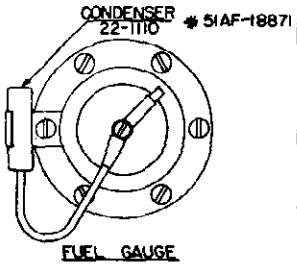

Fig. 5

A condenser, Part No. 22-1110, should be connected to the fuel gauge tank unit. (Fig. 5.)

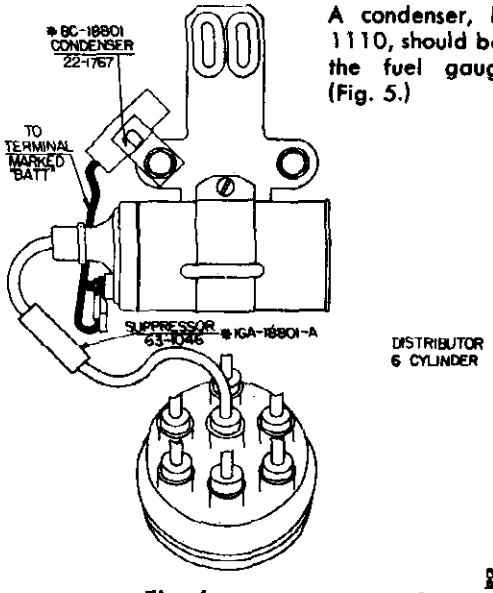

Fig. 6

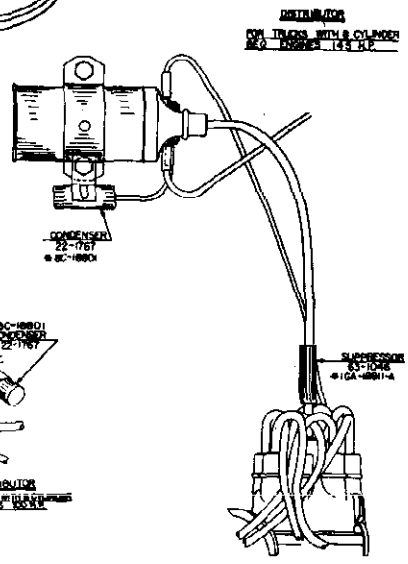

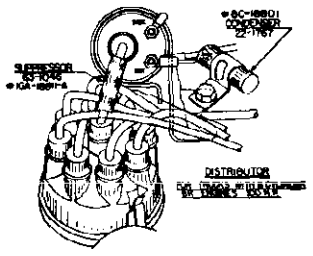

Fig. 6A

Fig. 6B

The suppressor, No. 63-1046, should be in the high tension wire, approximately 1½ inches from the distributor cap. (Figs. 6, 6A and 6B.) The ignition coil condenser, No. 22-1767, should be connected to the BAT, terminal of the ignition coil. (Figs. 6, 6A and 6B.)

*Indicates Ford part number

MODEL 8MF881,
Ford

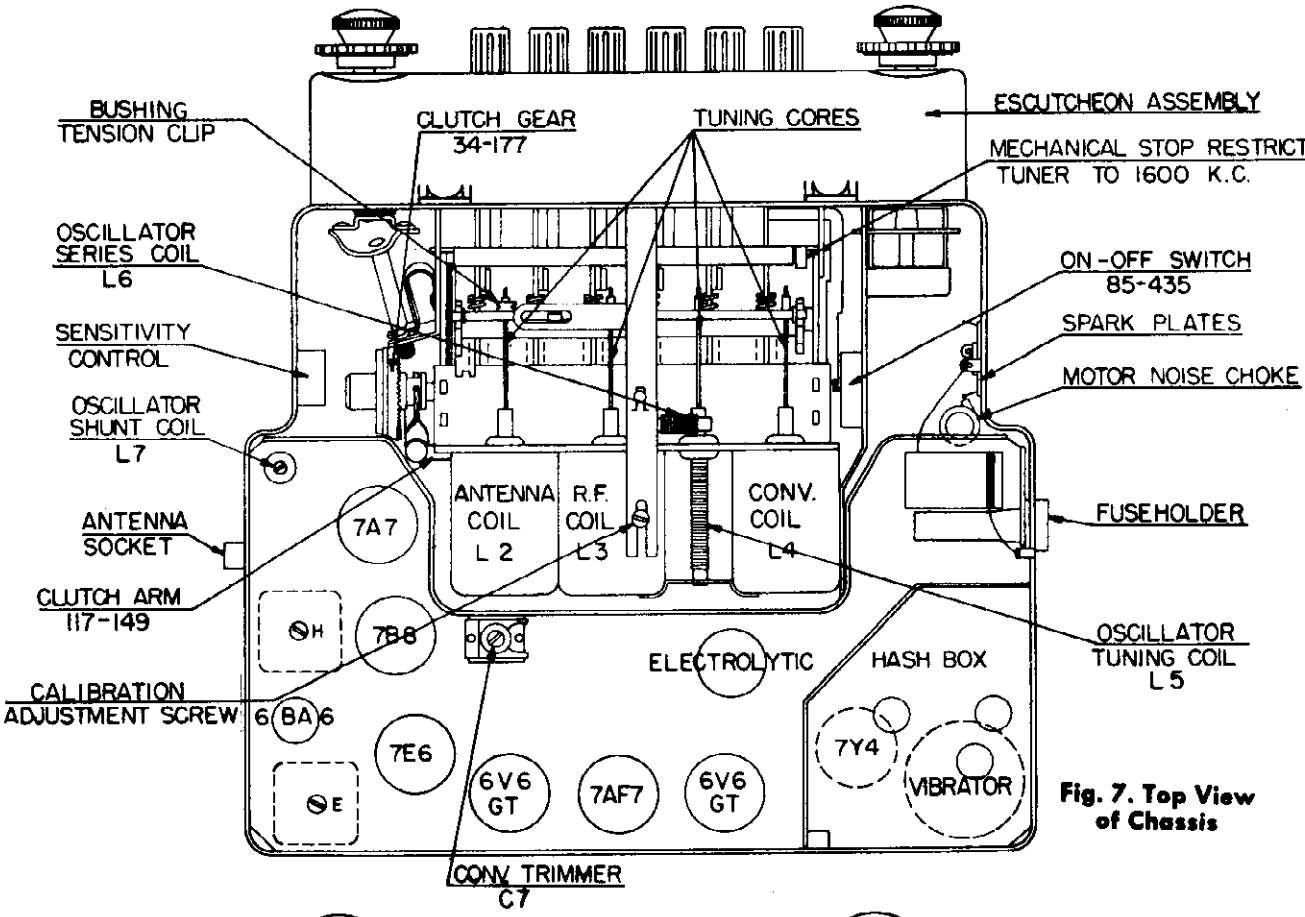

Fig. 7. Top View of Chassis

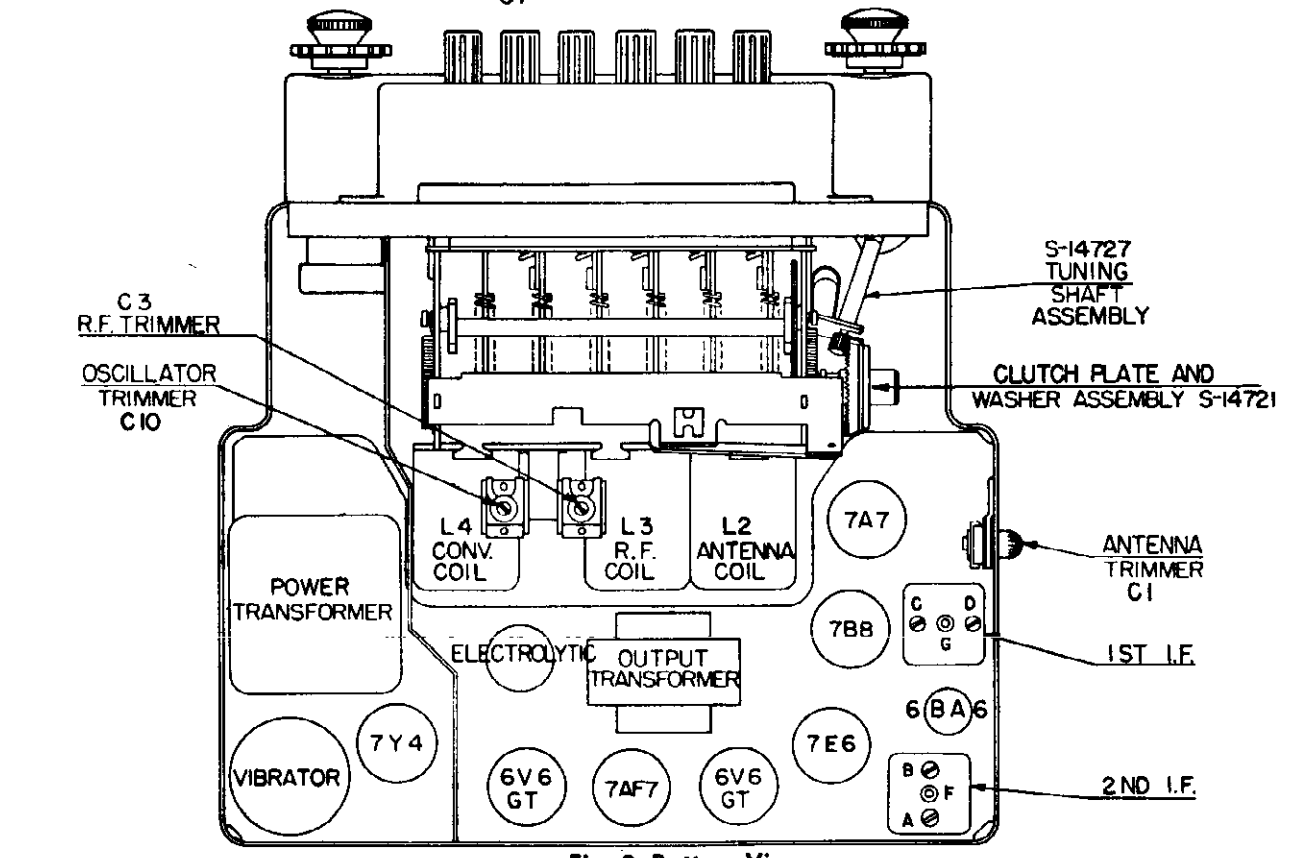

Fig. 8. Bottom View of Chassis

MODEL 8MF881,
Ford

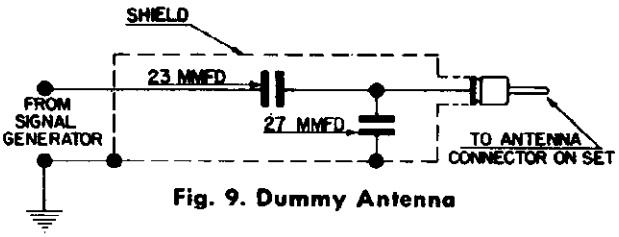

Fig. 9. Dummy Antenna

Figure 9 shows the schematic of a recommended dummy antenna, closely resembling actual antenna capacity, to be used in series with signal generator leads when aligning the R.F. section of the receiver.

ALIGNMENT

Maximum performance depends on accurate alignment of the receiver; therefore follow these instructions carefully.

CAUTION: Make all alignment adjustment to the receiver with the volume control set at maximum, and the tone control in the treble position. Reduce the signal intensity as much as possible at the signal generator. Connect the output meter across the voice coil.

I.F. ALIGNMENT PROCEDURE

1. Remove top and bottom covers from receiver.
2. Set signal generator to 265 Kc.
3. Apply signal from generator through a .1 Mfd. dummy to 7B8 converter grid. (Pin No. 6 on socket.)
4. Adjust I.F. trimmers A, B, C, and D in order named for maximum output. (Fig. 8.) Some units have I.F. transformers that are slug tuned. In this case adjust I.F. slugs E, F, G, and H in order named. Repeat the operation to assure accurate alignment. (Figs. 7 and 8.)

R.F. AND OSCILLATOR ALIGNMENT

1. Connect signal generator leads through dummy, illustrated in Fig. 9, to antenna lead in socket on receiver. This is important.
2. Set signal generator to 535 Kc.
3. Tune set to 535 Kc.
4. Adjust oscillator trimmer C-10 (Fig. 8), for maximum response.
5. Set signal generator to 1300 Kc.
6. Tune set to 1300 Kc.
7. Adjust converter trimmer C-7, R.F. trimmer C3 and antenna trimmer C-1 (Fig. 8) for maximum response (Figs. 7 and 8).
8. If dial calibration is off after making above adjustments, a correction can be made by turning eccentric screw at fulcrum of dial pointer. (Fig. 7.)

TO ADJUST OR REPLACE THE ADJUSTING SPRING AND CORE

1. Remove the top and bottom covers from the receiver. Remove the escutcheon assembly.
2. With pliers remove the bushing tension clip from the cross arm insulating bushing.
3. With core alignment tool, part No. S-13064, screw the core in, or out, to the desired position.
4. After all adjustments or replacements are completed, be sure to replace the bushing tension clip.

ALIGNMENT PROCEDURE AFTER CORE OR COIL REPLACEMENT

WARNING: The following adjustments are to be made only after a core or coil is replaced.

1. Set signal generator to 1675 Kc.
2. Connect signal generator leads through dummy, illustrated in Fig. 9, to antenna receptacle on the receiver.
3. Set receiver dial to 1600 Kc. (Maximum high frequency end of dial.)
4. Screw the cores completely out of the antenna coil, the R.F. coil, the converter coil, and the oscillator coil.
5. Adjust the oscillator trimmer C-10 (Fig. 8) at 1675 Kc.
6. Adjust the converter trimmer C-7, R.F. trimmer C3, and antenna trimmer C-1 (Figs. 7 and 8) for maximum output reading.
7. Set signal generator dial and receiver dial to 1300 Kc.
8. Replace cores to their approximate original position (so that the cores project about 1 1/16 of an inch from the end of the coil form).
9. Adjust the oscillator core L-5 (Fig. 7) to scale at 1300 Kc.
10. Adjust the antenna core L-2, R.F. core L3, and converter core L-4 (Fig. 7) for maximum output reading.
11. Set signal generator to 600 Kc.
12. "Rock in" shunt oscillator coil L-7 (Fig. 7) for maximum output reading. This should be done only as a last resort. This is the same as rocking in the padder condenser on a gang condenser receiver.
13. Check receiver at 1300 Kc. for calibration and gain. If the receiver is off scale or weak, repeat operations 9, 10, and 11.
14. After alignment is complete, the maximum high frequency tuning range should be checked. If the range is greater or less than 1605 Kc., the lug stop near the volume control should be bent to limit the frequency coverage to 1605 Kc.

IMPORTANT: After reinstalling the receiver in the car, allow it to operate for approximately 15 minutes to reach normal operating temperature. Extend antenna to maximum. Check the antenna trimmer alignment on a weak station at approximately 1300 Kc.

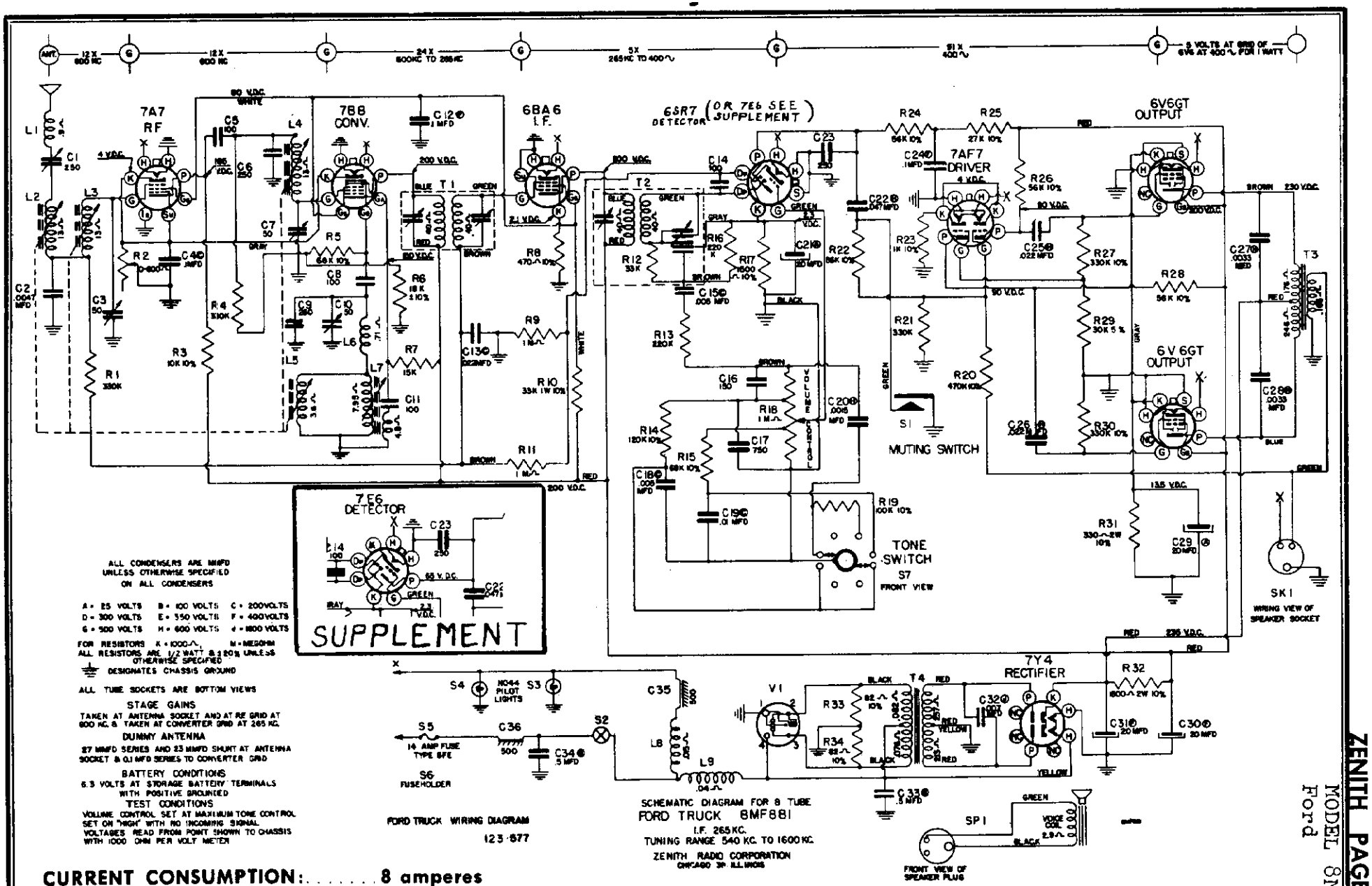

CURRENT CONSUMPTION: . . . . . 8 amperes

SENSITIVITY: . . . . . 5 microvolts at one watt output.

UNDISTORTED POWER OUTPUT: . . . . . 6 watts measured at the voice coil.

MODEL 8MF881,
Ford

PARTS LIST FORD TRUCK RECEIVER

Diagram No.	Part No.	Description	
		COILS AND CHOKES	
L 9	20-213	Main Hash Choke	
T 1	95-1077	1st I.F. Transformer	
T 2	95-1078	2nd I.F. Transformer	
L 1	S-8819	Antenna Motor Noise Choke Assembly	
L 8	S-11232	Motor Noise Choke Assembly	
L 7	S-14225	Oscillator Shunt Coil Assembly	
L 6	S-14226	Oscillator Series Coil Assembly	
L 3	S-14227	RF Coil Assembly	
L 2	S-14227	Antenna Coil Assembly	
L 4	S-14227	Converter Coil Assembly	
L 5	S-14228	Oscillator Coil Assembly	
L 2, L 3, L 4, L 5	S-14295	Tuner Coil Unit Assembly	
		CONDENSERS	
C12	22-170	.1 Mfd	400 V.
C23	22-182	250 Mmfd	400 V.
C 4	22-190	.1 Mfd	200 V.
C17	22-242	750 Mmfd	500 V.
C15, C18	22-906	.005 Mfd	200 V.
C 6	22-1136	250 Mmfd	500 V.
C16	22-1137	150 Mmfd	500 V.
C34	22-1238	.5 Mfd	120 V.
C19	22-1466	.01 Mfd	200 V.
C29, C30, C31	22-1484	Electrolytic 20 Mfd.—25 V. x20-20 Mfd	400 V.
C21	22-1553	20 Mfd. Electrolytic	25 V.
C 9	22-1712	260 Mmfd. Compensating	
C32	22-1713	.007 Mfd	1600 V.
C 7	22-1715	Single Section Trimmer (Converter)	
C 1	22-1721	Single Section Trimmer (Antenna)	
C 3, C10	22-1722	Two Section Trimmer (R.F. and Osc.)	
C33	22-1728	.5 Mfd	100 V.
C 5, C11, C14	22-1730	100 Mmfd. Ceramic (or 22-162)	500 V.
C20	22-1743	.0015 Mfd	600 V.
C27, C28	22-1747	.0033 Mfd	600 V.
C24	22-1748	.1 Mfd	400 V.
C22	22-1749	.047 Mfd	600 V.
C25, C26	22-1750	.022 Mfd	600 V.
C13	22-1751	.022 Mfd	200 V.
C 2	22-1752	.0047 Mfd. (or 22-1022)	600 V.

Diagram No.	Part No.	Description	
		RESISTORS	
R 2	63-1379	Sensitivity Control	
R10	63-1398	33M Ohm (Insulated)	1 W.
S 7, R18	63-1590	Volume Control and Tone Switch	
R32	63-1620	1800 Ohm (Insulated)	2 W.
R31	63-1622	330 Ohm (Insulated)	2 W.
R33, R34	63-1740	82 Ohm (Insulated)	½ W.
R 8	63-1771	470 Ohm (Insulated)	½ W.
R23	63-1785	1000 Ohm (Insulated)	½ W.
R17	63-1792	1500 Ohm (Insulated)	½ W.
R 3	63-1827	10M Ohm (Insulated)	½ W.
R 7	63-1835	15M Ohm (Insulated)	½ W.
R25	63-1845	27M Ohm (Insulated)	½ W.
R29	63-1846	30M Ohm (Insulated)	½ W.
R12	63-1849	33M Ohm (Insulated)	½ W.
R22, R24, R26, R28	63-1859	56M Ohm (Insulated)	½ W.
R 5	63-1862	68M Ohm (Insulated)	½ W.
R19	63-1869	100M Ohm (Insulated)	½ W.
R14	63-1873	120M Ohm (Insulated)	½ W.
R13, R16	63-1884	220M Ohm (Insulated)	½ W.
R27, R30	63-1890	330M Ohm (Insulated)	½ W.
R 1, R 4, R21	63-1891	330M Ohm (Insulated)	½ W.
R20	63-1897	470M Ohm (Insulated)	½ W.
R 9, R11	63-1912	1 Megohm (Insulated)	½ W.
R 6	63-1838	18M Ohm	½ W.
		MISCELLANEOUS	
	12-1423	Set Mounting Bracket	
	12-1424	Set Mounting Bracket	
	46-715	Antenna Trimmer Knob (used on 22-1721)	
SP 1	49-627	P.M. Speaker (6" x 9" Oval) (See S-14344.	
S 6	52-451	Battery Cable—Fuse to Set—Fuse-holder	
	52-455	Volume Control Cable	
	52-470	Speaker Cable and Plug	
	73-50	No. 6-32 x ¼" Headless Slotted Set Screw—Cuppoint	
	78-596	Socket—Loktal Tube	
SK 1	78-728	Socket—Speaker	
	78-782	Socket—Miniature Tube	
	78-796	Socket—Antenna Connector	
	78-801	Socket—Octal Base Tube	

Diagram No.	Part No.	Description
	78-804	Socket—Vibrator
	93-888	Vibrator Cushion Washer
	93-891	Tone Control Knob Washer
T 4	95-1071	Power Transformer
T 3	95-1079	Output Transformer
	125-63	Rubber Grommet (used on S-14295)
	126-553	Miniature Tube Shield
	149-62	Iron Core and Screw
	149-63	Iron Core and Spring (4 used)
V 1	190-22	Vibrator
	196-106	Speaker Gasket
	199-81	Tone Gear Sleeve
	202-577	Instruction Book (Owner's Manual)
	202-606	Interference Elimination Instruction Sheet
	S-14344	Speaker and Gasket Assembly (use 49-627 and 196-106)

INSTALLATION PARTS

	S-14339	Installation Kit Assembly (complete)
	52-458	Battery Cable—Fuse to Ammeter
	54-157	1/4-20 x 7/16" x 3/16" Hex Nut—Steel—Cad. Pl. (4 used)
	112-715	No. 8 x 5/8" Binding Hd. Self Tapping Screw
	114-299	1/4-20 x 1/2" Hex. Hd. M. Screw—Steel—Cad. Pl
S 5	136-11	14 Ampere Fuse—Type S.F.E. No. 14

MOTOR NOISE SUPPRESSION KIT

	S-14340	Motor Noise Suppression Kit Assembly (complete)
	22-1110	Fuel Gauge Capacitor
	22-1601	Generator Capacitor
	22-1767	Ignition Coil Capacitor
	63-1046	Distributor Suppressor
	80-579	Motor Hood Bond Spring
	112-365	No. 8 x 1/2" B.H. Sheet Metal Screw

DIAL ASSEMBLY

	12-1435	Dial Scale Retaining Bracket (2 used)
	19-165	Insulating Bushing Tension Clip (4 used)
	26-395	Dial Scale
	46-727	Tone Control Knob
	46-714	"Off" Switch Knob

Diagram No.	Part No.	Description
	56-228	Cross Arm Guide Rod
	57-1349	Escutcheon
	57-1344	Dial Background Plate
	59-208	Dial Pointer
	80-232	Knob Retaining Spring
	80-379	Pointer Retaining Spring
	80-586	Cross Arm Tension Spring (2 used)
	80-625	Pointer Link Tension Spring
	94-609	Cross Arm Insulating Bushing
S 3 S 4	100-36	Dial Light Bulb—Mazda No. 44
	112-699	No. 4-40 x 3/16" R.H. Self Tapping Screw—Stan Top—Steel—Cad
	114-294	No. 6-20 x 1/4" Hex Hd. Self Tapping Screw Type No. 25 (Escutcheon Mtg.)
	S-14215	Pointer Support Bracket and Stud Assembly
	S-14216	Pointer Drive Link and Stud Assembly
	S-14300	Cross Arm and Bushing Assembly
	S-14304	Dial Light Socket and Wire Assembly
	S-14307	Tone Gear and Bushing Assembly
	S-14308	Tone Drum Shaft and Gear Assembly (26-390)
	S-14342	Tuning Control and Knob Assembly
	S-14343	Volume Control Knob and Spring Assembly
	S-14386	Tuner Unit Assembly
S 1	S-14534	Tuner Unit Final Assembly
S 2	85-435	"On-Off" Switch (on Tuner)
	S-14754	Automatic Knob and Screw Assembly
	S-14721	Clutch Plate and Washer
	S-14729	Tuning Shaft, Pinion Gear and Coupling Assembly
	17-102	Cam Lock (5 used)
	34-177	Clutch Gear
	64-162	.088 D x 3/32" Rivet (2 used on S-14733)
	73-118	No. 6-32 x 1/4" Hex Hd. Slotted Set Screw (2 used)
	80-640	Yoke Tension Spring (2 used)
	80-641	Clutch Release Bar Spring
	80-642	Clutch Spring
	93-921	Tuning Shaft Steel Washer
	93-922	Tuning Shaft Spring Washer
	93-923	Fishpaper Washer (2 used)
	97-305	Clutch Arm Stud
	117-149	Clutch Lever
	188-111	Retaining Ring (2 used)

MODELS 8ML882,
8ML882Z, Lincoln

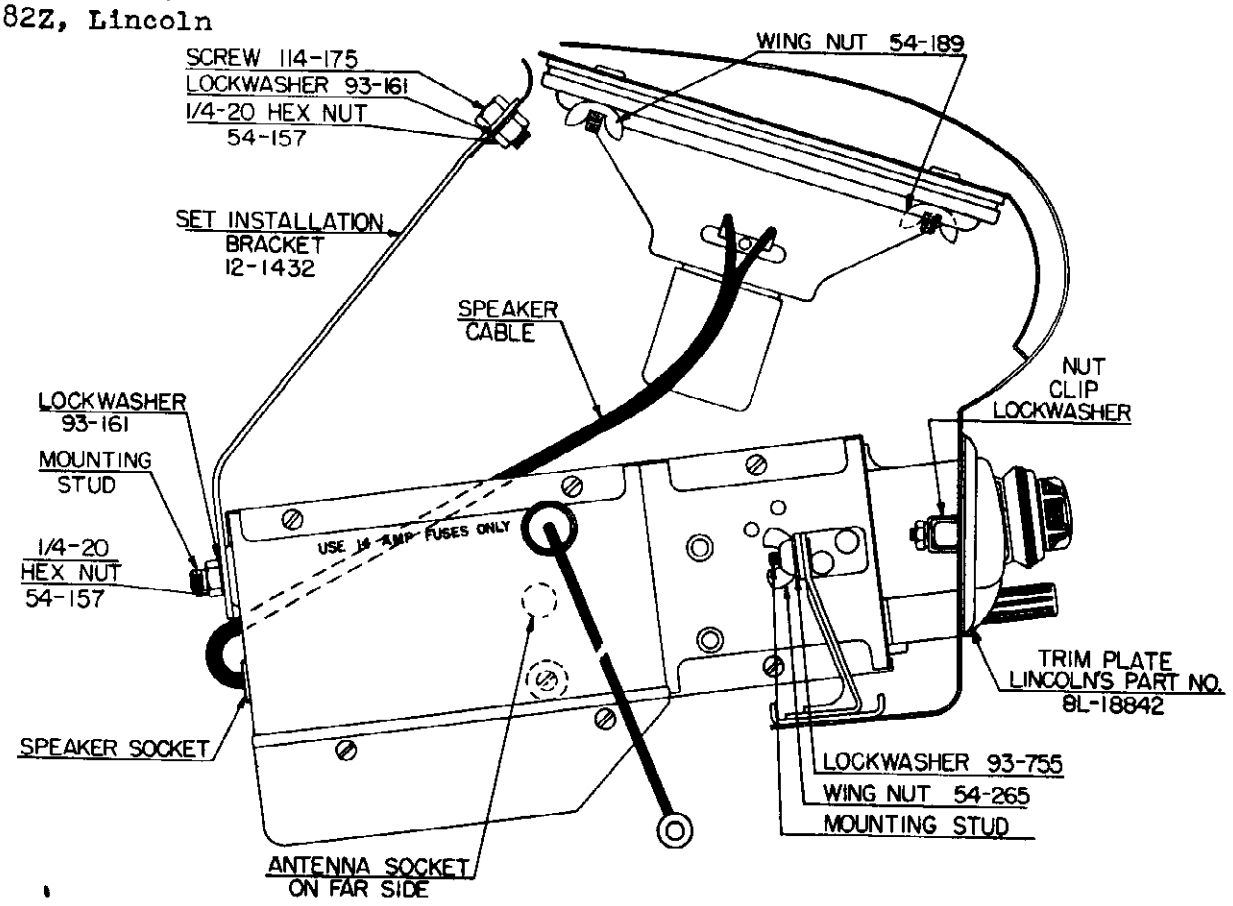

Fig. 2. Model 8ML882

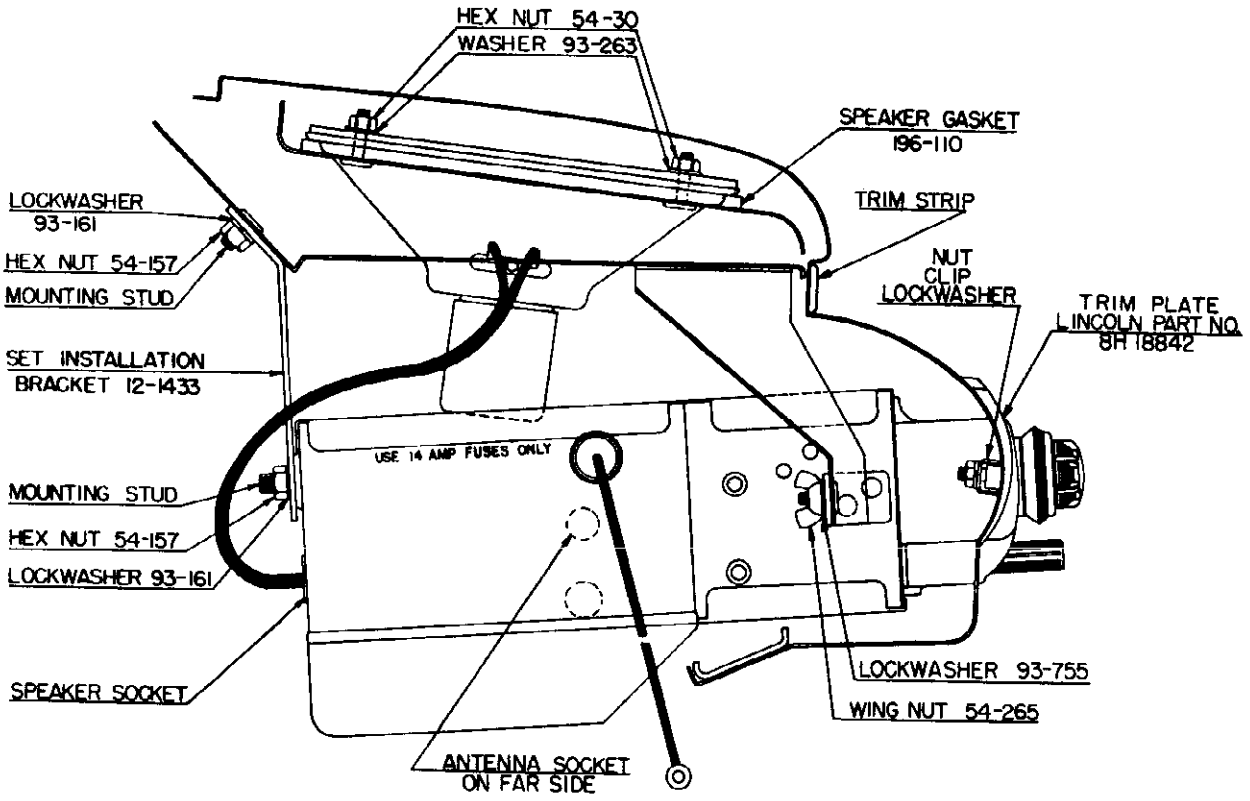

Fig. 2A. Model 8ML882Z

RECEIVER INSTALLATIONS

Figures 1, 1A, 2 and 2A, illustrating the escutcheon plates, control knobs and the installed receivers, are given here to facilitate removal and reinstallation of the receivers when service or repair is necessary.

To take the receiver from the car:

1. Remove the plenem chamber of the heater (Model 8L Lincoln only), by removing the two sheet metal screws at each end of the chamber.
2. Disconnect the "A" lead at the set. Remove the speaker plug from the set and disconnect the antenna.
3. Loosen the top of the set installation bracket, and remove the bottom of the bracket from the set. (Figs. 2-2A.)
4. Remove the 8/32 wingnuts and lockwashers from the instrument panel support brackets. (Figs. 2-2A.)

To take the speaker from the Model 8H Lincoln, pry off the trim strip along the bottom edge of the speaker grille. Remove the three sheet metal screws from the lower edge of the speaker grille, and remove the grille. Remove the two 8/32 hex nuts and flat washers holding the speaker in place. (Fig. 2A.)

To take the speaker from the Model 8L Lincoln, remove the two stamped wingnuts from the stud bolts on the rear of the instrument panel. (Fig. 2.)

OPERATING INSTRUCTIONS

TO TURN RADIO ON:

The radio is connected to the accessory terminal of the ignition switch, therefore, it is necessary to turn the ignition key to the left, if the engine is not running, before turning the radio on. Press any one of the five automatic push buttons. (Figs. 1, 1-A.) Allow approximately 20 seconds for the receiver to reach operating temperature.

To turn the receiver off, press the "Off" push button. (Fig. 1.)

MANUAL TUNING:

To operate the manual tuning control simply turn the tuning knob. (Figs. 1, 1A.) When tuning in a station, be sure to tune to the exact frequency for the best tone quality.

VOLUME CONTROL:

Turn the volume control knob for the desired volume. (Figs. 1, 1A.)

TONE CONTROL:

The tone control knob is located directly behind the volume control knob. Turning this control to the right or left will change the tone of the receiver. The control has four positions. The position to which the control is set is indicated in the window in the center of the dial scale.

AUTOMATIC TUNING:

There are five automatic tuning push buttons located to the right of the "Off" push button. (Figs. 1, 1A.)

The five buttons may be adjusted in succession to any desired dial setting. To simplify the identification of the stations, it is advisable to set the buttons in sequence according to the frequencies of the stations, beginning with the station broadcasting at the lowest frequency and progressing to the station broadcasting at the highest frequency.

To adjust the automatic tuning push buttons:

1. Turn the receiver on and allow it to operate for at least 15 minutes in order for each part to reach normal operating temperature.
2. Tune in the station desired for number 1 position by turning the tuning knob. (Fig. 1.) Be sure to tune to the exact frequency to insure the best tone.
3. Loosen the number one push button, located nearest the "OFF" push button (Fig. 1.), by turning it counterclockwise with your fingers not more than two turns. If the push button is completely unscrewed, the plunger assembly, inside the receiver, may fall apart. Then it will be necessary to remove the radio from the car, open the case, and reassemble the plunger.
4. Press the button in as far as it will go.
5. Release the number 1 button and tighten it by turning it clockwise with your fingers.
6. Use the same procedure for adjusting positions 2, 3, 4, and 5. When the five automatic tuning push buttons have been adjusted to the five desired stations, any one of the five stations can be instantly tuned in by pressing the automatic push button that is adjusted to it.

INTERFERENCE SUPPRESSION

There should be no motor noise or interference from the ignition circuit if the receiver has been installed in the car according to the instructions furnished with it. The interference suppression equipment may be checked for proper installation by referring to the following illustrations:

The hood bonding spring No. 80-579 should be installed on the cowl at the location shown in Fig. 3.

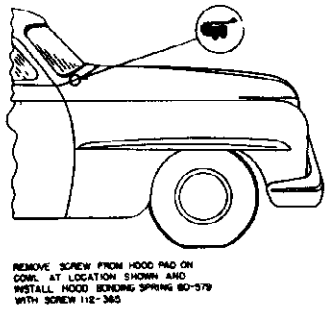

Fig. 3

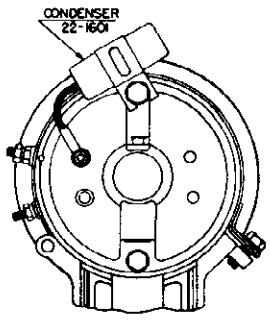

Fig. 4

The generator condenser, No. 22-1601, should be mounted under the top assembly bolt on the rear end plate of the generator, and the lead connected to the ARMATURE terminal of the generator. (Fig. 4.)

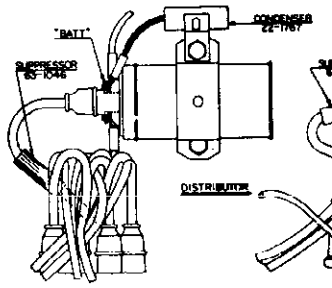

Fig. 5

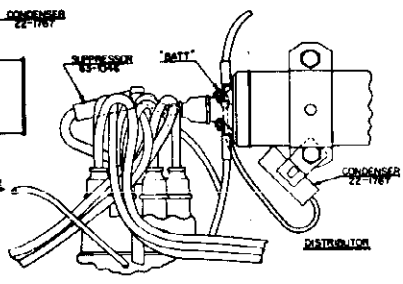

Fig. 6

The suppressor, No. 63-1046, should be in the high tension wire, approximately 1½ inches from the distributor cap. (Figs. 5 and 6.) The ignition coil condenser, No. 22-1767, should be connected to the BAT. terminal of the ignition coil. (Figs. 5 and 6.)

MODELS 8ML882,
8ML882Z, Lincoln

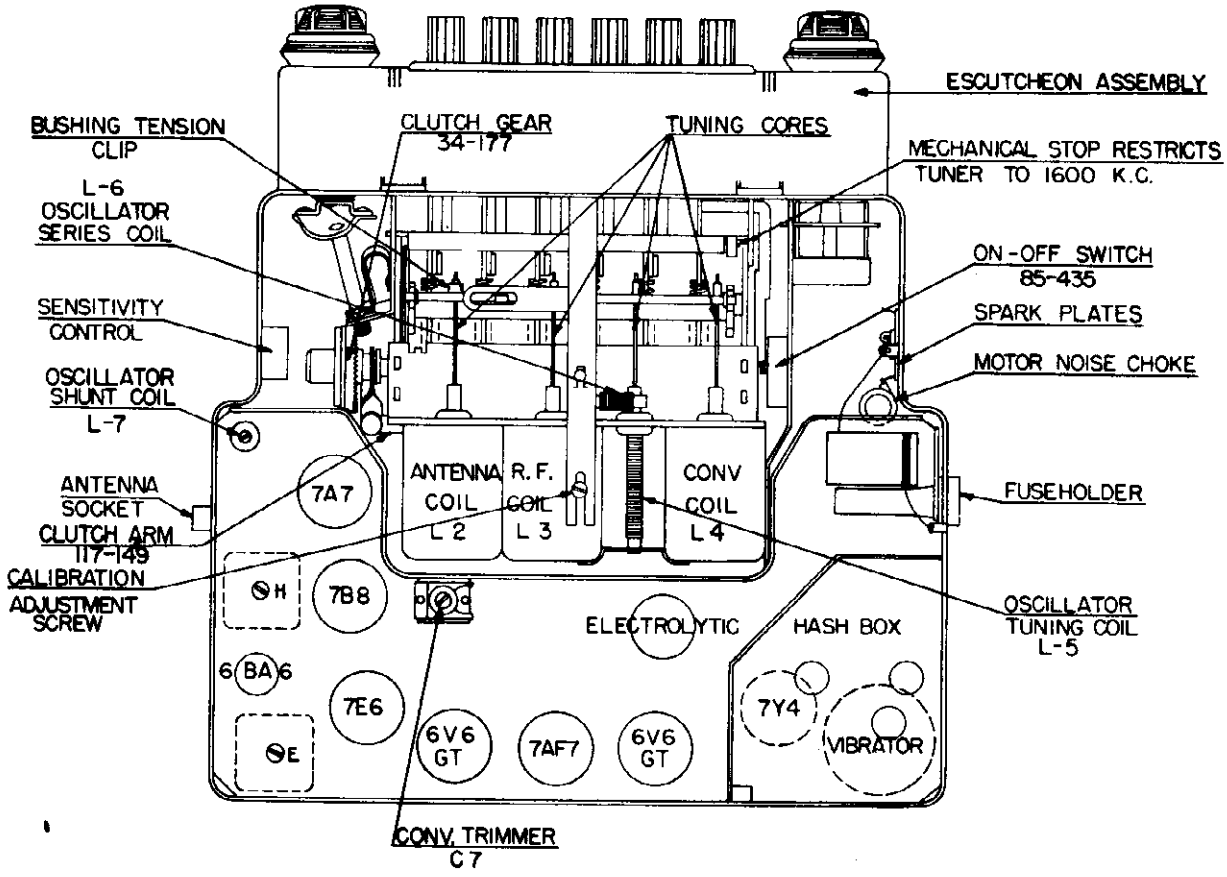

Fig. 7. Top View of Chassis

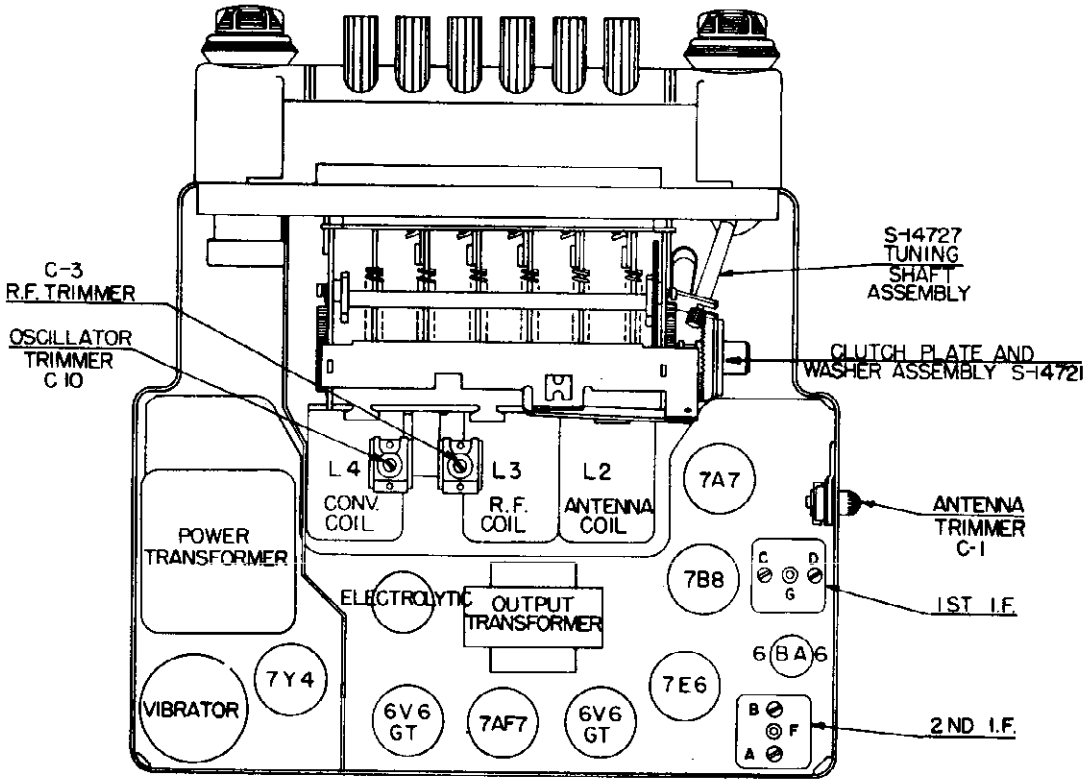

Fig. 8. Bottom View of Chassis

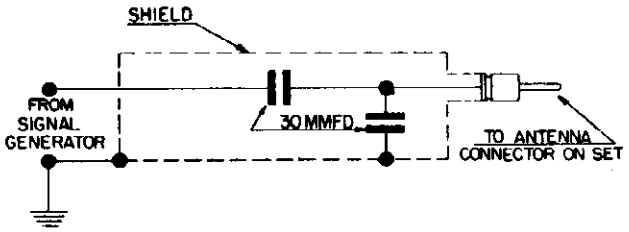

Fig. 9. Dummy Antenna

Figure 9 shows the schematic of a recommended dummy antenna, closely resembling actual antenna capacity, to be used in series with signal generator leads when aligning the R.F. section of the receiver.

ALIGNMENT

Maximum performance depends on accurate alignment of the receiver; therefore follow these instructions carefully.

CAUTION: Make all alignment adjustment to the receiver with the volume control set at maximum, and the tone control in the treble position. Reduce the signal intensity as much as possible at the signal generator. Connect the output meter across the voice coil.

I.F. ALIGNMENT PROCEDURE

1. Remove top and bottom covers from receiver.
2. Set signal generator to 265 Kc.
3. Apply signal from generator through a .1 Mfd. dummy to 7B8 converter grid. (Pin No. 6 on socket.)
4. Adjust I.F. trimmers A, B, C, and D in order named for maximum output. (Fig. 8.) Some units have I.F. transformers that are slug tuned. In this case adjust I.F. slugs E, F, G, and H in order named. Repeat the operation to assure accurate alignment. (Figs. 7 and 8.)

R.F. AND OSCILLATOR ALIGNMENT

1. Connect signal generator leads through dummy, illustrated in Fig. 9, to antenna lead in socket on receiver. This is important.
2. Set signal generator to 535 Kc.
3. Tune set to 535 Kc.
4. Adjust oscillator trimmer C-10 (Fig. 8), for maximum response.
5. Set signal generator to 1300 Kc.
6. Tune set to 1300 Kc.
7. Adjust converter trimmer C-7, R.F. trimmer C3 and antenna trimmer C-1 (Fig. 8) for maximum response (Figs. 7 and 8).
8. If dial calibration is off after making above adjustments, a correction can be made by tuning eccentric screw at fulcrum of dial pointer. (Fig. 7.)

TO ADJUST OR REPLACE THE ADJUSTING SPRING AND CORE

1. Remove the top and bottom covers from the receiver. Remove the escutcheon assembly.
2. With pliers remove the bushing tension clip from the cross arm insulating bushing.
3. With core alignment tool, part No. S-13064, screw the core in, or out, to the desired position.
4. After all adjustments or replacements are completed, be sure to replace the bushing tension clip.

ALIGNMENT PROCEDURE AFTER CORE OR COIL REPLACEMENT

WARNING: The following adjustments are to be made only after a core or coil is replaced.

1. Set signal generator to 1675 Kc.
2. Connect signal generator leads through dummy, illustrated in Fig. 9, to antenna receptacle on the receiver.
3. Set receiver dial to 1600 Kc. (Maximum high frequency end of dial.)
4. Screw the cores completely out of the antenna coil, the R.F. coil, the converter coil, and the oscillator coil.
5. Adjust the oscillator trimmer C-10 (Fig. 8) at 1675 Kc.
6. Adjust the converter trimmer C-7, R.F. trimmer C3, and antenna trimmer C-1 (Figs. 7 and 8) for maximum output reading.
7. Set signal generator dial and receiver dial to 1300 Kc.
8. Replace cores to their approximate original position (so that the cores project about 1/16 of an inch from the end of the coil form).
9. Adjust the oscillator core L-5 (Fig. 7) to scale at 1300 Kc.
10. Adjust the antenna core L-2, R.F. core L3, and converter core L-4 (Fig. 7) for maximum output reading.
11. Set signal generator to 600 Kc.
12. "Rock in" shunt oscillator coil L-7 (Fig. 7) for maximum output reading. This should be done only as a last resort. This is the same as rocking in the padder condenser on a gang condenser receiver.
13. Check receiver at 1300 Kc. for calibration and gain. If the receiver is off scale or weak, repeat operations 9, 10, and 11.
14. After alignment is complete, the maximum high frequency tuning range should be checked. If the range is greater or less than 1605 Kc., the lug stop near the volume control should be bent to limit the frequency coverage to 1605 Kc.

IMPORTANT: After reinstalling the receiver in the car, allow it to operate for approximately 15 minutes to reach normal operating temperature. Extend antenna to maximum. Check the antenna trimmer alignment on a weak station at approximately 1300 Kc.

MODELS 8ML882,
8ML882Z, Lincoln

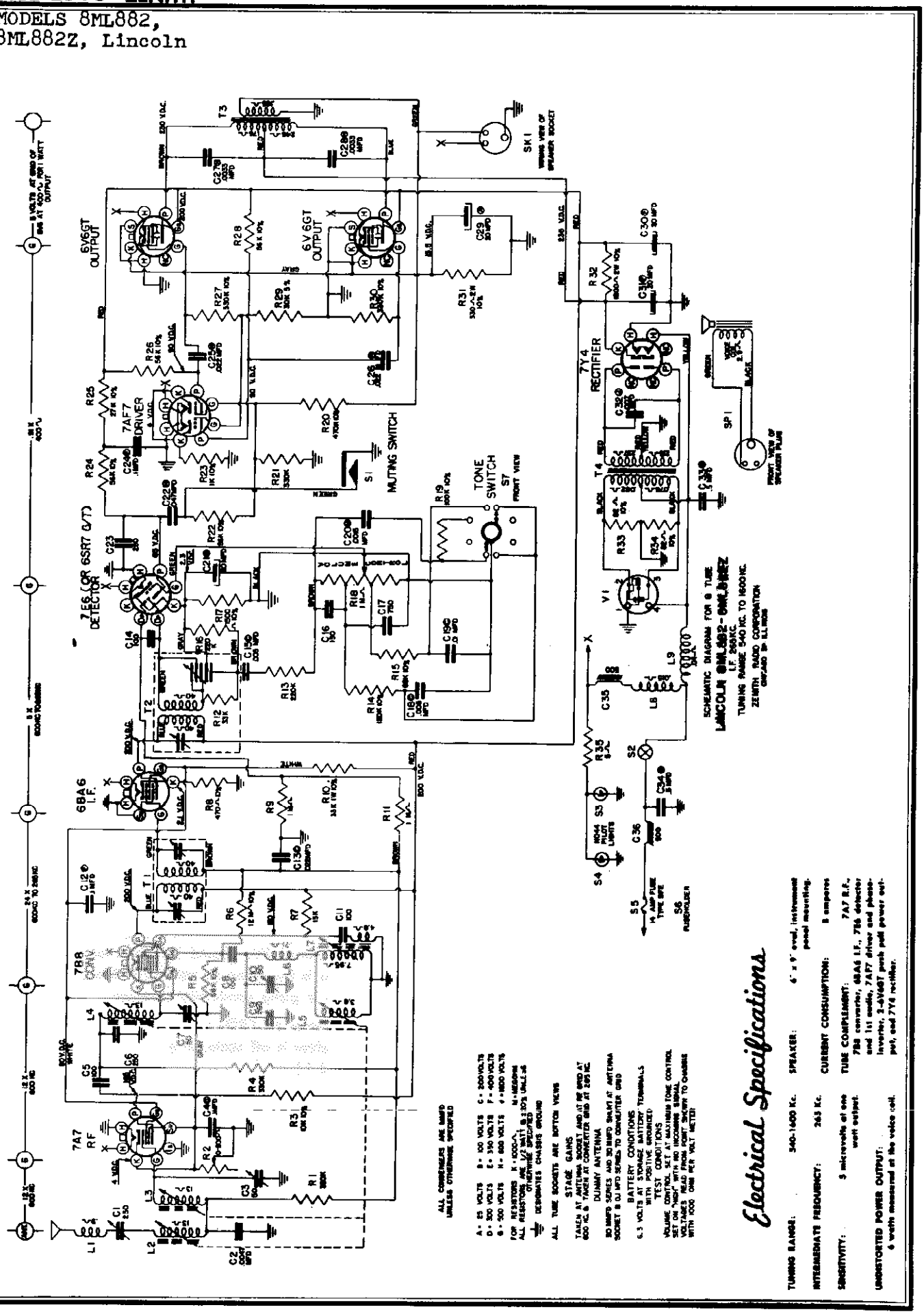

© John F. Rider

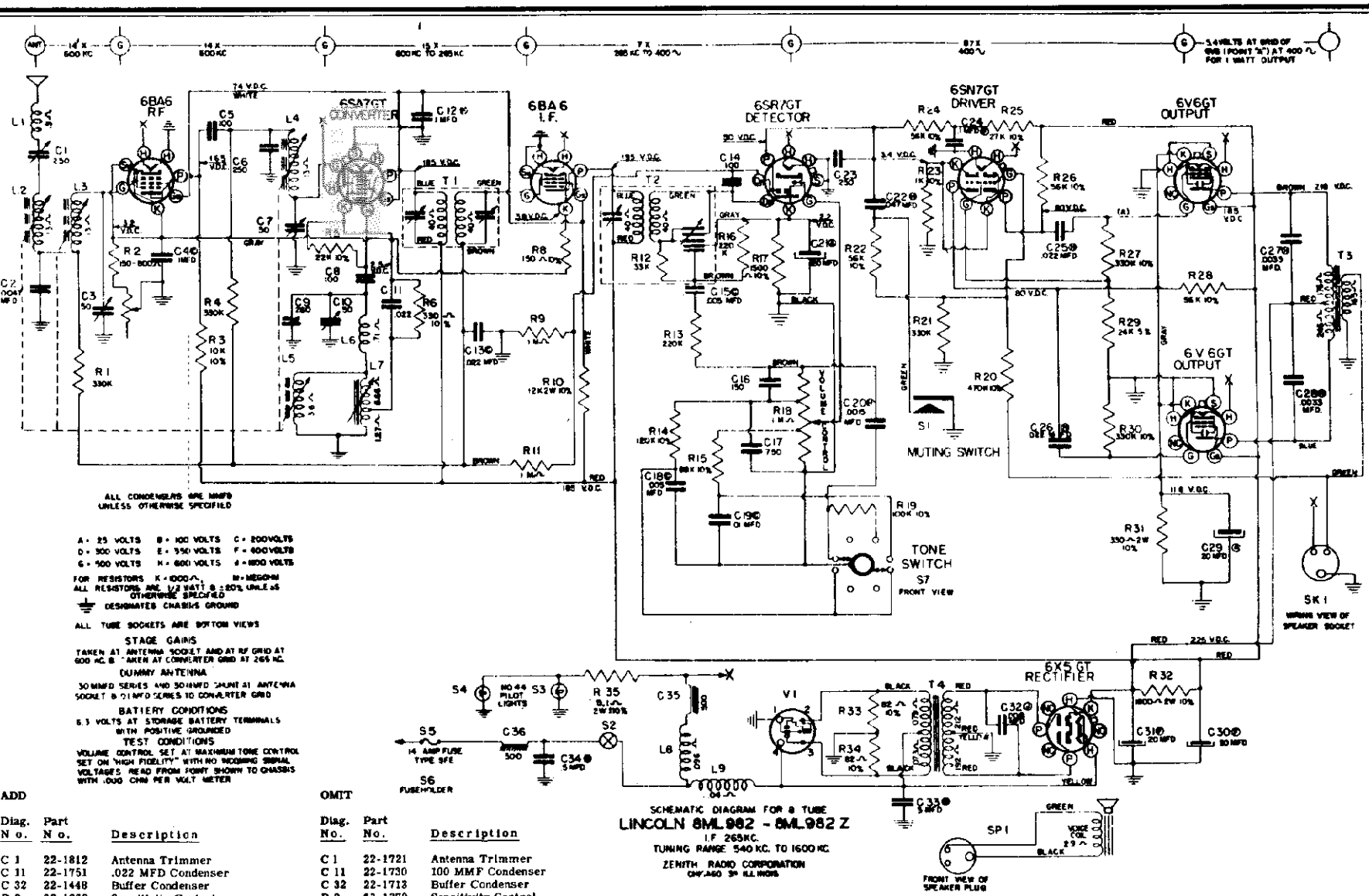

SCHEMATIC DIAGRAM FOR 8 TUBE
LINCOLN 8ML982 - 8ML982Z
I.F. 265KC.
TUNING RANGE 540 KC. TO 1600 KC.
ZENITH RADIO CORPORATION
ONLY ALSO SEE ILL WORK

ADD

Diag. No.	Part No.	Description
C 1	22-1812	Antenna Trimmer
C 11	22-1751	.022 MFD Condenser
C 32	22-1448	Buffer Condenser
R 2	63-1662	Sensitivity Control
R 5	63-1841	22K ohm 1/2 W.
R 6	63-1764	330 ohm 1/2 W.
R 8	63-1750	150 ohm 1/2 W.
R 10	63-1823	12K ohm 2 W.
R 29	63-1843	24K 1/2 W.
L 7	S-14846	Oscillator Shunt Coil
L 8	S-14781	Motor Noise Choke
T 4	95-1073	Power Transformer
	202-641	Instruction Book
	202-643	Instruction Book

OMIT

Diag. No.	Part No.	Description
C 1	22-1721	Antenna Trimmer
C 11	22-1730	100 MMF Condenser
C 32	22-1713	Buffer Condenser
R 2	63-1379	Sensitivity Control
R 5	63-1862	68K ohm 1/2 W. resistor
R 6	63-1838	18K ohm 1/2 W. resistor
R 7	63-1835	15K ohm 1/2 W. resistor
R 8	63-1771	470 ohm 1/2 W. resistor
R 10	63-1398	33K ohm 1 W. resistor
R 29	63-1846	30K ohm 1/2 W. resistor
L 7	S-14225	Oscillator Shunt Coil
L 8	S-11232	Motor Noise Choke
T 4	95-1071	Power Transformer
	202-567	Instruction Book
	202-573	Instruction Book

PARTS LIST MODELS 8ML982-8ML982Z

The parts list for models 8ML982-8ML982Z is the same as for models 8ML882-8ML882Z with the following parts added and omitted.

MODELS 8ML882,
8ML882Z, Lincoln

PARTS LIST MODEL 8ML882 (Chassis 8E82)

COILS AND CHOKES

Diagram No.	Part No.	Description
L 9	20-213	Main Hash Choke
T 1	95-1077	1st I.F. Transformer
T 2	95-1078	2nd I.F. Transformer
L 1	S-8819	Antenna Motor Noise Choke Assembly
L 8	S-11232	Motor Noise Choke Coil Assembly
L 7	S-14225	Oscillator Shunt Coil Assembly
L 6	S-14226	Oscillator Series Coil Assembly
L 3	S-14227	R.F. Coil Assembly
L 2	S-14227	Antenna Coil Assembly
L 4	S-19227	Converter Coil Assembly
L 5	S-14228	Oscillator Coil Assembly
L 2, L 3, L 4, L 5	S-14295	Tuner Coil Unit Assembly

CONDENSERS

C12	22-170	.1 Mfd	400 V.
C23	22-182	250 Mmfd	500 V.
C 4	22-190	.1 Mfd	200 V.
C17	22-242	750 Mmfd	500 V.
C15, C18	22-906	.005 Mfd	200 V.
C 6	22-1136	250 Mmfd	500 V.
C16	22-1137	150 Mmfd	500 V.
C34	22-1238	.5 Mfd	120 V.
C19	22-1466	.01 Mfd	200 V.
C29, C30, C31	22-1484	Electrolytic 20 Mfd. 25 V. x 20-20 Mfd	400 V.
C21	22-1553	20 Mfd. Electrolytic	25 V.
C 9	22-1712	260 Mmfd. Compensating	
C32	22-1713	.007 Mfd	1600 V.
C 7	22-1715	Single Section Trimmer (Converter)	
C 1	22-1721	Single Section Trimmer (Antenna)	
C 3, C10	22-1722	Two Section Trimmer (R.F. and Osc.)	
C33	22-1728	.5 Mfd	100 V.
C 5, C11, C14	22-1730	100 Mmfd. Ceramic (or 22-162)	500 V.
C20	22-1743	.0015 Mfd	600 V.
C27, C28	22-1747	.0033 Mfd	600 V.
C24	22-1748	.1 Mfd	400 V.
C22	22-1749	.047 Mfd	600 V.
C25, C26	22-1750	.022 Mfd	600 V.
C13	22-1751	.022 Mfd	200 V.
C 2	22-1752	.0047 Mfd. (or 22-1022)	600 V.

RESISTORS

Diagram No.	Part No.	Description
R35	63-1375	5 Ohm (Wirewound) 2 W.
R 2	63-1379	Sensitivity Control
R10	63-1398	33M Ohm 1 W.
R18, S 7	63-1590	Volume Control and Tone Switch
R32	63-1620	1800 Ohm 2 W.
R31	63-1622	330 Ohm 2 W.
R34, R35	63-1740	82 Ohm ½ W.
R 8	63-1771	470 Ohm ½ W.
R23	63-1785	1000 Ohm ½ W.
R17	63-1792	1500 Ohm ½ W.
R 3	63-1827	10M Ohm ½ W.
R 7	63-1835	15M Ohm ½ W.
R25	63-1845	27M Ohm ½ W.
R29	63-1846	30M Ohm ½ W.
R12	63-1849	33M Ohm ½ W.
R22, R24, R26, R28	63-1859	56M Ohm ½ W.
R 5, R15	63-1862	68M Ohm ½ W.
R19	63-1869	100M Ohm ½ W.
R14	63-1873	120M Ohm ½ W.
R13, R16	63-1884	220M Ohm ½ W.
R27, R30	63-1890	330M Ohm ½ W.
R 1, R 4, R21	63-1891	330M Ohm ½ W.
R20	63-1897	470M Ohm ½ W.
R 9, R11	63-1912	1 Megohm ½ W.
R 6	63-1960	15 Megohm ½ W.

MISCELLANEOUS

	12-1414	Set Mounting Bracket (2 used)
	12-1432	Set Installation Bracket
	46-715	Antenna Trimmer Knob (used on 22-1721)
SP 1	49-627	P.M. Speaker (6" x 9" Oval)
S 6	52-451	Battery Cable—Fuse to Set—Fuse Holder
	52-455	Volume Control Cable
	52-470	Speaker Cable and Plug
	73-50	No. 6-32 x ¼" Headless Slotted Set Screw—Cuppoint
	78-596	Socket—Loktal Tube
SK 1	78-728	Socket—Speaker
	78-782	Miniature Tube Socket
	78-796	Socket—Antenna Connector
	78-801	Socket—Octal Base Tube
	78-804	Socket—Vibrator
	93-888	Vibrator Cushion Washer

Diagram No.	Part No.	Description
T 4	95-1071	Power Transformer
T 3	95-1079	Output Transformer
	125-63	Rubber Grommet (used on S-14295)
	126-553	Miniature Tube Shield
	149-63	Iron Core and Spring (4 used)
V 1	190-22	Vibrator
	196-91	Speaker Gasket
	199-81	Tone Gear Sleeve
	202-567	Instruction Book (Owner's Manual)
	202-607	Interference Elimination Instruction Sheet
	S-14303	Speaker and Gasket Assembly (Use 49-627 and 196-91)

DIAL ASSEMBLY

	12-1435	Dial Scale Retaining Bracket (2 used)
	19-165	Insulating Bushing Tension Clip (4 used)
	26-392	Dial Scale
	46-708	Tone Control Knob
	46-714	"Off" Switch Knob
	56-228	Cross Arm Guide Rod
	57-1338	Escutcheon
	57-1356	Dial Background Plate
	59-208	Dial Pointer
	80-232	Knob Retaining Spring
	80-379	Pointer Retaining Spring
	80-586	Cross Arm Tension Spring (2 used)
	80-625	Pointer Link Tension Spring
S 3-S 4	Dial Light Bulb—Mazda No. 44	
	112-699	No. 4-40 x 3/16" R.H. Self Tapping Screw — Stan Top — Steel — Cad
	114-294	No. 6-20 x 1/4" Hex Hd. Self Tapping Screw—Type No. 25 (Escutcheon Mtg.)
	126-566	Dial Light Shield
	S-14215	Pointer Support Bracket and Stud Assembly
	S-14216	Pointer Drive Link and Stud Assembly
	S-14281	Tuner Unit Assembly
	S-14300	Cross Arm and Bushing Assembly
	S-14304	Dial Light Socket and Wire Assembly
	S-14307	Tone Gear and Bushing Assembly
	S-14308	Tone Drum Shaft and Gear Assembly (26-392)
	S-14320	Tuning Control and Trim Knob Assembly (46-705-707)
	S-14321	Volume Control Knob and Spring Assembly (46-706)
S 2	85-435	On-Off Switch (on tuner)
	S-14754	Automatic Knob and Screw Assembly
	S-14721	Clutch Plate and Washer
	S-14727	Tuning Shaft, Pinion Gear and Coupling Assembly
S 1	S-14733	Muting Switch Assembly
	17-102	Cam Lock (5 used)
	34-177	Clutch Gear
	64-162	.088 D x 3/32" Rivet (2 used on S-14733)
	73-118	No. 6-32 x 1/4" Hex Head Slotted Set Screw (2 used)
	80-640	Yoke Tension Spring (2 used)
	80-641	Clutch Release Bar Spring
	80-642	Clutch Spring
	93-921	Tuning Shaft Steel Washer
	93-922	Tuning Shaft Spring Washer
	93-923	Fishpaper Washer (2 used)
	97-305	Clutch Arm Stud
	117-149	Clutch Lever
	118-111	Retaining Ring (2 used)

INSTALLATION PARTS

	S-14317	Installation Kit Assembly (complete)
	52-458	Battery Cable (Fuse to Ammeter)
	54-157	1/4-20 x 7/16" x 3/16" Hex Nut
	54-189	No. 8-32 Wing Nut
	54-265	No. 8-32 Wing Nut (Forged)
	93-161	1/4" External Shakeproof Lockwasher
	93-755	No. 8 External Shakeproof Lockwasher
	114-175	1/4-20 x 1/2" Hex Hd. M. Screw
S 5	136-11	14 Amp. Fuse (Type SFE-14)

MOTOR NOISE SUPPRESSION KIT

	S-14285	Motor Noise Suppression Kit Assembly (complete)
	22-1601	Generator Capacitor
	22-1767	Ignition Coil Capacitor
	63-1046	Distributor Suppressor
	80-579	Motor Hood Bond Spring
	112-365	No. 8 x 1/2" B.H. Sheet Metal Screw

PARTS LIST MODEL 8ML882Z (Chassis 8E82)

The parts list for Model 8ML882Z is the same as for Model 8ML882 with the following parts omitted and added:

ADD

Part No.	Description
196-110	Speaker Gasket
202-573	Instruction Book
202-615	Interference Elimination Sheet
49-627	P.M. Speaker (6" x 9" oval)
S-14325	Installation Kit Assembly

OMIT

Part No.	Description
196-91	Speaker Gasket
202-567	Instruction Book
202-607	Interference Elimination Sheet
S-14303	Speaker and Gasket Assembly
S-14317	Installation Kit Assembly

MODEL 8MM890, Ch. 8E90,
Lincoln-Mercury

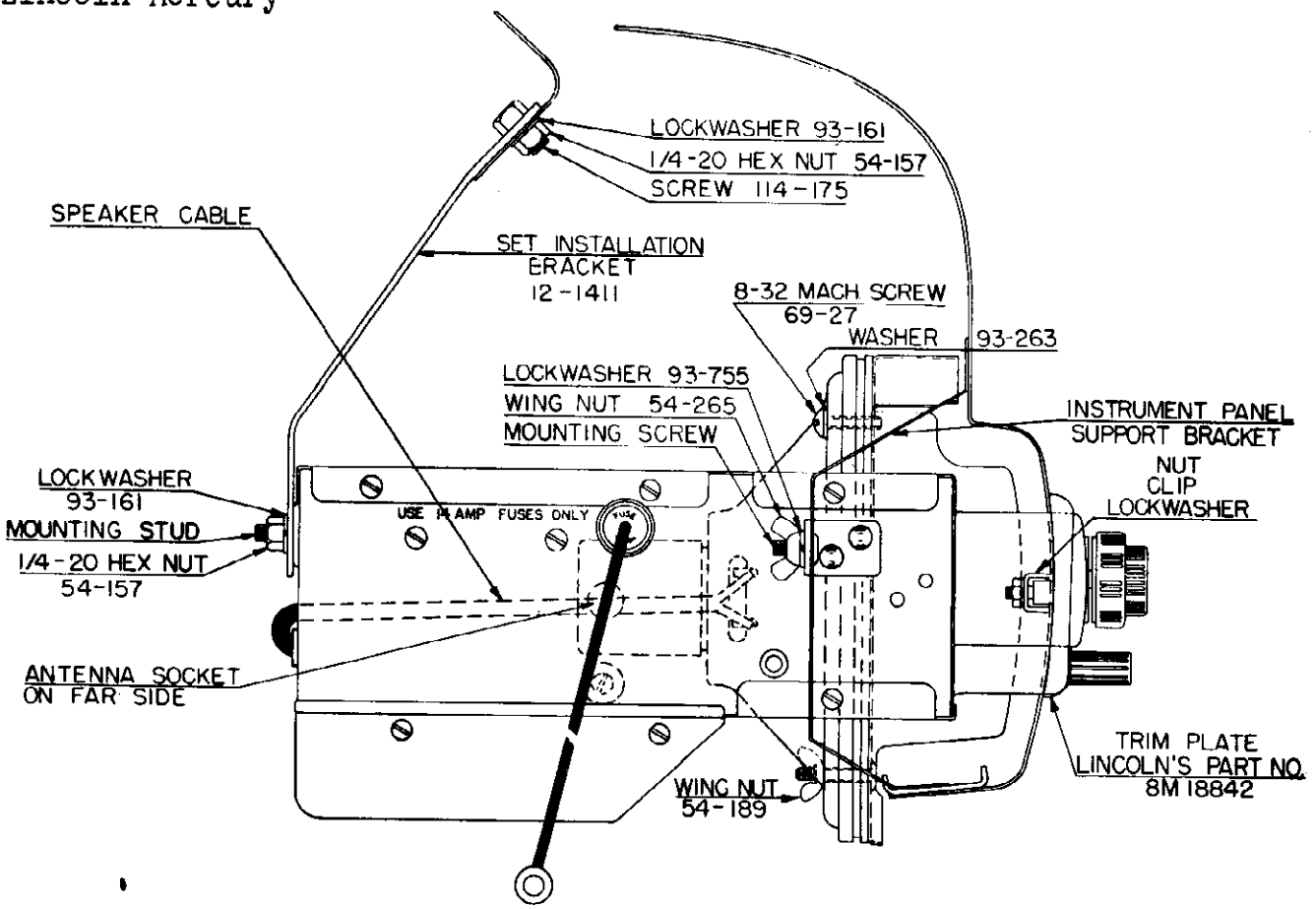

Fig. 1. Set Installed, Cut Away View

RECEIVER INSTALLATIONS

Figures 1 and 2, illustrating the escutcheon plate, control knobs and the installed receiver, are given here to facilitate removal and reinstallation of the receivers when service or repair is necessary.

1. Disconnect the "A" lead at the set. Remove the speaker plug from the set and disconnect the antenna.
2. Loosen the top of the set installation bracket, and remove the bottom of the bracket from the set. (Fig. 1.)
3. Remove the 8/32 wingnuts and lockwashers from the instrument panel support brackets. (Fig. 1.)

To take the speaker from the car, remove the stamped wingnut and the 8/32 machine screws from the rear of the instrument panel. (Fig. 1.)

OPERATING INSTRUCTIONS

TO TURN RADIO ON:

The radio is connected to the accessory terminal of the ignition switch, therefore, it is necessary to turn the ignition key to the left, if the engine is not running, before turning the radio on. Press any one of the five automatic push buttons. (Fig. 2.) Allow approximately 20 seconds for the receiver to reach operating temperature.

To turn the receiver off, press the "Off" push button (Fig. 2.)

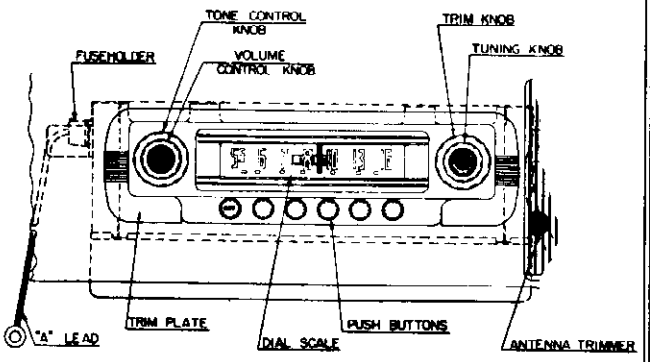

Fig. 2. Front Panel View

MANUAL TUNING:

To operate the manual tuning control simply turn the tuning knob. (Fig. 2.) When tuning in a station, be sure to tune to the exact frequency for the best tone quality.

VOLUME CONTROL:

Turn the volume control knob for the desired volume. (Fig. 2.)

TONE CONTROL:

The tone control knob is located directly behind the volume control knob. Turning this control to the right or left will change the tone of the receiver. The control has four positions. The position to which the control is set is indicated in the window in the center of the dial scale.

© John F. Rider

AUTOMATIC TUNING:

There are five automatic tuning push buttons located to the right of the "Off" push button. (Fig. 2.)

The five buttons may be adjusted in succession to any desired dial setting. To simplify the identification of the stations, it is advisable to set the buttons in sequence according to the frequencies of the stations, beginning with the station broadcasting at the lowest frequency and progressing to the station broadcasting at the highest frequency.

To adjust the automatic tuning push buttons:

1. Turn the receiver on and allow it to operate for at least 15 minutes in order for each part to reach normal operating temperature.
2. Tune in the station desired for number 1 position by turning the tuning knob. (Fig. 2.) Be sure to tune to the exact frequency to insure the best tone.
3. Loosen the number one push button, located nearest the "OFF" push button (Fig. 2) by turning it counterclockwise with your fingers not more than two turns. If the push button is completely unscrewed, the plunger assembly, inside the receiver, may fall apart. Then it will be necessary to remove the radio from the car, open the case, and reassemble the plunger.
4. Press the button in as far as it will go.
5. Release the number 1 button and tighten it by turning it clockwise with your fingers.
6. Use the same procedure for adjusting positions 2, 3, 4, and 5. When the five automatic tuning push buttons have been adjusted to the five desired stations, any one of the five stations can be instantly tuned in by pressing the automatic push button that is adjusted to it.

INTERFERENCE SUPPRESSION

There should be no motor noise or interference from the ignition circuit if the receiver has been installed in the car according to the instructions furnished with it. The interference suppression equipment may be checked for proper installation by referring to the following illustrations:

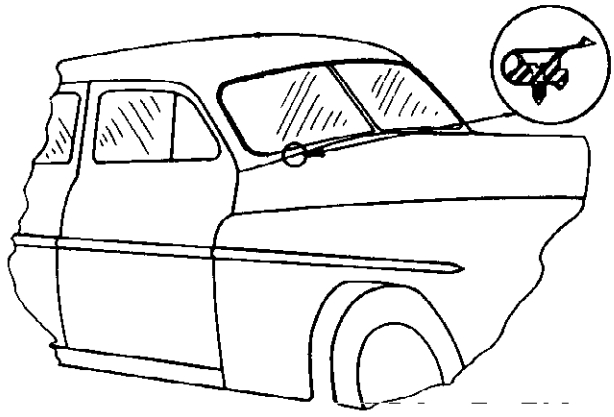

REMOVE SCREW FROM HOOD PAD ON COWL AT LOCATION SHOWN AND INSTALL HOOD BONDING SPRING 80-579 WITH SCREW 112-365

Fig. 3

The hood bonding spring No. 80-579 should be installed on the cowl at the location shown in Fig. 3.

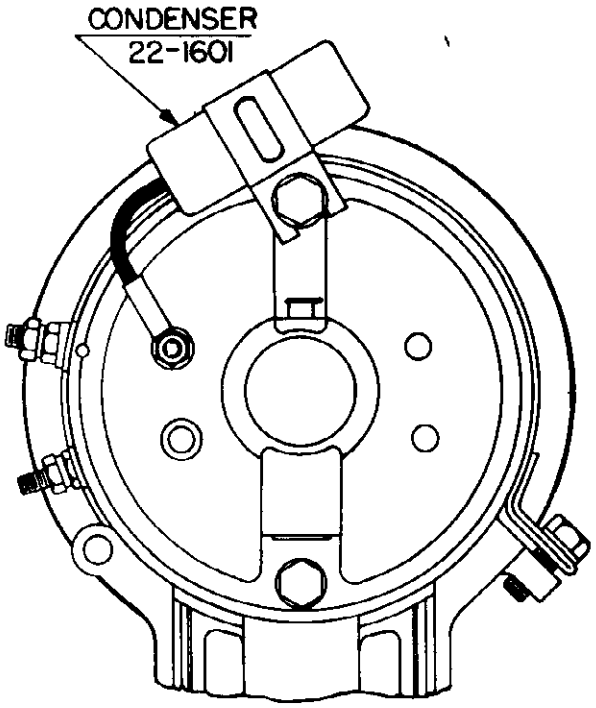

Fig. 4

The generator condenser, No. 22-1601, should be mounted under the top assembly bolt on the rear end plate of the generator, and the lead connected to the ARMATURE terminal of the generator. (Fig. 4.)

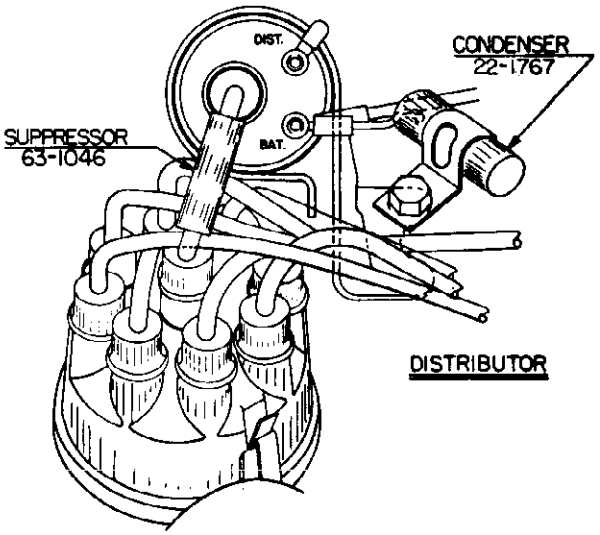

Fig. 5

The suppressor, No. 63-1046, should be in the high tension wire, approximately 1½ inches from the distributor cap (Fig. 5). The ignition coil condenser, No. 22-1767, should be connected to the BAT. terminal of the ignition coil. (Fig. 5.)

MODEL 8MM890, Ch. 8E90,
Lincoln-Mercury

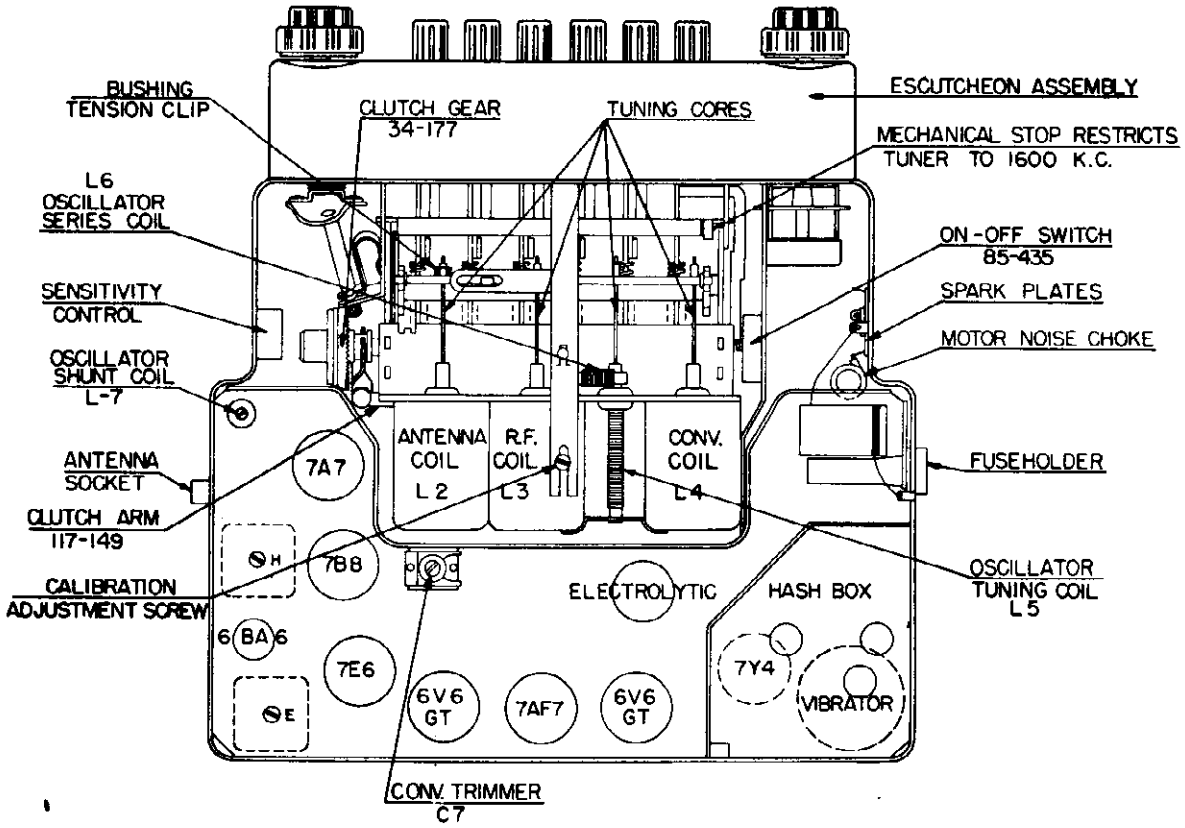

Fig. 6. Top View of Chassis

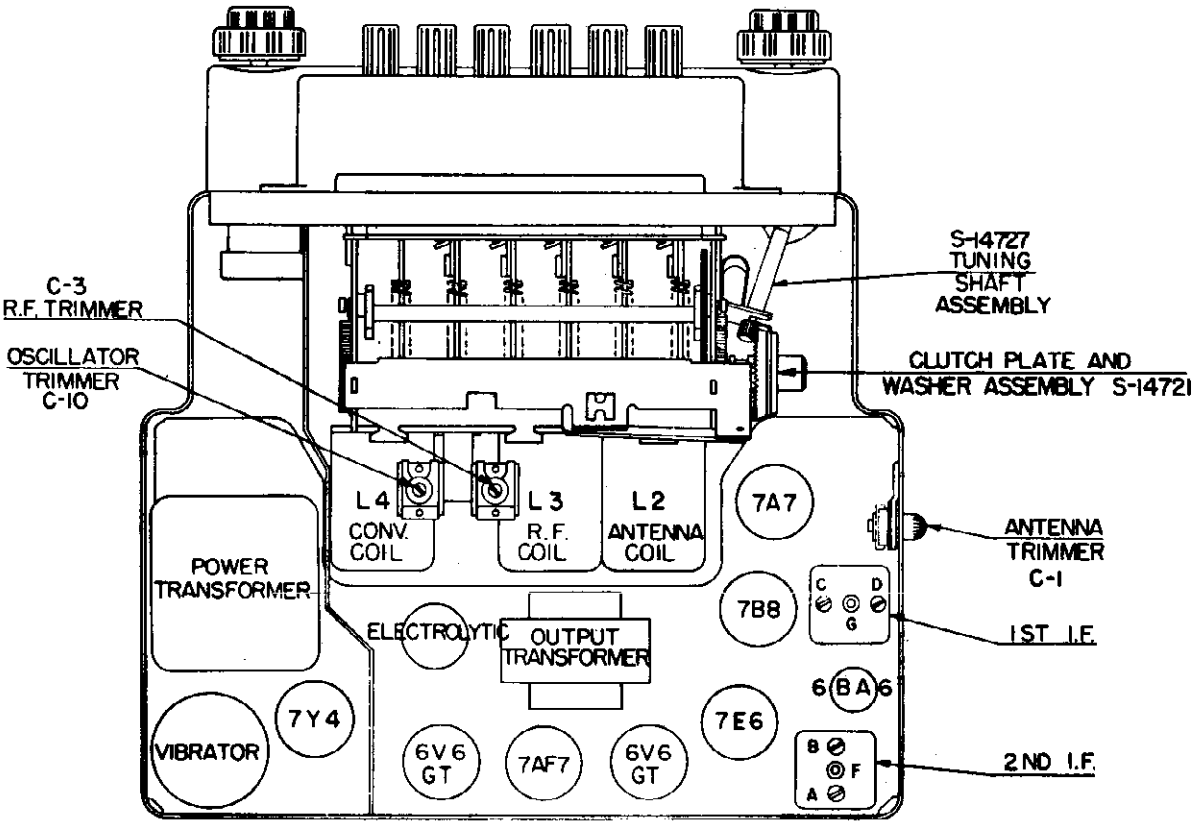

Fig. 7. Bottom View of Chassis

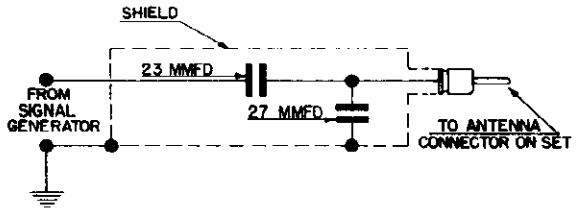

Fig. 8 Dummy Antenna

Figure 8 shows the schematic of a recommended dummy antenna, closely resembling actual antenna capacity, to be used in series with signal generator leads when aligning the R.F. section of the receiver.

ALIGNMENT

Maximum performance depends on accurate alignment of the receiver; therefore follow these instructions carefully.

CAUTION: Make all alignment adjustment to the receiver with the volume control set at maximum, and the tone control in the treble position. Reduce the signal intensity as much as possible at the signal generator. Connect the output meter across the voice coil.

I.F. ALIGNMENT PROCEDURE

1. Remove top and bottom covers from receiver.
2. Set signal generator to 265 Kc.
3. Apply signal from generator through a .1 Mfd. dummy to 7B8 converter grid. (Pin No. 6 on socket.)
4. Adjust I.F. trimmers A, B, C, and D in order named for maximum output (Fig. 7). Some units have I.F. transformers that are slug tuned. In this case adjust I.F. slugs E, F, G, and H in order named for maximum output. Repeat the adjustments to assure accurate alignment. (Figs. 6 and 7.)

R.F. AND OSCILLATOR ALIGNMENT

1. Connect signal generator leads through dummy, illustrated in Fig. 8, to antenna lead in socket on receiver. This is important.
2. Set signal generator to 535 Kc.
3. Tune set to 535 Kc.
4. Adjust oscillator trimmer C-10 (Fig. 7), for maximum response.
5. Set signal generator to 1300 Kc.
6. Tune set to 1300 Kc.
7. Adjust converter trimmer C-7, R.F. trimmer C3 (Figs. 6 and 7) and antenna trimmer C-1 (Fig. 7) for maximum response.
8. If dial calibration is off after making above adjustments, a correction can be made by tuning eccentric screw at fulcrum of dial pointer. (Fig. 6.)

TO ADJUST OR REPLACE THE ADJUSTING SPRING AND CORE

1. Remove the top and bottom covers from the receiver. Remove the escutcheon assembly.
2. Remove, with pliers, the bushing tension clip from the cross arm insulating bushing.
3. With core alignment tool, part No. S 13064, screw the core in, or out, to the desired position.
4. After all adjustments or replacements are completed, be sure to replace the bushing tension clip.

ALIGNMENT PROCEDURE AFTER CORE OR COIL REPLACEMENT

WARNING: The following adjustments are to be made only after a core or coil is replaced.

1. Set signal generator to 1675 Kc.
2. Connect signal generator leads through dummy, illustrated in Fig. 8, to antenna receptacle on the receiver.
3. Set receiver dial to 1600 Kc. (Maximum high frequency end of dial.)
4. Screw the cores completely out of the antenna coil, R.F. coil, the converter coil, and the oscillator coil.
5. Adjust oscillator trimmer C-10 (Fig. 7) at 1675 Kc.
6. Adjust converter trimmer C-7, R.F. trimmer C3, and antenna trimmer C-1 (Figs. 6 and 7) for maximum output reading.
7. Set signal generator dial and receiver dial to 1300 Kc.
8. Replace cores to their approximate original position (so that the cores project about 1/16 of an inch from the end of the coil form).
9. Adjust oscillator core L-5 (Fig. 6) to scale at 1300 Kc.
10. Adjust the antenna core L-2, R.F. core L3, and converter core L-4 (Fig. 6) for maximum output reading.
11. Set signal generator to 600 Kc.
12. "Rock in" shunt oscillator coil L-7 (Fig. 6) for maximum output reading. This should be done only as a last resort. This is the same as rocking in the padder condenser on a gang condenser receiver.
13. Check receiver at 1300 Kc. for calibration and gain. If the receiver is off scale or weak, repeat operations 9, 10, and 11.
14. After alignment is complete, the maximum high frequency tuning range should be checked. If the range is greater or less than 1605 Kc., the lug stop near the volume control should be bent to limit the frequency coverage to 1605 Kc.

IMPORTANT: After reinstalling the receiver in the car, allow it to operate for approximately 15 minutes to reach normal operating temperature. Extend antenna to maximum. Check the antenna trimmer alignment on a weak station at approximately 1300 Kc.

©John F. Rider

MODEL 8MM890, Ch. 8E90,
Lincoln-Mercury

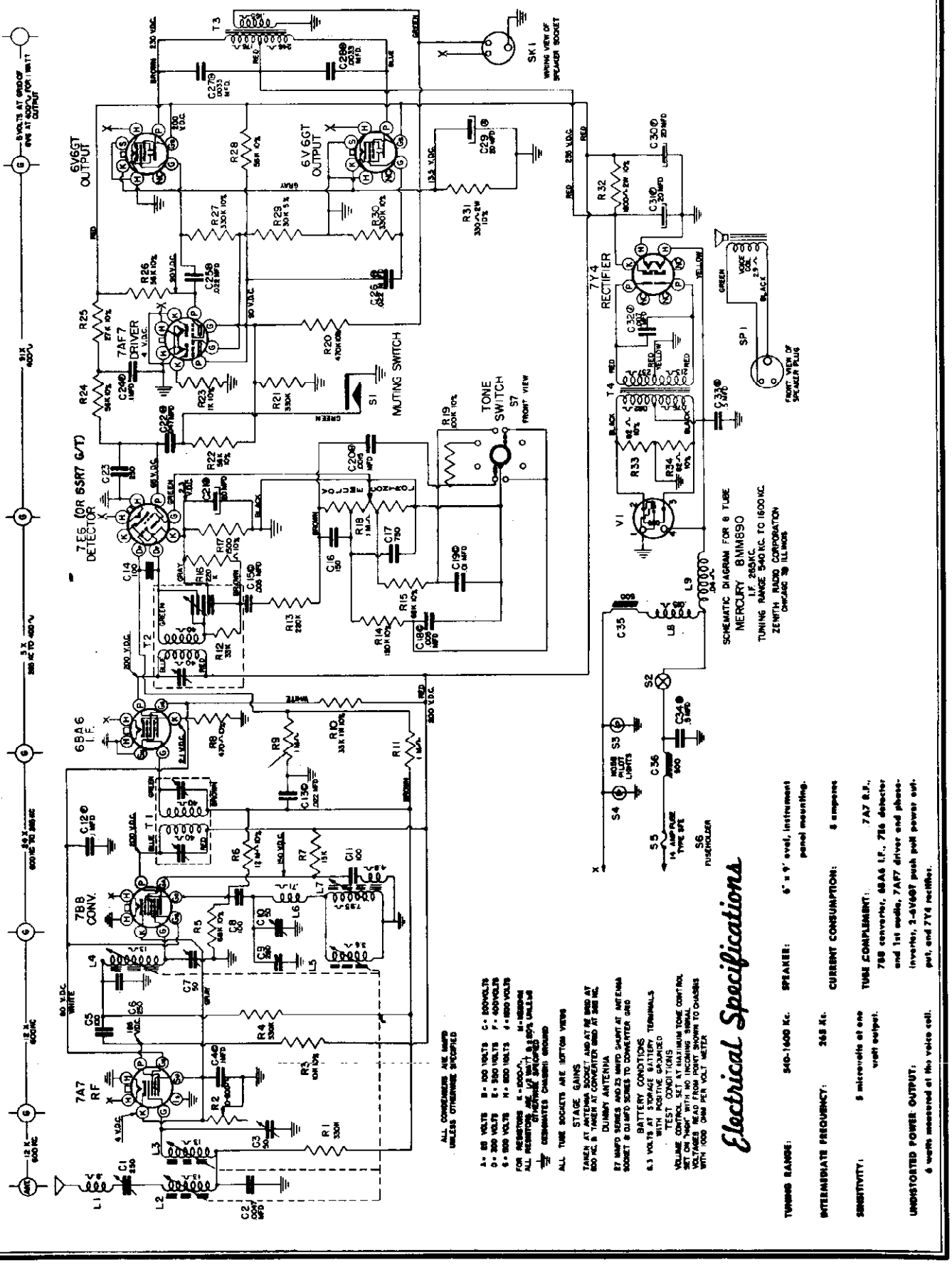

©John F. Rider

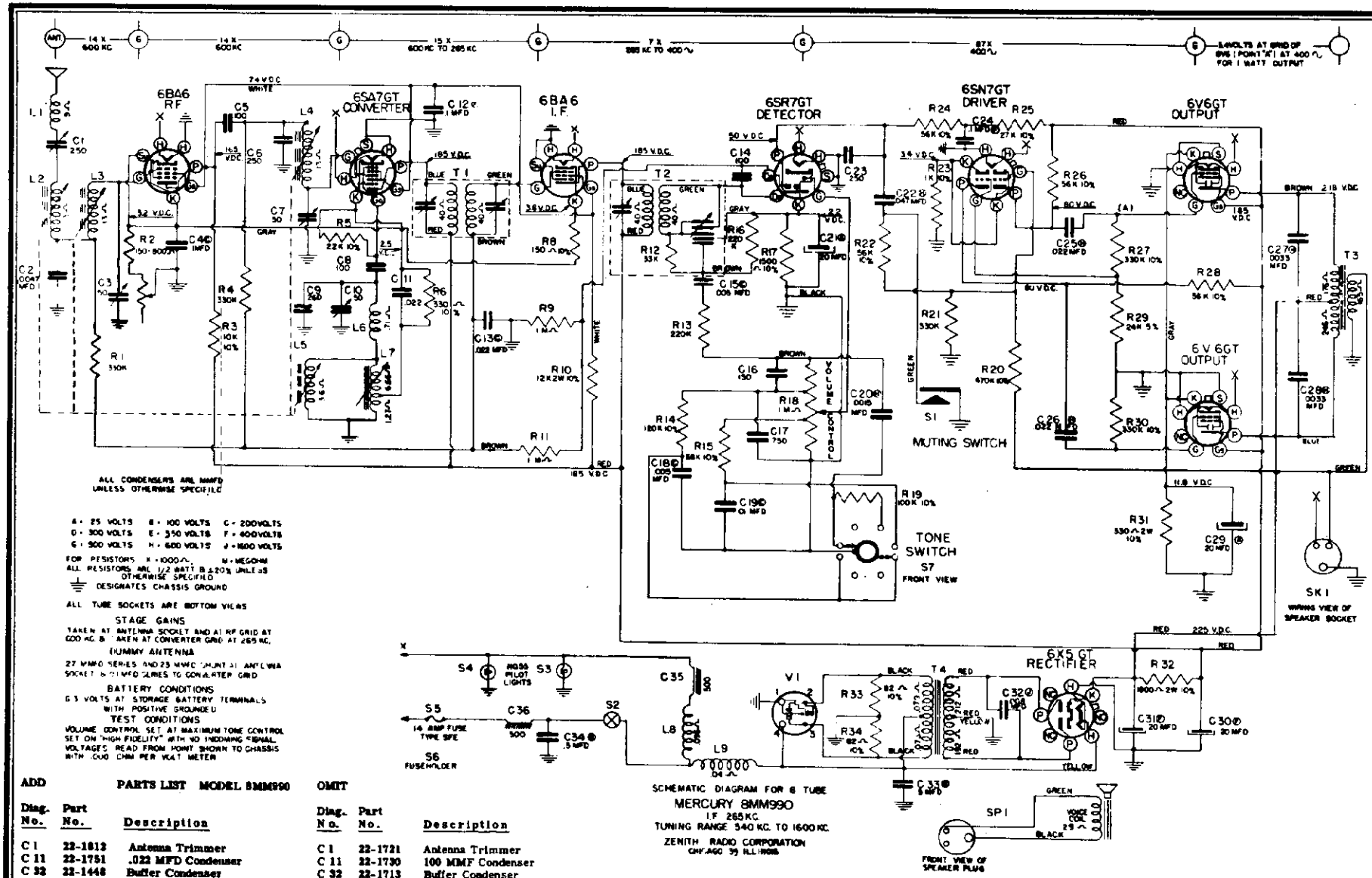

SCHEMATIC DIAGRAM FOR 6 TUBE
MERCURY 8MM990
I.F. 265 KC.
TUNING RANGE 540 KC. TO 1600 KC.
ZENITH RADIO CORPORATION
CHICAGO 39, ILLINOIS

PARTS LIST MODEL 8MM990

ADD Diag. No.	Part No.	Description	OMIT Diag. No.	Part No.	Description
C 1	22-1812	Antenna Trimmer	C 1	22-1721	Antenna Trimmer
C 11	22-1751	.022 MFD Condenser	C 11	22-1730	100 MMF Condenser
C 32	22-1448	Buffer Condenser	C 32	22-1713	Buffer Condenser
R 2	63-1662	Sensitivity Control	R 2	63-1379	Sensitivity Control
R 5	63-1841	22K ohm 1/2 Wt	R 5	63-1862	68K ohm 1/2 W. resistor
R 6	63-1764	330 ohm 1/2 W.	R 6	63-1838	18K ohm 1/2 W. resistor
			R 7	63-1835	15K ohm 1/2 W. resistor
R 8	63-1750	150 ohm 1/2 W.	R 8	63-1771	470 ohm 1/2 W. resistor
R 10	63-1623	12K ohm 2 W.	R 10	63-1398	33K ohm 1 W. resistor
R 29	63-1843	24K 1/2 W.	R 29	63-1846	30K ohm 1/2 W. resistor
L 7	S-14846	Oscillator Shunt Coil	L 7	S-14225	Oscillator Shunt Coil
L 8	S-14761	Motor Noise Choke	L 8	S-11232	Motor Noise Choke
T 4	95-1073	Power Transformer	T 4	95-1071	Power Transformer
	202-845	Instruction Book		202-587	Instruction Book

The parts list for model 8MM990 is the same as for model 8MM890 with the following parts added and omitted.

MODEL 8MM890, Ch. 8E90,
Lincoln-Mercury

PARTS LIST

Diagram No.	Part No.	Description
		COILS AND CHOKES
L 9	20-213	Main Hash Choke
T 1	95-1077	1st I.F. Transformer
T 2	95-1078	2nd I.F. Transformer
L 1	S-8819	Antenna Motor Noise Choke Assembly
L 8	S-11232	Motor Noise Choke Assembly
L 7	S-14225	Oscillator Shunt Coil Assembly
L 6	S-14226	Oscillator Series Coil Assembly
L 3	S-14227	RF Coil Assembly
L 2	S-14227	Antenna Coil Assembly
L 4	S-14227	Converter Coil Assembly
L 5	S-14228	Oscillator Coil Assembly
L 2, L 3, L 4, L 5	S-14295	Tuner Coil Unit Assembly
		CONDENSERS
C12	22-170	.1 Mfd. 400 V.
C23	22-182	250 Mmfd. 400 V.
C 4	22-190	.1 Mfd. 200 V.
C17	22-242	750 Mmfd. 500 V.
C15, C18	22-906	.005 Mfd. 200 V.
C 6	22-1136	250 Mmfd. 500 V.
C16	22-1137	150 Mmfd. 500 V.
C34	22-1238	.5 Mfd. 120 V.
C19	22-1466	.01 Mfd. 200 V.
C29, C30, C31	22-1484	Electrolytic 20 Mfd.—25 V. x20-20 Mfd. 400 V.
C21	22-1553	20 Mfd. Electrolytic. 25 V.
C 9	22-1712	260 Mmfb. Compensating
C32	22-1713	.007 Mfd. 1600 V.
C 7	22-1715	Single Section Trimmer (Converter)
C 1	22-1721	Single Section Trimmer (Antenna)
C 3, C10	22-1722	Two Section Trimmer (R.F. and Osc.)
C33	22-1728	.5 Mfd. 100 V.
C 5, C11, C14	22-1730	100 Mmfd. Ceramic (or 22-162) 500 V.
C20	22-1743	.0015 Mfd. 600 V.
C27, C28	22-1747	.0033 Mfd. 600 V.
C24	22-1748	.1 Mfd. 400 V.
C22	22-1749	.047 Mfd. 600 V.
C25, C26	22-1750	.022 Mfd. 600 V.
C13	22-1751	.022 Mfd. 200 V.
C 2	22-1752	.0047 Mfd. (or 22-1022) 600 V.

Diagram No.	Part No.	Description
		RESISTORS
R 2	63-1379	Sensitivity Control
R10	63-1398	33M Ohm (Insulated) 1 W.
R18	63-1590	Volume Control and Tone Switch
R32	63-1620	1800 Ohm (Insulated) 2 W.
R31	63-1622	330 Ohm (Insulated) 2 W.
R33, R34	63-1740	82 Ohm (Insulated) ½ W.
R 8	63-1771	470 Ohm (Insulated) ½ W.
R23	63-1785	1000 Ohm (Insulated) ½ W.
R17	63-1792	1500 Ohm (Insulated) ½ W.
R 3	63-1827	10M Ohm (Insulated) ½ W.
R 7	63-1835	15M Ohm (Insulated) ½ W.
R25	63-1845	27M Ohm (Insulated) ½ W.
R29	63-1846	30M Ohm (Insulated) ½ W.
R12	63-1849	33M Ohm (Insulated) ½ W.
R22, R24, R26, R28	63-1859	56M Ohm (Insulated) ½ W.
R 5, R17	63-1862	68M Ohm (Insulated) ½ W.
R19	63-1869	100M Ohm (Insulated) ½ W.
R14	63-1873	120M Ohm (Insulated) ½ W.
R13, R16	63-1884	220M Ohm (Insulated) ½ W.
R27, R30	63-1890	330M Ohm (Insulated) ½ W.
R 1, R 4	63-1891	330M Ohm (Insulated) ½ W.
R21, R20	63-1897	470M Ohm (Insulated) ½ W.
R 9, R11	63-1912	1 Megohm (Insulated) ½ W.
	63-1957	12 Megohm (Insulated) ½ W.
		MISCELLANEOUS
	12-1414	Set Mounting Bracket (2 used)
	46-715	Antenna Trimmer Knob (used on 22-1721)
SP 1	49-627	P.M. Speaker (6" x 9" Oval) (See S-14303)
S 6	52-451	Battery Cable—Fuse to Set—Fuse-holder
	52-455	Volume Control Cable
	52-470	Speaker Cable and Plug
	73-50	No. 6-32 x ¼" Headless Slotted Set Screw—Cuppoint
	78-596	Socket—Loktal Tube
SK 1	78-728	Socket—Speaker
	78-782	Socket—Miniature Tube
	78-796	Socket—Antenna Connector
	78-801	Socket—Octal Base Tube

Diagram No.	Part No.	Description
	78-804	Socket—Vibrator
	93-888	Vibrator Cushion Washer
T 4	95-1071	Power Transformer
T 3	95-1079	Output Transformer
	125-63	Rubber Grommet (used on S-14295)
	126-553	Miniature Tube Shield
	149-62	Iron Core and Screw
	149-63	Iron Core and Spring (4 used)
V 1	190-22	Vibrator
	196-91	Speaker Gasket
	199-81	Tone Gear Sleeve
	202-587	Instruction Book (Owner's Manual)
	202-608	Interference Elimination Instruction Sheet
	S-14303	Speaker and Gasket Assembly (use 49-627 and 196-91)

INSTALLATION PARTS

	S-14284	Installation Kit Assembly (complete)
	12-1411	Set Installation Bracket
	52-456	Battery Cable—Fuse to Ammeter
	54-157	No. 1/4-20 x 7/16" x 3/16" Hex Nut—Steel, Cad. Pl
	54-189	No. 8-32 Wing Nut
	54-265	No. 8-32 Wing Nut (Forged)
	69-27	No. 8-23 x 5/8" R.H.M.S.—Steel, N.P
	93-161	1/4 Ext. Shakeproof Lockwasher No. 1114
	93-263	1/32 x .136 x 3/8" Steel Washer—Cad. Pl
	93-755	No. 8 External Shakeproof Lockwasher
	114-175	1/4-20 x 1/2" Hex Hd. M.S., Steel—Zinc Plate
S 5	136-11	14 Ampere Fuse—Type S.F.E. No. 14

MOTOR NOISE SUPPRESSION KIT

	S-14285	Motor Noise Suppression Kit Assembly (complete)
	22-1601	Generator Capacitor
	22-1767	Ignition Coil Capacitor
	63-1046	Distributor Suppressor
	80-579	Motor Hood Bond Spring
	112-365	No. 8 x 1/2" B.H. Sheet Metal Screw

DIAL ASSEMBLY

	12-1435	Dial Scale Retaining Bracket (2 used)
	19-165	Insulating Bushing Tension Clip (4 used)
	26-395	Dial Scale
	46-701	Tone Control Knob
	46-714	"Off" Switch Knob
	56-228	Cross Arm Guide Rod
	57-1339	Escutcheon
	57-1344	Dial Background Plate
	59-208	Dial Pointer
	80-232	Knob Retaining Spring
	80-379	Pointer Retaining Spring
	80-586	Cross Arm Tension Spring (2 used)
	80-625	Pointer Link Tension Spring
S 3 S 4	100-31	Dial Light Bulb—Mazda No. 55
	112-699	No. 4-40 x 3/16" R.H. Self Tapping Screw—Stan Top—Steel—Cad
	114-294	No. 6-20 x 1/4" Hex Hd. Self Tapping Screw Type No. 25 (Escutcheon Mtg.)
	S-14215	Pointer Support Bracket and Stud Assembly
	S-14216	Pointer Drive Link and Stud Assembly
	S-14281	Tuner Unit Assembly
	S-14300	Cross Arm and Bushing Assembly
	S-14301	Tuning Control and Trim Knob Assembly
	S-14302	Volume Control Knob and Spring Assembly
	S-14304	Dial Light Socket and Wire Assembly
	S-14307	Tone Gear and Bushing Assembly
	S-14308	Tone Drum Shaft and Gear Assembly (26-390)
S 1	S-14534	Tuner Unit Final Assembly
S 2	85-435	"On-Off" Switch (on Tuner)
	S-14754	Automatic Knob and Screw* Assembly
	S-14721	Clutch Plate and Washer
	S-14727	Tuning Shaft, Pinion Gear and Coupling Assembly
S 1	S-14733	Muting Switch Assembly
	17-102	Cam Lock (5 used)
	34-177	Clutch Gear
	64-162	.088 D x 5/32" Rivet (2 used on S-14733)
	73-118	No. 6-32 x 1/4" Hex Hd. Slotted Set Screw (2 used)
	80-640	Yoke Tension Spring (2 used)
	80-641	Clutch Release Bar Spring
	80-642	Clutch Spring
	93-921	Tuning Shaft Steel Washer
	93-922	Tuning Shaft Spring Washer
	93-923	Fishpaper Washer (2 used)
	97-305	Clutch Arm Stud
	117-149	Clutch Lever
	188-111	Retaining Ring (2 used)

MODELS G660, G663, G665; Ch. 6G01

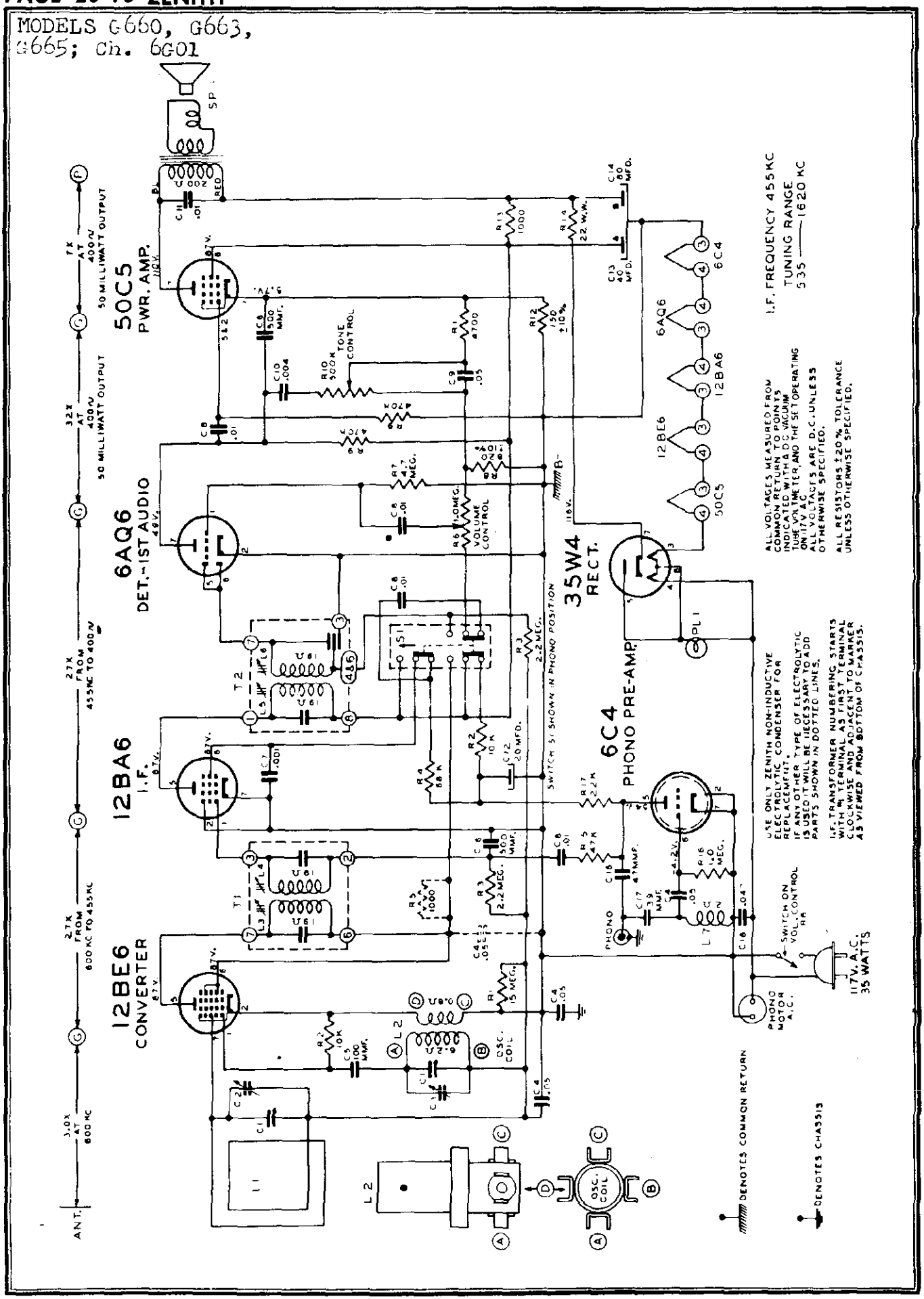

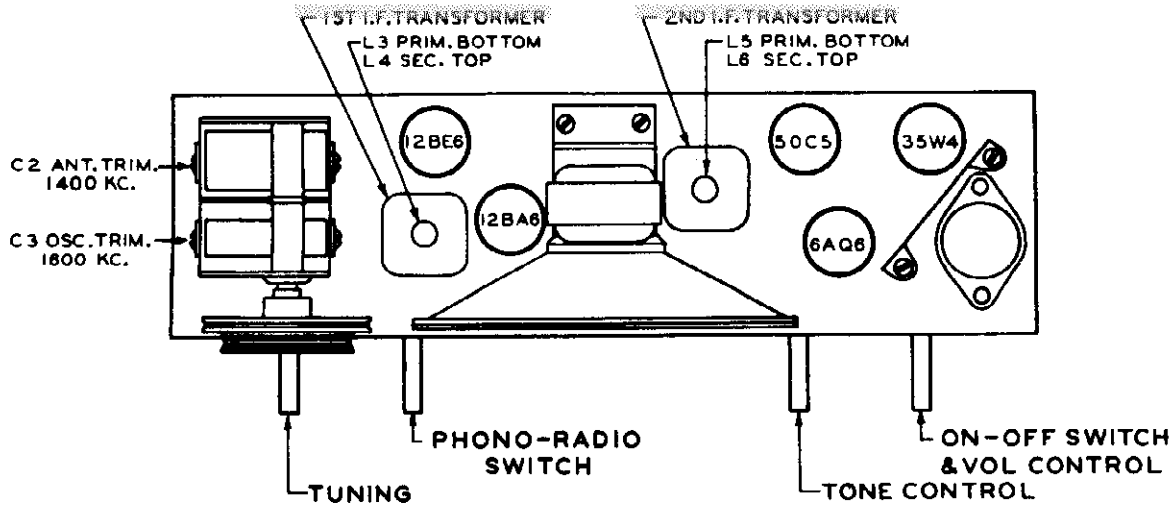

TUBE AND TRIMMER LOCATION

ALIGNMENT PROCEDURE

OPERATION	CONNECT OSCILLATOR TO	DUMMY ANTENNA	INPUT SIG. FREQUENCY	SET DIAL AT	TRIMMERS	PURPOSE
1	Converter Grid	.5 Mfd.	455 Kc.	600 Kc.	L3, 4, 5, 6	For I. F. Alignment
2	One Turn Loop Coupled Loosely to Wave Magnet	--	1600 Kc.	1600 Kc.	C-3	Set Oscillator to Dial Scale.
3		--	1400 Kc.	1400 Kc.	C-2	Align Antenna Stage

The I.F. transformers incorporated in this receiver are of the new permeability tuned type. The advantage of an I.F. transformer of this type is its extreme stability under various humidity and temperature conditions. The upper coil is the secondary and the lower the primary. When adjusting these I.F. transformers the tuning wrench 68-7 can be inserted into the top slug, rotated until maximum output is obtained and then dropped down to the lower slug and the same operation repeated. The tuning wrench is so designed that turning one slug does not affect the adjustment of the other.

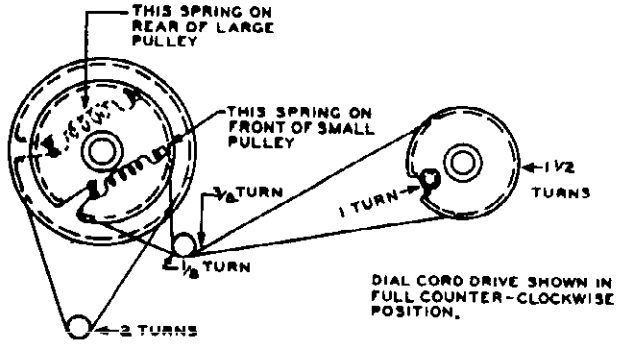

DIAL CABLE DRAWING AND DETAIL OF I. F. TRANSFORMER

©John F. Rider

©John F. Rider

PARTS LIST

G660 (CHASSIS 6G01)

DIAL ASSEMBLY

26-424		Dial Scale & Escutcheon
46-811		Tuning & Volume Control Knob (2 used)
46-812		Tone Control Knob
46-816		Radio-Phono Knob
59-229		Dial Pointer
76-556		Tuning Control Shaft
78-808		Pilot Light Socket & Wire
80-69		Dial Cord Tension Spring
80-209		" " " "
93-138		Felt Washer (Used on S-16029)
100-67	PL-1	Dial Light Bulb
171-10		Pilot Light Lenz
S-15903		Dial Cord Assembly (Short)
S15904		" " " (Long)
S-16028		Pulley & Bushing Assembly
S-16029		Bracket & Stud Assembly

COILS & CHOKES

95-1101	T1	1st I.F. Transformer
95-1102	T2	2nd " "
S-12603	L7	Phono Oscillator Coil Assembly
S-13799	L2	Oscillator Coil Assembly

CONDENSERS

22-3	C-8	.01 Mfd. Ceramic (Disc) 500 V
22-4	C10	.004 " " (") 500 V
22-5	C5	.0001 " " (") 500 V
22-178	C9	.05 " 200 V
22-289	C16	47 " (Molded) 500 V
22-829	C4	.05 " 200 V
22-854	C6	.0005 " 600 V
22-1182	C11	.01 " 400 V
22-1444	C7	.001 " 200 V
22-2200	C17	39 Mmfd. Ceramic 500 V
22-1775	C18	.047 Mfd. 400 V
22-2085	C1	Two Gang Variable Condenser (With Pulleys)
22-2086	C12,13,14	Elect. Cond. 20 Mfd. 150 V - 40 Mfd. 150 V - 80 Mfd. 150 V

RESISTORS

63-1219	R-14	22 ohm W.W. 1/2 W 20% Ins. Resistor
63-1574	R-13	1000 " 1 W 20% " "
63-1782	R-8	820 " 1/2 W 10% " "
63-1814	R-11	4700 " 1/2 W 20% " "
63-1828	R-2	10K " 1/2 W 20% " "
63-1842	R-17	22K " 1/2 W 20% " "
63-1856	R-15	47K " 1/2 W 20% " "
63-1863	R-4	68K " 1/2 W 20% " "
63-1898	R-9	470K " 1/2 W 20% " "
63-1912	R-16	1.0 Megohm 1/2 W 20% " "
63-1926	R-3	2.2 Megohm 1/2 W 20% " "
63-1940	R-7	4.7 " 1/2 W 20% " "

RESISTORS (CONT'D.)

63-1961	R-1	15 Megohm 1/2 W 20% Ins. Resistor
63-1977	R-12	150 Ohm 1 W 10% " "
63-2045	R-10	Tone Control
63-2046	R-6	Volume Control & Switch

MISCELLANEOUS

11-104		Line Cord & Plug (7 ft. Long)
14-1204		Plastic Cabinet for G660
17-116		Wavemagnet Retaining Clamp
19-123		Record Changer Mtg. Clip (4 used)
24-512		Cabinet Top Cover
		" Bottom Cover
40-87		" Cover Hinge (R.H.)
40-88		" " " (L.H.)
49-669	SP-1	5-1/4" P.M. Speaker
		*208-669 Cone & Voice Coil
		*206-669 Output Transformer
52-538		Two Prong Receptacle & Cable
54-139		3/8-32X9/16" Palnut Cad. (1 ea. used 85-465-63-2045-63-2046)
54-211		Speed Nut (4 used to mt. S-16053)
54-267		6-32X5/16" Palnut Cad. (1 ea. used 95-1101-95-1102)
57-1551		Cover Plate
78-229		Elect. Cond. Socket
78-644		Phono Connector Socket
78-806		Miniature Tube Socket (2 used)
78-807		" " " (3 ")
78-861		" " "
83-1670		Line Cord Retaining Strip
83-1671		Wavemagnet Terminal Strip
85-465	S1	Phono-Radio Switch (or 85-466)
93-755		#8 Ext. Shakeproof Lockwasher (2 used on 54-30)
94-295		Gang Cond. Mtg. Bushing
110-142		Grille Cloth
112-773		#6X3/8 Phill. B.H.S.T. Screw Stat. Bronze (14 used)
112-775		Record Changer Mtg. Screw (4 used)
112-781		#8X1" Phill. B.H.S.T. Stat. Br. (6 used on 24-513)
114-291		#8-32X7/16" Hex. Hd. Sl. M.S. (2 used on S-16029)
114-297		#6X1/4" Hex. Hd. Sl. S.T. (2 used on 126-624)
114-333		#10-32X1/2" Hex. Washer Hd. M.S. Steel Stat. Bronze (4 used Chassis Mtg.)
125-17		Rubber Grommet (3 used on Gang)
125-76		" " (4 " " Changer)
126-624		Heat Shield
166-41		Rubber Bumper (1 used on Gang)
188-32		Retaining Ring (Used on S-16028)
188-60		" "
202-743		Instruction Book (Radio-Phono)
S-14023		Dual Speed Record Changer
S-15896		Wavemagnet Assembly
S-16053		Speaker Baffle Assembly

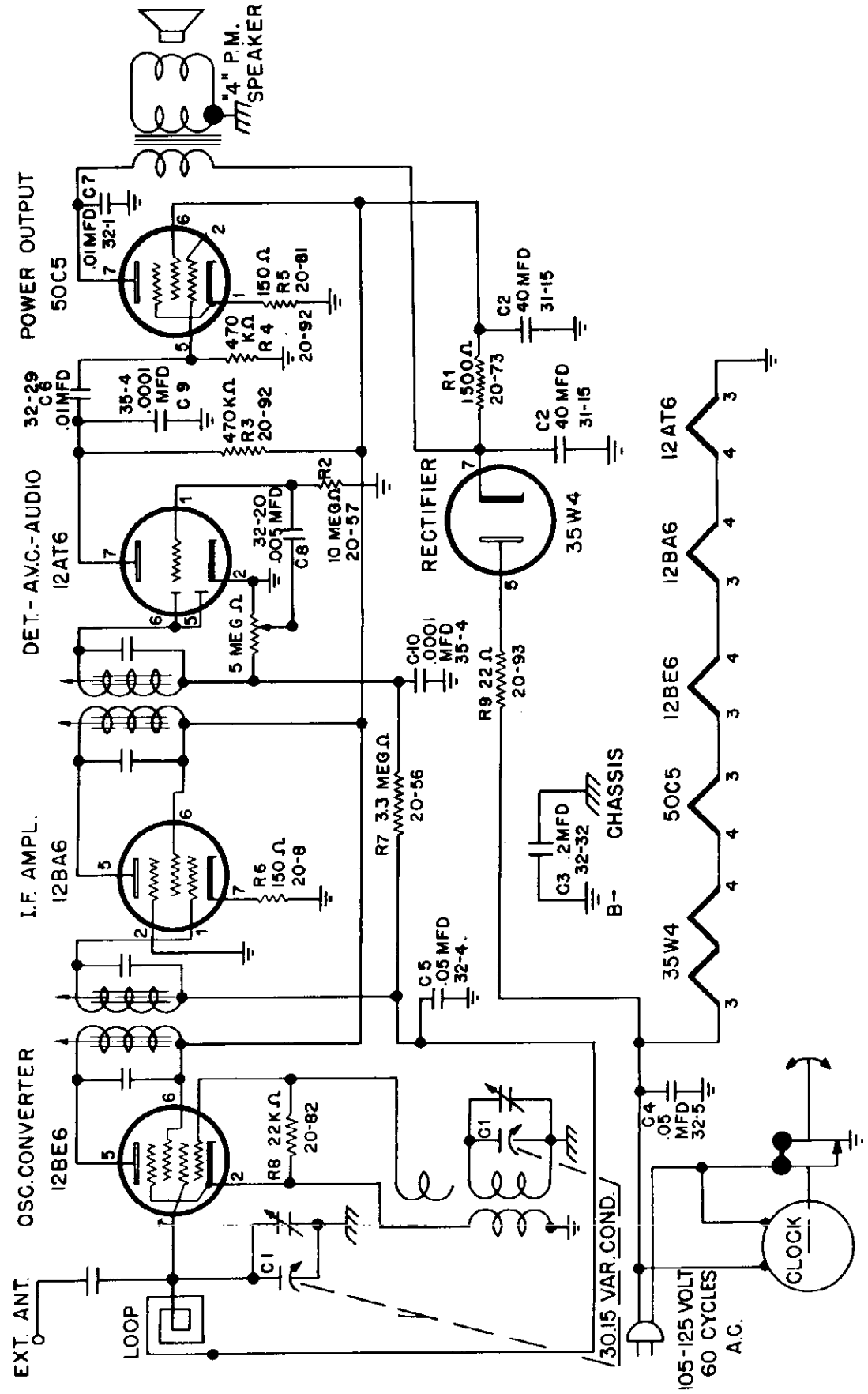
"4" P.M. SPEAKER
POWER OUTPUT
50C5
.01MFD C7
32-1
150Ω R5
20-81
470 KΩ R4
20-92
C2 40 MFD
31-15
R1 1500Ω
20-73
C2 40 MFD
31-15
32-29 C6 .01MFD
35-4 .0001 MFD C9
470KΩ R3 20-92
DET.-A.V.C.-AUDIO
12AT6
32-20 .005 MFD C8
10 MEGΩ R2
20-57
RECTIFIER
35W4
5 MEGΩ
C10 .0001 MFD 35-4
R9 22Ω
20-93
I.F. AMPL.
12BA6
R6 150Ω
20-8
R7 3.3 MEGΩ
20-56
C3 .2MFD
32-32
B- CHASSIS
C5 .05 MFD
32-4
OSC. CONVERTER
12BE6
R8 22KΩ
20-82
C1
C1
30.15 VAR. COND.
C4 .05 MFD
32-5
EXT. ANT.
LOOP
105-125 VOLT 60 CYCLES A.C.
CLOCK
12AT6
12BA6
12BE6
50C5
35W4

©John F. Rider

MODELS 707, 708;
Ch. 113

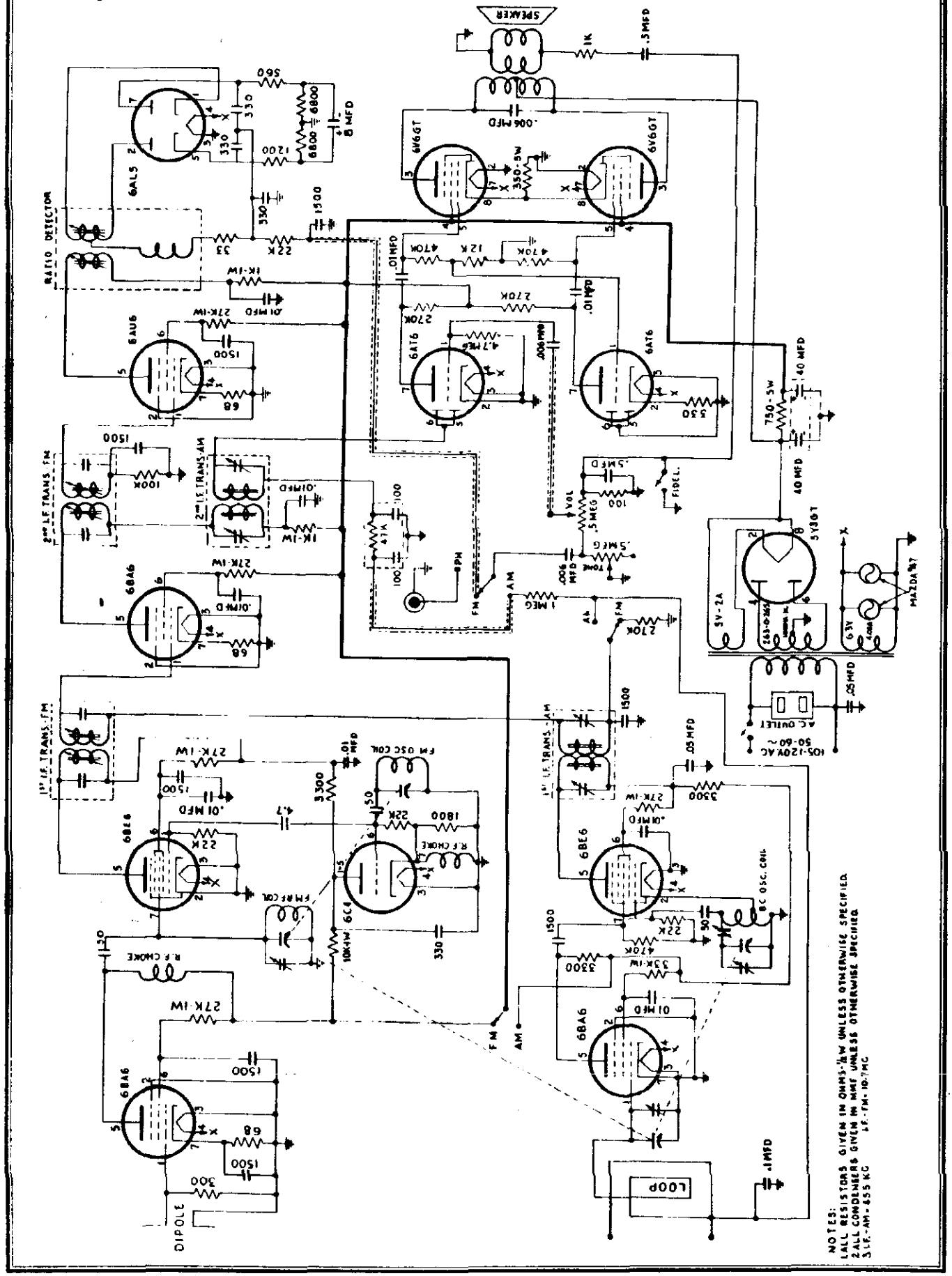

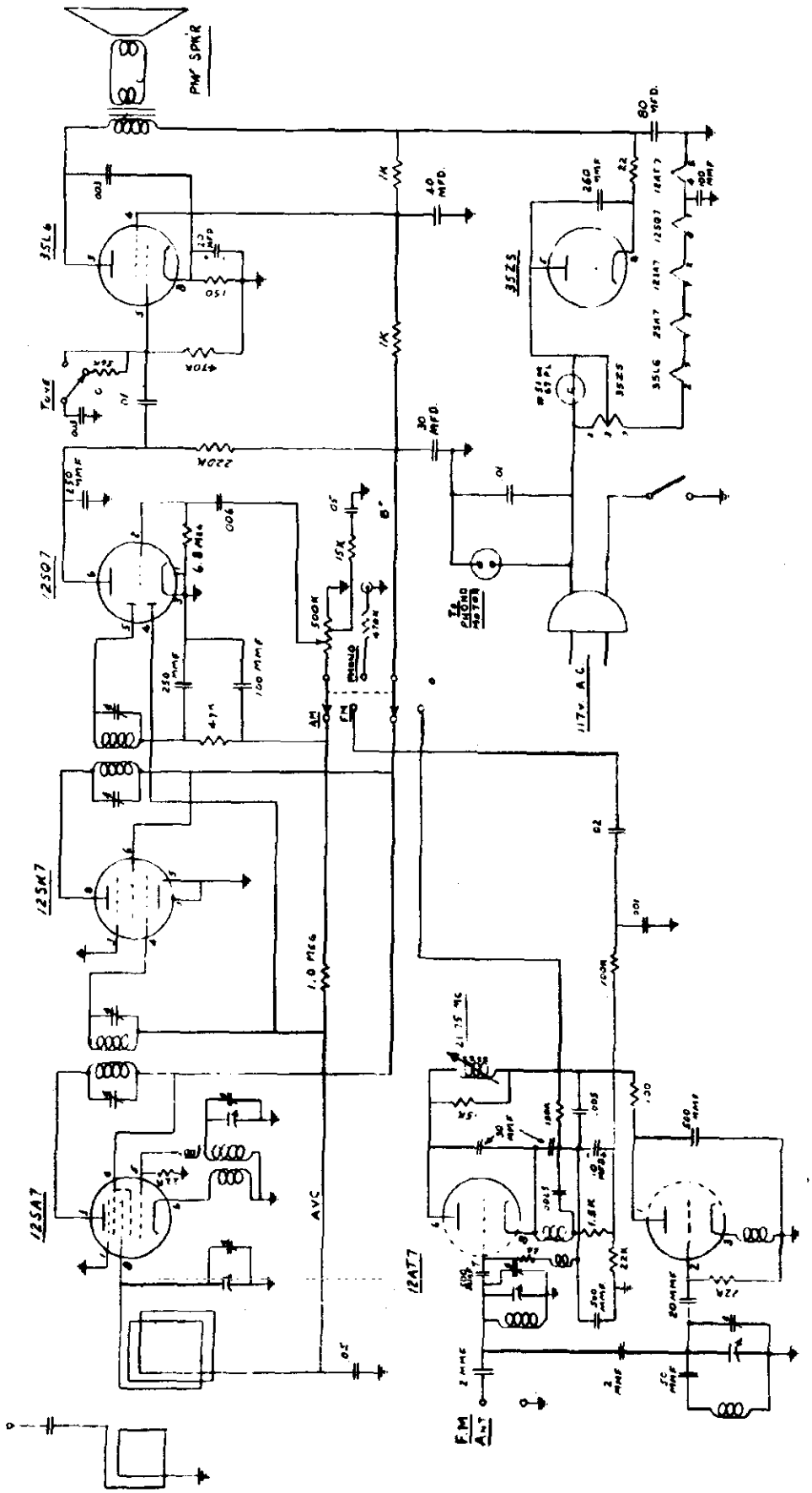
PM SPKR
35L6
35Z5
12SQ7
12SK7
12SA7
12AT7
I.F. = 455 Kc
AVC
117v. A.C.
To PHONO MOTOR
F.M. ANT

©John F. Rider

MODEL 7B-1T

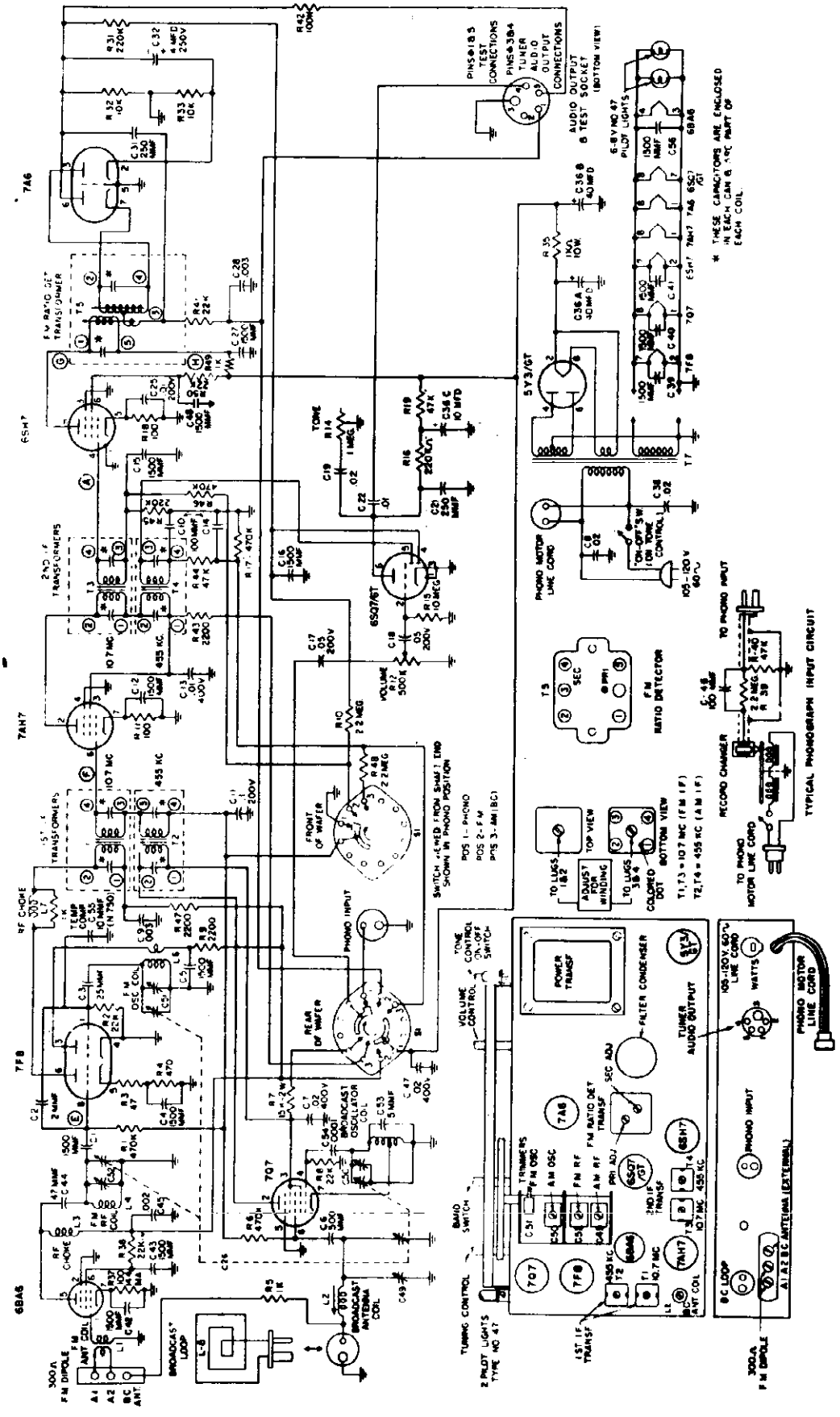

©John F. Rider

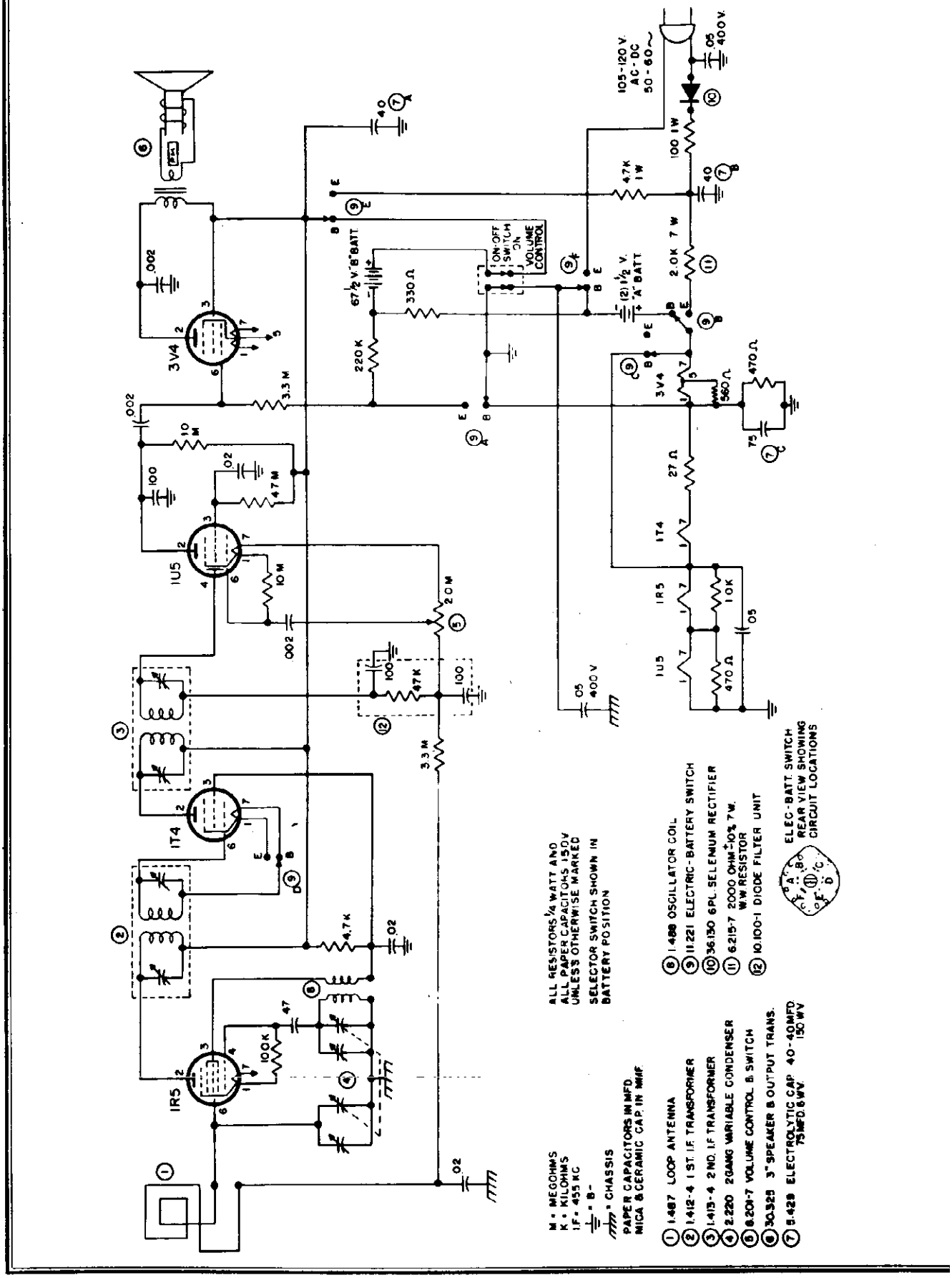
105-120 V. AC-DC 50-60~
.05 400 V.
100 1W
47K 1W
2.0K 7W
67½ V. B BATT
(2) 1½ V. A BATT
ON-OFF SWITCH
VOLUME CONTROL
330 Ω
220K
3.3 M
3V4
1U5
1T4
1R5
10 M
.02
47 M
.002
100
20 M
47K
27 Ω
10K
470 Ω
560 Ω
75
.05
.02
4.7 K
100K
47
ALL RESISTORS ¼ WATT AND ALL PAPER CAPACITORS 150V UNLESS OTHERWISE MARKED
SELECTOR SWITCH SHOWN IN BATTERY POSITION
M = MEGOHMS
K = KILOHMS
I.F. = 455 KC
= B-
= CHASSIS
PAPER CAPACITORS IN MFD.
MICA & CERAMIC CAP. IN MMF
① 1-487 LOOP ANTENNA
② 1-412-4 1 ST. I.F. TRANSFORMER
③ 1-413-4 2 ND. I.F. TRANSFORMER
④ 2.220 2GANG VARIABLE CONDENSER
⑤ 6.201-7 VOLUME CONTROL & SWITCH
⑥ 30.323 3" SPEAKER & OUTPUT TRANS.
⑦ 8.428 ELECTROLYTIC CAP 40-40MFD 150 WV 75MFD 6 WV.
⑧ 1.488 OSCILLATOR COIL
⑨ 11.221 ELECTRIC-BATTERY SWITCH
⑩ 36.130 6 PL. SELENIUM RECTIFIER
⑪ 6.215-7 2000 OHM ±10% 7 W. W.W. RESISTOR
⑫ 10.100-1 DIODE FILTER UNIT
ELEC-BATT. SWITCH REAR VIEW SHOWING CIRCUIT LOCATIONS

©John F. Rider

MODEL 6R608

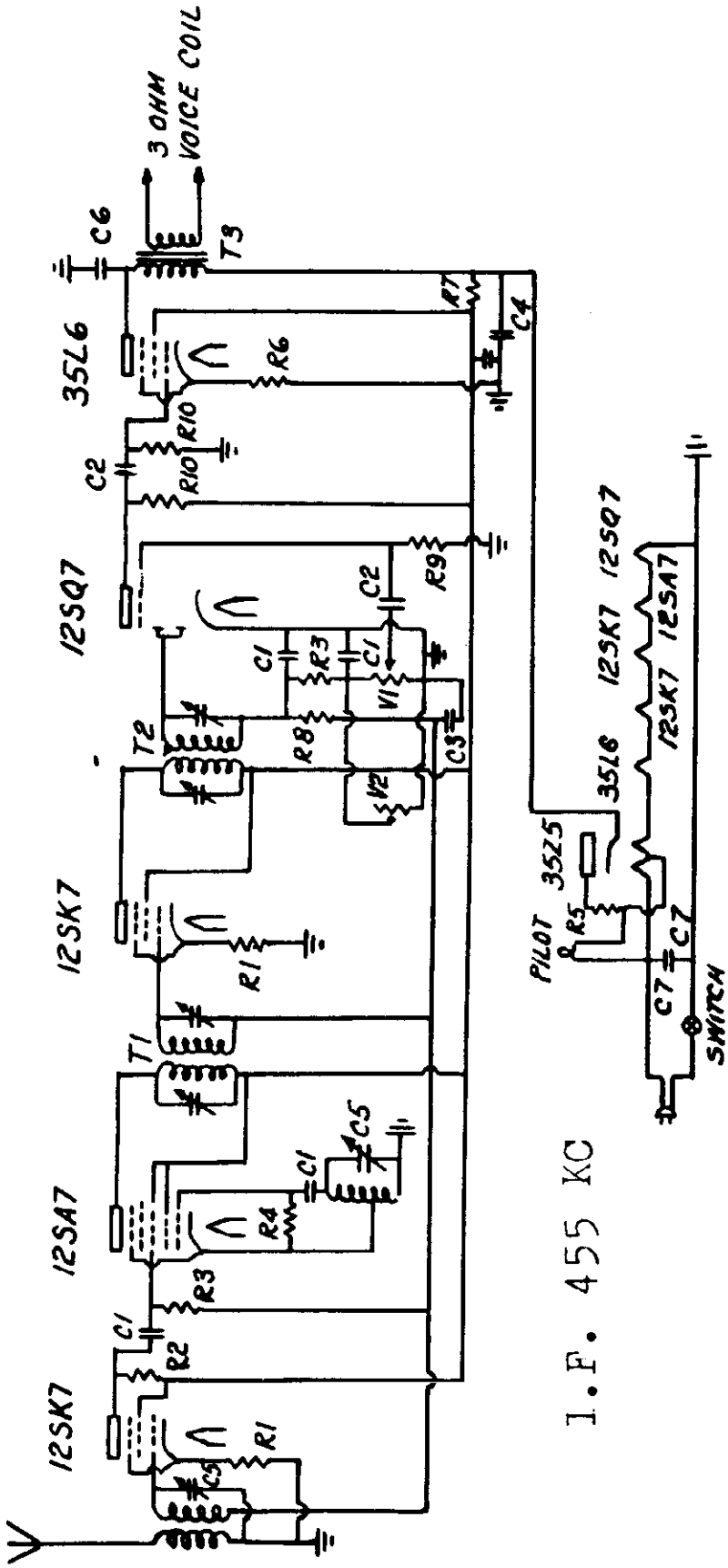

I.F. 455 KC

PART #	DESCRIPTION	PART #	DESCRIPTION
R1	200Ω 1/2 W	C1	.001 Mfd.
R2	4700 "	C2	.01 "
R3	43000 "	C3	.05 "
R4	22000 "	C4	30-50 "
R5	30 "	C5	Var. Cond.
R6	150 "	C6	.02 Mfd.
R7	1500 "	T1	I.F. Input
R8	2.2 Meg. "	T2	I.F. Output
R9	3 "	T3	Output TRAN
R10	500000"	V1	500000 VC & SW
C7	.25 Mfd.	V2	500000 VC

©John F. Rider

MODEL SR28FAM

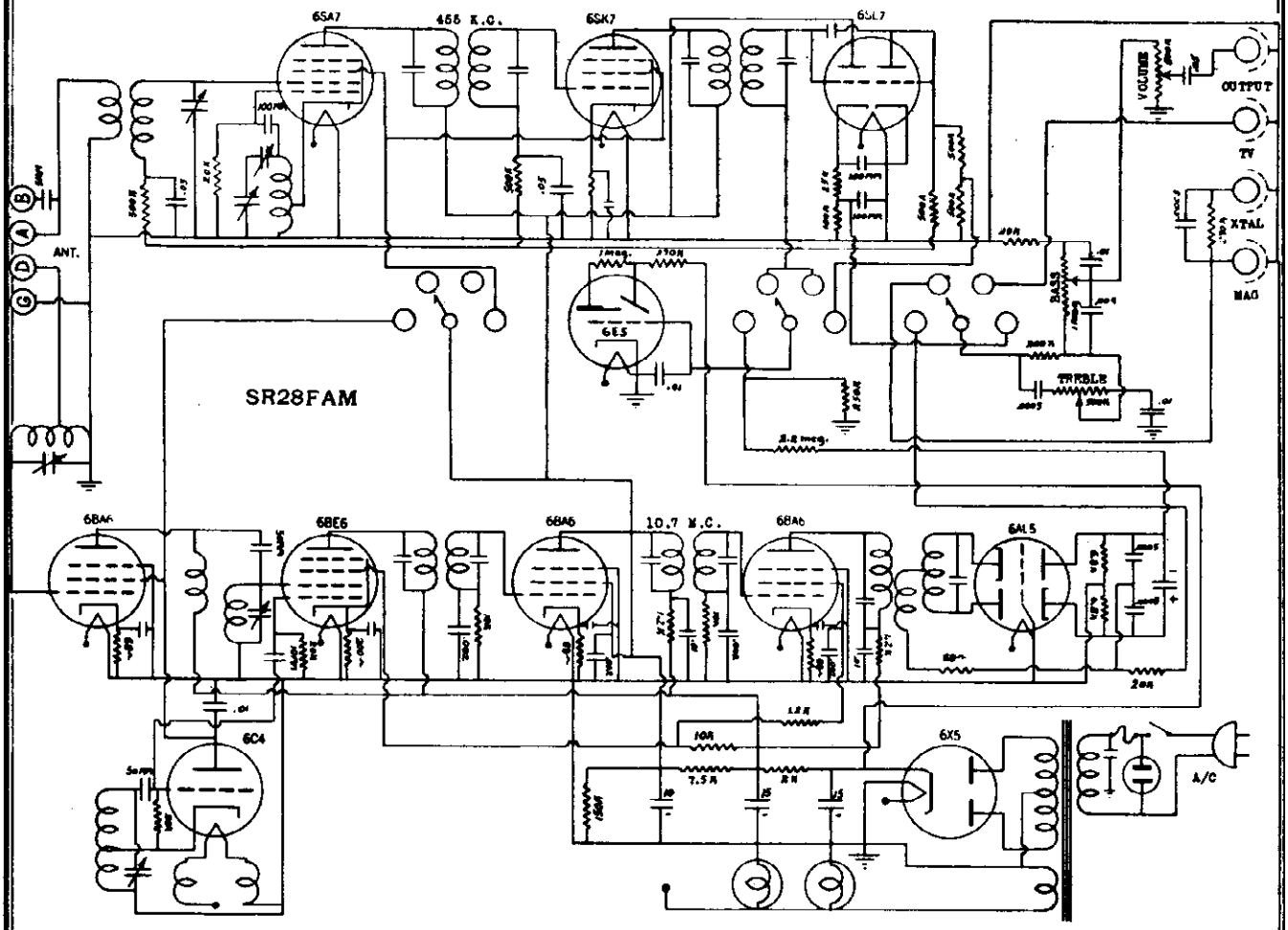

The electronic circuit is a dual Superhet designed to operate into an amplifier adjusted for acoustically flat response.

Full range bass and treble controls make it possible to diminish or augment any major portion of the audible scale allowing for an unsurpassed flexibility of tone pattern (Fig. 1.)

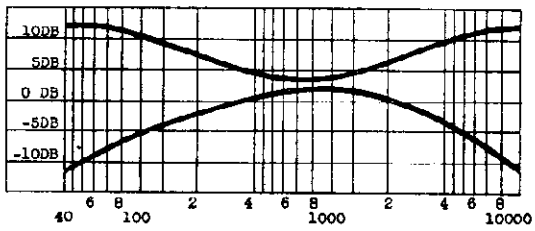

SR28FAM embodies such features as tuned Infinite Impedence type AM detection.

Electron ray tuning indicator as a visual tuning aid.

Complete shielding for the elimination of strays.

Input jacks for Magnetic phono pickup, Crystal pickup, and TV audio channel on selector Control Switch.

Average output: .4 volts.

Licensed under patents of Hazeltine Laboratories, Inc., and others.

Tubes: 3, 6BA6; 1 each 6BE6; 6C4, 6AL5, 6SL7GT, 6SA7, 6SK7, 6E5, 6X5.

Power Consumption: 50 watts, 110-125 volts, 50-60 cycles.

CAUTION

VENTILATION IS EXTREMELY IMPORTANT. No multi-tube unit should be housed in an insufficiently ventilated cabinet. Damage to the unit and the cabinet will result.

USE ONLY 1 AMP. FUSE.

ANTENNA REQUIREMENTS.

For best non-directional standard AM broadcast results a single wire five to ten feet in length connected to antenna terminal "A" will be sufficient. Additional selectivity to this efficient input circuit would tend to restrict the wide band reception capabilities of the Infinite Impedence type detector.

For best F.M. results a 100 M.C. dipole should be installed well above surrounding obstructions. The twisted 300 ohm line from the dipole should be connected to antenna terminals "B" and "G". ("G" also grounds unit.)

A console type folded dipole is supplied with the tuner and will prove a satisfactory substitute in most cases where an external dipole is impractical.

INPUT JACKS.

All phono or TV audio signals as well as the AM and FM radio are subject to the volume and tone controls of the tuner.

The jack marked MAG is the phono input for the new variable reluctance cartridge with its properly compensated pre-amplifier.

XTAL is the phono input for a standard crystal pickup.

The TV jack makes it possible to channel the audio of a television tuner thru the radios amplifier and speaker.

The OUTPUT jack should be connected to the high impedence input control (250,000 to 500,000 ohms) of a quality audio amplifier. Use the prepared shielded lead supplied with the tuner. Choose a speaker capable of wide range reproduction.

A.C.POWER. SR28FAM is completely powerized for 110-125 volts 50-60 cycles. The power switch (on the Volume Control) also controls the A.C.recepticle on the back of the chassis for convenience in amplifier installation.

©John F. Rider

MODELS 171, 172

TUNING RANGE

This receiver is designed to operate over the standard broadcast band which extends from 535 to 1620 Kilocycles (KC) (185 to 560 Meters).

ALIGNMENT PROCEDURE

GENERAL DATA. The alignment of this receiver requires the use of a test oscillator that will cover the frequencies of 455, 600, 1400 and 1620 KC and an output meter to be connected across the primary or secondary of the output transformer. If possible, all alignments should be made with the volume control on maximum and the test oscillator output as low as possible to prevent the AVC from operating and giving false readings.

CORRECT ALIGNMENT PROCEDURE. The intermediate frequency (I.F.) stages should be aligned properly as the first step. After the I.F. transformers have been properly adjusted and peaked, the broadcast band should be adjusted.

I.F. ALIGNMENT. Remove the chassis and loop antenna from the cabinet and set them up on the bench so that they occupy exactly the same respective position on the bench as they did in the cabinet. Care should be taken to have no iron or other metal near the loop. Do not make this set-up on a metal bench. With the gang condenser set at minimum, adjust the test oscillator to 455 KC and connect the output to the grid of the first detector tube (12SA7) through a .05 or .1 mid. condenser. The ground on the test oscillator should be connected to the ground buss, indicated on the circuit diagram. Align all three I.F. trimmers to peak or maximum reading on the output meter.

BROADCAST BAND ALIGNMENT. Connect the test oscillator to a dummy loop which can be made by coiling 2 turns of hookup wire about 6" in diameter. Place this dummy loop about a foot from the loop on the receiver and in the same plane as the receiver loop. With the gang condenser set at minimum capacity, set the test oscillator at 1620 KC, and adjust the oscillator (or 1620 KC trimmer) on the gang condenser. Next—set the test oscillator at 1400 KC, and tune in the signal on the gang condenser. Adjust the antenna trimmer (or 1400 KC trimmer) for maximum signal. Next set the test oscillator at 600 KC, and tune in signal on condenser to check alignment of coils.

POWER SUPPLY. This receiver is designed to operate on any alternating current supply (AC) ranging from 110 to 120 volts, 50 to 60 cycles; or on any direct current supply (DC) ranging from 110 to 120 volts.

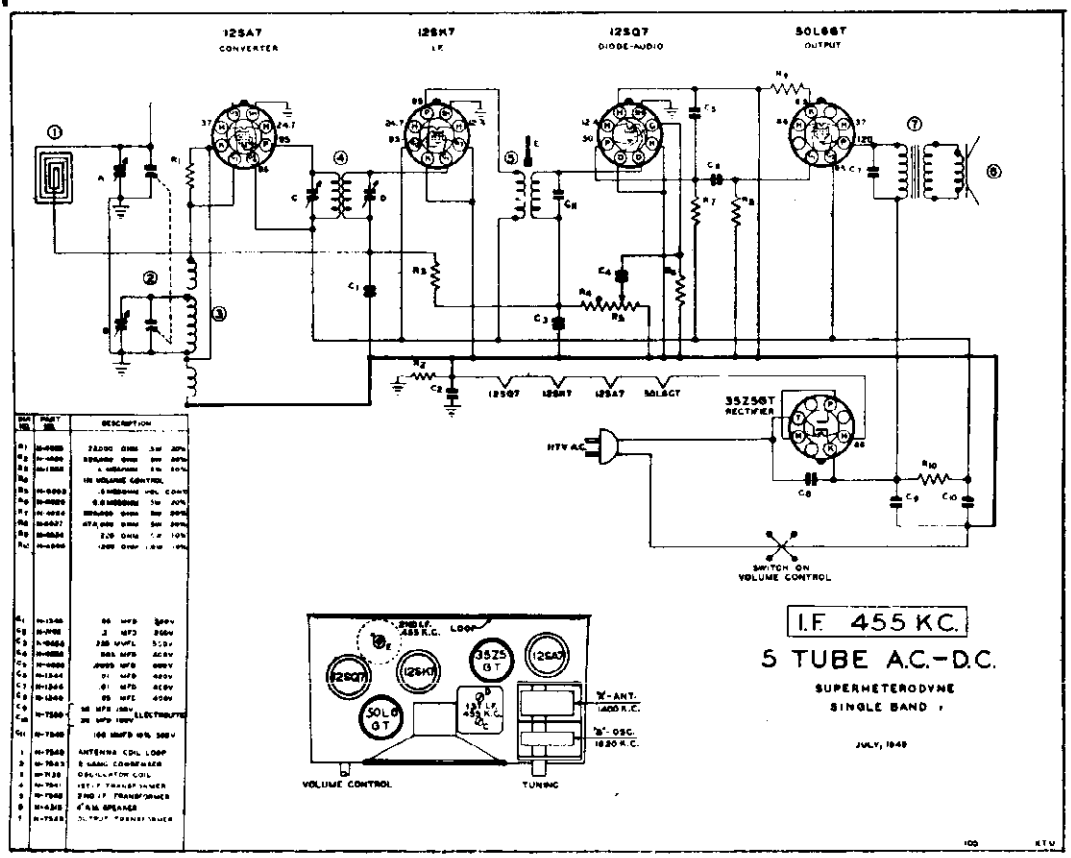

SCHEMATIC AND PARTS LIST INCLUDING CHASSIS LAYOUT AND TUBE POSITIONS

Bendix 69 Series

This model appears on *pages 19-1 through 19-8 of Rider's Manual Volume XIX.* The location of trimmer C3c on gang capacitor in Figure 8, Trimmer Location Diagram, should be on terminal 4, rather than terminal 3.

Air King A400, Minstrel; Ch. 470

This model appears on *page 16-1 of Rider's Volume XVI.* The following material should be added to that which appears in the Manual. The voltage and resistance measurements follow.

TUBE	PIN	VTVM	20,000 OHM/V	1,000 OHM/V	RESISTANCE
12SA7 Converter	1	0	0	0	0
	2	AC	AC	AC	25
	3	+76	+76	+76	OVER 500K
	4	+76	+76	+76	OVER 500K
	5				
OSC. VOLTAGE	550 KC	-3.1	-3.2	-0.3	17K
	1600 KC	-3.9	-5.2	-0.3	17K
	6	0	0	0	0.6
	6	AC	AC	AC	14
	8	-1.5	-0.7	0	6.5 MEG
12SQ7 DET. AVC 1st AF	1	0	0	0	0
	2	-1.3	-0.8	-0.6	5.2 MEG
	3	0	0	0	0
	4	-1.9	-0.6	-0.3	2 MEG
	5	-1.6	-0.8	-0.4	6.5 MEG
	6	+48	+48	+23	OVER 500K
	7	AC	AC	AC	14
	8	0	0	0	0
50L6 AUDIO OUTPUT	1	0	0	0	0
	2	AC	AC	AC	26 OHM
	3	+110	+110	+110	OVER 500K
	4	+75	+75	+75	OVER 500K
	5	-3.8	-1.1	-0.4	340K
	6	---	---	---	---
	7	AC	AC	AC	80
	8	0	0	0	0
35Z5 RECT.	1	+1.6	+1.6	+1.6	6.5 MEG
	2	AC	AC	AC	140
	3	---	---	---	130
	4	---	---	---	---
	5	AC	AC	AC	155
	6	AC	AC	AC	80
	7	AC	AC	AC	105
	8	+122	+122	+122	OVER 500K

ALL RESISTANCES IN OHMS UNLESS OTHERWISE NOTED. ALL VOLTAGE AND RESISTANCE MEASUREMENTS MADE WITH RESPECT TO CHASSIS GROUND WITH 166 V AC LINE V VOLTAGE.

I-F Alignment

Connect an output meter across the voice coil. Connect the signal generator to the primary of the antenna transformer through a 100-$\mu\mu$f capacitor.

Set the signal generator to 455 kc and fully mesh the receiver tuning capacitor.

Keep the receiver volume control at maximum and the output of the signal generator sufficient to give a readable deflection on the output meter and adjust i-f trimmers C15 and C14 for maximum.

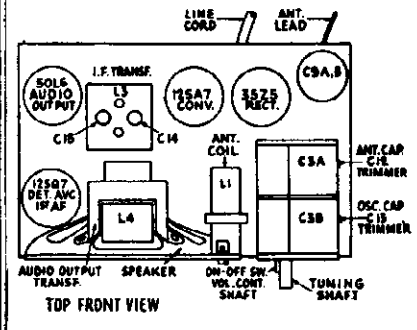

The top front view of the Air King A400, showing tubes and trimmer locations.

R-F Oscillator Adjustment

Keeping the same setup as used for i-f alignment, set the signal generator for 1600 kc and adjust oscillator trimmer C13 for maximum output.

Set signal generator and receiver for 1400 kc and adjust antenna trimmer C12 for maximum output.

The parts layout and alignment points are shown in the accompanying diagrams.

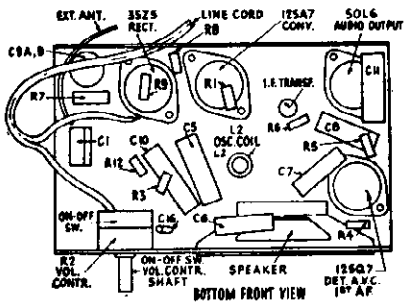

The bottom front view of the Air King A400, showing parts layout.

Bendix 1217B, 1217D

Model 1217B appears on *pages 19-9 through 19-19 of Rider's Manual Volume XIX* and Model 1217D appears on *pages 19-20 through 19-33 of Rider's Manual Volume XIX.* Hum can be corrected by removing the shielded lead between the two chassis from the plug assembly and running it in through a separate connector. All of the hum pickup is taking place at the eight-prong plug on the radio chassis. With the cable running in through the chassis about two inches away from the plug assembly, the hum level is so low as to be almost unmeasurable.

Crosley 9-212B

This model is the same as Model 9-209 appearing on *pages 19-19 through 19-21 of Rider's Volume XIX.*

Espey 509

This model is the same as Model 7B1, appearing on *pages 18-12 of Rider's Volume XVIII,* except for the following changes Capacitor C55 (10 $\mu\mu$f) connected from pin 1 of the 7F8 tube to ground has been removed. The 0.003-μf capacitor C9 has been changed to 1500 $\mu\mu$f.

The position of the trimmers has been changed. Looking at the front of the set, they are: C49 (broadcast trimmer), C51 (f-m oscillator), C50 (broadcast oscillator), and C52 (f-m r-f trimmer).

A coil has been placed in the cathode lead of the 7Q7 tube before this lead is connected to C50. Capacitor C53 (15 $\mu\mu$f) has been changed to a variable capacitor and is now connected between L5 and ground, instead of across L5. The junction of C50 and the cathode lead of the 7Q7 tube is connected to the ground side of this capacitor.

The 22,000-ohm resistor, R51, connected between R13 and ground has been eliminated. The side of C19 that is not connected to R13 is grounded directly. The side of the tone control, R14, previously connected to C19 has been left open. R20 has been changed from a 470,000-ohm resistor to a 1-megohm variable resistor. The movable arm of R20 is now connected to pin 5 of the 7F7 tube, and one side of R20 is connected to the junction of C21, C22, and C23. C56, the 1500-$\mu\mu$f capacitor across the filaments of the 6BA6 tube, has been removed.

Farnsworth K-084, K-086, K-289

The first two models appear on *pages 18-6 through 18-12 of Rider's Volume XVIII.* The following changes have been made in production. Model K-289 incorporates these changes.

A 3-gang tuning capacitor is used, necessitating changes in the r-f amplifier circuit. The 100,000-ohm resistor connected to the grid (pin 1) of the 6AG5 r-f amplifier has been changed in value to 1 megohm. The lead which was formerly connected from the bottom of this resistor to the junction of resistors 7 and 8 (1 megohm and 4.7 megohms, respectively) is now connected directly to resistor 4 (100,000 ohms) and to D5 of switch section 2 rear. Resistors 7 and 8 have been eliminated.

The band-pass coil and the 470-$\mu\mu$f capacitor which were connected between the plate (pin 5) of the 6AG5 tube and the third grid (pin 8) of the 6SB7Y oscillator convertor tube have been removed. A connection has been made from the plate of the 6AG5 tube through a 100-$\mu\mu$f capacitor to D3 of switch section 2 rear. The third grid of the 6SB7Y is still connected to D2 of switch section 2 rear. The 100,000-ohm resistor, which was formerly connected between D1 of switch section 2 rear and the junction of D4 of the same switch section and the 1000-ohm resistor, has been removed. There is a connection from D1 of switch section 2 rear and C1 of switch section 2 front indicated on the schematic by the black dot on these connections.

The 0.005-μf capacitor connected to C7 of switch section 2 front has been removed as has the wave trap and 100-$\mu\mu$f capacitor connected to C1 of the same switch section. The third section of the ganged tuning capacitor is connected between C1 and ground, and is shunted by the f-m converter trimmer, and also by a band pass coil (49) in series with a 0.05-μf capacitor. A 100,000-ohm resistor is connected from the junction of this capacitor and coil to D4 of switch section 2 rear. A 0.01-μf capacitor in series with a coil is connected from this common ground point to the junction of the 4700-ohm resistor and the r-f choke in the plate circuit of the 6AG5 r-f amplifier. A 47,000-ohm resistor has been connected in the line going between A3 of switch section 1 front and the junction of the 47,000-ohm resistor, the 470,000-ohm resistor, and the 100-$\mu\mu$f capacitor in the filter circuit of the a-m detector.

The following step should be included in the a-m alignment table on *page 18-1* between steps 6 and 7.

Step	*Connect Generator*	*Set generator At*	*Set Gang At*
6A	Ex. Ant. Binding Post	1500 kc.	1500 kc.

Adjust	*To Obtain*
BC R-F Trimmer	Maximum Output

The following additions should be made to the parts list.

Ref. No.	Part No.	Description
27	25456	60-$\mu\mu$f ceramic capacitor
34	25182	0.1-μf tubular capacitor, 200 volts
39	26277	Tuning capacitor
46	13766	Loop antenna (GK-084, -088; K-084)
46	13784	Loop antenna (GK-086, -087; K-086, -289)
47	38932	F-m antenna coil
50	25181	0.05-μf tubular capacitor, 200 volts
51	38933	F-m converter coil
52	38934	F-m oscillator coil
69	81175	Speaker
72	42185	Pilot lamp, 250 ma (K-084, -086)
73	42187	Pilot lamp, Mazda 55 (K-289)
	22147	Pickup cable (GK-084, -088; K-084)
	22150	Pickup cable (GK-085, -086, -087; K-086, -289)
	31421	A-m dial glass (K-084, -086)
	31422	F-m dial glass (K-084, -086)
	31453	A-m dial glass (K-289)
	31454	F-m dial glass (K-289)
	31431	Dial escutcheon (K-084, -086)
	31452	Dial escutcheon (K-289)
	92192	Dial drive cord (45 inches)
	17014	Drive drum
	54091	Band switch lever (K-084, -086)
	54310	Band switch lever (K-289)
	59451	Knobs (K-084, -086)
	92228	Dial background (K-084)
	60665	Escutcheon backing (K-289)

H-283-1	Cabinet and carton for K-084 (walnut)
H-283-2	Cabinet and carton for K-084 (blonde)
H-285-1	Cabinet and carton for K-086 (walnut)
H-285-2	Cabinet and carton for K-086 (blonde)
H-315	Cabinet and carton for K-289

Farnsworth Chassis C-170, C-194, C-216, C-201

These chassis are used in Models GK-100, GK-102, GK-103, and GK-104, appearing on *pages 17-3 through 17-10 of Rider's Volume XVII*. These chassis are listed as follows:

Model	*Chassis*
GK-100	C-170
GK-102	C-194
GK-103	C-216
GK-104	C-201

Farnsworth GK140 Series

This model appears in *Rider's Manual XVI, pages 16-6 through 16-11*. The following procedure is conducive to increased sensitivity, noise rejection, broader tuning, and reduced thermal drift of the f-m section of the GK140 series combination instrument.

To reduce drift, change the oscillator grid coupling capacitor (grid of 6C4 to the oscillator coil) from 50 $\mu\mu$f zero temperature coefficient to 40 $\mu\mu$f N-1400 temperature coefficient. The part number of this replacement is 25442. Change the oscillator padder capacitor (oscillator coil to f-m gang section) from 55 $\mu\mu$f N-330 to 55 $\mu\mu$f zero temperature coefficient. This new part number is 25441. These changes will necessitate slight realignment of the f-m converter and oscillator. To make these modifications, use the following procedure:

Clip out two 330,000-ohm, ½-watt resistors connected between the ratio detector transformer (next to the 6H6 socket) and the terminal board, one 5,000-$\mu\mu$f mica capacitor between the B-supply for the transformer and ground and two 6,000-ohm, ½-watt resistors connected to the 6H6 socket. Clip four leads connected to the transformer. Remove the ratio detector transformer and replace with the transformer No. 38879. To do this, it is necessary to drill two new holes as shown in the accompanying diagrams.

After the transformer is connected (make leads as short as possible) connect two 33,000-ohm, ½-watt resistors, Part No. 77183, one between pin No. 8 on the 6H6 socket and ground, and the other between Pin No. 3 and ground (short leads). Connect a 1,500-$\mu\mu$f capacitor, No. 25273, between the B-supply to the transformer and ground. Connect a 0.002-μf, 600-volt capacitor, No. 25185, between ground and the point where the 22,000-ohm, ½-watt resistor connects to the shielded lead on the terminal board by the 6H6 socket.

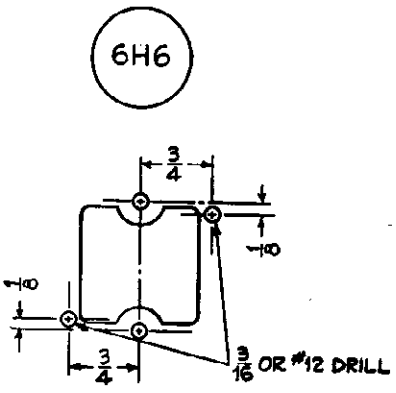

The 3/16-inch holes pointed out here must be drilled to accomodate transformer 38879 in the Farnsworth GK140 series.

This completes the changes. It is now necessary to align the i.f.'s on f.m. Connect a voltohmyst on the AVC line (Pin 3 on 6H6 socket through a 1-megohm resistor).

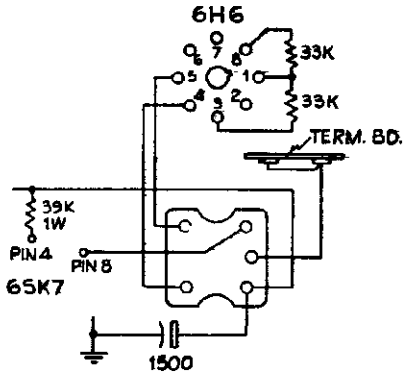

The circuit of the Farnsworth GK140 series as it appears after modification.

Connect the a-m signal generator, set at 10.7 mc, to the grid of the 6SK7 which feeds the diode transformer. Connect the output meter across the voice coil of the speaker. Turn the bottom slug next to the chassis of the diode transformer out as far as possible. Tune the top slug for maximum output (negative voltage) on the voltohymst. Move the generator to the grid of the second i-f amplifier. Detune the slug under the chassis by turning it out as far as possible. Tune the top slug for maximum voltage, next tune the bottom slug for maximum voltage. In each step do not use an input greater than necessary to give three volts AVC. Move the signal generator to the grid of the first i-f amplifier. Detune the bottom f-m slug (nearest corner of can) by turning it out as far as possible. Tune the top slug (nearest corner of can) for maximum voltage, next tune the bottom slug for maximum voltage. Move the signal generator to the 6AG5 converter grid and tune the first i-f transformer as described previously. With the generator still hooked to the 6AG5 grid and modulated with 400 cycles and with about 200 microvolts input, adjust the slug next to the chassis on the diode transformer for maximum output voltage on output meter, which is across the voice coil.

Farnsworth GK-266, K-699, Chassis C-152, GK-267, K-267 Chassis C-153

These models are the same as Models EK-263 and EK-264, which appear on *pages 15-7 through 15-9 of Rider's Volume XV*, except for the cabinets. The parts list should be amended to include the following:

Ref. No.	*Part No.*	*Description*
39	94235	Output transformer, GK-266, GK-267, K-267, K-669
41	38533	Loop antenna, EK-264, GK-267, K-267
41	38997	Loop antenna assembly, K-669
41	38894	Loop antenna assembly, GK-266
47	81169	Speaker, K-669
47	81170	Speaker, GK-266, GK-267, K-267
	31318	Dial glass, EK-264, GK-267, K-267
	31290	Dial glass, EK-263, EK-265, GK-266, K-669
	59211	Dial escutcheon, EK-264, GK-267, K-669, K-267
	59199	Dial escutcheon, EK-263, EK-265, GK-266
	58587	Dial background, GK-266, K-669
	58586	Dial background, GK-267, K-267
H-278-1		Cabinet and packing, GK-267, walnut
H-278-2		Cabinet and packing, GK-267, blonde
H-277-1		Cabinet and packing, GK-266, walnut
H-277-2		Cabinet and packing, GK-266, blonde
H-317		Cabinet and packing, K-669
	59134	Knob for walnut cabinets
	59450	Knobs for GK-266, GK-267, blonde

Farnsworth P7, P9, P10, Capehart

These models appear on *pages 19-19 through 19-33 of Rider's Volume XIX*. The program control knob on these models turns a switch with detent contacts. If this knob is not pushed down to grip a substantial portion of the knurled shaft, the inside of the knob may become reamed out and in time lose its ability to grip the shaft sufficiently to actuate the switch.

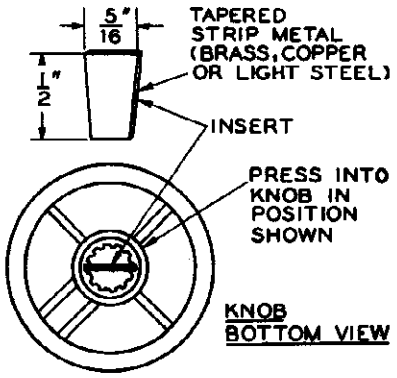

Method of wedging the program control knobs of the Farnsworth P7, P9, P10, so they grip the shaft.

If such a condition occurs and there is no replacement knob handy, refer to the accompanying diagram and the following:

A piece of metal strip 5/16" × 3/8" or ½" should be wedged tightly into the center of the knob. When the knob is placed over the shaft, the metal insert will engage the shaft slot.

Improved knob gripping can sometimes be obtained by slightly spreading the shaft slot. Care must be exercisied in doing this however. If the shaft slot is spread too far, it is likely to break or be spread unevenly, thereby imparting an undesirable "wobbly motion" when turned.

If hum is encountered in the 35P7 or in any instrument using the P7, P9, or P10 chassis, it may be due to either a gaseous or aged 6T8 that is used as the 1st audio amplifier, or a signal that is being picked up on the power line because of a faulty 0.005-μf, 600-volt capacitor, Part No. 25031, located between the unbuffered side of the line and ground.

© John F. Rider

Farnsworth P71

This model appears on *pages RCD. CH. 19-1 through 19-10 of Rider's Manual Volume XIX*. The following changes should be noted in the parts list:

Part No.

07594 Turntable assembly, changed to 15241

64437 Tone arm counterbalance spring, changed to 64343.

Part number 44064, phono motor, has been deleted. This is shown on *pages RCD. CH.19-5*. It is available as Part Number 11437 only. Motor parts, Numbers 15237, 37241, 54308, 64471, and 92335, are no longer available as separate parts. If any of these are required, a complete motor assembly, No. 11437, must be ordered.

Farnsworth P72 Record Changer

This record changer may be found on *pages RCD.CH. 18-25 through RCD.CH. 18-9 of Rider's Volume XVIII*. A production change has been made in the Surfa-Sonic Control. The 0.02-μf capacitor has been changed to 0.1 μf. The 3,300-ohm resistor has been changed to 2,200 ohms.

The following have been deleted from the parts list:

Part No.	*Description*
25276	0.02 μf, 200 v
77240	3,300 ohms, ½ w

The following have been added to the parts list:

25182	0.1 μf, 200 v
77184	2,200 ohms, ½ w

Farnsworth P71, P72, P73

Model P71 appears on *pages RCD.CH.19-1 through 19-10 of Rider's Manual Volume XIX*, and Models P72 and P73 appear on *pages RCD. CH. 18-1 through 18-9 of Rider's Manual Volume XVIII*. There appears to be some misunderstanding concerning the correct nomenclature of parts numbers 58854 and 64467. Part 58854 is correctly titled "Starting Lever Spring". The function of this part is to exert the proper amount of tension on part 58853, starting reset lever, which in turn performs the dual purpose of transmitting the motion of the trip mechanism to the starting lever, thus setting the starting lever in the proper position for starting the change cycle and also resetting the starting and reject levers, after the change cycle has started, to their proper positions. Part 64467 performs the operation of transmitting the motion from the reject button mechanism to the reject lever, thus starting the change cycle. Part 64467 is referred to in the parts list as the "Trip Spring". In order to avoid future misunderstanding, the nomenclature of this part has been changed to read—Part #64467, Reject lever spring.

Farnsworth 41E Capehart Record Changer

This record changer may be found on *pages RCD.CH. 18-25 through RCD.CH. 18-46 of Rider's Volume XVIII*. The change cycle is placed into operation when the trip finger releases the mercury switch dog (part number 561222). If, for any reason, a changer should fail to cycle properly and, upon checking, the trip mechanism is found to be operating normally, it is suggested that the top of the mercury switch Reset Lever (part number 561221) be examined to make sure that it is smooth. Many hours of operation may tend to wear a groove in the top of the Reset Lever which would tend to hold the dog in place, thus resisting the action of the trip mechanism. This condition is caused by normal wear due to friction between the two parts.

When this condition is found, it is recommended that the mercury switch Reset Lever be replaced by a new one. The new stock has been hardened to provide longer operating life.

In an early production run, a mercury switch with a metal shell or housing was used. Due to the slow action and greater angle of drop necessary to actuate this switch, it has since been replaced by one using a glass housing or bulb. Changers employing the metal-housed mercury switch should be checked for positive switch action, especially if it has been reported that the changer cycles continuously, or more than once for a single tripping action.

In such cases, it is recommended that the metal switch be replaced with the more positive glass bulb type (part number 90147). The contacts of the Play Control switch must be set so that positive contact is made when the play control knob is set in OFF position. In this position the contact points must be OPEN.

It is not necessary to remove the play control to adjust these contacts on the majority of the Model 41-E changers now in use. A 5/16" diameter observation hole has been added to the back of the play control housing directly in line with the contact points. With the changer on the service bench, it is an easy matter to insert a screwdriver or a pair of long nose pliers and bend the contact springs slightly.

This operation is a little more difficult with the changer in the cabinet, as there is only about a 3-inch clearance between the back of the play control housing and the side of the cabinet. A small inspection mirror, a "knob" type screwdriver and a penlite will be helpful in making these adjustments when the changer is in the cabinet.

Federal 1021, 1031, 1032, and 1540

These models are the same as Model 1030T, appearing on *pages 16-5 through 16-8 of Rider's Volume XVI*, except for the cabinets.

Federal 1024TB

This model appears on pages *17-1 through 17-3 of Rider's Volume XVII*. Some sets have been equipped with a 12SK7 tube as an i-f amplifier instead of the 6SS7. This gives better performance.

Federal 1027, 1035

These models are the same as Model E1025TB, appearing on *pages 16-1 through 16-4 of Rider's Volume XVI*, except for the cabinets.

Federal 1028TB, 1029

These models are the same as Model 1024TB, appearing on *pages 17-1 through 17-3 of Rider's Volume XVII*, except for the following changes. A 12SK7 tube is used as the i-f amplifier instead of the 6SS7. The cathode resistor (R2) of the i-f amplifier can be either 1500 ohms or 750 ohms. C17 can be either 470 $\mu\mu$f or 1000 $\mu\mu$f. R13 (in filament lead) has been eliminated, and pin 2 of the 50L6GT tube connected to pin 7 of the 35Z5GT tube.

Federal 1034

This model is the same as Model 1024TB, appearing on *pages 17-1 through 17-3 of Rider's Volume XVII*, except for the cabinet.

General Electric 41, 42, 43

These models appear on *pages 17-1,2 through 17-16 of Rider's Volume XVII*. To increase the sensitivity at certain points on the broadcast and shortwave bands, a 470-$\mu\mu$f capacitor, C111, catalog number UCU-544, has been added between terminals 3 and 5 on the first i-f transformer. On early production sets without this capacitor, the following should be done:

1. This capacitor should be added between terminals 9 and 10 of wafer #6 on the band switch.
2. The orange, green, and black leads from terminals 5, 3, and 8 of the first i-f transformer to the band switch should be grouped together and pressed to chassis.
3. C108, a 0.02-μf bypass capacitor, ground end, should be removed and grounded under the mounting lug of the first i-f plate coil.

General Electric 50

This model appears on *pages 15-1 through 15-4 of Rider's Volume XV*. Add to the description of catalog number RAU-009 Cabinet—plastic cabinet, the color "Brown Mottle." Also, add the following to the parts list:

Cat. No.	*Description*
RAU-017	Cabinet—plastic cabinet (black)
RAU-018	Cabinet—plastic cabinet (dark ivory)
RAU-019	Cabinet—plastic cabinet (ivory and red)
RAU-024	Cabinet—plastic cabinet (white urea)

General Electric 118, 119

These models appear on *pages 19-8 through 19-10 of Rider's Volume XIX*. The green grid lead and blue plate lead of the first i-f transformer must be dressed as far as possible to the rear of the chassis and against the chassis. Coupling capacitor C24 should never lie against either of these leads. This will eliminate any possibility of r-f leakage into the phono-preamplifier which causes stations to be heard while operating the phonograph.

The following changes should be made in the parts list. Add P2 under symbol for RJP-003. Delete: RCN-014, C26, Capacitor—phenolic, for Model 118. Add to UCC-045: C26, Capacitor, 0.05 μf, 600 v., paper, for Model 118.

General Electric 118, 119M, 119W

These models appear on *pages 19-8 through 19-10 of Rider's Manual Volume XIX*. The phono radio switch S1, catalogue number RSW-043 has been changed to RSW-065 and the new switch is wired as follows:

Connect terminals 1 and 3 together. Connect terminals 5 and 6 together. Connect terminals 7 and 8 together and then connect terminals 9 and 10 together. The leads may then be transferred from the old switch to the corresponding terminals on the new switch RSW-065, as shown in the accompanying diagram.

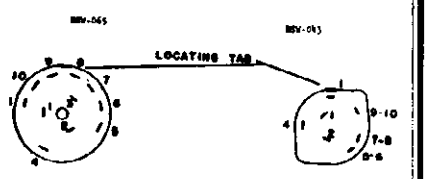

General Electric 118, 119.

© John F. Rider

General Electric 145

This model appears on *pages 19-13 through 19-16 of Rider's Volume XIX*. The B battery minus connection is made to the dummy lug 5 on the switch shown in Fig. 2.

General Electric 150

This model appears in *Rider's Manual Volume XIX on pages 19-10 through 19-12.*

If a condition of parasitic oscillation with strong signals and high volume setting, characterized by whistles and distorted output is reported on late production models in the gray cabinet the following change will correct the condition:

Change the grid return of the i-f amplifier by moving bus wire lead on #2 lug of first i-f transformer to pin #5 of the r-f amplifier (1T4), instead of pin #5 of the i-f tube. This changes the bias of the i-f amplifier from zero volts to minus 1.4 volts.

The following replacements should be made in the catalogue numbers:

Delete the following parts:

Old Cat. No.	*New Cat. No.*	*Symbol*	*Description*
URD-009	URE-009	R1	Resistor - 330 ohms, 1 w., carbon*
RCE-069	RCE-087	C2A,B,C	Capacitor - Electrolytic capacitor
RCW-3013	RCW-3015	C11	Capacitor - Electrolytic capacitor*
RHB-004	RHB-009		Monogram Button**
RLL-029	RLL-034		Loop - Antenna loop
SJS-068	RJC-016		Speaker Contact and Lead
		RAB-080	Cabinet Back - Plastic (ivory)
		RAU-041	Cabinet - Plastic (ivory)

Add the following parts:

RAB-081		Cabinet Back - Plastic (gray)
URD-045	R5	Resistor - 680 ohms, ½ w., carbon*
RHS-010		Tube shield*
UCC-625	C12	Capacitor - 0.005 µf, 600 v., paper*
UCC-635	C9	Capacitor - 0.05 µf, 600 v., paper*
RHM-052		Clip - Clip for loop antenna

*Applies to receivers with chassis number greater than 100,000.
**The new button is attached to the cabinet by means of glue.

For chassis numbers up to 55,000 the capacitors C10, 100 µµf, and C12, 0.005 µf, were not connected according to the schematic diagram. Their B- connections were made to the left side of the switch S1B, together with the capacitors C2A and C2B. This was done to prevent a howling sound when the power switch S1 is turned off.

For chassis numbers from 60,000 to 70,000 the capacitors C10 and C12 were wired according to the schematic diagram. However, the wiring of the capacitors C2A and C2B has been changed. It was found that, under certain circumstances, these capacitors added their charge to the peak of the line voltage, causing a current surge which was capable of damaging any tube. Therefore, the negative sides of the two capacitors (C2A and C2B) were connected to the right side of the switch S1B (B- line) and the positive side of C2B was connected to the terminal of the S2A switch which is connected to the B+ line of the receiver. Now the charge can leak off after the set is disconnected from the power supply. The following replacement has been made in the parts list:

Connecting pin SJS-008 for the loop antenna has been changed to RJC-001.

General Electric 160

This model appears on *pages 19-17 through 19-21 of Rider's Manual Volume XIX*. The following change in parts list should be noted:

Change catalogue number RTO-003 to read RTC-003 T5 Transformer-charging transformer.

GE 201, 202

Since there are electrically identical, these models have been added to the listing for Models 200, 208, and 205 which appears in *Rider's Volume XVIII, pages 18-19 and 18-20.*

The following items have been added to the parts list:

RAU-001 Cabinet—ivory (plastic), model 201

RAU-023 Cabinet—brown (plastic), model 202

The Beam-a-Scope cabinet back listed as RAB-003 also applies to models 201 and 202

General Electric 230, Kaiser-Frazer

This model appears on *pages 18-26 through 18-28 of Rider's Volume XVIII.* When rough manual tuning action is experienced, it is usually traced to insufficient spacing between the end of the center shaft of the turret assembly and the guide rod bracket near the tuning shaft. Production requirements call for one or more (as required) brass shim washers at this point for smooth tuning action. Where rough tuning is experienced, a thin "C" washer slipped onto the end of the center shaft of the turret in addition to the brass shim washers will relieve binding and result in smoother tuning action.

GE 230, 233

Model 230 appears in *Rider's Volume XVIII on pages 18-26 through 18-28* and Model 233 in the same Volume, *pages 18-29 through 18-36*. To the replacement parts list for these two models add RMX-120, Coil Cap Retaining Spring and Screw.

A quantity of these are used to service the antenna r-f or oscillator-converter coil and shield assemblies where the tabs have been broken. The spring is placed upon the assembly to form a bridge. Bearing upon the coil and held by the small self-tapping screw through the hole in the shield, the bridge retains the coil within its shield in lieu of tabs.

While early production receivers of Model 233 were wired as shown in the schematic, late production changes revise the power supply circuit as follows:

R24 has been deleted and the circuit for C30 is completed by connecting its free end to the secondary winding lead going to pin 5 of the rectifier, V8, so that C30 appears across the secondary of T4. Resistors R26 and R27 are connected in series with one another and across the primary winding of T4. The junction of the resistors is grounded.

To conform with these production changes, Cat. Part URE-073, R24 is deleted from the replacement parts list and item URD-023, R26 and R27, 82 ohms, ½ w., carbon resistor is added.

Cat. No. RMX-123, pushbutton locking screw is also added. This screw locks the pushbutton device for automatic station tuning and has a knurled head and threaded end.

Cat. No. RCY-028 for C1 has been changed for an improved antenna trimmer, 8-480 µµf, used in late production, listed RCY-052. This item allows knob adjustment of the antenna trimmer for which a knob is available under Cat. No. RDK-158.

General Electric 233, Kaiser-Frazer

This model appears on *pages 18-29 through 18-36 of Rider's Manual Volume XVIII.* In cases where the volume and tuning control shafts appear too short to accomodate the shaft parts and knobs, a formed lip which is bent forward in the escutcheon opening of the instrument panel will be found to obstruct receiver installation. This lip may be removed by either filing or bending it back.

In instances where the hole for the receiver mounting bracket has not been accurately located, it is possible that the receiver is positioned a bit too far toward the front of the car to allow the receiver control shafts to come through instrument panel holes to their maximum extent. If the "knock out" hole for the mounting brackets screw must be drilled, make certain it is accurately positioned.

In case of pushbutton sticking, check for and remove any burrs from the bottom of the cast grille for pushbutton openings. A binding tuning shaft will also cause the pushbottons to stick or fail to return to their normal positions. To clear shaft from binding, enlarge the tuning shaft opening using a reamer, or a rat tail file.

If the receiver is dead, check installation wiring to make certain the correct lead is connected to the ignition and instrument light switch respectively. If the receiver lead that should go to the instrument light control is connected to the ignition switch, the receiver will not operate though pilot lamps will light.

Check the loudspeaker plug connection. Though the plug pin receptacles in the speaker lead connector are arranged in such a manner to be polarized, it is often that the operator neglects to align the receptacles with respect to the male plug pins at the speaker. Forcing together of the incorrectly aligned parts is liable to cause the male pins to break through into the thin walls of the non-conducting adjacent holes of the speaker plug, resulting in open circuit wiring to the loudspeaker.

Exposure of the radio receiver to such dampness as water drain-leaks upon the receiver components and wiring, results in voltage breakdown at tube sockets (especially the 6V6 output tubes), or the shorting of capacitors and resistors. The r-f trimmer strip at the center of the receiver will also be affected, causing the radio to become weak or dead. Water leaks around the windshield, and screw head holding the set mounting bracket to the cowl should be well sealed against water draining upon the receiver. A thorough check for probable leaks and the necessary steps taken to prevent their occurrence should be taken at the time of the initial radio receiver installation.

A lower than normal battery voltage can be the cause of the radio to be weak or fail to operate. The receiver will not function properly if the battery voltage measures less than 5.8 volts.

The following changes in production wiring should be noted in the schematic diagram:

Capacitor C28 has been changed to the left side of switch, S1, at the junction of C27 and the switch connection. The ground lead of C28 is connected to chassis ground.

©John F. Rider

GE 210, 211, 212

These models appear in *Rider's Volume XVIII, pages 18-21 through 18-26.* In the schematic diagram C12 is shown as 22 $\mu\mu$f. This should be corrected to read 20 $\mu\mu$f. C12 is listed correctly in the replacement parts list as Cat. No. RCW-3016, 20 $\mu\mu$f.

The following items should be added to the replacement parts list:

RII-021—Insulator — Textolite (to insulate the volume control from chassis)

RII-022—Insulator — Textolite (to insulate the band switch from chassis)

In the tube and trimmer location shown on page 18-25, the secondary tuning slug of T6 is available through the top of the can, while the primary tuning slug of T6 is available through the holes in the bottom of the can.

General Electric 219, 220, 221

These models appear on *pages 15-28 through 15-31 of Rider's Volume XV.* In the parts list, catalog number RLL-003 should be identified as a replacement loop assembly only for Models 219 and 220. Catalog number RLL-025 should be added as the loop assembly for Model 221.

General Electric 250, 260

Model 250 appears on *pages 15-32 through 15-36 of Rider's Volume XV.* Model 260 appears on *pages 16-6 through 16-12 of Rider's Volume XVI.* The following should be added to the parts list for both models: Hinge pin for cover, catalog number RMP-011.

General Electric 321A

This model is the same as Model 321 Late, appearing on *pages 15-48 and 15-52 of Rider's Volume XV.*

General Electric 356, 357, 358

These models appear on *pages 18-40 through 18-44 of Rider's Volume XVIII.* The following changes should be made in the parts list. Under UCC-025, remove symbols C43, C65, C70. Add to UCC-026 symbols C43, C65, C70.

General Electric 356, 357, 358; 376, 377, 378

Models 356, 357, and 358 appear on *pages 18-40 through 18-44 of Rider's Volume XVIII.* Models 376, 377, and 378 appear on *pages 19-36 through 19-41 of Rider's Volume XIX.* When an old type construction 6BE6 (date coded 8/17 or before) is replaced with a new type construction 6BE6 (dated 8/22 or later) it is necessary that the f-m oscillator choke coil L8 be a 13½-turn coil (catalogue number RLF-012) instead of the 17-turn coil that was used in early production models.

General Electric 376, 377, 378

These models appear on *pages 19-36 through 19-41 of Rider's Volume XIX.* The f-m choke, L8, in the cathode circuit of the 6BE6 oscillator converter tube, V2, was listed under catalog number RLF-007. Due to a production change, this choke now becomes RLF-012.

Delete URD-033, R12, Resistor—220 ohms, ½ w., carbon. Add URD-037, R12, Resistor—330 ohms, ½ w., carbon. Add RCW-3009, C37, Capacitor—20.5 $\mu\mu$f. ±5%, ceramic. Delete UCW-2011, C37, Capacitor —20 $\mu\mu$f, ceramic. Add symbol number P4 to RJP-003. Delete P3 and P4 (Plug—preamplifier power plug) from RJP-004. Add RJP-005, P3, Plug—preamplifier power plug.

General Electric 417, 417A

Model 417 appears on *pages 16-16 through 16-19,* and *pages 16-21 through 16-24 of Rider's Volume XVI.* Model 417A appears on *pages 17-27,28 through 17-38 of Rider's Volume XVII.* These changes are in reference to the wiring of Phono Preamp Plug RJP-005.

Since some of the plugs supplied are inconsistent with specifications regarding the identification notch often referred to in wiring guides, this notch must be disregarded for indentification purposes to avoid confusion. While in some receiver productions the position of this key notch will differ from others, nevertheless, all receiver productions are wired the same in respect to the polarized system of prong arrangement.

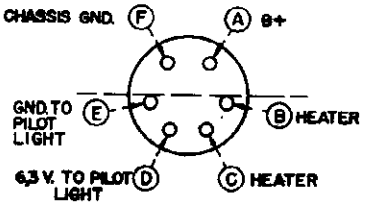

Phone Preamp Plug RJP-005 in the GE 417, 417A should be wired as shown.

When replacing the plug RJP-005, it is only necessary to follow the simple wiring rule as used in all receiver production where the cluster of four prongs is first located within one-half the area of the plug base as determined by the imaginary center line. Next, locate the two remaining prongs as viewed from the prong end of the plug and begin the wiring in a clockwise direction as indicated by the letter designations in the accompanying diagram. The letters A, B, C, etc., in the diagram, are keys to wiring points, as referred to in the various published receiver circuit diagrams.

Magnavox AMP-101C

This model is the same as Model AMP-101A on *pages 17-1 and 17-2 of Rider's Volume XVII,* except for the following changes in parts values.

Ref. No.	*Description*	*Part. No.*
2-1	Capacitor, paper, 0.1 μf 600 v.	250152G33
2-2	Capacitor, paper, 0.1 μf, 600 v.	250152G33
8	Resistor, composition, 15,000 ohms, ±10%, ½ w.	230084G76
9	Resistor, composition, 100,000 ohms, 10%, ½ w.	230084G86

Magnavox AMP 111D, AMP 111E

These models are the same as Model AMP 111, appearing in *Rider's Volume XVIII, pages 18-4 through 18-7,* except for the following parts value changes:

Ref. No.	*Description*	*Part. No.*
9	Capacitor, paper, 0.03 μf, 400 V	250152G25
22	Resistor, composition, 22,000 ohms, ±10%, ½ W	230084G78

Hoffman C501 and C511, Chassis 108

These models are the same as Model A501, Ch. 108S, appearing on *pages 15-6 through 15-10 of Rider's Manual Volume XV,* except that four 6K6 beam-power tubes are used in push-pull parallel in the output stage instead of the two push-pull 6V6's. The change is indicated in the accompanying diagrams. The alignment is still the same as given on *page 15-9.*

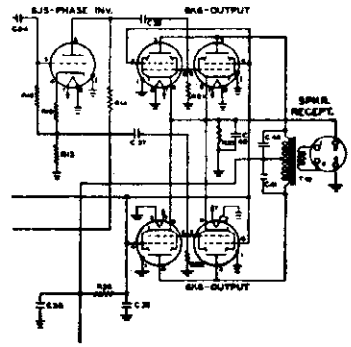

6K6 tubes for Hoffman C501 and C511.

The parts list should be changed to read as follows:

Symbol	*Description*	*Hoffman Number*
C47, C23, C24, C25	100$\mu\mu$f. ± 20%, mica	4000
C28, C32	0.005μf, 600 volt, tubular paper	4102
C29, C30	10μf, 450 volt, tubular electrolytic	4203
C31, C33, C34	0.01μf, 400 volt, tubular paper	4112
C41, C46	0.001μf, 600 volt, tubular paper	4104
C43	0.01μf, 600 volt, tubular	4103
C42, C44	330$\mu\mu$f, ± 10%, mica or ceramic	4010
C45	650$\mu\mu$f, ± 10%, mica or ceramic	4011
L1	Loop antenna	55210
LS	12" speaker, electrodynamic	9044
R2, R17	22,000 ohm, ± 20%, ½ w	4501
R3, R27	2.2 megohm, ± 20%, ½ w	4502
R4	10,000 ohm, ± 10%, 2 w	4503
R11	4,700 ohm, ± 20%, ½ w	4543
R12, R18	47,000 ohm, ± 20%, ½ w	4504
R23	500 ohm, ± 20%, 3 w	4550
R28	1,500 ohm, ± 5%, 6 ½ w	4701
R13, R14, R24, R25	47,000 ohm, ± 5%, ½ w	4537
R26	22,000 ohm, ± 5%, ½ w	4538
T10	Output transformer	5108

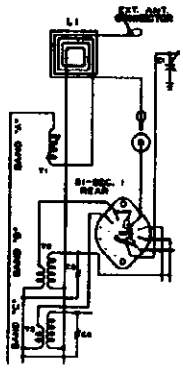

Antenna connection changes for Hoffman C501 and C511.

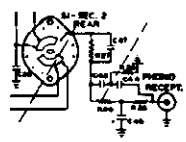

Circuit changes for Hoffman C501 and C511.

Kotary RP570T

This model appears in the *Miscellaneous section, page 15-8 of Rider's Manual Volume XV.* This model is listed in the Indexes as RP507T. It should read RP570T.

©John F. Rider

Magnavox AMP-109B, AMP-109C, AMP-109D

These are the same as Model AMP-109 on *pages 18-1,2 through 18-3 of Rider's Volume XVIII*, except for the following changes. In Model AMP-109D, only, the 4-ampere, 250-volt fuse has been removed from the a-c line. Pin number 1 of the changer motor receptacle is now connected to the bottom of the primary of the a-c transformer. A 4-ampere, 250-volt fuse is connected from the bottom of the primary of the a-c power transformer to the high side of the a-c power socket. This side of the a-c power socket is also connected to pin 1 of the speaker socket.

The following parts have been substituted:

Ref.No.	*Part No.*	*Description*
3	250152G33	Capacitor, tubular, 0.1 μf, 600 v.
4	250152G33	Capacitor, tubular, 0.1 μf, 600 v.
22	230084G21	Resistor, composition, 22,000 ohms, ½ w. (AMP-109B only)
22	230084G18	Resistor, composition, 6,800 ohms, ½ w. (AMP-109C & D only)

Magnavox CR197 Series

Models CR197, CR197A, and CR197B appear on *pages 16-1, 2 through 16-7 of Rider's Manual Volume XVI*. The schematics and parts lists for Models CR197C, CR197D, and CR197E are similar to those listed above except for the following changes:

Part No. 8 is now connected from ground to the junction of 24, 83, and 99, in all models.

Part No. 9 is now connected from ground to the junction of 25, 85, and 99, in all models.

The value of Part No. 13 has been changed from 20 $\mu\mu f$ to 13 $\mu\mu f$ in all models.

Resistor 61 has been deleted in Models CR197D and CR197E, as shown in the accompanying diagram.

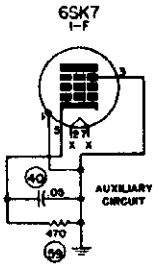

Circuit changes for the Magnavox CR197D and CR197E.

Part No. 106, a 6-volt socket, has been added between the filament connections and the lamps in Model CR197E only.

The supplement to the parts list is as follows:

Part No.		*Magnavox Part No.*
	CR197A	
32	Capacitor, paper, 0.02 μf, 600 v	250152G37
49	Omitted	
61	Resistor, composition, 2,200 ohms, ½ w	230084G15
65	Resistor, composition, 10,000 ohms, ½ w	230084G19
88, 89, 90, 91	Omitted	
99	Switch, rotary band selector	160172G1
106	Omitted	
	CR197B	
32	Capacitor, paper, 0.02 μf, 600 v	250152G37
49, 88, 89, 90, 91, 106	Omitted	
	CR197C	
19	Capacitor, molded mica, 680 $\mu\mu f$, ±10%	250159G131
32, 49, 65	Omitted	
88	Resistor, composition, 680,000 ohms, ±10%, ½ w	230084G90
99	Switch, rotary band selector	160172G1
106	Omitted	
	CR197D	
19	Capacitor, molded mica, 680 $\mu\mu f$, ±10%	250159G131
32, 49, 61, 65	Omitted	
88	Resistor, composition, 680,000 ohms, ±10%, ½ w	230084G90
89	Resistor, composition, 150,000 ohms, ±10%, ½ w	230084G88
90, 91, 106	Omitted	
	CR197E	
19	Capacitor, molded mica, 680 $\mu\mu f$, ±10%	250159G131
32, 61, 65	Omitted	
88	Resistor, composition, 680,000 ohms, ±10%, ½ w	230084G90
89	Resistor, composition, 150,000 ohms, ±10%, ½ w	230084G88
90, 91	Omitted	
106	Socket, 6 volt	189788G1

Magnavox CR198 Series

Chassis CR198, CR198A, and CR198B appear on *pages 16-5 through 16-11 of Rider's Manual Volume XVI*. The schematic diagrams and the parts lists for Chassis CR198C, CR198D, CR198E, CR198F, CR198H, and CR198J are the same as those for CR198, CR198A, and CR198B except for the changes that are noted below.

Item No. 13 has been changed from 20 $\mu\mu f$ to 13 $\mu\mu f$.

Section 1 front of item 99 is the same for all models except for J. This wafer is shown in Figure 1.

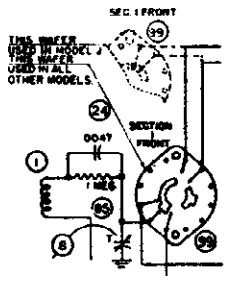

Fig. 1. Wafer used in Magnavox CR198 Series.

The position of item 12 has been changed for model J only. Capacitor 12 for model J has been removed from across item 4 and inserted in the wafer lead to the junction of items 4 and 43. In all other models, it remains in parallel with item 4.

Resistor 91 has been inserted from the tap of item 97 to item 91. Its value is shown in the accompanying table.

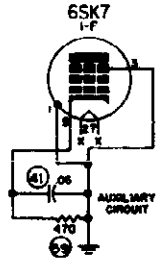

Fig. 2. Auxiliary Circuit for Magnavox CR198 Series.

Resistor 62 has been deleted from all models except CR198A, CR198B, and CR198C. The auxiliary circuit is shown in Figure 2.

The connection from item 99, section 2 rear, to the cathode and grid leads of the 6J5, 1st a-f stage, has been deleted. Resistor 83 is now connected between pins 1 and 5 of the 6J5, in all models except CR198A. The values are given in the accompanying table.

Table of electrical values for Magnavox CR198 Series.

ITEM NO	ELECTRICAL VALUES						
	CR 198A	CR 198 B	CR 198 D	CR198E	CR198F	CR198H	CR198J
16	000060	0001	0001	0001	0001	OMIT	OMIT
26	01	005	005	005	005	005	005
31	02	015	015	018	015	015	015
81	00033	00068	00068	00068	00068	OMIT	OMIT
83	OMITTED	680K	680K	680K	680K	820K	820K
72	4700	22K	22K	22K	22K	22K	22K
89	OMITTED	OMITTED	150K	150K	150K	OMIT	OMIT
108	OMITTED	OMITTED	OMITTED	USED	USED	USED	USED
62	2200	2200	OMITTED - SEE AUXILIARY CIRCUIT				
90	OMITTED	OMITTED	OMITTED	OMITTED	6.8MEG	330K	330K
91	OMIT -	OMIT	OMIT	OMIT	OMIT	10K	10K

Items 48, 90, and 89 have been added as shown in Figure 3. Item 48 appears

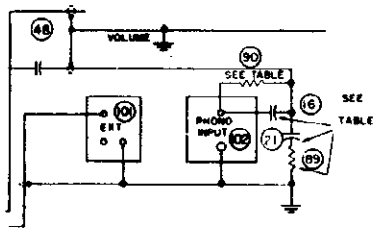

Fig. 3. Circuit changes for Magnavox CR198 Series.

in Models CR198H and CR198J only. Its value is 0.001 μf.

The 6-volt socket, item 106, has been inserted across the filament leads in models CR198E, CR198F, CR198H, and CR198J.

The positions of items 8 and 9 for all models have been changed from the transformer side of the *R-C* filter to ground, to the wafer side and to ground.

Magnavox CR-202 Series

These models appear on *pages 18-16 through 18-25,26 of Rider's Manual Volume XVIII*. Two resistors, R143 and R144, have been added to Ch. CR-202C. R143 is connected between C41 and the junction of R118 and C64. R144 is located between the junction of R142, R113, and C40, and the rotary band switch 153.

The parts list should be amended to include the following:

Ref. No.	*CR-202A*	*Part No.*
34	Capacitor, mica 510 $\mu\mu f$, ± 5%	250159G64
40	Capacitor, mica 300 $\mu\mu f$, ± 10%	250159G88
41	Capacitor, mica, 510 $\mu\mu f$, ± 5%	250159G64
113	Resistor, comp, 82,000 ohms, ½ w, ±10%	230084G85
124	Resistor, comp, 220,000 ohms, ½ w, ±10%	230084G27
142	Omitted	
143	Omitted	
144	Omitted	
	CR-202B	
142	Resistor, comp, 3.3 megohm, ½ w	230084G34
	CR-202C	
40	Capacitor, mica, 0.002 μf, ±10%	250160G68
41	Capacitor, mica, 0.0015 μf, ±10%	250160G66
124	Resistor, comp, 470,000 ohms, ½ w	230084G94
143	Resistor, comp, 33,000 ohms, ½w, ±10%	230084G80
144	Resistor, comp, 150,000 ohms, ½w	230084G26
	CR-202D	
124	Resistor, comp, 470,000 ohms, ½ w	230084G94

© John F. Rider

Magnavox CR-208C

This model is the same as Model CR-208 appearing on *pages 17-13 and 17-25,26 through 17-31 of Rider's Volume XVII*, except for the following changes. Capacitor 15 has been changed in value from 510 $\mu\mu$f to 150 $\mu\mu$f. A 150,000-ohm resistor (80) has been connected in series with capacitor 15. Capacitor 16 and resistor 72 in series with it have both been omitted. Capacitor 17 has been changed from 510 μf to 150 μf. A 33,000-ohm resistor (79) has been connected in series with capacitor 17. Resistor 71 has been changed from 220,000 ohms to 470,000 ohms.

The following changes have been made in the parts list:

Ref. No.	*Description*	*Part No.*
15	Capacitor, fixed mica, 220 $\mu\mu$f, 500 v	250160G68
16	Omitted	
17	Capacitor, fixed mica, 1500 $\mu\mu$f, 500 v	250160G66
71	Resistor, composition, 470,000 ohms, ±10% ½ w.	230084G94
72	Omitted	
79	Resistor, composition, 33,000 ohms, ±10%, ½ w.	230084G80
80	Resistor, composition, 150,000 ohms, ±10%, ½ w.	230084G88

Majestic 6FM769, 6FM783, Ch. 6C14D

Model 6FM783 is a 1949 styled, 6-tube, using Oak and Milwaukee record changers, console combination using a cabinet similar to Model 8FM783, which appears on *pages 17-17, 18 through 17-22 of Rider's Manual Volume XVII* and on *page C18-4 of Rider's Manual Volume XVIII*. Model 6FM769 is a 1949 styled, 6-tube, console combination using the Aero record changer.

For voltages, alignment, and chassis parts refer to data on Model 6FM773 which appears on *pages 18-3 through 18-4 of Rider's Manual Volume XVIII*. The output transformer, T3, is located on the speaker instead of on the chassis. The parts list remains the same except for the following changes:

Symbol	*Part No.*	*Description*
L1	S-2017	Loop antenna assembly (BC only)
	117-108	Dial scale, glass
	117-109	Dial scale, background
	129-65	Dial scale clips, (6 req'd)
	133-34	Dial pointer
	15-91	Socket, speaker
	115-61	Cabinet, console-Model 6FM783
	115-70	Cabinet, console-Model 6FM769-mahogany
	21-24	Oak record changer (6FM783)
	21-31	Milwaukee record changer (6FM783)
	21-36	Aero record changer (6FM769)
	22-63	Speaker, 8" PM
	122-57	Escutcheon plate
	128-63	Knob, tuning
	128-68	Knob, tone
	128-69	Knob, volume
	128-80	Knob, bandswitch
	120-60	Spring, for knobs
	123-39	Cabinet back Model 6FM783
	123-40	Cabinet back Model 6FM769

Motorola CR7

This model is the same as Model CR6, appearing on *pages 16-9 and 16-10 of Rider's Volume XV* and *pages 16-1 through 16-8 of Rider's Volume XVI*.

Noblitt-Sparks Chassis RE-202, RE-231

These chassis are used in Models 555, 555A, 552N, and 552AN, appearing on *pages 16-1 through 16-4 of Rider's Volume XVI*.

Meck Chassis 4D7

Chassis 4D7 is used in models DA-601, DB-602. This chassis is similar to model DA-601, which appears on *page 19-5 of Rider's Manual Volume XIX*. The 4D7 differs from the 6B8 in the following ways: Capacitors C1, C2 and C7 have been deleted. A capacitor, designated as C2, has been inserted in place of C7. Resistor R1 has been removed from across the junctions of R2 and R3, and L1 and C2, and is now located in the cathode lead of the pentode (12BA6, 12SG7). Capacitor C5 is connected from the plate lead of the tetrode (50B5, 50L6) to ground. The parts list is given below, with the exception of those parts that are identical to those for the DA-601.

Symbol	*Part No.*	*Description*
C2	CP-14203	Capacitor, paper, tubular, 0.02μf, 400v
R1	RC-10680	Resistor, carbon, 68 ohms, ½w
R2	RC-11003	Resistor, carbon, 100,000 ohms, ½w
R4	RC-11005	Resistor, carbon, 10 megohms, ½w
R5, R6	RC-14703	Resistor, carbon, 470,000 ohms, ½w
R7	RC-11500	Resistor, carbon, 150 ohms, ½w
R8	RC-32001	Resistor, carbon, 2,000 ohms, ½w
L1	TRF10017-A	Antenna coil
C4	CP-12502	Condenser, paper, tubular, 0.005μf, 200v.
C3	CP-12202	Condenser, paper, tubular, 0.002μf, 200v.

RCA Q109, Ch. RC-602

This model appears on *pages 18-3 through 18-10 of Rider's Volume XVIII*.

On some sets the filter capacitor C44 has two sections of 15 μf and one section of 20 μf at 450 volts and one section of 20 μf at 25 volts. The capacitor specified in the Q109 service data has three sections of 10 μf at 450 volts and one section of 20 μf at 25 volts. Use the specified capacitor (Stock No. 33014) if replacement is required.

RCA Q109, Q109X, Ch. RC-602, RC-602A

These models appear on *pages 18-3 through 18-10 of Rider's Volume XVIII*. The following should be added to the parts list under Chassis Assemblies.

72996	Capacitor—molded paper, 0.05μf, 600 v. (C53)
30787	Resistor—fixed composition, 47,000 ohms, ½ w. (R26)

RCA RP-176 Record Changer

This record changer appears on *pages RCD.CH. 17-1 through RCD.CH. 17-12 of Rider's Volume XVII*. The method of attaching the pivot arm spring (Ref. #75) has been changed. The stud (Ref. #74) is no longer being used. A curved spring which clips into the inside rear of the tone arm is used in its place. The timing notch originally in the rim of the main cam and gear is no longer used. A small metal projection has been added to the inside of the rim of the main cam and gear for the same purpose. The indention in the hub of the main cam and gear into which a projection on the ratchet lever fits may also be used for timing purposes.

Add the following stock number to the parts list: 73198—Curved spring for anchoring pivot arm spring.

RCA RP-178 Series

This model appears in *Rider's Manual Volume XVIII on pages RCD.CH. 18-14 through RCD.CH. 18-23*.

The RP-178 record changer is for operation on 105-125 volts, 60 cycles, a.c. A conversion spring (Stock No. 73158) may be used for 50-cycle operation. The RP-178-2 is the same as RP-178 except for a motor (Stock No. S-4283) for 105-125 volts, 25 cycles, a.c. This has been manufactured only for Canadian use. The RP-178-3 is the same as RP-178 except for a motor (Stock No. S-4773) for 105-125 volts or 210-250 volts, 60 cycles, a.c., and a 6 prong plug (Stock No. 11953). A conversion spring (Stock No. S-4774) may be used for 50-cycle operation.

The following should be added to the parts list:

Stock No.	*Description*
73158	Spring - Spring sleeve for converting 60-cycle motors to 50-cycle operation

RCA 8BX5, 8BX54, 8BX55; Ch. RC-1059, RC-1059A

These models appear on *pages 19-5 through 19-9 of Rider's Volume XIX*. The position of the battery pack in these models affects the loop inductance. When the battery is removed, the loop inductance will increase and the sensitivity will decrease because of improper electrical tracking of the loop circuit with the oscillator.

When a battery is temporarily unavailable, a sheet of aluminum 8½" long by 3-5/8" wide and from 0.020" to 0.050" thick may be placed in the position occupied by the battery so that it is lying flat on the bottom of the cabinet. This sheet of aluminum has an effect on the loop inductance similar to the effect caused by the battery and will, therefore, return the performance of the loop to approximately the same as obtained when a battery is installed. If aluminum is not available, brass may be substituted with approximately the same performance. DO NOT USE STEEL OR IRON since the performance will be adversely affected. If desired, the sheet of aluminum may be waxed to the inside bottom of the case. DO NOT PLACE ANY WAX, CEMENT, OR OTHER MATERIAL ON THE LOOP WINDINGS.

For the reasons mentioned, the battery as well as the chassis must be properly installed in the case when realigning the oscillator and antenna circuits. Failure to do this will result in extremely poor performance because of improper tracking. It is, of course, necessary to remove the chassis from the case for i-f alignment.

Since the first i-f stage employs neutralization by means of capacitor C7, incorrect alignment of the primary of transformer T2 will result if stage-by-stage alignment procedure is employed. Follow the alignment procedure on *page 19-5* to assure correct alignment.

The following changes have been made in the parts list.

Delete:
73144 Hinge—

Add:
74180 Hinge—cabinet hinge (2 required)

It has been found that the detent used on the original hinge (73144) caused strain on the cabinet which might result in breakage of the cabinet or back if roughly handled. The new hinge (74180) does not have this detent.

© John F. Rider

RCA Record Changers RP-176, RP-177 Series

Model RP-176 may be found on *pages RCD.CH. 17-1 through RCD.CH. 17-12 of Rider's Volume XVII*. The RP-177 Series appears on *pages RCD.CH. 18-1 through RCD.CH. 18-13 of Rider's Volume XVIII*. The numbers in the following discussion refer to the item numbers in the service data for Model RP-176. The numbers in parentheses refer to the item numbers of the RP-177 series.

When the changer shows failure to trip, or pre-tripping characteristics, the following should be done: The engagement of items 59 (67) and 41 (93) must be 1/64" to 1/32"—file or bend positioning pin of item 59 (67) to obtain proper engagement. The engaging surfaces of items 59 (67) and 41 (93) must be smooth and free of burrs. Stone the surfaces if required—if the surfaces are rough, the tone arm jumps into the label when the mechanism trips. The overlap between the trip pawl of item 85 (29) and the ratchet of item 59 (67) must be 3/32" to 1/8".

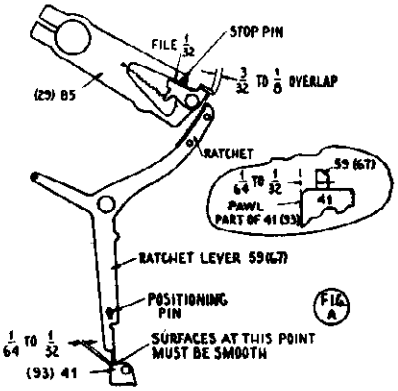

Tone arm travel over the record label can be corrected by following these instructions.

If the tone arm travels over the record label, try the following procedure. While holding the pawl of item 41 (93) disengaged from the ratchet lever 59 (67), place the tone arm in the eccentric groove of a record with the turntable running. The tone arm should swing back and forth freely. Should the tone arm jump the eccentric groove and sweep over the label, more overlap is needed between the pawl of trip lever 85 (29) and the ratchet of item 59 (67). This can be obtained by filing approximately 1/32" from the trip pawl as indicated in Fig. A.

If the spacing between the record posts need adjustment, refer to *page RCD.CH. 17-3 (RCD.CH. 18-6)*, adjustments B and C, and Fig. B accompanying. Set the record separator post, as described in the service data, in the 10-inch position. Adjust the 10-inch position of the record support by means of the screws "*B*," so that the *A* and *B* dimensions indicated in Fig. B are obtained. Set the record support to the 12-inch position, and adjust by means of the screws "*B*" so that dimension *B* indicated on Fig. B is obtained. Bend the stop bracket so that dimension *A* indicated on Fig. B is obtained.

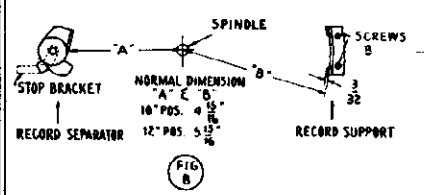

The spacing between the record posts may be adjusted as indicated above.

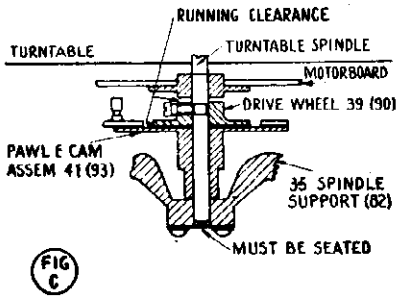

To prevent binding of the turntable, it should be adjusted as shown.

If the turntable should bind, refer to Fig. C and the following procedure. The spindle must be seated in spindle support 35 (82). The turntable must be parallel to the motorboard. A running clearance must be provided between drive wheel 39 (90) and spindle support 35 (82) and also between drive wheel 39 (90) and pawl and cam assembly 41 (93).

Record damage may be caused by incorrect spacing between the record separator shelf and knife or by an improperly shaped knife edge. Refer to Fig. D.

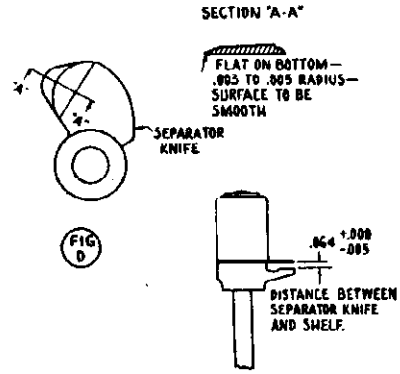

Adjust the spacing between the record separator shelf and the knife to prevent record damage.

RCA 8BX65, Ch. RC-1040C

This model is the same as Model 8BX6 which appears in *Rider's Volume XVIII on pages 18-11 through 18-14*, except for the finish of the metal case parts. Model 8BX6 has an aluminum finish and Model 8BX65 has a gold finish. Replacement parts are identical except for the following which are used on Model 8BX65 only:

Stock No.	*Description*
73879	Back - Case back complete with center strip, feet, and spring latch
73878	Front - Case front complete less shutter
73875	Link - Carrying handle link group, consisting of two links, two shafts and four drive screws (two groups required)
73876	Screw - No. 8-32 x 5/16" screw to hold case together (Located under carying handle, two required)
73877	Shutter - Case shutter

RCA 8BX6, 8BX65, Chassis RC-1040C

These models appear on *pages 18-11 through 18-14 of Rider's Volume XVIII*. The parts list should be changed as follows:

Add: 71040 Socket—2 contact female socket for external loop

Delete: Speaker assembly 92577-3.
73123 Speaker—4" PM Speaker

Use Stock No. 71058 Speaker (4" x 6") as replacement.

RCA 8BX6, Chassis RC-1040D

This model is the same as the model using Chassis No. RC-1040C, appearing in *Rider's Volume XVIII on pages 18-11 through 18-14*, except that the external loop antenna socket is omitted on RC-1040D.

RCA 8R71, 8R72, 8R74, 8R75, 8R76; Ch. RC-1060, RC-1060A

These models appear on *pages 19-10 through 19-15 of Rider's Volume XIX*. The second i-f transformer (T3) used in these receivers may be stamped 970435-2 or 970435-5. The d-c resistance (8.2 ohms) of the windings indicated on the schematic is for transformer 970435-2. The d-c resistance of the same windings in transformer 970435-5 is 12 ohms.

The number of turns of dial drive cord on the tuning knob shaft has been changed from 3½ turns to 4½ turns.

The following changes have been made in the parts list.

Delete:
73363 Transformer
71033 Washer
71034 Washer

Add:
74019 Transformer—second i-f transformer, dual (T3)
73333 Washer — insulating washer — extruded — for mounting output transformer (2 required)
73332 Washer—insulating washer—flat—for mounting output transformer (2 required)

In some instruments, speakers stamped 92572-4W have been used as a substitute for the specified speaker (92572-2W). For replacement use the specified speaker (stock number 72201).

In some chassis, two 3300-ohm resistors are connected in parallel as a substitute for the 1500-ohm resistor, R22. In other chassis, two 820-ohm resistors are connected in series as a substitute for this resistor.

RCA 8R71 to 8R76, Ch. RC-1060, RC-1060A; 9W101, 9W103, Ch. RC-618B

Models 8R71 to 8R76 appear on *pages 19-10 through 19-15 of Rider's Manual Volume XIX* and Models 9W101 and 9W103 appear on *pages 19-35 through 19-44* of the same Volume.

Some ceramic capacitors C11 (5 $\mu\mu$f) have been used which have a color code of black-green-black. The capacitor is correct, but the color code is incorrect. The normal color code of this capacitor is green-black-white.

©John F. Rider

RCA 8R71, 8R72, 8R74, 8R75, 8R76, 8V90, 8V91

Models 8R71, 8R72, 8R74, 8R75, and 8R76 appear in *Rider's Manual Volume XIX on pages 19-10 through 19-15* and Models 8V90 and 8V91 appear in the same Volume on *pages 19-16 through 19-25.*

To insure greater oscillator stability a support has been added for the f-m oscillator coil as illustrated in the accompanying diagram. Adjustment of the coil is

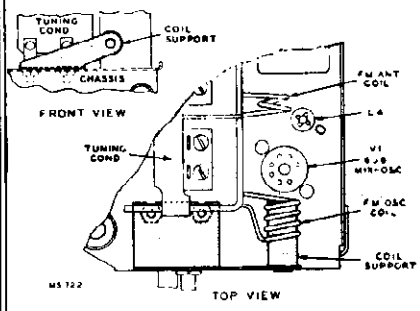

Coil Support

A support has been added to insure greater oscillator stability for the f-m oscillator coil for the RCA Models 8R71, 8R72, 8R74, 8R75, 8R76, 8V90, 8V91.

made as described in the Service Data. After adjustment the coil is cemented to the coil support.

The following is added to the parts list:
74202 Support—Polystyrene coil support complete with mounting bracket.

RCA 8V112, Chassis RC-616

This model appears on *pages 18-17 through 18-24 of Rider's Volume XVIII.* To minimize the possibility of "A" band oscillation and to reduce interference, a resistor (R35) has been added in the mixer grid circuit as shown in the accompanying diagram.

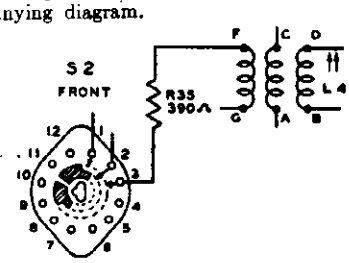

A 390-ohm resistor has been added in the mixer grid circuit of the RCA 8V112 to reduce interference.

In late production sets C42 has been changed from 22 $\mu\mu f$ to 15 $\mu\mu f$ and R18 has been changed from 22,000 ohms to 18,000 ohms. This change was made to prevent oscillation at the high end of the f-m band.

Add the following to the parts list:
Resistor — fixed composition, 390 ohms, ±10%, ½ watt (R35)

RCA 8V112, Chassis RC-616, RC-616F

The schematic diagram for this model, which is contained in *pages 18-17 through 18-24 of Rider's Volume XVIII,* is in error in showing the connection of R22. It should be shown connected to C18A instead of to the RED lead of the output transformer.

In order to provide adequate lead length, resistor R10 (56,000 ohms) has been changed from ½ watt to 1 watt.

Chassis RC-616F, used in the second production of these instruments, is very similar to Chassis RC-616 except for the following:

First Production RC-616
{Four position selector switch
{M.M.—PHONO—AM—FM
Aux. input jack is not used

Second Production RC-616F
{Five position selector switch
{AUX.—M.M.—PHONO—AM—FM
Aux. input jack is used

Except for the following replacement parts, all parts are identical.

74163 Selector switch is used in place of 73608 (switch S1, S2)

74164 Control panel decal for mahogany or walnut instruments is used in place of 73764 decal

74354 Control panel decal for blonde instruments is used in place of 73765 decal

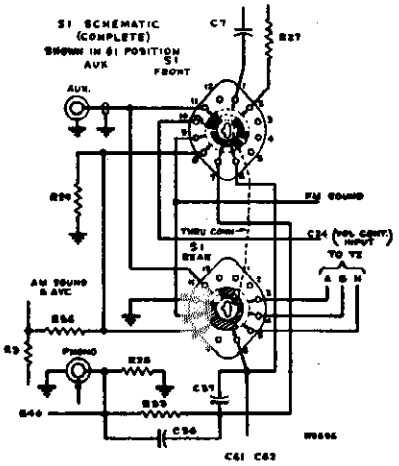

Fig. 1. (Above) shows the selector switch used in RCA Chassis RC-616F. Fig. 2. (Below) The simplified circuit of the selector switch in the #2 position.

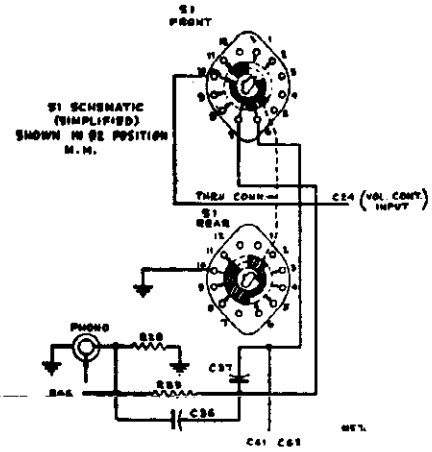

Figs. 1 and 2 show the selector switch S1 used in Chassis No. RC-616F. The connections to S2 are identical in both chassis. Note that position #2 (M.M.) of RC-616F corresponds to position #1 (M.M.) of RC-616. No connections are made through S2 in AUX. position.

RCA 8V151, Ch. RK-121C

This model appears on *pages 18-25 through 18-40 of Rider's Manual Volume XVIII.* In the diode load circuit, R29 (270,000) should be deleted—R20 (82,000) and R34 (180,000) should be added, as shown in the accompanying diagram.

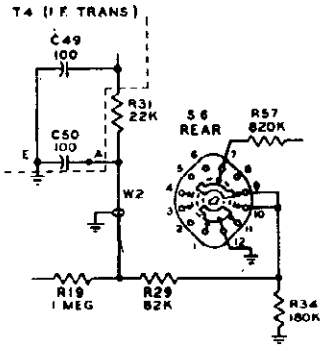

Diode Load Circuit for RK-121C.

The wiring diagram is incorrect in the wiring of the range switch. The illustration below shows the changes which should be made.

Late production models of Chassis No. RK-121C use a crystal rectifier for a-m detection instead of the diode plate (pin 6 of V8) of 6AT6 as shown.

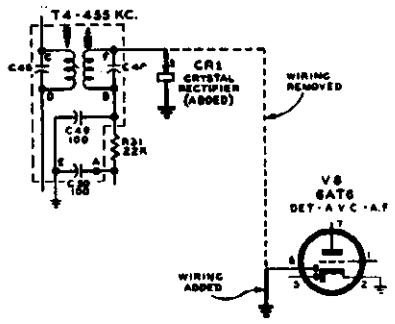

Crystal Rectifier for RK-121C.

Service Caution: (1) Maintain a minimum lead length of ¾ inch on the crystal leads. Excess heat from a soldering iron will damage the crystal, (2) the normal voltage existing in this circuit should never be exceeded when testing or trouble shooting, and (3) maintain polarity of crystal.

The following change has been made in the parts list.

Add:
54374 Rectifier—crystal rectifier (CR1)

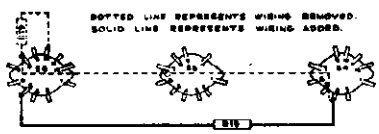

Change in Wiring of RCA 8V151.

An addition to the Parts List under Miscellaneous is:
74312 Ornament — Wood fibre ornament for front of cabinet.

RCA 9W101, 9W103, 9W105

These models appear on *pages 19-35 through 19-44 of Rider's Manual Volume XIX.*

A capacitor (150 μμf-C44) has been added between the screen grid terminal of V8 (6V6GT) socket and chassis as shown in the accompanying illustration. This was

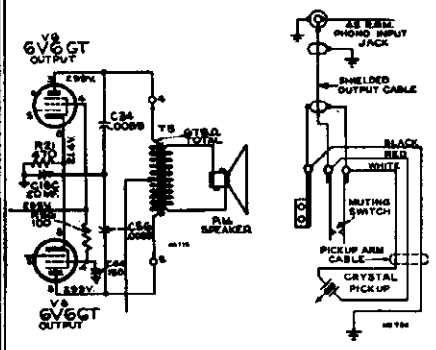

Output Tubes Circuit Pickup Arm Cable Models 9W101, 9W103, 9W105

done to eliminate spurious audio oscillation.

The simplified schematic diagrams (phono position) on page *19-39* show C34 and C56 connected to ground. They should be shown connected to the cathodes of the 6V6GT tubes as shown in the accompanying illustration.

To improve f-m stability one dial lamp is now connected to pin #2 of V9 (6X5GT). Previously both were connected to pin #2 of V8 (6V6GT).

Speakers stamped 92569-1WX have been used as a substitute for 92559-5W speakers in Model 9W101; 92569-1WX speakers have a 2.2-ohm voice coil; 92569-5W speakers have a 3.2-ohm voice coil.

The following additions have been made to the parts list:

48125 Capacitor—Ceramic, 150 μμf (C44) Same as C7, C19, C38, C50, C53
13867 Cap—Dust cap
36145 Cone—Cone and voice coil assembly
5039 Plug—4 prong male plug for speaker
71145 Suspension—Metal cone suspension
37899 Transformer—Output transformer (T3)

Note: When replacing complete speaker order Stock No. 73635 (92569-5W).

37396 Grommet—Rubber grommet for mounting speaker (3 required)—for Model 9W103
73896 Loop—Loop antenna complete for Models 9W101 and 9W103 (previously listed for 9W101 and 9W105).

The RP-168A-1 record changer pickup arm cable now being used is a three wire cable (RED-WHITE-BLACK). In some instruments the black wire is omitted or a shielded wire may be used as shown in 9W101, 9W103, 9W105 Service Data. The latest connection diagram is shown in the accompanying illustration.

RCA 8X53, 65X1, 65X2, RC-1064

Model 8X53 appears on *pages 18-41 and 18-42 of Rider's Volume XVIII* and Models 65X1 and 65X2 appear on *pages 15-61 and 15-62 of Rider's Volume XV.*

The number of turns of dial cord on the tuning shaft has been increased from 2-¼ turns to 3-¼ turns.

RCA 8X71, 8X72

These models appear on *pages 19-30 through 19-34 of Rider's Manual Volume XIX.* A capacitor (0.01 μf-C38) has been added between pin #3 of V6 (35C5) and chassis. The revised heater connection

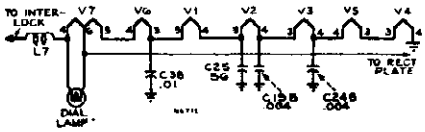

Heater Connections—Models 8X71, 8X72

schematic diagram is illustrated in the accompanying diagram.

The following have been added to the parts list:

71923 Capacitor—Tubular, 0.01 μf. 200 v. (C38) same as C23, C36.

RCA 75ZU, Ch. RC-1063A

This model appears on *pages 19-45 and 19-46 of Rider's Manual Volume XIX.* A groove approximately 1/16 inch deep by ⅛ inch wide is now included on the outer rim of the bakelite station selector indicator pulley, Stock No. 73060.

If trouble is encountered with the drive cord coming off this pulley, either of the following corrections may be applied:

(a) Position the pulley in relation to the gang drum by the adjustment provided on the long support bracket for the dial back plate assembly so that the drive cord occupies the position indicated in the accompanying illustration.

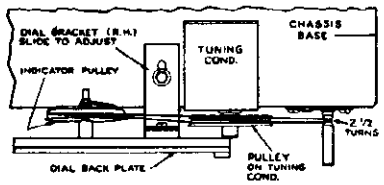

Dial Drive Cord of RCA 75ZU.

(b) Replace the pulley with one incorporating the groove indicated above.

The service data for the 50-cycle version of Radiola 75ZU will apply to this instrument except:

RP-178 record changer only is used.

A conversion spring (Stock No. 73158) is added to the motor spindle shaft for 50-cycle operation.

A decal ("RCA Victor" Stock No. 71984) is added to the front of the cabinet.

These changes apply to the RC-1063B also.

The following have been added to the parts list for instruments using blonde mahogany cabinets:

73722 Knob—Power—Phono—radio switch knob—for blonde instruments
73629 Knob—Tuning Knob—for blonde instruments
73630 Knob—Volume Control Knob—for blonde instruments

RCA 66BX, Ch. RC-1040, RC-1040A, RC-1040B; 8BX5, 8BX54, 8BX55, Ch. RC-1059, RC-1059A; 8BX65, Ch. RC-1040C, RC-1040D; 9BX5, Ch. RC-1059B

Model 66BX appears on *pages 15-87 through 15-88 of Rider's Manual Volume XV* and on *page C17-7 of Rider's Manual Volume XVII.* Models 8BX5, 8BX54, and 8BX55 appear on *pages 19-5 through 19-9 of Rider's Manual Volume XIX.* Models 8BX6 and 8BX65 appear on *pages 18-11 through 18-14 of Rider's Manual Volume XVIII.*

The line-battery switch used in these receivers is of the "slide" type. The actual switch does not have numbered terminals, although the schematic diagrams have numbers indicated. The numbers on the schematic diagrams do not indicate the actual sequence of the terminals on the switch. The accompanying illustrations show the actual sequence of the switch terminals and the corresponding numbers which appear on the schematic diagrams. Figure 1 is the diagram for the 8BX5,

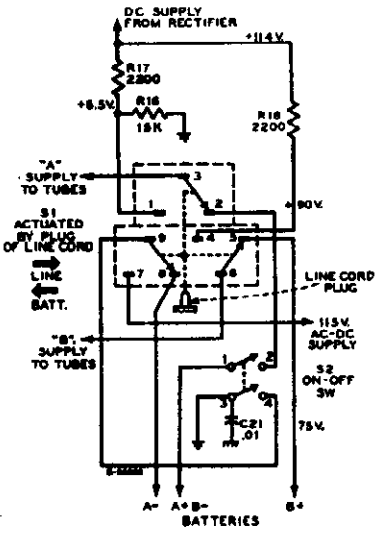

Fig. 1. Line-battery switch for RCA 8BX5.

first production, Ch. RC-1059. Figure 2 applies to models 8BX5, 8BX54, 8BX55, second production, Ch. RC-1059A; 9BX5, first production, Ch. RC-1059B; 9BX5, second production, Ch. RC-1059C. For models 8BX6 and 66BX, the circuit is as shown in Figure 2, except for different resistor numbers and values.

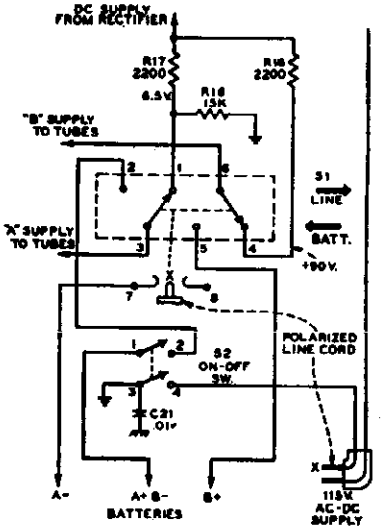

Fig. 2. Line-battery switch for RCA 8BX5, 8BX54, 8BX65, 9BX5, 8BX6, and 66BX.

©John F. Rider

RCA 8X544, 8X545, 8X546, Chassis RC-1065, RC-1065A

These models are the same as Model 8X541, on *pages 18-45 and 18-46 of Rider's Volume XVIII*, except for the color of the cabinets and the parts noted here.

The parts are the same, except for:

73486 Loop — loop and back cover assembly for Models 8X544 and 8X545

73487 Loop — loop and back cover assembly for Model 8X546

Y2096 Cabinet — plastic cabinet — mahogany — complete with station indicator and dial backing disc — for Model 8X544

Y2097 Cabinet — plastic cabinet — walnut — complete with station indicator and dial backing disc — for Model 8X545

Y2098 Cabinet — plastic cabinet — blonde — complete with station indicator and backing disc — for Model 8X546

70429 Grommet — rubber grommet to mount speaker (4 required). This part has been added to Models 8X541, 8X542, 8X543, 8X544, 8X545, 8X546, and 8X547. To reduce microphonics, the speaker is now mounted to the chassis and to the cabinet using rubber grommets. The screws through the grommets should be tightened only enough to obtain a secure assembly.

RCA 68R1, 68R2, 68R3, 68R4, Ch. RC-608; 610V1, Ch. RC-610; 610V2, Ch. RC-610C

The 68R series appear on *pages 16-39 through 16-43 of Rider's Volume XVI*. The 610 series appear on *pages 19-56 through 19-64 of Rider's Volume XIX*.

In locations where 10.7-mc i-f interference (not tunable) is encountered on the f-m band of these receivers, the following may eliminate the condition:

1. Check lead dress (and correct if necessary) to minimize antenna coupling into the i-f amplifier input. Resistor R1 (located on the antenna terminal board) should be dressed on the side of the terminal board away from the 6BE6 1st detector socket, V1.

2. Dress the 6BE6 1st detector plate lead along the shelf base and under C2 (330 $\mu\mu$f) using C2 as a partial shield for this lead.

3. Ground one f-m antenna terminal to the chassis at the terminal board. (Dipole still connects normally.) This is generally more effective than connecting a 10.7-mc series-tuned trap from the f-m antenna terminal to the chassis.

4. Place a tube shield over the 6BE6 1st detector tube, grounding the shield to chassis using as short a ground as possible. Correct for any detuning caused by this method.

5. Correct realignment of circuits is suggested to provide maximum sensitivity, since step 3 may reduce sensitivity slightly.

RCA 75X11, 75X12, 75X14, 75X15, 75X16

These models appear in *Rider's Manual Volume XVIII on pages 18-49 and 18-50.*

In some chassis a substitute i-f transformer has been used in these models. An adapter plate is riveted to the chassis for mounting purposes. A mounting clip is used to secure the transformer to the mounting plate. The accompanying diagram illustrates the revised schematic.

The following have been added to the Parts List:

73935 Clip—Spring clip for mounting i-f transformers, type 970441

93036 Transformer — First i-f transformer, stamped 970441-1 (C6, C7, L6, L7)

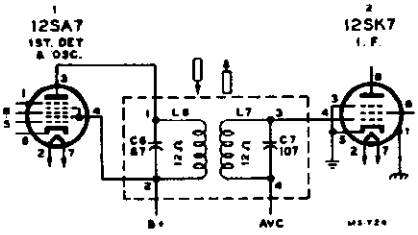

Substitute 1st I.F. Transformer—75X Series

RCA 77U

This model appear on *pages 18-53 and 18-54 of Rider's Volume XVIII*. The following parts should be added to the parts list.

73109 Nut—Tee nut to mount record changer—3 required.

73110 Screw—¼-20 x 1¾" fillister head machine screw to mount record changer.

The service data previously issued for this model also apply to instruments using blonde mahogany cabinets, except for the following parts which are used with such cabinets.

73631 Knob—power, radio and phono switch knob—tan- for blonde instruments.

73629 Knob—tuning knob —tan— for blonde instruments.

73630 Knob—volume control knob—tan —for blonde instruments.

The following voltage and current measurements apply to this model. A selenium rectifier is used. The oscillator grid voltage (pin 5 of the 12SA7) is —10 volts at 600 kc and —11 volts at 1600 kc. Voltages are measured with Chanalyst or VoltOhmyst to common insulated wiring —B). The voltages and currents should hold to within ± 20% with a 117-volt, 60-cycle power supply.

Tube	Plate Voltage	Screen Voltage	Cathode Voltage	Cathode Current
(1) 12SA7 1st det. osc.	92.	92.	—	9.4 ma.
(2) 12SK7 I.F. Amp.	92.	92.	—	13.3 ma.
(3) 6C4 A.F. Amp.	15.	—	—	0.32 ma.
(4) 6AQ6 2nd Det.—AVC—Vh. Inv.	50.	—	—	0.18 ma.
(5) 35L6GT Output	121.	92.	5.8	31.7 ma.
(6) 35L6GT Output	121.	92.	5.8	31.7 ma.

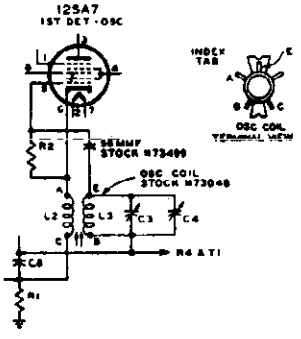

Oscillator coil 73048 is connected into the circuit of the RCA 77U as shown.

In some chassis capacitor C18 is 0.027 μf instead of 0.025 μf as shown on the schematic. In some instruments a substitute oscillator coil has been used. The original coil (70477) uses a capacitive winding (L4) for coupling the oscillator circuit to the oscillator grid (pin 5) of the 12SA7 tube. The substitute coil uses a 56-$\mu\mu$f ceramic capacitor for the same purpose. (L4 is not used.) The accompanying figure shows how this coil is connected into the circuit.

The following changes should be made in the parts list.

Delete:

73007 Condenser—

Add:

73007 Condenser — variable tuning condenser (C3, C4, C6, C7)

RCA 610V1, Ch. RC-610C; 610V2, Ch. RC-610

These models appear on *pages 19-56 through 19-60 of Rider's Volume XIX*. A small quantity of these receivers were shipped with the incorrect loop antennas. The incorrect loops contain approximately 14 turns instead of 17 turns. This reduced inductance causes low sensitivity and poor selectivity, particularly below 900 kc.

Complaint cases of poor sensitivity, poor selectivity, or interference in the form of local station(s) repeating at one or several places on the "A" band (except response at the image frequency) should have the loop checked as one possible cause.

The incorrect loop may peak at the high end of the "A" band but will not peak at lower frequencies. This may be checked by varying the oscillator coil inductance. The correct loop tracks normally across the band.

The stock number of the antenna terminal board is 72058. It was listed incorrectly as 70258.

RCA 710V2, Ch. RC-613A

These models appear on *pages 18-55 through 18-60 of Rider's Volume XVIII*. Resistor R15 in the cathode circuit of the type 6AU6 f-m driver stage has been changed from 68 ohms to 120 ohms. This change was made because certain 6AU6 tubes were found to draw grid current at the bias value produced by 68 ohms, which resulted in a decrease in f-m sensitivity.

Regal W800

This model is the same as Model 800 which appears on *page 16-1 of Rider's Volume XVI*. The socket layout for both models is shown in the accompanying diagram.

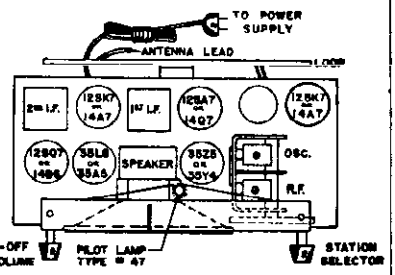

The socket layout of the Regal Models W800 and 800.

© John F. Rider

RCA 612V1, 612V3, 612V4, Ch. RK-121, RS-123

Models 612V1 and 612V3 appear on *pages 17-81 through 17-43 of Rider's Volume XVII*. Model 612V4 is the same except for the cabinet. Some of these receivers have developed a howl when operating on the f-m band. Howl of this nature is generally a result of vibration from the speaker being transmitted to some component, or series of components, in the oscillator circuit. This vibration causes the oscillator frequency to become modulated, resulting in a howl being emitted from the speaker.

The following are possible causes:

1. Loose elements in the oscillator tube.
2. Loose plates or unequal spacing of rotor and stator plates in the f-m oscillator section.
3. Capacitor C88 should be placed adjacent to the side wall of the r-f shelf and held firmly in place. This may be accomplished by melting wax against the capacitor and the chassis.
4. All oscillator, r-f, and ant. leads should be well separated and arranged to produce the least capacitance change if set breaks into vibration.

When searching for the cause of the trouble, an alignment tool having a high dielectric constant and without a metal tip can be used to probe in the circuit. It is important that the position of the wires and components be changed as little as possible during realignment. During such probing, the air column of the speaker in relation to the chassis must be as near as possible to normal operating position. Failure to maintain such relation may result in false indications of either excessive howl or no howl.

On the RK-121 chassis, starting with serial number 25,000, a 10-ohm carbon resistor has been added between C16 (100 $\mu\mu$f) and terminal number 1 of S4 Front. This resistor has been inserted to eliminate dead spots between 1400 and 1600 kc on the "A" band. This resistor should be added to any early model set developing dead spots, but make certain that the over-all lead length, including the resistor remains the same as before.

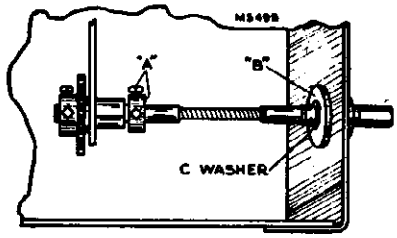

Fig. 1. The early production coupling shaft of the RCA 612V series.

The range switch coupling shaft on the early and late productions differ. To remove the early production coupling shaft, refer to Fig. 1 and the following directions. Loosen square head set screws "A" in collar of shaft, remove "C" washer from shaft at inside of bushing "B", push shaft through bushing to permit removal of "C" washer normally recessed inside bushing. Pull shaft through bushing to inside of chassis.

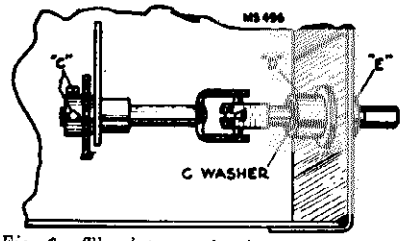

Fig. 2. The late production range switch coupling shaft of the RCA 612V series.

Refer to Fig. 2 for the late production range switch coupling shaft. Loosen square head set screws "C" in collar of gear. Remove nut "E" (on front apron of chassis) from bushing "D". Push shaft and bushing to the rear so that shaft and bushing are clear of the chassis apron. Flex the shaft and pull forward. To remove bushing from shaft, use procedure described for early type shaft.

The brown lead of the dial lamp for phono. operation is at present dressed to contact #3 of S-1 Front, then through the space between the switch rotor and through the bolt spacer. This lead should be dressed between the spacer and the shelf cradle. The bus wire from the "C" band antenna coil to contact #9 of S-1 Rear is to be dressed a distance of ¼ inch from the loop load coil antenna lead (yellow). The f-m antenna lead (yellow) is to be dressed between the switch spacer through the bolt and the switch rotor shaft, keeping clear of the shelf and cradle.

The changes indicated should be made in the parts list. The entire listing of Miscellaneous parts is given for convenience.

Add the following to the parts list:

72119 Escutcheon—Escutcheon only—less screen, window and marker strips—for blonde instruments.

Change 71868 Frame in the parts list to read

71868 Frame—Rollout carriage frame with brackets—less wheels.

The parts list for these models applies to Model 612V4 also except for the following miscellaneous parts:

73719 Back—Cabinet back—blonde—for sides—2 required

73720 Back—Cabinet back—blonde—for center

X1825 Cloth—Grille cloth—for 612V4 blonde

The RP-176A record changer is used.

STOCK No.	DESCRIPTION
	RADIO CHASSIS ASSEMBLIES RK-121
Add: 72986	Bushing—Threaded bushing for knob end of selector switch coupling shaft (late production).
72984	Plate—Connecting plate for selector switch coupling shafts (late production).
34761	Resistor—10 ohms, ½ watt (R54).
72982	Shaft—Selector switch coupling shaft—switch end (late production).
72983	Shaft—Selector switch coupling shaft—knob end—less threaded bushing (late production).
72951	Shield—Lead tube shield (for V3).
Delete: 71791	Cable—
Change in Stock No.: 45233	Capacitor—to 39396 Capacitor—(C16, C21, C83).
33789	Capacitor—(C60) to 33223 Capacitor—(C60).
32634	Cord—to 72987 Cord—
	AMPLIFIER ASSEMBLIES RS-123
Add: 72955	Capacitor—Electrolytic comprising 1 section of 30 mfd., 450 volts, 1 section of 50 mfd., 400 volts, and 1 section of 40 mfd., 25 volts (C1A, C1B, C1C).
Delete: 36599	Capacitor—
Change in Stock No.: 72396	Capacitor—to 71551 Capacitor—(C7).
	MISCELLANEOUS
71884	Antenna—Di-pole antenna
72999	Back—Cabinet back for 612V1—for center
72998	Back—Cabinet back for 612V1—sides (2 required)
72996	Back—Cabinet back for 612V3—for center
72379	Back—Cabinet back for 612V3—sides (2 required)
70140	Back—Cabinet back—mahogany—for sides (2 required)—for 612V4
70142	Back—Cabinet back—mahogany—for center—for 612V4
70161	Back—Cabinet back—walnut—for sides (2 required)—for 612V4
70143	Back—Cabinet back—walnut—for center—for 612V4
71868	Bottom—Bottom cover (pan) for rollout mechanism
36630	Bracket—Pilot lamp bracket
71874	Bushing—Bushing and washer for large knobs (4 required)
72999	Button—Plug button for cabinet assembly sides (2 required)
71884	Button—Push button
72967	Cable—Shielded audio cable complete with plugs
71883	Cable—4 wire moulded antenna lead-in cable
36604	Capacitor—Mica trimmer, on loop, 2-20 mmf. (C1)
X1617	Cloth—Grille cloth for 612V1—wal. or mahog. cabinets
X1624	Cloth—Grille cloth for 612V1—blonde cabinets
X1620	Cloth—Grille cloth—upper—for 612V3—wal. or mahog. cabinet
X1621	Cloth—Grille cloth—lower—for 612V3—wal. or mahog. cabinets
X1628	Cloth—Grille cloth—upper—for 612V3—blonde cabinet
X1629	Cloth—Grille cloth—lower—for 612V3—blonde cabinet
X1607	Cloth—Grille cloth for 612V4
71902	Decal—Trade mark decal (Victrola)
71910	Decal—Trade mark decal (RCA-Victor)
71870	Escutcheon—Escutcheon only less screen, window and marker strips for walnut instruments
71877	Escutcheon—Escutcheon only less screen, window and marker strips for mahogany instruments
71868	Frame—Mounting frame and bracket
71943	Grille—Metal grille—upper—for 612V3
71944	Grille—Metal grille—lower—for 612V3
70105	Grille—Metal grille for 612V4
72060	Grommet—Rubber grommet for mounting loop brackets—part of loop (2 required)
72701	Handle—Pull handle for rollout mechanism
73001	Hinge—Door hinge L.H. for 612V1 (2 required)
73002	Hinge—Door hinge R.H. for 612V1 (2 required)
71945	Hinge—Door hinge for 612V3—wal. or mahog. cabinets and 612V4 record storage compartment doors (4 required)
73004	Hinge—Door hinge for 612V3—blonde cabinet (4 required)
71784	Hinge—Drop door hinge for 612V1 and wal. or mahog. 612V3 cabinets (2 required)
73001	Hinge—Drop door hinge for 612V3 blonde cabinet (2 required)
73024	Hinge—Drop door hinge for 612V4 (2 required)
70107	Hinge—Speaker compartment door hinge L.H. for 612V4 (2 required)
70106	Hinge—Speaker compartment door hinge R.H. for 612V4 (2 required)
13103	Jewel—Pilot lamp cap
71883	Knob—Tone control knob for wal. or mahog. cabinets
72761	Knob—Tone control knob for blonde cabinet
71821	Knob—Volume control, power switch, selector switch or tuning knob for wal. or mahog. cabinets
72118	Knob—Volume control, power switch, selector switch or tuning knob for blonde cabinets
11705	Lamp—Pilot lamp
71862	Loop—Antenna loop complete (L1, L1S, C2)
71900	Marker—Call letter markers
72765	Nut—Speed nut to fasten transparent screen to escutcheon (2 required)
71870	Plate—Backing plate for transparent screen
71881	Plate—Call letter marker plate
72764	Plate—Backing plates (1 set) for pullout handle
36869	Plug—2 contact female plug for power cable
71867	Plug—6 contact female plug for power cable
33841	Plug—3 prong male plug for loop cable
71868	Plug—6 prong male plug for power cable
31048	Plug—Pin plug for audio cable (2 required)
71880	Pull—Door pull for 612V1 (2 required)
71946	Pull—Door pull for 612V3
73004	Pull—Door pull for 612V4
71881	Pull—Drop door pull for 612V1
71873	Retainer—Rubber retainer to mount record changer (2 required)
71878	Screen—Transparent screen
36822	Socket—3 contact female socket for loop cable
36074	Spring—Conical spring to mount record changer (4 required)
71867	Spring—Retaining spring for push button
36868	Spring—Retaining spring for knobs
71869	Spring—Braking spring for right rear wheel (612V1 and 612V3 early prod.)
71870	Spring—Braking spring for left rear wheel (612V1 and 612V3 early prod.)
71865	Spring—Spring to hold flexible cable from mechanism
71899	Stop—Rollout carriage stop consisting of disc, rubber sleeve and spacer
73099	Stop—Drop door fall supports metal stop for 612V4
70144	Stop—Stop for drop door for 612V4
72300	Stop—Stop for speaker compartment doors for 612V4
71882	Strike—Cabinet door strike and catch
71880	Strip—Backing strip for call letter marker plate
71886	Support—Drop door fall support—for 612V1 (2 required)
72999	Support—Drop door fall support—R.H.—for 612V3 wal. or mahog. cabinets
73000	Support—Drop door fall support—L.H.—for 612V3 wal. or mahog. cabinets
73002	Support—Drop door fall support—R.H.—for 612V3 blonde cabinet
73003	Support—Drop door fall support—L.H.—for 612V3 blonde cabinet
*72940	Support—Drop door fall support—L.H. for 612V4
*72939	Support—Drop door fall support—R.H. for 612V4
71872	Tire—Rubber tire for front rollout wheels
71871	Tire—Rubber tire for rear rollout wheels
*2917	Washer—"C" washer for rubber retainer (2 required)
71875	Washer—Spring washer for fastening front wheels and late production rear wheels
71887	Wheel—Front wheel and tire assembly (2 required)
72658	Wheel—Rear wheel and tire assembly (2 required)—late production only
71886	Wheel—Left rear wheel complete with braking mechanism, less braking spring #71870
71885	Wheel—Right rear wheel complete with braking mechanism, less braking spring #71869
71882	Window—Window for call letter markers

Parts list of the RCA 612V1, 612V3, 612V4

Sears 8070, Ch. 101.817-1A; 8070A, Ch. 101.817-2A

These Models are the same as Model 7070, appearing on *pages 17-2, 17-3, and 17-15 of Rider's Volume XVII*, except for the following changes. The appearance only of the parts have been changed in Ch. 101-817-1A.

In Ch. 101.817-2A, capacitor C17 has been changed in value from 0.05 μf to 0.01 μf. Resistor R8 has been changed in value from 100 ohms to 150 ohms. The second i-f transformer has been changed from capacitor tuning to slug tuning. The new parts number is R65374. The location of the trimmers is shown in the accompanying diagram.

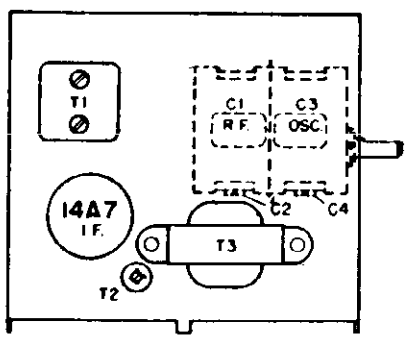

The trimmer locations of the Sears Chassis 101.817-1A and 101.817-2A.

Sears 8020, Chassis 132.841

This model appears on *pages 18-56 through 18-60 of Rider's Volume XVIII*. It has been discovered that the dial cord on some of these receivers binds. If the dial cord is strung as shown on *page 18-58*, continued turning of the tuning knob in a clockwise direction, after the pointer has reached the right-hand end of the dial, will cause the tuning shaft to turn in the cord and the cord will slide back on the shaft toward the chassis. Then, when the knob is turned in the counterclockwise direction, the cord will travel farther back on the shaft and have a tendency to come in contact with the chassis and bind on the shaft.

If the cord is wound from back to front on the tuning shaft, as shown in the accompanying figure, it will travel away from the chassis when the knob is turned in a counterclockwise direction and the binding will not occur.

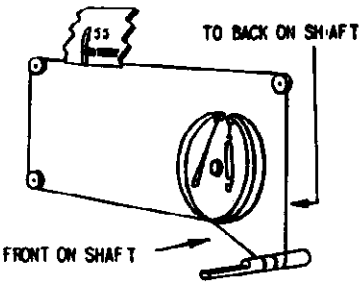

When the dial cord of the Sears 8020 is wound from back to front on the tuning shaft, the cord will not bind on the chassis.

If excessive hum is encountered, try disconnecting the low-voltage section of the electrolytic capacitor, part number N21744, which is the cathode bypass capacitor on the 50L6GT output tube. Substitute a separate 20-μf, 25-v. capacitor for this section.

Some of the original electrolytic capacitors had the sections wound in improper sequence, so there was capacitive coupling between the input high-voltage section and the low-voltage cathode bypass section. This condition would cause excessive hum in the receiver output. It is probable that this condition will be found only on the later production sets of this model.

Sears 8011, Ch. 132.840

This model is the same as Model 8010, Ch. 132.840, appearing on *page 19-26 of Rider's Manual Volume XIX*, except for the following changes. Model 8010 has a brown cabinet and knobs, while Model 8011 has an ivory cabinet and knobs. Parts which are different from the 8010 are as follows: N21092-1 Cabinet less front trim assembly N21204-3 Knob, control, volume and tuning.

Stewart-Warner A51T Series

These models are the same as Model A51T1, appearing on *pages 17-4 through 17-6 of Rider's Volume XVII*. The code listings for these models are:

Model	*Code*
A51T1	9020-A
A51T2	9020-B
A51T3	9020-C
A51T4	9020-D

On chassis which have the letters H or R stamped on the rear surface adjacent to the model numbers, the rotor of the gang tuning capacitor is grounded instead of being connected to the AVC line. Oscillator coil 505397 (see accompanying diagram) is used on chassis which are stamped with the letters "S", "H", or "R".

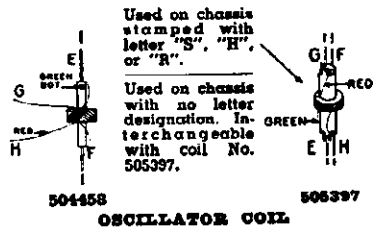

Oscillator coil for Stewart-Warner A51T series.

Regal W900

This model is the same as Model 900 which appears on *pages 16-2 and 16-3 of Rider's Volume XVI*. The socket layout and voltages for both models are shown in the accompanying diagram.

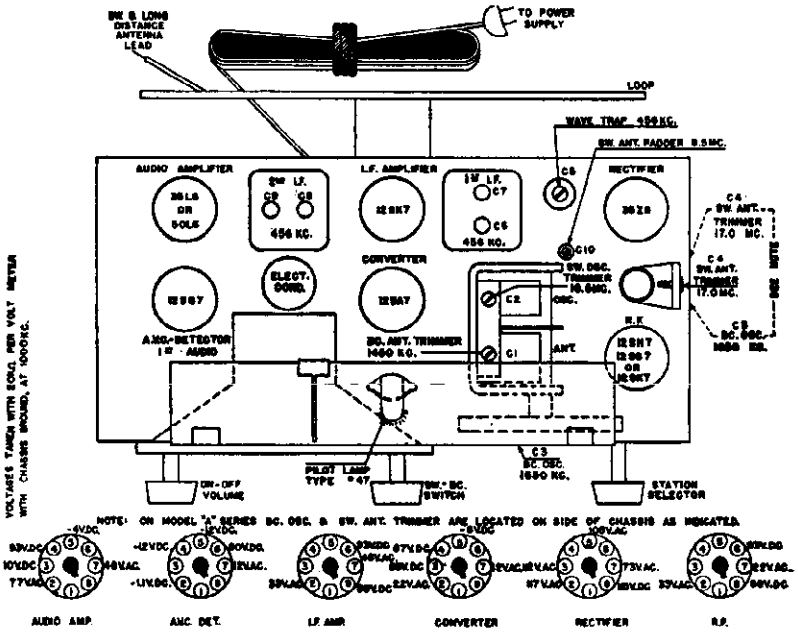

Tube layout, trimmer locations, and voltages of the Regal W900.

Sears 101.809 Series

These chassis are all the same as Model 7080, Ch. 101.809, appearing on *pages 16-1, 16-4, 16-5, and 16-8 of Rider's Volume XVI*, except for the following changes.

Models 8083, 8083A, Ch. 101.809-1A. Pushbuttons have been added. The record changers used in these models are all different. Resistor R5, 330,000 ohms, formerly across the phono pickup socket, has been removed. The dial drive hookup is as shown in the accompanying diagram.

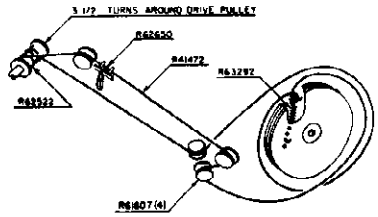

The dial drive hookup for the Sears Chassis 101.809-1A.

All resistors which were 1/3 watt are now ½ watt. All capacitors, except C23, C26, and C27, now have a voltage rating of 600 volts. A 6-by-9-inch p-m speaker (R62658) is used, requiring cone and voice coil R62659, and output transformer R62660.

Models 8084, 8084A, Ch. 101.809-1B. Same as Chassis 101.809-1A, except for the record changers.

Models 7080, 7080A, Ch. 101.809-2. Same as Chassis 101.809, except for a new type tone control circuit. A 0.001-μf. capacitor (C24) is connected from the plate (pin 2) of the 7C6 tube to the variable arm of the 2-megohm tone control (R16). The other end of this tone control is connected to the B-line. The parts layout for this chassis is shown in the accompanying diagram.

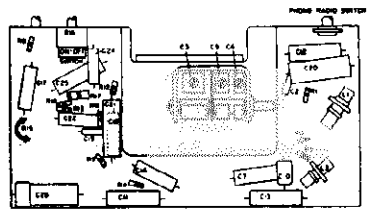

The parts layout for the Sears Chassis 101.809-2.

Models 8101, 8101A, 8101B, 8101C, 9101, Ch. 101.809-3C. These models are the same as chassis 101.809-2 except for differences in the cabinets, and the fact that different record changers are used.

Stewart-Warner A41T1, Code 9032-A

This is the same as Model A41T1 appearing on *pages 17-1 through 17-3 of Rider's Manual Volume XVII*, except for the following change. Resistor 40, formerly 270 ohms, has been changed to 560 ohms to minimize "B" supply drain. Chassis which incorporate this change have a letter "S" stamped on the rear surface. The new resistor is described as follows:

502127 Resistor—carbon—560 ohms, ¼ w.

Stewart-Warner 61T Series; 9022-T

These models are the same as Model 61T16, appearing on *pages 15-7 and 15-8 of Rider's Volume XV*, except for some changes. The code listings for these models are:

Model	*Code*
61T16	9022-A
61T16W	9022-AW
61T26	9022-B

A 0.01-μf capacitor (45) has been added from the black lead (center tap) of the loop antenna to ground. A 0.05-μf capacitor (46) has been connected from the cathode of the 12SF7 tube to the AVC line. A 390-ohm resistor (44) has been connected in shunt with the pilot lamp.

The following should be added to the parts list:

Diagram No.	*Part No.*	*Description*
45	502151	Capacitor—0.01 μf, 400 v.
46	502153	Capacitor—0.05 μf, 200 v.
44	502140	Resistor—carbon 390 ohms, ¼ w.
37	504756	Transf.—output, for speaker with prefix Y.
	504758	Transf.—output, for speaker with prefix Z.
	504781	Transf.—output, for speaker with prefix C.
42	502208	Speaker—p.m., dynamic, 5-inch
	502298	Speaker—p.m., dynamic, 5-inch
41	504757	Cone and voice coil, spkr. with prefix Y.
	504759	Cone and voice coil, spkr. with prefix Z.
	504782	Cone and voice coil, spkr. with prefix C.
	502502	Back for cabinet, Model 9022T
	500385	Cabinet—ivory, Model 61T16W
	502476	Cabinet—ivory, Model 9022T
	502506	Clamp—dial scale mtg., Model 9022T
	502553	Knob—ivory, Model 61T16W
	502564	Knob—ivory, Model 9022-T

Stewart-Warner A61C and A61CR Series

The following models are the same as Model A61CR1, appearing on *pages 17-3 and 17-7 and 17-8 of Rider's Volume XVII*, except for the record changers and cabinets. The parts list for these models appears on *page 17-3*. This information was inadvertently left out of the index and should be inserted.

The parts list appearing on *page 17-3* should be amended to include the following:

Model numbers and code numbers:

Model No.	*Code No.*
A61C20	9034-P
A61CR1	9034-C
A61CR1LP	9034-CLPW
A61CR2	9034-D
A61CR2LP	9034-DLP
A61CR3	9034-E
A61CR4	9034-F
A61CR4X	9034-FX
A61CR4LP	9034-FLP
A61CR4LPX	9034-FLPX
A61CR5	9034-G
A61CR6	9034-H
A61CR7	9034-J
A61CR7X	9034-JX
A61CR7LPW	9034-JLPW
A61CR7LPWX	9034-JLPWX
A61CR8	9034-K
A61CR9	9034-L
A61CR10	9034-M
A61CR11	9034-N
A61CR12	9034-GR
A61CR12LP	9034-GRLP
A61CR13	9034-GL
A61CR13LP	9034-GLLP
A61CR14	9034-GM
A61CR14LP	9034-GMLP
A61CR15	9034-GT
A61CR15LP	9034-GTLP
AC1CR16	9034-FH
A61CR16LP	9034-FHLP
A61CR17	9034-CM
A61CR17LP	9034-CMLP
A61CR21	9034-R

The phonograph connections for some of these models are shown in the accompanying diagram.

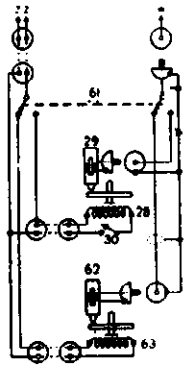

PHONO CONNECTIONS FOR MODELS A61CR4X, A61CR4LPX, A61CR7X & A61CR7LPWX.

PART NO.	DESCRIPTION
	OTHER ELECTRICAL PARTS
28	505273 Motor for type "VM"-505339 record changer, 115 volt 60 cycle
	505758 Motor for type "A"-505650 record changer 115 volt 60 cycle
	507403 Motor for type "W"-506910 record changer 115 volt 60 cycle
	507409 Motor—for type "VM"-506911 record changer 115 volt 60 cycle
29	505100 Crystal cartridge for standard records (used on "A"-505650 & "VM"-505339 record changers)
	507400 Crystal cartridge for standard and "LP" records (used on "W"-506910 record changer)
	507405 Crystal cartridge for standard and "LP" records (used on "VM"-506911 record changer)
30	505269 Switch "ON-OFF" for type "VM"-505339 & "VM"-506911 record record changers
	505759 Switch—"ON-OFF" for type "A"-505650 record changer
	507402 Switch—"ON-OFF" for type "W"-506910 record changer
60	505342 Speaker P.M. dynamic (8 inch) (used on all models)
	506657 Speaker P.M. dynamic (5 inch) This is an additional speaker used only on models A61CR5, A61CR6, A61CR7, A61CR7X, A61CR7LPW, A61CR7LPWX, A61CR12, A61CR12LP, A61CR13, A61CR13LP, A61CR14, A61CR14LP, A61CR15, A61CR15LP, A61CR16, A61CR16LP, A61CR17 & A61CR17LP
61	507562 Switch—"ON-OFF" for type "R"-507556 record changer
62	507746 Crystal cartridge (used on "R"-507556 record changer)
63	507747 Motor—for type "R"-507556 record changer 115 volt 60 cycle
	MISCELLANEOUS PARTS
	180832 Clip—mts. escutcheon
	505465 Door (less hardware) for Models A61CR1 & A61CR1LP
	506412 Door—left hand (less hardware) for Model A61CR5
	506413 Door—right hand (less hardware) for Model A61CR5
	506414 Door—left hand (less hardware) for Models A61CR6, A61CR7, A61CR7X, A61CR7LPW & A61CR7LPWX
	506415 Door—right hand (less hardware) for Models A61CR6, A61CR7, A61CR7X, A61CR7LPW & A61CR7LPWX
	506075 Door (less hardware) for Models A61CR17 & A61CR17LP
	507184 Door—left hand (less hardware) for Models A61CR12 & A61CR12LP
	507185 Door—left hand (less hardware) for Models A61CR13 & A61CR13LP
	507196 Door—left hand (less hardware) for Models A61CR14 & A61CR14LP
	507187 Door—left hand (less hardware) for Models A61CR15 & A61CR15LP
	507198 Door—right hand (less hardware) for Models A61CR12 & A61CR12LP
	507189 Door—right hand (less hardware) for Models A61CR13 & A61CR13LP
	507190 Door—right hand (less hardware) for Models A61CR14 & A61CR14LP
	507191 Door—right hand (less hardware) for Models A61CR15 & A61CR15LP
	505498 Drawer—record changer; for Model A61CR3
	507480 Drawer—record changer; for Model A61CR21
	505666 Emblem, plastic
	505393 Escutcheon—dial
	505466 Handle—door; for Models A61CR1 & A61CR1LP
	506077 Handle—door; for Models A61CR17 & A61CR17LP
	506416 Handle—door; for Models A61CR5, A61CR12, A61CR12LP, A61CR13, A61CR13LP, A61CR14, A61CR14LP, A61CR15 & A61CR15LP
	506417 Handle—door; for Models A61CR6, A61CR7 A61CR7X, A61CR7LPW & A61CR7LPWX
	505486 Handle—drawer; for Model A61CR3
	506265 Handle for Models A61CR8, A61CR9 & A61CR10
	507491 Handle—drawer; for Model A61CR21
	505467 Hinge—door (supplied in pairs) for Models A61CR1 & A61CR1LP
	506076 Hinge—door (supplied in pairs) for Models A61CR17 & A61CR17LP
	506421 Hinge—door (supplied in pairs) for Models A61CR5, A61CR6, A61CR7, A61CR7X, A61CR7LPW, A61CR7LPWX, A61CR12, A61CR12LP, A61CR13, A61CR13LP, A61CR14, A61CR14LP, A61CR15 & A61CR15LP

PART NO.	DESCRIPTION
	MISCELLANEOUS PARTS (Cont.)
	505457 Hinge—lid (supplied in pairs) for Models A61CR2, A61CR2LP, A61CR5, A61CR6, A61CR7, A61CR7X, A61CR7LPW, A61CR7LPWX, A61CR8, A61CR9, A61CR10, A61CR11, A61CR12, A61CR12LP, A61CR13, A61CR13LP, A61CR14, A61CR14LP, A61CR15, A61CR15LP, A61CR16 & A61CR16LP
	505464 Hinge—lid (supplied in pairs) for Models A61CR1, A61CR1LP, A61CR4, A61CR4X, A61CR4LP, A61CR4LPX, A61CR17 & A61CR17LP
	505344 Knob—tuning (clear plastic)
	505345 Knob—"VOLUME" (clear plastic)
	505346 Knob—"RADIO-PHONO" (clear plastic)
	506262 Knob—tuning (black plastic)
	506263 Knob—"VOLUME" (black plastic)
	506264 Knob—"RADIO-PHONO" (black plastic)
	505455 Lid (less hardware) for Models A61CR2 & A61CR2LP
	505462 Lid (less hardware) for Models A61CR1 & A61CR1LP
	505669 Lid (less hardware) for Models A61CR4, A61CR4X, A61CR4LP, A61CR4LPX, A61CR17 & A61CR17LP
	506160 Lid (less hardware) for Model A61CR11
	506268 Lid (less hardware) for Model A61CR8
	506269 Lid (less hardware) for Model A61CR9
	506270 Lid less hardware) for Model A61CR10
	506418 Lid (less hardware) for Model A61CR5
	506419 Lid (less hardware) for Models A61CR6, A61CR7, A61CR7X, A61CR7LPW & A61CR7LPWX
	507179 Lid (less hardware) for Models A61CR16 & A61CR16LP
	507180 Lid (less hardware) for Models A61CR12 & A61CR12LP
	507181 Lid (less hardware) for Models A61CR13 & A61CR13LP
	507182 Lid (less hardware) for Models A61CR14 & A61CR14LP
	507183 Lid (less hardware) for Models A61CR15 & A61CR15LP
	505456 Lid support for Models A61CR2, A61CR2LP, A61CR8, A61CR9, A61CR10, A61CR11, A61CR16 & A61CR16LP
	505463 Lid support for Models A61CR1, A61CR1LP, A61CR4, A61CR4X, A61CR4LP & A61CR4LPX
	506074 Lid support for Models A61CR17 & A61CR17LP
	506422 Lid support for Models A61CR5, A61CR6 A61CR7, A61CR7LPA, A61CR12, A61CR12LP, A61CR13, A61CR13LP, A61CR14, A61CR14LP, A61CR15 & A61CR15LP
	505469 Light diffusing strip
	505717 Needle—phonograph; for standard record (used on "A"-505650, & "VM"-505339 record changers)
	507401 Needle—phonograph; for standard and "LP" records (used on "W"-506910 record changer)
	507406 Needle—phonograph; for standard and "LP" records (used on "VM"-506911 record changer)
	507748 Needle—phonograph (used on "R"-507556 record changer)
	507749 Nut—retains needle (used on "R"-507556 record changer)
	500866 Plug—phono. pick-up cable
	501031 Plug for phono. motor cable
	505686 Pointer
	505497 Rail for drawer; Model A61CR3 (supplied in sets)
	506234 Rail for drawer; Model A61CR21 (supplied in sets)
	119087 Ring for dial cord
	113463 Rubber pad for mtg. chassis
	79905 Screw—#8x1½" for loop mounting
	78993 Screw—#8x1¼" for mtg. chassis
	505716 Screw—set for phono needle (used on "VM"-505339 & "A"-505650 record changers)
	507404 Screw—set for phono. needle (used on "W"-506910 record changer)
	503588 Shaft & Drum for dial
	505313 Shaft—tuning
	505653 Shield for phono. pick-up cable Connector
	505722 Shield—tight
	116690 Socket—octal base
	160039 Socket—phono. plug
	160392 Socket—octal (rectifier)
	505307 Socket & phono. motor cable
	505459 Socket—dial lamp
	505654 Socket for phono. pick-up cable Connector
	505151 Spring—tension
	506276 Stop for door; Models A61CR17 & A61CR17LP
	111456 Washer—spring washer for tuning shaft

The parts list of the Stewart Warner A61C and A61CR series.

©John F. Rider

Tele-Tone Chassis A

Models 123, 125, 127, and 131 are the same as Model 100, Chassis A, which appears on *page 15-2 of Rider's Volume XV*.

Tele-Tone Chassis D

Models 110, 119, 124, 126, and 132 are the same as Model 117, Chassis D, appearing in *Rider's Volume XV, page 15-4*.

Tele-Tone Chassis U

Models 172 and 176 are the same as Model 156, Chassis U, which appears on *page 17-4 of Rider's Volume XVII*.

Tele-Tone Chassis W

Models 154, 155, 173, and 177 are the same as Model 152, Chassis W, which appears on *pages 17-2 and 17-3 of Rider's Volume XVII*.

Templetone H-127

This model is the same as Model G-725, appearing on *pages 17-5 through 17-6 of Rider's Volume XVII*.

United Motors 982421

This model appears on *pages 19-44 through 19-49 of Rider's Manual Volume XIX*. The following service parts have been changed after serial #1-38500.

Illus. No.	*Production Part No.*	*Service Part No.*	*Description*
6	1219508	1219508	1st i-f coil assy.
7	1219509	1219509	2nd i-f coil assy.
25	7240724	M908	Electrolytic
25A			20 μf, 25 v.
25B			20 μf, 400 v.
25C			20 μf, 400 v.
28	7237836	R202	0.002 μf, 600 v. tubular
48	1213217	A101	100 ohms, ½ w.
	1218107	5233	6SR7
	1213793	5241	6V6GT
	7237751	5229	6SK7
	7237752	5222	6SA7

Watterson RC-4581

This model is the same as Model 4581 appearing on *page 15-1 of Rider's Volume XV*.

Western Auto D2718 Series B, Serial No. 137000 Up

This model is the same as Model D2718, appearing on *pages 17-20 through 17-23 of Rider's Volume XVII*, except for the following changes. Capacitor C30, formerly connected from the junction of R-16, C-29, and pin 8 of the 12SQ7 tube to pin 2 of the 35Z5GT rectifier tube, is connected from the same junction to the center tap (pin 3) of the filament of the 35Z5GT rectifier tube.

The part number of capacitor C16 and C20 should be changed from 47X446 to 47X466. The value remains the same. Part number 17X96, celluloid crystal, should be added to the parts list.

Western Auto D4832-B

This model appears on *pages 18-69 through 18-72 of Rider's Volume XVIII*. The "B" chassis of this model differ from the "A" chassis by a change in the value of resistor R-4 from 220,000 ohms to 10,000 ohms.

The new part number and description are as follows:

R-4 B-85103 10,000 ohms, 0.5 w.

United Motors R-705

This model appears on *pages 17-1 through 17-6 of Rider's Volume XVII*. This receiver may be installed in the 1949 Fords by using parts from the adapter parts package number 4428. It is necessary to use the Delco universal speaker, part number 6111—6" × 9" eliptical speaker, in place of the speaker supplied with the radio set. This speaker should be returned to your stock under part number 6104.

The parts that are to be used from adapter package 4428, are shown in the following operations.

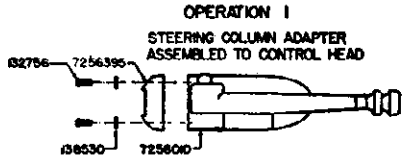

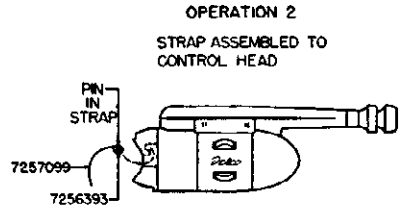

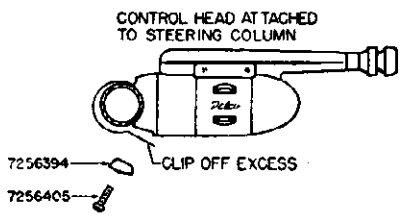

OPERATION 4: Remove the tips from speaker cable and solder ends to 6" × 9" speaker terminals.

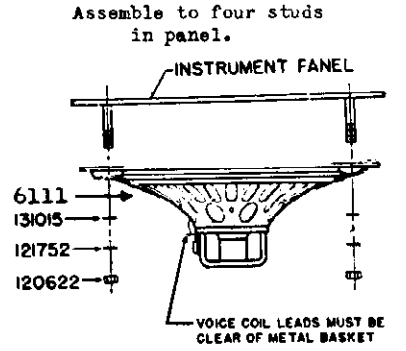

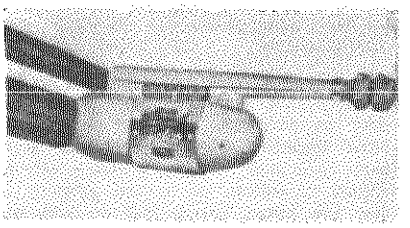

The various operations necessary to install United Motors Model R-705 in the 1949 Fords, as well as the assembled control head are illustrated.

Westinghouse H-125, H-126, H-127

Models H-125 and H-126 appear in *Rider's Volume XV, pages 15-8 through 15-10*. Several changes were made in the chassis of these two models in late production. A 35L6GT output tube replaces the 35A5. The electrical characteristics of the tubes are similar except for a difference in tube bases and connections. An isolating network consisting of a 470-ohm resistor (44) and a 0.02-μf capacitor (14) has been inserted in the plate and screen voltage supply line for the r-f and converter stages. In the circuit, the rotor plates of the tuning and trimmer capacitors are now connected directly to chassis ground rather than to the AVC line.

Model H-127 is the same as the previous models with a burgundy and gold cabinet. The following items should be added to the parts lists for these models:

14	RCP10W2203A	Capacitor, 0.02 μf
44	RC20AE471M	Resistor, 470 ohms 0.5 watt
	V-3711-2	Case Assembly, center (H-126 and H-127)
	V-3991	Cover, left hand (H-127)
	V-3992	Cover, right hand (H-127)
	V-3498-2	Handle Assembly (H-127)
	V-3481-2	Knob (H-127)
	V-3333-2	Medallion (H-127)
	V-3455-2	Dial (H-127)

Westinghouse H-164, H-166, H-166A, H-167

These models appear on *pages 18-12 through 18-19 of Rider's Volume XVIII*.

To reduce hum in later production of these models, a de-coupling network was inserted in the plate circuit of the 6AT6 a-m detector, avc and a-f amplifier tube. This network consists of a 100,000-ohm ½ watt resistor (RC20AE104K) and a 0.1 μf 400 volt resonant type capacitor (V-5442-1). The resistor is inserted between the plate load resistor (R11) and the B plus line, and the capacitor is connected from the junction of R11 and the new resistor to ground.

Westinghouse H-183, H-183A

These models appear on *pages 19-15 through 19-17 of Rider's Manual Volume XIX*. An error exists in the schematic diagram. The value of R9 in the converter circuit should be 3,300 ohms instead of 300 ohms.

The position of C20 in the circuit has been changed. On some chassis this capacitor was connected across the primary of the output transformer as shown on the schematic diagram. In later production, the capacitor is connected from the plates to the cathodes of the parallel 25L6GT output tubes.

Westinghouse H-186, H-187

These models appear on *pages 18-26 through 18-30 of Rider's Volume XVIII*.

To reduce hum in later production of these models, a de-coupling network was inserted in the plate circuit of the 6AT6 AM detector, AVC and A-F amplifier tube. This network consists of a 100,000 ohm ½ watt resistor (RC20AE104K) and a 0.05 μf 400 volt capacitor (RCP10W4503A). The resistor is inserted between the plate load resistor (R13) and the B plus line, and the capacitor is connected from the junction of R13 and the new resistor to ground.

©John F. Rider

Westinghouse H-202, H-204

These models appear on *pages 19-24 through 19-28 of Rider's Manual Volume XIX*. The schematic diagram shows C12 and R17 in series between the a-m antenna terminal and the top of L17. R17 should connect to the bottom of L17 rather than to the top of L17.

Westinghouse H-188, Ch. V-2133

This model appears on *pages 19-18 and 19-19 of Rider's Volume XIX*. Short wave interference may be cured by replacing the 0.05-μf resonant capacitor (C7) with a 0.1-μf standard paper capacitor of 200 volts or higher rating.

The 220,000-ohm resistor, R11, which was previously connected between the common negative line and the chassis, is not being used on late chassis.

The switch, SW1, is incorrectly shown on the schematic diagram and parts list as a D.P.S.T. switch. Actually, it is a S.P.S.T. switch, and it interrupts only one side of the a-c line, the side which connects to the common negative line.

In later production, a V-6199-2 2nd i-f transformer was used in place of the V-5686 2nd i-f transformer listed. Although the new transformer is smaller than the original one, it is directly interchangeable through the use of a V-5426 mounting clip. The new transformer is slug-tuned and has one adjustment hole in the top of the can and one in the bottom of the can. The terminals are marked by numbers which are equivalent to the colors on the old transformer as follows: 1 equals green, 2 equals white, 3 equals blue, and 4 equals red. For replacement purposes, order the V-6199-2 2nd i-f transformer and V-5426 mounting clip.

Some chassis may use a V-5686 i-f transformer in place of the V-5685 1st i-f transformer; however, the V-5685 transformer as listed in the parts list should be ordered for replacement of the 1st i-f.

The following items should be added to the parts list:

Part No.	*Description*
V-6199-2	Transformer, 2nd i-f, (L6, L7, C19, C20)
V-5426	Clip, i-f mounting
V-1160-2	Cabinet, ivory
V-5778-2	Baffle and grille cloth assembly for ivory cabinet
V-5779-2	Grille, for ivory or black cabinet

Note: The V-1160-1 cabinet listed in the parts list is a black cabinet, and the V-5778-1 baffle and grille cloth assembly is for use with the black cabinet.

Westinghouse H-190, H-191, H-191A

These models appear on *pages 19-20 through 19-23 of Rider's Manual Volume XIX*. In later production, the cathode resistor, R3, for the 6BA6 1st i-f amplifier was removed and the cathode connected directly to ground. In addition, a 0.0022-μf mica capacitor (RCM30B222M) was connected across the 6BA6 2nd i-f amplifier cathode resistor, R4.

On some chassis, V-5596 "HI-KAP" capacitors are substituted for the following capacitors:

V-5040-15 (C7, C8, C9, C10, C11)
V-5040-11 (C19, C20, C21).

In the parts list, the part number of "Pull, door, phono (H-191 and H-191A)" should be changed to V-5877-1 and the part number of "Pull, door, record compartment (H-191 and H-191A)" should be changed to V-5877-2. These part numbers were reversed. Also, the part number of "Hinge, L.H." should be changed to V-6603-1, and the part number of "Hinge, R.H." should be changed to V-6603-2.

Westinghouse H-204A

This model appears on *pages 19-24 through 19-28 of Rider's Manual Volume XIX*. On some chassis, V-5595 "HI-KAP" capacitors are substituted for V-5040-13 (C51, C52, C53, C54, C55, C56, C57) capacitors. The substitution was made for convenience in production, and the receiver operation is not affected.

Westinghouse H-210, H-211; Ch. V-2144, V-2144-1

These models appear on *pages 19-33 through 19-35 of Rider's Volume XIX*. If the dial pointer has a tendency to bind, lubricate the two dial pulleys with record changer lubricant and move the dial cord tension spring to another hole in the drum to increase the tension.

If the dial pointer rattles, glue a piece of bumper material (cork and rubber composition) 1/8" thick and about ½" square between the right-hand pulley rivet on the dial background and the front of the chassis.

In later production models, the resistance of the 12BA6 i-f amplifier cathode resistor, R3, was changed to 668 ohms. The part number of the new resistor is RC20AD680J. In addition, the resistor, R12, in the lead from pin 5 of the 35W4 was deleted from the circuit, and a direct connection was made in lieu of the resistor.

The tuning shafts used in later production have a wider groove for the dial cord. With these shafts, there are 3¼ turns of dial cord around the shaft rather than 2¼ turns as indicated on the dial-drive drawing.

Zenith S-11468

Model S-11468 may be found in the Record Changer section of *Rider's Volume XV, pages RCD.CH. 15-1 through RCD. CH. 15-9*.

The following instructions deal with repairing erratic landing of the needle of Model S-11468. In the first production of this non-intermixer record changer, a neoprene cork-tipped lift pin, Part No. S-13056, was used to stabilize the set down or landing of the needle on the run-in groove of the record. The weight of the tone arm and the friction plate, riding on the neoprene tip of the lift pin was relied on to provide effective braking action. Grease or oil on the neoprene tip of the lift pin will cause erratic landing of the tone arm on the record. To remove the oil or grease, clean the pin tip and friction plate with carbon tetrachloride and roughen with fine sandpaper.

Later production S-11468 changers have a spring type brake on the tone arm shaft and use an all metal lift pin, Part No. S-13086. Erratic landing, where the arm swings sharply to the center of the record or beyond, may be caused by an incorrect locating bushing. Replace with a 94-415 bushing.

If the tone arm skips grooves and repeats, the vertical hinge on the tone arm may be too tight, causing the arm to hang slightly. This prevents the needle from exerting enough pressure on the record to follow the record grooves. To free the hinge, use a pair of long nose pliers and bend the horizontal spring "U" bracket until it pivots freely, Be certain that the connecting lead to the crystal cartridge is dressed so that it does not interfere with either the vertical or horizontal movement of the tone arm. *This is important.*

Excessive center hole wear on records is caused by a sharp edge or burrs on the spindle shelf. The edge of the record shelf must be perfectly smooth and slightly rounded. Check the edge, and if sharp, smooth out with fine sandpaper

Zenith 5DO and 5RO Series, Chassis 5C01, 5C02, and 5C04

These models appear on *pages 15-8 and 15-9 of Rider's Volume XV*.

Alternate tubes are used in the 5C01 chassis. A single chassis may contain octal, lock-in, and miniature button tubes. The alternate lineups are as follows.

Original	*Alternate*	*Alternate*
12SA7GT	12BE6	14Q7
35Z5GT	35W4	
12SK7	12BA6	
12SQ7	12AT6	
50L6GT	50B5	

If the oscillator should shift, replace the 220-ohm oscillator coupling resistor (R8) with a 1000-ohm resistor. When the oscillator drops out at the low end of the band, remove the 10,000-ohm grid leak resistor (R1) from the common return (B—) and connect it instead to the cathode of the converter. If audio oscillation occurs in the early model, disconnect the 0.0005-μf capacitor (C13) from the common return and connect it to the cathode of the 50L6GT output tube, as shown in the late model schematic on *page 15-8*. Remove the 250-$\mu\mu$f capacitor (C20) that is connected from the plate to the cathode of the 50L6GT output tube. When hum and microphonics appear, check for a grounded tuning capacitor frame to the cabinet ventilator plate.

The letter "V" after a chassis number indicates that an aluminum chassis is used

Zenith Chassis 6C05, 6D0 Series

This chassis appears in *Rider's Volume XV, pages 15-2, 15-28, and 15-29*.

There will be variations in the tube line-up for different 6C05 chassis. A single chassis may contain octal, lock-in, and miniature button tubes. If an original tube is replaced with an alternate, the socket must also be replaced.

Original	*Alternate*	*Alternate*
12SJ7GT		
12SA7GT	12BE6	14Q7
12BA6		
12SQ7GT	12AT6	
35L6GT		
35Z5GT	35W5	

If the oscillator shifts, replace R3 (220 ohms) with a 1,000-ohm resistor.

If the oscillator drops out at the low end of the band, disconnect R1 (10,000 ohms) from the negative return and connect to the cathode of the converter tube.

For audio oscillation, disconnect C14 from the negative return and connect to the cathode of the 35L6GT. Take out C21 (connected from the plate to cathode of the 35L6GT).

If there is oscillation at 910 kc, change C5 (negative return to chassis) from 0.05 to 0.1 μf.

Check for grounded tuning capacitor frame in case of oscillation, hum, and poor sensitivity. Correct by inserting cork or rubber pad between rear capacitor frame and chassis. Cement in place.

The letter "V" as in Chassis number 6C05V, indicates that an aluminum chassis is used.

©John F. Rider

Zenith 4G800 Chassis 4E41

This model appears in *Volume XVII of Rider's Manuals, pages 17-1 and 17-2.* The On-Off switch #85-433 does not completely break contact on some receivers when the lid is closed, causing battery drain. To correct this condition, saw one plastic switch knob 46-736 into 1/16" lengths and place a length on the switch shaft, and then replace the knob. This will force the switch down far enough when the lid is closed to break contact and disconnect the batteries.

In some cases the calibration pointer touches the metal front of the cabinet, thus putting the gang at an a-c potential and causing a hum. To correct this condition place a fibre washer #93-323 between the pointer and the metal dial front. This fibre washer between the metal front panel and the dial pointer, completely prevents this "shorting" condition.

In very rare cases, when hum is encountered and cannot be corrected in any other manner, changing the 1S5 tube is suggested.

On later production runs the 3Q4 tube was replaced with a 3V4 tube. The circuit remains the same in this case. However, the wiring to the tube base has been altered. The 3Q4 is not interchangeable with the 3V4 because of socket connections.

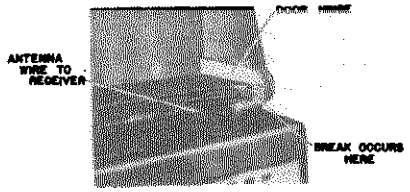

Enough extra lead length should be left when replacing the wavemagnet lead on the Zenith 4G800 so that a break does not occur at the point indicated.

In some cases when the front lid of the receiver is open, the receiver will cut in and out or sometimes be entirely dead. The wire from the wavemagnet to the front door hinge may break at the hinge connection. To correct this condition, remove the handle and resolder these leads, being quite certain that solder is not allowed to run back on the antenna lead and that enough extra antenna lead is allowed for flexing to prevent breakage when the door is open as illustrated in the accompanying diagram.

Zenith 6G801, Chassis 6E40

This model appears in *Rider's Volume XVIII, pages 18-7, 18-8, and 18-10.* In some cases when microphonics are encountered they can be eliminated by replacing one or more of the tubes. The offending tube can be located by turning the set on with the volume advanced and the set tuned to an off-station position. Then gently tap each tube, the one emitting the loudest "ping" is the defective item.

Zenith 8H023, 8H034, Chassis 8C01

These models appear on *pages 15-71 to 15-74 of Rider's Volume XV.* The rushing noise that occurs when the volume control is turned to minimum is caused by a poor connection from the grid element to the grid cap of the 6S8GT tube. A hot iron and a little flux on the grid cap will remove the high-resistance solder joint.

If the f-m oscillator drifts, check for a red dot on the oscillator tuning-slug wire. If the wire is unmarked, replace with one which has a red dot. If the receiver flutters on f.m., this may be cured by installing a 22-1635, 20-μf, 150-V capacitor and two 1/4-watt resistors, 63-583, 1000 ohms, and 63-600, 2.2 Megohms, as indicated in the accompanying diagram.

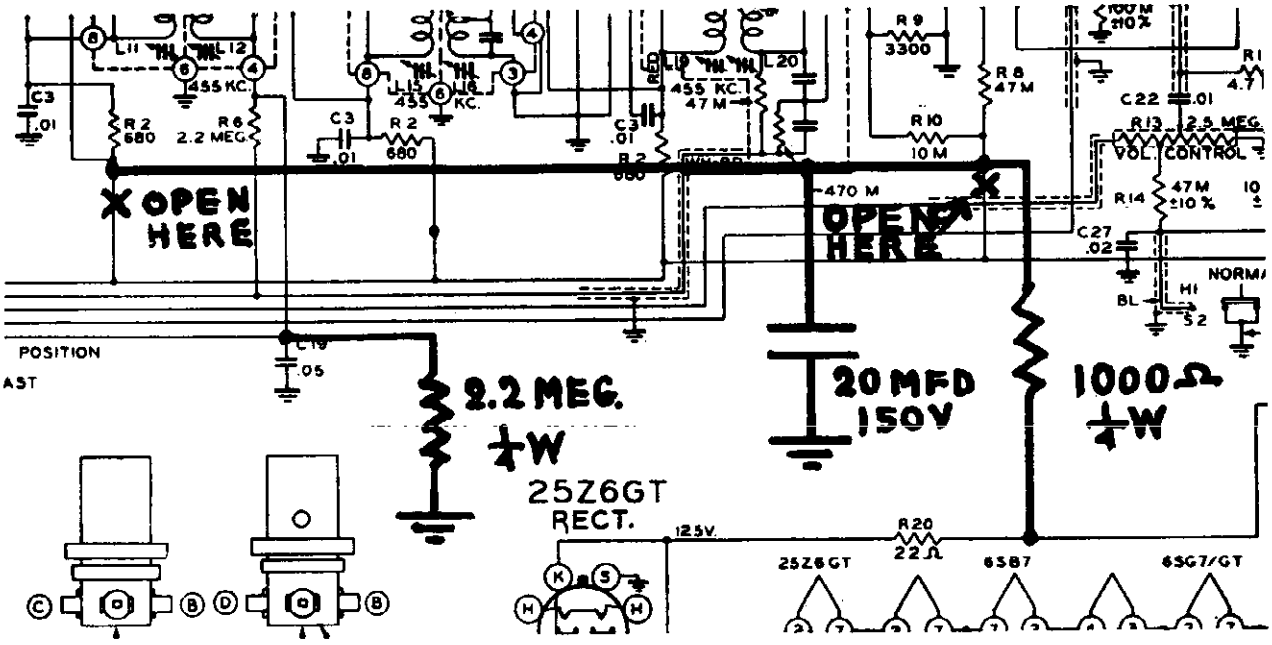

Drift in the f-m oscillator of the Zenith 8H023 may be corrected by making the changes indicated.

©John F. Rider

Zenith 9H881, 9H882, 9H885, 9H888, Ch. 9E21

These models appear on *pages 19-22 through 19-29,30 of Rider's Volume XIX.* If capacitor C-4, 0.05 μf, in series with the wavemagnet is open, the signals will be weak and the addition of an external antenna will not appreciably improve the signal strength. The replacement of this capacitor with a new 0.05 μf capacitor usually clears up the trouble.

If the phonograph is dead, check resistor R-14, 10,000 ohms, ½ watt, for intermittent operation. Due to movement of the r-f shelf when the band switch is operated, this resistor sometimes becomes intermittent, thus opening the phono circuit.

In most cases when aligning these models, it is not necessary to change or make any alterations in the i-f or discriminator trimmers. These trimmers are quite stable, and the only change recommended in alignment is that of the r-f section.

Be very sure to dress the tone control wires away from the pulley and dial cord. If these are not dressed away, binding and dial slipping will result.

If static is present when tuning in a station, check and see if the silver foil on the paper tube shield is tightly wrapped on the cardboard form. Sometimes this foil unwraps from the cardboard form and lies against the gang plates, creating static.

Zenith 6R886Z, Chassis 6E02Z

Model 6R886Z is the same as Model 6R886 which appears in *Rider's Manual Volume XVII, pages 17-16 and 17-17,* except that a tone control has been added, as illustrated in the accompanying diagram.

The following parts were added:

S-14667	Dial pointer and pulley assy.
S-14670	Tone control brkt. and lug assy.
12-1490	Cover plate support
22-827	0.1 μf 200 v.
46-688	Tone control knob
57-1398	Escutcheon
63-1653	Tone control
78-793	Socket-octal tube
85-438	Phono-Radio switch
125-66	Rubber grommet
166-41	Rubber bumper
188-34	Retaining ring.

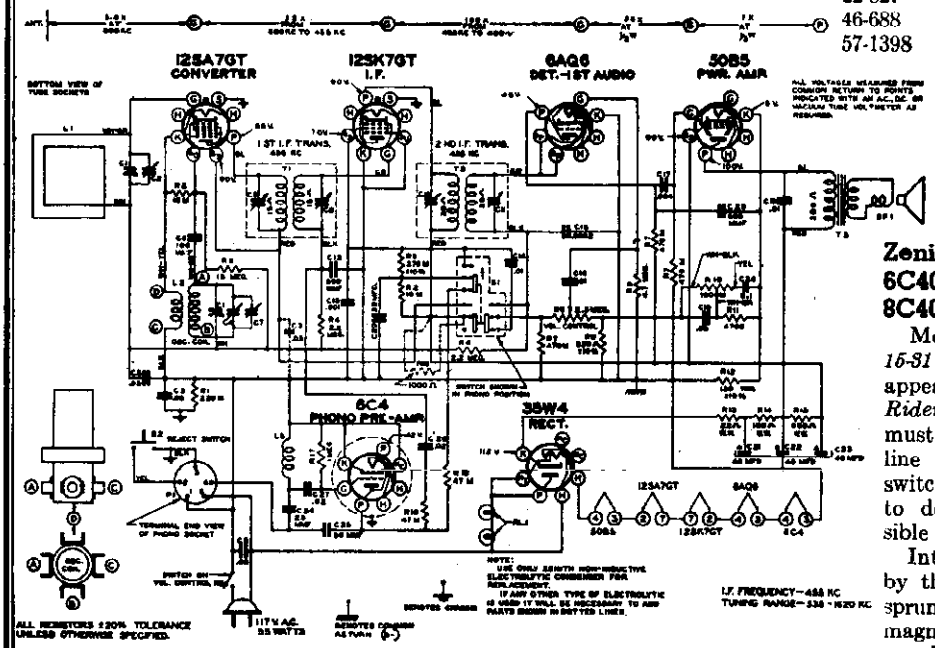

Changes in the Zenith 6R886Z.

Zenith Chassis 6C01, 6D0 Series

Chassis 6C01, 6D0 Series, which appears on *page 15-26 of Rider's Volume XV,* will contain variations in the tube line-up. A single chassis may contain octal, lock-in, and miniature button tubes. If an original tube is replaced with an alternate, the socket must also be replaced.

Original	*Alternate*
35Z5G/GT	35W4
12SQ7GT	12AT6

When replacing speakers, use a speaker with the same code letter (49U, AG etc.) as the original otherwise a low-pitch hum may be produced. If a speaker with a different code is used, R10 (feedback resistor) may have to be changed. With 49U, H, or AG speakers, R10 is 390,000 ohms. When using a 49CS549 speaker, R10 must be 680,000 ohms. R10 is 330,000 ohms for all other speakers.

To repair this set when it produces a howl, change the 14C7 tube, which is probably microphonic.

For oscillation, hum, and poor sensitivity, check for grounded tuning capacitor frame. Correct by inserting a rubber pad between the capacitor frame and chassis. Cement in place.

Zenith 8G005 Series

These models appear on *pages 15-63 through 15-70 of Rider's Volume XV.* All receivers of this series are similar. Different letters after the numbers 8G005 indicate differences in the cabinet only, except for Model 8G005BT. The latter is an export-standard model and employs a 220-120-volt changeover switch in the rear of the chassis. Otherwise, it is the same as the rest of the series.

Zenith 6G001, 6G001YX, Chassis 6C40, 8G005, 8G005YX, Chassis 8C40

Model 6G001 appears on *pages 15-30 and 15-31 of Rider's Volume XV.* Model 8G005 appears on *pages 15-63 through 15-70 of Rider's Volume XV.* The On-Off switch must be in the Off position whenever the line plug is inserted into the changeover switch on the rear of the chassis. Failure to do this may cause flashing and possible burn-out of the output tubes.

Intermittent operation may be caused by the wavemagnet snap connectors being sprung, causing a poor contact. Poor wavemagnet contact is made through the cabinet hinge.

The letter "X" after the model number (6G001YX, 8G005YX) indicates that an aluminum cabinet is used.

MODELS RC195, RC196, RC197, RC210. RC211, RC212

RC195, RC196, RC197 RECORD CHANGERS

A very small quantity of record changers with model numbers RC195, RC196, RC197 were produced. These Record Changers are early production version of the RC210, RC211, and RC212 Record Changers. The only difference between them is that on the RC195, RC196, and RC197 Record Changers, no provision was made for automatically playing 7-inch records. (Centerpost is not removable and pickup arm does not have size selector knob.)

OPERATING INSTRUCTIONS

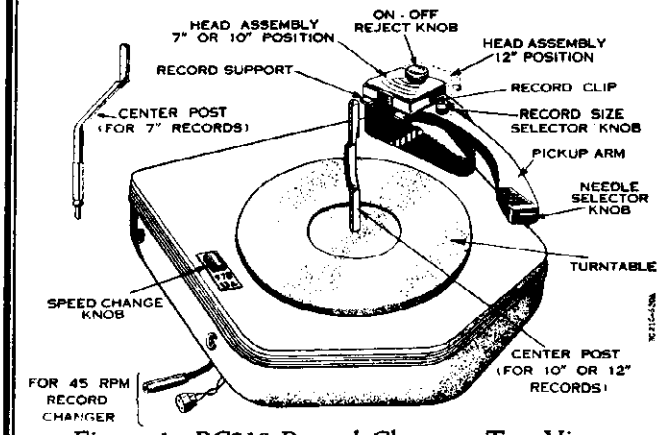

Figure 1. RC210 Record Changer, Top View.

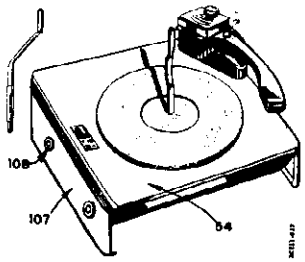

Figure 2. RC211 Record Changer

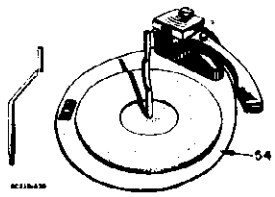

Figure 3. RC212 Record Changer

This Admiral Record Changer will automatically play a series of ten 7-inch, twelve 10-inch, or ten 12-inch records of either the 78 RPM, or the new 33 RPM type. The records must be of one size and type for each loading.

Models RC210 and RC211 can also be used, in connection with the Admiral 45 RPM Record Changer, to play the new 7-inch, 45 RPM records. Two plugs have been provided to allow for connecting it to the Admiral 45 RPM Record Changer.

SETTING NEEDLE SELECTOR AND SPEED CHANGE KNOBS

Rotate the pickup arm cartridge, by turning the needle selector knob which extends out from the front of the pickup arm. The small arrow next to the "33" and "78" indicates the direction in which the knob must be rotated. When turning this knob to either the "78" or the "33" position, make certain that it is turned until it reaches its stop.

For playing 78 RPM records, move the speed change knob to the "78" position; for playing 33 RPM records, move it to the "33" position. When moving the speed change knob, make certain that it clicks or snaps into position.

Be certain that the needle selector knob and speed change knob are both set for "78", or are both set for "33"

SETTING FOR SIZE OF RECORD

SELECTING CENTERPOST: This record changer is designed to be used with either of two centerposts. The centerpost which has a curved portion in the center is the centerpost for 10-inch and 12-inch records. The second centerpost is bent approximately 45 degrees and is to be used for automatically playing 7-inch records.

To change centerposts it is only necessary to lift the centerpost from its socket. Place one hand on the turntable while pulling out the centerpost with the other hand.

SETTING HEAD ASSEMBLY: In order to play 7-inch or 10-inch records, rotate the head assembly so that the embossed design is toward the centerpost. See figure 1. For 12-inch records, rotate the head assembly so that the embossed design is away from the centerpost.

SETTING RECORD SIZE SELECTOR KNOB: To play 7-inch records, turn the Record Size Selector knob to the left so that the figure "7" on the knob is adjacent to the dot on the pickup arm. To play 10-inch or 12-inch records, turn this knob to the right until the figures "10 12" are adjacent to the dot on the pickup arm.

STARTING THE RECORD CHANGER

Do not load 33 RPM records with the standard 78 RPM type. Also, the records must be of the same size (all 7-inch, all 10-inch, or all 12-inch) for each loading.

After setting the head assembly for the correct record size, move the record clip so that it is away from the centerpost before loading the changer.

Place your records over the centerpost so that they rest on its offset. The edge of the bottom record will be held up by the record support.

Move the record clip so that it rests on the top record.

Turn the On-Off Reject knob to the "ON" position.

Press down on the On-Off Reject knob momentarily to the "Reject" position. The bottom record will drop to the turntable and the Record Changer will play the entire stack of records automatically.

REJECTING A RECORD

If you wish to stop playing any record and start playing the next one, merely press down on the On-Off Reject knob momentarily.

STOPPING AND UNLOADING

This Record Changer cannot be turned off, by means of the On-Off Reject knob, during its change cycle. Therefore, after the last record, allow the mechanism to go through its change cycle and start playing over again.

MODELS RC210,
RC211, RC212

THE CHANGE CYCLE

DESCRIPTION OF CHANGE CYCLE
(See Figures 4 and 5)

If at all possible, we recommend that you carefully observe the operation of a changer that is in normal operating condition. It is a good idea to rotate the turntable by hand and repeat the changing cycle until you understand the function of each part. **It is important to note that this changer employs the oscillating type trip, which depends upon the in and out movement of the pickup arm caused by the eccentric groove in the record.**

The changer operates as follows: The changer mechanism is driven during its change cycle by the knurled hub of the turntable rotating the rubber-tired drive wheel (69). During normal playing, the drive wheel is held in a neutral position as illustrated in Fig. 4A, so that the indentation prevents the tire from contacting the knurled hub. The drive wheel (69) is held in this position by the trip stop wire (91A) and the cam stop stud (72A) on the control cam (72).

During the record play and as the needle enters the record eccentric groove, the pickup arm is moving in toward the centerpost. The pawl (103A) is moving across the trip serrations (94). When the eccentric groove in the record causes the pickup arm to move away from the centerpost, the pawl (103A) tends to reverse its direction but its sharp point catches in one of the trip serrations (94) and moves the trip lever (91). As the eccentric groove moves the pickup arm back in toward the centerpost, and then away from the centerpost again, the pawl (103A), again locks in one of the trip serrations, moves the trip lever (91) far enough so that the trip stop wire (91A) is no longer engaged with the cam stop stud (72A). **This oscillating trip action is dependent upon the adjustment of the trip set screw (95).** If it is adjusted properly, the pickup arm will move away from the centerpost, toward the centerpost, and as it comes away the second time the changer will trip and start its change cycle. (See paragraph under heading "Trip Adjustment.") The position of drive wheel (69) at this moment is shown in Figure 4B.

This allows the cycle spring (92) to pull the control cam clockwise (bottom view). Since the control cam (72) and the drive wheel (69) are on the same shaft, the drive wheel is turned so its rubber tire is against the knurled hub of the turntable (see Figure 4B). The turntable now rotates the drive wheel (69) which simultaneously rotates the control cam (72). As soon as changer has been tripped, the trip cocking spring (90) causes the trip lever (91) to return the trip stop wire (91A) to the noraml playing position.

Roller (85) riding on the control cam (72) moves the pivot link (84) which in turn rotates the control plate (83). The rotation of the control plate (83) causes its inclined tab (83A) to ride against the lift rod (28) which lifts the pickup arm from the record. The arm control lever roller and stud (103B) then engages the safety arm (100). Further rotation of the control cam (72) moves the pivot link (84) causing further rotation of the control plate (83) causing the pickup arm to move to the right, clearing the record. This much has taken place in approximately one-third of the total rotation of the control cam.

As the control cam rotates further, its push-off stud (72B) engages with the end of the slot in the pushoff link assembly (76), moving it. This movement is transmitted through the push-off arm (76A) and as a result, the push-off shaft (10) is rotated. This rotates the push-off cam (10A) which in turn slides the push-off plate (11) forward and drops the next record to be played. Note that the record stack rests on the record support shelf (12). The small slide at the top end of the centerpost holds back all records other than the bottom one when the push-off plate (11) moves forward.

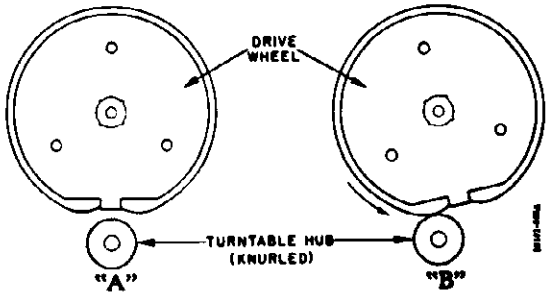

Figure 4. Drive Wheel Positions.

As the control cam continues its rotation, the pivot link (84) moves back following the cam, since the roller (85) is kept in contact with the cam by the control plate spring (87). This moves the control plate (83) back, the arm control lever (103) moves the pickup arm to the set-down point for the record to be played. The pickup arm is held above the record because the lift rod (28) is still resting at the top of the inclined tab (83A) on the control plate (83). The set-down point is governed by the set-down adjusting screw (21). (See figure 6.) The shoulder on the set-down arm (104A) holds the pickup arm at the set-down point until it is pushed back by the edge of the control plate engaging the set-down arm stud (104B). The pickup arm is then free and moves down toward the record starting groove.

When the record changer is set to play 7-inch or 10-inch records, the set-down arm (104A) through the tension of the set-down spring (106) moves the arm in toward the centerpost until the return roller and stud (103C) reaches the shoulder of the set-down arm (104A). The pickup arm is held in this position until the control plate (83) engages the set-down arm stud (104B), pushing the set-down arm back, releasing or freeing the pickup arm.

When the changer is set for 12-inch records the size change eccentric (82) moves the set-down and size change assembly (104) so that the arm return roller and stud (103C) does not travel as great a distance along the set-down arm (104A) before it reaches the shoulder. Therefore the pickup arm cannot move in toward the centerpost as far as for 7-inch or 10-inch records, during change cycle.

When the On-Off Reject knob (1) is pressed down, the push-off cam and shaft (10) moves the reject arm (97) down. This movement causes the trip lever (91) to move which prevents the trip stop wire (91A) from engaging the cam stop stud (72A). The change cycle then proceeds in the manner described above.

The change cycle is exactly the same for either speed (33 RPM or 78 RPM) except for the fact that the change cycle time is proportional to the turntable speed (33 RPM or 78 RPM).

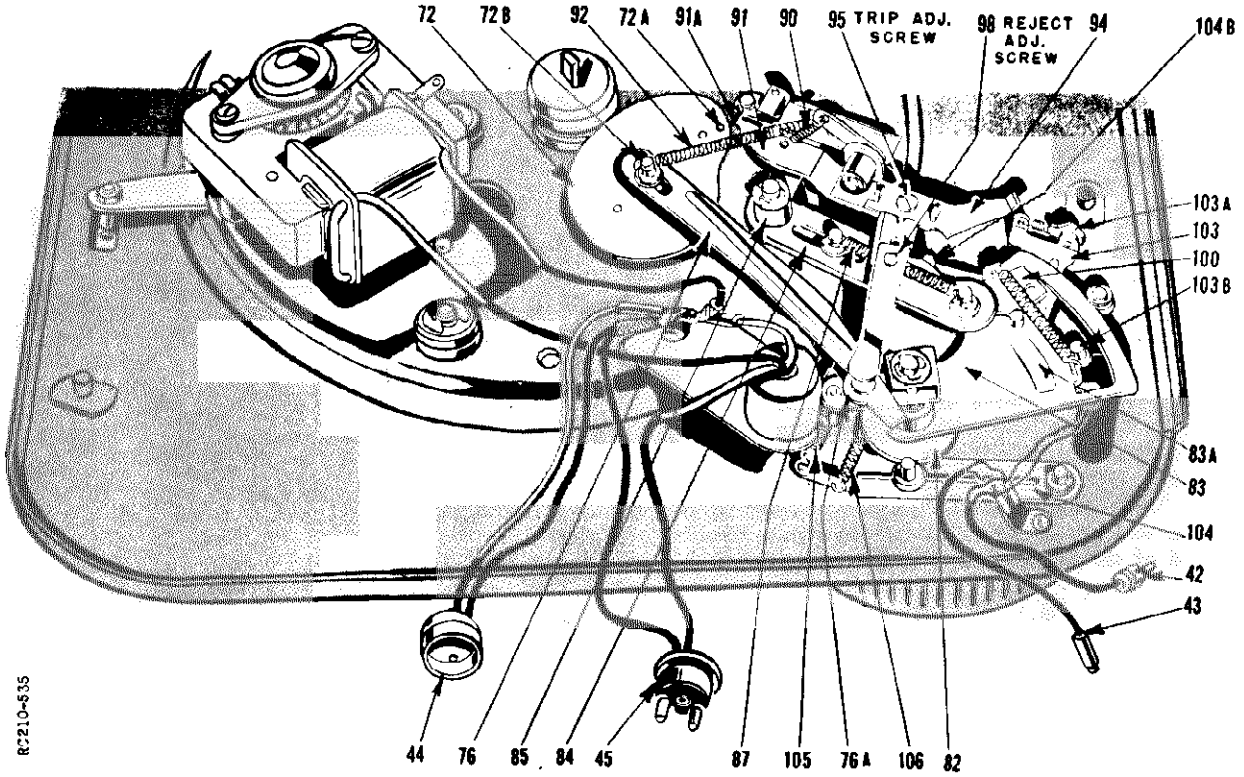

Figure 5. Bottom View Assembled.

Playing 7-inch records automatically is accomplished by removing the centerpost for 10-inch or 12-inch records and inserting the centerpost for 7-inch records. Rotation of the record size selector knob (17) to the position for 7-inch records, rotates the set-down eccentric (23). The set-down eccentric rotates or moves the set-down plate, part of pivot and mounting plate (24), and the pivot spring and hub (29). This in turn moves the arm control lever, studs, and pawl (103) so the pawl (103A) is closer to the lip of the trip serrations (94). This results in moving the end of the pick-up arm closer to the centerpost, by the distance needed for proper set-down on 7-inch records.

ADJUSTMENTS

ADJUSTMENT OF SET-DOWN POINT

Adjustment of the set-down point, for either 7-inch, 10-inch, or 12-inch records, is made by adjustment of the set-down adjusting screw (21), see Figure 6. Screw (21) is accessible through hole in right side of pickup arm. This adjustment must be made with the record size selector knob (17) in the "10.12" position. When turning this knob be sure to turn it all the way (the dot between "10.12" should line up with the indicating dot on the pickup arm) to avoid making the set-down adjustment at the wrong point, resulting in improper set-down on 7-inch records. Turning the set-down adjusting screw (21) in, moves the set-down point of the pickup arm closer to the centerpost and turning the screw out moves it away from the centerpost.

Make the set-down point adjustment as follows:

1. Set record size selector knob (17) to the "10.12" position; be sure the knob is turned all the way to its stop (the dot between "10.12" should line up with dot on pickup arm).
2. Set needle selector knob to either position being certain that the knob is turned to its stop so the needle projects straight down.
3. Set the head assembly to the position for playing 7-inch or 10-inch records.
4. Press down on the On-Off Reject knob (1) momentarily. Rotate the turntable by hand through the change cycle until the pickup arm moves down toward the turntable.
5. Check the distance between the needle point and the near side of the centerpost. For proper set-down on 10-inch records, the distance between needle and centerpost should be between 4⅜" and 4-11/16".
6. Adjust set-down screw (21) and repeat steps 4 and 5 until the proper distance is obtained. If this adjustment is made carefully, the set-down point for 7-inch records and 12-inch records will be automatically correct.
7. Check 12-inch set-down as follows: Set the head assembly to the position for 12-inch records, press On-Off Reject knob momentarily, rotate turntable by hand through the change cycle and check the 12-inch set-down point. The proper distance between the needle point and the near side of the centerpost is between 5⅜" and 5-11/16".
8. Check 7-inch set-down as follows: Set the head assembly to the position for 7-inch and 10-inch records, set the record size selector knob (17) so the dot under the "7" lines up with the locating dot on the pickup arm. (NOTE: In some early production sets, it may be necessary to set the

© John F. Rider

MODELS RC210, RC211, RC212

record size selector knob (17) so that the dots are slightly out of line.) Press the On-Off Reject knob momentarily, rotate the turntable by hand through the change cycle and check the 7-inch set-down point. The proper distance between needle point and the near side of the centerpost is between 3-3/16" and 3¼".

9. If step 7 or step 8 indicates improper set-down on 7-inch records or 12-inch records, make a compromise adjustment for 10-inch record set-down as outlined in steps 3, 4, 5 and 6.

ADJUSTING THE PICKUP ARM HEIGHT (See Figure 6)

This record changer is designed so that when the needle point rests ¼" above the changer pan, the pick-up arm will automatically lift high enough, during change cycle, to clear the top record of a stack of ten 7-inch, twelve 10-inch, or ten 12-inch records on the turntable. With proper pickup arm height setting, the pickup arm will not lift high enough to strike the bottom record of the stack to be played.

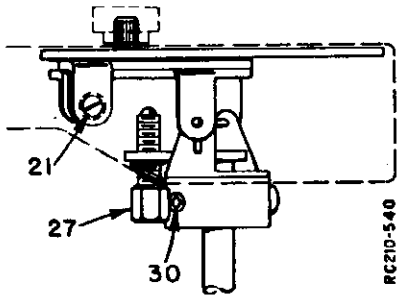

Figure 6. Arm Detail Showing Adjustments.

With the record changer out of change cycle and the pickup arm clear of the turntable, adjust the lift adjusting screw (27) so that the needle rests approximately ¼" above the top of the changer pan. Turning screw (27) in raises the pickup arm; turning it out lowers the arm.

After this adjustment has been made, the record changer should be run through its change cycle a few times to make certain that the pickup arm does not touch the bottom record of the stack to be played. If, for some reason, the arm lifts too high, a compromise adjustment should be made. That is, turn the screw out and lower the pickup arm slightly.

REJECT AND TRIP ADJUSTMENTS

Before making either reject or trip adjustments it is very important to make certain that the reject spring (2) is holding the push-off shaft (10) up, as far as it will go. If this precaution is not observed, erratic reject and trip action may result.

Possible causes of the spring not holding the push-off shaft up are:

a. The On-Off Reject knob (1) may be loose.

b. The reject spring (2) may be broken, missing, slipped down between washer (3) and push-off shaft (10), or has lost its tension.

c. Push-off shaft (10) binding.

REJECT ADJUSTMENT

1. Be sure to read the paragraph under "Reject and Trip Adjustments".
2. Adjust the reject link adjusting screw (98) until there is approximately 1/32 of an inch space between the end of the reject arm (97) and the rivet on the push-off arm and link assembly (76). NOTE: If there is no space between these two parts, it will be possible for the changer to begin its change cycle when the on-off reject knob is turned to the "OFF" position. If there is too much space, the changer may reject erratically.
3. Operate the Record Changer, press the On-Off Reject knob momentarily and check reject action.

TRIP ADJUSTMENT

Since this Record Changer uses the oscillating trip principle to begin its change cycle, it is very important that the trip adjusting screw (95) is properly adjusted. See Figures 5 and 7.

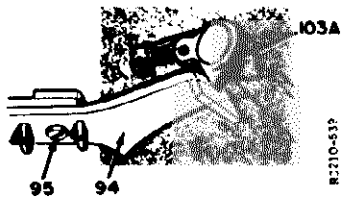

Figure 7. Positioning Trip Serrations.

The trip adjusting screw (95) is properly adjusted when the record changer trips into change cycle after the eccentric groove in the record has caused the pickup arm to move away from the centerpost once or twice, that is, one or two backswings of the pickup arm, before the changer trips into change cycle. Since some eccentric grooves cause greater movement of the pickup arm than others, the changer might trip into change cycle with only one backswing on some records and with two backswings on others.

The ideal adjustment of screw (95) for best operation is when the point of the pawl (103A) is horizontally even or level with the smooth side of the trip serrations (94). NOTE: The point of the pawl will be approximately 3/32 of an inch from the bottom edge of the lip on the trip serrations. See Figure 7.

Adjust the trip adjusting screw (95) as follows:

1. Be sure to read the paragraph under "Reject and Trip Adjustments".
2. Connect record changer motor to power source and turn the On-Off Reject knob on and off as needed to check this adjustment.
3. Adjust trip adjusting screw (95) until the point of the pawl (103A) is horizontally even or level with the smooth side of the trip serrations (94), or until the point of the pawl is 3/32 of an inch from the bottom edge of the lip on the trip serrations. See Figure 7.
4. If the top of the trip stop wire (91A) is not level with the top of the main cam stop stud (72A) as shown in Figure 8, check to see if the trip stop wire is bent slightly. If it is, bend the wire until it is even (level) with the top of the stud.
5. Place a record on the turntable and check to make certain that the changer trips into change cycle with one or two backswings of the arm.

IMPORTANT

The eccentric groove of a record should be used when checking the trip adjustment. Do not lift the pick-up arm and move it in and out by hand.

If the trip adjusting screw (95) is turned out too

© John F. Rider

far, it will take more than two backswings of the pickup arm to trip the changer into change cycle. If the screw (95) is almost all the way out, the changer will not trip. If the screw is turned too far in, there will be excessive drag and wear on the trip serrations, pawl point and on record eccentric grooves. Consequently, the trip adjustment should be made very carefully.

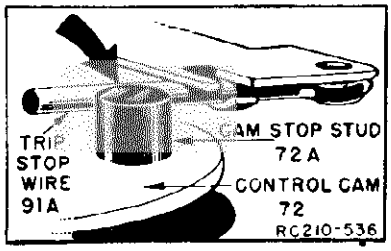

Figure 8. Positioning Trip Stop Wire.

SERVICE AND REPAIR

CAUTIONS

1. **See that the rubber tires on both the drive wheel and the idler wheel are kept clean and free from oil, grease, dirt or any foreign material.** Carbona or carbon tetrachloride may be used for cleaning these parts.
2. The drive wheel assembly (69) appears to be almost identical with that used on the model RC170 and RC170A record changers. **These parts are not interchangeable.**
3. When replacing the rubber tire (68) do not bend the tab on the drive wheel over too far as this may result in the tire catching or rubbing on the drive wheel pressure spring (71).
4. If the On-Off Reject knob (1) cannot be pulled off with the fingers, pry very carefully. The head cover (7) is plastic and if the On-Off Reject knob is pried off, excessive force should not be used.
5. When removing or replacing the pawl spring (102) care should be taken not to stretch it.
6. When removing or replacing the pickup arm (18), always loosen the Allen set screw (30) and lift off the complete assembly. The pivot spring, hub and pin assembly (29) can be removed from the pivot plate assembly (24) and replaced much more readily with the complete pickup arm assembly off of the changer.
7. When replacing the switch mounting bracket (79) or the trip bracket (89) be sure to locate the half punches in the holes in the pan before tightening their mounting screws (80).
8. When replacing the on-off switch assembly (81) care should be used in bending the tab fasteners so that the switch is mounted firmly to the bracket.
9. When replacing or reinstalling the record size selector knob (17), turn the set-down eccentric (23) to the position for 10" and 12" set-down. Then install the knob (17) so that the dot between "10.12" lines up with the locating dot on the pickup arm.

CARTRIDGE AND NEEDLES

The cartridge (34) used in these record changers is especially designed and there are a few things which should be observed when replacing the cartridge (34), needles (36 and 37), or pickup arm cable (40).

When replacing either needle make certain that the correct needle is inserted in the proper "side" of the cartridge. The needle (36) for 33 RPM records is an osmium tipped needle especially designed for playing 33 RPM records. The radius of the point of the 33 RPM needle is only 1/3 of the radius of the point of a standard (78 RPM) needle. If this sharp needle is used on standard 78 RPM records, it has a tendency to "wobble" in the record groove and would possibly damage the standard record groove. A needle for 78 RPM records may possibly damage 33 RPM "microgroove" records because of its tendency to "skate" across a microgroove record. Consequently, care should be taken when replacing needles.

The needle (36) for 33 RPM records is painted red to identify it. The needle guard on the 33 RPM "side" of the cartridge has red color dots to distinguish it from the 78 RPM "side" of the cartridge. The red (33 RPM) needle (36) should be inserted in the side of the cartridge which has the red color dots.

When replacing the cartridge (34) care must be taken when placing the pickup arm cable pinjacks on the cartridge. There must be sufficient slack in the cable to allow the cartridge to rotate. It is also important that the short length of plastic tubing be kept over one terminal.

TWO SPEED MOTOR (67)

The turntable speed of these Record Changers is changed mechanically. When the speed change knob (58) is moved to the "33" position, the speed change arm (56) moves. This causes the 33 RPM drive shaft to pivot and ride against the idler wheel (60). When the speed change knob is moved to the 78 RPM position, the speed change arm causes the 33 RPM drive shaft to pivot away from the idler wheel (60). When the speed change knob (58) is moved, make certain that it "clicks" or "snaps" into position.

Note that the 33 RPM drive shaft is driven by the 78 RPM drive shaft by means of a rubber belt (63). This belt should be clean and free from oil. If the belt is greasy or stretched, it might possibly slip which would cause the turntable speed to vary, resulting in unsatisfactory operation.

When replacing the speed change knob (58), make certain that the shaft in the knob does not touch the sides or ends of the cut-out in the pan. The speed change arm (56) must be installed properly (its half-punches keep the proper angle). If it is not installed correctly, the speed change knob shaft may rub against the edge of the opening in the pan causing rumble and noise pickup. Also, the clearance between the bottom of the speed change knob and the top of the pan should not be less than 1/64 of an inch or more than 3/64 of an inch.

REMOVING THE PLASTIC BASE HOUSING (14

Should it be necessary to remove the plastic base housing, proceed as follows:

1. Remove retaining rings (86 and 88).
2. Release one end of the index spring (105).

MODELS RC210, RC211, RC212

3. Lift the entire head assembly up from the top of the changer.
4. Loosen Allen set screw (30) and lift complete pickup arm assembly off.
5. Remove retaining ring (31) and washer (32).
6. Remove three screws (16) holding base.
7. Lift off the plastic base housing (14).
8. When reassembly has been completed, the pickup arm height should be carefully checked and adjusted, if necessary, by means of the lift adjusting screw (27). The set-down should also be checked and adjusted, if necessary, as outlined under "Adjustment Of Set-Down Point".

REMOVING TURNTABLE (8) AND BEARING ASSEMBLY (49)

To remove the turntable it is only necessary to grasp the turntable by its edges and lift up. Before replacing the turntable, make sure that the recessed part of the drive wheel (69) is towards the centerpost. If necessary, turn drive wheel counterclockwise about a turn so it locks in this position. The pickup arm should be positioned away from the turntable. In replacing the turntable, force is not needed to seat it. Make certain, however, that the idler wheel of the motor has been pushed in towards the centerpost and that the idler wheel is making contact with the inner side of the turntable flange.

The dimensions of the two speed motor are such that three cork washers (47) are used under the turntable hub to keep the turntable from rubbing against the idler wheel drive shafts.

In some cases it may be found that the three cork washers, after considerable use, are compressed so the turntable will rub. To build the stack up, an additional thin cork washer should be used. This fourth cork washer may be placed at the top or bottom of the stack.

The washers (47 and 48) and thrust bearing assembly (49) are removed by sliding them off of the centerpost. In replacing, have them in the order shown in Figure 9.

REMOVING BOTTOM COVER (107)

For Model RC210 only. To remove the bottom cover (107) from the record changer, remove the two rear screws (50) through the bottom. Then press on the front edge of the bottom cover; this frees the changer from the slotted mounting brackets at the front of the bottom cover. To replace bottom cover, reverse above operations.

The changer must float on the springs (51) to prevent microphonic feedback, thus these springs must be re-installed properly. The wider end fits around and hugs the extrusion in the mounting brackets in the bottom cover. The narrow end of the spring fits over the threaded bushing on the changer pan (54). To assure "free floating" of the changer, spacer washers (52) are used under the narrow portion of springs (51).

For Model RC211 only. To remove the bottom cover on this model (RC211), remove the three mounting screws (50), from the top of the changer pan. Then merely lift the changer pan off of the bottom cover (107) being careful to see that lead-in cables and motor leads are disconnected.

When reinstalling the changer pan on the bottom cover be certain the float springs (51) are properly installed. Insert the mounting screws (50). IMPORTANT: These screws must be installed so they travel freely through the extruded holes in the changer pan. If the screws touch the edges of the holes in the pan, a scraping sound will occur when records drop to the turntable and microphonics might also result.

LUBRICATION

Under normal operating conditions, the motor should never require oiling. The rest of the changer, however, should be lubricated with grease whenever it comes into the shop for repairs or adjustment. **All pivot and friction points should be greased adequately but not excessively.** A good automobile chassis grease may be used for this purpose.

The push-off shaft (10), powdered iron roller (85), oilite bearings, (used in the turntable hub and base housing), may be lubricated with SAE No. 20 motor oil.

Care shoull be taken to prevent any of the lubricant from coming into contact with the drive or idler wheel tires. Also be careful, when using oil, that an excess does not seep into the felt of the turntable.

RECORD CHANGER TROUBLE SHOOTING

1. Records Do Not Drop To Turntable Or More Than One Record Drops.

(a) Check the distance between the inside edge of the centerpost (9) and the edge of the record support (12). This distance should be 4-61/64" ± 1/32", in the 10-inch position.

With the centerpost for 7-inch records in place and the head assembly in the 10-inch position, the distance between the inside edge of the centerpost and the edge of the record support should be 3½" ± 1/32". These dimensions are critical and if distance does not meet specifications, bend the centerpost slightly toward or away from the head assembly as needed.

2. Changer Repeatedly Trips Into Change Cycle.

(a) Check for broken trip cocking spring (90), or
(b) Check for broken reject spring (2), or
(c) Check for On-Off Reject knob (1) loose, or
(d) Check for misadjustment of reject adjusting screw (98), or trip adjusting screw (95).

3. Changer Will Not Trip.

(a) Check for broken or loose cycle spring (92),
(b) Check On-Off switch cover (81). If cover is is not assembled to switch properly it may bind push-off link and arm (76) preventing cycle spring (92) from pulling the main cam (72) around, or
(c) Check for misadjusmtent of the trip adjusting screw (95), or
(d) Check for bent trip stop wire (91A), or
(e) Check for broken pawl spring (102).

4. Changer Will Not Reject.

(a) Check adjustment of reject screw (98).

5. Cannot Get Proper Set Down.

(a) Check set-down spring (106), or
(b) Check for broken or loose set-down adjusting spring (22), or
(c) Check for loose pickup arm counter weight screws (20) resulting in erratic set-down. (These screws hold pivot and mounting plate (24) in position).

© John F. Rider

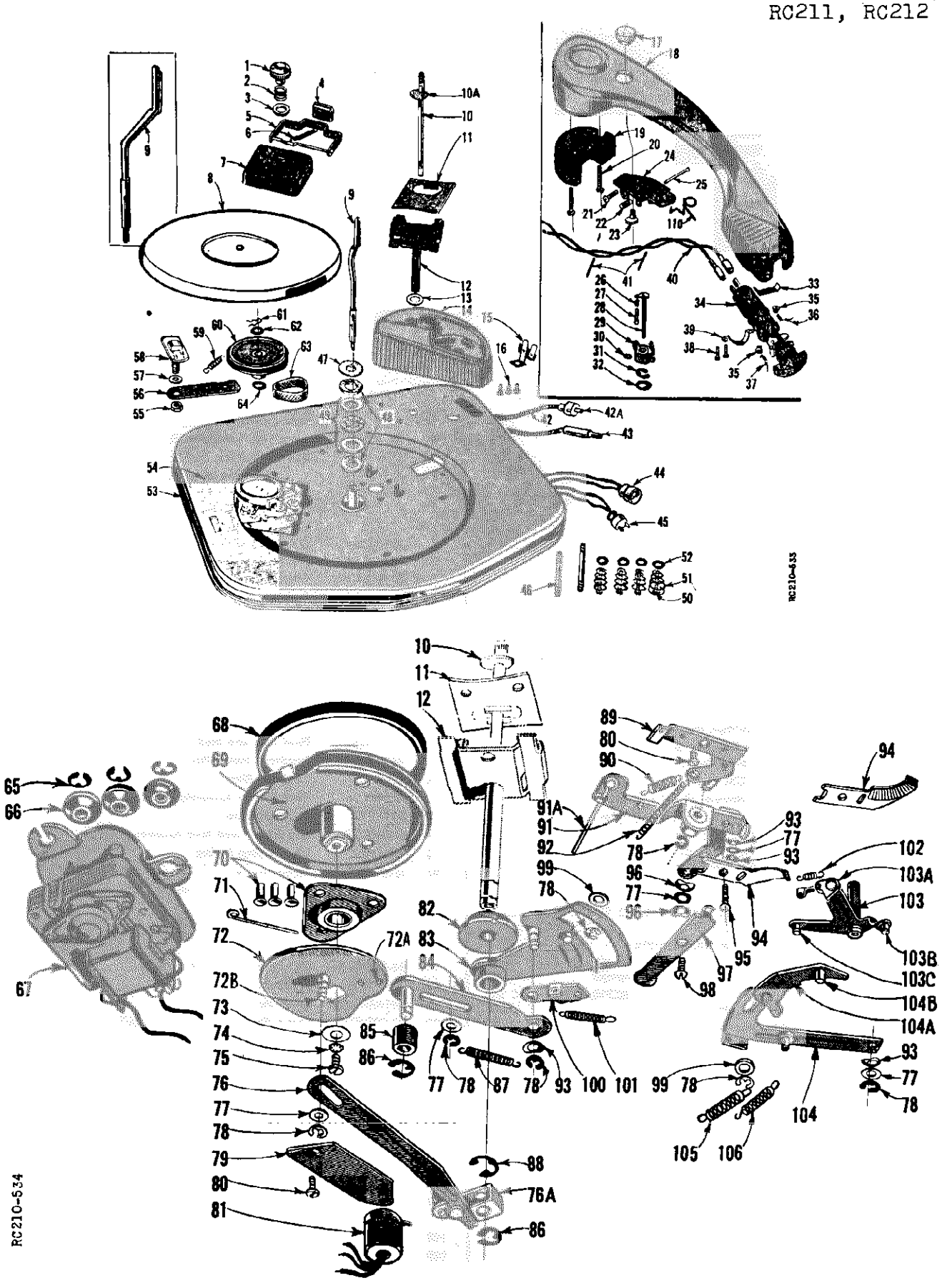

Figure 9. RC210 Record Changer, Exploded.

© John F. Rider

MODELS RC210, RC211, RC212

PARTS LIST

Ref. No.	Part Number	Description
1	403A27	On-Off Reject Knob
2	405A97	Reject Spring
3	4B1-166-47	Washer (Flat) .390x5/8x1/16
4	406A18	Rubber Bumper for Record Clip
5	403A32	Record Clip (Plastic)
6	405A94	Record Clip Spring
7	403A31	Head Cover (Plastic)
8	G400B167	Turntable
9	G400B311 G400B310	Centerpost Assy. (for 10" & 12" Records) Centerpost Assy. (for 7" Records)
10	G400A248	Push-Off Cam and Shaft Assembly
10A		Push-Off Cam (Part of 10)
11	401A166	Push-Off Plate
12	G400A249	Support Tube and Shelf Assembly
13	4B1-166-47	Washer (Flat) .390x5/8x1/16
14	403C28	Base Housing
15	10B1-6	Terminal Strip
16	402A148	Screw, Base Housing Mounting
17	403A37	Record Size Selector Knob
18	403C35	Pickup Arm
19	404A23	Pickup Arm Counterweight
20	1A50-6-47	Screw, #4 FH S.T. (2 req.)
21	45-500-C2-47	Set-Down Adjusting Screw 4-40x½ BH MS
22	405A118	Set-Down Adjusting Spring
23	402A173	Set-Down Eccentric
24	G400A297	Pivot and Mounting Plate
25	414A31	Pivot Shaft
26	405A120	Lift Adjusting Lock Spring
27	402A156	Lift Adjusting Screw
28	G400A238	Lift Plate and Rod Assembly
29	G400A294	Pivot Spring & Hub (includes 8-32 Set Screw)
30	1A43-14	Allen Set Screw 8-32
31	401A235	Retaining Ring
32	412A32	Washer
33	405A111	Cartridge Indexing Spring
34	98A54-1	Cartridge, includes Needle Screws (less Needles)
35	98A54-2	Needle Screw (Knurled)
36	98A15-6	33 RPM Needle (Painted Red)
37	98A15-7	78 RPM Needle
38	402A139	Plastiscrew, #2 (2 req.)
39	401A264	Cartridge Hold-Down Bracket
40	G400A307	Pickup Arm Cable and Lugs
41	414A30 414A34	Wire Clip, approx. ½" long (2 required) Wire Clip, approx. ¾" long (1 required)
42	413A11-1 413A11-2	Shielded Lead-in Cable & Plug (15") for RC211, RC212 Shielded Lead-in Cable & Plug (30") for RC210 only
42A	88A2-3	Plug (for lead-in cable)
43	89A5-27	Shielded Cable & Socket (RC210, RC211 only) for 45 RPM Record Changer
44	413A12	Motor Socket & Leads (RC210, RC211 only) for 45 RPM Record Changer
45	88A8-1	Motor Plug (Male)
46	1A80-5	Stud Bolt (for RC210 only)
47	412A9	Cork Washer 3/64" thick (1 req.)
48	412A1	Cork Washer 3/32" thick (2 req.)
49	415A11	Thrust Bearing
50	G400A197 402A154	Mtg. Screw & Washer Assembly for RC210, RC212 (4 req.) Float (Mounting) Screw for RC211 only (3 req.)
51	19A10-3	Conical Mounting Spring (for RC210, RC211, RC212)
52	4B1-72-21	Fibre Mounting Washer for RC210 only (4 req.)
53	403A24 403A38	Plastic Trim (for RC210) Plastic Trim for RC211 (2 req.)
54	G400D303 G400D291 G400D306-1 G-400D306-2	Changer Pan Assembly (RC212) Changer Pan Assembly (RC210) Changer Pan Assembly, (RC211) Copper Changer Pan Assembly, (RC211) Black
55	2A1-20-47	Hex Nut #10-32
56	401A242 401A269	Speed Change Arm (for RC210, RC211) Speed Change Arm (for RC212 only)
57	4B1-68-47	Washer
58	403A33	Speed Change Knob
59	405A107	Idler Wheel Spring
60	G400A279	Idler Wheel Assembly
61	405A15	Hairpin Clip
62	412A30	Washer (under Hairpin Clip)
63	406A20	Drive Belt
64	98A54-4	Fibre Washer (under Idler Wheel)
65	401A229	Retaining Ring
66	406A21	Rubber Mounting Grommet (3 req.)
67	407B15	2 Speed Motor
	405A113	50 Cycle Conversion Spring (for 78 RPM Drive Shaft)
	405A112	50 Cycle Conversion Spring (for 33 RPM Drive Shaft)
68	406A13	Drive Wheel Tire Only
69	G400A252	Drive Wheel (includes Tire)
70	404A18-1	Drive Wheel Support Assembly (includes Rivets)
71	414A23	Drive Wheel Pressure Spring
72	G400A227	Control Cam Assembly
72A		Cam Stop Stud (Part of 72)
72B		Push-Off Link Stud (Part of 72)
73	401A145	Control Cam Washer
74	3B1-26-47	Lockwasher, #8 I.T.
75	85-375-C2-39	Control Cam Screw 8-32x⅜ BH MS
76	G400A219	Push-Off Arm and Link Assembly
77	4B1-68-47	Washer
78	401A177	Retaining Ring
79	401A223	Switch Bracket
80	1A53-9-47	Screw, Switch Bracket Mounting
81	408A1	On-Off Switch and Cover
82	404A17	Size Change Eccentric
83	G400A226	Control Plate, Hub and Stud Assembly
84	G400A224	Pivot Link and Stud
85	415A9	Powdered Iron Roller
86	401A229	Retaining Ring
87	405A91	Control Plate Assembly
88	401A230	Retaining Ring
89	G400A228	Trip Bracket and Stud Assembly
90	405A88	Trip Cocking Spring
91	G400A230-1	Reject Arm Support and Trip Lever
91A		Trip Stop Wire (Part of 91)
92	405A87	Cycle Spring
93	405A22	Spring Washer
94	401A271	Trip Serrations
95	65-500-C2-47	Trip Adjusting Screw
96	405A98	Spring Washer
97	401A237	Reject Arm
98	65-500-C2-47	Screw, Reject Adjusting 6-32x⅜"
99	401A173	Washer
100	401A202	Safety Arm
101	405A90	Safety Spring
102	405A89	Pawl Spring
103	G400A233	Arm Control Lever, Studs and Pawl
104	G400A222	Set-Down and Size Change Assembly
105	405A92	Index Spring
106	405A93	Set-Down Spring
107	G400D260 G400D287-2 G400D288-1	Bottom Cover (RC210) Bottom Cover, Painted Black (RC211) Bottom Cover, Painted Copper (RC211)
108	27A24	Bushing in Bottom Cover for RC210, RC211
109	405A99	Spring Washer for Bushing (RC210, RC211)
110	414A33	Size Change Tension Spring

OPERATING INSTRUCTIONS

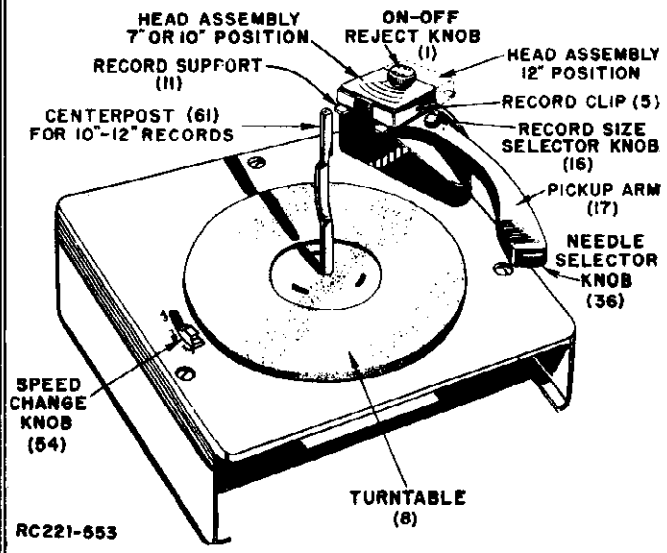

Figure 1. RC221 Record Changer, Top View.

This Admiral Record Changer is designed to automatically play a series of twelve 10-inch or ten 12 inch 78 RPM or 33 RPM records. It will also automatically play ten 7-inch 33 RPM records or twelve of the new 7-inch 45 RPM records, by using an accessory 7-inch centerpost and an accessory 45 RPM Spindle Unit. The records must be of one size and type for each loading.

SELECTING CENTERPOST

To play 78 RPM or 33 RPM records (7-inch, 10-inch or 12-inch), insert the proper centerpost into the socket in the center of the turntable. To remove a centerpost, merely place one hand on the turntable and lift up the centerpost with the other hand. To play 45 RPM 7-inch records, insert the 45 RPM spindle into the socket in the center of the turntable. Turn the spindle counter-clockwise until the "Lock-In Lugs" fall into and lock in the three holes in the turntable. To remove the spindle, hold the turntable stationary, turn the spindle clockwise, then lift it out of the socket.

IMPORTANT: If the 45 RPM spindle is being used for the first time or if the changer does not operate properly on 45 RPM, be sure to read the information given under the heading "45 RPM Spindle Adjustment."

SETTING SPEED CHANGE KNOB

For playing 78 RPM records, move the speed change knob (54) the "78" position; for playing 33 RPM records, move it to the "33" position; for 45 RPM records, move it to the "45" position. When moving the speed change knob, make certain that it clicks or snaps into position.

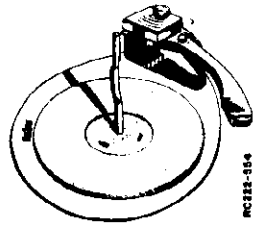

Figure 2. RC222 Record Changer.

SETTING NEEDLE SELECTOR KNOB

To play 78 RPM records, rotate the needle selector knob so the side marked "78" faces up; to play 33 RPM records or 45 RPM records, the side marked "LP" must face up. The small arrows next to the "78" and "LP" indicate the direction in which the knob must be turned. When turning this knob to either position, make certain that it is turned until it reaches its stop.

SETTING HEAD ASSEMBLY

To play any 7-inch or 10-inch records, rotate the head assembly so that its embossed design is toward the centerpost. For 12-inch records, rotate the head assembly so that the embossed design is away from the centerpost.

SETTING RECORD SIZE SELECTOR KNOB

To play any 7-inch records, turn the Record Size Selector knob (16) all the way to the left until it reaches its stop.

To play 10-inch or 12-inch records, turn this knob to the right until it reaches its stop.

LOADING AND STARTING THE RECORD CHANGER

To load 78 RPM or 33 RPM records, place a stack of records so that they rest on the record support (11) and the offset in the centerpost. Do not mix records—play a stack of the same size and type.

To load 45 RPM records, place as many as twelve records over the 45 RPM Spindle, so that they rest on the record supports (67). Be sure that the records are held up by BOTH record supports as shown in figure 9. If the bottom record slips down over one of the record supports, the record may not drop when the changer goes through its change cycle.

REJECTING A RECORD

If you wish to stop playing any record and start playing the next one, merely press down on the On-Off Reject knob momentarily.

STOPPING AND UNLOADING

This Record Changer cannot be turned off, by means of the On-Off Reject knob, during its change cycle. Therefore, after the last record, allow the mechanism to go through its change cycle and start playing over again.

MODELS RC221, RC222

THE CHANGE CYCLE

DESCRIPTION OF CHANGE CYCLE FOR 78 RPM AND 33 RPM OPERATION

(See Figures 3, 4 and 5)

If at all possible, we recommend that you carefully observe the operation of a changer that is in normal operating condition. It is a good idea to rotate the turntable by hand and repeat the change cycle until you understand the function of each part.

It is important to note that this changer employs two different types of trip arrangements. For 78 RPM and 33 RPM operation, the oscillating type trip is used, which depends upon the in and out movement of the pickup arm caused by the eccentric groove in the record. For 45 RPM operation, a position type trip is used which trips the changer into change cycle when the pickup arm reaches a given distance from the 45 RPM spindle.

The changer operates as follows: The turntable is driven by the rubber tired idler wheel (58) on the three speed motor. The turntable speed (78 RPM, 33 RPM or 45 RPM) is determined by the diameter of the drive shaft that drives the idler wheel. See figure 3. The 78 RPM drive shaft is a part of the motor armature. The 33 RPM and 45 RPM drive shafts are moved in and out of position mechanically when the speed change knob is moved.

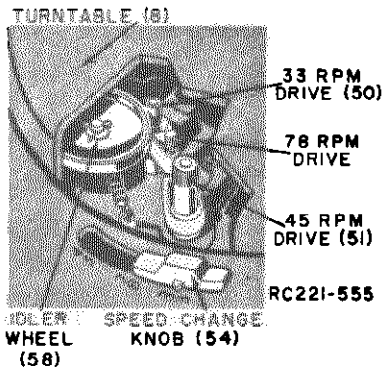

Figure 3. Motor, Showing 3 Drives.

The changer mechanism is driven during its change cycle by the rubber-tired drive wheel (86), which in turn is driven by the knurled hub of the turntable. During normal playing, the drive wheel is held in a neutral position as illustrated in Fig. 4A, so that the indentation prevents the tire from contacting the knurled hub. The drive wheel (86) is held in this position by the trip stop wire (111A) and the cam stop stud (91A) on the control cam (91).

During the record play and as the needle enters the record eccentric groove, the pickup arm is moving in toward the centerpost. The pawl (127B) is moving across the trip serrations (114). When the eccentric groove in the record causes the pickup arm to move away from the centerpost, the pawl (127B) tends to reverse its direction, but its sharp point catches in one of the trip serrations (114) and moves the trip lever (111). As the eccentric groove moves the pickup arm back in toward the centerpost, and then away from the centerpost again, the pawl (127B), again locks in one of the trip serrations, moves the trip lever (111) far

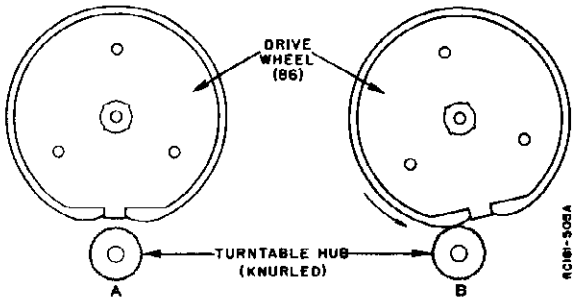

Figure 4. Drive Wheel Positions.

enough so that the trip stop wire (111A) is no longer engaged with the cam stop stud (91A). ***This oscillating trip action is dependent upon the adjustment of the oscillating trip adjusting screw (115).*** If it is adjusted properly, the pickup arm will move away from the centerpost, then toward the centerpost, and as it comes away the second time the changer will trip and start its change cycle. (See paragraph under heading "Oscillating Trip Adjustment.") The position of drive wheel (86) at this moment is shown in Figure 4B.

This allows the cycle spring (112) to pull the control cam clockwise (bottom view). Since the control cam (91) and the drive wheel (86) are on the same shaft, the drive wheel is turned so its rubber tire is against the knurled hub of the turntable (see Figure 4B). The turntable now rotates the drive wheel (86) which simultaneously rotates the control cam (91). As soon as the changer has been tripped, the trip cocking spring (110) causes the trip lever (111) to return the trip stop wire (111A) to the normal playing position.

Roller (105) riding on the control cam (91) moves the pivot link (104) which in turn rotates the control plate (123). The rotation of the control plate (123) causes its inclined tab (123A) to ride against the lift rod (30) which lifts the pickup arm from the record. The arm control lever roller and stud (127C) then engages the safety arm (124). Further rotation of the control cam (91) moves the pivot link (104) causing further rotation of the control plate (123); this moves the pickup arm to the right, clearing the record. This much has taken place in approximately one-third of the total rotation of the control cam.

As the control cam rotates further, its push-off stud (91B) engages with the end of the slot in the push-off link assembly (95), moving it. This movement is transmitted through the push-off arm (95A) and as a result, the push-off shaft (9) is rotated. This rotates the push-off cam (9A) which in turn slides the push-off plate (10) forward and drops the next record to be played. Note that the record stack rests on the record support shelf (11). The small slide at the top end of the centerpost holds back all records other than the bottom one when the push-off plate (10) moves forward.

As the control cam continues its rotation, the pivot link (104) moves back following the cam, since the roller (105) is kept in contact with the cam by the control plate spring (106). This moves the control plate (123) back; the arm control lever (127) moves the pickup arm to the set-down point for the record to be played. The pickup arm is held above the record because the lift rod (30) is still resting at the top of the inclined tab (123A) on the control plate (123). The

© John F. Rider

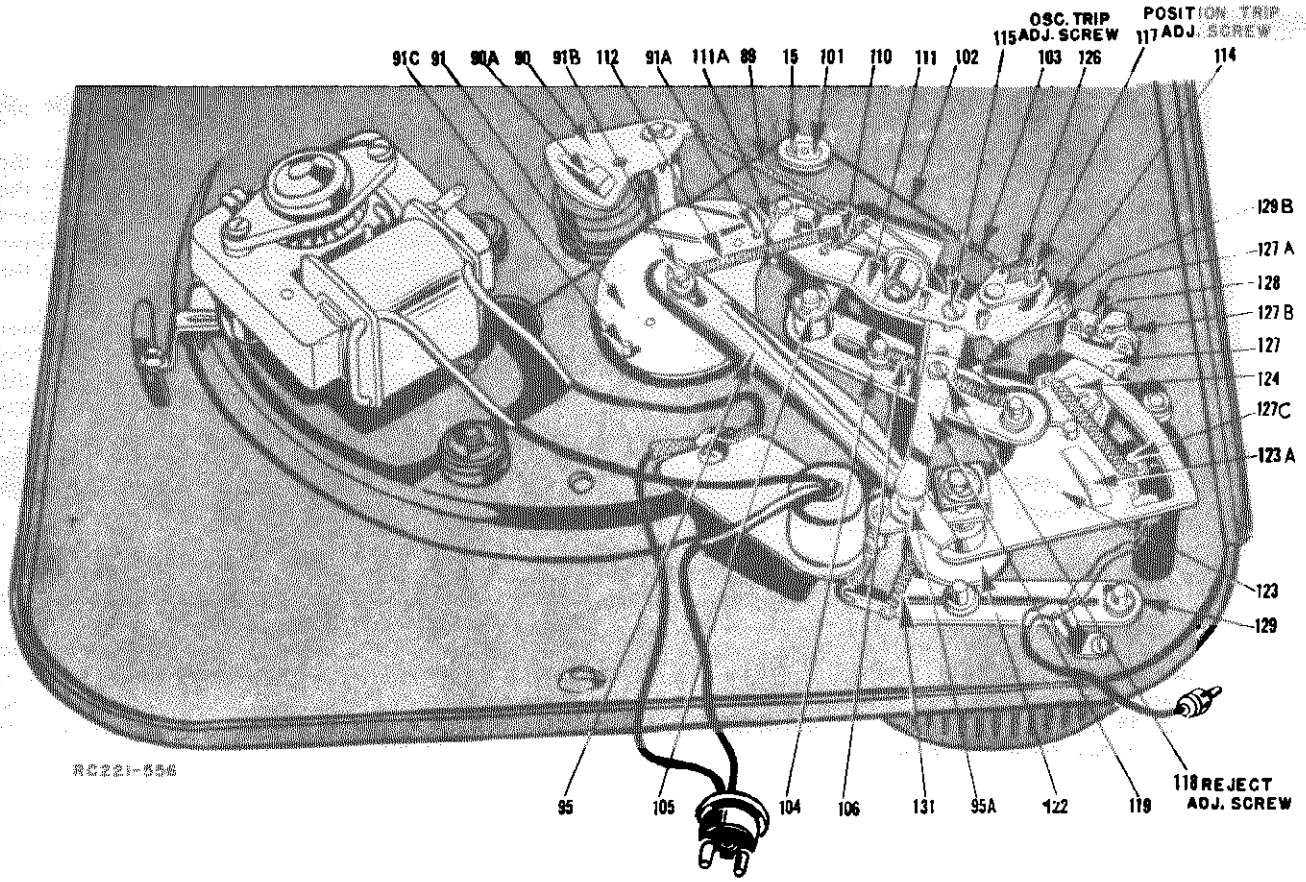

Figure 5. RC221 Bottom View Assembled.

set-down point is governed by the set-down adjusting screw (20). (See figure 10.) The shoulder on the set-down arm (129A) holds the pickup arm at the set-down point until it is pushed back by the edge of the control plate engaging the set-down arm stud (129B). The pickup arm is then free and moves down toward the record starting groove.

When the record changer is set to play 7-inch or 10-inch records, the set-down arm (129A), through the tension of the set-down spring (131), moves the arm in toward the centerpost until the return roller and stud (127D) reaches the shoulder of the set-down arm (129A). The pickup arm is held in this position until the control plate (123) engages the set-down arm stud (129B), pushing the set-down arm back, releasing or freeing the pickup arm.

When the changer is set for 12-inch records the size change eccentric (122) moves the set-down and size change assembly (129) so that the arm return roller and stud (127D) does not travel as great a distance along the set-down arm (129A) before it reaches the shoulder. Therefore the pickup arm cannot move in toward the centerpost as far as for 7-inch or 10-inch records, during change cycle.

When the On-Off Reject knob (1) is pressed down, the push-off cam and shaft (9) moves the reject arm (119) down. This movement causes the trip lever (111) to move which prevents the trip stop wire (111A) from engaging the cam stop stud (91A). The change cycle then proceeds in the manner described above.

The change cycle is exactly the same for either speed (33 RPM or 78 RPM) except for the fact that the change cycle time is proportional to the turntable speed (33 RPM or 78 RPM).

Playing 7-inch (33 RPM) records automatically is accomplished by removing the centerpost from 10-inch or 12-inch records and inserting the centerpost for 7-inch (33 RPM) records. Rotating the record size selector knob (16) to the position for 7-inch records, rotates the set-down eccentric (25). The set-down eccentric rotates or moves the set-down plate, part of pivot and mounting plate (22), and the pivot spring and hub (31). This in turn moves the end of the pickup arm closer to the centerpost and automatically provides for proper set-down on 7-inch records.

DESCRIPTION OF CHANGE CYCLE FOR 45 RPM OPERATION

For 45 RPM operation, the record changer functions in exactly the same manner as described under the heading "Description of Change Cycle for 78 RPM and 33 RPM." However, a few parts not yet described operate when the speed change knob (54) is in the "45" position and the 45 RPM spindle (62) is in place.

Since 45 RPM records do not have an eccentric groove, a position type trip is required to trip the changer into its change cycle. When the speed change knob is moved to the "45" position, the tension on the position trip cord (102) is released. This allows the position trip cocking spring (126) to pull the trip engagement arm (114A) so that the position trip

adjusting screw (117) will ride on the position trip incline (127A) as the pickup arm moves toward the centerpost. As the position trip incline (127A) moves across the position trip adjusting screw (117), the trip lever (111) moves, thereby moving the trip stop wire so it is no longer engaged with the control cam stop stud (91A). The changer then goes through its change cycle in the same manner as it does for 33 RPM and 78 RPM operation.

After the control cam (91) has rotated approximately one third of its rotation, the riser control stud (91C) engages the riser plate (90), driving the riser plate counter-clockwise so that its inclined portion (90A) rides across the push-off adjusting shaft (75) on the 45 RPM spindle. This forces the push-off adjusting shaft and the slicer cam and shaft assembly (69), up into the spindle.

As the slicer cam (69A) rises, its sides push the slicers (65 & 66) outward. The slicers move under the second from the bottom record of a stack. The record supports (67) are moved into the spindle simultaneously since the ears of the slicers are fitted into the cut-away section of the record support on the opposite side of the spindle.

When the push-off adjusting shaft (75) reaches the top of the inclined portion of the riser plate (90), the slicers (65 & 66) are fully extended, and the record supports are all the way into the spindle. This allows the bottom record to drop to the turntable while the remainder of the stack is held up by the slicers.

As the control cam continues its rotation, the riser control stud (91C) releases the riser plate (90) and the riser plate is returned to its normal position by the riser plate return spring (89). The record supports (67) and slicers (65 & 66) are returned to their normal position by the record support spring (68) and the slicer springs (64). At this point the record stack drops from the slicers to the record supports.

ADJUSTMENTS

REJECT AND TRIP ADJUSTMENTS

This record changer employs two different types of trip mechanisms to trip it into change cycle. For 78 RPM and 33 RPM operation, an "oscillating" type trip is used. See figure 6. This type of trip depends upon the in and out movement of the pickup arm caused by the eccentric groove in the record.

For 45 RPM operation, a "position" type trip is used. See figure 8. (45 RPM records do not have an eccentric groove.) This type of trip arrangement, trips the changer into change cycle when the pickup arm reaches a given distance from the 45 RPM spindle.

Screw adjustments are provided for both types of trips. However, before making either of the trip adjustments or the reject adjustment, it is very important to make certain that the reject spring (2) is holding the push-off shaft (9) up, as far as it will go. It is also important that there is $\frac{1}{32}$ of an inch clearance between the end of the reject arm (119) and the rivet on the push-off arm and link assembly (95). If these precautions are not observed, erratic reject and trip action may result, or if there is no clearance at the end of the reject arm, the changer may repeatedly trip into change cycle.

Possible causes of the spring not holding the push-off shaft up are:

a. The On-Off Reject knob (1) may be loose.
b. The reject spring (2) may be broken, missing, slipped down between washer (3) and push-off shaft (9), or has lost its tension.
c. Push-off shaft (9) binding.

REJECT ADJUSTMENT

1. Make certain that the push-off shaft (9) is not binding and is being held up, as far as it will go, by the reject spring (2) and the On-Off Reject knob (1).
2. Adjust the reject adjusting screw (118) until there is approximately $\frac{1}{32}$ of an inch space between the end of the reject arm (119) and the rivet on the push-off arm and link assembly (95).
   NOTE: If there is no space between these two parts, it will be possible for the changer to begin its change cycle when the on-off reject knob is turned to the "OFF" position. If there is too much space, the changer may not reject or will reject erratically.
3. Operate the Record Changer, press the On-Off Reject knob momentarily and check reject action.

OSCILLATING TRIP ADJUSTMENT
For 33 RPM and 78 RPM Operation

IMPORTANT: This adjustment must be made properly before making the Position Trip Adjustment.

This record changer uses the oscillating type trip for 78 RPM and 33 RPM operation. See figure 6. In order for the changer to trip properly, the oscillating trip adjusting screw (115) must be properly adjusted. Also, this adjustment affects the position trip adjustment and consequently should be made carefully before attempting the position trip adjustment.

The oscillating trip adjusting screw (115) is properly adjusted when the record changer trips into change cycle after the eccentric groove in the record has caused the pickup arm to move away from the centerpost once or twice, that is, one or two backswings of the pickup arm, before the changer trips into change cycle. Since some eccentric grooves cause greater movement of the pickup arm than others, the changer might trip into change cycle with only one backswing on some records and with two backswings on others.

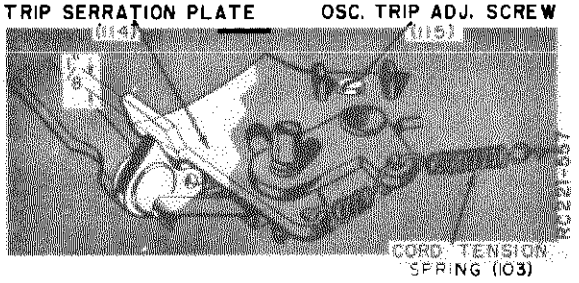

Figure 6. Trip Serration Plate, Showing Oscillating Trip Adjustment.

© John F. Rider

The ideal adjustment of screw (115) for best operation is when the point of the pawl (127B) is horizontally even or level with the smooth side of the trip serration plate (114). NOTE: The point of the pawl should be approximately 1/8 of an inch from the bottom edge of the lip on the trip serration plate. See figure 8.

Adjust the oscillating trip adjusting screw (115) as follows:

1. Make certain that the push-off shaft (9) is not binding and is being held up, as far as it will go, by the reject spring (2) and the On-Off Reject knob (1). Also check for 1/32 of an inch clearance at the end of the reject arm. See the third paragraph under heading "Reject and Trip Adjustments."
   Check to be sure that the position trip cord (102) is not broken or loose and that the cord tension adjusting cam (101) is not misadjusted.
2. Check to see that the top of the trip stop wire (111A) is even (level) with the top of the control cam stop stud (91A) as shown in figure 7. If the stop wire is not even with the top of the stud, bend the wire until it is even. The trip bracket assembly should be removed before bending the trip stop wire.

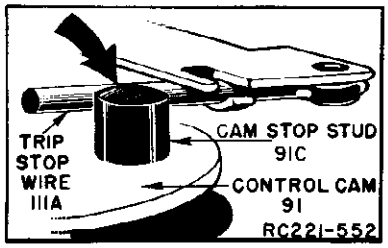

Figure 7. Positioning Trip Stop Wire.

3. Set speed change knob in the "78" or "33" position.
4. Connect record changer motor to power source and turn the On-Off Reject knob on and off as needed to check this adjustment.
5. Adjust trip adjusting screw (115) until the point of the pawl (127B) is horizontally even or level with the smooth side of the trip serrations (114). See figure 6. The point of the pawl should be 1/8 of an inch from the bottom edge of the lip on the trip serrations.
6. Place a record on the turntable and check to make certain that the changer trips into change cycle with one or two backswings of the arm. Three or four backswings may be required on 7-inch 33 RPM records.

Important

The eccentric groove of a record should be used when checking the oscillating trip adjustment. Do not lift the pickup arm and move it in and out by hand.

If the oscillating trip adjusting screw (115) is turned out too far, it will take more than two backswings of the pickup arm to trip the changer into change cycle. If the screw (115) is almost all the way out, the changer will not trip. If the screw is turned too far in, there will be excessive drag and wear on the trip serrations, pawl point and on record eccentric grooves.

POSITION TRIP ADJUSTMENT
For 45 RPM Operation

IMPORTANT: Before making this adjustment, the Oscillating Trip Adjustment should be properly made.

The position trip adjusting screw (117) is properly adjusted when the record changer trips into change cycle when the needle is 1 1/4" to 1 7/16" from the near edge of the 45 RPM spindle or 2" to 2 3/16" from the center of the centerpost hole in the turntable.

Turning the position trip adjusting screw (117) in, moves the trip point away from the 45 RPM spindle. Turning the screw out, moves the trip point closer to the 45 RPM spindle.

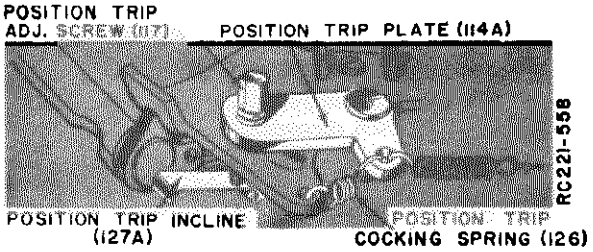

Figure 8. Trip Serration Plate, Showing Position Trip Adjustment.

Adjust the position trip adjusting screw (117) as follows:

1. Make certain that the push-off shaft (9) is not binding and is being held up, as far as it will go, by the reject spring (2) and the On-Off Reject knob (1). Also check for 1/32 of an inch clearance at the end of the reject arm. See the third paragraph under heading "Reject and Trip Adjustments."
   Check to be sure that the position trip cord (102) is not binding or twisted and that the cord tension adjusting cam (101) is not misadjusted, preventing the position trip cocking spring (126) from pulling the position trip plate (114A) into position.
2. Check to see that the top of the trip stop wire (111A) is even (level) with the top of the control cam stop stud (91A) as shown in figure 7. If the stop wire is not even with the top of the stud, bend the wire until it is even. The trip bracket assembly should be removed before bending the trip stop wire.
3. Check Oscillating Trip Adjustment.
4. Set the Speed Change knob in the "45" position.
5. Connect record changer motor to power source and turn changer on and off as needed to check this adjustment.
6. Adjust position trip adjusting screw so the changer trips at the proper point as given above.

ADJUSTMENT OF SET-DOWN POINT

IMPORTANT: This adjustment must be made with the record size selector knob (16) in the "10.12" position. Also, the head assembly must be in the position for 7-inch and 10-inch records.

Adjustment of the set-down point, for either 7-inch, 10-inch, or 12-inch records, is made by adjustment of the set-down adjusting screw (20), see figure 10. Screw (20) is accessible through hole in right side of pickup arm. When turning the record size selector knob (16) be sure to turn it all the way to avoid making the set-down adjustment at the wrong point, resulting in

© John F. Rider

improper set-down on 7-inch records. Turning the set-down adjusting screw (20) in, moves the set-down point of the pickup arm closer to the centerpost and turning the screw out moves it away from the centerpost.

CAUTION: Normal practice has been to check the set-down points, using records as a gauge. However, due to the large variety of record sizes, it is recommended that the distances specified below are checked to insure proper set-down on all sizes and types of records.

Make the set-down point adjustment as follows:

1. Set record size selector knob (16) to the "10.12" position; be sure the knob is turned all the way to its stop.
2. Set needle selector knob to either position being certain that the knob is turned to its stop so the needle projects straight down.
3. Set the head assembly to the position for playing 7-inch or 10-inch records.
4. Press down on the On-Off Reject knob (1) momentarily. Rotate the turntable by hand through the change cycle until the pickup arm moves down toward the turntable.
5. Check the distance between the needle point and the near side of the centerpost. For proper set-down on 10-inch records, the distance between needle and centerpost should be between 4 5/8" and 4 11/16".
6. Adjust set-down screw (20) and repeat steps 4 and 5 until the proper distance is obtained. If this adjustment is made carefully, the set-down point for 7-inch records and 12-inch records will be automatically correct.
7. Check 12-inch set-down as follows: Set the head assembly to the position for 12-inch records, press On-Off Reject knob momentarily, rotate turntable by hand through the change cycle and check the 12-inch set-down point. The proper distance between the needle point and the near side of the centerpost is between 5 5/8" and 5 11/16".
8. Check 7-inch set-down as follows: Set the head assembly to the position for 7-inch and 10-inch records, set the record size selector knob (16) all the way to the right until it reaches its stop. Press the On-Off Reject knob momentarily, rotate the turntable by hand through the change cycle and check the 7-inch set-down point. The proper distance between needle point and the near side of either of the two small centerposts is between 3 3/16" and 3 1/4". The proper distance from the needle point to the near side of the 45 RPM Spindle is between 2 9/16" and 2 5/8".
9. If step 7 or step 8 indicates improper set-down on 7-inch records or 12-inch records, make a compromise adjustment for 10-inch record set-down as outlined in steps 3, 4, 5 and 6.

ADJUSTING THE PICKUP ARM HEIGHT
(See Figures 9 and 10)

This record changer is designed so that when either needle point rests 3/16" above the changer pan, the pickup arm (17) will automatically lift high enough during the change cycle, to clear the top record of a stack of twelve 10-inch, ten 12-inch, ten 7-inch 33 RPM or twelve 7-inch 45 RPM records on the turntable. With proper pickup arm height setting, the pickup arm will not lift high enough to strike the bottom record of the stack to be played.

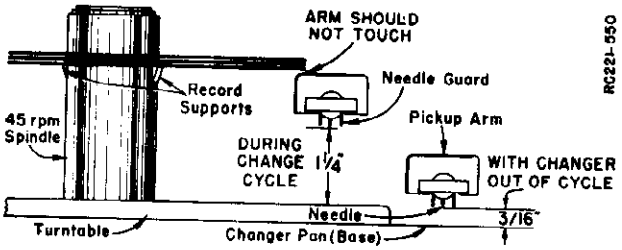

Figure 9. Checking Pickup Arm Height.

With the record changer out of change cycle and the pickup arm clear of the turntable, adjust the lift adusting screw (29) so that the needle rests approximately 3/16" above the top of the changer pan. Turning screw (29) in raises the pickup arm; turning it out lowers the arm. See Figure 10.

After this adjustment has been made, the record changer should be run through its change cycle a few times to make certain that the pickup arm does not lift high enough to touch the bottom record of the stack to be played. This adjustment should be checked with the 45 RPM Spindle in place and a 45 RPM record resting on the record supports (67). See figure 9. If, for some reason, the arm touches the bottom record, a compromise adjustment should be made. Turn the screw out and lower the pickup arm slightly.

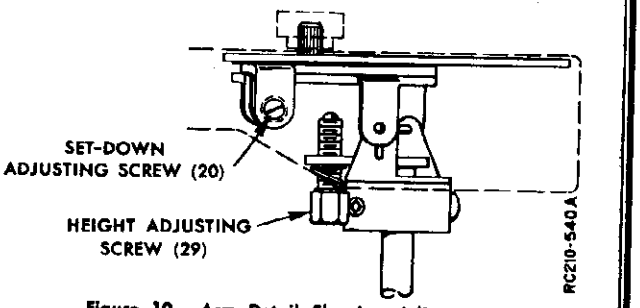

Figure 10. Arm Detail Showing Adjustments.

POSITION TRIP CORD TENSION ADJUSTMENT

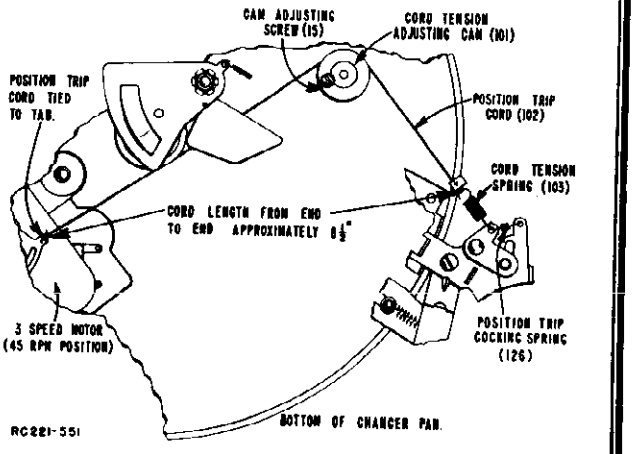

Figure 11. Adjusting Cord Tension.

An adjustment is provided which compensates for variations in the length of the position trip cord (102).

© John F. Rider

If the position trip cord is being replaced or if the adjusting cam lock screw (15) has come loose, allowing the cord tension adjusting cam (101) to rotate away from its normal position, proceed as follows:

1. Set speed change knob (54) to "45" position.
2. Move the cord tension adjusting cam (101) to just the point where all slack has been removed from position trip cord (102), and there is just a very slight tension on the cord tension spring (103). Do not adjust it so tight as to stretch the position trip cocking spring (126).
3. Tighten the adjusting cam lock screw (15).

ADJUSTING DISTANCE BETWEEN RECORD SUPPORT (11) AND CENTERPOSTS (60 and 61) (See Figures 12 and 13)

To check the distance between the record support (11) and centerposts (60 and 61), proceed as follows:

1. Set the head assembly to the position for 7-inch and 10-inch records. Insert the centerpost (61) for 10-inch and 12-inch records.
2. Hold the centerpost away from the head assembly to take up any play.
3. Measure the distance from the edge of the record support to the inside edge of the offset shelf on the centerpost. If this distance is not between 4-59/64" and 4-63/64", it will be necessary to bend centerpost until proper distance is obtained. NOTE: To bend the centerpost, remove it from the changer, and place the bottom end in a vise. Grasp the centerpost BELOW the offset (with a wrench) and bend it the amount needed in the direction necessary.

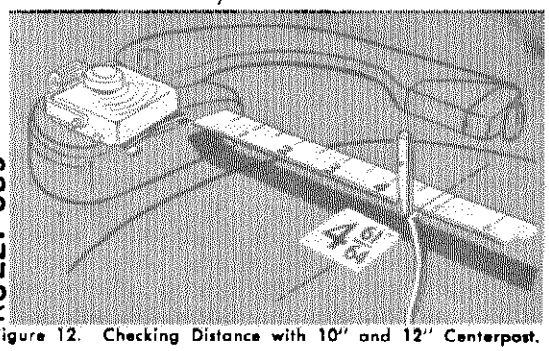

Figure 12. Checking Distance with 10" and 12" Centerpost.

4. With the head assembly in the position for 7-inch and 10-inch records, insert the centerpost (60) for 7-inch 33 RPM records. Then proceed with steps 2 and 3 above and check for a distance of between $3\frac{15}{32}$" and $3\frac{17}{32}$".
5. If this distance is not within the dimensions specified in step 4, bend the centerpost as described in step 3.

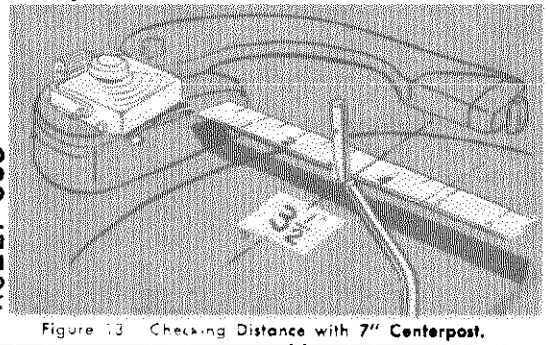

Figure 13. Checking Distance with 7" Centerpost.

45 RPM SPINDLE ADJUSTMENT

The push-off adjusting shaft (75 is the only adjustment on the 45 RPM Spindle (62). This adjustment is fairly critical and must be made for the individual record changer. The push-off adjusting shaft is pre-set at the factory so that the distance between the end of the shaft and the top of the lock nut (74) is $1\frac{1}{32}$". This adjustment should be satisfactory for most record changers. However, **the adjustment should be checked and adjusted, if necessary, before the 45 RPM Spindle is used.** To check for proper adjustment, proceed as follows:

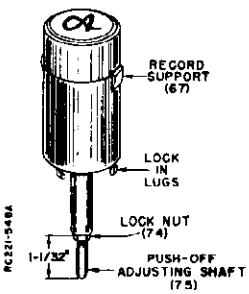

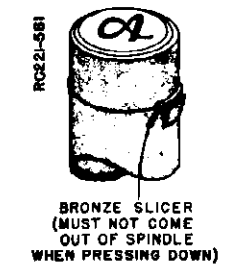

1. Place the 45 RPM Spindle in the hole in the center of the turntable and turn it so that "lock in lugs" fall into slots in the turntable (do not lock the lugs into the turntable).
2. Press down on the spindle and CAREFULLY note whether or not the slicers (65 and 66) just start to move out of the spindle.

3a If the slicers do not move when the spindle is pressed down, proceed with step 4.

3b If the slicers start to move out of the spindle as it is pressed down, lift the spindle out, loosen the lock nut (74), turn the push-off adjusting shaft (75) in approximately one turn and then tighten the lock nut. Insert the spindle, press it down and check to see if the slicers still move out. If the slicers move out, repeat this procedure, turning the adjusting shaft in, approximately one turn at a time, until the slicers do not move out when the spindle is pressed down.

4. Insert the spindle and lock it in place. Put a stack of records over the spindle, turn the record changer on and momentarily press the on-off reject knob (1) to the reject position.
5. If the bottom record drops to the turntable, keep rejecting records until the whole stack has been dropped to the turntable. Each record should slide smoothly down the spindle. If all records drop properly, the adjustment is satisfactory.
6. If records do not drop, remove the spindle, loosen the lock nut (74) and turn out the push-off adjusting shaft (75) approximately one turn and repeat steps 1 and 2, check step 3b and then proceed with steps 4 and 5. Repeat this procedure until the records drop properly.

© John F. Rider

MODELS RC221, RC222

SERVICE AND REPAIR

DISASSEMBLING THE 45 RPM SPINDLE

(See Figure 14)

To disassemble the spindle for parts replacement etc., proceed as follows:

1. Remove two screws from the underside of the spindle and lift up the spindle cap. See figure 14a. *CAUTION: When the spindle cap (63) is off, use extra care to keep from accidentally pushing up on the push-off adjusting shaft (75). If this shaft is pushed up, the slicer return springs (64) and slicer may fly off and be lost.*
2. Using a "long nose" pliers or tweezers, remove the slicer spring (64) which holds the top slicer (65) in place. Then remove the top slicer, see figure 14b. (NOTE: This slicer has an offset. It must be removed first when disassembling and installed last when reassembling).
3. Remove the other slicer return spring and the bottom slicer (66).
4. Now, push up on the push-off adjusting shaft (75) until the record supports (67) come up over the top of the spindle.
5. Grasp both record supports with the thumb and two forefingers and lift them off of the slicer cam (69A). Release record supports carefully so record support return spring (68) is not lost.
6. To remove the slicer cam and push-off assembly (69), remove the retaining ring (72) and the push-off return spring (71) from the underside of the spindle and lift the assembly off from the top of the spindle.

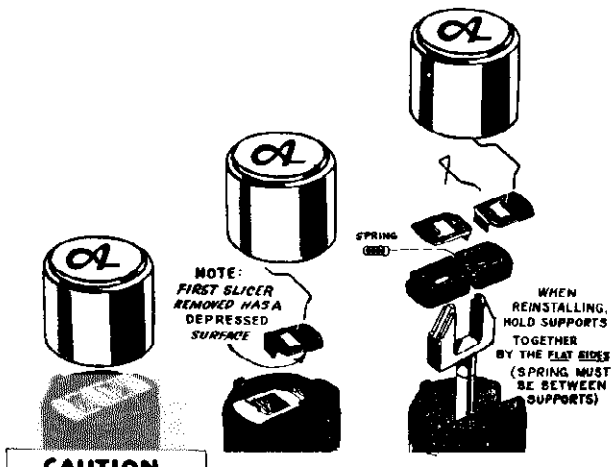

Figure 14. Disassembly of 45 RPM Spindle.

When assembling the spindle, merely reverse the above procedure. When installing the record supports (67) and their return spring (68), place the spring between the record supports (67) and compress the spring enough so the record supports can be slid down over the slicer cam (69A). When installing the slicers (65 and 66) be sure to install the flat slicer (66) first, and then the slicer with the offset (it also has a smaller cut-out).

CARTRIDGE AND NEEDLES

The cartridge (36) used in these record changers is especially designed and there are a few things which should be observed when replacing the cartridge (36), needles (40 and 41), or pickup arm cable (35).

When replacing either needle make certain that the correct needle is inserted in the proper "side" of the cartridge. The needle (41) for "LP" records is an osmium tipped needle especially designed for playing "LP" records. The radius of the point of the "LP" needle is only 1/3 of the radius of the point of a standard (78 RPM) needle. If this sharp needle is used on standard 78 RPM records, it has a tendency to "wobble" in the record groove and would possibly damage the standard record groove. A needle for 78 RPM records may possibly damage "LP" records because of its tendency to "skip" across the fine record grooves. Consequently, care should be taken when replacing needles.

The needle (41) for "LP" records is painted red to identify it. The needle guard on the LP "side" of the cartridge has red color dots to distinguish it from the 78 RPM "side" of the cartridge. The red (LP) needle should be inserted in the side of the cartridge which has the red color dots.

When replacing the cartridge (36) care must be taken when placing the pickup arm cable pinjacks on the cartridge. There must be sufficient slack in the cable to allow the cartridge to rotate. It is also important that the short length of plastic tubing be kept over one terminal.

THREE SPEED MOTOR

The turntable speed of this record changer is changed mechanically by causing one of the three drive shafts (having different diameters) to ride against the idler wheel. See figure 3. The 78 RPM drive shaft is part of the motor armature. The other two drive shafts (33 RPM and 45 RPM) are driven by the 78 RPM drive shaft by two rubber belts (55). These rubber belts (55) and the idler wheel (58) must be kept clean and free from oil. If they become greasy or stretched, they might possibly slip, causing the turntable speed to vary, resulting in unsatisfactory operation.

When replacing the speed change knob (54), make certain that the shaft in the knob does not touch the sides or ends of the cut-out in the pan. If the speed change arm is bent, the speed change knob shaft may rub against the edge of the opening in the pan, causing rumble and noise pickup. Also, the clearance between the bottom of the speed change knob and the top of the pan should not be less than 1/64 or more than 3/64 of an inch.

REMOVING THE PLASTIC BASE HOUSING (13)

Should it be necessary to remove the plastic base housing, proceed as follows:

1. Remove retaining rings (84 and 108).
2. Release one end of the index spring (130).
3. Lift the entire head assembly up from the top of the changer.
4. Loosen Allen set screw (32) and lift complete pickup arm assembly off.
5. Remove retaining ring (33) and washer (34).

© John F. Rider

6. Remove three screws (15) holding base.
7. Lift off the plastic base housing (13).
8. When reassembly has been completed, the pickup arm height should be carefully checked and adjusted, if necessary, by means of the lift adjusting screw (29). The set-down should also be checked and adjusted, if necessary, as outlined under "Adjustment of Set-Down Point."

REMOVING TURNTABLE (8) AND BEARING ASSEMBLY (48)

To remove the turntable it is only necessary to grasp the turntable by its edges and lift up. Before replacing the turntable, make sure that the recessed part of the drive wheel (86) is towards the centerpost. If necessary, turn drive wheel counter-clockwise about a turn so it locks in this position. The pickup arm should be positioned away from the turntable. In replacing the turntable, force is not needed to seat it. Make certain, however, that the idler wheel of the motor has been pushed in towards the centerpost and that the idler wheel is making contact with the inner side of the turntable flange. The idler wheel should be pushed in with a screwdriver or similar flat tool. Do NOT push toward the rear of the changer.

The dimensions of the three speed motor are such that three cork washers (46) are used under the turntable hub to keep the turntable from rubbing against the idler wheel drive shafts.

In some cases it may be found that the three cork washers, after considerable use, are compressed so the turntable will rub. To build the stack up, an additional thin cork washer should be used. This fourth cork washer may be placed at the top or bottom of the stack. CAUTION: If an addition cork washer is used, it may be necessary to make a compensating adjustment on the 45 RPM spindle. See "45 RPM Spindle Adjustment."

The washers (46 and 47) and thrust bearing assembly (48) are removed by sliding them off of the centerpost. Replace in the order shown in Figure 15.

REMOVING CHANGER FROM BOTTOM COVER

Model RC221 only. To remove the changer from the bottom cover of the RC221, remove the three mounting screws (79), from the top of the changer pan. Then merely lift the changer pan off of the bottom cover (136) being careful to see that lead-in cables and motor leads are disconnected.

When reinstalling the changer pan on the bottom cover, be certain that float springs (78) are properly installed. (The wide end of the spring fits around the extrusion on the changer pan.) Insert the mounting screws (79). IMPORTANT: These screws must be installed so they travel freely through the extruded holes in the changer pan. If the screws touch the edges of the holes in the pan, a scraping sound and micro phonics may occur when records drop to the turntable.

REPLACING POSITION TRIP CORD (102)

The position trip cord (102) is ordinary braided silk or nylon dial cord approximately $\frac{1}{32}$" thick. To replace this cord, cut a piece of dial cord about 10" or 12" long and tie one end to the tab on the motor. See figure 11. This is most easily done by either making a slip knot so the knot will tighten when the cord is placed over the tab on the motor and pulled, or removing one end of the idler wheel spring (57) and pivoting the idler wheel and bracket out of the way. Tie the other end of the cord to the cord tension spring (103) so that the distance between the two knots is approximately 8½". Late production record changers have a metal clip (137) to fasten the cord at the tension spring end. After threading the cord under the control cam (91), hook the cord tension spring as shown in the illustration. Then adjust the cam (101) as outlined under "Position Trip Cord Tension Adjustment."

RISER PLATE (90)

The inclined portion of the riser plate (90) was copper plated in later production, to eliminate the possibility of stalling the changer during change cycle (45 RPM operation only).

If the record changer stalls during change cycle, try replacing the riser plate with part number G400A336.

LUBRICATION

Under normal operating conditions, the motor should never require oiling. Also, do NOT use oil on the 45 RPM spindle. The rest of the changer, however, should be lubricated with grease whenever it comes into the shop for repairs or adjustment. *All pivot and friction points should be greased adequately but not excessively.* A good automobile chassis grease may be used for this purpose.

The push-off shaft (9), powdered iron roller ((105), oilite bearings, (used in the turntable hub and base housing), may be lubricated with SAE No. 20 oil.

Care should be taken to prevent any of the lubricant from coming into contact with the drive or idler wheel tires, or the rubber drive belts. Also be careful, when using oil, that an excess does not seep into the felt of the turntable.

45 RPM RECORD SLIPPAGE

The 7-inch 45 RPM records may have a tendency to slip on each other when they are new. This would result in unsatisfactory reproduction which might be confused with results of a varying turntable speed.

In most cases, record slippage can be eliminated by making a series of shallow scratches, with a pen knife or other sharp instrument, on each record label. Another method of correcting this condition would be to place two small pieces of scotch tape, directly across from one another, on each record label.

RECORD CHANGER TROUBLE SHOOTING

Changer Will Not Trip.

1. Check for broken or loose cycle spring (112).
2. Check On-Off switch cover (100). If cover is not assembled to switch properly, it may bind push-off link and arm (95), preventing cycle spring (112) from pulling the control cam (91) around.
3. Check for misadjustment of the oscillating trip adjusting screw (115).
4. Check for bent trip stop wire (111A).
5. Check for broken pawl spring (128).

© John F. Rider

MODELS RC221, RC222

Changer Repeatedly Trips Into Change Cycle.
1. Check for misadjustment of reject adjusting screw (118), or trip adjusting screw (115). See "Reject and Trip Adjustments".
2. Check for broken trip cocking spring (110).
3. Check for broken reject spring (2).
4. Check for loose On-Off Reject knob (1).
5. Check for bent trip stop wire (111A).

Changer Will Not Reject.
1. Check adjustment of reject adjusting screw (118).
2. Check for bent trip stop wire (111A).
3. Check for control cam (91) binding.

Pickup Arm Does Not Set Down Properly
1. Check set down adjustment. See paragraph under heading "Set Down Adjustments."
2. Check for broken or loose set down spring (131).
3. Check for broken or loose set-down adjusting lock spring (21).
4. Check for missing or loose pickup arm counterweight screws (19) resulting in erratic set-down. (These screws hold pivot and mounting plate (22) in position.)
5. Check for taut pickup arm cable (35). The cable must be loose between the pickup arm and the terminal strip (14).

Pickup Arm "Skips" Across Records
1. Check to be sure that cabinet is level.
2. Check for worn needle.

Turntable Rubs Against Motor Drive Shafts
1. Check for missing or compressed cork washer (46 or 47). See discussion under heading "Removing Turntable (8) and Bearing Assembly (48)" in the Service and Repair section.

Changer Trips Into Change Cycle When On-Off Reject Knob Is Turned to Off.
1. Check paragraph under "Reject Adjustment".

Changer Causes Rumble Or Noise
1. Check for broken or missing "float" springs (78).
2. Check for "float" screws (79) rubbing against the edges of the holes in the changer pan.
3. Check for the speed change knob shaft (54) rubbing against the cut-out in the changer pan.

Records Do Not Drop to Turntable or More Than One Record Drops. (33 RPM and 78 RPM operation only.)
1. Check distance between record support and centerpost as described under "Adjusting Distance Between Record Support (11) and Centerposts (60 and 61)"

Changer Trips Into Change Cycle Before Finishing Record (78 RPM and 33 RPM only).
1. Check for broken position trip cord (102 or cord tension spring (103).
2. Check to see that cord tension adjusting cam (101) has not loosened or is misadjusted.

Changer Will Not Trip (45 RPM operation only).
1. Check for broken or missing position trip cocking spring (126).
2. Misadjustment of the position trip adjusting screw (117). See paragraph under heading "Position Trip Adjustment".
3. Broken or bent position trip incline spring (127A).
4. Check to see that position trip cord (102) is not too short or is twisted or binding.
5. Check for misadjustment of the cord tension adjusting cam (101).

Changer Trips Into Change Cycle Before Finishing Record (45 RPM only).
1. Misadjustment of position trip adjusting screw (117). See "Position Trip Adjustment".

Records Do Not Drop to Turntable (7-inch 45 RPM only).
1. Adjust push-off adjusting shaft (75). See paragraph under heading "45 RPM Spindle Adjustment".
2. Check for broken or missing riser plate return spring (89).

Turntable Jumps (Rises) During Change Cycle (45 RPM only).
1. Adjust push-off adjusting shaft (75). See paragraph under heading "45 RPM Spindle Adjustment".

Changer Stalls in Change Cycle (45 RPM only)
1. See "Riser Plate (90)" discussion in the Service and Repair section.

CAUTIONS
1. *See that the rubber tires on both the drive wheel and the idler wheel and both drive belts are kept clean and free from oil, grease, dirt or any foreign material.* Carbona or carbon tetrachloride may be used for cleaning these parts.
2. When handling the idler wheel (58) or drive wheel (86), keep fingers and hands away from the rubber tires. This is also true when handling the rubber drive belts (55). Natural body oils on these parts may possibly cause slippage.
3. When replacing the rubber tire (85) do not bend the tab on the drive wheel over too far as this may result in the tire catching or rubbing on the drive wheel pressure spring (88).
4. If the On-Off Reject knob (1) cannot be pulled off with the fingers, pry very carefully. The head cover (7) is plastic and if the On-Off Reject knob is pried off, excessive force should not be used.
5. When removing or replacing the pawl spring (128) care should be taken not to stretch it.
6. When removing or replacing the pickup arm (17), always loosen the Allen set screw (32) and lift off the complete assembly. The pivot spring, hub and pin assembly (31) can be removed from the pivot plate assembly (22) and replaced much more readily with the complete pickup arm assembly off of the changer. When reinstalling pickup arm assembly or the arm control lever (127) be sure to replace all washers that were used originally.
7. When replacing the switch mounting bracket (98) or the trip bracket (109) be sure to locate the half punches in the holes in the pan before tightening their mounting screws (99).
8. When replacing the on-off switch assembly (100) care should be used in bending the tab fasteners so that the switch is mounted firmly to the bracket.
9. When replacing or reinstalling the record size selector knob (16), turn the set-down eccentric (25) to the position for 10" and 12" set-dowr (all the way to the left). Then install the knot (16) so that the dot between "10.12" lines up with the locating dot on the pickup arm.
10. When disassembling the 45 RPM spindle, do not push up on the push-off adjusting shaft just after removing the spindle cap.

© John F. Rider

In later production, turntable (8) is held in place by a retaining ring (part number 401A286). Remove before lifting turntable.

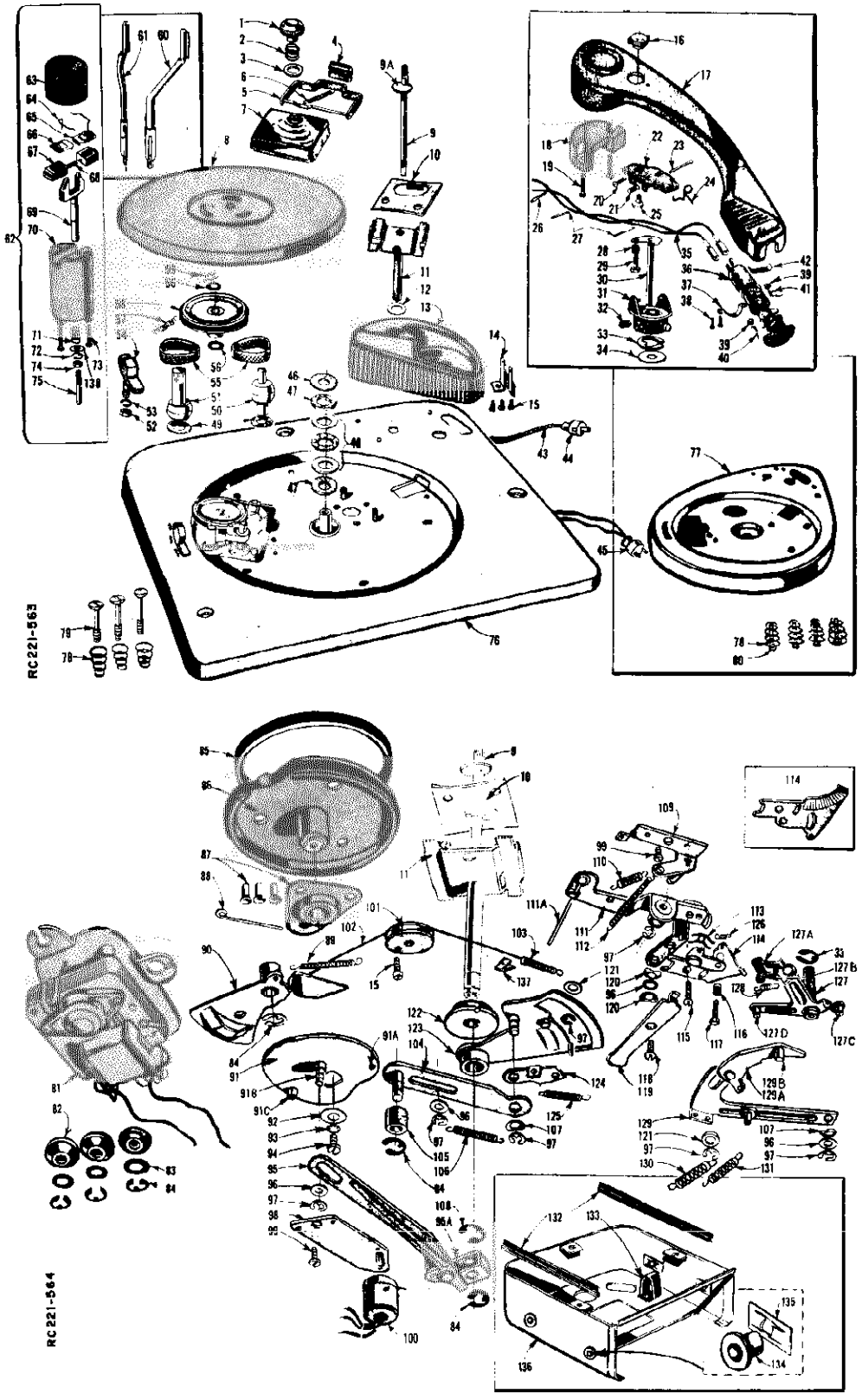

Figure 15 RC221 Exploded View

©John F. Rider

MODELS RC221, RC222

PARTS LIST

Ref. No.	Part Number	Description
1	403A27	On-Off Reject Knob
2	405A97	Reject Spring
3	4B1-166-47	Washer (Flat) .390x5/8x1/16
4	406A18	Rubber Bumper for Record Clip
5	403A32	Record Clip (Plastic)
6	405A94	Record Clip Spring
7	403A31	Head Cover (Plastic)
8	G400A332	Turntable
9	G400A248	Push-Off Cam and Shaft Assembly
9A		Push-Off Cam (Part of 9)
10	401A166	Push-Off Plate
11	G400A249	Support Tube and Shelf Assembly
12	4B1-166-47	Washer (Flat) .390x5/8x1/16
13	403C28	Base Housing
14	10B1-6	Terminal Strip
15	402A148	Screw, #6 P.K. Spec. ⅜" OFHST
16	403A37	Record Size Selector Knob
17	403C37	Pickup Arm
18	404A23	Pickup Arm Counterweight
19	1A50-6-47	Screw, #4 FH S.T. (2 req.)
20	45-500-C2-47	Set-Down Adjusting Screw 4-40x½ BH MS
21	405A118	Set-Down Adjusting Lock Spring
22	G400A297	Pivot and Mounting Plate
23	414A31	Pivot Shaft
24	414A33	Size Change Tension Spring
25	402A185	Set-Down Eccentric
26	414A34	Wire Clip, approx. ¾" long (1 req.)
27	414A30	Wire Clip, approx. ½" long (2 req.)
28	405A120	Lift Adjusting Lock Spring
29	402A156	Lift Adjusting Screw
30	G400A238	Lift Plate and Rod Assembly
31	G400A294	Pivot Spring & Hub (includes 8-32 Set Screw)
32	1A43-14	Allen Set Screw 8-32
33	401A235	Retaining Ring
34	412A32	Washer
35	G400A307	Pickup Arm Cable and Lugs
36	409A11	Cartridge, includes Needles
37	401A264	Cartridge Hold-Down Bracket
38	402A139	Plastiscrew, #2 (2 req.)
39	98A54-2	Needle Nut (Knurled)
40	98A15-7	78 RPM Needle
41	98A15-6	"LP" Needle (Painted Red)
42	405A111	Cartridge Indexing Spring
43	413A11-1	Shielded Lead-in Cable & Plug (15")
44	88A2-3	Plug (for lead-in cable)
45	88A8-1	Motor Plug (Male)
46	412A9	Cork Washer 3/64" thick (1 req.)
47	412A1	Cork Washer 3/32" thick (2 req.)
48	415A11	Thrust Bearing
49	98A15-9	Oil Retaining Felt Washer (2 req.)
50	98A15-10	33 RPM Drive Shaft
51	98A15-11	45 RPM Drive Shaft
52	2A1-11-47	Hex Nut #6-32
53	3A4-5	Lock Washer
54	G400A330	Speed Change Knob
55	406A20	Drive Belt (2 req.)
56	412A30	Fibre Washer
57	98A15-13	Idler Wheel Spring
58	G400A279	Idler Wheel Assembly
59	405A15	Hairpin Clip
60	G400B310	Centerpost Assy. (for 7" Records)
61	G400B311	Centerpost Assy. (for 10" & 12" Records)
62	G400B329	45 RPM Spindle Complete
63	403A41	Spindle Cap
64	414A35	Slicer Return Spring (2 req.)
65	401A276	Top Slicer
66	401A275	Bottom Slicer
67	403A40	Record Support (2 req.)
68	405A125	Record Shelf Spring
69	G400A327	Slicer Cam and Shaft
70	403B39	Spindle Base
71	405A124	Push-Off Shaft Return Spring
72	401A235	Retaining Ring
73	60-1000-C2-47	Screw (2 req.) #6-32x1 RHMS
74	402A182	Lock Nut
75	402A181	Push-off Adjusting Shaft
76	G400D346-1 G400D346-2	Changer Pan Assembly, Copper (RC221) Changer Pan Assembly, Black (RC221)
77	G400D349	Changer Pan Assembly (RC222)
78	19A10-3	Conical Mtg. Spring (for RC221, RC222)
79	402A154	Float (Mounting) Screw for RC221 only (3 req.)
80	G400A197	Mtg. Screw & Washer Assembly for RC222
81	407B17	3 Speed Motor
82	406A21	Rubber Mounting Grommet (3 req.)
83	412A32	Fibre Washer (3 req.)
84	401A229	Retaining Ring
85	406A13	Drive Wheel Tire Only
86	G400A252	Drive Wheel (includes Tire)
87	404A18-1	Drive Wheel Assembly (includes Rivets)
88	414A23	Drive Wheel Pressure Spring
89	405A87	Riser Plate Return Spring
90	G400A336	Riser Plate and Hub
91	G400A342	Control Cam Assembly
91a		Cam Stop Stud (Part of 91)
91b		Push-Off Link Stud (Part of 91)
91c		Riser Control Stud (Part of 91)
92	401A145	Control Cam Washer
93	3B1-26-47	Lock Washer, #8 I.T.
94	85-375-C2-47	Control Cam Screw 8-32x⅜ BH MS
95	G400A219	Push-Off Arm and Link Assembly
96	4B1-68-47	Washer
97	401A177	Retaining Ring
98	401A223	Switch Bracket
99	1A53-9-47	Screw, Switch and Trip Bracket Mtg.
100	408A1	On-Off Switch and Cover
101	412A34	Cord Tension Adjusting Cam
102		Position Trip Cord Use 10" of braided silk or nylon radio dial cord (approx. 1/32" diameter).
103	405A127	Cord Tension Spring
104	G400A224	Pivot Link and Stud
105	415A9	Powdered Iron Roller
106	405A91	Control Plate Spring
107	405A22	Spring Washer
108	401A230	Retaining Ring
109	G400A228	Trip Bracket and Stud Assembly
110	405A88	Trip Cocking Spring
111	G400A230-1	Reject Arm Support and Trip Lever
111A		Trip Stop Wire (Part of 111)
112	405A87	Cycle Spring
113	405A128	Trip Serration Adjustment Spring
114	G400A333	Trip Serration Plate
115	65-500-C2-47	Trip Adjusting Screw
116	405A120	Position Trip Adjusting Lock Spring
117	402A186	Position Trip Adjusting Screw
118	65-375-C2-47	Screw, Reject Adjusting 6-32x⅜"
119	401A237	Reject Arm
120	405A98	Spring Washer
121	401A173	Washer
122	404A17	Size Change Eccentric
123	G400A226	Control Plate, Hub and Stud Assembly
124	401A202	Safety Arm
125	405A90	Safety Spring
126	405A126	Position Trip Cocking Spring
127	G400A340	Arm Control Lever, Studs and Pawl
128	405A89	Pawl Spring
129	G400A222	Set-Down and Size Change Assembly
130	405A92	Index Spring
131	405A93	Set-Down Spring
132	403A38	Plastic Trim for RC221 (2 req.)
133	32A88	Antenna Lead Support (RC221 only)
134	27A24	Bushing in Bottom Cover for RC221
135	2B10-10-59	Speed Nut (RC221)
136	G400D287-2 G400D288-1	Bottom Cover, Painted Black (RC221) Bottom Cover, Painted Copper (RC221)
137	401A283	Metal Clip
138	4B1-152-47	Washer (Flat) .328x⅝x1/16

©John F. Rider

OPERATING INSTRUCTIONS

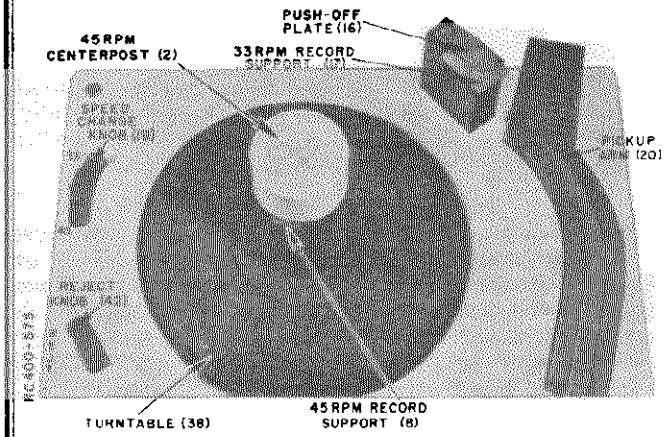

Figure 1. RC400 Record Changer (Top View).

This Admiral Record Changer is designed to automatically play a series of ten 7-inch 33 RPM "Long Play" records or ten 7-inch 45 RPM "Long Play" records. A wide-diameter, plastic centerpost is used for playing 45 RPM records and a conventional, metal centerpost is used for playing 33 RPM records.

SELECTING CENTERPOST

To play 45 RPM records, insert the large diameter (plastic) centerpost (2) into the hole in the center of the turntable (38). While holding the turntable with one hand, turn the centerpost counter-clockwise until the lock-in-lugs fall into and lock in the three slots in the turntable. To remove this centerpost, hold the turntable with one hand and turn the centerpost clockwise; then lift it up.

To play 33 RPM records, insert the small diameter (metal) centerpost (1) into the center of the turntable and press it down until it "locks" in place. To remove this centerpost, merely lift it straight up and out.

SETTING SPEED CHANGE KNOB

To play 45 RPM records, set the Speed Change Knob (19) so that its indicating arrow points to "45". To play 33 RPM records, set this knob so its indicating arrow points to "33". When moving this knob to either position, make sure that the knob "clicks" into position.

This control also has a center ("neutral") position for disengaging the rubber-tired idler wheel (47). The changer pan is not marked "neutral" but the position can be felt when the Speed Change Knob is halfway between "33" and "45". In this position, the compound idler wheel is not in contact with the drive shaft or the turntable. **When the record changer is not going to be used for some time, set the speed change knob in the center position.**

LOADING AND STARTING THE RECORD CHANGER

To load 45 RPM records, place as many as ten over the 45 RPM centerpost so that the bottom record rests on the record supports (8). To load 33 RPM records, place as many as ten over the 33 RPM centerpost so that the bottom record rests on the ledge on the centerpost (1) and the 33 RPM record support (17). Start the changer by turning the Radio-Phono switch on the radio to the "Phono-On" position.

STOPPING AND UNLOADING

Turn changer off by turning Radio-Phono switch on the radio to "Phono-Off" position. Do not turn changer off during change cycle. To unload, merely lift records straight up.

THE CHANGE CYCLE

45 RPM OPERATION
(See Figures 2, 3 and 4)

If at all possible, we recommend that you carefully observe the operation of a changer that is in normal operating condition. It is a good idea to rotate the turntable by hand and repeat the change cycle until you understand the function of each part.

The changer operates as follows: The turntable (38) is driven by the smaller of the two rubber tires on the compound idler wheel (47), riding against the outer rim of the turntable.

The speed of the turntable is determined by the setting of the speed change knob (19). When the knob is in the "45" position, the larger rubber tire on the compound idler wheel (47) rides against the 45 RPM section (larger diameter) of the motor drive shaft. When the knob is moved to "33", the compound idler wheel moves so that the larger tire rides against the 33 RPM section (smaller diameter) of the motor drive shaft. See Figure 2.

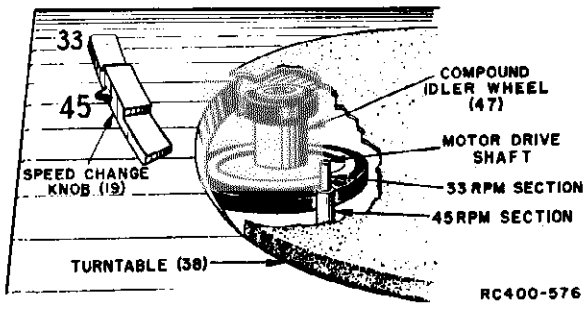

Figure 2. Compound Idler Wheel and Motor Drive Shaft.

The changer mechanism is driven through change cycle by the knurled hub of the turntable rotating the rubber tired drive wheel (36). During normal playing, the drive wheel does not touch the knurled hub of the turntable. See Figure 3A. As the needle enters the record spiral grooves and moves towards the centerpost, the pickup arm lever and stud (72) moves simultaneously and rotates the trip bracket (61) counterclockwise. Since the trip bracket and drive wheel are

©John F. Rider

on the same shaft, the drive wheel is pivoted approximately 10 degrees counter-clockwise. The rubber tire contacts the knurled hub of the turntable, and is rotated in a counter-clockwise direction. See Figure 3B.

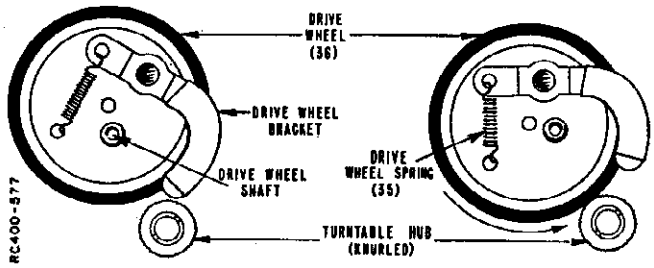

Figure 3A

Figure 3B

Drive Wheel Positions.

The drive wheel shaft is fitted through the drive bracket (78) and is mounted OFF CENTER on the drive wheel (36). Due to the cam action of the "off-center" drive wheel (36), rotation of the drive wheel, by the knurled hub of the turntable, forces the drive shaft out. Since the drive shaft is fitted through the drive bracket (78), the drive bracket is pivoted around the drive bracket hub. The cycle spring (76) maintains pressure on the drive bracket so that the drive wheel tire is kept in contact with the knurled hub. After the changer has been tripped and the drive bracket begins to be pivoted by the movement of the drive wheel, the arm lift incline (78A) on the drive bracket moves across the lift rod moving it upward. This lifts the pickup arm off of the record. Stud (78C) on the drive bracket now contacts the pickup arm lever and begins to move it so the pickup arm moves out from the center of the record.

At about this time, the push-off adjusting shaft (15) on the 45 RPM centerpost (2) starts moving up the push-off incline (78B) on the drive bracket (78). See figure 12. This causes the push-off shaft to move up into the centerpost. As the push-off shaft moves into the centerpost. As the push-off shaft moves into the centerpost, the slicers (5 and 6) ride on the incline of the slicer cam and consequently move out of the centerpost. The record supports (8) are also brought into the centerpost as each slicer is hooked to the record support on the opposite side of the centerpost.

As the drive bracket continues to pivot, the pickup arm continues to move away from the record, the slicers (5 and 6) continue to come out, and the record supports continue to pull in. When the pickup arm has moved to the right almost as far as it will go, the record supports (8) have pulled into the centerpost enough to drop the bottom record to the turntable and the slicers are out far enough to hold up the remainder of the stack of records.

The pickup arm lever control stud (72A) riding against the indexing edge of the index bracket (65) controls the movement of the pickup arm. The index bracket (65) and set down spring (64) prevent the pickup arm from moving out too far. (Later in the change cycle the index bracket (65) and set-down spring (64) control the set-down point.)

At this point, the drive wheel (36) has gone through one-half of its rotation and as the drive wheel continues to rotate, the drive bracket (78) will begin to return to its normal (out of change cycle) position.

The set-down spring (64) keeps the pickup arm lever (72) in contact with the arm control stud (78C) on the drive bracket. Therefore as the drive bracket moves back toward its normal position, the pickup arm is moved in toward the set-down point. When the pickup arm lever stud (72A) has reached the indexing point (notch) in the index bracket, the pickup arm has reached the set-down point and stops moving in toward the centerpost. At this time, the drive bracket has pivoted to a point where the lift rod (32) starts moving down the arm lift incline (78A) in the drive bracket and the pickup arm starts moving down toward the record. When the arm has moved down about halfway, the second stud on the drive bracket (78D) moves the index bracket (65) away from the stud on the pickup arm lever so that the pickup arm is free to travel in on the lead in grooves on the record.

Almost simultaneously, the push-off adjusting shaft (15) is riding down the push-off incline (78B) on the drive bracket. This allows the push-off return spring (11) on the centerpost to pull the cam and shaft assembly (9) down.

The record supports are forced out of the centerpost by their return spring (7) and the slicers are moved into the centerpost by the slicer return springs (4). When the slicers are all the way in, the stack drops to the record supports (8).

The drive wheel is no longer in contact with the knurled hub but it is rotated approximately 20 degrees further by the drive wheel bracket, which is held against the knurled hub of the turntable by the drive wheel bracket spring (35).

When the drive wheel bracket has rotated past the knurled hub, the drive wheel must be rotated another 10 degrees by the trip bracket (61), or reject lever (43), before it will contact the knurled hub and begin the change cycle. When the reject knob (42) is moved to the "Rej" position, the reject lever roller rotates the drive wheel the necessary 10 degrees and the change cycle begins.

33 RPM OPERATION

The change cycle for 33 RPM operation is exactly the same as for 45 RPM operation, except for change cycle time and the fact that 33 RPM records are supported by the offset on the 33 RPM centerpost and the

©John F. Rider

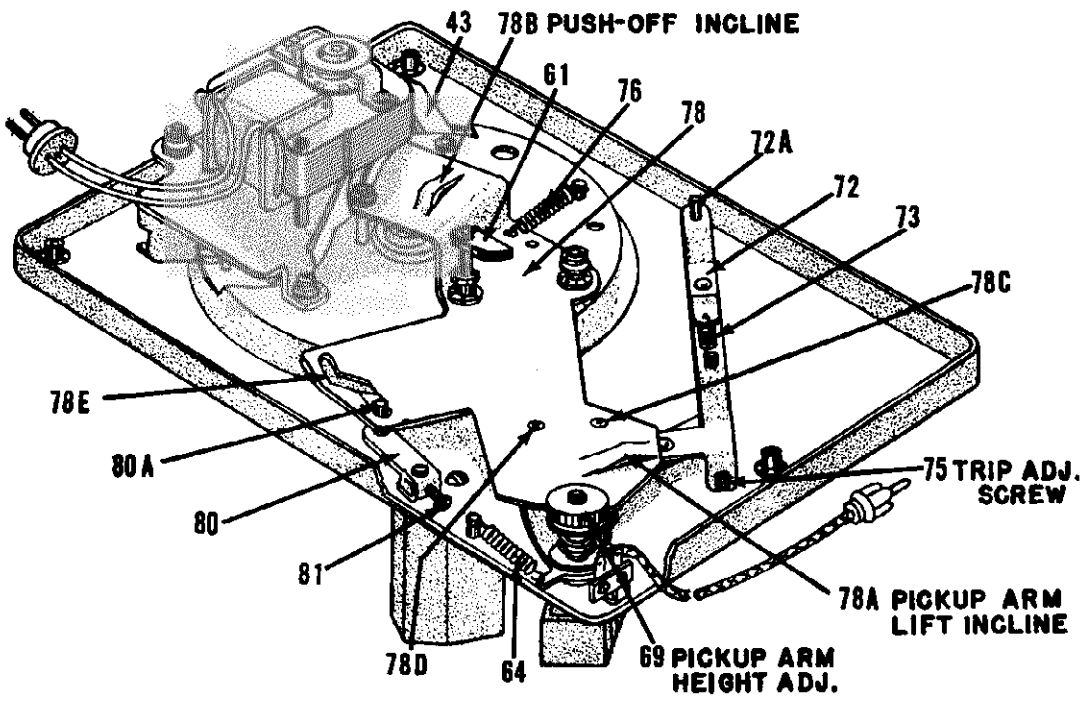

Figure 4. RC400 Bottom View (Assembled).

33 RPM record support (17), and are pushed off by the push-off plate (16).

When the drive bracket (78) has pivoted to the point where the pickup arm is clear of the record, the stud (80A) on the push-off bracket (80) is moved by the slot (78E) in the drive bracket. This movement causes the push-off plate (16) to pivot and push-off the bottom record. The remainder of the records are held back by the small sliding piece at the top of the centerpost. When the drive bracket pivots back to its normal playing position, the push-off bracket stud (80A) follows the slot in the drive bracket and causes the push-off plate to pivot back to its normal position. Then the record stack drops to the record support (17) from the push-off plate (16).

ADJUSTMENTS

TRIP ADJUSTMENT

This record changer employs the position type trip; that is, it trips into change cycle when the needle in the pickup arm reaches a given distance from the center of the record. If the trip is properly adjusted, the record changer will trip into change cycle when the needle is between 2" to 2-3/16" from the center of the hole in the turntable or approximately half way in on the spiral groove in the center of the record.

If the record changer does not trip at the proper position, it will be necessary to adjust the trip adjusting screw (75). See figure 4. Turning this screw in (clockwise) moves the trip point away from the centerpost. Turning it out, moves the trip point nearer to the centerpost.

If the screw is turned all the way out, the changer may not trip. If it is turned in too far, the changer may trip before the record finishes playing.

33 RPM PUSH-OFF ADJUSTMENT
(See Figures 1 and 4)

If 33 RPM records do not drop to the turntable during change cycle, it may be necessary to correct the push-off adjustment.

The push-off is properly adjusted when the leading edge of the push-off plate (16) extends to a maximum of 1/32" beyond the edge of the record support (17) during change cycle.

To make this adjustment, proceed as follows:

1. With the record changer in change cycle, rotate the turntable by hand until the pickup arm STOPS moving away from the centerpost.
2. Loosen the set screw (81) on the push-off bracket (80) and move the push-off plate (16) so that its leading edge extends 1/32" beyond the edge of the record support (17). Then tighten the set screw (81).
3. Load the record changer with 33 RPM records,

© John F. Rider

place the changer in operation and keep rejecting records until the stack has been dropped to the turntable.

4. If records still do not drop properly, repeat steps 1 through 3.

ADJUSTMENT OF SET-DOWN POINT
(See Figures 4 and 5)

This record changer does not have a conventional set-down screw adjustment. The pickup arm should set-down properly unless the Allen set screw (34) on the pivot collar (33) is loosened, or excessive pressure has been applied to the pickup arm.

When properly adjusted for correct set-down, the needle point will set-down between 2-9/16" and 2-10/16" from the near side of the 45 RPM centerpost. (Between 3-5/16" and 3-6/16" from center of the hole in the turntable.) Making this adjustment for 45 RPM records, automatically provides correct set-down for 33 RPM records.

If the pickup arm does not set-down properly, the set-down point adjustment should be made as follows:

1. Insert the 45 RPM centerpost (2); set the speed change knob (19) to the "45" position; move the reject knob (42) to the "Rej" position and then rotate the turntable (clockwise) by hand JUST to the point where the pickup arm stops moving in toward the centerpost and starts moving downward. DO NOT ROTATE THE TURNTABLE BEYOND THIS POINT.

2. Insert a #6 Allen wrench into the Allen set screw (34) on the pivot collar (33) as shown in Figure 5. Do NOT loosen the Allen set screw.

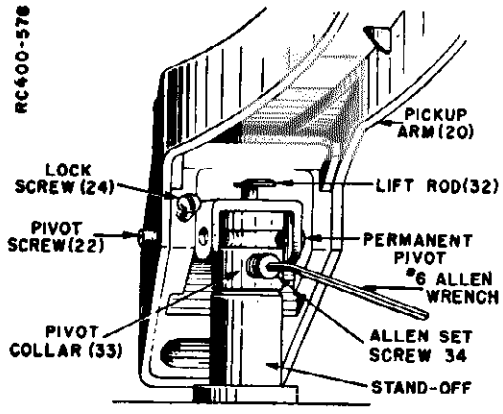

Figure 5. Pickup Arm Mounting Detail.

3. From the underside of the changer, hold the pickup arm lever and trip bracket assembly (72) STATIONARY so that it can not move down or to either side.

4. Slightly loosen the Allen set screw (34).

5. Place a ruler against the near side of the 45 RPM centerpost and then move the pickup arm until the distance between the needle and centerpost is from 2-9/16" to 2-10/16".

6. Tighten the Allen set screw (34) VERY CAREFULLY to avoid moving the pickup arm. Before firmly tightening the Allen set screw, make sure that there is a little space (ten thousandths of an inch) between the pivot collar (33) and the stand-off.

7. Run the record changer through change cycle a few times to make certain that the set-down point adjustment has been properly made.

ADJUSTING THE PICKUP ARM HEIGHT

This record changer is designed so that when the needle rests 1/16" above the changer pan, the pickup arm will automatically lift high enough during change cycle to clear the top record of a stack of ten 33 RPM records on the turntable and will not lift high enough to strike the bottom record of a stack of 33 RPM records to be played.

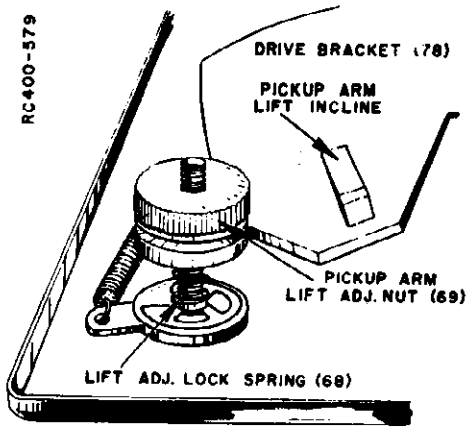

Figure 6. Adjusting Pickup Arm Height.

With the record changer out of change cycle and the pickup arm clear of the turntable, adjust the pickup arm lift adjusting nut (69) (see figure 6), so that the needle rests 1/16" above the top of the changer pan. Turning the nut (69) clockwise raises the pickup arm; turning it counter-clockwise lowers the pickup arm.

To check this adjustment, load the record changer with ten 33 RPM records. Turn the changer on and reject records until the stack has been dropped to the turntable. The pickup arm should not lift high enough

©John F. Rider

to strike the bottom record (of the stack about to be played) but should lift high enough to play the tenth record on the turntable.

If, for some reason, the arm strikes the bottom record or will not lift high enough to play the tenth record, a compromise adjustment should be made. That is, raise the arm slightly to make the arm lift higher or lower the arm slightly to prevent it from striking the bottom record.

45 RPM CENTERPOST ADJUSTMENT

NOTE

This 45 RPM centerpost (G400B410) is very similar to, but is not interchangeable with, the 45 RPM centerpost (G400B329) used in models RC221, RC222. The centerposts can be readily identified by noting that the length of the un-threaded portion of the push-off adjusting shaft (15) is approximately 5/16" in G400B410, and ¾" in G400B239.

If 45 RPM records do not drop to the turntable as they should, or if the turntable stalls during change cycle, it will be necessary to adjust the 45 RPM centerpost (2).

The push-off adjusting shaft (15) is the only adjustment on this centerpost. When properly adjusted, the dimension from the bottom of the adjusting nut (14) to the end of the push-off adjusting shaft (15) is approximately ½ inch. To make an adjustment, proceed as follows:

1. Turn the set off. Push the Reject knob (42) to the "Rej" position. Then rotate the turntable clockwise (to the right) by hand until the pick-up arm moves as far away from the turntable as it will go. Do not continue to rotate the turntable beyond this point.

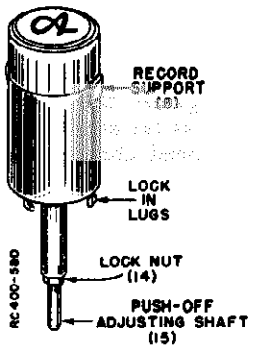

Figure 7. 45 RPM Centerpost.

2. Insert the 45 RPM centerpost and lock it in place.

3. In this position the record supports (8) should be pulled into the centerpost until the top edge of the record supports are just inside the centerpost. You should only be able to see approximately 1/32 of an inch of the centerpost wall. See figure 8.

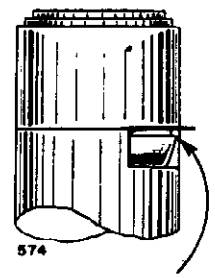

Corner of record support (8) must be slightly (1/32") inside centerpost wall.

Figure 8. 45 RPM Centerpost Adjustment.

4. If the record supports do not pull into the centerpost as far as the position shown in figure 8, remove centerpost, loosen the locknut (14) and turn the push-off adjusting shaft out (counter-clockwise) approximately one half turn.

5. Insert the centerpost and check to see if the record supports "pull in" to the proper position. If they do not, repeat tep 4. If they pull in far enough, proceed with step 6.

6. Place a stack of 45 RPM records on the centerpost and turn the record changer on. Push the Reject knob to the "Rej" position and then keep rejecting records until the whole stack has been dropped to the turntable. If each record slides smoothly down the centerpost, the adjustment is satisfactory.

IMPORTANT: If the turntable stalls during change cycle, the push-off adjusting shaft may have been turned out too far. Remove the 45 RPM centerpost and run the changer through change cycle. If the changer does not stall with the centerpost removed, turn the push-off adjusting shaft in about four or five full turns and repeat steps 1 through 6 above.

SERVICE AND REPAIR

DISASSEMBLING THE 45 RPM CENTERPOST
(See Figure 9)

To disassemble the centerpost for parts replacement etc., proceed as follows:

1. Remove screws (12) from underside of centerpost and lift up the centerpost cap (3). See figure 9. *CAUTION: When the centerpost cap (3) is off, use extra care to keep from accidentally pushing up on the push-off adjusting shaft (15). If this shaft is puhed up, the slicer return springs (4) and slicers may fly off and be lost.*

MODEL RC400

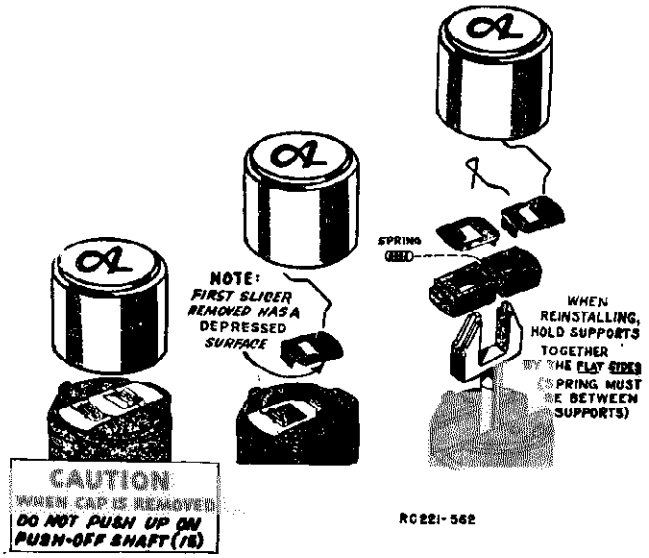

Figure 9. Disassembly of 45 RPM Centerpost.

2. Using a "long nose" pliers or tweezers, remove the slicer spring (4) which holds the top slicer (5) in place. Then remove the top slicer. (NOTE: This slicer has an offset. It must be removed first when disassembling and installed last when reassembling).
3. Remove the other slicer return spring and the bottom slicer (6).
4. Now, push up on the push-off adjusting shaft (15) until the record supports (8) come up over the top of the centerpost.
5. Grasp both record supports with the thumb and two forefingers and lift them off of the slicer cam (9A). Release record supports carefully so record support return spring (7) is not lost.
6. To remove the slicer cam and push-off assembly (9), remove the retaining ring (13) and the push-off return spring (11) from the underside of the centerpost and lift the assembly off from the top of the centerpost.

When assembling the centerpost, merely reverse the above procedure. When installing the record supports (8) and their return spring (7), place the spring between the record supports and compress the spring enough so the record supports can be slid down over the slicer cam (9A). When installing the slicers (5 and 6) be sure to install the flat slicer (5) first, and then the slicer with the offset (it also has a smaller cut-out).

REMOVING THE PICKUP ARM
(See Figure 5)

If the pickup arm must be removed for any reason, proceed as follows:

Important

Do NOT loosen the Allen set screw (34) in the pivot collar (33). If the screw is loosened, it will be necessary to make the set-down point adjustment.

1. Loosen the pivot locking screw (24) at the front of the pickup arm counterweight (21).
2. Turn the pivot screw (22) almost all the way out.
3. Move the pickup arm to the right to free the permanent pivot (part of the counterweight) from the pivot hole in the pivot collar (33). In early production changers, it may be necessary to use a slight twisting or "wiggling" motion to free the permanent pivot. When the permanent pivot has been freed, merely lift the pickup arm assembly up and off.

To reinstall the pickup arm assembly proceed as follows:

1. Slide the counterweight down on the pivot collar (33) until the permanent pivot point falls into the pivot hole in the pivot collar. In early production changers, it may be necessary to set the permanent pivot point in the pivot hole and then twist or "wiggle" the arm until the counterweight falls into the proper position.
2. Tighten the pivot screw (22) until it is tight and then back it off just enough so the pickup arm can move up and down freely.
3. Tighten the pivot locking screw (24).

REMOVING TURNTABLE (38) AND THRUST BEARING ASSEMBLY (40)

To remove the turntable first place the speed change knob (19) in the "neutral" position. Being sure that the changer is not in change cycle, move the pickup arm away from the turntable. Then remove the retaining clip (37) on top of the turntable and lift the turntable straight up.

Before replacing the turntable, see that the drive wheel (36) is not against the centerpost socket and move the pickup arm as far as possible from the centerpost. Be sure the speed change knob (19) is in the "neutral" position.

No force is needed to seat the turntable.

Replace the turntable retaining clip (37) on the centerpost socket so that its "turned-up" ends are facing upward and away from the pickup arm.

The cork washers (39) and thrust bearing assembly (40) are removed by sliding them over the centerpost socket. Replace them in the order shown in figure 12.

LUBRICATION

Under normal operating conditions, the motor should never require oiling. Also, do NOT use oil on the 45 RPM centerpost and do NOT oil the roller on the reject lever (43). Any oil on this roller will be transferred to the drive wheel tire when the reject knob is moved to the "Rej" position, which might cause the drive wheel (36) to slip during change cycle. The

drive shaft is fitted through an oilite bearing on the drive bracket (78); it also should not require oil.

The rest of the changer, however, should be lubricated with grease whenever it comes into the shop for repairs or adjustment. All pivot and friction points should be greased adequately but not excessively. A good automobile chassis grease may be used for this purpose.

The push-off shaft (16) and the bearing in the turntable hub may be lubricated with SAE No. 20 oil.

Care should be taken to prevent any of the lubricant from coming into contact with the drive or idler wheel tires. Also, be careful when using oil, not to let an excess seep into the felt of the turntable.

CARTRIDGE AND NEEDLE REPLACEMENT

Alternate cartridges, interchangeable when complete with needle, are used in this changer.

In models having cartridge (27), part number 409A300, replace the needle (28), part number 98A15-6, by loosening the knurled nut (29) and withdrawing the old needle. Insert the new needle and tighten the knurled nut. See figure 10.

In models having cartridge (27), part number 409A301, replace the needle (28), part number 98A15-14, by prying downward on the back edge of the needle. Insert the new needle by pressing it into the cartridge. See figure 11.

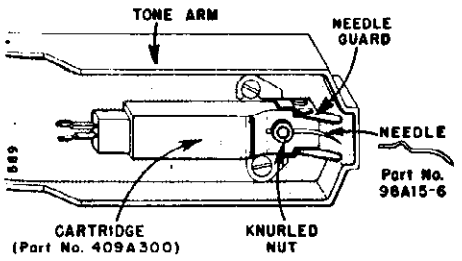

Figure 10. Cartridge 409A300 and Needle Detail.

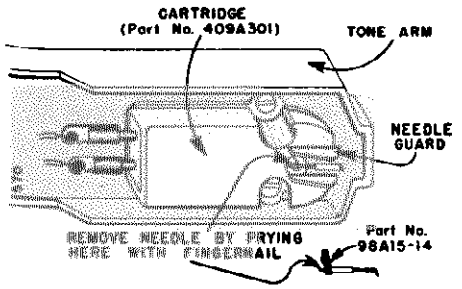

Figure 11. Cartridge 409A301 and Needle Detail.

PARTS LIST

Ref. No.	Part Number	Description
1	G400B 409	33 RPM Centerpost
2	G400B 410	†45 RPM Centerpost Complete
3	403A 1	45 RPM Centerpost Cap
4	414A 35	Slicer Return Spring
5	401A 276	Top Slicer
6	401A 275	Bottom Slicer
7	405A 125	Record Supports Return Spring
8	403A 40	Record Supports
9	G400A 411	Slicer Cam and Shaft
10	403B 43	45 RPM Centerpost Base
11	405A 124	45 RPM Push-Off Return Spring
12	60-1000-C2-47	Screw, #6-32x1" R.H.M.S. (2 req.)
13	401A 229	Retaining Ring
14	402A 312	Lock Nut
15	402A 313	45 RPM Push-Off Adjusting Shaft
16	G400A 417	33 RPM Push-Off Plate and Shaft
17	401A 311	33 RPM Record Support
18	G400A 418	Record Support Housing and Sleeve
19	403A 42	Speed Change Knob
20	403B 300	Pickup Arm
21	G400A 433	Pickup Arm Counterweight
22	402A 320	Pickup Arm Pivot Screw
23	1A73-10	Screw, #6x3/8 Shakeproof Type (2 req.)
24	42-187-C2-47	Lock Screw, #4-40x3/16 F.H.M.S
25	G400A 439	Cable and Pin Jack Assembly
26	2B10-5-59	Speed Nut
27	409A 300 or 409A 301	Cartridge with needle (See Figure 10) / Cartridge with needle (See Figure 11)
28	98A 15-6 or 98A 15-14	Needle (See Figure 10) / Needle (See Figure 11)
29	98A 54-2	Needle Nut (Knurled)
30	4B 1-7-47	Flat Washer, .096x3/16x1/32 (2 req.)
31	402A 335	Screw, #2x1/4 Fil. Hd. (2 req.)
32	G400A 401	Pickup Arm Lift Rod and Plate
33	G400A 432	Pivot Bracket and Collar (includes Allen screw)
34	1A 43-9	Allen Hd. Set Screw, #6-32x1/4
35	405A 303	Drive Wheel Spring
36	G400A 407	Drive Wheel Assembly (less spring)
37	414A 300	Turntable Retaining Clip
38	G400A 403	Turntable and Hub Assembly
39	412A 300	Cork Washer (2 req.)
40	415A 300	Thrust Bearing Assembly
41	G400C 438	Changer Pan and Stud Assembly
42	403A 302	Reject Knob
43	G400A 414	Reject Lever and Studs
44	405A 127	Reject Lever Return Spring
45	98A 54-5	Idler Wheel Retaining Spring
46	98A 54-6 / 98A 54-11	Fibre Washer, 3/16" ID x 9/32" OD (4 req.) / Metal Washer, 3/16" ID x 9/32" OD (Quantity required varies; replace as found in changer.)
47	98A 54-7	Compound Idler Wheel
48	98A 54-8	Fibre Washer (5/32 ID x 3/8" OD)
49	98A 54-9	Metal Washer (5/32" ID x 5/16" OD)
50	98A 54-10	Idler Wheel Spring
51	407C 300	*Motor; 33 and 45 RPM; 60 cycle
52	3A 4-5-47	#6 Split Lock Washer
53	2A 1-11-47	Hex. Nut, #6-32
54	88A 8-1	Motor Plug (male)
55	406A 301	Motor Mounting Grommet (3 req.)
56	4B 1-68-47	Flat Washer, .196x3/8x1/32 (5 req.)
57	401A 317	Retaining Ring (3 req.)
58	405A 308	Changer Mtg. Spring (3 req.)
59	402A 334	Changer Mtg. Screw (3 req.)
60	402A 115	Plastiscrew, #6x3/8
61	401A 307	Trip Bracket
62	401A 173	Flat Washer
63	401A 177	Retaining Ring (7 req.)
64	405A 302	Set-Down Spring
65	401A 315	Index Bracket
66	4B 1-87-47	Flat Washer, .25x3/8x1/32
67	401A 229	Retaining Ring
68	405A 307	Lift Adjusting Lock Spring
69	402A 306	Pick Up Arm Lift Adjusting Nut
70	88A 2-3	Plug, Male (for shielded cable)
71	413A 11-1	Shielded Cable and Plug
72	G400A 427	Pickup Arm Lever and Trip Bracket (less springs)
73	405A 127	Trip Tension Spring
74	405A 305	Trip Adjusting Lock Spring
75	402A 328	Trip Adjusting Screw
76	405A 92	Cycle Spring
77	4B 1-178-0	Flat Washer, .196x3/8x1/64
78	G400B 416	Drive Bracket (includes hub and studs)
79	4B 1-67-47	Flat Washer, .196x5/16x1/32
80	G400A 420	Push-Off Bracket Assembly
81	65-375-C2-47	Push-Off Adjustment Lock
	41A 17-40	Operating Instructions for Models 5W11, 5W12
	S275	Service Manual for RC400 Record Changer
	1A45-2	Allen Wrench, #6

†This 45 RPM centerpost (G400B410) is very similar to, but is not interchangeable with, the 45 RPM centerpost (G400B329) used in models RC221, RC222. The centerposts can be readily identified by noting that the length of the un-threaded portion of the push-off adjusting shaft (15) is approximately 5/16" in G400B410, and 3/4" in G400B329

*At the time of publication, 50 cycle conversion parts were not available

© John F. Rider

MODEL RC400

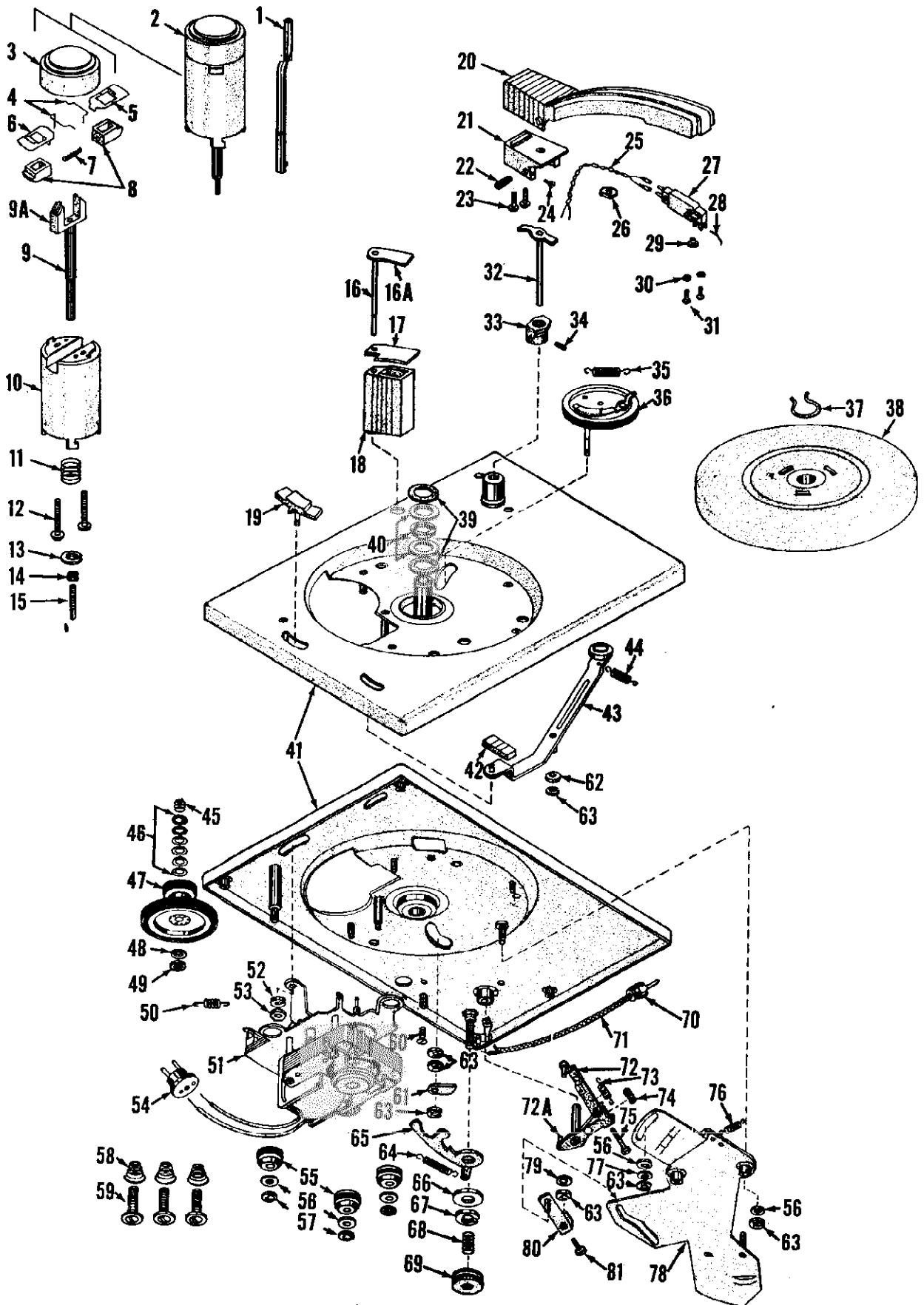

Figure 12. RC400 Exploded View.

©John F. Rider

RECORD CHANGER TROUBLE SHOOTING

Changer Will Not Trip Into Change Cycle.

1. Check adjustment of trip adjusting screw (75).
2. Check for broken, loose or weak trip tension spring (73).
3. Check for broken, missing or loose trip adjusting lock spring (74).
4. Check for oil or foreign material on the drive wheel tire (36).
5. Check to see that the drive bracket (78) is free (not binding) to pivot around drive bracket hub.
6. Check for broken cycle spring (76).

Changer Trips Into Change Cycle Before Finishing Record.

1. Check adjustment of trip adjusting screw (75). See paragraph under heading "Trip Adjustment."

Changer Will Not Reject.

1. Check for oil or foreign material on the drive wheel tire (36).
2. Check to see that the drive bracket (78) is free to pivot around the drive bracket hub.

Pickup Arm Does Not Set Down Properly.

1. Check set-down adjustment. See paragraph under "Adjustment of Set-down Point".

Records Do Not Drop to Turntable.

1. If 45 RPM records do not drop, adjust push-off adjusting shaft (15). See paragraph under heading "45 RPM Centerpost Adjustment".
2. If 33 RPM records do not drop, check the push-off adjustment. See paragraph under heading "Push-off Adjustment".

Changer Stalls in Change Cycle.

1. Check for parts binding.
2. If changer stalls with 45 RPM centerpost in place, adjust push-off adjusting shaft (15). See paragraph under heading "45 RPM Centerpost Adjustment".

Turntable Will Not Revolve When Changer Is Turned On.

1. Check position of speed change knob (19). If it is in "neutral" position, the turntable will not revolve.
2. Check for oil or foreign material on the tires of the compound idler wheel (47).
3. Check for broken idler wheel spring (50).

Changer Causes Rumble or Noise.

1. Check for broken or missing "float" springs (58).
2. Check for speed change knob shaft (19) rubbing against the edge of the cut-out in the changer pan.

Pickup Arm "Skips" Across Records.

1. Check to be sure that cabinet is level.
2. Check for worn needle.

CAUTIONS AND SERVICE HINTS

1. See that the rubber tires on both the drive wheel (36) and the compound idler wheel (47) are kept clean and free from oil, grease, dirt or any foreign material. Carbona or carbon tetrachloride may be used for cleaning these parts.
2. When handling the idler wheel or drive wheel, keep fingers and hands away from the rubber tires. Natural body oils on these parts may possibly cause slippage.
3. When the turntable is off, do NOT push the drive wheel (26) against the centerpost socket.
4. If the record changer is not going to be used for some time, place the speed-change knob (19) in the "neutral" position. This will eliminate the possibility of denting the idler wheel tires (47).
5. When disassembling the 45 RPM centerpost, do not push up on push-off adjusting shaft (15), just after removing the centerpost cap (3).
6. When removing the pickup arm, do NOT loosen the Allen set screw (34) in the pivot collar (33).
7. Do not oil the roller on the reject bracket (43). Oil will be transferred to the drive wheel tire (26) possibly causing slippage during change cycle.
8. When replacing the turntable retaining clip (37) be sure to slip it on with the "turned-up" ends facing upward.
9. When removing or reinstalling turntable, make sure that the record changer is not in change cycle and that the speed change knob (19) is in the "neutral" position.

Due to the fact that a complete understanding of the proper operation of a record changer is necessary before any attempt be made to repair or effect Service adjustments; we are giving a description of the change cycle of the P-43 Series Capehart Record Changers.

The record shelves are set for the size record to be played (either 10" or 12") by turning either shelf to the position indicated on the decal, then the correct number of records should be placed on the record shelves. (Twelve 10" or ten 12"). The tone arm should be on its rest.

Before loading the records on the shelves they should be examined for rough edges (burrs, flash or chips) and if any burrs are found they should be removed with fine sandpaper.

Move the control switch which starts the phonograph and move the reject button sidewise. The changer will go into cycle lifting the tone arm off the rest and swinging it under the stack. The tone arm should swing clear of the record stack, a record should drop to the hooks, pause, then gently settle to the turntable. The tone arm should swing back and be lowered to the starting groove on the record. When the record is played the above cycle is repeated until the records have been played.

Now let's follow the above cycle through the mechanism.

When the reject button is moved, the Reject Lever (56-877) pushes the Start Lever and Release Trip Assembly (64215) far enough to disengage it from the Starting Lever Assembly (13-38). Due to its construction the Starting Lever (which is part of the Main Cam Assembly) (13-296) tilts down and engages with the Starting Pin (34309) to make the Main Cam Gear mesh with the Spindle Gear (part of 13-297).

The Turntable is screwed onto the Spindle Gear and both are driven through the Idler Pulley (3672) by the Motor. When the cycle is completed the Main Cam Gear disengages from the Spindle Gear because several teeth are left off the Main Cam Gear, this is called the playing position, see Fig. A,

When the Starting Lever engages with the Starting Pin (see above) the Main Cam Assembly is moved forward at the right speed and the correct distance to cause the gears to mesh properly. Then the Main Cam goes through a complete revolution.

©John F. Rider

MODEL P-43

First the Tone Arm is lifted off the record through the Tone Arm Lift Lever (13-303). As soon as it is elevated both the Record Plungers move toward the Spindle to center the record for the drop to the Turntable; if no record is on the shelves the Automatic Switch is turned off, however the cycling switch makes the changer complete the cycle with the Tone Arm in playing position and needle resting on the record. As this happens the Tone Arm Return Lever (09-119) moves the Tone Arm from under the record stack. The Rear Record Plunger moves forward at the same rate of speed as the eccentric portion of the Spindle and the Front Plunger does. This pushes the record off the Rear Shelf where the Rear Record Hook catches it. Both Front and Rear Plunger move backwards at the same rate as the Spindle does, pushing the record off the Front Shelf and dropping it to the Front Hooks, the record pauses here until the Hooks move to center the record in respect to the Spindle. Then both Hooks snap back out of the way, allowing the record to settle gently to the turntable. Next the Tone Arm swings into the proper position and is lowered to the record. A wire feed-in spring acts against the Tone Arm Crank to feed the Tone Arm into the music grooves in case there is no feed-in groove on the record.

To accomplish the record feed there are three sections of the Main Cam, together with the Centering Lever and Rocker Arm Assembly involved. The first section of the Main Cam is a "Boss" illustrated at the end of the Tone Arm Lift Lever in Fig. A. The Second section is the Trip Roller Assembly on top of the Main Cam. The third section is the "slot" in the Tone Arm Lift portion of the cam adjacent to the Trip Roller Assembly.

The action is as follows; As the Main Cam rotates, the "Boss" strikes the Centering Lever and Rocker as shown in Fig. B, this moves the Record Plungers toward the Spindle. Because this pressure is applied through a spring, variations in record diameter are of little consequence. After the Boss passes the Centering Lever, the Trip Roller strikes the Rear Rocker the first time moving the Rear Record Plunger forward and the Front Record Plunger is also moved forward, Fig. C. As the Main Cam moves on, the Record Plungers go to a central position then both move backward, Fig. D, then resume the central position, this is while the record rests on the Hooks. Then the Centering Lever drops into the "Slot" in the Main Cam, Fig. E, the Front and Rear Hooks are suddenly withdrawn from the record and it drops to the Turntable.

As the Tone Arm moves over the record, its motion is transmitted through the Friction Trip to the Friction Trip Lever. When the needle enters the change groove the Starting Lever Release Trip is released by the Friction Trip Lever, this allows the Starting Lever to drop and engage the Starting Pin.

©John F. Rider

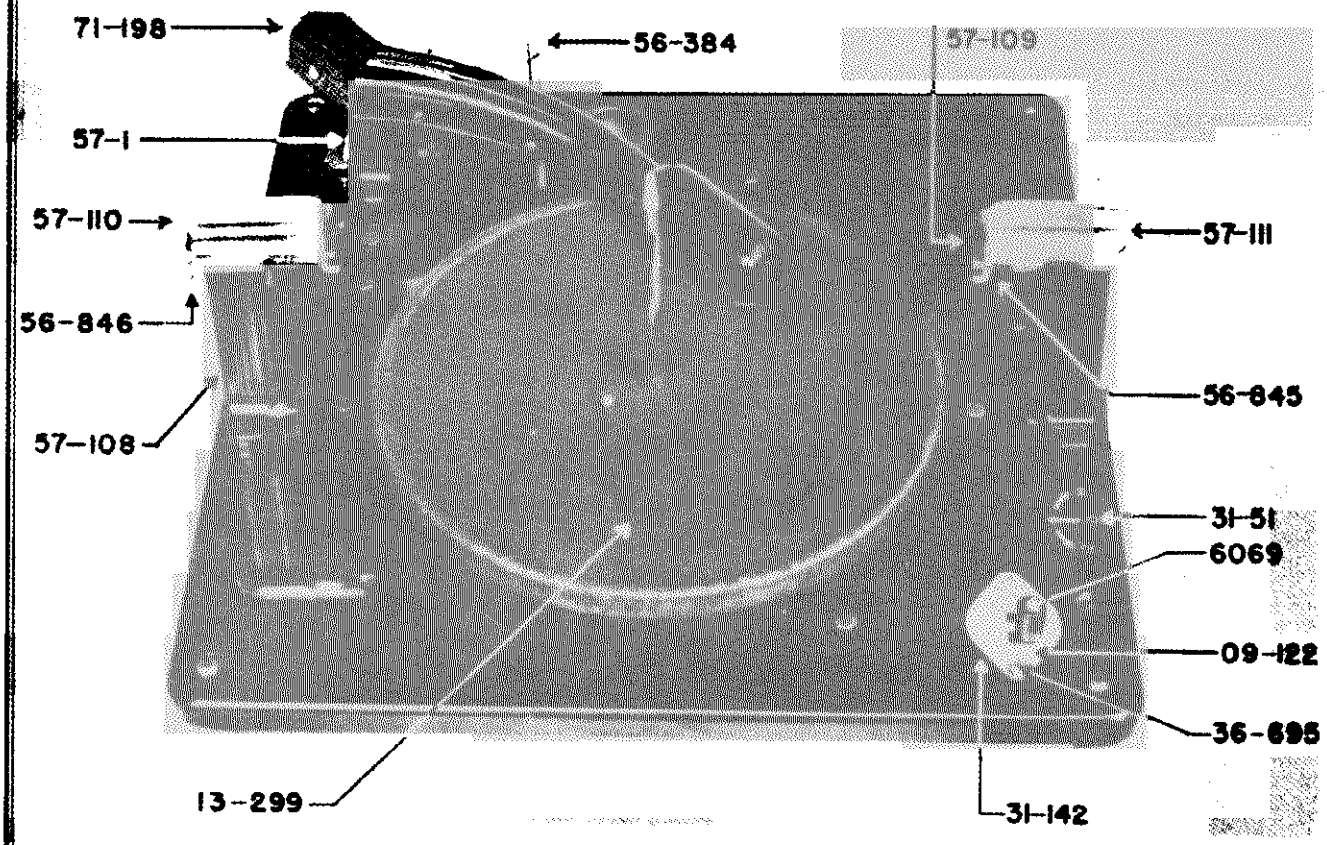

FIGURE 1

09-122	Automatic Stop Switch & Bracket Assembly
09-123	Tone Arm Return Lever & Spring Assembly
13-299	Turntable
13-303	Tone Arm Lift Lever & Bracket Assembly
13-305	Center Lever & Rocker Assembly
31-51	Decalcomania
31-142	Stop Switch Escutcheon
36-695	#6-32x3/8 Phil. Oven H.M.S. St
56-384	Tone Arm Rest Pin
56-845	10" Record Plunger, Fig. 5A
56-846	12" Record Plunger, Fig. 5A
56-868	Switch Lifting Lever
57-1	Tone Arm Support Housing, Fig. 4
57-108	Record Support Housing, Fig. 5A
57-109	Record Support Shelf & Tube Ass'y Fig. 5A
57-110	Record Shelf Cover, Rear, Fig. 5A
57-111	Record Shelf Cover, Front, Fig. 5A
71-198	Tone Arm Assembly, Fig. 4
6069	Reject Button
46293	Trip Finger Stop, Fig. 2
99-12-1	8-32 Hex Nut
99-33-3	#8 S.P. Washer

©John F. Rider

MODEL P-43

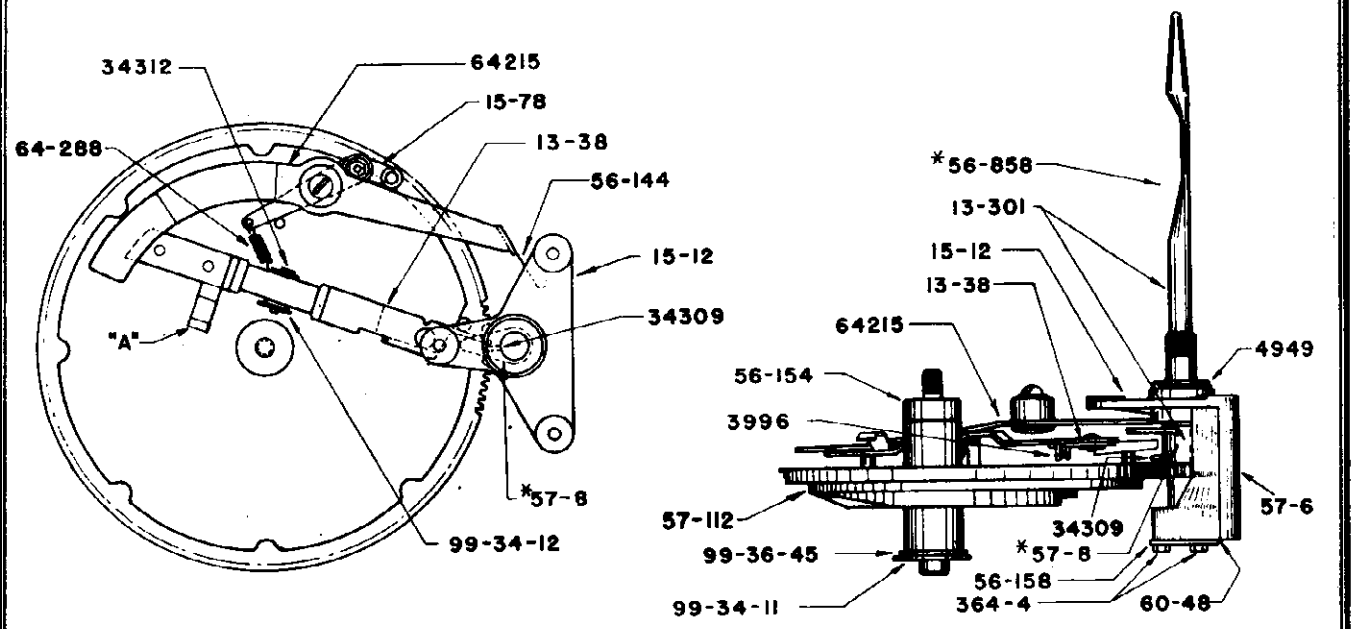

FIGURE 2

07-26 **Front Locking Lever Assembly**

Mounting Parts

36-117	10-32x1" H.H. Screw
36-136	#10 Flat Washer
368-7	10-32 Hex Nut
56-112	Spacer
99-33-4	#10 S.P. Washer

07-27 **Rear Locking Lever Assembly**

Mounting Parts

36-114	10-32x21/32" H.H. Screw
36-136	#10 Flat Washer
368-7	10-32 Hex Nut
56-112	Spacer
99-33-4	#10 S.P. Washer

07-28 **Connecting Link Assembly**

56-104	Connecting Link
56-106	Connecting Link Rivet
56-124	Gear Sector, Front
56-191	Gear Sector, Rear
56-263	Gear Spacer
99-36-28	Brass Washer
99-37-2	Wave Washer

Mounting Parts

36-114	10-32x21/32" H.H. Screw
36-136	#10 Flat Washer

Mounting Parts--Continued

36-231	10-32x1/2" H.H. Screw
368-7	10-32 Hex Nut
99-33-4	#10 S.P. Washer

09-119 **Tone Arm Return Lever and Spring Assembly**

11-180	Feed-In Spring Assembly
36-141	6-32x1/4" R.H.M.S.
36-465	6-32x5/8" R.H.M.S.
3612-4	#6 S.P. Washer
3624-2	#6 Flat Washer
56-166	Ratchet Pawl
56-167	Shoulder Rivet
3996	Pawl Spring
99-11-6	6-32 Hex Nut
99-40-6	#0x3/16" Drive Screw

Mounting Parts

36-112	#10 Flat Washer 1" O.D.
36-115	10-32x1/2" H.H.M.S.
368-7	10-32 Hex Nut
56-155	Spacer
99-33-4	#10 S.P. Washer

13-296 **Main Cam Assembly**

13-38 Starting Lever Assembly

15-78 **Trip Roller Assembly**

Mounting Parts
36-119 8-32x3/8" B.H.M.S.
368-4 8-32 Hex Nut
99-33-3 #8 S.P. Washer
99-36-20 #8 Flat Washer
56-100 Starting Lever End
56-105 Rivet
57-112 Main Cam
3996 Spring
99-36-1 Washer

Mounting Parts
34312 Pivot Pin
99-34-12 H.P. Cotter

Mounting Parts, Main Cam
36-129 1/4"-28 Hex Nut
56-154 Main Cam Stud
99-33-5 1/4" S.P. Washer
99-34-11 H.P. Cotter
99-36-45 Washer

13-297 **Spindle Gear and Bracket Assembly**
13-301 Spindle and Gear Assembly
56-858 Spindle *
57-8 Spindle Gear *
* Not Sold Separately
34309 Starting Pin
4949 Felt Washer
99-42-10 3/16" Ball Bearing
99-42-11 Turntable Stop Washer

Mounting Parts
36-303 8/32x7/16 R.H.M.S.
56-102 Spacer
50206 Rubber Grommet
99-36-21 #8 Flat Washer

13-298 **Centering Lever & Rocker Assembly**
36-690 #10 Flat Washer 1/2" O.D.x .042" St.
368-7 #10-32 Hex Nut 3/8" A.F.x1/8" Hi. St.
56-841 Centering Lever
56-844 Plunger Rocker
56-848 Rocker Lever Spacer
56-852 Rocker Connecting Link Rivet
56-853 Centering Lever Return Arm
56-857 Centering Lever Rivet and Guide Pin
56-860 Rocker Connecting Link
56-878 Centering Lever Guide Pin
64-13 Centering Lever Return Arm Spring
64-290 Centering Lever Equalizing Spring
99-20-31 #10-32x7/8" R.H.M.S. - St.
99-33-4 #10 S.P. Int. Lockwasher

13-300 **Play Control Assembly**
13-302 Switch, Cam, Ratchet and Hub
13-153 Switch Cover

13-300 **Play Control Assembly--Continued**
15-16 Switch Cam & Hub
15-80 Ratchet, Hub and Pin Assembly
36-143 Taper Pin
36-593 #2x1/4" Drive Screw
56-168 Shaft
56-169 Ratchet Locking Plunger
56-171 Switch Cam Spacer
56-173 Switch Bracket
64-18 Ratchet Plunger Spring
64-19 Switch Cam Spring
90-12 Switch
99-18-1 6-32x3/16" R.H.M.S.
99-36-7 Plain Washer
3612-4 #6 S.P. Washer

Mounting Parts
36-236 6-32x1/4" Philips O.H.

13-303 **Tone Arm Lift Lever & Bracket Assembly**

15-10 **Front Gear & Cam Assembly, See Fig. 7**
99-28-31 6-32x3/16" Bristol Set Screw

15-11 **Rear Gear & Cam Assembly**
99-28-31 6-32x3/16" Bristol Set Screw

44-27 **Phono Motor 60 Cycles**
3671 Motor Pulley 60 cycles

44-28 **Phono Motor 50 Cycles**
3681 Motor Pulley 50 cycles

Mounting Parts
45176 Tension Spring Holder
99-19-3 8-32x3/8" R.H.M.S.
99-33-3 #8 S.P. Washer
99-36-36 #8 Flat Washer

56-877 * **Reject Lever**
3160 "Reject" Tab
59-48 Reject Button
39236 Reject Lever Spring

Mounting Parts
36-114 10-32x21/32" H.H. Screw
36-136 #10 Flat Washer
368-7 10-32 Hex Nut
99-33-4 #10 S.P. Washer

90-84 **Cycle Switch**
60-205 Switch Cover

Mounting Parts
36-624 6-32x1/2" Philips B.H.M.S.
56-881 Spacer

46293 **Trip Finger Stop**

64215 **Trip Lever Release Lever**

66351 **Friction Trip Assembly Springs**

64-13 **Rear Shelf Lock Lever or Centering Lever Return Spring**

6416 **Front Shelf Lock Lever**

64-290 **Centering Lever Equalizing Spring**

39234 **Tone Arm Swing Lever**

39236 **Reject Lever Spring**

MODEL P-43

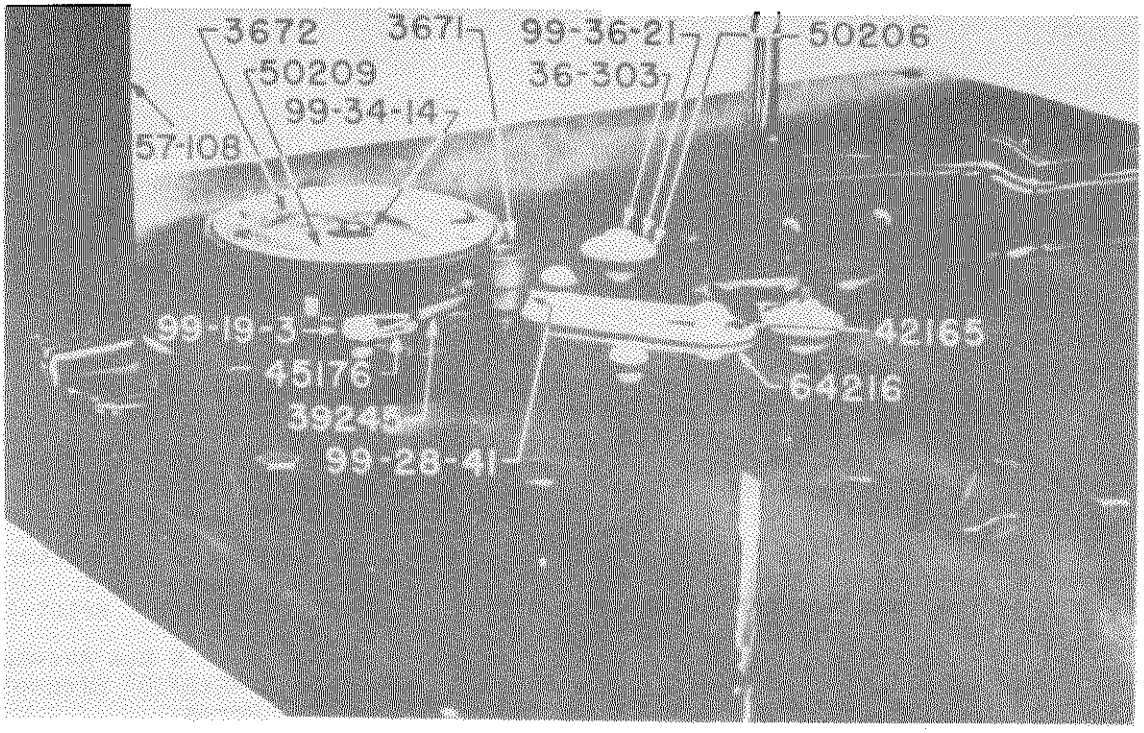

FIGURE 3

36-303	8-32x7/16" R.H.M.S.
368-4	8-32x1/4" Hex Nut
57-108	Record Support Post, See Fig. 5A
3671	Motor Pulley 60 Cycle
3672	Idler Pulley
39245	Idler Spring
42165	Spacer
45176	Spring Holder
50206	Rubber Grommet
50209	Thrust Washer
64216	Idler Bracket and Stud Assembly
99-12-1	8-32x11/32" Hex Nut
99-19-3	8-32x3/8" R.H.M.S.
99-28-41	6-32x1/8" Bristol Set Screw
99-34-14	H.P. Cotter
99-36-21	#8 Flat Washer
99-36-38	Flat Brass Washer

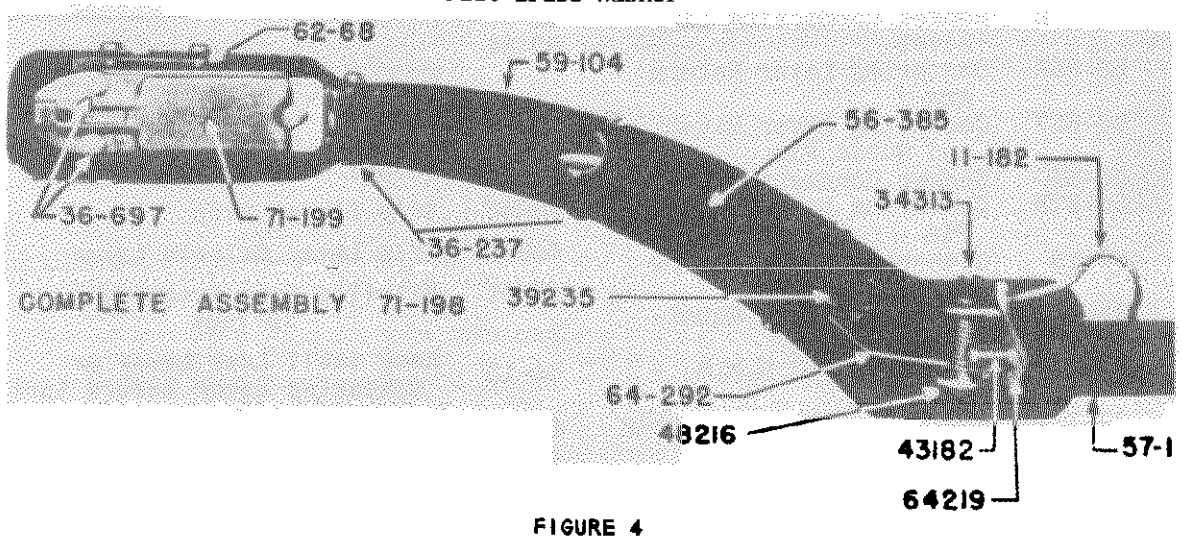

FIGURE 4

71-198 **Complete Tone Arm Assembly**

	11-182	Lead and Plug Assembly
	61269	Plug
	36-140	#4x1/4" Philips B.H.S.T.S.
	36-268	4-36x1/8" Philips B.H.M.S.
	36-504	4-36x3/16" Philips B.H.M.S.
	36-758	Slotted Needle Set Screw
	56-252	Crystal Mounting Bracket
	56-257	Cartridge Mounting Spacer
	56-385	Tone Arm Brace
*	57-1	Tone Arm Support Housing
	59-104	Tone Arm Only
	62-39	Dampening Shim
	48216	Tone Arm Bushing
	64-292	Counterbalance Spring
	71-199	Crystal Cartridge
	34313	Hinge Pin
	39235	Spring Clip
	64219	Tone Arm Bracket Assembly
	99-10-8	4-36 Hex Nut
	99-17-11	4-36x5/8" R.H.M.S.
	99-33-1	#4 S.P. Washer

Mounting Parts

36-120	8-32x5/16" B.H.M.S.
56-251	Wire Clamp
43182	Tone Arm Lift Rod
50204	Cork Washer

* Replaced by 57-122

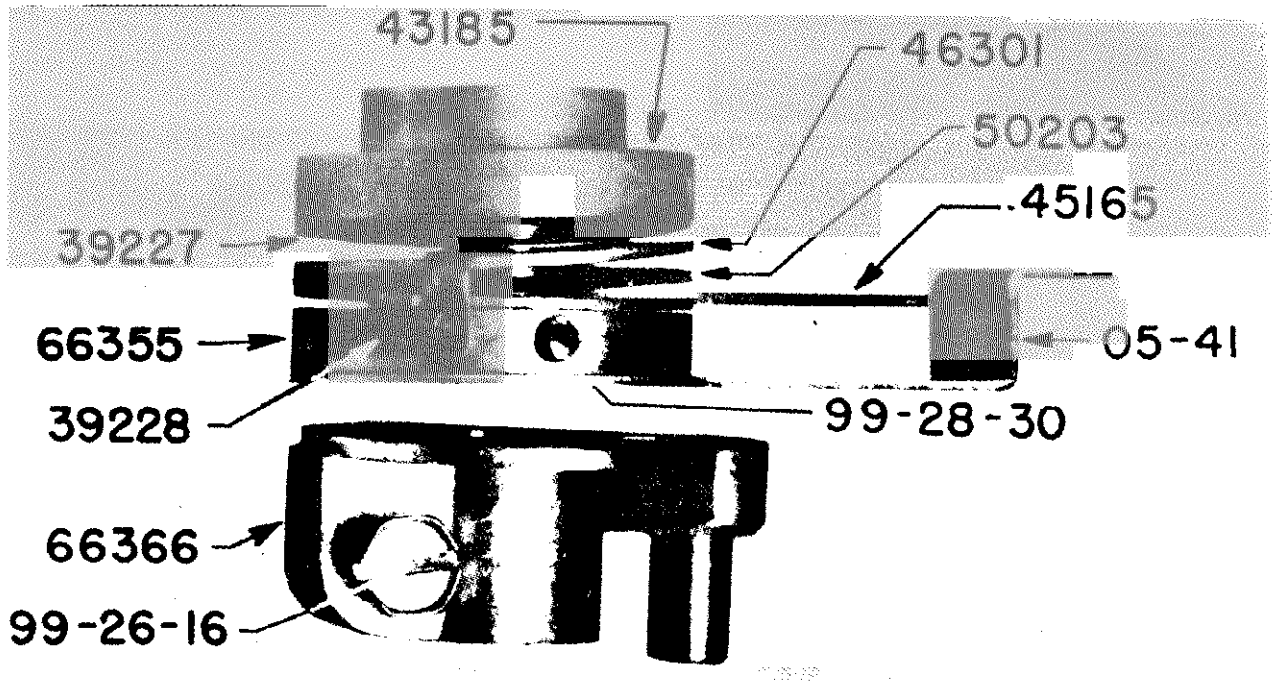

FIGURE 5

66351 **Friction Trip Assembly**

05-41	Trip Finger
39227	Spring Washer
39228	Coil Spring
43185	Upper Collar
99-28-30	6-32x1/4" Bristol Set Screw
45165	Friction Trip Lever
46301	Friction Trip Stop Disc

66351 **Friction Trip Assembly--Continued**

50203	Cork Washer
66355	Lower Collar, Pin and Screw
99-28-30	6-32x1/4" Bristol Set Screw
66366	Tone Arm Crank Assembly
99-26-16	Tone Arm Crank Set Screw

©John F. Rider

MODEL P-43

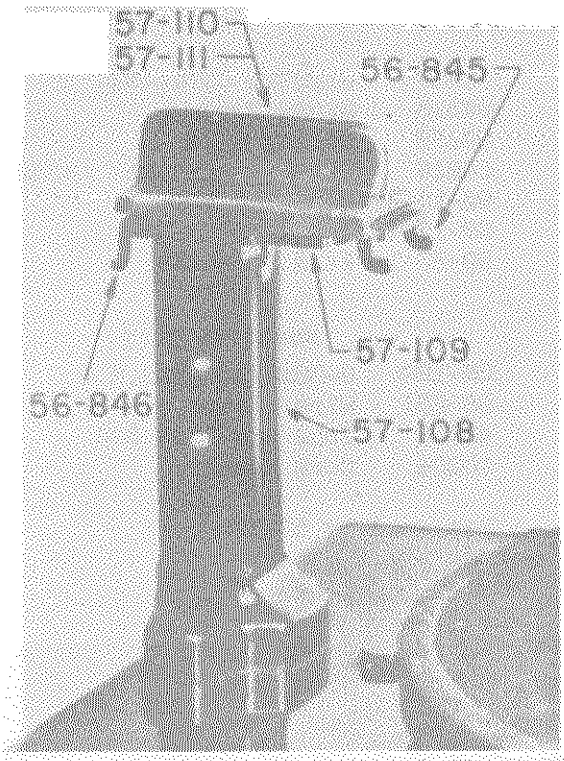

FIGURE 5A

	56-845	10" Plunger
	56-846	12" Plunger
*	57-108	Record Support Post
	57-109	Record Support Shelf and Tube Assembly
	57-110	Record Shelf Cover Rear
	57-111	Record Shelf Cover Front

Mounting Parts

	36-119	8-32x3/8" Philips B.H.M.S. Post to Base
	36-687	4-36x9/16" Philips F.H.M.S.
	36-688	6-32x9/16" Philips B.H.M.S.

* Replaced by 57-121

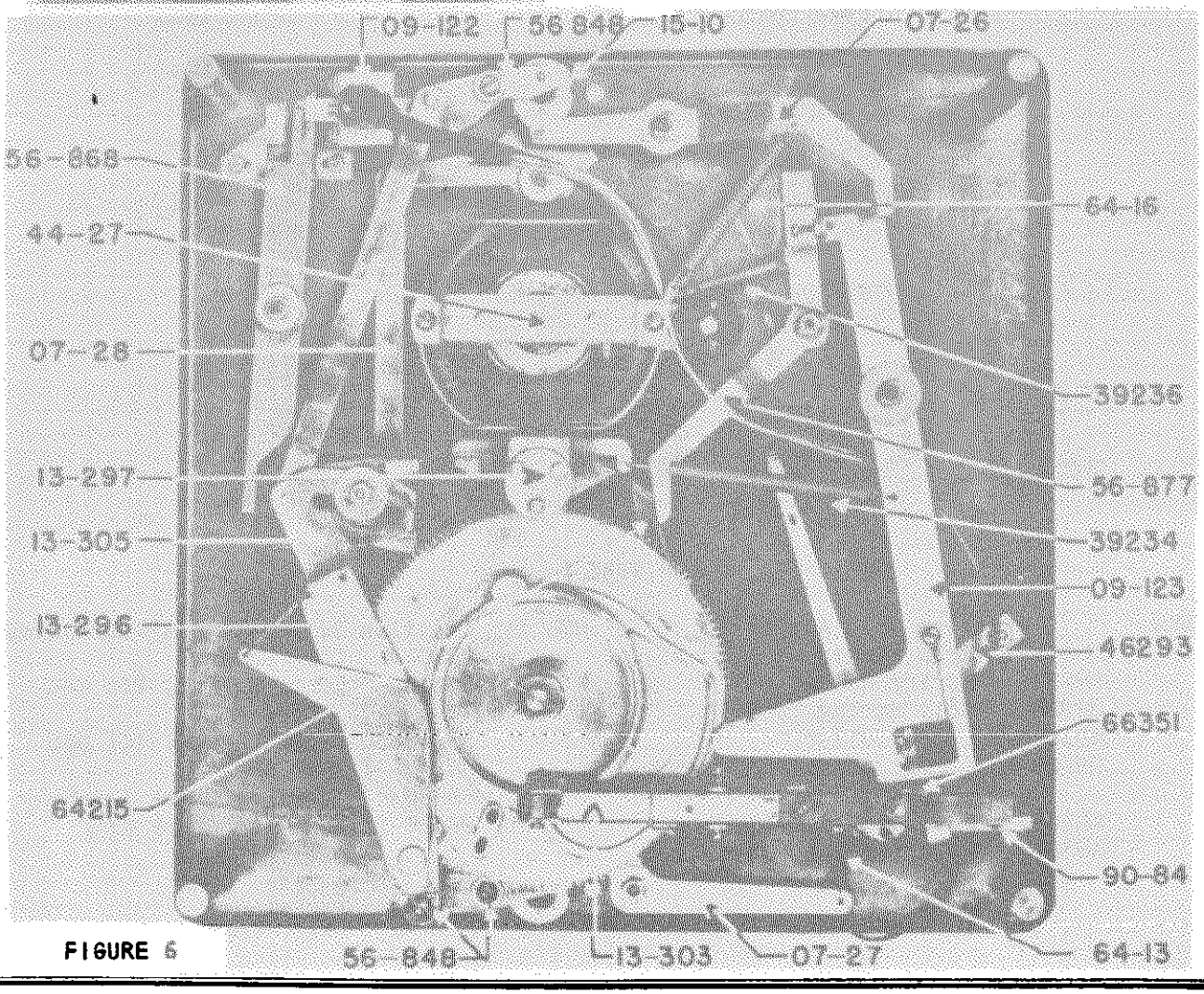

FIGURE 6

©John F. Rider

09-122 Automatic Stop Switch Assembly
09-123 Tone Arm Return Lever & Spring Assembly
13-297 Spindle, Gear and Bracket Assembly
13-301 Spindle and Gear Assembly
34309 Starting Pin (needed to complete 13-301
15-12 Spindle Support Bracket
31-142 Stop Switch Escutcheon
36-695 #6-32x3/8" Phil. Oven H.M.S. St.
364-4 6-32x1/4" H.H.M.S.
56-158 Spindle Thrust Plate
56-384 Tone Arm Rest Pin
57-6 Spindle Support Bracket
6048 Paper Gasket
4948 Felt Washer
99-42-10 3/16" Thrust Ball
99-42-11 Turntable Stop Washer

Mounting Parts

36-303 8-32x7/16" R.H.M.S.
56-102 Spacer, Spindle Bracket to Base

Mounting Parts--Continued

50206 Rubber Grommet
99-36-21 Flat Washers

13-296 Main Cam Assembly
13-38 Starting Lever Assembly
15-78 Trip Roller Assembly
56-100 Starting Lever End
56-105 Starting Lever End Rivet
56-868
71-198 Tone Arm & Pick Up Assembly
3996 Starting Lever End Spring
34312 Starting Lever Pin
99-34-12 H.P. Cotter for 34312
99-36-1 Starting Lever End Rivet Washer

Mounting Parts

36-129 1/4"-28x7/16" Hex Nut
56-154 Main Cam Stud
99-33-5 1/4" S.P. Washer
99-34-11 H.P. Cotter for 56-154
99-36-45 Main Cam Stud Washer

FIGURE 7

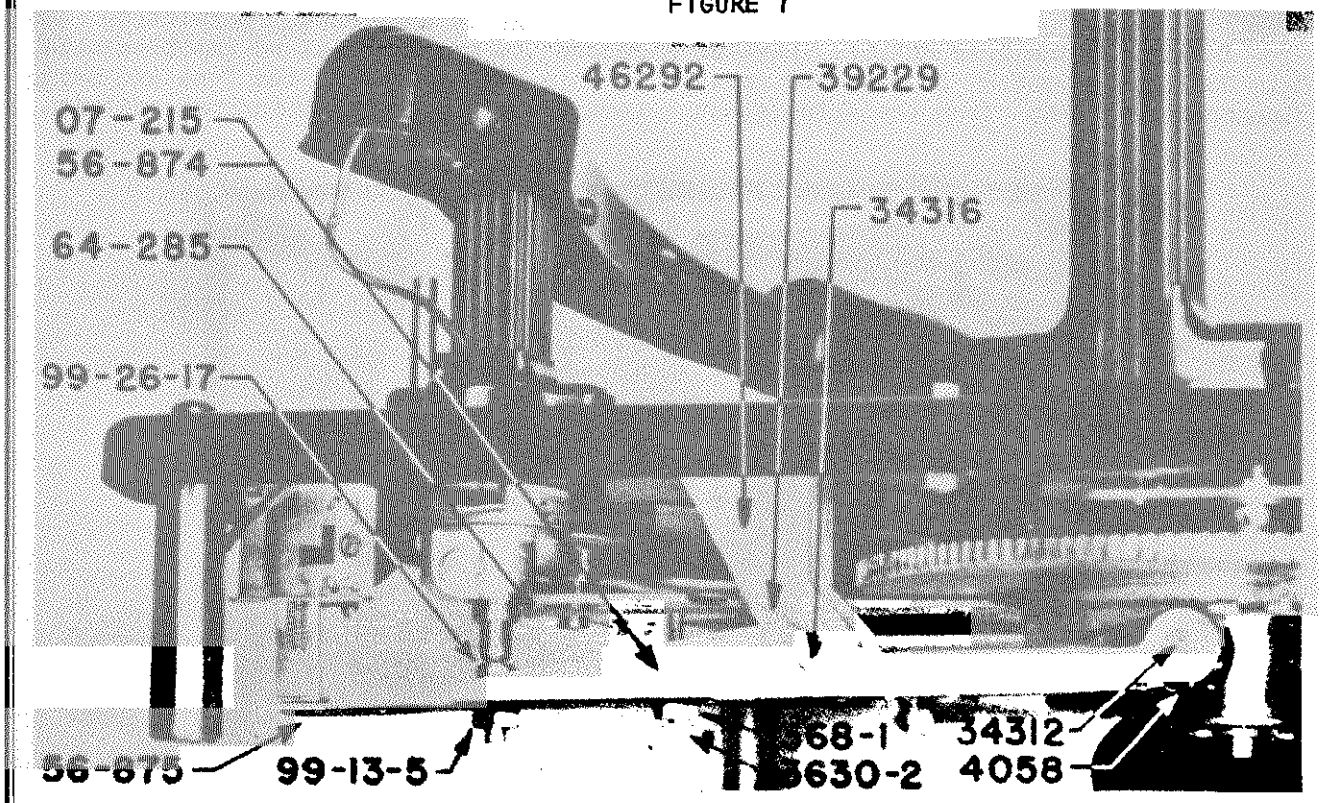

13-303 Tone Arm Lift Lever and Brake Assembly

07-215 Lever and Brake Spring Assembly
56-874 Lever only
64-285 Brake Spring
362-1 Rivet
368-1 6-32 Hex Nut
3630-2 6-32x7/8" R.H.M.S.
56-875 Switch Trip Finger
34312 Pin
34316 Pin
39229 Spring
4058 Roller
46292 Lever Mounting Bracket
99-13-5 10-32x3/8" Hex Nut
99-26-17 10-32x1/2" H.H.M.S.
99-33-4 #10 S.P. Washer
99-34-12 H.P. Cotter for 34312
99-34-13 H.P. Cotter for 31316

Mounting Parts

36-116 10-32x1/4" H.H.M.S.

©John F. Rider

MODEL P-43

In the following five illustrations we are showing the cycle of operation of a P-43 Series Capehart Changer.

Figure A is known as the playing position.

In Figure B the Main Cam has advanced so the "Boss" on the Main Cam has moved the Centering Lever Return Arm away from the cam, which because of the Return Spring causes the Centering Arm thru the Rocker Levers and Plunger Shafts to move the Record Plungers toward the Spindle. Due to the motion being transmitted thru the Return Spring different diameter records are handled equally well. The equalizer spring aids in exactly centering the record in regard to the Spindle. Note, in this illustration the Tone Arm Swing Lever is part way up the Cam Shoulder.

In Fig. C the Trip Roller (part of Main Cam) has advanced to move the rear plunger rocker away from the spindle, at the same time moving the front plunger rocker toward the spindle. Due to the Plunger Shafts, which transmit the motion of the Rockers to the Record Plungers the Record Plungers move in the opposite direction from the Rockers, i.e. Front Record Plunger moves away from the Spindle. This causes the record to be pushed off the Rear Shelf and drop to the Rear Hooks.

Between C & D the Record Plungers go through the central position and assume the position shown in Fig. D where the Rear Record Plunger moves away from the Spindle causing the record to drop to the Front Hooks.

In Fig. E the Centering Lever Return Arm has dropped into the "Slot" in the Main Cam, moving both Plungers Rockers toward the Spindle, causing the Front and Rear Hooks to snap back, permitting the record to settle flat on the turntable. In this illustration the Tone Arm Swing Lever is returning to the normal position.

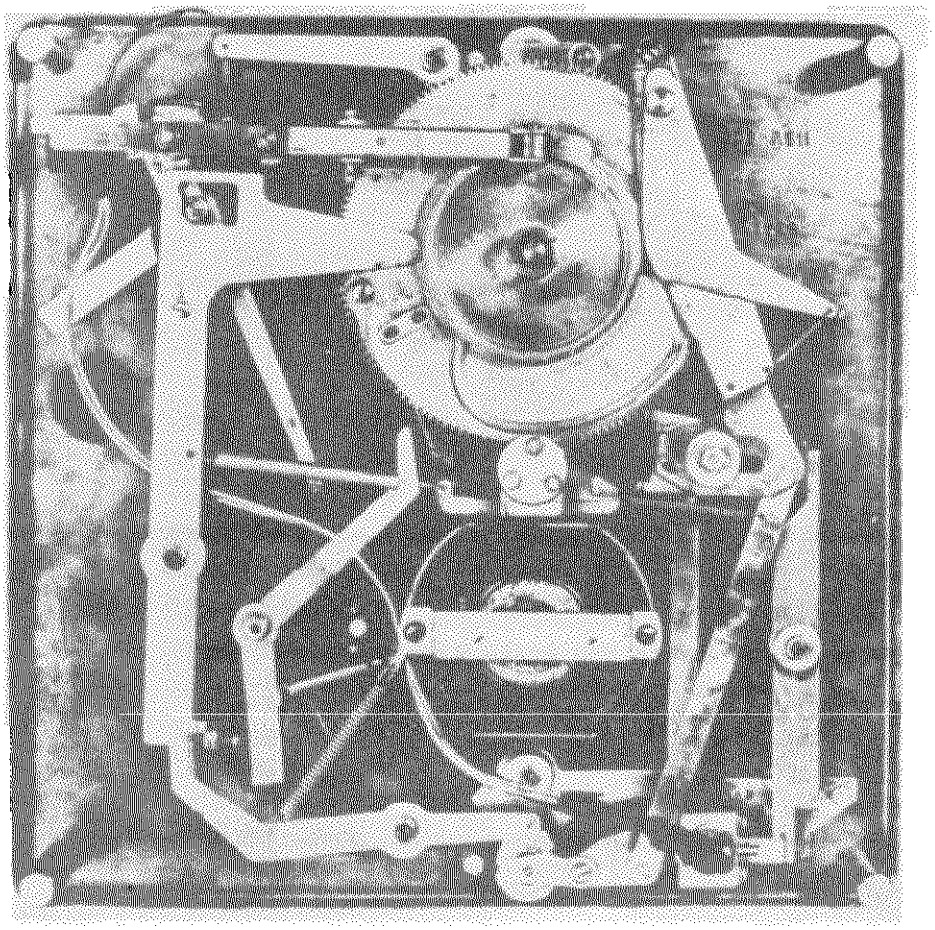

FIGURE A

© John F. Rider

MODEL P-43

SERVICE SUGGESTIONS

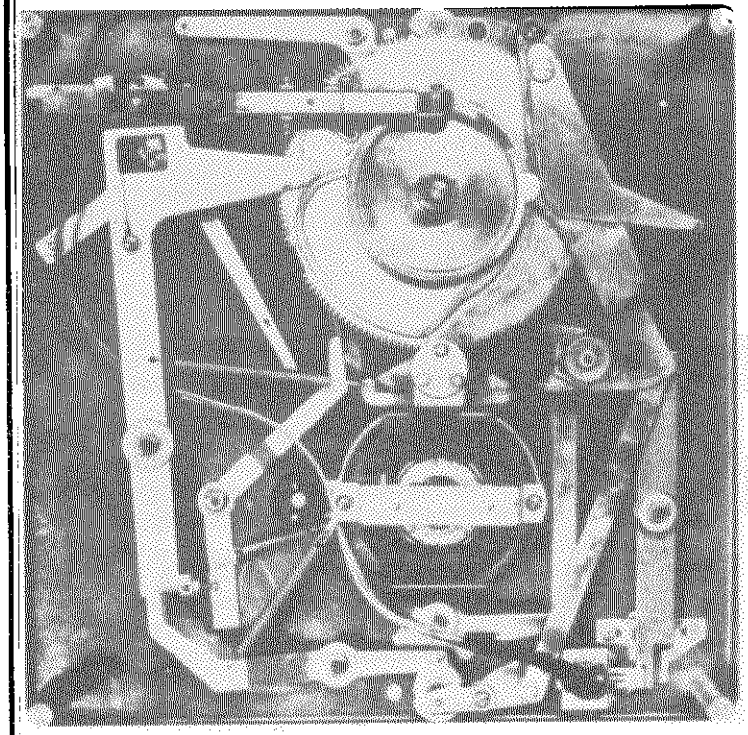

FIGURE B

1. TO REMOVE TURNTABLE 13-299

The Spindle Gear may be wedged, by a screwdriver between it and the Main Cam, to prevent its turning, the Turntable should be unscrewed from the Spindle. When removing the Turntable make certain one of the Spacer Washers is not lost. These Washers often adhere to the Turntable because of an oil film from the Felt Washer 4949. When replacing Turntable make sure it is properly tightened. NEVER USE GAS PLIERS TO HOLD SPINDLE.

2. TO REPLACE OR ADJUST IDLER PULLEY 3672.

First remove Turntable. The Idler Pulley is used to transfer power from the Motor Pulley 3671 to the Turntable. If the Idler Spring tension is incorrect the Turntable speed may be too high or too low, it should fall between 76.59 R.P.M. and 80.00 R.P.M. This tension is adjusted by loosening the Motor Mounting Screw holding the Spring Holder 45176 and turning the Spring Holder until the required tension is secured.

If it is necessary to replace the Idler Pulley remove the Hair Pin Cotter 99-34-14 and the Thrust Washer 50209. After removing the Idler Pulley also remove the Thrust Washer used underneath the pulley. If the Idler Pulley is replaced both Thrust Washers should be also.

When replacing the Pulley a single drop of oil should be used on the Pulley Stud.

CAUTION--Do not allow oil to get on either the Idler Pulley or the Turntable Rim.

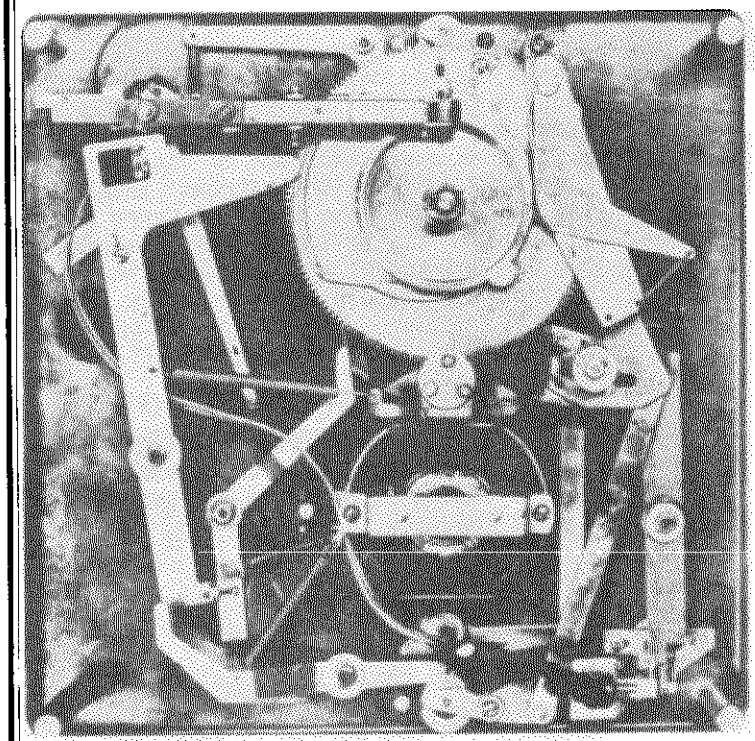

FIGURE C

3. ALIGNMENT OF RECORD SUPPORT SHELVES

The center line of the record shelves should form a straight line, in 10" position which passes through the center of the spindle. The shelves should be exactly 9 and 41/64 inches apart, plus or minus .005", and should be equidistant from the spindle. In the event it becomes necessary to change the spacing of the record shelves it is recommended that shims be used to adjust them. In some cases if oversized or undersized records are used it may be necessary to change the spacing of the shelves.

©John F. Rider

MODEL P-43

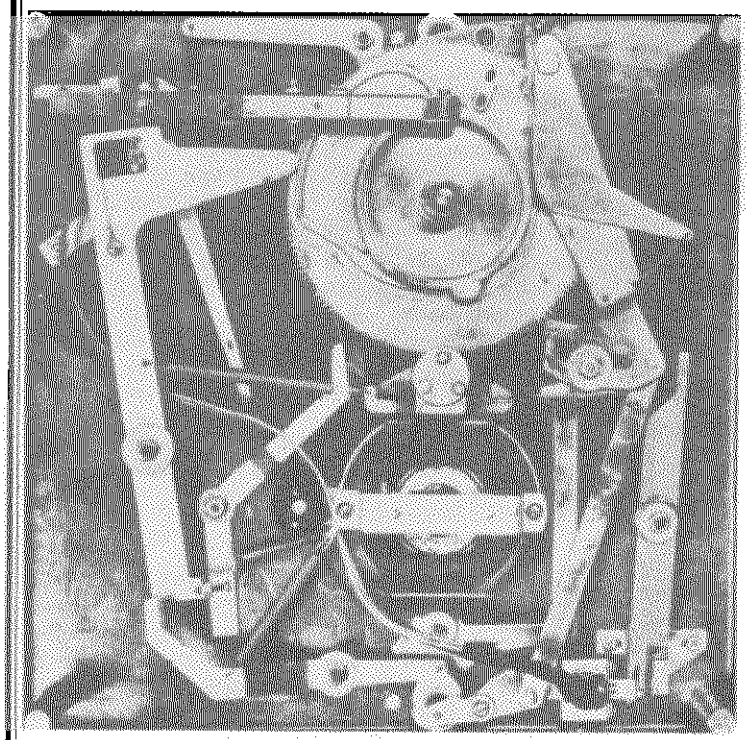

FIGURE D

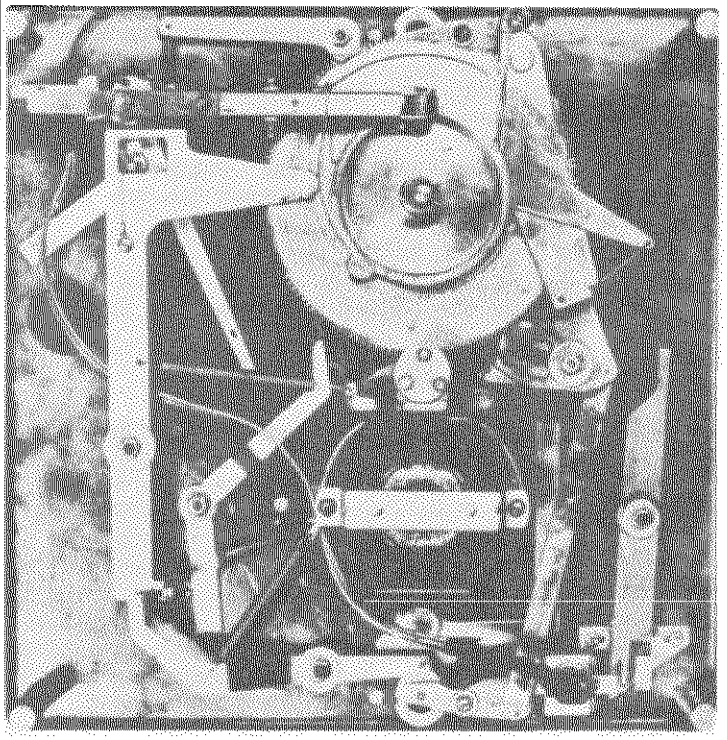

FIGURE E

4. ALIGNMENT OF RECORD SPINDLE

To prevent feedback the Spindle, Gear and Bracket Assembly is rubber mounted and can shift in transit. To reposition the spindle loosen all three mounting screws, position the spindle and tighten all three mounting screws equally; so as not to force the spindle out of place which may happen if one screw is tightened first.

5. SHELF LOCKING LEVER ADJUSTMENTS

The Front Record Shelf 57-111 should be lined up with the record spindle in the 10" position. The Shelf Locking Cam 15-10 is lined up with the center line of the Gear Sector Assembly and adjusted until the Locking Lever 07-26 is properly seated in the Shelf Locking Cam. The Record Shelf should not be permitted to slip when adjusting these parts.

When aligning the Rear Shelf Locking Cam the Locking Lever Hex Head Mounting screw may be loosened to permit the necessary adjustment to properly align the Shelf Locking Cam and Shelf Locking Lever.

6. ADJUSTMENT OF NON TRIP CAM OF STARTING LEVER 13-38 (Fig. 6)

This Cam shown at "A" in (Fig. 6) should be adjusted so that when the machine is in the "Manual" position, the Starting Lever Release Trip 64215 (Fig. 6) will pass over the end of the Starting Lever 13-38 (Fig. 6) without touching. The front end of the Starting Lever must also clear the bottom of the Resetting Dog and the top of the Starting Pin both part of the Spindle Gear 57-8 (Fig. 6).

7. THE TRIP FINGER STOP 46293 (Fig. 2)

The Trip Finger Stop 46293 should be 2-1/4" from the inside of the base plate to the inside face of the 90° bend at the end of the Stop.

8. NEEDLE LANDING

In 10" position, adjust the Tone Arm Crank 66366 (Fig. 5) so the needle lands

©John F. Rider

4-7/8" from center of the Record Spindle. To adjust have record changer in playing position, loosen Tone Arm Set Screw 99-26-16 (Fig. 5) set needle 4-7/8" from center of Record Spindle. Hold Tone Arm Crank firmly against Tone Arm Swing Lever 09-119 (Fig. 2) at the same time hold the Tone Arm Crank firmly up against the Trip finger 46287 (Fig. 5). Tighten the Set Screw 99-26-16. There should be a small amount of play up and down in the tone arm. Next set the 12" drop. To adjust set the record shelves for 12" records and have record changer in playing position. Loosen Lock Nut 99-11-6; which is part of 09-119 and adjust Screw 36-465 until the needle drops 5-7/8" from the center of the Record Spindle. Be sure nut 99-11-6 is tightened after adjustment is made.

9. ADJUSTMENT OF TONE ARM 71-195 (Fig. 4)

With records on the shelves, the top of the pickup arm at the highest point in its return should be 3/16" below the bottom of the bottom record on the shelves.

10. TRIP MECHANISM (Fig. 5)

The proper adjustment of the Trip Mechanism is, when the needle is 1-7/8" from the center of the record spindle, the Trip Finger 05-41 (Fig. 5) trips the Starting Lever Release Trip 64215 (Fig. 6).

To adjust tension loosen Bristol Set Screw 99-28-30 in Upper Collar 43185 (Fig. 5). Turn collar counter clockwise to increase friction (if changer does not trip at end of record) and clockwise to decrease friction (if changer trips before the end of the record). There should never be any more friction than is necessary to move Starting Lever Release Trip 64215 (Fig. 6) off the end of the Starting Lever 13-38 (Fig. 6).

Excessive friction will cause a loud click each revolution of the turntable after a part of the record has been played.

11. STARTING PIN 34309 AND STARTING LEVER 13-38 (Fig. 6)

The Starting Pin 34309 (Fig. 6) is normally driven into the Spindle Gear 57-8 (Fig. 6) until the square end is flush and the pointed end projects about 1/8" and should engage the end of the Starting Lever 13-38 to allow the teeth of the Main Cam to mesh with the Spindle Gear without topping. Two adjustments are possible if the teeth do not engage properly, either drive the Starting Pin in further or bend the end of the Starting Lever.

12. MOTOR SPEED

Due to commercial tolerances it is impossible to secure motors which will run at exactly 78.26 R.P.M. Our limits are from 76.59 R.P.M. to 80.00 R.P.M.

In the event it becomes necessary to get exact speed on one of these changers choose a motor pulley that gives a slightly higher speed than required. Using a fine file reduce the diameter of the motor pulley a little at a time until the required speed is secured.

13. The following simple OILING INSTRUCTIONS will result in a minimum of service calls---

Every six months or once each year, two or three drops of oil should be put on the two felt washers in the Spindle Gear Bracket. One washer is located at the bottom of the Spindle Gear, the other is at the top of the bracket and is accessible by removing the Turntable. Two or three drops of oil on the felts in the Motor. One drop of oil on the Pin for the roller of the Tone Arm Lift Lever. A very light application of White Vaseline on the teeth of the Main Cam, also some on the face of this Cam where the Tone Arm Swing Lever rides. A single drop of oil on the 10" and 12" plungers. Care should be exercised to prevent an excess of oil being used on any part.

No further lubrication on the tone arm bearing will be necessary unless a replacement is made. In this case a thin film of vaseline may be used.

Care should be taken to see that no oil gets on the motor pulley, idler pulley or rim of the turntable. No oil should be used on the Friction Trip Assembly.

Use only a good grade of machine oil with a viscosity of SAE 10.

©John F. Rider

PARTS LIST

Old Part No.	New Part No.	DESCRIPTION
07-26	07026	Front Locking Lever Assembly
07-27	07027	Rear Locking Lever Assembly
07-28	07028	Connecting Link Assembly
07-216	07216	Lever and Brake Spring Assembly
09-122	09122	Automatic Stop Switch and Bracket Ass'y
09-123	09123	Tone Arm Return Lever and Spring Assembly
11-86	11086	Lead and Plug Assembly, Tone Arm
11-180	11180	Feed-in Spring Assembly
13-38	13038	Starting Lever Assembly
13-296	13296	Main Cam Assembly
13-297	13297	Spindle Gear and Bracket Assembly
13-299	13299	Turntable
13-301	13301	Spindle and Gear Assembly
13-303	13303	Tone Arm Lift Lever and Bracket Ass'y
13-305	13305	Center Lever and Rocker Assembly
15-10	15010	Front Gear and Cam Assembly
15-11	15011	Rear Gear and Cam Assembly
15-12	15012	Spindle Support Bracket Assembly
15-76	15076	Front Plunger Shaft Assembly
15-77	15077	Rear Plunger Shaft Assembly
15-78	15078	Trip Roller Assembly
31-51	31051	Decalcomania
31-60	31060	"Reject" Tab
31-142	31142	Stop Switch Escutcheon 1 ½"
36-112	36112	#10 Flat Washer 1" O. D.
36-114	36114	10-32 x 21/32" H. H. Screw
36-115	36115	10-32 x ½" H. H. Mach. Screw
36-116	36116	10-32 x ¼" H. H. Mach. Screw
36-117	36117	10-32 x 1" H. H. Screw Front Locking Lever
36-118	36118	Turntable Washer
36-119	2012-209	8-32 x ⅜" B. H. M. S.
36-120	2012-207	8-32 x 5/16" B. H. M. S.
36-129	36129	¼" -28 Hex Nut
36-136	36136	#10 Flat Washer ¾" O. D.
36-141	2000-155	6-32 x ¼" R.H.M.S.
36-231	36231	10-32 x ½" H. H. Screw
36-237	36237	#4-32 x 3/18" Oven Head M. S. ST.
36-303	2000-211	8-32 x 7/16" R.H.M.S.
36-454	2000-205	8-32 x ¼" R.H.M.S.
36-465	36465	6-32 x ⅜" R.H.M.S.
36-624	36624	6-32 x ½" Philips B.H.M.S.
36-688	36688	6-32 x 9/16" B.H.M.S.
36-693	36693	Flat Washer ¾" O.D. x 17/64" I.D. x .050 C.R.S.
36-690	36690	#10 Flat Washer ½" O.D. x .042", Steel
36-695	2085-209	#6-32 x ⅜" Phil. Oven Hd., M.S. St.
36-697	36697	#4-6 x 7/16" R.H.M.S. St.
36-769	36769	#4-32 x ½" Phil. F.H.M.S. St.
36-758	36758	Special Slotted Screw Needle Screw, Pkg. 10
362-1	2091-003	Rivet, Brake Spring
364-4	36871	6-32 x ¼" H.H.M.S.
368-1	2016-004	6-32 Hex Nut
368-4	2016-005	8-32 Hex Nut
368-7	2015-007	10-32 Hex Nut
3612-4	2019-004	#6 S. P. Washer
3624-2	36945	#6 Flat Washer
3630-2	2000-169	6-32 x ⅞" R.H.M.S.
44-27	44027	Motor, 60 Cycle
44-28	44028	Motor, 50 Cycle
56-100	56100	Starting Lever End
56-102	56102	Spacer, Spindle, Gear and Bracket
56-103	56103	Tone Arm Swing Lever Spacer
56-104	56104	Connecting Link
56-105	56105	Rivet, Starting Lever
56-106	56106	Connecting Link Rivet
57-108	57108	Record Support Post
56-109	56109	Record Support Shelf and Tube
56-112	56112	Spacer, Front Rocking Lever
56-122	56122	Spacer
56-124	56124	Gear Sector, Front
56-144	56144	Starting Lever Spring
56-154	56154	Main Cam Stud
56-155	56155	Spacer (Tone Arm Swing Lever)
56-158	56158	Spindle Thrust Plate
56-191	56191	Gear Sector, Rear
56-251	56251	Wire Clamp
56-263	56263	Gear Sector Spacer
56-384	56384	Tone Arm Rest Pin
56-385	56385	Tone Arm Brace
56-481	56481	Spring Clip
56-841	56841	Centering Lever
56-844	56844	Plunger Rocker
56-845	56845	10" Record Plunger
56-846	56846	12" Record Plunger
56-848	56848	Rocker Lever Spacer
56-849	56849	Centering Lever Washer
56-850	56850	Centering Lever Guide Stud
56-852	56852	Rocker Connecting Link Rivet
56-853	56853	Centering Lever Return Arm
56-857	56857	Centering Lever Rivet and Guide Pin
56-860	56860	Rocker Connecting Link
56-865	56865	Spacer Sleeve
56-868	56868	Switch Shifting Lever
56-870	56870	Switch Mtg. Brkt.
56-874	56874	Tone Arm Lift Lever, Only
56-875	56875	Switch Trip Finger
56-877	56877	Reject Lever (for use with Die Case Spindle Bracket)
56-878	56878	Centering Lever Guide Pin
56-881	56881	Spacer
56-1045	561045	Reject Lever
57-1	57001	See 57122
57-108	57108	See 57121
57-109	57109	Record Support Shelf, Tube Assembly
57-110	57110	Record Shelf Cover, Rear
57-111	57111	Record Shelf Cover, Front
57-112	57112	Main Cam Only
57-121	57121	Record Support Post
57-122	57122	Tone Arm Support Housing
59-48	59048	Reject Knob
59-104	59104	Tone Arm
60-48	60048	Paper Gasket
60-205	60205	Cycle Switch Cover
62-13	62013	Bushing for Crystal Lead
62-68	62068	Crystal Shim
64-13	64013	Spring, Rear Locking Lever
64-16	64016	Spring, Shelf Lock Lever, Front
64-288	64288	Spring, Trip Roller
64-290	64290	Spring, Centering Lever Equalizing
64-291	64291	Switch Trip Lever Spring
64-292	64292	Counter-balance Spring
71-198	71198	Tone Arm and Pick Up Assembly
71-199	71199	Crystal Cart
71-204	71204	White Sapphire Needle

©John F. Rider

PARTS LIST

Old Part No.	New Part No.	DESCRIPTION
71-206	71206	Pfanstiehl Needle
90-82	90082	Switch
90-84	90084	Switch, Cycle
99-11-6	2015-004	6-32 Hex Nut
99-12-1	2015-005	8-32 Hex Nut
99-13-5	2015-007	10-32 x 3/8" Hex Nut
99-18-1	2000-153	6-32 x 3/16" R.H.M.S. Play Control
99-19-17	2000-207	8-32 x 3/4" Mach. Screw, Rd., Hd., Nickel
99-19-3	2000-209	8-32 x 3/8" R.H.M.S.
99-19-8	2000-221	8-32 x 1" R.H.M.S.
99-20-31	2000-319	10-32 x 7/8" R.H.M.S.
99-26-16	36865	Tone Arm Crank Set Screw
99-26-17	36881	10-32 x 1/2" H.H.M.S.
99-28-30	36696	6-32 x 1/4" Bristol Set Screw
99-33-3	2019-005	#8 S. P. Washer
99-33-4	2019-006	#10 S. P. Washer
99-33-5	2019-007	1/4" S. P. Washer
99-34-11	36876	H. P. Cotter, Main Cam Stud
99-34-12	36882	H. P. Cotter, Starting Lever
99-34-13	36883	H. P. Cotter, Tone Arm Lift Lever
99-36-1	2017-002	Washer Starting Lever
99-36-9	36905	Washer
99-36-12	36874	Flat Washer 17/16" x 3/4"
99-36-20	2018-009	#8 Flat Washer
99-36-21	36830	#8 Flat Washer 1/2" O. D.
99-36-28	36872	Brass Washer
99-36-36	36867	#10 Flat Washer
99-36-38	36868	Brass Washer, Idler Bracket
99-36-45	36875	Washer, Main Cam Stud
99-37-2	36873	Wave Washer
99-42-10	561415	3/16" Ball Bearing
99-42-11	36870	Washer, Turntable Stop
3294	37158	Shoulder Bearing, Clutch Locking Lever
3671	55106	Pulley, 60 Cycle Motor
3672	13441	Idler Pulley
3681	55081	Pulley, 50 Cycle Motor
3996	64379	Spring, Start Lever
4058	55001	Tone Arm Roller
4949	92189	Felt Washer
6069	67388	Reject Knob
34309	34309	Starting Pin
34312	34312	Pivot Pin
34313	34313	Hinge Pin, Tone Arm
34316	34316	Hinge Pin, Tone Arm Lift Lever
39227	39227	Spring Washer
39228	39228	Coil Spring
39229	39229	Spring, Tone Arm Lift Lever
39234	39234	Spring, Tone Arm Swing Lever
39235	39235	Spring Clip
39236	39236	Spring, Reject Lever
39245	39245	Spring Idler Pulley
42165	42165	Spacer Idler Bracket
43182	43182	Tone Arm Lift Rod
43185	43185	Upper Collar
45165	45165	Friction Trip Lever
45176	45176	Tension Spring Holder
46287	46287	Trip Finger
46292	46292	Bracket, Tone Arm Lift
46293	46293	Trip Finger Stop
48216	48216	Insulating Washer Tone Arm
50203	50203	Cork Washer
50204	50204	Cork Washer
50206	50206	Rubber Grommet
50209	50209	Thrust Washer, Drive Disc
61269	61269	Phono Plug
64215	64215	Trip Lever Release
64216	54216	Idler Bracket and Stud Assembly
64219	64219	Bracket, Tone Arm
66351	66351	Friction Trip Assembly
66355	66355	Lower Collar, Pin and Screw
66366	66366	Tone Arm Crank Assembly
36-128	36128	Mounting Bolts
64-14	64014	Spring Top
64-15	64015	Spring Lower
36-127	36127	Spring Mounting Cup
36-137	36137	Bottom Spring Retainer
5637-1	58021	Shipping Clamp
56-149	56149	Retainer Channel
368-7	2015-007	10 x 32 H.H.M.
3611-4	2019-005	10 S. P. Ext. Lockwasher

©John F. Rider

MODELS P-77, P-777

The Capehart P-77 Record Changer is a dual speed changer designed to operate at either 33 1/3 r.p.m. or 78 r.p.m. This changer is capable of playing 12-inch, 10-inch, or 7-inch records automatically at either speed. Furthermore, 12- and 10-inch records can be played intermixed.

The information herein presented is published in an effort to assist the serviceman in properly preparing the instrument for operation and in effecting any replacement or adjustment which he may be called upon to perform on the long play section of the subject model record changer.

Information or adjustments that are not covered herein are the same as those required for the standard version of this changer (Model P-71), and are already covered in the maintenance manual for the Model P-71 record changer, previously published.

SPECIFICATIONS

Voltage Rating	105 to 125 volts at 60 c.p.s.
Speed	78 r.p.m. and 33 1/3 r.p.m.
Type Pickup	Variable Reluctance
Type Needle	Osmium Point

MICROGROOVE 33 1/3 r.p.m.	MAXIMUM RECORD CAPACITY	STANDARD 78 r.p.m.
10	12-inch records	10
12	10-inch records	12
10	12-inch and 10-inch records intermixed	10
12	7-inch records	12

WHEN PUTTING TONE ARMS INTO POSITION ON THEIR MOUNTING DO NOT PRESS IN ON THE RELEASE BUTTONS. THESE BUTTONS SHOULD ONLY BE COMPRESSED WHEN REMOVING THE TONE ARMS!

IF YOU PRESS THE BUTTONS WHEN TONE ARM IS BEING PRESSED INTO POSITION ON ITS MOUNTING YOU ARE LIKELY TO BEND THE BRONZE LOCKING CATCH!

PREPARING FOR OPERATION

CHECKING

After carefully uncrating the instrument, the following checks should be made before attempting to operate the record changer:

1. Remove all packing material and pieces of tape from the changer compartment.
2. Remove the shipping bolts from the floating mounting panel.
3. See that the changer and mounting panel float freely upon the spring mountings.
4. Check the sliding drawer to see that there is no binding in the roller and that the leads to the changer do not interfere with the action of the drawer.
5. Check both the 78 r.p.m. and 33 1/3 r.p.m. tone arm to see that the needle and pickup has not been damaged.
6. Run changer by hand through cycle to make sure action is free from binding.
7. See that the changer is level. If the changer is not level, use the simple method, described herein, to correct the condition.
8. Check the turntable speed at both 78 r.p.m. and 33 1/3 r.p.m. with a stroboscope record.

LEVELING

1. Remove the four acorn palnuts which hold the changer mounting board to the spring mounts.
2. Lift the changer up from the front. It may or may not be necessary to remove the changer; however, if it is, be sure to remove the electrical connections from the underside before removing the changer.
3. Place a small washer, which can be easily made of soft cardboard (such as a blotter), on the spring mounts on the side which is the lowest. One or more of these washers may be used, depending on the amount the changer was off-level.
4. Set the changer back on the spring mounts, and replace the four acorn palnuts. In this operation, be sure that the wires do not become fouled by either the changer or the slide mechanism.

DESCRIPTION OF SPEED CHANGING ACTION

In order to describe the action of the mechanical motor speed changing action, consider the changer in position for playing standard 78 r.p.m. records. The action of changing the speed from 78 r.p.m. to 33 1/3 r.p.m. and placing the correct tone arm on the changer is actually accomplished with one physical movement.

The Long Play Tone Arm is placed on the Tone Arm Support and pressed down until a definite "click" is heard.

In this one operation, the following action takes place:

1. The Tone Arm being pressed down on the Tone Arm Support causes inter-connection of the contacts from the pickup and the phono-output jack, thus the pickup is connected electrically.
2. The Tone Arm, in addition, when pressed down contacts one of the two switching rods. In this case (switching from 78 r.p.m. to 33 1/3 r.p.m.), it will contact the rod closest to the control button. One of these two rods, depending on which speed the changer is operating at, will at all times be protruding through the top of the main frame, near the tone arm support bracket. The rod is pressed down, by the force exerted by the tone arm being pressed, thus actuating a mechanical switch on the underside of the changer. The action of the rods at one end transmit the rotary motion by means of a drive shaft to a switch arm which is connected to the other end of the drive shaft. This switch arm (or lever) in turn acts to raise or lower the idler pulley (in this case, raise) so that it contacts the proper section of the motor drive shaft for the desired turntable speed.

©John F. Rider

For additional data: See Farnsworth Model P71, Pages RCD.CH. 19-1 through RCD.CH. 19-10

PARTS IDENTIFICATION

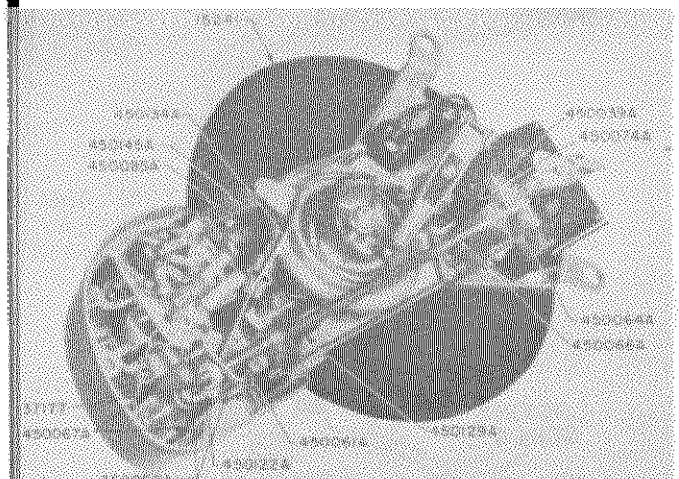

FIGURE 1

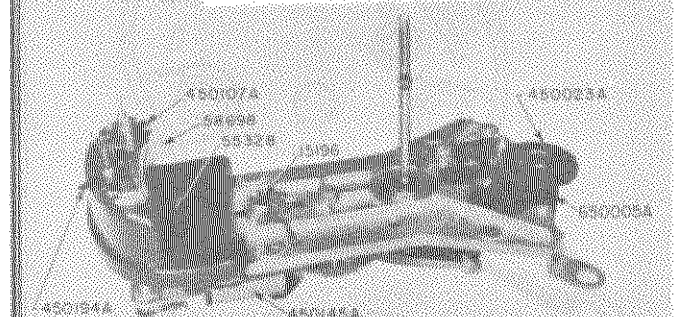

FIGURE 2

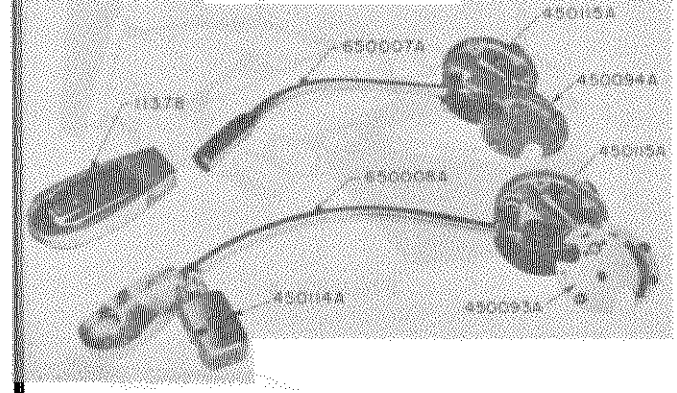

FIGURE 3

ADJUSTMENTS

TONE ARM SET DOWN

When it is necessary to adjust the Tone Arm Set Down so that after the changing cycle is completed, the tone arm will set down properly in the lead-in grooves of the record, the adjustment should be made first for the 7-inch position and at 33 1/3 r.p.m. speed. The procedure to be followed is outlined below:

1. Place the 33 1/3 r.p.m. tone arm in place on the tone arm support.

2. Set the 7-inch Set Down Lever in position against the Tone Arm Interceptor Lever.

3. Make sure that the changer is in the playing position.

4. Loosen the set screw on the Tone Arm Crank (located on the underside of the changer).

It should be stated here that .006 inch spacing is required between the Crank and the main frame (in other words, .006 inch "play" is needed in the tone arm support bracket). It has been found that a small shim, as shown in the sketch following, placed between the crank and the frame will assist in holding this tolerance while the set down adjustment is being made.

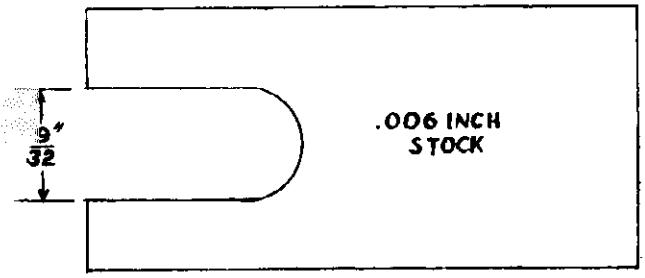

FIGURE 4

5. If the tone arm sets in too far on the record, rotate the tone arm outward slightly while holding the Tone Arm Crank. If the tone arm does not set in far enough, rotate the tone arm inward slightly.

6. Tighten the Tone Arm Crank set screw.

7. Check the set down for a 7-inch record. If the adjustment is not correct, repeat steps 4 and 5.

8. Set the 7-inch Set Down Lever to the 10- and 12-inch record position.

9. Check the tone arm set down for 10-inch and 12-inch records at 33 1/3 r.p.m.

10. If the set down is not correct, adjust by means of the Tone Arm Adjusting Stud (located on the changer base). This adjustment will have no effect on the 7-inch adjustment already made.

11. Set the 78 r.p.m. Tone Arm in place on the Tone Arm Support.

12. Check the set down on 10- and 12-inch records. If the adjustment is not correct, the 78 r.p.m. tone arm may have become slightly bent in handling, and it will be necessary to rebend the arm slightly to provide the proper set down.

THE PUSH RODS

The Push Rods, as shown in Figure 5, should be adjusted between two limits. When the rod is in the "up" position, it should not extend any higher than one-half the thickness of the support bracket plate. This is to insure that the rod does not bind on the Tone Arm Housing. The other limit is that the rod be high enough that when the tone arm housing is pressed down, the switching action will be completed.

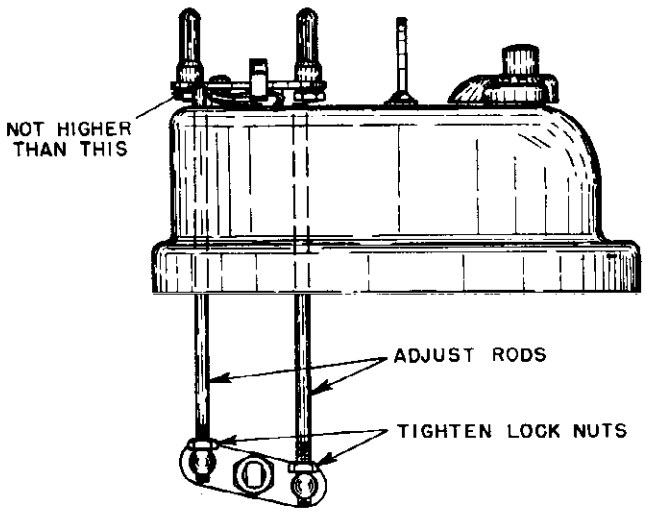

FIGURE 5

©John F. Rider

MODELS P-77, P-777

The rods are adjusted at the factory, and the lock nuts are tightened and secured with Glyptal. If it is necessary to readjust these rods, be sure to tighten the lock nuts and coat them with Glyptal or some similar securing agent.

NEEDLE PRESSURE

This adjustment is accurately made at the factory; therefore, it should not be necessary to readjust the needle pressure under normal operating conditions.

If, for some reason the factory adjustment no longer holds true, the following procedure should be used in readjusting.

The procedure for adjusting the 78 r.p.m. tone arm is the same as for the 33 1/3 r.p.m. tone arm, with exception of the pressure specifications.

There are two adjustments to be made in setting the tone arm for correct needle pressure. These are: The Tone Arm Spring Adjustment (located on the outer side of the tone arm housing), which is adjustable with a small screw driver, and the Tone Arm Sideplay Adjustment (located directly opposite the spring adjustment), which requires a No. 8 Allen Wrench for adjustment. Both adjustments utilize a No. 6 Allen Head Locking Screw to maintain adjustment. The locking screws are located on the underside of the tone arm housing. *See Figure 7.*

Detailed Procedure:

1. Loosen the locking screws on both adjustments.
2. Loosen slightly the Tone Arm Sideplay Adjustment.
3. With a Gram Scale (if adjustment is being made for the 33 1/3 r.p.m. tone arm), test the up and down pressure of the tone arm. *See Figures 8 and 9.* This should be within the limits of 5 to 7 grams. If it is not, adjust the Tone Arm Spring Adjustment screw to provide the correct pressure.

Note: With the 78 r.p.m. Tone Arm, the up and down pressure should be 1⅛ ounce ± ⅛ ounce.

4. Tighten the locking screw for the spring adjustment.
5. Adjust the Tone Arm Sideplay screw to provide approximately 1/32" horizontal play, measured at the pickup.

CAUTION: Do not tighten this screw beyond this limit, as added friction will be exerted which will effect the needle pressure.

6. Tighten the locking screw for the sideplay adjustment.

Lift the micro-groove 33 1/3 r.p.m. tone arm, as shown in Figure 8, approximately ½ inch and make a note of the gram scale reading. Then lower the tone arm approximately ½ inch and again note the reading of the scale, as in Figure 9. The two readings noted are the limits of needle pressure. The actual needle pressure is taken as the average of these two readings. The difference between the two readings is referred to as the Vertical Friction. This should not be more than 2 grams.

WOW AND RUMBLE

The condition known as "wow" is in actuality the result of a variation in speed within each revolution of the turntable. The most common cause of wow in rim drive motors is found to be in the idler drive wheel, either in the bearing or the rubber drive tire. Proper lubrication and elimination of "gumming" will eliminate the bearing as a source of trouble. Some faults of the drive tire which may cause wow are listed as follows:

Oil or grease on the tire—clean with a cloth saturated in carbon tetrachloride.

Dent formed or worn in the tire. This can be caused by pressure of the motor pulley if the changer has remained idle for a long period of time or by the motor pulley if the turntable should become stalled. The remedy in this case is replacement of the idler drive wheel.

Another possible source of wow is in the bearing support washer and its relationship with the turntable hub. This washer is held in place by two screws, the same two screws that are used to fasten the Turntable Hold Down Levers. The washer must be concentric with the turntable hub, otherwise, friction may result. Concentricity of the washer and turntable hub is accurately set at the factory; however, it is possible that the washer will become misaligned when the turntable is removed for servicing purposes. Therefore, it is recommended (to eliminate this source of "wow") when removing or replacing the turntable to loosen only one of the hold down lever screws at a time. In this way the support

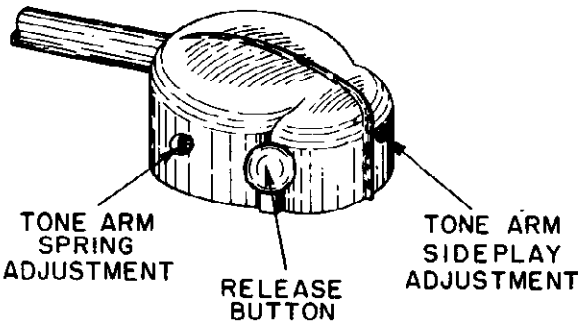

FIGURE 6

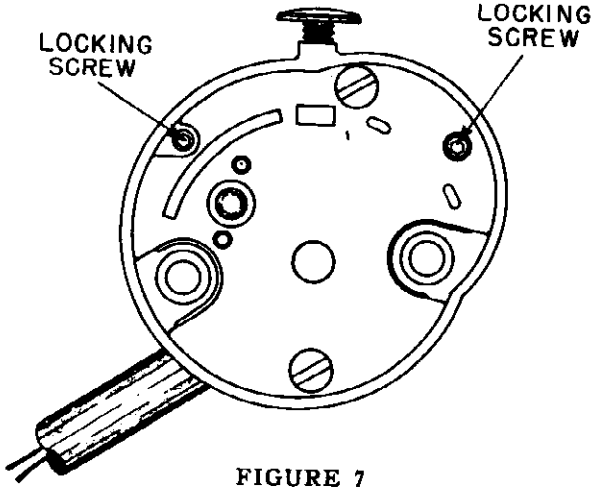

FIGURE 7

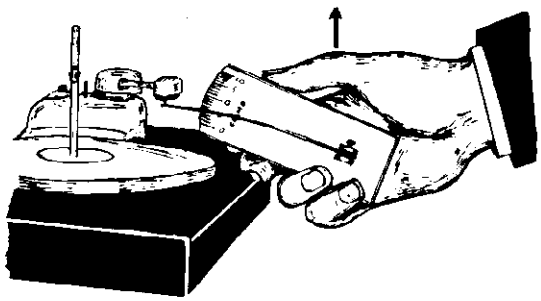

FIGURE 8

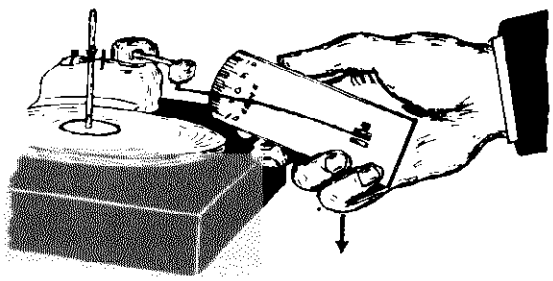

FIGURE 9

©John F. Rider

washer will be at all times held fast by at least one screw. Also it is recommended that care be exercised when replacing the turntable so as not to damage the cork washer and to check the turntable hold down levers to make certain they are not binding on the turntable hub. Both of these points are possible sources of "wow".

"Wow" can also be caused by a warped or dented turntable or by a bent turntable spindle. Care in removing and handling the turntable will tend to eliminate these sources.

"Wow" may also emanate from sources other than the changer itself, for example, the records. Badly warped records will cause a noticeable "wow".

Rumble is a form of amplified noise vibrations resulting from insufficient cushioning of the rotating parts. This results from the fact that a motor will transmit vibration to surroundng objects unless it is adequately "floated". Even then a certain amount of vibration is transmitted to the changer, and it becomes necessary to spring mount the entire changer mounting board. It can be readily seen that when something destroys this cushioning, such as in the condition where the changer drawer is not pushed all the way in and the compartment door touches the drawer pull, or if the power or phono cables to the changer become fouled and are drawn taut, the vibrations will be amplified by the entire cabinet acting as a sounding board.

HORIZONTAL FRICTION

Hold the gram scale in the right hand with the scale divisions facing up.

Press the control button to put the changer in the playing position. As soon as the Tone Arm is set down, turn the instrument off with the On-Off Control on the receiver. This turns the changer off and leaves it in the playing position.

Place a small piece of folded cardboard between the tone arm tube and the tone arm housing to hold the pickup above the turntable.

With the scale pointer bearing against the pickup housing, move the tone arm in toward the spindle (by moving the gram scale) and note the reading of the gram scale in so doing. This reading should not be more than 2 grams.

If the reading is more than 2 grams, it will usually be found that the .006 inch spacing (mentioned in step 4 of Tone Arm Set Down Adjustment) of the tone arm support bracket has not been maintained.

REPLACEMENT OF PICKUP UNITS

The Standard 78 r.p.m. Tone Arm

The *entire pickup housing* on the 78 r.p.m. tone arm is easily removable as the housing plugs into a fixture in the end of the tone arm tube. This facilitates removal and replacement since there are no screws to be removed and solder connections to be made. If it is desired to replace just the pickup cartridge, this can be done by first removing the small spring clip which holds the cartridge in its housing. Next, unsolder the pickup leads from the plug pins in the end of pickup housing. When the new pickup cartridge is placed in the housing, its leads must be soldered to the same plug pins as were those of the old cartridge.

The Micro-Groove 33 1/3 r.p.m. Tone Arm

The pickup housing on this tone arm is not removable. Replacement of the pickup cartridge in the 33 1/3 r.p.m. tone arm is accomplished by removing the two small screws from the underside of the pickup. NO UNSOLDERING is necessary since slip-on connectors are used for connecting the leads to the terminals on the pickup cartridge.

REPLACEMENT OF THE MICROGROOVE NEEDLE

The needle in this 33 1/3 r.p.m. pickup is replaceable. In order to replace the needle, the unit is first removed as described above. An ejecting tool is needed. This can be a straightened paper clip or similar object. Holding the pickup unit in the left hand, with the needle facing down, insert the ejecting tool in the hole in the brass eyelet in the center of the unit, and gently push the needle out. To insert a new needle, place the base pin of the needle in the center hole of the pickup and press down at the *base* of the needle. *Do not* press down on the stylus itself or its shaft. The needle aligns itself properly when pressed down.

CIRCUIT MODIFICATIONS

CAPEHART P-4 INSTRUMENTS

A circuit change is to be incorporated in instruments using the P-4 chassis, when used with the P-77 Long Play Record Changer. The change increases the frequency range of these instruments, and provides increased gain in the Pre-Amplifier. The change follows:

The .01 mfd. condenser (Ref. No. 41), which is connected in series with a 68K resistor from ground to the junction of the 220K and 100K resistors (Ref. Nos. 12 and 5 respectively), in the plate circuit of the 2nd pre-amp stage, has been changed to a .005 mfd., 600V condenser.

CAPEHART P-7 INSTRUMENTS

The Pre-Amplifier Circuit used with P-7 instruments when incorporating the P-77 Long Play Record Changer will be modified in production to provide increased frequency range and audio gain. The change follows:

On the Pre-Amplifier Equalizer Can, the two .01 mfd. condensers (one connected in series with a 33K resistor from the grid of the 2nd pre-amp stage to ground, and the other connected in series with a 68K resistor from the phono output cable to ground) have been changed to .005 mfd., 200V condensers.

PARTS LIST

(Parts not listed here are same as those used in P-71)

Part No.	Description
650005A	Dual Speed Motor and Mtg. Brkt. Assy.
450023A	Idler Assembly
450074A	Idler Block Assy. (Inc. in 450023A)
450142A	Record Lift Brkt. Assy.
450134A	Tone Arm Lift Lever, Brkt. & Pin Assy.
450129A	Tone Arm Swing Lever Assy.
450132A	Tone Arm Lever & Pin Assy.
450107A	Tone Arm Support
650007A	Tone Arm Assy. (78 r.p.m.) less pickup
650008A	Tone Arm Assy. (33 1/3 r.p.m.) less pickup
450114A	Pickup and Lead Assy. (33 1/3 r p.m.)
11378	Pickup & Housing Assy. (78 r.p.m.)
450094A	Tone Arm Housing Cover Plate (78 r.p.m.)
450093A	Tone Arm Housing Cover Plate (33 1/3 r.p.m.)

Part No.	Description
450122A	Tone Arm Crank & Pin Assy.
450066A	Speed Change Shaft & Lever
450145A	Cycle Completing Switch Housing & Lead Assy.
450085A	Switch Cover & Bearing
450064A	Speed Change Detent Spring
450039A	Connecting Link
450061A	Speed Change Shaft Yoke
450067A	Speed Change Push Rod
450060A	Push Rod Pin
37177	Hex Nut
450115A	Tone Arm Pressure Adjusting Spring
450194A	7" Tone Arm Set Down Lever
15241	Turntable
55328	Tone Arm Adjusting Stud
58698	Tone Arm Interceptor Lever
15169	Automatic Stop Switch Assy.
450275A-1	Replacement Needle for Microgroove Pickup

©John F. Rider

MODEL P-777

The Capehart Model P-777 Automatic Record Changer is a three-speed changer, designed to play, automatically, all types of records currently being made. 12-inch, 10-inch or 7-inch records can be played at 78 r.p.m., 45 r.p.m. or 33-1/3 r.p.m. In addition, 12-inch and 10-inch records, designed for the same speed, can be played intermixed.

The information presented herein is intended to supplement the Maintenance Information already issued covering the Model P-77 two-speed record changer. The combination of the two then presents up-to-date preliminary service information on the P-777 record changer. The P-777 is similar to the P-77 in all respects except two; these are the motor assembly and tone arm swing lever assembly. Later production of the P-77 included the revisions to the swing lever assembly; therefore, these changers will differ from the P-777 only in the motor assembly.

A complete parts and price list for the P-777 Record Changer is included herewith.

TONE ARM SET DOWN ADJUSTMENT

(This information applies to P-777 and late production P-77 Changers.)

When it becomes necessary to adjust the Tone Arm Set Down so that, after the changing cycle has been completed, the tone arm will set down properly in the lead-in grooves of the record, the following procedure should be used.

7-INCH RECORDS:

1. Place the Microgroove Tone Arm in position on the tone arm support.
2. Set the 7-inch record Set-Down Lever in position against the Tone Arm Interceptor Lever.
3. Place a 7-inch record (either 33-1/3 r.p.m. or 45 r.p.m.) on the spindle shelf and press the reject button.
4. Observe whether or not the needle lands in the starting groove of the record.
5. If the needle does not land properly, make adjustment to the eccentric stop nut located on the tone arm swing lever spring bracket. This adjustment is accessible from the underside of the changer.
   a. Loosen the small lock nut which secures the eccentric stop.
   b. If the needle lands too far in on the record, rotate the eccentric stop so as to move the swing lever toward the axis of the eccentric stop.
   c. If the needle lands off the edge of the record, rotate the eccentric stop so as to move the swing lever away from the axis of the eccentric stop.
   d. Tighten the lock-nut and secure with Glyptol or a similar fixative.
6. Check the adjustment by observing the set down with a full stack of records.

©John F. Rider

10-INCH AND 12-INCH RECORDS:

1. Check the needle landing for 10-inch records with both tone arms.
2. If needle landing is not correct, adjust by means of the Tone Arm Adjusting Stud (located on the changer base). This adjustment has no affect on the 7-inch record adjustment already made.
3. Check the needle landing for 12-inch records with both tone arms. This, normally, will not require re-adjustment, if the 10-inch adjustment has been properly made.
4. Check the adjustment by observing the set down with a full stack of intermixed 10 and 12-inch records.

POSSIBLE SERVICE PROBLEMS

TONE ARM SET DOWN

1. If the Microgroove Tone Arm cannot be adjusted for proper set down on a 7-inch record, there are two possible causes, as follows:

   a. The tone arm crank has slipped on the tone arm support bracket tube. To be certain of this possibility, place the standard tone arm on the support bracket and observe the needle landing. If the standard tone arm also cannot be adjusted for proper set down, then adjustment should be made by loosening the set screw on the Tone Arm Crank. There is a .006-inch spacing required between the tone arm crank and the main frame; therefore, a .006-inch shim should be used to maintain this spacing while adjustment is being made. After loosening the set screw, hold the crank firmly with one hand and with the other rotate the tone arm in the direction necessary for proper set down. Tighten the set screw on the tone arm crank. A finer adjustment can now be made by the procedure given in Step 5 under "7-inch Records."

   b. The second possible cause is that the Microgroove Tone Arm has become misshapened. This possibility can either be eliminated or proven as in Step 2 by observing the needle landing of the standard tone arm. If the standard tone arm does set down properly and the Microgroove does not, then it is proven that the tone arm crank is in its proper position. Therefore, the Microgroove Tone Arm is not shaped correctly. The remedy is to reshape the Microgroove tone arm by bending the tube slightly until it does set down properly.

2. If the Microgroove Tone Arm can be adjusted properly for 7-inch records, no difficulty will be experienced in adjusting this tone arm for 10-inch and 12-inch records. However, if the standard tone arm cannot be made to set down properly (while the Microgroove arm does set down properly) it can be assumed that the standard tone arm has become misshapened. The remedy in this case is to reshape the standard tone arm to provide proper set down.

BENT TONE ARMS

The possibility of P-777 tone arms (particularly the Microgroove arm) becoming bent in shipment (resulting in improper set down when the instruments are unpacked and checked) is quite unlikely, for the tone arms are carefully packed in a separate carton.

It is possible that there is some slight variation in the relative shapes of the tone arms. It is important that the persons who unpack and check the instruments do not intermix the tone arms from various instruments at the time of unpacking. To have the changer operate with the least amount of prior adjustment, the tone arms which are packed with each particular instrument should be used with that instrument only. The record changer in each instrument is adjusted (at the factory) using the tone arms that are shipped with it.

©John F. Rider

MODEL P-777

BROKEN TONE ARM LOCK SPRINGS

The main cause of breakage of this lock-on spring results from improper methods of placing and removing the tone arms. The small release button on the tone arm housing is to be used only when removing the tone arm. If this button is depressed when placing the tone arm on the support bracket, the shaft of the button will exert pressure on the top of the lock-on spring, thus bending it as the tone arm is pressed down. It is probable then that when the tone arm is placed on the support again, the spring will not line-up with the hole in the cover plate; therefore, the spring is bent down and broken. Damage to the spring can also result from removal of the tone arm without pressing the release button.

IMPORTANT! Do not press the release button when placing the tone arm on the changer. Do press the release button when removing the tone arm.

MISALIGNED MOTOR BEARINGS

It is possible that the floating bearings in the motor may become misaligned in shipment, resulting in motor noise. This is possible if the changer or instrument is subjected to excessively rough handling in shipment. The bearings can be easily re-aligned by tapping the motor (with the handle of a screwdriver or light tack hammer) while the motor is running.

P-777 PARTS

Ref. No.	Part No.	Description
1	07651	Record Lift Lever Assembly.
2	09353	Reject Button and Plunger Assembly.
3	11378	Pickup & Housing Assembly (78 r.p.m.)
4	11495	Inner Spindle Assembly.
5	13672	Main Cam Assembly
6	13674	Upper Spindle Assembly.
8	13816	Ball Bearing Retainer (for turntable)
9	13825	Tone Switch & Brkt. Assembly (Complete)
10	15195	Compression Lever Assembly.
11	15196	Automatic Stop Switch Assembly.
12	25112	Capacitor, .01 mfd., 200 volt
13	25182	Capacitor, .1 mfd., 200 volt.
14	36857	Hex Nut 1/4-28 (for cam mtg.)
15	36882	H. P. Cotter (1/8" shaft)
16	37155	Spade Bolt (for tone arm lift lever spring)
17	37177-2	Hex Nut 5-40 (for speed change shaft)
18	37203	Spring Washer
19	37332	Special Flat Washer #6 (mtg. reject lever assy.).
20	37333	"E" Washer (for tone arm adj. stud)
21	37334	Hex Head Screw #10-32x7/8" (to mount outer spindle)
22	37335	Flat Washer #4 (for mtg. levers on main cam).
23	37338	Shim Washer (to mount main cam)
24	37339	Flat Washer (to mount main cam)
25	37344	Special Hex Head Nut #3-48 (Spindle height adj.).
26	37390	"E" Washer (small, for upper spindle)
27	37511	Hex Head Screw #10-32x5/8" (on tone arm lift lever)
28	37512	"E" Washer (large, for inner spindle)
29	37683	Set Screw (used in tone arm assy.).

©John F. Rider

30	37688	"E" Washer (used in 450039A Assy.). . . . .
31	54307	Motor Plug Insulator. . . . .
32	55193	Ball Bearing 1/8" Dia. (tone arm sup. bear. 10 used)
33	55249	Brass Collar (for speed change shaft) . . . . .
34	55328	Tone Arm Set Down Adjustment Stud . . . . .
35	55329	Hinge Pin (for tone arm interceptor lever) . . . .
38	55332	Hinge Pin (for compression lever) . . . . .
39	55333	Hinge Pin (for record lift lever) . . . . .
40	55335	Cam Spacer (inside Main Cam Hub). . . . .
41	55336	Cam Bolt (for mounting Main Cam). . . . .
42	55345	Sleeve Support Washer (for record spindle). . . . .
43	55395	Hinge Pin (for manual reject link). . . . .
44	55397	Trip Adjusting Screw. . . . .
45	55420	Manual Reject Plunger Rod . . . . .
46	55446	Outer Spindle . . . . .
47	57248	Main Cam Switch (on Main Cam) . . . . .
48	57262	Surfa-Sonic Control Knob. . . . .
49	58692	Interceptor Reset Lever . . . . .
50	58693	Switch & Reject Lever . . . . .
51	58697	Tone Arm Adjustment Lever . . . . .
52	58698	Tone Arm Interceptor Lever. . . . .
53	58701	Turntable Holddown Brkt. (2 used) . . . . .
54	58702	Bearing Support Washer (turntable bearing). . . . .
55	58706	Starting Lever (on Main Cam). . . . .
56	58707	Reject Lever (on Main Cam). . . . .
57	58708	Tone Arm Holdout Lever (on Main Cam). . . . .
58	58709	Holdout Locking Lever (on Main Cam) . . . . .
59	58716	Bearing Race Washer (for turntable). . . . .
60	58789	Compression Spring (spindle height adj.). . . . .
61	58852	Manual Reject Link. . . . .
62	58853	Starting Lever Reset Lever. . . . .
63	58854	Trip Adjustment Spring (on Starting Lever). . . . .
64	58863	Pickup Retainer Spring (78 r.p.m.). . . . .
65	59472	Pickup Housing (78 r.p.m.). . . . .
66	59486	Reject Button . . . . .
67	60597	Cork Bearing Damper (for turntable) . . . . .
68	62152	Rubber Sleeve (for record spindle). . . . .
69	62173	Rubber Motor Mtg. Grommet . . . . .
70	64324	Spring (on compression lever) . . . . .
71	64429	Reset Spring (for interceptor reset lever). . . . .
72	64430	Reject Spring (for switch & reject lever) . . . . .
73	64431	Tone Arm Lift Lever Spring. . . . .
74	64433	Tone Arm Adj. Stud Spring . . . . .
75	64434	Tone Arm Interceptor Lever Spring . . . . .
76	64452	Cam Switch Spring (on Main Cam) . . . . .
77	64464	Switch Release Spring (on switch & reject lever). .
78	64465	Tone Switch Coupling Link . . . . .
79	64466	Tone Arm Holdout Lever Spring (on Main Cam) . . . .
80	64467	Trip Spring (on reject lever on main cam) . . . . .
81	64474	Reject Button Spring. . . . .
82	71238	Magnetic Pickup (78 r.p.m. less housing). . . . .
83	71244	Magnetic Pickup (Microgroove) . . . . .
84	77184	Resistor 2.2K 1/2 watt. . . . .
85	77246	Resistor 15K 1/2 watt . . . . .
86	80030	Phono Output Jack . . . . .
87	80150	Motor Plug (4-prong, male). . . . .
88	80327	Pickup Socket (78 r.p.m., 2-prong molded) . . . . .

©John F. Rider

MODELS P-777

89	90243	Surfa-Sonic Control Switch.
90	2006-011	Fil. H.M.S. #2-56x7/16" (to mount cam switch)
91	2015-001	Std. Hex Nut #2-56 (to mount cam switch).
92	2015-002	Std. Hex Nut #3-48 (lock nut spindle height adj.)
93	2019-009	Lockwasher Shakeproof
94	2041-012	Allen Set Screw (for tone arm sideplay adj.).
95	2216A-105	Phillips T.H.M.S. #4-40x1/4" (to mt. 7" setdown lever)
96	450004A	Shaft Pin
97	450009A	Idler Arm Assembly.
98	450013A	Idler Wheel Assembly.
99	450020A	Idler Arm Spring.
100	450023A	Idler Assembly (including #450009A & #450013A).
101	450024A	Motor Mtg. Spacer Nut
102	450058A	Speed Change Shaft Mtg. Brkt.
103	450060A	Push Rod Pin.
104	450061A	Speed Change Shaft Yoke
105	450062A	Speed Change Shaft Mtg. Brkt.
106	450063A	Spacer Plate (for mtg. brkt. #450062A).
107	450064A	Speed Change Detent Spring.
108	450065A	Backup Plate (for detent spring).
109	450066A	Speed Change Shaft Lever.
110	450067A	Speed Change Push Rod
111	450074A	Idler Block Assembly.
112	450076A	Connecting Link Assembly.
113	450089A	Hinge Pin Pivot (for needle pressure adj.).
114	450093A	Cover Plate (for microgroove tone arm).
115	450094A	Cover Plate (for standard tone arm)
117	450098A	Tone Arm Release Button
118	450107B	Tone Arm Support Assembly
119	450112A	Tone Crank & Pin Assembly
120	450114A	Pickup & Lead Assembly (microgroove).
121	450115B	Tone Arm Pressure Adjusting Spring.
122	450117A	Guide Pin (on tone arm support)
123	450118A	Tone Arm Release Button Spring.
124	450121A	Swing Lever Mtg. Stud
125	450123A	Tone Arm Support Bearing Washer
126	450124B	Tone Arm Lift Rod
127	450127A	Washer.
128	450128B	Tone Arm Swing Lever.
129	450132B	Tone Arm Lever & Pin Assembly
130	450134A	Tone Arm Lift Lever Brkt. & Pin Assembly.
131	450142A	Record Lift Brkt. Assembly.
132	450145B	Cycle Completing Switch Assembly.
133	450193A	Spacer (for 7" Setdown Lever)
134	450194A	7" Set Down Lever
135	450220A	Compression Ring.
136	450241A-G1	Tone Arm Brake Assy. (on tone arm lift lever)
137	450254A	Eccentric Stop (on #450256A).
138	450255A	Spring (used with #450256A)
139	450256A	Spring Brkt. Assy. (used with #450128B)
140	450259A	Retaining Ring (used on tone arm release button).
141	450275A-1	Replacement Needle for Microgroove Pickup
142	450298A	Pulley Drive Belt
143	650007A	Tone Arm Assy. (78 r.p.m. less pickup).
144	650008A	Tone Arm Assy. (Microgroove less pickup).
145	650074A	Turntable Assembly.
146	650075A	Motor Assembly.

©John F. Rider

PRELIMINARY MAINTENANCE INFORMATION

This information is published for the purpose of aiding the serviceman in properly setting the instrument up for operation and in effecting replacements or adjustments which he may be called upon to perform on those sections of the changer which have to do with its dual speed feature. Information or adjustments which are not covered herein are the same as those required for the standard version of this changer, and are already covered in the maintenance manual for the Capehart Model 41-E Record Changer, previously published.

SPECIFICATIONS

Power Consumption at 117 volts
- Turntable Motor ..... 22 Watts
- Cycling Motor ..... 91 Watts

Voltage Rating .....105 to 125 volts at 60 cycles
Turntable Speed ..... 78 r.p.m. & 33 1/3 r.p.m.
Type Pickup ..... Variable Reluctance
Type Needle ..... Osmium Point

MAXIMUM RECORD CAPACITY

Microgroove 33 1/3 r.p.m.		Standard 78 r.p.m.
16	10 inch or 12 inch records	16
16	10 inch or 12 inch records (intermixed)	16
manual	7 inch records	manual

SETTING UP FOR OPERATION

After carefully uncrating the instrument, the following checks should be made on the record changer prior to its operation:

1. Remove all packing material and pieces of tape from the changer compartment.
2. Remove the shipping bolts which hold the changer baseplate down during shipment.
3. See that the changer floats freely upon the spring mountings.
4. Check both the 78 r.p.m. and 33 1/3 r.p.m. tone arms to see that the needle and pickup have not been damaged.
5. Check the turntable speed at both 78 r.p.m. and 33 1/3 r.p.m. with a stroboscope record.
6. Refer to the section "41-E2 & 41E Check List".

ADJUSTMENTS

TONE ARM SET DOWN ADJUSTMENT

Check the tone arm height. The pickup needle should barely clear the turntable cover when there is no record on the turntable. The height of the tone arm can be adjusted by means of a small screw, located on the underside of the tone arm housing. The setting of this screw should be secured with Glyptal after the adjustment is made. The adjustment is the same for both the standard and microgroove tone arms and the check should be made with both arms.

©John F. Rider
For additional data: See Farnsworth Model 41-E,

MODEL 41-E2

10-INCH SET DOWN ADJUSTMENT

Allow the changer to deliver a 10" record to the turntable, and let the tone arm move over the record. Just as the changer completes its cycle and the tone arm sets down on the record, stop the changer by turning the "Off-On" switch on the changer to the "Off" position. Lift the pickup end of the tone arm up and move the tone arm away from the spindle; a definite "stop point" will be noticed in so doing. Beyond this "stop point", a spring tension will tend to return the tone arm to the set down position. Hold the tone arm against this "stop point", and turn the 10-inch indexing screw in the direction indicated depending on the direction of the set down adjustment needed. The changer should be allowed to complete at least one more cycle with a 10-inch record to check the adjustment. The adjustment should be checked with both standard and microgroove records using the correct tone arm for each.

12-INCH SET DOWN ADJUSTMENT

The adjustment procedure is the same as that described for the 10-inch adjustment with the exception that a 12-inch record is used, and the 12-inch indexing screw is rotated for adjustment. The adjustment should be checked as before with both standard and microgroove records and tone arms.

ADJUSTMENTS OF THE SPEED SELECTOR PINS

The selector pins or rods, should be adjusted so that there is always at least .015 inch clearance between the top of the pin, when it is in the up position, and the underside of the tone arm housing. This is to ensure that the pin does not bind on the Tone Arm Housing as it moves while playing a record. If both pins are too high when in the up position, the pins can be lowered by placing the paper spacer (Part No. 60674), between the speed switch mounting bracket and the bearing casting. If only one of the pins is too high, this means that the cam shaft has slipped in the cam. The shaft is held in place by two allen head set screws. To adjust, the screws should be loosened and the shaft rotated until the selector pin is at the right height. If the motor speed is set for 78 r.p.m., the selector pin on the right should be in the up position. Tighten the set screws,and switch to the other speed. Check the clearance between the tone arm housing and the other selector pin.

NEEDLE PRESSURE ADJUSTMENT

The needle pressure of both the standard and microgroove tone arms is accurately set at the factory prior to shipment of the instrument; however, if it should become necessary to readjust this setting on either of the two tone arms, the following procedure is offered.

Procedure for adjustment of the standard tone arm is the same as that for the microgroove tone arm, with exception of the pressure specifications.

The adjustment screw is located on the underside of the tone arm housing and is accessible from the rear of the tone arm housing when the tone arm is in place on the changer. A small screw driver is used for adjusting this screw which is arranged so that rotation in a clockwise direction will increase needle pressure and rotation in a counter-clockwise direction will decrease it.

©John F. Rider

NEEDLE PRESSURE ADJUSTMENT - (cont.)

1. Check the tone arm side play. The tone arm should have approx. 1/32" horizontal play, measured at the pickup. If the amount of play does not correspond with this figure, adjustment can be effected by means of the two Allen Head set screws, which form the pivot point for the tone arm tube. The screws are secured with locking nuts, which should be tightened after the side play adjustment is made. This adjustment should be checked for both tone arms.
2. Using a Gram Scale for the Microgroove tone arm, and an Ounce Scale for the standard tone arm, check the up and down pressure of the tone arm in the following manner:
   Lift the tone arm up with the scale approx. 1/2 inch and make a note of the reading. Then lower the tone arm approx. 1/2 inch, and again note the scale readings. The two readings noted are the limits of the needle pressure. The actual needle pressure is taken as the average of these two readings. In the case of the microgroove tone arm, the actual needle pressure should be within the limits of 5 to 7 grams. For the standard tone arm, the specifications are 1 1/8 oz. ± 1/8 oz.
3. If the needle pressure does not come within the specified limits, adjustment should be made on the needle pressure adjusting screws and the pressure re-checked as described in Step 2.

ADJUSTMENT OF THE CONNECTING ROD

The connecting rod should be adjusted so that positive switching is achieved at the Idler Block Assembly. There should be a small amount of play in the rod action. The rod can be shortened or elongated in the following manner:

1. Remove the hair pin cotter which fastens the motor end of the connecting rod to the switching link at the idler block.
2. Loosen the locking nut on the motor end.
3. Rotate the motor end of the connecting rod in or out, depending on whether the rod needs to be shortened or lengthened.
4. Replace the hair pin cotter, and tighten the locking nut.

MODIFICATIONS INCORPORATED IN THE 41-E2 RECORD CHANGER

Certain changes have been made to various parts of this changer, along with the added features of two speed operation. These modifications, listed herein, were incorporated to provide more accurate adjustment to accommodate microgroove records.

TRIP SLIDE ASSEMBLY (PART NO. 09387)

The trip slide assembly has been revised (previous part no. 09176), to provide a more convenient method of trip friction adjustment and to provide a means of adjusting the height of the assembly with respect to the baseplate. A new trip lever bushing is incorporated with a bearing adjusting screw and locking nut. To raise or lower the trip slide assembly, the nut is first loosened and the screw is rotated to provide the correct height. The nut is then tightened to secure the bearing adjustment.

©John F. Rider

MODEL 41-E2

TRIP SLIDE ASSEMBLY (PART NO. 09387) Cont.

Adjustment of the trip friction is provided by rotating the small adjusting screw (Part No. 36278), located in the center of the flat metal trip friction spring (Part No. 51166). Rotating the adjusting screw in a clockwise direction will cause the spring to exert more pressure on the trip pivot pin (Part No. 55465), thus increasing the friction between the trip slide assembly and the automatic stop trip lever.

TURNTABLE HEIGHT ADJUSTMENT

The 41E-2 incorporates an adjustable turntable bearing which enables the height of the turntable to be varied with respect to the baseplate. The new parts added to the changer for this purpose are:

55462 - TURNTABLE ADJUSTING PLATE
37690 - ADJUSTING SCREW
37691 - ADJUSTING NUT

To raise the turntable, the adjusting screw is rotated clockwise, after first loosening the adjusting or locking nut. To lower the turntable, the screw is rotated in the reverse direction. The correct height for the turntable is the same height(± 1/64"), as the milled surface on which is mounted the tone arm support housing.

MAIN CAM SHAFT (PART NO. 650013A)

The main cam shaft has been made in two sections, and a coupling has been provided between the reduction gear box section and the main cam section. The main cam section of the shaft can thus be de-coupled from the motor and reduction gears. The main cam shaft section is fastened in the coupling by means of a small set screw. The set screw should always be tightened on the flat side of the main cam shaft only. This prevents the shaft from slipping within the coupling.

This shaft de-coupling arrangement enables the serviceman to run the changer through cycle by hand, thus facilitating the checking and adjusting of the cycling mechanism.

41E-2 & 41E CHECK LIST

It is important to use a step by step method when checking either the Capehart Model 41-E2 or Model 41E Record Changers. If this method is not followed, it is possible to make one adjustment against the other, which will result in improper operation. This could be the cause for erratic conditions. Therefore, the following list should always be followed in order, referring to the Maintenance Manual on the 41E Record Changer for adjustments, which are not included herein.

TURNTABLE

1. (a). Check height of turntable with respect to the base plate. This is accomplished by placing a straight edge ruler long enough to reach the distance, taking in the diameter of the turntable, to a point along side the tone arm collar assembly. Observation will reveal the tone arm collar is mounted on a milled surface.

©John F. Rider

41E-2 & 41E CHECK LIST (Cont.)

TURNTABLE

1. (a) Cont.)
This milled surface and the ones under the hook post and buckhorn are all milled at the same time and are the same height above the base plate. We call these points bosses and are the points at which we start our measurements. The top of the turntable should be level with this boss. A tolerance of 1/64" high or low would be allowable. For 41-E2. refer to "TURNTABLE HEIGHT ADJUSTMENT".
(b). To remove turntable, remove set screw in turntable shaft housing.

RECORD TRAY

2.(a).Check centering or record lowering tray with respect to turntable. This can be accomplished by placing the record selector lever in the "one side" position, run the record changer through a cycle to a point where the record lowering tray pauses for the second time. Stop the changer by the "on-off" switch at this point. Note the distance between the lowering tray and turntable. This distance must be equal on either side of turntable. Also note the level of the tray at this time. The front points of the 10" felt in the record tray should be level with the turntable cover.
(b). Check for binding between record tray gears. To do this, it will be necessary to disengage the lever connecting the shaft with the quadrant section of the record tray gear, from the record tray slide arm assembly by removing the eccentric shoulder screw. Move tray up and down by hand.
(c). Check 10" rubber bumpers.
(d). Check 10" rubber guard for smooth operation.
(e). Clean and remove rough spots on polished edges and surfaces.

BUCKHORN

3.(a). Check distance from the center of magazine pivot pin mounted in the buckhorn section of the magazine support, to the milled section of the base plate, on which is mounted the record separator hook post. This distance should be 7 9/16", plus or minus 1/16". Also check the distance between buckhorn pivot arms, which should be 13 7/16".

MAGAZINE

4.(a). Check distance between magazine pivot arms. This should be 13 1/4".
(b). Check position of the upper record support on changers incorporating the single knife. The lower points of this support should be even and centered. Changers incorporating the double knife;check the roller and position of assembly.
(c). Check magazine position with respect to lowering tray. Channel grooves will be noted at the base end of the record lowering tray. These were cut for the purpose of allowing the two lowest points of the record magazine to pass when traveling through the change cycle to deliver a record; therefore, it is necessary that these two points are centered within these channels. It will also be noted there are two holes at the back end of these tray channels to allow the level points of the record support bracket to protrude through the record lowering tray. These points should be adjusted to an equal distance with respect to the outside edge of the holes.
(d). Clean and remove rough spots on all polished surfaces and edges.
(e). Check & oil rollers -- Rollers should roll quietly.
(f). Check record reverse arm and guide assembly. Should be parrallel and centered with a 12" record in magazine when changer is stopped at that portion of the cycle where the reverse arm has come in contact with the magazine and rubber bumper.

MODEL 41-E2

(g). Check reverse arm fork as it engages the crank pin assembly. Should be centered and engaged so that the jaws extend around the crank pin about 1/8". At this point, check the return position of the magazine with the stop screw located at center and back of the buckhorn support. This would be the adjustment that would determine the clearance of the crank pin. See the 41E manual for adjustments of the travel of the crank pin assembly.

(h). Check linkage--magazine should return against stop snugly.

(i). Check record selector knife.

(j). Check record selector knife as it engages the record separator hook.

(k). Check felts on back side of lower record support casting. If loose, can be the cause of late delivery of records which would cause chipping due to sharp contact with record lowering tray tongue.

(l). Check record "U" Guide assembly.

TONE ARM

5. (a). Check Tone Arm Height. Refer to"Tone Arm Set Down Adjustment", or the 41E

(b). Check the distance of Travel of the tone arm in toward the turntable spindle on a 12" record.

(c). Check pickup for tracking in record grooves.

(d). Check 10" and 12" landing position.

(e). Check feed-in tension spring.

TRIP SLIDE ASSEMBLY

6. (a). Height above base plate should be high enough at the rubber roller end to contact the trip clip on under side of turntable. Refer to "Trip Slide Assembly", or to the 41E Manual.

(b). Slide action should work freely and oil should never be used.

(c). Setting of stop should be set so that it is impossible for the trip clip on turntable to lock with trip slide assembly.

(d). Check rubber roller.

PLAY CONTROL

7. (a). Check play control.

BELOW CHASSIS

GEAR REDUCTION BOX

8. (a). Check adjustment of second reduction gear train. Should be no slack or bobbing of this assembly. This can be determined by under noise of gears.

(b). Check to see that oil has been put in gear box. A maximum of 1 oz. of heavy oil should be put in gear box. The gear should dip into this oil level.

(c). Check for oil leaks.
Check reverse arm mechanism.

(d). Check position of reverse segment with respect to stops and locking assembly.

© John F. Rider

41E-2 & 41E CHECK LIST (Cont.)

TONE ARM MECHANISM

9. (a). Check horizontal and vertical position of tone arm crank assembly also relation to tone arm swing lever.

(b). Check position of tone arm brake spring collar.

(c). Check action of tone arm stop bracket assembly.

(d). Check position of tone arm, lift and swing cam.

(d). Check tone arm trip pin.

MERCURY SWITCH OPERATION

10. (a). Check reset lever and timing with main cam.

(b). Check contact of reset lever & mercury dog.

(c). Check clearance between top of mercury dog and lever extending down through base plate from trip slide arm assembly.

MAIN CAM SHAFT (See "Main Cam Shaft"

11. (a). Check for underplay with record magazine tilted up.

(b). Check action of slide arms of main cam.

(c). Check record selector lever action.

(d). Check cam track switches.

(e). Check lubrication.

ADDITIONAL CHECK LIST FOR 41-E2 ONLY

1. Check Idler Wheel.
2. Check Idler Mounting Assembly .....Part No. 14108.
3. Check connection link Assembly ..... " " 09382.
   Adjust link to divide travel of 33 1/3 r.p.m. to 78 r.p.m.
4. Check Support Bracket, cam & hub assembly..... " " 09385.
   Adjust for equal throw of shift pins under tone arm key.
5. Check vertical tone arm pressure
   Adjust screw in cover plate assembly ..... " " 09381.
6. Check for clearance between tone arm hinge bracket No. 57271, and tone arm housing.
7. Check clearance on friction cork above tone arm crank - should be .005.
8. Check for dirt in tone arm bearing.
9. Check clearance of shift pins against tone arm hinge bracket on 33 1/3 and 78 r.p.m. arms.
10. Check needle--should protrude beyond guard 1/32".
11. Check needle height --
    Should be adjusted to clear turntable with no record.
12. Check trip slide assembly --not to exceed 7 grams.
13. Check motor fan blades--should run true.

© John F. Rider

MODEL 41-E2

PARTS LIST

Following is a list of new parts and parts that have been revised. Parts that are not listed here are the same as those used in the standard version of this changer, the 41E.

44067 ..... Two Speed Turntable Motor
15246 ..... New Turntable
14100 ..... Tone Arm Assembly (33 1/3 r.p.m.)
14101 ..... Tone Arm Assembly (78 r.p.m.)
11378 ..... Pickup & Housing Assembly (78 r.p.m.)
05160 ..... Pickup & Lead Assembly (33 1/3 r.p.m.)
450148A..... Gear Shaft and Hub Assy.
2003-161 003 #6/32 x 7/16" F.H.M.S.
2085-215 071 #6/32 x 5/8" O.H.M.S.
14108 ..... Idler Mtg. Assy.
55456 ..... Selector Pin
37688 ..... "E" Washer
64492 ..... Selector Spring
60674 ..... Paper Spacer
36926 ..... Washer
62199 ..... Rubber Tone Arm Rest
2003-109-003 #4/40 x 3/8 F.H.M.S.
04135 ..... Tone Arm Support Housing
07721 ..... Speed Switch Support Bracket Assy.
09382 ..... Connecting Rod Ass'y.
05163 ..... Connecting Rod Motor End Assy.
55459 ..... Connecting Rod (Cam End)
55461 ..... Connecting Rod Adjusting Sleeve
54329 ..... Contact Washer
37689 ..... Washer
80528 ..... 3 pr. Plug.
15245 ..... Speed Switch Cam & Hug Assy.
57274 ..... Tone Arm End
37685 051 Pivot Screw #8/32 x 3/8"
2015-005 003 #8/32 Hex Nut
2006-053 051 3/48 x 3/16 F.H.M.S.
04134 ..... Tone Arm Hinge Bracket Assy.
05159 ..... Pickup Housing & Tone Arm Tube Assy.
71244 ..... Microgroove (33 1/3 r.p.m.) Pickup
77195 ..... Resistor (Ins. Car.) 3.3 K 1/2 W

55153..... Pickup Contact Assy.
450150A.... Spacer
650013A.... Main Cam Shaft
55449 ..... Tone Arm Locking Pin
54490 ..... Locking Pin Spring
07700 ..... Mercury Switch Mtg. Brkt. Assy.
09367 ..... Trip Slide Assembly
09381 ..... Cover Plate Assy.
51152 ..... Cover Plate
55450 ..... Spring Adj . Screw
37684 ..... Spring Adjust. Nut
37421 ..... "E" Washer
64489 ..... Adjustment Spring
04136 ..... Tone Arm Hinge Bracket, finish Assy.
2215-201-003 #4 40 x 3/16" Slotted Hex H.M.S.C.

55462... Turntable Adjusting Plate
37690...End Thrust Screw (Turntable
37691.. " " " "Adjustment
55457.. Speed Switch Cam Shaft
57273.. Speed Switch Crank
14107.. Contact "Lead & Plate Assy". (Tone Arm Support)
71238.. Pickup (78 r.p.m.)
59472.. Pickup Housing (78 r.p.m.)
58863.. Retainer Spring
51166.. Trip Friction Spring
55465.. Trip Pivot Pin
55466.. Trip Bearing Adjusting Screw
37692.. Trip Bearing Adjusting Nut
2006-113-003 #4-40 x 1/2" F.H.M.S.

© John F. Rider



GENERAL

This record changer is designed for a power supply of 105–125 volts, 60 cycles. It operates at two speeds of 78 rpm and 33⅓ rpm and is equipped with one pickup arm head for standard groove records (tan) and one pickup arm head for microgroove records (red). The changer provides manual or automatic playing and takes a one-inch stack of 10- or 12-inch records. When the last record is played, the pickup arm returns to its starting position. The motor has to be switched off manually by the Speed Control Knob.

MANUAL OPERATION

1. Turn the Record Selector Post (1, Figure 1) to the 12-inch position in the direction indicated by the arrow on the post, in order to give more clearance in loading and unloading records. Turn the Selector Switch (23, Figure 1) to Manual.
2. Place a record on the turntable. It may facilitate this operation if the record is slanted, as it is slipped over the spindle with the edge of the record held below the level of the record selector post shelf. Records may be removed in the same manner.
3. Check the pickup cartridge to make certain it is the correct type for use with the record being played. This is important as use of the wrong cartridge will cause excessive record surface wear or even immediate damage to the record.
4. Move the speed control (9, Figure 1) from the OFF position to the 33⅓ or 78 position as required by the type of record. Hereby, the motor switch connects the motor to the power supply, and the disk starts to rotate at the proper speed.
5. Push down the R button (24, Figure 1) in the front right-hand corner of the record changer and gently place the stylus of the pickup arm on the outer groove of the record. Lift the arm just sufficiently to clear the record. If it is raised too high, it may catch, restricting its travel.

AUTOMATIC OPERATION

1. Turn the Record Selector Post (1, Figure 1) to ten or twelve, according to the size of the records used, and turn the Selector Switch (23, Figure 1) to Automatic.
2. With the Record Stabilizer Weight turned back, place a stack of records (one-inch maximum height) on the spindle so that the bottom record rests on the step of the spindle and on the shelf of the Record Selector Post. Turn the record stabilizer weight forward to rest on the edge of the top record.
3. Check the pickup head assembly to make certain it is the correct type for use with the records being played. Move the Speed Control (9, Figure 1) to the 33⅓ or 78 position, as required by the type of records.
4. Depress the R button (24, Figure 1) to reject any record.
5. To stop the phonograph before all records have been played, simply turn the Speed Control (9, Figure 1) to the middle OFF position. The pickup arm may be moved without damaging the mechanism. However, after the last record has been played, the pickup arm is automatically locked in position and should not be touched until it has come to the rest post (25, Figure 1).
6. After playing, entire stack may be removed by the following procedure: Move the Record Stabilizer Weight (3, Figure 1) back out of position, place fingers of both hands under opposite edges of bottom record and lift straight up following the contours of the spindle.

OPERATING PRECAUTIONS

The microgroove records are easily scratched so that it is recommended to use utmost care in handling the pickup arm while setting it on the record.

Be sure that the right cartridge is used with the various types of records (tan for standard records, red for microgroove records).

DO NOT use warped, home-recorded, or odd-size records for automatic operation, but use manual operation.

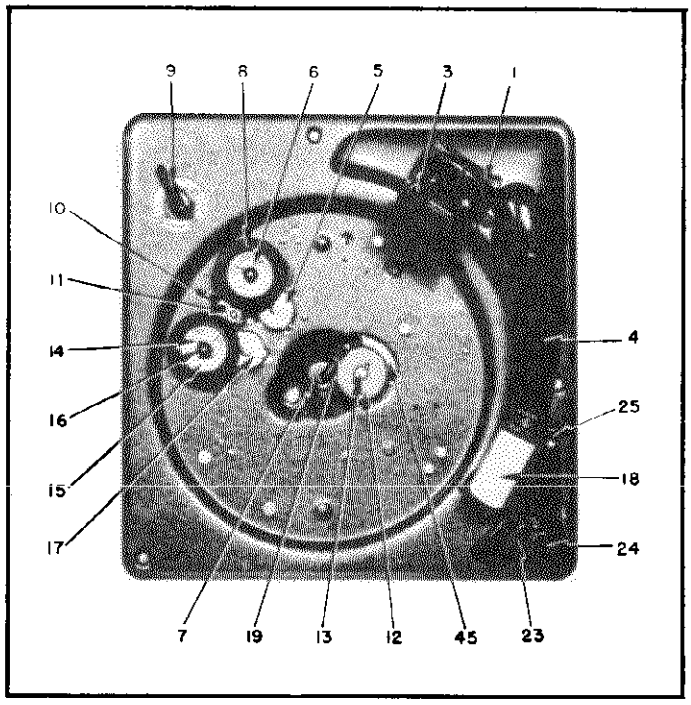

Fig. 1. Top View of Record Changer

© John F. Rider

MODEL P8

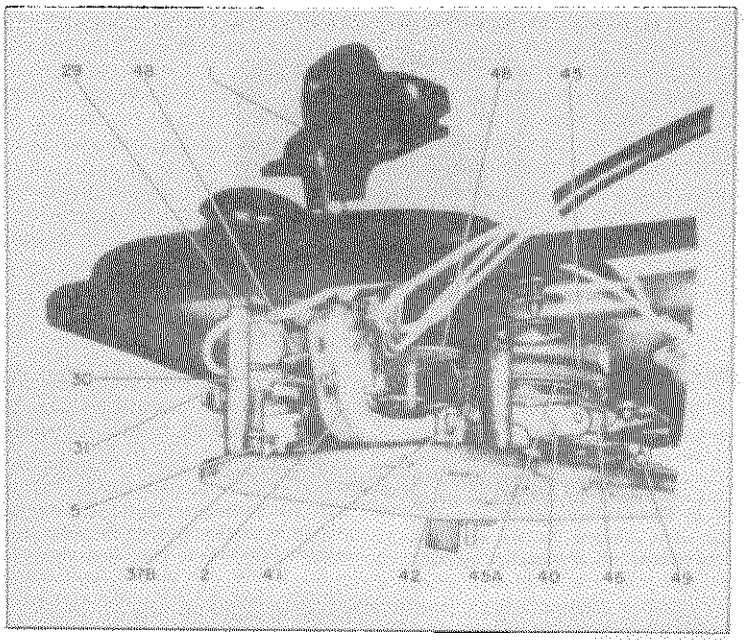

Fig. 2. Underside View of Chassis (Motor End)

DO NOT use force to start or stop the motor or any part of the record changing mechanism.
store the records on the record post or the turntable, as they may warp, especially at higher temperature.
allow any oil or grease on the drive wheel or any rubber part of the changer.
connect the motor to direct-current or to different alternating current supply.

LUBRICATION

Apply light machine oil on:

1. Motor bearings, saturate top and bottom felts.
2. Pickup arm shaft (5, Figure 3). Apply one drop each to bottom bearing point, bracket hole, and hole through main base plate.
3. Ball bearing assembly (7, Figure 1).
4. Idler wheels' felt (6 and 16, Figure 1).

Apply Lubriplate No. 110 with small brush to:

1. Idler wheel linkage (5 and 17, Figure 1).
2. Turntable shaft stud.
3. Pickup arm hinge pins.
4. Knife edge of raising lever.
5. Main cam bearing. For lubrication, the subplate assembly has to be removed.

Apply STA-PUT with a small brush:

1. Teeth of main actuating gear (45, Figure 4).
2. Track of main cam gear (46, Figure 4).
3. Teeth of large and small idler gear (12, Figure 1).
4. Raising lever bracket bearing surfaces:(38, Figure 4).

PICKUP

This record changer is equipped with two head assemblies containing two different cartridges—one for standard groove, and one for microgroove records. The pickup and head assembly identified by the red color has to be used for microgroove Long Playing records (33⅓ rpm). The other pickup and head assembly for use with standard groove records is identified by tan color. The pickup head required for the type of record to be played is fitted into its socket at the end of the pickup arm. The cartridge is designed according to the variable reluctance principle which will give superior results from the standpoint of high fidelity, low surface noise, and negligible record wear. The pickup is not interchangeable with a crystal pickup as the ratio of output voltage levels of the two types is in the order of 70 to 1, due to the very low output voltage of the variable reluctance cartridge.

The stylus supplied is of a semi-permanent type. Dust and foreign matter should be removed from the stylus assembly at regular intervals with a soft brush. Make sure the stylus arm is centered between the pole pieces.

CYCLE OF OPERATION

STARTING THE CHANGE CYCLE—The motor is started by movement of the Speed Control Knob (9, Figure 1). The rotating motor bushing (11, Figure 1) drives the Idler Wheel according to the speed selected by the Speed Knob. The bushing has two sections of different diameter which are engaged with the flywheel (8 or 15, Figure 1) corresponding to the position of the Speed Control. This control operates a lever arrangement (5 and 17, Figure 7) which presses the corresponding flywheel against the motor bushing and the rim of the disk. The rotating motor drives the disk by means of the flywheel friction drive. By means of the Gear Wheel on this disk the large Idler Gear (12, Figure 1) is engaged transferring the movement to the smaller Idler Gear which drives the Main Cam Actuating Gear (45, Figure 1). The power of the motor (33, Figure 3) is transferred to the disk by means of friction which is produced by the pressure of the springs (10 and 21, Figure 7). This pressure is applied to the Idler Wheel by means of the Levers (17 and 5, Figure 1). The gear wheel of the Main Cam Actuating Gear (45, Figure 1, or 45, Figure 4) is rotating all the time the motor is switched on and only when this is coupled to the Main Cam Gear (46, Figure 4) the change cycle starts causing the Pickup Arm and the Record Selector Lever to perform the respective movements. This coupling is accomplished by means of a Pawl (46A, Figure 4 and Figure 5) mounted on the Bottom Cam Gear (46, Figure 4, and Figure 5) which presses against the bottom teeth of the Main Cam Actuating Gear (45A, Figure 2). The weight of the lever causes the Pawl (46A, Figure 5) to engage the Main Cam Actuating Gear. Only when this weight is lifted the Pawl moves out of the tooth and disengages the lower Cam Gear (46, Figure 4). This movement of the Pawl is actuated by the left end of the Trip Lever (47, Figure 4). Automatic cycling may be started by pressing on the R button. The Automatic Trip Arm (34, Figure 3) trips the Velocity Trip and Roller Assembly (47, Figure 4). This releases the Actuating Pawl (46A, Figure 5), allowing it to engage the Main Cam Actuating Gear (45, Figure 4) and couples it to the Main Cam Gear (46, Figure 4), driving the mechanism through the change cycle.

CYCLING—A single revolution of the main cam results in a complete automatic cycling of the changer. This includes selection of a record from the stack, lifting the tone arm from its rest position and setting the needle in the first groove of the record.

RECORD FEED—The outer and lower surface of the Main Cam (46, Figure 4) controls the record selection. The wheel on the rocker arm lever follows the variation of the path on the Main Cam and causes by its swinging movement the Selector Arm (2, Figure 4) to push forward and drop a record.

PICKUP ARM MOVEMENT—The shaft at the end of the lever (38, Figure 3) moves along a specially designed path in the lower surface of the automatic trip cam and guides the disk hub and with it the pickup arm. The path is so designed that it swings and

© John F. Rider

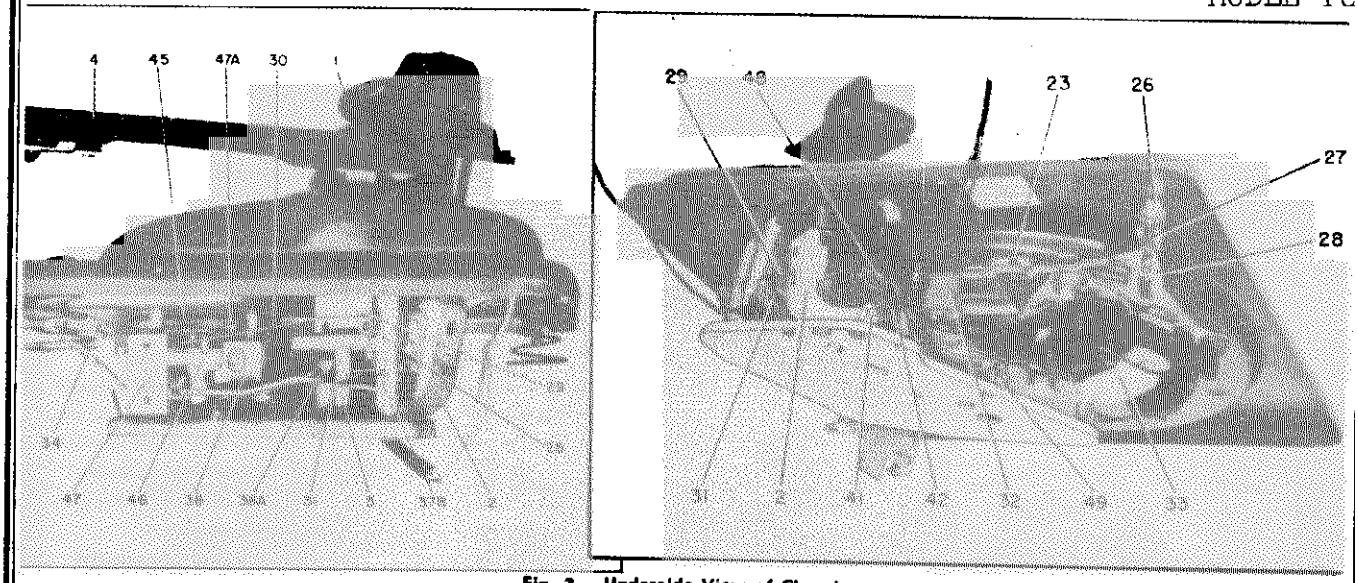

Fig. 3. Underside View of Chassis

lifts the pickup as required. If at the last groove of the record the pickup arm advances $\frac{1}{8}$ inch—$\frac{1}{2}$ inch in revolution, the lever on the pickup arm which is forced to move with it by the weight clutch (29, Figure 3) moves the trip lever which trips the pawl between the turning cam and the automatic trip cam, causing the arm to swing back again.

SERVICE ADJUSTMENTS

A. AUTOMATIC TRIP—When the movement of the Pickup Arm towards the spindle is greater than $\frac{1}{8}$ inch in $\frac{1}{2}$ revolution of the turntable, the Automatic Trip Arm (30, Figure 3) trips the Velocity Trip and Roller Assembly (47, Figure 4). This releases the Actuating Pawl on the Main Cam Assembly, coupling it with the Main Cam Actuating Gear and, therefore, driving the mechanism through the change cycle. The Automatic Trip Arm follows the movement of the pickup arm through the friction clutch (29, Figure 2). This clutch must be kept free of oil and grease.

B. AUTOMATIC LOCK LEVER—This lever (48, Figure 2) should move up and down freely with no record on spindle. Hook end of the automatic shut-off lock lever (48C, Figure 4) should catch Pickup Arm Raising Disk (31, Figure 3) at the beginning of the cycle to prevent travel of the arm and to cause it to drop on the rest post. The weight of the records moves the spindle through the hole and presses the Spring of the Automatic Lock Lever (48A, Figure 4), thereby lifting this lever. With no records on the spindle, the hook (48C, Figure 4) should clear the Pickup Arm Disk by $\frac{1}{32}$ inch with the mechanism at rest. This distance can be adjusted by bending the lip (D, Figure 6) underneath the lever.

C. VELOCITY TRIP—At the completion of the change cycle, the Actuating Pawl (46A, Figure 5) is engaged by the hook end of the Velocity Trip and Roller Assembly (47, Figure 4) which has been returned to its normal position by the reset points on the Main Cam Drive Gear (45B, Figure 4). This hook should be adjusted for about $\frac{1}{32}$ inch and $\frac{1}{64}$ inch clearance from the bottom of the Main Cam Actuating Gear (45, Figure 5). Greater clearance may permit the Pawl to bounce past the hook and re-engage, causing it to go into another cycle.

D. INDEXING—The eccentric screw, accessible through the top of the Pickup Arm should take care of any normal adjustment. Turn the screw clockwise to index the stylus in towards the spindle and counterclockwise to index the stylus out away from the spindle.

Should further adjustment be necessary, proceed as follows: Operate the mechanism by revolving the turntable manually until the stylus drops to within $\frac{1}{8}$ inch of a 10-inch record on the turntable. Check that the notch in the Pickup Arm Raising Disk engages the Pickup Arm Raising Lever (38A, Figure 4). With a No. 8 Bristol wrench in each of the setscrews (point C, Figure 6), alternately loosen one and tighten the other until the stylus rests above the records lead-in groove at the desired point. After completion of this adjustment, see that both setscrews are tightened.

E. PICKUP ARM LIFT—The stylus should approach the top record of a full stack on the turntable with approximately $\frac{1}{8}$-inch clearance. Adjust by bending the pickup arm raising lever (38A, Figure 3) at point B (Figure 6). Do not attempt to move Pickup Arm Raising Disk up or down because it would influence the correct working of the Automatic Lock Lever (48, Figure 2). The pickup arm is prevented from falling off the Rest Post (25, Figure 1) by the upturned end of the pickup arm pivot shaft bracket (37B, Figure 4). The clearance between the tongue of the pickup arm raising disk (31, Figure 2) and the bottom of the groove formed by the bracket and the Base Plate Post should be $\frac{1}{64}$ inch. In order to obtain proper positioning, bend the bracket up or down. If the bracket is too high, the disk tongue will rub on it when the needle approaches the edge of a 12-inch record. This will have the undesired effect of causing "glide in" on the first grooves of the record.

F. RECORD DROP ADJUSTMENT—As the change cycle is started, the first motion of the inclined outer bottom surface of the Main Cam (46, Figure 4) causes the Record Selector Post (2, Figure 4) to move towards the Spindle about $\frac{3}{32}$ inch. This position is maintained until the Pickup Arm has made its full outward lateral excursion, at which time the Record Selector Post again moves towards the spindle, causing the bottom record to drop into playing position. The distance between the Selector Post and the Spindle should be such that with a standard record ($9\frac{7}{8}$ inches for 10-inch and $11\frac{7}{8}$ inches for 12-inch) the distance between the edge of the record and the front of the selector arm groove is approximately $\frac{1}{32}$ inch. If this distance is too great, records of minimum diameter will not be pushed off the Spindle Step and if it is too short records will be pushed against the Spindle with undue force, causing center hole damage. If the Record Selector Post (1, Figure 1) has been bent back away from the Record Spindle, a standard record might rest on the spindle step with its edge just over the edge of the Record Selector Post shelf. Then at the beginning of the change cycle, the record is pushed off the spindle by the initial movement of the Record Selector Post, so that the record drops on the Pickup Arm. The push-off distance can be easily adjusted by the Screw on the rocker arm (40, Figure 5) which is accessible through the top of the main plate (remove disk!). Turning the screw clockwise diminishes the distance.

G. TO REMOVE THE PICKUP ARM—While holding the Pickup Arm firmly, bend in one end of the blue steel pickup arm hinge brackets while lifting up on the arm. This will release the pickup arm hinge pin. Repeat on the other pickup arm bracket, so that the released arm may be turned over and laid on the turntable.

H. TO REMOVE THE SUB-PLATE ASSEMBLY—In case it is necessary to replace any of the major parts of the sub-plate assembly, this can be removed by the following procedure:

1. Remove the Spindle which is held in by a clip under the sub-plate.
2. Remove the Turntable and the Pickup Arm.
3. Unhook the Rocker Arm Return Spring (42, Figure 2), and remove the Rocker Arm Pivot Pin (41, Figure 2).
4. Remove the holding screws.

© John F. Rider

MODEL P8

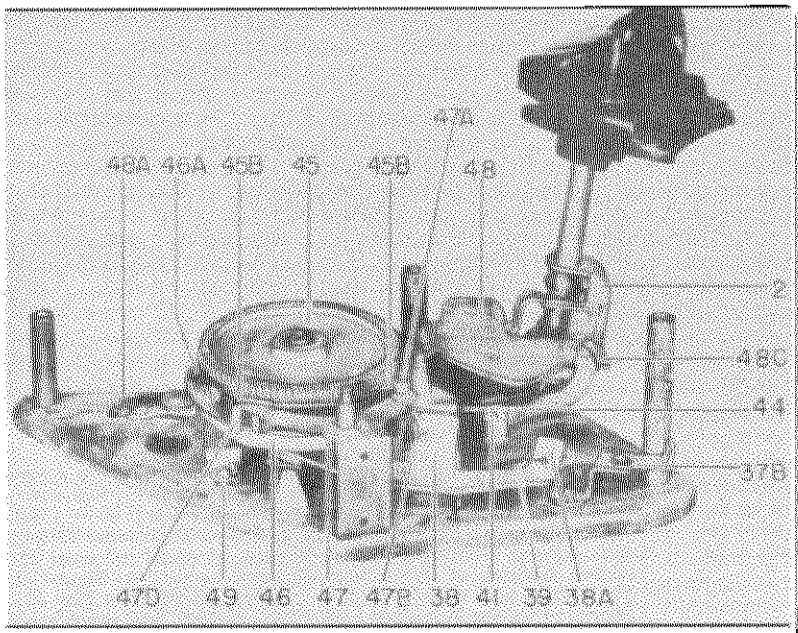

Fig. 4. Main Cam Gear Assembly

Cat. No.	Ref.	Description
RMS-177	27	SPRING—Tension spring for two-speed shaft
RMS-179		SPRING—Spring for weight RWP-003
RMS-180		SPRING—Tension spring for stabilizer
RMS-181		SPRING—Shock mounting spring
RMT-008		TURNTABLE BASE ASSEMBLY
RMU-020		SPINDLE—Spindle assembly
RMW-053		IDLER WHEEL—Idler wheel assembly (78 rpm)
RMW-055	23	DRIVE SLEEVE—Drive sleeve and set-screw
RMW-056		IDLER WHEEL—Idler wheel assembly (33⅓ rpm)
RMX-071		BEARING—Ball and retainer assembly
RMX-072		NUT—Post and nut assembly
RMX-075	31	DISC AND HUB ASSEMBLY—For pick-up arm raising
RMX-076	29	COLLAR—Collar assembly
RMX-077	46	CAM—Main cam assembly
RMX-078	47	TRIP—Velocity trip and roller assembly
RMX-080		SPRING—Collar clutch tension spring
RMX-081		IDLER GEAR ASSEMBLY
RMX-084	3	RECORD SHELF ASSEMBLY
RMX-098		NEEDLE PAD
RMX-102		PICKUP ARM LEVER AND BRACKET
RMX-128		HINGE—Pickup arm mount hinge
RMX-129		POST—Pickup arm pivot post assembly
RMX-135	26	TWO-SPEED SHAFT ASSEMBLY
RMX-137		COUNTERBALANCE—Pickup counter-balance assembly
RMX-139	47	VELOCITY TRIP AND ROLLER ASSEMBLY
RPA-009	4	ARM—Phono pickup arm
RPH-003		HOUSING—Housing for pickup assembly, 78 rpm (tan)
RPH-004		HOUSING—Housing for pickup assembly, 33⅓ rpm (red)
RPJ-001		STYLUS—Replaceable stylus, 3 mils (78 rpm)
RPJ-005		STYLUS—Replaceable stylus, 1 mil (33⅓ rpm)
RPX-040		CARTRIDGE—Magnetic pickup, 3 mils (78 rpm)
RPX-041		CARTRIDGE—Magnetic pickup, 1 mil (33⅓ rpm)
RSS-004	32	SWITCH—A-C power switch
RSX-017		SPEED CHANGER—Switch assembly, less button
RWP-003		WEIGHT—Weight for RPH-003

MODEL P8 REPLACEMENT PARTS LIST

Cat. No.	Ref.	Description
RBX-017	33	MOTOR—Motor assembly
RDB-017	24	REJECT BUTTON
RDB-018	25	BUTTON—Rest button
RDE-050	23	ESCUTCHEON BUTTON—Control escutcheon
RDF-007	16	WASHER—Felt washer for idler wheel
RDK-167	9	KNOB—Speed lever knob
RHC-011	22	CLIP—Retaining clip for idler wheel
RHC-019		BRACKET—Spring retainer bracket
RHG-024		COLLAR—Rubber collar for chassis mounting screws
RHM-031		RUBBER—Rubber shock mount for motor
RHR-001		RIVET—Idler mounting rivet
RHS-003		CONE POINT SETSCREW—For motor bushing
RHS-030		SCREW—Chassis mounting screw
RHS-009	13	SCREW—Idler gear mounting
RHW-003	7	WASHER—Bearing race washer
RHW-004		WASHER—Idler wheel (fiber)
RMG-005	45	GEAR—Main cam actuating gear
RMG-007	11	GEAR—Small idler gear (fiber)
RMG-008	12	GEAR—Larger idler gear (fiber)
RMK-003		COUPLING—Idler gear coupling
RML-006	34	MANUAL TRIP LEVER—Lever and wire assembly
RML-008		ROCKER ARM ASSEMBLY
RML-009		STOP—Selector lever stop
RML-010	48	AUTOMATIC "SHUT-OFF" LOCK LEVER
RML-016		LEVER ASSEMBLY PICKUP ARM
RML-017		LEVER—Rocker arm lever assembly
RML-022	34	LEVER—Lever and wire assembly manual trip
RML-024	17	LINK—Idler link
RML-025	28	LEVER—Two-speed lever assembly
RML-026		RELEASE—Link release
RMM-023	1	POST—Record selector post
RMM-024		RECORD STABILIZER
RMM-038		COVER—Switch cover
RMM-079		BRACKET—Hub assembly for pickup arm
RMP-008	41	PIN—Rocker arm pivot pin
RMS-071	39	SPRING—Raising lever tension spring
RMS-073		SPRING—Selector shaft compression spring
RMS-074	44	SPRING—Selector lever compression spring
RMS-075	42	SPRING—Rocker arm return spring
RMS-175		SPRING—Idler link tension spring (idler wheel 78 rpm)
RMS-176		SPRING—Idler wheel (tension spring 33⅓ rpm)

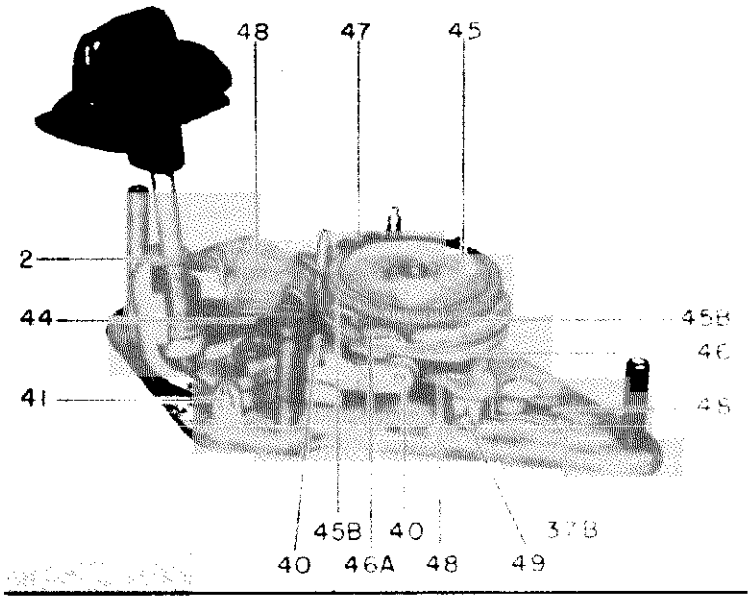

Fig. 5. Main Cam Gear Assembly

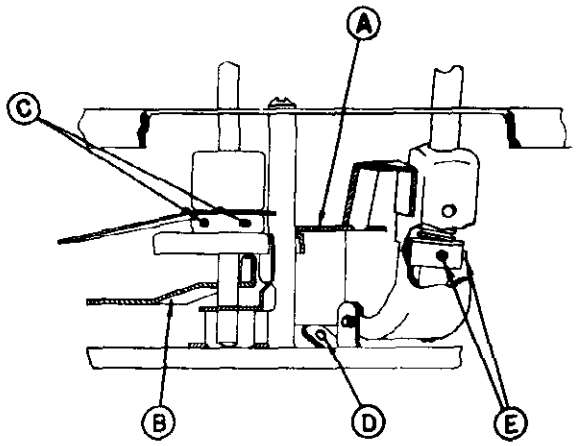

Fig. 6. Adjustment Points

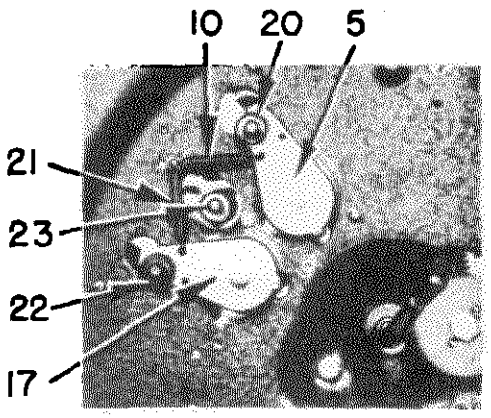

Fig. 7. Idler Wheel Links

TROUBLE SHOOTING CHART

SYMPTOMS	REMEDIES OR CAUSES
TRIPPING	
1. Changer Fails to Trip.	1. Check: (a) Adjustment A. (b) Velocity Trip and Roller Assembly binding (47, Figure 4). (c) Actuating Pawl (46A, Figure 5) stuck. (d) Automatic Trip Lever (30, Figure 3) bent and not hitting the Velocity Trip and Roller Assembly (47, Figure 3). (e) Velocity Trip and Roller Assembly rubbing on the underside of the Main Cam Actuating Gear. (f) Manual trip lever binding. (g) No velocity lead-in groove in center of record. (h) Worn record or needle. (i) Foreign matter in record groove.
2. Changer Trips Continuously.	2. Check: (a) Velocity and Roller Assembly (47, Figure 3) rubbing on Main Cam Actuating Gear (46, Figure 3). (b) Manual Trip Lever binding. (c) Hook end of Velocity Trip and Roller Assembly (47, Figure 3) bent and not engaging Pawl (46A, Figure 5). To be adjusted for about $\frac{1}{64}$ inch clearance from the bottom of the Main Cam Drive Gear. (d) Bakelite Disengage Roller broken on Velocity Trip and Roller Assembly (47A, Figure 4).
3. Changer continues to play last record and does not switch off.	3. Check: (a) Floating Spindle (free up and down movement). (b) Automatic Shut-off Lock Lever (48, Figure 4). Hook end of this arm (48C, Figure 4) should catch the Pickup Arm Rising Disk (31, Figure 3) at the beginning of the cycle to prevent travel of the arm and cause it to drop on the Rest button. This hook should clear the Pickup Arm Rising Disk (31, Figure 3) by $\frac{1}{32}$ inch with the mechanism at rest. Bend lip (D, Figure 6) if necessary to make this adjustment.
4. Manual Trip Fails.	4. (a) Manual Trip Lever Hair Spring bent or broken. (b) Velocity Trip and Roller Assembly binding (47, Figure 4). (c) Actuating Pawl stuck (46A, Figure 5).
GLIDE IN ON 12" RECORDS	Check tension of compression spring (44, Figure 4).
RECORD DROP.	Check adjustment E.
MORE THAN ONE RECORD IS DROPPED.	Check adjustment F.
INDEXING OF ARM.	Check latch of record spindle.
SELECTOR POST ANGLE INCORRECT.	Check adjustment D.
PICKUP ARM MOVEMENT.	Check adjustment F.
NEEDLE SKIPS GROOVES.	Check adjustment E.
	Check: (a) Record changer not level. (b) Pickup Arm binding. Check vertical and lateral friction. (c) Badly worn record or needle.
PICKUP ARM DROPS OFF THE REST POST.	Check adjustment E.
MOTOR	
1. Motor Does Not Switch Off.	1. (a) Defective Switch mechanism. (b) Defective Switch (do not attempt to repair).
2. Changer is Sluggish or Motor Overheats.	2. (a) Check lubrication—oil, old or gummy. (b) Incorrect line voltage. (c) Defective motor winding.

GENERAL

This single post and single tone arm record changer is designed for dual speed operation (33⅓ or 78 revolutions per minute) from a power source of 110 volts at 60 cycles. It will play the Standard Groove or Microgroove type records for these speeds, a single record at a time or a series of twelve 10-inch or ten 12-inch records or ten records of the two sizes intermixed. *Note: Never stack together the Standard and Microgroove records intermixed for automatic operation* as playing of each type record requires special attention to the pick-up discussed below.

The tone arm is designed to use either of two pick-up heads which are interchanged by a plug arrangement at the end of the tone arm. The pick-up heads are finished in color for identification. The TAN head is used to play Standard Groove records while the RED colored head is for Microgroove reproduction. *Always use the TAN head with Standard Groove records and the RED head with Microgroove records.* Use of the wrong head is certain to result in damage to records and pick-up stylus.

MANUAL OPERATION

1. Turn the Selector switch (23) to the "M" position.
2. With the Record Stabilizer Weight (1) turned back and the spindle in position, place the record on the spindle. The record is then moved slightly to slip over the step in the spindle and lowered to the turntable.
3. Attach to the pick-up arm the correct pick-up head (19) required for the particular type record to be played.
4. Set the Turntable Speed Control (32) to correspond to the speed required by the type of record.
5. Depress the "ON" button (24).
6. Gently place the stylus of the pick-up on the outer groove of record.
7. Upon the end of record playing or to stop recording during manual play, lift the pick-up arm from record and return it to "rest" position. A slight pressure upon the pick-up arm at the rest position will depress the "OFF" button (25) to stop the mechanism.
8. When through operating the record changer, set the Speed control to the "OFF" position.

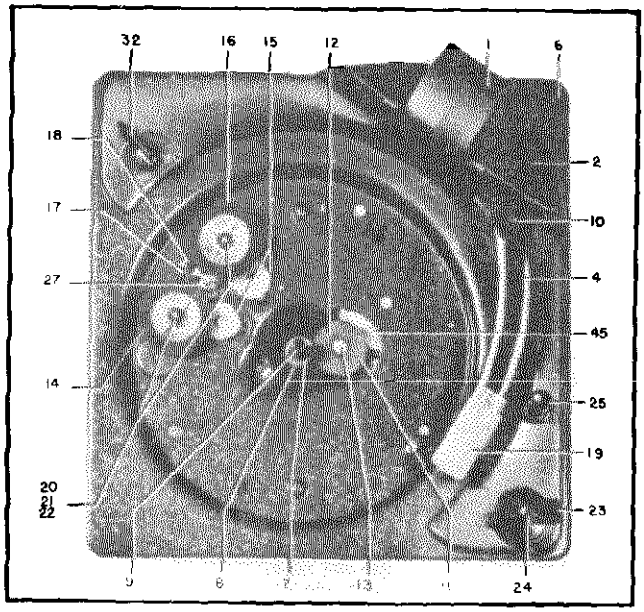

Fig. 1. Top View of Record Changer

AUTOMATIC OPERATION

1. Turn the Selector switch (23) to "A" position.
2. Turn back the Record Stabilizer Weight (1). Place upon the record spindle not more than twelve of the 10-inch records, ten of the 12-inch, or ten records intermixed. The bottom record will rest on the step of the spindle and the record selector shelf (62). Set the Stabilizer Weight (1) forward so that it rests on the edge of the top record.
3. Attach to the pick-up arm the correct pick-up head (19) required for the type records to be played.
4. Set the Speed Control (32) to the setting as required by the type of records used.
5. Depress the "ON" button (24). The record changer will operate automatically without further attention and when the last record has been played, the pickup arm will automatically come to rest upon the "OFF" button (25) turning off the changer mechanism. The automatic shut-off feature applies to standard groove record operation only. The TAN pick-up head, balanced to give a greater needle pressure than required for the RED head as applied to microgroove records, has sufficient weight to trip the "OFF" button mechanism.
6. If it is desired to reject a record selection being played, push down the ON button. The record changer will then immediately shift to play the next record.
7. To stop operation of the record changer at any time during automatic play, lift the pick-up arm off the record and return it to the "rest" position on the OFF button, however, after the last record is being played, the pick-up arm mechanism is automatically locked in position and must either complete the cycle or the "ON" button must be depressed.
8. To remove a stack of records from the turntable, pull out the record spindle, lift off the entire stack of records, and replace spindle.
9. When through operating the record changer, set the Speed control to the "OFF" position.

OPERATING PRECAUTIONS

1. Do not, under any circumstances, connect the motor to a source of direct current or to alternating current other than that specified by the label.
2. Do not allow oil or grease to come in contact with the rubber tired friction drive wheels (14 and 16) or the Automatic Trip Arm (30) and Clutch (29) parts.
3. Never use force to start or stop the motor, or any part of the record changer mechanism.
4. Do not intermix Microgroove records with the Standard Groove type.
5. Make certain the correct pick-up head (19) is used to play the desired records. The TAN head is for Standard Groove recordings, while the RED head is used to reproduce Microgroove recordings.
6. Always make certain that the Speed Control (32) is set to the proper speed position as required for the type of record.
7. Use only records in good condition for automatic operation. For warped, odd size, or home recorded records, play as for manual operation.
8. Do not store the records upon the record post and spindle or on the turntable as they may warp, especially if the temperature is high.
9. When through operating the record changer, make certain the Speed Control (32) is returned to the "OFF" position. This pre-

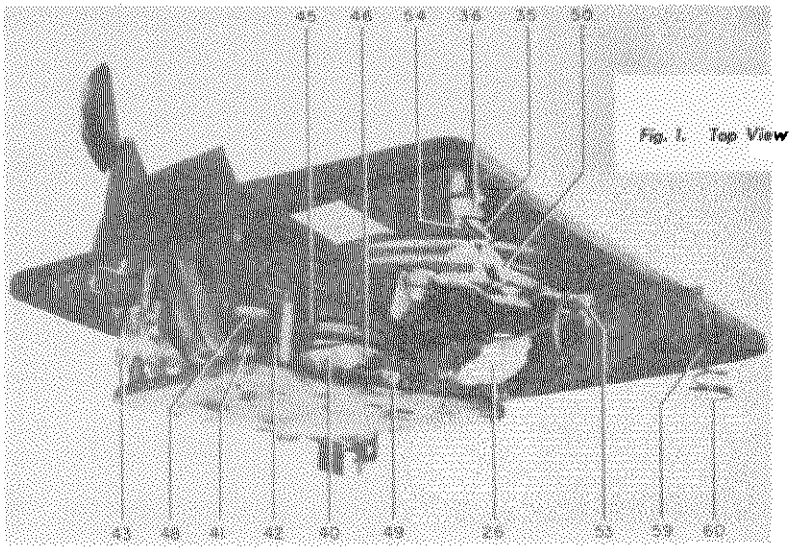

Fig. 1. Top View of Record Changer

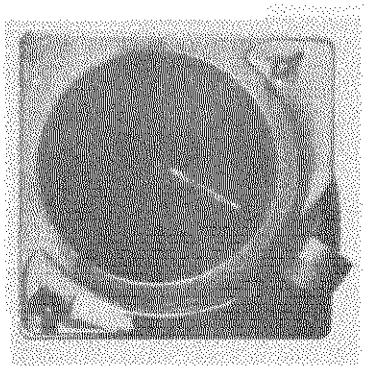

vents a damaging flat surface upon the rubber tired drive wheels otherwise developed as the motor drive shaft bears pressure upon them when the record changer remains idle for long periods engaged in either of the speed positions.

LUBRICATION

Use a light machine oil on the following:

1. Motor bearings, saturate top and bottom felts at end bells.
2. Pick-up arm shaft (5), see Figure 3. Apply one drop each to bottom bearing point, bracket hole, and hole through main base plate.
3. Ball bearing assembly (8). See Figure 1.
4. Idler wheel felt (21). See Figure 1.

Apply Lubriplate No. 110 with a small brush to:

1. Idler wheel linkage (15). See Figure 1.
2. Turntable shaft stud (9). See Figure 1.
3. Pick-up arm hinge pins.
4. Pick-up arm raising lever (38). Apply to edge lifting disk hub (31). See Figure 3.
5. Main cam (46) bearing. See Figure 2. It is necessary to remove the sub-plate assembly to lubricate this bearing.

Apply Sta-Put with a small brush to:

1. Teeth of Main Cam Gear (45). See Figure 4.
2. Channeled undersurface of Main Cam Gear (46). See Figure 4.
3. Teeth of Idler Drive Gears (11 and 12). See Figure 1.
4. Pick-up Arm Raising Lever (38). Apply to bearing surfaces. See Figure 4.

PICK-UP CARTRIDGE

The Model P10 record changer is equipped with two pick-up arm cartridge heads, each containing a General Electric Variable Reluctance Cartridge incorporating a replaceable stylus assembly. The "TAN" colored head is plugged into the end of the pick-up arm to play wide groove records known as the Standard type. The "RED" colored head is similarly inserted into the arm when using the Long Playing Microgroove records.

SERVICE—The stylus assemblies may be removed readily from the cartridge for replacement. Instructions for replacement are supplied with each new Replaceable Stylus Assembly catalogued in the replacement parts lists on the last page of this publication.

To insure optimum performance from the cartridge, its stylus, magnetic pole pieces, and gaps should be cleaned periodically of foreign particles accumulated from the record surfaces. A soft bristle brush similar to Cat. No. RQB-001 should be used to clean these parts. The gap clearance between stylus and each of its pole pieces has been adjusted to be not less than .011 inch. Care should be taken not to disturb this adjustment during service adjustment or cleaning.

CYCLE OF AUTOMATIC OPERATION

The following titled paragraphs describe in sequence each action of the record changer mechanism through the automatic cycle of operation.

INITIATING THE CHANGE OF CYCLE—Depressing the ON Button (24) turns on the Motor Power Switch (33) and triggers the Manual Trip Lever (34). The turntable driven by one of the Idler Wheels (14 or 16) drives the Main Cam Gear (45) through the Idler Coupling Gears (11 and 12).

PAWL TRIP ACTION—The Actuating Pawl upon the Main Cam Assembly (46) engages with the sawtooth serrations on the underside of the Main Cam Gear (45). The main cam assembly is thus driven by the main cam gear whenever the actuating pawl is engaged.

The actuating pawl is tripped directly by the Velocity Trip and Roller Assembly (47) which may be triggered either manually or automatically. The pawl becomes engaged in the cam gear sawtooth and the velocity trip lever is shortly returned to normal position in readiness to disengage the actuating pawl at the end of the main cam cycle. In Manual control the velocity trip and roller assembly is triggered by control of the ON Button (24) through Switch Assembly (33) and Manual Trip Lever (34). During automatic operation of the record changer, tripping is accomplished by action of the Automatic Trip Arm (30) which is driven by the Clutch Friction Weight (29) and Pick-up Arm Shaft Assembly.

PICK-UP ARM MOVEMENT—The underside channeled surface of the Main Cam Assembly (46) controls the pick-up arm movement through the Pick-up Arm Raising Lever (38). The lever follows the channeled contour of the main cam, lifting, turning and lowering the Disk Hub (31) and associated pick-up arm and shaft assembly so that the pick-up is started upon the first record grooves.

This completes the movement of the main cam assembly as the actuating pawl is released by the Velocity Trip and Roller Assembly (47) to be tripped and engaged again upon another record changer cycle.

The Automatic Trip Arm (30), coupled to the pick-up arm and shaft assembly by friction, moves toward the velocity trip and roller assembly as the pick-up arm moves across the record being played. As the last or inner record grooves are reached by the pick-up arm, the automatic trip arm triggers the velocity trip and roller assembly. The velocity trip, in turn, trips the actuating pawl to drive the main cam, beginning a new cycle of record play and returning the pick-up arm onto the first grooves of a next record.

RECORD FEED—Movement of the Rocker Arm Lever and Roller assembly (40) upon the underside and outer edge of the Main Cam Assembly (46) controls the record feed. The attached Record Selector Shelf (62) and associated Record Selector Arm Fingers (61) move to push forward a record from the shelf, off the step of the record spindle, and onto the turntable.

©John F. Rider

MODEL P10

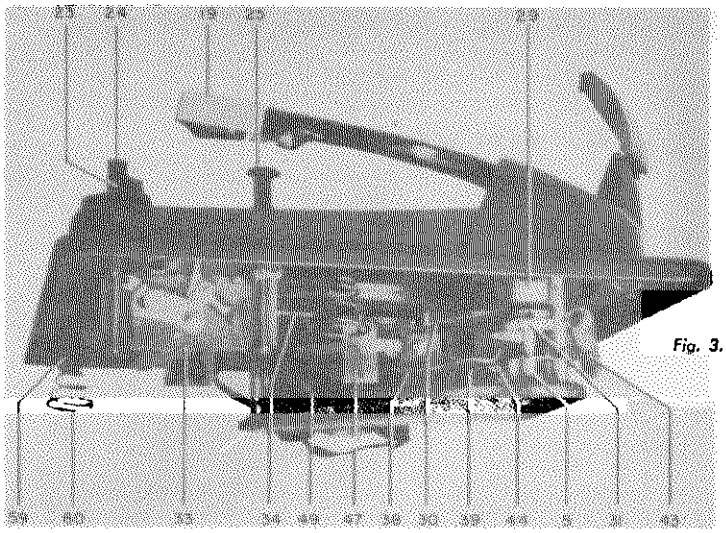

Fig. 3. Right Oblique View of Bottom of Changer

PICK-UP ARM INDEXING—The position of the Record Selector Fingers (61) and attached Index Control Arm (3) just before a record leaves the Record Shelf (62), determines the proper index of the pick-up arm to start upon the first grooves of that particular record.

When a 10-inch diameter record rests upon the record shelf, the record selector fingers are tilted so that the attached index control arm is engaged with the Index Lever Assembly (43). The index lever, by virtue of its compressed spring, forces the Pick-up Arm Raising Lever assembly (38) to follow the outer contour of the channeled undersurface of the Main Cam Assembly (46). Guided by *this contour*, the pick-up arm raising lever lowers the pick-up arm to the proper position upon the first grooves of the *10-inch record.*

A 12-inch record upon the record shelf will depress the record selector fingers, unlatching the attached index control arm from the index lever assembly. This renders the index lever assembly inoperative and results in the pick-up arm raising lever following the inside contour of the channeled undersurface of the main cam assembly as guided by its associated tension springs. In following *this contour*, the pick-up arm raising lever lowers the pick-up arm to the proper position upon the first grooves of the *12-inch record.*

AUTOMATIC SHUT OFF—As the last record leaves the Record Selector Shelf (62) and Record Spindle Step to drop onto the turntable, the bottom of the spindle ceases to bear down upon the end of the Automatic Shut-off Lock Lever (48) directly beneath as a result of all record weight removed from the spindle. This changes the position of the automatic shut-off lock lever so that the hooked segment of its lowered end engages with a segment of the Disk Hub (31), obstructing its normal movement. As a result, the pick-up arm is lowered onto the OFF Button, depressing it to shut off the electrical power to the record changer mechanism.

SERVICE ADJUSTMENTS

A. IDLER WHEEL DRIVE—The turntable is driven by means of one or the other friction idler drive wheels (14 or 16). The driving power is transferred from the motor bushing (27) to the drive wheels and then to the rim of the turntable.

It is important, therefore, that the motor bushing, idler wheels, and rim of turntable be kept clean of grease, oil, dirt, or any foreign matter. Naphtha or an equivalent quick drying solvent is satisfactory for cleaning these parts.

B. AUTOMATIC TRIP—The Automatic Trip Arm (30) follows the movement of the pickup arm through a weight compression clutch (29). When the movement of the pick-up arm (4) toward the record spindle is greater in velocity than $\frac{1}{8}$ inch in $\frac{1}{2}$ revolution of the turntable, the automatic trip arm trips the Velocity Trip and Roller Assembly (47). This releases the actuating pawl on the Main Cam Assembly (46), allowing it to engage the Main Cam Gear (45) to drive the mechanism through the changer cycle.

Normally, the change in velocity of pick-up arm movement occurs at the end of record play, due to the eccentric record lead-in grooves toward the record spindle.

Proper friction between the automatic trip arm and the Disk Hub (31) is essential to correct automatic trip operation. The respective surfaces of clutch weight, automatic trip arm and disk hub surfaces must be kept free of oil or grease.

C. AUTOMATIC LOCK LEVER—The automatic Lock Lever (48) should move up and down freely with no record on the spindle. Normally, its hooked end adjacent to the Pick-up Arm Raising Disk Hub (31) will be raised clear of the disk hub as long as records are upon the spindle. However, after the last record has been played, the hooked end of the automatic lock lever is in a lowered position (due to record weight removed from spindle). In this position, the hook of the lever obstructs further lateral movement of the disk hub and pick-up arm and the pick-up arm is then lowered on to the OFF Button (25) shutting off the changer mechanism. To allow final indexing of the pick-up arm to play the last record as it leaves the spindle and drops onto the turntable, the hooked end to the automatic lock lever must clear the disk hub. This is accomplished for the last record play through the Tab "B" of the lock lever, shown in Figure 5, as it engages with the adjacent tab of the Rocker Arm Lever and Roller Assembly (40). This prevents the lock lever from being lowered which would otherwise obstruct the disk hub movement for the last record play.

For correct adjustment, there should be a clearance of $\frac{1}{32}$ inch between hook end of lock lever and disk hub, with the changer mechanism at rest and no records on the spindle. To make this adjustment, bend the Tab "F" shown in Figure 5. The tab is located on the Base Plate (37) just beneath the automatic lock lever.

D. VELOCITY TRIP—At the completion of the first part of change cycle, the actuating pawl is engaged by the hook end of the Velocity Trip and Roller Assembly (47) which has been returned to its normal position by the reset points on the Main Cam Drive Gear (45). This hook should be adjusted between .005 to .015 inch clearance from the bottom of the main cam drive gear. Greater clearance may permit the pawl to bounce past the hook and re-engage with the main cam gear sawtooth, causing the changer mechanism to operate into another cycle.

E. INDEXING—The eccentric screw (10) accessible through the top of the Pick-up Arm (4) should take care of any normal adjustment. Turn the screw clockwise to index the pick-up stylus in, toward the spindle, or counterclockwise to index the stylus out, away from the spindle.

Should further adjustment be necessary, proceed as follows: Operate the mechanism by revolving the turntable manually until the stylus drops to within $\frac{1}{2}$ inch of a 10-inch record on the turntable. With a No. 8 Bristol wrench in each of the set screws (points D and E, Fig. 5), alternately loosen one and tighten the other until the stylus rests above the records lead-in groove at the desired point.

Make certain both set screws are tightened after adjustment is completed.

The 12-inch position is indexed automatically by the pressure of a 12-inch record on the Record Selector Fingers (61).

©John F. Rider

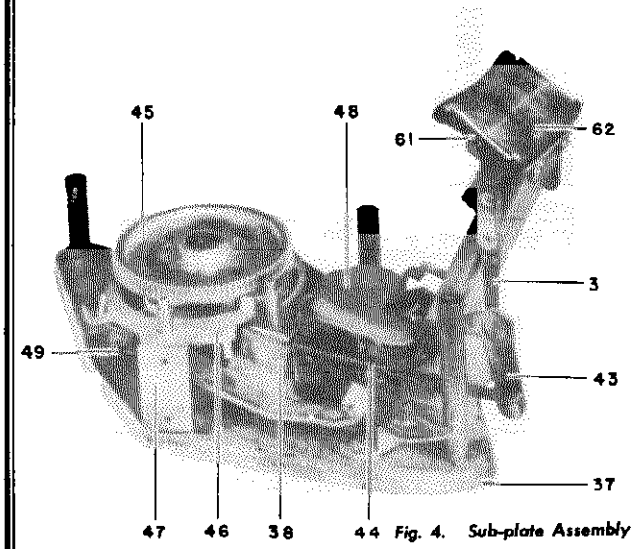

Fig. 4. Sub-plate Assembly

F. PICK-UP ARM LIFT—The stylus should clear the top record of a full stack of records upon the turntable by approximately $\frac{1}{8}$ inch in its approach to, or return travel across the record. Adjust by bending the Pick-up Arm Raising Lever (38) at point "C" shown in Figure 5. ***Do not attempt to move Pick-up Arm Raising Disk Hub (31) up or down*** as this would upset the adjustment of the Automatic Lock Lever mentioned in a previous paragraph.

G. RECORD DROP ADJUSTMENT—The distance between the Record Selector Fingers (61) and the Record Spindle is critical and should be adjusted as accurately as possible. If this distance is too great, records of minimum diameter will not be pushed off the spindle step during the change cycle. If it is too short, records of maximum diameter will either be over the tips of the record selector fingers (resulting in no record drop and improper pick-up arm index), or be pushed against the spindle with undue force, causing center hole of the record to become damaged.

IMPORTANT: Make certain that a standard size record is used in making the adjustments in the following paragraphs. A standard 10-inch record measures $9\frac{7}{8}$ inches $\pm\frac{1}{32}$ inch in diameter. A standard 12-inch record measures $11\frac{7}{8}$ inches $\pm\frac{1}{32}$ inch in diameter.

With a standard 10-inch record on the spindle, check the distance between the edge of the record and the front of the record selector fingers. This distance should be approximately $\frac{5}{32}$ inch and should be the same for each of the two fingers. With a full stack of records on the spindle, the weight of the records will reduce this distance to about $\frac{1}{8}$ inch. Do not attempt to bend the spindle to adjust this distance. Bending the spindle will destroy the relationship between the heel of the spindle off-set and the horizontal plane of the record. This spacing is set to permit only one record at a time to slide between the heel of the off-set and the step of the spindle. Standard records are 0.70 inch to 0.100 inch in thickness and any change in the angle of the spindle will either close the angle of the off-set which will result in torn center labels on thick records, or open the angle permitting two thin records to drop at one time.

The procedure for adjusting the push-off distance is as follows:

1. Remove the four screws under the Main Plate (6) which hold the Center Trim Section (2).

2. Remove the center trim section by lifting it straight and upward.

3. For forward adjustment of the record selector fingers, wedge a screwdriver between the Rocker Arm and Roller Assembly (40) and the Sub Plate (37) in front of the rocker arm pivot. With the heel of the hand bearing upon the Record Selector Shelf (62), push on shelf to bend rocker arm, bringing record selector fingers nearer to record spindle.

4. For backward adjustment, wedge the screwdriver between the rocker arm and the sub-plate in back of the pivot pin. Push on record selector shelf to bend rocker arm, bringing record selector fingers further away from record spindle.

5. After making adjustment, make certain that both selector arm fingers are equidistant from edge of record. A slight twisting of the rocker arm will bring the fingers to the proper position.

PICK-UP ARM REMOVAL AND REPLACEMENT

The following step-by-step procedure may be used in removing the pick-up arm for service and replacement.

1. The spacing spring between the hinge pins of the pick-up arm bracket must be removed by pressing down on its center until it snaps off the pins. This spring was used to prevent the pick-up arm hinge from coming apart during shipment.

2. With a screwdriver or long-nose pliers, bend in one of the blue steel pick-up arm hinge brackets while lifting up on the arm. This will release the hinge bracket from its hinge pin.

3. Repeat step 2 to free opposite hinge bracket.

4. The pick-up arm may now be removed after freeing pick-up cord from clips.

5. In replacing pick-up arm, the above procedure may be followed in reverse. Make certain cord does not become wedged in bracket. The roller at the rear of pick-up arm hinge should pass beneath the lift bracket attached to the record changer deck. The spacing spring need not be replaced unless the unit is to be shipped.

SUB-PLATE ASSEMBLY (REMOVAL AND ASSEMBLY)

In the event that it becomes necessary to replace any of the major parts of the sub-plate assembly (Figure 4), the entire assembly should first be removed from the main plate. Proceed as follows:

1. Remove the record spindle and turntable.

2. Remove four screws holding Center Trim (2) from Main Plate and remove trim.

3. Remove the Record Selector Shelf (62) held to the Rocker Arm and Roller Assembly (40) by the two screws.

4. Detach Rocker Arm Return Spring (42) from main plate.

5. Remove the four No. 8-32 screws holding the sub-plate studs and the main cam gear stud to the main plate.

6. Main plate may be lifted from sub-plate, letting rocker arm drop through opening of main plate..

Reverse the above procedure to reassemble record changer, making certain pick-up arm shaft, sub-plate dowels and other parts are in their proper position.

RECORD SELECTOR SHELF AND ROCKER ARM ASSEMBLY (REMOVAL AND REASSEMBLY)

The Record Selector Shelf and Rocker Arm Lever Assembly (62 and 40) may be removed from the record changer by detaching its Return Spring (42), removing its Pivot Pin (41) and lifting the assembly out from the top of the record changer.

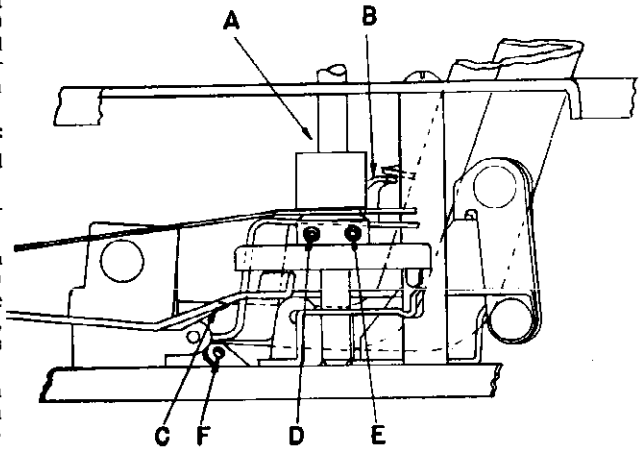

Fig. 5. Adjustment Points

©John F. Rider

MODEL P10

TROUBLE SHOOTING CHART

SYMPTOMS	REMEDIES OR CAUSES
TRIPPING	
1. Automatic Trip Fails.	1. (a) Binding of velocity trip and roller assembly (47). (b) Actuating pawl stuck; part of main cam assembly (46). (c) Automatic trip arm (30) bent and not striking velocity trip and roller (47). (d) Manual trip lever (34) binding. (e) No velocity lead-in eccentric groove at center of record. (f) Foreign matter in record groove or broken record.
2. Manual Trip Fails.	2. (a) Manual trip lever (34); wire spring bent or broken. (b) Velocity trip and roller assembly (47) binding. (c) Actuating pawl stuck.
3. Velocity Trip Fails.	3. (a) Check Service Adjustments paragraphs D. (b) Velocity trip and roller assembly (47) rubbing on main cam gear (45).
4. Last Record Is Not Played.	4. Automatic lock lever failure. Check Service Adjustments, paragraphs C.
PICK-UP INDEXING	
1. Pick-up does not start in proper record groove.	1. Check Service Adjustments, paragraphs E.
PICK-UP ARM MOVEMENT	
1. Pick-up arm lift too high or too low.	1. Check Service Adjustments, paragraphs F.
RECORD DROP	
1. Inconsistent record drop.	1. Check Service Adjustments, paragraphs G.
MOTOR	
1. Motor does not shut off automatically.	1. (a) OFF button stuck. (b) Defective switch. (c) Defective switch mechanism.

CAT. NO.	REF.	DESCRIPTION
RMS-181	60	SPRING—Record changer mounting spring
RMT-008		TURNTABLE—Record turntable
RMW-053	14	WHEEL—Turntable drive wheel (78 rpm)
RMW-055	27	DRIVE BUSHING—Motor shaft drive bushing and set screw
RMW-056	16	WHEEL—Turntable drive wheel (33 ⅓ rpm)
RMX-071	8	BEARING—Ball bearing and retainer assembly
RMX-072	9	STUD—Turntable shaft assembly
RMX-077	46	CAM—Main cam assembly
RMX-078	47	LEVER—Velocity trip and roller assembly
RMX-081	11, 12, 13	GEAR ASSEMBLY—Fiber idler drive gears, coupling, washer, and mounting bolt
RMX-097		*RECORD SPINDLE*
RMX-102	38	*LEVER Pick-up arm raising lever* and bracket assembly
RMX-119	61, 62, 63	RECORD PUSH-OFF SHELF ASSEMBLY—Plastic shelf with record selector fingers and index arm attached
RMX-128	51	PICK-UP ARM HINGE—Hinge assembly for pick-up arm
RMX-129	5	PIVOT POST—Pick-up arm pivot shaft and hinge bracket
RMX-135	35	SHAFT ASSEMBLY—Speed control shaft with retaining washer and toggle arm
RMX-137	52	SPRING AND BRACKET—Pick-up arm counterbalance assembly
RPA-010	4	PICK-UP ARM—Plastic shell with female receptacle and pick-up cord
RPH-003	19	PICK-UP HEAD—Tan colored plastic head with male connector tips and ballast weight (less pick-up cartridge)
RPH-004	19	PICK-UP HEAD—Red colored plastic head with male connector tips (less pick-up cartridge)
RPJ-001		STYLUS ASSEMBLY—3 mil sapphire replaceable stylus (for use with standard groove records)
RPJ-005		STYLUS ASSEMBLY—1 mil sapphire replaceable stylus (for use with microgroove records)
RPX-040		PICK-UP CARTRIDGE—Includes 3 mil sapphire replaceable stylus RPJ-001
RPX-041		PICK-UP CARTRIDGE—Includes 1 mil sapphire replaceable stylus RPJ-005
RSS-004		SWITCH—A-C power switch
RSX-014	33	SWITCH ASSEMBLY—Complete mechanical assembly with a-c switch (less ON and OFF buttons)
RSX-016	36	SPEED CONTROL MOUNTING KIT—Consists of: bushing, dial escutcheon, toggle bracket, lock washer, and hex nut
RWP-003		WEIGHT—Used in tan pick-up head (19) to obtain correct stylus pressure *for 3 mil cartridge*

CAT. NO.	REF.	DESCRIPTION
RAA-008	30	ARM—Automatic trip arm
RBX-017	26	MOTOR—60-cycle motor
RDB-013	24	BUTTON—"ON" button
RDB-014	25	BUTTON "OFF" button
RDF-007	21	WASHER—Felt washer over turntable drive wheels
RDK-091	23	KNOB—Manual control knob and *spring washer*
RDK-167	32	KNOB—Speed control knob
RHC-011	22	CLIP—Retaining clip for turntable idler drive wheels
RHG-024	59	MOUNTING BUSHING—Rubber mounting bushing for record changer mounting springs
RHM-031	53	GROMMET—Rubber shock mount for motor mounting
RHR-001		RIVET—For mounting turntable drive wheel lever (15)
RHS-003		SET SCREW—Allen Head, cone *point, #8-32 x ¼ inch for pick-up* arm raising disk hub (31)
RHS-009	13	SCREW—Mounting screw for idler drive gears
RHW-003	7	WASHER—Turntable bearing race washer
RHW-004	20	WASHER—Fiber washer beneath turntable drive wheels
RMF-010	1	RECORD STABILIZER WEIGHT
RMG-005	45	GEAR—Main cam drive gear
RMK-003	12	GEAR COUPLING—Drive coupling *between idler drive gears*
RML-010	48	LEVER—Automatic shut-off lock lever
RML-017	40	ARM—Rocker arm and roller assembly (less record selector shelf and fingers)
RML-018	43	LEVER—Index selector lever
RML-022	34	LEVER—Manual trip lever and wire assembly
RML-024	15	LINK LEVER—Supports one of each turntable drive wheel
RML-025	50	LEVER PLATE—Speed control lever *plate with neutral positioning flat* index spring
RML-026	28	LEVER—Turntable drive wheel link lever release
RMM-038		COVER A-C power switch cover
RMM-079	31	DISK AND HUB—Pick-up arm raising disk with set screws
RMM-088	62	RECORD PUSH-OFF SHELF—Plastic record shelf
RMP-008	41	PIN—Rocker arm pivot pin
RMP-009	49	PIN—Pivot pin for automatic shut-off *lever*
RMS-071	39	SPRING—Pick-up arm raising lever tension spring
RMS-074	44	SPRING—Index rod compression spring
RMS-075	42	SPRING—Rocker arm return spring
RMS-175	17	SPRING—Tension spring on 78 rpm turntable drive wheel
RMS-176	18	SPRING—Tension spring on 33⅓ rpm turntable drive wheel
RMS-177	54	SPRING—Tension spring on speed control shaft toggle
RMS-179		SPRING—Used in mounting pick-up cartridges (19)

MODEL P10 REPLACEMENT PARTS LIST

©John F. Rider

GENERAL

This record changer is designed to operate from a power source of 105-125 volts at 60 cycles per second. It is a dual speed type of 33⅓ rpm or 78 rpm for playing the standard records automatically or the "Long Play" records manually.

This changer is similar to the Model P6 except for the addition of the pickup arm with the 1 mil stylus for playing the narrow groove records and the dual-speed motor. A switch has been added to switch to either pickup arm. For detailed information, on automatic operation, trouble shooting, and replacement parts common to both the P6 and the P11, refer to ER-S-P6. Only parts special to the P11 changer are given below.

CONTROLS

1. The CONTROL KNOB turns the power to the motor "ON" in *Manual* or *Auto.* position and will cancel a record being played when rotated to *Rej.*
2. If the SPEED CHANGE KNOB is rotated to *Long Play,* the turntable will rotate at 33⅓ rpm. When rotated to *St'd Play,* the turntable will rotate at 78 rpm. When the record changer is not in use, this knob should be rotated to the center position to relieve pressure from the rubber tired idler wheel.
3. PICKUP ARM SWITCH should be switched to *St'd Play* when playing records of the wide or standard groove. This switch should be switched to *Long Play* when playing 33⅓ rpm "Long Play" records which have the narrow or microgroove type of grooves.
4. 10-INCH RECORD SHELF should be raised to a vertical position when playing 12-inch records or lowered to a horizontal position when playing 10-inch records automatically.
5. HOLD-DOWN ARM should be lowered onto the top record of the stack when playing records automatically.

MANUAL OPERATION

1. Raise the hold-down arm and the 10-inch record support to a vertical position and lower the record onto the turntable over the spindle.
2. Select the proper turntable speed with the SPEED CONTROL KNOB.
3. Set the PICKUP ARM SWITCH to select the proper pickup arm.
4. Rotate the CONTROL KNOB to manual.
5. Place the stylus of the proper pickup arm in the lead-in groove of the record.
6. After the record has been played, lift the pickup arm and place it at its rest position. Rotate the CONTROL KNOB to the "OFF" position to stop the turntable.

AUTOMATIC OPERATION

1. Place up to ten 12-inch or twelve 10-inch records over the spindle resting on the spindle shelf and the 12-inch shelf or the 10-inch shelf. Lower the HOLD DOWN ARM onto the records.
2. Set the PICKUP ARM SWITCH to *St'd Play.*

Note: Only records of the wide or standard groove width which require a 3 mil stylus may be played automatically on this changer.

3. Select the proper speed for the records with the SPEED CONTROL KNOB. Note: Do not intermix records requiring different turntable speeds.
4. Rotate the CONTROL KNOB to *Rej.* and release it. The record changer will automatically play the records. After the last has played, lift the pickup arm and place it on its rest position. Rotate the CONTROL KNOB to "*OFF*" to stop the changer.

OPERATING PRECAUTIONS

Do not use warped records for automatic operation. For warped, odd-size, or home-recorded records, play as for manual operation.

When playing microgroove records, do not allow the St'd Pickup to contact the records as this may damage the record surface.

Do not allow oil or grease to come in contact with the rubber of the idler wheel.

P11 REPLACEMENT PARTS LIST

Cat. No.	Description	Ref. No.
RAC-077	COVER—Terminal cover	113
RBH-011	MOTOR—Two-speed phono-motor (see Fig. 4)	100
RHG-023	GROMMET—For motor speed lever	103
RHX-017	ARM REST—Assembly	110
RMM-092	ARM REST BUMPER	109
RMM-108	LEVER—Motor speed lever	102
RMM-109	"C" WASHER	104
RMM-110	LEVER—Motor speed change lever	105
RMM-111	WASHER—Friction washer	106
RMM-112	SPACER—Thin motor spacer	107
RMM-113	SPACER—Thick motor spacer	108
RMS-178	SPRING—Balance spring inside RPA-008	112
RPA-008	TONE ARM ASSEMBLY—For LP records	111
RPX-040	STANDARD PLAY PICKUP	
RPX-041	LONG PLAY PICKUP	
RSW-067	SWITCH—Tone arm switch	101

MODEL P11

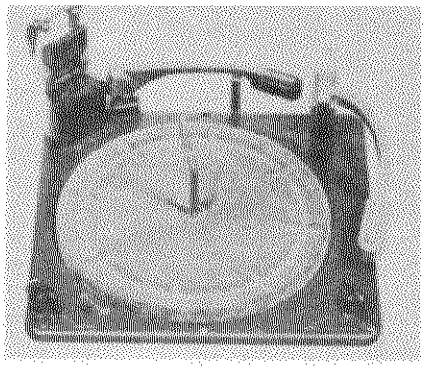

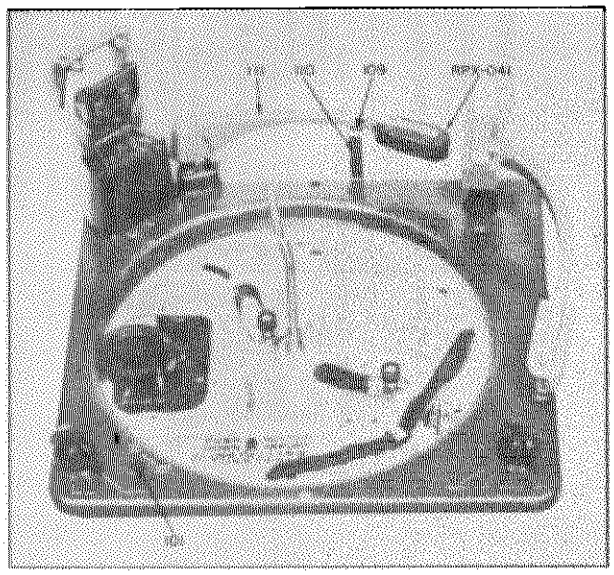

Fig. 1

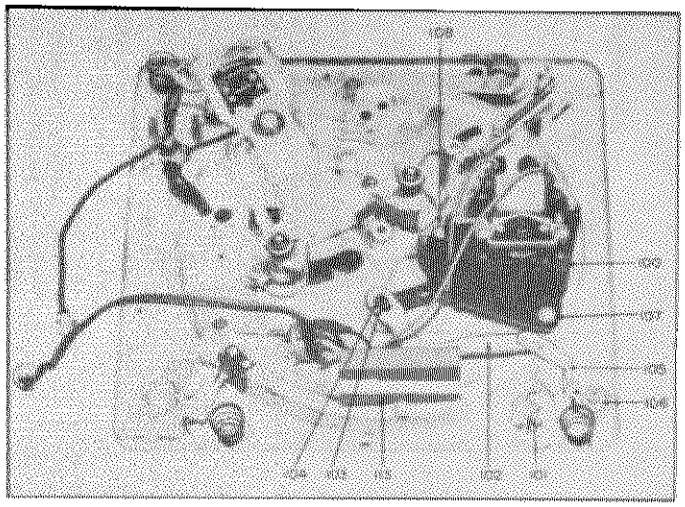

Fig. 2

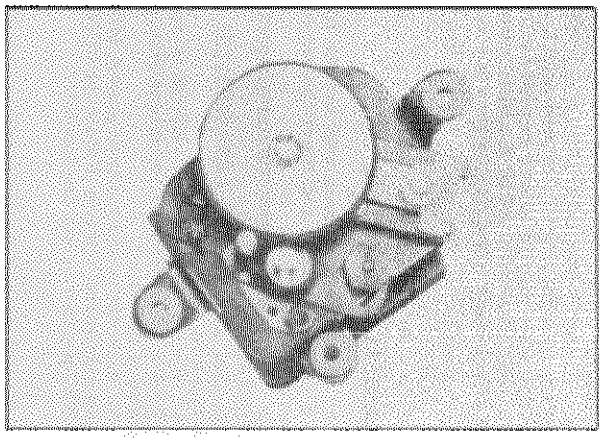

Fig. 3. RBH-010
Two-speed phono motor with belt driven 33⅓ RPM bushing

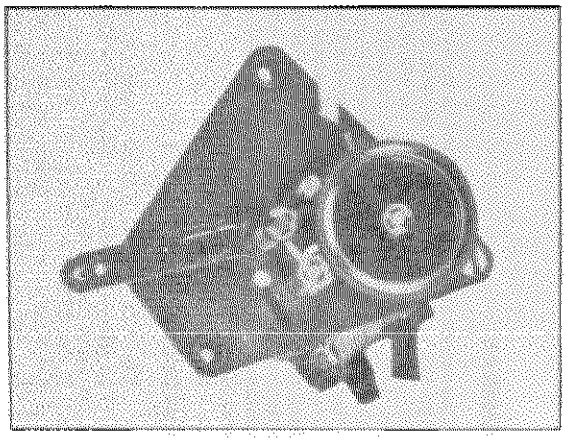

Fig. 4. RBH-011
Two-speed phono motor with idler wheel switching cam

©John F. Rider

MILWAUKEE Record Changer
No. 11200 Series

TO OPERATE MANUALLY

Raise the record balance arm (42) and the 10" record support (38).
Place a record on the turntable and turn the control button to the manual position.
Place the pickup arm at the start of the record and return it to the pickup arm rest at the end of the record.

TO OPERATE AUTOMATICALLY

Place the pickup arm on the pickup arm rest and raise the record balance arm (42).
(The 10" record support (38) must be lowered for 10" records and raised for 12" records.)
Place 12-10" or 10-12" records on the spindle and record support.
Lower the record balance arm (42) and turn the control button to reject and release it. it will automatically return to the automatic position.
To reject an unfinished record turn the control button to reject and release it.
To remove records from the turntable, turn the control button to the OFF position and raise the record balance arm (42) and the 10" record support (38) and lift the records off.

CYCLE OF OPERATION

The following drawings show a complete cycle of operation. Figures 1, 1A, 1B and 1C show the mechanism in the OFF or nonoperating position. The rest of the Figures show the mechanism in various phases of the change cycle.

To start the change cycle turn the control button (126) to the Reject position as shown in Fig. 2. This causes the notched washer (127) to take the position shown in Fig. 2B. And as soon as the control button (126) Fig. 2 is released, the selector lever spring forces the notched washer (127) Fig. 3B, also (126) Fig. 3, into the automatic position. This action of the notched washer causes point A of the selector lever (132) Fig. 2B to move against the ON-OFF switch (125 Fig. 2 B applying voltage to the motor.

Point B of the selector lever (132) Fig. 2B moves away from the lead roller shoulder nut (95) Fig. 2B. Point C of the selector lever (132) pushes against the lead roller dropping lever (78) Fig. 2B causing it to move away from the lead roller shoulder nut (95) Fig. 2B. Thereby, allowing the lead roller (94) Fig. 2A to enter the spiral cam underneath the turntable Fig. 2A.

Fig. 2C shows the lead roller (94) engaged with the spiral cam. This starts the change cycle by the action of the spiral cam forcing the lead roller (94) Fig. 3C and the swing arm (71) Fig. 3B toward the center of the turntable. As the swing arm moves toward the center of the turntable, the cammed end of it (Point D), Fig. 3B forces the adjusting plunger pin (21) Fig. 3C upward raising the pickup arm (14) Fig. 3C from the pickup arm rest (2) Fig. 3C.

As the swing arm (71) Fig. 3B moves farther toward the center of the turntable, the ratchet arm friction springs (82 and 83) Fig. 3B engage the ratchet arm (7) Fig. 3B and swings the pickup arm (14) Fig. 3 away from the turntable (136) Fig. 3 until the ratchet arm (7) Fig. 3B is stopped by coming in contact with the ratchet arm stop bracket (142) Fig. 3B.

MODEL 11200, Series

As the swing arm (71) Fig. 3B starts toward the center of the turntable, Point E, on the swing arm (71) Fig. 3B moves away from the ratchet arm lever (64) Fig. 3B allowing it to pivot up due to the tension of the ratchet arm lever spring (69) Fig. 3B so that it will be in a position for Point F of the ratchet arm lever to contact the ratchet arm (7) Fig. 3 B at the proper point for the pickup arm (14) Fig. 3C to set down on the record. If it were not engaged at the proper point, the tension of the ratchet arm friction springs (82 and 83) Fig. 3B would carry the pickup arm past the start of the record.

Another operation that is taking place as the swing arm (71) Fig. 3B moves toward the center of the turntable is that the roller (73) Fig. 3B of the cammed dropping lever (74) Fig. 3B, makes contact with the lever trip bracket (109)Fig. 3B and gradually forces the cammed dropping lever away from the bearing pin shoulder nut (103) Fig. 3C so that as soon as a record is dropped, the lower or return roller (102) Fig. 3C also (102) Fig. 3A is allowed to enter the spiral cam Fig. 3A so that the swing arm (71) Fig. 3B can return to its original position. This will be covered later, as soon as this phase of the change cycle occurs.

Point G of the swing arm (71) Fig. 3B pushes against the roller (117) Fig. 3B of the ejector idler lever (118) Fig. 3B and the adjusting screw (119) Fig. 3B on the ejector idler lever (118) Fig. 3B pushes against the lower push pin (114) Fig. 3B, which in turn pushes against the ejector lever (31) Fig. 3B (a side view of the ejector lever (31) is shown in Fig. 6). The ejector lever (31) Fig. 6A then pushes against the 12" record slide bolt (33) Fig. 6A which pushes the 10" record slide bolt (40) Fig. 6A; causing the 10" record to drop on the turntable.

To play a 12" record, raise the 10" record support (38) Fig. 8, which causes point J on the 10" record support (38) Fig. 8 to engage the change lever ejector (28) Fig. 8A, which pivots and moves the change lever (67) Fig. 1B, toward the rear of the changer base plate. This allows the ratchet arm lever (64) Fig. 1B to pivot more causing the ratchet arm (7) Fig. 1B to hit against point K on the ratchet arm lever (64) Fig. 1B causing the 12" record to land on the turntable, as was the case with Point F for the 10" record.

As mentioned in a previous paragraph, the roller (73) Fig. 3B of the cammed dropping lever (74) Fig. 3B has made contact with the lever trip bracket (109) Fig. 3B and has forced the cammed dropping lever (74) Fig. 3B away from the bearing pin shoulder nut (103) Fig. 3C allowing the lower or return roller (102) Fig. 3A (also 102) Fig. 3C) to enter the spiral cam Fig. 3A and so to return the swing arm (71) Fig. 3B to its original position.

The lead roller (94) Fig. 3A (also 94 Fig. 3C) is then forced out of the spiral cam by a raised portion of the spiral cam Point H Fig. 3A. Through the action of the tension spring (79) Fig. 3B the lead roller dropping lever (78) Fig. 3B is moved into position over the lead roller shoulder nut (95) Fig. 3B thereby keeping the lead roller (94) Fig. 3C also Fig. 3A out of the spiral cam.

As the swing arm (71) starts back to its original position, the ejector mechanism returns to its' original position. The pickup arm is being moved into position to land on the record through the action of the ratchet arm friction springs (82 and 83) Fig. 4B, on the ratchet arm (7) Fig. 4B.

As explained in a previous paragraph, the ratchet arm lever (64) Fig. 4B has been moved up so as to stop the ratchet arm (7) Fig. 4B at the proper position for the pickup arm to land on the record. As the swing arm (71) Fig. 4B nears the end of its' return swing Point I of the swing arm engages

©John F. Rider

the friction brake spring spring (61) Fig. 4B. This insures smooth lowering of the pickup arm and also tends to hold the swing arm (71) Fig. 4B in the same position while a record is being played. As soon as the adjusting plunger pin (21) Fig. 4C starts down the cammed end Point D Fig. 4B of the swing arm (71) Fig. 4B the ratchet arm friction springs (82 and 83) Fig. 4B disengage from the ratchet arm (7) Fig. 4B. Point F of the ratchet arm lever (64) Fig. 4B is forced away from the ratchet arm (7) Fig. 4B by Point E on the swing arm (71) Fig. 4B.

The pickup arm (14) Fig. 4 also Fig. 4C is lowered on the record and then Point H of the spiral cam Fig. 4A forces the lower or return roller (102) Fig. 4A also Fig. 4C out of the spiral cam. Through the action of the tension spring (76) Fig. 4B the cammed dropping lever (74) Fig. 4B also Fig. 4C is moved into position over the bearing pin shoulder nut (103) Fig. 4C thereby keeping the lower or return roller (102) Fig. 4C out of the spiral cam. Thus the pickup arm can continue across the record.

Fig. 5 shows the pickup arm (14) at the end of the record, and Fig. 5A shows how the ratchet arm (7) has also moved to the end of the record and the adjusting screw (11) of the ratchet arm (7) is just at the point of pushing the lead roller dropping lever (78) away from the lead roller shoulder nut (95) so that the lead roller (94) Fig. 5B may enter the spiral cam for another cycle of operation.

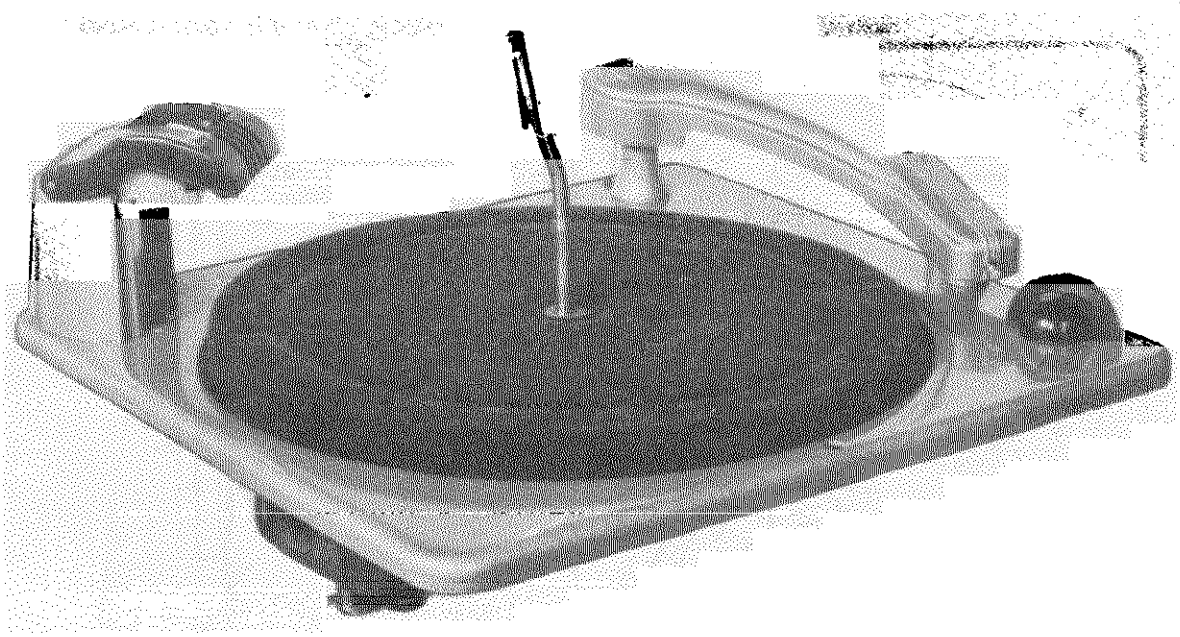

©John F. Rider

MODEL 11200, Series

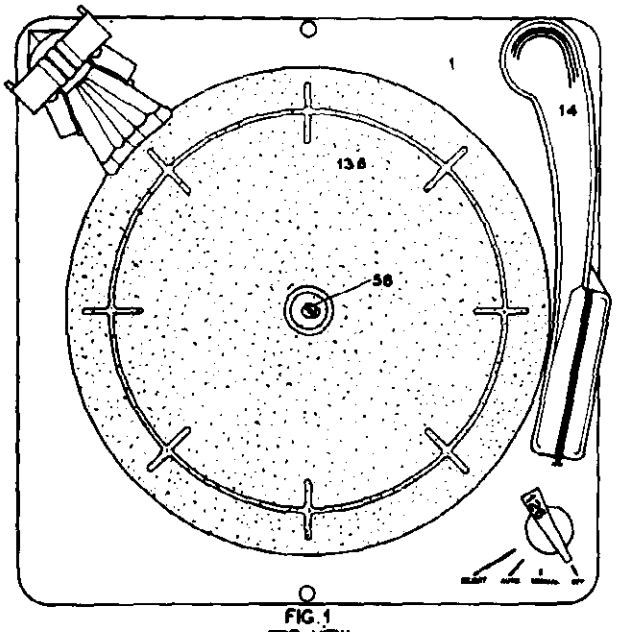

FIG. 1
TOP VIEW
(NORMAL POSITION)

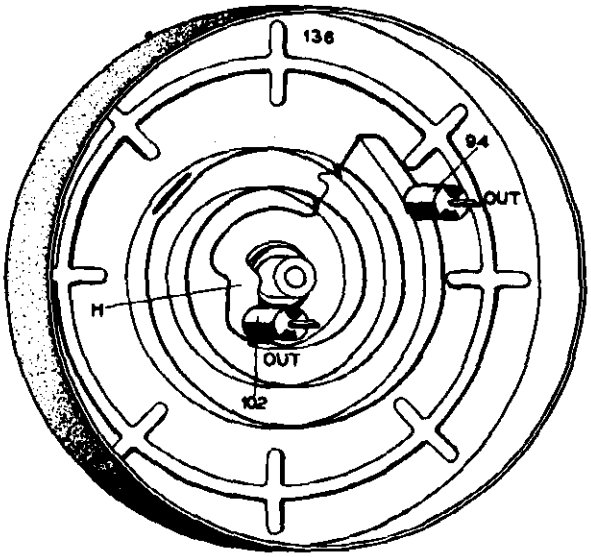

FIG. 1A
BOTTOM VIEW OF TURNTABLE
SHOWING SPIRAL CAM IN
NORMAL POSITION

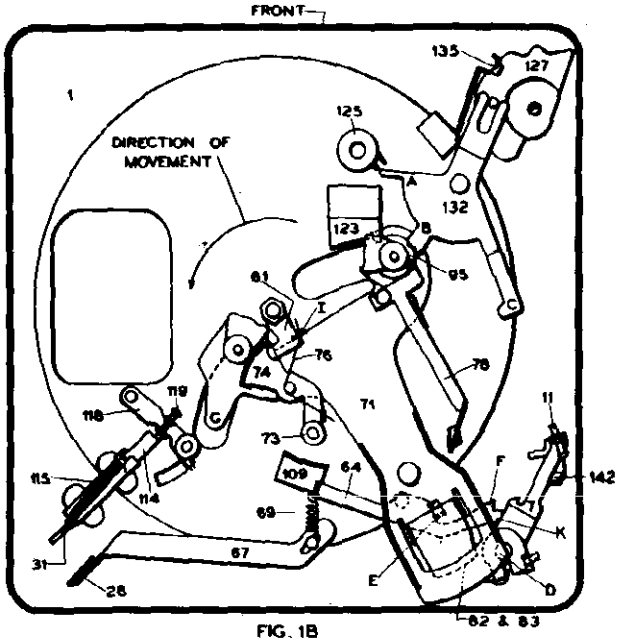

FIG. 1B
BOTTOM VIEW
(NORMAL POSITION)

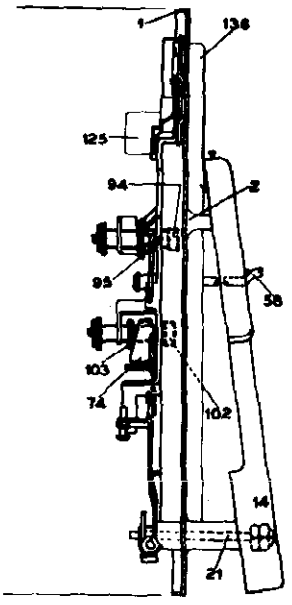

FIG. 1C
RIGHT END VIEW

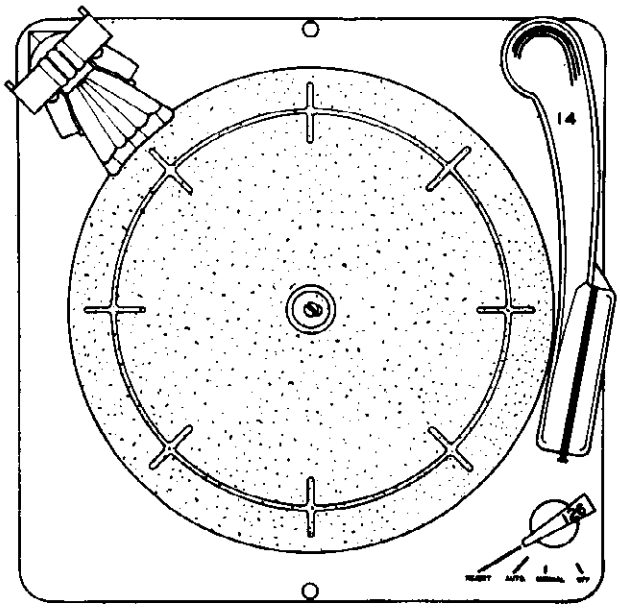

FIG. 2
TOP VIEW
(REJECT POSITION)

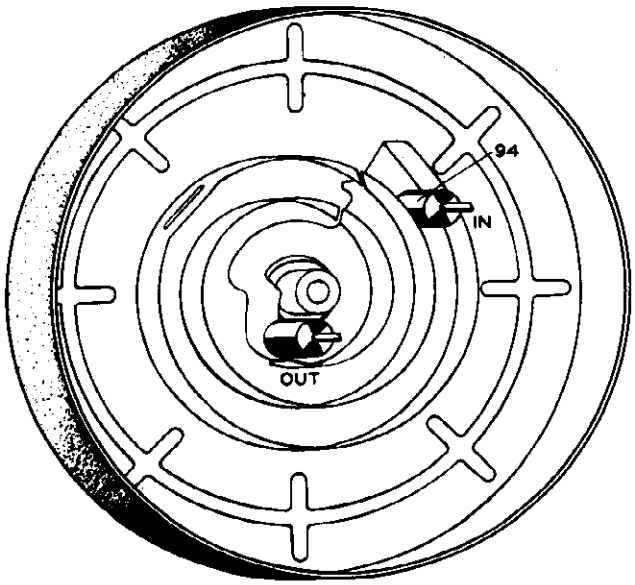

FIG. 2A
BOTTOM VIEW OF TURNTABLE
SHOWING SPIRAL CAM IN
REJECT POSITION

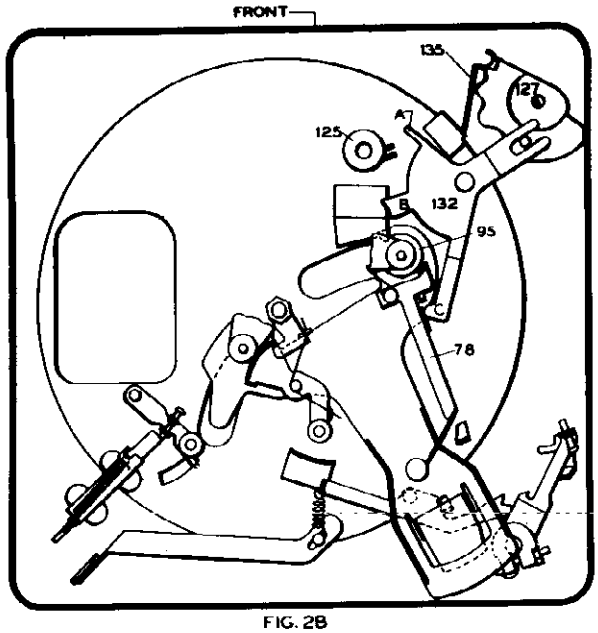

FIG. 2B
BOTTOM VIEW
(REJECT POSITION)

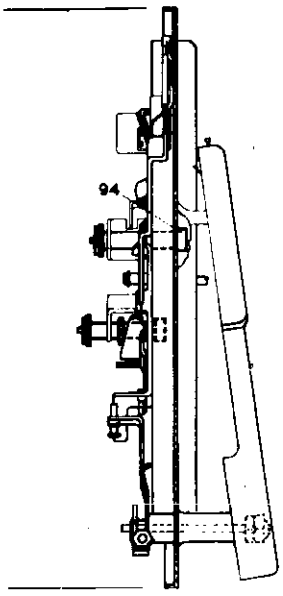

FIG. 2C
RIGHT END VIEW

©John F. Rider

MODEL 11200, Series

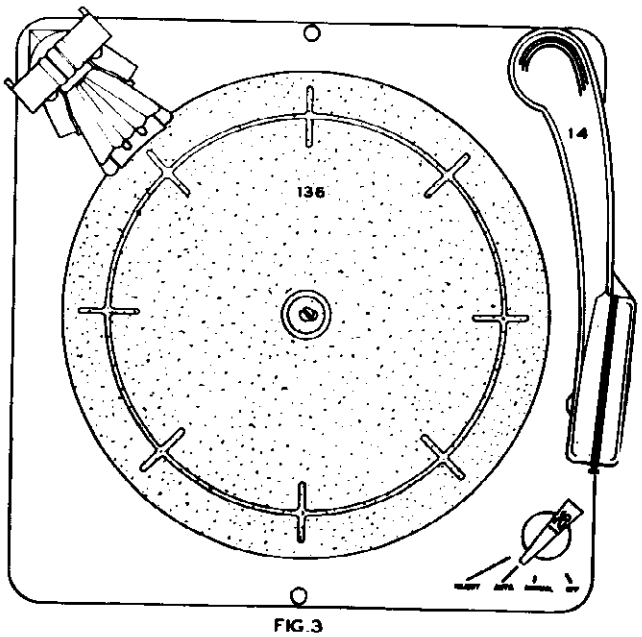

FIG. 3
TOP VIEW
AUTOMATIC POSITION
(RECORD EJECTED)

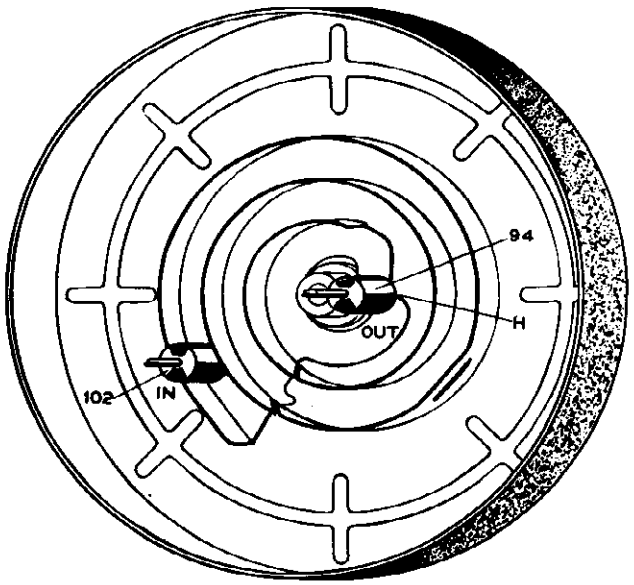

FIG. 3A
BOTTOM VIEW OF TURNTABLE
SHOWING SPIRAL CAM IN
RECORD EJECTING POSITION

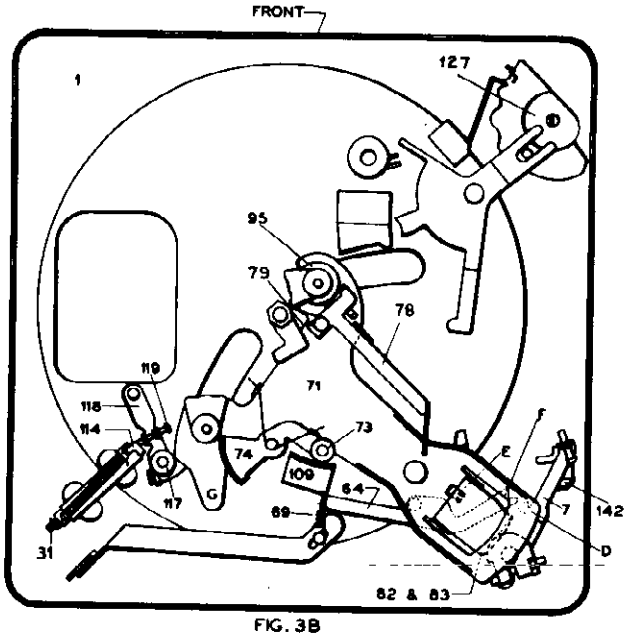

FIG. 3B
BOTTOM VIEW
(AUTOMATIC POSITION)

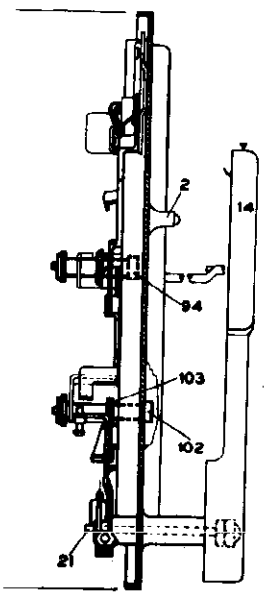

FIG. 3C
RIGHT END VIEW

©John F. Rider

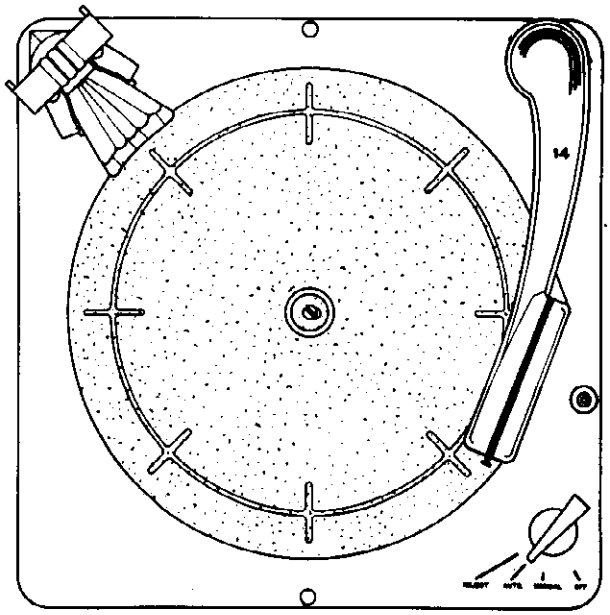

FIG. 4
TOP VIEW
AUTOMATIC POSITION
(START OF RECORD)

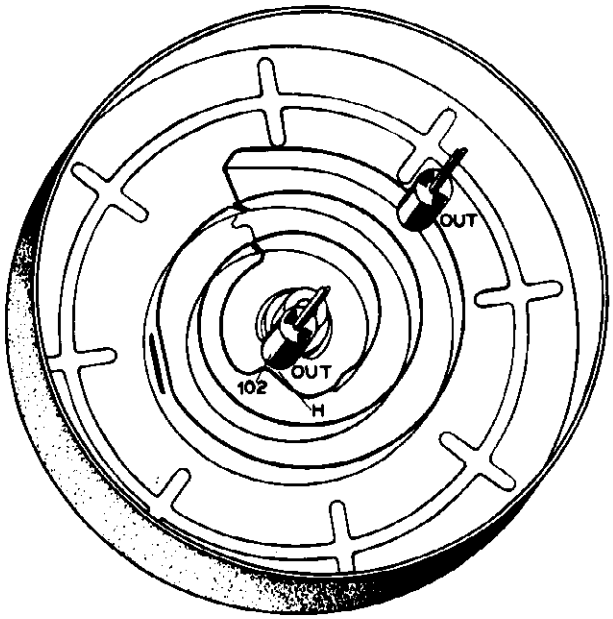

FIG. 4A
BOTTOM VIEW OF TURNTABLE
SHOWING SPIRAL CAM IN
CYCLE OF RECORD PLAYING POSITION

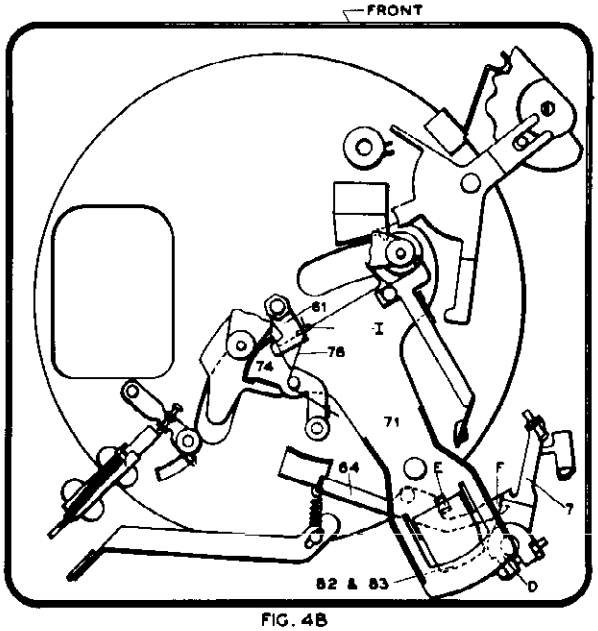

FIG. 4B
BOTTOM VIEW
(START OF RECORD POSITION)

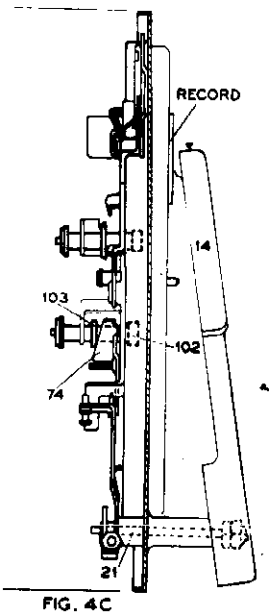

FIG. 4C
RIGHT END VIEW

MODEL 11200, Series

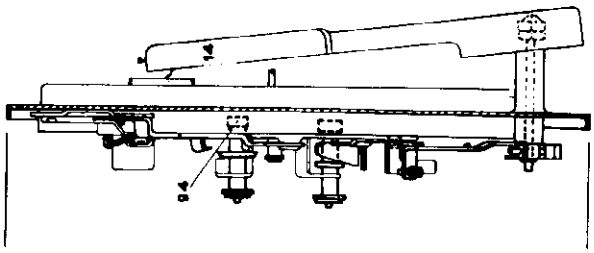

FIG. 5B
RIGHT END VIEW

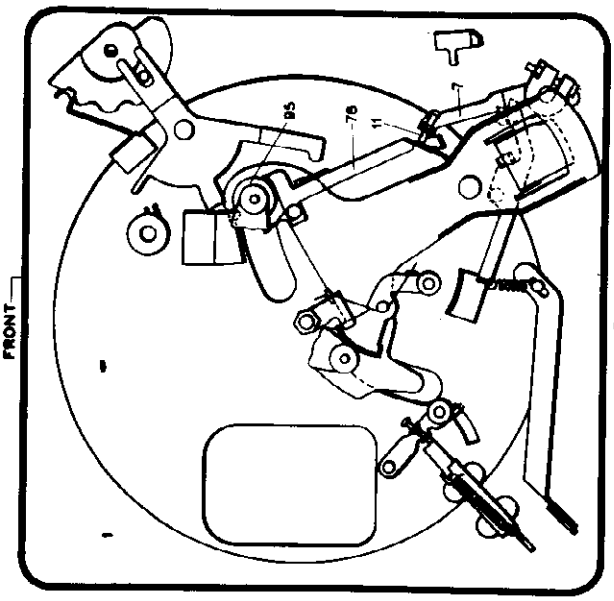

FIG. 5A
BOTTOM VIEW
(END OF RECORD POSITION)

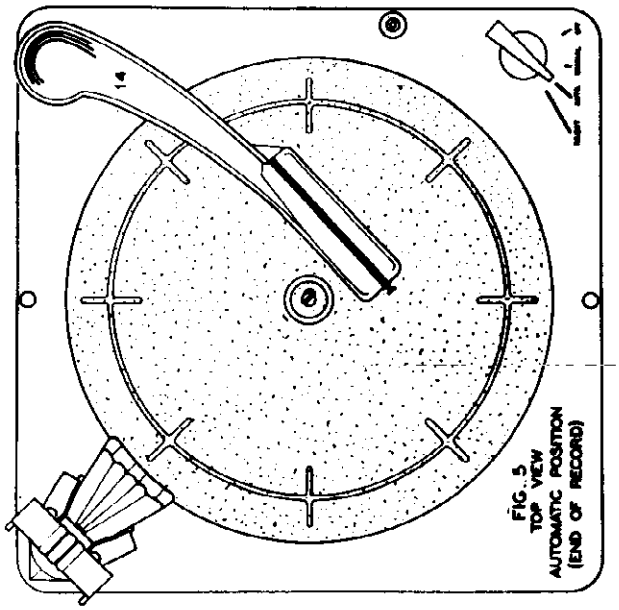

FIG. 5
TOP VIEW
AUTOMATIC POSITION
(END OF RECORD)

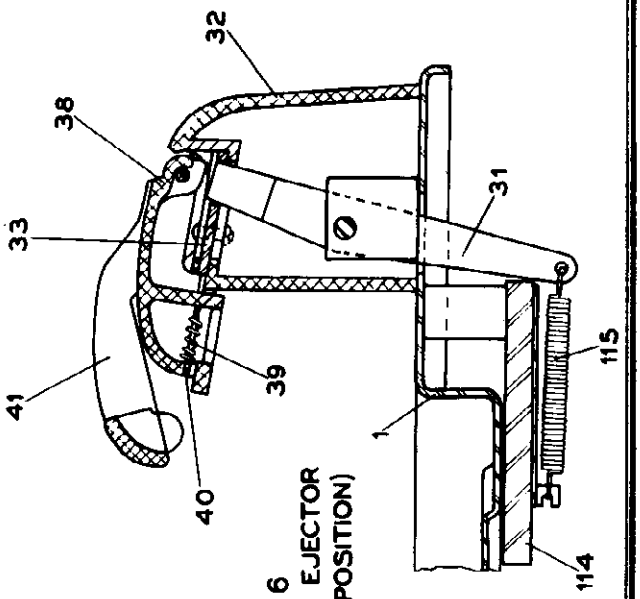

FIG. 6
10" RECORD EJECTOR
(NORMAL POSITION)

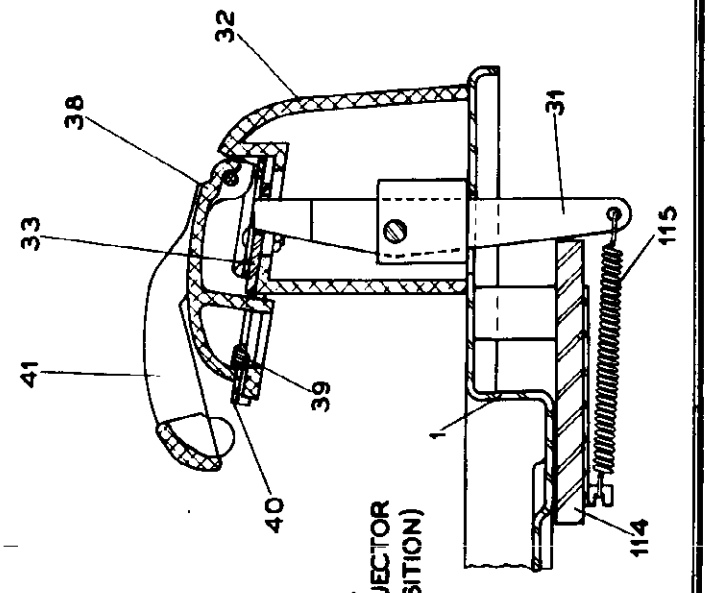

FIG. 6A
10" RECORD EJECTOR
(EJECTING POSITION)

©John F. Rider

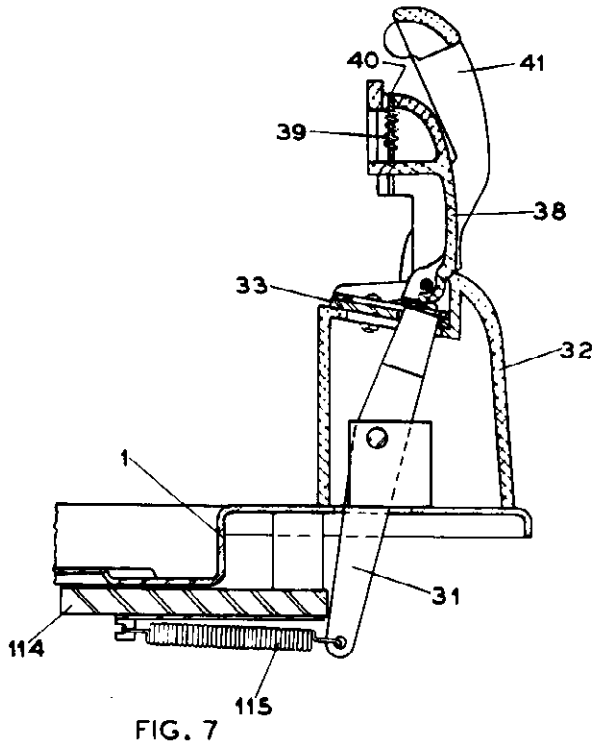

FIG. 7
12" RECORD EJECTOR
(NORMAL POSITION)

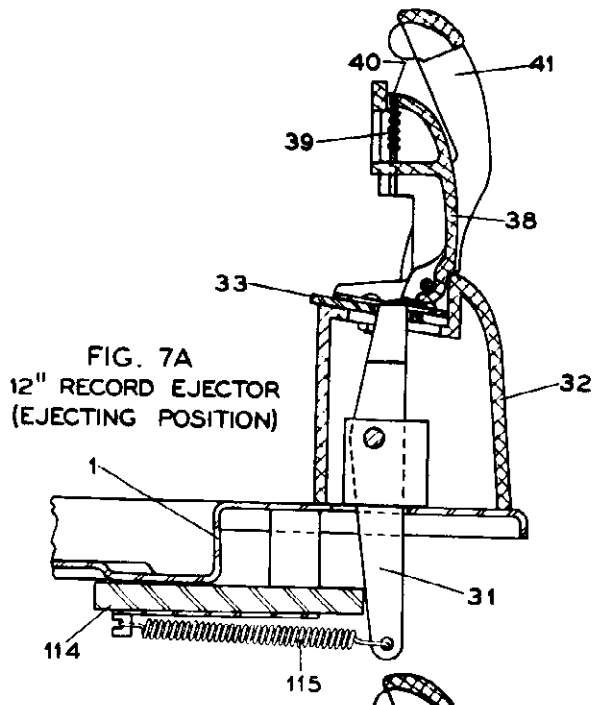

FIG. 7A
12" RECORD EJECTOR
(EJECTING POSITION)

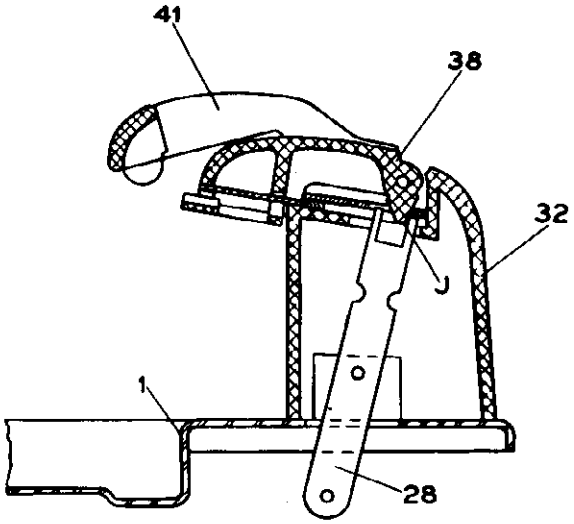

FIG. 8
CHANGE LEVER EJECTOR (28)
IN 10" POSITION

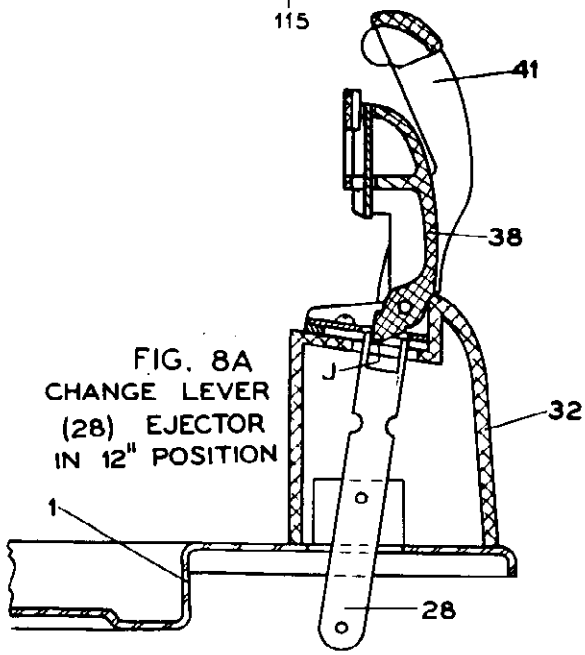

FIG. 8A
CHANGE LEVER
(28) EJECTOR
IN 12" POSITION

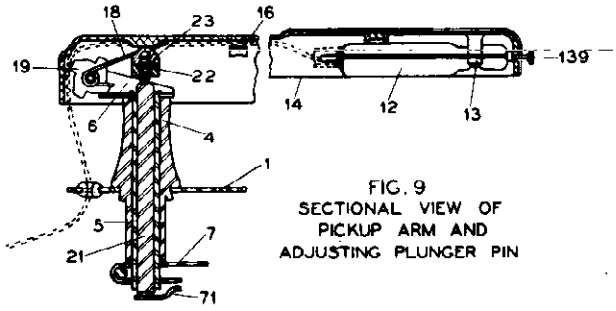

FIG. 9
SECTIONAL VIEW OF
PICKUP ARM AND
ADJUSTING PLUNGER PIN

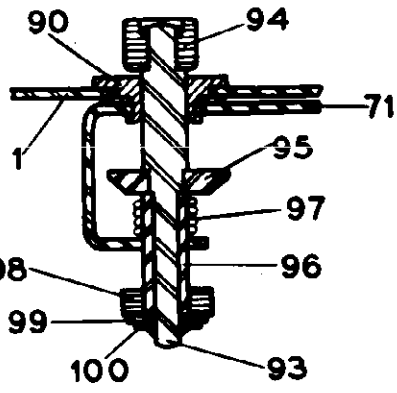

FIG. 10
SECTIONAL
VIEW OF
LEAD ROLLER
ASSEMBLY

TROUBLE SHOOTING CHART

SYMPTOMS	CAUSES	REMEDIES
1-Mechanism continues to cycle	1-Broken or bent selector lever spring (135)	1-Replace if broken 1a-If bent, remove the notched washer (127) and straighten the spring
2-Mechanism jams on return half of cycle	1-A broken or leave dropping lever tension spring (79)	1-Replace if broken 1a-Reset in proper place if loose
3-Mechanism jams on forward	1-A broken or loose cammed dropping lever spring (76)	1-Replace if broken 1a-Reset in proper place if loose
4-Mechanism trips before end	1-Ratchet arm adjusting screen (11) turned too far clockwise	1-Turn adjusting screw (11) counterclockwise until proper point is reached
5-Mechanism does not trip at end of record	1-Ratchet arm adjusting screw (11) turned too far counterclockwise 2-Lead roller compression spring (97) too weak to push lead roller (94) into spiral cam (137 & 138)	1-Turn adjusting screw (11) counterclockwise until proper point is reached 2-Replace compression spring (97)
6-Pickup arm (14) jumps groove	1-The lead roller dropping lever (78) may be bent and is jammed	1-Straighten it out and check to see that it moves freely
7- Pickup arm (14) lands too fast on record	1-Friction broke spring (61) weak or broken	1-Replace spring
8-Pickup arm (14) does not land at start of record	1-Ratchet arm lever spring (69) may be too weak to hold ratchet arm lever (64) in place 2-The ratchet arm clamp screw (8) may be loose	1-Replace spring 2-Disconnect line cord and place control button (126) on automatic. Trip the mechanism and rotate manually noting where pickup arm lands. Loosen clamp screw (8) and holding ratchet arm in place move pickup to start of record and tighten clamp screw (8)

©John F. Rider

TROUBLE SHOOTING SHART (Cont'd)

SYMPTOMS	CAUSES	REMEDIES
9-Pickup arm (14) does not land on record	1-Acorn nut (23) on plunger pin (21) not properly adjusted 2-Shielded lead from crystal pickup may be between pickup arm (14) and acorn nut (23)	1-Loosen jam nut (22) and screw acorn nut (23) farther down on plunger pin (21) 2-Dress shielded head over to one side out of the way
10-Records do not drop	1-The idler lever adjusting screw (119) not adjusted properly 2-The ejector arm extension spring (115) loose or broken 3-The 10" ejector compression spring (39) weak or lost	1-Turn the adjusting screw (119) until the 12" record slide bolt (33) extends slightly beyond the front edge of the 12" record support (34) 2-If loose reconnect, if broken replace 3-Replace spring
11-No sound	1-Audio amplifiers defective 2-Crystal pickup leads shorted 3-Crystal cartridge defective	1-Check with radio reception 2-Check for shorted leads 3-Try new cartridge
12-Distorted sound	1-Audio amplifier defective 2-Defective or worn needle 3-Defective crystal cartridge 4-Worn record	1-Check with radio reception 2-Replace needle 3-Try new cartridge 4-Try new record
13-Wow or motor rumble	1-Worn spots in idler wheel (46) 2-Oil on idler wheel (46) and turntable rim 3-Warped record	1-Replace idler wheel or if worn spots are not too deep try sanding the idler wheel smooth 2-Clean idler wheel and turntable rim
14-Change cycle is too slow or motor overheats	1-Moving parts binding 2-Line voltage incorrect 3-Defective motor winding	1-Locate part and oil lightly 2-Check for correct line voltage 115 to 117 volts 60 cycles 3-Replace motor if defective

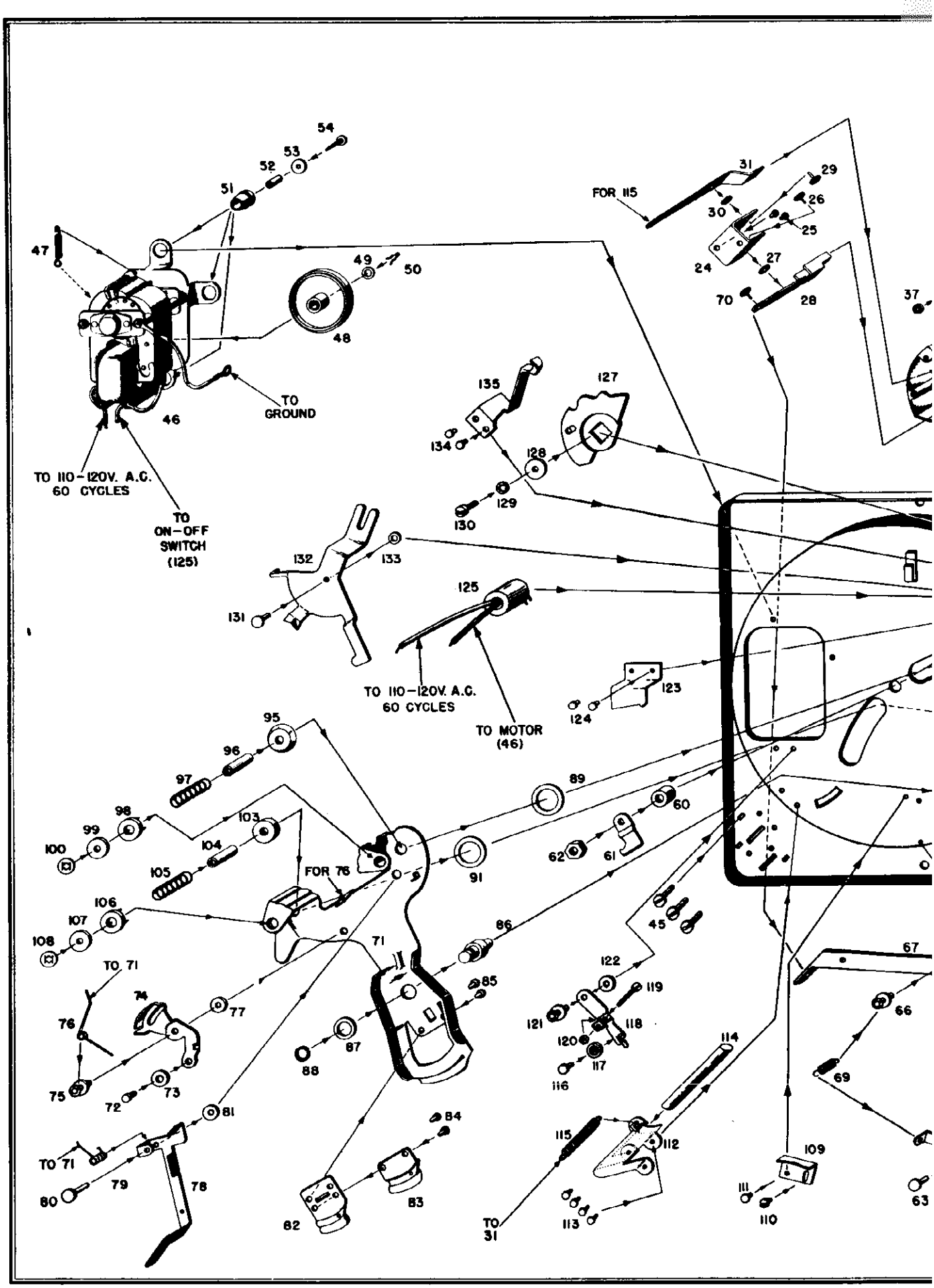

TO GROUND
TO 110-120V. A.C. 60 CYCLES
TO ON-OFF SWITCH (125)
FOR 115
TO 110-120V. A.C. 60 CYCLES
TO MOTOR (46)
FOR 76
TO 71
TO 71
TO 31

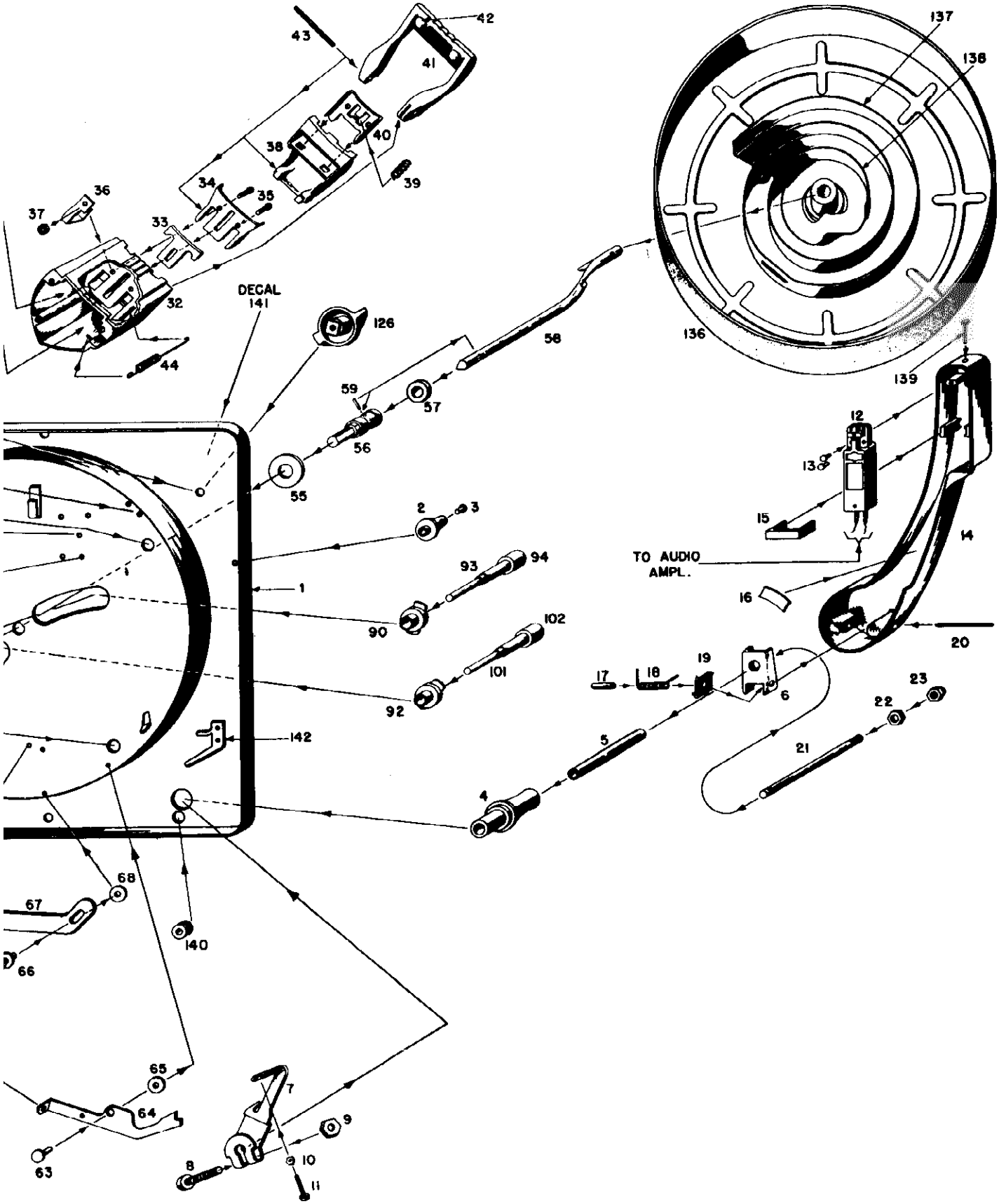
42
43
41
40
38
39
34
35
36
37
33
32
44
DECAL
141
126
58
59
57
56
55
137
138
136
139
12
13
15
14
TO AUDIO
AMPL.
16
20
2
3
93
94
1
90
102
101
92
142
17
18
19
6
23
22
21
5
4
68
67
140
66
65
64
63
7
9
8
10
11

MODEL 11200, Series

MILWAUKEE RECORD CHANGER

NO. 11200 SERIES

PART NO.	MFR. STOCK NO.	DESCRIPTION
1	11201	MECHANISM PLATE
2	11245	PICKUP ARM REST
3	11224	PICKUP ARM REST BUMPER
4	11230	STATIONARY POST
5	10755-C	PICKUP ARM SWING POST
6		
7	11237	RATCHET ARM
8	10837	10-32x1" CLAMP SCREW
9	10810	10-32 CLAMP SCREW NUT
10	10792	6-32 ADJUSTING NUT
11		6-32x5/8" ADJUSTING SCREW
12	10753	PICKUP CARTRIDGE
13	10834	4-40x3/4" SCREWS FOR CRYSTAL CARTRIDGE
14	10752	PICKUP ARM
15	10846	VISCOLOY STRIP
16	10754	PICKUP LEADS SPRING CLIP
17	10763	BALANCE SPRING TUBE
18	10764	PICKUP ARM BALANCE SPRING
19	10766	PICKUP ARM RATCHET
20	10798	PIVOT YOKE PIN
21	10757	ADJUSTING PLUNGER PIN
22	10810	10-32 BEARING PIN JAM NUT
23	10762	ACORN NUT FOR PICKUP ARM
24	11219	EJECTOR PIVOT CHANNEL
25		EJECTOR PIVOT CHANNEL RIVETS
26		CHANGE LEVER EJECTOR PIVOT PIN
27		EJECTOR PIVOT PIN WASHER
28	11222	CHANGE LEVER EJECTOR
29		EJECTOR LEVER PIVOT PIN
30		LEVER PIVOT PIN WASHER
31	11218	EJECTOR LEVER
32	11208	EJECTOR BOX
33	11217	12" RECORD SLIDE BOLT
34	11209	SLIDE BOLT COVER
35	11232	4-40x3/8" R.H. MACHINE SCREWS
36	11220	EJECTOR PRESSURE SPRING
37	11241	4-40 HEX NUT
38	11213	10" RECORD SUPPORT
39	11215	EJECTOR COMPRESSION
40	11214	10" RECORD SLIDE BOLT
41	11212	BALANCE ARM
42	11211	BALANCE ARM BUMPERS
43	11223	HINGE PIN
44	11210	BALANCE ARM SPRING
45	10831	10-32x3/8" THREAD CUTTING MACHINE SCREWS
46	10825	PHONO MOTOR
47		IDLER WHEEL TENSION SPRING
48		IDLER WHEEL
49		IDLER WHEEL FLAT WASHER
50		HAIRPIN SPRING CLIP
51		3 GROMMETS FOR MOUNTING MOTOR
52		3 SPACERS FOR MOUNTING MOTOR
53		3 FLAT WASHERS FOR MOUNTING MOTOR
54	10827	3 6x5/8" SM MOTOR MOUNTING SCREWS
55	10828	REINFORCEMENT WASHER
56	11249	CENTER POST DOG
57	10823-C	FRICTION SPRING WASHER
58	11250	CENTER POST
59		PIN FOR CENTER POST AND CENTER POST DOG
60	10736	SPACER COLLAR FOR CENTER POST
61	10741	FRICTION BRAKE SPRING
62	10830-A	5/16-24 CENTER STUD JAM NUT
63		RATCHET ARM LEVER PIVOT PIN
64	11234	RATCHET ARM LEVER
65		RATCHET ARM LEVER FLAT WASHER
66		CHANGE LEVER PIN
67	11236	CHANGE LEVER
68		CHANGE LEVER FLAT WASHER
69	11235	RATCHET ARM LEVER SPRING
70		CHANGE LEVER COUPLING RIVET
71	11229	SWING ARM
72		ROLLER RIVET
73		CAMMED DROPPING LEVER ROLLER
74	10730	CAMMED DROPPING LEVER
75		CAMMED DROPPING LEVER PIVOT PIN
76	10733	CAMMED DROPPING LEVER TORSION SPRING
77		CAMMED DROPPING LEVER WASHER
78	11231	LEAD ROLLER DROPPING LEVER
79	11233	DROPPING LEVER TORSION SPRING
80	11206	DROPPING LEVER PIVOT PIN
81		LEAD ROLLER DROPPING LEVER WASHER
82	10735	RATCHET ARM FRICTION SPRING
83	10791	RATCHET ARM FRICTION SPRING
84		RATCHET ARM FRICTION SPRING RIVETS
85		RATCHET ARM FRICTION SPRING RIVETS
86		SWING ARM PIVOT PIN
87	11239	33/64 I.D.x7/8 O.D.x.060" FLAT WASHER
88	11240	ESC RETAINING RING
89	10747	2 SWING ARM SLIDE WASHERS
90	10745	2 SWING ARM CLAMPS
91		
92		
93	10743	BEARING PIN
94	11248	ROLLER
95	11242	LEAD ROLLER SHOULDER NUT
96	10751	BEARING PIN SPACER
97	10750	COMPRESSION SPRING
98	11244	ROLLER CUSHION
99	10801	FULCRUM BEARING WASHER
100	10765	ROLLER BEARING SPEED NUT
101	10743	BEARING PIN
102	11248	ROLLER
103	10742	BEARING PIN SHOULDER NUT
104	10751	BEARING PIN SPACER
105	10750	COMPRESSION SPRING
106	11244	ROLLER CUSHION
107	10801	FULCRUM BEARING WASHER
108	10765	ROLLER BEARING SPEED NUT
109	10811	LEVER TRIP BRACKET
110	10831	6-32x3/8" THREAD CUTTING MACHINE SCREW
111		TRIP BRACKET RIVET
112	10724	EJECTOR PIN GUIDE
113		EJECTOR PIN GUIDE RIVETS
114	10804	LOWER PUSH PIN
115	10728	EJECTOR ARM EXTENSION SPRING
116		IDLER LEVER ROLLER PIN
117		EJECTOR IDLER LEVER ROLLER
118	10813	EJECTOR IDLER LEVER
119		6-32x5/8" ADJUSTING SCREW
120		6-32 NUT FOR ADJUSTING SCREW
121		IDLER LEVER PIVOT PIN
122		IDLER LEVER BEARING WASHER
123	11228	LEAD ROLLER RELEASE
124		ROLLER RELEASE RIVETS
125	11243	SWITCH
126	11203	CONTROL BUTTON
127	11225	NOTCHED WASHER
128	10801	FULCRUM BEARING WASHER
129		SEMS SCREW LOCK WASHER
130	10848	10-32x3/8" SEMS SCREW
131		SELECTOR LEVER PIVOT PIN
132	11205	SELECTOR LEVER
133		SELECTOR LEVER BEARING WASHER
134		SPRING RIVETS
135	11226	SELECTOR LEVER SPRING
136	10702	TURNTABLE
137	10704	OUTER SPIRAL
138	10703	INNER SPIRAL
139		NEEDLE SET SCREW
140	10850	PICKUP LEADS GROMMET
141	11247	DECAL
142	10843	RATCHET ARM STOP BRACKET

DESCRIPTION OF CYCLE

In order to observe the action of the changer mechanism as it progresses through a complete cycle of operation, disconnect motor plug from power supply so that Turntable can be rotated by hand. Move the front Control Button to the right so that only the word "AUTO" is visible. Then slide the "START-REJECT" Control Button to the left as far as it will go and release it. The operation of all parts of the changer can now be examined as the Turntable is rotated **clockwise.**

FUNCTION	EXPLANATION
SETTING FOR DESIRED RECORD SIZE	1. The position of the "10-12" Control Button determines the size of records that may be played on the changer 2. When this Control Button is in the 12 inch position, the Index Pin (19) is stopped by the front notch on the Index Stop Lever (43). The horizontal motion of the Pick-up Arm (1) is thus stopped. After the Pick-up Arm Lift Pin (17) and Pick-up Arm (1) are lowered, the Pick-up Arm will land in the correct position to start playing a 12 inch record. 3. When the Control Button is in the 10 inch position, the Index Pin (19) is stopped by the rear notch on the Index Stop Lever (43). Since this notch is deeper than the front notch, the Pick-up Arm (1) will be stopped at a point closer to the Center Post. After the Pick-up Arm Lift Pin (17) and Pick-up Arm (1) are lowered, the Pick-up Arm will land in the correct position to start playing a 10 inch record.
SETTING FOR DESIRED NEEDLE	1. Operating the Needle Selector (62) rotates Crystal Cartridge (2) to engage the proper Needle.

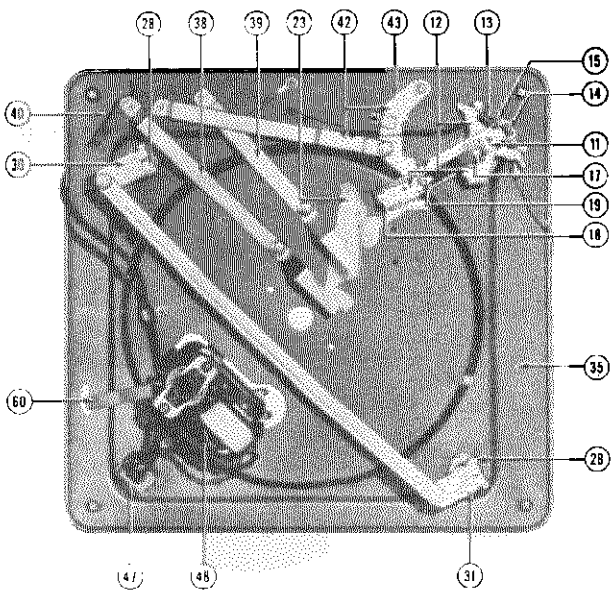

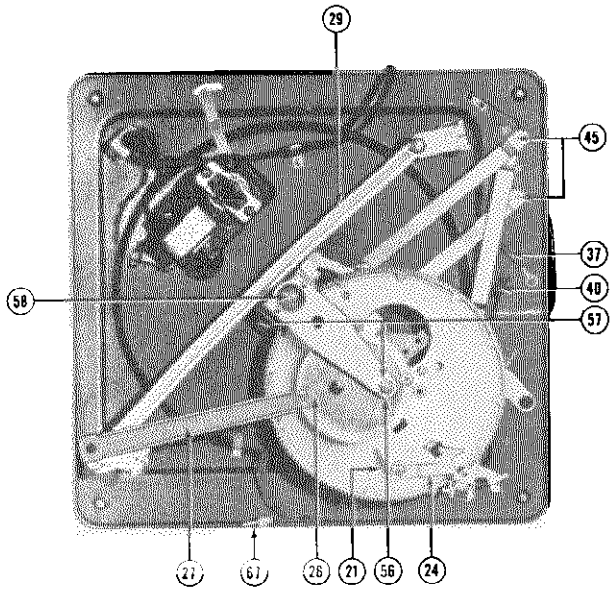

SETTING FOR DESIRED SPEED	1. When the Speed Selector Knob (61) is moved to the left as far as it will go toward the number "78" the motor hub rotates the Idler Wheel (52) which, in turn, engages the inside rim of the Turntable. 2. When the Speed Selector Knob (61) is moved to the right as far as it will go toward the number "33" an auxiliary shaft [connected to the motor hub through Rubber Drive Belt (16)] rotates the Idler Wheel (52). The Idler Wheel engages the inside rim of the Turntable.
STARTING **Operating the "ON-OFF" Switch (46).**	1. Operating this Switch supplies power to Motor (48). 2. Motor (48) operates Idler Wheel (52) to rotate Turntable and Turntable Gear (59). 3. All other parts of mechanism remain at rest until Starting Pawl (24) is released by trip action at end of playing cycle or by operation of the "START-REJECT" Control Button.

©John F. Rider

MODEL 9000

DESCRIPTION OF CYCLE (Continued)

FUNCTION	EXPLANATION
TRIPPING To trip mechanism and start change cycle, slide "START-REJECT" Control Button down and to the left as far as it will go and then release it.	1. Operating the "START-REJECT" Control Button causes the Reject Link (39) to move the Trip Release Assembly (23). This Assembly releases the Starting Pawl (24) and allows the Pawl to engage the Turntable Gear (59) and start the change cycle.
FUNCTION OF THE MAIN CAM (20)	1. The grooves on the upper surface of the Main Cam direct and co-ordinate the motions of the Pick-up Arm Lift Pin (17), which elevates the Pick-up Arm (1) during the change cycle and the Pick-up Arm Follower (18), which moves the Arm horizontally during the change cycle.
DISPLACEMENT OF A RECORD	1. While the Main Cam (20) is turning, the Eccentric (26) turns the Record Support Arms (32) through the action of the Eccentric Arm (27) and Tie Bar (29). 2. During the first half of the change cycle the Record Support Arm Shafts (30 and 31) and Record Support Arms (32) rotate in a clockwise direction. The two lower changer blades eject the bottom record loaded on the changer and the two upper changer blades slide under the remainder of the stack. 3. During the remainder of the cycle, the Record Support Arm Shafts (30 and 31) and Record Support Arms (32) rotate in a counter-clockwise direction. The upper changer blades now slide out from under the stack of records and drop the stack onto the lower changer blades.

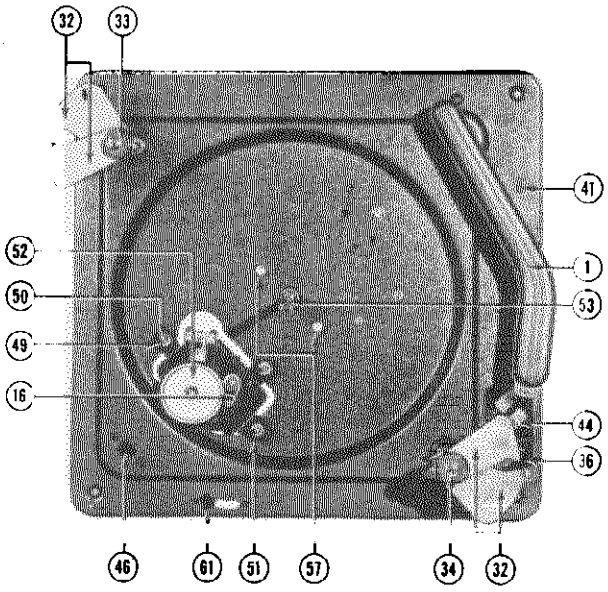

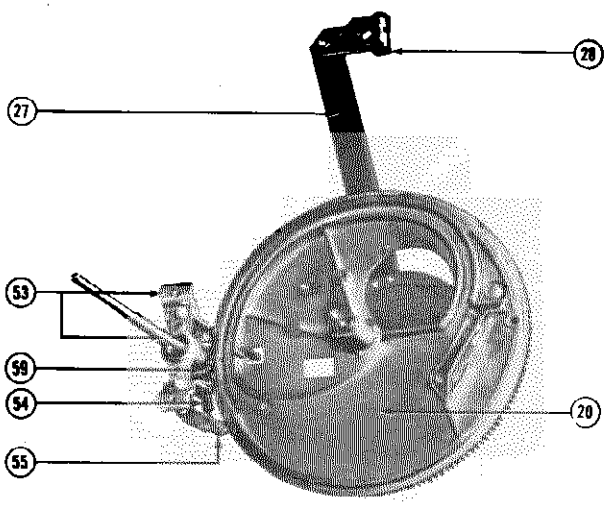

MOVEMENT OF PICK-UP ARM	1. As the Main Cam (20) starts to rotate, the Pick-up Arm Lift Pin (17) raises the Pick-up Arm (1) by riding up the outer ridge of the Main Cam (20). 2. After approximately a quarter turn of the Main Cam (20), the Pick-up Arm Follower (18) enters the groove in the Cam. The groove is cut so as to push the Pick-up Arm Follower (18) and thus the Pick-up Arm (1) to the right. 3. After approximately a three-quarter turn of the Main Cam (20), the groove in the Cam causes the Pick-up Arm Follower (18) and Pick-up Arm (1) to move to the left. 4. Near the end of the cycle, the outer ridge of the Main Cam (20) slopes downward and the Pick-up Arm Lift Pin (17) and Pick-up Arm (1) are lowered.

©John F. Rider

DESCRIPTION OF CYCLE (Continued)

FUNCTION	EXPLANATION
	5. The position at which the Pick-up Arm sets down on a record may be adjusted by means of the Index Screw (41) located on the upper right hand side of the changer base. The Screw acts as an eccentric in changing the position of the Index Stop Lever (43). A complete description of this method of positioning the Arm and another method which will give greater range of adjustment if required may be found in the "Trouble Shooting Chart" under the section entitled "Pick-up Arm (1) sets down at wrong starting point on record". 6. Elevation of the Pick-up Arm is adjusted by turning the Lift Adjusting Screw (5) located on the under side of the Pick-up Arm (1). For complete adjustment details, see section of "Trouble Shooting Chart" entitled "Pick-up Arm elevation is too high or too low during change cycle".
COMPLETION OF MAIN CAM CYCLE	1. After one complete revolution of the Main Cam (20), the notch in the teeth of this Cam will disengage the Main Cam from the Turntable Gear (59). The Cam Stop Roller (55) enters a groove on the side of the Main Cam (20) which serves to locate its rest position. 2. The Starting Pawl (24) contacts and again becomes held by the Trip Release Assembly (23).
ACTION OF TRIP MECHANISM AT END OF RECORD	1. During the playing portion of the cycle the Trip Latch (25) contacts the serrated edge of the Trip Release Assembly (23). While the Pick-up Arm (1) is advancing toward the Center Post (53) the Trip Latch (25) will not move this assembly. When the Needle (3) enters the spiral groove at the end of the record, the motion of the Pick-up Arm away from the Center Post will cause the Trip Latch (25) to operate the Trip Release Assembly (23). The Starting Pawl (24) will be released and will engage the Turntable Gear (59) to start the change cycle.
"MANUAL" CONTROL OF CHANGER	1. When "AUTO-MANUAL" Control Button is moved down and to the left so that the word "MANUAL" is visible, the Starting Pawl (24) is held in such a position as to be unable to engage the Turntable Gear (59) and it is impossible for the changer to cycle automatically. Forward or reverse recordings may now be played by manually placing the Pick-up Arm on the record at the desired starting point.
STOPPING	1. To stop the changer (NOT DURING CHANGE CYCLE), slide the "ON-OFF" Switch (46) to its off position. Power to the Motor (48) will be turned off.

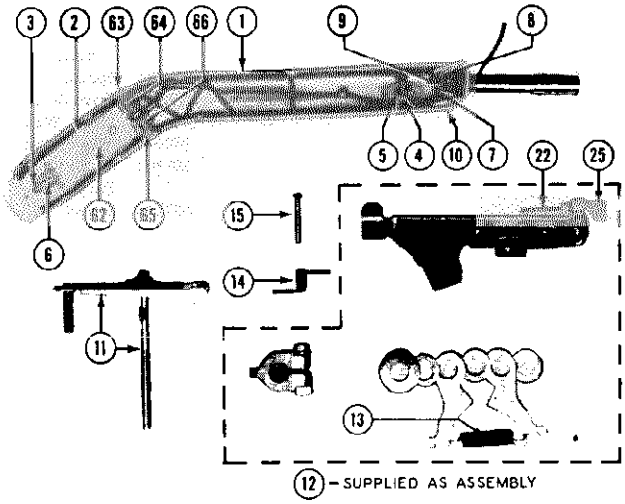

©John F. Rider

MODEL 9000

LUBRICATION

The record changer leaves the factory completely lubricated and under normal conditions this lubrication should be sufficient for approximately one year or 1,000 hours of operation. When operated under extreme conditions of dust or heat, lubrication should be performed as frequently as required.

NOTE: AVOID EXCESSIVE LUBRICATION. Do not permit any oil to get on the rubber tire of the Idler Wheel, on the motor hub, on the Trip Release and Starting Pawl mechanism, or on the drive rim of the Turntable. Any oil on these places should be removed with Carbon Tetrachloride.

A drop of good machine oil once a year on the Center Post Assembly bearings, motor bearings, small cotton oil wick on Main Cam, and frictional surfaces will provide the necessary lubrication.

PARTS LIST

DIA-GRAM NO.	PART NO.	DESCRIPTION
1	507452	Pick-up Arm, includes Hinge and Shaft (less Crystal Cartridge, Needles, Needle Selector Assembly and springs)
2	507453	Crystal Cartridge (includes Needles)
3	507454	Standard Needle
	507455	"Long Playing" Needle
4	506849	Spring, Lift Adjusting
5	506850	Screw, Lift Adjusting
6	507456	Set Nut for Needle
7	506851	Spring, Needle Pressure
8	506852	Adjusting Washer
9	506853	Tube, Hinge
10	506854	Pin, Hinge
11	506855	Indexing Assembly
12	507457	Crank Assembly
13	506857	Spring, Extension
14	506858	Spring, Index Latch
15	506859	Pin, Index Latch
16	507552	Rubber Drive Belt for Motor
17	*	Pick-up Arm Lift Pin (part of Item 11)
18	*	Pick-up Arm Follower (part of Item 12)
19	*	Index Pin (part of Item 11)
20	507458	Main Cam Assembly (includes attached levers and springs)
21	507555	Spring, Starting Pawl
22	507459	Spring, Trip Latch
23	507460	Trip Release Assembly
24	*	Starting Pawl (part of Item 20)
25	*	Trip Latch (part of Item 12)
26	*	Eccentric (part of Item 20)
27	506864	Eccentric Arm Assembly
28	506865	Drive Crank Nut
29	506866	Tie Bar Assembly
30	506867	Shaft, Front Record Support Arm
31	506868	Shaft, Rear Record Support Arm
32	506869	Record Support Arm Assembly
33	506870	Plastic Cap, Record Support Arm
34	506871	Cap Screw, Record Support Arm
35	507461	Base Assembly (includes Escutcheon and other riveted parts)
36	506873	Escutcheon

DIA-GRAM NO.	PART NO.	DESCRIPTION
37	506874	Spring, Reject
38	506875	Link, Manual
39	506876	Link, Reject
40	506877	Spring, Control
41	506878	Index Bushing Assembly
42	506879	Index Stop and Link Assembly
43	*	Index Stop Lever (part of Item 42)
44	506881	Control Button
45	506882	Control Insert
46	506845	"On-Off" Switch
47	506883	Switch Cover
48	507462	Motor—115 volt, 60 cycle
49	506884	Fibre Washer for Motor Mounting
50	506885	"C" Washer for Motor Mounting
51	506887	Rubber Grommet for Motor Mounting
52	507542	Idler Wheel (includes fibre washer and retaining clip)
53	507543	Center Post Assembly (includes Cam Stop Spring and Roller, Turntable Cam, and Large Ball Bearing)
54	506891	Spring, Cam Stop
55	*	Cam Stop Roller (part of Item 53)
56	506892	Fibre Washer for Center Post Mounting
57	506893	Screw and Lockwasher for Center Post Mounting
58	506894	Large Ball Bearing (at base of Center Post)
59	*	Turntable Gear (part of Item 53)
60	507544	Speed Selector Lever
61	507545	Knob, Speed Selector Lever
62	507546	Needle Selector Assembly
63	507547	Pin for Mounting Needle Selector
64	507548	Sleeve for Mounting Needle Selector
65	507549	End Spring for Mounting Needle Selector
66	507550	Return Spring for Mounting Needle Selector
67	500966	Plug for Phono Input Cable
	501031	Plug for Phono Motor Cable
	507553	Small Ball Bearing (for Pick-up Arm Shaft mounting)
	507551	Pad, Needle Selector
	506895	Turntable
	506842	Rest Post Bumper
	506896	Screw for Mounting Changer
	506897	Spring for Mounting Changer
	506898	Clip for Mounting Changer

** Not supplied as replacement part*

©John F. Rider

TROUBLE SHOOTING CHART

SYMPTOM	CAUSE	REMEDY
Turntable fails to start after actuating "ON-OFF" Switch (46).	1. No Power.	Check to determine if there is power at the wall outlet by disconnecting radio power cord and connecting a lamp to same outlet.
	2. Idler Wheel (52) not engaging turntable.	Check to see that pivot lever under Idler Wheel (52) is free. Also be sure that spring which pulls Idler Wheel (52) toward Turntable is hooked to motor frame and has sufficient tension.
	3. Defective "ON-OFF" Switch (46).	Check continuity across switch contacts. Replace switch if necessary.
	4. Defective motor.	Check and replace if necessary.
	5. Broken Rubber Drive Belt (16).	If Speed Selector is in "33" position and Turntable fails to rotate, check condition of Rubber Drive Belt and replace if necessary.
	6. Binding in changer mechanism.	For analysis of fault see symptom entitled "Changer stops while changing a record".
Changer refuses to cycle when "START-REJECT" Control Button is operated.	1. Broken or weak Starting Pawl Spring (21).	If the Starting Pawl Spring (21) is defective, the Starting Pawl (24) will not engage the Turntable Gear (59) when the Trip Release Assembly (23) is operated. Replace this Spring.
	2. Bent Reject Link (39).	Rear end of Reject Link (39) must contact side of Trip Release Assembly (23). Straighten Link.
Changer stops while changing a record.	1. Grease on Idler Wheel (52) or Turntable rim.	Clean with Carbon Tetrachloride.
	2. Idler Wheel (52) not engaging Turntable properly.	Check to see that pivot lever under Idler Wheel (52) moves freely. Also be sure that spring which pulls Idler Wheel (52) toward Turntable is properly engaged and has sufficient tension.
	3. Binding in changer mechanism.	Check for binding at points where Turntable Gear (59) engages Main Cam (20); also at base of Center Post Assembly (53). If Tie Bar (29) is bent and is rubbing against changer base, straighten or replace Tie Bar Assembly (29). Make sure Tie Bar (29) does not rub or jam against frame of Center Post Assembly (53). If this condition occurs, proceed as follows: a. Loosen the bolt and Drive Crank Nut (28) at the end of the Eccentric Arm Assembly (27). b. Rotate the Turntable clockwise by hand until the changer cycle is completed. c. Move Tie Bar Assembly (29) [Record Support Arm Shafts (30 and 31) and Record Support Arms (32) will also move] until Tie Bar (29) is approximately 1/32" from the frame of the Center Post Assembly (53). NOTE: There are two positions of the Tie Bar (29) at which it may be placed approximately 1/32" from the frame of the Center Post Assembly (53). Set the Record Support Arms (32) for automatic operation. Then make sure that at the proper separation of the Tie Bar and the frame of the Center Post Assembly, the lower blades of the Record Support Arm Assemblies (32) are nearer the Center Post (53) than the upper blades. d. Retighten the bolt and Drive Crank Nut (28), making sure that the flange of the Nut faces toward the Record Support Arm Shaft (31). e. Operate "START-REJECT" Control Button and rotate the Turntable clockwise by hand through the changer cycle. If the adjustment has been properly made, the Tie Bar (29) will no longer come in contact with the frame of the Center Post Assembly (53). Lubricate changer mechanism if necessary; see section entitled "Lubrication".
	4. Low line voltage.	Line voltage should not be less than 105 volts.
	5. Weak Motor (48).	If after checking the above items, the changer continues to stall, it may be assumed that the Motor has low torque and should be replaced.

©John F. Rider

MODEL 9000

TROUBLE SHOOTING CHART (Continued)

SYMPTOM	CAUSE	REMEDY
Changer cycles continuously.	1. Bent arm on Trip Release Assembly (23).	If the Trip Release Assembly (23) becomes bent, the Starting Pawl (24) may not become held by this Assembly at the completion of the Main Cam cycle. Straighten or replace Trip Release Assembly (23).
	2. Bent Starting Pawl (24).	If the portion of the Starting Pawl (24) which contacts the Trip Release Assembly (23) becomes bent, the Starting Pawl may not become held by this Assembly at the completion of the Main Cam cycle. Straighten Starting Pawl (24).
	3. Broken or weak Reject Spring (37).	A defective Reject Spring (37) will not return the "START-REJECT" Control Button to its original position and may keep the Trip Release Assembly (23) from engaging the Starting Pawl (24). Replace this Spring.
Changer fails to cycle after playing a record.	1. Bent or broken Trip Latch (25).	The Trip Latch (25) must contact and exert pressure against the serrated edge of the Trip Release Assembly (23) at the end of a record. Straighten Trip Latch or replace Crank Assembly (12).
	2. Broken or weak Trip Latch Spring (22).	A defective Trip Latch Spring (22) will prevent the Trip Latch (25) from contacting the Trip Release Assembly (23). Replace Spring.
	3. Worn serrated edge of Trip Release Assembly (23).	If the serrated edge of the Trip Release Assembly (23) becomes worn, the Trip Latch (25) will not cause the Trip Release to release the Starting Pawl at the end of a record. Replace Trip Release Assembly (23).
	4. Broken or weak Starting Pawl Spring (21).	If the Starting Pawl Spring (21) is defective, the Starting Pawl (24) will not engage the Turntable, Gear (59) when the Trip Release (23) is operated. Replace this Spring.
	5. No eccentric or Spiral groove at center of record.	The Needle (3) must enter the spiral groove at the center of a record before the Trip Latch (25) will operate the Trip Release Assembly (23). Old records which do not have this groove will prevent automatic operation of the changer.
Record drops on one side only during change cycle OR Both sides of record do not drop simultaneously during cycle.	1. Record Support Arms (32) incorrectly adjusted.	Proceed as follows: a. Make sure that the Record Support Arms (32) are set for automatic operation and the changer has completed its change cycle. b. Loosen the three bolts and Drive Crank Nuts (28) that hold the Tie Bar Assembly (29) and Eccentric Arm Assembly (27) to the Record Support Arm Shafts (30 and 31). c. Move the Tie Bar Assembly (29) until it is approximately 1/32" from the frame of the Center Post Assembly (53). NOTE: There are two positions of the Tie Bar (29) at which it may be placed approximately 1/32" from the frame of the Center Post Assembly (53). Make sure that at the proper separation of the Tie Bar and the frame of the Center Post Assembly the Tie Bar (29) extends closer to the front right hand corner of the changer base than in the other position. d. Then, holding the Tie Bar Assembly (29) in place, rotate Record Support Arms (32) and Record Support Arm Shafts (30 and 31) until lower changer blades are pointing in the general direction of the Center Post (53). e. Place a 10" record on the lower changer blades of the Record Support Arms (32) (as done when stacking records for automatic operation) and adjust Record Support Arms (32) so that the record covers the same amount of space on the two lower blades. Also, make sure that the nearest portion of the upper changer blades is approximately 5/8" from the edge of the record. f. Retighten the three bolts and Drive Crank Nuts (28). The flange of the Nuts should face toward the Record Support Arm Shafts (30 and 31). g. Operate "START-REJECT" Control Button and rotate the Turntable **clockwise** by hand through the changer cycle. If trouble is not completely corrected, repeat this adjustment but make slight changes in the positioning of the lower changer blades with respect to the 10" record.

©John F. Rider

TROUBLE SHOOTING CHART (Continued)

SYMPTOM	CAUSE	REMEDY
Record fails to drop off Record Support Arms (32) at correct time during change cycle.	1. Record Support Arms (32) incorrectly adjusted.	For proper adjustment, see previous section of "Trouble Shooting Chart" entitled "Record drops on one side only during change cycle OR Both sides of record do not drop simultaneously during cycle".
	2. Record size not standard.	A standard 10" record has a diameter of 9⅞" ± 1/32 and a standard 12" record has a diameter of 11⅞" ± 1/32.
Erratic motion of Pick-up Arm (1) in horizontal direction during change cycle.	1. Broken Pick-up Arm-Follower (18).	The groove in the Main Cam (20) directs the motion of the Pick-up Arm Follower (18) and the Pick-up Arm (1) in the horizontal direction. A broken Pick-up Arm Follower (18) eliminates or adversely affects this motion. Replace Crank Assembly (12).
	2. Loose bolt and nut on Crank Assembly (12).	The nut and bolt on the Crank Assembly (12) clamp the Crank Assembly to the shaft of the Pick-up Arm Assembly (1). If the nut and bolt are loose, horizontal motion between these two assemblies will be transmitted by friction only. Retighten according to section of "Trouble Shooting Chart" entitled "Pick-up Arm (1) sets down at wrong starting point on record".
	3. Weak or broken Extension Spring (13).	This spring is a safety device enabling the Pick-up Arm (1) to be moved horizontally beyond its normal operating range without causing injury to the changer mechanism. However, if the Extension Spring (13) is defective, horizontal motion between the Crank Assembly (12) and the Pick-up Arm Assembly (1) will be transmitted by friction only. Replace spring.
Erratic motion of Pick-up Arm (1) in vertical direction during change cycle.	1. Weak or broken Spring for Index Latch (14).	This spring lowers the Indexing Assembly (11) when the Pick-up Arm Lift Pin (17) enters the depression on the outer ridge of the Main Cam. Replace this spring if it is found to be defective.
	2. Weak or broken conical spring on Indexing Assembly (11).	This spring is also instrumental in obtaining proper vertical motion of the Pick-up Arm (1). If this spring is found to be defective, replace Indexing Assembly (11).
Pick-up Arm Elevation is too high or too low during change cycle.	1. Lift Adjusting Screw (5) improperly adjusted.	When Pick-up Arm elevation is incorrect, proceed as follows: a. Put twelve 10" records on the Turntable. b. Slide "START-REJECT" Control Button to the left as far as it will go and then release it. c. Rotate Turntable clockwise by hand until Pick-up Arm (1) and Needle (3) approach the stack of records. d. Adjust the Lift Adjusting Screw (5) so that clearance between Needle and top record is approximately ⅛".
Pick-up Arm (1) sets down at wrong starting point on record.	1. Incorrect adjustment of set-down point.	The position at which the Pick-up Arm (1) sets down on a record may be adjusted by means of the Index Bushing Assembly (41). Proceed as follows: a. Set changer for 12" operation and place a 12" record on the Turntable. b. Slide "START-REJECT" Control Button to the left as far as it will go and then release it. c. Rotate Turntable clockwise by hand until Pick-up Arm (1) and Needle (3) start to drop down to record. d. Loosen nut on Index Bushing Assembly (41) and adjust screw of this assembly to drop Pick-up Arm and Needle at desired position on record. This position should place the Needle 5-11/16" from the Center Post (53). e. Retighten nut on Index Bushing Assembly (41). If the Index Bushing Assembly (41) does not provide sufficient range for adjustment, proceed as follows: a. Make sure changer has completed its change cycle. b. Loosen nut and bolt on Crank Assembly (12). c. Move Pick-up Arm Follower (18) toward Center Post Assembly (53) as far as it will go. d. Holding the Pick-up Arm Follower in this position, place Pick-up Arm (1) approximately ¼" from Center Post (53). e. Tighten nut and bolt on Crank Assembly (12). f. Make final adjustment of set-down point using Index Bushing Assembly (41) as explained above.

©John F. Rider

MODEL 9000

TROUBLE SHOOTING CHART (Continued)

SYMPTOM	CAUSE	REMEDY
	2. Weak or broken spring which operates Index Pin (19).	A defective spring which operates the Index Pin (19) will not engage this Pin with the notches on the Index Stop Lever (43). Replace Indexing Assembly (11).
	3. Defective spring which operates lever on inside surface of Main Cam (20).	The lever located on the inside surface of the Main Cam aids in obtaining the proper set-down point for the Pick-up Arm (1). It guides the Pick-up Arm Follower (18) during the final part of the change cycle. If the spring which operates this lever is defective, the Main Cam Assembly (20) must be replaced.
	4. Broken Pick-up Arm Follower (18), loose bolt and nut on Crank Assembly (12), or weak or broken Extension Spring (13).	See section of "Trouble Shooting Chart" entitled "Erratic motion of Pick-up Arm (1) in horizontal direction during change cycle".
Tripping is possible with Control Button in "Manual" position.	1. Bent Starting Pawl (24).	If the portion of the Starting Pawl (24) which contacts the Manual Link (38) is bent, the Starting Pawl will not be kept from engaging the Turntable Gear (59). Straighten Starting Pawl or replace Main Cam Assembly (20).
	2. Bent Manual Link (38).	Rear end of Manual Link (38) must contact flange on Starting Pawl (24) when changer is set for manual operation. Straighten Link.
Improper "tracking" of Needle with record — Needle slips out of grooves and skips portions of record.	1. Incorrect setting of Needle Selector (62).	Make sure that Needle Selector (62) is in the correct position for playing the type of records on the changer.
	2. Foreign matter in record grooves.	Clean record with record brush or soft camel's hair brush.
	3. Badly worn record.	Examine record for scratches that may have destroyed continuity of grooves.
	4. Badly worn Needle (3).	Examine Needle for worn tip and replace if necessary. To remove and replace a worn or damaged Needle, proceed as follows: a. **If Standard Needle is to be removed,** adjust Needle Selector (62) so that the words "78 ONLY" appear at the top. **If "Long Playing" Needle is to be removed,** adjust Needle Selector (62) so that the words "33 ONLY" appear at the top. b. Loosen Set Nut for Needle (6) located directly below Needle. c. Replacement Needles may be obtained by requesting the following parts: Standard Needle.....Part No. 507454 "Long Playing" Needle.....Part No. 507455 **Do not attempt to use a substitute.** d. Insert Needle so that point extends away from Crystal Cartridge (2) and flat surface of shaft is against Set Nut (6). When tightening Nut make sure that Needle remains parallel to sides of Cartridge and point protrudes approximately 1/8" from lower frame of Needle Selector. To eliminate the possibility of installing the Needles in the wrong sides of the Crystal Cartridge, the shaft of the "Long Playing" Needle is painted red.
	5. Incorrect adjustment of Needle Pressure Spring (7).	The pressure that the Pick-up Arm (1) exerts on a record is controlled by the Needle Pressure Spring (7). Using a Needle Pressure Gauge, the needle pressure should be between 8 and 12 grams. To change needle pressure, proceed as follows: a. To decrease needle pressure, place a screwdriver in a notch of Adjusting Washer (8) and turn Washer by moving screwdriver upward. b. To increase needle pressure, place a screwdriver in a notch of Adjusting Washer (8) and turn Washer by moving screwdriver downward. In making this adjustment it will be necessary to disengage Adjusting Washer (8) from lip on Pick-up Arm Hinge (1).

©John F. Rider

TROUBLE SHOOTING CHART (Continued)

SYMPTOM	CAUSE	REMEDY
Slow Turntable speed.	1. Speed Selector (61) in wrong position.	Make sure that Speed Selector (61) is in the correct position for playing the type of records on the changer.
	2. Grease on Idler Wheel (52) or Turntable rim causing slipping.	Clean surfaces with Carbon Tetrachloride.
	3. Idler Wheel (52) not properly engaging Turntable.	Check to see that pivot lever under Idler Wheel (52) is free. Also be sure that spring which pulls Idler Wheel (52) toward Turntable is properly engaged and has sufficient tension.
	4. Binding of drive parts.	Carefully check Center Post Assembly (53) for binding.
	5. Line voltage too low.	Line voltage should not be less than 105 volts.
	6. Operating temperature too low.	If the changer has been stored in a cold room, the Turntable speed may be slower than normal.
	7. Faulty Motor (48).	If, after checking the above six items Turntable speed is still too slow, then it may be assumed that the Motor is at fault and should be replaced.
Rumble or "wow"	1. Changer not floating freely on its mounting springs.	Be sure the four Base Mounting Screws used for mounting the changer have been screwed down as far as they will go.
	2. Improper motor mounting.	Be sure that Motor (48) is mounted on Rubber Grommets (51).
	3. Worn tire on Idler Wheel (52).	Examine Idler Wheel (52) for flat spots on tire and replace Wheel if defective.
	4. Worn Pad for Needle Selector.	A worn Pad will cause the Needle Selector (62) to rest against the Pick-up Arm (1). This will cause "needle talk-back". Replace Needle Selector Pad.

PROCEDURE FOR REMOVAL AND REPLACEMENT OF MAJOR PARTS

NAME OF ITEM	METHOD OF REMOVING OR REPLACING
Needle (3).	To remove or replace a Needle (3), proceed as follows: a. If Standard Needle is to be removed, adjust Needle Selector (62) so that the words "78 ONLY" appear at the top. If "Long Playing" Needle is to be removed, adjust Needle Selector (62) so that the words "33 ONLY" appear at the top. b. Loosen Set Nut for Needle (6) located directly below Needle. c. Insert Needle so that point extends away from Crystal Cartridge (2) and flat surface of shaft is against Set Nut (6). When tightening Nut make sure that Needle remains parallel to sides of Cartridge and point protrudes approximately 1/8" from lower frame of Needle Selector.
Crystal Cartridge (2).	Remove the two Needles (3). Remove the two screws (and associated nuts and sleeves) which pass through the Needle Selector Assembly (62) and the Cartridge (2). Crystal Cartridge may now be removed by slipping the "quick disconnect" electrical connectors off the prongs at the rear of the Cartridge (2).
Center Post Assembly (53)	Removal of the Center Post Assembly (53), as well as the remainder of the drive mechanism, may be more easily accomplished if the changer has completed its change cycle. Remove the Turntable by lifting it up from changer base. Then remove the three Screws and Lockwashers (57). To disassemble the Center Post Assembly (53), remove the two screws on this Assembly. When reassembling the Center Post Assembly (53), make sure that the Large Ball Bearing (58) is properly seated in the base of the Assembly. To accomplish this, invert the upper portion of this Assembly and place the Ball Bearing (58) in the hollow at the base of the Center Post. Invert the lower portion of this Assembly and slide it over the Ball Bearing (58) as far as it will go. Insert and tighten the two screws. Then remount the Center Post Assembly (53) onto the changer base using the three Screws and Lockwashers (57). If binding occurs after assembly, a. Disassemble and place one drop of good machine oil in base of Center Post Assembly (53). b. If mechanism still binds, remove Assembly. Remove the two screws on this Assembly, rotate the flange on the upper section of the Assembly 180°, and replace the screws.

©John F. Rider

MODEL 9000

PROCEDURE FOR REMOVAL AND REPLACEMENT OF MAJOR PARTS (Continued)

NAME OF ITEM	METHOD OF REMOVING OR REPLACING
Eccentric Arm Assembly (27) and Tie Bar Assembly (29).	After the Center Post Assembly (53) has been removed, loosen the Drive Crank Nut (28) at one end of the Eccentric Arm Assembly (27) and remove the small screw and washer at the other end. The Eccentric Arm Assembly may then be easily removed. After the Eccentric Arm Assembly (27) has been removed, loosen the two Drive Crank Nuts (28) and slide the Tie Bar Assembly (29) off the two Record Support Arm Shafts (30 and 31). When reassembling, make sure that the flanges on the Drive Crank Nuts (28) face toward the Record Support Arm Shafts (30 and 31).
Main Cam Assembly (20).	After the Eccentric Arm Assembly (27) has been removed, the Main Cam Assembly will easily slide off its shaft.
Record Support Arm Assemblies (32) and Record Support Arm Shaft Assemblies (30 and 31).	After the Eccentric Arm Assembly (27) and Tie Bar Assembly (29) have been removed, remove the Record Support Arm Caps (33). The Record Support Arms (32) and Record Support Arm Shafts (30 and 31) are now disengaged from the Base Assembly (35) and may be easily slipped off.
Pick-up Arm Assembly (1).	The Pick-up Arm Assembly (1) should not be removed from the changer unless it is to be replaced. There are 18 Small Ball Bearings around the top of the Pick-up Arm Shaft and 17 Small Ball Bearings in a circular slot near the bottom of the Pick-up Arm Shaft. These Bearings will fall out of their respective positions unless the changer is in a horizontal position when the Pick-up Arm Shaft is removed and unless removal is accomplished with extreme care. To remove the Pick-up Arm Assembly: a. Make sure changer is in a horizontal position. b. Pull Phono Pick-up Cable to obtain "slack" in cable between Pick-up Arm (1) and changer base.
	c. Loosen the bolt and nut on the Crank Assembly (12) and remove the Pick-up Arm Assembly by carefully lifting at its base. When reassembling, the Pick-up Arm Shaft (1) must pass through each part of the Crank Assembly (12), and the hinge at the end of the Pick-up Arm (1) must be as close to the pick-up arm post of the Base Assembly (35) as possible.
Indexing Assembly (11) and Crank Assembly (12).	These two assemblies may be removed by loosening the bolt and nut on the Crank Assembly (12) and sliding these assemblies off the Pick-up Arm Shaft (1). **CAUTION: Separation of these two assemblies is not recommended unless one of the assemblies is to be replaced.** The Indexing Assembly (11) and Crank Assembly (12) may be separated by removing the small "C" washer on the Index Pin (19) and the Spring and Pin for Index Latch (14 and 15). When reassembling, **make sure parts of Crank Assembly are in correct order and position.** Hold hinge at the end of Pick-up Arm (1) tightly against pick-up arm post of Base Assembly (35) to prevent the 35 Small Ball Bearings around the Pick-up Arm Shaft from falling out.

©John F. Rider

DESCRIPTION OF OPERATIONAL CYCLES

Power for the motor is obtained through the on-off switch mounted on the bridge assembly. This switch is operated manually by the control button with positions OFF-MAN-AUT-REJ. This button is located to the left of the record-shelf assembly, on the top of the Record Changer.

The Record Changer has three speeds, controlled by the Speed Selector located to the right of the record-shelf assembly. The positions of the Speed Selector are ST'D PLAY– 45 –LONG PLAY. These speed changes are brought about by the shift lever, which changes the positions of the idler wheel and pulley with respect to the motor shaft.

The changer mechanism of the Record Changer is brought into action when a small retractable gear segment, mounted on the cam gear, is released, and engages the hub gear of the turntable shaft, causing the cam gear to be driven. While a record is playing, the retractable gear segment is held in the retracted position by the trip-plate retaining wall, which engages the roller of the gear segment. The segment is released either manually, by pushing the OFF-MAN-AUT-REJ control to REJ, or automatically, when the changer tone arm reverses direction as the needle follows the eccentric finish groove of a record. For 45 r.p.m. automatic operation, an additional trip mechanism is brought into play. This trip mechanism is actuated by a trip stop, mounted on the trip receiver. When the needle of the tone arm enters the finish groove of a 45 r.p.m. record, the trip stop engages the trip lever, which releases the hammer; this hammer strikes the trip plate, and pushes it aside. The gear segment is then released, as explained above, for either the standard or long-play operations.

The tone arm of the Record Changer is operated by two link assemblies attached to actuator levers, which are in contact with the cam surfaces of the cam gear. When the cam gear starts rotating, the lower actuator lever is pushed outward first, and the link assembly with the long cord attached to it raises the tone arm off the record. As the cam gear continues to turn, the upper actuator lever is pushed outward, and its link assembly pulls the tone arm out against the rest post. At this instant, a roller on the cam gear makes contact with the push-off actuator (which is connected to the record-shelf assembly through a series of push-off bars), and operates the record-dropping mechanism.

After the record has dropped to the turntable, the cam releases the upper actuator, permitting the tone arm to move inward. As the tone arm moves toward the center of the turntable, the index finger engages one of the selectors, which stops the tone-arm travel at a point just above the start groove of the record. Following this action, the lower actuator, which is engaged with the lower cam surface of the cam gear, starts riding inward, relaxing the long cord and link assembly, allowing the tone arm to set down onto the record.

ADJUSTMENTS

INDEXING OR SET-DOWN

7" Record

Set a 7" record on the turntable, push the OFF-MAN-AUT-REJ control to REJ, and rotate the turntable by hand approximately 4½ turns. The tone-arm needle should be approximately ½" above the record at this point. Loosen the clamp screw on the trip arm slightly (figure 9); then hold the tone arm steady, ⅛" in from the edge of the record, and set the trip arm so that the magnetic index stop, Part No. 76-5497, is in contact with the selector hinge (inside selector), Part No. 56-7494, as shown in figure 1. The index stop should engage the selector hinge by a minimum of ⅛".

Tighten the clamp screw, leaving $\frac{1}{32}$" vertical play, or clearance, between the trip arm and the base plate.

10" Record

Make the index adjustment for 7" records first. Check 10" indexing by the same method as that outlined above. With the needle point ½" above the record, and ⅛" in from the outside edge, the index stop should be in contact with the middle selector, Part No. 56-7478, as shown in figure 2.

Ordinarily, the 10" index is satisfactory after the 7" index adjustment is made; if not, bend the selector *slightly* to the right or left, as required, for the proper set-down of the needle.

12" Record

Adjust as given above for 10" records, except that the index stop should contact the outside selector, Part No. 56-7478. If the indexing is incorrect, bend the selector hinge *slightly* to the right or left, as required, for proper set-down.

TRIP ACTION

10" or 12" Standard or Long-Play Records

With a 10" or 12" record on the turntable, the Speed Selector set to either ST'D PLAY or LONG PLAY, and the OFF-MAN-AUT-REJ control in AUT position, place the tone arm in the finish, or eccentric, groove of the record. The trip finger, Part No. 56-7486, now rides over the ratchet of the trip plate, Part No. 76-5252, as shown in figure 3. The trip finger should ride at an angle of 25° to 30° with respect to the ratchet. To obtain the correct angle, adjust the screw on the trip receiver, Part No. 56-7491, as indicated in figure 3. Make certain that the vertical center line of the trip finger coincides with the center line of the ratchet. To obtain this alignment, loosen screw "A" slightly, and screw "B" completely, on the trip receiver, and swing the trip receiver to the right or left, rotating about point "A" until the trip finger is centered over the ratchet; then tighten the screws.

When this adjustment is made, care should be taken to prevent the trip receiver from being pulled in toward the trip arm too far, as this will prevent the trip-arm stop from engaging the selector hinge by a minimum of ⅛". A compromise between these two adjustments should be reached.

The index adjustment will be affected when making the above adjustments. Remember that these three adjustments are interrelated, and that, when any one of them is made, the other two should be rechecked.

7" — 45 R.P.M. Records

Place a 7", 45 r.p.m. record, with adaptor insert, on the turntable. Set the Speed Selector to 45, and the OFF-MAN-AUT-REJ control to AUT position. Set the tone arm on the portion of the record which contains the leadin grooves. The mechanism should trip when the needle reaches a point approximately ⅛" from the last groove (which is concentric). If it trips before reaching this point, bend the trip finger, Part No. 56-7486, away from the trip-arm stop. If it fails to trip when this point is reached, bend in the opposite direction.

The trip-arm stop should engage the trip by a minimum of $\frac{1}{32}$" in both the horizontal and vertical planes, as shown in figure 3. This may be adjusted by loosening the trip locking screw, and sliding or raising the trip to the desired position.

The horizontal force required to trip the changer and initiate the change cycle should not exceed 2 grams at any turntable speed.

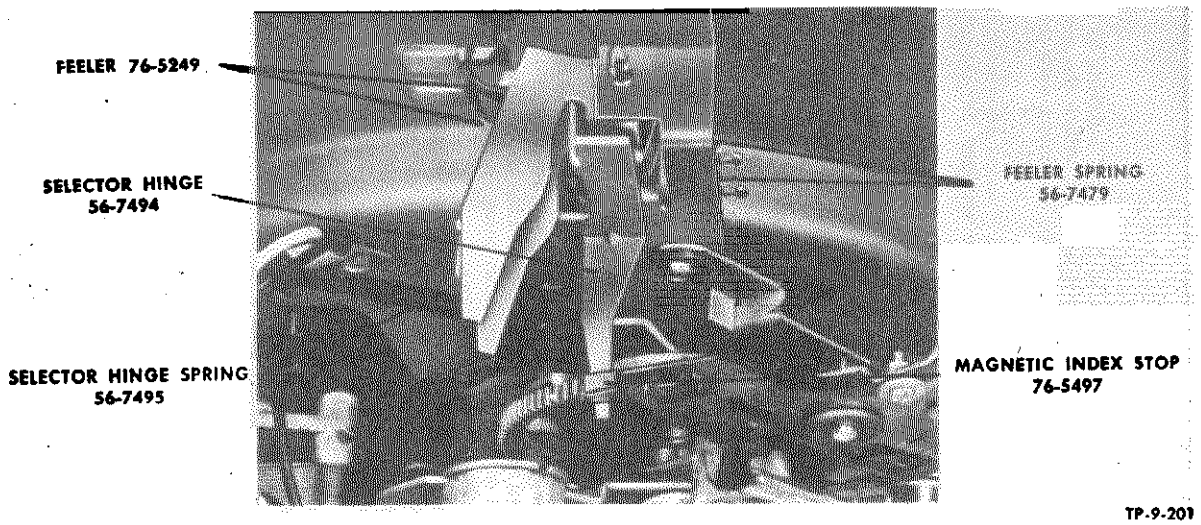

FIGURE 1. 7" INDEX ADJUSTMENT

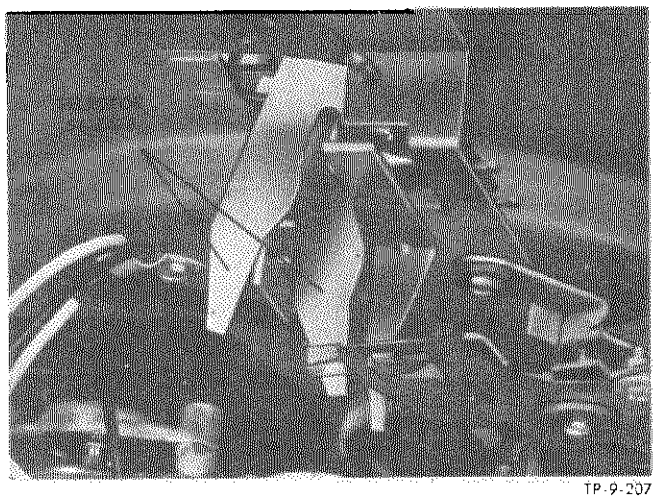

FIGURE 2. 10" INDEX ADJUSTMENT

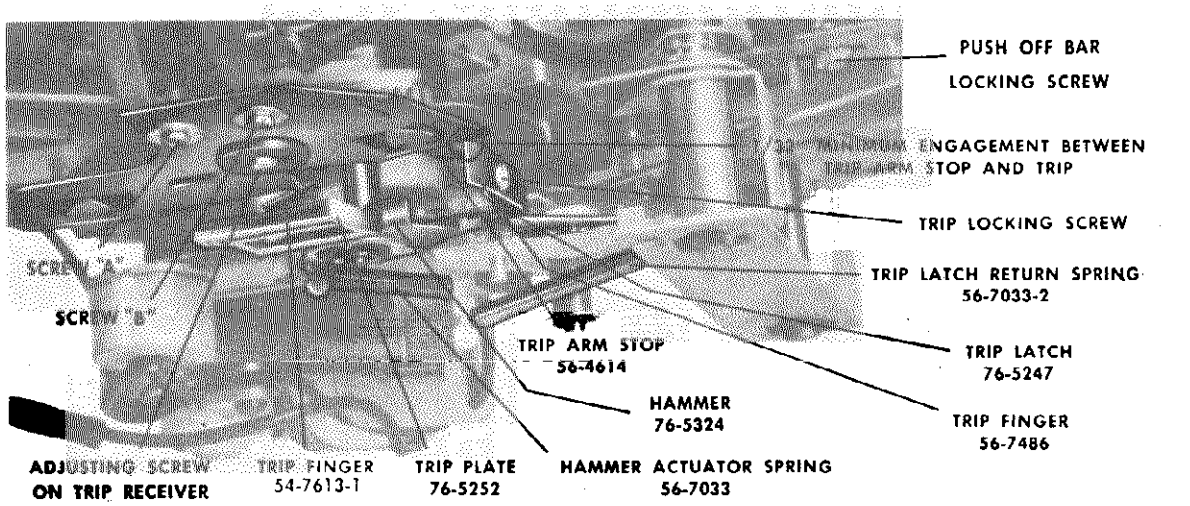

FIGURE 3. TRIP ADJUSTMENTS

©John F. Rider

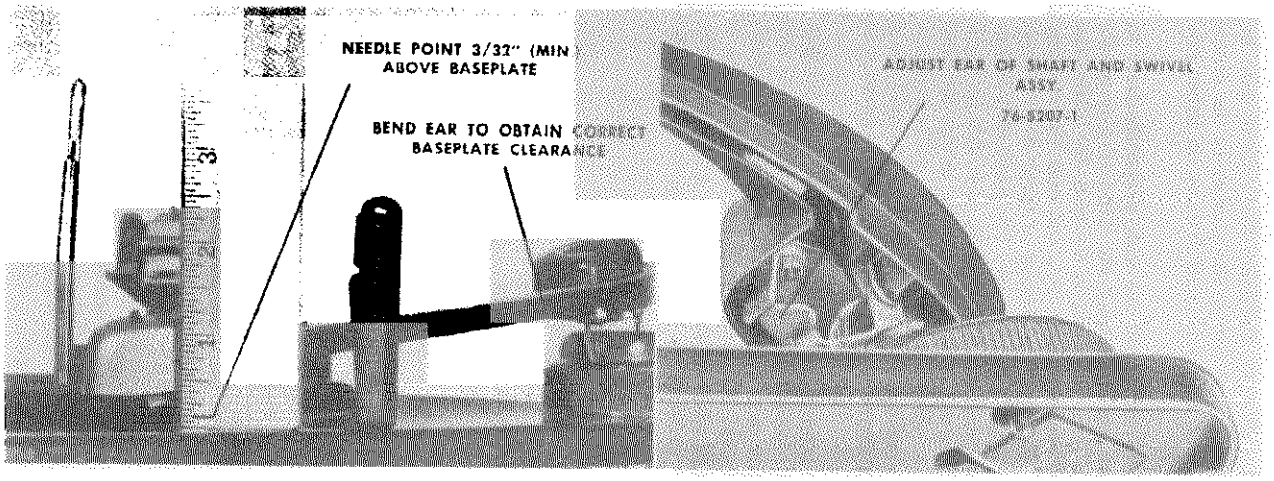

TP-9999

FIGURE 4. BASE-PLATE-CLEARANCE ADJUSTMENT

TP-9-205

FIGURE 5. TONE-ARM HEIGHT AND LIFT ADJUSTMENT

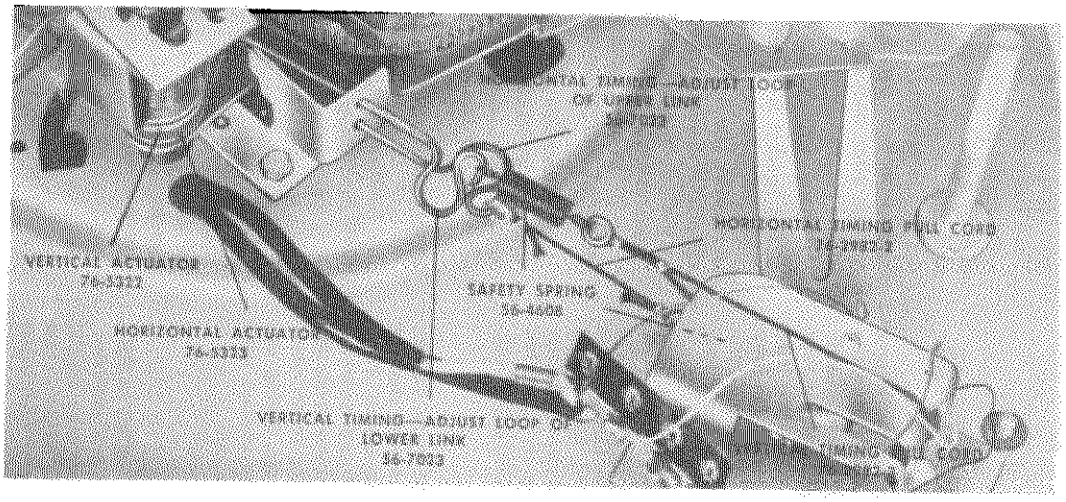

TP-10,000

FIGURE 6. HORIZONTAL AND VERTICAL TIMING ADJUSTMENTS

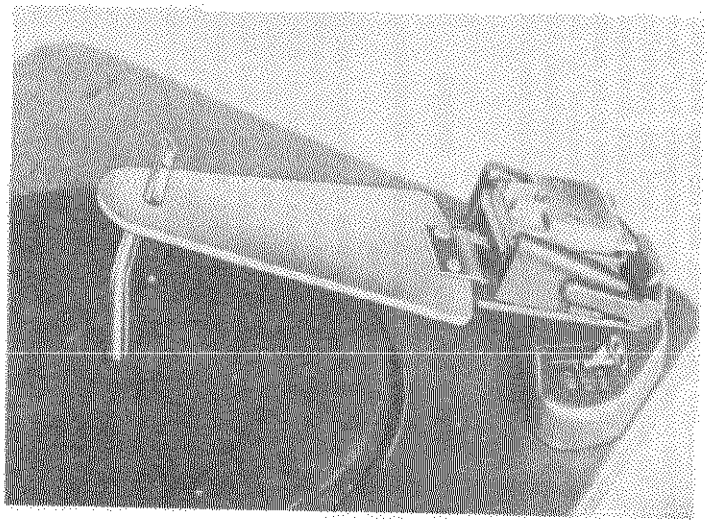

TP-9994

FIGURE 7. SPECIAL RECORD-SHELF GAUGE, SHOWN IN CORRECT POSITION

©John F. Rider

TONE-ARM HEIGHT AND LIFT

With the changer out of cycle, and the tone arm free, set the arm over the base plate. The needle point should be approximately 3/16" above the base plate, as shown in figure 4. To adjust the clearance, bend the protruding ear of the swivel post (bending the ear upward increases the clearance, downward decreases the clearance), as shown in figure 5. Now raise the tone arm to its maximum height, and place it against the rest post. There should be a minimum of 1/8" clearance between the lower edge of the tone arm and the top of the rest-post hook. Adjust the ear on the swivel post until a mean is reached between the correct rest-post clearance and base-plate clearance.

TONE-ARM HORIZONTAL AND VERTICAL TIMING

Before making the vertical and horizontal adjustments, make the tone-arm height and lift adjustments described above.

For the vertical timing, start with the changer out of cycle and the tone arm on the rest post, push the OFF-MAN-AUT-REJ control to REJ, and rotate the turntable approximately 1 1/2 revolutions by hand. At this point, the lower eccentric portion of the cam-and-gear assembly, Part No. 76-3995-2, fully engages the lower (vertical) actuator (the actuator with the cord), Part No. 76-5322. Adjust the wire loop of the lower link, Part No. 56-7023, figure 6, by squeezing or opening the loop so that the safety spring is expanded approximately 1/32". With this adjustment, the ear of the tone-arm swivel post makes firm contact with the lower end of the cutout on the tone-arm pivot assembly.

For the horizontal timing, start as given in the above paragraph. At the same point, 1 1/2 revolutions from the start of the cycle, the upper eccentric portion of the cam gear fully engages the upper (horizontal) actuator, Part No. 76-5323. Adjust the wire loop of the upper link, Part No. 76-7023, with the short cord, figure 6, by squeezing or opening the loop so that the safety spring is expanded approximately 1/32". With this adjustment, the tone arm should be snug against the rest post, but not so tight as to cause undue slapping as the arm returns to the rest post during cycling.

RECORD SHELF

Set the record shelf to the 10" position, with the changer out of cycle. Loosen the two hex-head drive screws that hold the record-shelf assembly to the changer base plate just sufficiently to allow movement of the record-shelf stanchion. Place the Philco record-shelf gauge, Part No. 45-1672, over the spindle and onto the record shelf, as shown in figure 7. Move the record-shelf assembly away from the spindle until the large, curved part of the gauge drops even with the record-shelf lips. Now push the record shelf and gauge lightly against the spindle, taking out all play toward the spindle; keep the lips of the record shelf in even contact with the edge of the gauge. Tighten the two hex-head screws.

PUSH-OFF

With the changer out of cycle, push the OFF-MAN-AUT-REJ control to REJ, and rotate the turntable 2 revolutions by hand. At this point, the push-off actuator, Part No. 56-4588, is in its most forward position, in contact with the roller on the cam gear. Loosen the push-off-bar locking screw (indicated in figure 3) slightly (just sufficiently to allow adjustment), and squeeze the push-off ears toward each other until the slide plate on the record shelf extends between 1/64" and 1/32" beyond the lips of the shelf. Tighten the hex-head push-off-bar screw.

NEEDLE PRESSURE

Use the Philco gram scale, Part No. 45-9531. Calibrate the scale to zero by holding it upright for vertical measurement, and setting the pointer to the center line of the scale. The center is the "0" point, and each small division on either side of "0" is equal to one gram.

After the scale has been calibrated to zero, hold the scale perpendicularly to the tone-arm head, and support the tone arm by placing the standard-play needle in the hole at the end of the gram-scale arm, as shown in figure 8. By lifting the gram scale carefully, raise the tone arm approximately 1/2", and note the reading. Then lower the tone-arm, and note the reading. The average of these two readings is the needle pressure, which should be between 7 and 9 grams. The pressure is adjustable by bending the ear at the rear of the tone arm to which the tone-arm spring is anchored, as shown in figure 9. Bending the ear so as to stretch the spring decreases the needle pressure; bending so as to relax the spring increases the needle pressure. If the needle pressure is out of tolerance, make the above adjustments gradually, and recheck after each change, as a small movement gives a rather large variation in needle pressure.

When making this adjustment, be careful not to bend or distort the bracket. If this bracket is deformed, the needle pressure on the last record of a stack will differ from the needle pressure on the first record. When the proper needle pressure is attained, the upper edge of the ear should be parallel to the rear, lower edge of the tone-arm shell. If the bracket was bent while adjusting the ear, gently pry down or push up the bracket (applying even pressure on both sides) until the ear and tone-arm shell are in proper relationship.

VERTICAL FRICTION

To measure the vertical friction, take two gram-scale readings as explained above under **NEEDLE PRESSURE**. One-half of the difference between the two readings is the vertical friction, which should not exceed 1.5 grams.

HORIZONTAL FRICTION

Calibrate the gram scale by laying it flat, face-up. Set the pointer to zero (center mark).

Place a counterweight on top of the rear end of the tone arm, with the changer out of cycle; move the counterweight until the tone arm is balanced horizontally, and the needle point clears the turntable. Hold the gram scale face-up, place its pointer against the side of the pickup, and slowly move the gram scale so as to push the tone-arm horizontally with the pointer, as shown in figure 10. Note the reading of the gram scale while moving the tone arm throughout its entire travel (outside the trip range). At no time should the horizontal friction (the force required to move the tone arm) exceed 1 1/2 grams, nor be less than 3/4 of a gram.

Note: Whenever any repairs or replacements are performed, all adjustments should be checked, and any necessary adjustments made. When making adjustments, check the lubrication at all points indicated in the LUBRICATION section, and lubricate where necessary, after cleaning off old and excess grease with a soft brush and carbon tetrachloride.

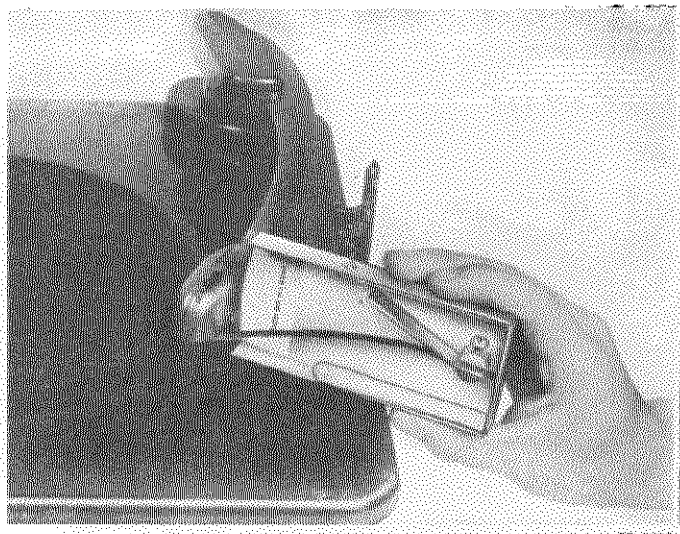

TP-9993

FIGURE 8. MEASURING VERTICAL FRICTION

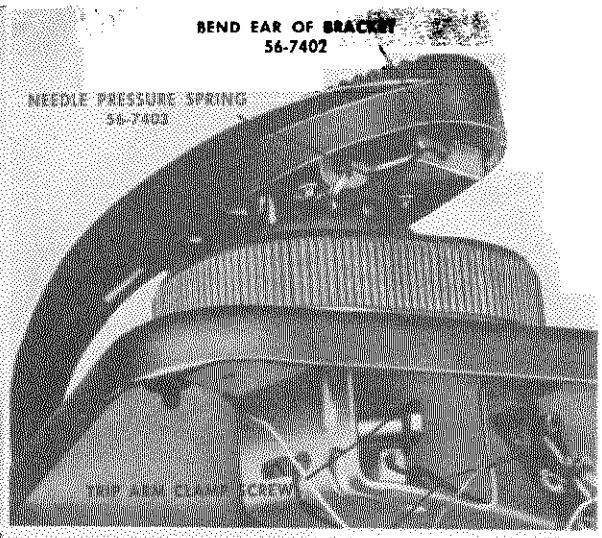

TP-9997

FIGURE 9. NEEDLE-PRESSURE ADJUSTMENT



TP-9992

FIGURE 10. MEASURING HORIZONTAL FRICTION

©John F. Rider

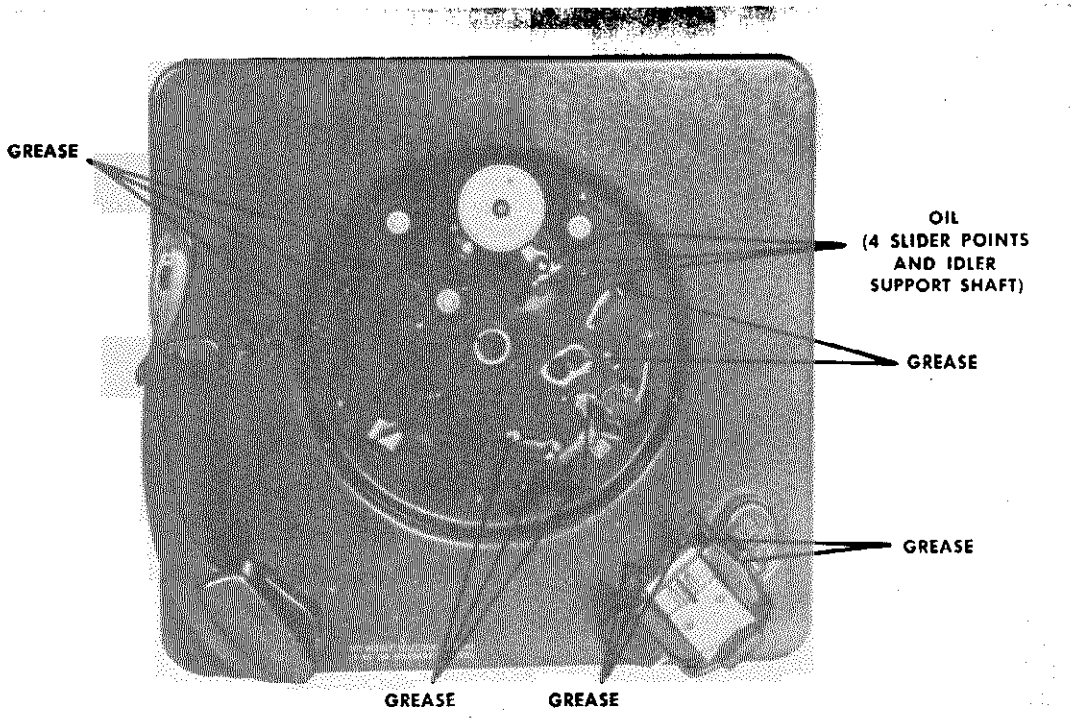

FIGURE 11. TOP VIEW, SHOWING LUBRICATION POINTS

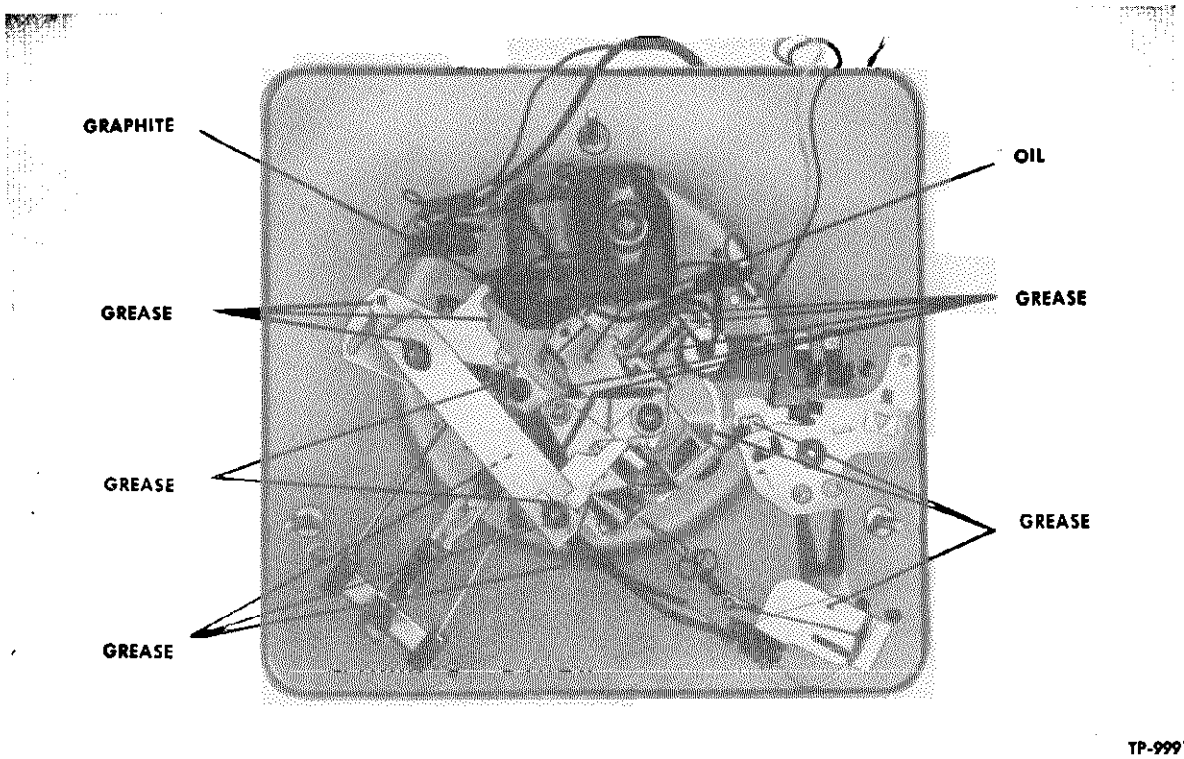

FIGURE 12. BOTTOM VIEW, SHOWING LUBRICATION POINTS

©John F. Rider

©John F. Rider



LUBRICATION

When the Record Changer is brought in for service, it should be well cleaned with a fine brush and carbon tetrachloride. Remove the needle guard and clean out accumulated dust with a fine brush. Remove all dirt and old grease and oil. When applying new grease and oil, use it sparingly. Lubrication points are shown in figures 11 and 12. It may be necessary to remove some parts and assemblies in order to properly lubricate them. For example, the cam gear and actuator levers should be removed to lubricate the cam-gear spindle and the actuator stud. The lubrication points that cannot be reached without some degree of disassembly are indicated in the following list with an asterisk, and are also indicated in the breakdown views of their respective assemblies.

LUBRICANTS

Oil—S.A.E. 20
Grease—Texaco Motor Cup Grease (unless otherwise specified)

PARTS NOT TO BE LUBRICATED

The following parts should not be lubricated at any time:
Trip receivers
Trip fingers
Selector assembly (except specific points indicated)
Ratchet portion of trip plate
Trip-latch assembly
Idler tire
Drive belt
Drive-pulley shaft

PARTS TO BE GREASED

Record-Shelf Assembly

Top of push-off saddle
Each of four cast lugs on 10" shelf where pin is inserted and where hold-down pivots*
Loops of hold-down springs where hooked to 10" hold-down and 7" record shelf*
Points of contact of record shelves where push-off blades ride*
Control button fulcrum points*

Bridge Assembly

Three dimples and two upturned ears
End and detent notches of control slider

Cam Gear

Between roller and gear surface
Gear teeth and two lateral cam surfaces
Upper cam surface where selector hinge rides*

Main Assembly

Push-off bar where it connects to its actuator
Push-off actuator where its dimples slide on base plate
Speed Selector ears where they slide on base plate
Speed Selector cam slot, detent surfaces, and pivot point
Selector hinge where ears slide on base plate
Turntable shaft at upper outside bearing *only**
Detent assembly; to roller stud, ear, and sliding guide surfaces
Trip actuator, to three guide surfaces and ear operating reset lever
Actuator spindle*
Horizontal actuator bushing, outside*
Vertical actuator bushing where trip reset arm rides

Tone Arm

Point of shaft and where it rotates in tone-arm stanchion

Motor Assembly

Cam surface of idler-wheel lifter
Detent surfaces
Guide slots of shifter plate
Extension of idler shaft in contact with lower shifter plate

PARTS TO BE OILED

Tone-arm pivot pin*
Trip-plate bushing (inside)*
Spindle; where spindle slides in hole in the bridge, and where it engages the upper bearing of turntable
Cam-gear spindle*
Roller on gear segment

Motor Assembly

Idler support shaft
Idler shaft
Slider bar; four points
Two shift roller pins
Under pivot bushing of shifter plate*
Pulley shaft (remove pulley)*

CAUTION: When lubricating the motor, remove the rubber belt and idler wheel. When lubrication is completed, be sure the motor shaft and pulley are free from oil and grease. Failure to observe this precaution may result in slippage.

GRAPHITE

Powdered graphite should be applied to the ear of the selector plate in the brass shifter bushing.

PETROLEUM JELLY (or DOW CORNING "DC-4")

Apply to the contacts of the cartridge contact plate, and to the dimple of the cartridge retaining spring.

SERVICE NOTE: After long usage, the push-off bar may develop squeaks while cycling. If this is encountered, the following points should be greased sparingly.

Both ends of return spring
Fulcrum of push-off rod
Point of contact between push-off bar and hanger
Where hanger pivots in fulcrum plate
Where push-off rod rides in push-off bar

UNEVEN TURNTABLE SPEED (WOWS)

Uneven turntable speed may be caused by the following conditions.

1. Dirt under and around the idler-wheel assembly.
2. Idler-wheel spring loose or missing.
3. Flat spot on idler-wheel tire or on turntable.
4. Loose or worn pulley belt.
5. Oil or grease on idler-wheel tire, pulley, or drive shaft.

©John F. Rider

REPLACEMENT OF PARTS AND ASSEMBLIES

The following procedures are recommended for the correct removal of parts and assemblies. The parts should be replaced by reversing the order of removal. Adjustments should be made according to the directions given in the ADJUSTMENTS section of the manual.

1. Crystal

Grasp crystal with fingernails. With the other hand, hold tone arm and apply slight pressure on switch lever. Pull down and to the outside. Replace by holding crystal contacts toward spindle, and pushing upward until firmly seated.

2. Needle

Remove crystal (see paragraph 1). Gently lift out with prying motion, using fingernail or knife point. When replacing needle, align key of needle shaft with keyway in chuck of cartridge, then push needle into cartridge.

3. Spindle

Remove cotter pin from lower end, and pull spindle out. The turntable may now be lifted off.

NOTE: When replacing the turntable, position the speed-control button midway between LONG-PLAY and 45. Hold the idler wheel back toward the center while positioning the speed control until the idler stays retracted. Then replace turntable. This method will *prevent damage* to the *idler-wheel tire.*

4. Tone-Arm Assembly

a. Place changer in MAN position.
b. Unsolder the four tone-arm leads from terminal panel.
c. Remove vertical actuator safety spring from long cord
d. Loosen trip-arm clamp screw
e. Lift out tone arm. Figure 13 shows tone-arm assembly

NOTE: When the tone arm is replaced, be sure to maintain $\frac{1}{32}$" vertical play between the trip arm and the fiber washer.

To insure proper tone-arm damping, be sure that the tone-arm damper is firmly seated in its proper position. Also, the lead washer under the adjusting screw of the trip receiver should never be replaced with a substitute; if it is necessary to replace it, use lead washer, Part No. 8W51958.

5. Trip-Arm Assembly

a. Loosen clamp screw.
b. Raise tone arm sufficiently to clear trip arm.
c. Remove trip arm, and disengage link spring. Figure 14 shows trip-arm and trip-receiver assemblies.

NOTE: When reassembling, maintain $\frac{1}{32}$" vertical play.

6. Motor Assembly

a. Remove spindle and turntable (see paragraph 3).
b. Unsolder motor lead from switch on bridge assembly.
c. Remove ground wire from terminal panel.
d. Remove the three hex-head screws, washers, and spacers from motor frame.
e. Slide jaws of speed-shift lever free of brass spacer and ear of speed-change actuator plate.
f. Lift motor out. Figures 15 and 16 show motor assemblies.

7. Speed-Change Assembly

a. Remove "E" washer and washer from actuator shaft.
b. Remove "E" washer and detent spring from selector-lever shaft
c. Lift off trip actuator.
d. Remove lower "E" washer from selector shaft.
e. Rotate selector lever until ears clear cutouts of base plate, and brass spacer comes free from motor shift lever.
f. Lift selector lever upward and off.
g. Disengage link from control button. Figure 17 shows speed-change assembly.

8. Tone-Arm-Actuator Levers

a. Remove "E" washer from actuator shaft; lift trip actuator off, and push to one side.
b. Remove long spring from reset lever, and lift off.
c. Remove small "E" washer from actuator shaft (above main plate), and remove inner actuator shaft.
d. Disengage link from vertical actuator.
e. Remove spacer, and swing horizontal actuator away from cam gear; slip off from actuator stud, and disengage link. Figure 17 shows actuator assembly.

9. Push-Off Actuator

a. Remove tone-arm actuators (see paragraph 8)
b. Remove return spring from push-off bar.
c. Disengage push-off bar from its actuator.
d. Rotate actuator until its ears clear cutouts in base plate. Lift off. See figure 17.

10. Bridge Assembly

a. Remove mounting plate and hammer-actuator springs.
b. Remove "E" washer, curved washer, and spacer from cam-gear shaft.
c. Lift hammer, hammer bushing, spacer, mounting plate and trip-latch assembly, and mounting-plate bushing from shaft.
d. Remove hex-head screw holding spindle spring and bridge to turntable-bearing bracket.
e. Lift bridge off, and disengage control link from slider control bar. See figure 18.

11. Cam-Gear Assembly

a. Remove bridge (see paragraph 10)
b. Remove "E" washer, and lift off trip plate
c. Remove "E" washer and spacer.
d. Slide cam gear from spindle. Figure 18 shows cam-gear assembly.

12. Selector Assembly

a. Remove cam-gear assembly (see paragraph 11).
b. Remove hex-head screws holding selector bracket.
c. Remove index lever, index-lever spring, and selector-hinge spring.
d. Lift out entire assembly. Figure 19 shows selector assembly.

13. Push-Off and Shelf Assembly

a. Remove push-off return spring, push-off bar, and hanger.
b. Remove selector-link bar from selector lever, then disengage from control button.
c. Remove the two hex-head screws holding stanchion.
d. While lifting assembly free of base plate, rotate, and disengage control link.
e. Remove the three speed nuts holding fulcrum plate.
f. Slide control-button shaft from fulcrum plate, and remove plate and control buttons.
g. Remove spring ring, spring-retaining washer, and heavy spring.

CAUTION: Use due care—the heavy spring may fly out.

h. Remove shelf and push-off assembly from stanchion. Figure 20 shows record shelf and push-off assemblies.

14. Push-Off Blades

a. Remove the two Phillips-head screws from bottom of 10"-12" record shelf, and the one Phillips-head screw from the top. Lift off cover.
b. The 10"-12" push-off blade, the push-off rod, and the 10"-12" hold-down and springs may now be removed.
c. Remove the two small Phillips-head screws from top of 7" cover. Remove cover.
d. The hold-down spring, 7" hold-down, ball bearing and push-off spring, push-off blade, and push-off return spring may now be removed.

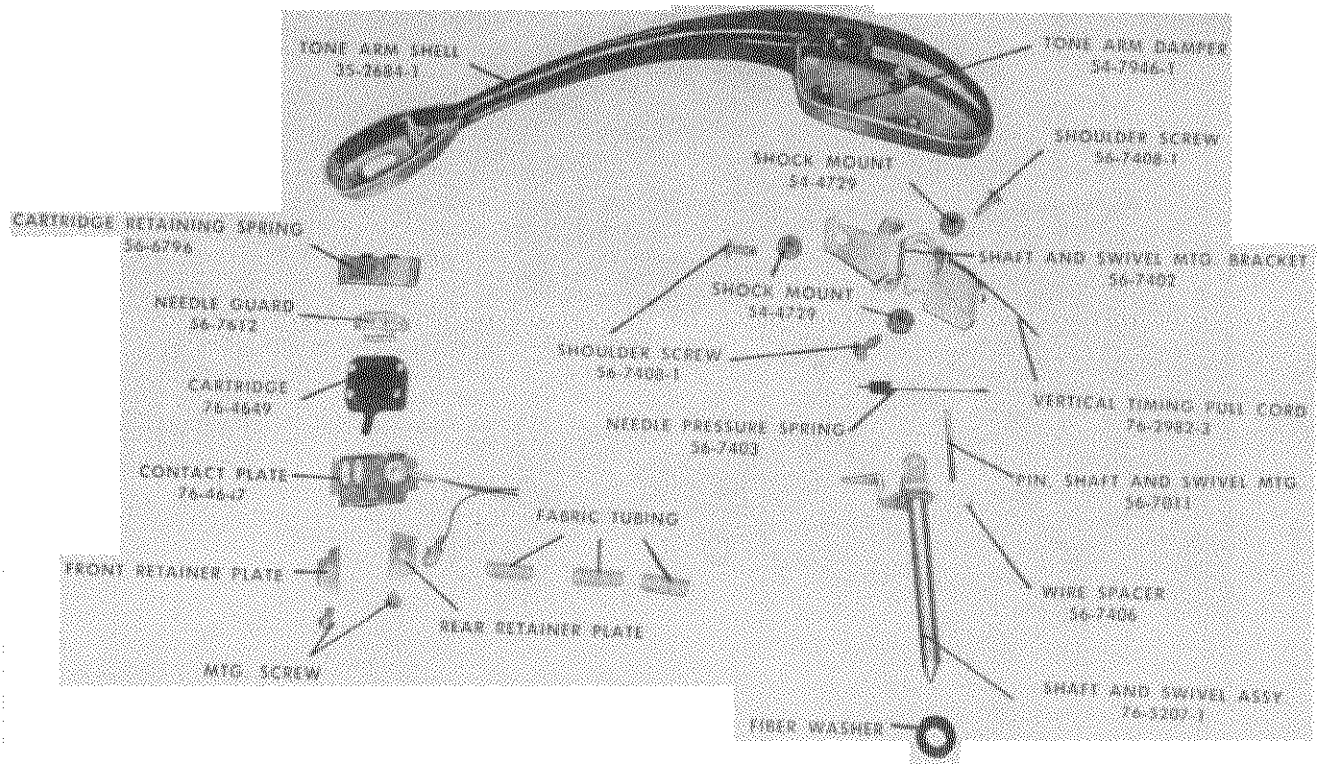

FIGURE 13. TONE-ARM ASSEMBLY

TP-9-215

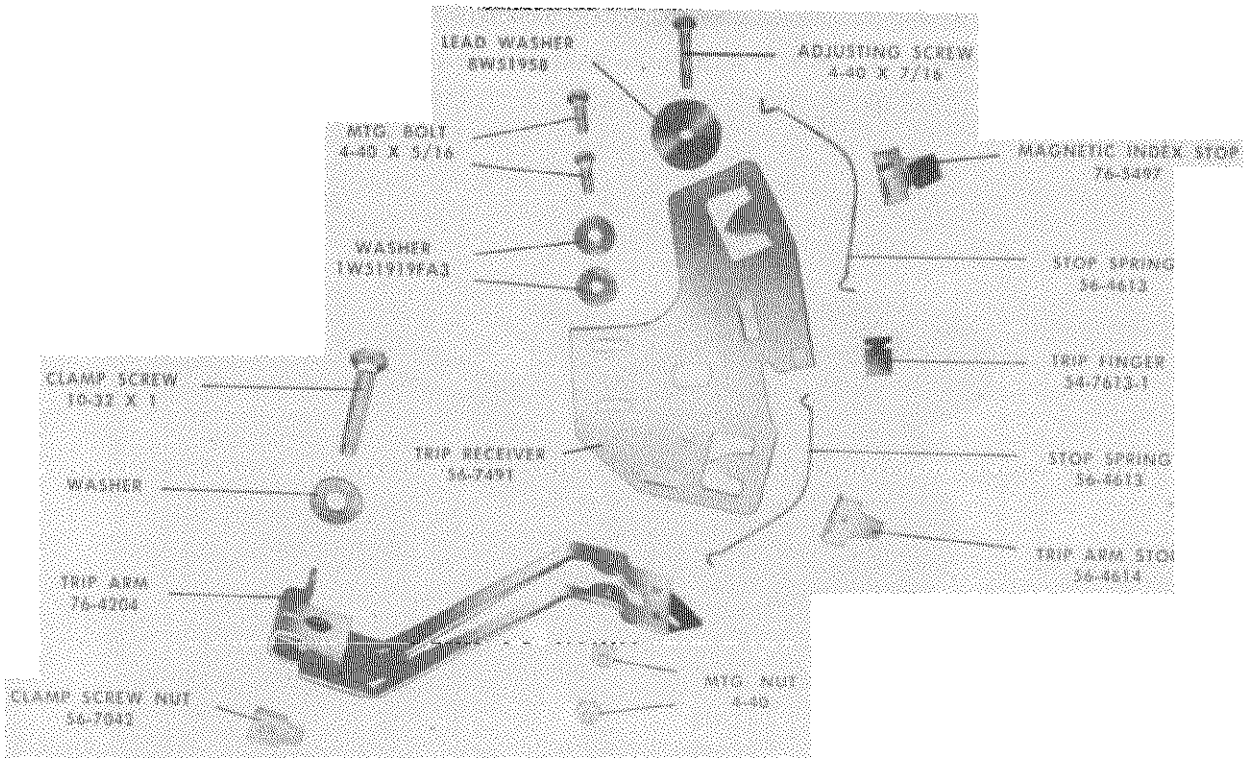

FIGURE 14. TRIP-ARM AND TRIP-RECEIVER ASSEMBLIES

TP-9-202

© John F. Rider

MODEL M-20

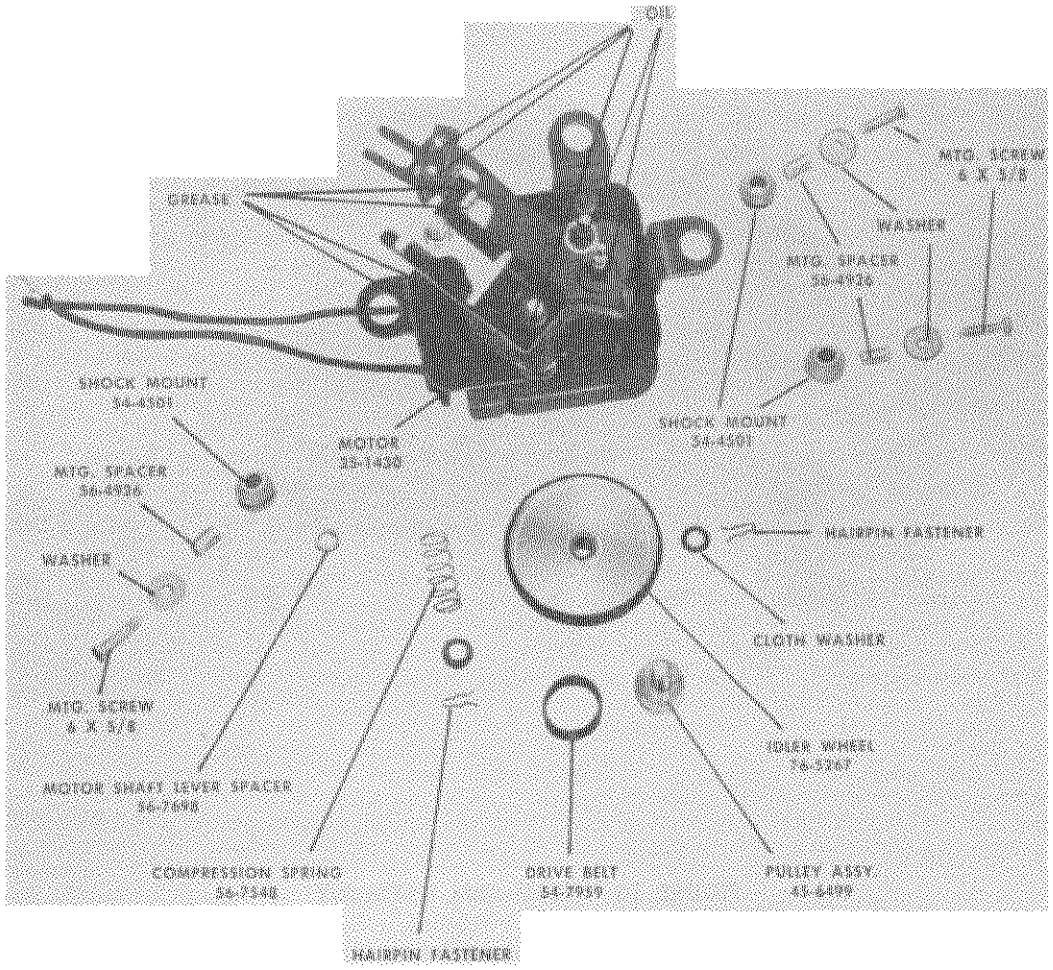

FIGURE 15. MOTOR ASSEMBLY—PART NO. 35-1430

TP-9-204

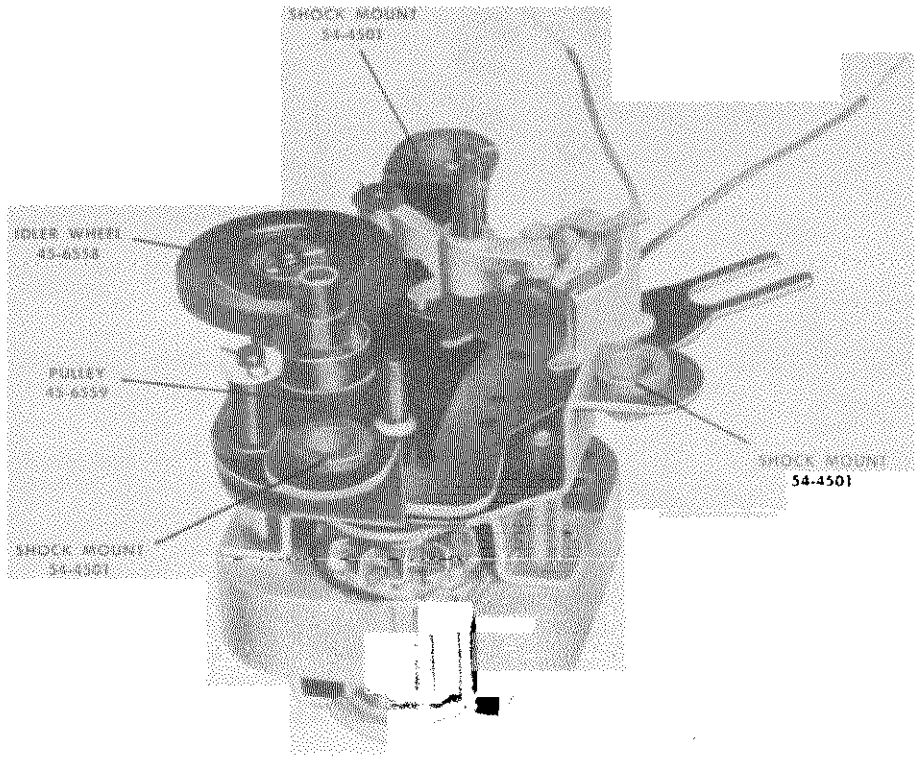

TP-9-456

FIGURE 16. MOTOR ASSEMBLY—PART NO. 35-1433

© John F. Rider

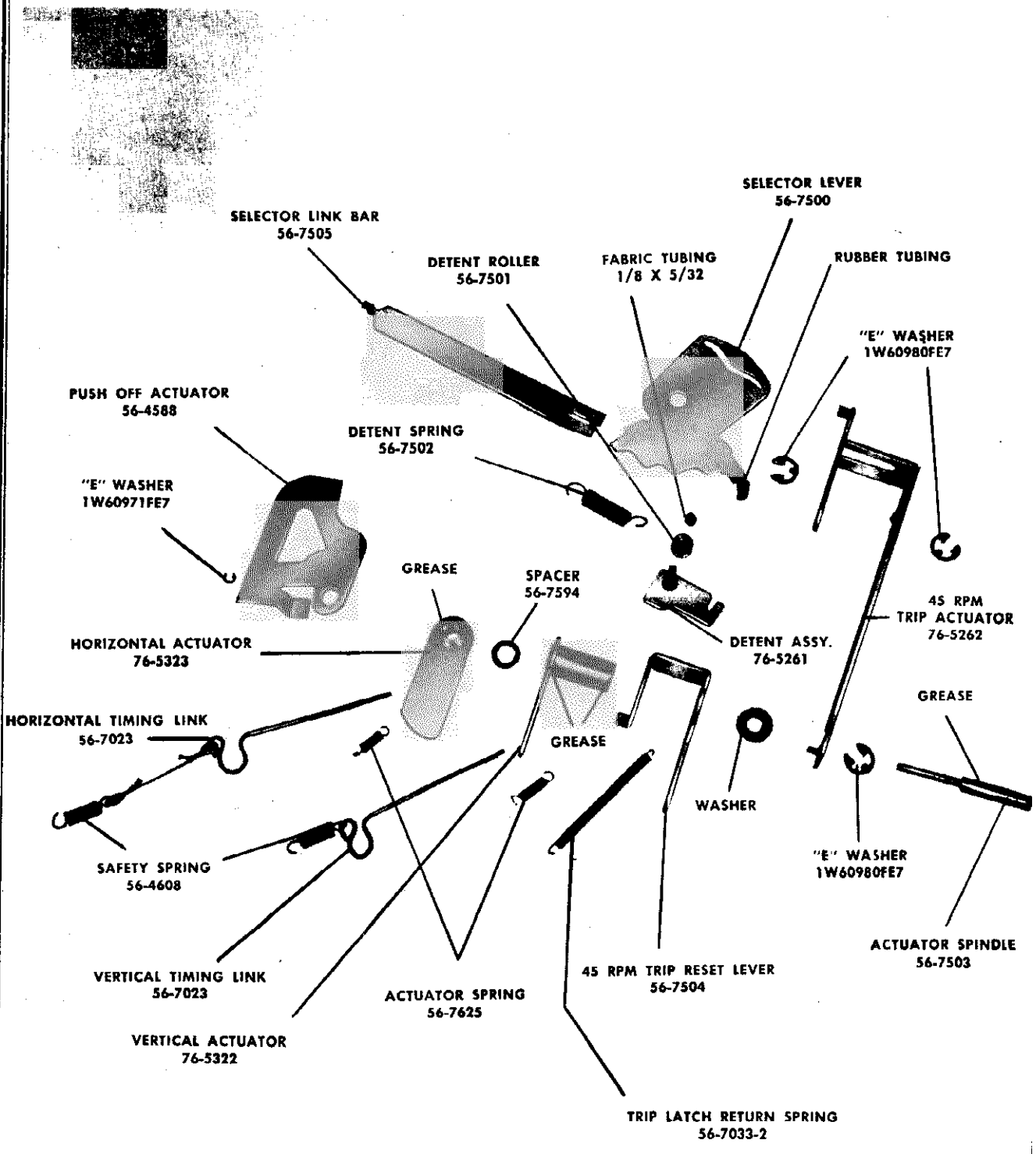

FIGURE 17. ACTUATOR AND SPEED-CHANGE ASSEMBLIES

TP-9-220

MODEL M-20

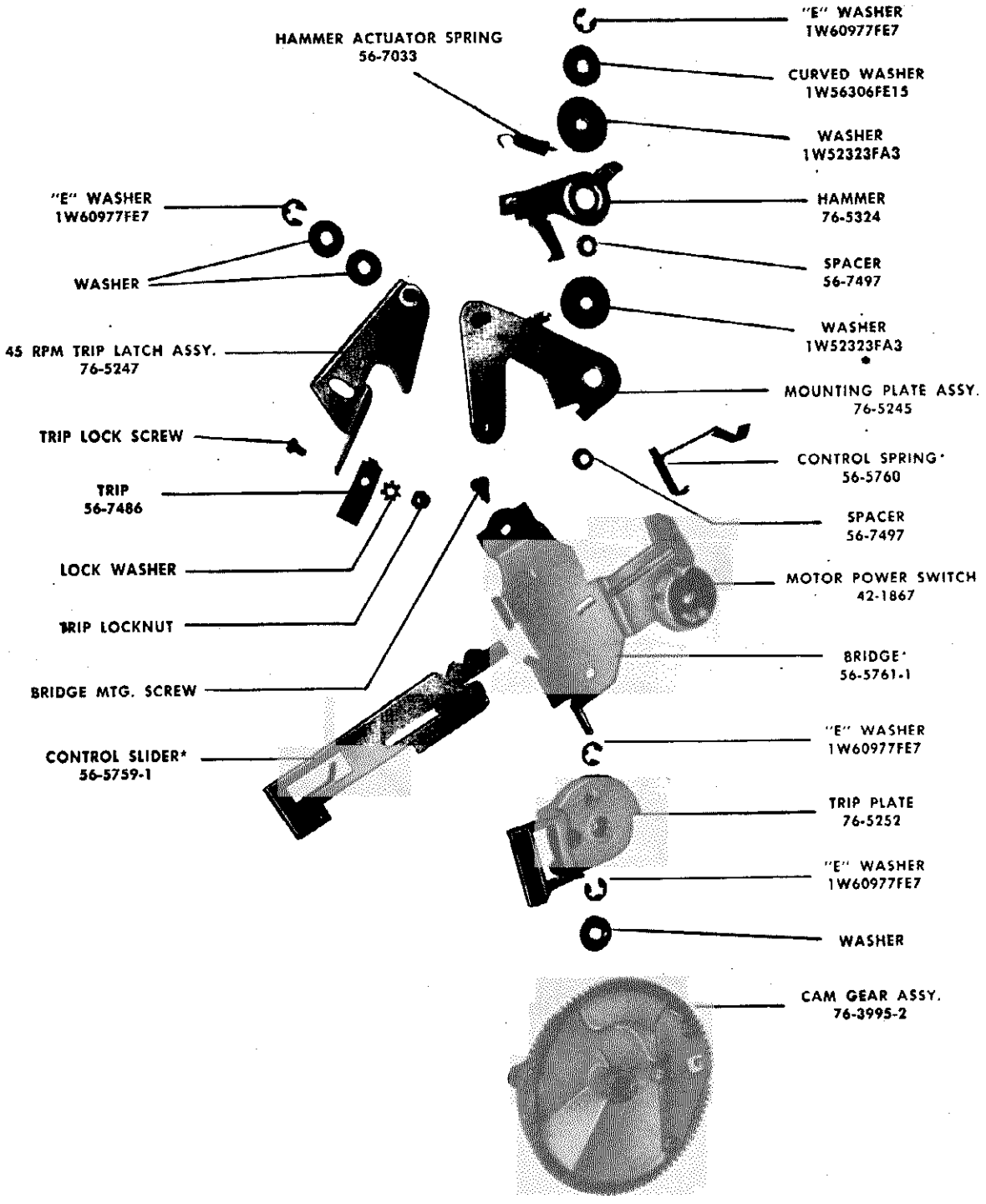

TP-9-221

FIGURE 18. CAM-GEAR AND BRIDGE ASSEMBLIES (BRIDGE ASSEMBLY PARTS ARE IDENTIFIED BY *)

©John F. Rider

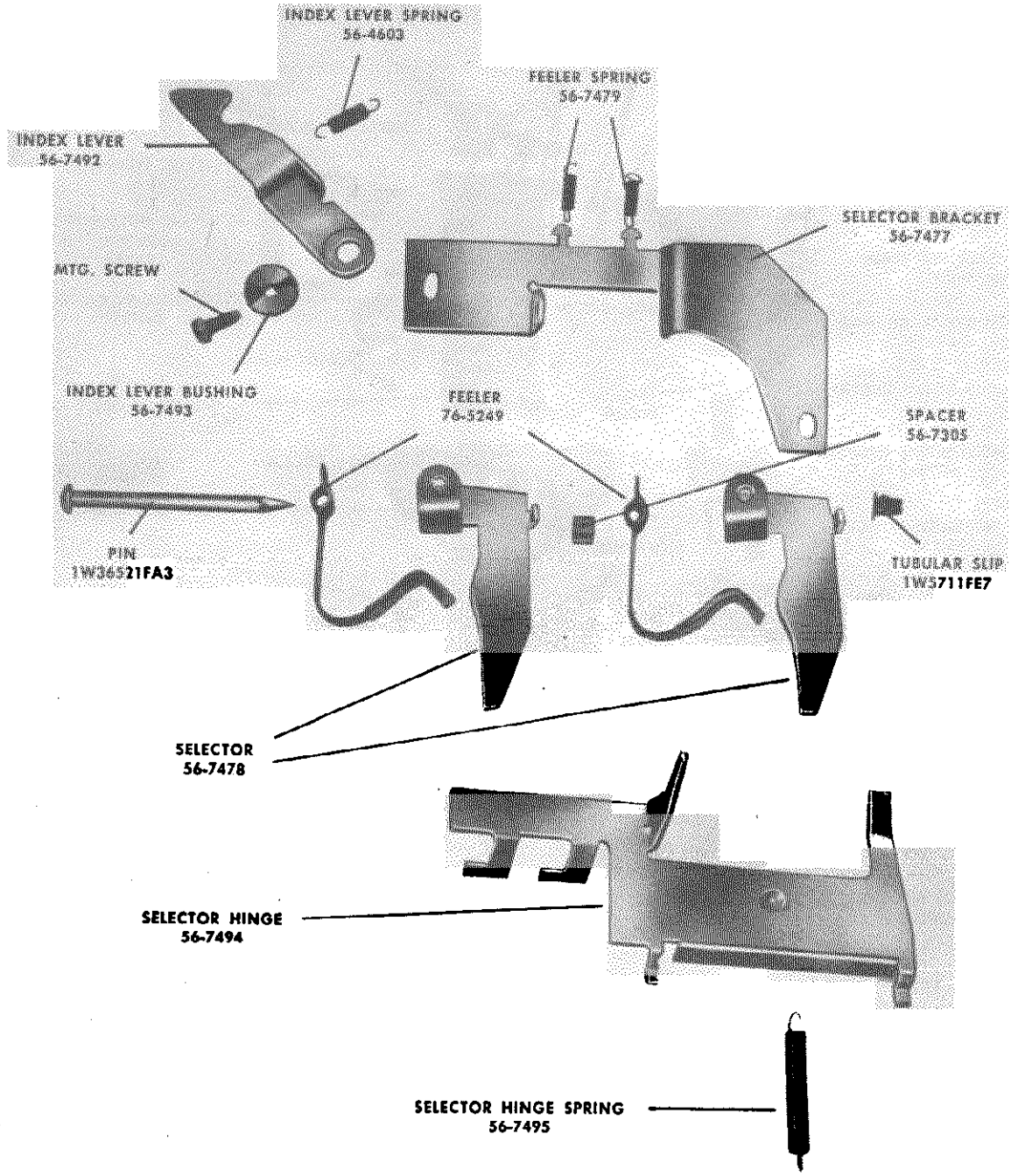

TP-9-222

FIGURE 19. SELECTOR ASSEMBLY

©John F. Rider

MODEL M-20

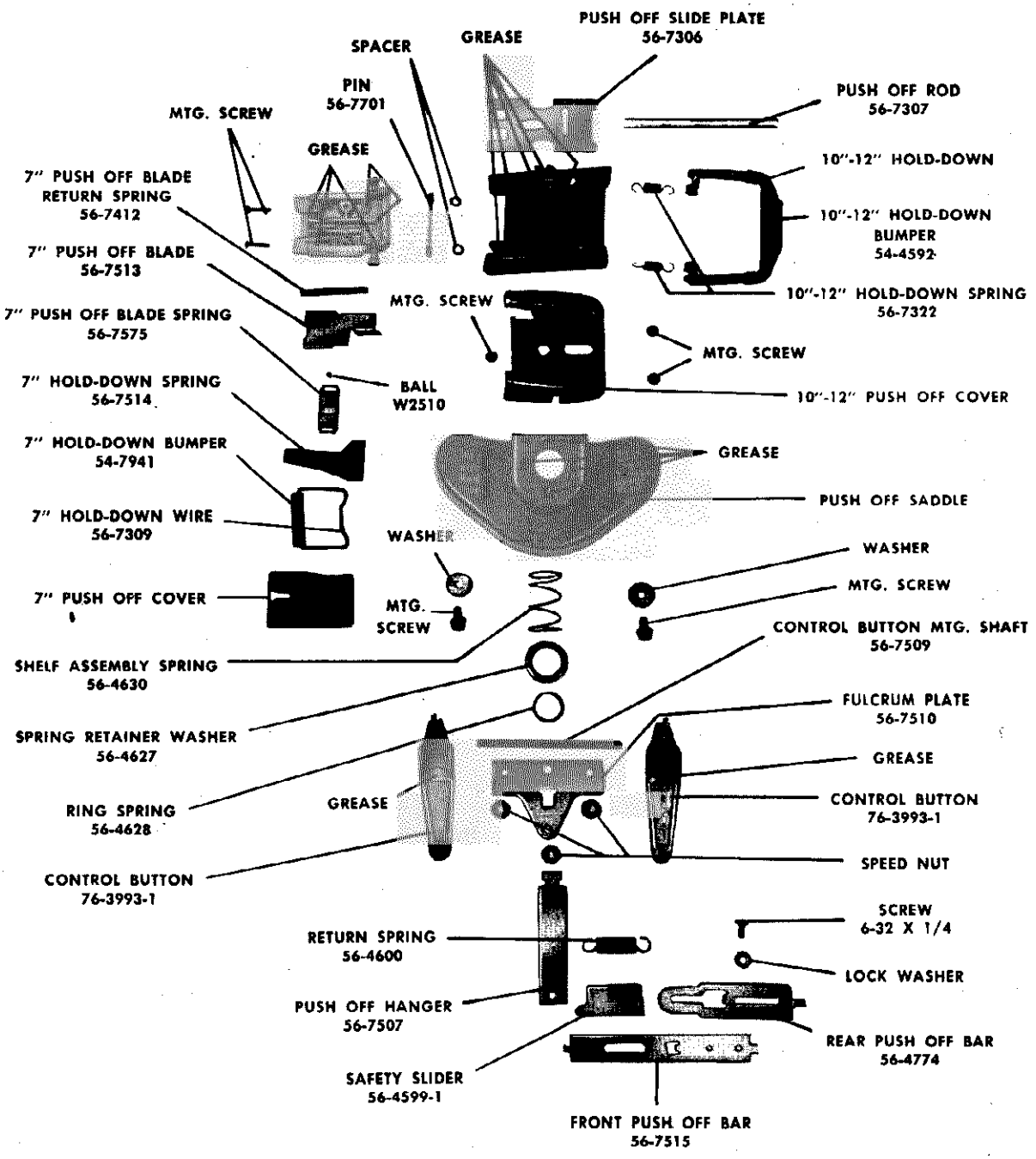

TP-9-203

FIGURE 20. RECORD-SHELF AND PUSH-OFF ASSEMBLIES

©John F. Rider

REPLACEMENT PARTS LIST

DESCRIPTION	SERVICE PART NO.
Actuator Assembly	
Actuator, horizontal	76-5323
Actuator, trip, 45 r.p.m.	76-5262
Actuator, vertical	76-5322
"E" washer	1W60980FE7
"E" washer	1W60971FE7
Link, horizontal and vertical timing (2)	56-7023
Reset lever, 45 r.p.m. trip	56-7504
Spacer	56-7594
Spindle, actuator mounting	56-7503
Spring, actuator (2)	56-7625
Bridge Assembly	76-3998-1
Bearing assembly, turntable	76-2991
Bridge	56-5761-1
Control link	56-7506
Control slider	56-5759-1
Cover, motor switch	76-4010
Spring, control	56-5760
Switch, motor power	42-1867
Cam-Gear Assembly	76-3995-2
Bushing, index lever	56-7493
"E" washer	1W60977FE7
Hammer	76-5324
Index lever, cam locking	56-7492
Latch assembly, 45 r.p.m. trip	76-5247
Mounting plate assembly	76-5245
Spacer (2)	56-7497
Spring, hammer actuator	56-7033
Spring, index lever	56-4603
Spring, 45 r.p.m. trip-latch return	56-7033-2
Trip finger, of trip latch	56-7486
Trip plate	76-5252
Washer (2)	1W52323FA3
Washer, curved	1W56306FE15
Index-Selector Assembly	
Bracket, selector	56-7477
Feeler (2)	76-5249
Pin	1W36521FA3
Selector (2)	56-7478
Selector hinge	56-7494
Spacer	56-7305
Spring, feeler (2)	56-7479
Spring, selector hinge	56-7495
Tubular slip	1W5711FE7
Motor Assembly, 60 cycles (see figure 15)	35-1430
Cable-and-plug assembly, motor power	41-3869
Drive belt	54-7959
Idler wheel	76-5267
Pulley assembly	45-6499
Shock mount (3)	54-4501
Spacer, mounting	56-4926
Spacer, motor shift lever	56-7698
Spring, compression	56-7548

DESCRIPTION	SERVICE PART NO.
Motor Assembly, 60 cycles (see figure 16)	35-1433△
Idler wheel	45-6558
Pulley	45-6559
Shock mount (3)	54-4501
Spacer, mounting	56-4926
Motor Assembly, 25 cycles	35-1446
Motor Assembly, 50/60 cycles	35-1442
Conversion kit for 50-cycle operation	40-7848
Push-Off-Bar Assembly	
Actuator, push-off	56-4588
Bar, push-off, front	56-7515
Bar, push-off, rear	56-4774
Hanger, push-off	56-7507
Safety slider	56-4599-1
Spring, return	56-4600
Push-Off and Shelf Assembly	76-5259
Ball	W2510
Bumper, 10"-12" hold-down	54-4592
Bumper, 7" hold-down	54-7941
Control button (2)	76-3993-1
Fulcrum plate	56-7510
Hold-down wire, 7"	56-7309
Pin	56-7701
Push-off blade (7")	56-7513
Push-off rod	56-7307
Shaft, control-button mtg.	56-7509
Slide plate, 10" and 12" push-off	56-7306
Spring, 7" hold-down	56-7514
Spring, 10" and 12" hold-down (2)	56-7322
Spring, 7" push-off blade	56-7575
Spring, 7" push-off blade return	56-7412
Spring, ring	56-4628
Spring, shelf assy.	56-4630
Washer, spring retainer	56-4627
Speed Change	
Detent assembly	76-5261
Lock, detent plate	56-7499
Roller, detent	56-7501
Selector lever	56-7500
Selector link bar	56-7505
Spring, detent	56-7502
Tone Arm (complete)	35-2692-3
Bracket, mounting for shaft and swivel	56-7402
Cartridge	76-4649
Contact plate	76-4647
Damper, pyralin	54-7946-1
Guard, needle	56-7612
Needle	35-2693
Pin, shaft and swivel	56-7011
Pull-cord assembly, vertical timing	76-2982-3
Retainer plate, front	56-6795

©John F. Rider

MODEL M-20

REPLACEMENT PARTS LIST (Continued)

DESCRIPTION	SERVICE PART NO.
Retainer plate, rear	*56-6794*
Screw, shoulder, swivel mounting (3)	56-7408-1
Shaft-and-swivel assembly	76-5207-1
Shock-mount, swivel mounting (3)	54-4729
Spacer, wire, shaft and swivel pin	56-7406
Spring, cartridge retaining	56-6796
Spring, needle pressure	56-7403
Spring, safety, pull-cord	56-4608
Stanchion, tone arm	56-5746-1
Tone-arm shell	35-2684-1
Trip Arm	76-4204
Index stop, magnetic	76-5497
Nut, clamp screw	56-7042
Pull-cord assembly, horizontal timing	76-2982-2
Spring, safety, pull-cord	56-4608
Spring, stop (2)	56-4613
Trip-arm stop	*56-4614*
Trip finger	54-7613-1
Trip receiver	56-7491
Washer (2)	IW51919FA3
Washer, lead	8W51958

DESCRIPTION	SERVICE PART NO.
Miscellaneous	
Base-plate and tone-arm-stanchion assembly	76-5256
Bumper, rubber, tone-arm rest	54-4647
Cable clamp	56-2832
Driver, 45 r.p.m. record	56-7747
Insert (adaptor), 45 r.p.m. record	54-4744
Spindle	76-3926-1
Cotter pin, spindle retaining	ZW35740
Spring, spindle	*56-7508*
Switch, tone-arm-output selector	42-1873
Tone-arm rest	56-6376
Turntable	
Felt ring, turntable bearing	54-7385

^This motor is not stocked. Order Part No. 35-1430.

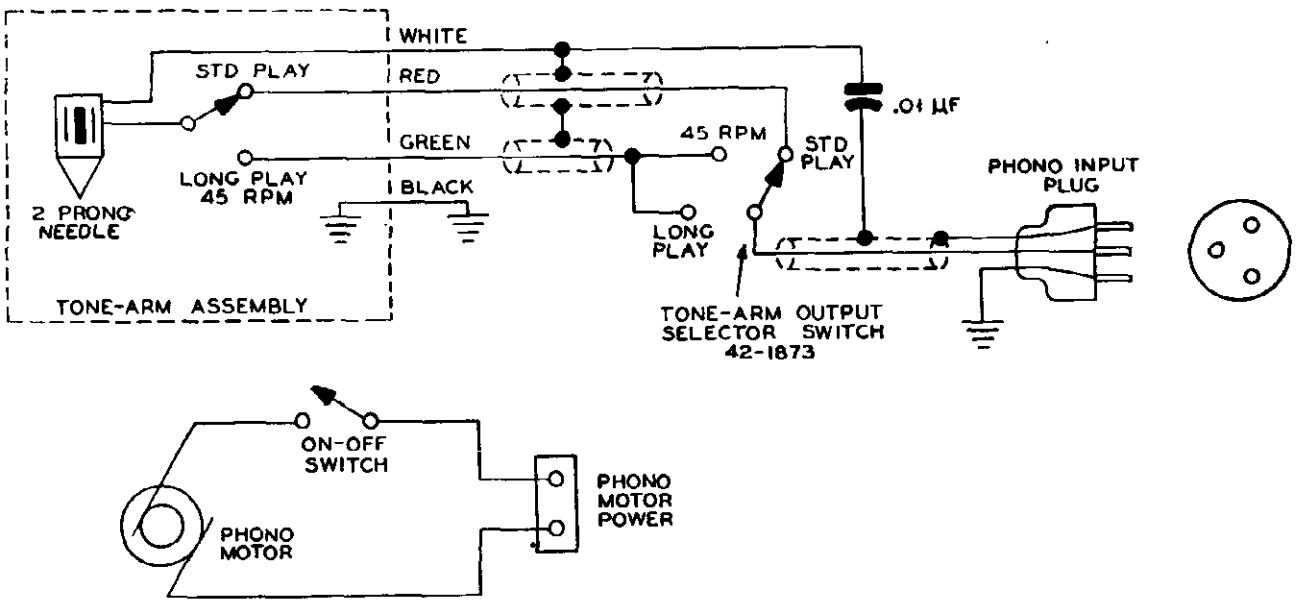

FIGURE 21. WIRING DIAGRAM OF MODEL M-20

Trav-ler Record Changer Model A

OPERATION OF RECORD CHANGER

For 10" records the long side of the record shelf (11) must be turned counterclockwise (Fig. 6) so that it points toward the spindle (47).

For 12" records, the short side of the record shelf (11) must be turned counterclockwise so that it points toward the spindle (47).

In either case, always turn the record shelf counterclockwise until a click is heard. This will be the 10"-12" index lever (9) engaging one of two slots on the 10"-12" index cam. (12). This insures correct positioning of the mechanism during cycling or playing.

Lift the record holddown plate (20) Fig. 6 to the rear of the record shelf (11)(if it is not already there) and place two or three records on the spindle (47) and record shelf (11). Return the record holddown plate (20) so that it rests on the records holding them in place.

Turn the control knob (29) to the Reject position and hold momentarily. Release the control knob (29) and it will return to the ON position for automatic operation.

If the mechanism is working properly more records may be added.

This changer was designed to play automatically 12 - 10" or 10 - 12" standard records not mixed, and to operate on 115-117 volts 60 cycles.

CYCLE OF OPERATION

Drawings A through 5 show Trav-ler Model A Record Changer progressing through a complete cycle of operation.

Fig. A shows the bottom view of the Record Changer with the drive wheel and belt in place. Fig. B shows the bottom view of the Record Changer with the drive wheel and belt removed and the main cam (40) in place. All parts visible from the bottom of the Record Changer are labeled in these 2 drawings.

If Figs. 1 through 5, the drive wheel (41) and main cam (40) have been omitted for sake of clarity and to show operation of otherwise hidden parts. The main cam, however, has been shown in these drawings as a dotted line to illustrate its position.

Only those parts are labeled in Figs. 1 - 5B which are operative or referred to in that particular phase of cycle. Figs. 1, 1A, and 1B illustrate the parts of the Record Changer in the OFF or normal position.

To start the change cycle, turn the control knob (29) to the Reject position as shown in Fig. 2A. Release the control knob and it will automatically return to the ON position as shown in Fig. 3A.

This causes the reject arm actuating lever (26 Fig. 2) to move to the left, causing the reject arm (35 fig. 2) to pivot and push the ON -

© John F. Rider

MODEL A

OFF switch (22 Fig. 2) to the ON position. And at the same time point A of the reject arm (25 Fig. 2) pushes against the release arm (35 Fig. 2) releases its hold on the cam pawl (39 Fig 2C) allowing it to drop down and engage the raised portions of the drive wheel (41 Fig. 2C). The drive wheel is driven by the drive belt (42) and drive pulley (46 Fig. A).

This section starts turning the main cam (40 Fig. B). The pickup arm lift (56 Fig. 3B) which normally rests in the depression (point C) in the top of the main cam (40 Fig. 3C) is forced out of the depression and rides around the flat surface of the cam for the duration of the change cycle. At the same time, the pickup arm lift (56) forces the pickup arm (62 Fig. 3B) upward. And the cam follower (14, point D, Fig. 3) in following the inside contour (E Fig. 3C) of the main cam moves the pickup (62 Fig. 3A) away from the turntable (54 Fig. 3A) so that a record will be free to drop. (Assuming start of new cycle.)

As soon as point F of the main cam (40 Fig. 3C) moves against the ejector roller (15 Fig. 3) the roller is forced away from the main cam and the roller shaft (15) see exploded view) in turn forces the ejector plate (16) Fig. 3A and 6 forward and pushes a record off the record shelf (11 Fig. 4A).

As the main cam (40 Fig. 3) continues to turn, the tension of the ejector spring (31 Fig. 3) forces the ejector roller (15) to follow the outside contour of the main cam (40 Fig. 4). This allows the ejector plate (16 Fig. 4A) to return to its normal position.

Near the end of the change cycle as the cam follower (14, point D, Fig. 4) reaches point G of the inside contour of the main cam (40 Fig. 4C), the pickup arm starts moving toward the turntable (54 Fig. 4A), and when it is directly over the starting point of the record, the main cam (40 Fig. 4C) moves until the depression, C, in the main cam, is directly under the pickup arm lift (56 Fig. 4B), which causes the pickup arm (62 Fig. 4B) to lower onto the record.

As the main cam (40 Fig. 4) ends its' revolution, the cam pawl (39 Fig. 4D) comes in contact with point B on the release arm (35 Fig. 4) and is lifted up from contact with the drive wheel (41 Fig. A also Fig. 4D) and thereby stopping the main cam in its original position.

The pickup arm is now free to move across the record.

Fig. 5 shows how the pickup trip arm (13) has followed the pickup arm (62 Fig. 5A) as it moved across the record. The pickup arm is at the end of the record and the serrated end of the pickup trip arm has moved against the release arm tension bracket (33 Fig. 5). (Also see 33 on exploded view). The backward and forward movement caused by the grooves at the end of the record forces the release arm tension bracket (33 Fig. 5) to pivot, and the pivot point applies pressure to the release arm (35 Fig. 5) forcing it away from the cam pawl (39 Fig. 2C) allowing the cam pawl to drop and engage the main drive wheel (41 Fig. 2C), thereby starting another change cycle.

© John F. Rider

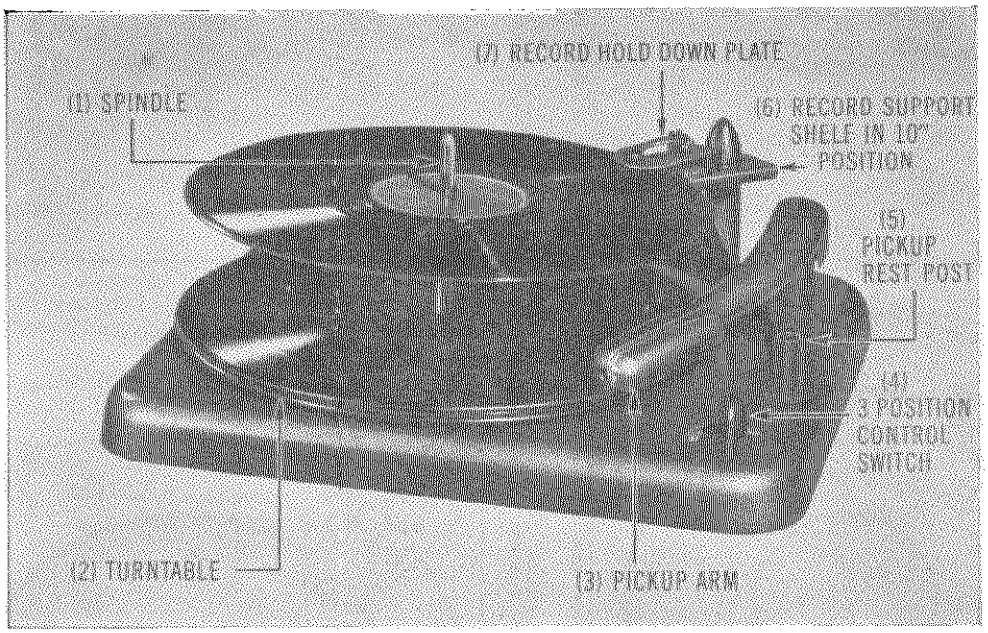

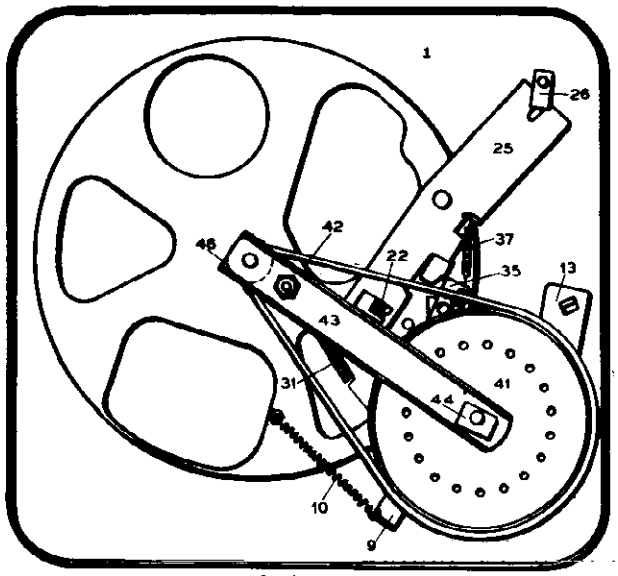

BOTTOM VIEW

FIG. A
DRIVE WHEEL AND BELT IN PLACE

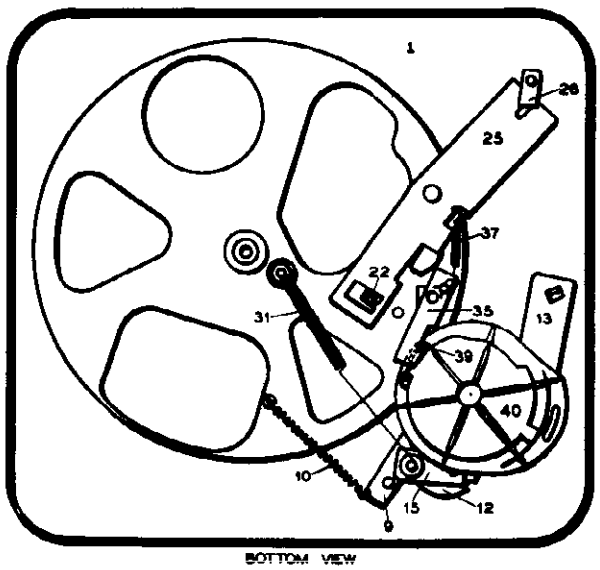

BOTTOM VIEW

FIG. B
CAM IN PLACE

©John F. Rider

MODEL A

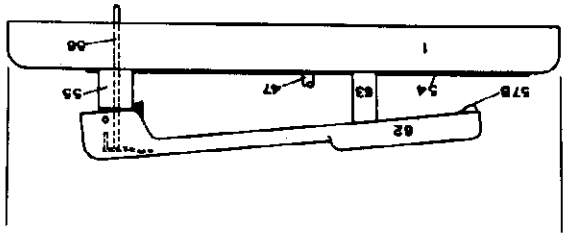

FIG. 1B
OFF POSITION

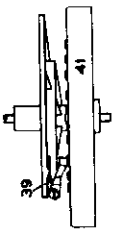

SIDE VIEW OF CAM AND DRIVE WHEEL AT START OF CYCLE

FIG. 2C
REJECT POSITION

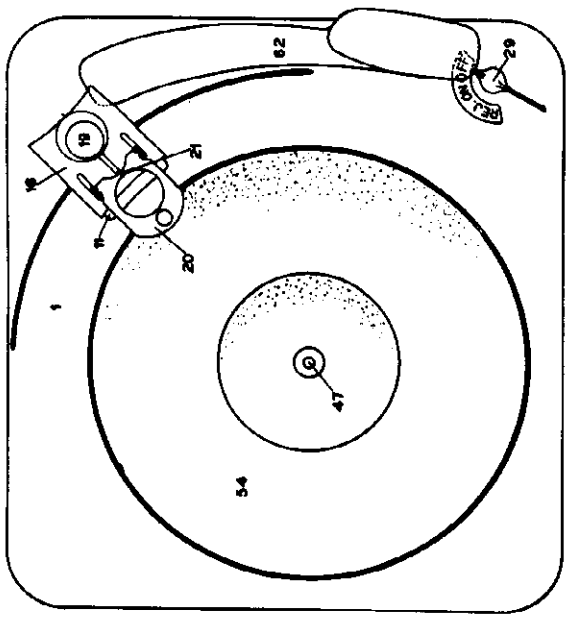

FIG. 1A
OFF POSITION

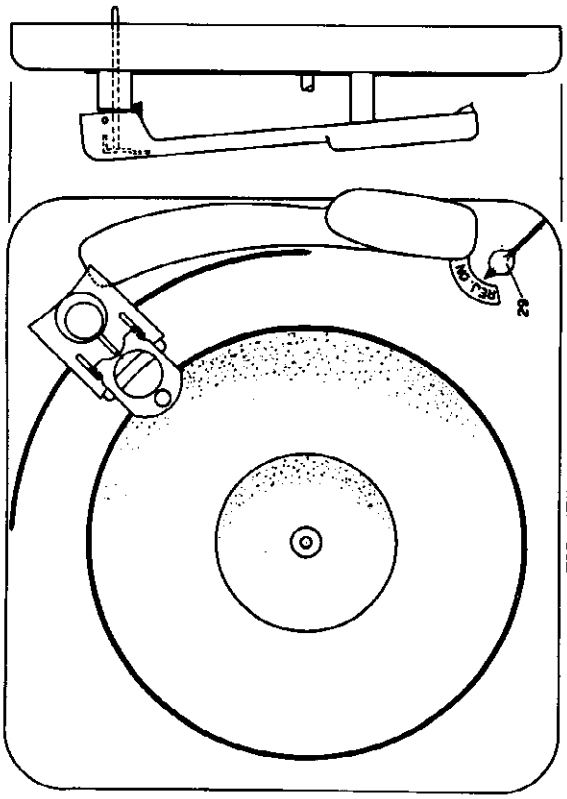

FIG. 2B
REJECT POSITION

FIG. 2A
REJECT POSITION

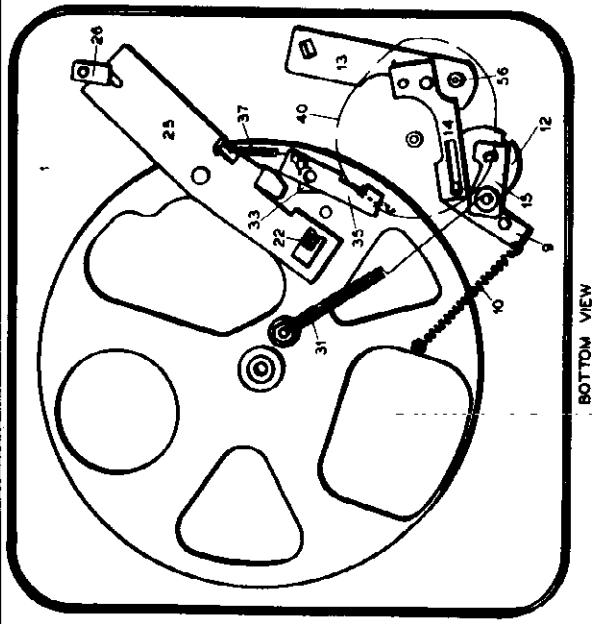

FIG. 1
OFF POSITION

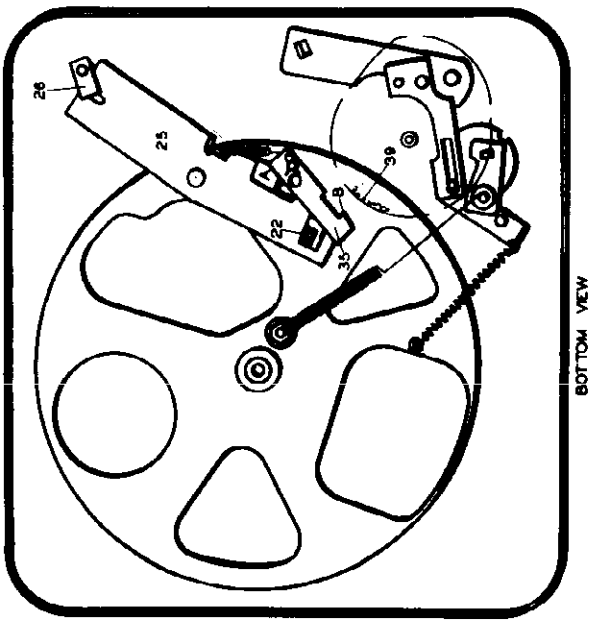

FIG. 2
REJECT POSITION

©John F. Rider

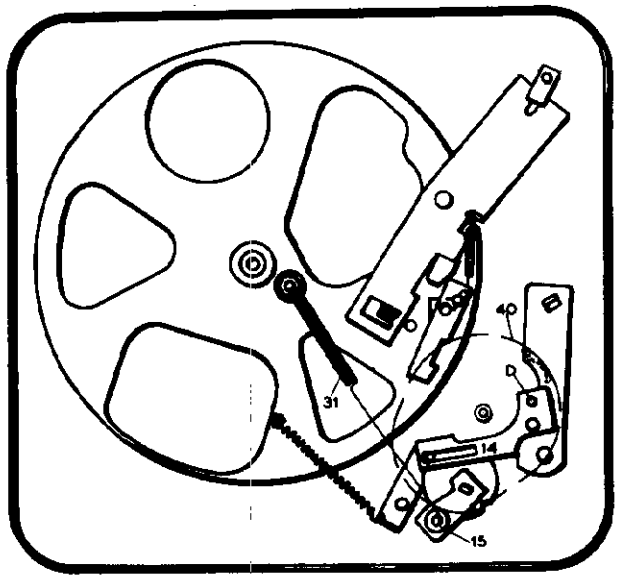

BOTTOM VIEW

FIG. 3
RECORD EJECTION POSITION

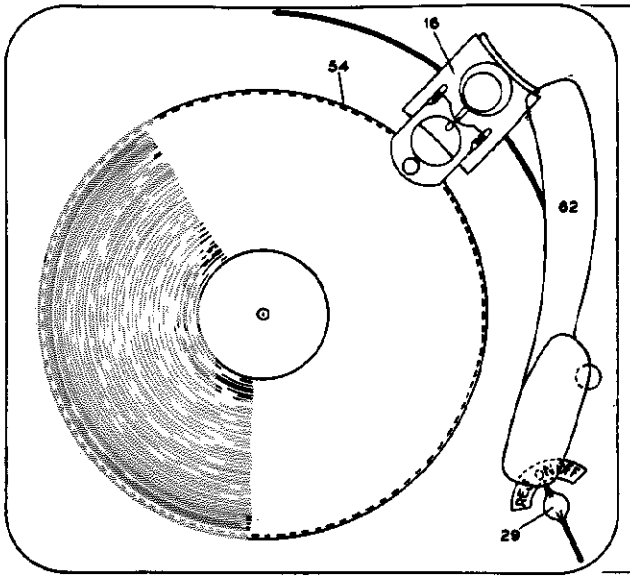

TOP VIEW

FIG. 3A
RECORD EJECTION POSITION

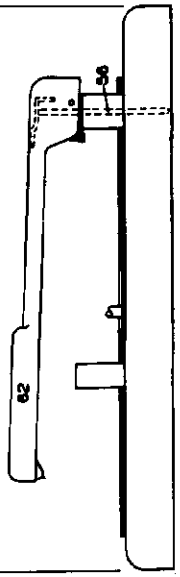

RIGHT SIDE VIEW

FIG. 3B
RECORD EJECTION POSITION

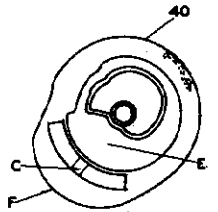

TOP VIEW OF CAM

FIG. 3C
RECORD EJECTION POSITION

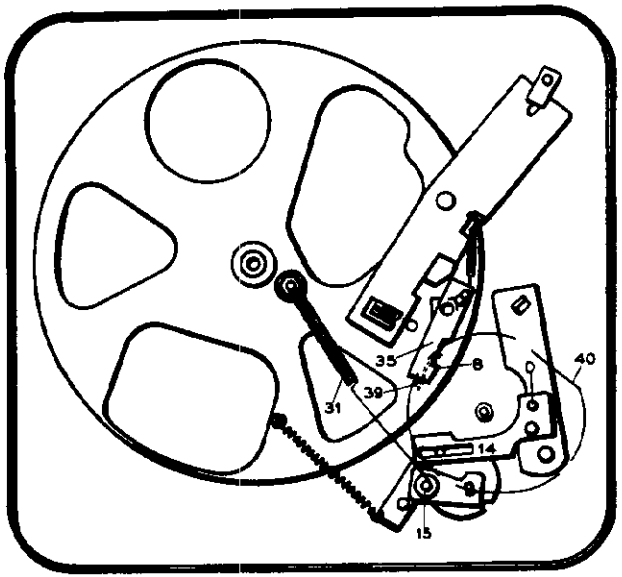

BOTTOM VIEW

FIG. 4

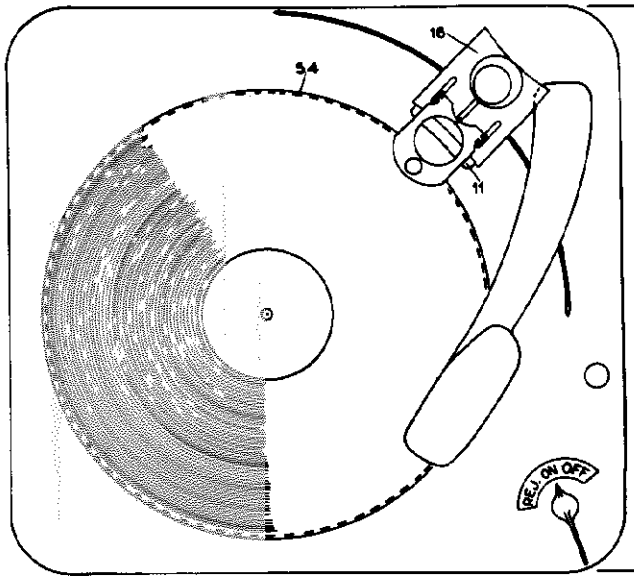

TOP VIEW

FIG. 4A

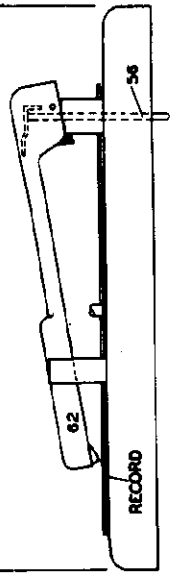

RIGHT SIDE VIEW

FIG. 4B

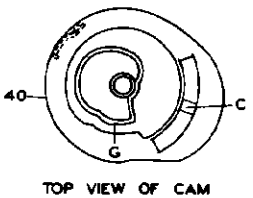

TOP VIEW OF CAM

FIG. 4C
START OF RECORD POSITION

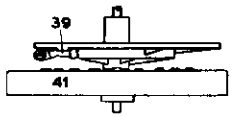

SIDE VIEW OF
CAM AND DRIVE WHEEL

FIG. 4D
START OF RECORD POSITION

©John F. Rider

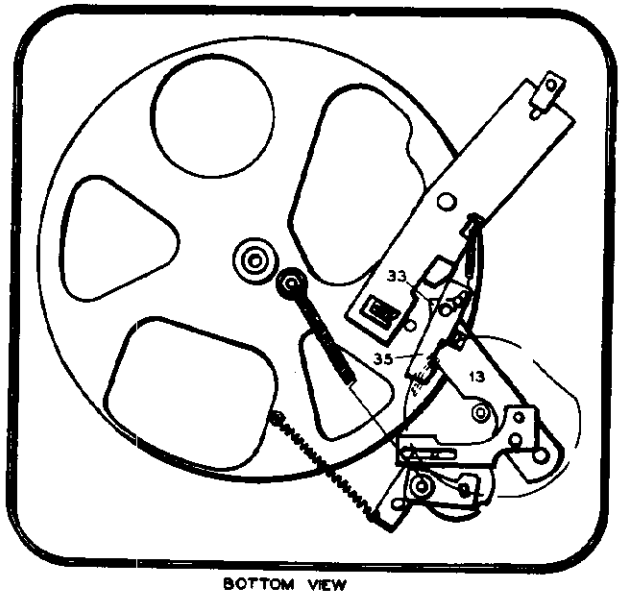

BOTTOM VIEW

FIG. 5
END OF RECORD POSITION

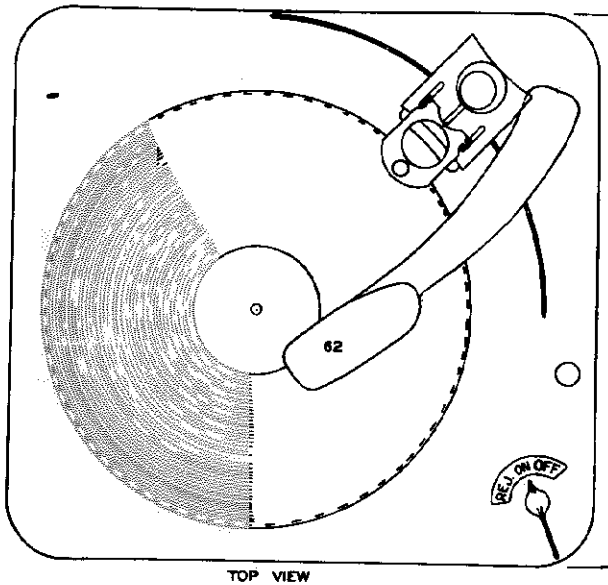

TOP VIEW

FIG. 5A
END OF RECORD POSITION

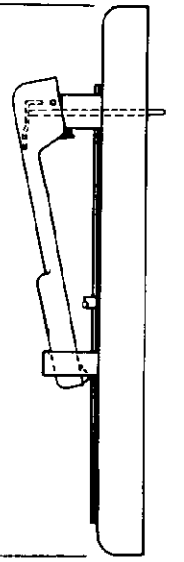

RIGHT SIDE VIEW

FIG. 5B
END OF RECORD POSITION

FIG. 7
BALL DETENT & SLOT

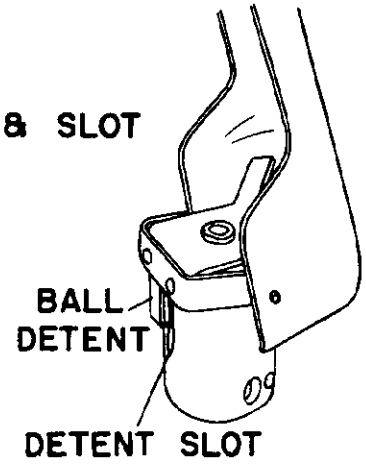

ALWAYS TURN LEFT FOR
10" OR 12" RECORDS

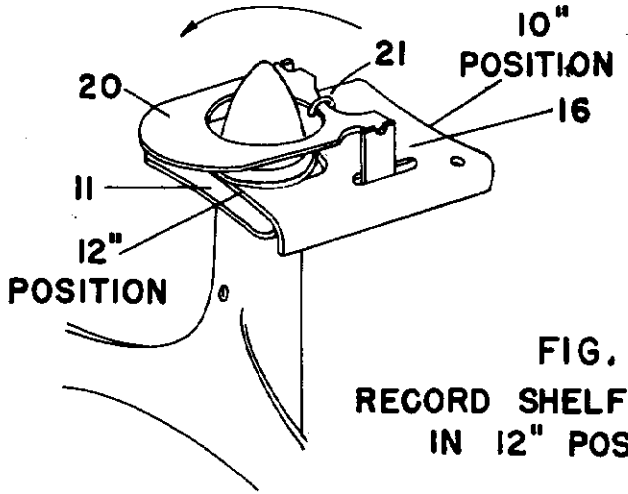

FIG. 6
RECORD SHELF SHOWN
IN 12" POSITION

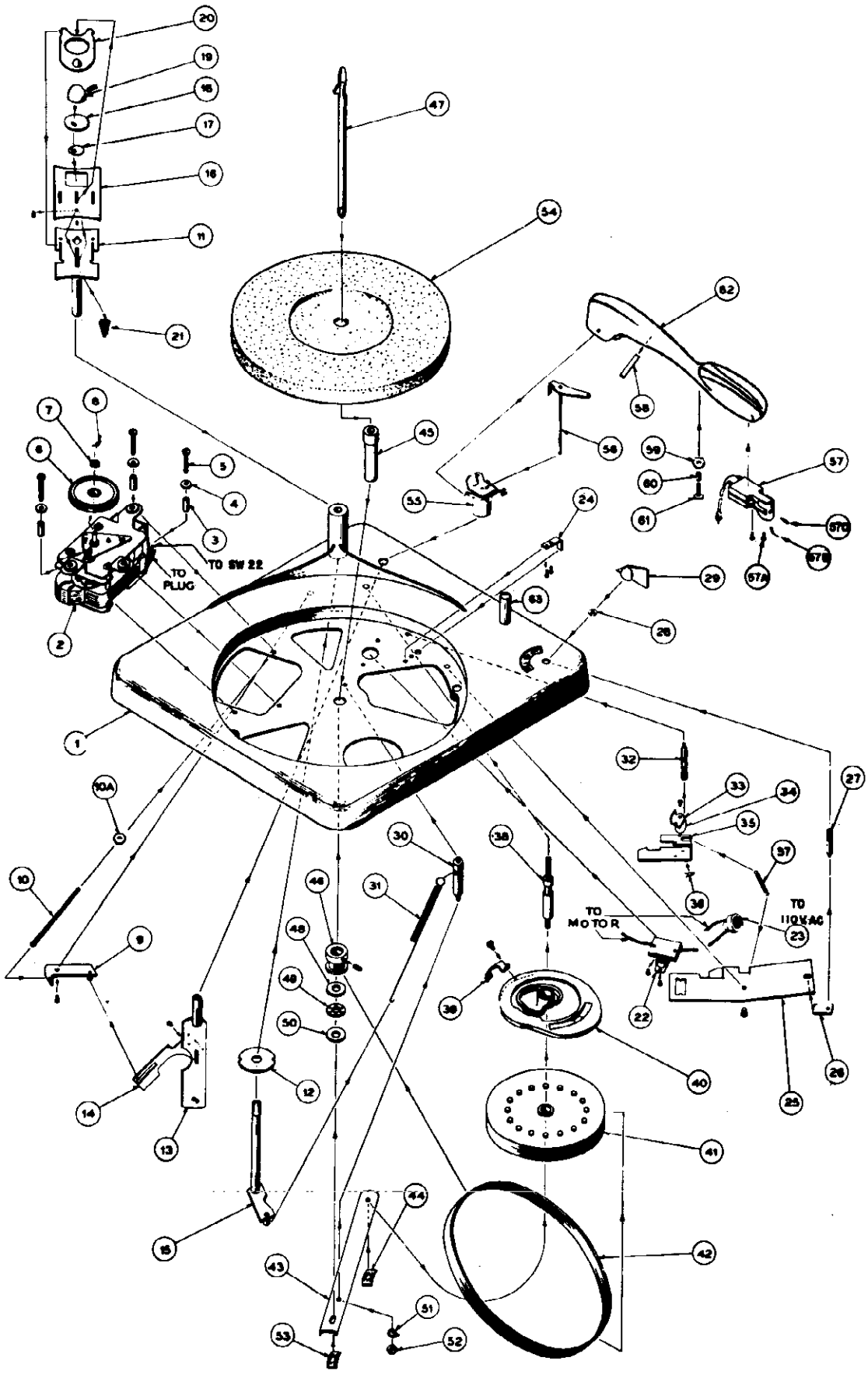

©John F. Rider

SYMPTOMS	CAUSES	REMEDIES
1. Changer continues to cycle	1. Release arm spring (37) weak or lost 2. Reject Arm (25) binding 3. Release arm (35) bent 4. Actuating lever shaft (27) binding	1. Replace Spring 2. Oil lightly at pivot pin 3. Straighten until parallel with changer base plate 4. Remove control knob and oil shaft lightly
2. Mechanism does not trip at end of record	1. Pickup trip arm (13) is bend downwards	1. Straighten trip arm until parallel with changer base plate
3. Pickup arm moves a short way in on record then jumps a groove	1. Pickup trip arm (13) is bent upwards	1. Straighten trip arm until parallel with base plate
4. Wow or motor rumble	1. Worn spots in idler wheel (6) 2. Oil on idler sheel (6) and turntable rim 3. Warped record	1. Replace idler wheel or if spots are too deep try sanding the wheel smooth 2. Clean idler wheel and turntable rim
5. Change cycle is too slow or motor overheats	1. Moving parts binding 2. Line voltage incorrect 3. Defective motor winding 4. Drive belt slipping	1. Locate part and oil lightly 2. 115-117 Volts 60 cycles 3. Replace motor 4. Clean belt, pulley and drive wheel if oily. Replace belt if not oily
6. Pickup arm lands too far in on record or	1. Ball detent is not in detent slot Fig. 7	1. Hold the pickup arm part (55) stationary and move the pickup arm until the ball detent Fig 7 engages the ball detent slot
7. Pickup arm does not lower enough to reach the record	1. The pickup arm lift (56) is bent upwards	1. Bend the pickup arm lift (56) down slightly and try the changer each time until the proper angle is obtained
8. Turntable will not start	1. A break in the line cord 2. Defective power plug 3. Defective switch 4. No voltage at power outlet 5. Burned out motor	1. Replace 2. Replace 3. Replace 4. Check fuse box 5. Replace
9. Distorted sound	1. Audio Amplifier defective 2. Word needle 3. Defective crystal cartridge 4. Worn record	1. Check with radio reception or check audio amplifier 2. Replace needle 3. Try new cartridge 4. Check with new record
10. No Sound	1. Defective crystal cartridge 2. Loose connection between crystal and audio amplifier 3. Defective Audio Amplifier	1. Replace 2. Make continuity and short check 3. Make conventional voltage, resistance and tube check

©John F. Rider

TRAV-LER RECORD CHANGER MODEL A

PART NO.	DESCRIPTION
1	Base Plate
2	Motor
3	Motor Mount Spacer
4	#6 Flat Washer
5	6 - 32x7/8" Motor Mount Screw
6	Idler Wheel
7	Fibre Washer
8	Hairpin Clip
9	10" - 12" Index Lever
10	Index Lever Tension Spring
10A	Tension Spring Anchor Nut #6-32
11	Record Shelf
12	10" - 12" Index Cam
13	Pickup Arm Trip Arm and Shaft
14	Cam Follower and Arm
15	Ejector Roller and Shaft
16	Ejector Plate
17	Ejector Cam
18	Ejector Washer
19	Ejector Assembly Top
20	Record Hold Down Plate
21	Hold Down Plate Spring
22	A.C. On-Off Switch
23	A.C. Connector Plug
24	Release Arm Stop
25	Reject Arm
26	Reject Arm Actuating Lever
27	Actuating Lever Shaft
28	"C" Washer
29	Control Knob
30	Bearing Support Bar Standoff
31	Ejector Roller Spring
32	Release Arm Support

PART NO.	DESCRIPTION
33	Release Arm Tension Bracket
34	Tension Bracket Spring
35	Release Arm
36	Hairpin Clip
37	Release Arm Spring
38	Main Cam and Drive Wheel Shaft
39	Cam Pawl
40	Main Cam
41	Drive Wheel
42	Drive Belt
43	Bearing Support Bar
44	Speed Nut
45	Turntable Bearing
46	Drive Pulley and Set Screw
47	Spindle
48	Bearing Washer
49	Turntable Thrust Bearing
50	Bearing Washer
51	#10 Lock Washer
52	#10-28 Nut
53	Speed Nut
54	Turntable
55	Pickup Arm Post and Set Screws
56	Pickup Arm Lift
57	Crystal Pickup Cartridge
57A	Pickup Mounting Screws
57B	Needle
57C	Needle Set Screw
58	Pickup Leads Spring Clip
59	#4-32 Nut
60	Spaghetti Sleeve
61	#4-32x1/2" Machine Screw
62	Pickup Arm
63	Pickup Arm Rest

MODELS 133-6, 146, 160, 161, 164

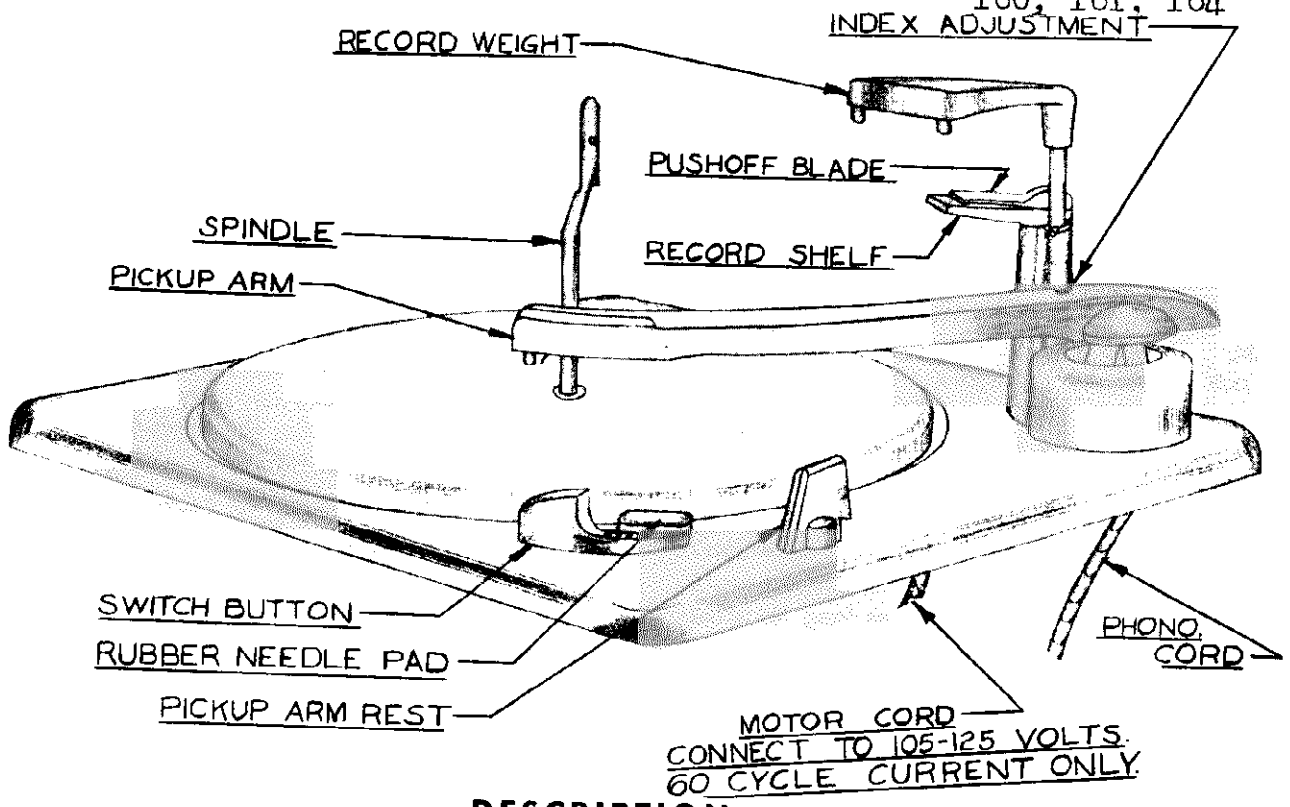

DESCRIPTION

The Webster-Chicago Model 146 is a single post, spring-cushioned spindle, automatic record changer. Simple in design and operation, it provides manual or automatic playing of a 1" stack of 10" or 12" records with a minimum of waiting time between records during automatic operation. When set for automatic operation, Model 146 returns the pickup arm to the rest position after the last record, although the motor continues to revolve until attended.

Model 146 features the exclusive Webster-Chicago Velocity Trip mechanism. The pickup arm is not actuated by "lead-in" springs and there is a minimum of lateral pressure. The arm travels freely in either direction. This lack of lateral pressure or inertia add immeasurably to the life of records and is considered to be as important as extra light vertical pressure, which in some instances would result in poor tracking at extremely low or high frequencies. This free floating arm permits "home recordings" or "inside out" records up to 12" size to be played manually.

Model 146 will change warped or rough-edged records, at the same time assuring maximum protection to the finest discs.

©John F. Rider

MODELS 133-6, 146,
160, 161, 164

OPERATION

MOTOR

Connect the motor cord to a source of 105-115 volt 60 cycle current only. If it is desired to operate the changer on 50 cycle current, a special motor pulley (Part No. 17X412-11) must be used in place of the one supplied with the changer in order to drive the turntable at the required speed of 78 R.P.M.

Do not under any circumstances connect the motor to a source of direct current or alternating current of any other frequencies.

PICKUP

The high impedance crystal cartridge supplied may be of the fixed permanent point or removable needle type. If it is the latter, use a needle which is not more than $1\frac{1}{16}$ inches long for most satisfactory results.

Some desirable qualities of a good needle are faithful reproduction, low surface scratch or hiss, long wearing qualities, minimum record wear and rugged construction.

The Webster-Chicago Nylon Needles are particularly adaptable for use with your Webster-Chicago "146" Do not use single play or cactus needles for automatic operation. Such needles require frequent replacement or sharpening and are not designed to play a full stack of records.

OPERATION — AUTOMATIC

1. Turn the Record Shelf forward or back for ten or twelve inch records.
2. With the record ballast weight lifted and turned forward out of position, place up to a 1" stack of 10" or 12" records on the spindle so that the bottom record rests on the step of the spindle and on the Record Shelf.
3. Turn the record ballast weight and lower it until it rests on the top record.
4. Move the control knob from the STOP position (nearest the pickup arm rest) to the START-REJECT position (farthest from the pickup arm rest) and release. The control will then drop back into the automatic playing position and the mechanism will continue to operate automatically until the last record is completed. The pickup arm will then return to the "rest" position and the motor will continue to revolve until the control knob is returned to the STOP position.
5. To reject any record while playing in the automatic position, move the control knob momentarily to the START-REJECT position and release.

NOTE: The mechanism may be turned off at any time or during any portion of the change cycle by moving the control knob to the STOP position.

The pickup arm may be moved horizontally at any time without damage to the mechanism. However, the pickup arm cannot be returned to the pickup arm rest until the change cycle has been completed.

After the last record has been played, the entire stack may be removed from the turntable at one time. The simplest procedure is as follows:

a. Place the pickup arm on the pickup arm rest.
b. Lift and turn the record ballast weight out of position.
c. Place the fingers of both hands under opposite edges of the bottom record.
d. Do not apply pressure to the top record. (Keep your thumbs free.)
e. Lift the stack of records straight up following the contours of the spindle. This permits the stack of records to follow the curve of the spindle without binding and greatly facilitates the removal of the stack.

OPERATION — MANUAL

1. Turn the Record Shelf to the TWELVE inch position (this is not essential but permits more clearance in loading and unloading records.)
2. Place a record on the turntable.
3. Move the control knob from the STOP position to the AUTOMATIC position, then toward the spindle to the MANUAL position, as indicated by the arrow on the control knob.

   No harm will result if the knob is accidentally moved to the START-REJECT position. If a twelve inch record is on the turntable, the arm will automatically index to the edge of the record. If a ten inch record is on the turntable, the needle will be set down gently on the rubber pad and the arm may be moved to the edge of the record.
4. Place the needle gently on the edge of the record. Particular care should be exercised if your pickup has a sapphire point needle. Although the sapphire is very hard and long wearing, it is extremely brittle and may be fractured or chipped if dropped on the record
5. To stop the mechanism at any time, move the control knob to the STOP position.

MODELS 133-6, 146, 160, 161, 164

SERVICE INFORMATION

All units are accurately adjusted, lubricated and tested at the factory. However, service repairs and adjustments sometimes become necessary. This bulletin should be studied carefully before making any adjustments or replacing parts.

The functions and most probable misadjustments of the main assemblies are as follows (reference numbers refer to the exploded views

THE AUTOMATIC TRIP FAILS TO FUNCTION

The Main Cam Assembly (32) and Actuating Gear (31) are the heart of the record changer. The Main Cam Assembly drives the mechanism associated with the action of the Pickup Arm (7) and the Record Selector assemblies. It, in turn, is driven by the gear train (28, 29, 30) and the Turntable which is rim driven by the phonograph motor.

The Main Cam Assembly and Actuating Gear is put in motion or "tripped" by means of the "automatic" trip or by the manually operated "reject" trip. When the movement of the Pickup Arm toward the spindle is greater than ⅛" in ½ revolution of the turntable, the Automatic Trip Arm (35) trips the Velocity Trip and Roller Assembly (33). This releases the Actuating Pawl on the Main Cam Assembly (32), allowing it to engage the Main Cam Actuating Gear (31) and driving it through the change cycle. The pressure from the Automatic Trip Arm required to actuate the trip mechanism is negligible.

The Automatic Trip Arm follows the movement of the Pickup Arm through a weighted friction clutch (34). This clutch must be kept free of oil and grease. If the clutch does not cause the Automatic Trip Arm to trip the mechanism, clean the clutch parts with carbon tetrachloride. This clutch should operate the trip mechanism without placing undue drag on the movement of the pickup arm.

Also check for:

1. Velocity Trip and Roller Assembly (32) binding.
2. Slight burr on end of the Actuating Pawl or on the underside of the hook end of the Velocity Trip and Roller Assembly.
3. Actuating Pawl stuck (part of Main Cam Assembly (32) engaged by the hook end of the Velocity Trip and Roller Assembly (33).
4. Automatic Trip Arm (35) bent and not hitting the Velocity Trip and Roller Assembly (33).
5. Automatic Trip Arm (35) fails to touch the Velocity Trip and Roller Assembly.
6. Velocity Trip and Roller Assembly (33) rubbing on the underside of the Main Cam Actuating Gear (31).
7. No velocity lead-in groove or eccentric groove in the center of record.

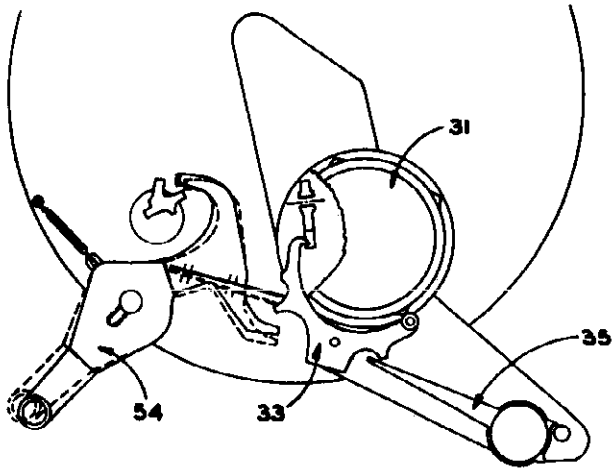

Fig. 1

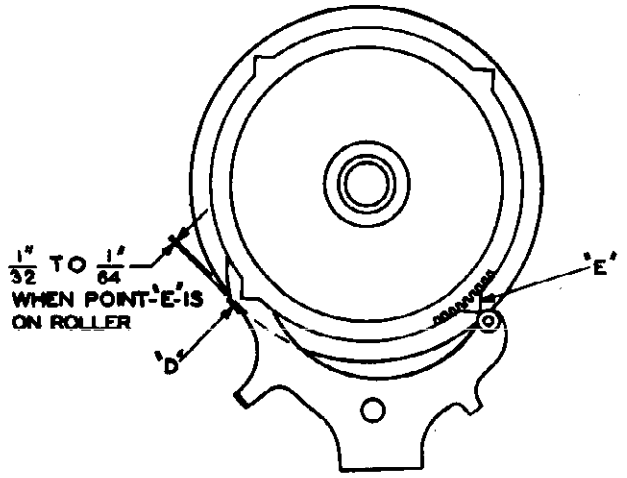

ADJUST IF NECESSARY BY BENDING AT POINT "D"

Fig. 2

MODELS 133-6, 146,
160, 161, 164

8. Foreign matter in record groove.
9. Badly worn record.
10. Badly bent or worn needle.

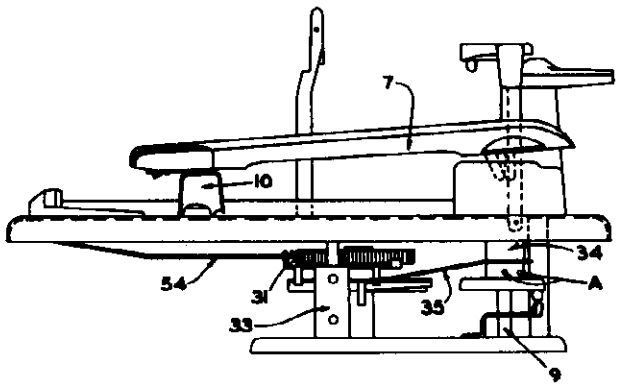

Fig. 3

IF THE "REJECT" TRIP FAILS TO FUNCTION

When the control knob is moved to the extreme START-REJECT position, the hair spring of the Reject Trip Lever Arm (54) actuates the Velocity Trip and Arm Assembly, putting the change mechanism in cycle. See Fig. 1.

Check for:

1. "Reject" trip hair spring of Lever 54 bent or broken.
2. Velocity Trip and Roller Assembly (33) binding.
3. Actuating Pawl stuck (part of Main Cam Assembly 32).

IF THE MECHANISM CONTINUES TO CYCLE

At the completion of the change cycle, the Actuating Pawl is disengaged from the Main Cam Assembly Actuating Gear by the hook end of the Velocity Trip and Roller Assembly, which has been returned to its normal position by the reset points on the Main Cam Drive Gear, Fig. 2.

If the clearance between the lip on the Velocity Trip Lever and the edge of the Main Cam is too small, it will prevent the hooked end of the Velocity Trip Lever from engaging the trigger. Adjust the clearance between the lip ("D" of Fig. 2) on the Velocity Trip Lever and the Main Cam to be within $\frac{1}{32}$" and $\frac{1}{64}$" when the roller is contacting the point of one of the reset points on the Actuating Gear

Also check for:

1. Velocity Trip and Roller Assembly (33) rubbing on Main Cam Actuating Gear (31).
2. Manual Trip Lever (54) binding.
3. "Disengage Roller" broken on Velocity Trip and Roller Assembly (33).

PICKUP ARM LIFT TOO HIGH OR TOO LOW

The vertical movement of the pickup arm is controlled by the angle of the pickup arm raising lever (37 and Fig. 4). The needle should approach the top record of a full stack of 10" records on the turntable with approximately $\frac{1}{16}$" clearance.

To adjust:

1. Put a full stack of 10" records ON THE TURNTABLE.
2. Trip the "Start-Reject" control and rotate the turntable clockwise until the needle clears the top record of the stack by about $\frac{1}{16}$"
3. Be sure the notch in the pickup arm raising disc engages the pickup arm raising lever.
4. If the needle does not clear the top record or if it raises too high, adjust by bending the pickup arm raising lever (37) at points X and Y as indicated in Fig. 4.

CAUTION: All adjusting bends should be made slowly, using slight but firm, easy pressure.

Be sure the set screws in the Pickup Arm Raising Disc (36) are not loose and are properly positioned in the alignment holes as explained in the paragraph on Needle Setdown Indexing.

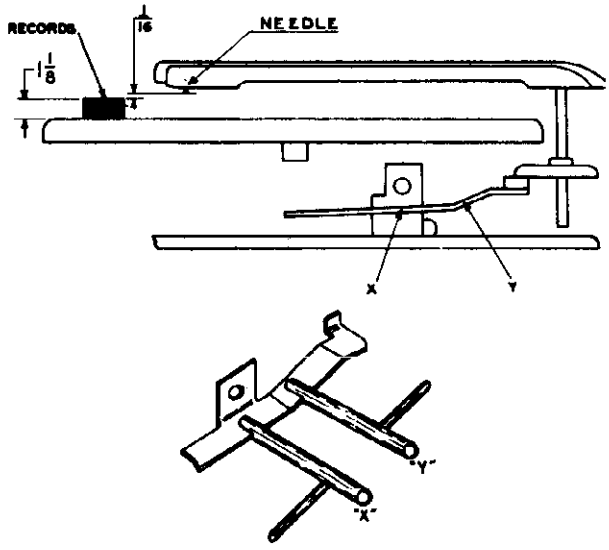

Fig. 4

NEEDLE SET DOWN INDEXING INCORRECT

The horizontal movement of the pickup arm (7) is controlled by the eccentric excursion of the Pickup Arm Raising Lever (37) moving the Pickup Arm Raising Disc (36) when actuated by the Main Cam Assembly (32). The eccentric screw (part of 8), accessible through the top of the pickup arm (7), should take care of any normal position adjustment. Turn this screw clockwise to index the needle in toward the spindle and counter-clockwise to index the needle out away from the spindle.

Should further adjustment be necessary, proceed as follows:

1. Set the eccentric screw, just mentioned, to a middle position.
2. Set the Record Shelf (4) to the 10" position.
3. Operate the mechanism by revolving the turntable manually until the needle drops to within 1/8" of a ten inch record on the turntable.
4. Be sure the notch in the Pickup Arm Raising Disc (36) engages the Pickup Arm Raising Lever (37).
5. The No. 8 Bristol set screws "A" of the Pickup Arm Raising Disc (36, Fig. 3) have pointed ends which fit into off center holes in the Pickup Arm Pivot (9). Alternately loosen one screw and tighten the other until the needle rests above the record lead-in groove at the desired point. Be sure that both set screws are tight when this adjustment is completed.
6. Complete the change cycle of the mechanism and place the pickup arm on the Pickup Arm Rest (10). The tongue of the Pickup Arm Raising Disc (36) should now rest against the post which supports the sub plate assembly. If the pickup arm does not rest in the proper position on the pickup arm rest, bend the tongue closer to or away from this post until the pickup arm is correctly positioned.
   REMEMBER: Always slight but firm, easy bends!
7. Turn the Record Shelf to 12" and check the needle drop on a twelve inch record. Make any additional adjustments with the eccentric screw mentioned previously.

PICKUP ARM DROPS OFF REST

The upturned end of the Pickup Arm Pivot Shaft Bracket (Fig. 3) prevents the Pickup Arm from falling off the Pickup Arm Rest. There should be 1/64" clearance between the tongue of the Pickup Arm Raising Disc (36) and the bottom of the groove formed by the Bracket and the Base Plate Post. Bend the Bracket end up or down to secure proper positioning of the Disc tongue and the Pivot bracket. Be careful to bend the end only or the Bracket will bind on the Pickup Arm Pivot Shaft. The Bracket should not be too high or the Disc tongue will rub on it when the needle approaches the edge of a 12" record, causing "glide in" on the first few grooves of the record.

ERRATIC INDEXING

Indexing in either the 10" or the 12" position is controlled through the presence or absence of pressure from the Compression Spring (45), on the Pickup Arm Raising Lever bracket, forcing the stud to travel the inside edge or the outside edge of the groove in the bottom of the Main Cam. The compression on this spring is changed as the Record Shelf is changed from the 10" to the 12" position. Improper adjustment of the spring tension will result in erratic indexing.

In the 12" position, the spring should be just free. In the 10" position the compression of the spring holds the stud of the Pickup Arm Raising Lever against the outside edge of the groove. If the compression tension needs adjustment:

1. Turn the Record Shelf (4) to the 12" position.
2. Trip the Reject control and rotate the Turntable clockwise until the push off Blade reaches its farthest forward position. At this point the cam follower will be at the highest point on the Main Cam ("A" of Fig. 5).
3. Loosen the lock bolts of (41) and (42).
4. Be sure that the Record Shelf is held in the extreme 12" position while adjusting the Record Shelf and Push-off Blade fingers.
5. At the same time, push the Push-off Blade forward as far as possible and push the Push-off Blade and Record Shelf Assembly downward tight against the Housing (6).
6. Position the Record Shelf finger and the Toggle Assembly (41) so the 12" finger of the Push-off

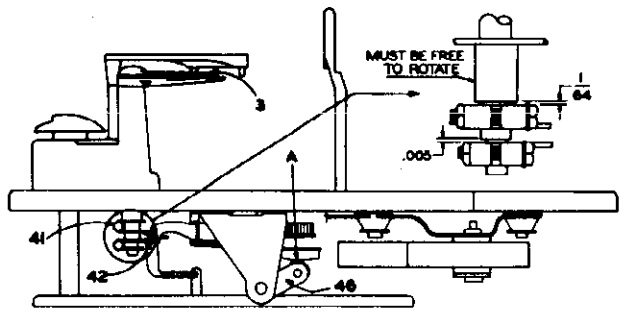

Fig. 5

MODELS 133-6, 146, 160, 161, 164

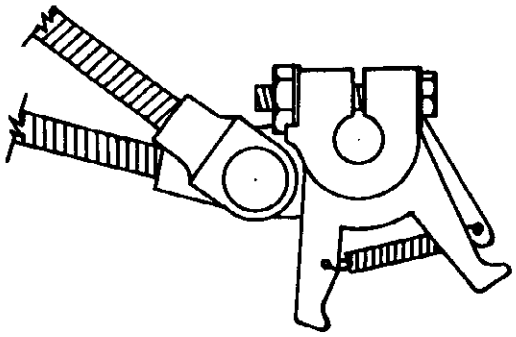

Fig. 6

Blade finger (42) looks like Fig. 6. A visual spacing of approximately 1/64 between the rounded edge of the toggle assembly and the Push-off Blade finger when viewed directly from the bottom of the record changer is required. See Fig. 6. Since these two parts lie on different planes, this adjustment must be made by observation only.

7. While holding the Push-off Blade and Record Shelf Assembly tight against the Housing (6), push the Index Toggle Assembly (41) against the spacer (40) and tighten the lock bolt.
8. Tighten the Push-off Blade bracket lock bolt, leaving approximately 1/64" clearance between the shoulder of the Record Shelf shaft and the Push-off Blade finger bracket (42).

RECORD FAILS TO DROP

The record must leave the spindle step just prior to or at least by the time it leaves the record shelf. If the spindle is too far from the record shelf, the record will hang up on the spindle step and fail to drop.

To adjust:

Press down on the edge of the turntable nearest the Record Shelf to secure proper spacing. DO NOT bend the spindle itself. Also be sure a standard record is used when aking this adjustment. A standard 10" record has a diameter of 9 7/8" ± 1/32". A standard 12" record measures 11 7/8" ± 1/32" in diameter.

If the changer still fails to drop records, put the mechanism in cycle and watch the movement of the Push-off Blade. If it fails to protrude beyond the edge of the Record Shelf when at its greatest forward position, adjust the Push-off Blade finger position:

1. Turn the record Shelf (4) to the 12" position.
2. Trip the Reject control and rotate the Turntable until the Push-off Cam Follower reaches the highest point on the Main Cam ("A" of Fig. 5).
3. Loosen the Push-off Blade finger (42) clamp bolt.
4. Push the Push-off Blade forward as far as possible and hold the Push-off Blade and Record Shelf assembly downward tight against the housing (6).
5. Tighten the Push-off Blade finger clamp bolt (42), leaving 1/64" vertical clearance between the shoulder of the Record Shelf shaft and the Push-off Blade finger (42).

CHANGE CYCLE STARTS BEFORE END OF RECORD

If the Trip Assembly chatters while the changer is running or if the changer cycles before the entire record is played, there is probably insufficient clearance between the hook end of the Velocity Trip and Roller Assembly and the actuating gear. This clearance should be adjusted to be within 1/32" to 1/64" by bending the lever at point "C" as shown in Fig. 7.

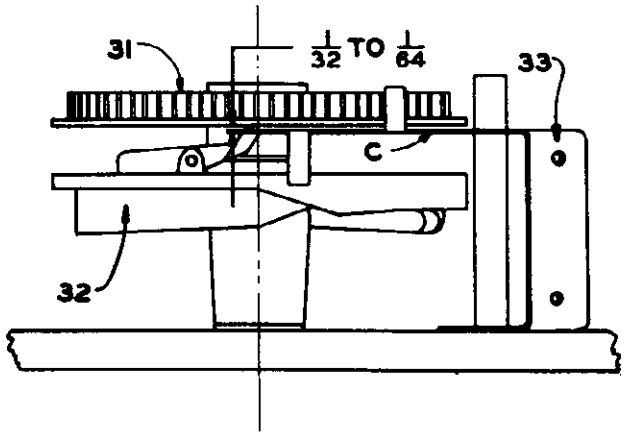

Fig. 7

LAST RECORD REPEATS

The weight of the records on the Spindle keeps the Automatic Shut Off Lock Lever (59) from dropping and engaging the Pickup Arm Raising Disc. The dropping of the last record releases the Automatic Shut Off Lock Lever, permitting it to drop and prevent the Pickup Arm Raising Disc from moving the Arm onto the record when the change cycle starts.

©John F. Rider

MODELS 133-6, 146, 160, 161, 164

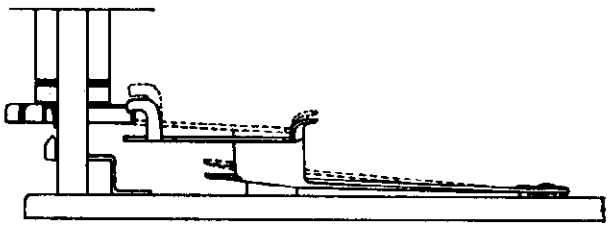

Fig. 8

If the last record continues to play:

1. Check the Spindle to be sure that it moves up and down freely.
2. With no records on the Spindle, and with the mechanism at rest, the hook of the Automatic Shut Off Lock Lever (59) should clear the top of the Pickup Arm Raising Disc by 1/32". Adjust, if necessary, by bending the Automatic Shut Off Lock Lever slightly.

REPLACEMENT OF PARTS

TO REPLACE PICKUP CARTRIDGE

A Pickup cartridge can be most easily replaced by first removing the Pickup Arm.

1. Hold the Pickup Arm firmly with left hand.
2. Remove the spring from between the pins of the hinge bracket.
3. Using a tool such as a screwdriver, press in on one of the blue steel Pickup Arm hinge brackets while lifting up on the arm. This will release the Pickup Arm Hinge pin.
4. Repeat on the other pickup arm bracket.
5. The Pickup Arm, when released from the hinge brackets, may then be turned over and laid on the turntable for easy access to the cartridge.

TO REPLACE THE PICKUP ARM

The Pickup Arm may be replaced in its bracket as follows:

1. Hook the roller on the rear of the hinge assembly under the Pickup Arm lift stop, inside the Housing (6).
2. Using a pair of long nose pliers, place the pickup arm hinge brackets, one at a time, over the pins in the Pickup Arm Pivot Shaft (9) bracket.

The retaining spring need not be replaced unless the unit is to be re-shipped.

In performing this operation, be sure that the pickup cord lies outside of the hinge and does not become wedged in the bracket.

LUBRICATION

Model 146 Record Changers leave the factory completely oiled and lubricated. Under normal conditions this should be sufficient for approximately one year or 1,000 hours of operation. When operated under extreme conditions of dust or heat, this operation should be performed more frequently as required.

Do not permit any oil or grease to get on the rubber Idler Drive Wheel or the Motor Sleeve, on Turntable Drive Rim or on the Automatic Trip Arm clutch. Any oil or grease on these points should be removed using Carbon Tetrachloride.

The recommended lubricants and points of lubrication are as follows:

A — No. 10 OIL (Apply With Small Oil Can or Medicine Dropper)

1. Motor Bearings. Saturate top and bottom felts.
2. Pickup Arm Shaft. Drop one drop each to bottom bearing point, bracket hole through Main Base Plate.
3. Ball Bearing Assembly.
4. Idler Wheel Felt.

B — A NON FLUID LUBRICANT (Apply With Small Brush)

1. Idler Wheel Link.
2. Turntable Shaft Stud.
3. Pickup Arm Hinge Pins.
4. Knife edge of Pickup Arm Raising Lever.
5. Main Cam Bearing. (It is necessary to remove the sub-plate assembly to lubricate this bearing.)
6. Teeth of Main Cam Actuating Gear.
7. Track of Main Cam Gear.
8. Teeth of Large and Small idler gears.
9. Raising lever Bracket bearing surfaces.

AVOID EXCESSIVE LUBRICATION

©John F. Rider

MODELS 133-6, 146,
160, 161, 164

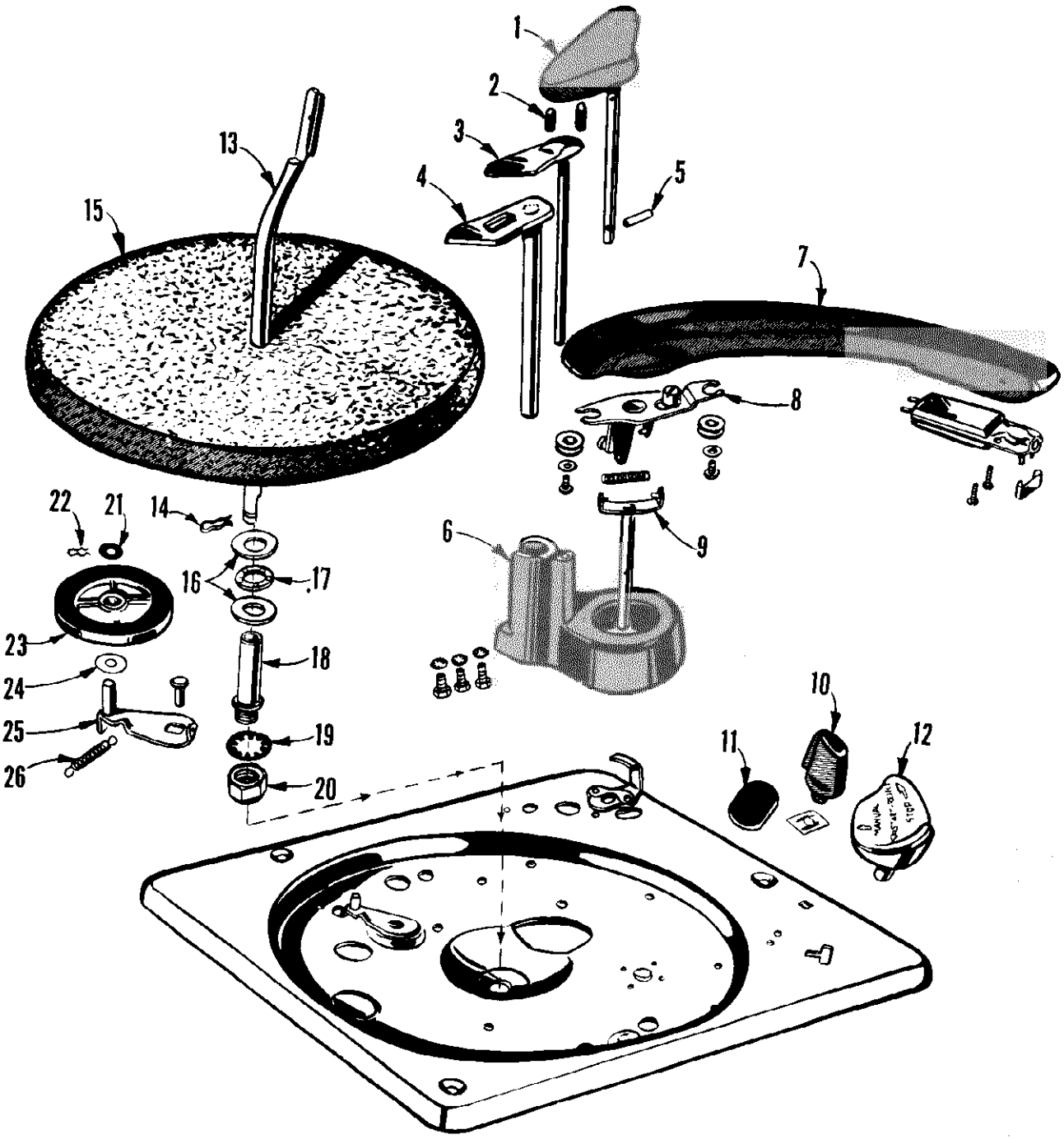

Exploded View — Above Main Plate

©John F. Rider

©John F. Rider

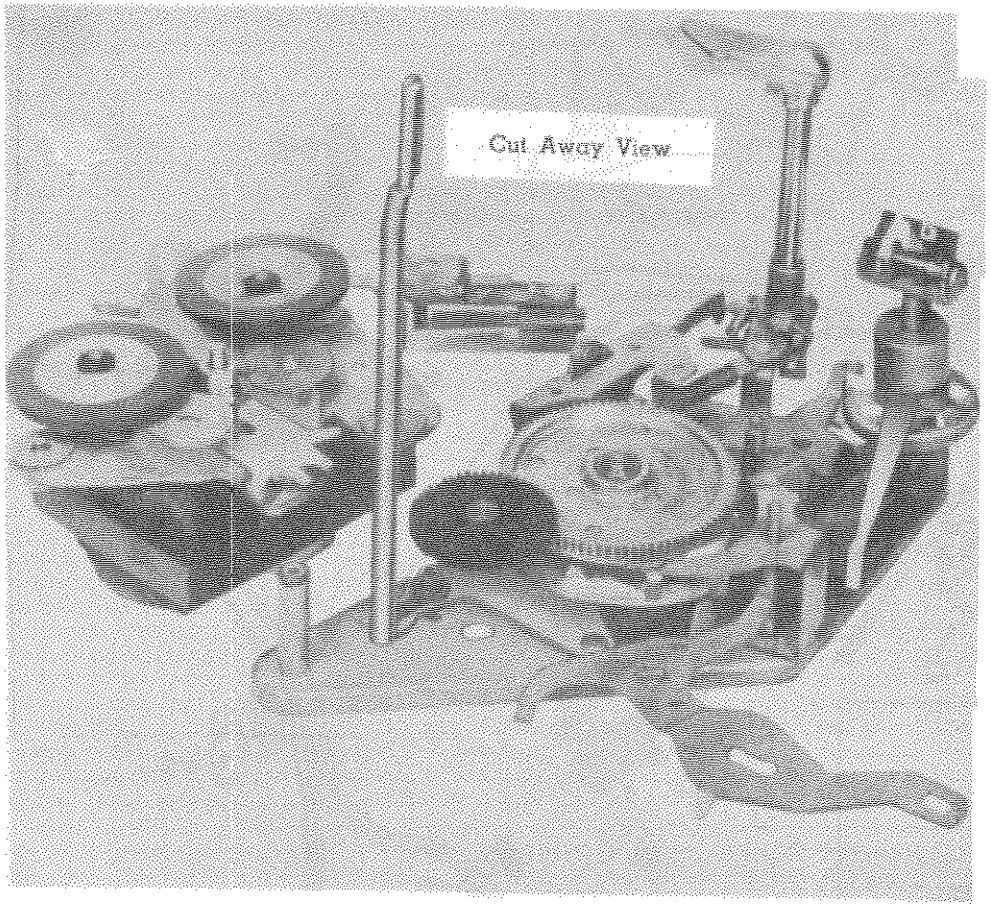

REPLACEMENT PARTS LIST

Illustration No.	*Part No.*	*Description*
1	42X186	Record Weight Assembly
2	24P013	Record Weight Cushion
3	42X183	Push-off Blade
4	42X184	Record Shelf
5	27P157	Groove Pin
6	42P182	Housing
7	49P021	Pickup Arm — Less Cartridge
8	21X258	Tone Arm Hinge Assembly
9	11X136	Shaft Assembly for Tone Arm
10	49P090	Rest-Tone Arm
11	24P004	Needle Pad
12	42P001	Switch Button
13	11X358	Spindle
14	50P204	Clip — Spindle Retaining
15	11X292	Turntable
16	25P269	Bearing Race Washer
17	11X058	Bearing Race Washer
18	41P414	Turntable Bearing
19		
20	26P687	Nut — Turntable Stud
21	25P030	Felt Washer — Idler
22	50P125	Clip — Idler Retaining
23	11X003	Idler Drive Wheel
24	25P046	Fibre Washer — Idler
25	11X068	Idler Link Assembly
26	45P347	Pickup Arm Pivot Bracket

MODELS 133-6, 146,
160, 161, 164

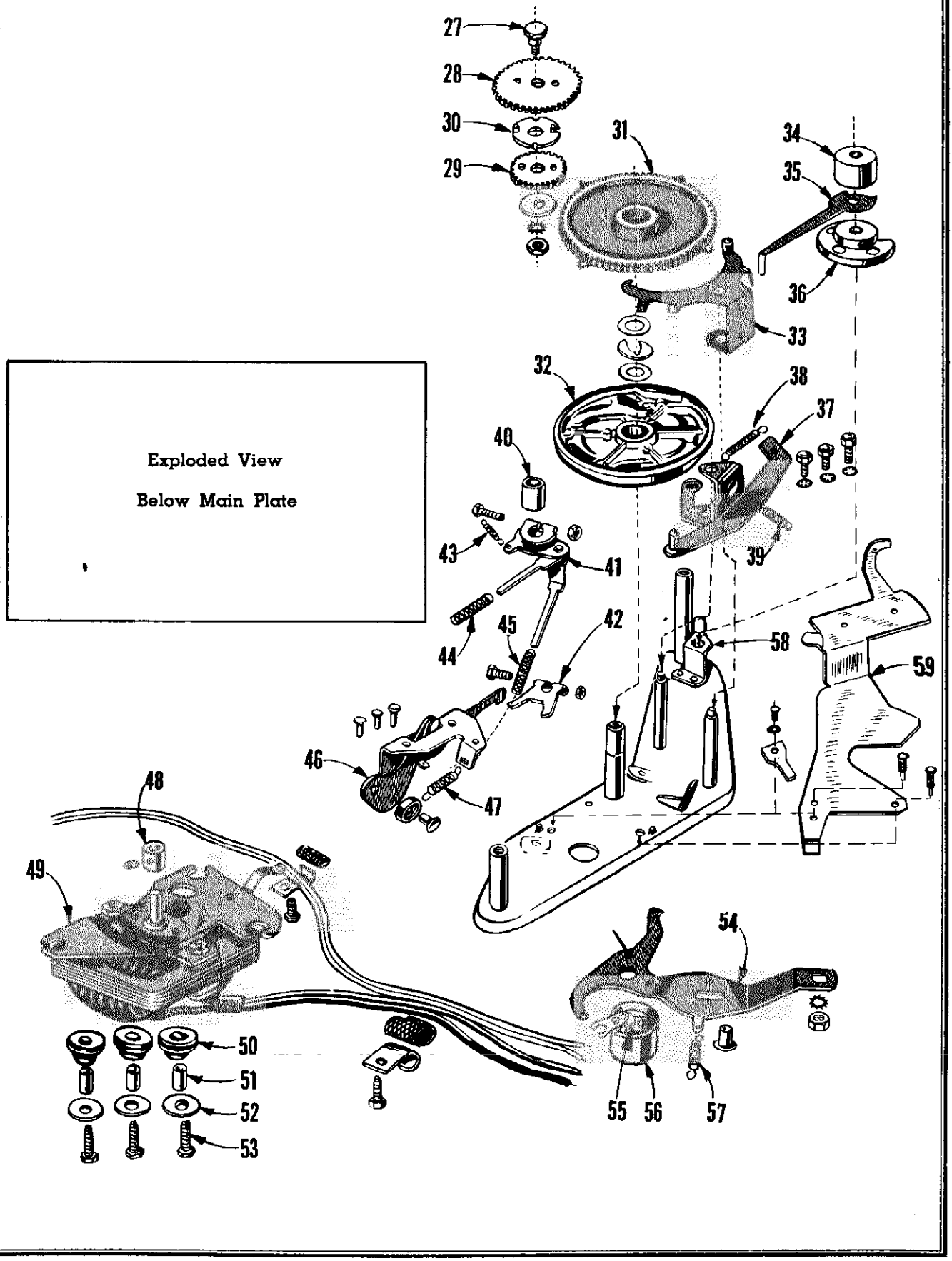

MODELS 133-6, 146, 160, 161, 164

REPLACEMENT PARTS LIST

Illustration No.	*Part No.*	*Description*
27	41P333	Shoulder Screw
28	47P024	Gear — Large Idler
29	47P023	Gear — Small Idler
30	45P342	Coupler — Idler Gear
31	11X032	Gear — Trip Resetting
32	11X033	Cam and Trigger Assembly
33	11X320	Velocity Trip and Roller
34	41P576	Clutch Weight
35	45P568	Automatic Trip Arm
36	11X227	Tone Arm Raising Disc
37	11X046	Tone Arm Raising Lever
37	46P044	Tension Spring Raising Lever
39	46P139	Tension Spring Raising Lever
40	41P607	Spacer
41	11X287	Lever and Toggle Assembly
42	11X312	Push-off Lever
43	46P162	Tension Spring — Push-off Lever
44	46P151	Compression Spring — Toggle Lever
45	46P152	Compression Spring — Toggle Lever
46	11X319	Cam Lever and Bracket
47	46P158	Tension Spring — Cam Lever
48	17X412-12	Motor Shaft Sleeve — 60 Cy.
48	17X412-11	Motor Shaft Sleeve — 50 Cy.
49	15X090	Motor — 117 V., A. C. — 60 Cycle
50	25P363	Rubber Motor Shock Mount
51	41P592	Motor Mount Sleeve
52	25P367	Motor Mount Washer
53	26P312	Motor Mount Belt
54	11X291	Trip Lever and Wire Assembly
55	32X045	A. C. Switch
56	32X039	A. C. Switch Cover
57	46P117	Tension Spring Trip Lever
58	45P347	Pickup Arm Pivot Bracket
59	11X316	No-Record Lever

©John F. Rider

© John F. Rider

DESCRIPTION

The Webster-Chicago Model 246 is a dual speed, single post, spring cushioned spindle automatic record changer. Simple in design and operation, it provides automatic or manual playing of up to a 1" stack of 10" or 12" standard 78 R.P.M. or microgroove 33⅓ R.P.M. records.

Model 246 returns the pickup arm to the rest position after playing the last record, although the motor continues to revolve until the "33⅓ — OFF — 78" Speed Control Lever is moved to the OFF position. This is especially important when playing microgroove records for it eliminates the necessity of manually lifting the pickup arm or setting it down on the easily scratched microgrooves. The idler wheels are also pulled away from the motor shaft when the Speed Control Lever is in the OFF position, eliminating the possibility of a flat spot developing on the rubber wheels with consequent "wow"

Model 246 also features the exclusive Webster-Chicago velocity trip mechanism. The pickup arm is not actuated by "lead-in" springs and there is a minimum of lateral pressure. The arm travels freely in either direction. This lack of lateral pressure or inertia adds immeasurably to the life of records and is considered to be as important as extra-light vertical pressure, which in some instances would result in poor tracking at extremely low or high frequencies. The free floating arm permits "home recordings" or "inside out" records up to 12" size to be played manually.

Model 246 will change warped or rough edged records, at the same time assuring maximum protection to the finest discs.

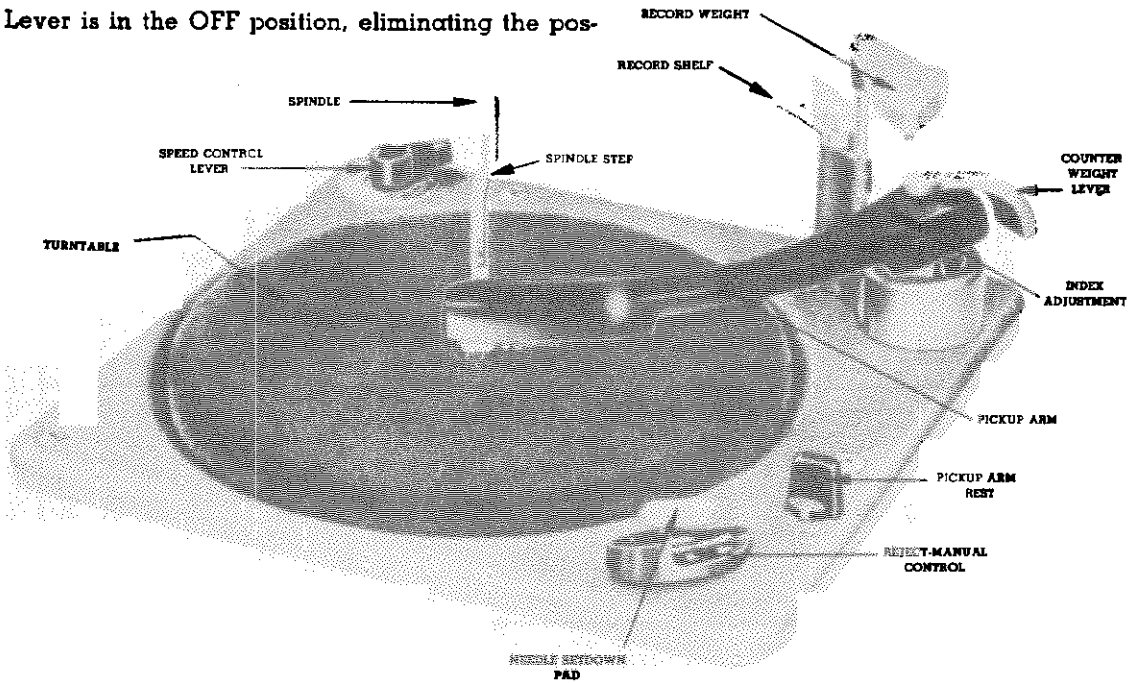

OPERATION

PICKUP

The special pickup cartridge supplied has a replaceable tandem point needle. A unique connection between the cartridge and the needle weight counterbalance automatically lowers the proper point into playing position when the counterbalance is adjusted for light or normal needle pressure. When the counterbalance weight is turned back, the needle pressure is the 7 grams required for proper playing of the microgroove records. When it is turned forward to the side of the pickup arm the normal weight for standard 78 R.P.M. records is at the needle point.

The voltage output is normally lower when playing microgroove records. The volume control of the radio or amplifier must be turned up further when they are played.

Any 33⅓ R.P.M. records other than microgroove should be played with the standard needle and standard needle weight.

MOTOR

Connect the motor cord to a source of 105-120 volt, 60 cycle current only. If it is desired to operate the changer on 50 cycle current, special motor shaft bushings must be used in order to drive the turntable at the required speed of 78 R.P.M. or 33⅓ R.P.M.

Do not under any circumstances connect the motor to a source of direct current (DC) or alternating current of any other frequencies.

SPEED CONTROL ADJUSTMENTS

1. Move the Speed Control Lever to either "33⅓ or 78" as required for microgroove or standard records.

   Moving the Speed Control Lever also turns the motor power on.

2. Move the needle pressure counterbalance weight back for 7 gram needle pressure and the .001" tip radius needle point required by microgroove records Move the weight lever forward for normal pressure and the .003" tip radius needle point required by the usual 78 R.P.M. records.

The Red or White dots on the Pickup Arm and the Speed Control Knob should match. The proper needle point will then be in position for the record speed selected.

FOR AUTOMATIC RECORD CHANGE

1. Turn the Record Shelf forward or back for ten or twelve-inch records. Do not turn this shelf while a record is changing or the mechanism is in cycle.
2. With the record ballast weight lifted and turned forward out of position, place up to a 1" stack of 12" or 10" records on the spindle so that the bottom record rests on the step of the spindle and on the Record Shelf.
3. Turn the record ballast weight and lower it until it rests on the top record.
4. Move the "Manual-Reject" Control toward you, to the "Reject" position, and release it. The Control will then drop back into the automatic playing position and the records will be changed automatically until the last record is completed. The pickup arm will then return to the "Rest" position and the motor will continue to revolve until the Speed Control is turned to the OFF position.
5. To reject any record while playing in the automatic position, move the "Manual-Reject" Control to the REJECT position and release.

The pickup arm may be moved horizontally at any time without damage to the mechanism. However, after the last record is completed or while the mechanism is in cycle the pickup arm cannot be returned to the pickup arm rest until the change cycle has been completed.

After the last record has been played, the entire stack may be removed from the turntable at one time. The simplest procedure is as follows:

a. Place the pickup arm on the pickup arm rest.

b. Lift and turn the record ballast weight out of position.

c. Place the fingers of both hands under opposite edges of the bottom record.

d. Do not apply pressure to the top record. (Keep your thumbs free.)

e. Lift the stack of records straight up following the contours of the spindle. This permits the stack of records to follow the curve of the spindle without binding and greatly facilitates the removal of the stack.

FOR "MANUAL" RECORD CHANGE

CAUTION: We recommend that microgroove records never be played with the control in the "Manual" position. The microgrooves are easily scratched and the automatic rest position of the pickup arm plus the use of the "Reject" position of the control knob make manual playing unnecessary. However, manual operation when playing standard 78 R.P.M. records is often desirable.

1. Place a record on the turntable.
2. Move the "Manual-Reject" Control Knob toward the spindle to the "Manual" position, as indicated by the arrow on the Control Knob. No harm will result if the knob is accidentally moved to the "Reject" position. If a twelve-inch record is on the turntable, the arm will automatically index to the edge of the record. If a ten-inch record is on the turntable, the needle will be set down gently on the rubber pad and the arm may be moved to the edge of the record.
3. Place the needle gently on the edge of the record.
4. To stop the mechanism at any time move the Speed Control Lever to the OFF position.

MODEL 246

SERVICE INFORMATION

All units are accurately adjusted, lubricated and tested at the factory. However, service repairs and adjustments sometimes become necessary. This bulletin should be studied carefully before making any adjustments or replacing parts.

The functions and most probable misadjustments of the main assemblies are as follows (reference numbers refer to the exploded views

THE AUTOMATIC TRIP FAILS TO FUNCTION

The Main Cam Assembly (32) and Actuating Gear (31) are the heart of the record changer. The Main Cam Assembly drives the mechanism associated with the action of the Pickup Arm (7) and the Record Selector assemblies. It, in turn, is driven by the gear train (28, 29, 30) and the Turntable which is rim driven by the phonograph motor.

The Main Cam Assembly and Actuating Gear is put in motion or "tripped" by means of the "automatic" trip or by the manually operated "reject" trip. When the movement of the Pickup Arm toward the spindle is greater than 1/8" in 1/2 revolution of the turntable, the Automatic Trip Arm (35) trips the Velocity Trip and Roller Assembly (33). This releases the Actuating Pawl on the Main Cam Assembly (32), allowing it to engage the Main Cam Actuating Gear (31) and driving it through the change cycle. The pressure from the Automatic Trip Arm required to actuate the trip mechanism is negligible.

The Automatic Trip Arm follows the movement of the Pickup Arm through a weighted friction clutch (34). This clutch must be kept free of oil and grease. If the clutch does not cause the Automatic Trip Arm to trip the mechanism, clean the clutch parts with carbon tetrachloride. This clutch should operate the trip mechanism without placing undue drag on the movement of the pickup arm.

Also check for:

1. Velocity Trip and Roller Assembly (32) binding.
2. Slight burr on end of the Actuating Pawl or on the underside of the hook end of the Velocity Trip and Roller Assembly.
3. Actuating Pawl stuck (part of Main Cam Assembly (32) engaged by the hook end of the Velocity Trip and Roller Assembly (33).
4. Automatic Trip Arm (35) bent and not hitting the Velocity Trip and Roller Assembly (33).
5. Automatic Trip Arm (35) fails to touch the Velocity Trip and Roller Assembly.
6. Velocity Trip and Roller Assembly (33) rubbing on the underside of the Main Cam Actuating Gear (31).
7. No velocity lead-in groove or eccentric groove in the center of record.

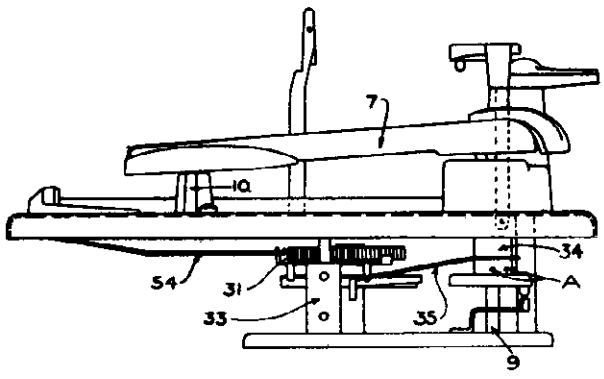

Fig. 1

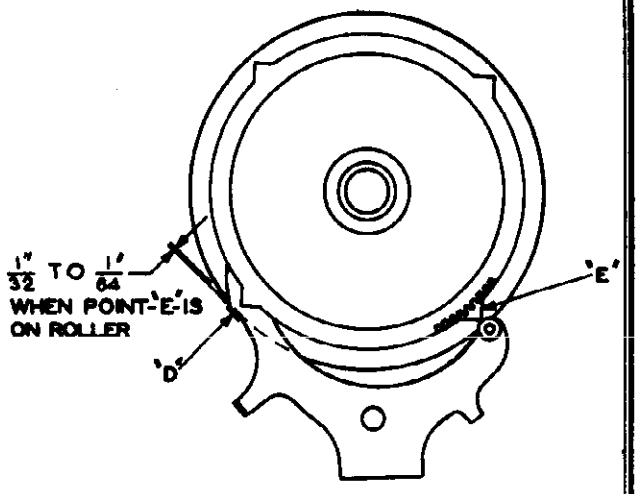

ADJUST IF NECESSARY BY BENDING AT POINT "D".

Fig. 2

8. Foreign matter in record groove.
9. Badly worn record.
10. Badly bent or worn needle.

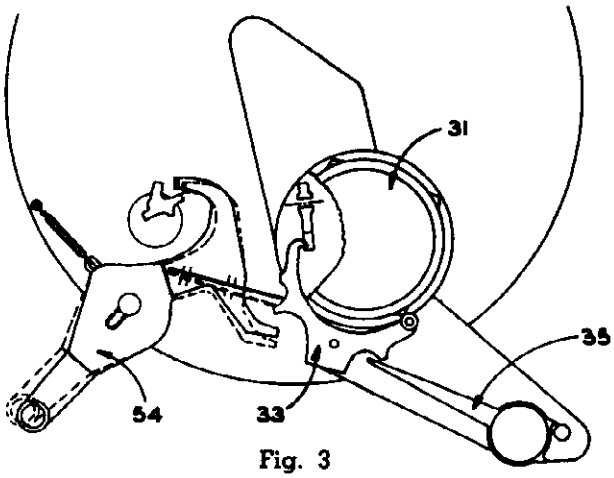

Fig. 3

IF THE "REJECT" TRIP FAILS TO FUNCTION

When the control knob is moved to the extreme START-REJECT position, the hair spring of the Reject Trip Lever Arm (54) actuates the Velocity Trip and Arm Assembly, putting the change mechanism in cycle. See Fig. 3.

Check for:

1. "Reject" trip hair spring of Lever 54 bent or broken.
2. Velocity Trip and Roller Assembly (33) binding.
3. Actuating Pawl (32) stuck (part of Main Cam Assembly).

IF THE MECHANISM CONTINUES TO CYCLE

At the completion of the change cycle, the Actuating Pawl is disengaged from the Main Cam Assembly Actuating Gear by the hook end of the Velocity Trip and Roller Assembly, which has been returned to its normal position by the reset points on the Main Cam Drive Gear, Fig. 2.

If the clearance between the lip on the Velocity Trip Lever and the edge of the Main Cam is too small, it will prevent the hooked end of the Velocity Trip Lever from engaging the trigger. Adjust the clearance between the lip ("D" of Fig. 2) on the Velocity Trip Lever and the Main Cam to be within $\frac{1}{32}$" and $\frac{1}{64}$" when the roller is contacting the point of one of the reset points on the Actuating Gear.

Also check for:

1. Velocity Trip and Roller Assembly (33) rubbing on Main Cam Actuating Gear (31).
2. Manual Trip Lever (54) binding.
3. "Disengage Roller" broken on Velocity Trip and Roller Assembly (33).

PICKUP ARM LIFT TOO HIGH OR TOO LOW

The vertical movement of the pickup arm is controlled by the angle of the pickup arm raising lever (37 and Fig. 4). The needle should approach the top record of a full 1" stack of records on the turntable with approximately $\frac{1}{16}$" clearance.

To adjust:

1. Put a full 1" stack of records ON THE TURNTABLE.
2. Trip the "Start-Reject" control and rotate the turntable clockwise until the needle clears the top record of the stack by about $\frac{1}{16}$"
3. Be sure the notch in the pickup arm raising disc engages the pickup arm raising lever.
4. If the needle does not clear the top record or if it raises too high, adjust by holding the pickup arm raising lever (37) at point X and bending at Y as indicated in Fig. 4.

CAUTION: All adjusting bends should be made slowly, using slight but firm, easy pressure.

Be sure the set screws in the Pickup Arm Raising Disc (36) are not loose and are properly positioned in the alignment holes as explained in the paragraph on Needle Setdown Indexing.

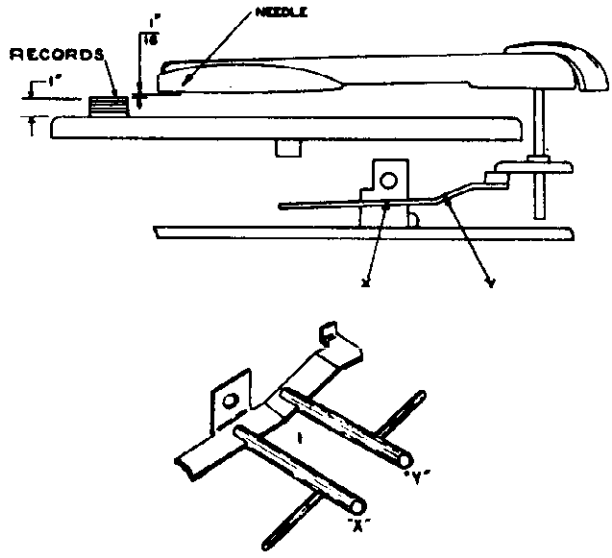

Fig. 4

MODEL 246

NEEDLE SET DOWN INDEXING INCORRECT

The horizontal movement of the pickup arm (7) is controlled by the eccentric excursion of the Pickup Arm Raising Lever (37) moving the Pickup Arm Raising Disc (36) when actuated by the Main Cam Assembly (32). The eccentric screw (part of 8) accessible through the top of the pickup arm (7), should take care of any normal position adjustment. Turn this screw clockwise to index the needle in toward the spindle and counter-clockwise to index the needle out away from the spindle.

Should further adjustment be necessary, proceed as follows:

1. Set the eccentric screw, just mentioned, to a middle position.
2. Set the Record Shelf (4) to the 10" position.
3. Operate the mechanism by revolving the turntable manually until the needle drops to within ⅛" of a ten inch record on the turntable.
4. Be sure the notch in the Pickup Arm Raising Disc (36) engages the Pickup Arm Raising Lever (37).
5. The No. 8 Bristol set screws "A" of the Pickup Arm Raising Disc (36, Fig. 1) have pointed ends which fit into off center holes in the Pickup Arm Pivot (9). Alternately loosen one screw and tighten the other until the needle rests above the record lead-in groove at the desired point. Be sure that both set screws are tight when this adjustment is completed.
6. Complete the change cycle of the mechanism and place the pickup arm on the Pickup Arm Rest (10). The tongue of the Pickup Arm Raising Disc (36) should now rest against the post which supports the sub plate assembly. If the pickup arm does not rest in the proper position on the pickup arm rest, bend the tongue closer to or away from this post until the pickup arm is correctly positioned.
   REMEMBER: Always slight but firm, easy bends!
7. Turn the Record Shelf to 12" and check the needle drop on a twelve inch record. Make any additional adjustments with the eccentric screw mentioned previously.

PICKUP ARM DROPS OFF REST

The upturned end of the Pickup Arm Pivot Shaft Bracket (Fig. 3) prevents the Pickup Arm from falling off the Pickup Arm Rest. There should be 1/64" clearance between the tongue of the Pickup Arm Raising Disc (36) and the bottom of the groove formed by the Bracket and the Base Plate Post. Bend the Bracket end up or down to secure proper positioning of the Disc tongue and the Pivot bracket. Be careful to bend the end only or the Bracket will bind on the Pickup Arm Pivot Shaft. The Bracket should not be too high or the Disc tongue will rub on it when the needle approaches the edge of a 12" record, causing "glide in" on the first few grooves of the record.

ERRATIC INDEXING

Indexing in either the 10" or the 12" position is controlled through the presence or absence of pressure from the Compression Spring (45), on the Pickup Arm Raising Lever bracket, forcing the stud to travel the inside edge or the outside edge of the groove in the bottom of the Main Cam. The compression on this spring is changed as the Record Shelf is changed from the 10" to the 12" position. Improper adjustment of the spring tension will result in erratic indexing.

In the 12" position, the spring should be just free. In the 10" position the compression of the spring holds the stud of the Pickup Arm Raising Lever against the outside edge of the groove. If the compression tension needs adjustment:

1. Turn the Record Shelf (4) to the 12" position.
2. Trip the Reject control and rotate the Turntable clockwise until the push off Blade reaches its farthest forward position. At this point the cam follower will be at the highest point on the Main Cam ("A" of Fig. 5).
3. Loosen the lock bolts of (41) and (42).
4. Be sure that the Record Shelf is held in the extreme 12" position while adjusting the Record Shelf and Push-off Blade fingers.
5. At the same time, push the Push-off Blade forward as far as possible and push the Push-off Blade and Record Shelf Assembly downward tight against the Housing (6).
6. Position the Record Shelf finger and the Toggle Assembly (41) so the 12" finger of the Push-off

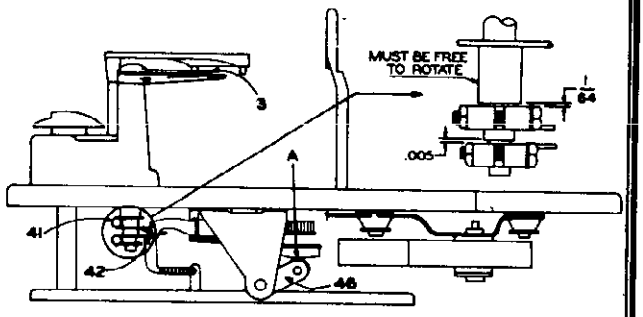

Fig. 5

©John F. Rider

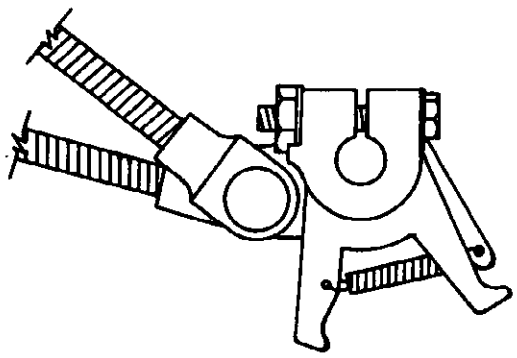

Fig. 6

Blade finger (42) looks like Fig. 6. A visual spacing of approximately 1/64" between the rounded edge of the toggle assembly and the Push-off Blade finger when viewed directly from the bottom of the record changer is required. See Fig. 6. Since these two parts lie on different planes, this adjustment must be made by observation only.

7 While holding the Push-off Blade and Record Shelf Assembly tight against the Housing (6), push the Index Toggle Assembly (41) against the spacer (40) and tighten the lock bolt.

8. Tighten the Push-off Blade bracket lock bolt, leaving approximately 1/64" clearance between the shoulder of the Record Shelf shaft and the Push-off Blade finger bracket (42).

RECORD FAILS TO DROP

The record must leave the spindle step just prior to or at least by the time it leaves the record shelf. If the spindle is too far from the record shelf, the record will hang up on the spindle step and fail to drop.

To adjust:

Press down on the edge of the turntable nearest the Record Shelf to secure proper spacing. DO NOT bend the spindle itself. Also be sure a standard record is used when aking this adjustment. A standard 10" record has a diameter of 9 7/8" ± 1/32". A standard 12" record measures 11 7/8" ± 1/32" in diameter.

If the changer still fails to drop records, put the mechanism in cycle and watch the movement of the Push-off Blade. If it fails to protrude beyond the edge of the Record Shelf when at its greatest forward position, adjust the Push-off Blade finger position:

1. Turn the record Shelf (4) to the 12" position.
2. Trip the Reject control and rotate the Turntable until the Push-off Cam Follower reaches the highest point on the Main Cam ("A" of Fig. 5).
3. Loosen the Push-off Blade finger (42) clamp bolt.
4. Push the Push-off Blade forward as far as possible and hold the Push-off Blade and Record Shelf assembly downward tight against the housing (6).
5. Tighten the Push-off Blade finger clamp bolt (42), leaving 1/64" vertical clearance between the shoulder of the Record Shelf shaft and the Push-off Blade finger (42).

CHANGE CYCLE STARTS BEFORE END OF RECORD

If the Trip Assembly chatters while the changer is running or if the changer cycles before the entire record is played, there is probably insufficient clearance between the hook end of the Velocity Trip and Roller Assembly and the actuating gear. This clearance should be adjusted to be within 1/32" to 1/64" by bending the lever at point "C" as shown in Fig. 7.

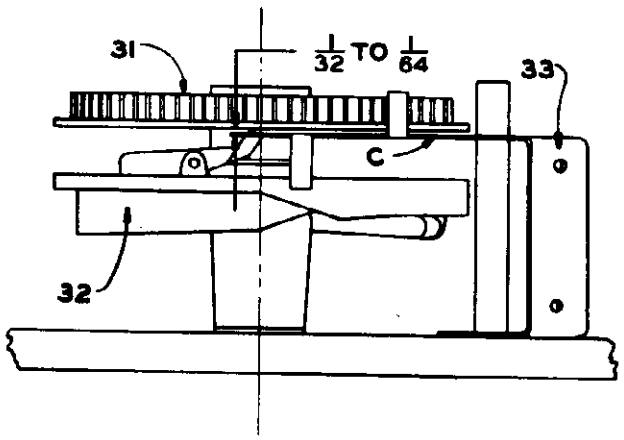

Fig. 7

LAST RECORD REPEATS

The weight of the records on the Spindle keeps the Automatic Shut Off Lock Lever (59) from dropping and engaging the Pickup Arm Raising Disc. The dropping of the last record releases the Automatic Shut Off Lock Lever, permitting it to engage the Pickup Arm Raising Disc and prevent the Pickup Arm from moving onto the record. The Pickup Arm then comes to rest on the Rest Button.

©John H. Bisbee

MODEL 246

If the last record continues to play:

1. Check the Spindle to be sure that it moves up and down freely.
2. With no records on the Spindle, and with the mechanism at rest, the hook "D" of the Automatic Shut Off Lock Lever (59) should clear the top of the Pickup Arm Raising Disc by 1/32" Adjust, if necessary, by bending the Automatic Shut Off Lock Lever slightly.

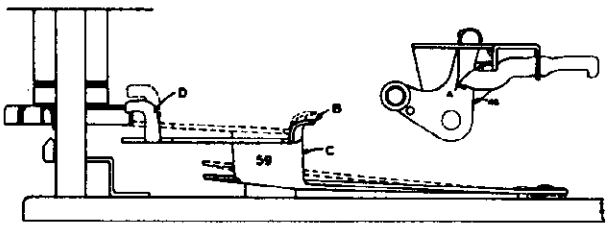

Fig. 8

LAST RECORD WILL NOT PLAY

As explained above, the weight of records on the spindle prevents the Automatic Lock Lever (59) from dropping. As the Cam Lever and Bracket assembly (46) moves forward to engage the Push-off Blade Actuating Lever (42), Fig. 5, point A of the Cam Lever (46), Fig. 8, should also move forward under point B of the Automatic Shut Off Lock Lever (59) to make certain it does not drop until the last record has dropped to the turntable and the Pickup Arm is in position to play. If point A does not engage point B, the Lock Lever (59) will drop to engage the Pickup Arm Raising Disc (36) and the Pickup Arm will return to the rest position without playing the last record.

To adjust, bend B so they engage properly. It may be necessary to bend (46) at point C, then readjust point D so it engages the Pickup Arm Raising Disc (36) correctly.

78 R.P.M. AT BOTH SPEED SETTINGS

The 78 R.P.M. bushing on the motor shaft should be low enough to clear the 33⅓ R.P.M. idler wheel. If it is too high:

1. Loosen the bushing set screw, using a No. 8 Bristol wrench.
2. Lower the bushing until it just clears the idler wheel.
3. Tighten the set screw.

SLOW SPEED

1. Idler wheel (23) or (74) may be cocked at an angle. Bend the mounting bracket (25).
2. Too strong tension on Idler Link Tension Spring (26) or (85). Stretch spring slightly.
3. Lip of Idler Wheel Link (25) may be binding in mounting hole. Carefully bend out the lip so the Idler Wheel rides more firmly on the rim of the Turntable.

MOTOR DOES NOT TURN ON

The top switch leaf of the AC switch (60) may be bent, preventing contact when the Speed Control Lever is moved to 33⅓ or 78. Bend the Switch leaf by means of a small screw driver inserted through the small opening in the plastic protecting cover or bend the switch mounting bracket.

STALLS DURING CHANGE CYCLE

Too weak tension on Idler Link Spring (26) or (85). Tighten spring as required.

ERRATIC SPEED ("WOW")

Remove any dirt or excess flocking from the inside rim of the turntable. Check the rubber drive wheel for a flat spot or "out of round".

The idler wheel links (25) should be loose on the shoulder rivets but not sloppy. If too loose, erratic speed will result.

1. Remove the motor.
2. Carefully stake the shoulder rivet move securely to insure smooth operation.
3. Idler wheel cocked at an angle. This may have been caused by forcing the Turntable onto the spindle and bearing (18) with the Speed Control Lever in either the "33⅓" or "78" position. Remove the Turntable and carefully bend the idler wheel (23 or 74) so the idler wheel link stud (part of 84) is perpendicular. Always have the Speed Control at OFF when putting on the Turntable.

©John F. Rider

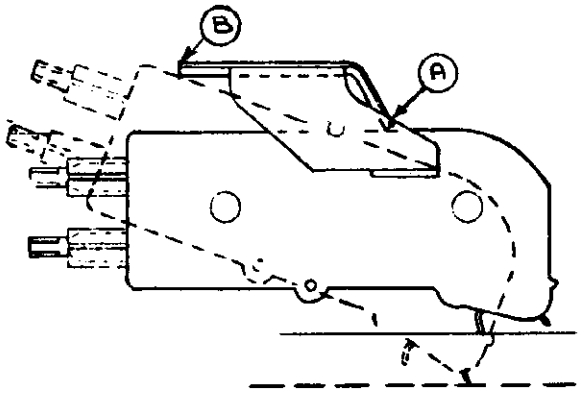

Fig. 9

NEEDLE JUMPS GROOVES ON 33⅓ R.P.M.

Check the needle pressure, using a Clarkstan needle pressure gauge. Pressure should be between 7 grams and 9 grams.

To increase the pressure, use a heavy wire or small steel rod to turn the spring shaft (63).

BOTH NEEDLE POINTS TOUCH AT ONCE

1. Needle point is bent. Replace needle.
2. Needle mounting bracket "fingers" improperly bent. See Fig. 9.

REPLACEMENT OF PARTS

TO REPLACE THE NEEDLE

1. Loosen the needle set screw, using a small screw driver.
2. Remove the needle.
3. Insert new needle with the flat side of the needle shank facing the needle set screw. Be sure the needle shank is all the way in to the bottom of the needle hole.
4. Tighten the set screw. The needle point should be parallel to the sides of the needle slot and evenly spaced between the walls of the slot.

TO REPLACE THE CARTRIDGE

1. Remove the two set screws, one on each side of the cartridge.
2. Lift the cartridge from the pickup arm mounting studs and remove the Tilt Spring from its mounting hole.
3. Insert the Tilt Spring in the new cartridge.
4. Seat the cartridge on the mounting studs, insert and tighten the two set screws.

The holes in the cartridge bracket are elongated. Position the cartridge so it fits solidly against the back finger of the mounting bracket when the needle weight counterbalance lever is in the "forward" or microgroove position and solidly against the front finger of the bracket when the counterbalance lever is in the "back" or 78 R.P.M. position.

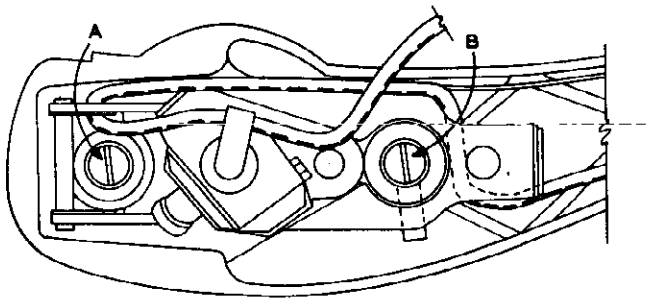

Fig. 10

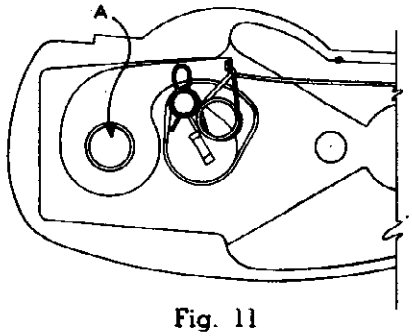

Fig. 11

TO REPLACE THE PICKUP ARM

CAUTION: Closely observe the original placement of the pickup cord and replace it in the same position. (See Fig. 10.) **Do Not** push hard on the needle end of the cartridge. Bending the mounting bracket will cause improper tracking or even cause both needle points to touch the record at once.

1. Remove mounting screws from mounting studs A and B, Fig. 10.
2. Gently remove hinge assembly from the mounting studs.
3. Remove tension spring anchor from mounting stud A. (See Fig. 11.)
4. Loosen No. 8 Bristol set screw and remove needle pressure counterbalance arm.
5. Remove the tilt control Lever. Do not disassemble the springs from this lever.
6. Remove the pickup cord and tilt spring brackets.
7. Remove the cartridge mounting screws and the cartridge.

Reassemble the parts to the new pickup arm in reverse order. Read the paragraph regarding replacement of the cartridge.

©John F. Rider

MODEL 246

LUBRICATION

Model 246 Record Changers leave the factory completely oiled and lubricated. Under normal conditions this should be sufficient for approximately one year or 1,000 hours of operation. When operated under extreme conditions of dust or heat, this operation should be performed more frequently as required.

Do not permit any oil or grease to get on the rubber Idler Drive Wheel or the Motor Sleeve, on Turntable Drive Rim or on the Automatic Trip Arm clutch. Any oil or grease on these points should be removed using Carbon Tetrachloride. *The recommended lubricants and points of lubrication are as follows:*

A — No. 10 OIL (Apply With Small Oil Can or Medicine Dropper)

1. Motor Bearings. Saturate top and bottom felts.
2. Pickup Arm Shaft. Drop one drop each to bottom bearing point, bracket hole through Main Base Plate.
3. Ball Bearing Assembly.
4. Idler Wheel Felt.

B — A NON FLUID LUBRICANT (Apply With Small Brush)

1. Idler Wheel Link.
2. Turntable Shaft Stud.
3. Pickup Arm Hinge Pins.
4. Knife edge of Pickup Arm Raising Lever.
5. Main Cam Bearing. (It is necessary to remove the sub-plate assembly to lubricate this bearing.)
6. Teeth of Main Cam Actuating Gear.
7. Track of Main Cam Gear.
8. Teeth of Large and Small idler gears.
9. Raising lever Bracket bearing surfaces.

AVOID EXCESSIVE LUBRICATION

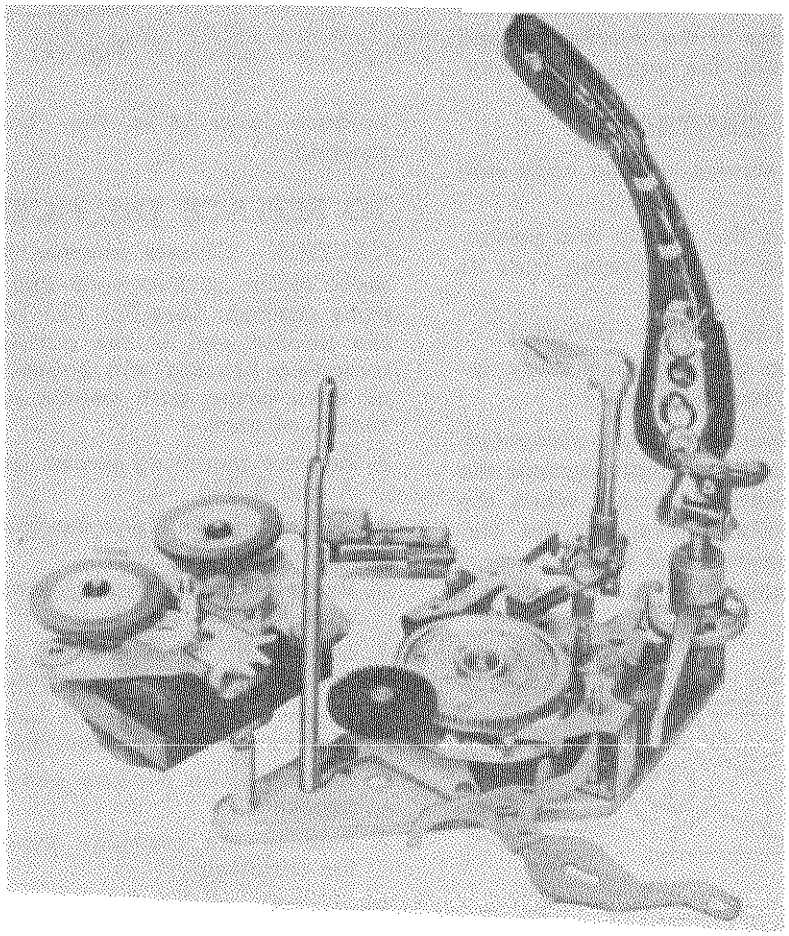

Cut Away View

©John F. Rider

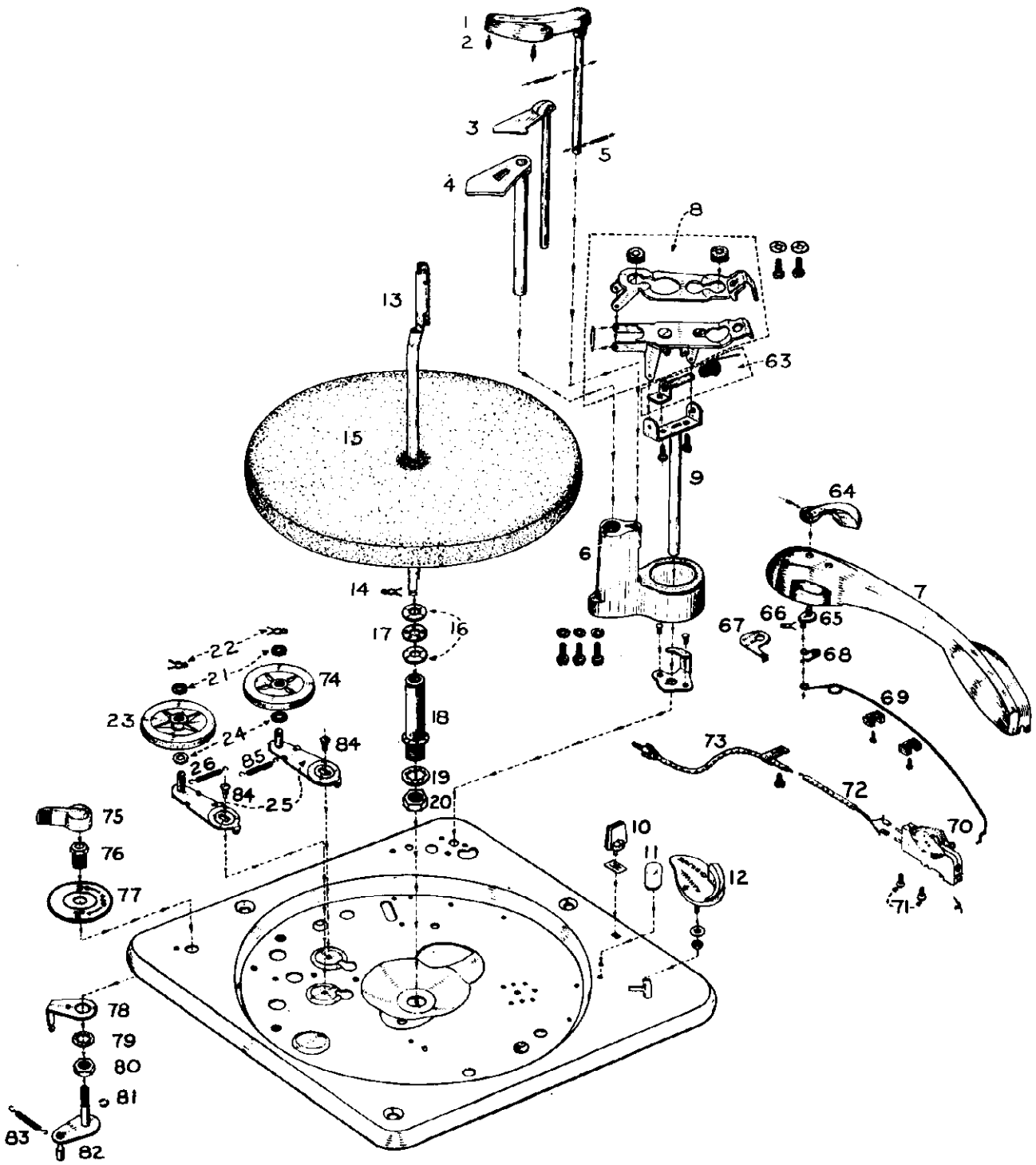

Exploded View above Main Plate

©John F. Rider

MODEL 246

REPLACEMENT PARTS LIST

Illustration No.	*Part No.*	*Description*
1	42X196	Record Weight Assembly
2	24P013	Record Weight Cushion
3	42X183	Push Off Blade
4	42X184	Record Shelf
5	27P157	Record Weight Groove Pin
6	42P199	Housing
7	49X063	Pickup Arm
8	21X283	Pickup Arm Hinge Assembly
9	11X385	Pickup Arm Shaft
10	49P099-C	Pickup Arm Rest
11	24P004-C	Needle Pad
12	49X-89-C	"Reject-Manual" Lever
13	11X358	Spindle
14	50P204	Spindle Retainer Clip
15	11X292-C	Turntable
16	25P269	Bearing Race Washer
17	11X058	Bearing Race
18	41P414	Turntable Bearing
19	25P333	Turntable Bearing Lock Washer
20	26P687	Turntable Bearing Nut
21	25P030	Felt Washer
22	50P125	Spring Clip
23	11X366	Idler Wheel (78 R.P.M.)
24	25P041	Fibre Washer
25	11X375	Idler Link
26	46P179	Link Tension Spring (78 R.P.M.)
63	11X386	Pickup Arm Counterbalance Spring
64	42P201	Counter Weight Lever
65	11X405	Crank Lever Assembly
66	50P125	Spring Clip
67	45P700	Crank Lever Spring Retainer
68	46P176	Crank Lever Spring
69	46P178	Cartridge Tilt Spring
70		Cartridge
71	26P474	Cartridge Mounting Screw
72	20X1244	Light Pickup Cord Assembly
73	20X1247	Heavy Pickup Cord Assembly
74	11X368	Idler Wheel (33⅓)
75	39P044	Speed Control Lever
76	41P632	Bushing
77	78P410	Dial
78	45P757	Toggle Bracket
79	25P345	Lock Washer
80	26P276	Hex Nut
81	50P216	Retainer for 11X381
82	11X381	Two Speed Shaft Assembly
83	46P175	Tension Spring
84	27P102	Shoulder Rivet
85	46P134	Link Tension Spring

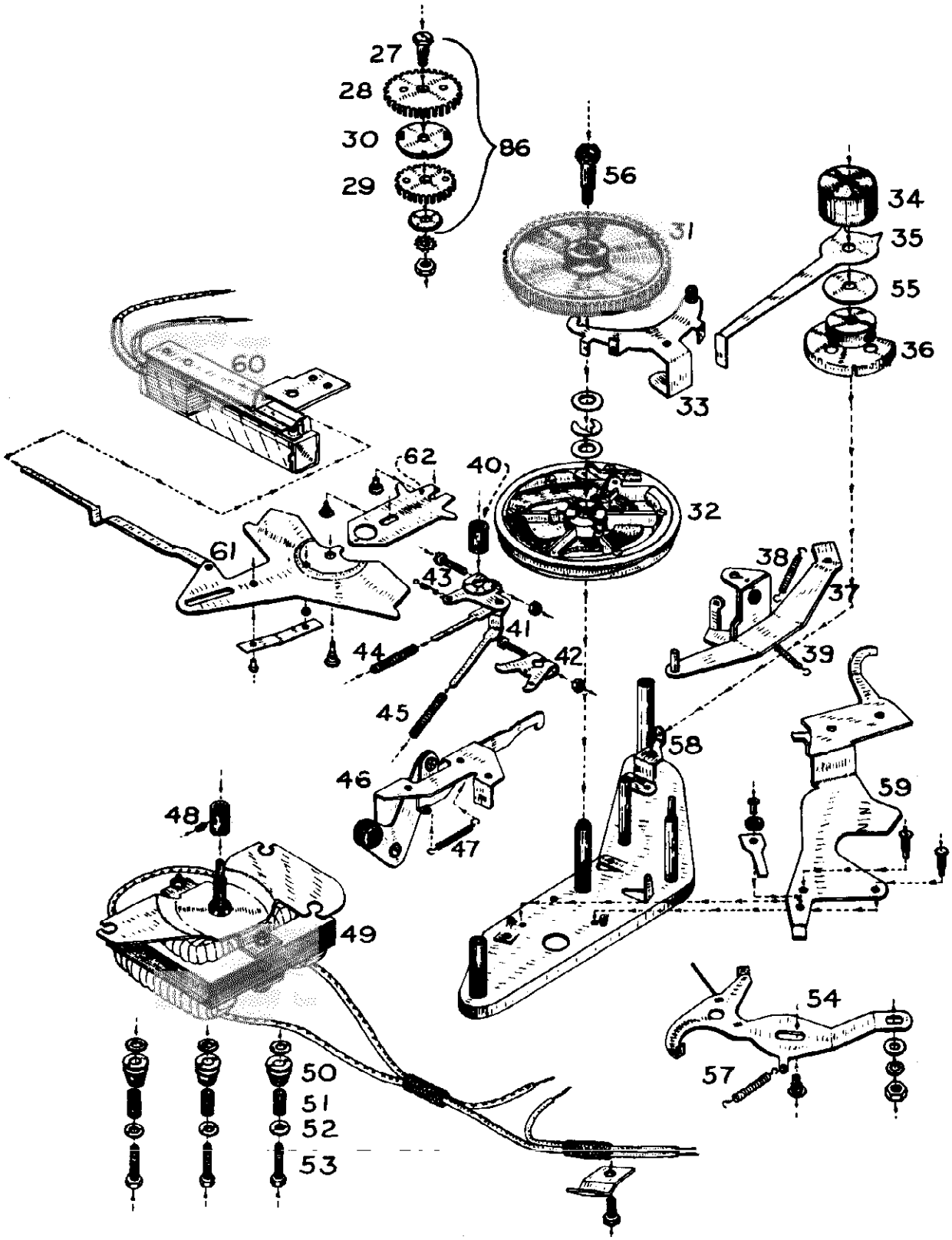

Exploded View below Main Plate

MODEL 246

REPLACEMENT PARTS LIST

Illustration No.	*Part No.*	*Description*
27	41P333	Shoulder Screw
28	47P024	Large Idler Gear
29	47P023	Small Idler Gear
30	45P342	Idler Gear Coupler
31	11X032	Trip Resetting Gear Assembly
32	11X033	Cam and Trigger Assembly
33	11X320	Velocity Trip
34	41P576	Velocity Trip Clutch Weight
35	45P568	Automatic Trip Arm
36	11X227	Pickup Arm Raising Disc
37	11X036	Pickup Arm Raising Lever
38	46P044	Tension Spring
39	46P139	Tension Spring
40	41P607	Spacer
41	11X287	Lever and Toggle Assembly
42	11X312	Push-Off Blade Actuating Lever
43	46P162	Tension Spring
44	46P151	Compression Spring
45	46P152	Compression Spring
46	11X319	Cam Lever and Bracket Assembly
47	46P158	Tension Spring
48	17X450	Drive Sleeve
49	15X097-1	Motor
50	25P363	Motor Shock Mounts
51	41P592	Motor Mount Sleeve
52	25P367	Motor Mount Washer
53	26P312	Motor Mount Bolt
54	11X291	Trip Lever and Wire Assembly
55	23P009	Friction Disc
56	41P333	Stud Mounting Screw
57	46P117	Tension Spring
58	45P347	Pickup Arm Pivot Bracket
59	11X316	Automatic Shut Off Lock Lever
60	32P052	Motor Switch
61	11X397	Two Speed Lever Assembly
62	45P755	Link Release
86	11X132	Complete Gear Assembly

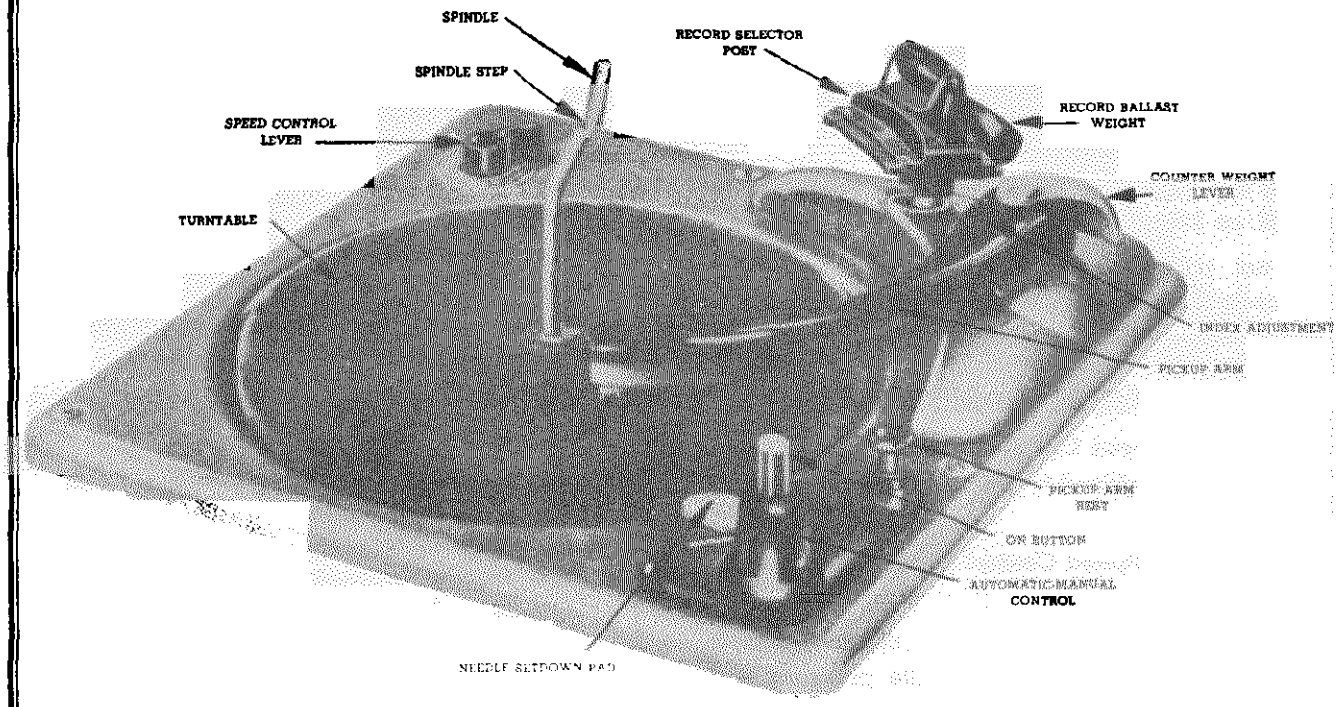

DESCRIPTION

The Webster-Chicago Model 256 is a dual speed, single post, spring cushioned spindle, automatic record changer. Simple in design and operation, it provides automatic or manual playing of up to a 1" stack of 10" or 12" standard 78 R.P.M. or microgroove 33⅓ R.P.M. records.

Model 256 returns the pickup arm to the rest position after playing the last record, although the motor continues to revolve until the "33⅓ OFF — 78" Speed Control Lever is moved to the OFF position. This is especially important when playing the microgroove records for it eliminates the necessity of manually lifting the pickup arm or setting it down on the easily scratched microgrooves. The idler wheels are also pulled away from the motor shaft when the Speed Control Lever is in the OFF position, eliminating the possibility of a flat spot developing on the rubber wheels with consequent wow.

Model 256 also features the exclusive Webster-Chicago velocity trip mechanism. The pickup arm is not actuated by "lead-in" springs and there is a minimum of lateral pressure. The arm travels freely in either direction. This lack of lateral pressure or inertia adds immeasurably to the life of records and is considered to be as important as extra-light vertical pressure, which in some instances would result in poor tracking at extremely low or high frequencies. The free floating arm permits "home recordings" or "inside out" records up to 12" size to be played manually.

Model 256 will change warped or rough edged records, at the same time assuring maximum protection to the finest discs.

OPERATION

PICKUP

The special pickup cartridge supplied has a replaceable tandem point needle. A unique connection between the cartridge and the needle weight counterbalance automatically lowers the proper point into playing position when the counterbalance is adjusted for light or normal needle pressure. When the counterbalance weight is turned back, the needle pressure is the 7 grams required for proper playing of the microgroove records. When it is turned forward to the side of the pickup arm the normal weight for standard 78 R.P.M. records is at the needle point.

The voltage output is normally lower when playing microgroove records. The volume control of the radio or amplifier must be turned up further when they are played.

Any 33⅓ R.P.M. records other than microgroove should be played with the standard needle and standard needle weight.

©

MODELS 256, 256-1

MOTOR

Connect the motor cord to a source of 105-120 volt, 60 cycle current only. If it is desired to operate the changer on 50 cycle current, special motor shaft bushings must be used in order to drive the turntable at the required speed of 78 R.P.M. or 33⅓ R.P.M.

Do not under any circumstances connect the motor to a source of direct current (DC) or alternating current of any other frequencies.

SPEED CONTROL ADJUSTMENTS

1. Move the Speed Control Lever to either "33⅓" or "78" as required for microgroove or standard records.

   Moving the Speed Control Lever also turns the motor power on.

2. Move the needle pressure counterbalance weight back for 7 gram needle pressure and the .001" tip radius needle point required by microgroove records. Move the weight lever forward for normal pressure and the .003" tip radius needle point required by the usual 78 R.P.M. records.

The Red or White dots on the Pickup Arm and the Speed Control Knob should match. The proper needle point will then be in position for the record speed selected.

FOR AUTOMATIC RECORD CHANGE

1. Turn the Record Selector Post to "10" or "12" for ten or twelve inch records. The Record Selector Post is pivoted and turns in a counterclockwise direction to the 10" position and clockwise to the 12" position as indicated by the arrows. Do not use the Ballast Weight as a handle to turn the post. Turn by grasping the head of the Record Selector Post with the thumb and forefingers.
2. Turn the Selector Switch (sleeve of ON button) to AUTOMATIC.
3. With the Record Ballast Weight turned back, place up to a 1" stack of 12" or 10" records on the spindle so that the bottom record rests on the step of the spindle and the shelf of the Record Selector Post.
4. Turn the Record Ballast Weight forward to rest on the top record.
5. Press the ON button.

   To reject any record while playing in the AUTOMATIC position, press the ON button.

6. After the last record has been played, the entire stack may be removed from the turntable at one time. The simplest procedure is as follows:
   a. Turn the Record Ballast Weight back out of position.
   b. Place the fingers of both hands under opposite edges of the bottom record.
   c. Do *not* apply pressure to the top record. (Keep your thumbs free.)
   d. Lift the stack of records straight up following the contours of the spindle. This permits the stack of records to follow the curve of the spindle without binding and greatly facilitates the removal of the stack.

FOR "MANUAL" RECORD CHANGE

CAUTION: We recommend that microgroove records never be played with the control in the "Manual" position. The microgrooves are easily scratched and the automatic rest position of the pickup arm plus the use of the "Reject" position of the control knob make manual playing unnecessary. However, manual operation when playing standard 78 R.P.M. records is often desirable.

1. Place a record on the turntable.
2. Turn the Record Selector Post to the "12" position. (This is not essential but permits more clearance in loading and unloading records.)
3. Turn the Selector Switch (sleeve of ON button) to MANUAL.
4. Place a record on the turntable. It may facilitate this operation if the record is placed over the spindle at an angle, with one edge of the record held below the level of the Record Selector Post Shelf. Records may be removed in the same manner.
5. Press the ON button.
6. Place the needle gently on the edge of the record. Do not lift the pickup arm too high as this will cause it to catch in the Automatic Stop Lock position.
7. To stop the mechanism at any time, turn the Speed Control to the "OFF" position.

©John F. Rider

SERVICE INFORMATION AND ADJUSTMENTS

All units are accurately adjusted, lubricated and tested at the factory. However service repairs and adjustments sometimes become necessary. This bulletin should be studied carefully before making any adjustments or replacing parts.

The functions and most probable misadjustments of the main assemblies are as follows (reference numbers refer to the exploded view

THE AUTOMATIC TRIP FAILS TO FUNCTION

The Main Cam Assembly (38) and Actuating Gear (36) are the heart of the record changer. The Main Cam Assembly drives the mechanisms associated with the action of the Pickup Arm (5) and the Record Selector assemblies. It, in turn, is driven by the gear train (29, 30, 31) and the Turntable which is rim driven by the phonograph motor.

The Main Cam Assembly and Actuating Gear is put in motion or "tripped" by means of the "automatic" trip or by the manually operated "reject" trip. When the movement of the Pickup Arm toward the spindle is greater than ⅛" in ½ revolution of the Turntable, the Automatic Trip Arm (33) trips the Velocity Trip and Roller Assembly (37). This releases the Actuating Pawl on the Main Cam Assembly (38), allowing it to engage the Main Cam Actuating Gear (36) and driving it through the change cycle. The pressure from the Automatic Trip Arm required to actuate the trip mechanism is negligible.

The Automatic Trip Arm (33) follows the movement of the Pickup Arm through a weighted friction clutch (32). This clutch must be kept free of oil and grease. Should it become necessary, clean the clutch parts with carbon tetrachloride. This clutch should operate the trip mechanism without placing undue drag on the movement of the pickup arm.

Also check for:

1. Velocity Trip and Roller Assembly binding.
2. Slight burr on end of the actuating pawl or on the underside of the Velocity Trip hook.
3. Actuating Pawl stuck (part of Main Cam Assembly (38) engaged by the hook end of the Velocity Trip and Roller Assembly (37).
4. Automatic Trip Arm (33) bent and not hitting the Velocity Trip and Roller Assembly (37).
5. Automatic Trip Arm (33) fails to touch the Velocity Trip and Roller Assembly.
6. Velocity Trip and Roller Assembly (37) rubbing on the underside of the Main Cam Actuating Gear (36).
7. No velocity lead-in groove or eccentric groove in the center of record.
8. Foreign matter in record groove.
9. Badly worn record.
10. Badly bent or worn needle.

IF THE "REJECT" TRIP FAILS TO FUNCTION

When the "On" button is pressed, the hair spring of the "reject" trip lever arm (65), actuates the Velocity Trip and Arm Assembly, putting the change mechanism in cycle.

Check for:

1. "Reject" trip hair spring of Lever (65) bent or broken.
2. Velocity Trip and Roller Assembly (37) binding.
3. Actuating Pawl (part of Main Cam Assembly 38) stuck.

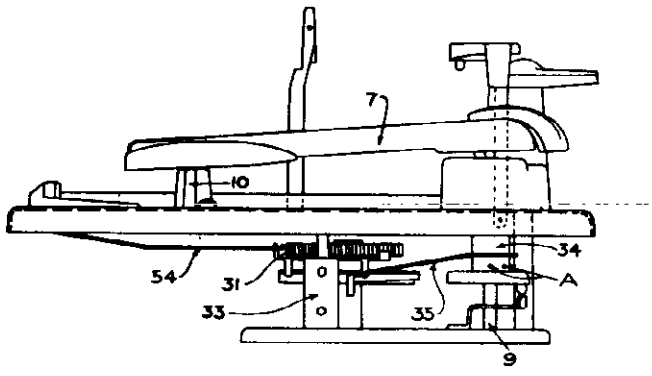

Fig. 1

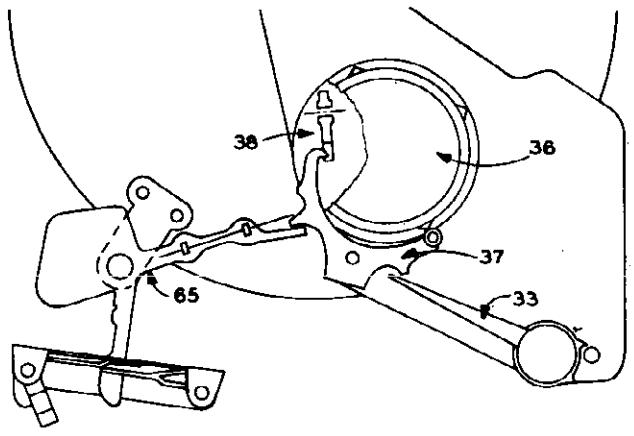

Fig. 2

©John F. Rider

IF THE MECHANISM CONTINUES TO CYCLE

At the completion of the change cycle, the Actuating Pawl is disengaged from the Main Cam Assembly Actuating Gear (36) by the hook end of the Velocity Trip and Roller Assembly (37) which has been returned to its normal position by the reset points on the Main Cam Drive Gear (Fig. 3). This hook should be adjusted for about 1/64" clearance from the bottom of the Main Cam Drive Gear (36), Fig. 1. Greater clearance may permit the pawl to bounce past the hook and re-engage, causing the mechanism to continue to cycle.

If the clearance between the lip on the Velocity Trip Lever and the edge of the Main Cam is too small, it will prevent the hook end of the Velocity Trip Lever from engaging the trigger. Adjust the clearance between the lip (D, Figs. 3 and 5) on the Velocity Trip Lever of the Main Cam to be within 1/64" when the roller is contacting the point of one of the protrusions on the Actuating Gear.

Also check for:

1. Velocity Trip and Roller Assembly (37) rubbing on Main Cam Actuating Gear (36).
2. Manual Trip Lever (65) binding.
3. "Disengage Roller" broken on Velocity Trip and Roller Assembly (37).

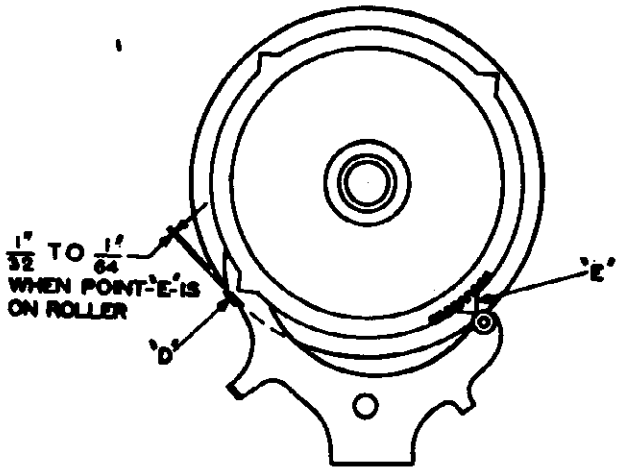

ADJUST IF NECESSARY BY BENDING AT POINT "D".

Fig. 3

PICKUP ARM LIFT TOO HIGH OR TOO LOW

The vertical movement of the pickup arm is controlled by the angle of the Pickup Arm Raising Lever (40), Fig. 4. The needle should approach the top record of a full stack of 10" records on the turntable with approximately 1/8" clearance. *To adjust:*

1. Put a full stack of 10" records ON THE TURNTABLE.
2. Press the "On" button and rotate the Turntable clockwise until the needle clears the top record of the stack by about 1/8".
3. Be sure the notch in the Pickup Arm raising disc (34) engages the pickup arm raising lever (40).
4. If the needle does not clear the top record or if it raises too high, adjust by bending the pickup arm raising lever at the point indicated in Fig. 4.

CAUTION: All adjusting bends should be made slowly, using slight but firm, easy pressure.

Be sure the set screws (A of Fig. 1) of the pickup arm raising disc are not loose and are properly positioned in the alignment holes as explained in the paragraph on Needle Setdown Indexing.

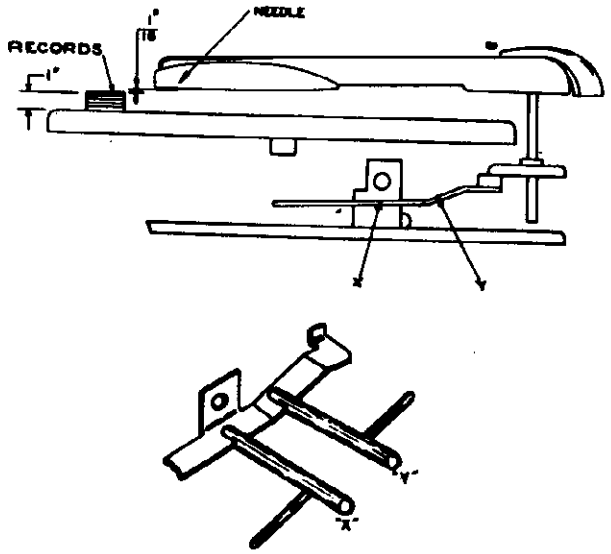

Fig. 4

NEEDLE SET DOWN INDEXING INCORRECT

The horizontal movement of the pickup arm (5) is controlled by the eccentric excursion of the Pickup Arm Raising Lever (40) moving the Pickup Arm Raising Disc (34) when actuated by the Main Cam Assembly (38). The eccentric screw (part of 6), accessible through the top of the pickup arm (5), should take care of any normal position adjustment. Turn this screw clockwise to index the needle in toward the spindle and counter-clockwise to index the needle out away from the spindle.

Should further adjustment be necessary, proceed as follows:

1. Set the eccentric screw, just mentioned, to a middle position.
2. Set the Record Selector Post (42) to the 10" position.
3. Operate the mechanism by revolving the Turntable manually until the needle drops to within 1/8" of a 10" record on the turntable.
4. Be sure the notch in the Pickup Arm Raising Disc (34) engages the Pickup Arm Raising Lever (40).

©John F. Rider

5. With a No. 8 Bristol wrench in each of the set screws of the Pickup Arm Raising Disc (35) as indicated in A, Fig. 1, alternately loosen one screw and tighten the other until the needle rests above the record lead-in groove at the desired point.
6. Complete the change cycle of the mechanism and position the Pickup Arm on the rest button (10). If necessary, bend the tongue of the Pickup Arm Raising Disc closer to or away from the Base Plate Post until the Pickup Arm is correctly seated on the rest button when the tongue is touching the Base Plate Post.

NOTE: All adjusting bends should be slight but firm, easy bends.

CHANGE CYCLE STARTS BEFORE END OF RECORD

If the trip assembly chatters while the changer is running, or if the changer cycles before the entire record is played, there is probably insufficient clearance between the hook end of the Velocity Trip and Roller Assembly (37) and the Actuating Gear (36). This clearance should be adjusted to be within $\frac{1}{32}$" to $\frac{1}{64}$" by bending the lever at point "C" shown in Fig. 5.

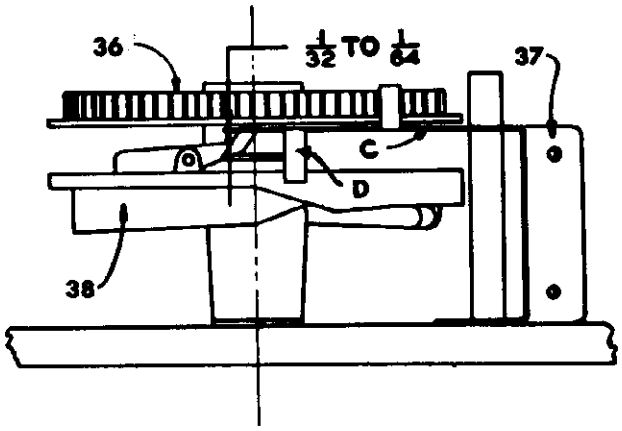

Fig. 5

MORE THAN ONE RECORD IS DROPPED DURING A CHANGE CYCLE

The floating latch at the top of the Record Spindle is so spaced that only one record at a time can slide between the heel of the latch and the step of the spindle. The hole in the latch is elongated so that the latch can slip into the spindle recess when records are being removed.

If more than one record is dropped at a time, it will be found to be due to:

1. Foreign matter in spindle recess causing the latch to stick.
2. Exceptionally thin records.

RECORD DROPS ON PICKUP ARM

As the change cycle is started, the first motion of the inclined outer bottom surface of the Main Cam (38) causes the Record Selector Post (42) to move toward the Spindle about $\frac{3}{32}$ inch. This position is maintained until the Pickup Arm has made its full outward lateral excursion at which time the Record Selector Post again moves toward the spindle, causing the bottom record to drop into playing position.

If the Record Selector Post (42) has been bent back, away from the Record Spindle, it is possible for a standard record to rest on the spindle step with its edge just over the edge of the Record Selector Post shelf. Then as the change cycle is started, the record is pushed off the spindle by the initial movement of the Record Selector Post, so that it drops on the Pickup Arm.

To correct this condition, the Rocker Arm Assembly must be adjusted so that the Record Selector Post is brought nearer to the spindle. This adjustment is made in the following manner:

1. With the mechanism at rest, remove the Turntable and replace the Record Spindle. Set the Record Selector Post to the position for playing 12-inch records and place a 12-inch record on the Record Spindle.
2. Insert a short screwdriver through the motorboard opening into the screw slot as shown at "A" in Fig. 6. Clockwise rotation of the screw will increase the distance between the Record Spindle and the Record Selector Post; counterclockwise rotation will decrease it.

It is recommended that the distance between the edge of the record and the step of the Record Selector Post be held to just over $\frac{1}{32}$ of an inch so that records with rough or sharply beveled edges will not catch on the outer edge of the Record Selector Post.

CAUTION: Be certain that a standard size record is used in making this adjustment. A standard 10" record measures $9\frac{7}{8}$" ± $\frac{1}{32}$" diameter. A standard 12" record measures $11\frac{7}{8}$" ± $\frac{1}{32}$" diameter.

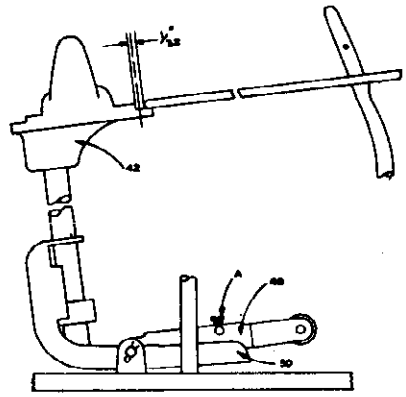

Fig. 6

©John F. Rider

MODELS 256, 256-1

PUSH OFF POST ANGLE INCORRECT

The Record Selector Post should be adjusted so that the curve of the shelf matches the curve of the record. See Fig. 7.

To adjust this angle:

1. Turn the Record Selector Post to the "10" position.
2. Place a ten-inch record on the Spindle in the normal position for automatic playing.
3. With a No. 8 Bristol wrench in each of the set screws (point A, Fig. 7), alternately loosen one and tighten the other until the Record Selector post angle is correct. Be sure that both set screws are tight at the completion of this adjustment.

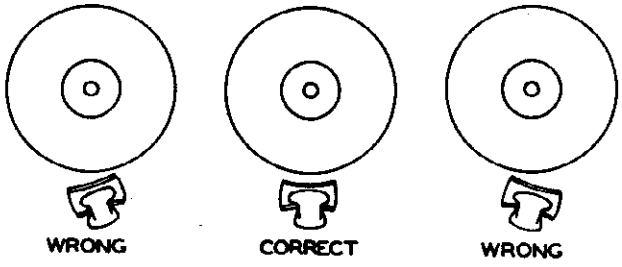

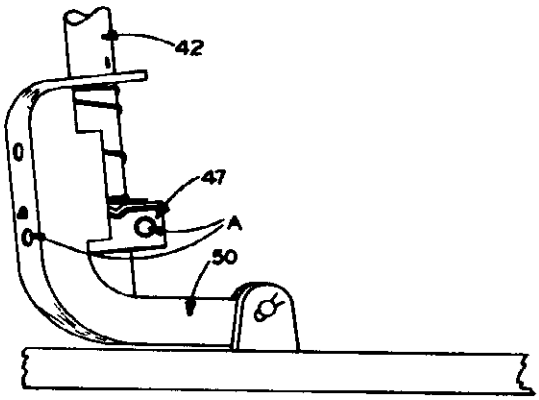

ERRATIC INDEXING

Indexing in the 10" or the 12" position is controlled through the presence or absence of pressure from the Compression Spring (47A) on the Pickup Arm Raising Lever (40). The compression on this spring is changed as the Record Selector Post (42) is changed to the 10" or 12" position. Improper adjustment of the spring tension will result in erratic indexing. In the 12" position, the spring should be just free. In the 10" position, the compression of the spring holds the stud of the Pickup Arm Raising Lever (40) against the outside edge of the groove, forcing the stud to travel the inside edge or the outside edge of the groove in the bottom of the Main Cam (38).

To adjust:

Bend the slotted arm (part of 40) for proper tension and smooth clearance of the spring guide arm (47).

GLIDE IN ON 12" RECORDS

1. Check tension of compression spring (47A) as explained above. Spring should be free in 12" position.
2. Remove any cause of friction in Index Lever (47).
3. Tongue of Pickup Arm Raising Disc (34) should not touch beveled edge of pickup arm pivot shaft bracket (35) when the needle is on the edge of a 12" record. Bend the end of the bracket if necessary.

LAST RECORD DOES NOT PLAY

The weight of the records on the Spindle keeps the Automatic Shut Off Lock Lever (44) from dropping and engaging the Pickup Arm Raising Disc (38), thus permitting the mechanism to continue to cycle.

The Push Off Post (50) moves forward slightly at the beginning of each change cycle. The bracket "B" on this post is then underneath the elevated hook "A" on the Automatic Shut Off Lock Lever (44). This forward movement takes place before the last record drops so the change cycle should continue. However the dropping of the last record releases the Automatic Shut Off Lock Lever, permitting it to drop and shut off the mechanism when the change cycle starts after the last record.

If the last record does not play:

1. Bend the elevated hook "A", Fig. 8 forward so that it will overlap the Push Off Post bracket "H" about 1/32" with a record on the spindle.

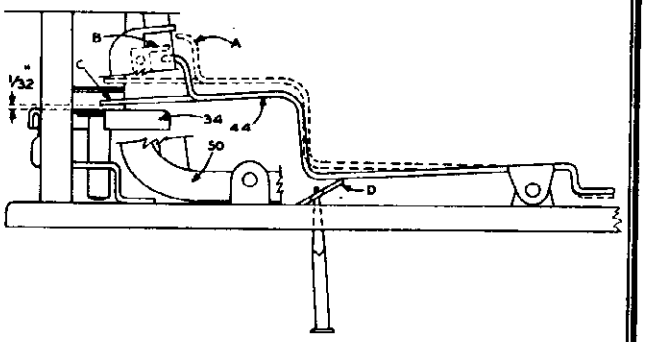

Fig. 8

LAST RECORD CONTINUES TO PLAY

1. Check the record spindle to be sure that it moves up and down freely.
2. With no records on the spindle, check the Automatic Shut Off Lock Lever (44). The lower hook end of this arm ("C") should catch the Pickup Arm Raising Disc (34) at the beginning of the cycle to prevent travel of the Pickup Arm, causing it to drop on the OFF button. With no records on the Spindle and with the mechanism at rest, this hook should clear the top of the Pickup Arm Raising Disc by 1/32". Adjust, if necessary, by inserting a screw driver in the hole in the bottom base plate and bending

©John F. Rider

lip "D". Never attempt to move the Pickup Arm Raising Disc up or down.

3. The elevated hook "A" on the Automatic Shut Off Lock Lever will sometimes lock with the bracket "B" on the Record Selector Post (50) if the drop of the record is delayed. More clearance can be obtained by bending the elevated hook "A" away from the bracket.

78 R.P.M. AT BOTH SPEED SETTINGS

The 78 R.P.M. bushing on the motor shaft should be low enough to clear the 33⅓ R.P.M. idler wheel. If it is too high:

1. Loosen the bushing set screw, using a No. 8 Bristol wrench.
2. Lower the bushing until it just clears the idler wheel.
3. Tighten the set screw.

SLOW SPEED

1. Idler wheel (24) or (91) may be cocked at an angle. Bend the mounting bracket (26).
2. Too strong tension on Idler Link Tension Spring (27) or (90). Stretch spring slightly.
3. Lip of Idler Wheel Link (26) may be binding in mounting hole. Carefully bend out the lip so the Idler Wheel rides more firmly on the rim of the Turntable.

MOTOR DOES NOT TURN ON

The top switch leaf of the AC switch (61) may be bent, preventing contact when the Speed Control Lever is moved to 33⅓ or 78. Bend the Switch Leaf by means of a small screw driver inserted through the small opening in the plastic protecting cover or bend the switch mounting bracket.

STALLS DURING CHANGE CYCLE

Too weak tension on Idler Link Spring (25 or (90). Tighten spring as required.

ERRATIC SPEED ("WOW")

Remove any dirt or excess flocking from the inside rim of the turntable. Check the rubber drive wheel for a flat spot or "out of round".

The idler wheel links (26) should be loose on the shoulder rivets but not sloppy. If too loose, erratic speed will result.

1. Remove the motor.
2. Carefully stake the shoulder rivet more securely to insure smooth operation.
3. Idler wheel cocked at an angle.

BOTH NEEDLE POINTS TOUCH AT ONCE

1. Needle point is bent. Replace needle.
2. Needle mounting bracket "fingers" improperly bent. See Fig. 9.

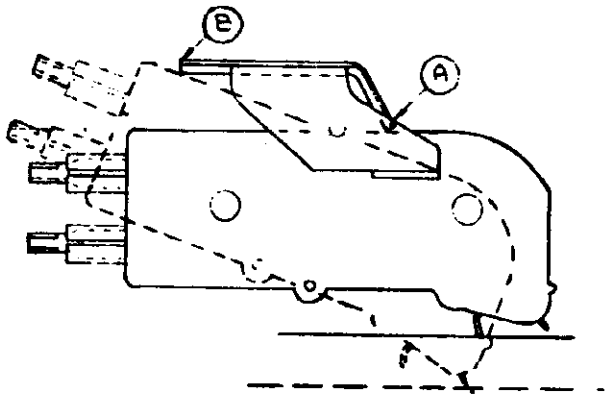

Fig. 9

REPLACEMENT OF PARTS

TO REPLACE THE NEEDLE

1. Loosen the needle set screw, using a small screw driver.
2. Remove the needle.
3. Insert the new needle with the flat side of the needle toward the set screw. Be sure the needle shank is all the way in to the bottom of the needle hole.
4. Tighten the set screw. The needle point should be parallel to the sides of the needle slot and evenly spaced between the walls of the slot.

TO REPLACE THE PICKUP ARM

CAUTION: Closely observe the original placement of the pickup cord and replace it in the same position. (See Fig. 10). *Do not* push hard on the needle end of the cartridge. Bending the mounting bracket will cause improper tracking or even cause both needle points to touch the record at once.

1. Remove mounting screws from mounting studs A and B, Fig. 10.
2. Gently remove hinge assembly from the mounting studs.

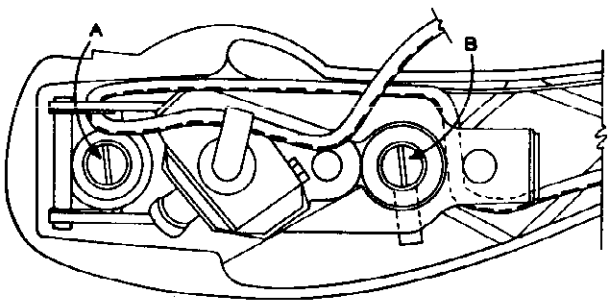

Fig. 10

MODELS 256, 256-1

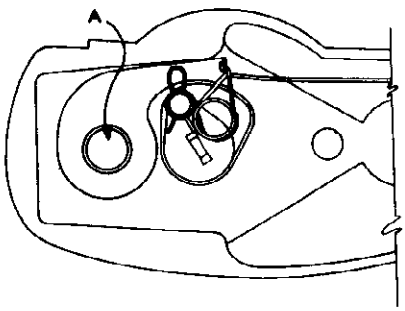

Fig. 11

3. Remove tension spring anchor from mounting stud A. (See Fig. 11.)
4. Loosen No. 8 Bristol set screw and remove needle pressure counterbalance arm.
5. Remove the tilt control lever. Do not disassemble the springs from this lever.
6. Remove the pickup cord and tilt spring brackets.
7. Remove the cartridge mounting screws and the cartridge.

Reassemble the parts to the new pickup arm in reverse order. Read the paragraph regarding cartridge replacement.

TO REPLACE THE CARTRIDGE

1. Remove the two set screws, one on each side of the cartridge.
2. Lift the cartridge from the pickup arm mounting studs and remove the Tilt Spring from its mounting hole.
3. Insert the Tilt Spring in the new cartridge
4. Seat the cartridge on the mounting studs, insert and tighten the two set screws.

The holes in the cartridge bracket are elongated. Position the cartridge so it fits solidly against the back finger of the mounting bracket when the needle weight counterbalance lever is in the "forward" or 78 R.P.M. position and solidly against the front finger of the bracket when the counterbalance lever is in the "back" or micro-groove position.

REPLACE PICKUP ARM BRACKET AND SHAFT ASSEMBLY

1. Loosen Bristol screws in Pickup Arm Raising Disc.
2. Remove Disc and Clutch parts by sliding them off the bottom of the Pickup Arm Shaft and pull shaft out of changer from above.

To replace, reverse the procedure and adjust the Pickup Arm Raising Disc for proper operation.

REPLACE RECORD POST AND ROCKER ARM ASSEMBLY

1. Remove the Pickup Arm Assembly.
2. Remove the four nuts under the main plate which hold the Crescent Assembly.
3. Unhook the Rocker Arm Return Spring.
4. Remove the Rocker Arm Pivot Pin.
5. Lift out the Record Selector Post, Rocker Arm and Crescent Assembly as a unit.
6. In replacing the Rocker Arm Assembly, note paragraph "Replacing the Sub-Plate Assembly."

LUBRICATION

Model 256 Record Changers leave the factory completely oiled and lubricated. Under normal conditions this should be sufficient for approximately one year or 1,000 hours of operation. When operated under extreme conditions of dust or heat, this operation should be performed more frequently as required.

Do not permit any oil or grease to get on the rubber Idler Drive Wheel or the Motor Sleeve, on Turntable Drive Rim or on the Automatic Trip Arm clutch. Any oil or grease on these points should be removed using Carbon Tetrachloride.

The recommended lubricants and points of lubrication are as follows:

A — No. 10 OIL (Apply With Small Oil Can or Medicine Dropper)

1. Motor Bearings. Saturate top and bottom felts.
2. Pickup Arm Shaft. Drop one drop each to bottom bearing point, bracket hole through Main Base Plate.
3. Ball Bearing Assembly.
4. Idler Wheel Felt.

B — A Non Fluid Lubricant (Apply With Small Brush)

1. Idler Wheel Link.
2. Turntable Shaft Stud.
3. Pickup Arm Hinge Pins.
4. Knife edge of Pickup Arm Raising Lever.
5. Main Cam Bearing. (It is necessary to remove the sub-plate assembly to lubricate this bearing.)
6. Teeth of Main Cam Actuating Gear.
7. Track of Main Cam Gear.
8. Teeth of Large and Small idler gears.
9. Raising lever Bracket bearing surfaces.

AVOID EXCESSIVE LUBRICATION

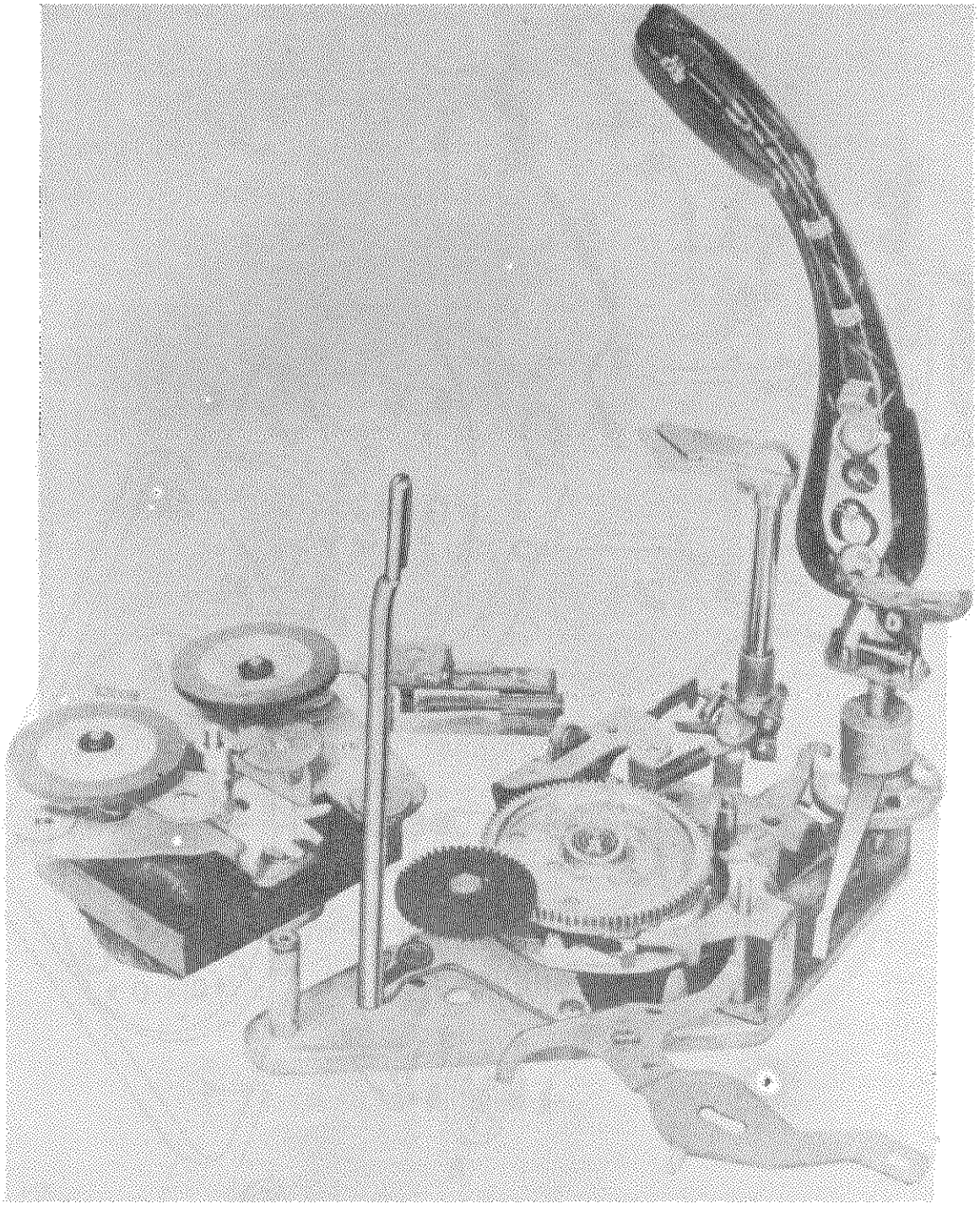

Cut Away View

This view shows a Model 246 mechanism. It is used because it shows the dual speed mechanism and main actuating gear assembly.

©John F. Rider

MODELS 256, 256-1

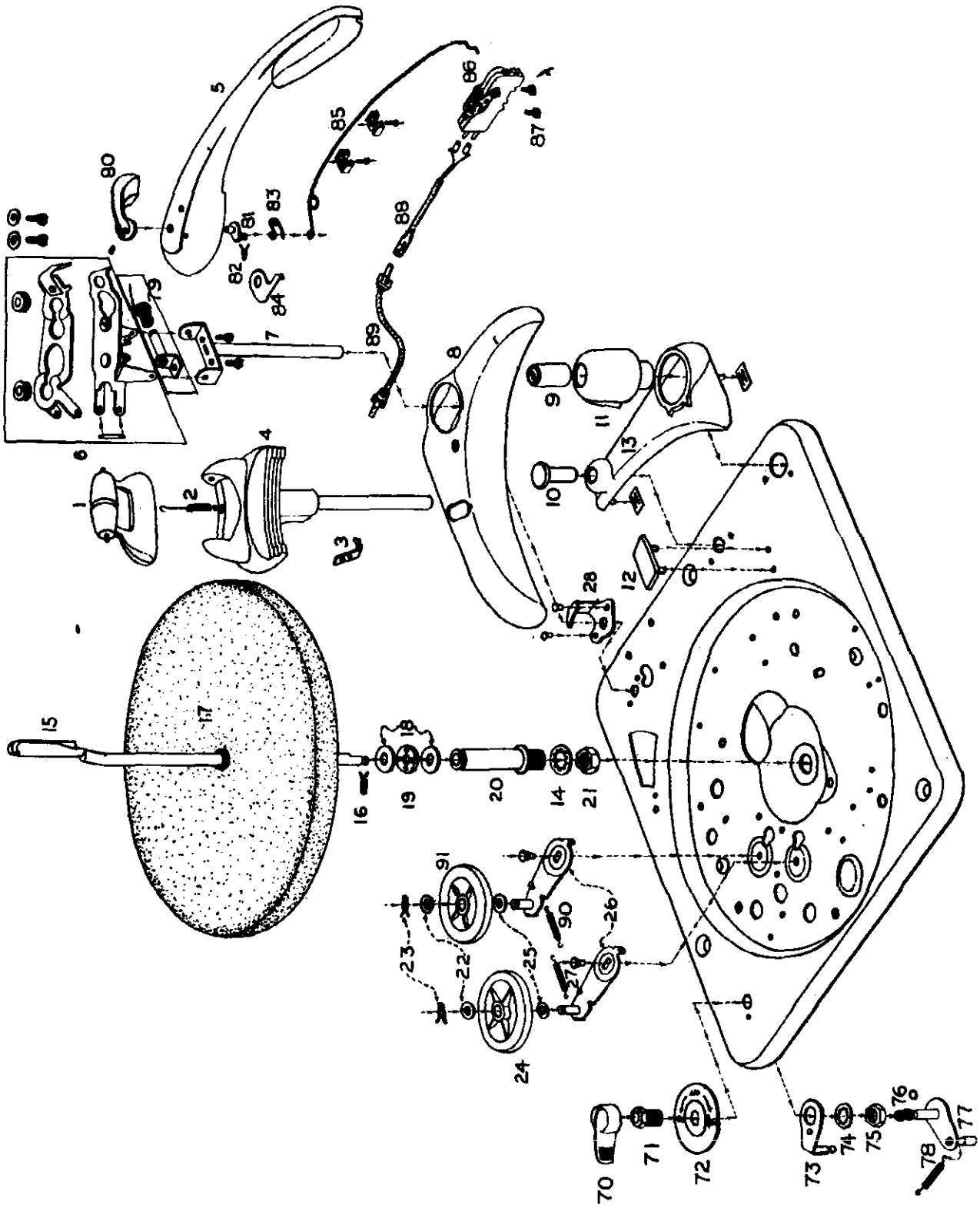

Exploded View above Main Plate

PARTS LIST

Illustration No.	*Part No.*	*Description*
1	49P074	Record Stabilizer Weight
2	46P126	Tension Spring — Record Weight
3	45P464	Spring Retaining Bracket
4	49X029	Record Selector Post
5	49X068	Pickup Arm — less cartridge and hardware
6	21X283	Pickup Arm Mounting Hinge
7	11X385	Pickup Shaft Assembly
8	45P350	Crescent Plate
9	49P111	Reject Button
10	49P112	Pickup Arm Rest
11	11X139	"Automatic-Manual" Control
12	24P022	Needle Pad
13	49P027	Escutcheon
14	25P333	Lock Washer
15	11X133	Spindle
16	50P204	Spindle Retaining Clip
17	11X289	Turntable
18	25P269	Bearing Race Washer
19	11X058	Bearing Race Assembly
20	41P414	Turntable Bearing
21	26P687	Bearing Nut
22	25P030	Felt Washer
23	50P125	Retaining Clip
24	11X366	Idler Wheel — 78 R.P.M.
25	25P046	Fibre Washer
26	11X375	Link Assembly
27	46P179	Link Tension Spring — 78 R.P.M.
70	39P044	Speed Control Knob
71	41P632	Shaft Bushing
72	78P410	Dial
73	45P757	Toggle Bracket
74	25P345	Lock Washer
75	26P276	Hex Nut
76	50P216	Retainer for 11X381
77	11X381	Two Speed Shaft Assembly
78	46P175	Tension Spring
79	11X386	Pickup Counterbalance Assembly
80	11X429	Counterbalance Weight Lever and Set Screw
81	11X405	Crank Lever Assembly
82	50P125	Spring Clip
83	46P176	Crank Lever Spring
84	45P700	Crank Lever Spring Retainer
85	46P180	Cartridge Tilt Spring
86		Cartridge and Bracket Assembly
87	26P474	Cartridge Mounting Screw
88	20X1244	Pickup Cord Assembly — Internal
89	20X1247	Pickup Cord Assembly — External
90	46P134	Link Tension Spring — 33⅓ R.P.M.
91	11X368	Idler Wheel — 33⅓ R.P.M.

MODELS 256, 256-1

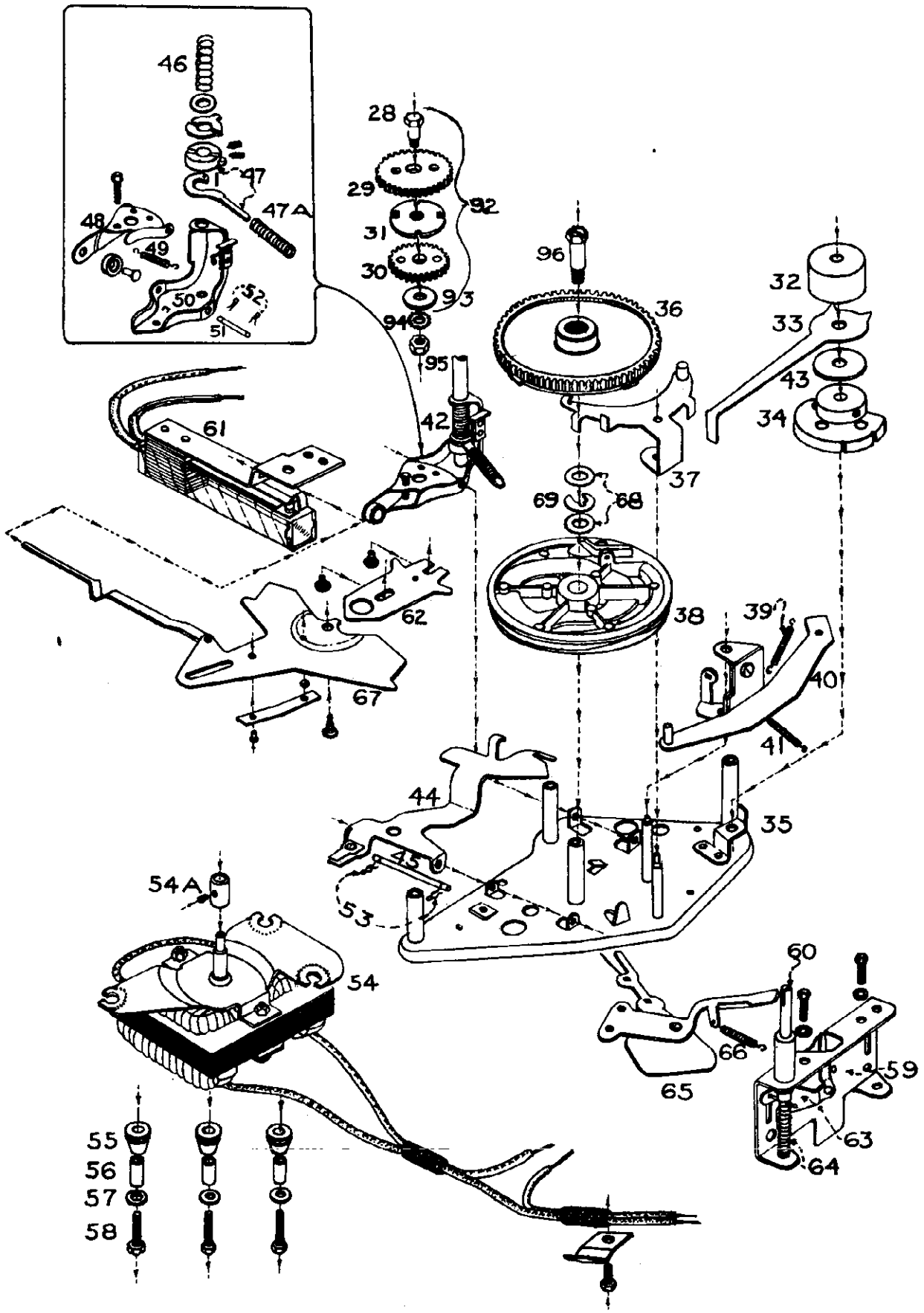

Exploded View below Main Plate

©John F. Rider

PARTS LIST

Illustration No.	*Part No.*	*Description*
28	41P333	Shoulder Screw
29	47P024	Large Fibre Gear
30	47P023	Small Fibre Gear
31	45P342	Idler Gear Coupler
32	41P576	Velocity Trip Clutch Weight
33	45P568	Automatic Trip Arm
34	11X227	Tone Arm Raising Disc
35	Not stocked as replacement item	
36	11X032	Trip Reset Gear
37	11X320	Velocity Trip
38	11X033	Cam and Trigger Assembly
39	46P139	Tension Spring
40	11X046	Raising Arm Lever Assembly (includes springs)
41	46P022	Tension Spring
42	Not a replacement item	
43	23P009	Friction Disc
44	11X079	No-Record Lever
45	41P443	Pin
46	46P012	Compression Spring
47	11X049	Selector Lever and Collar Assembly
47A	46P011	Compression Spring
48	11X141	Rocker and Roller Assembly
49	46P017	Tension Spring
50	11X142	Rocker Arm Lever
51	41P421	Retaining Pin
52	50P125	Clip
53	50P125	Clip
54	15X097	Motor
54A	17X450	Motor Shaft Sleeve (60 cycle)
55	25P363	Rubber Shock Motor Mounts
56	41P592	Motor Mounting Sleeve
57	25P367	Motor Mounting Washer
58	26P312	Motor Mounting Bolt
59	11X396	"Automatic-Manual" Control Assembly
60	41P444	"Automatic-Manual" Control Shaft
61	32P052	A.C. Switch and Bracket Assembly
62	45P755	Link Release
63	45P361	"Reject" Trip Actuating Lever
64	46P123	Compression Spring
65	11X158	"Reject" Trip Lever and Wire Assembly
66	46P117	Trip Lever Tension Spring
67	11X397	Two Speed Lever Assembly
68	25P343	Washer
69	25P342	"C" Washer
92	11X132	Idler Gear Assembly
93	25P367	Washer
94	25P222	Lock Washer
95	26P046	Nut
96	26P748	Shoulder Screw