RIDER'S
VOLUME - XIX

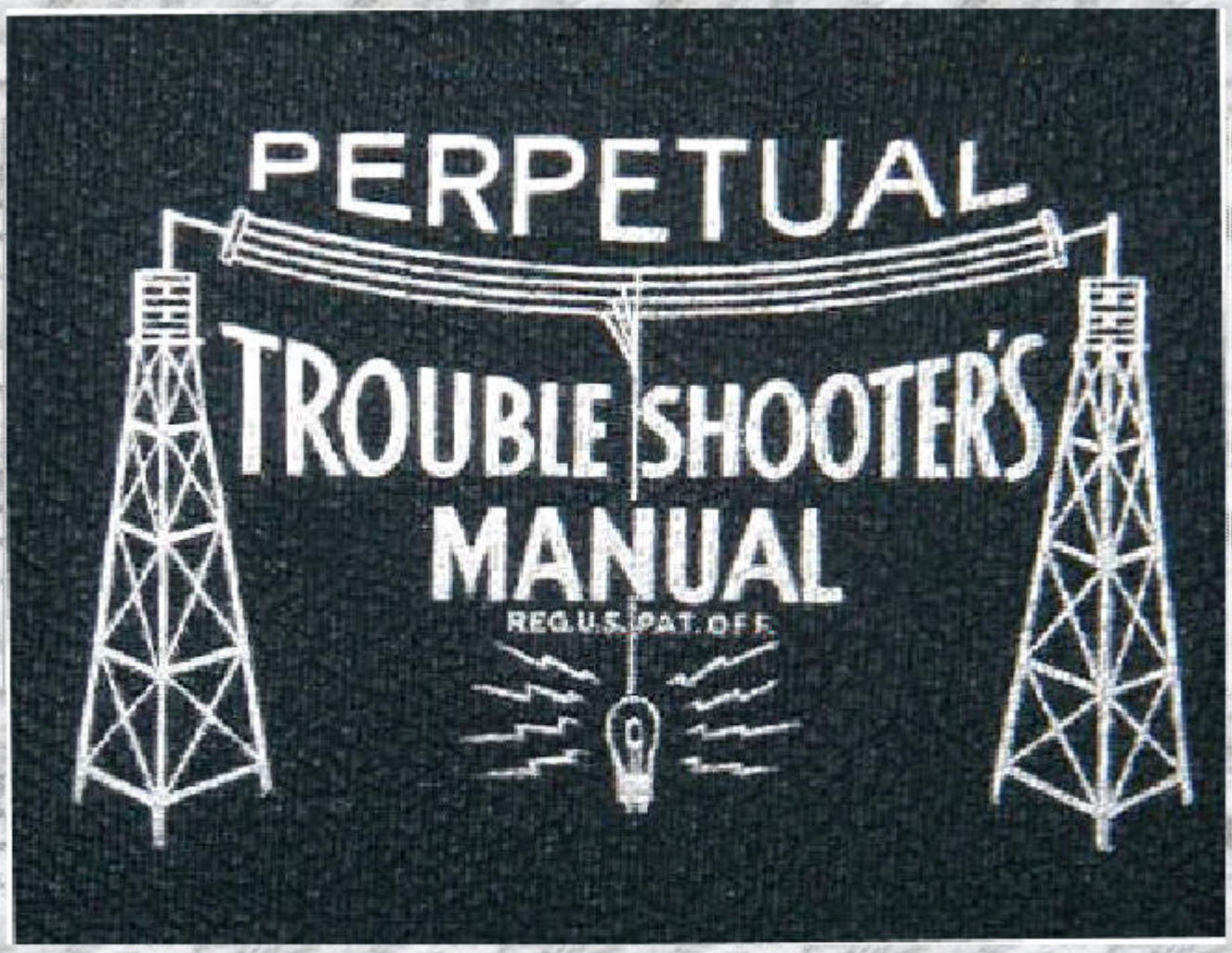

COVERING LATE 1948
TO LATE 1949

ADMIRAL CORP.

MODEL 5T12, CHASSIS 5T1

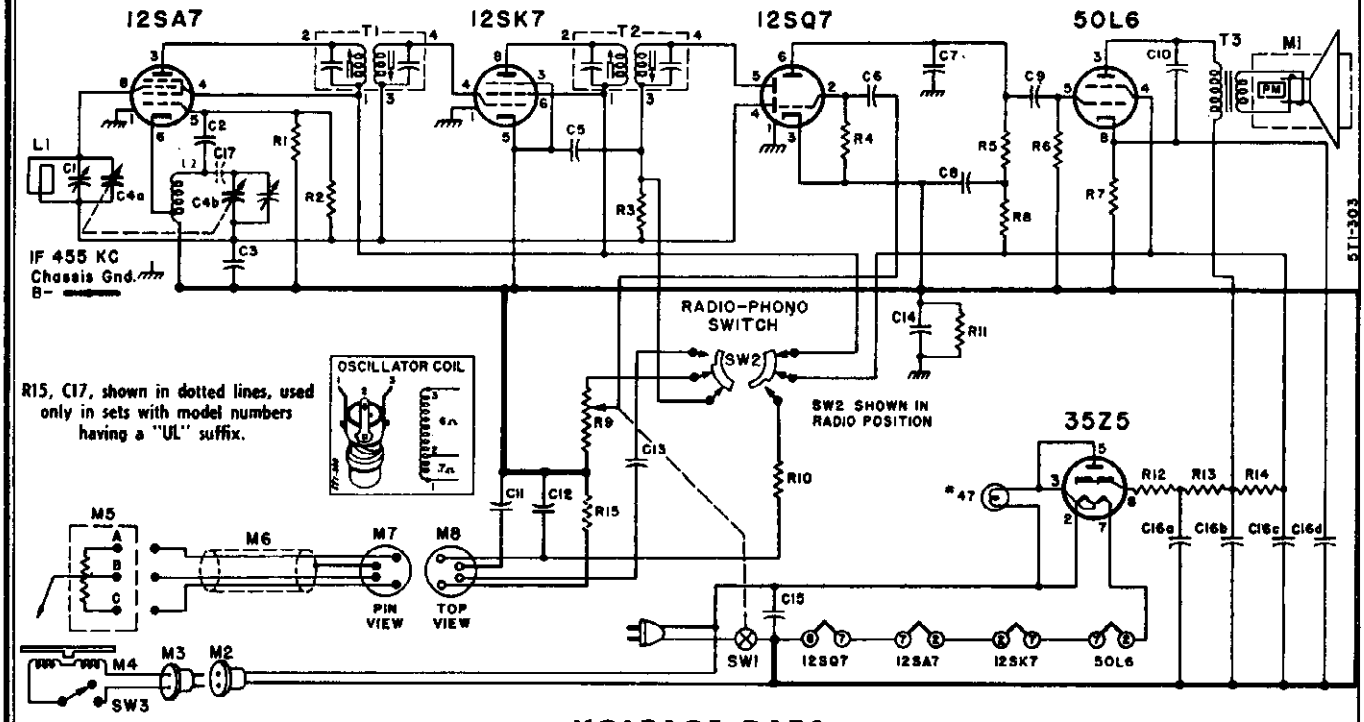

VOLTAGE DATA

- All readings made between tube socket terminals and B minus (terminal of On-Off switch).
- Switch in "Radio" position.
- Measured on 117 Volt AC line.
- Volume control minimum; dial turned to low frequency end.
- Voltages measured with Vacuum Tube Voltmeter. Readings taken with a 1000 ohm-per-volt meter will be approximately the same except for those marked with an asterisk * in the voltage chart; these readings will either be lower or practically zero.

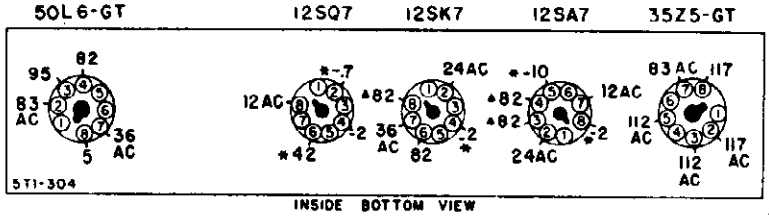

* If taken with a 1000 ohm-per-volt meter, readings will be lower or practically zero.

▲ On "Phono" these voltages will be zero. All other DC readings may be slightly higher.

RESISTORS

Symbol	Description	Part No.
R1	22,000 Ohms, ½ Watt	60B 8-223
R2	10 Megohms, ½ Watt	60B 8-106
R3	1 Megohm, ½ Watt	60B 8-105
R4	4.7 Megohms, ½ Watt	60B 8-475
R5	470,000 Ohms, ½ Watt	60B 8-474
R6	470,000 Ohms, ½ Watt	60B 8-474
R7	150 Ohms, 1 Watt	60B 14-151
R8	47,000 Ohms, ½ Watt	60B 8-473
R9	1 Megohm Volume Control	75B 1-32
R10	22,000 Ohms, ½ Watt	60B 8-223
R11	150,000 Ohms, ½ Watt	60B 8-154
R12	33 Ohms, 1 Watt	60B 28-3
R13	220 Ohms, 1 Watt	60B 28-7
R14	1,000 Ohms, 1 Watt	60B 28-2
R15	33,000 Ohms, ½ Watt (R15 used only in sets with model numbers having a "UL" suffix)	60B 8-333

CONDENSERS

Symbol	Description	Part No.
C1	Trimmer, 3 to 30 mmfd.	Part of L1
C2	50 mmfd., Ceramic	65B 6-4
C3	.1 mfd., 200 Volts, Paper	64B 1-30
C4a, C4b	0 to 420 mmfd., 0 to 108 mmfd. Gang (Note—Gang spot welded to dial drum.)	68B 20-1
C5	250 mmfd., Ceramic	65B 6-5
C6	.01 mfd., 400 Volts, Paper	64B 1-25
C7	500 mmfd., Ceramic	65B 6-6
C8	.1 mfd., 200 Volts, Paper	64B 1-30
C9	.01 mfd., 400 Volts, Paper	64B 1-25
C10	.03 mfd., 400 Volts, Paper	64B 1-23
C11	.05 mfd., 400 Volts, Paper	64B 1-22
C12	.18 mfd., 200 Volts, Paper	64A 2-2
C13	.001 mfd., 600 Volts, Paper	64B 1-15
C14	.18 mfd., 200 Volts, Paper	64A 2-2
C15	.05 mfd., 400 Volts, Paper	64B 1-22
C16a, C16b, C16c, C16d	30 mfd., 150 Volts, 30 mfd., 150 Volts, 20 mfd., 150 Volts, 20 mfd., 25 Volts (Elect.)	67A 14-1
C17.	.02 mfd. 400 Volts, Paper (Used only in sets with model numbers having a "UL" suffix	64B 1-24

COILS, TRANSFORMERS, ETC.

Symbol	Description	Part No.
L1	Antenna and Trimmer, Loop	69B 13
L2	Coil, Oscillator	69A 52
T1	Transformer, 1st IF	72B 50
T2	Transformer, 2nd IF	72B 51
T3	Transformer, Output	79A 11-2
M1	Speaker (5") less output Trans.	78B 39-1
M2	Socket, Phono Motor	89A 6-3
M8	Socket, Phono input	88A 8-6
SW1	Switch, On-Off	Part of R9
SW2	Switch, Radio-Phono	77A 16-4

PHONOGRAPH PARTS

Note—See Record Changer Manual (changer model number specified on label on underside of changer) for complete parts list.

Symbol	Description	Part No.
M3	Plug, AC Phono Motor	88A 8-1
M4	Motor, 60 Cycles, 115 Volts AC	407B 3-2
M5	Cartridge and Needle, Pickup	A1372-13
M6	Cable, Pickup (3 conductor)	89A 18-4
M7	Plug, Pickup Cable	88A 8-5
SW3	Switch, Motor On-Off (See caution in changer manual)	408A 1
	Centerpost (includes speed-nut)	G400B 137-1
	Idler Wheel (407B 3-2 Motor)	G400A 23
	Idler Wheel (407B 1-2 Motor)	G400A 57

CABINET PARTS

Cabinet, Plastic	
Bottom Less Lid (Mahog.)	34D 11-12
Lid only (Mahogany)	34D 11-13
Dial Scale, Glass	21B 35-2
Escutcheon Overlay	23C 23-3
Grille Cloth and Baffle	A1859
Knobs, Radio	
"Volume" and "Tuning"	33A 21-5
"Radio-Phono"	33A 21-9
Hinge	37A 8-1
Stay Arm and Plate	37A 9-1
Rubber Strip, Dial Scale Mtg. (8½")	12A 9-3

MISCELLANEOUS

Background, Dial	22B 9-1
Bracket, Dial Light	15A 156
Carton and Fillers	44B 112
Dial Cord	50A 1-3
Pilot Light, Mazda No. 47	81A 1-8
Pilot Light Socket and Leads	82A 2-4
Pointer, Dial	25A 21
Spring, Dial Drum Tension	19B 1-3
Tuning Shaft	28A 26-3
Washer, "C" (Tuning Shaft)	4A 4-6
Washer, Felt	5A 4-11
Washer, Spring (Tuning Shaft)	4A 6-3-0

© John F. Rider

ALIGNMENT PROCEDURE

- Check pointer position. With tuning gang closed, the tip of the pointer clip should be over the 1/16" circular punch at the extreme left end of the dial background (see stringing diagram).
- Connect output meter across voice coil.
- Turn receiver volume control full on.
- Loop antenna must be connected and placed in the same relative position to the chassis as when in cabinet.
- Use an isolation transformer if available, otherwise connect a .1 mfd. condenser in series with low side of signal generator and attach to B minus of chassis.
- Use an insulated alignment screwdriver for IF adjustments.
- Use lowest output setting of signal generator capable of producing adequate output meter indication and proceed in the following sequence.
- Repeat adjustments to insure good results.

Step	Dummy Antenna in Series with Signal Generator	Connection of Signal Generator (High Side)	Signal Generator Frequency	Receiver Gang Setting	Trimmer Description	Trimmer Designation	Type of Adjustment
1	250 mmfd. condenser	Tuning condenser, antenna stator	455 KC	Gang fully open	2nd IF 1st IF	A, B C, D (see note below)	Maximum output
2	250 mmfd. condenser	Tuning condenser, antenna stator	1620 KC	Gang fully open	Oscillator	E	Maximum output
3	Loop of several turns of wire, or place generator lead close to receiver loop for adequate signal.	No physical connection (signal by radiation)	1400 KC	Tune in generator signal	Antenna	F (see note below)	Maximum output

NOTE: Antenna Trimmer "F" must be aligned after chassis and loop are mounted in cabinet. Loop trimmer adjustment is located at the rear of the cabinet.

Trimmers "A" and "C" are adjusted from underside of chassis.

TUBE AND TRIMMER LOCATION

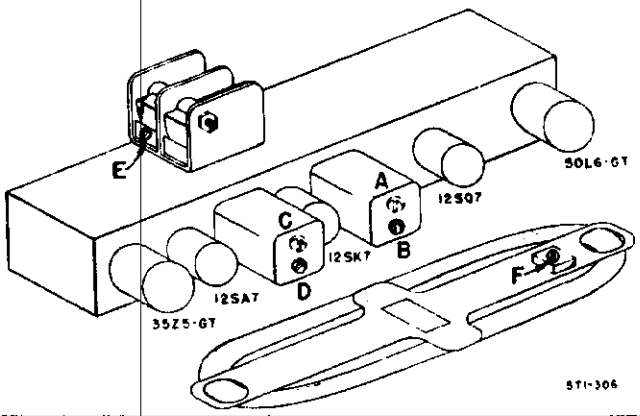

DIAL STRINGING AND POINTER SETTING

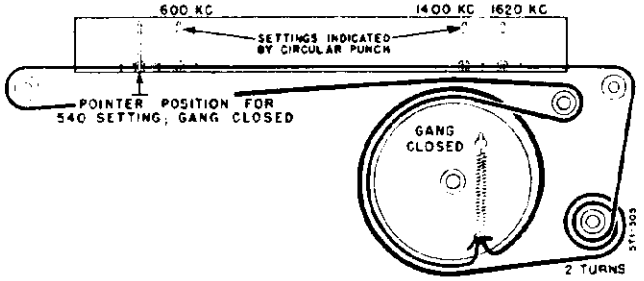

With the gang fully closed, the tip of the pointer clip should be in line with the 1/16" circular punch at the extreme left end of the dial background.

AIRADIO INC.

MODEL 3049

SCHEMATIC DIAGRAM

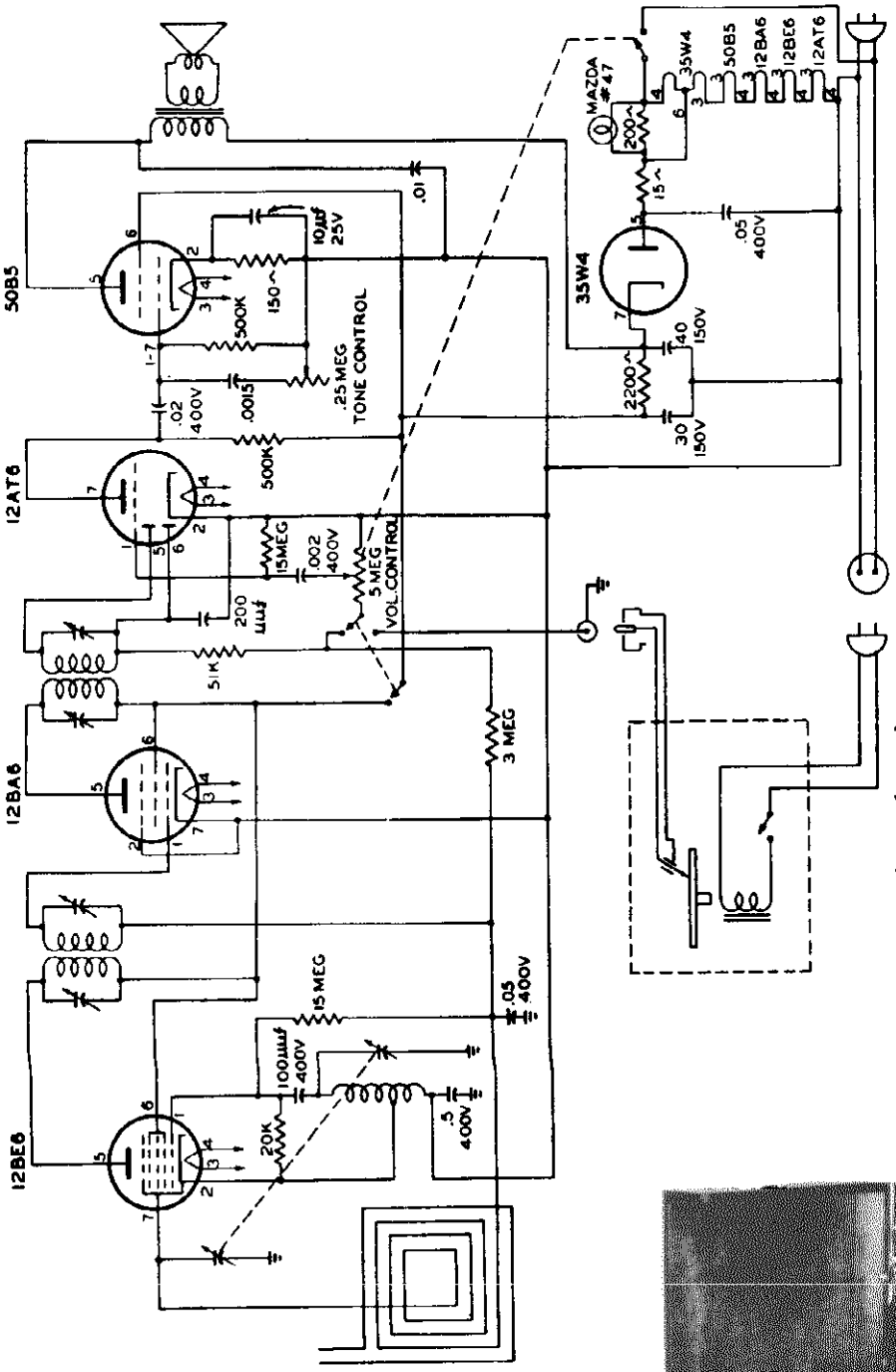

TUBE COMPLEMENT:

Type	Function
12BE6	Oscillator, mixer
12BA6	I.F. Amplifier
12AT6	Detector, A.V.C. Audio Amplifier
50B5	Power output
35W4	Rectifier

Pilot Lamp: Masda 47

TYPE: Five tube, single band, superheterodyne with Record Changer.

FREQUENCY RANGE: 540 to 1600 kc.

INTERMEDIATE FREQUENCY: 456 kc.

POWER SUPPLY: a.c.—60 cycle.

VOLTAGE RATING: 105-125 volts.

POWER CONSUMPTION: 35 watts. (Phonograph: 15 watts additional)

POWER OUTPUT: 1.5 watts.

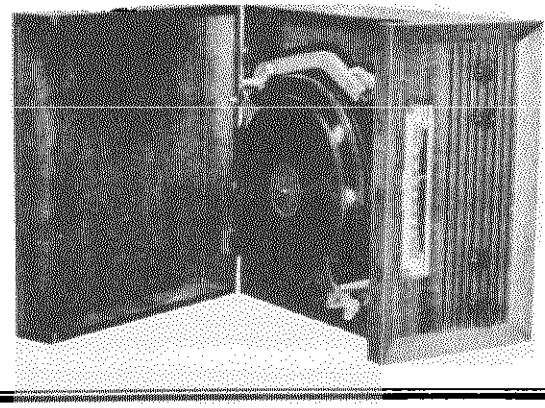

PARTS LIST

PART No.	DESCRIPTION	PART No.	DESCRIPTION
LA-1014-32	Bulb, dial lamp, Mazda 47	AS-3362	Dial Glass (Calibrated)
AT-1018	Ant. loop	KN-1053	Knob
CI-1049	Oscillator coil	CD-1071-28	Condenser, 250 mmfd., mica
TR-1052	Transformer, 1st I.F.	CD-1071-22	Condenser, 100 mmfd., mica
TR-1051	Transformer, 2nd I.F.	CD-1227-3	Condenser, .002 mfd., 400 volt, tubular
CD-1217	Condenser, variable, two-section	CD-1227-10	Condenser, .02 mfd., 400 volt, tubular
BU-1120	Condenser drive bushing	CD-1227-13	Condenser, .05 mfd., 400 volt, tubular
CX-1025	Condenser drive bushing clip	CD-1227-19	Condenser, .5 mfd., 400 volt, tubular
SW-1060	Phono-radio switch	CD-1227-2	Condenser, .0015 mfd., 400 volt, tubular
RE-1165	Tone control potentiometer	CD-1227-8	Condenser, .01 mfd., 400 volt, tubular.
RE-1164	Volume control and switch	CD-1224	Condenser, 10 mfd., 25 volt, electrolytic
SK-1011	Speaker with output transformer	CD-1226	Condenser, 30-40 mfd., 150 volt, tubular electrolytic.
SO-1060	Socket (Tube)	RE-1169	Resistor, 15 ohm.
SO-1064	Socket (pilot lamp)	RE-1168-225	Resistor, 2200 ohm, 1 watt
SE-1033	Tube Shield	RE-1166-516	Resistor, 51 K ohm, ½ watt
BE-1048	Tube Shield Base	RE-1166-159	Resistor, 15 megohm, ½ watt
SO-1061	Phono input jack	RE-1166-308	Resistor, 3 megohm, ½ watt
SO-1059	A.C. outlet (Phono)	RE-1166-507	Resistor, .5 megohm, ½ watt
AS-3361	Dial drive cable assembly	RE-1166-206	Resistor, 20 K ohm, ½ watt
IN-1024	Dial Pointer	RE-1003-154	Resistor, 150 ohm, ½ watt

ALIGNMENT PROCEDURE

1. Turn gang condenser to full mesh position. Set dial pointer on the small dot to the left of the last calibration.
2. Connect the output meter across the voice coil.
3. Connect the output of the Signal Generator to a two-turn loop of wire and place about one foot away from loop on the set.
4. Turn volume full on. Keep output of Signal Generator as low as possible and still get deflection on output meter.

ALIGNMENT CHART

Alignment Sequence	Signal Generator	Position of Dial Pointer	Adjust for Maximum Output
1	456 kc.	Full mesh 55	2nd I.F. (2 trimmers)
2	456 kc.	Full mesh 55	1st I.F. (2 trimmers)
3	1400 kc.	1400	Oscillator Section of Gang Condenser
4	1400 kc.	1400	Antenna Section of Gang Condenser

TUBE LAYOUT

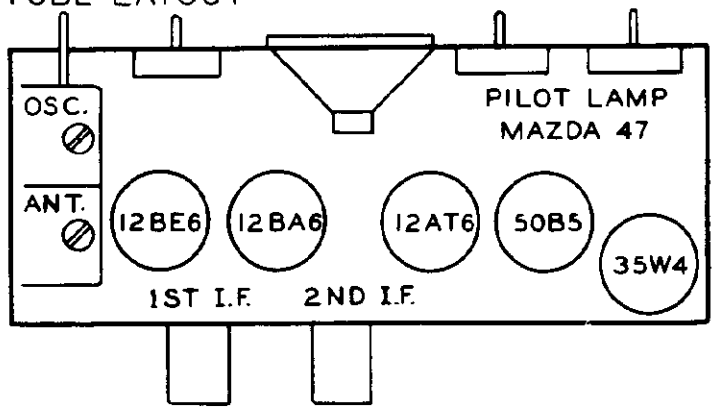

AIR KING PRODUCTS CO., INC. MODEL A410

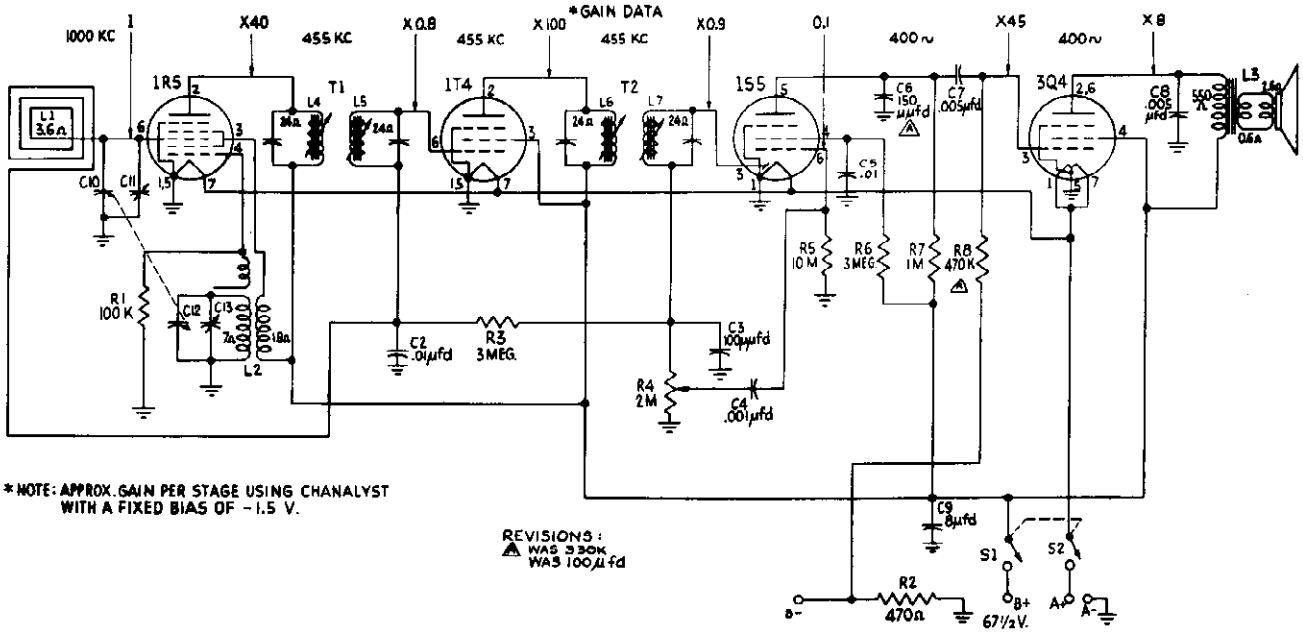

* NOTE: APPROX. GAIN PER STAGE USING CHANALYST WITH A FIXED BIAS OF -1.5 V.

TUBE	PIN	VTVM	20,000 OHM/V	1,000 OHM/V	RESISTANCE
1R5	1	0	0	0	0
CONVERTER	2	65	65	65	OVER 500K
	3	65	65	65	OVER 500K
	4				
	550 KC	-13	-7	-2.5	100K
	1600 KC	-17	-8	-3.5	100K
	5	0	0	0	0
	6	0	0	0	5MEG
	7	1.4	1.4	1.4	4.5 OHM
1T4	1	0	0	0	0
IF AMPL.	2	65	65	65	OVER 500K
	3	65	65	65	OVER 500K
	4	-5	-5	-5	460 OHM
	5	0	0	0	0
	6	0	0	0	5 MEG
	7	1.4	1.4	1.4	4.5 OHM
1S5	1	0	0	0	0
DET AVC	2	--	--	--	--
1st AUDIO	3	0	0	0	1.6 MEG
	4	15	3.5	0.2	OVER 3 MEG
	5	10	4.5	0.5	OVER 1 MEG
	6	0	0	0	10 MEG
	7	1.4	1.4	1.4	4.5 OHM
3Q4	1	1.4	1.4	1.4	4.5 OHM
AUDIO	2	65	65	65	OVER 500K
OUTPUT	3	5	5	5	1 MEG
	4	65	65	65	OVER 500K
	5	0	0	0	0
	6	65	65	65	OVER 500K
	7	1.4	1.4	1.4	4.5 OHM

ALL VOLTAGE AND RESISTANCE MEASUREMENTS MADE WITH RESPECT TO CHASSIS GROUND, AND WITH A SUPPLY VOLTAGE OF 67½ V.D.C.

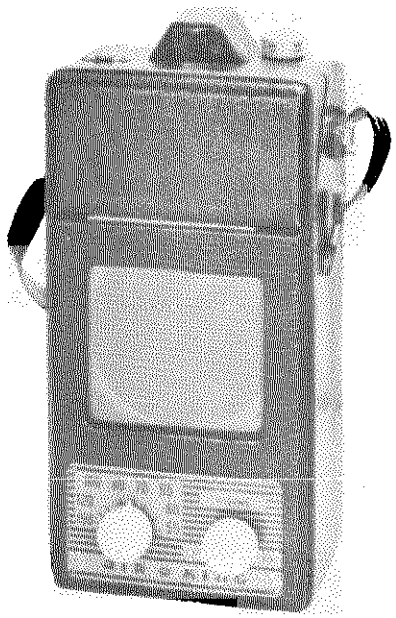

©John F. Rider

MODEL A410 AIR KING PRODUCTS CO., INC.

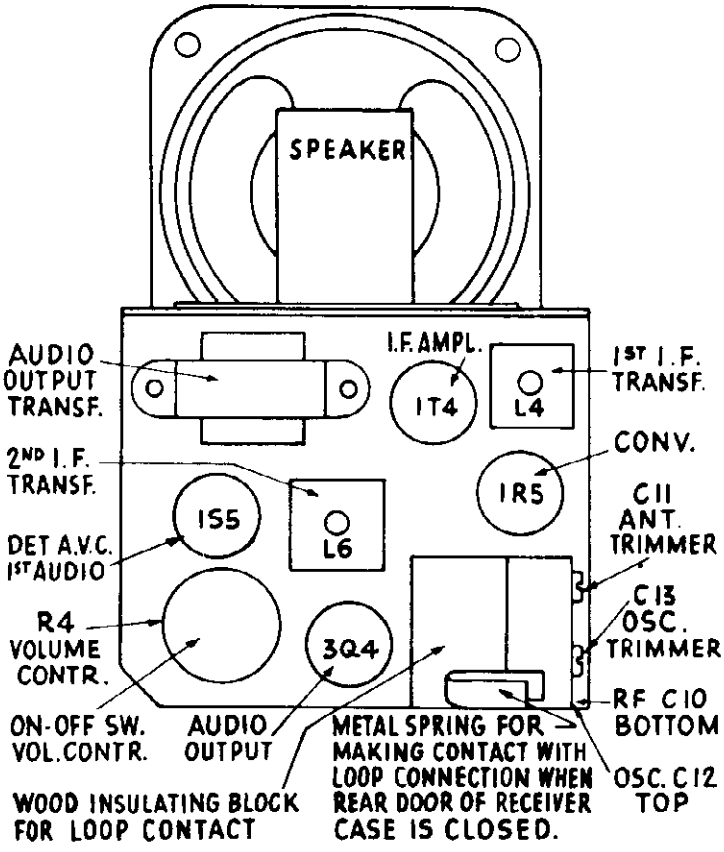

TOP VIEW

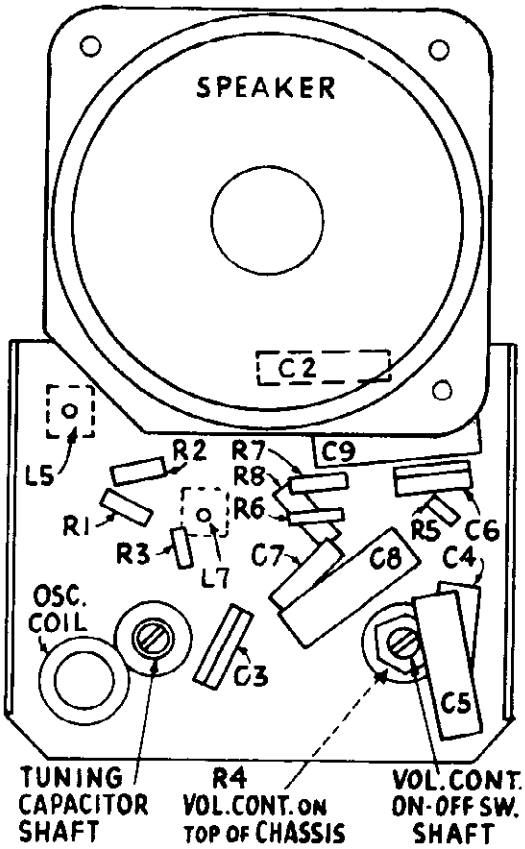

BOTTOM VIEW

ALIGNMENT PROCEDURE

IF ALIGNMENT (REMOVE RECEIVER FROM CABINET)

CONNECT AN OUTPUT METER ACROSS THE VOICE COIL. CONNECT THE SIGNAL GENERATOR TO THE STANDARD HAZELTINE LOOP MODEL 1150 AND COUPLE IT LOOSELY TO THE RECEIVER.

SET THE SIGNAL GENERATOR TO 455KC AND FULLY MESH THE RECEIVER TUNING CAPACITOR.

KEEP THE RECEIVER VOLUME CONTROL AT MAX. AND THE OUTPUT OF THE SIGNAL GENERATOR SUFFICIENT TO GIVE A READABLE DEFLECTION ON THE OUTPUT METER. ADJUST FOR MAX. IF TUNING SLUGS L7, L6, L5, L4.

RF OSCILLATOR ADJUSTMENT

PLACE CHASSIS IN CABINET AND SET DIAL POINTER TO 1500 KC. REMOVE KNOB AND REMOVE CHASSIS FROM CABINET. KEEPING THE SAME SETUP AS USED FOR IF ALIGNMENT, SET THE SIGNAL GENERATOR TO 1500 KC AND ADJUST OSCILLATOR TRIMMER C13 FOR MAX. OUTPUT.

SET THE SIGNAL GENERATOR AND RECEIVER TO 1300 KC AND ADJUST ANTENNA TRIMMER C11 FOR MAX. OUTPUT.

©John F. Rider

AIR KING PRODUCTS CO., INC. MODEL 4608A, CHASSIS 458-3

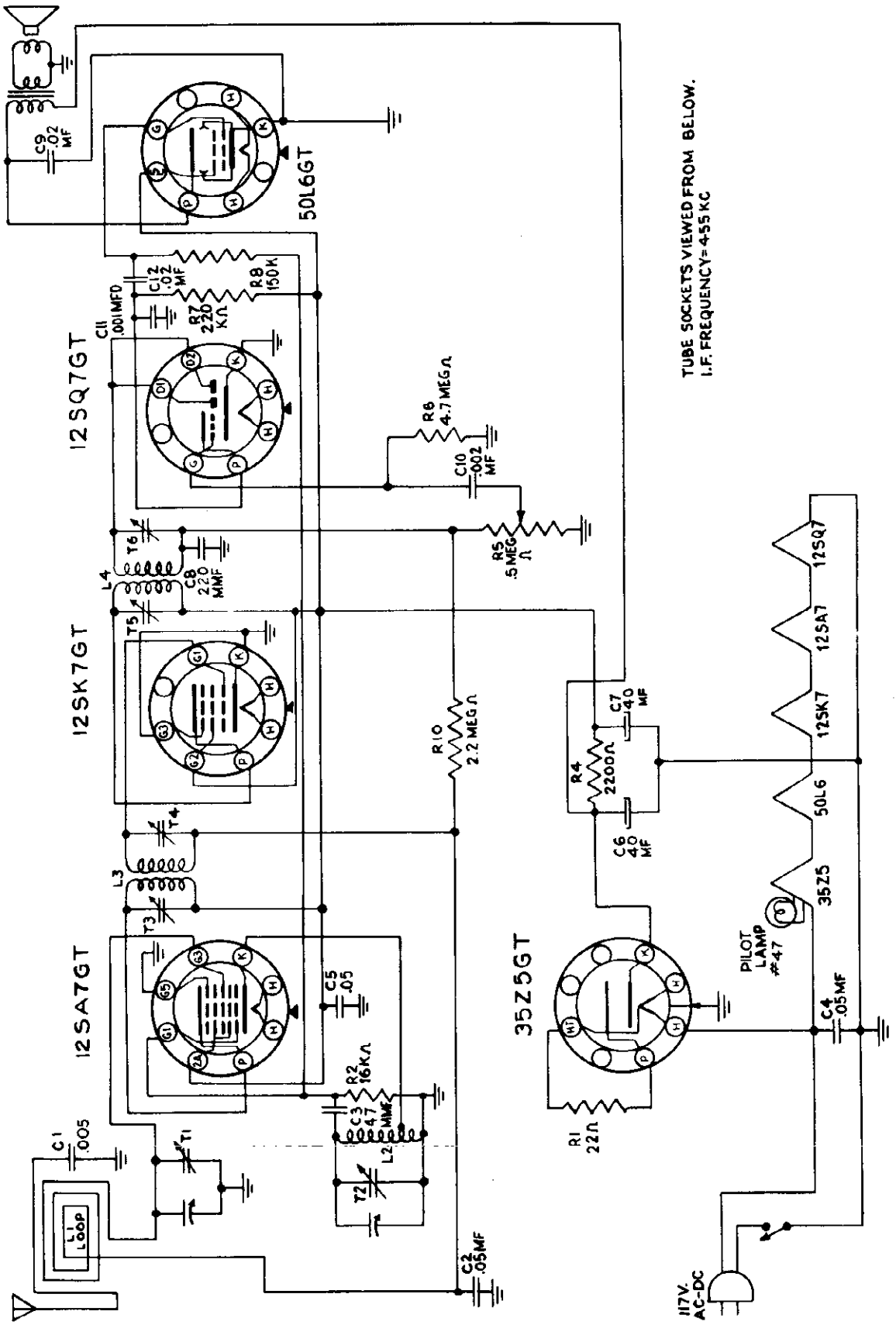

© John F. Rider

MODEL 4700,
CHASSIS 476

AIR KING PRODUCTS CO., INC.

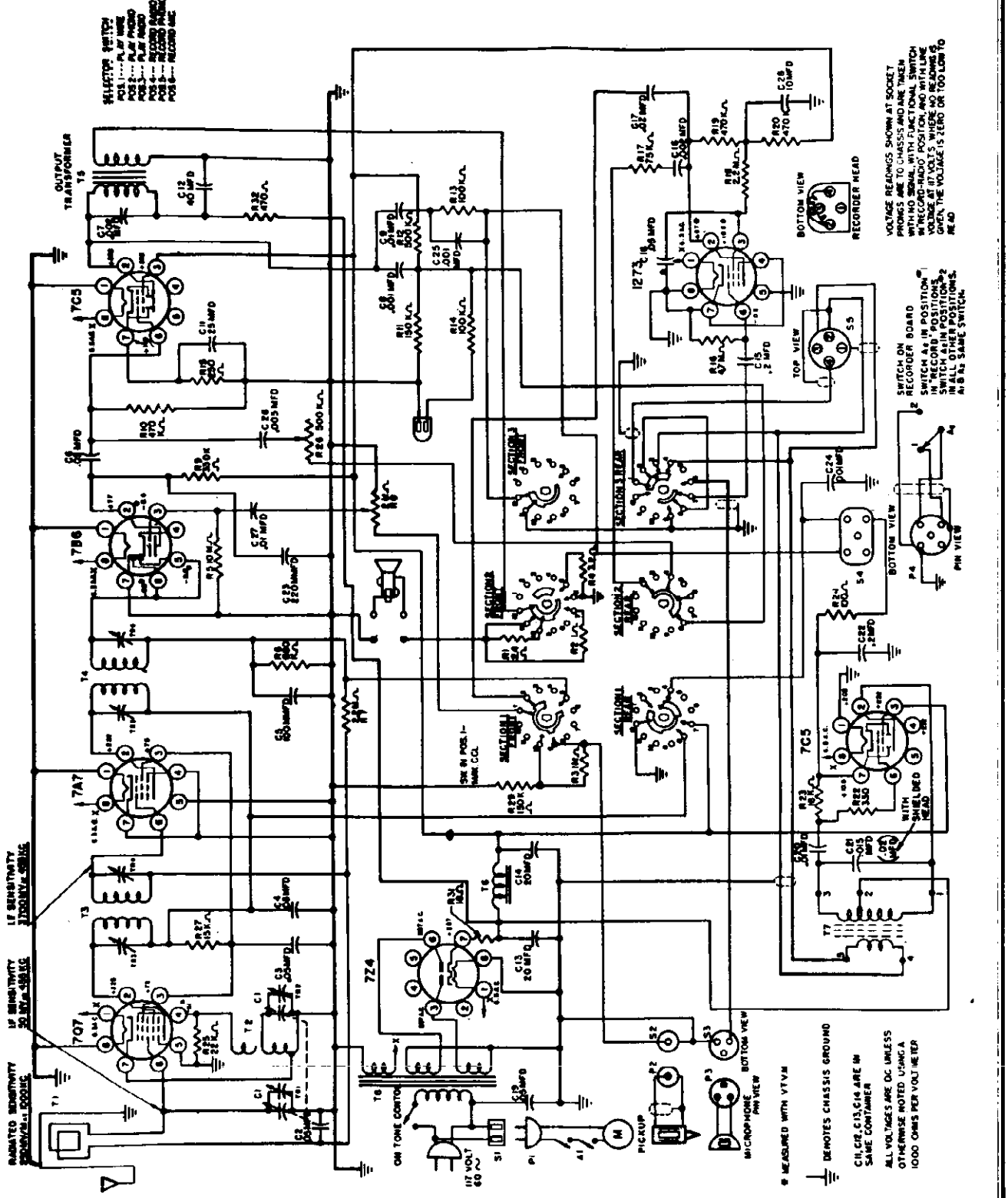

©John F. Rider

AIR KING PRODUCTS CO., INC.

MODEL 4700,
CHASSIS 476

GENERAL DESCRIPTION

This model is a seven-tube superheterodyne receiver with wire recorder. It covers the broadcast frequency range of 540 to 1600 kc. The antenna input and oscillator circuits are tuned by a two gang variable capacitor. A loop antenna is built into the cabinet; provision is also made for the connection of an outside antenna. The wire recorder is designed to record sound magnetically on wire. The standard spool contains enough wire for an hour of continuous recording at two feet per second. The recordings may be played back immediately after the wire has been rewound. The receiver, in addition, can be used for playing phonograph records and listening to radio programs.

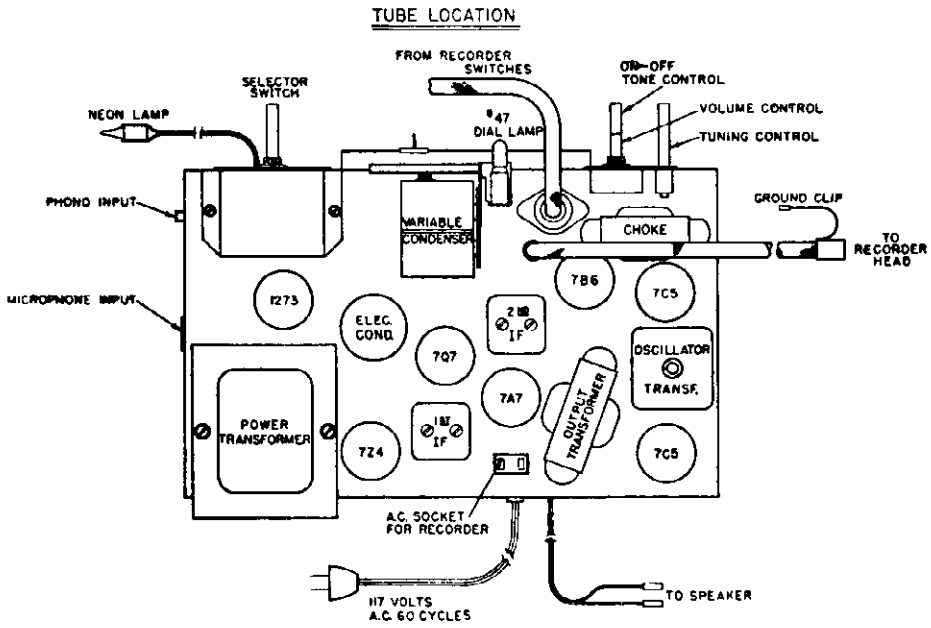

TO REMOVE THE RECORDER ASSEMBLY FROM CABINET:

1. Remove the four Phillips Head screws (in each corner of the recorder board) taking care not to drop the flat washers and studs to the bottom of the unit.
2. Disconnect cable from recorder motor switches (see "Tube Location" Drawing for location of cable).
3. Disconnect A.C. Plug from recorder which plugs into chassis.
4. Tilt recorder assembly up from the front end, and disconnect recorder head cable, and ground connection.
5. The wire recorder assembly can now be removed.

TO REMOVE CHASSIS FROM CABINET:

1. Remove Wire Recorder assembly as covered in above paragraph.
2. Remove four knobs.
3. Remove neon bulb from lens by pulling it out through bottom of motor board.
4. Remove three screws at rear of chassis.
5. Remove the two bolts at the sides of the chassis (one is near the 7C5 output tube, and other is near the 1273 preamplifier tube).
6. The chassis can now be removed from cabinet.

MODEL 4700,
CHASSIS 476

AIR KING PRODUCTS CO., INC.

ALIGNMENT PROCEDURE

Power Supply	117 V 60 Cycle A.C. 95 Watts
Frequency Range	540—1600 kc
Intermediate Frequency	455 kc
Power Output	2.25 Watts undistorted, 6 Watts maximum
Loudspeaker	10" P.M. 3.2 or 8 ohm V.C. Impedance

Output Meter Connection	Across loud speaker voice coil
Output Meter Reading	½ Watt
Connection of Generator output lead	See note below
Connection of Generator ground lead	B minus bus.
Generator Modulation	30% at 400 cycles
Position of Volume Control	Fully clockwise
Position of Tone Control	Counter clockwise
Position of Dial Pointer	Variable fully closed
Position of Functional Switch	Play radio

FREQUENCY	DUMMY ANTENNA	GENERATOR CONNECTION	POSITION VARIABLE	ADJUST TRIMMER TO MAXIMUM OUTPUT IN ORDER SHOWN
455 kc	0.1 mfd	grid 7Q7	Fully closed	Tr3, Tr4, Tr5, Tr6
1500 kc	* * *	* * *	1500 kc	Tr2
1500 kc	* * *	* * *	1500 kc	Tr1
600 kc	* * *	* * *	600 kc	Check Point

* * * Run a wire from the output terminal of the signal generator near the receiver. No connection is made between the signal generator and the receiver.

The Alignment Procedure should be repeated stage by stage to insure greatest accuracy. Keep the output from signal generator at lowest value to make the A.V.C. action of the receiver ineffective.

OPERATION

The proper operation of this unit is discussed in the customers' instruction book. The most important item is the proper loading of the recording wire. It must be done properly to eliminate "wow". Make sure that the reset button is making contact if the recorder fails to operate.

ELECTRICAL ADJUSTMENTS

To check the erasing voltage of the recorder measure the voltage between pin 2 and 3 of the recorder head with a vacuum tube voltmeter. This measurement should be made with the recorder head attached to the plug of the recorder cable. The voltage at this point should be 4.0 volts minimum (as measured with a V.T.V.M.), with the shielded recorder head, and 2.7 volts minimum with the unshielded recorder head. If it is low, try replacing the 7C5 oscillator tube to increase the voltage.

If there is excessive hum when the unit is in the "Play Wire" position, the hum can be reduced by rotating the hum bucking coil (next to the power transformer) for minimum hum. If this does not entirely eliminate the hum, slide the power transformer shield slightly for minimum hum, and readjust the hum bucking coal. This should be done with the volume control on full.

AIR KING PRODUCTS CO., INC.

MODEL 4700,
CHASSIS 476

MECHANICAL ADJUSTMENTS

The Wire Recorder has been adjusted perfectly at the factory prior to shipment. There are very few things that can go wrong, and they are relatively simple to adjust.

The first thing to check if the recorder unit does not function properly is the centering of the motor. This is done by prying off the dust cap on the recorder board. The dust cap is the small cap which is directly to the rear of the "Reset" assembly, on the recorder board proper. Use a screwdriver, taking care not to mar the finish.

When this cap is removed, the motor spindle will be exposed. The spindle must be in the center of the opening. The centering should be checked using our centering gauge (Part #6815). If the spindle is not in the exact center, loosen the two screws holding the motor assembly, and adjust motor, with centering gauge in place, then tighten screws, and replace the dust cap.

Proper adjustment of the turntable torque is very important. To adjust the torque proceed as follows: With the power connect and wire being wound on the turntable, loosen the lock nut from the adjusting screw underneath the recorder chassis at the rear near the motor. Put your finger on the turntable to add a slight breaking action. Turn the adjusting screw clockwise until the turntable stops rotating, then turn the screw ½ turn counterclockwise. Let the wire continue to run and then switch the lever to "rewind". If the adjustment is correct the turntable should continue to rotate in a counterclockwise direction for about ½ turn before reversing. Tighten the lock nut taking care not to disturb the adjustment of the screw. Recheck the adjustment by going from maximum rewind to play.

If wire does not wind level, rotate the spindle until the cam under the level winding mechanism is at the position which allows the recording head to be at the bottom of its level. In this position the slot in which the wire rides should be approximately 1/64th of an inch above the motor board. If the slot is closer than this, loosen the two screws, holding the recorder head to the slide mechanism (at the bottom of unit) and place additional shims between the slide and the recorder head until the slot is 1/64th of an inch above the motor board. Place the wire on recorder and let it wind onto turntable if the wire rubs on the Reset Switch Trip Lever after about one minute of rewind. The Reset Switch Trip Lever should not depress the wire more than 1/64th of an inch when the cam is in its top position. Let the wire run for awhile and check the way the wire lays into the channel underneath the turntable. With the proper adjustment, it should wind level across the channel. If it piles up on the top of the channel, remove the turntable by loosening the set screw on the turntable spindle, remove the felt washer, and spring. The turntable can now be removed. Remove the turntable and place additional shims underneath the spindle. Replace all parts and recheck to see if the wire is being wound level. If the wire piles up on the bottom of the channel remove some of the shims.

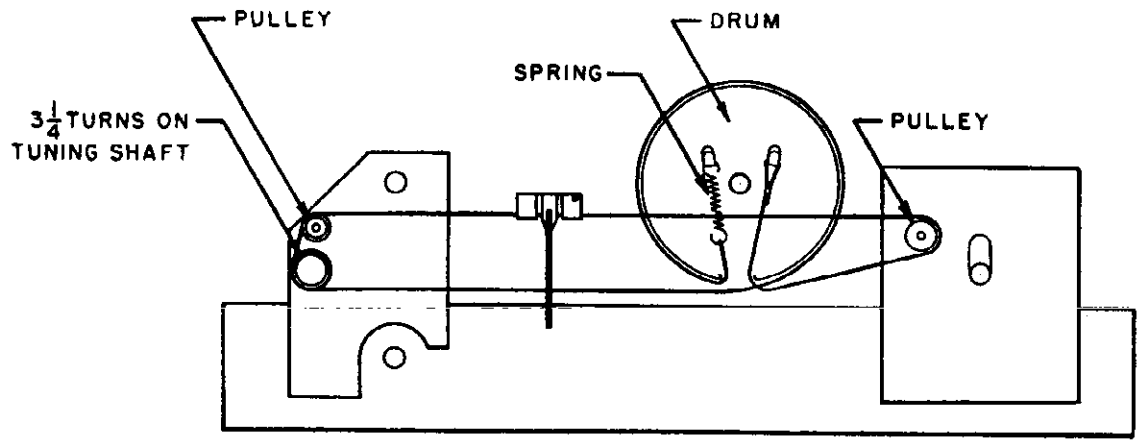

STRINGING DIAGRAM

©John F. Rider

MODEL 4700,
CHASSIS 476

AIR KING PRODUCTS CO., INC.

PARTS LIST

SCHEMATIC LOCATION	PART NO.	DESCRIPTION
	5591	Cable, Recorder head
T6	3368	Choke
T2	28184	Coil, B.C. Osc.
C1	1695	Condenser—Variable
C2		Condenser—.05 mfd., paper, 200 V
C3, C4, C6, C18		Condenser—.05 mfd., paper, 400 V
C5		Condenser—100 mmfd., Mica
C7, C16		Condenser—.002 mfd., paper, 400 V
C8, C25, C24		Condenser—.001 mfd., paper, 400 V
C9, C20, C27		Condenser—.01 mfd., paper, 400 V
C11, C12, C13, C14		Condenser—25 mfd.—20 V 40 mfd.—300 V 20 mfd.—300 V 20 mfd.—300 V
C15		Condenser—.2 mfd., paper, 200 V
C17		Condenser—.02 mfd., paper, 400 V
C19		Condenser—.02 mfd., oil, 400 V
C21		Condenser—.015 mfd., paper, 600 V (.02 mfd., if shielded recording head is used)
C22		Condenser—.2 mfd., paper, 400 V
C23		Condenser—220 mmfd., Mica
C26		.005 mfd., paper, 400 V
C28	2078	Condenser—10 mfd., electrolytic 400 V
R26	2486	Control—Tone (with switch)
R8	2485	Control—Volume
	54373	Cord Dial Drive
	5592	Cord, Line 8 Feet Long
	40133	Dial, Station, Lucite
		Knob, Pointer
	39177	Knob, Tone-off-on
	39177	Knob, Tuning
	39177	Knob, Volume control
	4926	Lamp Ass'y Neon Glow
	54372	Lens Neon Light
T1	28295	Loop Antenna
	6610	Microphone, Cord and Plug
	4146	Pointer, Dial
R1		Resistor—2.4 ohms, ½ W
R2		Resistor—1.0 oms, ½ W
R3		Resistor—1 meg. ohms, ¼ W
R4		Resistor—3.2 ohms, 1 W, Wirewound

SCHEMATIC LOCATION	PART NO.	DESCRIPTION
R5		Resistor—10 meg. ohms, ¼ W
R6		Resistor—680,000 ohms, ¼ W
R7, R18		Resistor—2.2 meg. ohms, ¼ W
R9		Resistor—330,000 ohms, ¼ W
R10, R14, R19		Resistor—470,000 ohms, ¼ W
R11, R29		Resistor—150,000 ohms, ¼ W
R12		Resistor—470,000 ohms, ¼ W
R13		Resistor—100,000 ohms, ¼ W
R15		Resistor—250 ohms, ½ W
R16		Resistor—4.7 meg. ohms, ¼ W
R17		Resistor—33,000 ohms, ¼ W
R20		Resistor—27,000 ohms, ¼ W
R21		Resistor—5000 ohms, ¼ W
R22		Resistor—330 ohms, ¼ W
R23, R25		Resistor—22,000 ohms, ¼ W
R24		Resistor—150 ohms, ¼ W
R27		Resistor—15,000 ohms, 2 W
R28		Resistor—270,000 ohms, ¼ W
R31		Resistor—18 ohms, 2 W
R32		Resistor—470 ohms, 1 W
	54361	Shaft Dial Drive
	18144	Socket Dial Light
	54374	Socket (for cable from recorder switch)
	18101	Socket (Microphone)
	18104	Socket Phono
	58103	Speaker—10" P.M. 3.2 ohm voice coil
	58108	Speaker—10" P.M. 8 ohm voice coil
	18127	Speaker Socket, 2 Prong, used with Speaker 58108
	18126	Speaker Plug, 2 Prong, used with Speaker 58108
	54335	Spring—Dial Cord
	3791	Switch—Master Selector
T3	3371	Transformer—1st I.F.
T4	3535	Transformer—2nd. I.F.
T6	28178	Transformer—40 KC Osc.
T5	1339	Transformer—Output (used with Speaker 58103)
	1341	Transformer—Output (used with Speaker 58108)
T8	1091	Transformer—Power

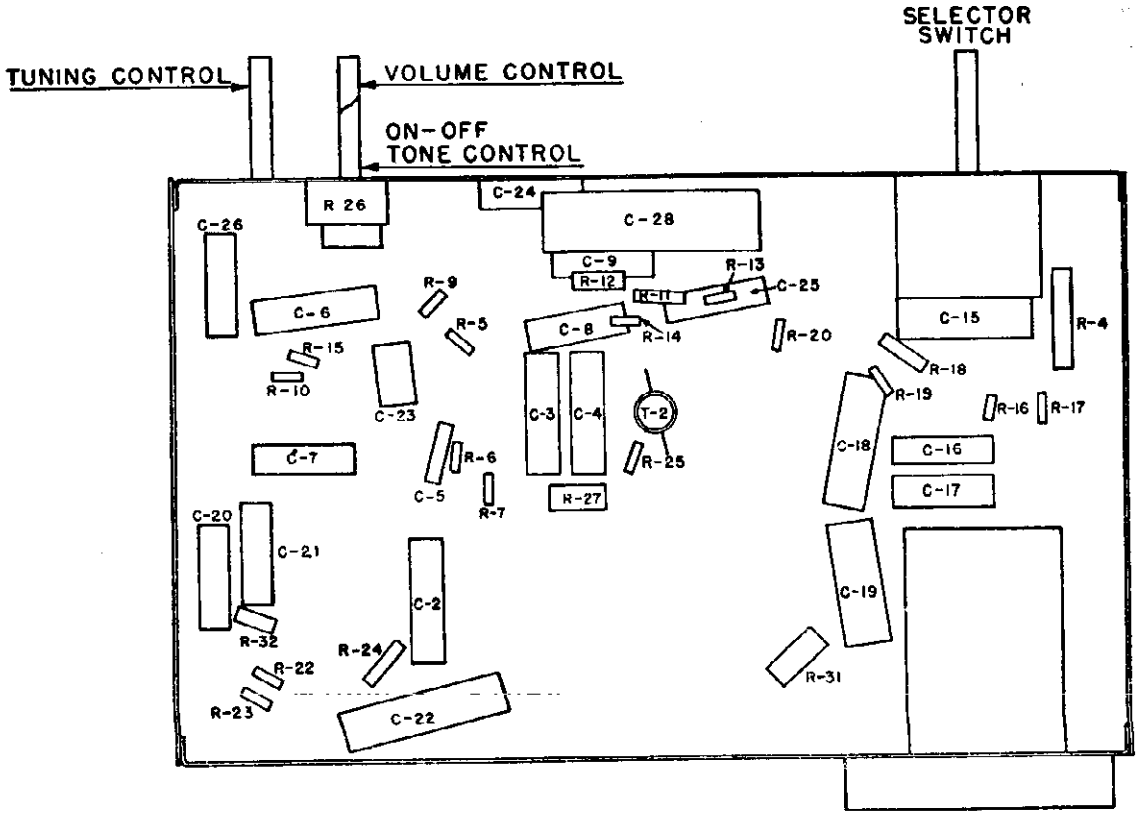

LOCATIONS OF PARTS UNDER CHASSIS

©John F. Rider

ALDEN INC.

MODELS 1800, 1801, 1802, 1803

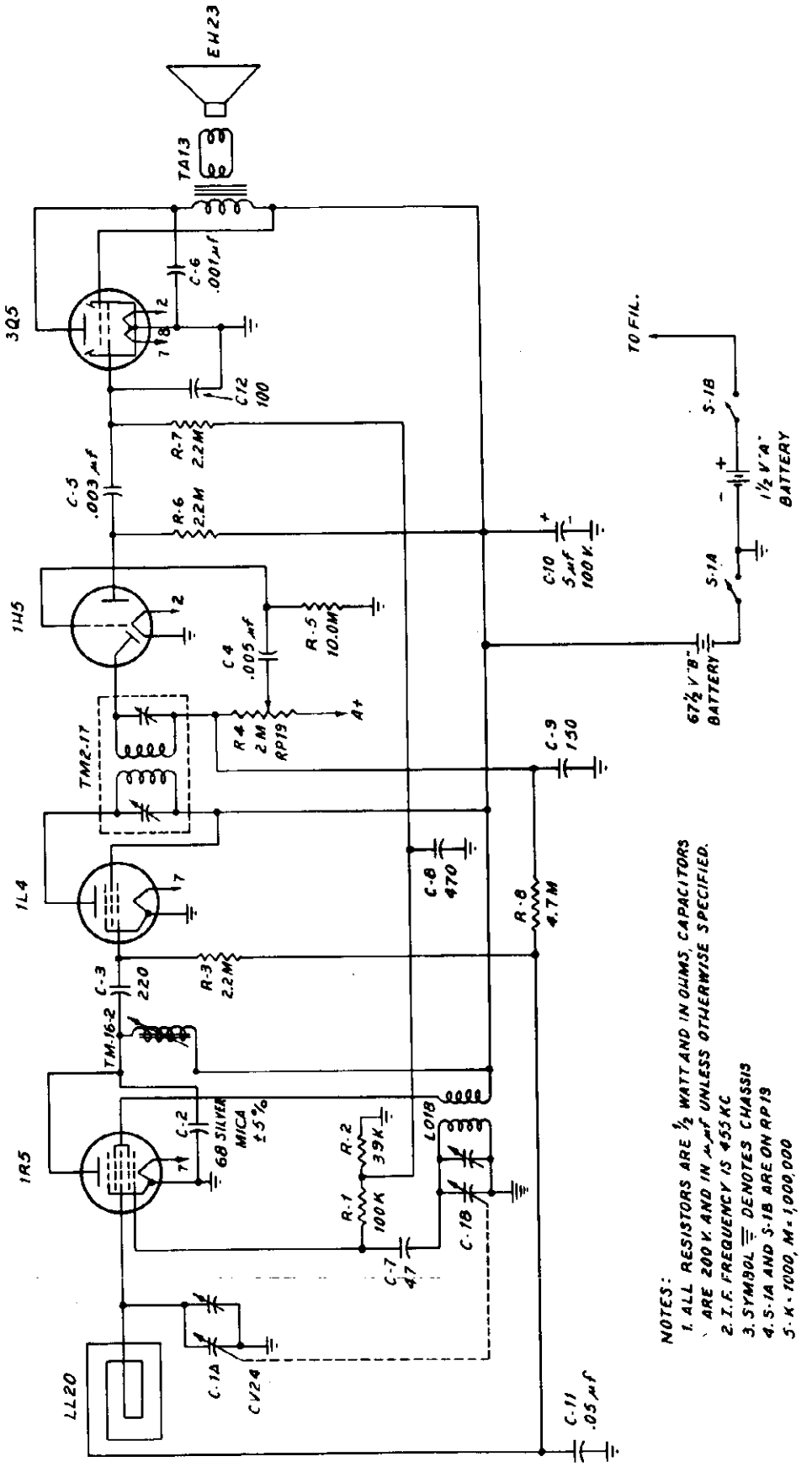

NOTES:
1. ALL RESISTORS ARE ½ WATT AND IN OHMS, CAPACITORS ARE 200 V. AND IN μμf UNLESS OTHERWISE SPECIFIED.
2. I.F. FREQUENCY IS 455 KC
3. SYMBOL ⏚ DENOTES CHASSIS
4. S-1A AND S-1B ARE ON RP13
5. K = 1000, M = 1,000,000

© John F. Rider

MODELS 1855, 1856,
1857, 1858, 1859, 1860

ALDEN, INC.

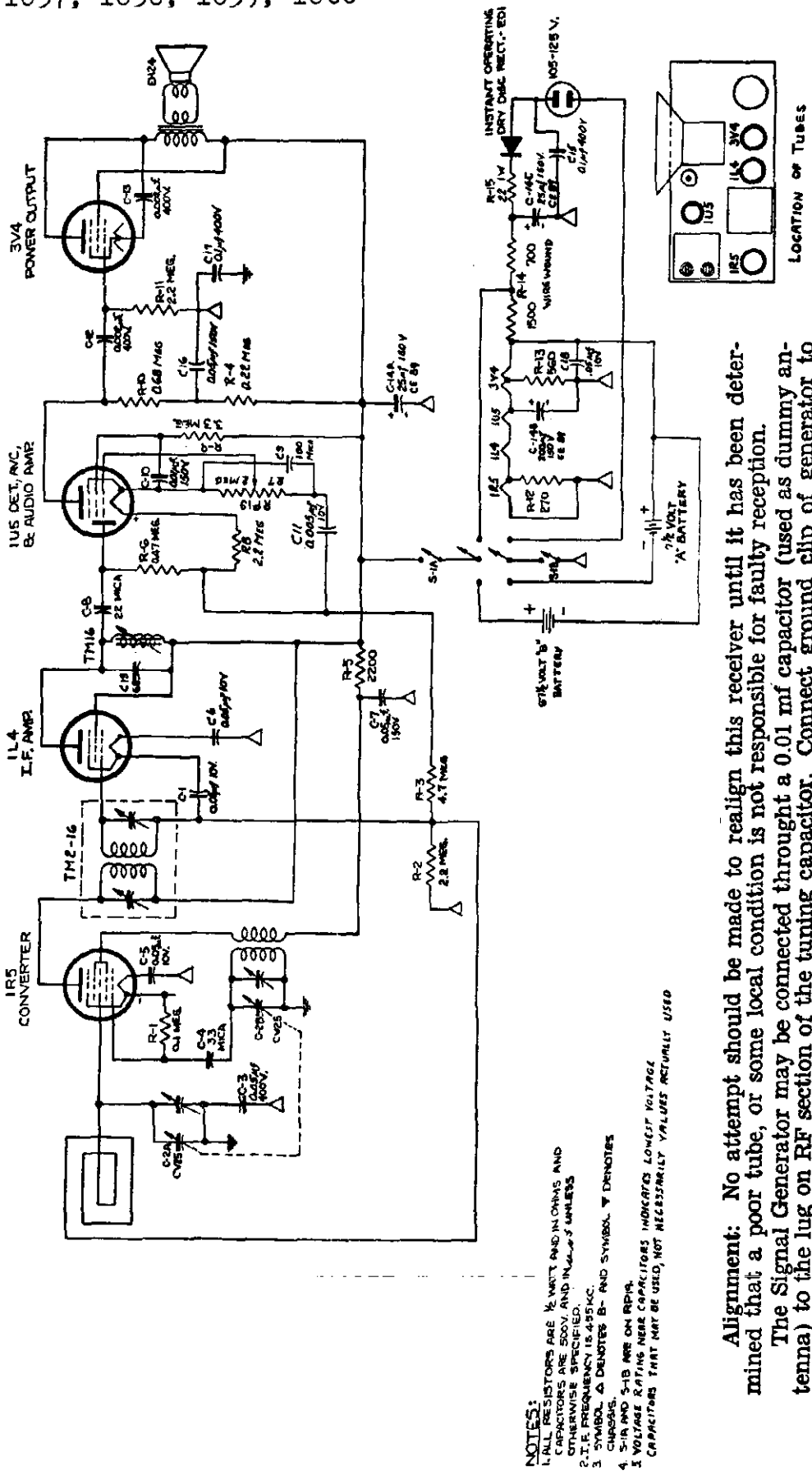

Alignment: No attempt should be made to realign this receiver until it has been determined that a poor tube, or some local condition is not responsible for faulty reception.

The Signal Generator may be connected throught a 0.01 mf capacitor (used as dummy antenna) to the lug on RF section of the tuning capacitor. Connect ground clip of generator to the B— terminal. An output meter may be clipped directly across the voice coil lugs. Align the I.F. trimmers and iron core to 455 kc, using least possible input from Signal Generator to avoid developing A.V.C. voltage which would make the tuning adjustments broad.

Provisions are made to align the R.F. trimmers with the receiver in the metal cabinet. Remove the two plug buttons on the right side of the cabinet and connect the Signal Generator leads to two or three turns of heavy wire, forming a self-supporting loop of about 7 or 8 inches diameter, placed about a foot away from the receiver's loop antenna. Again, use the least possible input from the Signal Generator. With the tuning capacitor plates completely out of mesh, and the pointer at the extreme right end of its travel, adjust the oscillator trimmer (on front section of tuning capacitor) to 1625 kc. Readjust both Signal Generator and tuning capacitor to 1550 kc and adjust the R.F trimmer (on rear section) for maximum response.

© John F. Rider

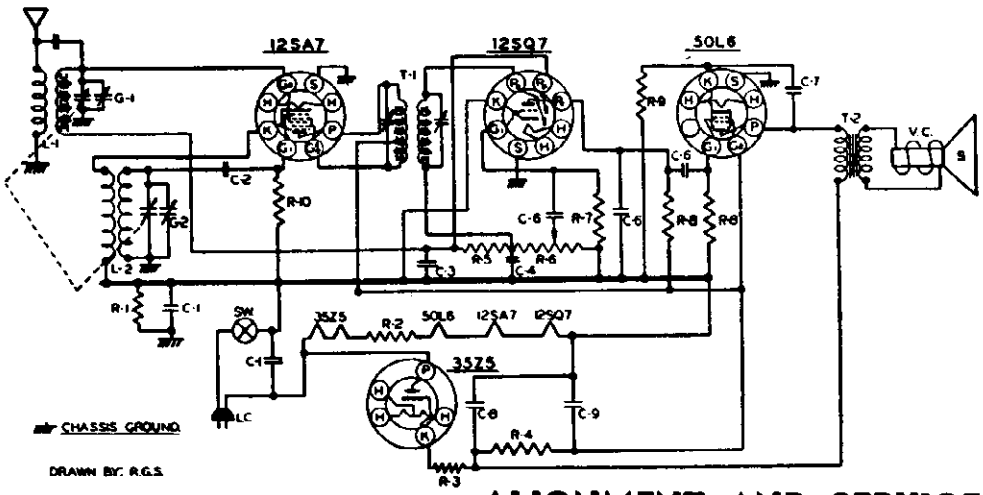

ALIGNMENT AND SERVICE DATA

Remove chassis from cabinet for alignment.

A Signal Generator is required having the following frequencies: 455 KC, 1400 KC, 1650 KC. An output meter should be connected across the speaker.

PART NO.		DESCRIPTION
1R-28	R-1	220M Ω RESISTOR 1/2W. 20
1R-41	R-2	47 Ω RESISTOR 1 W. 10
1R-17	R-3	33 Ω RESISTOR 1/2 W. 20
1R-25	R-4	2200 Ω RESISTOR 1 W. 10
1R-23	R-5	3.3 MEG. RESISTOR 1/2 W. 20
VC-9	R-6	1 MEG. VOLUME CONTROL
1R-3	R-7	10 MEG. RESISTOR 1/2 W. 20
1R-11	R-8	470M Ω RESISTOR 1/2 W. 20
1R-14	R-9	150 Ω RESISTOR 1/2 W. 20
1R-9	R-10	22M Ω RESISTOR 1/2 W. 20
PC-5	C-1	.05 MFD. CONDENSER 400 V.
MC-4	C-2	50MMFD. MICA
PC-2	C-3	.05 MFD. CONDENSER 200V
MC-2	C-4	100MMFD. MICA
MC-5	C-5	500MMFD. MICA
PC-6	C-6	.005 MFD. CONDENSER 600 V
PC-7	C-7	.01 MFD. CONDENSER 400 V.
EC-45	C-8	30MFD. ELECTROLYTIC COND.
	C-9	20MFD
LA-3	L-1	ANT. COIL
LO-14	L-2	OSC. COIL
LI-8	T-1	I.F. TRANSFORMER
T-2		OUTPUT TRANSFORMER
SPK-10	S	4" P.M. SPEAKER.
	VC	VOICE COIL
GC-7X	G-1	TUNING CONDENSER
	G-2	
CO-1	LC	LINE CORD.
TU-32		35Z5 - 50L6 - 12SA7 - 12SQ7

The volume control of the receiver should be turned to maximum during the I. F. and all subsequent alignment and the generator output as low as possible to prevent the A. V. C. from working and giving false readings.

FIRST STEP: Connect the hot lead from the generator to the ANT. section of the gang condenser through a .1 MFD. condenser. The ground lead from the generator must be connected to "B" minus under the chassis. Turn the gang condenser to complete minimum capacity. Set the generator to 455 KC. Adjust the trimmers of the I. F. transformer until a maximum reading is noted on the output meter.

SECOND STEP: With the leads from the generator still connected in the same manner, adjust the Signal Generator to 1650 KC. Adjust the OSC. trimmer until the 1650 KC signal is tuned in. The gang condenser must be at complete minimum capacity for this adjustment.

THIRD STEP: Remove the generator hot lead and connect it to the antenna hank terminal strip through a 200 MMFD. condenser. With the receiver and generator set at 1400 KC, increase the generator output. Adjust the ANT. trimmer until a maximum signal is noted on the output meter. No further adjustment should be made as the coils and gang condenser in this receiver have been specially handled at the factory to insure proper alignment at the lower frequencies.

TUBE AND TRIMMER LOCATION

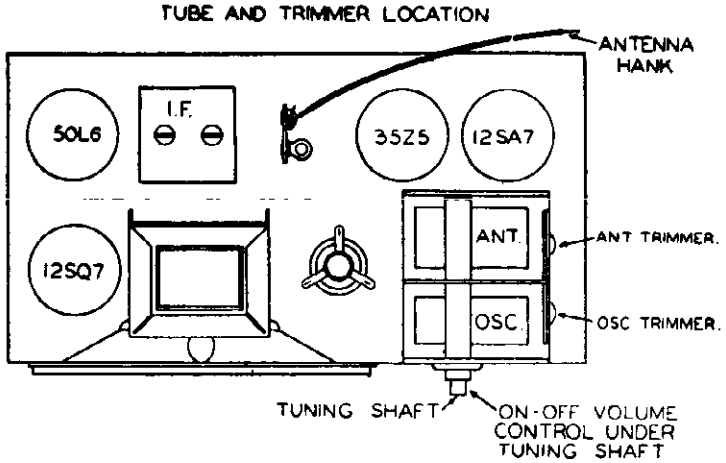

©John F. Rider

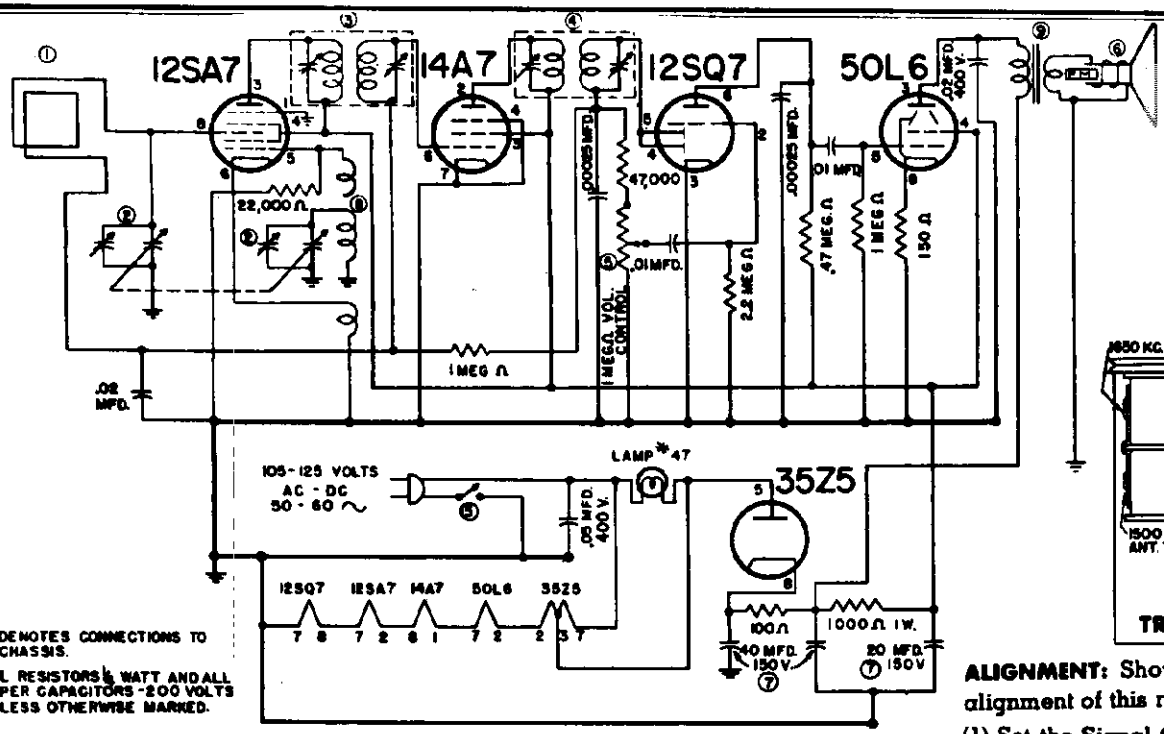

+ DENOTES CONNECTIONS TO CHASSIS.

ALL RESISTORS ½ WATT AND ALL PAPER CAPACITORS 200 VOLTS UNLESS OTHERWISE MARKED.

I.F. - 455 K.C.

① 1.469 LOOP ASSEMBLY
② 2.163 2GANG VARIABLE COND.
③ 1-259 1ST. I.F. TRANSFORMER
④ 1.409 2ND. I.F. TRANSFORMER
⑤ 8.201-3 VOLUME CONTROL & SWITCH
⑥ 30,318 P.M. 5" SPEAKER
⑦ 5,400-8 ELECTROLYTIC CAP. 40-40-20 MFD.
⑧ 1.402-1 OSCILLATOR COIL
⑨ 9.219 OUTPUT TRANSFORMER

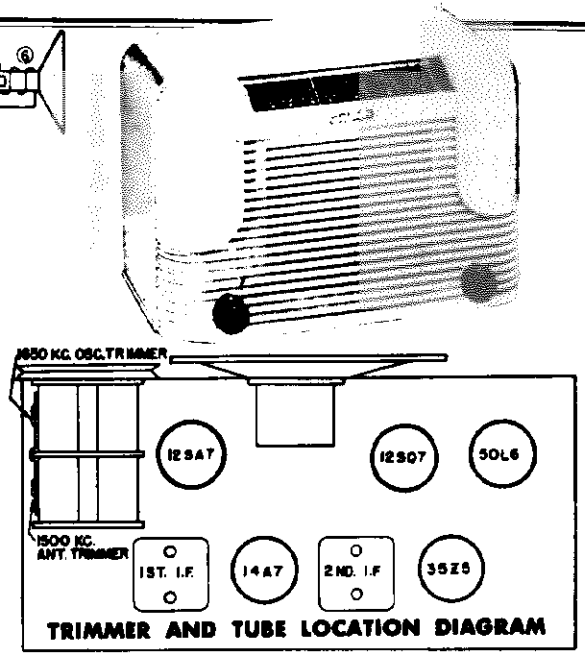

TRIMMER AND TUBE LOCATION DIAGRAM

LINE VOLTAGE: This receiver is designed for operation on 105-125 Volts, 50-60 Cycles, either Alternating or Direct Current (AC-DC).

POWER CONSUMPTION: 30 Watts.

TUNING RANGE: Broadcast: 540 to 1650 Kilocycles (180 to 555 meters).

DIAL: The Dial Scale is calibrated in Kilocycles times 10 to correspond with newspaper or periodical listings.

TUBES: The tubes used, and their functions, are as follows:

12SA7 Converter — 12SQ7 Detector, Avc and Audio Amp.
14A7 I.F. Amplifier — 50L6 Beam Power Amplifier
35Z5 Rectifier

ALIGNMENT: Should it become necessary at any time to check the alignment of this receiver, proceed as follows:

(1) Set the Signal Generator to 455 KC and connect to the stator lug on the rear section of the Variable Capacitor. Connect the Signal Generator Ground lead to the chassis. Connect a suitable output meter across the Speaker Voice Coil Connections. Turn the Volume Control to the maximum position. Turn the Variable Capacitor to the extreme clockwise position.

(2) Adjust the trimmers located at the top of the first and second I. F. Transformers or the iron cores located at the top and bottom of each I. F. for maximum output as indicated on the Output Meter.

(3) Loosely couple the Signal Generator lead to the Loop and set to 1650 KC.

(4) With Variable Capacitor set at the extreme clockwise position, tune in the 1650 KC signal by means of the Oscillator Trimmer on the Variable Capacitor (front section).

(5) Set the Signal Generator to 1500 KC and turn the Tuning Control so that this frequency is indicated on the dial. Adjust the Antenna Trimmer on the Variable Capacitor (rear section) for maximum output. No other adjustments are necessary.

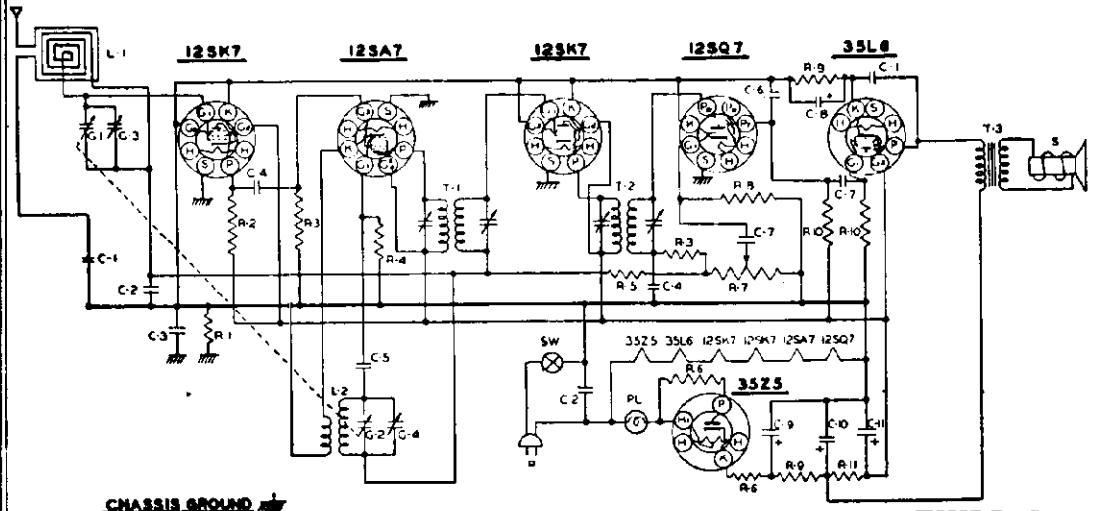

PART NO.		DESCRIPTION	PART NO.		DESCRIPTION
PC-7	C-1	.01MFD CONDENSER 400 V	IR-9	R-4	22M ~ RESISTOR 1/2W 20%
PC-5	C-2	.05MFD CONDENSER 400 V	IR-23	R-5	.33MEG ~ RESISTOR 1/2W 20%
PC-8	C-3	1MFD CONDENSER 400 V	IR-17	R-6	33~ RESISTOR 1/2W 20%
MC-2	C-4	.001 MICA CONDENSER	VC-13	R-7	1MEG VOLUME CONTROL
MC-4	C-5	.00005 MICA CONDENSER	IR-13	R-8	2.2MEG ~ RESISTOR 1/2W 20%
MC-5	C-6	.0005 MICA CONDENSER	IR-5	R-9	220 ~ RESISTOR 1/2W 10%
PC-6	C-7	.005MFD CONDENSER 600 V	IR-11	R-10	470M ~ RESISTOR 1/2W 20%
EC-2	C-8	10MFD 25WV ELECTROLYTIC	IR-21	R-11	330 ~ RESISTOR 1/2W 1%
EC-14	C-9	40MFD	GC-5	G-1	GANG CONDENSER
	C-10	40MFD ELECTROLYTIC 150 W V		G-2	
	C-11	20MFD		G-3	ANT TRIMMER
IR-20	R-1	220M ~ RESISTOR 1/2W 20%		G-4	OSC TRIMMER
IR-22	R-2	3900 ~ RESISTOR 1/2W 10%	LL-16	L-1	LOOP ANT
IR-10	R-3	47M ~ RESISTOR 1/2W 20%	LO-10	L-2	OSC COIL
LI-6	T-1	INPUT I.F. TRANSFORMER			
LI-7	T-2	OUTPUT I.F. TRANSFORMER			
	SW	SWITCH ON VOLUME CONTROL			
SPK-12	T-3	OUTPUT TRANSFORMER			
	S	5" P.M. SPEAKER			
PB-1	PL	#47 PILOT BULB			
CO-1	P	LINE CORD			

ALIGNMENT

Remove chassis from cabinet for alignment.

A Signal Generator is required having the following frequencies: 455 KC, 1400 KC, 1720 KC. An output meter should be connected across the speaker.

The receiver volume control should be turned to maximum during the I.F. and all subsequent alignments to keep the AVC from working and giving false readings. Keep the generator output as low as possible to prevent overloading.

FIRST STEP: Connect the hot lead from the generator to the ANT. section of the gang condenser, through a .1 MFD condenser. The ground lead from the generator must be connected to the floating ground buss under the chassis. Turn the gang condenser to complete minimum capacity. Adjust the generator to 455KC and adjust the trimmers of the 1st and 2nd I.F. transformers until a maximum reading is noted on the output meter.

SECOND STEP: With the leads from the generator still connected in the same manner, adjust the Signal Generator to 1720 KC. The OSC. trimmer is located on the front of the chassis. Adjust this trimmer until the 1720 KC signal is tuned in.

THIRD STEP: Remove the hot lead of the generator from the ANT section of the gang condenser. Connect this lead to the primary of the loop antenna through a 200 MMFD condenser. Adjust the Signal Generator to 1400 KC. Rotate the tuning control until this signal is tuned in. The ANT trimmer is located on the back of the loop antenna. Adjust this trimmer until a maximum reading is noted on the output meter. No further adjustment should be necessary, unless the set has been damaged, as the coils and condenser in this receiver have been specially handled at the factory to insure proper alignment at the lower frequencies.

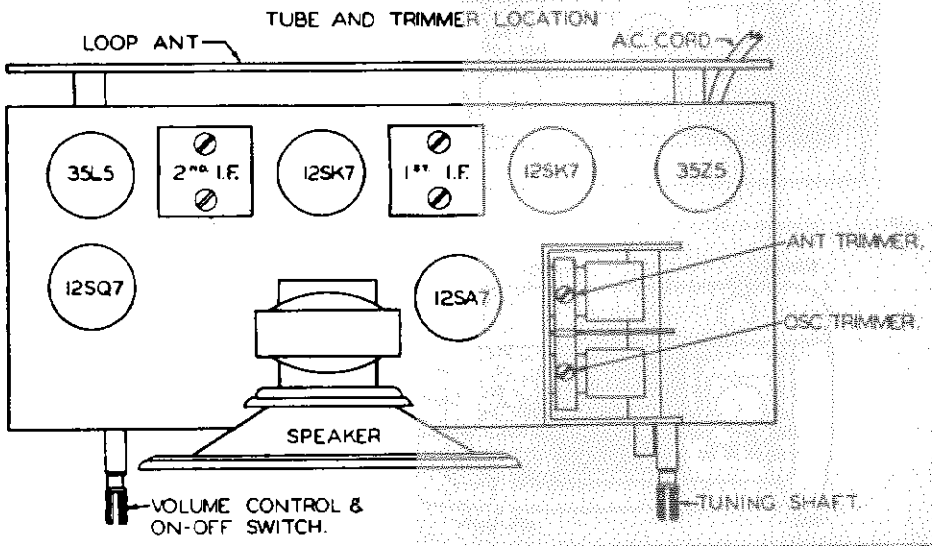

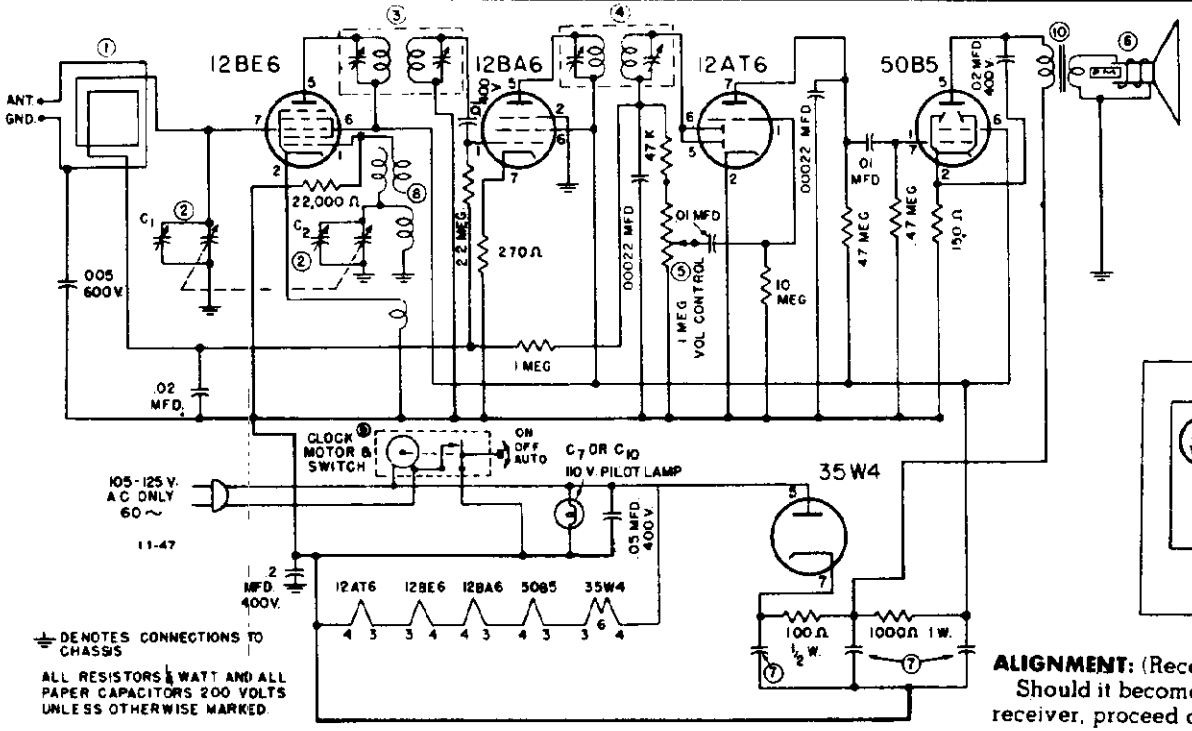

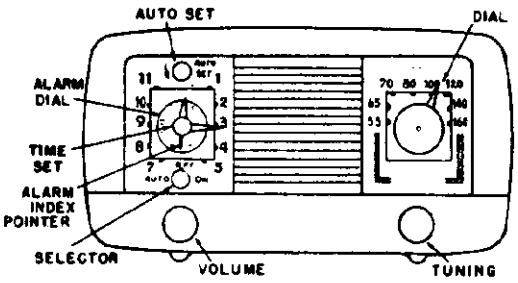

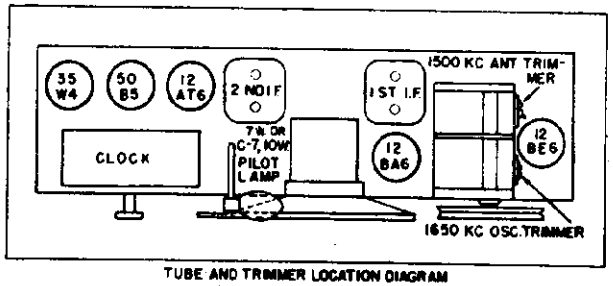

TUBE AND TRIMMER LOCATION DIAGRAM

① 1.464 LOOP ANTENNA
② 2.213 2 GANG VARIABLE COND.
③ 1.259 1ST I.F. TRANSFORMER
④ 1.409 2ND I.F. TRANSFORMER
⑩ 9.200 OUTPUT TRANSFORMER
⑤ 8.200-II VOLUME CONTROL
⑥ 30.300 OR 30.316 P.M. SPEAKER
⑦ 5.415-1 ELECTROLYTIC CAP. 20-20-20 MFD.
⑧ 1.402-1 OSCILLATOR COIL
⑨ 36.113 TELECHRON CLOCK ASSEMBLY

TO OPERATE THE RADIO: Turn the Selector knob located at the bottom of the clock face so that its index points to on. This turns on the power to the radio. Next, turn the Volume control knob at the bottom left of the cabinet about half way in the clockwise direction, or to the right. Wait a few seconds for the tubes to warm up. Turn the Tuning control knob so that the dial pointer indicates the frequency of the desired station, tuning carefully for best and clearest reception.

To turn the radio off, turn the Selector knob so that the index points to the upright or center position.

TO OPERATE YOUR "RADALARM" RADIO AS A MUSICAL ALARM: You may set your clock radio to automatically turn on a program you wish to hear during the next eleven hours. Proceed by tuning in the station which will carry the program desired. Then set the Volume control knob at the level you want as for the regular radio operation. Turn the Auto set knob at the top of the clock face, which rotates the disc forming the alarm dial of the clock.

Stop rotation when the time you desire the radio to go on is directly under the short index pointer on the opposite end of the hour hand. Now turn the Selector knob so that the index points to Auto (that is points to the left).

After setting the alarm, if you wish to return to normal radio operation, turn the Selector knob so that the index points to on. Then operate the radio as described in preceding paragraphs. Be sure to turn the Selector knob back to the Auto position if you want a program to be turned on automatically.

TUBES: The tubes used, and their function are as follows:

12BE6 Converter
12BA6 I.F. Amplifier
12AT6 Detector, AVC and Audio Amp.
50B5 Beam Power Amplifier
35W4 Rectifier

LINE VOLTAGE: This clock-radio receiver is designed for operation on 105-125 volts 60 cycles alternating current only.

POWER CONSUMPTION: 40 Watts.

TUNING RANGE: Broadcast: 540 to 1650 Kilocycles (180 to 555 Meters).

DIAL: The dial scale is calibrated in kilocycles. Example: Read 60 as 600 KC.

ALIGNMENT: (Receiver removed from cabinet)

Should it become necessary at any time to check the alignment of this receiver, proceed as follows:

(1) Set the Signal Generator to 455 KC and connect to the stator lug on the rear section of the variable capacitor. Connect the signal generator ground lead to the chassis. Connect a suitable output meter across the speaker voice coil connections. Turn the volume control to the maximum position. Turn the variable capacitor to the extreme clockwise position.

(2) Adjust the trimmers located at the top of the first and second I.F. Transformers for maximum output as indicated on the output meter.

(3) Loosely couple the signal generator lead to the loop and set to 1650 KC.

(4) With the variable capacitor set at the extreme clockwise position, tune in the 1650 KC signal by means of the oscillator trimmer on the variable capacitor (front section).

(5) Set the signal generator to 1500 KC and turn the tuning control so that this frequency is indicated on the dial. Adjust the antenna trimmer on the variable capacitor (rear section) for maximum output. No other adjustments are necessary.

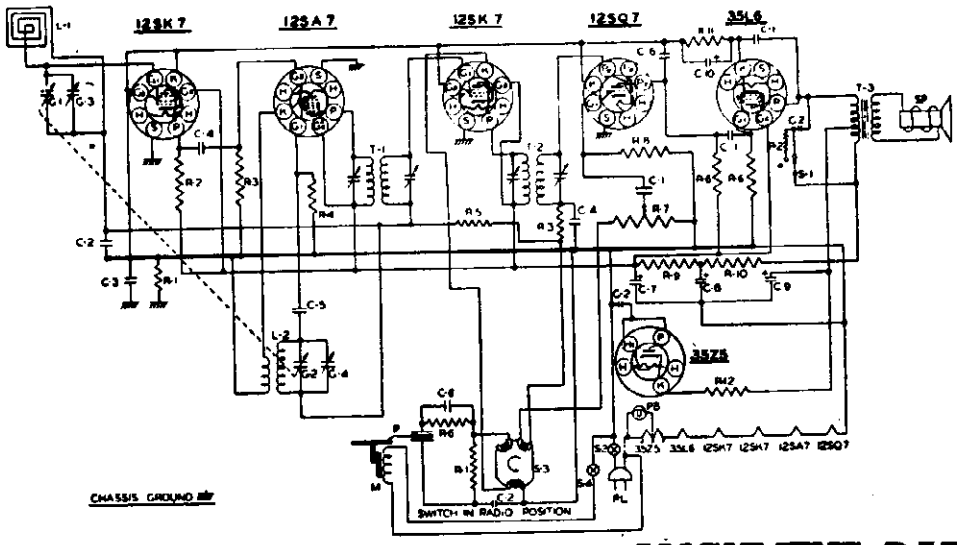

ALIGNMENT DATA

Remove the chassis from the cabinet. A Signal Generator with the following frequencies is required: 455 KC, 1400 KC and 1720 KC.

The receiver volume control should be turned to maximum during the I.F. and all subsequent alignments to keep the A.V.C. from working and giving false readings. Turn the tone control to complete left hand position. Keep the generator output as low as possible to prevent overloading.

Connect an output meter across the voice coil of the speaker.
Connect a 20,000 ohm resistor across the loop connector terminals to reflect proper loop impedance.

FIRST STEP: Connect the hot lead from the generator to the "ANT." section of the gang condenser through a .1 MFD. condenser. The ground lead must be connected to the floating ground buss under the chassis. Turn the gang condenser to complete minimum capacity. Adjust the generator to 455 KC and adjust the trimmers of the 1st and 2nd I.F. transformers until a maximum reading is noted on the output meter.

SECOND STEP: With the leads from the generator connected in the same manner as in I.F. alignment, adjust the signal generator to 1720 KC. The "O.S.C." trimmer is located on the front section of the gang condenser. Adjust this trimmer until the signal is tuned in. The gang condenser should be at complete minimum capacity for this setting.

THIRD STEP: Remove the generator leads from the chassis. Remove the 20,000 ohm resistor from the loop connector terminals. Reinstall the chassis in the cabinet, connect the loop leads, motor plug and phono pickup leads.

Connect the generator leads to a transmitting loop, made of a few turns of wire, and loosely couple to the receiver loop antenna which is located on the back end of the cabinet. Adjust the generator to 1400 KC. Rotate the tuning control until this signal is tuned in. The "ANT." trimmer is located on the rear section of the gang condenser. Adjust this trimmer until a maximum signal is noted on the output meter.

No further adjustment should be necessary, unless the receiver has been damaged, as the coils and tuning condenser have been specially handled at the factory to insure proper alignment at the lower frequencies.

PART NO.		DESCRIPTION
PC-7	C-1	.01 MFD. CONDENSER 400 V.
PC-5	C-2	.05MFD. CONDENSER 400 V.
PC-6	C-3	.1 MFD. CONDENSER 400 V.
MC-2	C-4	100MMFD. MICA CONDENSER
MC-4	C-5	50 MMFD. MICA CONDENSER
MC-5	C-6	500MMFD. MICA CONDENSER
EC-14	C-7	20 MFD.
	C-8	40 MFD. 150WV ELECTROLYTIC
	C-9	40 MFD.
EC-2	C-10	10 MFD. 25WV ELECTROLYTIC
IR-20	R-1	220M Ω RESISTOR 1/2W 20%
IR-15	R-2	2200 Ω RESISTOR 1/2W 20%
IR-10	R-3	47M Ω RESISTOR 1/2W 20%
IR-9	R-4	22M Ω RESISTOR 1/2W 20%
IR-23	R-5	33 MEG. RESISTOR 1/2W 20%
IR-11	R-6	470M Ω RESISTOR 1/2W 20%
VC-4	R-7	1MEG VOLUME CONTROL
IR-13	R-8	2.2 MEG RESISTOR 1/2W 20%
IR-1	R-9	470 Ω RESISTOR 1/2W 20%
IR-42	R-10	1000 Ω RESISTOR 1 W 10%
IR-14	R-11	150 Ω RESISTOR 1/2 W 20%
IR-17	R-12	33 Ω RESISTOR 1/2W 20%
GC-5	G-1	
	G-2	GANG CONDENSER
	G-3	ANT. TRIMMER
	G-4	OSC. TRIMMER
LI-6	T-1	INPUT I.F. TRANSFORMER
LI-7	T-2	OUTPUT I.F. TRANSFORMER
	T-3	OUTPUT TRANSFORMER
LL-17	L-1	LOOP ANT.
LO-15	L-2	OSC. COIL
SPK-12	SP	5" P.M. SPEAKER
SW-2	S-1	TONE SWITCH
	S-2	SWITCH ON VOLUME CONTROL
SW-1	S-3	PHONO.-RADIO SWITCH
	S-4	SWITCH ON RECORD CHANGER
AC-M-7	M	RECORD CHANGER MOTOR
AC-PU-7	P	CRYSTAL PICKUP ARM, CARTRIDGE &
	PB	#47 PILOT BULB
CO-2	PL	LINE CORD

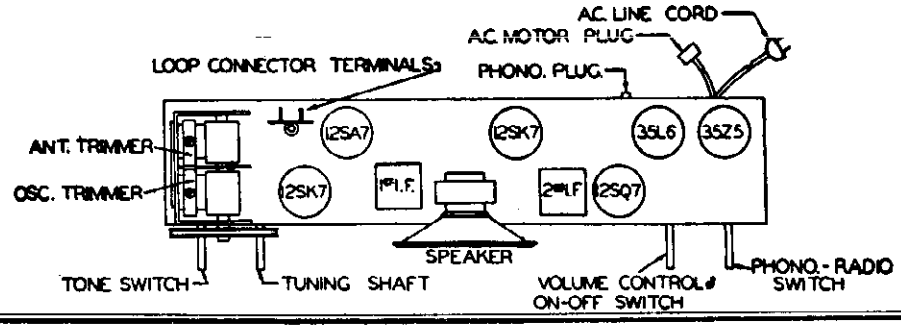

MODELS 1996, 1997 ALDEN, INC.

Model 1996

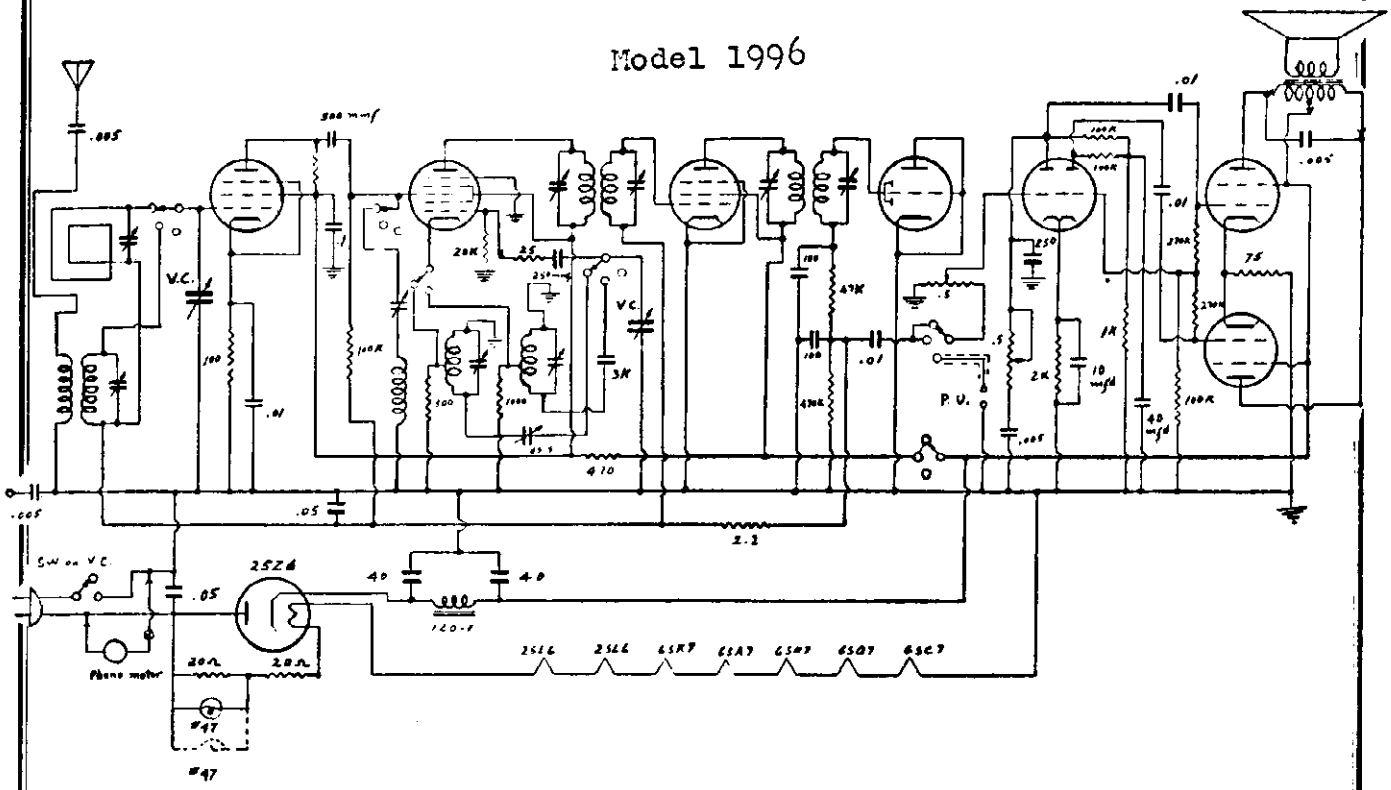

Model 1997

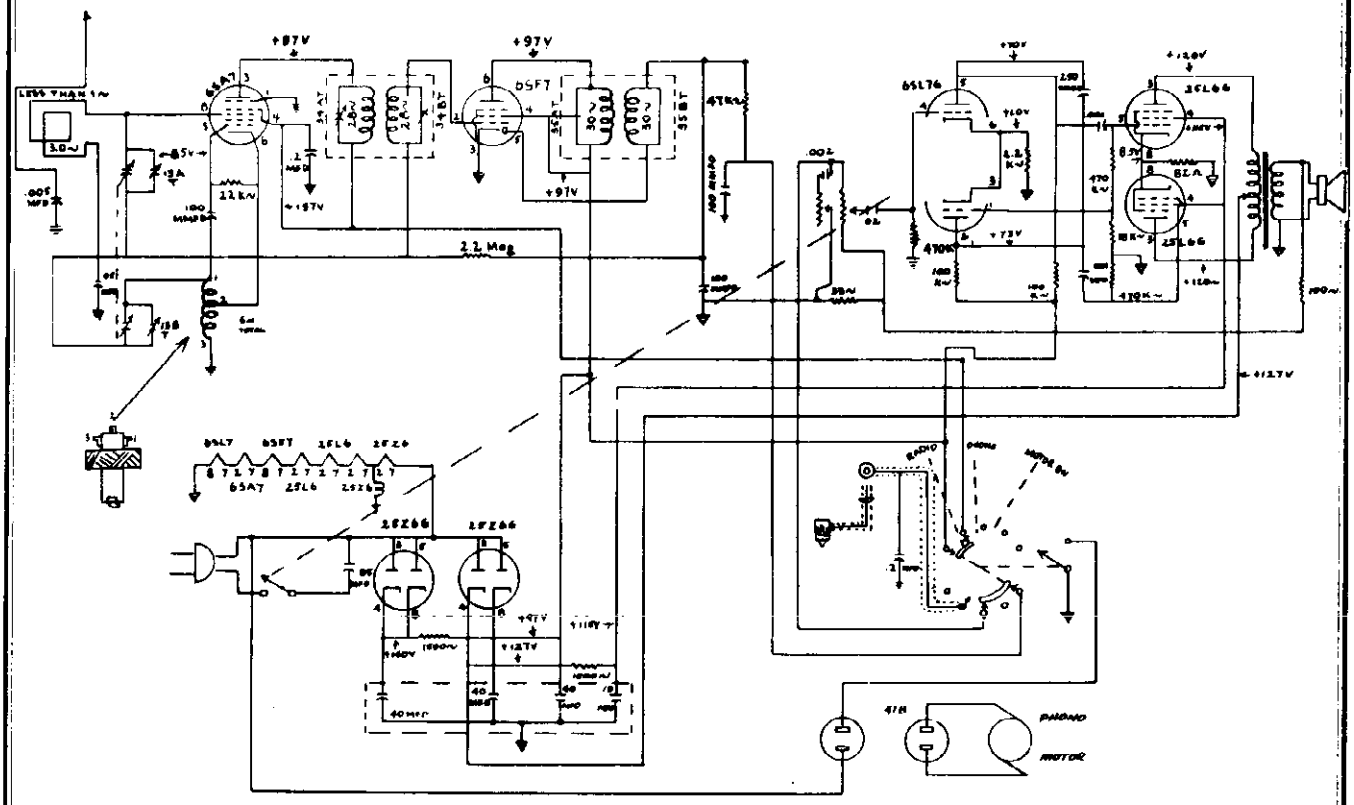

©

ALLIED RADIO CORP. MODELS 4E-515, 4E-516, 4F-515, 4F-516

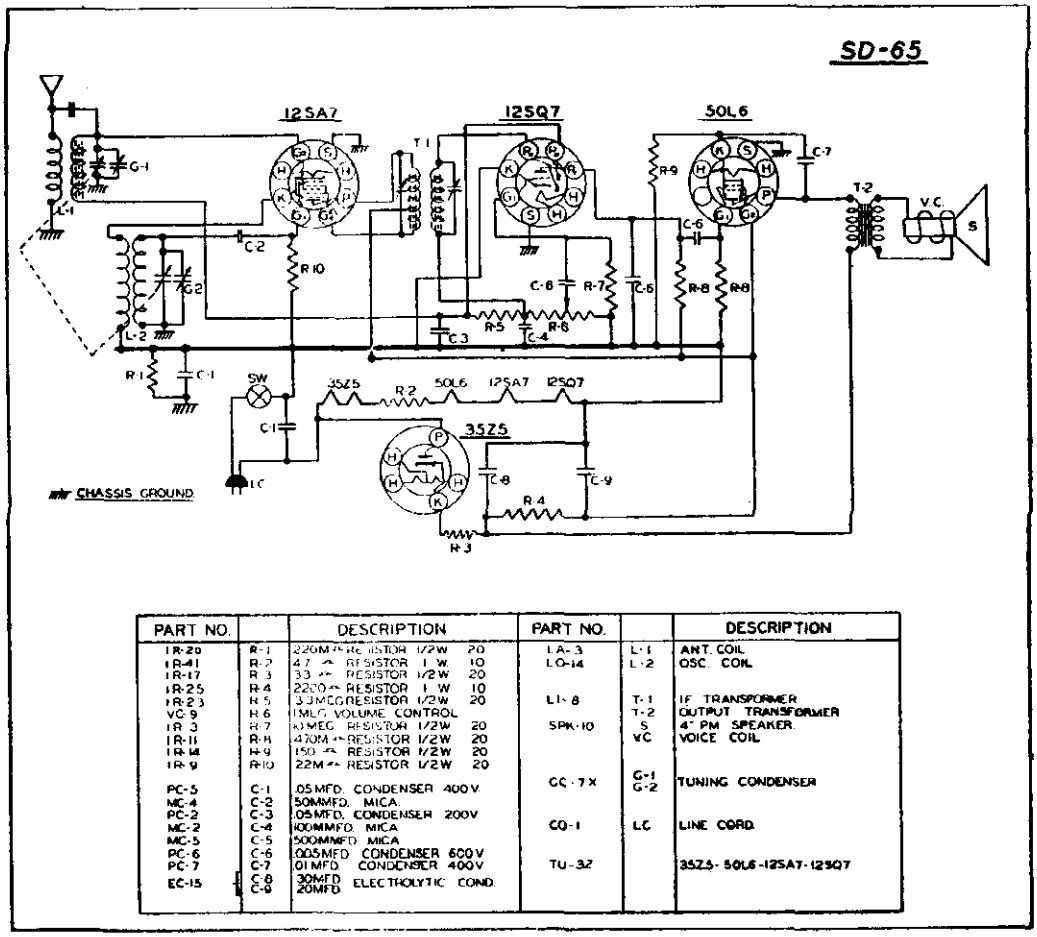

PART NO.		DESCRIPTION	PART NO.		DESCRIPTION
1R-20	R-1	220M Ω RESISTOR 1/2W 20	LA-3	L-1	ANT. COIL
1R-41	R-2	47 Ω RESISTOR 1 W 10	LO-14	L-2	OSC. COIL
1R-17	R-3	33 Ω RESISTOR 1/2W 20			
1R-25	R-4	2200 Ω RESISTOR 1 W 10	LI-8	T-1	IF TRANSFORMER
1R-23	R-5	3.3MEG RESISTOR 1/2W 20		T-2	OUTPUT TRANSFORMER
VC-9	R-6	1MEG VOLUME CONTROL	SPK-10	S	4" PM SPEAKER
1R-3	R-7	47MEG RESISTOR 1/2W 20		VC	VOICE COIL
1R-11	R-8	470M Ω RESISTOR 1/2W 20			
1R-14	R-9	150 Ω RESISTOR 1/2W 20			
1R-9	R-10	22M Ω RESISTOR 1/2W 20			
PC-5	C-1	.05 MFD. CONDENSER 400 V.	GC-7X	G-1 G-2	TUNING CONDENSER
MC-4	C-2	50MMFD. MICA			
PC-2	C-3	.05 MFD. CONDENSER 200V	CO-1	LC	LINE CORD
MC-2	C-4	100MMFD. MICA			
MC-5	C-5	500MMFD. MICA			
PC-6	C-6	.005 MFD. CONDENSER 600 V	TU-32		35Z5-50L6-12SA7-12SQ7
PC-7	C-7	.01 MFD. CONDENSER 400 V			
EC-15	C-8	30MFD ELECTROLYTIC COND.			
	C-9	20MFD			

Operating Instructions

POWER SOURCES: This receiver may be operated on alternating current (AC) of 110 to 125 volts at 60 cycles or on direct current (DC) of 110 to 125 volts. When used on DC, if the tubes light up but set does not play, reverse the cord plug in the power outlet.

CAUTION: Always predetermine voltage of power sources. Never try to plug this receiver into a 220 volt line, as this will cause serious damage.

INSTALLATION: Unwind the power cord and plug into a convenient outlet. This receiver is equipped with an antenna hank, which should be uncoiled and stretched out to its full length for best reception. However, in steel constructed buildings or in distant isolated locations, better results may be obtained by connecting an outdoor antenna to the end of the antenna hank wire. The outdoor antenna should be about 50 feet long, including the lead-in wire.

MODELS 4E-515, 4E-516, 4F-515, 4F-516 ALLIED RADIO CORP.

TUBE AND TRIMMER LOCATION

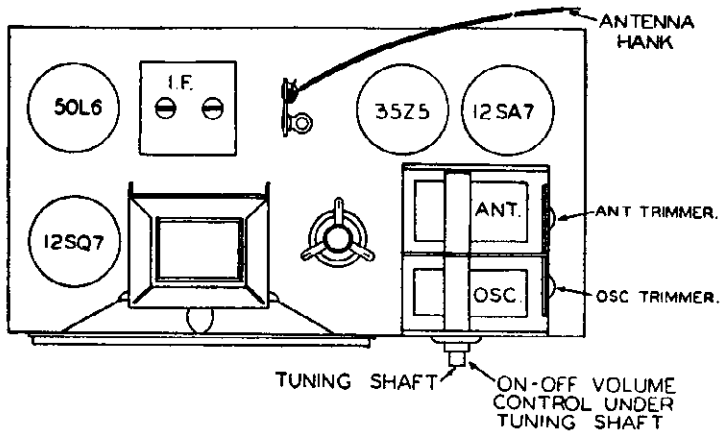

TL-65

CONTROLS: Two knobs control the operation of this receiver. The lower knob is used to turn the set off and on. It is also used to control volume. Rotate this knob to the right in a clockwise direction and a click will be heard. This turns the receiver on. Allow about thirty seconds for tubes to heat up, then continue to rotate the knob to the right to increase volume. The upper knob is the station selector. Rotate this knob to the right or left to locate your station. By mentally adding a zero to the numbers on the dial, the result will be read directly in kilocycles. To turn off, turn the lower knob to the left in a counterclockwise direction as far as it will go and a click will be heard. The power switch will then be turned off.

ALIGNMENT AND SERVICE DATA

(See Fig. No. 1 For Trimmer Location)

Remove chassis from cabinet for alignment.

A Signal Generator is required having the following frequencies: 455 KC, 1400 KC, 1650 KC. An output meter should be connected across the speaker.

The volume control of the receiver should be turned to maximum during the I. F. and all subsequent alignment and the generator output as low as possible to prevent the A. V. C. from working and giving false readings.

FIRST STEP: Connect the hot lead from the generator to the ANT. section of the gang condenser through a .1 MFD. condenser. The ground lead from the generator must be connected to "B" minus under the chassis. Turn the gang condenser to complete minimum capacity. Set the generator to 455 KC. Adjust the trimmers of the I. F. transformer until a maximum reading is noted on the output meter.

SECOND STEP: With the leads from the generator still connected in the same manner, adjust the Signal Generator to 1650 KC. Adjust the OSC. trimmer until the 1650 KC signal is tuned in. The gang condenser must be at complete minimum capacity for this adjustment.

THIRD STEP: Remove the generator hot lead and connect it to the antenna hank terminal strip through a 200 MMFD. condenser. With the receiver and generator set at 1400 KC, increase the generator output. Adjust the ANT. trimmer until a maximum signal is noted on the output meter. No further adjustment should be made as the coils and gang condenser in this receiver have been specially handled at the factory to insure proper alignment at the lower frequencies.

ALLIED RADIO CORP. MODELS 5D-250, 5D-251, 5E-250, 5E-251

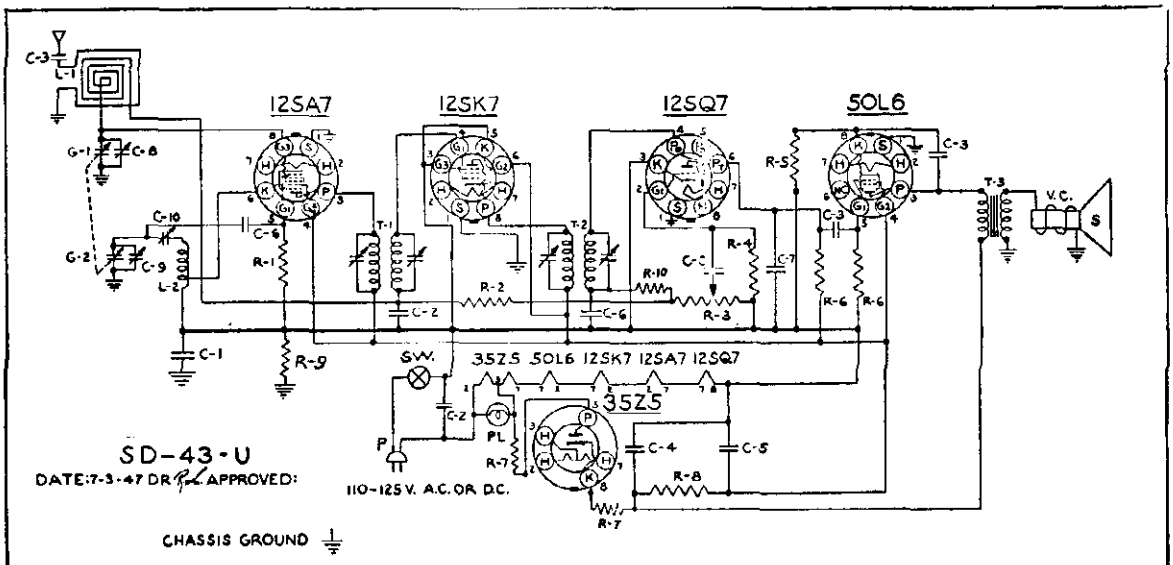

PART NO.		DESCRIPTION	PART NO.		DESCRIPTION	PART NO.		DESCRIPTION
IR-9	R-1	22,000Ω RESISTOR ½W 20%	TC-7	C-8	ANTENNA TRIMMER COND.	CO-1	P	LINE CORD
IR-23	R-2	3.3 MEG. RESISTOR ½W 20%	TC-6	C-9	OSC. TRIMMER COND.	TU-3	—	12SA7 GT 12SK7 GT
VC-4	R-3	1 MEG. VOL. CONTROL & SW.	TC-9	C-10	OSC. PADDING COND.			12SQ7 GT 50L6GT 35Z5GT
IR-13	R-4	2.2 MEG. RESISTOR ½W 20%	IR-20	R-9	220Ω RESISTOR ½W 20%			
IR-14	R-5	150Ω RESISTOR ½W 20%	GC-1	G-1	GANG CONDENSER			
IR-11	R-6	470Ω RESISTOR ½W 20%		G-2				
IR-17	R-7	33Ω RESISTOR ½W 20%	LL-4	L-1	LOOP ANTENNA			
IR-25	R-8	2,200Ω RESISTOR 1W 10%	LO-7	L-2	OSC. COIL			
PC-8	C-1	.1 MFD. COND. 400V.	LI-1	T-1	INPUT I.F. TRANSFORMER			
PC-5	C-2	.05 MFD. COND. 400V.	LI-2	T-2	OUTPUT I.F. TRANSFORMER			
PC-7	C-3	.01 MFD. COND. 400V.		T-3	OUTPUT SPKR. TRANSFORMER			
EC-12	C-4	40 MFD. 150 V. ELECTROLYTIC	SPK-6	V.C.	VOICE COIL			
	C-5	20 MFD.		S	P.M. SPEAKER			
MC-2	C-6	100 MMFD. MICA COND.	PB-1	PL	No. 47 PILOT BULB			
MC-5	C-7	500 MMFD. MICA COND.		SW.	A.C. SW. ON VOL. CONTROL			
IR-10	R-10	47M Ω 1/2 W 20 %						

OPERATING INSTRUCTIONS

POWER SOURCES: This receiver may be operated on alternating current (AC) of 110 to 125 volts at 60 cycles or on direct current (DC) of 110 to 125 volts. When used on DC, if the tubes light up but set does not play, reverse the cord plug in the power outlet.

CAUTION: Always predetermine voltage of power source. Never try to plug **this receiver into a 220 volt line, as this will cause serious damage.**

INSTALLATION: Unwind the power cord and plug into a convenient outlet. This receiver is equipped with a sensitive loop antenna and under ordinary conditions no external antenna would be required. However, in steel constructed buildings or in distant isolated locations, the reception may be improved by using an outside antenna. This should be a single wire not more than 50 feet long and should be connected to the antenna lead that projects from the back of the *receiver. No ground wire is required at any time.*

MODELS 5D-250, 5D-251, 5E-250, 5E-251

ALLIED RADIO CORP.

ALIGNMENT AND SERVICE DATA

Remove chassis from cabinet for alignment.

A Signal Generator is required having the following frequencies: 455 KC, 1400 KC, 1720 KC. An output meter should be connected across the speaker.

The receiver volume control should be turned to maximum during the I.F. and all subsequent alignments to keep the AVC from working and giving false readings. Keep the generator output as low as possible to prevent overloading.

FIRST STEP: Connect the hot lead from the generator to the ANT. section of the gang condenser, through a .1 MFD condenser. The ground lead from the generator must be connected to the floating ground buss under the chassis. Turn the gang condenser to complete minimum capacity. Adjust the generator to 455KC and adjust the trimmers of the 1st and 2nd I.F. transformers until a maximum reading is noted on the output meter.

SECOND STEP: With the leads from the generator still connected in the same manner, adjust the Signal Generator to 1720 KC. The OSC. trimmer is located on the front of the chassis. Adjust this trimmer until the 1720 KC signal is tuned in.

THIRD STEP: Remove the hot lead of the generator from the ANT section of the gang condenser. Connect this lead to the primary of the loop antenna through a 200 MMFD condenser. Adjust the Signal Generator to 1400 KC. Rotate the tuning control until this signal is tuned in. The ANT trimmer is located on the top of the ANT. section of the gang condenser. Adjust this trimmer until a maximum reading is noted on the output meter. No further adjustment should be necessary, unless the set has been damaged, as the coils and condenser in this receiver have been specially handled at the factory to insure proper alignment at the lower frequencies.

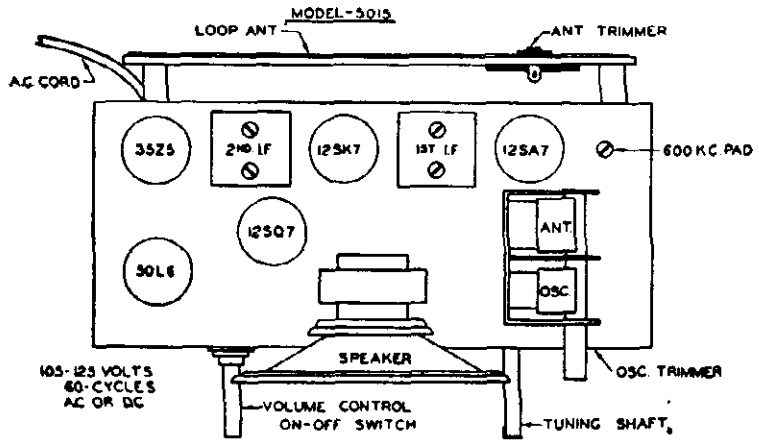

FIGURE-1

CONTROLS: Two knobs control the operation of this receiver. The left hand knob is used to turn set off and on. It is also used to control volume. Rotate knob to your right in a clockwise direction and a click will be heard. This turns receiver on. Allow about 30 seconds for tubes to heat up, then continue to rotate knob to your right to increase volume. The right hand knob is the station selector. Rotate this knob to the right or left to locate your station. By mentally adding a zero to the numbers on the dial, the result will be read directly in kilocycles. To turn set off, turn left hand knob to your left in a counter-clockwise direction as far as it will go and a click will be heard. The power switch will then be turned off.

ALLIED RADIO CORP.

MODELS 5D-455, 5E-455

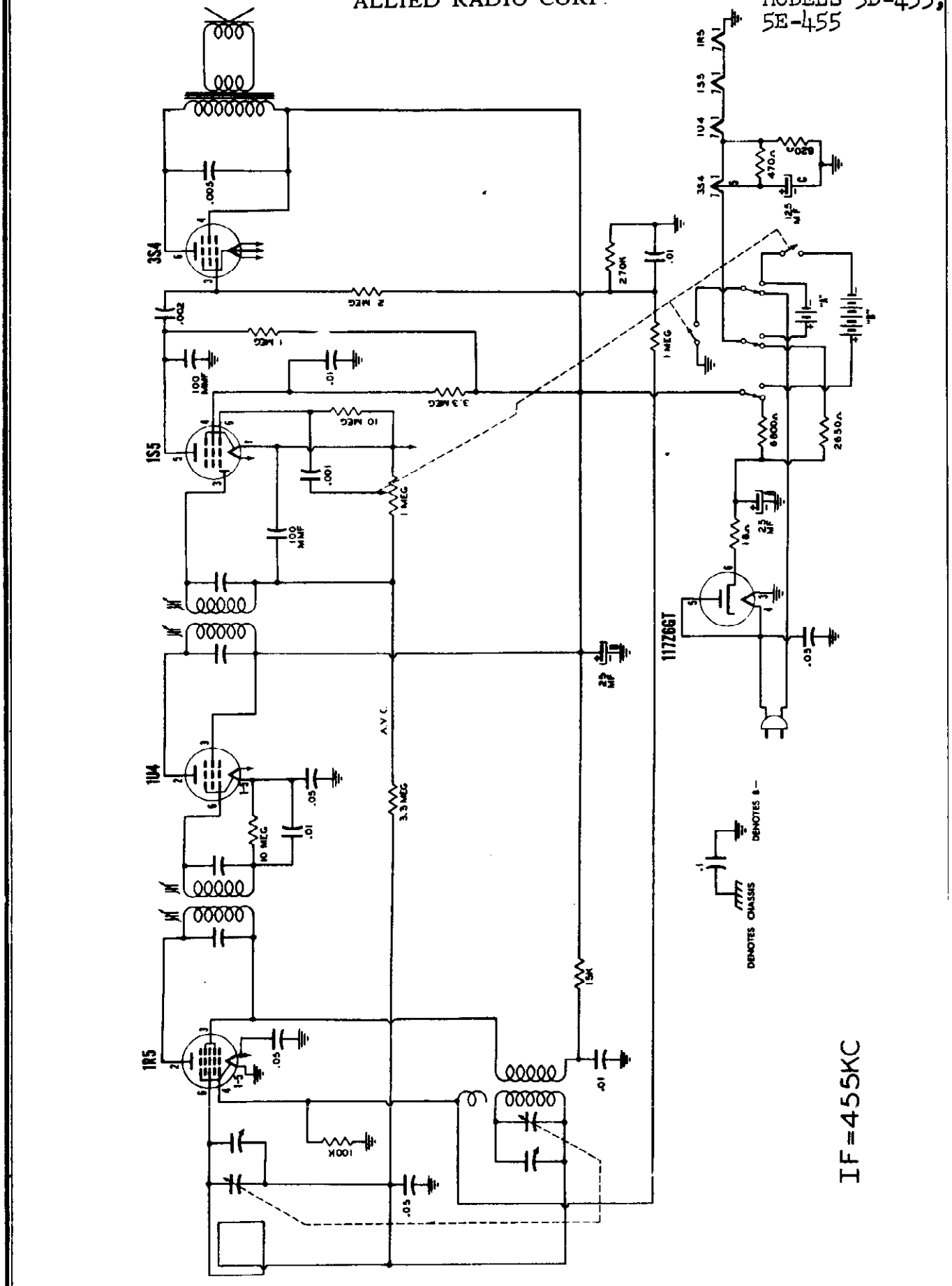

IF=455KC

© John F. Rider

© John F. Rider

ALIGNMENT PROCEDURE

(Continued)

CAUTION: This is an A.C.-D.C. receiver and when aligning the set it is necessary to isolate the Signal Generator or the Receiver from the line by use of a transformer, or place a .2 MFD. condenser in both test leads of the Signal Generator.

Position of Variable	Generator Frequency	Dummy Ant. Mid.	Generator Connections	Trimmer Adjustment	Trimmer Function
Fully open	455 KC	.1	*12SA7 Grid (Stator of C1A)	T1	Input I.F.
Fully open	455 KC	.1	*12SA7 Grid (Stator of C1A)	T2	Output I.F.
Fully open	1630 KC	.1	*12SA7 Grid (Stator of C1A)	C1B	Oscillator
Tune in signal from generator	1400 KC		Loosely coupled to loop antenna	C1A	Antenna

*Connect ground lead of signal generator to common negative.

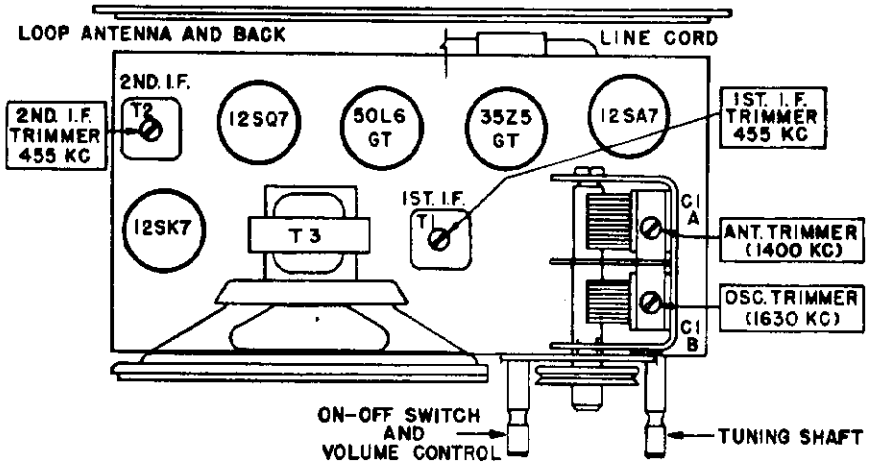

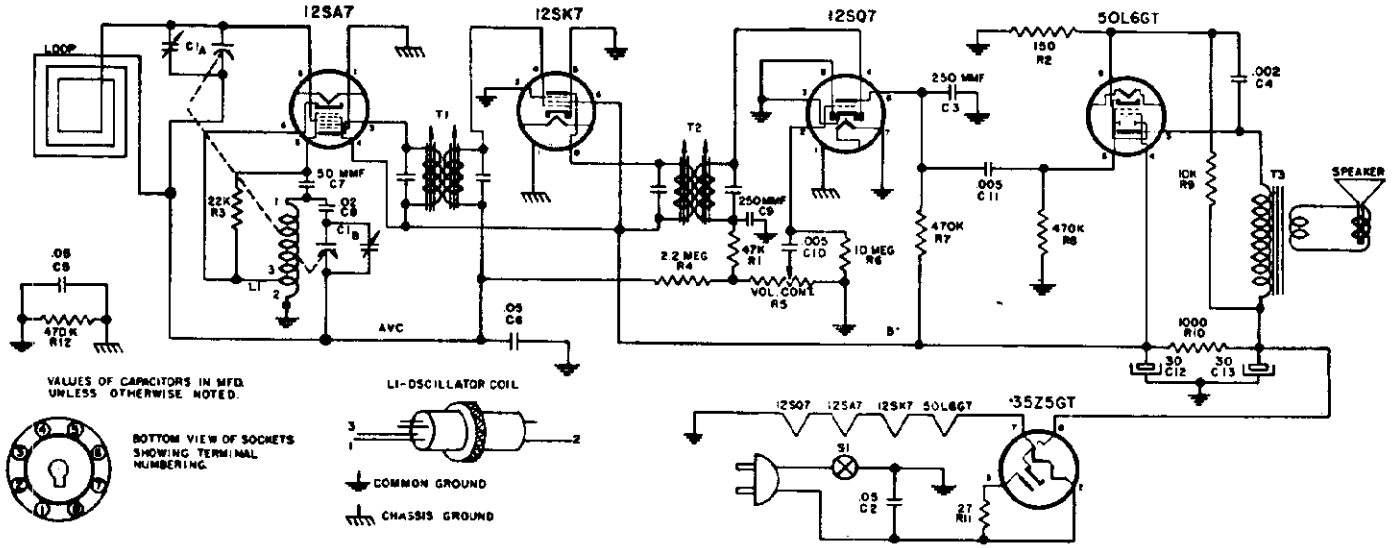

ALLIED RADIO CORP. MODELS 5F-525, 5F-526

INSTALLATION

The loop antenna incorporated in the receiver is sufficient for all normal reception.

When using a DC power supply and after allowing sufficient time for the tubes to warm up the receiver does not operate, remove the line cord plug from the receptacle and reverse. Replace the plug in the reversed position and allow tubes to warm up at which time the receiver will operate.

If an excessive hum is noticed when operating from an AC power source, reverse the line cord plug to determine which position gives the best results.

NOTE: All loop antennas are somewhat directional in their characteristics.

Reception can sometimes be improved and/or local interference reduced by turning the set in a different direction.

OPERATION

To turn the receiver on, rotate the on-off switch and volume control knob (left hand control) clockwise about one-half its range. This supplies power to the receiver. Allow about thirty seconds for the tubes to warm up after which the desired station may be tuned by rotating the station selector (right hand control).

For best tone, tune the desired station with the volume control turned low. This enables you to get the exact point where the station comes in best. Then, adjust the volume to the desired level with volume control.

DESCRIPTION

This model is a 4 tube (plus rectifier) superhetrodyne radio receiver designed for use on 117 volts 60 cycle AC or 117 volts DC power supply.

The tubes used are:—

1—12SA7 Oscillator Converter
1—12SK7 I.F. Amplifier
1—35Z5GT Power Rectifier
1—12SQ7 AVC Detector and 1st Audio
1—50L6GT Power Output

This receiver covers the frequency range from 540 kilocycles to 1630 kilocycles (KC).

ALIGNMENT PROCEDURE

The following alignment procedure is for use only by competent servicemen having the proper equipment.

The alignment should be made with volume control fully on, and the output from the signal generator as low as possible, to prevent A.V.C. action from interfering with correct alignment.

With the output meter connected across the voice coil of the speaker, the output meter reading for 50 milli-watts is .4 volts using a signal which is modulated 400 c.p.s.

Adjust all trimmers for maximum output. Repeat alignment procedure given below as a final check.

PARTS LIST

CODE	PART NO.	DESCRIPTION
R7, R8, R12	A60-662	470K ohm ½ watt resistor
R9	A60-698	10K ohm 1 watt resistor
R10	A60-732	1000 ohm 1 watt resistor
R11	A60-690	27 ohm ½ watt resistor
T1	A10-475	1st I.F. transformer
T2	A10-479	2nd I.F. transformer
L1	B10-502	Oscillator coil
	A42-451	Cabinet, molded, brown
	D42-424	Cabinet, molded, ivory
	B67-510	Dial scale, paper
	A52-243	Knob, tenite, black
	A52-222	Knob, tenite, ivory
	S84-265	Loop and back
	A58-56	Pointer, "Knight"
	B72-369	Speaker, 5", P.M. (includes output transformer)
C1A, C1B	B19-194	Variable condenser
C2, C5	A16-158	.05 MFD 400 volt condenser
C3, C9	A15-176	250 MMF mica condenser
C4	A16-155	.002 MFD 600 volt condenser
C6	A16-152	.05 MFD 200 volt condenser
C7	A15-175	50 MMF mica condenser
C8	A16-150	.02 MFD 400 volt condenser
C10, C11	A16-153	.005 MFD 600 volt condenser
C12, C13	B18-283	30-30 MFD 150 volt electrolytic condenser
R1	A60-685	47K ohm ½ watt resistor
R2	A60-686	150 ohm ½ watt resistor
R3	A60-659	22K ohm ½ watt resistor
R4	A60-684	2.2 megohm ½ watt resistor
R5	A24-174	Volume control and switch, 1 megohm
R6	A60-663	10 megohm ½ watt resistor

MODEL 5F-565 ALLIED RADIO CORP.

POWER SOURCES: This receiver is designed for operation on either an external power source or on the enclosed batteries.

AC OR DC OPERATION: This receiver may be operated on 50 to 60 cycle, 110 to 125 volt AC current or 110 to 125 DC current.

CAUTION: Never plug this receiver into a 220 volt line as this will seriously damage the component parts which have been designed for 110 to 125 volt operation only.

To operate on AC or DC open the small door at the right in the back of the cabinet. Pull out the power cord and plug into a convenient outlet of the proper voltage and current. Follow instructions under "Controls."

To operate on the enclosed batteries, follow instructions under "Controls."

ANTENNA: This receiver is equipped with a sensitive loop antenna and requires no external antenna wire. However, due to the directional qualities of the loop some stations may appear to be weak in reception. This condition may be remedied by rotating or changing the position of the receiver.

CONTROLS: This receiver has three control knobs which are located on the front panel of the cabinet.

STATION SELECTOR KNOB: The right hand knob is the station selector. Rotate this knob to the right or left to select your desired station. The dial scale is calibrated in kilocycles. By mentally adding a zero to the numbers on the scale, the result will be read directly in (KC) kilocycles. (i.e., 60 plus 0 equals 600 KC or 140 plus 0 equals 1400 KC).

POWER SELECTOR SWITCH: The left hand knob is the power selector. It has three positions which are indicated on the front panel. The extreme left hand position is the "OFF" position. The small dot on this knob must point to "OFF" when the receiver is not in use. The center position is "AC-DC" and is used when it is desired to operate the receiver from a power line source. The extreme right hand position is "BATT" and is used when it is desired to operate on the enclosed batteries.

AC OPERATION: When an AC power source is used, set the power selector knob to "AC-DC" after the power cord has been plugged into a convenient outlet. The receiver is now ready for operation.

DC OPERATION: If the receiver does not operate after a few seconds, reverse the power cord plug in the outlet and it will operate properly.

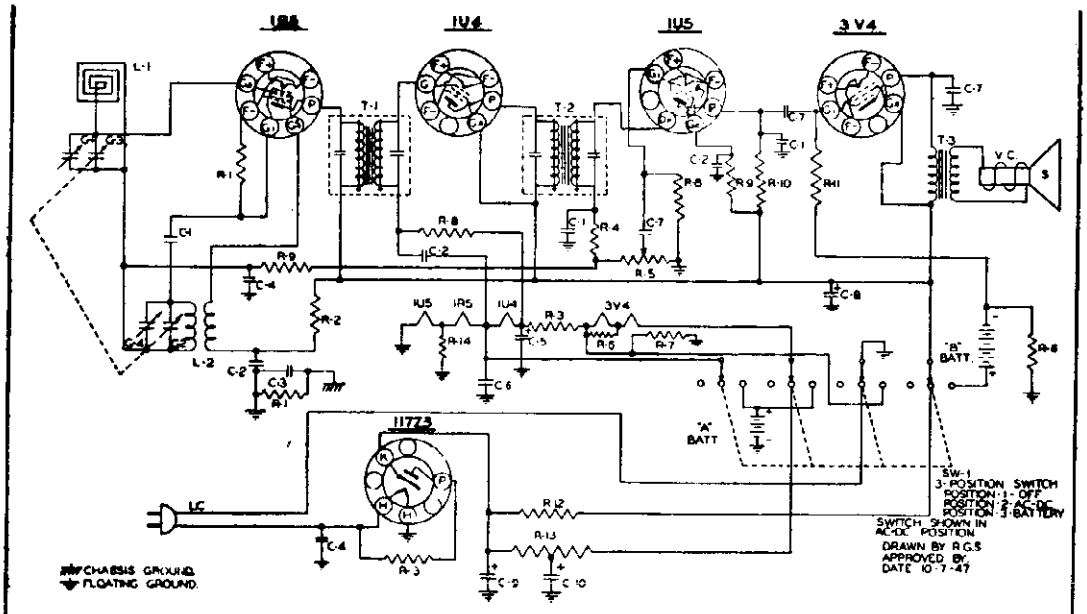

PART NO.		DESCRIPTION	PART NO.		DESCRIPTION	PART NO.		DESCRIPTION
15-20	R-1	220M Ω RESISTOR 1/2W 20 %	PC-3	C-6	1 MFD. CONDENSER 200 W.V.	LT-5	T-1	INPUT I.F. TRANSFORMER
15-37	R-2	10M Ω RESISTOR 1/2W 20 %	PC-6	C-7	.005 MFD. CONDENSER 600 W.V.	LT-5	T-2	OUTPUT I.F. TRANSFORMER
15-17	R-3	33 Ω RESISTOR 1/2W 20 %		C-8	40 MFD.			
15-31	R-4	82M Ω RESISTOR 1/2W 10 %	EC-14	C-9	40 MFD. 150 W.V. ELECTROLYTIC		T-3	SPEAKER OUTPUT TRANSFORMER
16-11	R-5	1 MEG. VOLUME CONTROL		C-10	20 MFD.	SPK-81	V.C.	VOICE COIL
15-33	R-6	270 Ω RESISTOR 1/2W 10 %					S	3½ P.M. SPEAKER
15-39	R-7	620 Ω RESISTOR 1/2W 5 %						
15-22	R-8	33M Ω RESISTOR 1/2W 20 %		G-1	ANT. TRIMMER			
15-24	R-9	1.5 MEG Ω RESISTOR 1/2W 20 %						
15-10	R-10	1 MEG Ω RESISTOR 1/2W 20 %	GC-6M	G-2	GANG CONDENSER			
15-21	R-11	2.2 MEG Ω RESISTOR 1/2W 20 %		G-3				
15-12	R-12	5000 Ω RESISTOR 1 W 10 %		G-4	OSC. TRIMMER			
15-13	R-13	1050-1050 CANDOHM RESISTOR 5W 5%						
15-1	R-14	470 Ω RESISTOR 1/2 20 %	LL-14	L-1	LOOP ANTENNA			
			LO-8	L-2	OSC. COIL			
MC-2	C-1	100 MMFD. MICA CONDENSER						
PC-3	C-2	.01 MFD. CONDENSER 400 W.V.	CO-1	LC	LINE CORD			
PC-6	C-3	1 MFD. CONDENSER 400 W.V.	SW-8	SW-1	4 POLE-3 POSITION SWITCH			
PC-3	C-4	.005 MFD. CONDENSER 400 W.V.						
EC-14	C-5	70 MFD. 10 W.V. ELECTROLYTIC						

PART NO.		DESCRIPTION
TU-33	—	1T73-1R5-1U4-1U5-3V4
	4 BATT	2"D" SIZE 1½ VOLT FLASHLITE CELLS
	6 BATT	1-6 7½ VOLT BATTERY

© John F. Rider

TUNING RANGE — 540 KC to 1650 KC

ALIGNMENT AND SERVICE DATA

(See Fig. No. 2 For Trimmer Location)

Remove chassis from cabinet for alignment.

A Signal Generator is required having the following frequencies: 455 KC, 1400 KC, 1650 KC. An output meter should be connected across the speaker.

The volume control of the receiver should be turned to maximum during the I. F. and all subsequent alignment and the generator output as low as possible to prevent the A. V. C. from working and giving false readings.

FIRST STEP: Connect the hot lead from the generator to the ANT. section of the gang condenser through a .1 MFD. condenser. The ground lead from the generator must be connected to "B" minus under the chassis. Turn the gang condenser to complete minimum capacity. Set the generator to 455 KC. Adjust the movable iron cores in the IF cans. These IF adjustments are made in the top and in the bottom of the can under the chassis. Adjust the cores until a maximum reading is noted on the output meter.

SECOND STEP: With the leads from the generator still connected in the same manner, adjust the Signal Generator to 1650 KC. Adjust the OSC. trimmer until the 1650 KC signal is tuned in. The gang condenser must be at complete minimum capacity for this adjustment.

THIRD STEP: Remove the generator leads from the gang condenser and replace the chassis in the cabinet. Loosely couple the generator to the receiver loop by making a complete turn of wire over the outside of the cabinet. With the receiver and generator set at 1400 KC, increase the generator output. Adjust the ANT. trimmer through the hole which is provided in the end of the cabinet until a maximum signal is noted on the output meter. The ANT. trimmer hole in the side of the cabinet is covered by a small plug button. Replace this button after adjustment has been made. No further adjustment should be made as the coils and gang condenser in this receiver have been specially handled at the factory to insure proper alignment at the lower frequencies.

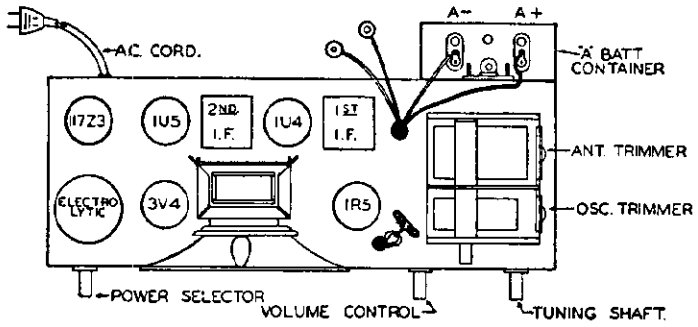

TL-75

TUBE AND TRIMMER LOCATION
FIGURE-2

BATTERY OPERATION: The power cord is not used for battery operation and may be hanked and put back in the cabinet. Set the power control knob to "BATT" and the receiver is ready for operation on the enclosed batteries.

CAUTION: When the receiver is not in use, the power selector knob must be turned to "OFF." If the knob is allowed to remain in "BATT" position, the batteries will be in use constantly. The volume control does not control the batteries and they are still in operation even though the volume control is turned all the way off.

VOLUME CONTROL: The center knob is the volume control. After the power selector knob has been properly set and the receiver is in operation, rotate the volume control knob to the right to increase volume or to the left to decrease volume.

BATTERY SUPPLIERS

The batteries for this receiver may be purchased from any reliable dealer.

For proper operation this receiver requires two "A" batteries and one "B" battery.

The "A" batteries are size "D" flashlight cells and are made by all battery manufacturers.

The "B" battery is a 67½ volt battery and is made by the following manufacturers:

Eveready	67½ vlt.	#467
Burgess	67½ vlt.	#XX45
General	67½ vlt.	#W45A
Ray-O-Vac	67½ vlt.	#4367

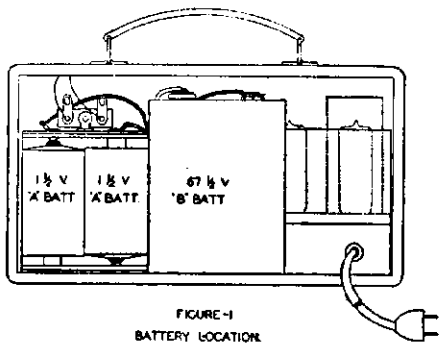

FIGURE-1
BATTERY LOCATION

BATTERY SUPPLIERS

(See Fig. No. 1)

To replace the batteries in this receiver:

Remove the back.

To the left, looking into the rear of the cabinet is the "A" or flashlight battery container. To the right is the "B" or 67½ volt battery.

To replace the "A" batteries, pull the old batteries out of the container. Replace with fresh batteries, making sure the batteries are inserted according to the diagram on the inside of the container.

To replace the "B" battery, disconnect the snap fastener connectors. Replace with a fresh battery and snap the connectors into place. Replace the battery in the cabinet as shown in Fig. No. 1, making sure that the connector end faces the top of the cabinet.

After the batteries have been installed, replace the back, making sure that the two washers in the bottom of the back fit into the slot near the bottom edge of the cabinet.

MODELS 14F-490, 14F-495, 14F-496

ALLIED RADIO CORP.

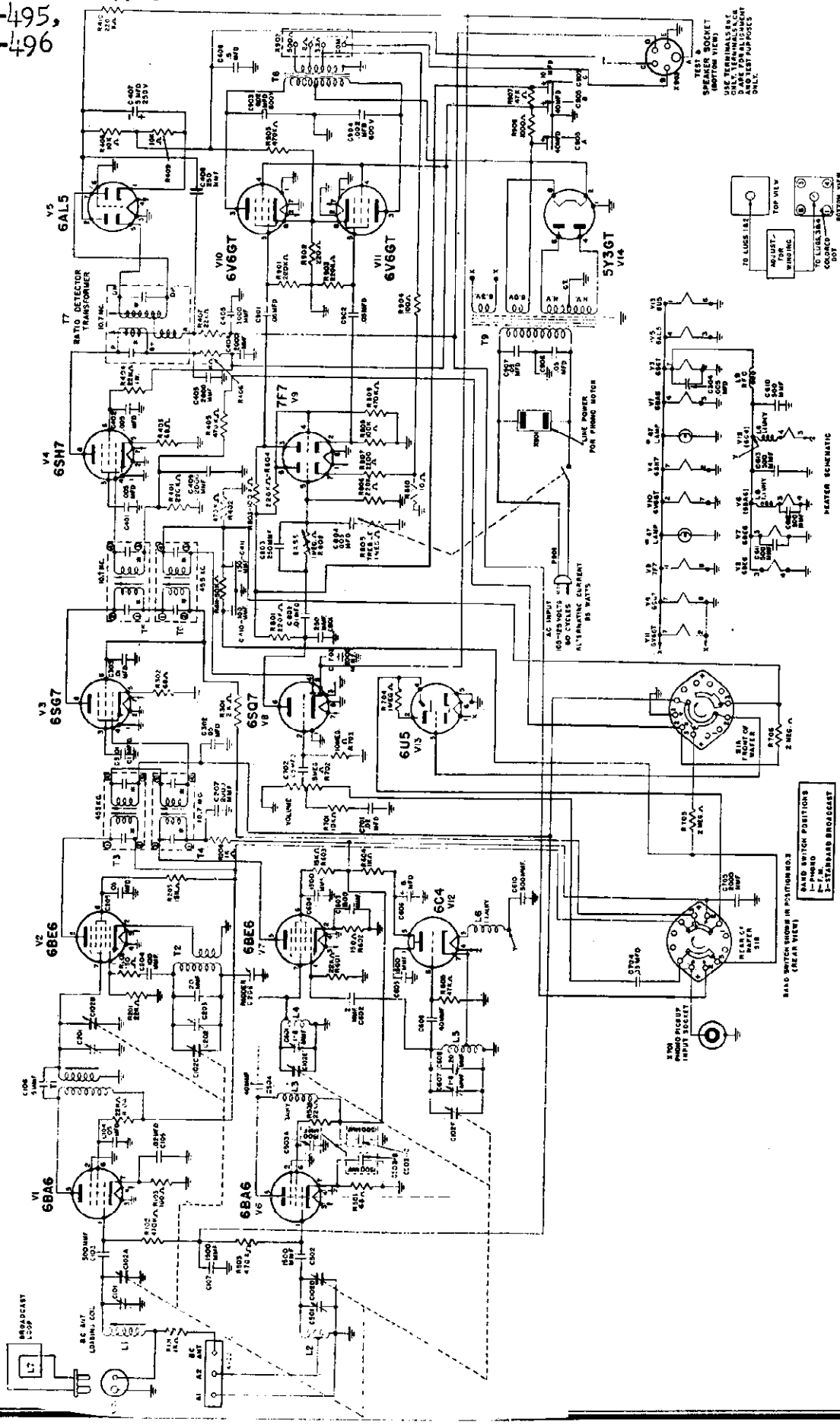

ALLIED RADIO CORP.

MODELS 14F-490, 14F-495, 14F-496

This AM-FM superheterodyne radio receiver is designed to operate on 105-125 volts, 60 cycles AC.

The Tuning Ranges are:

AM 525 kc to 1720 kc
FM 88 mc to 108 mc

Tube Complement:
1 Type 6BA6 FM R.F. Amplifier
1 Type 6BA6 AM R.F. Amplifier
1 Type 6BE6 FM Mixer
1 Type 6BE6 AM Oscillator, converter
1 Type 6C4 FM Oscillator
1 Type 6SG7 I.F. Amplifier
1 Type 6SH7 FM Detector Driver
1 Type 6AL5 FM Ratio Detector
1 Type 6SQ7 AM Detector, A.V.C., 1st Audio Amplifier
1 Type 7F7 2nd Audio Amplifier and Phase Inverter
1 Type 6U5 Electron Ray Tuning Indicator
2 Type 6V6/GT Push Pull Power Amplifiers
1 Type 5Y3/GT Full Wave Rectifier

SERVICE NOTES:

Failure of Receiver to Operate May Be Due To:

1. No current at power socket
2. All tubes not firmly in sockets
3. Band switch in wrong position
4. Output impedance jumper on rear of chassis not connected or missing
5. Low signal strength in the particular location. Change position (rotate) of loop, or "folded dipole" antenna, or use an outside antenna
6. Speaker or loop antenna not plugged into sockets

ALIGNMENT PROCEDURE

Alignment Procedure for AM

Equipment Required:
Broadcast Band Signal Generator
Audio Output Meter

A) 1. Set Band Switch to "AM". Advance Volume Control to maximum, set "BASS" Control at minimum, set Treble Control at maximum.

2. Connect output meter across speaker voice coil.

NOTE: During all of these tests it is necessary to reduce the signal generator output so that the receiver output level is maintained at .5 watt.

B) I. F. ALIGNMENT

1) Set signal generator to 455 kc. Connect a .05 mfd condenser in series with the "high" side of the generator output lead to pin #4 of the 6SG7 (V3) I.F. amplifier tube. Peak bottom and top cores of 2nd I.F. (T-6).

2) Connect signal generator ("high" side in series with a .05 mfd condenser) across C201 on variable condenser, peak bottom and top cores of 1st I.F. Transformer (T-3).

C) R. F. ALIGNMENT

1) Connect signal generator to the AM antenna terminal ("high" side in series with a 50 mmf condenser) and ground. Open variable condenser to minimum capacity, set signal generator to 1720 kc, adjust broadcast oscillator trimmer C202 to tune in signal.

2) Close variable condenser to maximum capacity, set signal generator to 535 kc and adjust broadcast band padder (C206) to tune in signal.

3) Repeat step (1).

4) With variable condenser fully meshed move dial pointer to small white line slightly to left of "55" on broadcast band dial scale.

5) Set signal generator to 1500 kc. Tune in signal with Tuning Control. Peak antenna trimmer (C101) and interstage trimmer (C201).

6) Set signal generator to 600 kc, tune in signal with receiver Tuning Control, peak antenna loading coil (L1). Peak interstage transformer (T1).

7) Repeat step (5).

MODELS 14F-490, 14F-495, 14F-496

ALLIED RADIO CORP.

Alignment Procedure for FM

NOTE: Contacts A, C, and D of the speaker socket at the rear of the chassis have been provided for connection to V.T.-V.M. for the alignment of the FM circuits.

Equipment Required:

High Frequency Signal Generator 87.5 mc to 108.5 mc.
Signal Generator capable of delivering .1 volt at 10.7 mc.
Audio Output Meter.
D.C. Vacuum Tube Voltmeter with zero center scale.
Tuning Wand.

A) RATIO DETECTOR ALIGNMENT

1) Connect V.T.V.M. across speaker socket terminals "A" and "C", (A.V.C. Voltage).

2) Feed 10.7 mc unmodulated R.F. signal into 6SH7 (V4) grid, pin #4, through .01 mfd condenser. This signal should be .1 volt.

3) Adjust primary of ratio detector transformer (T-7) for maximum indication on V.T.V.M.

4) Connect zero centered V.T.V.M. across speaker socket terminals "D" and "C".

5) Adjust secondary of ratio detector transformer (T-7) for zero indication.

6) Tune 10.7 mc Signal Generator higher in frequency (about 200 kc) until maximum voltage reading is obtained on V.T.V.M.

Note this voltage, then tune signal generator lower in frequency until maximum voltage of the opposite polarity is obtained. Note this voltage, then if necessary re-adjust primary of the detector (T-7) until the maximum detector voltages are about equal on either the high or low side of 10.7 mc.

B) FM 10.7 Mc I. F. ALIGNMENT

1) Shunt a 100 ohm carbon resistor across the primary of the detector (T-7) lugs "B+" and "P".

2) Connect output meter across speaker.

3) Set volume controls at maximum, bass at minimum.

4) Connect 10.7 mc signal generator (modulated 30%) to the grid (pin #4) of the 6SG7 (V-3) thruogh a .01 mfd condenser and ground.

5) Peak bottom and top cores of (T-5) 2nd I.F.

6) Connect 10.7 mc signal generator (modulated 30%) across the FM interstage trimmer (C601) and ground.

7) Peak bottom and top cores of 1st I.F. (T-4).

8) Remove 1000 ohm shunting resistor from (T17).

NOTE: during all of these tests it is necessary to reduce the signal generator output so that the receiver output level is maintained at .5 watts.

C) FM OSCILLATOR ALIGNMENT

1) Connect the high frequency signal generator across the FM antenna terminals. The ground side of the generator output cable is attached to terminal "A1", a 270 ohm carbon resistor is connected from the "high" side of the generator cable to terminal "A2".

2) Open variable condenser to minimum capacity; set signal generator to 108.5 mc, tune in signal with FM oscillator trimmer (C607).

3) Close variable condenser to maximum capacity: set signal generator to 87.5 mc. To adjust oscillator to signal it may be necessary to spread or squeeze the FM oscillator coil L5 slightly.

4) Repeat steps (2) and (3) if necessary.

D) FM R. F. ALIGNMENT

NOTE: When making the following tests keep the signal generator output at a level that will not cause A.V.C. voltage to rise above 1.5 volts DC.

1) Connect V.T.V.M. across test socket terminals "A" and "C" (A.V.C. Voltage).

2) FM antenna terminal connections as in "C-1".

3) Set signal generator to 108 mc. Tune in signal with the receiver Tuning Control. Peak FM antenna trimmer (C501), peak FM interstage trimmer (C601) for maximum voltage on V. T. V. M.

4) Set signal generator to 88 mc. Tune in signal with the receiver Tuning Control. Check FM antenna coil L2 and FM interstage coil L4 with a tuning wand; if any adjustment is necessary; spread or squeeze the coil turns slightly for maximum indication on V.T.V.M.

5) Repeat steps (3) and (4) if necessary.

PARTS LIST

Schematic No.	*Description*
C101	Trimmer Cond. (Part of C102)
C102	Variable Cond. Gang.* B6.070.
C103	500mmf ±20%.
C104	.05 mf 400V.
C105	.02 mf 150V.
C106	5mmf ±10%.
C107	1500 mmf ±20%.
C201	Trimmer Cond. (Pa t of C102).
C202	Trimmer Cond. (Part of C102)
C203	20 mmf ±20%.
C204	100 mmf ±20%.
C205	.05 mf 400V.
C206	Padder Cond. 500-1000 mmf*C13518.
C207	2000 mmf ±20%.
C301	.01 mf 400V.
C302	.05 mmf 200V.
C303	.01 mf 400V.
C304	.005 mf 400V.

ALLIED RADIO CORP.

MODELS 14F-490, 14F-495, 14F-496

PARTS LIST

Schematic No.	Description
C401	.005 mf 400V.
C402	.005 mf 400V.
C403	2000 mmf ±20%.
C404	2000 mmf ±20%.
C405	3000 mmf ±20%.
C406	250 mmf ±20%.
C407	5. mf 250V.* Electrolytic Cond.*N25.206
C408	.5 mf 200V
C409	2000 mmf ±20%.
C410	100 mmf ±20%.
C411	100 mmf ±20%.
C501	Trimmer Cond. (Part of C102)
C502	1500 mmf ±20%.
C503	A, B, C, 1500 mmf each*N25.211.
C504	40 mmf ±10% NPO
C601	Trimmer Cond. 1-8 mmf*N20.022.
C602	2 mmf ±10% NPO
C603	1500 mmf ±20%.
C604	1500 mmf ±20%.
C605	1500 mmf ±20%.
C606	8 mf 450V
C607	Trimmer Cond. 1-8 mmf*N20.022
C608	20 mmf ±10% N130* N25.220
C609	40 mmf ±10% NPO.
C610	500 mmf ±20%.
C611	500 mmf ±20%.
C612	500 mmf ±20%.
C613	500 mmf ±20%.
C701	.02 mf 150V.
C702	.05 mf 200V.
C703	2,000 mmf ±20%.
C704	.05 mf 200V.
C705	2,000 mmf ±20%.
C801	250 mmf ±20%.
C802	.01 mf 400V.
C803	250 mmf ±20%.
C804	.005 mf 400V.
C901	.05 mf 400V.
C902	.05 mf 400V.
C903	.002 mf 600V.
C904	.002 mf 600V.
C905	A, B, C, 40 mf x 40 mf x 10 mf Electrolytic Cond. 450V,*N25.205
C906	.05 mf 400V. Bakelite
C907	.05 mf 400V. Bakelite.
R101	1 K ohm ¼W. ±20%.
R102	470 K ohm ¼W. ±20%.
R103	100 ohm ¼W. ±10%.
R104	22 K ohm 1 W. ±10%.
R201	22 K ohm ¼W. ±10%.
R202	150 ohm ¼W. ±10%.
R203	15 K ohm 2W. ±10%.
R204	1 K ohm ½W. ±10%.
R301	2 K ohm ½W. ±10%.
R302	68 ohm ½W. ±10%.
R401	220 K ohm ¼W. ±10%.
R402	470 K ohm ¼W. ±10%.
R403	68 ohm ½W. ±10%.
R404	22 K ohm 1 W. ±10%.
R405	470 K ohm ¼W. ±10%.
R406	1 K ohm ½W. ±20%.
R407	22 K ohm ¼W. ±10%.
R408	10 K ohm ¼W. ±5%.
R409	10 K ohm ¼W. ±5%.
R410	220 K ohm ½W. ±10%.
R411	50 K ohm ¼W. ±20%.
R501	68 ohm ½W. ±10%.
R502	22 K ohm 1 W. ±10%.
R503	470 K ohm ¼W. ±10%.
R601	22 K ohm ¼W. ±10%.
R602	150 ohm ½W. ±10%.
R603	15 K ohm 2W. ±10%.
R604	1 K ohm ½W. ±10%.
R605	47 Kohm ¼W.±10%.
R701	10 K ohm ¼W. ±20%.
R702	.5 Meg ohm volume control*A9.127.
R703	10. Meg ohm ¼W. ±20%.
R704	1. Meg ohm ¼W. ±20%.
R705	2. Meg ohm ¼W. ±20%.
R706	2. Meg ohm ¼W. ±20%.
R801	220 K ohm ¼W. ±20%.
R802	1. Meg ohm potentiometer*A9.129.
R803	100 K ohm ¼W. ±20%.
R804	220 K ohm ¼W. ±220%.
R805	1. Meg ohm potentiometer with S.P.S.T. Switch* A9.128
R806	220 K ohm ¼W. ±20%.
R807	2,200 ohm ¼W. ±10%.
R808	100 K ohm ½W. ±20%.
R809	470 K ohm ¼W. ±20%.
R810	10 ohm ¼W. ±10%.
R901	220 K ohm ¼W. ±20%.
R902	220 ohm 2 Watt ±10%.
R903	220 K ohm ¼W. ±20%.
R904	100 ohm ¼W. ±10%.
R905	470 K ohm ¼W. ±20%.
R906	1000 ohm 15 W. ±10%* N14.087.
R907	47 K ohm ¼W. ±20%.
T1	Interstage R.F. transf., AM*B2.409.
T2	Oscillator Coil, AM* A2.410.
T3	I.F. Transfer. 455KC* N2.414.
T4	I.F.Transf. 10.7MC* N2.415.
T5	I.F. Transf. 10.7MC* N2.415.
T6	I.F. Transf. 455 KC* N2.414.

©John F. Rider

MODELS 14F-490, 14F-495, 14F-496

ALLIED RADIO CORP.

T7	Ratio Det. Transf. 10.7MC* C2.278.	L9	R.F. Choke* N2.439.
T8	Outut Transf.* A15.036.	X101	Socket, AM Loop* X13.852.
T9	Power Transf.* B18.076.	X102	Ant. Terminal Strip* A32.329.
S1	Band Switch* A12.102.	X701	Socket, Phono input* N32.163.
L1	Ant. Loading Coil, AM* B2.423.	X901	Socket, Phono Motor* N32.072.
L2	Ant. Coil, FM* N2.411.	X902	Output taps terminals* A32.312.
L3	R.F. Choke 3uhy* A2.402.	X903	Speaker & test socket* N32.109.
L4	Interstage R.F. Coil, FM* N2.412.	P1	Power Cord and Plug set* N10.049.
L5	Oscillator Coil, FM* N2.413.		
L6	R.F. Choke 1.1uhy* N2.416.	Pilot Lamps, No. 47 6-8V. Bayonet* I12301.	
L7	Loop Ant. AM* C5.027.	FM Folded dipole Ant.* A5.010.	
L8	R.F. Choke 1.1uhy* N2.416.		

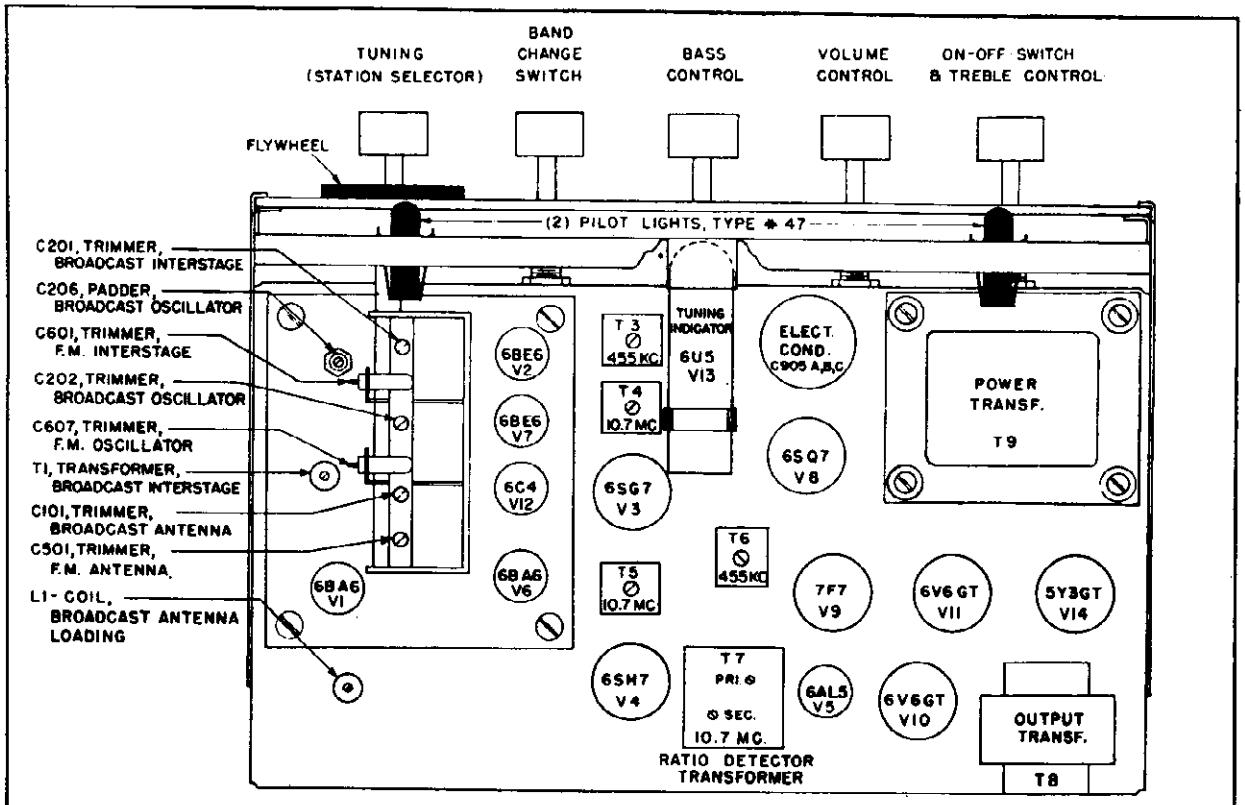

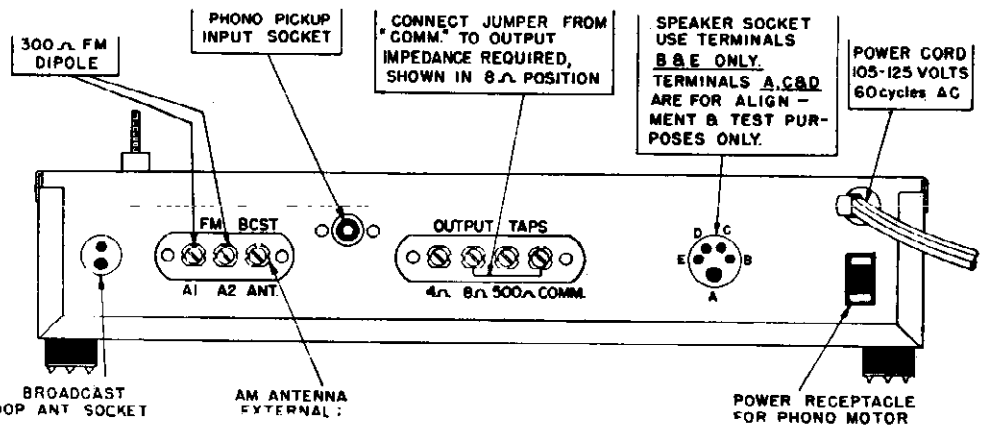

TUBE LAYOUT & PARTS PLACEMENT

© John F. Rider

ALLIED RADIO CORP.

MODELS 19F-492, 19F-497, 19F-498

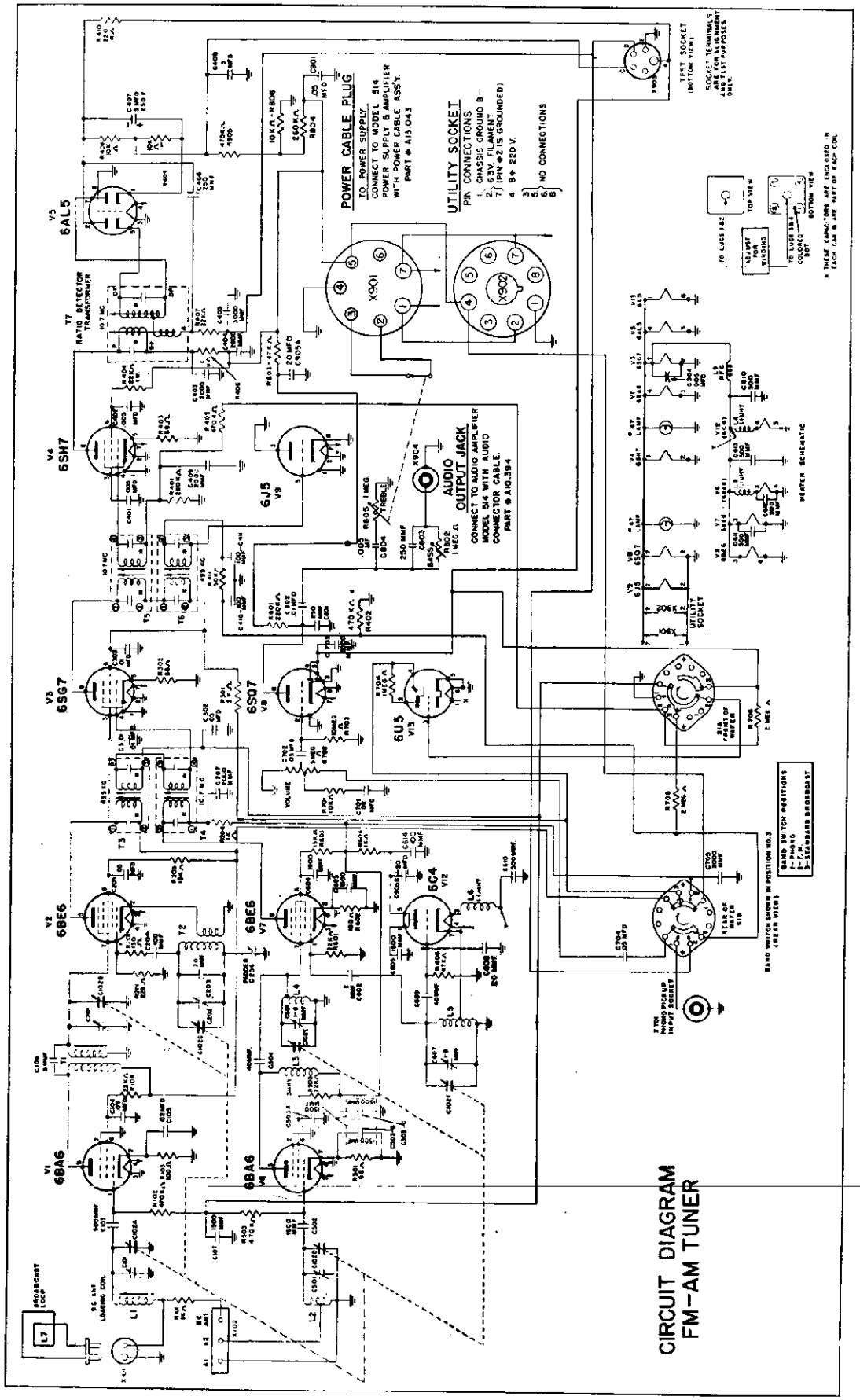

MODELS 19F-492, 19F-497, 19F-498

ALLIED RADIO CORP.

POWER SUPPLY & POWER AMPLIFIER

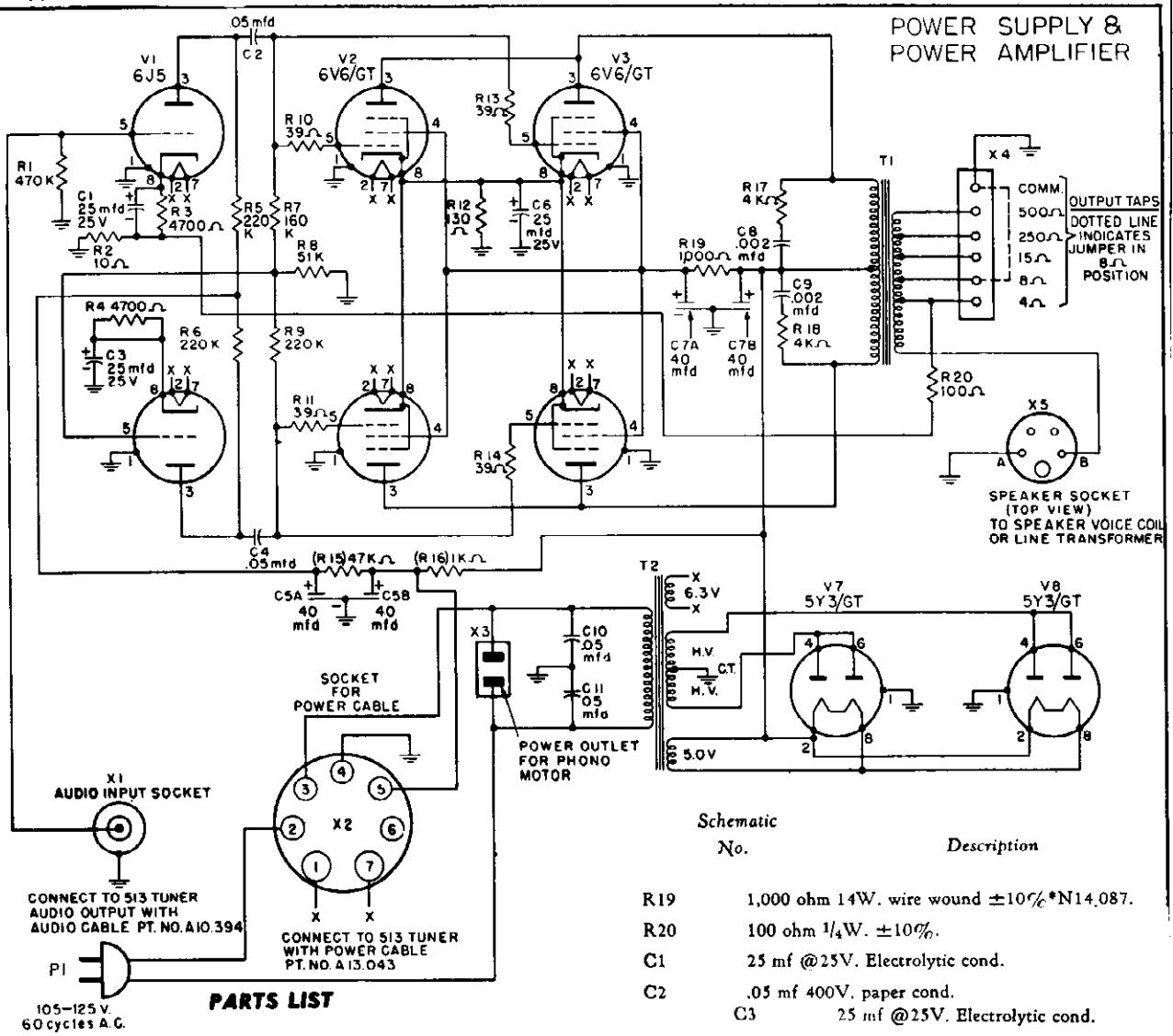

PARTS LIST

Schematic No.	Description
R1	470K ohm 1/4W. ±20%.
R2	10 ohm 1/4W. ±10%.
R3	4,700 ohm 1/4W. ±10%.
R4	4,700 ohm 1/4W. ±20%.
R5	220K ohm 1/4W. ±20%.
R6	220K ohm 1/4W. ±10%.
R7	160K ohm 1/4W. ±10%.
R8	51K ohm 1/4W. ±10%.
R9	220K ohm 1/4W. ±10%.
R10	39 ohm 1/4W. ±20%.
R11	39 ohm 1/4W. ±20%.
R12	130 ohm 5W. ±10% wire wound*N14.089.
R13	39 ohm 1/4W. ±20%.
R14	39 ohm 1/4W. ±20%.
R15	47K ohm 1/4W. ±20%.
R16	1K ohm 14W. wire wound ±10%*N14.087.
R17	4K ohm 10W. wire wound ±10%.
R18	4K ohm 10W. wire wound ±10%.
R19	1,000 ohm 14W. wire wound ±10%*N14.087.
R20	100 ohm 1/4W. ±10%.
C1	25 mf @25V. Electrolytic cond.
C2	.05 mf 400V. paper cond.
C3	25 mf @25V. Electrolytic cond.
C4	.05 mf 400V. paper cond.
C5	A & B 40 mf x 40 mf @450V. Electrolytic cond.*C13.806.
C6	25 mf @25V. Electrolytic cond.
C7	A & B 40 mf x 40 mf @450V. Electrolytic cond.*C13.806.
C8	.002 mf 600V. paper cond.
C9	.002 mf 600V. paper cond.
C10	.05 mf 400V. Bakelite paper cond.
C11	.05 mf 400V. Bakelite paper cond.
T1	Output transformer*B15.037.
T2	Power transformer*B18.077
X1	Coaxial socket audio connector* N32.163.
X2	7 pin power cable socket* N32.294.
X3	Phono motor power receptacle* N32.072.
X4	Output taps terminal board* A32.299.
X5	Speaker socket* N32.109.
P1	Line power cord & plug set* N10.049.
P2	7 wire power cable* A13.043.
P3	Audio connector cable* A10.394.
P4	Speaker plug* N32.230.

ALLIED RADIO CORP.

MODELS 19F-492, 19F-497, 19F-498

this tuner may be used with any audio amplifier or P.A. system if it is powered by an auxiliary power supply capable of delivering 220 Volts @ 60 Ma., well filtered DC and 6.3V. @ 3.5 amps. 60 cycles AC or DC.

The Tuning Ranges are:

AM 535 kc to 1720 kc.

FM 88 mc to 108 mc.

Tube Complement:

1 Type 6BA6 FM R.F. Amplifier.
1 Type 6BA6 AM R.F. Amplifier.
1 Type 6BE6 FM Mixer.
1 Type 6BE6 AM Oscillator, converter.
1 Type 6C4 FM Oscillator.
1 Type 6SG7 I.F. Amplifier.
1 Type 6SH7 FM Detector Driver.
1 Type 6AL5 FM Ratio Detector.
1 Type 6SQ7 A.V.C., 1st Audio Amplifier.
1 Type 6U5 Electron Ray Tuning Indicator.
1 Type 6J5 AM Detector.

SERVICE NOTES:

Failure of Tuner to Operate May Be Due to:

1. Power Supply cable disconnected.
2. "Audio Connector" cable disconnected.
3. Band switch in wrong position.
4. Amplifier power off or gain set too low.
5. Low signal strength in the particular location. Change position (rotate) of loop, or "folded dipole" antenna, or use an outside antenna.
6. All tubes not firmly in sockets.

ALIGNMENT PROCEDURE

Alignment Procedure for AM

Equipment Required:

Broadcast Band Signal Generator

Audio Output Meter

Power Supply and Amplifier

A) 1. Set Band Switch to "AM". Advance Volume Control to maximum, set "BASS" Control at minimum, set Treble Control at maximum.

2. Connect output meter across speaker voice coil.

NOTE: During all of these tests it is necessary to reduce the signal generator output so that the receiver output level is maintained at .5 watt.

B) I.F. ALIGNMENT

1) Set signal generator to 455 kc. Connect a .05 mfd condenser in series with the "high" side of the generator output lead to pin #4 of the 6SG7 (V3) I.F. amplifier tube. Peak bottom and top cores of 2nd I.F. (T-6).

2) Connect signal generator ("high" side in series with a .05 mfd condenser) across C201 on variable condenser, peak bottom and top cores of 1st I.F. Transformer (T-3).

C) R. F. ALIGNMENT

1) Connect signal generator to the AM antenna terminal ("high" side in series with a 50 mmf condenser) and ground. Open variable condenser to minimum capacity, set signal generator to 1720 kc, adjust broadcast oscillator trimmer C202 to tune in signal.

2) Close variable condenser to maximum capacity, set signal generator to 535 kc and adjust broadcast band padder (C206) to tune in signal.

3) Repeat step (1).

4) With variable condenser fully meshed move dial pointer to small white line slightly to left of "55" on broadcast band dial scale.

5) Set signal generator to 1500 kc. Tune in signal with Tuning Control. Peak antenna trimmer (C101) and interstage trimmer (201).

6) Set signal generator to 600 kc, tune in signal with receiver Tuning Control, peak antenna loading coil (L1). Peak interstage transformer (T1).

7) Repeat step (5).

© John F. Rider

MODELS 19F-492, 19F-497, 19F-498

ALLIED RADIO CORP.

Alignment Procedure for FM

NOTE: Contacts A, C, and D of the test socket at the rear of the chassis have been provided for connection to V.T.-V.M. for the alignment of the FM circuits.

Equipment Required:

High Frequency Signal Generator 87.5 mc to 108.5 mc.

Signal Generator capable of delivering .1 volt at 10.7 mc.

Audio Output Meter.

D.C. Vacuum Tube Voltmeter with zero center scale.

Tuning Wand.

A) RATIO DETECTOR ALIGNMENT

1) Connect V.T.V.M. across test socket terminals "A" and "C", (A.V.C. Voltage).

2) Feed 10.7 mc unmodulated R.F. signal into 6SH7 (V4) grid, pin #4, through .01 mfd condenser. This signal should be .1 volt.

3) Adjust primary of ratio detector transformer (T-7) for maximum indication on V.T.V.M.

4) Connect zero centered V.T.V.M. across test socket terminals "D" and "C".

5) Adjust secondary of ratio dectector transformer (T-7) for zero indication.

6) Tune 10.7 mc Signal Generator higher in frequency (about 200 kc) until maximum voltage reading is obtained on V.T.V.M.

Note this voltage, then tune signal generator lower in frequency until maximum voltage of the opposite polarity is obtained. Note this voltage, then if necessary re-adjust primary of the detector (T-7) until the maximum detector voltages are about equal on either the high or low side of 10.7 mc.

B) FM 10.7 Mc I. F. ALIGNMENT

1) Shunt a 1000 ohm carbon resistor across the primary of the detector (T-7) lugs "B+" and "P".

2) Connect output meter across speaker.

3) Set volume control at maximum, bass at minimum.

4) Connect 10.7 mc signal generator (modulated 30%) to the grid (pin #4) of the 6SG7 (V-3) through a .01 mfd condenser and ground.

5) Peak bottom and top cores of (T-5) 2nd I.F.

6) Connect 10.7 mc signal generator (modulated 30%) across the FM interstage trimmer (C601) and ground.

7) Peak bottom and top cores of 1st I.F. (T-4).

8) Remove 1000 ohm shunting resistor from (T-7).

NOTE: During all of these tests it is necessary to reduce the signal generator output so that the receiver output level is maintained at .5 watts.

C) FM OSCILLATOR ALIGNMENT

1) Connect the high frequency signal generator across the FM antenna terminals. The ground side of the generator output cable is attached to terminal "A1", a 270 ohm carbon resistor is connected from the "high" side of the generator cable to terminal "A2".

2) Open variable condenser to minimum capacity; set signal generator to 108.5 mc, tune in signal with FM oscillator trimmer (C607).

3) Close variable condenser to maximum capacity; set signal generator to 87.5 mc. To adjust oscillator to signal it may be necessary to spread or squeeze the FM oscillator coil L5 slightly.

4) Repeat steps (2) and (3) if necessary.

D) FM R. F. ALIGNMENT

NOTE: When making the following tests keep the signal generator output at a level that will not cause A.V.C. voltage to rise above 1.5 volts DC.

1) Connect V.T.V.M. across test socket terminals "A" and "C". (A.V.C. Voltage).

2) FM antenna terminal connections as in "C-1".

3) Set signal generator to 108 mc. Tune in signal with the receiver Tuning Control. Peak FM antenna trimmer (C501), peak FM interstage trimmer (C601) for maximum voltage on V. T. V. M.

4) Set signal generator to 88 mc. Tune in signal with the receiver Tuning Control. Check FM antenna coil L2 and FM interstage coil L4 with a tuing wand; if any adjustment is necessary; spread or squeeze the coil turns slightly for maximum indication on V.T.V.M.

5) Repeat steps (3) and (4) if necessary.

V PARTS LIST

Schematic No.	*Description*
C101	Trimmer Cond. (Part of C102)
C102	Variable Cond. Gang.*B6.070.
C103	500mmf ±20%.
C104	.05 mf 400V.
C105	.02 mf 150V.
C106	5mmf ±10%.
C107	1500 mmf ±20%.
C201	Trimmer Cond. (Part of C102).
C202	Trimmer Cond. (Part of C102).
C203	20 mmf ±20%.
C204	100 mmf ±20%.
C205	.05 mf 400V.
C206	Padder Cond. 500-1000 mmf*CI3518.
C207	2000 mmf ±20%.
C301	.01 mf 400V.

ALLIED RADIO CORP.

MODELS 19F-492, 19F-497, 19F-498

V PARTS LIST

Schematic No.	Description
C302	.05 mf 200V.
C303	.01 mf 400V.
C304	.005 mf 400V.
C401	.005 mf 400V.
C402	.005 mf 400V.
C403	2000 mmf ±20%.
C404	2000 mmf ±20%.
C405	3000 mmf ±20%.
C406	250 mmf ±20%.
C407	5. mf 250V. Electrolytic Cond. *N25.206.
C408	.5 mf 200V.
C409	2000 mmf ±20%.
C410	100 mmf ±20%.
C411	100 mmf ±20%.
C501	Trimmer Cond. (Part of C102).
C502	1500 mmf ±20%.
C503	A, B, C, 1500 mmf each*N25.211.
C504	40 mmf ±10% NPO.
C601	Trimmer Cond. 1-8 mmf*N20.022.
C602	2 mmf ±10% NPO.
C603	1500 mmf ±20%.
C604	1500 mmf ±20%.
C605	1500 mmf ±20%.
C607	Trimmer Cond. 1-8 mmf*N20.022.
C608	20 mmf ±10% N130*N25.220.
C609	40 mmf ±10% NPO.
C610	500 mmf ±20%.
C611	500 mmf ±20%.
C612	500 mmf ±20%.
C613	500 mmf ±20%.
C614	100 mmf 400V. ±20%.
C701	.02 mf 150V.
C702	.05 mf 200V.
C703	2,000 mmf ±20%.
C704	.05 mf 200V.
C705	2,000 mmf ±20%.
C801	250 mmf ±20%.
C802	.01 mf 400V.
C803	250 mmf ±20%.
C804	.005 mf 400V.
C901	.05 mf 400V.
C902	.05 mf 400V.
C905	A & B 20 mf x 20 mf Electrolytic Cond. 450V. *N25.225.
R101	1 K ohm 1/4W. ±20%.
R102	470 K ohm 1/4W. ±20%.
R103	100 ohm 1/4W. ±10%.
R104	22 K ohm 1 W. ±10%.
R201	22 K ohm 1/4W. ±10%.
R202	150 ohm 1/4W.±10%.
R203	15 K ohm 2W. ±10%.
R204	1 K ohm ½W. ±10%.

Schematic No.	Description
R301	2 K ohm ½W. ±10%.
R302	68 ohm ½W. ±10%.
R401	220 K ohm 1/4W. ±10%.
R402	470 K ohm 1/4W. ±10%.
R403	68 ohm ½W. ±10%.
R404	22 K ohm 1 W. ±10%.
R405	470 K ohm 1/4W. ±10%.
R406	1 K ohm ½W. ±20%.
R407	22 K ohm 1/4W. ±10%.
R408	10 K ohm 1/4W. ±5%.
R409	10 K ohm 1/4W. ±5%.
R410	220 K ohm 1/4W. ±10%.
R411	50 K ohm 1/4W. ±20%.
R501	68 ohm ½W. ±10%.
R502	22 K ohm 1 W. ±10%.
R503	470 K ohm 1/4W. ±10%.
R601	22 K ohm 1/4W. ±10%.
R602	150 ohm ½W. ±10%.
R603	15 K ohm 2W. ±10%.
R604	1 K ohm ½W. ±10%.
R605	47 K ohm 1/4W. ±10%.
R701	10 K ohm 1/4W. ±20%.
R702	.5 Meg ohm volume control*A9.127.
R703	10. Meg ohm 1/4W. ±20%.
R704	1. Meg ohm 1/4W. ±20%.
R705	2. Meg ohm 1/4W. ±20%.
R706	2. Meg ohm 1/4W. ±20%.
R801	220 K ohm 1/4W. ±20%.
R802	1. Meg ohm potentiometer*A9.129.
R803	47 K ohm 1/4W. ±20%.
R804	260 K ohm 1 W. ±20%.
R805	1. Meg ohm potentiometer with S.P.S.T. Switch* A9.128
R806	10 K ohm 1W. ±10%.
R905	470 K ohm 1/4W. ±20%.
T1	Interstage R.F. transf., AM*B2.409.
T2	Oscillator Coil, AM*A2.410.
T3	I.F. Transf. 455KC*N2.414.
T4	I.F. Transf. 10.7MC*N2.415.
T5	I.F. Transf. 10.7MC*N2.415.
T6	I.F. Transf. 455 KC*N2.414.
T7	Ratio Det. Transf. 10.7MC*C2.278.
S1	Band Switch*A12.102.
L1	Ant. Loading Coil, AM*B2.423.
L2	Ant. Coil, FM*N2.411.
L3	R.F. Choke 3uhy*A2.402.
L4	Interstage R.F. Coil, FM*N2.412.
L5	Oscillator Coil, FM*N2.413.
L6	R.F. Choke 1.1uhy* N2.416.
L7	Loop Ant. AM* C5.027.
L8	R.F. Choke 1.1uhy* N2.416.

MODELS 19F-492, 19F-497, 19F-498

ALLIED RADIO CORP.

Schematic No. — *Description*

L9	R.F. Choke* N2.439.
X101	Socket, AM Loop* X13.852.
X102	Ant. Terminal Strip* A32.329.
X701	Socket, Phono input* N32.163.
X901	Plug, recessed, 7 Pin* A32.297.
X902	Socket, Octal* X13821
X903	Test Socket* N32.109.
*X904	Socket, Audio output* N32.163.
P1	Plug, octal utility* N32.300.
Pilot Lamps, No. 47 6-8V. Bayonet* I12301.	
FM Folded dipole Ant.* A5.010.	

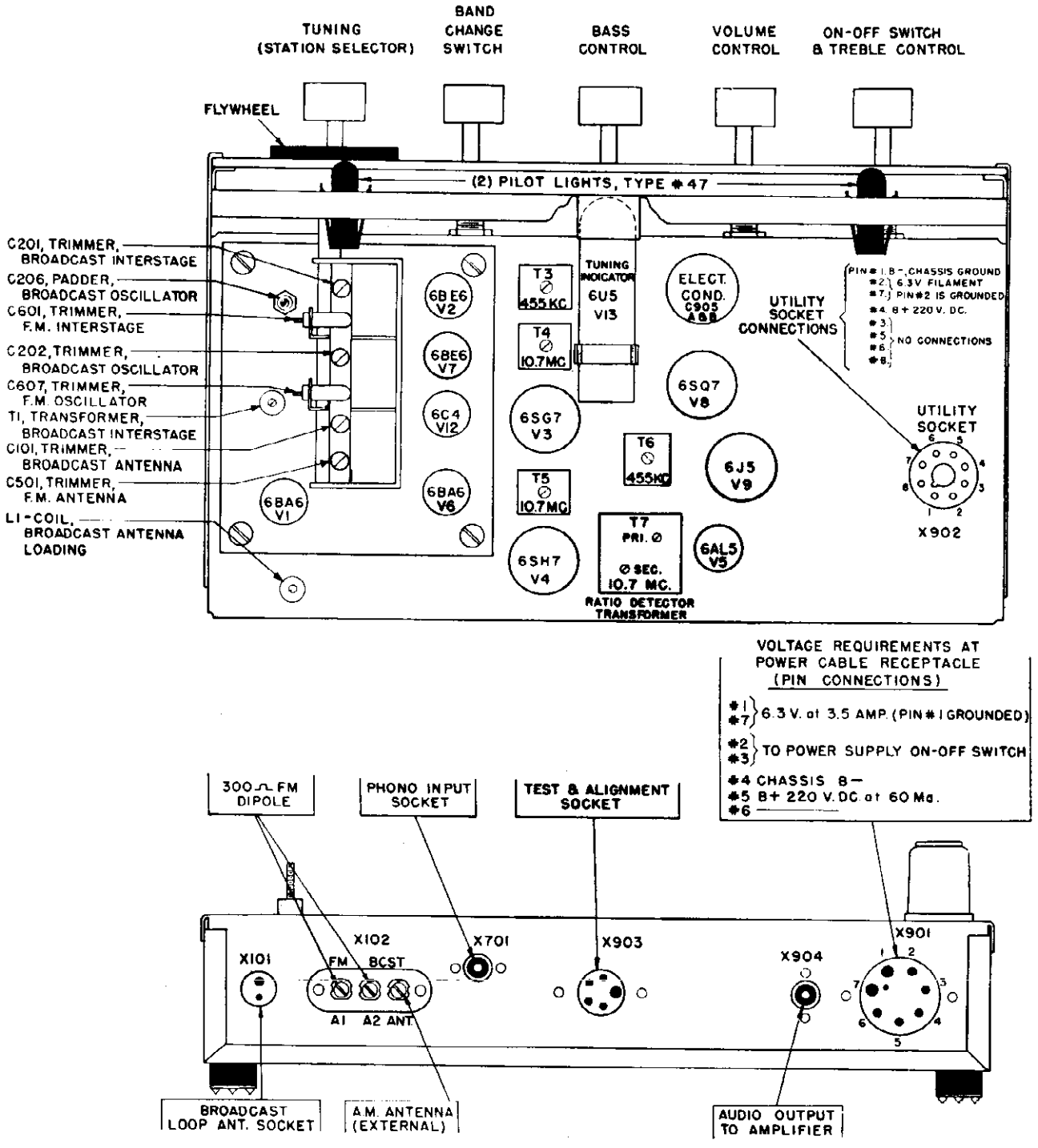

TUBE & PARTS LAYOUT
F.M. A.M. TUNER

ALLIED RADIO CORP.

MODELS 19F-492, 19F-497, 19F-498

TUBE COMPLEMENT:

(4) 6V6/GT push-pull parallel power amplifier.
(1) 6J5 Audio votage amplifier.
(1) 6J5 Audio voltage amplifier.
(2) 5Y3/GT Rectifiers.

To be operated on 105-125 Volts 60 cycles AC

Power Consumption Approx. 150 Watts

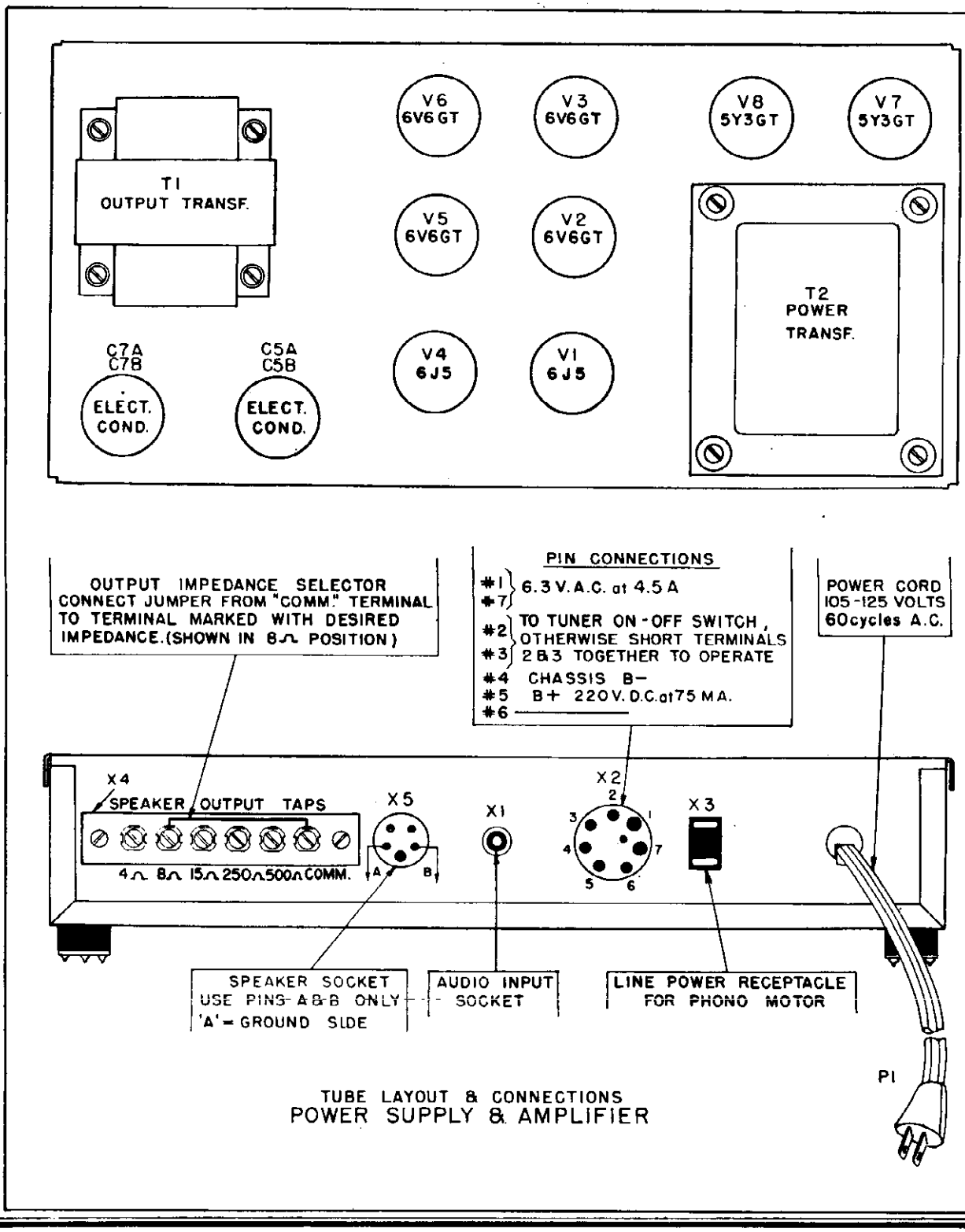

TUBE LAYOUT & CONNECTIONS
POWER SUPPLY & AMPLIFIER

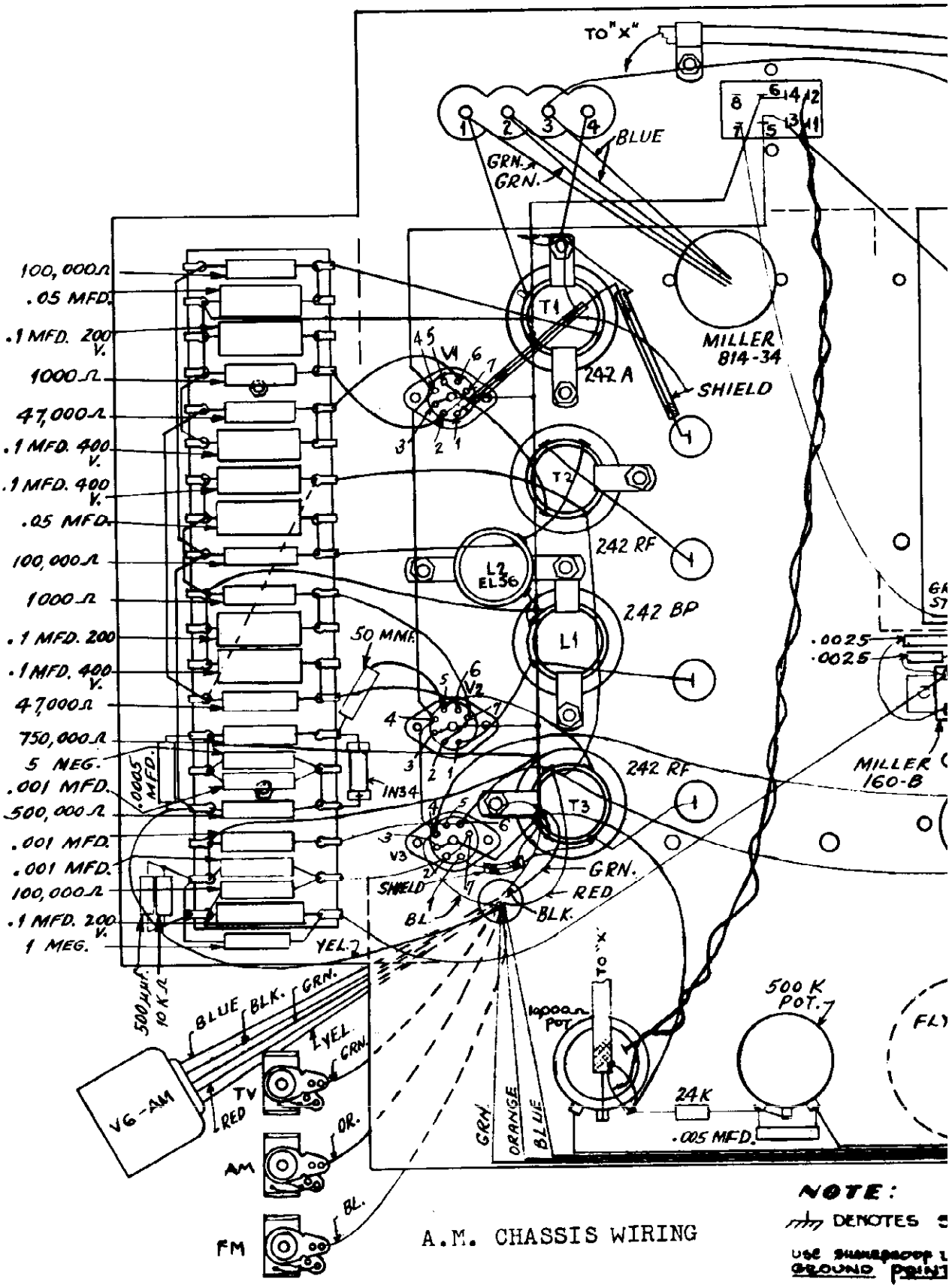

A.M. CHASSIS WIRING

NOTE:

DENOTES

USE SHIELDED

GROUND

©John F. Rider

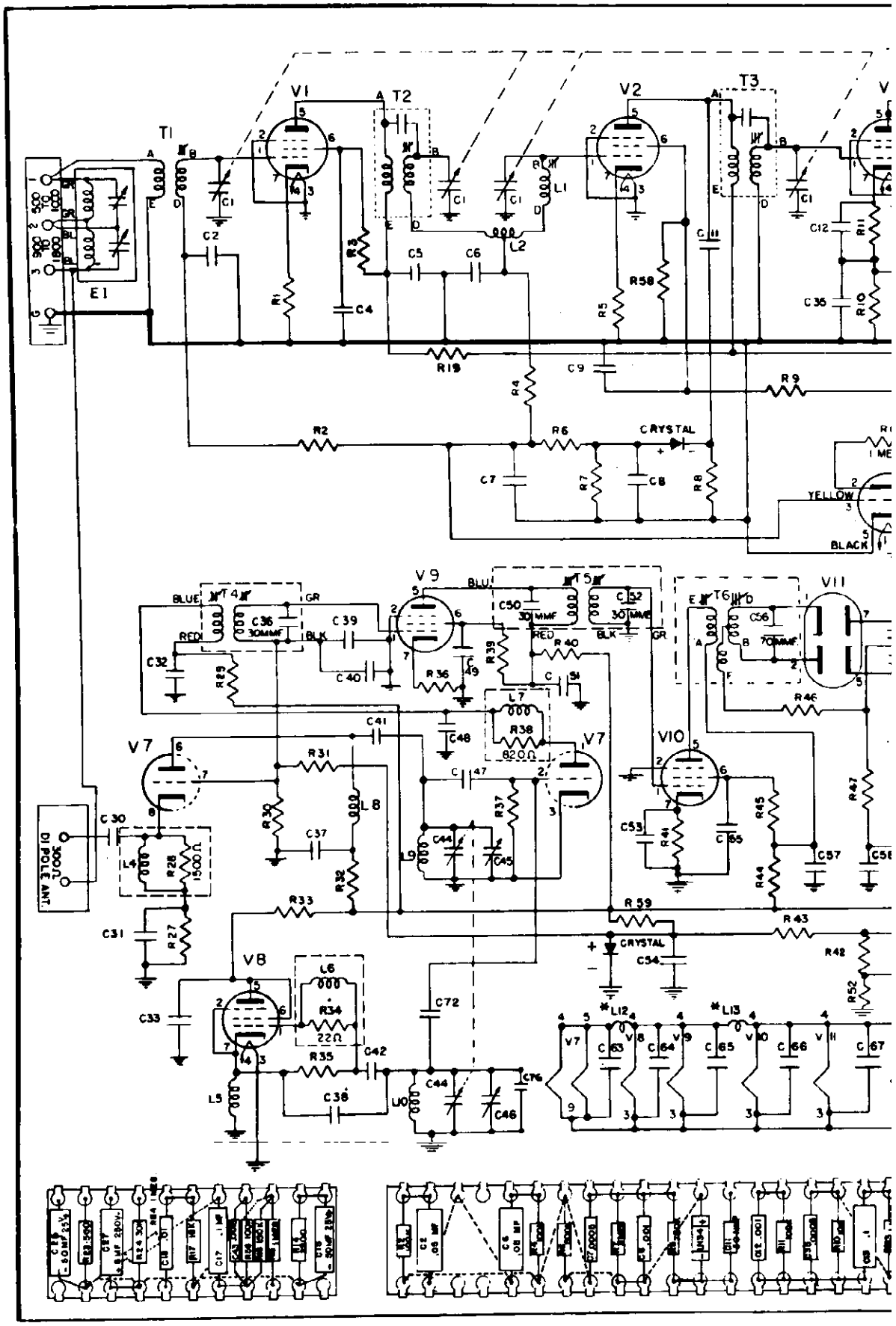
V1
T1
T2
V2
T3
E1
C1
C2
R1
C4
R3
C5
C6
L1
L2
R5
R58
C11
C12
R11
C35
R10
R19
C9
R9
R4
R2
R6
CRYSTAL
C7
R7
C8
R8
YELLOW
BLACK
V9
T4
T5
T6
V11
C36
30MMF
C39
C40
C32
R29
R36
C49
C50
30 MMF
C52
30 MMF
R39
R40
C51
C56
70MMF
R46
L7
R38
820Ω
C41
C48
V7
R31
L8
R30
C37
C47
R37
C44
C45
L9
V10
C53
R41
C55
R45
R44
C57
R47
C30
300Ω
DI POLE ANT.
L4
R28
1500Ω
R32
R33
R59
R43
C31
R27
CRYSTAL
C54
R42
R52
V8
L6
R34
22Ω
C33
C72
R35
C42
C38
L5
L10
C44
C46
C76
*L12
*L13
C63
C64
C65
C66
C67

©John F. Rider

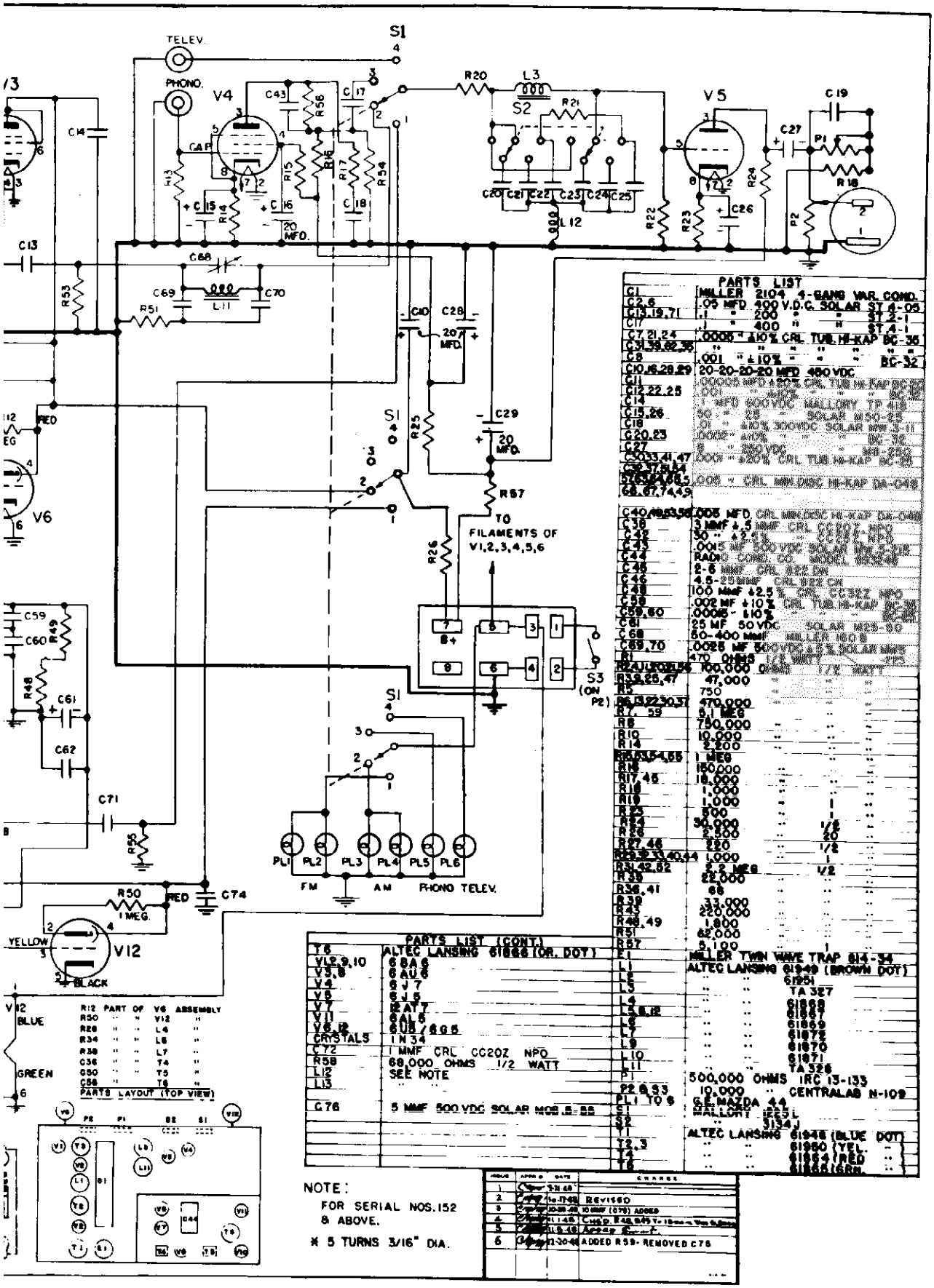

PARTS LIST	
C1	MILLER 2104 4-GANG VAR. COND.
C2,6	.05 MFD 400 V.D.C. SOLAR ST 4-05
C13,19,71	.1 " 200 " " ST 2-1
C17	.1 " 400 " " ST 4-1
C7,21,24	.0005 " ±10% CRL TUB.HI-KAP BC-35
C31,39,62,35	" " " " " "
C8	.001 " ±10% " " " BC-32
C10,16,28,29	20-20-20-20 MFD 450 VDC
C11	.00005 MFD ±20% CRL TUB HI-KAP BC-30
C12,22,25	.001 " " " " " BC-32
C14	.1 MFD 600 VDC MALLORY TP 418
C15,26	50 " 25 " SOLAR M50-25
C18	.01 " ±10% 300 VDC SOLAR MM 3-11
C20,23	.0002 " ±10% " " " BC-36
C27	25 " 350 VDC " MP-350
C30,33,41,47	.0001 " ±20% CRL TUB HI-KAP BC-30
C34,37,64	
C36,40,65,66,5	.005 " CRL MM DISC HI-KAP DA-048
67,68,74,49	
C40,48,53,56	.005 MFD CRL MM DISC HI-KAP DA-048
C38	3 MMF ±.5 MMF CRL CC20T NPO
C42	50 " ±5 % " " CC20Z NPO
C43	.005 MF 500 VDC SOLAR MM 5-51
C44	RADIO COND. CO. MODEL 0035-M
C45	2-8 MMF CRL 822 DM
C46	4.5-25 MMF CRL MICA CN
C48	100 MMF ±2.5 % CRL CC33Z NPO
C50	.002 MF ±10% CRL TUB.HI-KAP BC-38
C59,60	.00045 " ±10% " " " BC-38
C61	25 MF 50 VDC SOLAR M25-50
C68	50-400 MMF MILLER M50 B
C69,70	.0025 MF 500 VDC ±5 % SOLAR MM5
R1	470 OHMS 1/2 WATT
R2,4,11,20,58	100,000 OHMS 1/2 WATT
R3,9,25,47	47,000 " " "
R5	750 " " "
R8,13,22,30,37	470,000 " " "
R7, 59	0.1 MEG " " "
R6	750,000 " " "
R10	10,000 " " "
R14	2,200 " " "
R15,35,54,55	1 MEG " " "
R16	150,000 " " "
R17,45	18,000 " " "
R18	1,000 " " "
R19	1,000 " 1 " "
R23	500 " 1 " "
R24	30,000 " 1/2 " "
R26	2,500 " 20 " "
R27,48	220 " 1/2 " "
R29,32,33,40,44	1,000 " 1 " "
R31,42,52	0.2 MEG " 1/2 " "
R38	22,000 " " " "
R36,41	68 " " " "
R39	33,000 " " " "
R43	220,000 " " " "
R46,49	1,800 " " " "
R51	62,000 " " " "
R57	9,100 " 1 " "
P1	MILLER TWIN WAVE TRAP 814-34
L1	ALTEC LANSING 61949 (BROWN DOT)
L2	" " 61951
L3	" " TA 327
L4	" " 61868
L5,6,12	" " 61867
L8	" " 61869
L7	" " 61872
L9	" " 61870
L10	" " 61871
L11	" " TA 326
P1	500,000 OHMS IRC 13-133
P2,3,33	10,000 " CENTRALAB N-109
PL1 TO 6	G.E. MAZDA 44
S1	MALLORY 3225 J
S2	" 3134 J
S3	ALTEC LANSING 61948 (BLUE DOT)
T2,3	" " 61950 (YEL. ")
T4	" " 61864 (RED ")
T5	" " 61865 (GRN. ")

PARTS LIST (CONT.)	
T6	ALTEC LANSING 61866 (OR. DOT)
V1,2,9,10	6BA6
V3,8	6AU6
V4	6J7
V5	6J5
V7	12AT7
V11	6AL5
V6,12	6U5/6G5
CRYSTALS	1N34
C72	1 MMF CRL CC20Z NPO
R58	68,000 OHMS 1/2 WATT
L12	SEE NOTE
L13	" "
C76	5 MMF 500 VDC SOLAR MOS .5-55

R12	PART OF	V6	ASSEMBLY
R50	"	V12	"
R28	"	L4	"
R34	"	L6	"
R38	"	L7	"
C36	"	T4	"
C50	"	T5	"
C58	"	T6	"

PARTS LAYOUT (TOP VIEW)

NOTE:
FOR SERIAL NOS. 152 & ABOVE.
* 5 TURNS 3/16" DIA.

NO.	APPD.	DATE	CHANGE
1		3-31-48	
2		10-17-48	REVISED
3		10-30-48	10 MMF (C76) ADDED
4		11-1-48	Chgd. R48,R49 to 1800 ohms
5		11-5-48	Approved
6		11-30-48	ADDED R59- REMOVED C76

NSING CORP.

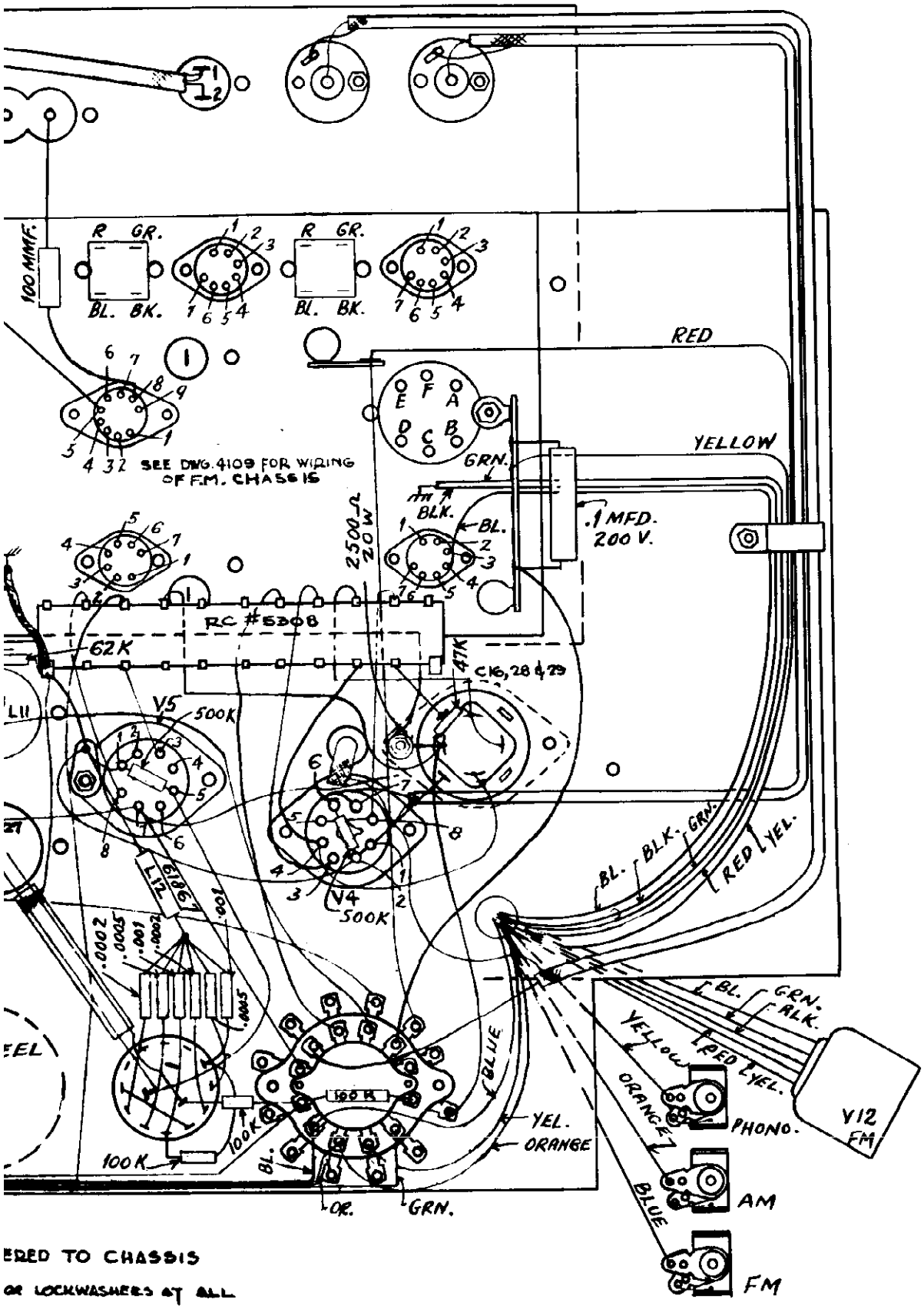

ERED TO CHASSIS

OR LOCKWASHERS AT ALL

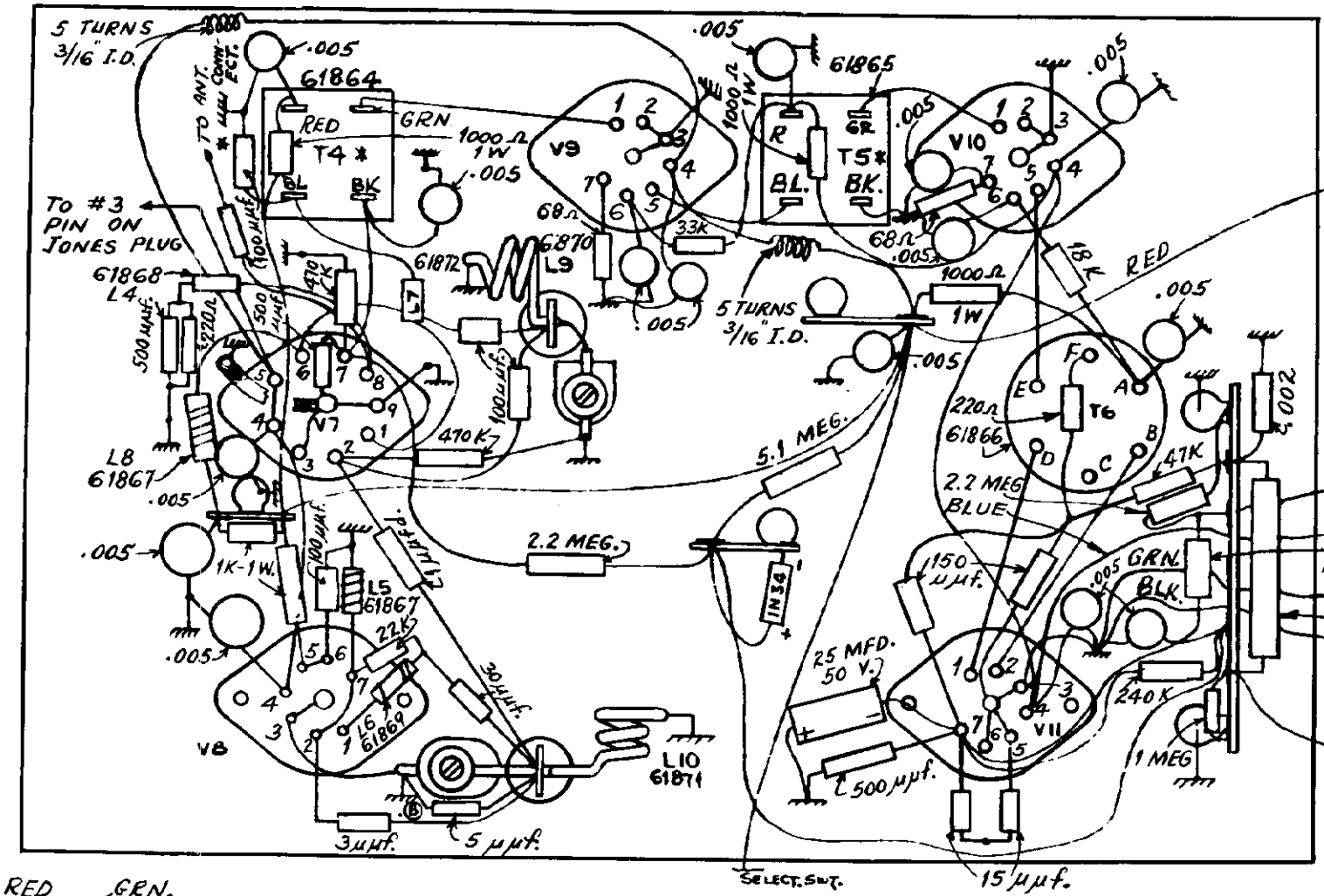

F.M. CHASSIS WIRING

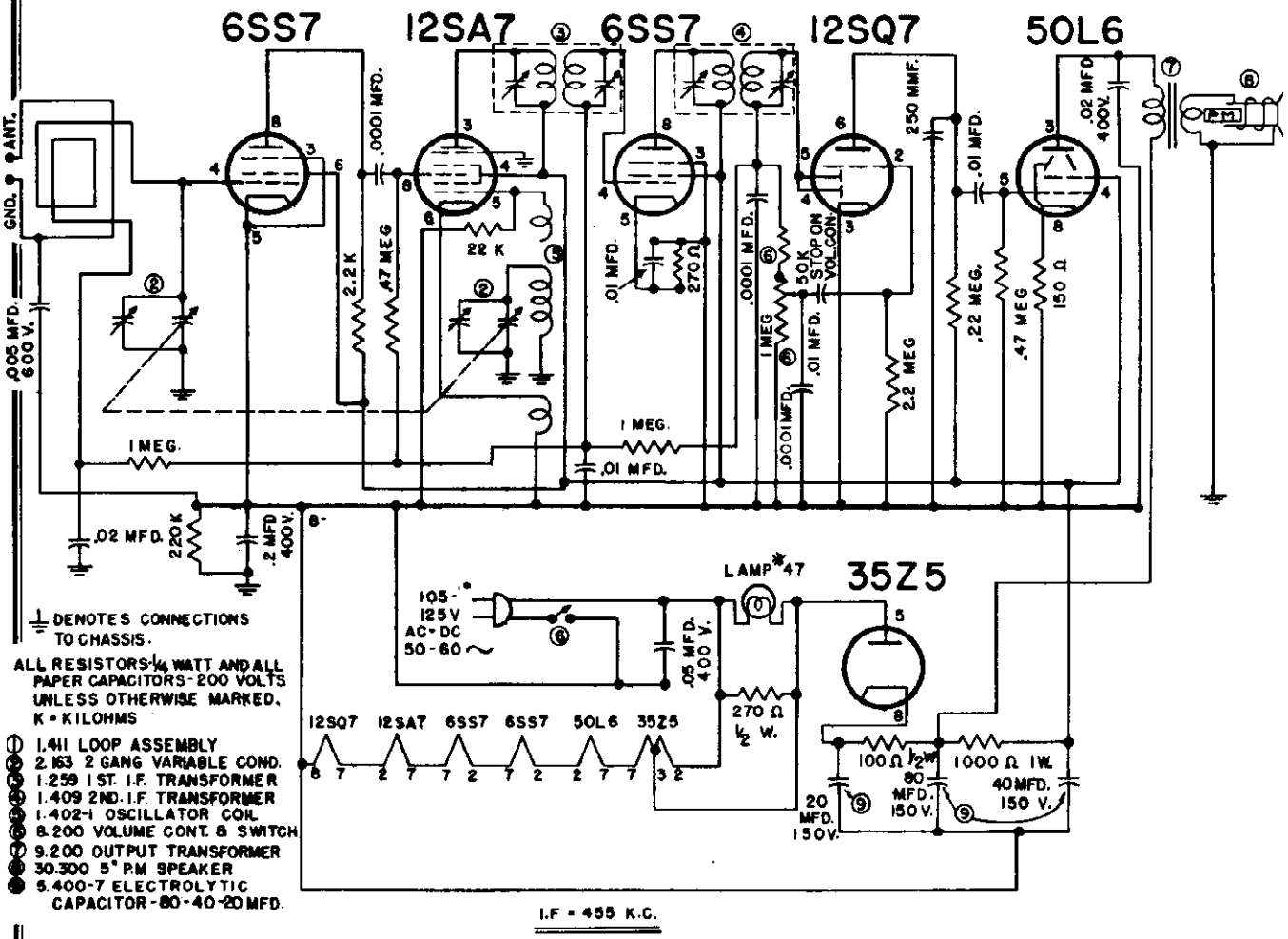

LINE VOLTAGE: This receiver is designed for operation on 105-125 Volts, 50-60 Cycles, either Alternating or Direct Current (AC-DC)

POWER CONSUMPTION: 30 Watts.

UNDERWRITER'S LABORATORIES LISTING: This receiver is listed under the Re-examination Service of the Underwriter's Laboratories as indicated by the label attached to the cabinet.

TUNING RANGE: Broadcast: 540 to 1650 Kilocycles (180 to 555 meters).

DIAL: The Dial Scale is calibrated in Kilocycles.

TUBES: The tubes used, and their functions, are as follows:

6SS7 R. F. Amplifier	12SQ7 Detector, Avc and Audio Amp.
12SA7 Converter	50L6GT Beam Power Amplifier
6SS7 I. F. Amplifier	35Z5GT Rectifier

MINOR REASONS FOR FAILURE TO FUNCTION: Defective tubes; defective Volume Control and On-Off Switch; line cord reversed on D. C.; defective line cord plug; or tubes in wrong socket.

ALIGNMENT: Should it become necessary at any time to check the alignment of this receiver, proceed as follows:

(1) Set the Signal Generator to 455 KC and connect to the grid of the 6SS7 R. F. Amplifier, or to the Stator Lug on the rear section of the Variable Capacitor. Connect the Signal Generator Ground Lead to a "–B" point underneath the chassis. Connect a suitable output meter across the Speaker Voice Coil Connections. First turn the Volume Control to the maximum position. Turn the Variable Capacitor to the extreme clockwise position.

(2) Adjust the trimmers located at the top of the first and second I. F. Transformers for maximum output as indicated on the Output Meter.

(3) Loosely couple the Signal Generator lead to the Loop and set to 1650 KC.

(4) With the Variable Capacitor set at the extreme clockwise position, tune in the 1650 KC signal by means of the Oscillator Trimmer on the Variable Capacitor (front section).

(5) Set the Signal Generator to 1500 KC and turn the Tuning Control so that this frequency is indicated on the dial. Adjust the Antenna Trimmer on the Variable Capacitor (rear section) for maximum output. No other adjustments are necessary.

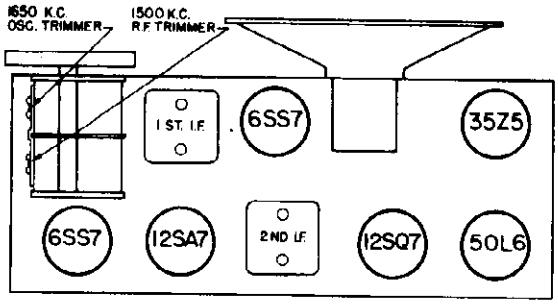

TRIMMER AND TUBE LOCATION DIAGRAM

INSTALLATION: The Model 126 is complete in every detail for efficient and immediate operation. A self-contained Loop Antenna is included, which will give excellent results in most locations. Due to the directional properties of the Loop, it may be advantageous to turn the receiver to the left or right in noisy locations for maximum signal and minimum noise. A best position for reception can always be found. In unfavorable locations where distant reception is required, a well-constructed outside antenna may be used, and connected to the *green* wire labeled "Ant." at the rear of the Loop. A water or gas pipe may be used as a ground and connected to the *black* wire labeled "Gnd." at the rear of the Loop.

CAUTION: If this receiver is operated on D. C. (Direct Current), and you cannot obtain reception although the tubes are lighted, reverse the line cord plug to obtain the correct polarity. Objectionable hum or noise may also be eliminated on A. C. operation by reversing the line cord plug.

AUDAR INC.

MODEL PR-6

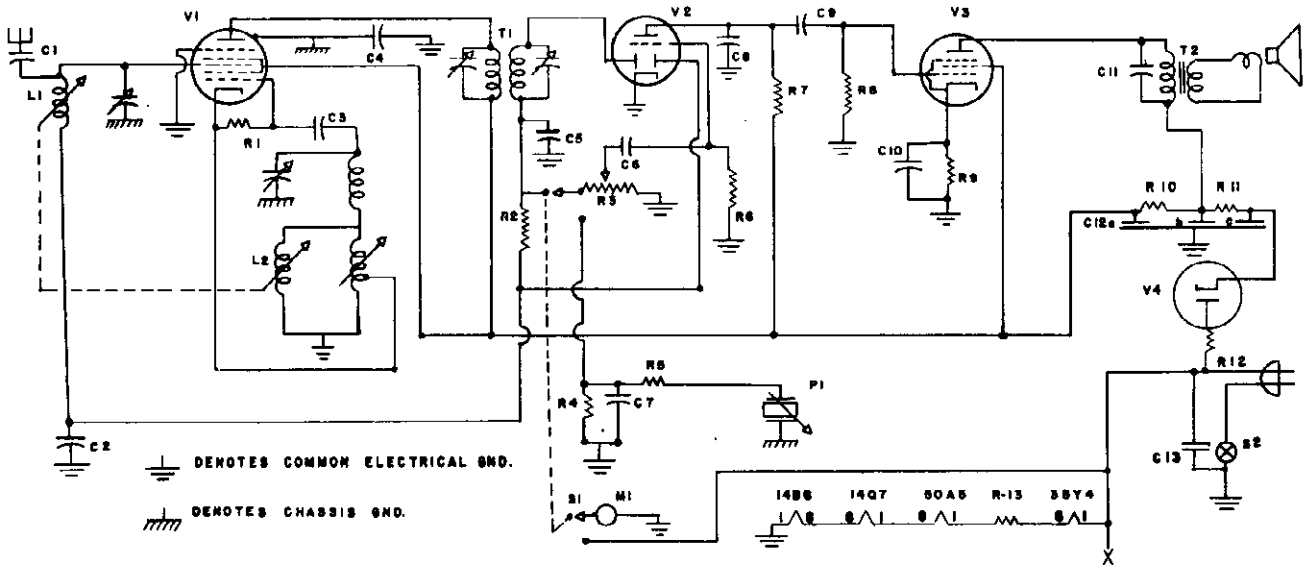

CIRCUIT DES.	PART NO.	DESCRIPTION
C1—C3	CM-45-11	COND. 50MMF 500V MICA
C2—C13	CP-18-9	" .05MFD. 400V PAPER
C4	CP-01-9	" .1 MFD " "
C5—C8	CM-325-11	" 250MMF. 500V MICA
C6—C9	CP-11-9	" .01 MFD. 400V PAPER
C7	CP-21-9	" .001 " " "
C10	CE-E-1	" 10 MFD. 25V ELECTROLYTIC
C11	CP-12-9	" .02 " 400V PAPER
C12a-b-c	CE-LHH-4	" a 20- b 20- c 50 150V ELECTROLYTIC
L1—L2		TUNER, PERMEABILITY ASSEMBLY
M1	MP-200 MP-201	MOTOR, PHONO
P1	PC-301M	PICKUP, CRYSTAL
R1	RC-103-C	RES. CARBON-10K OHM 1/2 WATT
R2	RC-225-C	" " 2.2 MEGOHM 1/2 WATT
R3	RVC-16-S	VOLUME CONTROL, 1 MEGOHM, WITH S2
R4—R7	RC-224-C	RES. CARBON 220K OHM 1/2 WATT
R5	RC-205-C	" " 2 MEGOHM " "
R6	RC-475-C	" " 4.7 MEGOHM " "
R8	RC-474-C	" " 470K OHM " "

CIRCUIT DES.	PART NO	DESCRIPTION
R9	RC-151-D	RES. CARBON, 150 OHM, 1 WATT
R10	RC-102-C	" " 1000 " 1/2 WATT
R11	RC-221-D	" " 220 OHM 1 WATT
R12	RW-330-C	" " OR WIRE 33 OHM 1/2 WATT
R13	RW-50-H	RES. WIRE 50 OHM 5 WATT
S1		SWITCH, WAFER 2 POS.—2 POLE
S2		SWITCH ON VOLUME CONTROL, R3
T1	TIF-1	TRANSFORMER, IF, 455 KC
T2	TOS-20-3	TRANSFORMER, OUTPUT
V1		TUBE, 1407 OR 12SA7GT
V2		TUBE, 1486 OR 12SQ7GT
V3		TUBE, 50A5 OR 50L6 GT
V4		TUBE, 35Y4 OR 35Z5

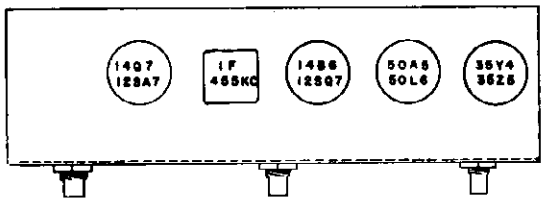

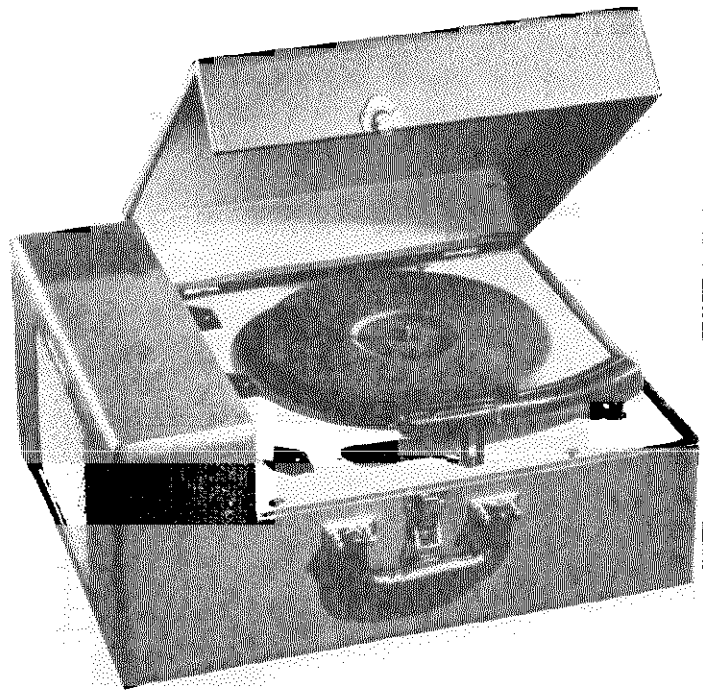

FILEMENT CONNECTIONS FOR OCTAL TUBES

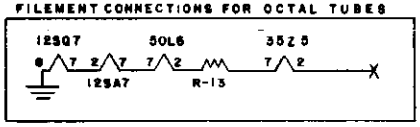

MODEL PR-6

AUDAR INC.

ALIGNMENT PROCEDURE

I.F. ALIGNMENT:

1. The following adjustments have been made at the factory and should not be changed unless necessary, and then only by an authorized service man.

2. Set the signal generator to 455 kilocycles.

3. Connect an output meter so that the output can be determined.

4. Connect the high side of the signal generator output to the antenna lead of the tuner. The ground side of the signal generator output is connected to the common electrical ground through a 0.01 mfd. condenser.

5. Turn the volume control on full and turn the dial drive shaft so that the slugs of the tuner unit are all the way out (high frequency end).

6. Adjust the two I.F. trimmers, tuning each carefully to get the maximum deflection of the output meter.

7. Repeat both adjustments since the adjustment of each I.F. trimmer may effect the other to a certain extent.

OSCILLATOR AND R.F. ALIGNMENT:

1. Connect the high side of the signal generator output to the insulation covering the antenna wire and not the wire itself.

2. Stretch antenna out to its full length.

3. Set the signal generator to 1650 kilocycles. Make sure that the slugs of the tuner are all the way out against the stop. Adjust the oscillator and antenna trimmers for maximum reading on the output meter.

4. Set the signal generator to 540 kilocycles. Turn the dial drive shaft until the slugs of the tuner are all the way in. Adjust the tracking core (screwdriver adjusted slug) to give maximum reading on the output meter.

5. Readjust as in steps 3 and 4.

6. Set signal generator to 1400 kilocycles. Turn the dial drive shaft until the 1400 kilocycle note is heard. Adjust the antenna core (core nearest the trimmers), by turning in or out with fingers, to give maximum reading on the output meter.

VOLTAGE TABLE

TYPE TUBE	1	2	3	4	5	6	7	8
1907	12.5 A.C.	92	92	-12	0	-1.05	0	25 A.C
1486	0	65	-.7	——	-.9	-1.05	0	12.5 AC
50A5	74 A.C.	104	92	——	——	0	6.5	25 A.C.
35Y4	117 A.C.	112.5 A.C.	112	——	——	——	125	82 A.C.
12SA7	——	12.5 A	92	92	-12	0	25 AC	-1.05
12SQ7	——	-.7	0	-.7	-1.05	65	12.5 A.C.	0
50L6	——	74 A.C.	104	92	0	——	25 A.C.	6.5
35Z5	——	117 A.C.	——	112	112.5 AC	——	82 A.C.	125

NOTE: USE HIGH RESISTANCE VOLTMETER 20,000 OHMS PER VOLT D.C. AND 1,000 OHMS PER VOLT A.C. READINGS MARKED WITH AN ASTERISK OBTAINED WITH A VACUUM TUBE VOLTMETER ALL READINGS TAKEN UNDER NO SIGNAL CONDITION.

AUTOMATIC RADIO MFG. CO., INC.

MODEL B-44
Bike Radio

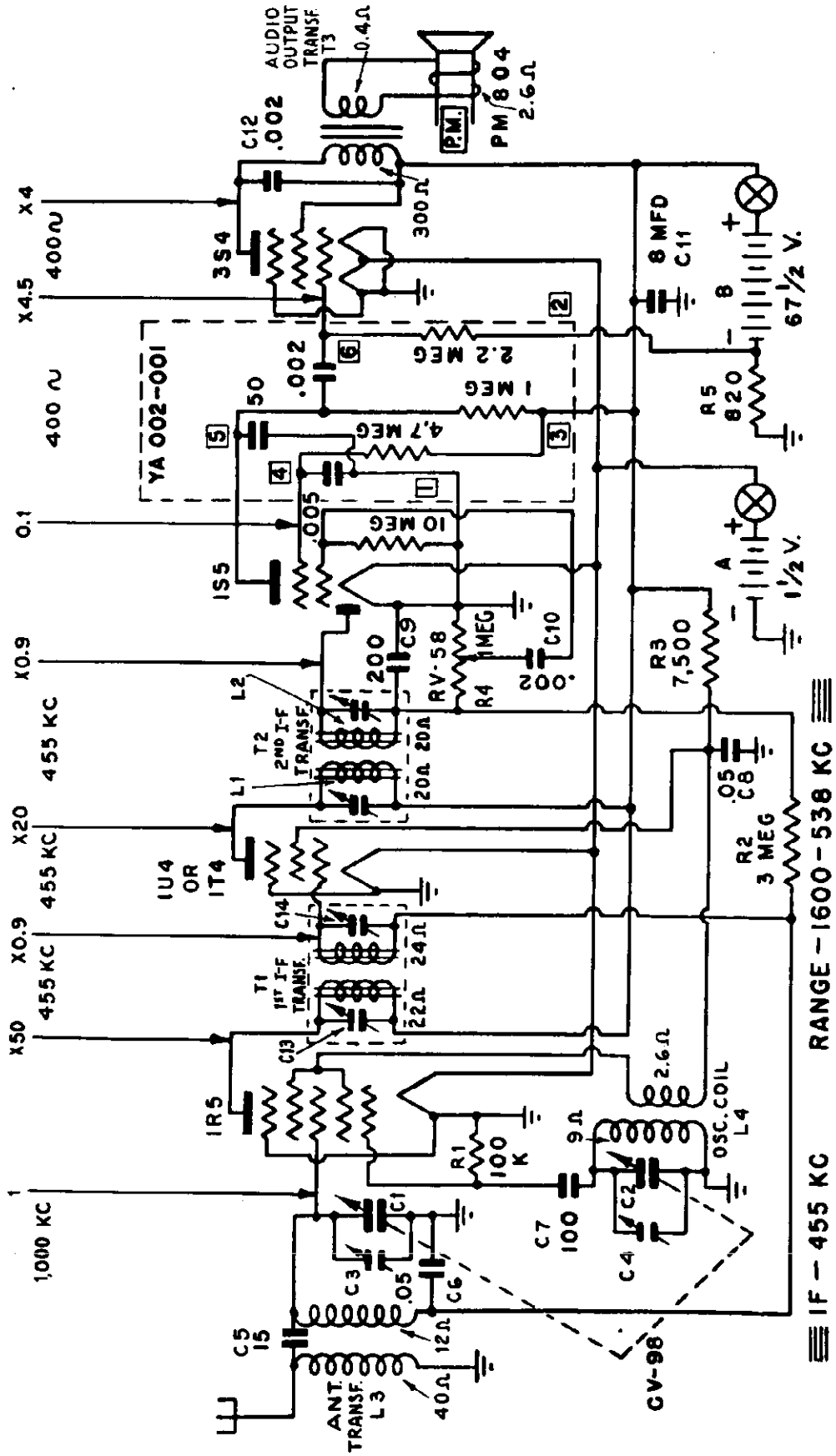

MODEL B-44
Bike Radio

AUTOMATIC RADIO MFG. CO., INC.

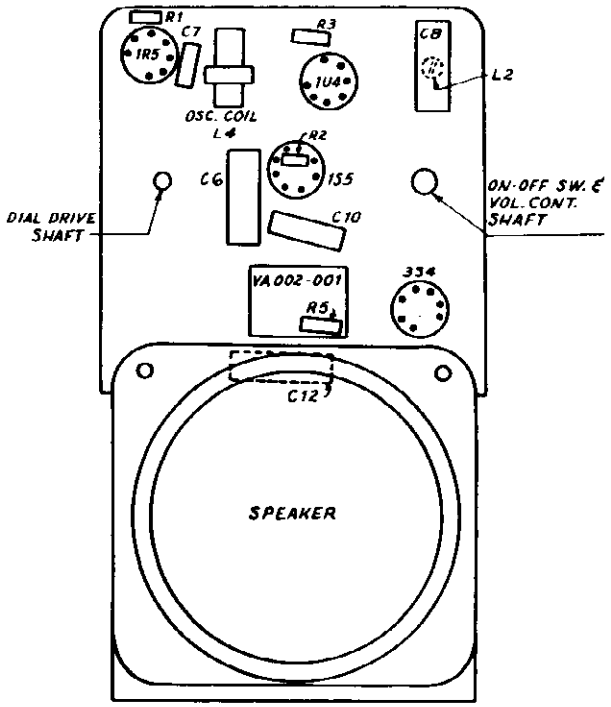

BOTTOM VIEW

TUBE	PIN	V.T.V.M.	20,000 Ω/v.	RESISTANCE
1R5	1	GND.	GND.	GND.
CONV.	2	+58	+58	OVER 1 MEG.
	3	+44	+44	OVER 1 MEG.
	4	-10	-6.5	175K
	5	0	0	LESS THAN 0.1 Ω
	6	0	0	INFINITE
	7	+1.5	+1.5	5Ω
1U4	1	GND.	GND.	GND.
or	2	+58	+58	OVER 1 MEG.
1T4	3	+44	+44	OVER 1 MEG.
I.F.	4	N.C.	N.C.	N.C.
AMPL.	5	GND.	GND.	GND.
	6	0	0	4 MEG.
	7	+1.5	+1.5	5Ω
1S5	1	GND.	GND.	GND.
DET.	2	0	0	INFINITE
A.V.C.	3	0	0	28Ω*
1st	4	+14	+10	OVER 5 MEG.
AUDIO	5	+20	+16	OVER 1 MEG.
	6	0	0	10 MEG.
	7	+1.5	+1.5	5Ω
3S4	1	GND.	GND.	GND.
AUDIO	2	+56	+56	OVER 1 MEG.
OUTPUT	3	-7	-1	2.2 MEG.
	4	+58	+58	OVER 1 MEG.
	5	+1.5	+1.5	5Ω
	6	+56	+56	OVER 1 MEG.
	7	GND.	GND.	GND.

Voltage and resistance measurements were made with respect to chassis ground, and with a B supply voltage of 65 V.D.C.

*With Vol. Cont. full counter clockwise the resistance is 28Ω.
With Vol. Cont. full clockwise the resistance is 1 MEG.

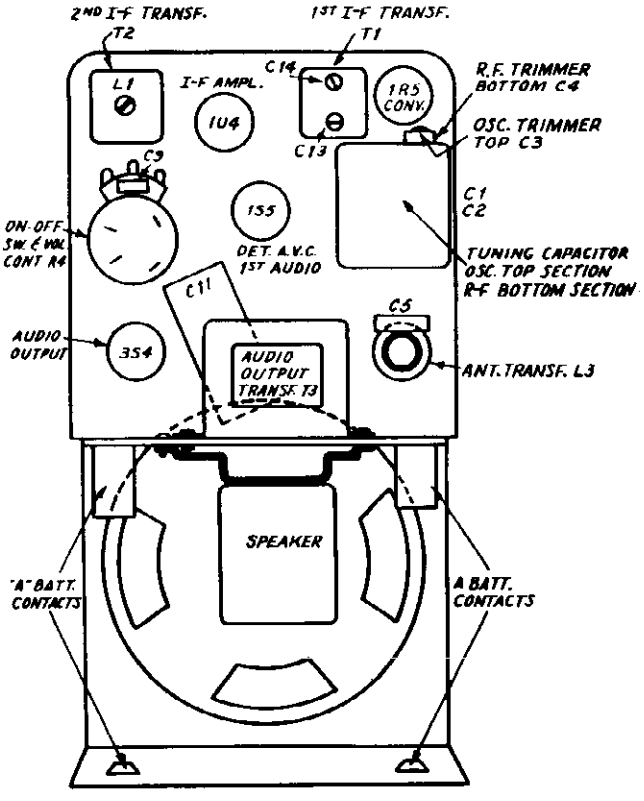

TOP VIEW

ALIGNMENT PROCEDURE

Connect output meter across voice coil.

Connect the signal generator to the standard Hazeltine Loop Model 1150 and couple it loosely to the receiver loop. Set the volume control at maximum, and fully mesh the tuning capacitor.

The output of the signal generator should be just sufficient to give a readable deflection on the output meter.

Set the signal generator to 455 kc and adjust i-f trimmers and slugs for maximum output in the following order: L2, L1, C14, C13. Repeat sequence if trimmers were badly maladjusted.

Set the signal generator and receiver to 1500 kc and adjust the oscillator trimmer C4 for maximum output.

Set the signal generator and receiver to 1400 kc and adjust the antenna trimmer C3 for maximum output.

Set the signal generator and receiver to 1500 kc and readjust oscillator trimmer C4 for maximum output

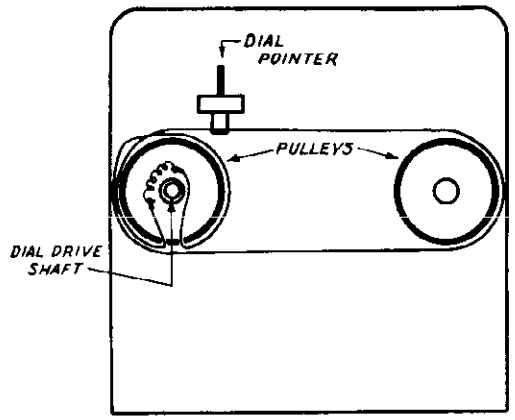

NOTE: TUNING CAPACITOR IN MAXIMUM CAPACITY POSITION

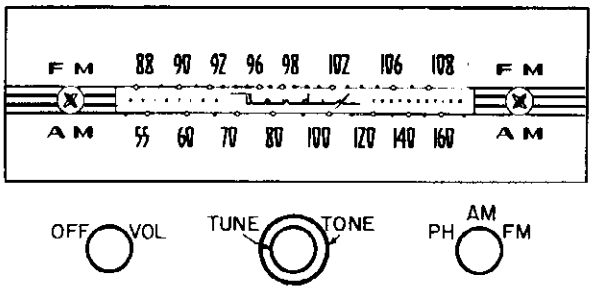

Fig. 2 – Control Layout

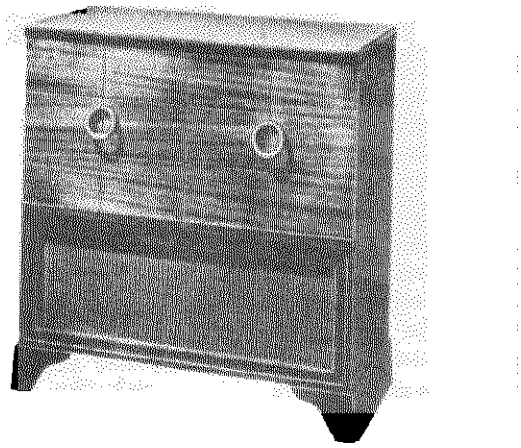

Fig. 1–Models 69M8 & 69M9–Mahogany; 69B8–Blonde

GENERAL

The Bendix Radio Models 69M8, 69B8, and 69M9 employ six tubes and a selenium rectifier to provide reception of the FM band and the AM standard broadcast band. The FM section of this receiver contains a tuned RF stage. The RF stage has its plate voltage removed when the range switch is in any but the FM position. The B+ is removed from the plates of the RF amplifier and mixer oscillator tubes when the band switch is in the PH position. Built in FM and AM antennas are mounted in the cabinet and a terminal board is provided on the rear of the cabinet for attaching external antennas. Each model contains a ten inch permanent magnet type speaker which is driven by a 50L6 audio output tube. Two multi-purpose tubes are used. One, the 19T8, combines the functions of an AM demodulator, FM detector, and first audio amplifier in one envelope. The other multi-purpose tube, the 12AT7, is a double triode and is used as a mixer-oscillator tube.

The power supply required for these models is 105-120 volts 60 cycle AC since a phono motor is included. The radio chassis itself is operative on AC or DC, but the phono motor would be damaged beyond repair if operated on DC.

SPECIFICATIONS

Power Requirements
105-120V 60 cycle AC
Power Consumption
Radio 50W – Phono Turntable 25W
Tuning Frequency Range
AM –– 540-1620KC
FM –– 88-108MC
Intermediate Frequency
AM – 455KC –– FM – 10.7MC
Power Output
Maximum – 2.5W
Tube Complement
3––12BA6, 12AT7, 19T8, 50L6 – Total 6 Tubes Plus Selenium Rectifier
Loudspeaker –– PM 10 Inch
Record Changer
Models 69M8 and 69B8
Automatic for Twelve 10-inch or Ten 12-inch Standard Lateral Cut or Long Play Microgroove Records.
Model 69M9
Automatic for Twelve 10-inch or Ten 12-inch Standard Lateral Cut Records.
Overall Dimensions – All Models
Height 33 5/16"; Width 33";
Depth 15 15/16"
Shipping Weight – All Models –– 75 lbs.

MODELS 69B8, 69M8, 69M9

BENDIX RADIO DIV.

PRELIMINARY ALIGNMENT PROCEDURE

The AM circuits should be aligned before the FM section because of possible interaction between the IF coils. Before attempting to align set allow receiver and test equipment to warm up for at least five minutes. Whenever possible, have a speaker connected to the output and use a 30% amplitude modulated signal in order to identify weak signals in a poorly tuned set. The antenna trimmer for AM which is attached to the loop antenna must be adjusted when the chassis is replaced in the cabinet, since the antenna loop is installed in the cabinet and cannot be removed with the chassis. It may be necessary to adjust the FM antenna trimmer slightly when the chassis is replaced in the cabinet.

TEST EQUIPMENT REQUIRED

Signal Generator
AM 455 KC to 106 MC
FM 10.7 MC & 88-108MC.
Vacuum Tube Voltmeter
(ground or minus must be isolated from power line)
Capacitors, .01 mfd and 100 mmf
Alignment Screwdrivers
Standard Output Meter

AM ALIGNMENT

PRELIMINARY PROCEDURE: With gang condenser closed, set dial pointer to coincide with reference mark etched into dial back plate. See Fig. 5. Place band switch in AM position and use a 30% modulated signal throughout. Connect an output meter across voice coil. Adjust Antenna Trimmer C87 after chassis is installed in the cabinet. Keep input as low as possible while obtaining a stable output meter reading.

GENERATOR FREQUENCY	GENERATOR COUPLING	DUMMY ANTENNA	SPECIAL CONDITIONS	DIAL SETTING	ADJUSTMENTS	REMARKS
1.) 455 KC AM	High Side—Term. #5 gang cond. Low side—common ground	.01 mfd capacitor	Short AM Osc. Term. #1 to common ground	Gang condenser fully open	Top slug of T1, T2, T4 and bottom slug of T4	Adjust for maximum output. Repeat several times to insure maximum output
2.) 1475 KC AM	High side—Term. #3 gang cond. Low side—common ground	100 mmf capacitor	Remove short from Osc. Term. #1	1475 KC Ref. mark	C79	Rock tuning control while adjusting for maximum output
3.) 965 KC AM	"	"		965 KC Ref. mark		* Check Calibration
4.) 580 KC	"	"		580 KC Ref. mark		* Check Calibration

* If calibration does not check within tolerances denoted by etched lines on dial backplate, oscillator gang rotor plates must be bent to obtain proper calibration. This operation is very delicate and should be attempted only by properly trained personnel.

FM ANTENNA

The FM antenna used in Models 69M8, 69B8, and 69M9 will not be found in the Replacement Parts List since the service man, by following the specifications in the drawing, Fig. 3, can very easily and inexpensively make the antenna himself.

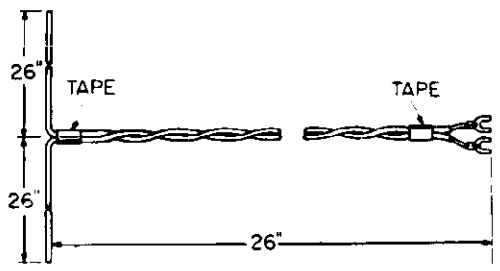

Fig. 3—FM Antenna

© John F. Rider

FM ALIGNMENT

CW METER METHOD

PRELIMINARY ALIGNMENT PROCEDURE: With gang condenser fully closed, adjust dial pointer to coincide with the reference mark etched into dial back plate. See Fig. 5. Place band switch in FM position. Use 30% amplitude modulated signals when possible.

GENERATOR FREQUENCY	DUMMY ANTENNA	GENERATOR COUPLING	SPECIAL CONDITIONS	DIAL SETTING	VTVM CONNECTIONS	ADJUSTMENTS	REMARKS
1.) 10.7 MC AM or CW	.01 mfd capacitor	High side—term. #6 Gang Condenser. Low side—common ground	Short FM Osc. Term. #2 of Gang Condenser to common ground	Gang Condenser fully open	+Lead to B— —Lead to Pin #2 of tube 19T8	Bottom slug of T1, T2, Bottom slug of T3	Adjust for maximum AVC reading on VTVM. Repeat adjustment several times to insure maximum reading
2.) Remove Signal Generator		Remove Signal Generator	Short FM Osc. term. #2 of gang condenser to common ground. Two 100K matched resistors in series connected between Pin #2 of tube 19T8 & B—	"	Center Tap of 100K resistors and term. #6 of switch S1C	Adjust VTVM for Zero	While connected to chassis, the VTVM is adjusted to zero by its zero centering control
3.) 10.7 MC AM or CW	.01 mfd capacitor	High side—term. #3 of Gang condenser. Low Side—Common Ground	"	"	"	Top slug of T3	Adjust top slug to produce zero reading on VTVM
4.) Repeat in Step 3.	Steps 1, 2, and 3 until Step 1 produces no change in Step 3 adjustment and bottom of T3 produces no deflection						
5.) 106 MC	FM Dummy Antenna (See Fig. 4)	FM Dummy Antenna (See Fig. 4)	Remove short from Term. #2 of gang condenser. Remove 100K Resistors	106 MC Ref. mark	+Lead to B— —Lead to Pin #2 of tube 19T8	Osc. trimmer C9, then RF, C3c & Ant., C3b	Rock tuning control when adjusting C9 for maximun AVC reading, then adjust C3c and C3b respectively for max.†
6.) 97 MC AM or CW	"	"		97 MC Ref. mark	"		* Check Calibration
7.) 90 MC AM or CW	"	"		90 MC Ref. mark	"		* Check Calibration

† Oscillator operates on high frequency side of incoming signal but it is possible to adjust to the low side. Set Signal Generator to 84.6 MC and if signal is heard readjust oscillator trimmer at signal generator frequency of 106 MC and check again at 84.6 MC. Signal should not be heard.

* If calibration is not within reasonable tolerance at these points, the inductance of the FM oscillator coil must be adjusted. If dial pointer reading is on low frequency side, inductance of oscillator coil is too low and turns of coil must be compressed slightly. If pointer reading is on high frequency side, the coil inductance is too high and coil turns must be spread slightly. Repeat steps 5, 6, and 7 until correct calibration is obtained.

To adjust RF coil, tune receiver to 90 MC and observe AVC reading. Insert into RF coil, the iron core of tuning wand (rod of insulating material one end of which contains an iron core slug and the other end contains a non-ferrous metallic slug). If reading increases, the inductance of coil is too low and, turns must be spread *slightly*. If reading decreases, insert opposite end (non-ferrous) of tuning wand into RF coil. Inductance of coil is too low if reading increases and, turns must be compressed *slightly*. Correct adjustment is obtained when insertion of either end of tuning wand causes the reading to decrease.

The antenna coil inductance is adjusted in the same manner as the RF coil.

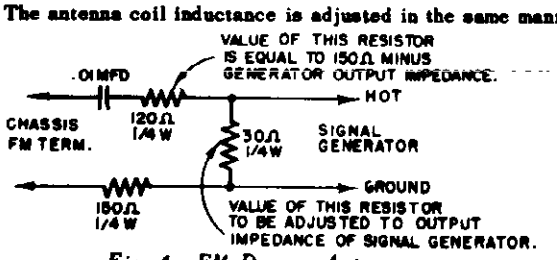

Fig. 4—FM Dummy Antenna

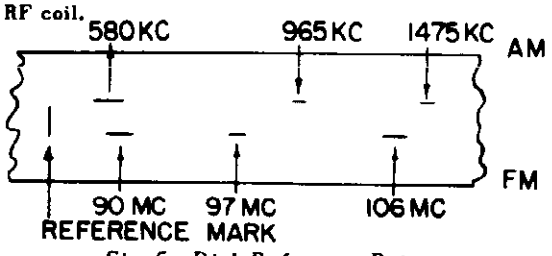

Fig. 5—Dial Reference Points

MODELS 69B8, 69M8, 69M9 BENDIX RADIO DIV.

VISUAL ALIGNMENT

The ratio detector in the FM section of this radio receiver can be aligned by the so-called Visual Alignment method. This method can be used in conjunction with the CW method by following the procedure outlined below:

1. Perform Step 1 indicated in CW Meter Method Chart.

2. Set Signal Generator to 10.7 MC, FM, with sweep width at maximum possible (should be a minimum of 200 KC). Connect output of generator to terminal #4 of gang condenser and B–.

3. Connect vertical input of cathode ray oscilloscope to terminal #6 of switch S1C and B–, and place a 60 cycle sine wave signal to horizontal input if oscilloscope does not have an internal 60 cycle sweep.

4. Adjust signal generator frequency until "S" curve (Fig. 6) is centered on the horizontal sweep. Curve may be reversed because of internal circuit of oscilloscope.

5. Adjust primary of T3 (top slug) and secondary (bottom slug) for maximum desired "S" curve. A VTVM can be very useful at this point if connected to pin #2 of tube 19T8 and B–. The oscilloscope will then indicate the most linear curve and the VTVM will indicate the maximum AVC voltage.

6. Adjust bottom of slugs of T1 and T2 and then repeat step 5 to insure correct alignment.

7. Continue at this point with the alignment procedure starting with step 5 as outlined in the FM-CW Meter Method.

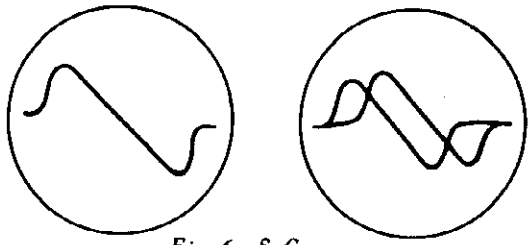

Fig. 6–S Curves

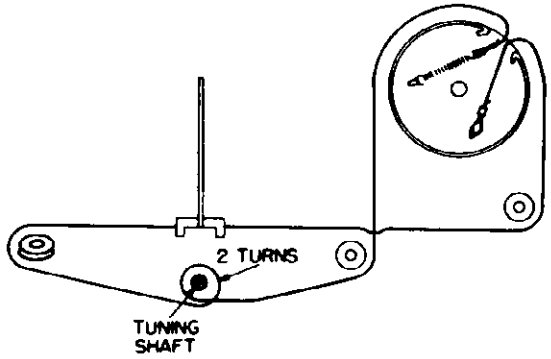

Fig. 7–Dial Stringing Diagram

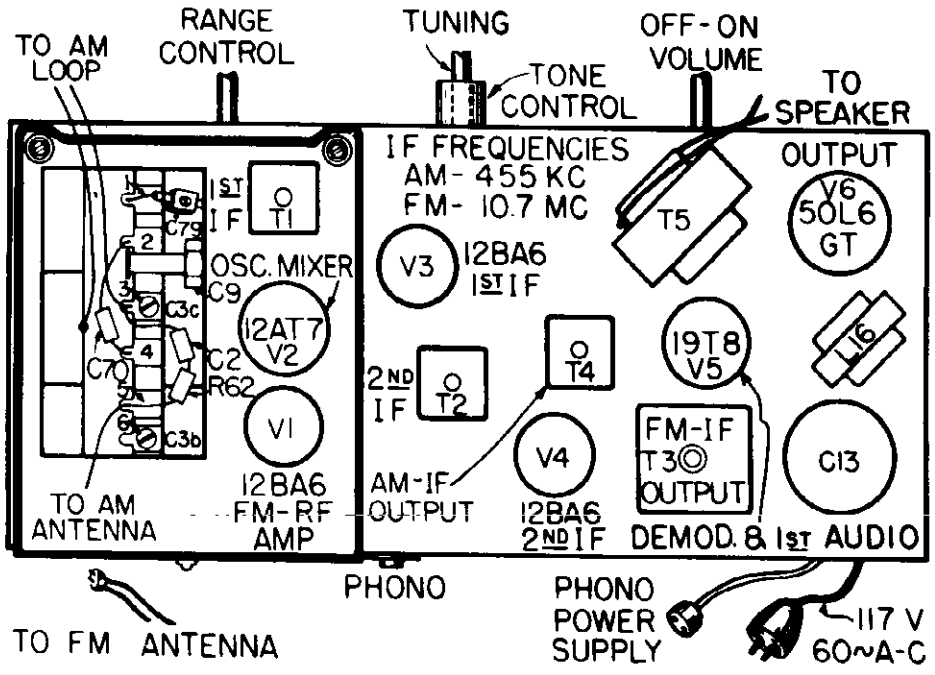

Fig. 8–Trimmer Location

© John F. Rider

© John F. Rider

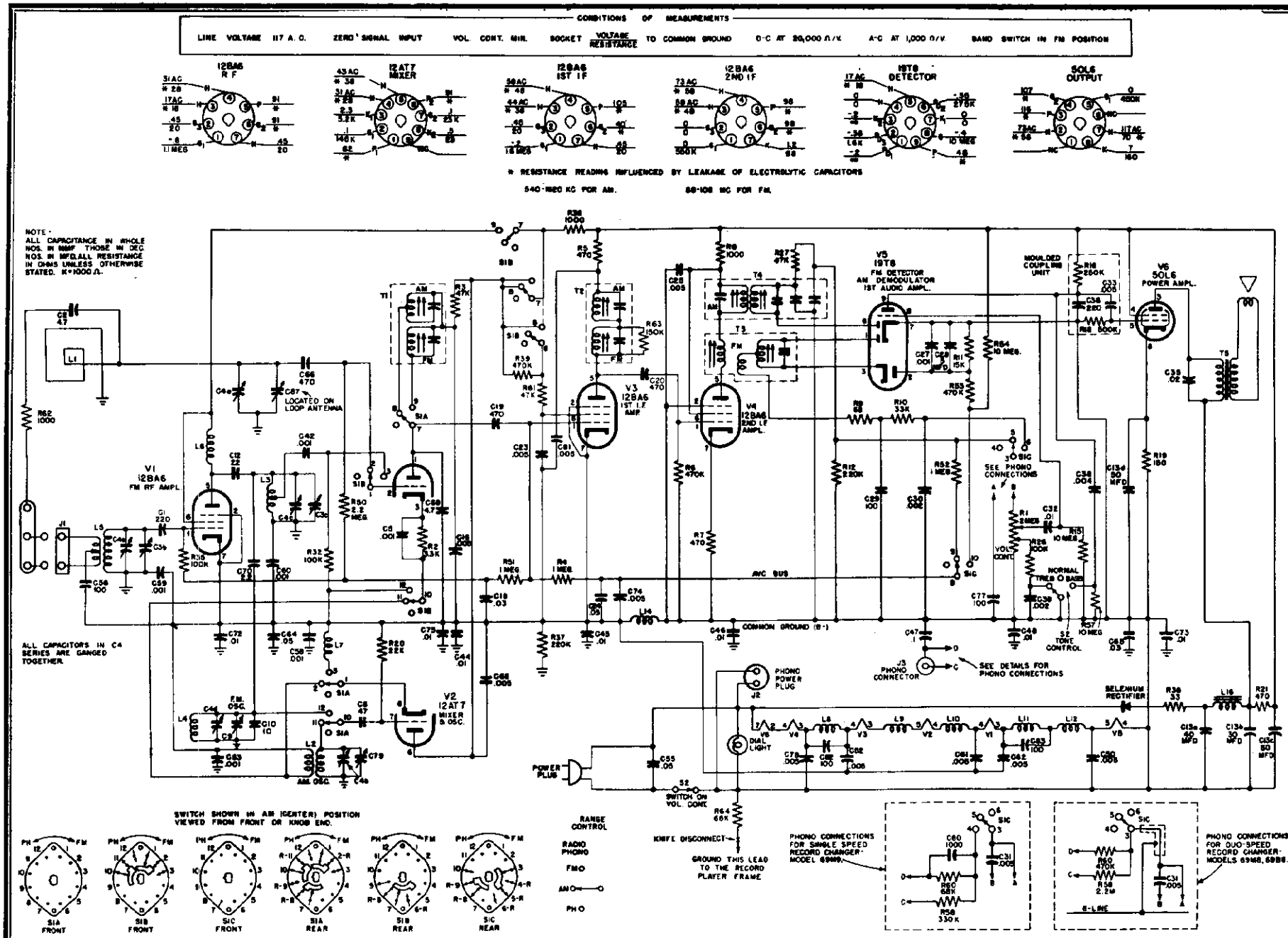

Fig. 9 – Schematic Diagram of Models 69M8, 69B8, and 69M9.

MODELS 69B8, 69M8, 69M9

BENDIX RADIO DIV.

CHASSIS IDENTIFICATION

The 69M8 and 69B8 chassis are identical and they differ from the 69M9 chassis only in the type of phono input circuit used. Models 69M8 and 69B8 include a dual speed record changer which requires a different phono input circuit than the single speed record changer that is installed in Model 69M9.

Models 69M8 and 69B8 chassis can be identified by the two resistors 470K and 2.2 meg, connected to terminal 4 of switch S1C. Model 69M9 chassis has two resistors, 68K and 330 K, connected to terminal 4 of switch S1C.

CHASSIS CODES

The chassis are coded by a large block letter within a square stamped in ink on the chassis rear apron visible from the back of the cabinet. Although code A chassis normally are not marked, check any unmarked chassis against following chart to insure proper code identification. In this chart the component revisions effected by various changes are listed in the left hand column. Under the right hand columns headed A, B, C, etc., are listed the revisions as applied to each chassis code.

DESCRIPTION OF CHASSIS DIFFERENCES	*CHASSIS USED WITH DUAL SPEED RECORD CHANGER*				*CHASSIS USED WITH SINGLE SPEED RECORD CHANGER*				
	A	*B*	*C*	*D*	*A*	*B*	*C*	*D*	*E*
Value of Resistor R61 in ohms.	1000	1000	47K	47K	1000	1000	1000	47K	47K
Chassis includes Resistor R63, 150K 1/4W, connected in parallel with AM coil of IF Transformer T2.	No	No	Yes	Yes	No	No	No	Yes	Yes
Chassis includes either Capacitor C84, .05 mfd 400V, or Resistor R64, 68K 1/2W, connected to common ground (B–) and grounded at Record Changer frame.	C84	C84	C84	R64	C84	C84	C84	C84	R64
Chassis includes antenna trimmer Capacitor C3a mounted on variable capacitor.	No	Yes	No	No	No	Yes	Yes	No	No
Chassis includes antenna trimmer Capacitor C87 mounted on loop antenna.	Yes	No	Yes	Yes	Yes	No	No	Yes	Yes
Chassis includes Coil L15 wrapped on Capacitor C85, 100 mmf, connected between B+ and junction of Resistors R36 and R5.	No	Yes	No	No	No	Yes	Yes	No	No
Chassis includes Capacitor C11, .005 mfd, one lead of which is connected to common ground (B–) and the other lead of which is connected to junction of Coil L15, Capacitor C85, and B+.	No	Yes	No	No	No	Yes	Yes	No	No
Value of Resistor R8 in ohms, 1/2W.	1000	470	1000	1000	1000	470	470	1000	1000
Chassis includes Capacitor C26, .005 mfd, connected between pin #7 of tube V4 (12BA6) and common ground (B–).	No	Yes	No	No	No	Yes	Yes	No	No
Value of Resistor R9 in ohms, 1/4W.	68	33	68	68	68	33	33	68	68
Value of Capacitor C29 in mmf.	100	150	100	100	100	150	150	100	100
Chassis includes Capacitor C51, .005 mfd, connected between pin #3 of V3 (12BA6) and common ground (B–).	No	Yes	No	No	No	Yes	Yes	No	No
Chassis includes Capacitor C67, 4.7 mmf, connected between pins #1 and #7 of tube V5 (19T8).	No	Yes	No	No	No	Yes	Yes	No	No
Value of Resistor R11.	15K	22K	15K	15K	15K	22K	22K	15K	15K
Value of Capacitor C32 in mfd, 400V.	.01	.03	.01	.01	.01	.03	.03	.01	.01

© John F. Rider

BENDIX RADIO DIV.

MODELS 69B8, 69M8, 69M9

REPLACEMENT PARTS LIST

Used On Chassis Codes 69M8, 69B8	Used On Chassis Codes 69M9	Stock No.	Symbol No.	Description
		ELECTRICAL COMPONENTS		
ALL	ALL	AC0C01	C33,36; R16,18	ASSY—Capacitor Resistor Coupling Plate
ALL	ALL	CC9A38	C1	CAPACITOR—Ceramic 220 mmf
ALL	ALL	CC0A18	C2,69	CAPACITOR—Ceramic 4.7 mmf
ALL	ALL	CV0D01	C3b,c; C4a,b,c,d,e	CAPACITOR—Variable
ALL	ALL	CM5A46	C5	CAPACITOR—Mica .001 mfd 300V
ALL	ALL	CC8B30	C6	CAPACITOR—Ceramic 47 mmf ±10% 500V
ALL	ALL	CT1B05	C9	CAPACITOR—Corning Glass Trimmer 1-8 mmf
ALL	ALL	CC8B22	C10	CAPACITOR—Ceramic 10 mmf ±10% 500V
B	B,C	CC0M00	C11,26,51	CAPACITOR—Ceramic .005 mfd Min Value 500V
ALL	ALL	CC0A26	C12	CAPACITOR—Ceramic 22 mmf
ALL	ALL	CE4A03	C13	CAPACITOR—Electrolytic 50-40-30 mfd 150V 50 mfd 25V
ALL	ALL	CC0M00	C16,23,25,31,50,52,61,62,68,74,78,81	CAPACITOR—Ceramic .005 mfd
ALL	ALL	CP4T36	C18,24,65	CAPACITOR—Paper .03 mfd 400V
ALL	ALL	CC9M42	C19,20,66	CAPACITOR—Ceramic 470 mmf Min Value
ALL	ALL	CC9M50	C27,42,58,59,60,63	CAPACITOR—Ceramic .001 mfd Min Value
ALL	ALL	CE1T06	C28	CAPACITOR—Electrolytic 5 mfd 50V
A,C,D	A,D,E	CC9A34	C29	CAPACITOR—Ceramic 100 mmf 500V
B	B,C	CC9A36	C29	CAPACITOR—Ceramic 150 mmf 500V
ALL	ALL	CP6T12	C30,39	CAPACITOR—Paper .002 mfd 600V
A,C,D	A,D,E	CC9R80	C32	CAPACITOR—Ceramic .01 mfd 450V
B	B,C	CP4T36	C32	CAPACITOR—Paper .03 mfd 400V
ALL	ALL	AC0C01	C33,36; R16,18	ASSY—Capacitor Resistor Coupling Plate
ALL	ALL	CP4T34	C35	CAPACITOR—Paper .02 mfd 400V
ALL	ALL	CP6T16	C38	CAPACITOR—Paper .004 mfd 600V
ALL	ALL	CC9R80	C44,45,46,48,72,73,75	CAPACITOR—Ceramic .01 mfd 450V
ALL	ALL	CP4T51	C47	CAPACITOR—Paper .1 mfd 400V
ALL	ALL	CP4T40	C55,64	CAPACITOR—Paper .05 mfd 400V
ALL	ALL	CC9A34	C56,77	CAPACITOR—Ceramic 100 mmf 500V
B	B,C	CC0A18	C57	CAPACITOR—Ceramic 4.7 mmf 500V
ALL	ALL	CC0A14	C70	CAPACITOR—Ceramic 2.2 mmf
ALL	ALL	CT1A20	C79	CAPACITOR—Trimmer 4-40 mmf
ALL	ALL	LF0C00	C82 & L8; C83 & L11	ASSY—Capacitor Coil 10.7 MC
A,B,C	A,B,C,D	CP4T40	C84	CAPACITOR—Paper .05 mfd 400V
B	B,C	LF0C00	C85 & L15	ASSY—RF Choke
ALL	ALL	RV4S13	R1; S2	ASSY—Potentiometer with Switch
ALL	ALL	RC23A332M	R2	RESISTOR—Comp. 3.3K 1/2W
ALL	ALL	RC22A473M	R3,27	RESISTOR—Comp. 47K 1/4W
ALL	ALL	RC22A105M	R4,51,52	RESISTOR—Comp. 1 meg 1/4W
ALL	ALL	RC23A102M	R5,36,62	RESISTOR—Comp. 1000 ohms 1/2W
ALL	ALL	RC22A474M	R6,39,53,60	RESISTOR—Comp. 470K 1/4W
ALL	ALL	RC23A101M	R7	RESISTOR—Comp. 100 ohms 1/2W
A,C,D	A,D,E	RC23A102M	R8	RESISTOR—Comp. 1000 ohms 1/2W
B	B,C	RC23A471M	R8	RESISTOR—Comp. 470 ohms 1/2W
A,C,D	A,D,E	RC22A680M	R9	RESISTOR—Comp. 68 ohms 1/4W
B	B,C	RC22A330M	R9	RESISTOR—Comp. 33 ohms 1/4W
ALL	ALL	RC22A333M	R10	RESISTOR—Comp. 33K 1/4W
A,C,D	A,D,E	RC22A153M	R11	RESISTOR—Comp. 15K 1/4W
B	B,C	RC22A223M	R11	RESISTOR—Comp. 22K 1/4W
ALL	ALL	RC22A224M	R12,37	RESISTOR—Comp. 220K 1/4W
ALL	ALL	RC22A106M	R15,54,57	RESISTOR—Comp. 10 meg 1/4W
ALL	ALL	AC0C01	R16,18; C33,36	ASSY—Capacitor Resistor Coupling Plate
ALL	ALL	RC23A151M	R19	RESISTOR—Comp. 150 ohms 1/2W
ALL	ALL	RC22A223M	R20	RESISTOR—Comp. 22K 1/4W
ALL	ALL	RC24A471M	R21	RESISTOR—Comp. 470 ohms 1W
ALL	ALL	RC22A104M	R26,32,35	RESISTOR—Comp. 100K 1/4W
ALL	ALL	RW1F06	R38	RESISTOR—Flexible Wirewound 1W
ALL	ALL	RW2F66	R50	RESISTOR—Metalized 2.2 meg 1/3W
ALL	ALL	RC22A225M	R58	RESISTOR—Comp. 2.2 meg 1/4W
A,B	A,B,C	RC23A102M	R61	RESISTOR—Comp. 1000 ohms 1/2W
C,D	D,E	RC22A473M	R61	RESISTOR—Comp. 47K 1/4W
C,D	D,E	RC22A154M	R63	RESISTOR—Comp. 150K 1/4W
D	E	RC23A683M	R64	RESISTOR—Comp. 68K 1/2W
ALL	ALL	AL0Z15	L1	ANTENNA—Loop AM
ALL	ALL	LO7B01	L2	TRANSFORMER—BC Osc.
ALL	ALL	LI0F01	L3	COIL—RF Choke
ALL	ALL	LO7F00	L4	COIL—FM Oscillator
ALL	ALL	LA0F01	L5	COIL—FM Antenna
ALL	ALL	LF0A08	L6,7,9,10,12	COIL—RF Filament Choke 2 mh
ALL	ALL	LF0C00	L8 & C82; L11 & C83	ASSY—Capacitor Coil 10.7 MC
ALL	ALL	LF0A07	L14	COIL—RF Choke 4.5 MC
B	B,C	LF0C00	L15 & C85	ASSY—RF Choke
ALL	ALL	LF0J02	L16	COIL—Filter Choke

© John F. Rider

MODELS 69B8, 69M8, 69M9

BENDIX RADIO DIV.

REPLACEMENT PARTS LIST—Continued

Used On Chassis Codes 69M8, 69B8	69M9	Stock No.	Symbol No.	Description
		ELECTRICAL COMPONENTS—(Continued)		
ALL	ALL	TI0C12	T1	TRANSFORMER—1st IF
ALL	ALL	TI0D20	T2	TRANSFORMER—2nd IF
ALL	ALL	TR0R00	T3	TRANSFORMER—Ratio Detector
ALL	ALL	TI0D23	T4	TRANSFORMER—AM 3rd IF
ALL	ALL	TA0O20	T5	TRANSFORMER—Audio Output
ALL	ALL	QR0S01		RECTIFIER—Selenium
ALL	ALL	SR3F00	S1	SWITCH—Rotary 3 Section 3 Position
ALL	ALL	RV4S13	S2; R1	ASSY—Potentiometer With Switch
ALL	ALL	SS1C02	S3	SWITCH—Slide 2 Pole 3 Position
ALL	ALL	SP0R01		SPEAKER—PM 10"
ALL	ALL	C7		LAMP—Dial 125V
		MECHANICAL COMPONENTS		
ALL	ALL	BT1S03		BOARD—Terminal 2 Lug 1 Mtg.
ALL	ALL	BT3S06		BOARD—Terminal 3 Lug 1 Mtg.
ALL	ALL	BT4S06		BOARD—Terminal 4 Lug 1 Mtg.
ALL	ALL	BT6S04		BOARD—Terminal 6 Lug 2 Mtg.
ALL	ALL	BT8S00		BOARD—Terminal 8 Lug 2 Mtg.
ALL	ALL	CD0N01		CABLE—Dial
ALL	ALL	CL2A08		CORD—AC Line
ALL	ALL	GR0S09		GROMMET—Sub-chassis Mtg. Rear
ALL	ALL	GR0S15		GROMMET—Sub-chassis Mtg. Top
ALL	ALL	HB0M74		BRACKET—Indicator Slide Rail
ALL	ALL	HB0M84		BRACKET—Dial Back Plate Mtg.
ALL	ALL	HB0M86		BRACKET—Sub-chassis Mtg.
ALL	ALL	HB0M87		BRACKET—Dial Light Mtg.
ALL	ALL	HC0M08		CLAMP—Tube Shield Base
ALL	ALL	HC0S00		CLIP—Tuning Shaft Spring
ALL	ALL	HC0S60		CLIP—IF Can Spring Retainer Mtg.
ALL	ALL	HC0S67		CLIP—Spring, Glass Trimmer
ALL	ALL	HS0C75		SPRING—Dial Cord Drum
ALL	ALL	HS0C88		SPRING—Coil Tension
ALL	ALL	HS0F19		SLEEVE—Spacer
ALL	ALL	HS0S13		STUD—Chassis Shock-mount
ALL	ALL	ID0M21		INDICATOR—Metal
ALL	ALL	JR2O12	J1	RECEPTACLE—2 Contact
ALL	ALL	JR2O14	J2	RECEPTACLE—Phono 2 Contact
ALL	ALL	JR1S00	J3	RECEPTACLE—Phono 1 Contact
ALL	ALL	MB0B00		BEARING—Brass, Tuning Shaft
ALL	ALL	ML0C04		LEVER—Tone Control
ALL	ALL	MP0I00		PULLEY—Idler Fiber
ALL	ALL	MS0T19		SHAFT—Tuning
ALL	ALL	PB0D06		PLATE—Back
ALL	ALL	PI0C01		PLATE—Electrolytic Capacitor Mtg.

Used On Chassis Codes 69M8, 69B8	69M9	Stock No.	Symbol No.	Description
		MECHANICAL COMPONENTS—(Continued)		
ALL	ALL	PI0P01		PLATE—Line Cord Insulator
ALL	ALL	SM0T10		SHIELD—Metal, Miniature Tube
ALL	ALL	SO7M09		SOCKET—Main Chassis 7 Prong Min. Tube
ALL	ALL	SO7M10		SOCKET—Sub-Chassis 7 Prong Min. Tube
ALL	ALL	SO9M00		SOCKET—Tube 9 Prong
ALL	ALL	SO6D12		SOCKET—Dial Light
ALL	ALL	SO8S01		SOCKET—Octal Tube
ALL	ALL	WF0I00		WASHER—Phono Input Insulating 23/64 x 15/16 x .015
ALL	ALL	XS0C11		STRIP—Sub-Chassis Insulating Plate
ALL	ALL	XS0C13		STRIP—Sub-Chassis Ground Plate
ALL	ALL	XS0C15		STRIP—Right Angle Common Ground
ALL	ALL	XS0C18		STRIP—Straight Common Ground
ALL	ALL	ZB0M03		BUTTON—Chassis Plug
		CABINET COMPONENTS		
		BT3S09		BOARD—Terminal 3 Lug 2 Mtg.
		BZ0B29		BACK—Cabinet Cover
		BZ0D45		BAFFLE—Cardboard & Cloth (Models 69M8 & 69M9)
		BZ0D46		BAFFLE—Cardboard & Cloth (Model 69B8)
		DS0C15		DIAL—Scale
		ED0M06		ESCUTCHEON—Dial, Metal
		HC0S10		CLIP—Control Knob Retainer Ring
		HC0S68		CLIP—Concentric Knob Retainer Ring
		HC0S69		CLIP—Dial Retainer
		HK0R17		KNOB—Door Pull
		HK0T00		KNOB—Tray Pull
		HZ0C12		CATCH—Bullet (Models 69M8 & 69M9)
		HZ0C13		CATCH—Bullet (Model 69B8)
		HZ0G01		GLIDE—Metal
		HZ0H04		HINGE—Door (Models 69M8 & 69M9)
		HZ0H20		HINGE—Door (Model 69B8)
		JP2O07		JACK—Plug 2 Contact
		KC0B16		KNOB—Control Brown (Models 69M8 & 69M9)
		KC0L03		KNOB—Control Beige (Model 69B8)
		KY0B02		KNOB—Concentric Brown (Models 69M8 & 69M9)
		KY0L00		KNOB—Concentric Beige (Model 69B8)
		RD0F01		REFLECTOR—Dial Light
		WF0F17		WASHER—Felt (Conc. Knob)
		XS0Z14		STRIP—Loop Support With Terminal Board
		ZW6G05		CABINET—Mahogany (Models 69M8 & 69M9)
		ZW6G06		CABINET—Blonde Mahogany (Model 69B8)

© John F. Rider

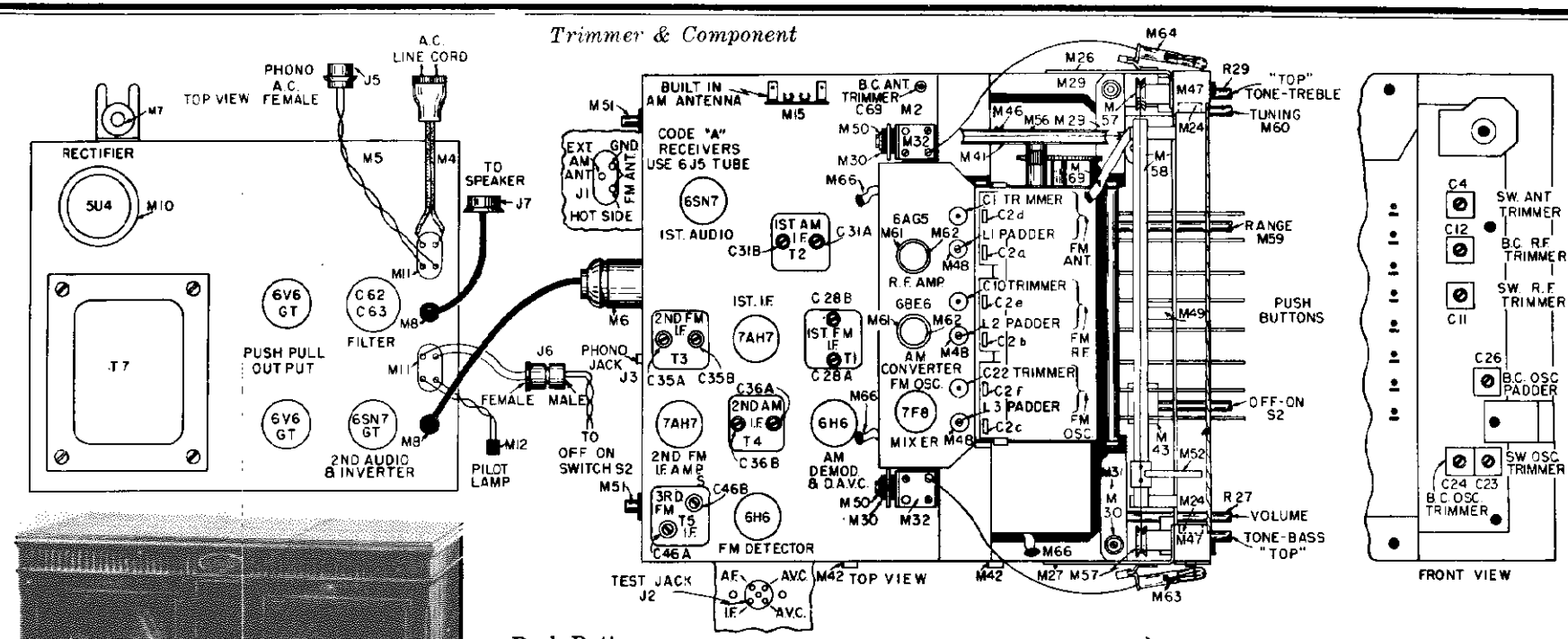

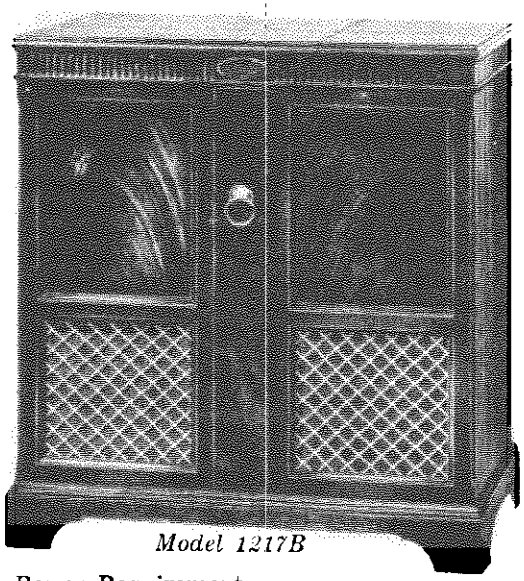

Model 1217B

Power Requirements
105 - 125 volts, 60 cycles AC

Power Consumption (including phonograph)
160 watts

Tuning Frequency Range
AM 540 - 1620 KC
SW AM 5.75 - 15.5 MC
FM 88 - 108 MC

Push-Buttons
8 mechanical type for any AM or FM station.

Loudspeaker
12-inch diameter electro-dynamic.

Record Changer
Automatic - twelve 10-inch or ten 12-inch standard records.

Maximum Power Output
12 watts.

GENERAL TECHNICAL DATA

The Model 1217B radio provides radio reception of the Standard AM Broadcast Band, the Shortwave Band from 6 to 14 megacycles, and the FM Band from 88 to 108 megacycles. Phonograph reproduction is provided through the audio amplifier from a high impedance phono jack located on the radio chassis. A standard superheterodyne circuit is used, with one stage of tuned radio frequency on all three bands. A low impedance loop antenna installed on the back cover of the cabinet is used on both the Standard Broadcast and Shortwave Bands. A built-in dipole antenna is used on the FM Band. An outside antenna for the AM Bands may be connected to the binding screw, marked ANTENNA, on the rear of the cabinet. A 300 ohm outside FM dipole antenna may be connected to the terminals marked FM DIPOLE, but the built-in dipole must be disconnected when an outside antenna is used.

The 7F8 dual triode is used as an oscillator-mixer in the FM circuit and is made inoperative by removing its plate voltages when the range switch (S1) is in any but the FM position. Likewise, the 6BE6 is used as a converter for the Standard Broadcast and Shortwave Bands only, and has no plate voltage applied to it when S1 is in the FM or PH (phono) positions. One half of the 6H6 (pins 3 and 4) AM demodulator tube is used in the delayed A-VC circuit for FM. The first triode section (pins 1, 2 and 3) of the 6SN7 in the radio chassis is used only when the range switch, S1, is in the FM position, but does not have the B plus removed from its plate when S1 is in any of the other three positions.

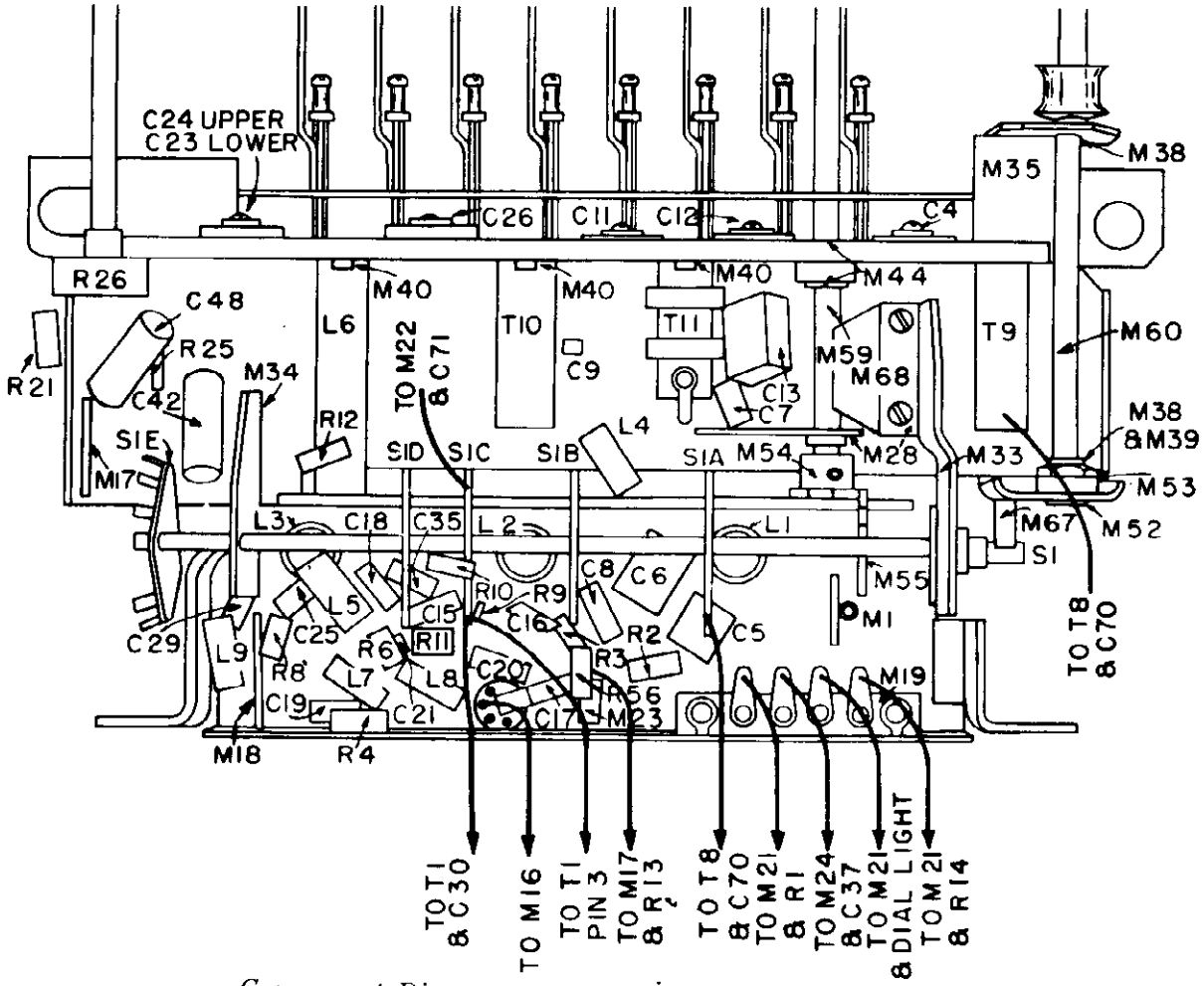

Component Diagram—Bottom View of Tuner Chassis

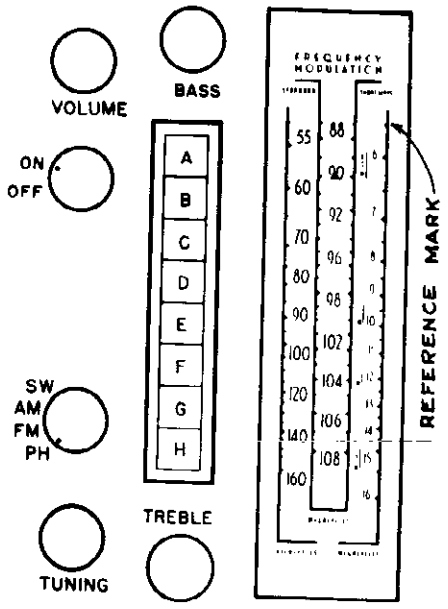

Control Layout

CHASSIS CODE CHANGES

CODE "A" AND UNCODED CHASSIS

First audio amplifier was a 6J5.
FM antenna was connected to a tap on the antenna coil (L1) instead of by link.

CODE "B" CHASSIS

Some chassis used a 6J5 and some a 6SN7 as a first audio amplifier. Tone compensation network, R54 and C77, removed from phono input lead. RF choke, L9, added in plate circuit of 7F8. R38 in D.A.V.C. circuit of ratio detector changed from 8200 ohms to 10,000. FM antenna input same as in code "A" chassis. Cathode resistor, R12 and capacitor C72 in first 7AH7 removed and R15 connected directly to ground.

CODE "C" CHASSIS

Included all previous changes.
FM antenna link coupled to antenna coil **L1.**

©John F. Rider

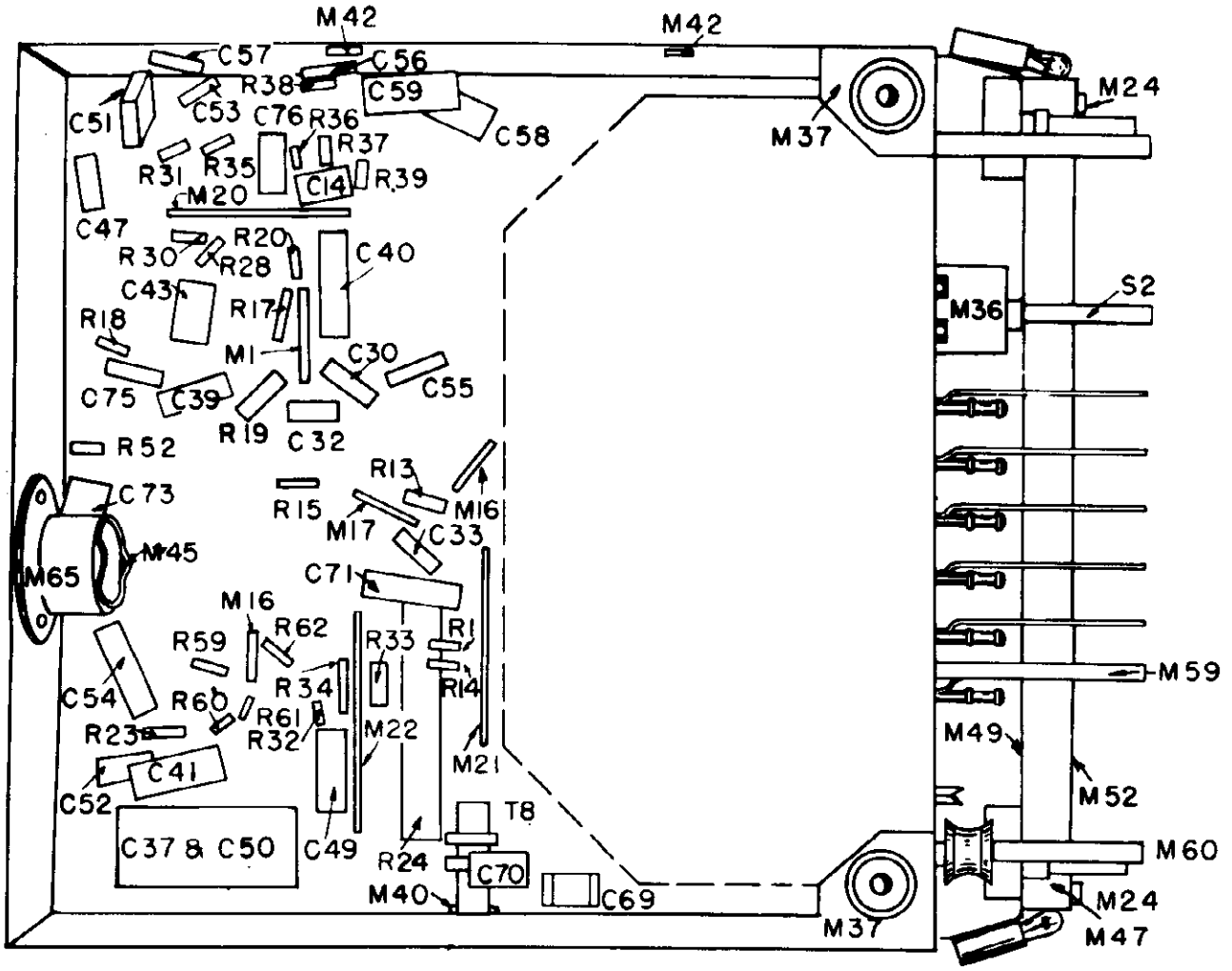

Component Diagram — Bottom View Radio Chassis

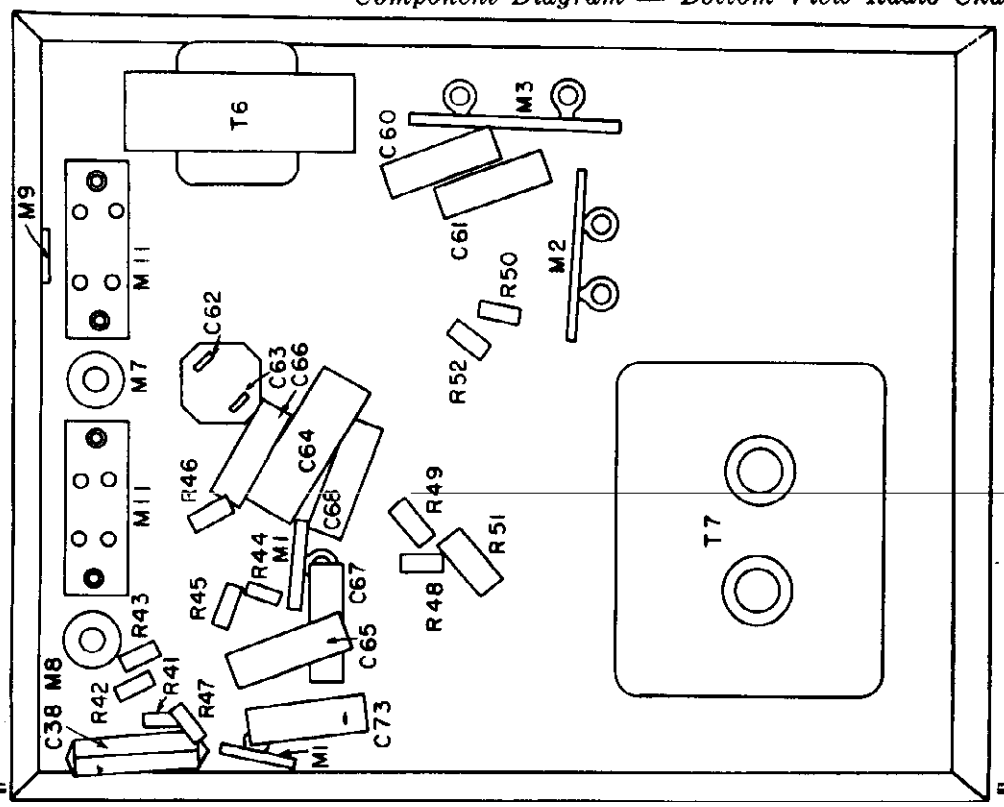

Component Diagram Bottom View of Amplifier Chassis

It is not necessary to remove the two chassis from the cabinet if the FM channel only is to be aligned. An FM test socket is provided on the chassis sideplate (facing outward in normal mounting position) at which the various voltages from the ratio detector are available for either meter or oscilloscope measurements.

If the BC and SW channels are to be aligned, it is advisable to remove the radio chassis from the cabinet in order to gain access to the BC and SW AVC voltage used for output indication. It is rather difficult to align the BC and SW RF and IF sections when the volume control is full "ON" because of background noise accompanying the high gain of the audio amplifier. A DC vacuum tube voltmeter connected to the junction of R20 and C10 (lug 3 of S1-E—See Figs. 9 & 10) will provide an accurate and stable indication of RF output, at the AM demodulator, for alignment of the BC and SW bands.

Unless the various circuits of each channel are very much out of alignment, adjustments made in the SW circuits will not affect the BC circuits and adjustments made in the FM circuits will not alter either the BC or SW circuit adjustments. However, if any of these channels are badly out of alignment necessitating considerable adjustment, it is best, after these adjustments have been made, to go back and check the adjustment previously made on the other channels.

An un-modulated (CW) signal of the proper radio frequency may be used for alignment of all three channels (BC, SW, and FM), but it is convenient to use a 400 cycle AM signal during alignment and occasionally advance the volume control to be sure the correct signal is tuned in.

Before making any adjustment, allow the receiver and signal generator to warm up for at least five minutes. IMPORTANT: All adjustments must be made in the order in which they are given; i.e., the BC band must be aligned first, followed by the SW, and last, the FM band.

INSTRUCTIONS FOR REMOVING THE CHASSIS

If, for any reason, it is necessary to remove the radio chassis from the cabinet, proceed as per following instructions:

Remove the power cord plug from the wall receptacle, and remove all control knobs and push-buttons by simply pulling them straight up from the panel. The cabinet back cover and AM loop assembly may be detached from the chassis by pulling the loop leads out of their receptacle on the chassis, after the small wood screws holding the assembly on the cabinet have been removed. The FM antenna is disconnected from the chassis by removing the three prong plug at the rear of the chassis. All power cables and leads may be disconnected at convenient plugs and jacks in the chassis. The speaker is connected to the amplifier chassis by a 5-prong plug on the speaker.

After all connecting leads and cables have been disconnected from the chassis, remove the four hexagon-head machine screws which hold the chassis mounting rails in the cabinet. The two upper machine screws are removed from inside the record changer compartment. The two lower bolts are located below the radio chassis and removed from the chassis side of the cabinet. Note: When replacing the chassis in the cabinet, be sure dial glass is up snug against the control panel when the four mounting screws are tightened and that they are tightened securely.

PUSH-BUTTON ADJUSTMENT

The mechanical type of push-button tuning used with this receiver makes possible the selection of any one of eight pre-selected stations. Any push-button may be adjusted to select any station in the three tuning bands. However, more accurate tuning of the SW and FM stations will be obtained if the lower four buttons E, F, G and H, Figures 2 and 3, are used for stations within these bands.

1. Remove all push-buttons by pulling straight up from the panel.
2. Manually tune in the desired station.
3. Release the screw adjacent to the push-button shank and push the shank in firmly as far as it will go while holding the tuning control knob.
4. Release the shank and tighten the locking screw.
5. Rotate the tuning control to a different position and check the push-button setting by again depressing the shank previously adjusted. The tuning dial should automatically return to the stations previously tuned in. However, in some cases it may not be exactly on the peak frequency of the stations. In such cases, continue as follows:
6. Re-tune the station manually to its peak frequency, and note whether it is necessary to increase or decrease the frequency setting for optimum tuning.
7. If it is necessary to increase the dial frequency setting, then the dial should be set at an additional increase beyond the optimum point (approximately the amount of the increase) and procedures 3, 4, 5 and 6 repeated. The push-button should then tune in the station exactly on its peak frequency.
8. If it is necessary to decrease the dial frequency setting, then the dial should be set at a lower frequency from its optimum point (approximately the amount of the decrease) and the procedure in 3, 4, 5 and 6 repeated.
9. Repeat the above procedures for the remaining seven push-buttons.

After the push-buttons have been set up as previously described, the proper tab with its transparent cover should be inserted together in each push-button knob. The push-buttons should now be placed on the proper shanks

ALIGNMENT PROCEDURE
MODEL 1217B

EQUIPMENT REQUIRED

Signal Generator
AM, 455 KC to 106 MC

Vacuum Tube Voltmeter
DC up to approximately 20 volts. Ground, or minus, must be isolated from the power line.

FM Test Circuit Plug
See Fig. 4 for details.

.01 mfd. and 50 mmf. (or less) capacitor used for connecting signal generator to receiver.

Alignment Screwdriver
Must be 100% fiber and preferably over 8" in length.

Alignment Socket Wrenches
One ¼" hexagon - 100% fiber, 8" long.
One ⅜" hexagon - 100% fiber, 6" long.
If the ⅜" wrench has a hole through the handle of sufficient diameter to permit inserting the alignment screwdriver, the locking nuts on L1, L2 and L3 can be loosened or tightened at the same time these padders are adjusted with the screwdriver inside.

AM ALIGNMENT

Turn receiver on and allow to warm up for at least 5 minutes. (Input voltage, 117 volts 60 cycle AC). Set volume control to minimum, bass and treble controls full counterclockwise, range control to BC (third from most counterclockwise position), tuning gang fully closed. Set dial pointer to Reference Mark at low Frequency end of dial as shown on Fig. 3. If built-in AM loop antenna is disconnected, the two contacts of the AM antenna input jack located on top the chassis must be shorted together. C69 and C4 should be adjusted with loop connected.

IF CHANNEL

1. Short #5 terminal on gang (C2-F) to chassis. See Fig. 2.
2. Set signal generator to 455 KC, CW or AM, and connect to #3 gang terminal (C2-E) through a .01 mfd. capacitor. See Fig. 2.
3. Connect low range of V.T.V.M. to junction of R20 and C40 (lug 3 of switch S1-E is a convenient point—See Figs. 9 & 10), and chassis ground, and adjust signal generator attenuator to produce approximately 2 volts of AVC on the V.T.V.M.
4. Adjust C36B, C36A, C31B and C31A for maximum meter reading, keeping signal input to produce approximately 2 volts AVC. Repeat these adjustments until no further improvements can be made in any one of them. NOTE: All adjustments must be made with a completely non-metalic screwdriver.

BC OSCILLATOR ALIGNMENT

1. Remove short from #5 gang terminal.
2. Move signal input from #3 gang terminal to external AM antenna terminal (J1) and set input frequency to 1475 KC CW or AM. (V.T.V.M. remains connected as for IF alignment.)
3. Set tuning control to 1475 KC.
4. Adjust C24, (BC oscillator trimmer) for maximum meter reading.
5. Set signal generator and receiver dial pointer to 580 KC.
6. Adjust BC oscillator padder C26 for maximum meter output. Repeat steps 2 to 6 until oscillator tracks correctly. Any change in C26 will necessitate a readjustment of oscillator trimmer C24.

RF AND ANTENNA ALIGNMENT FOR BC BAND

1. Change coupling capacitor connecting signal generator to AM external antenna terminal from .01 mfd. to 50 mmf. or less. (Terminals of AM loop input jack must be shorted together if loop is disconnected.)
2. Adjust signal generator and receiver tuning control to 1475 KC.
3. Adjust BC oscillator trimmer, C24, BC RF trimmer, C12 and BC antenna trimmer, C69 for maximum output. (If AM loop is disconnected, C69 should be adjusted after chassis is installed in cabinet.)
4. Check overall tracking at 580 KC and 965 KC. Maximum output should occur within the ± 10 KC of the indicated dial pointer reading. If it falls outside these limits, the plates of the gang rotor should be bent to correct tracking, but this is a difficult operation and should be attempted only by experienced technicians.
5. Repeat steps 3 and 4 until no appreciable improvement can be obtained by additional adjustments.

SW ALIGNMENT

1. V.T.V.M. and signal generator connected as for preceding step 5 of BC RF and antenna alignments; range switch in SW (most clockwise position).
2. Set signal generator and tuning control to 15 MC CW.
3. Adjust SW oscillator trimmer (C23), SW RF trimmer (C11), and SW antenna trimmer (C4) for maximum output. NOTE: If circuits are badly out of alignment, it may be necessary to apply the signal first to terminal #3 on gang (C2-E) until oscillator is brought close to correct alignment. The local oscillator frequency in the receiver should be adjusted to the RF *plus* the IF (not below the RF). The correct position can be determined by turning C23 all the way in (clockwise) and then out (counter-clockwise) until the second peak is reached.
4. Tune receiver and signal generator to 6 MC and check calibration and output. Maximum meter reading should be obtained with the dial pointer ± 100 KC of the 6 MC dial reference mark and an AVC output voltage not less than one-half of the AVC voltage obtained at 15 MC, providing the same voltage is applied to the antenna in both cases.

FM ALIGNMENT

FM IF CHANNEL

1. Set range control to FM (second from most counterclockwise position) and tuning gang to maximum capacity (closed).
2. Insert special FM test circuit plug, detailed below, in test circuit jack J2 located on left side of radio chassis. See Fig. 2.

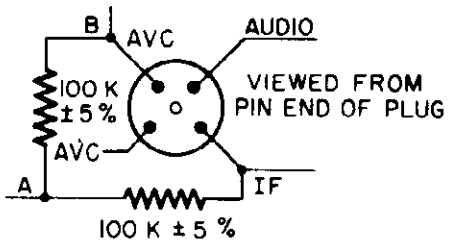

Test Circuit Plug

3. Connect V.T.V.M. ground or "minus" lead to point "B" and "plus" lead to IF pin on test circuit plug.
4. Connect signal generator to #4 (C2-B) gang terminal through a .01 mfd. capacitor and short #6 gang terminal (C2-C) to chassis. See Fig. 2.
5. Adjust output of signal generator to obtain 10.7 MC CW and approximately 4 volts on V.T.V.M.
6. Adjust C35B, C35A, C28B, C28A, and C46A for *maximum* meter reading, repeating all adjustments several times. NOTE: It may be necessary to apply the 10.7 MC signal to pin 6 of the 1st IF tube (7AH7) and adjust C35B, C35A, and C46A before applying the signal to #4 gang terminal and adjusting C28B and C28A.
7. Change V.T.V.M. "minus" to point "A" (center tap of two 100 K resistors) of test circuit jack and "plus" lead to audio (marked AF on chassis).
8. Turn signal generator OFF and set meter to zero when no signal is applied to IF.
9. Turn signal generator ON and adjust C46B for zero output on meter. It may be possible to obtain two or more points of adjustment at which a zero meter reading can be obtained. The correct one is the one at which the meter passes through zero most sharply with the minimum rotation of C46B.
10. Alternately adjust C46A (3rd FM IF primary) for maximum DC voltage across pins "B" and "IF" (meter connected as for previous IF alignment), and C46B (3rd FM IF secondary) for *minimum* DC voltage from point "A" to "audio." NOTE: In making this adjustment, the signal input level should be adjusted to provide approximately 6 volts DC across pins "B" and "IF" of test jack.
11. Remove short from #6 gang terminal and change signal generator input from gang to FM antenna jack on rear of radio chassis, applying signal through FM dummy antenna circuit shown in Fig. 5.

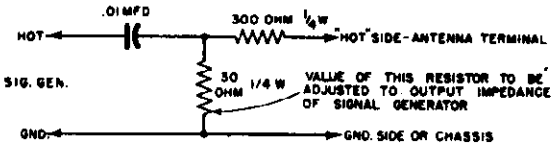

FM Dummy Antenna

12. V.T.V.M. should be connected from point "B" to "IF" of test circuit plug.
13. Adjust signal generator and tuning control to 106 MC and output to produce approximately 8 volts on V.T.V.M.
14. Using a completely non-metalic ¼" hexagon socket wrench, adjust FM oscillator trimmer (C22), FM RF trimmer (C10) and FM antenna trimmer (C1) for maximum output voltage read on V.T.V.M., rocking the tuning gang slightly as these adjustments are made.
15. Set signal generator and tuning control to 90 MC.
16. Adjust FM oscillator padder (L3), FM RF padder (L2) and FM antenna padder (L1) for maximum output voltage. The ⅜" locknut on these padders must be loosened before adjustments are made and tightened after adjustments are completed.
17. Repeat steps 14, 15 and 16 until maximum output voltage is obtained with the dial pointer at 90 MC and 106 MC when the signal generator is set at these respective frequencies. Any adjustments made under step 16 above must be followed by repeating the adjustments required under step 14.

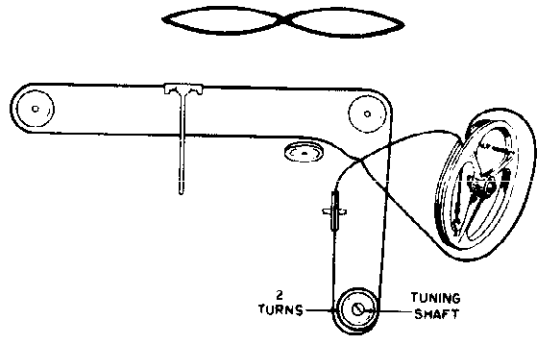

Dial Stringing Diagram

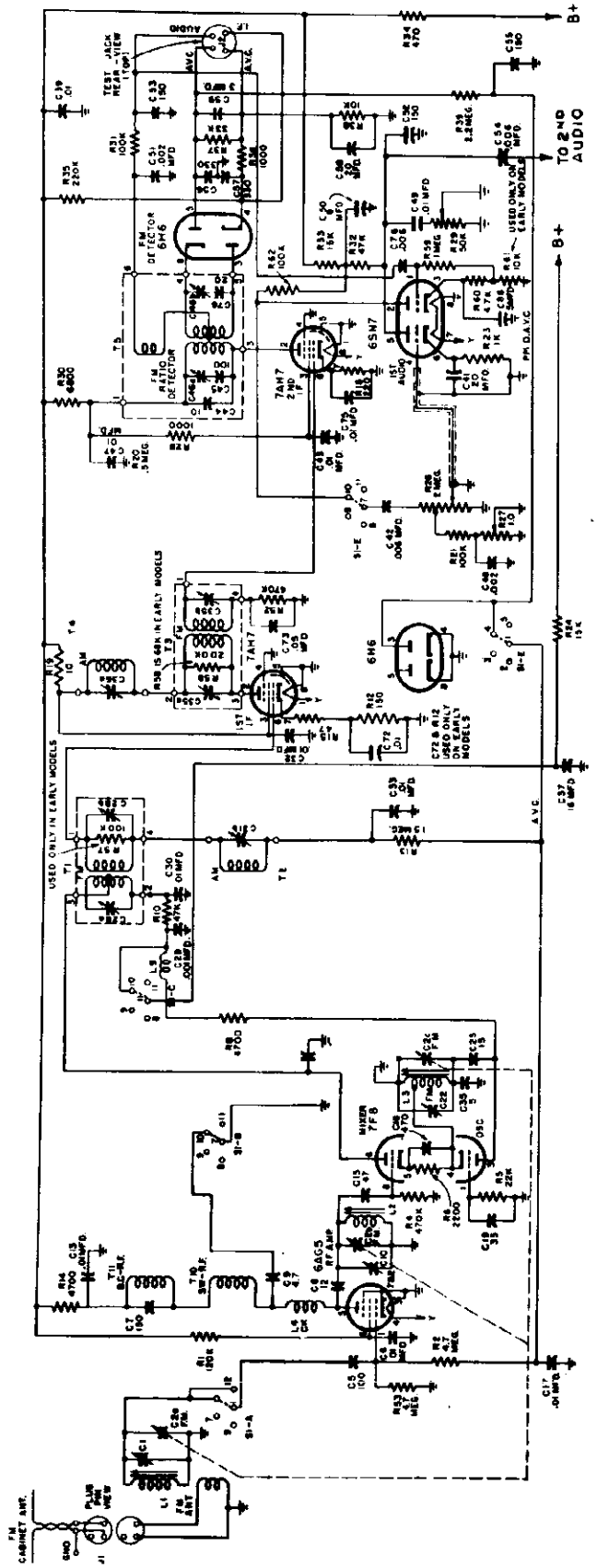

NOTE:
1ST POSITION
NOT SHOWN
BAND-SWITCH SHOWN
AT 2ND POSITION CLOCKWISE.
F M BAND
88-108 MC

© John F. Rider

LINE VOLTAGE 117 A-C	ZERO SIGNAL INPUT	RANGE SWITCH IN FM POSITION	VOL. CONT. MIN.	TONE CONTROL FULL COUNTERCLOCKWISE	CONDITIONS OF SOCKET	VOL RESIS

R F AMPLIFIER 6AG5

FM OSCILLATOR MIXER 7F8

A.M. CONVERTER 6BE6

1ST I.F. 7AH7

NOTE: VOLTAGE AND RESISTANCE MEASUREMENTS ON 6BE6 & 6H6 AM DEMODULA

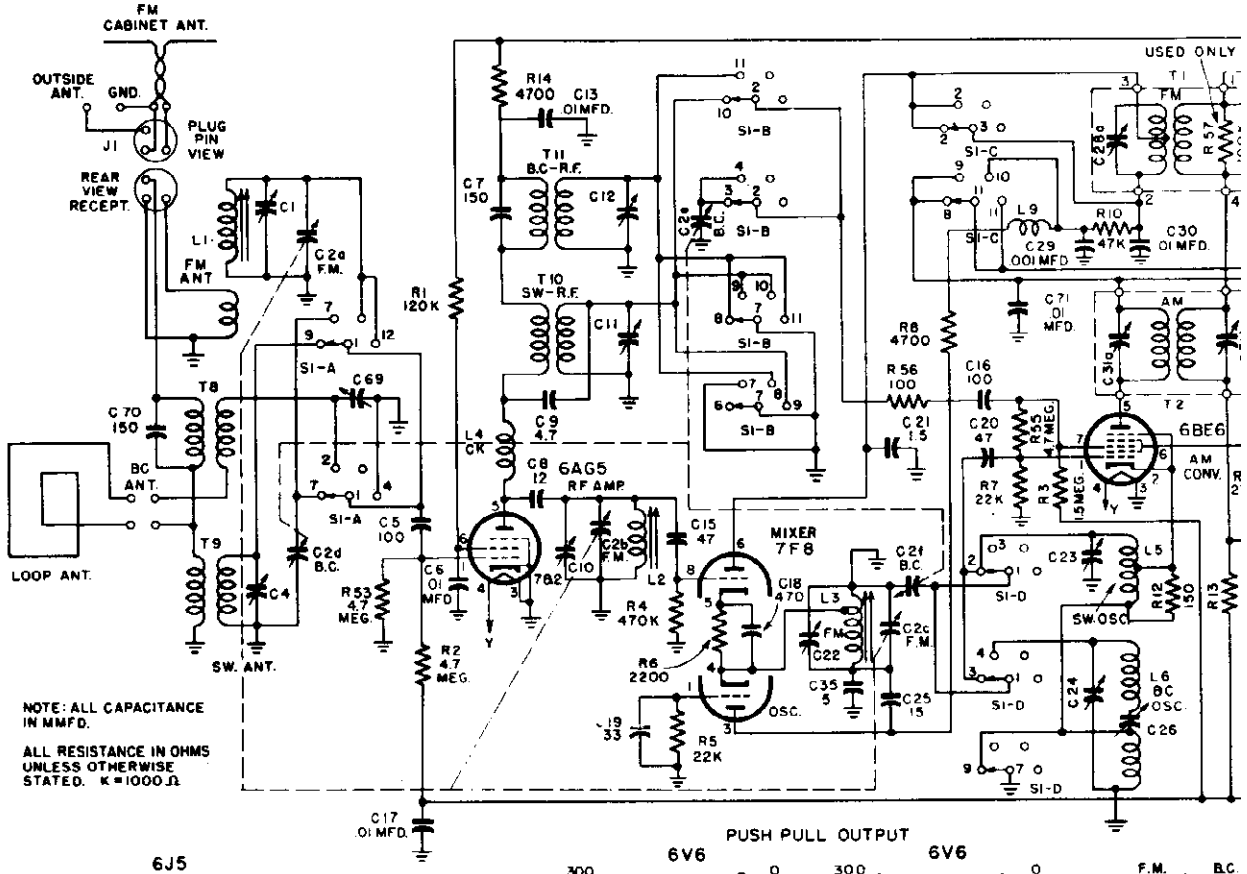

PUSH PULL OUTPUT

6J5

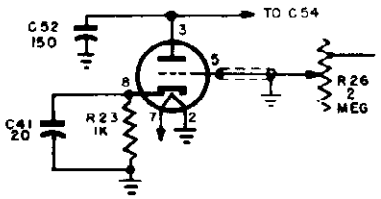

THE ABOVE CIRCUIT USED IN PLACE OF 6SN7 IN RADIO CHASSIS IN CODE "A" & "B" UNITS. LUG 10 OF SI-E CONNECTED DIRECTLY TO R31.

6V6

6V6

2ND AUDIO & INVERTER 6SN7

RECTIFIER 5U4G

AMPLIFIER & POWER SUPPLY TUBES

F.M. B.C. PHONO SW

RANGE SWITC SHOWN IN SW. POSITION

DUE TO SPROCKET DRIVE DIRECTION OF ROTATION OF SWITCH SHAFT IS OPPOSITE TO THAT OF CONTROL KNOB ROTATION.

REAR OF WAFERS WIEWED THROUGH WAFER FROM THE FRONT

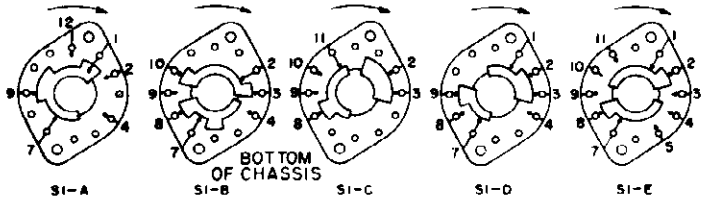

SWITCH SHAFT, SHOWN IN COUNTERCLOCKISE POSITION - SHORT WAVE

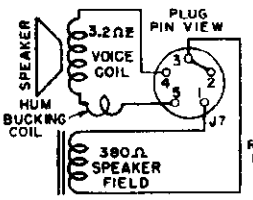

T6 C67 .01 MFD. C68 .01 MFD.

©John F. Rider

DIO DIV.

MODEL 1217B

ASUREMENTS

E TO COMMON GROUND D-C AT 20,000 Ω/V A-C AT 1,000 Ω/V

2ND I.F 7AH7

A.M. DEMODULATOR 6H6

F.M. DETECTOR 6H6

1ST AUDIO 6SN7

MADE WITH RANGE SWITCH IN AM POSITION

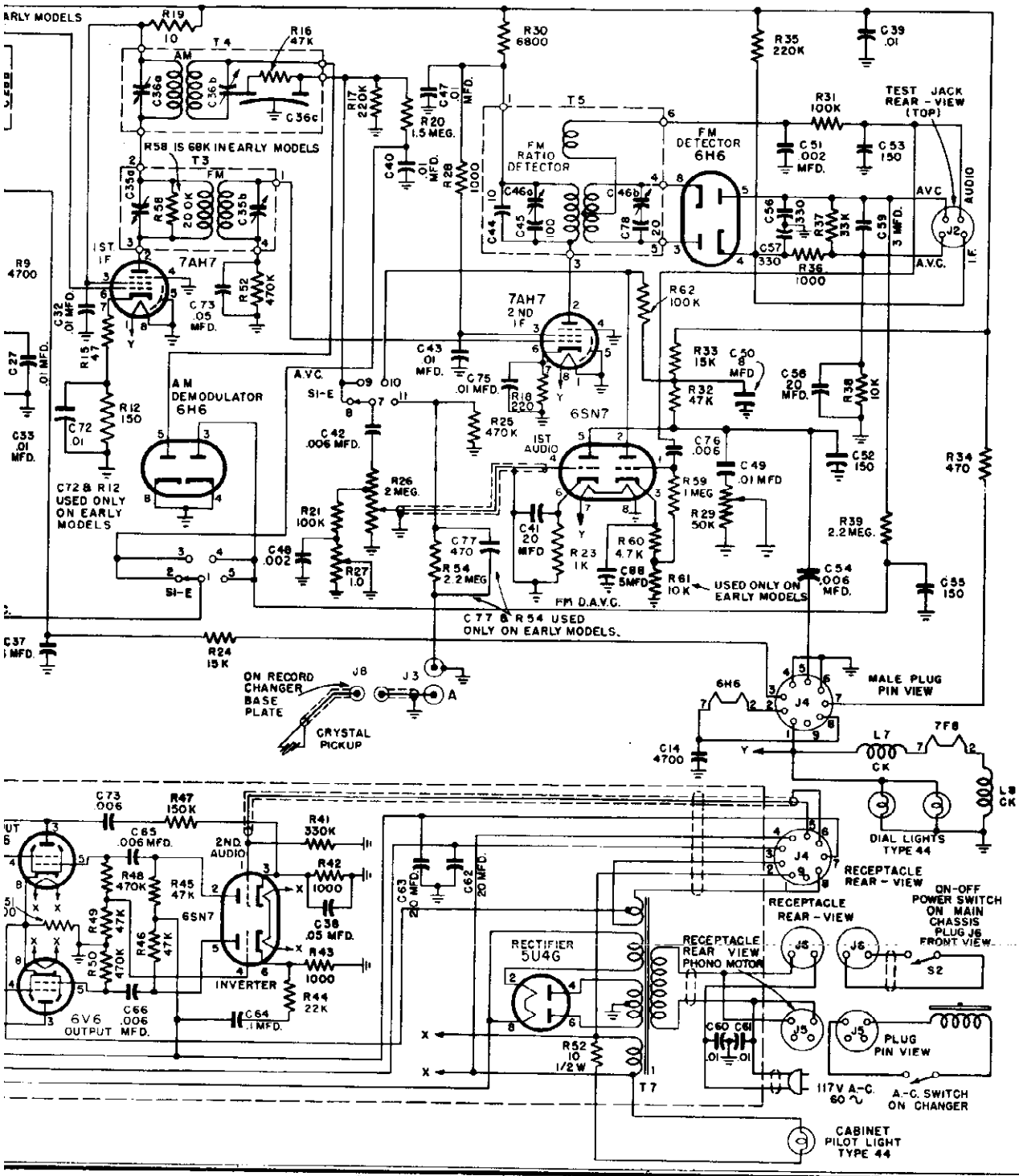

CLARI-SKEMATIX
Registered Trademark

MODEL 1217B

BENDIX RADIO DIV.

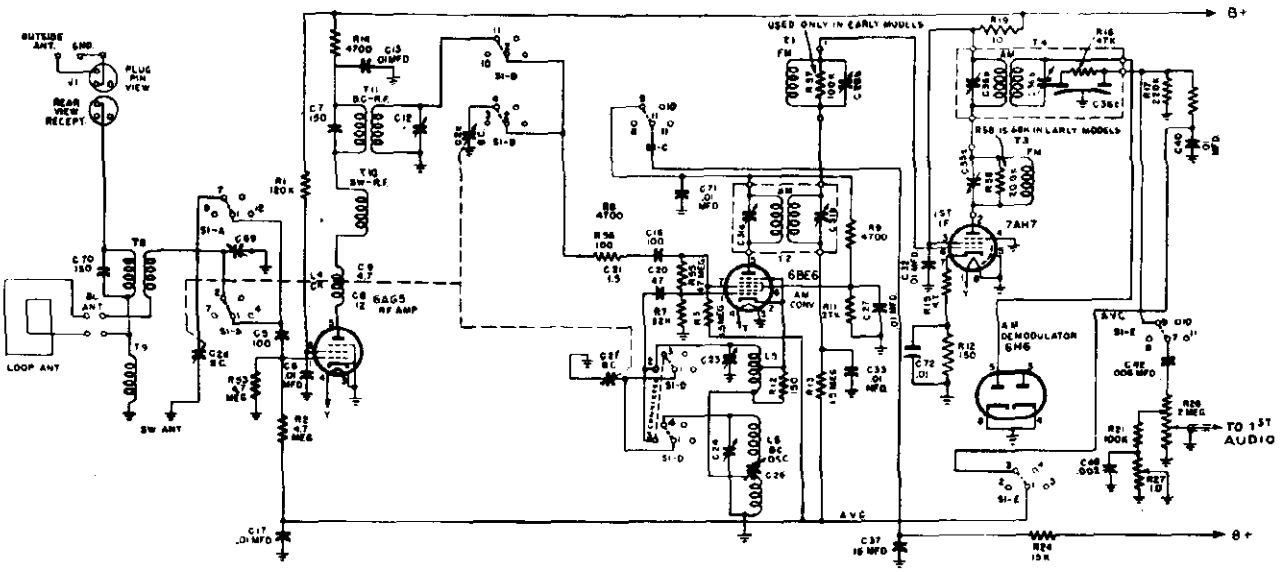

BAND-SWITCH SHOWN
AT 3RD POSITION CLOCKWISE.
BROADCAST BAND
540 - 1620 KC

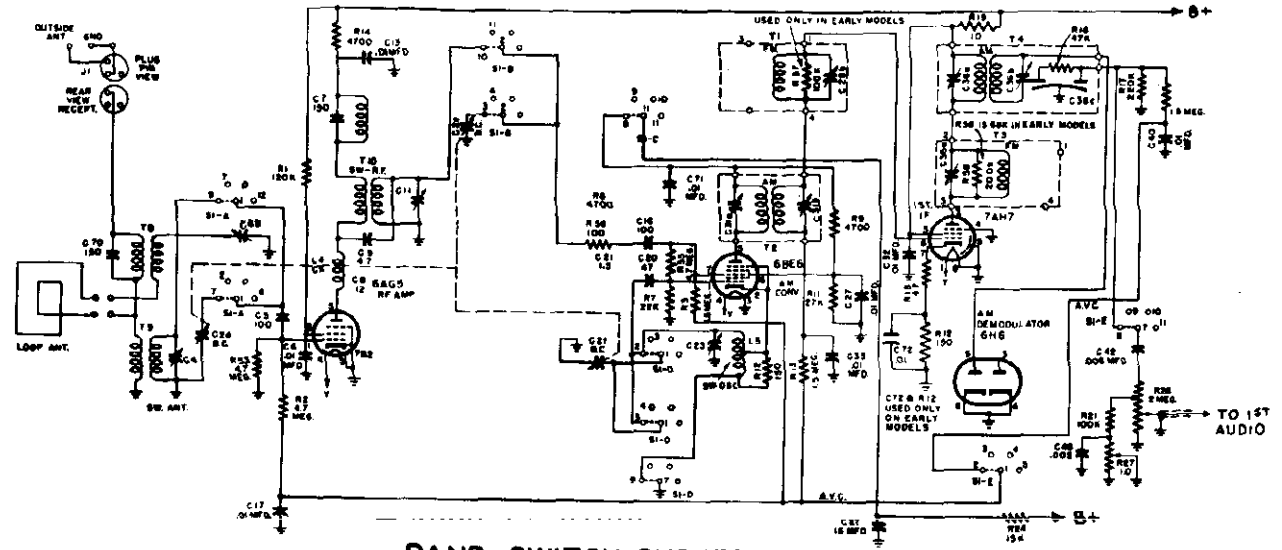

BAND-SWITCH SHOWN
AT 4TH POSITION CLOCKWISE.
SHORT WAVE BAND
5.75 - 15.5 MC

© John F. Rider

BENDIX RADIO DIV. MODEL 1217B

AMPLIFIER ELECTRICAL COMPONENTS

CE2A02	CAPACITOR—Electrolytic Fixed Dry, 20-20 mfd. 450V (C62 C63)
CP4M51	CAPACITOR—Paper .01 mfd. (C60 C61)
CP2T30†	CAPACITOR—Paper Tubular .05 mfd. 200V (C38)
CP4T20†	CAPACITOR—Paper Tubular .006 mfd. 400V (C65 C66 C79)
CP4T31†	CAPACITOR—Paper Tubular .01 mfd. 400V (C67 C68)
CP4T51†	CAPACITOR—Paper Tubular .1 mfd. 400V (C64)
RC4D16	RESISTOR—Comp. 220 ohms 2W ± 20%, (R51)
RC1G24†	RESISTOR—Comp. 1000 ohms 1/4W (R42 R43)
RC1G40†	RESISTOR—Comp. 22,000 ohms 1/4W (R44)
RC1G44†	RESISTOR—Comp. 47,000 ohms 1/4W (R49)
RC1G58	RESISTOR—Comp. 470,000 ohms 1/4W (R48 R50)
RC2G44	RESISTOR—Comp. 47,000 ohms 1/2W (R15 R46)
RC1H53	RESISTOR—Comp. 150,000 ohms 1/4W (R47)
RC1H56†	RESISTOR—Comp. 330,000 ohms 1/4W (R41)
RC2H00	RESISTOR—Comp. 10 ohms (R52)
TA0Q00	TRANSFORMER—Output (T6)
TP0R00	TRANSFORMER—Power (T7)

AMPLIFIER MECHANICAL COMPONENTS

BT3S03	BOARD—Terminal 3 Soldering lugs, Single Mt. (M1)
BT3S05	BOARD—Terminal 3 Soldering lugs, Double Mt. (M2)
BT4S03	BOARD—Terminal 4 Soldering lugs, Double Mt. (M3)
CL2A08	CORD—A.C. Brown (M4)
CL2A10	CORD—Phono Power (J5 M5)
CS0M02	COVER—Power Cable Assy. (M6)
GR0Z13†	GROMMET—Rubber (M7)
GR0S14†	GROMMET—Rubber Insulating (M8)
HC0C09†	CLIP—Cable (M9)
HC0T00†	CLAMP—Tube (M10)
JR2O07	RECEPTACLE—2 Contact Female (J6)
JR5O01	RECEPTACLE—5 Contact Female (J7)
PI0P00†	PLATE—Line Cord Insulator (M11)
SE2R00†*	SPEAKER—E.D. 12"
SO0D09†	SOCKET—Pilot Light (M12)
SO8S01†	SOCKET—Octal Tube

RECEIVER ELECTRICAL COMPONENTS

CC9A12	CAPACITOR—Ceramic Insulated 1.5 mmf. 500V (C21)
CC9A18	CAPACITOR—Ceramic Insulated 4.7 mmf. 500V (C9)
CC0B23	CAPACITOR—Ceramic Insulated 12 mmf. 500V (C8)
CC0B24	CAPACITOR—Ceramic Insulated 15 mmf. 500V (C25)
CC7B19	CAPACITOR—Ceramic Insulated 5 mmf. 500V (C35)
CC8B28†	CAPACITOR—Ceramic Insulated 33 mmf. 500V (C19)
CC8B30†	CAPACITOR—Ceramic Insulated 47 mmf. 500V (C15 C20)
CE1D00†	CAPACITOR—Electrolytic Single Section 3 mfd. 50V (C59)
CE2D00	CAPACITOR—Electrolytic Dry, 2 section 8 mfd. & 16 mfd. 450V (C37 C50)
CE1T02†	CAPACITOR—Electrolytic 20 mfd. 25V (C58 C11)
CM5A26†	CAPACITOR—Mica 150 mmf. 500V (C7 C55 C53 C52)
CM5A31†	CAPACITOR—Mica 330 mmfd. (C56 C57)
CM5A38†	CAPACITOR—Mica 470 mmfd. (C77)
CM5A1C	CAPACITOR—Mica .001 mfd. (C29)
CM5E73†	CAPACITOR—Mica 4700 mmf. 500V (C14)
CM5L02	CAPACITOR—Mica (Low Loss) .002 mfd. 500V (C51)
CM6L22	CAPACITOR—Mica (Low Loss) 100 mmf. 500V (C16 C5)
CM6L38	CAPACITOR—Mica (Low Loss) 470 mmfd. 500V (C18)
CP0M31†	CAPACITOR—Paper .01 mfd. 120V (C33 C17 C72 C75)
CP1M31†	CAPACITOR—Paper .01 mfd. 400V (C6 C27 C32 C39 C13 C30 C47 C43)
CP2T40†	CAPACITOR—Paper Tubular .05 mfd. 200V (C73)
CP4T20†	CAPACITOR—Paper Tubular .006 mfd. 400V (C54 C42 C76)
CP4T31†	CAPACITOR—Paper Tubular .01 mfd. 400V (C71 C40)
CP4T34†	CAPACITOR—Paper Tubular .02 mfd. 400V (C39)
CP6T12†	CAPACITOR—Paper .002 mfd. 600V (C48)
CT1A12†	CAPACITOR—Trimmer Mica (C26)
CT1A13†	CAPACITOR—Trimmer Mica 4-75 mmfd. (C11 C4 C23 C24)
CT1A14†	CAPACITOR—Trimmer Mica 1.8-40 mmfd. (C12)
CT1A15†	CAPACITOR—Trimmer 4.0-70 mmf. (C69)
CT1B00	CAPACITOR—Trimmer Air concentric 3-30 mmfd. (C1 C10 C22)
CV0E00	CAPACITOR—Variable (C2)
LA0F00	COIL—FM Ant. (L1)
LF0A02	CHOKE—RF (L7 L8)
LF0A03	CHOKE—RF (L4)
LI0F00	COIL—RF FM (L2)
LO1B01	COIL—Osc. B.C. (L6)
LO1C00	COIL—Osc. S.W. (L5)
LO1F00	COIL—Osc. FM (L3)
LT0A00	COIL—Broadcast Ant. (T8)
RC1G08	RESISTOR—Comp. 47 ohms 1/4W (R15)
TI0T00	INSERT—Brass 10-32 Tuning Core (M48)
RC1G14†	RESISTOR—Comp. 150 ohms 1/4W (R12)
RC1G24†	RESISTOR—Comp. 1000 ohms 1/4W (R36)
RC1G35†	RESISTOR—Comp. 8200 ohms 1/4W (R38)
RC1G40†	RESISTOR—Comp. 22,000 ohms 1/4W (R57)
RC2G41†	RESISTOR—Comp. 27000 ohms 1/2W (R11)
RC2G52†	RESISTOR—Comp. 120,000 ohms 1/2W (R1)
RC3G34†	RESISTOR—Comp. 68000 ohms 1W (R30)
RC1H12†	RESISTOR—Comp. 100 ohms 1/4W (R56)
RC1H16†	RESISTOR—Comp. 220 ohms 1/4W (R18)
RC1H24†	RESISTOR—Comp. 1000 ohms 1/4W (R23 R28)
RC1H28†	RESISTOR—Comp. 2200 ohms 1/4W (R6)
RC1H42†	RESISTOR—Comp. 33000 ohms 1/4 (R37)
RC1H44†	RESISTOR—Comp. 47000 ohms 1/4W (R10 R32)
RC1H51†	RESISTOR—Comp. 100,000 ohms 1/4W (R21 R31)
RC1H54†	RESISTOR—Comp. 220,000 ohms 1/4W (R17 R35)
RC1H58†	RESISTOR—Comp. 470,000 ohms (R25 R52 R4)
RC1H64†	RESISTOR—Comp. 1.5 meg. 1/4W (R3 R13 R20)
RC1H66†	RESISTOR—Comp. 2.2 meg. 1/4W (R39 R54)
RC2H32†	RESISTOR—Comp. 4700 ohms 1.2W (R8 R9 R14)
RC2H36	RESISTOR—Comp. 10,000 ohms 1/2W (R61)
RC2H38	RESISTOR—Comp. 15,000 ohms 1/2W (R33)
RC3H20	RESISTOR—Comp. 470 ohms 1W (R34)
RC3H36†	RESISTOR—Comp. 10,000 ohms 1W (R19)
RV0C00†	POTENTIOMETER—(Tone-Treble) (R20)
RV4C01†	POTENTIOMETER—Volume 2 meg. (R26)
RV1C02†	POTENTIOMETER—(Tone-Bass) 1 meg. (R27)
RW0D38	RESISTOR—Wirewound 15,000 ohms (R24)
TI0C07	TRANSFORMER—1st I.F. FM (T1)
TI0D09	TRANSFORMER—I.F. Output AM (T4)
TI0D10	TRANSFORMER—3rd I.F. FM (T5)
TI0C10	TRANSFORMER—1st I.F. Input AM (T2)
TI0I01	TRANSFORMER—2nd I.F. FM (T3)
TR1C00	TRANSFORMER—S.W.R.F. Assy. (T10)
TR1H00	TRANSFORMER—SW Ant. Assy. (T9)
TR1L00	TRANSFORMER—B.C. Interstage (T11)
*#44†	LAMP—Bayonet Base Dial
*#47†	LAMP—Bayonet Base Pilot

RECEIVER MECHANICAL COMPONENTS

BT2R00	BOARD—Contact Loop (M15)
BT1S00†	BOARD—Terminal 1 soldering lug Single Mt. (M16)
BT2S00†	BOARD—Terminal 2 Soldering Lug Single Mt. (M17)
BT2S03†	BOARD—Terminal 2 Soldering Lug Single Mt. (M18)
BT2S06	BOARD—Terminal 2 Soldering Lug Single Mt. (M23)
BT3S03	BOARD—Terminal 3 Soldering Lug Single Mt. (M1)
BT1S02	BOARD—Terminal 4 Soldering Lug Double Mt. (M19)
BT5S01	BOARD—Terminal 5 Soldering Lug Double Mt. (M20)
BT6S01	BOARD—Terminal 6 Soldering Lug 2 mtg. lug (M21)
BT7S00	BOARD—Terminal 7 Soldering Lug 2 mtg. lug (M22)
CD0C20	CABLE—Dial
DS0E01	DIAL—12 Tube AM FM Glass
GR0I04	GROMMET—Cushion Dial Glass Rubber (M24)
GR0S12	GROMMET—Condenser Shockmount (30)
HB0M23	BRACKET—Assy. R.H. Back Plate Support (M26)
HB0M24	BRACKET—Assy. L.H. Back Plate Support (M27)
HB0M25	BRACKET—Bearing Assy. (M28)
HB0M31	BRACKET—Condenser R.H. (M29)
HB0M32	BRACKET—Condenser LH (31)
HB0M34	BRACKET—R.F. Assy. (M32)
HB0M36	BRACKET—Band Switch (M33)
HB0M37	BRACKET—Rotary Switch (M34)
HB0M38	BRACKET—Manual Tuning Control (M35)
HB0M41	BRACKET—Power Control Mt. (M36)
HB0M42	BRACKET—Chassis Shockmount (M37)
HB0M43	BRACKET—Terminal Board & Trimmer Plate Assy. (inside T5 Can)
HB0S03	BALL—Tuning Shaft Bearing 3/32 Dia. (M38)
HB0S04	BALL—Tuning Shaft End Bearing 5/32 Dia. (M39)
HC0C00†	CLIP—Coil Mtg. (M40)
HC0C03†	CLAMP—Dial Cable (M41)
HC0C08†	CLIP—Cable (M42)
HC0L00	COVER—"S2" Switch (M43)
HC0S28	WASHER—"C" Blued Finish (M44)
HC0T02	CLAMP—Ring Retainer (M45)
HH0C00	HOOK—Dial Cord (M46)
HH01000	HOLDER—Dial Glass (M47)
HP0B00	PLATE—Dial Back (M49)
HS0C57	SPRING—Dial Cord
HS0C74	SPRING—Push Button Shaft Coil
HS8F00	SLEEVE—⅜ Spacer Flared (M50)
HS0S06	STUD—Shoulder 10-32 Thread (M51)
HS0S07	SCREW—8 x 32 x 3/16 Shoulder (R.H. end of RF Tuner Assy.)
IL0M11	INDICATOR—Dial (M52)
¶P1O00†	PIN—AM Loop Antenna Connector
JP1O02†	PLUG—Single Contact Male Phono (J3)
JP2O05	PLUG—2 Contact Male (J6)
JP3O01	PLUG—3 Contact Male (J1)
JR3O01	RECEPTACLE—3 Contact Ant. (J1)
JR4O01	RECEPTACLE—4 Contact (J2)
JR1S00	RECEPTACLE—Single Contact (J3)
MB0B03	BEARING—Manual Tuning Control (M52)
MB0S00	BUSHING—Manual Tuning Control (M53)
MG0S00	GEAR—Segment & Hub Assy. (M54)
MG0S01	SPROCKET—& Hub Assy. (M55)
MP0M01	PULLEY—Drive (M56)
MP0M02	PULLEY—Idler Dial Cord (M57)
MR0P00	RAIL—Pointer (M58)
MS0C01	SHAFT—Band Switch Control (M59)
MS0T09	TUNING—Shaft (M60)
SM0B00	SHIELD—Min. Tube Base (attached to chassis) (M61)
SM0R01	SHIELD—Metal Braid
SM0T03	SHIELD—Miniature Tube (M62)
SO0D07	SOCKET—Dial Light (Lead 12 1/4" Long) (M63)
SO0C08	SOCKET—Dial Light (Lead 8 3/4" Long) (M64)
SO0L02	SOCKET—Locktal Tube (Ringmount)
SO0L03	SOCKET—Locktal Tube
SO7M05	SOCKET—Min. Tube (Zip in type)
SO0M01	SOCKET—Power Cable (M65)
SR4G00	SWITCH—Rotary Range (S1)
SR2L00	SWITCH—Rotary Snap SPST (S2)
ST0M00	TUNING—Core 10-32 Threaded, Copper Rod
XS0C02	STRIP—Copper (M66)
XS0C03	STRIP—Contact (Rotary Switch Shaft) (M67)
XS0C04	STRIP—Contact (Band Switch Shaft) (M68)
XS0C05	STRIP—Copper 3" x 5 16" x .004 (M69)
	WIRE—Stranded (used for AM loops antenna—10 ft. req.)

CABINET COMPONENTS

BP0B01	BUTTON—Mottled Brown Push
HR0R00	BUMPER—Swing-A-Door Cam (Rubber)
RZ0B06	LOOP—Cabinet Back
BZ0D09	BAFFLE—Cardboard & Cloth
BZ0D10	BAFFLE—Cardboard & Cloth with cutout
DZ0F13	DECAL—Tuning
DZ0F14	DECAL—Volume
DZ0F15	DECAL—On - Off
DZ0F16	DECAL—AM - FM
DZ0F17	DECAL—Treble
DZ0F18	DECAL—Bass
DZ0N00	DECAL—"Swing-A-Door"
GR0S06†	GROMMET—3/8 x 7/8 x 1/2 thick Rubber Shockmount
GR0S11	GROMMET—9/16 x 1 1/4 x 9/32 thick Split-type Shockmount
GZ0M05	GRILLE—Metal
HB0M27	BRACKET—2 1/4 x 1 7/16 x 1" Record Player Mtg.
HB0M30	BRACKET—13/27/64 x 1 15/32" Record Changer Mtg.
HC0C07†	CLIP—1 x 5/8" Cable
HC0R00	CLIP—"V" Shaped Runner Stop
HC0S29	CLIP—Spring "C" Washer 5/16 x .039
HC0S30	CLIP—Pushbutton Retainer Spring
HK0R00†	RETAINER—Ring (For Control Knobs)
HK0R04	KNOB—Door Pull
HN0R00†	BUSHING—10-32 Threaded
HR0P01†	RIVET—1/8 x .121" Oval Head N.P. Tubular
HR0P05†	RIVET—13/64 x .121" Oval Head N.P. Tubular
HR0S07	RIVET—5/16 Head x .185 Shoulder x .330" Length (Cam Bumper)
HS0C18†	SPRING—Helical Coil (Record Changer Shockmount)
HS0C56†	SPRING—Helical Coil (Record Changer Shockmount)
HS0P17†	SPACER—3/8 x 1/4 x 1/2 x 1/2"
HT0F00†	TRAY—FP51 Record Changer
HT0T00	TRACK—Record Changer
HZ0C00†	CATCH—Bullet Door Furniture
HZ0G01†	METAL—Glides
HZ0H00	HINGE—Lid
HZ0H04	HINGE—Door
HZ0S02	SUPPORT—Lid
JI0A00	JEWEL—Pilot Light (Amber)
KB0B01	KNOB—Indexed Control
KC0B06	KNOB—Control
MC0C00	CAM—Bumper Assy.
MC0C01	CAM—Swing-A-Door
MR0C04	ROLLER—Swing-A-Door (Shaft and Roller)
MS0F00	RUNNER—13.5 x 1 3/8" Plain
MS0G00	RUNNER—13.5 x 1 3/8" Guide
NE0M00	EMBLEM—Nameplate
NP0S00	NEEDLE—Sapphire Phono
PF0B00	FELT—Pads Brown
WF0Z03†	WASHER—Felt Brown 11.32 x 7/8 x 1/32"
XZ0R00	RAIL—Record Changer Stop
ZD1G00	DOOR—and front right section (Matched Mahogany)
ZL1G00	LID—and Top Permanent lid (Matched Mahogany)
*ZW1G00	CABINET—Assy. (BW71) Period Combination (Mahogany)
*FP51†	CHANGER—Record

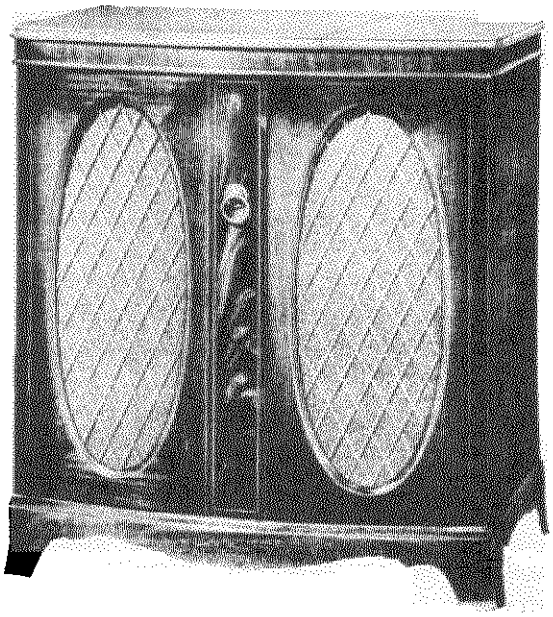

Fig. 1 Model 1217D

SPECIFICATIONS

Power Requirements
105 - 125 volts, 60 cycles AC
Power Consumption (including phonograph)
180 watts
Tuning Frequency Range
AM 540 - 1620 KC
SW AM 6 - 15.5 MC
FM 88 - 108 MC
Tube Complement
1-6AG5, 1-7F8, 1-6BE6, 2-7AH7, 2-6H6, 2-6SN7, 2-6V6GT, 1-5U4G, 1-6AQ6, 1-6BA6, Total 14
Pushbuttons
8 mechanical type for any AM, SW, or FM station.
Loudspeaker
12-inch diameter electro-dynamic.
Record Changer
Automatic - twelve 10-inch or ten 12-inch standard records.
Maximum Power Output
12 watts.
Overall Dimensions
Height 34", width 31", depth 18¼".

CIRCUIT ANALYSIS

The Model 1217D radio provides radio reception of the Standard AM Broadcast Band, the Shortwave Band from 6 to 15.5 megacycles, and the FM Band from 88 to 108 megacycles. Phonograph reproduction is provided through the audio amplifier from a high impedance phono jack located on the radio chassis. A standard superheterodyne circuit is used, with one stage of tuned radio frequency on all three bands. A low impedance loop antenna installed on the back cover of the cabinet is used on both the Standard Broadcast and Shortwave Bands. A built-in dipole antenna is used on the FM Band. An outside antenna for the AM Bands may be connected to the binding screw marked ANTENNA on the rear of the cabinet. A 300 ohm outside FM dipole antenna may be connected to the terminals marked FM DIPOLE but the built-in dipole must be disconnected when an outside antenna is used.

CHASSIS CODE CHANGES

The schematic shown in Fig. 8 is for the code D radio chassis and the code C amplifier chassis. The data given below indicates the circuit changes incorporated in the different chassis as compared to this schematic.

RADIO CHASSIS

CODE C CHASSIS

First audio amplifier, 6SN7, and AM demodulator, 6H6, filaments were connected from pin #1 of J4 to ground, instead of being isolated from ground and in parallel with the FM detector 6H6 filament.

The audio output of the FM detector transformer (T5) was connected directly to pin #1 (grid) of the 6SN7 first audio amplifier. This deleted C85, 86, 87, R72, and 73. Cathode bypass capacitor, C88, was not used; cathode resistor R60 and grid resistor R59 were connected to ground through a common 10K resistor.

De-emphasis filter capacitors in the output circuit of T5, C51 and C53 were .002 mfd and 150 mmf respectively.

The Hush-O-Matic circuit shown in Fig. 9 was used in this chassis.

The 7F8 dual triode is used as an oscillator-mixer in the FM circuit and is made inoperative by removing its plate voltages when the range switch (S1) is in any but the FM position. Likewise, the 6BE6 is used as a converter for the Standard Broadcast and Shortwave Bands only, and has no plate voltage applied to it when S1 is in the FM or PH (phono) positions. One half of the 6H6 (pins 3 and 4) AM demodulator tube is used in the delayed AVC circuit for FM. The first triode section (pins 1, 2 and 3) of the 6SN7 in the radio chassis is used only when the range switch, S1, is in the FM position, but does not have the B plus removed from its plate when S1 is in any of the other three positions. The 6AQ6 and 6BA6 are used as amplifier-rectifier and control tubes for the Hush-O-Matic circuit and are inoperative on radio reception.

AMPLIFIER CHASSIS

CODE B

The hum-balancing potentiometer R76 and the voltage divider network consisting of R74 and R75 were deleted. The transformer filament winding used only for the FM detector (6H6) was center tapped and this tap connected to the cathodes of the 6V6 output tubes.

Some chassis coded B were identical to code C chassis.

ADJUSTMENT OF HUM-BALANCING POTENTIOMETER

The hum-balancing potentiometer, R76, on code C amplifier chassis should be adjusted with the range control in the FM position and the volume control at minimum. Adjust R76 to obtain minimum hum from the loudspeaker.

GENERAL

It is not necessary to remove the two chassis from the cabinet if the FM channel only is to be aligned. An FM test socket is provided on the chassis sideplate (facing outward in normal mounting position) at which the various voltages from the ratio detector are available for either meter or oscilloscope measurements.

If the BC and SW channels are to be aligned, it is advisable to remove the radio chassis from the cabinet in order to gain access to the BC and SW AVC voltage used for output indication. It is rather difficult to align the BC and SW RF and IF sections when the volume control is full "ON" because of background noise accompanying the high gain of the audio amplifier. A DC vacuum tube voltmeter connected to the junction of R20 and C40 (lug 3 of S1-E—See Figs. 7 & 13) will provide an accurate and stable indication of RF output, at the AM demodulator, for alignment of the BC and SW bands.

Unless the various circuits of each channel are very much out of alignment, adjustments made in the SW circuits will not affect the BC circuits and adjustments made in the FM circuits will not alter either the BC or SW circuit adjustments. However, if any of these channels are badly out of alignment necessitating considerable adjustment, it is best, after these adjustments have been made, to go back and check the adjustment previously made on the other channels.

An un-modulated (CW) signal of the proper radio frequency may be used for meter alignment of all three channels (BC, SW, and FM), but it is convenient to use a 400 cycle AM signal during alignment and occasionally advance the volume control to be sure the correct signal is tuned in.

Before making any adjustment, allow the receiver and signal generator to warm up for at least five minutes. IMPORTANT: All adjustments must be made in the order in which they are given; i.e., the BC band must be aligned first, followed by the SW, and last, the FM band.

INSTRUCTIONS FOR REMOVING THE CHASSIS

If, for any reason, it is necessary to remove the radio chassis from the cabinet, proceed as per following instructions:

Remove the power cord plug from the wall receptacle, and remove all control knobs and push-buttons by simply pulling them straight up from the panel. The cabinet back cover and AM loop assembly may be detached from the chassis by pulling the loop leads out of their receptacle on the chassis, after the small wood screws holding the assembly on the cabinet have been removed. The FM antenna is disconnected from the chassis by removing the three prong plug at the rear of the chassis. All power cables and leads may be disconnected at convenient plugs and jacks in the chassis. The speaker is connected to the amplifier chassis by a 5-prong plug on the speaker.

After all connecting leads and cables have been disconnected from the chassis, remove the four hexagon-head machine screws which hold the chassis mounting rails in the cabinet. The two upper machine screws are removed from inside the record changer compartment. The two lower bolts are located below the radio chassis and removed from the chassis side of the cabinet. Note: When replacing the chassis in the cabinet, be sure dial glass is up snug against the control panel when the four mounting screws are tightened and that they are tightened securely.

PUSH-BUTTON ADJUSTMENT

The mechanical type of push-button tuning used with this receiver makes possible the selection of any one of eight pre-selected stations. Any push-button may be adjusted to select any station in the three tuning bands. However, more accurate tuning of the SW and FM stations will be obtained if the lower four buttons E, F, G and H, Figures 2 & 3, are used for stations within these bands.

1. Remove all push-buttons by pulling straight up from the panel.
2. Manually tune in the desired station.
3. Release the screw adjacent to the push-button shank and push the shank in firmly as far as it will go while holding the tuning control knob.
4. Release the shank and tighten the locking screw.
5. Rotate the tuning control to a different position and check the push-button setting by again depressing the shank previously adjusted. The tuning dial should automatically return to the stations previously tuned in. However, in some cases it may not be exactly on the peak frequency of the stations. In such cases, continue as follows:
6. Re-tune the station manually to its peak frequency, and note whether it is necessary to increase or decrease the frequency setting for optimum tuning.
7. If it is necessary to increase the dial frequency setting, then the dial should be set at an additional increase beyond the optimum point (approximately the amount of the increase) and procedures 3, 4, 5 and 6 repeated. The push-button should then tune in the station exactly on its peak frequency.
8. If it is necessary to decrease the dial frequency setting, then the dial should be set at a lower frequency from its optimum point (approximately the amount of the decrease) and the procedure in 3, 4, 5 and 6 repeated.
9. Repeat the above procedures for the remaining seven push-buttons.

After the push-buttons have been set up as previously described, the proper tab with its transparent cover should be inserted together in each push-button knob. The push-buttons should now be placed on the proper shanks.

ALIGNMENT PROCEDURE

EQUIPMENT REQUIRED

Signal Generator
AM, 455 KC to 106 MC
FM, 10.7 MC and 88 to 108 MC.

Vacuum Tube Voltmeter
DC up to approximately 20 volts. Ground, or minus, must be isolated from the power line.

Oscilloscope

FM Test Circuit Plug
See Fig. 7 for details.

.01 mfd and 50 mmf (or less) capacitor used for connecting signal generator to receiver.

Alignment Screwdriver
Must be 100% non-metalic and preferably over 8" in length.

Alignment Socket Wrenches—must be non-metalic.
One 1/4" hexagon, 8" long.
One 3/8" hexagon, 6" long.
If the 3/8" wrench has a hole through the handle of sufficient diameter to permit inserting the alignment screwdriver, the locking nuts on L1, L2 and L3 can be loosened or tightened at the same time these padders are adjusted with the screwdriver inside.

AM ALIGNMENT

Turn receiver and test instruments on and allow to warm up for at least 5 minutes. (Input voltage, 117 volts 60 cycles AC). Set volume control to minimum, bass and treble controls full counterclockwise, range control to BC (third from most counterclockwise position), tuning gang fully closed. Set dial pointer to Reference Mark at low frequency end of dial as shown on Fig. 6. If built-in AM loop antenna is disconnected, the two contacts of the AM antenna input jack located on top the chassis must be shorted together. C69 and C4 should be adjusted with loop connected.

IF CHANNEL

1. Short #5 terminal on gang (C2-F) to chassis. See Fig. 2.
2. Set signal generator to 455 KC, CW or AM, and connect to #3 gang terminal (C2-E) through a .01 mfd capacitor. See Fig. 2.
3. Connect low range of V.T.V.M. to junction of R20 and C40 (lug 3 of switch S1-E is a convenient point—See Figs. 8 & 13), and chassis ground, and adjust signal generator attenuator to produce approximately 2 volts of AVC on the V.T.V.M.
4. Adjust C24 (BC oscillator trimmer) for maximum meter reading, keeping signal input to produce approximately 2 volts AVC. Repeat these adjustments until no further improvements can be made in any one of them. NOTE: All adjustments must be made with a completely non-metalic screwdriver.

BC OSCILLATOR ALIGNMENT

1. Remove short from #5 gang terminal.
2. Move signal input from #3 gang terminal to external AM antenna terminal (J1) and set input frequency to 1475 KC CW or AM. (V.T.V.M. remains connected as for IF alignment.)
3. Set tuning control to 1475 KC.
4. Adjust C24 (BC oscillator trimmer) for maximum meter reading.
5. Set signal generator and receiver dial pointer to 580 KC.
6. Adjust BC oscillator padder C26 for maximum meter output. Repeat steps 2 to 5 until oscillator tracks correctly. Any change in C26 will necessitate a readjustment of oscillator trimmer C24.

RF AND ANTENNA ALIGNMENT FOR BC BAND

1. Change coupling capacitor connecting signal generator to AM external antenna terminal from .01 mfd to 50 mfd or less. (Terminals of AM loop input jack must be shorted together if loop is disconnected.)
2. Adjust signal generator and receiver tuning control to 1475 KC.
3. Adjust BC oscillator trimmer, C24, BC RF trimmer, C12, and BC antenna trimmer, C69, for maximum output. (If AM loop is disconnected, C69 should be adjusted after chassis is installed in cabinet.) Rock tuning gang slightly for maximum output as adjustments are made.
4. Check overall tracking at 580 KC and 965 KC. Maximum output should occur within the ± 10 KC of the indicated dial pointer reading. If it falls outside these limits, the plates of the gang rotor should be bent to correct tracking, but this is a difficult operation and should be attempted only by experienced technicians. Bending the plates of the gang rotor will likely cause mistracking on the shortwave band.
5. Repeat steps 3 and 4 until no appreciable improvement can be obtained by additional adjustments.

SW ALIGNMENT

1. V.T.V.M. and signal generator remain connected as for preceding step 5 of BC RF and antenna alignments; range switch in SW (most clockwise position).
2. Set signal generator and tuning control to 15 MC CW or AM.
3. Adjust SW oscillator trimmer (C23), SW RF trimmer (C11), and SW antenna trimmer (C4) for maximum output. NOTE: If circuits are badly out of alignment, it may be necessary to apply the signal first to terminal #3 on gang (C2-E) until oscillator is brought close to correct alignment. The local oscillator frequency in the receiver should be adjusted to the RF *plus* the IF (not below the RF). The correct position can be determined by turning C23 all the way in (clockwise) and then out (counter-clockwise) until the second peak is reached.
4. Tune receiver and signal generator to 6 MC and check calibration and output. Maximum meter reading should be obtained with the dial pointer ± 100 KC of the 6 MC dial reference mark and an AVC output voltage not less than one-half of the AVC voltage obtained at 15 MC, providing the same voltage is applied to the antenna in both cases.

FM ALIGNMENT

CW — METER METHOD

Turn receiver and test instruments "ON" and allow to warm up for at least five minutes. (Input voltage, 117 volts 60 cycles AC.) Set volume control to minimum, bass and treble controls full counterclockwise, range control to FM position (second from most counterclockwise position), and tuning gang fully closed. Dial pointer should be over Reference Mark as directed in first paragraph of AM Alignment. Connect FM dummy antenna to FM antenna binding screws on receiver.

1. Insert special FM test circuit plug, detailed below, in test circuit jack J2 located on left side of radio chassis. See Fig. 2 & 7.
2. Connect V.T.V.M. ground or "minus" lead to point "B" and "plus" lead to IF pin on test circuit plug.
3. Connect signal generator to #4 (C2-B) gang terminal through a .01 mfd capacitor and short #6 gang terminal (C2-C) to chassis. See Fig. 2.
4. Adjust output of signal generator to obtain 10.7 MC CW and approximately 4 volts on V.T.V.M.
5. Adjust C35B, C35A, C28B, C28A, and C46A for *maximum* meter reading, repeating all adjustments several times. NOTE: It may be necessary to apply the 10.7 MC signal to pin 6 of the 1st IF tube (7AH7) and adjust C35B, C35A, and C46A before applying the signal to #4 gang terminal and adjusting C28B and C28A.
6. Change V.T.V.M. "minus" to point "A" (center tap of two 100 K resistors) of test circuit jack and "plus" lead to audio (marked AF on chassis).
7. Turn signal generator "OFF" and set meter to zero when no signal is applied to IF.
8. Turn signal generator "ON" and adjust C46B for zero output on meter. It may be possible to obtain two or more points of adjustment at which a zero meter reading can be obtained. The correct one is the one at which the meter passes through zero most sharply with the minimum rotation of C46B.
9. Alternately adjust C46A (3rd FM IF primary) for maximum DC voltage across pins "B" and "IF" (meter connected as for previous IF alignment), and C46B (3rd FM IF secondary) for *minimum* DC voltage from point "A" to "audio." NOTE: In making this adjustment, the signal input level should be adjusted to provide approximately 6 volts DC across pins "B" and "IF" of test jack.
10. Remove short from #6 gang terminal and change signal generator input from gang to FM antenna jack on rear of radio chassis, applying signal through FM dummy antenna circuit shown in Fig. 3.
11. V.T.V.M. should be connected from point "B" to "IF" of test circuit plug.
12. Adjust signal generator and tuning control to 106 MC and output to produce approximately 10 volts on V.T.V.M.
13. Using a completely non-metalic ¼" hexagon socket wrench, adjust FM oscillator trimmer (C22), FM RF trimmer (C10) and FM antenna trimmer (C1) for maximum output voltage read on V.T.V.M., rocking the tuning gang slightly as these adjustments are made. NOTE: Be very careful when adjusting these trimmers, not to spring them and thus cause them to become shorted.
14. Set signal generator and tuning control to 90 MC.
15. Adjust FM oscillator padder (L3), FM RF padder (L2) and FM antenna padder (L1) for maximum output voltage. The ⅜" locknut on these padders must be loosened before adjustments are made and tightened after adjustments are completed.
16. Repeat steps 13, 14 and 15 until maximum output voltage is obtained with the dial pointer at 90 MC and 106 MC when the signal generator is set at these respective frequencies. Any adjustments made under step 15 above must be followed by repeating the adjustments required under step 13.

VISUAL METHOD

The antenna, RF, oscillator and first and second IF stages are aligned with a CW signal in the same manner described under the CW-meter method of alignment. The adjustment of the third IF, or ratio detector, determines to a considerable degree the fidelity and tuning characteristic of the receiver; therefore, the visual method, using an oscilloscope and FM signal, of aligning this stage may give better results then the CW - meter method. Numerous advantages can be given for either method. The best method to use depends not only on the type and quality of the test instruments available, but also on the ability and experience of the technician.

Turn receiver and test instruments "ON" and allow to warm up for at least five minutes. (Input voltage, 117 volts 60 cycles AC.) Set volume control to minimum, bass and treble controls full counterclockwise, range control to FM position (second from most counterclockwise position), and tuning gang fully closed. Dial pointer should be over Reference Mark as directed in first paragraph of AM Alignment. Connect FM dummy antenna to FM antenna binding screws on receiver.

1. Connect V.T.V.M. ground or "minus" lead to AVC pin of test circuit jack (J2) located on left side of radio chassis. (See Fig. 2).

FM ALIGNMENT

VISUAL METHOD—Cont.

The test circuit plug used for the CW - meter method of FM alignment may be used throughout the following visual alignment procedure for providing convenient points of connections to the test circuit jack. The two 100 K resistors connected to the test circuit plug and used during the CW - meter method are not needed when the visual alignment procedure is followed, but do not affect the circuit any great amount and therefore may be disregarded.

2. Connect signal generator to #4 (C2-B) gang terminal through a .01 mfd capacitor and short #6 gang terminal (C2-C) to chassis. See Fig. 2 for gang terminal numbers.
3. Adjust output of signal generator to obtain 10.7 MC CW and approximately 6 volts on the V.T.V.M.
4. Adjust C35B, C35A, C28B, and C46A for maximum meter reading, repeating all adjustments several times.
5. Connect test equipment as shown in Fig. 4. Some oscilloscopes have phasing controls and a 60 cycle sine wave horizontal sweep provided internally. If such an oscilloscope is available, the horizontal input connection and phasing capacitor shown in Fig. 4 are not required. The vertical input to the oscilloscope is connected to the AUDIO pin on the test circuit jack and the ground of the oscilloscope connected to the receiver chassis. Connect V.T.V.M. ground or "minus" lead to point B and "plus" lead to IF pin on test circuit plug.
6. Connect signal generator to #4 (C2B) gang terminal (See Fig. 2) through a .01 mfd capacitor and short #6 gang terminal (C2C) to chassis.
7. Adjust output of signal generator to obtain 10.7 MC FM and approximately 6 volts on the V.T.V.M. The sweep width of the FM signal must be at least 200 KC plus and minus the center frequency. An "S" curve similar to Fig. 5 should now appear on the oscilloscope, but it will likely be necessary to adjust the signal generator frequency slightly in order to properly center this "S" curve on the oscilloscope screen. If a double trace appears, as shown in Fig. 5b, adjust the phasing control (may be built in the oscilloscope or the phasing capacitor shown in Fig. 4) until a single trace is obtained.
8. Adjust C46A (ratio detector primary) to obtain maximum V.T.V.M. reading and C46B (ratio detector secondary) for best symmetrical "S" curve on oscilloscope. Repeat these adjustments several times.
9. Remove short from #6 gang terminal and change signal generator input from gang to FM antenna jack on rear of radio chassis, applying signal through FM dummy antenna circuit shown in Fig. 3.
10. V.T.V.M. should be connected from point "B" to "IF" of test circuit plug.
11. Adjust signal generator and tuning control to 106 MC CW and output to produce approximately 10 volts on V.T.V.M.
12. Using a completely non-metalic 1/4" hexagon socket wrench, adjust FM oscillator trimmer (C22), FM RF trimmer (C10) and FM antenna trimmer (C1) for maximum output voltage read on V.T.V.M., rocking the tuning gang slightly as these adjustments are made. NOTE: Be very careful when adjusting these trimmers, not to spring them and thus cause them to become shorted.
13. Set signal generator and tuning control to 90 MC.
14. Adjust FM oscillator padder (L3), FM RF padder (L2) and FM antenna padder (L1) for maximum output voltage. The 3/8" locknut on these padders must be loosened before adjustments are made and tightened after adjustments are completed.
15. Repeat steps 11, 12, 13 and 14 until maximum output voltage is obtained with the dial pointer at 90 MC and 106 MC when the signal generator is set at these respective frequencies. Any adjustments made under step 14 above must be followed by repeating the adjustments required under 12.
16. It is possible to visually align the ratio detector transformer (C46A & C46B) after the oscillator, RF and antenna circuits, have been aligned. In some cases this may be desirable, especially if the output of the FM signal generator is rather low at 10.7 MC. If this method is followed, align the IF channel up through C46A (ratio detector primary) and the oscillator, RF and antenna circuits as directed above, using a CW or AM signal and the V.T.V.M. connected across the ratio detector load resistor. (Point B and IF of the test circuit jack as shown in Fig. 2). Then, with the oscilloscope and V.T.V.M. connected as directed in step 5 above and the signal generator still connected to the FM antenna input through the FM dummy antenna, apply an FM signal of any frequency between 90 and 106 MC and adjust the receiver tuning control to center the resulting "S" curve on the oscilloscope screen. The ratio detector transformer (C46A & C46B) may now be adjusted in exactly the same manner as directed in step 8, except that it may be advisable to adjust the output of the signal generator to produce approximately 10 volts on the V.T.V.M. instead of 8 volts.

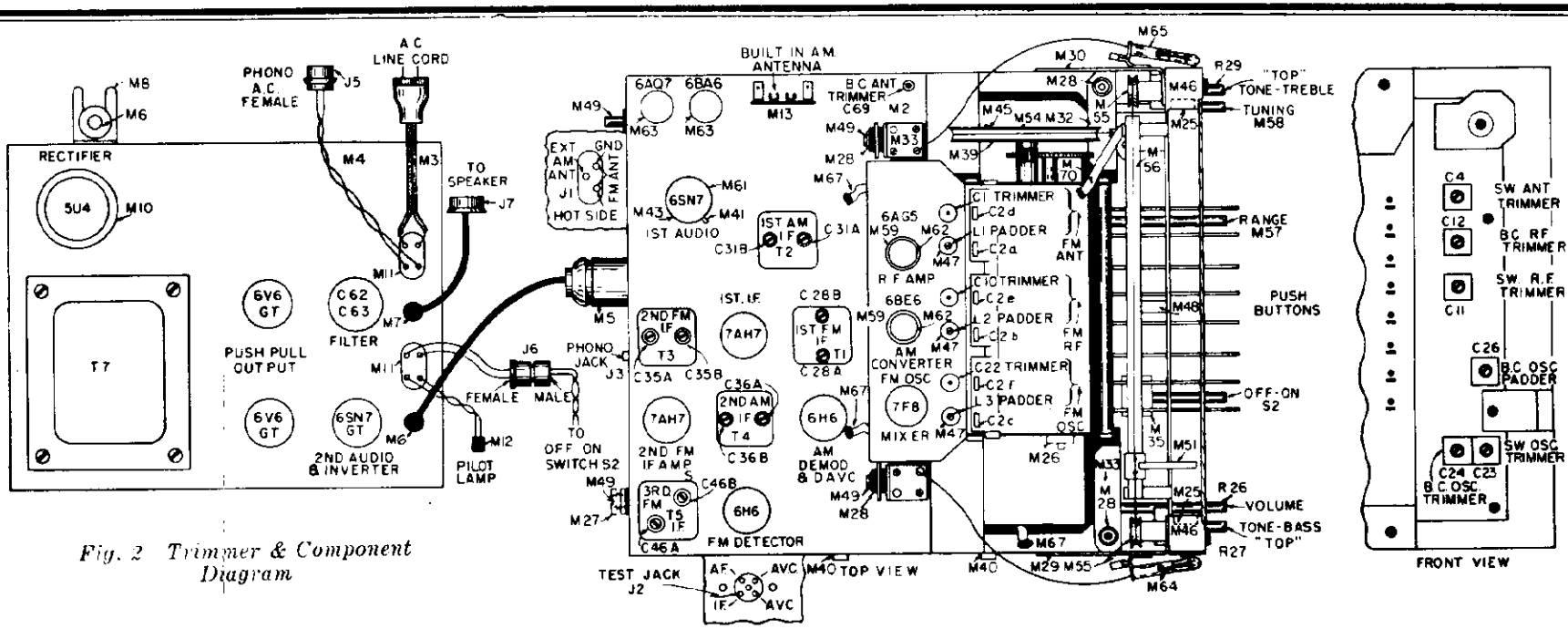

Fig. 2 Trimmer & Component Diagram

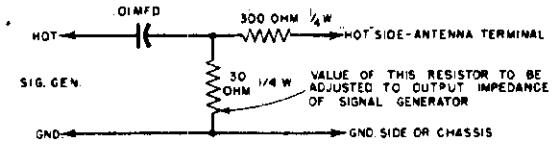

Fig. 3 FM Dummy Antenna

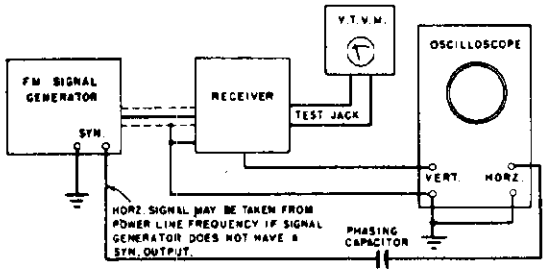

Fig. 4 Instrument Connection Diagram

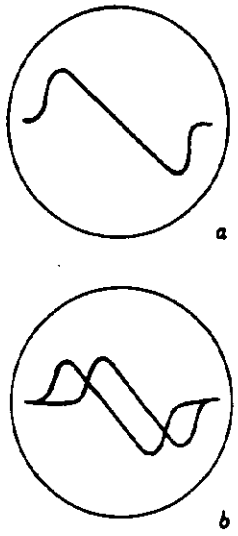

Fig. 5 Ratio Detector "S" Curves

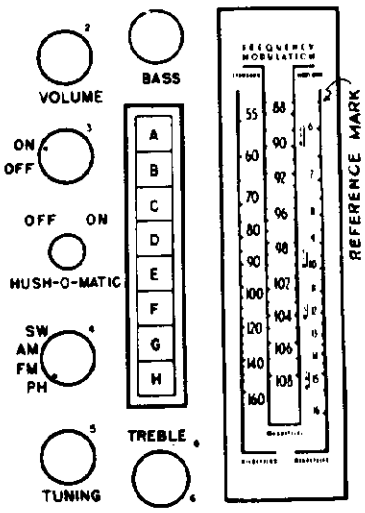

Fig. 6 Control Layout

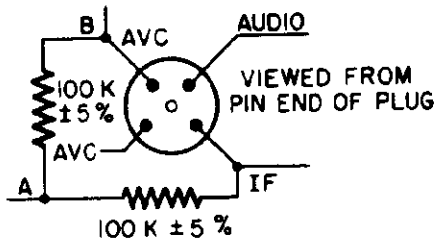

Fig. 7 Test Circuit Plug

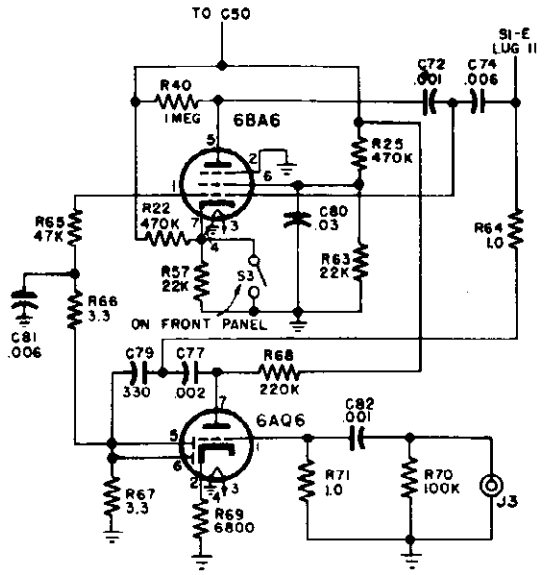

Fig. 9 Schematic Diagram—Model 1217D

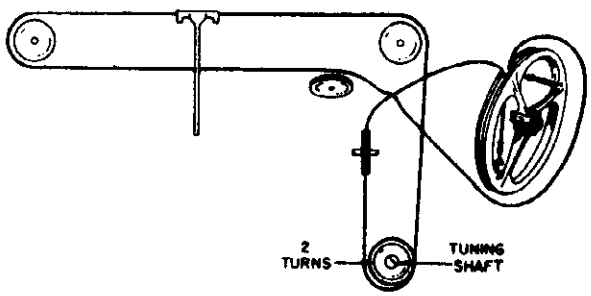

Fig. 11 Dial Stringing Diagram

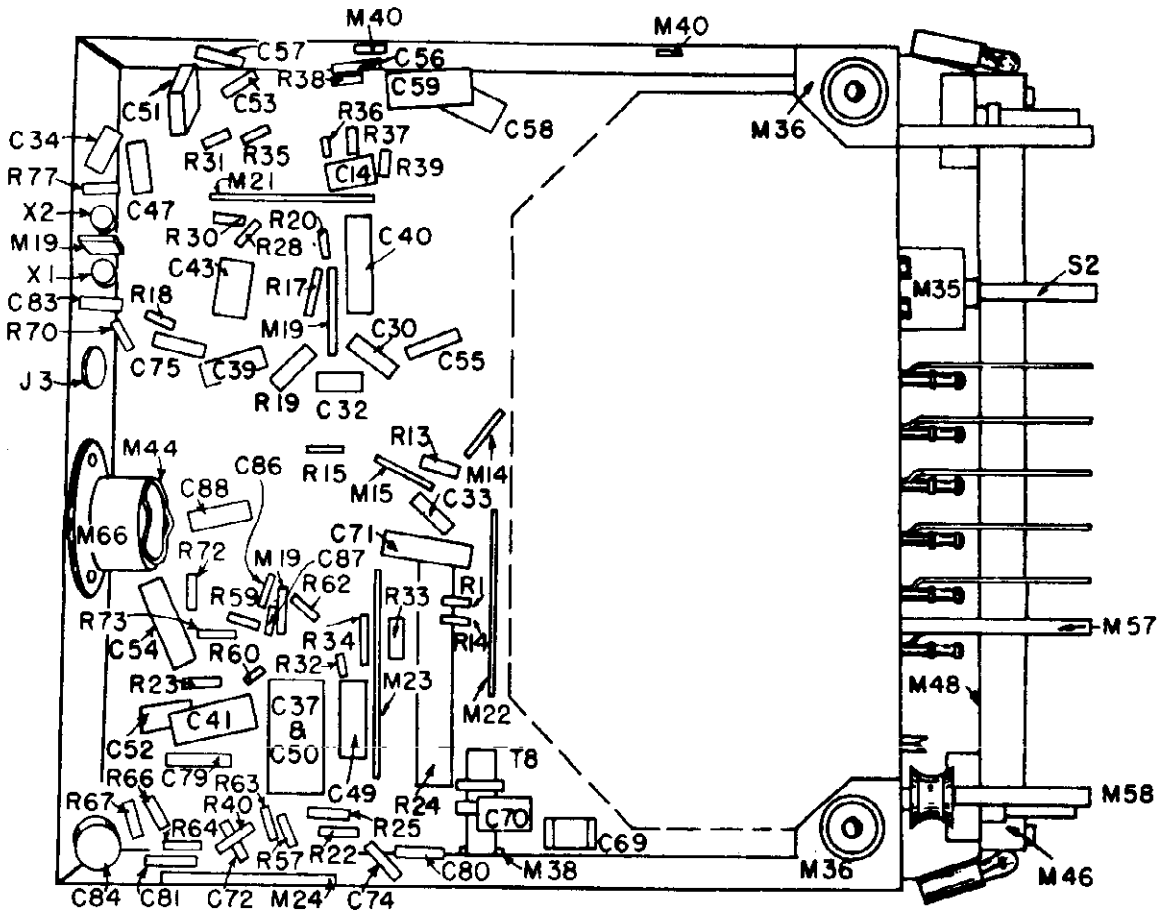

Fig. 12 Component Diagram—Bottom View Radio Chassis

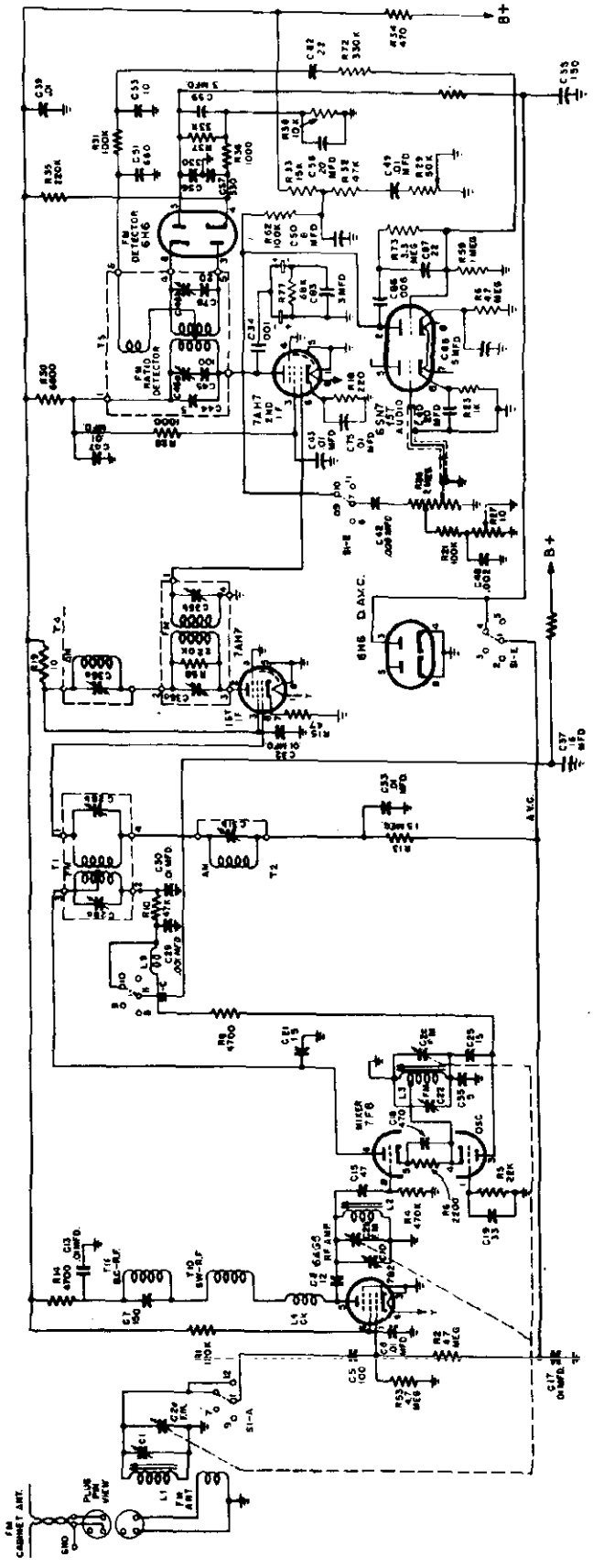

NOTE:
1ST POSITION (PHONO)
NOT SHOWN.
BAND-SWITCH SHOWN
AT 2ND POSITION CLOCKWISE.
F.M. BAND
88-108 MC

© John F. Rider

LINE VOLTAGE 117 A-C	ZERO SIGNAL INPUT	RANGE SWITCH IN FM POSITION	VOL. CONT. MIN.	TONE CONTROL FULL COUNTERCLOCKWISE	CONDITIONS SOCKET

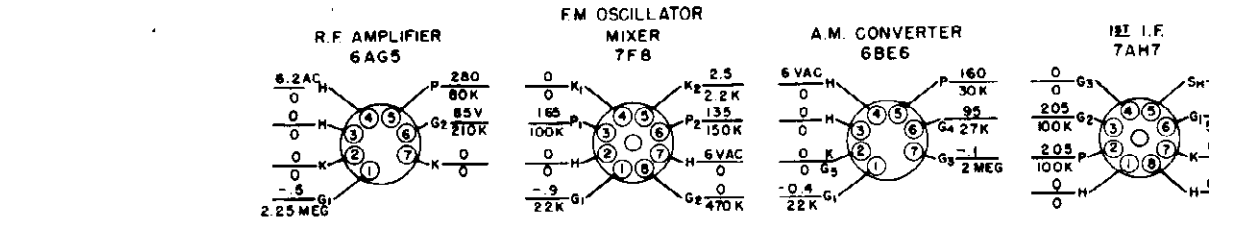

NOTE: VOLTAGE AND RESISTANCE MEASUREMENTS ON 6BE6 & 6H6 AM DEMO

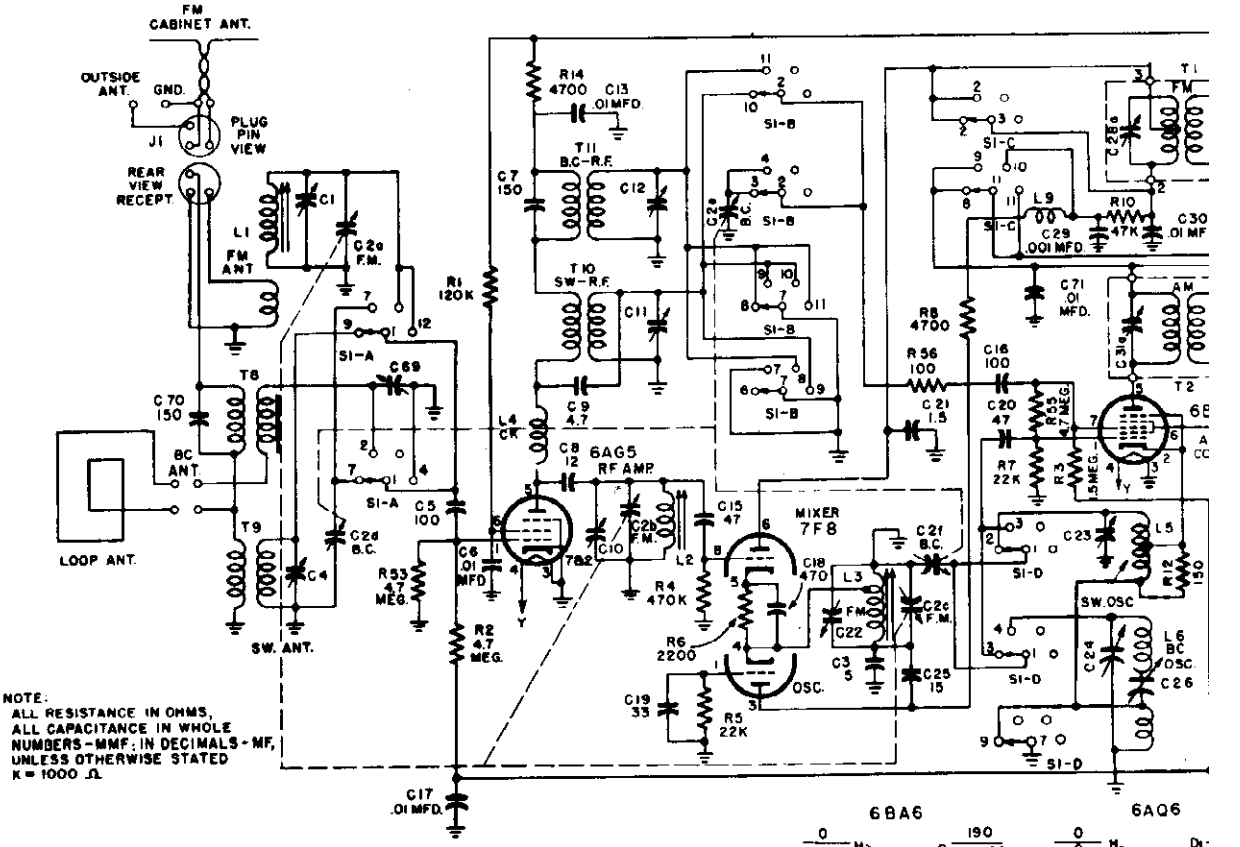

NOTE:
ALL RESISTANCE IN OHMS,
ALL CAPACITANCE IN WHOLE NUMBERS - MMF; IN DECIMALS - MF,
UNLESS OTHERWISE STATED
K = 1000 Ω

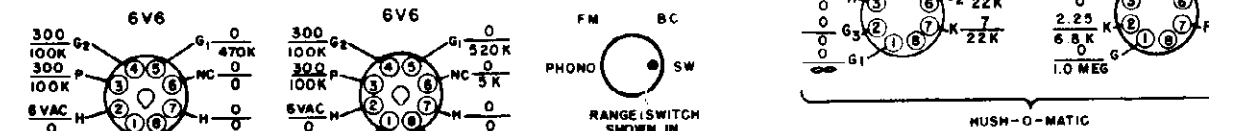

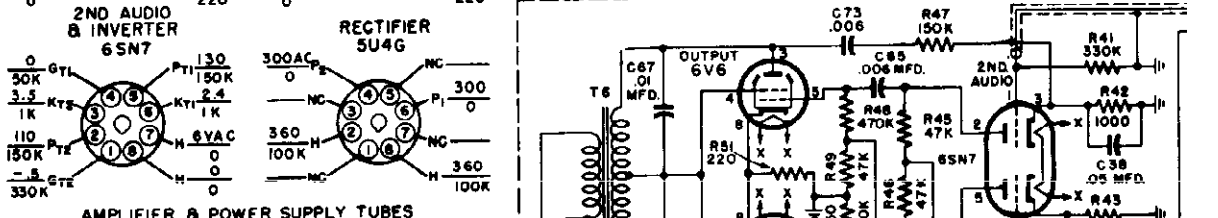

Fig. 8 Schematic Diagram

DIO DIV.

OF MEASUREMENTS
VOLTAGE TO COMMON GROUND D-C AT 20,000 Ω/V A-C AT 1,000 Ω/V
RESISTANCE

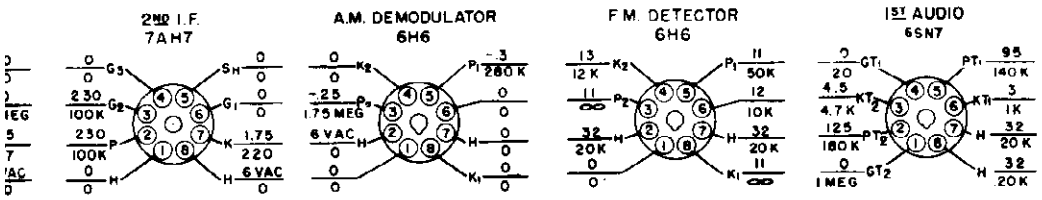

ULATORS MADE WITH RANGE SWITCH IN AM POSITION

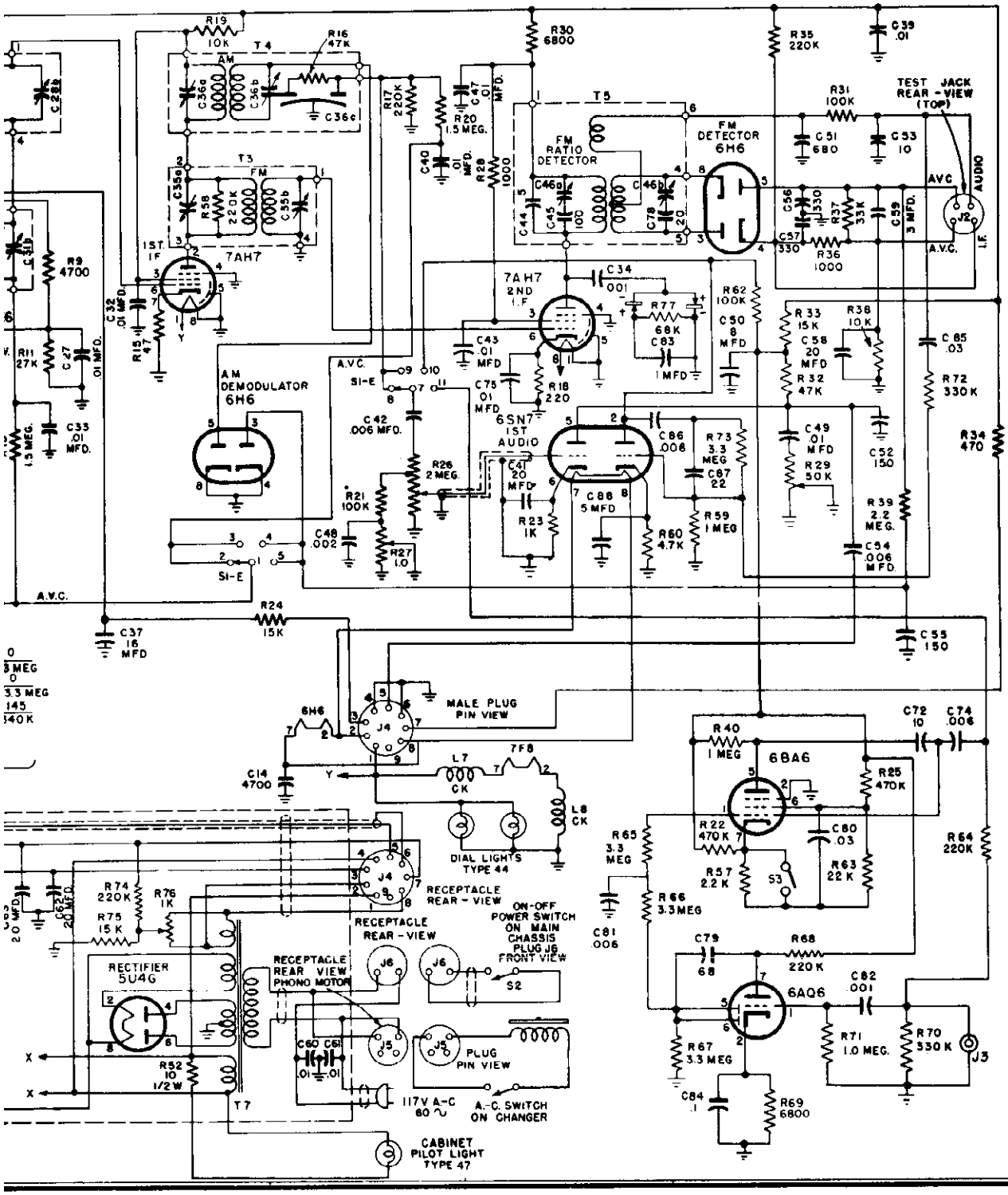

CLARI-SKEMATIX
Registered Trademark

MODEL 1217D

BENDIX RADIO DIV.

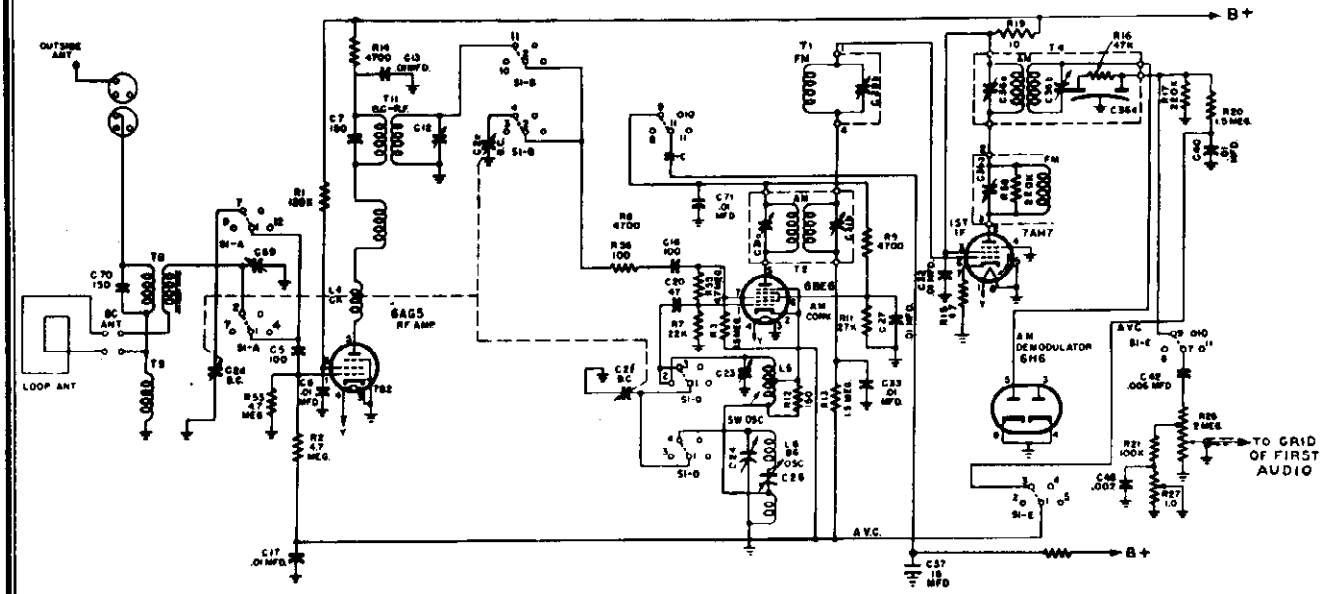

BAND-SWITCH SHOWN
AT 3RD POSITION CLOCKWISE.
BROADCAST BAND
540-1600 KC

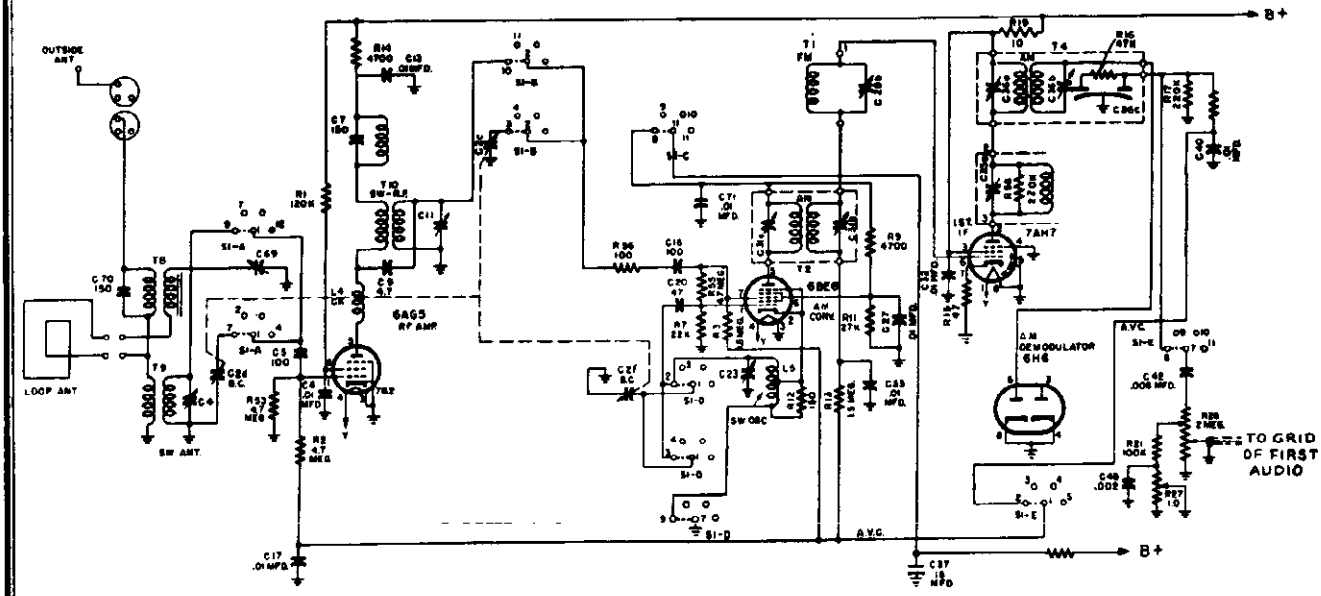

BAND-SWITCH SHOWN
AT 4TH POSITION CLOCKWISE.
SHORT WAVE BAND
5.75 - 15.5 MC

© John F. Rider

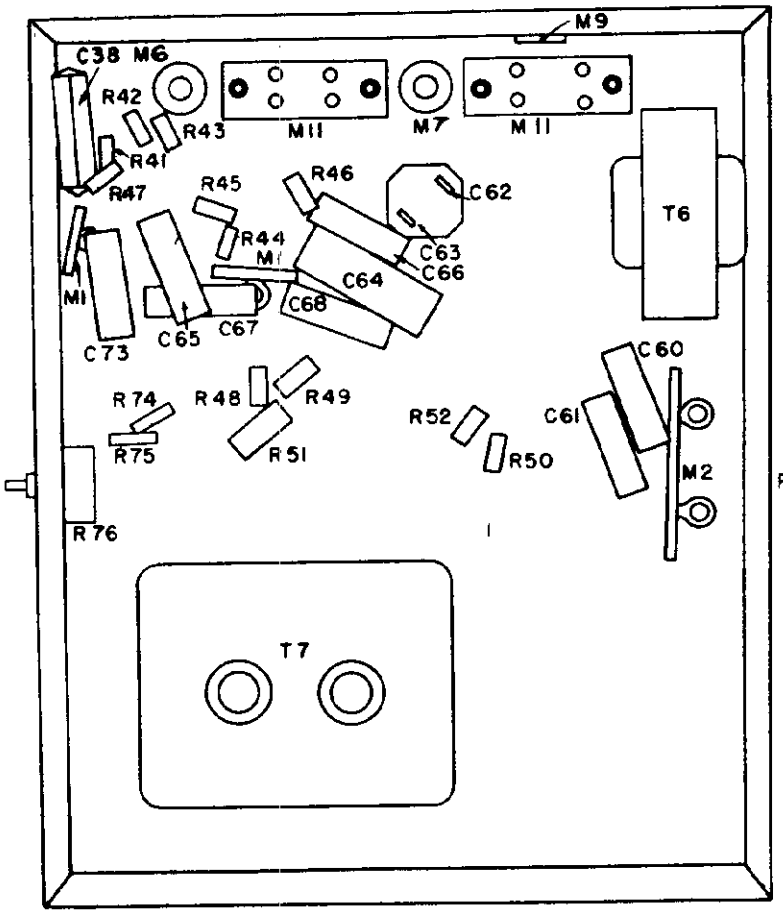

Fig. 10 Component Diagram—Bottom View of Amplifier Chassis

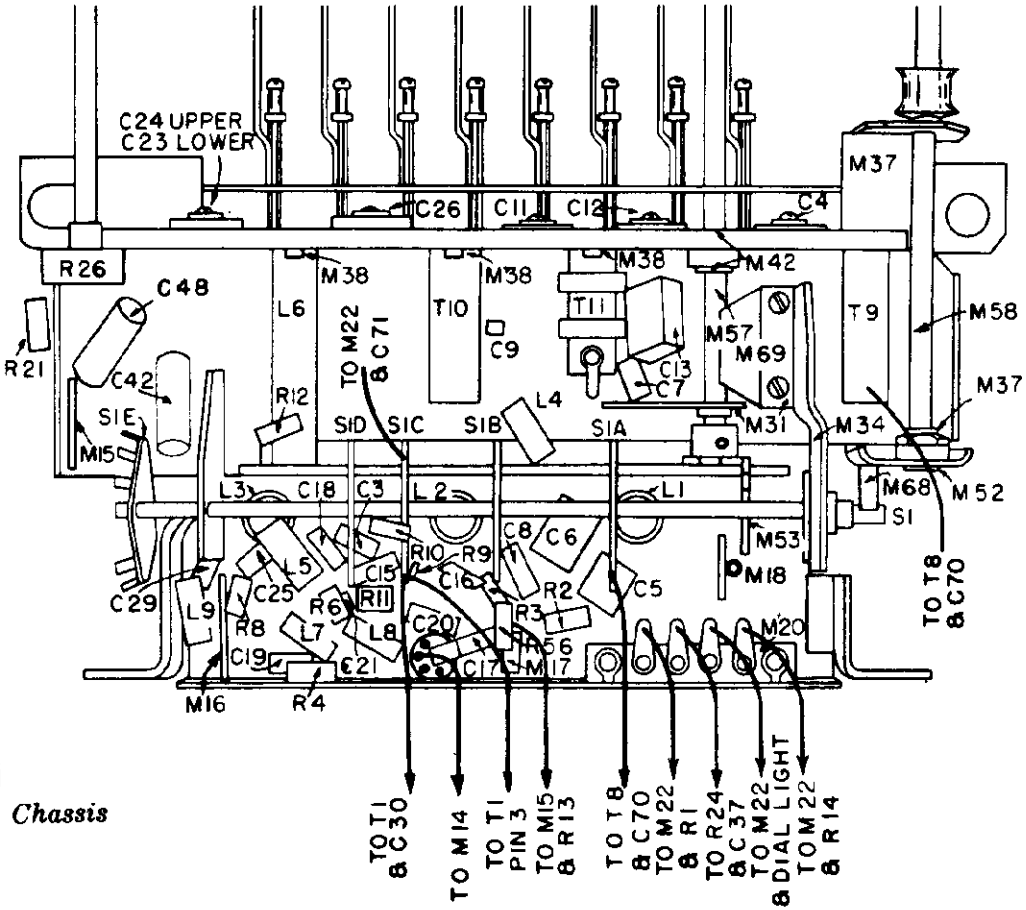

Fig. 13 Component Diagram—Bottom View of Tuner Chassis

MODEL 1217D

BENDIX RADIO DIV.

REPLACEMENT PARTS LIST

Stock Number	Symbol Number	Description
		AMPLIFIER ELECTRICAL COMPONENTS
CP2T40	(C38)	CAPACITOR—Tubular Paper .05 mfd 200V
CP4M51	(C60,61)	CAPACITOR—Moulded Paper .01 mfd 400V
CE2A02	(C62,63)	CAPACITOR—Electrolytic 20-20 mfd 450V
CP5T51	(C64)	CAPACITOR—Paper .1 mfd 600V
CP4T20	(C65,66,73)	CAPACITOR—Tubular Paper .006 mfd 400V
CP4T31	(C67,68)	CAPACITOR—Tubular Paper .01 mfd 400V
RC22A334M	(R41)	RESISTOR—Comp. 330K ¼W
RC22A102K	(R42,43)	RESISTOR—Comp. 1,000 ohms ±10% ¼W
RC22A223K	(R44)	RESISTOR—Comp. 22K ±10% ¼W
RC23A473K	(R45,46)	RESISTOR—Comp. 47K ±10% ½W
RC22A154M	(R47)	RESISTOR—Comp. 150K ¼W
RC22A474K	(R48,58)	RESISTOR—Comp. 470K ±10% ¼W
RC22A473K	(R49)	RESISTOR—Comp. 47K ±10% ¼W
RC25A221K	(R51)	RESISTOR—Comp. 220 ohms ±10% 2W
RC23A100M	(R52)	RESISTOR—Comp. 10 ohms ½W
RC23A224M	(R74)	RESISTOR—Comp. 220K ½W
RC23A153M	(R75)	RESISTOR—Comp. 15K ½W
RV0C03	(R76)	RESISTOR—Pot. 1,000 ohms
TA0000	(T6)	TRANSFORMER—Output
TP0R00	(T7)	TRANSFORMER—Power
		AMPLIFIER MECHANICAL COMPONENTS
BT3S05	(M1)	BOARD—Terminal
BT4S03	(M2)	BOARD—Terminal
CL2A00	(M3)	CORD—AC Brown
CL2A10	(M4 & J5)	CORD—Phono Power
CS0M02	(M5)	COVER—Power Cable
GR0S13	(M6)	GROMMET—Rubber Insulating
GR0S14	(M7)	GROMMET—Rubber Insulating
NB0M19	(M8)	BRACKET—Shockmount Mounting
NC0C09	(M9)	CLIP—Cable
NC0T01	(M10)	CLAMP—Tube
JR2007	(J6)	RECEPTACLE—2 Contact
JR5001	(J7)	RECEPTACLE—5 Contact
P10P80	(M11)	PLATE—Line Cord Insulator
S00D09	(M12)	SOCKET—Dial Light
S08S01		SOCKET—Octal 8 Prong Tube
S08S02	(J4)	SOCKET—Octal 9 Prong Power Cable
		RECEIVER ELECTRICAL COMPONENTS
CT1B00	(C1,10,22)	CAPACITOR—Trimmer 3-30 mmf Variable Air
CV0E00	(C2)	CAPACITOR—Variable (3 section AM) (3 section FM)
CC7B19	(C3)	CAPACITOR—Ceramic Insulated 5 mmf ±10% 500V
CT1A13	(C4,11,23,24)	CAPACITOR—Trimmer Mica 4-75 mmf
CM6L22	(C5,16)	CAPACITOR—Mica 100 mmf ±10% 500V (Low Loss)
CP4M31	(C6,13,27,30, 32,39,43,47)	CAPACITOR—Paper .01 mfd 400V
CM5A26	(C7,52,55,70)	CAPACITOR—Mica 150 mmf 500V
CC0B23	(C8)	CAPACITOR—Ceramic Insulated 12 mmf ±10% 500V
CC9A18	(C9)	CAPACITOR—Ceramic Insulated 4.7 mmf 500V
CT1A14	(C12)	CAPACITOR—Trimmer Mica 1.8-40 mmf
CM5E73	(C14)	CAPACITOR—Mica 4,700 mmf 500V
CC8B30	(C15,20)	CAPACITOR—Ceramic Insulated 47 mmf ±10% 500V
CP0M31	(C17,33,75)	CAPACITOR—Paper .01 mfd 120V
CM6L38	(C18)	CAPACITOR—Mica 470 mmf ±10% 500V (Low Loss)
CC8B28	(C19)	CAPACITOR—Ceramic Insulated 33 mmf ±10% 500V
CC9A12	(C21)	CAPACITOR—Ceramic Insulated 1.5 mmf 500V
CC0B24	(C25)	CAPACITOR—Ceramic Insulated 15 mmf ±10% 500V
CT1A12	(C26)	CAPACITOR—Trimmer Mica 150-600 mmf
CT2A09	(C28a,b;35a,b)	CAPACITOR—Trimmer 5-30 mmf, 5-30 mmf
CM5L01	(C29,34)	CAPACITOR—Mica .001 mfd 500 V (Low Loss)
CT2A15	(C31a,b)	CAPACITOR—Trimmer 75-145 mmf
CT2A13	(C36a,b)	CAPACITOR—Trimmer 75-145 mmf
CE2D00	(C37,50)	CAPACITOR—Electrolytic Dry 8-16 mfd 450V
CP4T31	(C40,71)	CAPACITOR—Tubular Paper .01 mfd 400V
CE1T02	(C41,58)	CAPACITOR—Electrolytic 20 mfd 25V
CP4T20	(C42,54,74, 81,86)	CAPACITOR—Tubular Paper .006 mfd 400V
CM7S07	(C44)	CAPACITOR—Silvered Mica 5 mmf 500V
CM5L25	(C45)	CAPACITOR—Mica 100 mmf 500V (Low Loss)
CT1B02	(C46a)	CAPACITOR—Trimmer 3-12 mmf
CT1B03	(C46b)	CAPACITOR—Trimmer 5-25 mmf
CP6T12	(C48,77)	CAPACITOR—Paper .002 mfd 600V
CP4T34	(C49)	CAPACITOR—Tubular Paper .02 mfd 400V
CM4A42	(C51)	CAPACITOR—Mica 680 mmf 300V
CM5A00	(C53)	CAPACITOR—Mica 10 mmf 500V
CM5A34	(C56,57)	CAPACITOR—Mica 330 mmf 500V
CE1D00	(C59)	CAPACITOR—Electrolytic 3 mfd 50V
CT1A15	(C69)	CAPACITOR—Trimmer 4-70 mmf
CC5A22	(C72)	CAPACITOR—Ceramic 10 mmf 500V
CC9K50	(C72,82)	CAPACITOR—Ceramic .001 mfd 300V
CM7S17	(C78)	CAPACITOR—Silvered Mica 20 mmf 500V
CC6A32	(C79)	CAPACITOR—Ceramic 68 mmf
CC6A40	(C79)	CAPACITOR—Ceramic 330 mmf
CP2T36	(C80)	CAPACITOR—Tubular Paper .03 mfd 200V
CE1T05	(C83)	CAPACITOR—Electrolytic 1 mfd 100V
CP4T51	(C84)	CAPACITOR—Paper .1 mfd 400V
CP4T36	(C85)	CAPACITOR—Paper .03 mfd 400V
CM5A05	(C87)	CAPACITOR—Mica 22 mmf 500V
CE1T03	(C88)	CAPACITOR—Electrolytic 5 mfd 25V
RC23A124K	(R1)	RESISTOR—Comp. 120K ±10% ½W
RC22A475M	(R2,53,55)	RESISTOR—Comp. 4.7 meg ¼W
RC22A155M	(R3,13,20)	RESISTOR—Comp. 1.5 meg ¼W
RC22A474M	(R4,22,25)	RESISTOR—Comp. 470K ¼W
RC22A223K	(R5,7)	RESISTOR—Comp. 22K ±10% ¼W
RC22A222M	(R6)	RESISTOR—Comp. 2.2K ¼W
RC23A472M	(R8,9,14,60)	RESISTOR—Comp. 4.7 ½W
RC22A473M	(R10,16,32)	RESISTOR—Comp. 47K ¼W
RC23A273K	(R11)	RESISTOR—Comp. 27K ±10% ½W
RC22A151K	(R12)	RESISTOR—Comp. 150 ohms ±10% ¼W
RC22A470K	(R15)	RESISTOR—Comp. 47 ohms ±10% ¼W
RC22A224M	(R17,64,68)	RESISTOR—Comp. 220K ¼W
RC22A221M	(R18)	RESISTOR—Comp. 220 ohms ¼W
RC24A103M	(R19,38)	RESISTOR—Comp. 10K 1W
RC22A104M	(R21,31,62,70)	RESISTOR—Comp. 100K ¼W
RC22A102M	(R23,28)	RESISTOR—Comp. 1,000 ohms ¼W
RW0D38	(R24)	RESISTOR—Wirewound 15K ±10% 10W
RV4C01	(R26)	RESISTOR—Pot. Volume 2 meg
RV4C02	(R27)	RESISTOR—Pot. Tone Bass 1 meg
RV0C80	(R29)	RESISTOR—Pot. Tone Treble .05 meg
RC24A682K	(R30)	RESISTOR—Comp. 68K ±10% 1W
RC23A153M	(R33)	RESISTOR—Comp. 15K ½W
RC24A471M	(R34)	RESISTOR—Comp. 470 ohms 1W
RC22A224K	(R35,58)	RESISTOR—Comp. 220K ±10% ¼W
RC22A102K	(R36)	RESISTOR—Comp. 1,000 ohms ±10% ¼W
RC22A333M	(R37)	RESISTOR—Comp. 33K ¼W
RC22A225M	(R39)	RESISTOR—Comp. 2.2 meg ¼W
RC22A105M	(R40,59,67,71)	RESISTOR—Comp. 1 meg ¼W
RC22A101M	(R56)	RESISTOR—Comp. 100 ohms ¼W
RC22A223M	(R57,63)	RESISTOR—Comp. 22K ¼W
RC22A335M	(R65,66,67,73)	RESISTOR—Comp. 3.3 meg ¼W
RC22A473K	(R65)	RESISTOR—Comp. 47K ±10% ¼W
RC22A682M	(R69)	RESISTOR—Comp. 6.8K ¼W
RC22A334M	(R70,72)	RESISTOR—Comp. 330K ¼W
RC22A683K	(R77)	RESISTOR—Comp. 68K ±10% ¼W
RC22A103K		RESISTOR—Comp. 10K ±10% ¼W (Used only on Code C Radio Chassis)
LA0F00	(L1)	COIL—FM Ant.
LO9F00	(L2)	COIL—RF FM
LO1F00	(L3)	COIL—Osc. FM
LF0A03	(L4)	CHOKE—RF
LO1C00	(L5)	COIL—Osc. SW
LO1B01	(L6)	COIL—Osc. BC
LF0A02	(L7,8)	CHOKE—RF
LF0A01	(L9)	CHOKE—RF
TI0C07	(T1)	TRANSFORMER—1st IF FM
TI0C10	(T2)	TRANSFORMER—IF BC
TI0J01	(T3)	TRANSFORMER—2nd IF FM
TI0D09	(T4)	TRANSFORMER—IF Output
TI0D15	(T5)	TRANSFORMER—3rd IF
TR1B00	(T8)	TRANSFORMER—Ant.
TR1H00	(T9)	TRANSFORMER—SW Ant.

©John F. Rider

Stock Number	Symbol Number	Description
TR1C00	(T10)	TRANSFORMER—SW RF
TR1L00	(T11)	TRANSFORMER—BC RF
SR4G00	(S1)	SWITCH—Rotary 5 Section-4 Position
SR2L02	(S2)	SWITCH—Rotary Snap
SR2A02	(S3)	SWITCH—Rotary Single Pole 2 Position
#1N34	(X1,2)	CRYSTAL—Detector
#44		LAMP—Dial
		RECEIVER MECHANICAL COMPONENTS
BT2R00	(M13)	BOARD—Loop Terminal
BT1S00	(M14)	BOARD—Terminal 1 Lug 1 Mtg.
BT2S00	(M15)	BOARD—Terminal 2 Lug 1 Mtg.
BT2S03	(M16)	BOARD—Terminal 2 Lug 1 Mtg.
BT2S06	(M17)	BOARD—Terminal 2 Lug 1 Mtg.
BT3S03	(M18)	BOARD—Terminal 3 Lug 1 Mtg.
BT3S06	(M19)	BOARD—Terminal 3 Lug 1 Mtg.
BT4S02	(M20)	BOARD—Terminal 4 Lug 2 Mtg.
BT5S01	(M21)	BOARD—Terminal 5 Lug 2 Mtg.
BT6S01	(M22)	BOARD—Terminal 6 Lug 2 Mtg.
BT7S00	(M23)	BOARD—Terminal 7 Lug 2 Mtg.
BT7S01	(M24)	BOARD—Terminal 7 Lug 2 Mtg.
CD0C21		CABLE—Dial 53"
DS0E01		DIAL—AM FM Glass
GR0D04	(M25)	GROMMET—Dial Glass
GR0S00	(M26)	GROMMET—Rubber Shockmount
GR0S06	(M27)	GROMMET—Rubber Shockmount
GR0S12	(M28)	GROMMET—Capacitor Shockmount
HB0M23	(M29)	BRACKET—R.H. Back Plate With Pulleys
HB0M24	(M30)	BRACKET—L.H. Back Plate With Pulleys
HB0M26	(M31)	BRACKET—Bearing Mtg.
HB0M31	(M32)	BRACKET—R.H. Capacitor Mtg.
HB0M32	(M33)	BRACKET—L.H. Capacitor Mtg.
HB0M36	(M34)	BRACKET—Band Switch
HB0M41	(M35)	BRACKET—Switch (S2) Mtg.
HB0M72	(M36)	BRACKET—Chassis Shockmount
HB0M73	(M37)	BRACKET—Manual Tuning Control
HB0S03		BALL—Bearing 3/32 Dia.
HB0S04		BALL—Bearing 5/32 Dia.
HC0C00	(M38)	CLIP—Coil Mtg.
HC0C03	(M39)	CLAMP—Dial Cable
HC0C08	(M40)	CLIP—Cable
HC0C11		CLAMP—Cable
HC0C12		CLIP—1st IF
HC0C13		CLIP—2nd IF
HC0M05	(M41)	CLAMP—Tube Shield
HC0S28	(M42)	CLIP—"C" Washer
HC0T00	(M43)	CLAMP—Tube Shield Ring
HC0T02	(M44)	CLAMP—Ring Retainer
HH0C00	(M45)	HOOK—Dial Cord
HH0D00	(M46)	RETAINER—Dial Glass
HI0T00	(M47)	INSERT—Tuning Core
HP0D00	(M48)	PLATE—Back
HR0S01		RIVET—Shoulder (.171 x .083)
HS0C57		SPRING—Dial Cord
HS0C74		SPRING—Push Button Coil
HS8F00	(M49)	SLEEVE—Flared, Tuning Cond.
HS0S06	(M50)	STUD—Shoulder
HS0S12		STUD—8-32 Shoulder (R.H. End RF Chassis)
ID0M20	(M51)	INDICATOR—Dial
JR3A01	(J1)	RECEPTACLE—3 Contact
JR4A01	(J2)	RECEPTACLE—4 Contact
JR1S00	(J3)	RECEPTACLE—Single Contact
JP2A02	(J6)	PLUG—2 Prong
MB0B03	(M52)	BEARING—Tuning Control
MG0S01	(M53)	SPROCKET—Hub
MP0M01	(M54)	PULLEY—Drive
MP0M02	(M55)	PULLEY—Dial Cord Idler
MR0P00	(M56)	RAIL—Pointer
MS0C01	(M57)	SHAFT—Band Switch
MS0T09	(M58)	SHAFT—Tuning Assy.
SM0B00	(M59)	SHIELD—Miniature Tube Base
SM0B03	(M60)	SHIELD—Miniature Tube Base
SM0T01	(M61)	SHIELD—Metal Tube
SM0T03	(M62)	SHIELD—Miniature Tube
SM0T04	(M63)	SHIELD—Miniature Tube
SO0D07	(M64)	SOCKET—Dial Light (12½" lead)
SO0D08	(M65)	SOCKET—Dial Light (8¾" lead)
SO8L02		SOCKET—Loktal Tube Ringmount Type
SO8L03		SOCKET—Loktal Tube Rivet Mtg.
SO7M05		SOCKET—Miniature Tube (Zip In)
SO8M01	(M66 & J4)	SOCKET—9 Contact
SO8S01		SOCKET—Octal Tube
ST0M00		SLUG—Tuning 10-32 Threaded Copper Rod
XS0C02	(M67)	STRIP—Copper (.004 x 5/16 x 1 5/8)
XS0C03	(M68)	STRIP—Contact (Rotary Switch Shaft)
XS0C04	(M69)	STRIP—Copper (Band Switch Shaft)
XS0C05	(M70)	STRIP—Copper (.004 x 5/16 x 3)
XS0C10		SHIELD—Dial Cable
		CABINET COMPONENTS
BP0B01		PUSHBUTTON—Mottled Brown
BZ0B11		BACK—Cabinet
BZ0D12		BAFFLE—Cardboard and Cloth
BZ0D13		BAFFLE—Cardboard and Cloth (With Cutout)
BZ0D29		BAFFLE—Speaker (Wood)
DZ0F13		DECAL—Tuning
DZ0F14		DECAL—Volume
DZ0F15		DECAL—On-Off
DZ0F16		DECAL—SW-AM-FM-PH
DZ0F17		DECAL—Treble
DZ0F18		DECAL—Bass
EC0M00		ESCUTCHEON—Control, Hush-O-Matic
GR0S11		GROMMET—Rubber, Phono Lead-In
GZ0M06		GRILLE—Metal
HC0C07		CLIP—Cable
MC0S29		CLIP—"C" Washer
MK0R00		CLIP—Knob Retainer Spring
MK0R05		KNOB—Door Pull
MN6S00		NUT—Speed
MT0F02		TRAY—Record Changer
MT0T00		TRACK—Swing-A-Door
MZ0C05		CATCH—Door Bullet
MZ0G01		GLIDE—Swing-A-Door
MZ0H04		HINGE—Door (Semi Concealed)
MZ0H05		HINGE—Lid
MZ0S02		SUPPORT—Lid (Bronze)
JI0A00		JEWEL—Amber Plastic
JP1C00		PLUG—AM Ant.
JP3D01		PLUG—3 Contact FM Ant. Connector
JP1C02		PLUG—Single Contact Phono
KB0B01		KNOB—Indexed Push-on
KC0B06		KNOB—Control (Brown)
KS0B02		KNOB—Hush-O-Matic Control
MC0C01		CAM—Swing-A-Door Bumper
MR0C04		ROLLER—Swing-A-Door
MR0C05		ROLLER—Swing-A-Door Cam
MS0F00		RUNNER—Plain, Swing-A-Door
MS0G00		GLIDE—Runner, Swing-A-Door
MS0S08		SHAFT—Roller, Swing-A-Door
ME0M00		DECAL—Bendix Emblem
PF0B00		PADS—Felt Bumper, Lid
SE2R00		SPEAKER—12" E.D.
WP0B01		WINDOW—Call Letter
XS0Z11		STRIP—Fishpaper (.005 x ¾ x 2½)
XZ0M01		STRIP—Back Mtg.
ZW1G01		CABINET

Circuit components, denoted by italicized symbol numbers, used only on Code C radio chassis.

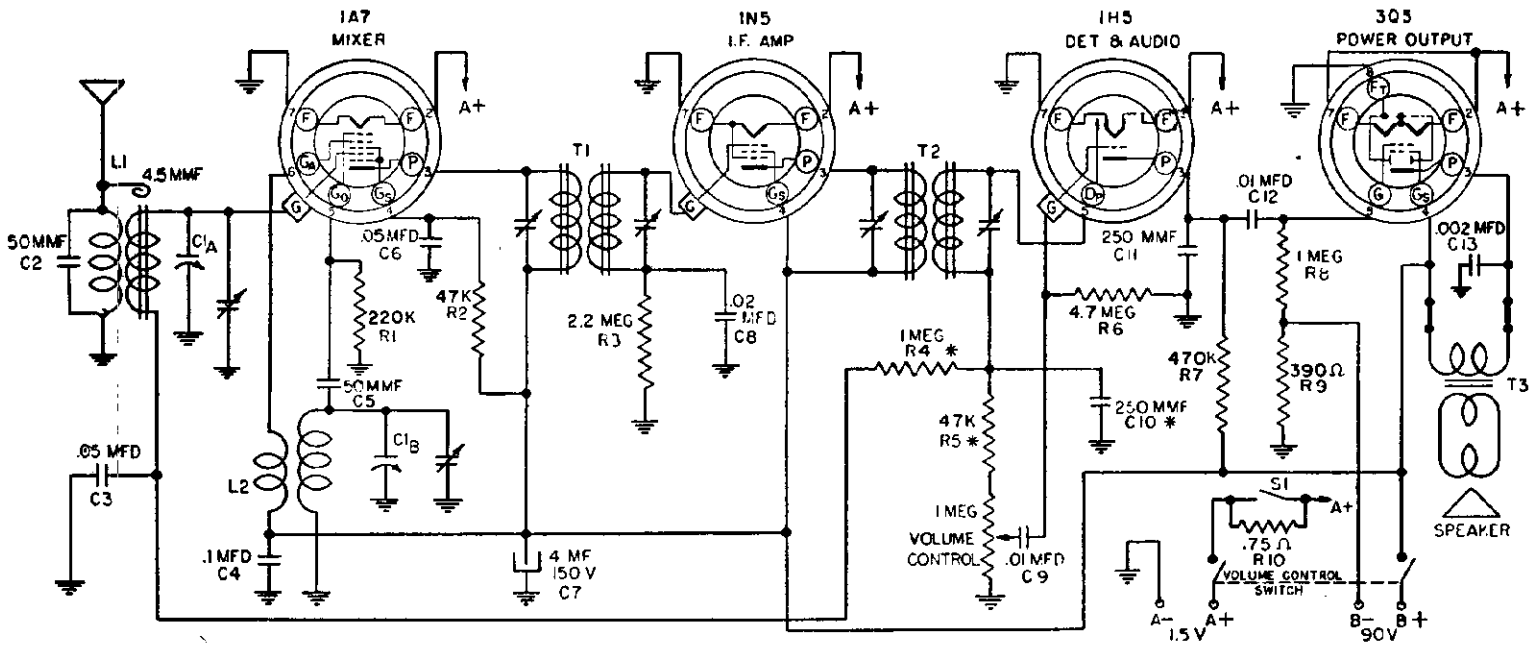

PARTS LIST

Code	Part No.	DESCRIPTION	Code	Part No.	DESCRIPTION	Code	Part No.	DESCRIPTION
C1A-C1B	B19-135	Variable Condenser	R3	A60-684	2.2 Megohm ½ watt Carbon Resistor	T2	B10-417	2nd I.F. Transformer
C2		50 MMFD Mica Condenser (Part of L-1)	R4		1 Megohm ⅛ watt Carbon Resistor (Part of T-2)	T3	A80-226	Speaker Output Transformer
C3-C6	A16-152	.05 MFD. 200 V Tubular Condenser					B79-348	Speaker
C4	A16-157	.1 MFD 200 V Tubular Condenser	R5		47 K Ohm ⅛ watt Carbon Resistor (Part of T-2)		B79-345	Alternate Speaker
C5	A15-175	50 MMFD Mica Condenser					B67-487	Dial Scale
C8	A16-150	.02 MFD 400 V Tubular Condenser	R6	A60-659	4.7 Megohm ½ watt Carbon Resistor		A58-42	Dial Pointer
C7	A18-273	4 MFD 150 V. Electrolytic Condenser	R7	A60-662	470 K Ohm ½ watt Carbon Resistor		A52-182	Knob
C9-C12	A16-156	.01 MFD 400 V Tubular Condenser	R8	A60-668	1 Megohm ½ watt Carbon Resistor		A83-277	Dial Scale Retainer
C10		250 MMFD Mica Condenser (Part of T-2)	R9	A60-665	390 Ohm ½ watt Carbon Resistor		D42-384	Wood Cabinet
C11	A15-176	250 MMFD Mica Condenser	R10	A60-691	.75 Ohm 1 watt Resistor		A84-35	Dial Drive Shaft Assembly
C13	A16-155	.002 MFD 600 V Tubular Condenser	L1	A10-414	Antenna Coil	S1	A69-164	Battery Thriftmaster Switch
R1	A60-667	220 K Ohm ½ watt Carbon Resistor	L2	A10-415	Oscillator Coil		A24-165	Volume Control and Switch
R2	A60-685	47 K Ohm ½ watt Carbon Resistor	T1	B10-416	1st I.F. Transformer			

MODELS MA361, ME1

COAST TO COAST STORES

DESCRIPTION

This model is a 4-Tube Superhetrodyne radio receiver designed to cover a frequency range of from 535 Kilocycles to 1725 Kilocycles (K.C.). The tubes used are—

1A7 GT—Osc. Converter
1H5 GT—AVC Det. Audio Amplifier
1N5 GT—I.F. Amplifier
3Q5 GT—Power Output

INSTALLATION

This receiver has been designed to operate from a battery that has the "B" Supply (90V) and the "A" Supply (1-½ V) incorporated into a single unit.

Any one of the following batteries may be used in conjunction with this receiver and after inserting the plug from the radio into the battery it should be placed inside the cabinet in the space provided.

1. Ray-O-Vac . . . . . Their No. "AB" 82 Power Pack
2. Burgess . . . . . Their No. 17G-D60 Power Pack
3. General . . . . . Their No. 60DL 11 L Power Pack
4. Everready . . . . . Their No. 748 Power Pack
5. Everready . . . . . Their No. 758 Power Pack

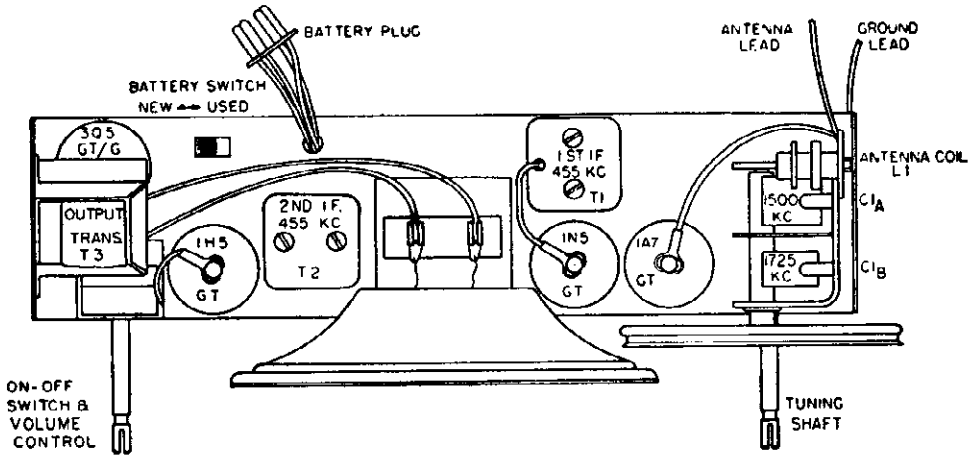

ALIGNMENT PROCEDURE

With an output meter connected across the voice coil of the speaker, the output meter reading for 50 milliwatts is .4 volts using a signal which is modulated 30% at 400 c.p.s. Follow through the procedure as outlined below for proper alignment.

Connect the signal generator to the grid cap of the 1A7 GT Tube through a .1 MFD. Condenser. Connect the ground lead of the generator to the chassis. Adjust the signal generator to 455 K.C. and set the variable condenser of the receiver to minimum capacity (fully opened). With the volume control full on and minimum output from the signal generator adjust the two trimmers on top of the first and second I.F. transformers for maximum output.

Now connect the signal generator to the antenna connection of the receiver through a .00025 condenser. Adjust the signal generator frequency to 1725 K. C. and set the variable condenser to minimum capacity (fully opened), and adjust the oscillator trimmer (C1B) for maximum output. Set signal generator to 1500 K. C. and tune receiver to signal. Adjust the antenna trimmer (C1A) on the variable condenser for maximum output.

©John F. Rider

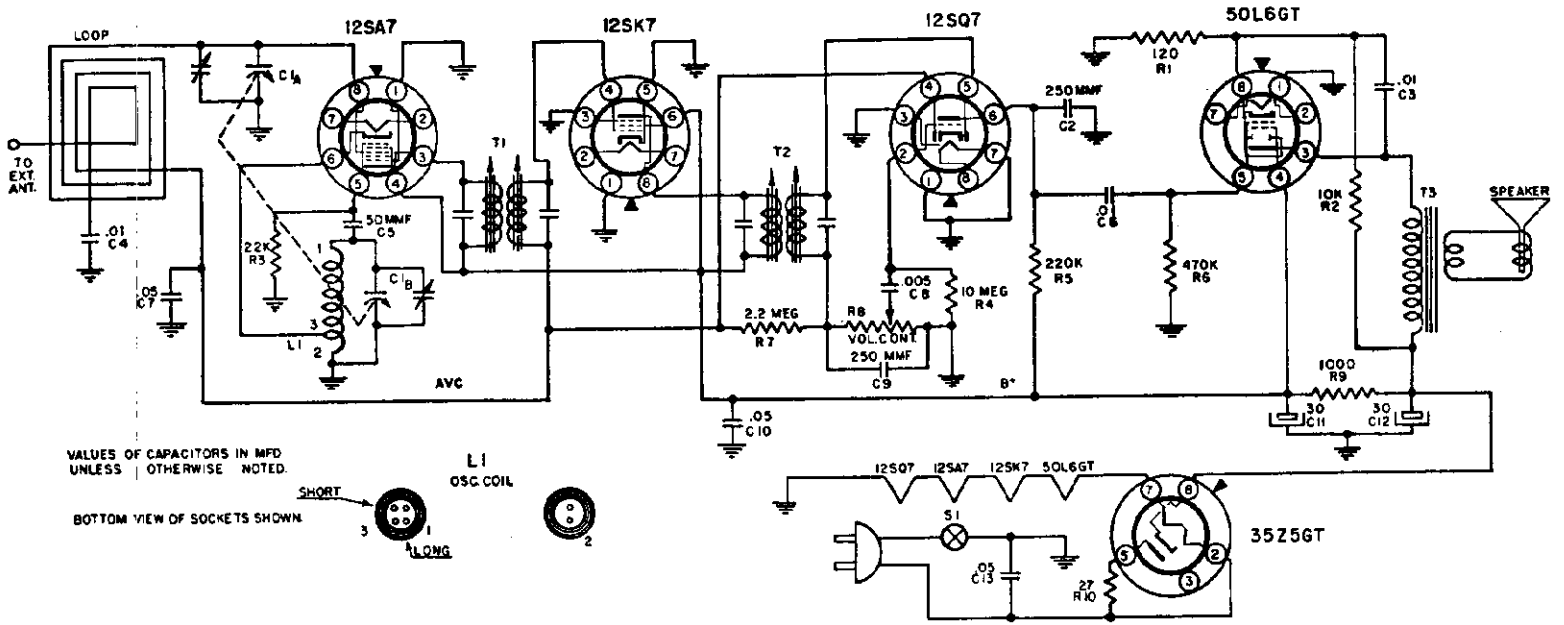

PARTS LIST

CODE	PART NO.	DESCRIPTION
C1A, C1B	19-173	Variable Condenser
C2, C9	A-15-176	250 MMFD. Mica Condenser
C3, C4, C6	A16-156	.01 MFD. 400 volt Condenser
C5	A15-175	50 MMFD. Mica Condenser
C7, C10	A16-152	.05 MFD. 200 volt Condenser
C8	A16-153	.005 MFD. 600 volt Condenser
C11, C12	B18-283	30x30 MFD. 150 volt Dual Electrolytic Condenser
C13	A16-158	.05 MFD. 400 volt Condenser
R1	A60-702	120 Ohm ½ watt Resistor
R2	A60-698	10K Ohm 1 watt Resistor
R3	A60-659	22K Ohm ½ watt Resistor
R4	A60-663	10 Megohm ½ watt Resistor
R5	A60-667	220K Ohm ½ watt Resistor
R6	A60-662	470K Ohm ½ watt Resistor
R7	A60-684	2.2 Megohm ½ watt Resistor
R8	24-157	Volume Control, 1 Megohm

CODE	PART NO.	DESCRIPTION
R9	A60-732	1000 Ohm 1 watt Resistor
R10	A60-690	27 Ohm ½ watt Resistor
T1	A10-478	1st I. F. Transformer
T2	A10-479	2nd I. F. Transforer
T3	A80-233	Output Transformer
L1	B10-480	Oscillator Coil
	48-34	Dial Crystal
	58-37	Dial Pointer
	79-316	4-inch P.M. Speaker
	C83-449	Cabinet Back
	B82-46	Loop Antenna
	83-254	Baffle
	A42-421	Cabinet, Molded Ivory
	B67-505	Dial Scale
	36-116	Grille Cloth
	A52-222	Knob, Ivory

MODELS MD26, MD27

COAST TO COAST STORES

DESCRIPTION

This radio is a 5 tube (including rectifier) superheterodyne radio receiver designed for use on 117 volts 60 cycle AC or 117 volts DC power supply.

The tubes used are:—

1—12SA7	Oscillator Converter	1—12SQ7	AVC Detector and 1st Audio
1—12SK7	I.F. Amplifier		
1—35Z5GT	Power Rectifier	1—50L6GT	Power Output

This receiver covers the frequency range from 540 kilocycles to 1630 kilocycles (KC).

ALIGNMENT PROCEDURE

The following alignment procedure is for use only by competent servicemen having the proper equipment.

The alignment should be made with volume control fully on, and the output from the signal generator as low as possible, to prevent A.V.C. action from interfering with correct alignment.

With the output meter connected across the voice coil of the speaker, the output meter reading for 50 milli-watts is .4 volts using a signal which is modulated 400 c.p.s.

Adjust all trimmers for maximum output. Repeat alignment procedure given below as a final check.

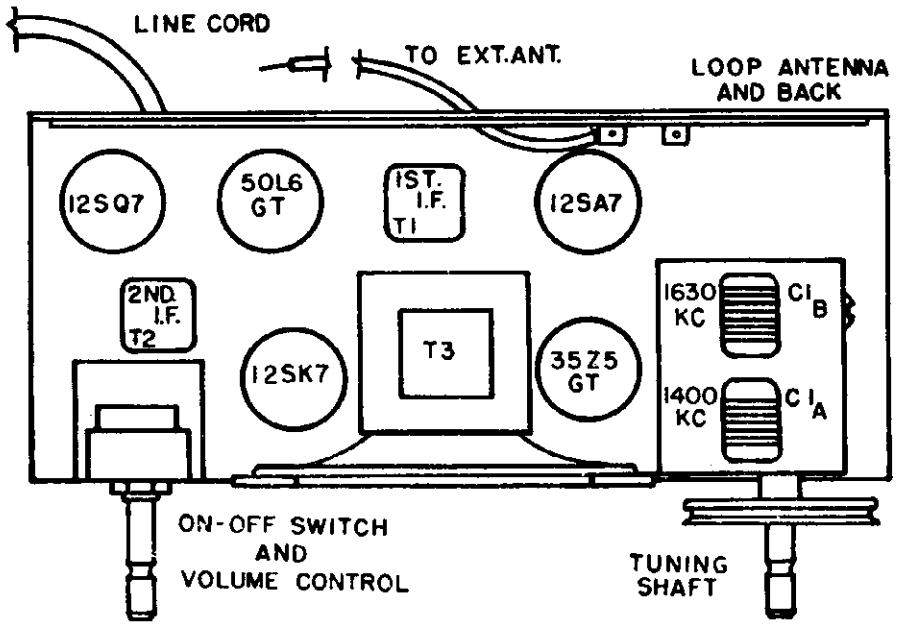

ALIGNMENT PROCEDURE

(Continued)

CAUTION: This is an A.C.-D.C. receiver and when aligning the set it is necessary to isolate the Signal Generator or the Receiver from the line by use of a transformer, or place a .2 MFD. condenser in both test leads of the Signal Generator.

Position of Variable	Generator Frequency	Dummy Ant. Mfd.	Generator Connections	Trimmer Adjustment	Trimmer Function
Fully open	455 KC	.1	*12SA7 Grid (Stator of C1A)	T1	Input I.F.
Fully open	455 KC	.1	*12SA7 Grid (Stator of C1A)	T2	Output I.F.
Fully open	1630 KC	.00025	*12SA7 Grid (Stator of C1A)	C1B	Oscillator
Tune in signal from generator	1400 KC	.00025	*Ant. lead from loop	C1A	Antenna

*Connect ground lead of signal generator to chassis.

©John F. Rider

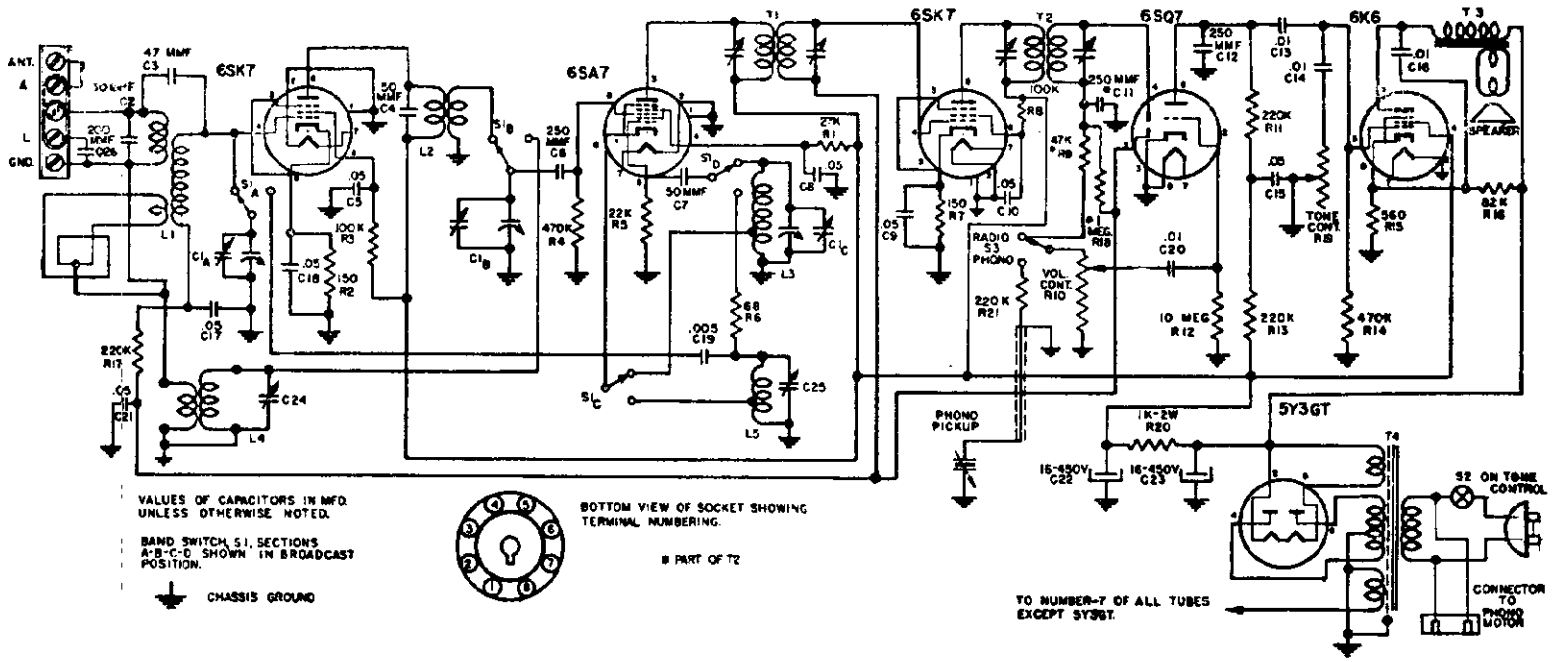

DESCRIPTION

This Model is a 2 band six tube (including Rectifier) superhetrodyne radio receiver and phonograph combination for operation on 117 volt 60 cycle AC current.

This receiver covers the standard broadcast frequency range, 535 to 1725 Kilocycles (K.C.) and the short wave frequency range from 6 to 18.2 Megacycles (M.C.).

The tubes used are:

6SK7—R. F. Amplifier
6SA7—Mixer—Osc.
6SK7—I. F. Amplifier
6SQ7—Det. AVC—Audio
6K6 GT—Power Output
5Y3 GT—Rectifier

MODELS MD42, MD43, MD44

COAST TO COAST STORES

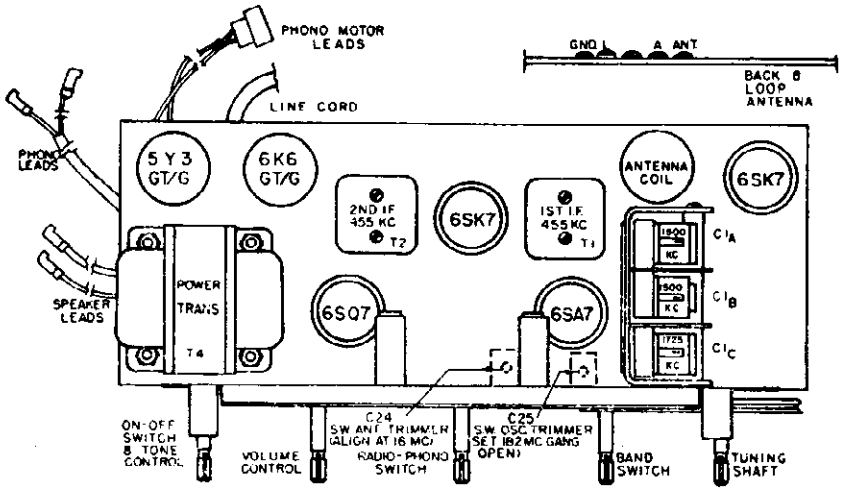

Fig. 2 Tube Positions and Alignment Points

ALIGNMENT PROCEDURE

The following alignment procedure is for use only by competent servicemen having the proper equipment.

With an output meter connected across the voice coil of the speaker, the output meter reading for ½ watt is 1.25 volts using a signal which is modulated 400 c.p.s. Follow through the procedure as outlined below for proper alignment.

The alignment should be made with volume control fully on, and the output from the signal generator as low as possible, for accurate alignment.

Position of Variable	Band Switch Position	Generator Freq.	Dummy Ant.	Generator Connections	Trimmer Adjustment	Trimmer Function
Fully Open	BC	455 KC	.1 MFD	6SA7 Grid (Stator of C1B)	T1 T2	I. F.
Fully Open	BC	1725 KC	.00025 MFD	*Ant. Terminal on Loop	C1C	BC Osc.
Tune in signal from Generator	BC	1500 KC	.00025 MFD	*Ant. Terminal on Loop	C1B	R. F.
Tune in signal from Generator	BC	1500 KC	.00025 MFD	*Ant. Terminal on Loop	C1A	BC Ant.
Fully Open	SW	18.2 MC	400 ohms	*Ant. Terminal on Loop	C25	SW Osc.
Tune in signal from Generator	SW	16 MC	400 ohms	*Ant. Terminal on Loop	C24	SW Ant.

GROUND lead of generator should be attached to the chassis for all adjustments

C24 and C25 are located under the chassis

For alignment points refer to Figure 2

* Be sure coupling link is in correct position for external antenna operation. See illustration below.

Repeat above alignment procedure as a final check.

ANTENNA and GROUND CONNECTIONS

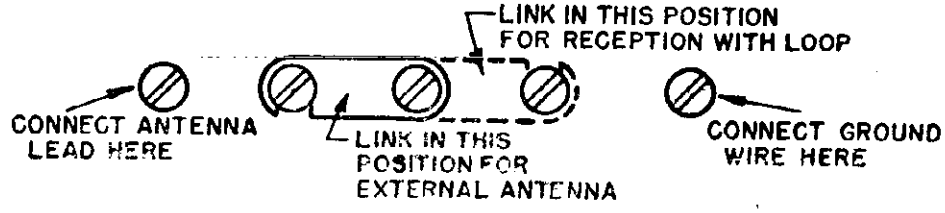

©John F. Rider

COAST TO COAST STORES

MODELS MD42
MD43, MD44

PARTS LIST

CODE	PART NO.	DESCRIPTION
C1A, C1B, C1C	B19-186	Variable Condenser
C2, C4, C7	A15-175	50 MMFD Mica condenser
C3	A83-355	4.7 MMFD condenser
C5, C8, C10, C15	A16-158	.05 MFD 400 volt condenser
C6, C12	A15-176	250 MMFD Mica condenser
C9, C17, C18, C21	A16-152	.05 MFD 200 Volt condenser
C13, C14, C20	A16-156	.01 MFD 400 Volt condenser
C16	A16-168	.01 MFD 1000 Volt condenser
C19	A16-181	.005 MFD Mica condenser
C22	A18-279	16 MFD 450 Volt electrolytic condenser
C23	A18-274	16 MFD 450 Volt electrolytic condenser
C24	A20-143	SW Antenna trimmer
C25	A20-143	SW Oscillator trimmer
C26	A15-189	200 MMFD Mica condenser
R1	A60-692	27K ohm 1 watt resistor
R2, R7	A60-686	150 ohm ½ watt resistor
R3, R8	A60-671	100K ohm ½ watt resistor
R4, R14	A60-662	470K ohm ½ watt resistor
R5	A60-659	22K ohm ½ watt resistor
R6	A60-733	68 ohm ½ watt resistor
R10	A24-169	Volume control, 500,000 ohm
R11, R13, R17, R21	A60-667	220K ohm ½ watt resistor
R12	A60-663	10 megohm ½ watt resistor
R15	A60-701	560 ohm 1 watt resistor
R16	A60-700	82K ohm 1 watt resistor
R19	A26-124	Tone control, 2 megohm, with switch
R20	A60-699	1K ohm 2 watt resistor
L1	C10-459	BC Antenna coil
L2	B10-452	RF Coil
L3	B10-446	BC Oscillator coil
L4	A10-482	SW Antenna coil
L5	A10-481	SW Oscillator coil
T1	B10-412	1st IF Transformer
T2	B10-444	2nd IF Transformer
T3	A80-222	Output Transformer
T4	C80-223	Power Transformer
	A84-41	Dial drive shaft assembly
S1	A69-176	Band Switch
S3	A69-180	Switch, Phono-Radio
	A52-200	Knob, Tuning
	A52-205	Knob, Volume
	A52-233	Knob, On-Off and Tone
	A52-234	Knob, SW-BC
	A52-235	Knob, Radio-Phono
	A58-67	Dial Pointer
	C67-513	Dial scale, glass
	C83-478	Dial scale retainer
	C79-357	Speaker, 8" P.M.
	S84-183	Back and Loop Assembly
	D42-426	Cabinet

CONCORD RADIO CORP.

MODEL 1-413

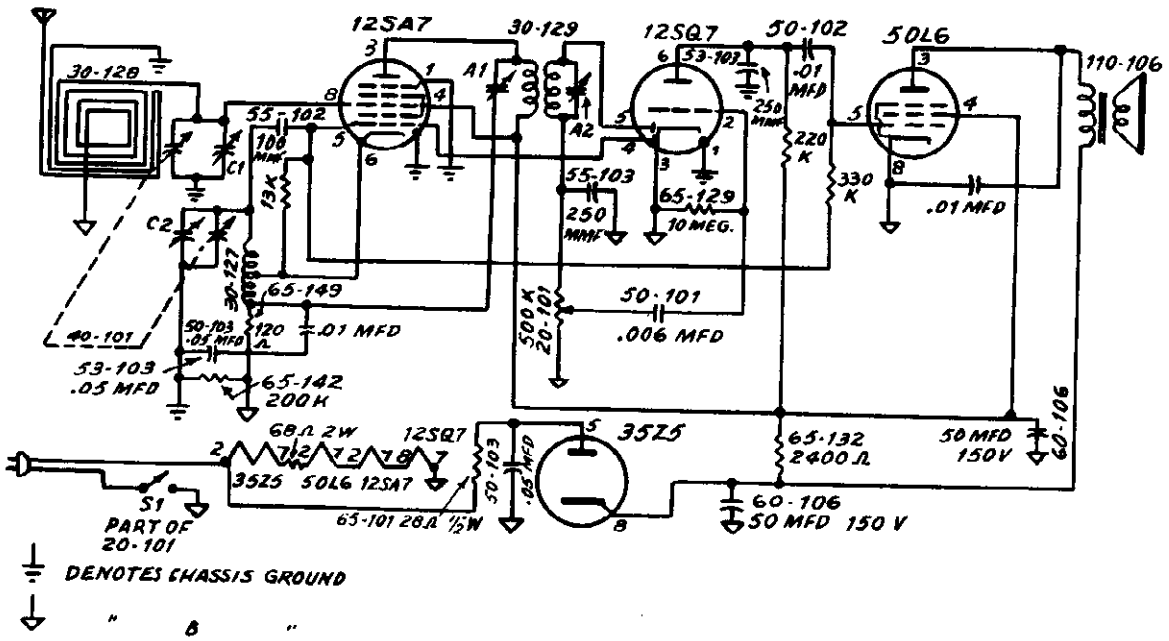

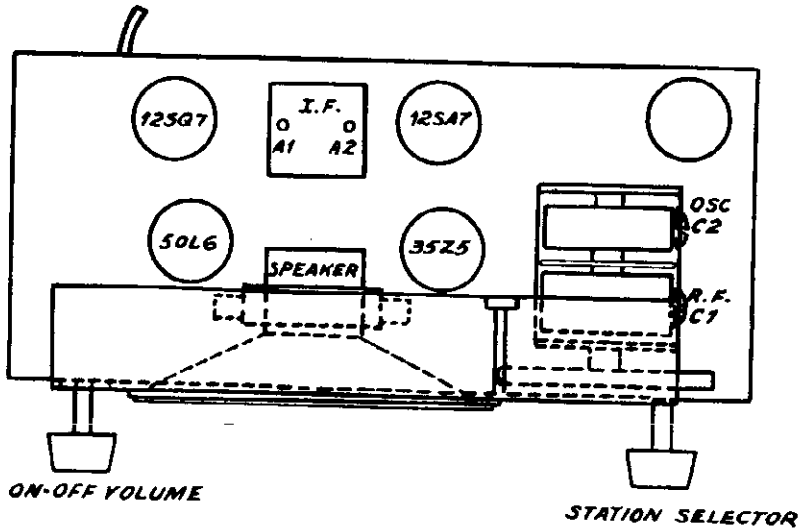

MODEL 1-608

CONCORD RADIO CORP.

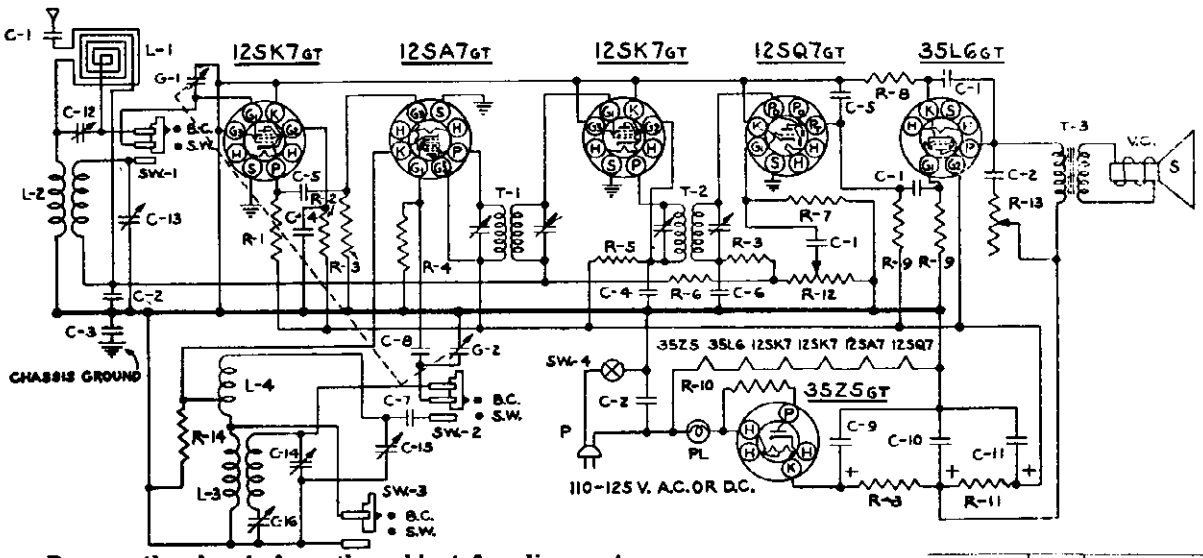

Remove the chassis from the cabinet for alignment.

A signal generator is required, having the following frequencies: 455 KC, 1400 KC, 1730 KC. 6 MC, 16 MC, and 18.3 MC. An output meter should be connected across the speaker.

I. F. ALIGNMENT: — Connect the generator lead through a .1 MFD Condenser to the terminal lug on the "Antenna" section of the gang condenser. The ground lead from the generator should be connected to the gang frame. Set the generator at 455 KC. Adjust the trimmer screws in the 1st and 2nd I. F. cans (See Fig. 1) until a maximum reading is noted on the output meter.

The receiver volume control should be turned to maximum during the I. F. and all subsequent alignments, to keep the AVC from working and giving false readings. Keep the generator output as low as possible to prevent overloading.

BC. OR BROADCAST ALIGNMENT: — With the generator leads still connected as in I. F. Alignment, rotate the tuning condenser to complete minimum capacity. Set the generator to 1730 KC. Adjust the BC. oscillator trimmer until the signal is tuned in. Next remove the hot lead of the generator from the "Ant" section of the gang condenser. Connect this lead to the antenna lead wire that projects from the back of the loop antenna through a 200 MMFD condenser. Set the generator to 1400 KC and rotate the tuning condenser until the signal is tuned in. Adjust the BC. antenna trimmer until a maximum reading is noted on the output meter. Set the generator to 600 KC and turn the tuning control until the signal is tuned in. Rock the tuning control back and forth slowly and at the same time adjust the 600 KC pad, slowly to the right or left until a maximum reading is noted on the output meter. It is advisable to return to the 1730 KC adjustment and re-check that setting to make sure it has not changed while padding at 600 KC.

S. W. OR SHORT WAVE ALIGNMENT: — Set the generator at 18.3 MC. Turn the receiver band switch to short band position. Turn the tuning condenser to complete minimum capacity. The generator leads should be connected to the antenna lead wire that projects from the back of the loop antenna through a 400 Ohm resistor. Adjust the S. W. oscillator trimmer slowly until the 18.3 MC signal is tuned in. At this point, it will be well to make sure that the fundamental signal is turned in. Turn up the generator output and tune the receiver to approximately 17.3 MC. At this point the 18.3 MC signal will be heard again but much weaker. This is the image frequency. If the image is not heard, then turn the tuning condenser back to complete minimum and readjust the S. W. oscillator trimmer. Remember, the image must always be heard (at 2 times the I. F. frequency in KC) lower the frequency than the fundamental signal. After the oscillator has been properly set, tune the signal generator to 16 MC and rotate the tuning control until the signal is tuned in. Adjust the S.W. antenna trimmer until a maximum reading is noted on the output meter. It is advisable to rock the gang slowly while adjusting the antenna trimmer. Set the generator to 6 MC and tune the signal in on the receiver. Check the alignment at this frequency. No adjustment should be necessary as the coils have been carefully checked before leaving the factory. A fixed oscillator padding condenser is used at 6 MC.

PART NO.		DESCRIPTION
IR-22	R-1	3900Ω RESISTOR 1/2 W. 10%
IR-8	R-2	22000Ω RESISTOR 1/2 W. 10%
IR-10	R-3	47000Ω RESISTOR 1/2 W. 20%
IR-9	R-4	22000Ω RESISTOR 1/2 W. 20%
IR-24	R-5	1000Ω RESISTOR 1/2 W. 20%
IR-23	R-6	3.9 MEG. RESISTOR 1/2 W. 20%
IR-13	R-7	2 MEG. RESISTOR 1/2 W. 20%
IR-5	R-8	220Ω RESISTOR 1/2 W. 10%
IR-11	R-9	470000Ω RESISTOR 1/2 W 20%
IR-17	R-10	39Ω RESISTOR 1/2 W. 20%
IR-21	R-11	330Ω RESISTOR 1/2 W. 10%
VC-3	R-12	1 MEG. VOLUME CONTROL
VC-1	R-13	25MΩ TONE CONTROL & SW.
IR-6	R-14	470Ω RESISTOR 1/2 W. 10%
PC-7	C-1	.01 MFD. CONDENSER 400 V.
PC-5	C-2	.05 MFD. CONDENSER 400 V.
PC-9	C-3	.25 MFD. CONDENSER 400 V.
PC-8	C-4	.1 MFD. CONDENSER 400 V.
MC-3	C-5	.00022 MFD. MICA COND. 500 V.
MC-2	C-6	.0001 MFD. MICA COND. 500 V.
MC-1	C-7	.00475 MFD. MICA COND. 3%
MC-4	C-8	.00005 MFD. MICA COND. 500 V.
EC-4	C-9, C-10, C-11	40 MFD. 40 MFD. 40 MFD. 150 V. ELECTROLYTIC
TC-7	C-12	LOOP ANTENNA TRIMMER
TC-8	C-13	S.W. ANTENNA TRIMMER
TC-1	C-14	B.C. OSC. TRIMMER
	C-15	S.W. OSC. TRIMMER
	C-16	B.C. OSC. PADDING COND.
GC-1	G-1, G-2	GANG CONDENSER
SW-1	SW-1, SW-2, SW-3	BAND SWITCH
	SW-4	A.C. SW. ON TONE CONTROL
LI-1	T-1	INPUT I.F. TRANSFORMER
LI-2	T-2	OUTPUT I.F. TRANSFORMER
SPK-4	T-3	OUTPUT SPK. TRANSFORMER
	V.C.	VOICE COIL
	S	P.M. SPEAKER
PB-1	PL	PILOT BULB #47
CO-1	P	LINE CORD
LL-2	L-1	LOOP ANTENNA
LA-2	L-2	S.W. ANTENNA COIL
LO-3	L-3	B.C. OSC. COIL
LO-4	L-4	S.W. OSC. COIL
TU-4		12SK7GT 12SA7GT 12SK7GT 12SQ7GT 35L6GT 35Z5GT

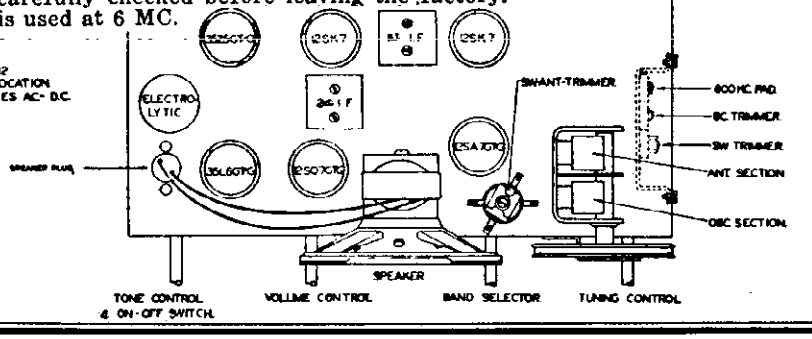

FIGURE-1
MODEL-5060-5011-5012
TUBE AND TRIMMER LOCATION
110-125 VOLTS 60 CYCLES AC-D.C.

CONCORD RADIO CORP. MODEL 1-608

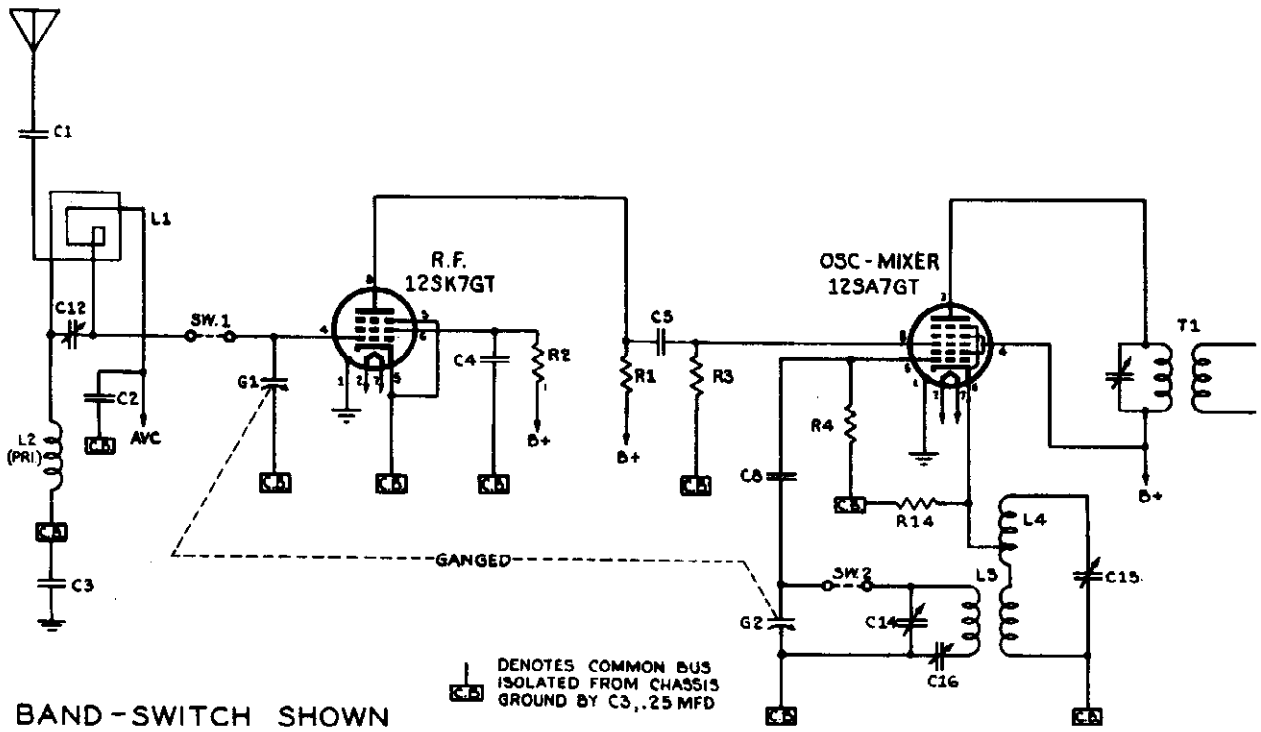

BAND-SWITCH SHOWN AT 1ST POSITION. BROADCAST BAND

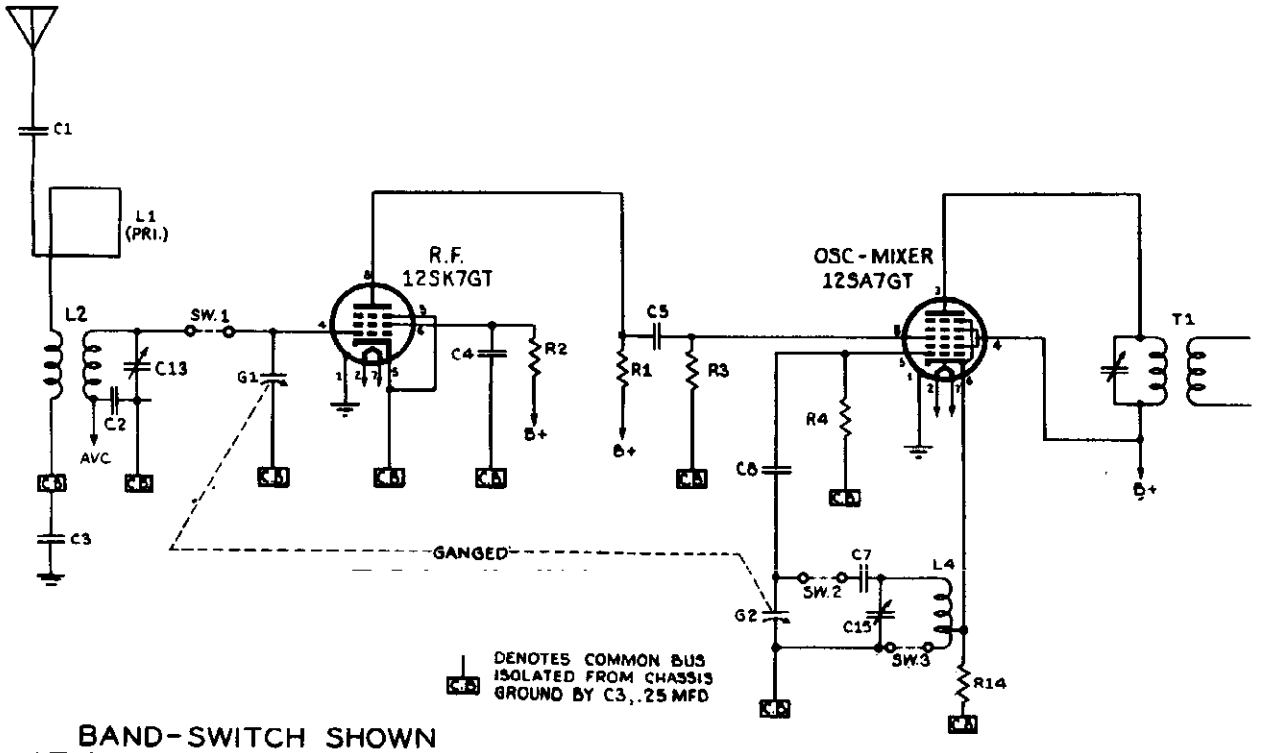

BAND-SWITCH SHOWN AT 2ND POSITION CLOCKWISE. SHORT WAVE BAND

MODELS 1-702, 1-704

CONCORD RADIO CORP.

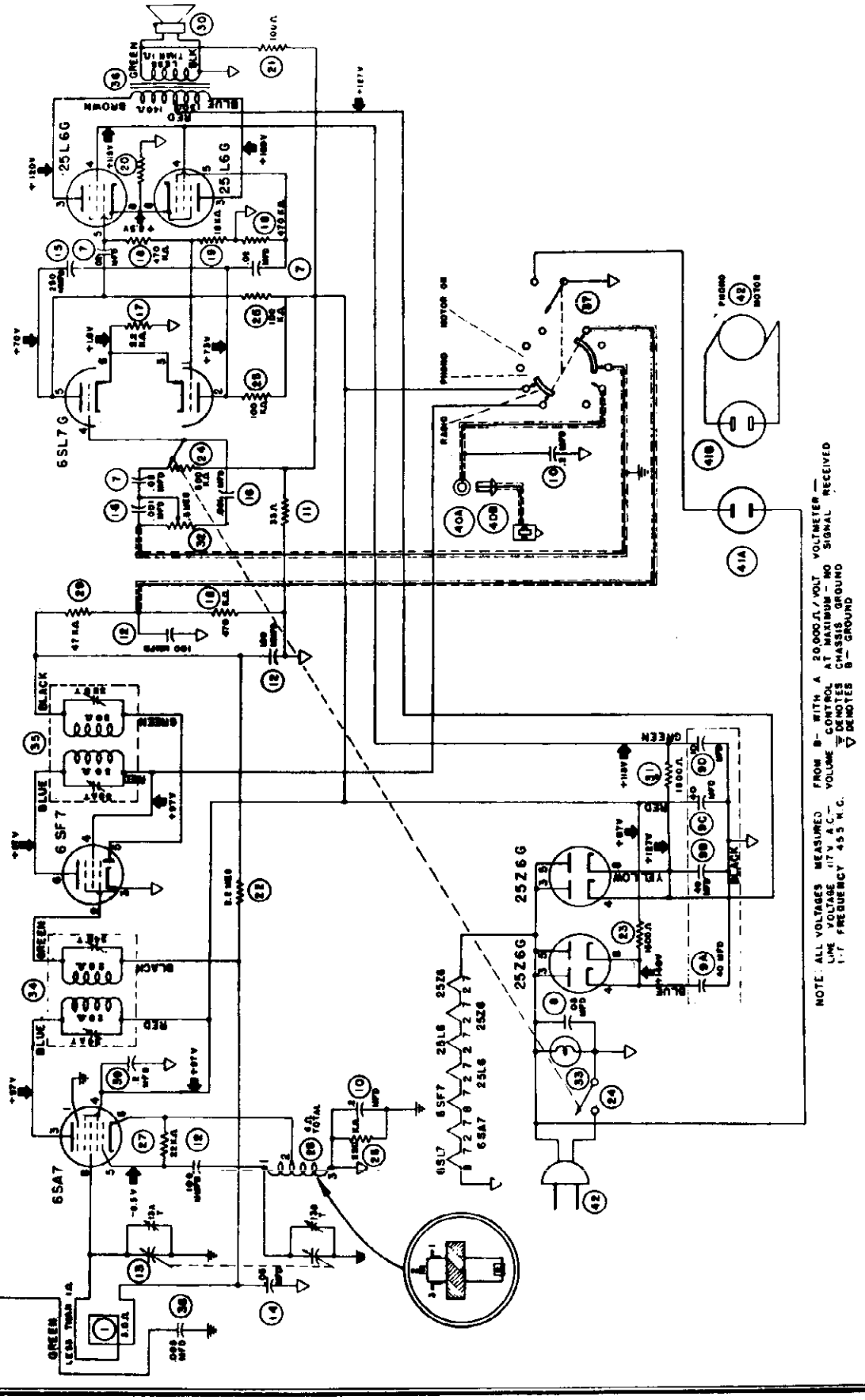

In order to make a proper alignment, the following equipment is required:

1. A signal generator capable of providing a modulated radio frequency output over the frequencies required.
2. A suitable output meter or sensitive AC voltmeter with a .1 mfd series blocking condenser.
3. A coupling loop, made of three turns of stiff hookup wire, 4 inches in diameter, mounted on a suitable block of wood or stand.
4. A non-metallic screwdriver.

With the receiver on and the volume control at maximum, connect the signal generator to the coupling loop and bring the loop close to the receiver chassis. Adjust the signal generator output to minimum necessary to give a suitable indication on the output meter, which should be connected from B minus to the plate of one output tube. CAUTION: Make sure the output meter is isolated from DC by a series blocking condenser.

I.F. FREQ. - 455 KC.

SET SIGNAL GENERATOR AT	SET GANG	LOOP DISTANCE	ADJUST TRIMMER	TUNE FOR	OPERATION
455 KC	Fully Meshed	Close	34a 34b 35a 35b	Max.	Align I.F.
1720 KC	Fully Open	Close	13b	Max.	Set Osc.
1400 KC	1400 KC	Close	13a	Max.	Align R.F.

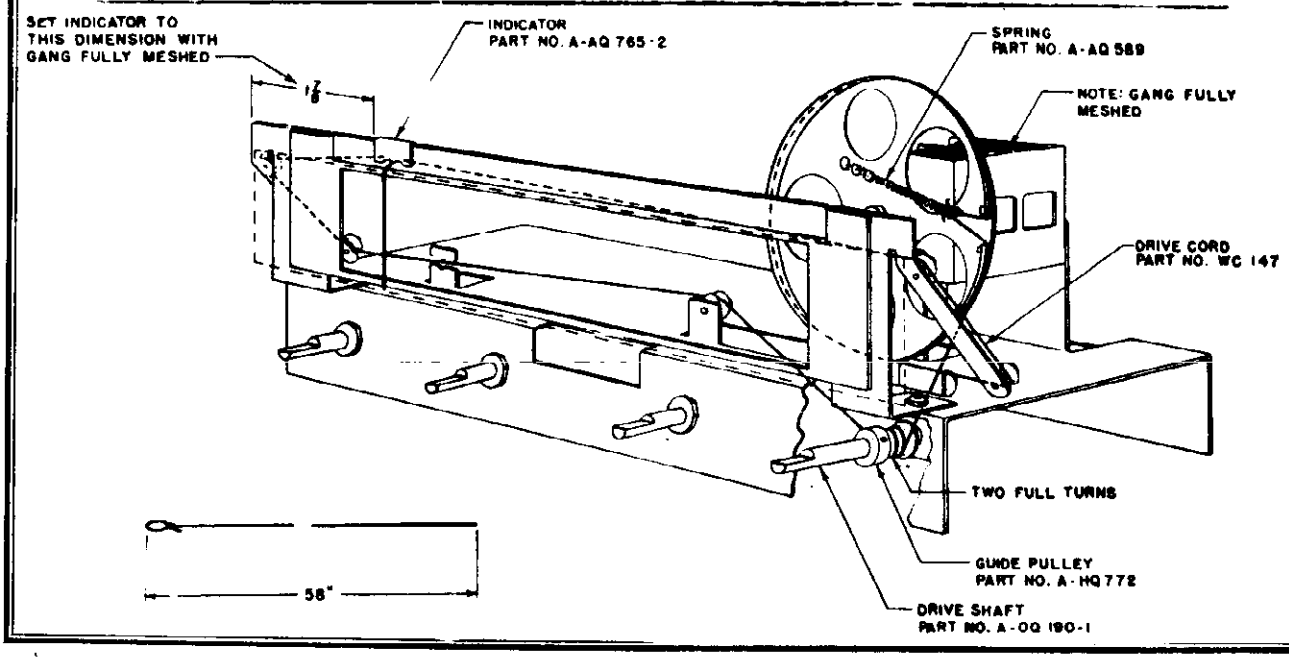

MODEL 7E71PR

CONCORD RADIO CORP.

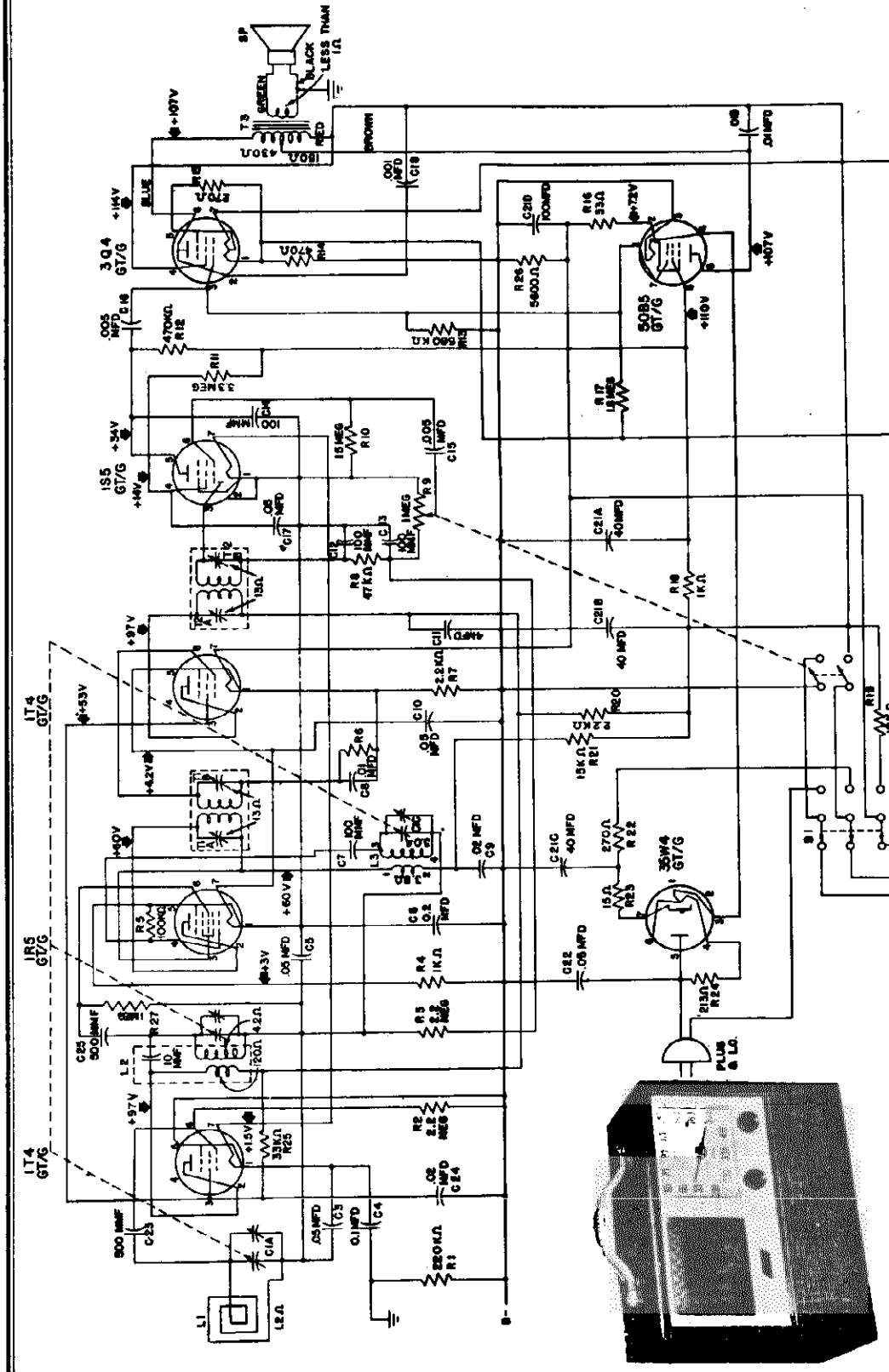

The following battery types may be used with this receiver

	"A" Battery	"B" Battery
Burgess	G3	M30
Ray-O-Vac	P 83 A.	P 7830
Everady	746	482

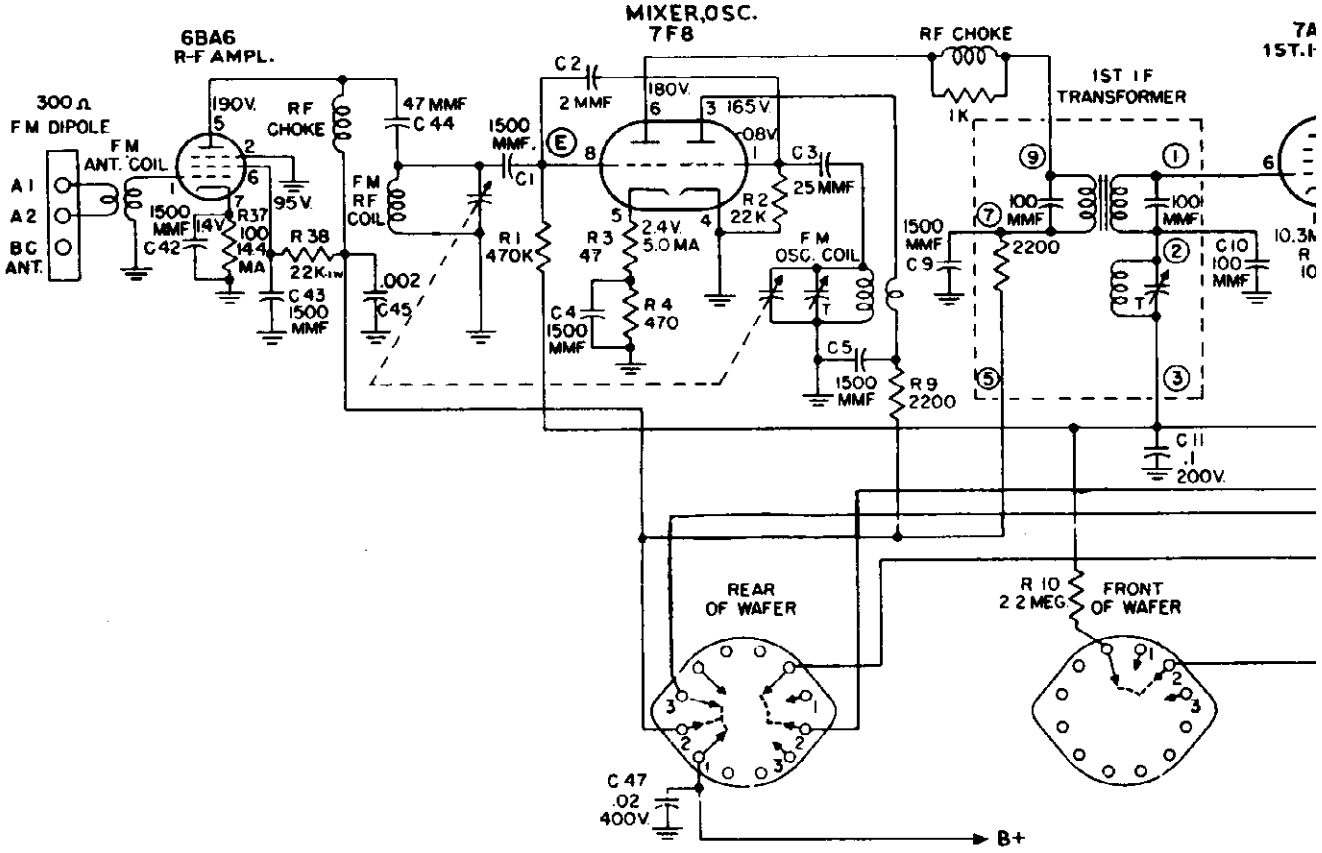
6BA6
R-F AMPL.
MIXER,OSC.
7F8
RF CHOKE
1ST IF
TRANSFORMER
300Ω
FM DIPOLE
A1
A2
BC
ANT.
FM
ANT. COIL
190V.
RF
CHOKE
95V.
47 MMF
C44
FM
RF
COIL
1500
MMF.
C1
C2
2 MMF
180V.
3 165V.
.08V.
C3
25 MMF
R2
22K
R1
470K
R3
47
2.4V.
5.0 MA
C4
1500
MMF
R4
470
FM
OSC. COIL
C5
1500
MMF
R9
2200
1K
1500
MMF
C9
100
MMF
2200
C10
100
MMF
C11
.1
200V.
1500
MMF
C42
14V.
R37
100
144
MA
R38
22K-1W
C43
1500
MMF
.002
C45
REAR
OF WAFER
R10
2.2 MEG.
FRONT
OF WAFER
C47
.02
400V.
B+

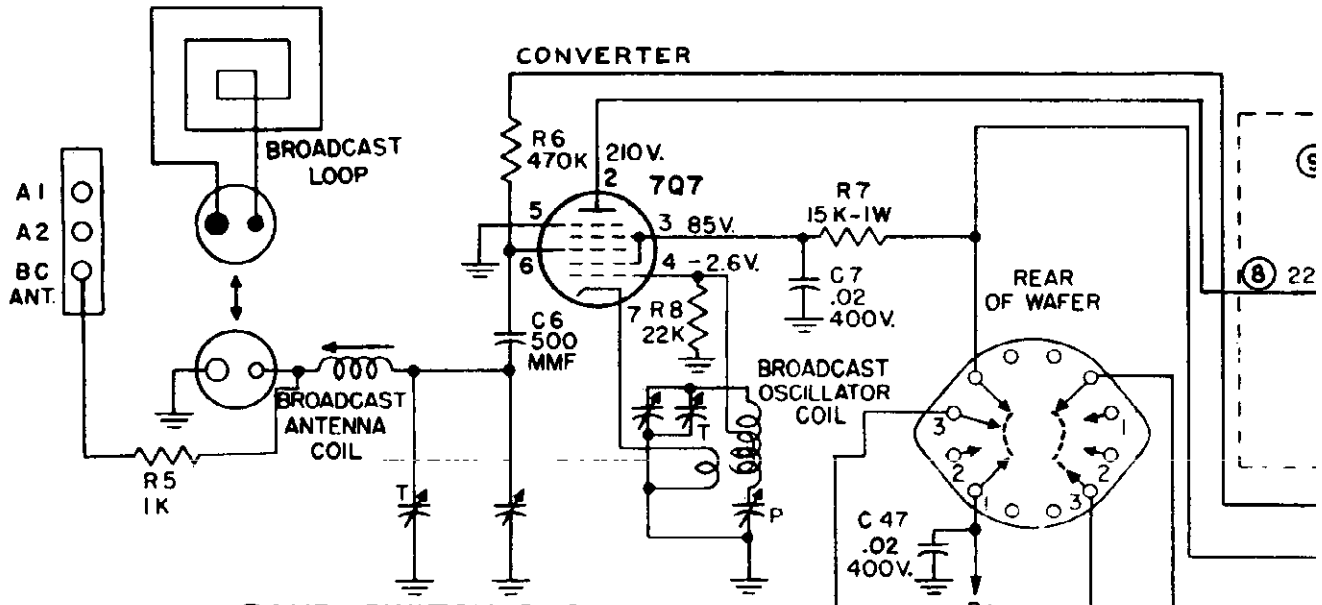
CONVERTER
A1
A2
BC
ANT.
BROADCAST
LOOP
BROADCAST
ANTENNA
COIL
R5
1K
R6
470K
210V.
7Q7
3 85V.
4 -2.6V.
R7
15K-1W
C7
.02
400V.
7 R8
22K
C6
500
MMF
BROADCAST
OSCILLATOR
COIL
REAR
OF WAFER
C47
.02
400V.
B+
BAND-SWITCH SHOWN
AT 3RD POSITION CLOCKWISE
BROADCAST BAND

©John F. Rider

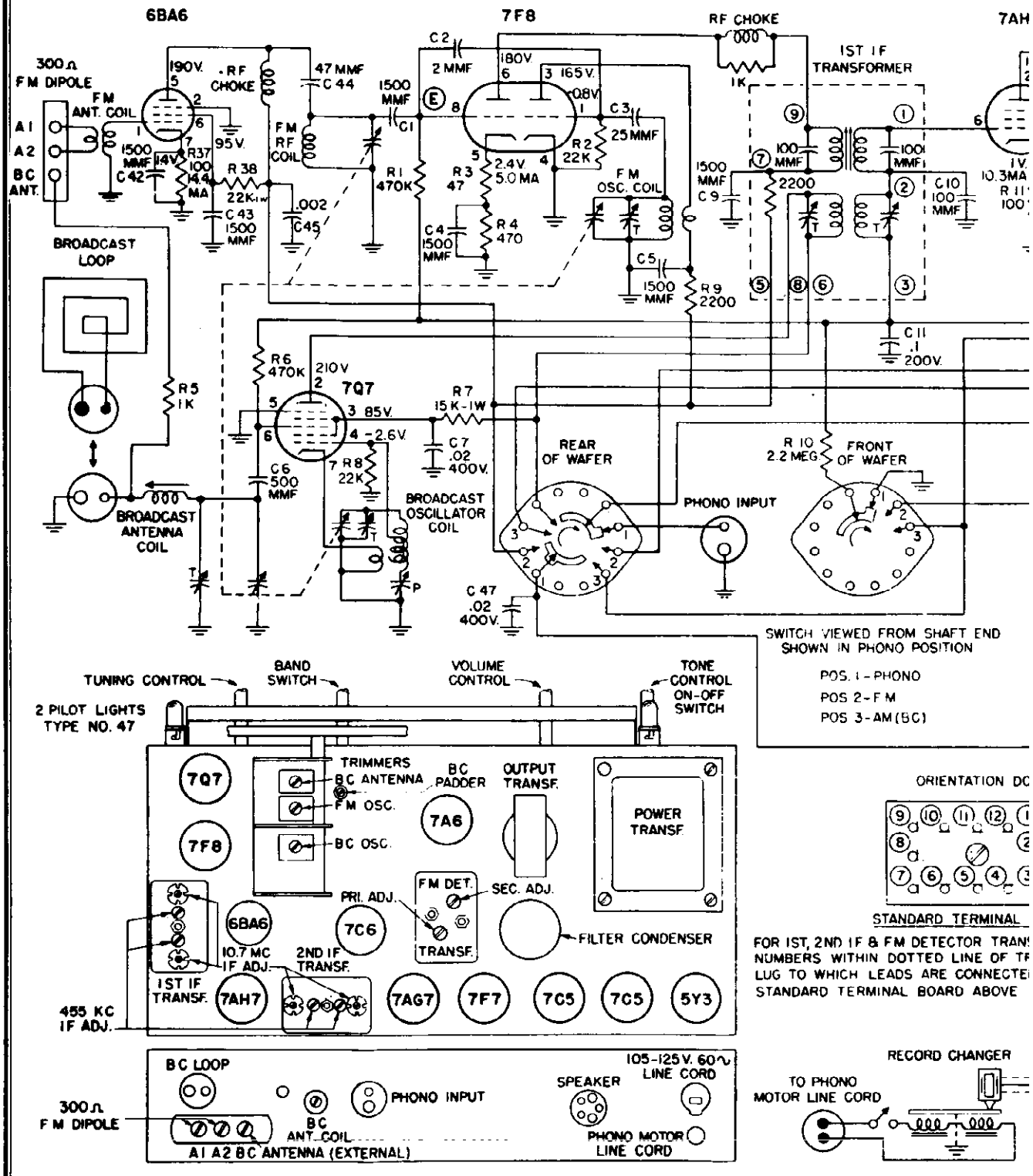
6BA6
7F8
RF CHOKE
7AH
300Ω FM DIPOLE
FM ANT. COIL
A1
A2
BC ANT.
190V.
RF CHOKE
95V.
1500 MMF C42
14V.
R37 100 44 MA
R 38 22K 1W
C 43 1500 MMF
47 MMF C 44
FM RF COIL
.002 C45
1500 MMF C1
R1 470K
C2 2 MMF
180V.
165V.
0.8V.
C3 25 MMF
R2 22K
R3 47
2.4V. 5.0 MA
R4 470
C4 1500 MMF
FM OSC. COIL
C5 1500 MMF
R9 2200
1ST I F TRANSFORMER
1K
1500 MMF C9
100 MMF
2200
C10 100 MMF
C 11 .1 200V.
BROADCAST LOOP
R5 1K
R6 470K
210V
7Q7
3 85V.
4 -2.6V.
R7 15K-1W
C7 .02 400V.
R8 22K
C6 500 MMF
BROADCAST ANTENNA COIL
BROADCAST OSCILLATOR COIL
REAR OF WAFER
FRONT OF WAFER
R 10 2.2 MEG
PHONO INPUT
C 47 .02 400V.
SWITCH VIEWED FROM SHAFT END SHOWN IN PHONO POSITION
POS. 1 - PHONO
POS 2 - F M
POS 3 - AM (BC)
TUNING CONTROL
BAND SWITCH
VOLUME CONTROL
TONE CONTROL ON-OFF SWITCH
2 PILOT LIGHTS TYPE NO. 47
TRIMMERS
BC ANTENNA
FM OSC.
BC OSC.
BC PADDER
OUTPUT TRANSF.
POWER TRANSF.
7A6
FM DET. TRANSF.
PRI. ADJ.
SEC. ADJ.
FILTER CONDENSER
6BA6
7C6
10.7 MC I.F. ADJ.
2ND I.F. TRANSF.
1ST I.F. TRANSF.
7AH7
7AG7
7F7
7C5
7C5
5Y3
455 KC I.F. ADJ.
ORIENTATION DO
STANDARD TERMINAL
FOR 1ST, 2ND I.F. & F.M. DETECTOR TRANS
NUMBERS WITHIN DOTTED LINE OF TR
LUG TO WHICH LEADS ARE CONNECTE
STANDARD TERMINAL BOARD ABOVE
BC LOOP
300Ω F M DIPOLE
BC ANT. COIL
A1 A2 BC ANTENNA (EXTERNAL)
PHONO INPUT
SPEAKER
105-125 V. 60~ LINE CORD
PHONO MOTOR LINE CORD
RECORD CHANGER
TO PHONO MOTOR LINE CORD

©John F. Rider

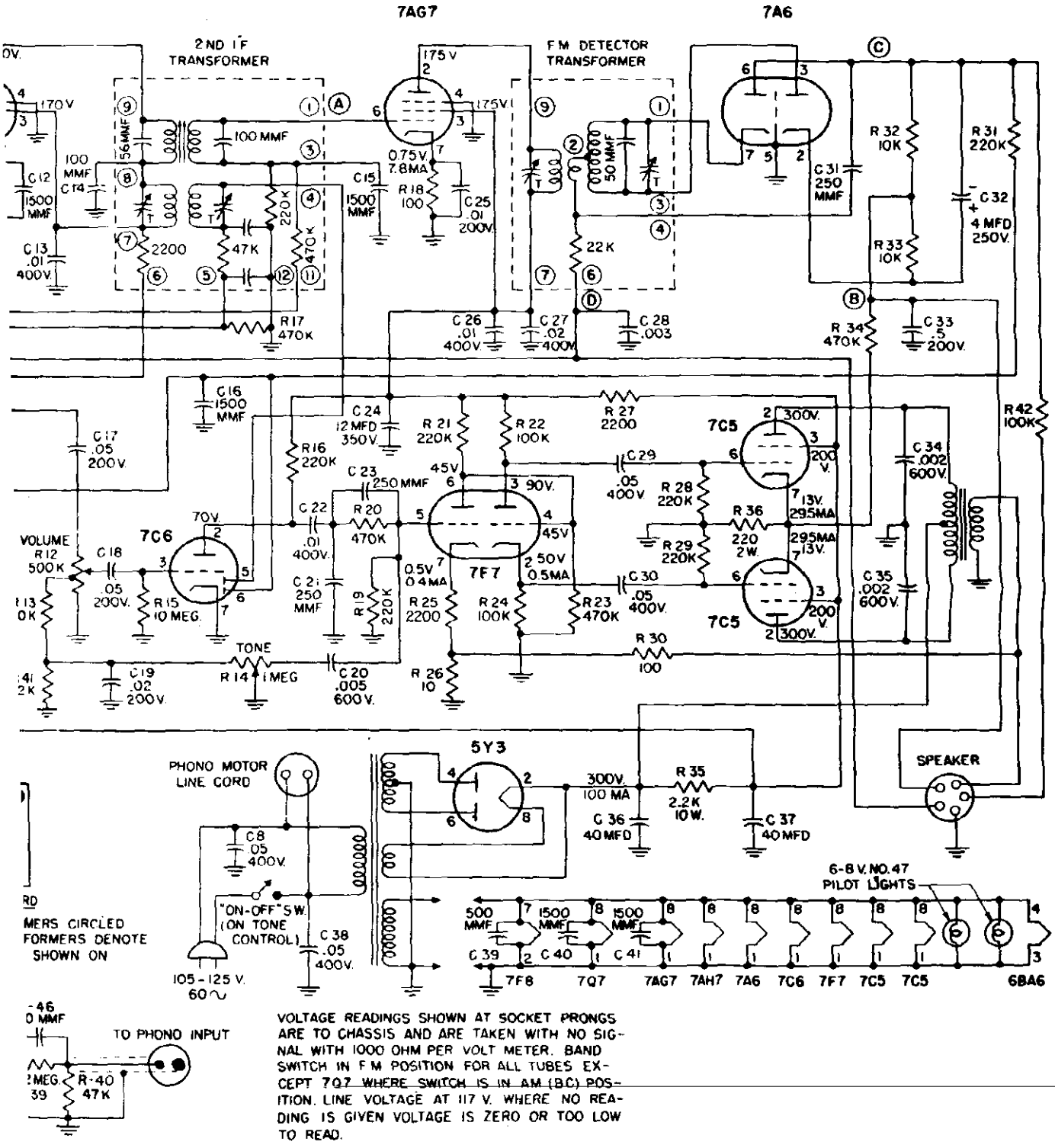

VOLTAGE READINGS SHOWN AT SOCKET PRONGS ARE TO CHASSIS AND ARE TAKEN WITH NO SIGNAL WITH 1000 OHM PER VOLT METER. BAND SWITCH IN F.M. POSITION FOR ALL TUBES EXCEPT 7Q7 WHERE SWITCH IS IN A.M. (B.C.) POSITION. LINE VOLTAGE AT 117 V. WHERE NO READING IS GIVEN VOLTAGE IS ZERO OR TOO LOW TO READ.

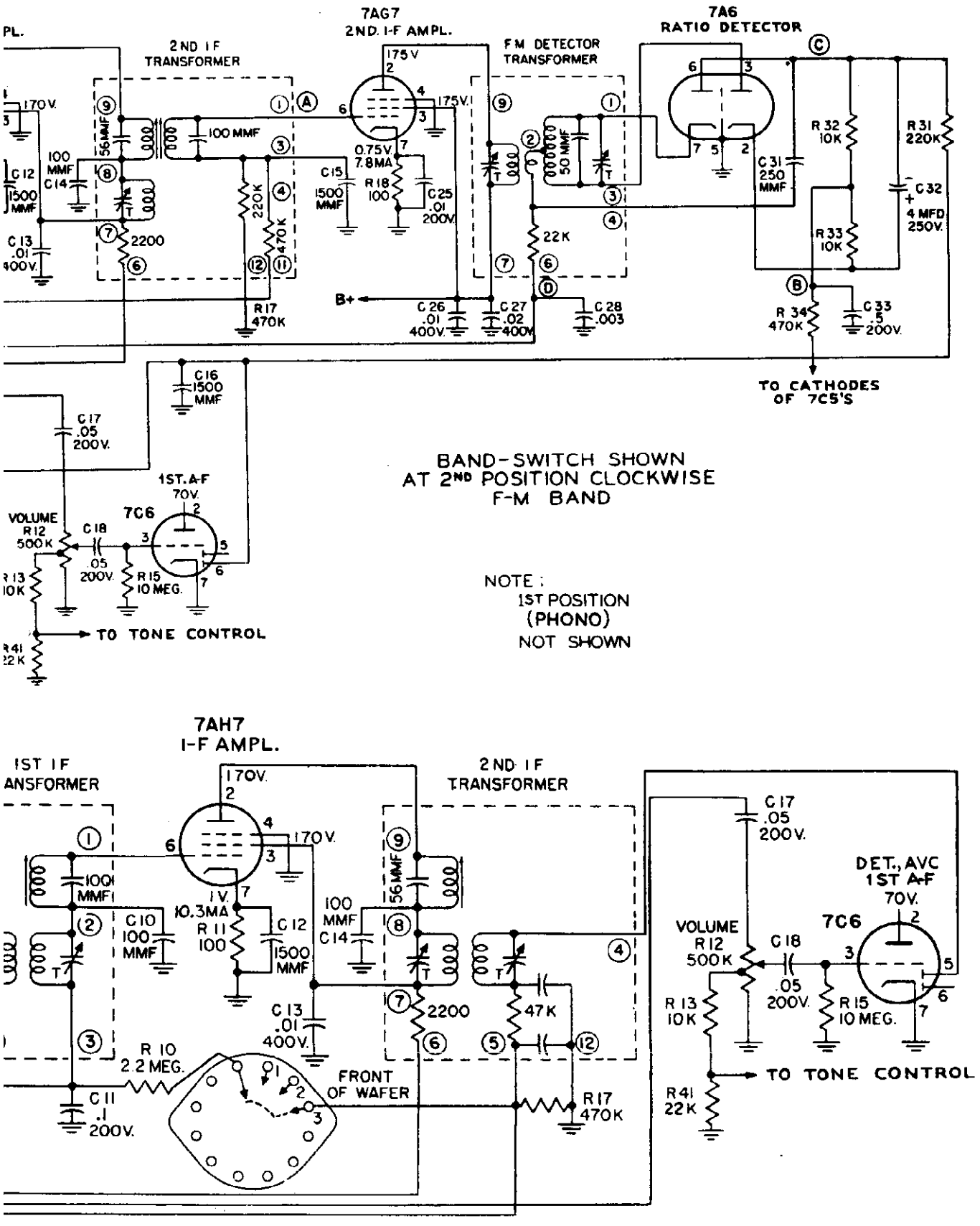
7AG7
2ND. I-F AMPL.
7A6
RATIO DETECTOR
2ND I F
TRANSFORMER
FM DETECTOR
TRANSFORMER
175 V
175V.
0.75V.
7.8MA
100 MMF
56 MMF
50 MMF
220K
470K
2200
22K
R17
470K
B+
C26
.01
400V.
C27
.02
400V.
C28
.003
R18
100
C15
1500
MMF
C25
.01
200V.
C31
250
MMF
R32
10K
R33
10K
R31
220K
C32
4 MFD
250V.
R34
470K
C33
.5
200V.
TO CATHODES
OF 7C5'S
C16
1500
MMF
C17
.05
200V.
1ST. A-F
70V.
7C6
VOLUME
R12
500K
C18
.05
200V.
R15
10 MEG.
R13
10K
R41
22K
TO TONE CONTROL
BAND-SWITCH SHOWN
AT 2ND POSITION CLOCKWISE
F-M BAND
NOTE :
1ST POSITION
(PHONO)
NOT SHOWN
7AH7
I-F AMPL.
1ST I F
ANSFORMER
2ND I F
TRANSFORMER
170V.
1V.
10.3MA
100
MMF
C10
100
MMF
R11
100
C12
1500
MMF
C14
100
MMF
56MMF
C13
.01
400V.
2200
47K
R10
2.2 MEG.
C11
.1
200V.
FRONT
OF WAFER
R17
470K
C17
.05
200V.
DET., AVC
1ST A-F
70V.
7C6
VOLUME
R12
500K
C18
.05
200V.
R15
10 MEG.
R13
10K
R41
22K
TO TONE CONTROL

MODELS 1-1500, 1-1501, 1-1502

CONCORD

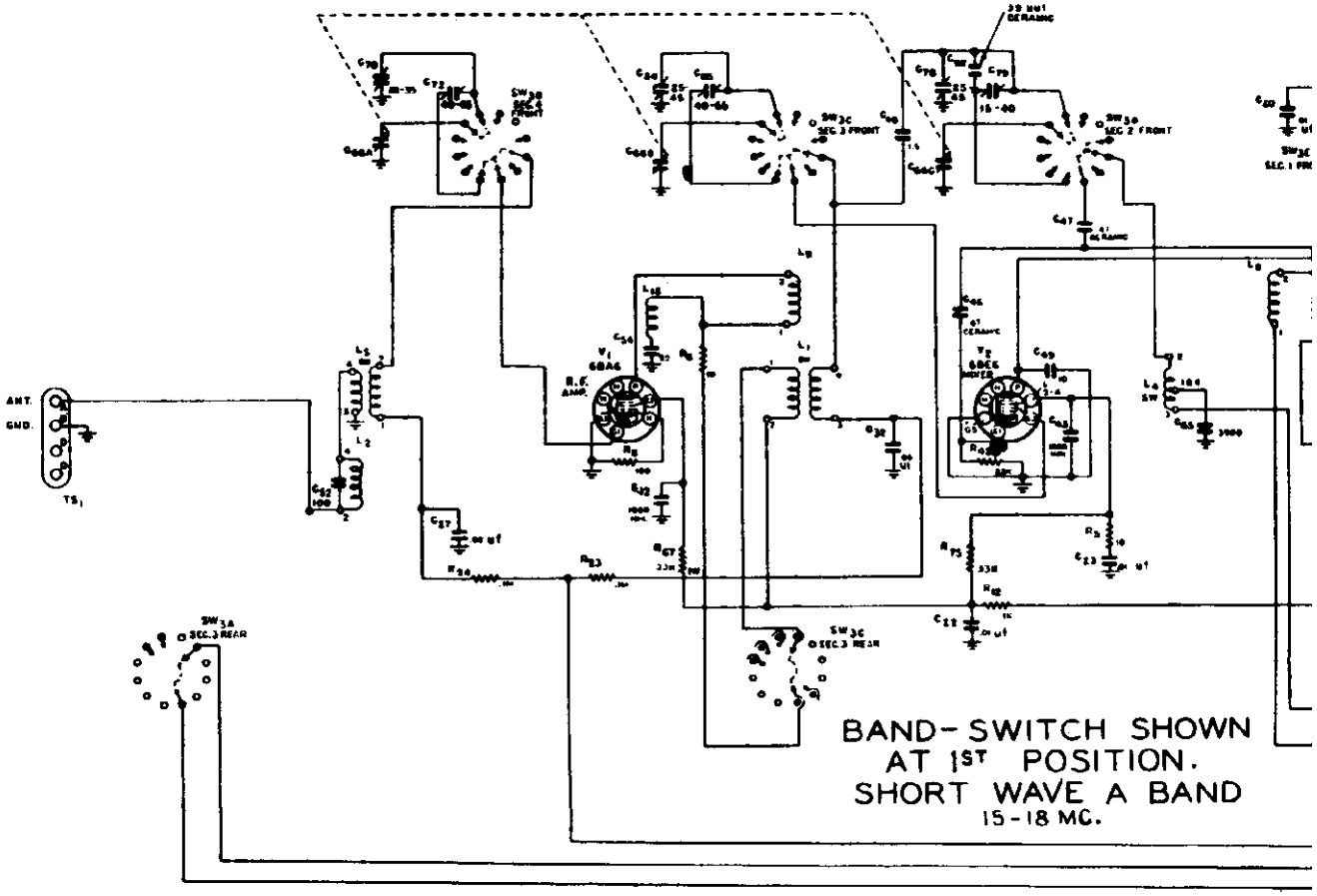

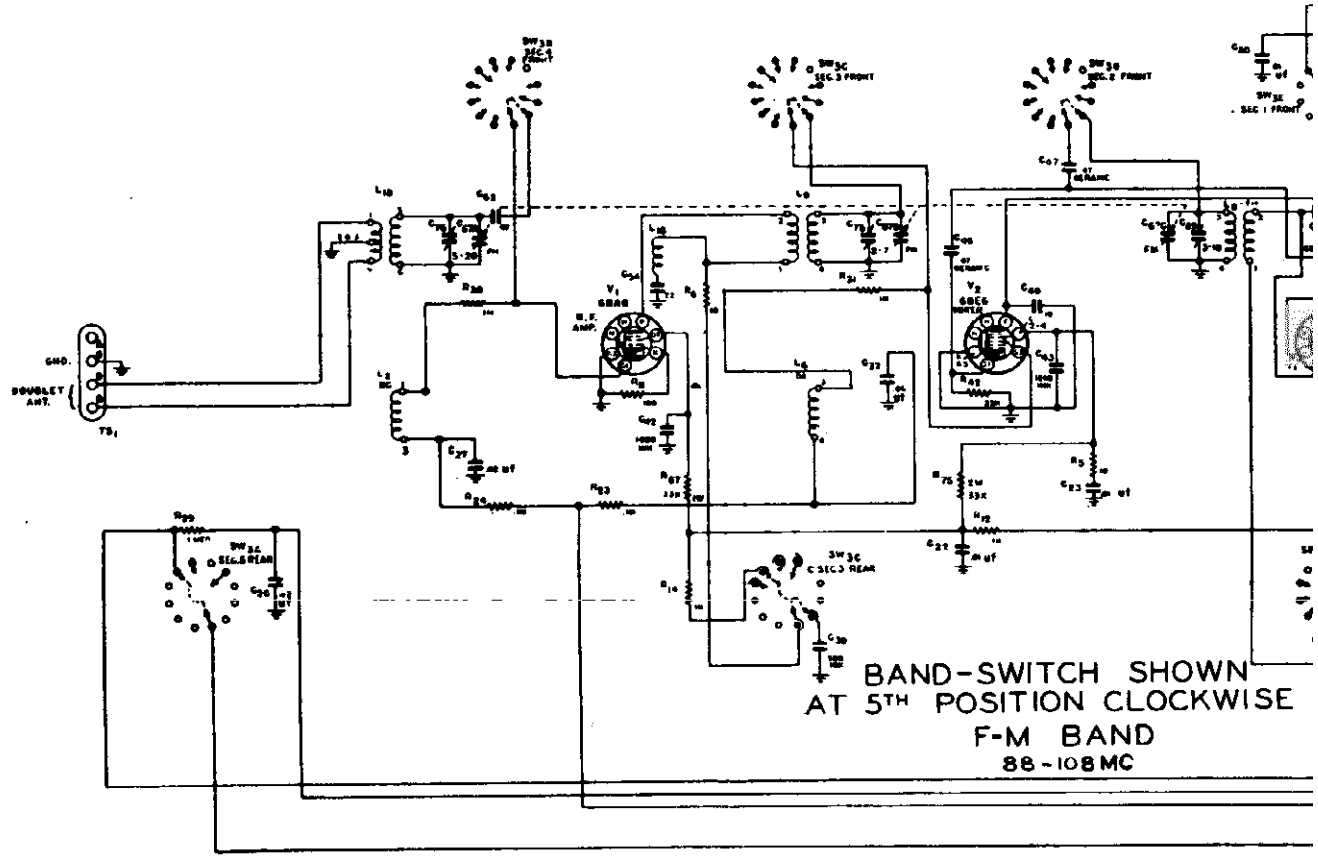

©John F. Rider

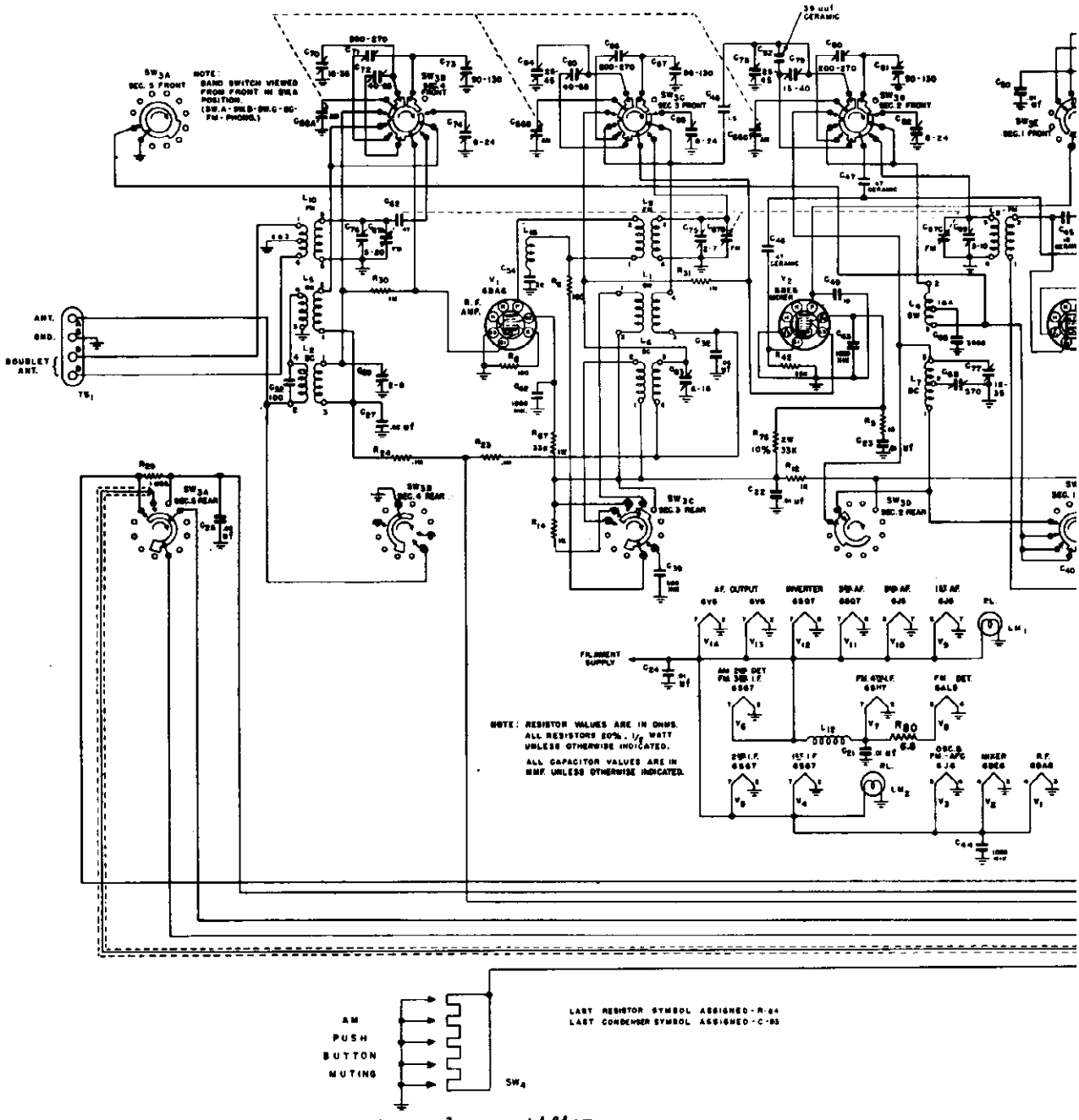

Tubes	Fourteen plus rectifier.
Speaker output impedance	500 ohms.
Antenna	Provisions for external long wire antenna for AM bands and a folded dipole (300-ohm) for FM band.
Tuning	Manual and mechanical push buttons. (Five channels for AM and five channels for FM.)
Tuning Range	(BC) 540kc - 1700 kc. (A) 15 mc - 18 mc. (B) 9 mc - 12 mc. (C) 5.8 mc - 18 mc. (FM) 88 mc - 108 mc.
I.F. (AM)	455 kc.
I.F. (FM)	10.7 mc.
Power Supply	105-125 V. 60 cycles A.C.
Power Consumption	180 watts.

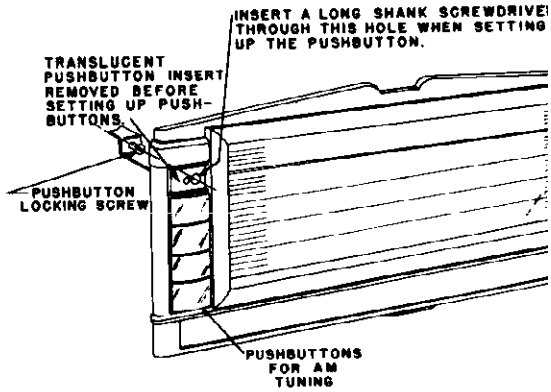

Fig. 1. View showing pushbutton se

©John F. Rider

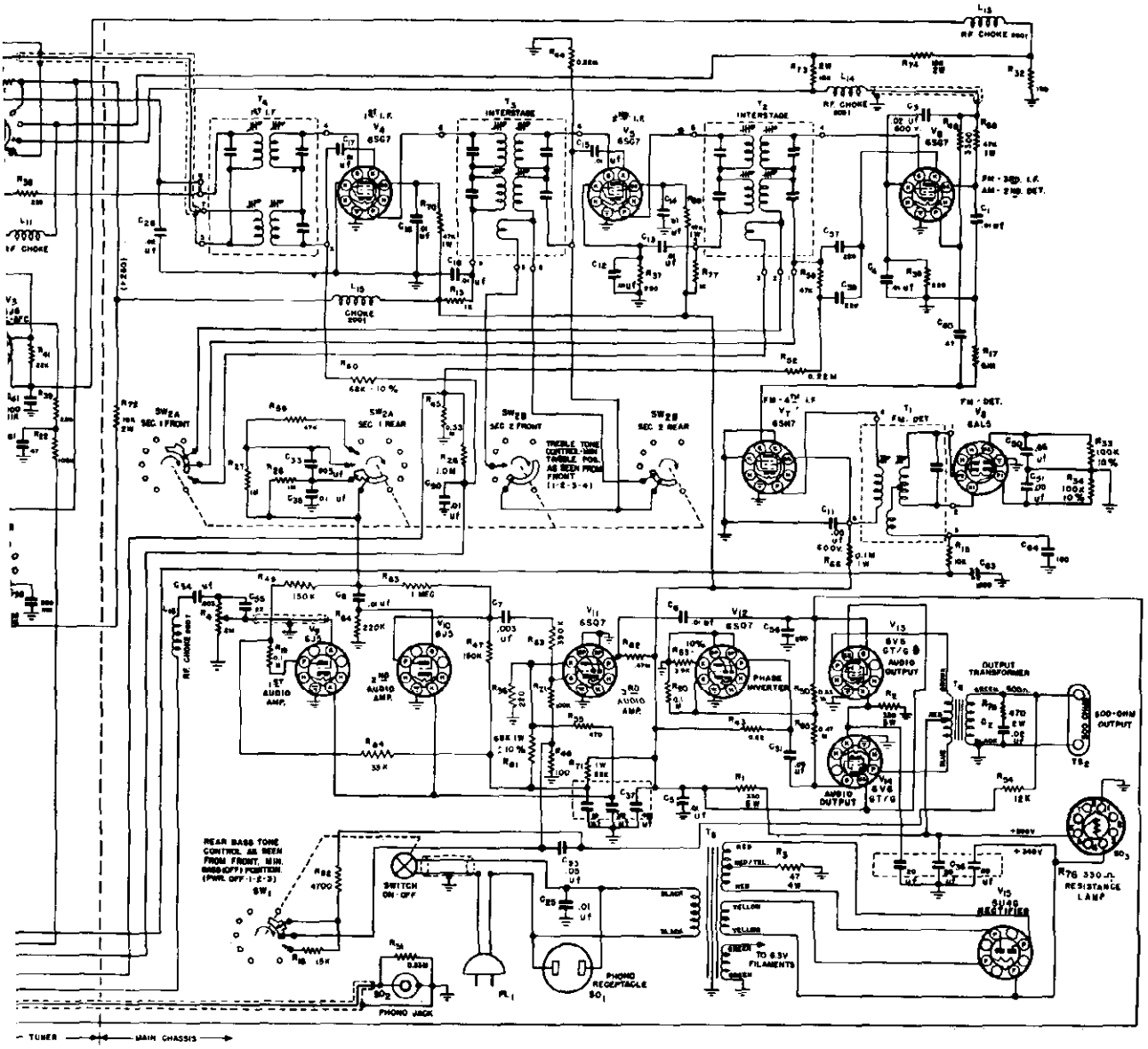

BUTTON SETTING:



Note - Insulate the muting switch springs before setting the AM buttons.

1. Select any one pushbutton.
2. Pull translucent insert straight out.
3. Insert screw driver blade through large hole of pushbutton into slot of locking screw. (See Fig. 1).
4. Loosen locking screw about one-half turn. (Not more than one full turn.)
5. With pushbutton depressed, carefully tune in desired station with the manual control and tighten the locking screw.

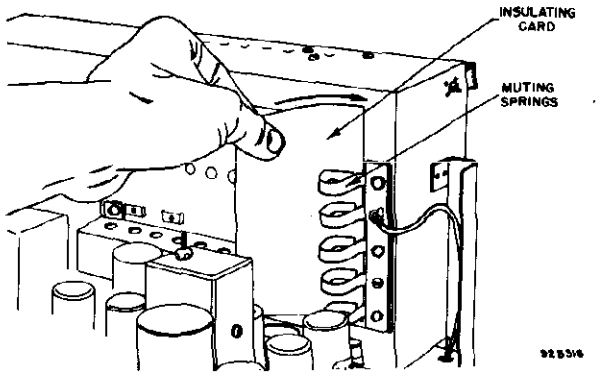

Fig. 3. Insulating the muting switch contacts

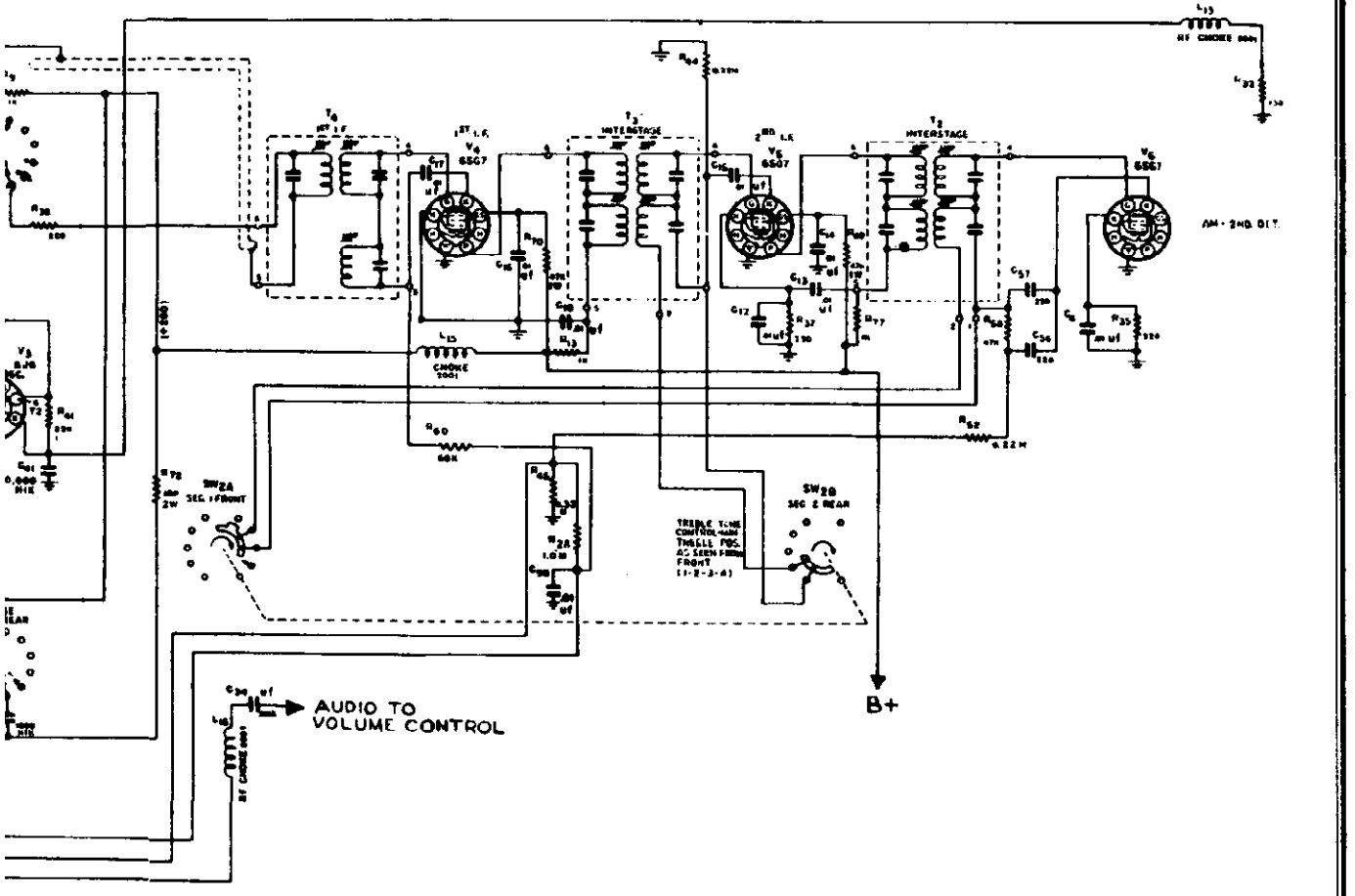
AUDIO TO VOLUME CONTROL
B+
AM - 2ND DET.

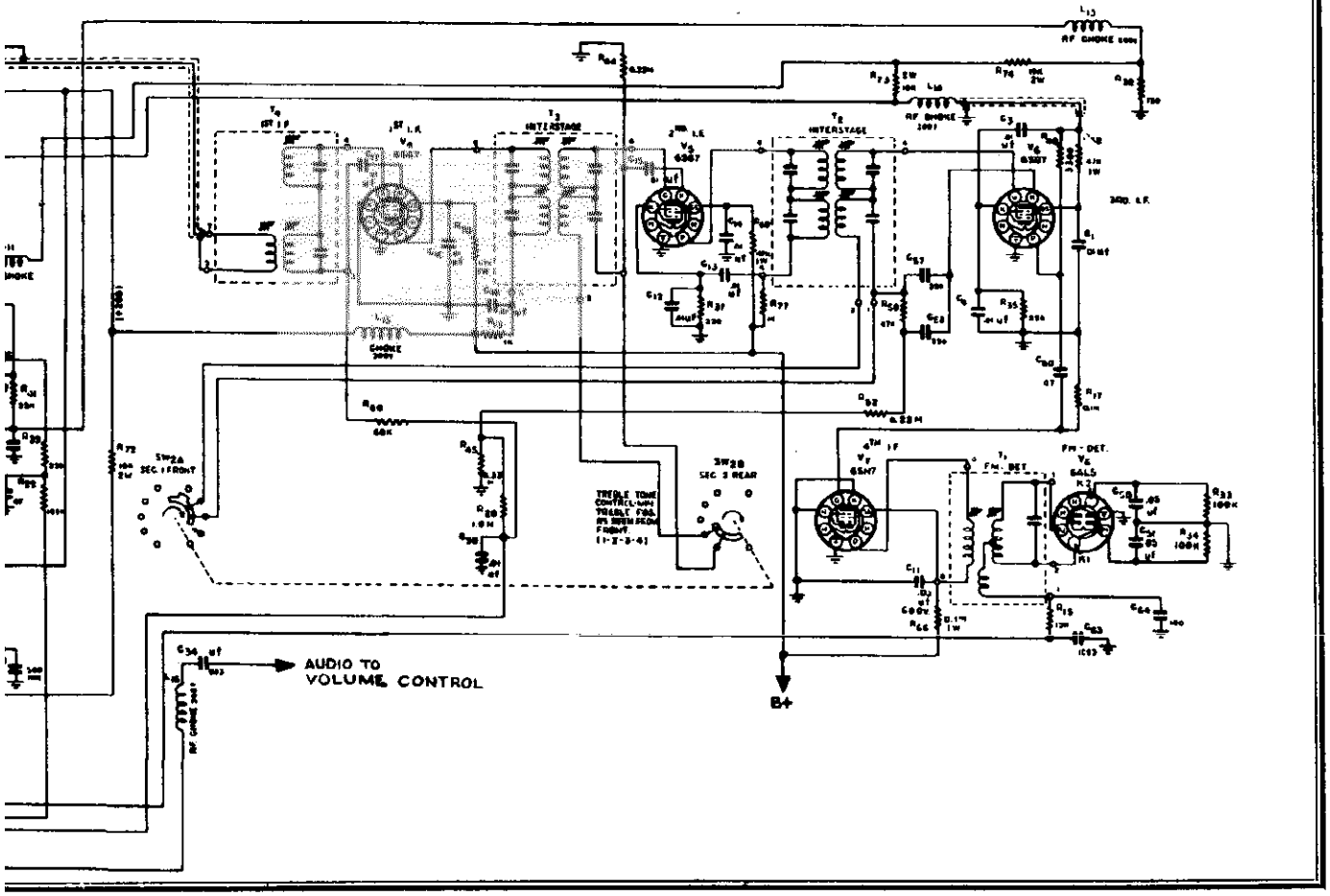
AUDIO TO VOLUME CONTROL
B+
FM - DET.

CONCORD RADIO CORP. MODELS 1-1500, 1-1501, 1-1502

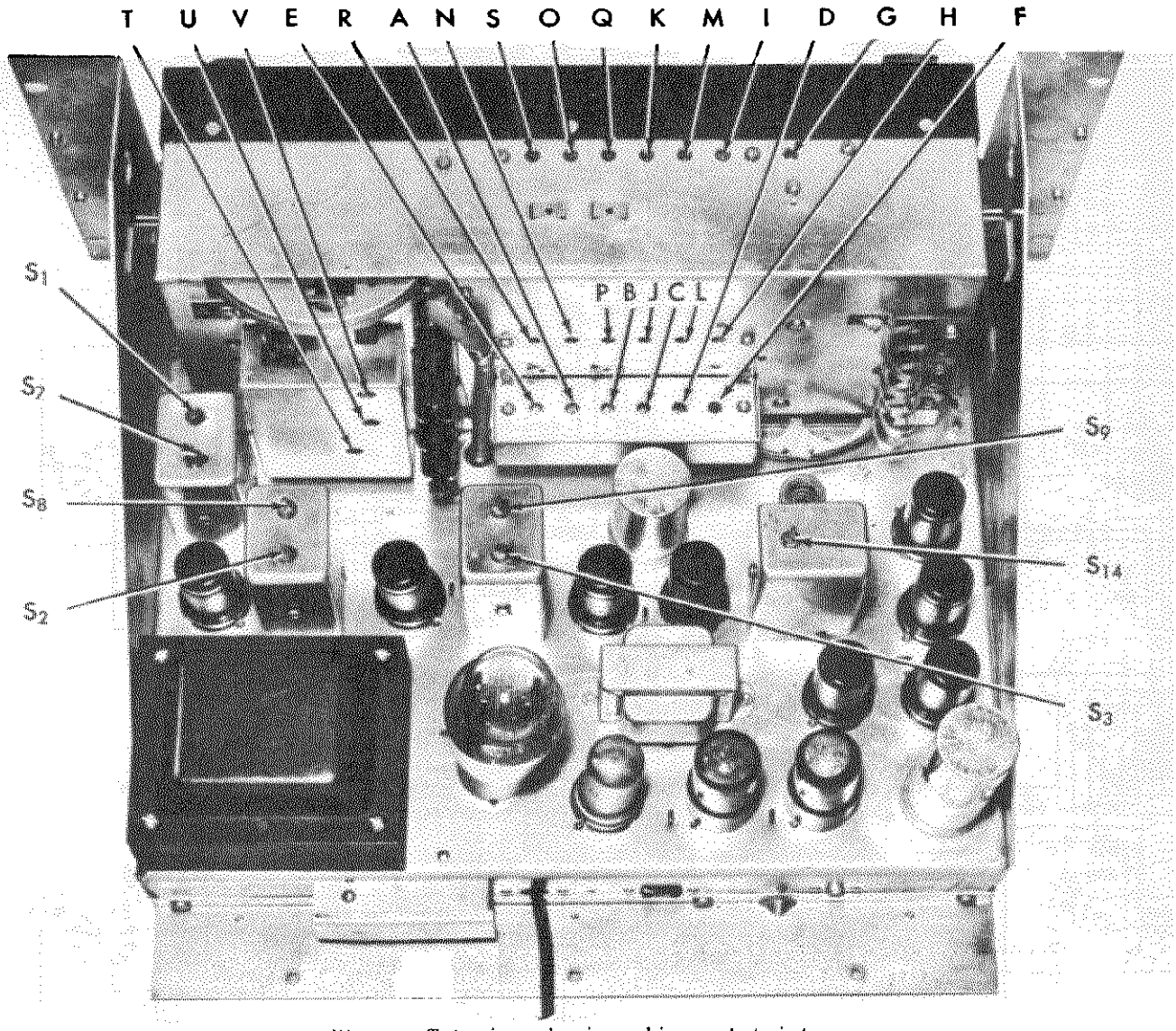

Fig. 4. Top view showing alignment points.

INSERTING CALL LETTERS INTO TRANSLUCENT INSERT ASSEMBLY:

1. Slide out metal insert from translucent insert assembly. (See Fig. 2).
2. Insert call letter tab.
3. Replace metal insert.
4. Replace translucent insert assembly into push-button.

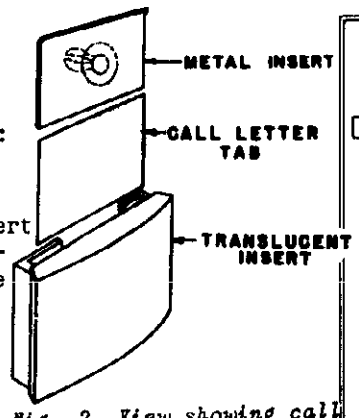

Fig. 2. View showing call letter installation.

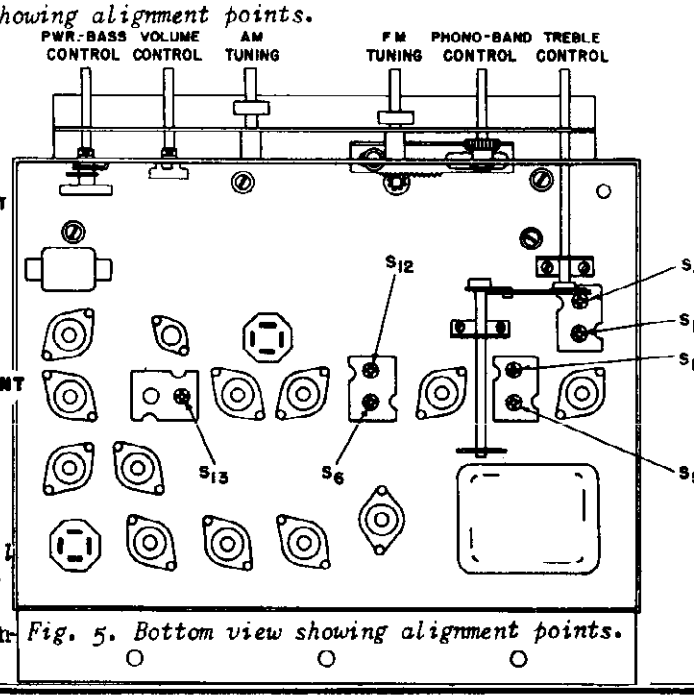

Fig. 5. Bottom view showing alignment points.

© John F. Rider

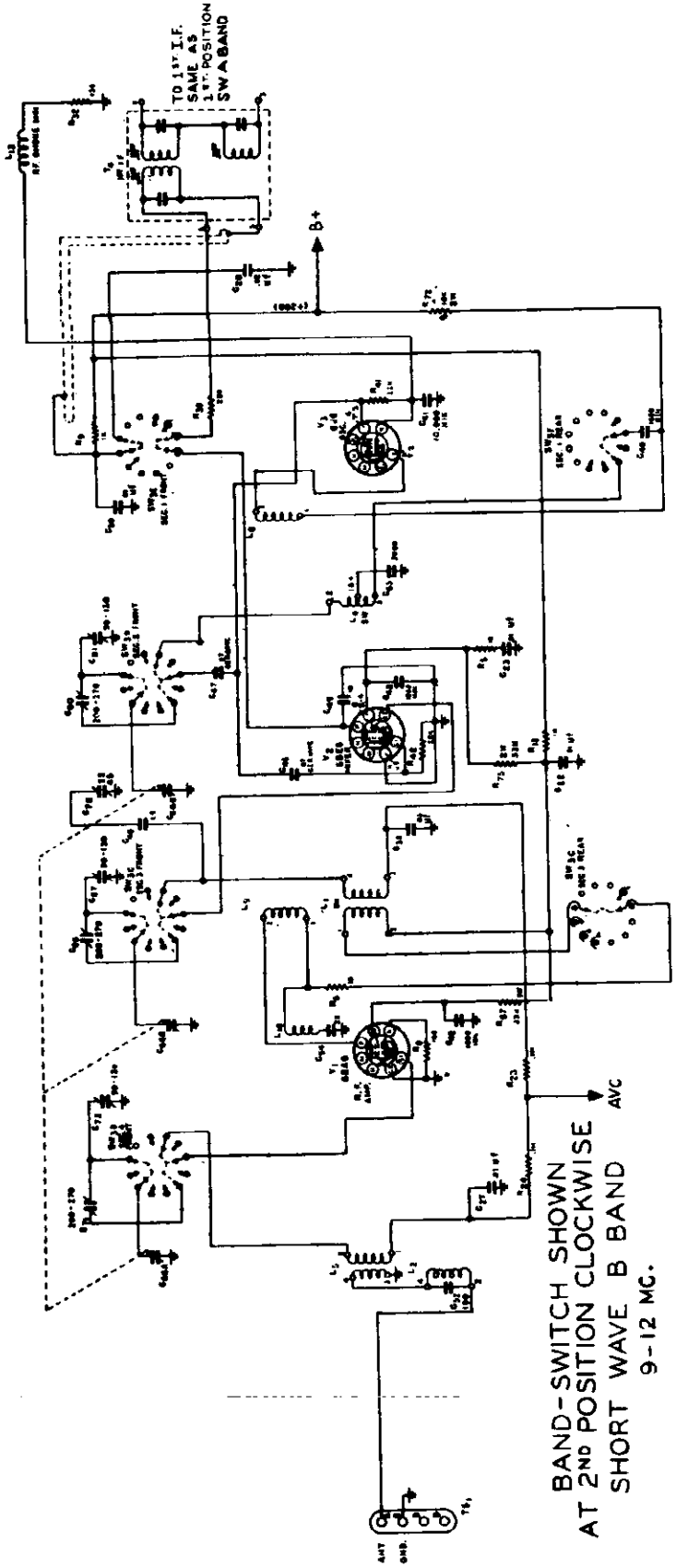
TO 1ST I.F. SAME AS 1ST POSITION SW A BAND
B+
AVC
BAND-SWITCH SHOWN AT 2ND POSITION CLOCKWISE
SHORT WAVE B BAND
9-12 MC.

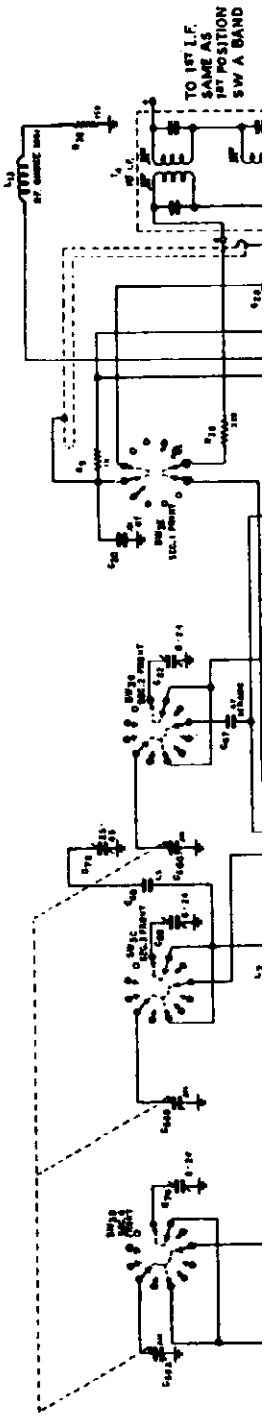
TO 1ST I.F. SAME AS 1ST POSITION SW A BAND

©John F. Rider

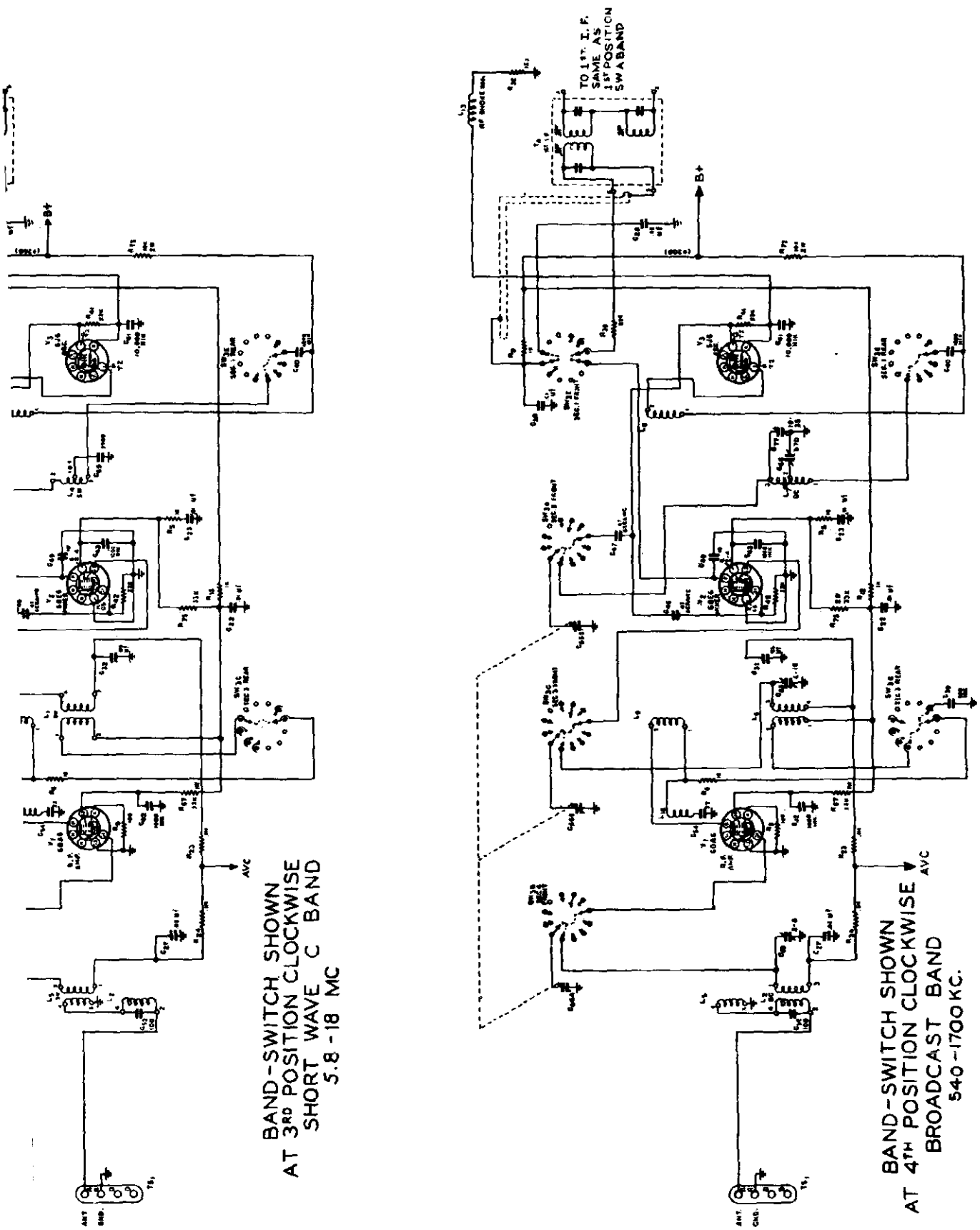
TO 1ST I.F. SAME AS 1ST POSITION SW A BAND
B+
AVC
BAND-SWITCH SHOWN
AT 3RD POSITION CLOCKWISE
SHORT WAVE C BAND
5.8 - 18 MC
BAND-SWITCH SHOWN
AT 4TH POSITION CLOCKWISE
BROADCAST BAND
540 - 1700 KC.

MODELS 1-1500,
1-1501, 1-1502

CONCORD RADIO CORP.

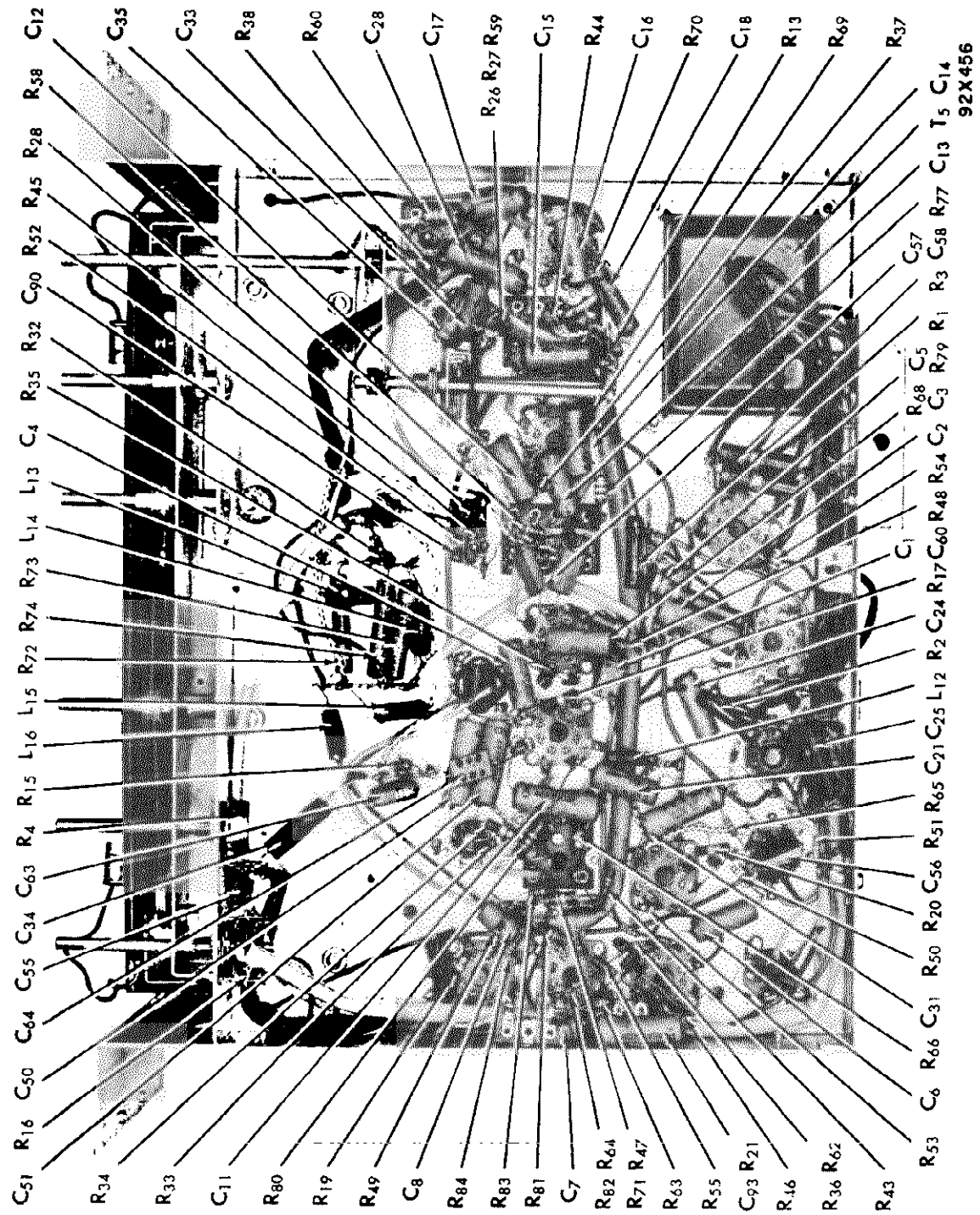

Fig. 6. Bottom view of receiver showing component location.

©John F. Rider

CONCORD RADIO CORP.

MODELS 1-1500, 1-1501, 1-1502

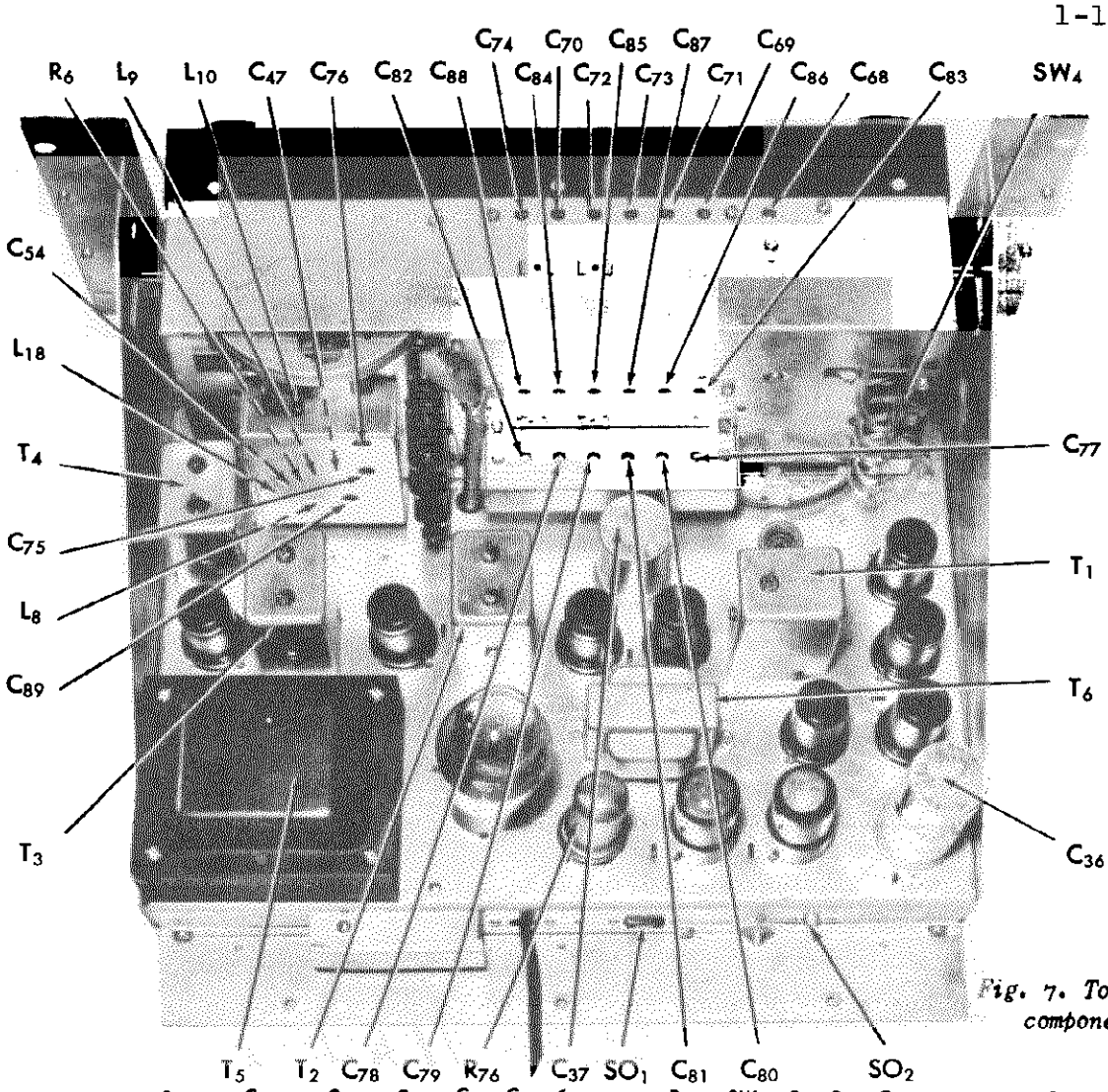

Fig. 7. Top view showing component location.

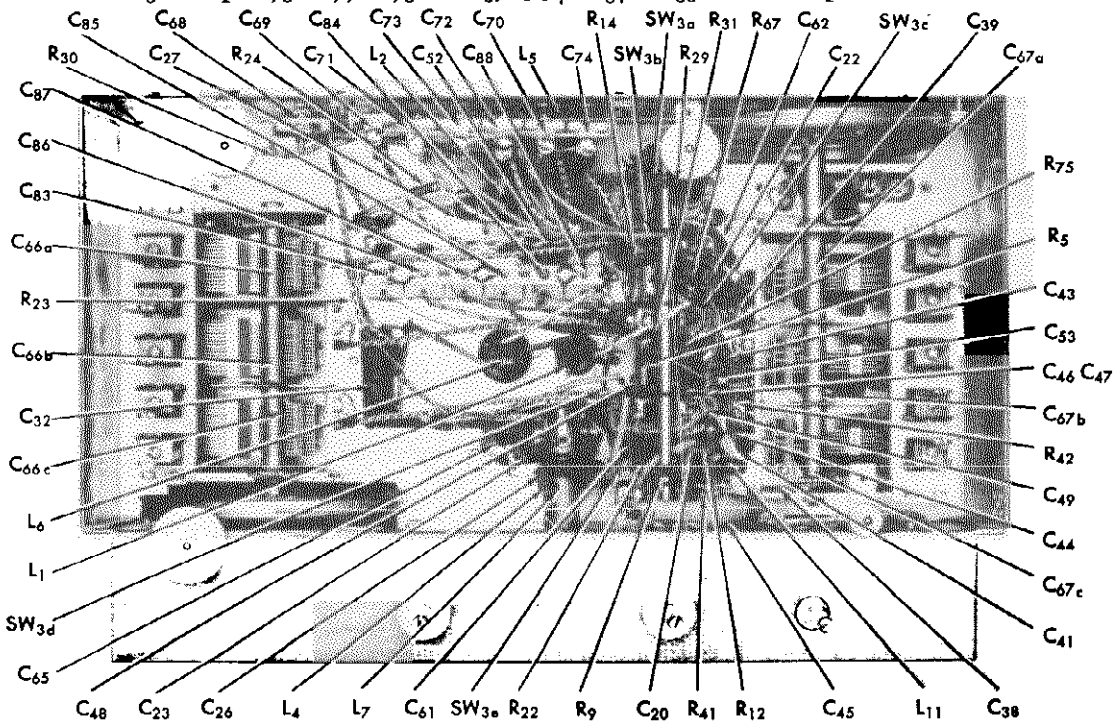

Fig. 8. Front view of R.F. chassis showing component location.

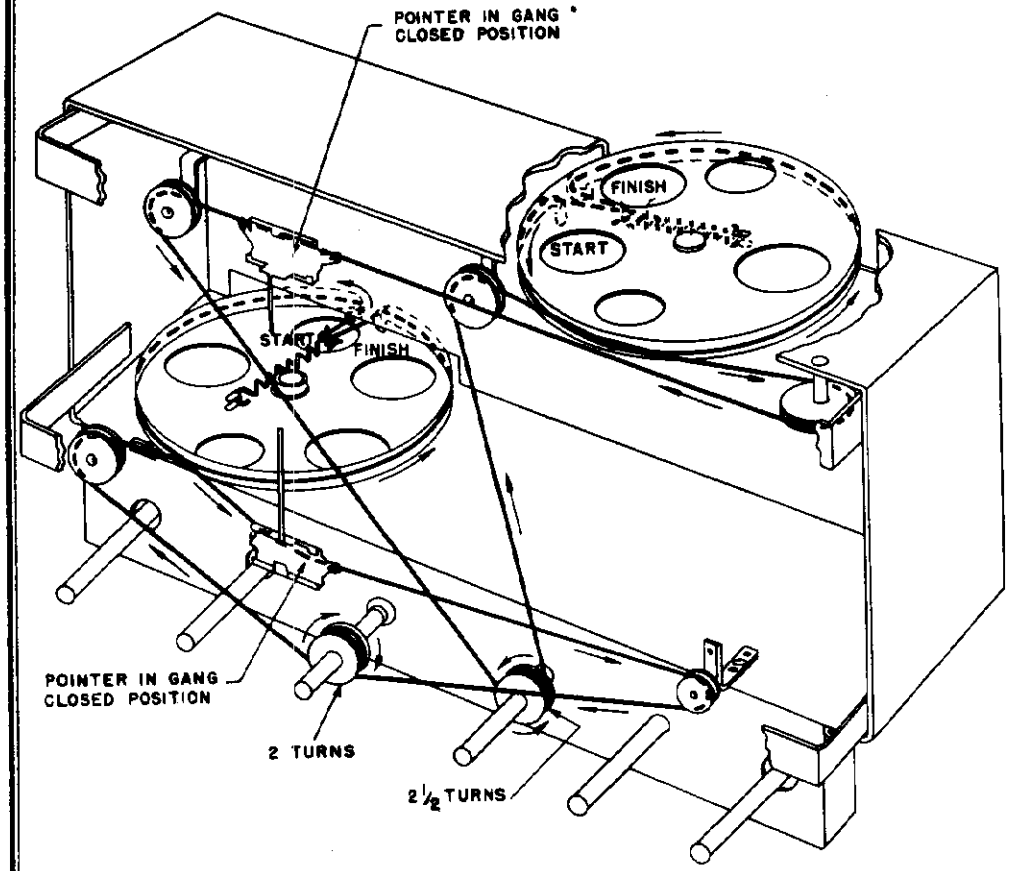

Fig. 9. Dial cable stringing procedure.

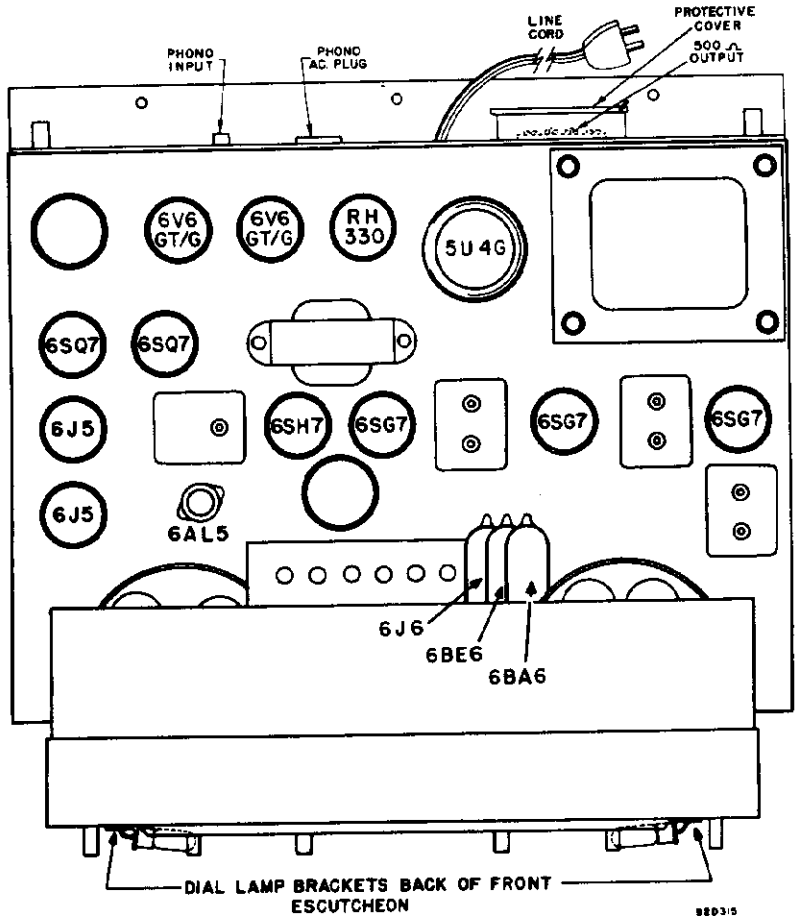

Fig. 10. Top view, location of tubes and dial lamps.

CONCORD RADIO CORP.

REPLACING DIAL LAMP:

Refer to Fig. 10 for location of the two pilot lamps. To gain access to the lamps remove the four front panel screws holding the panel to the cabinet and three chassis screws located under the cabinet. Pull the chassis clear of the cabinet. Unfasten and remove the knobs. Remove the four panel screws holding the panel to the chassis to release the panel exposing the pilot lamps for service. Replace pilot lamps with 6-8V. 150 ma. Mazda #47 equivalent.

ALIGNMENT PROCEDURE:

It will be necessary to remove the receiver chassis from the cabinet and remove the chassis bottom plate to gain access to some of the I. F. transformer iron core adjustments. See Fig. 5.

The receiver is equipped with AUTOMATIC FREQUENCY CONTROL on the "FM" band to compensate for mechanical variations in the push-button mechanism. Correction factor is approximately 5 times: "Take hold" characteristics are: "Before" 100 kc and "Release" before 450 kc at a 0.2 volt input signal.

The standard RMA dummy mentioned in the alignment chart consists of a 200 mmf condenser in series with a 20 uh r-f choke which is shunted by a 400 mmf condenser in series with a 400 ohm carbon resistor.

ALIGNMENT PROCEDURE

Step	Dummy Antenna	Signal Generator Coupling	Signal Generator Frequency	Band Switch Pos.	Radio Dial Setting	Adjust	Remarks
1	0.01 mfd cap.	To stator plates of center section of AM tuning cap.	455 kc	"BC"	1000 kc	S3, S8, S2, S5, S1 & S4	Adjust for max. output. TREBLE tone control set at No. 1.
2	0.01 mfd cap.	To stator plates of center section of FM tuning cap.	10.7 mc (No modulation)	"FM"	Mid-scale	S9, S12, 13 S6, S11, S7 & S10	Adjust for max. AVC voltage as measured between pin #7 of 6AL5 and ground with a 20,000-ohm per volt meter.
3	0.01 mfd cap.	To stator plates of center section of FM tuning cap.	10.7 mc (No modulation)	"FM"	Mid-scale	S14	Adjust for zero voltage as measured between junction of L16 and C34 with a 20,000-ohm per volt meter.
4	Std. RMA dummy.	To terminals "A" and "G" on ant. term. strip	1500 kc	"BC"	1500 kc	F*, H and I	Adjust for max. output
			600 kc	"BC"	600 kc	G*	
5	Std. RMA dummy	To terminals "A" and "G" on ant. term. strip	16 mc	"C"	16 mc	E*, R and S	Adjust for max. output.
6	Std. RMA dummy	To terminals "A" and "G" on ant. term. strip.	18 mc	"A"	18 mc	A*, O and N	Adjust for max. output
			15 mc	"A"	15 mc	B*, P, and Q	
7	Std. RMA dummy	To terminals "A" and "G" on ant. term. strip.	12 mc	"B"	12 mc	C*, J and K	Adjust for max. output.
			9 mc	"B"	9 mc	D*, L	
8	Two 150 ohm carbon resistors	To terminals "D" and "D" on ant. term. strip; one 150 ohm resistor in each lead.	108 mc	"FM"	108 mc	T*, U and V	Adjust for max. output.

* NOTE - Calibration adjustments.

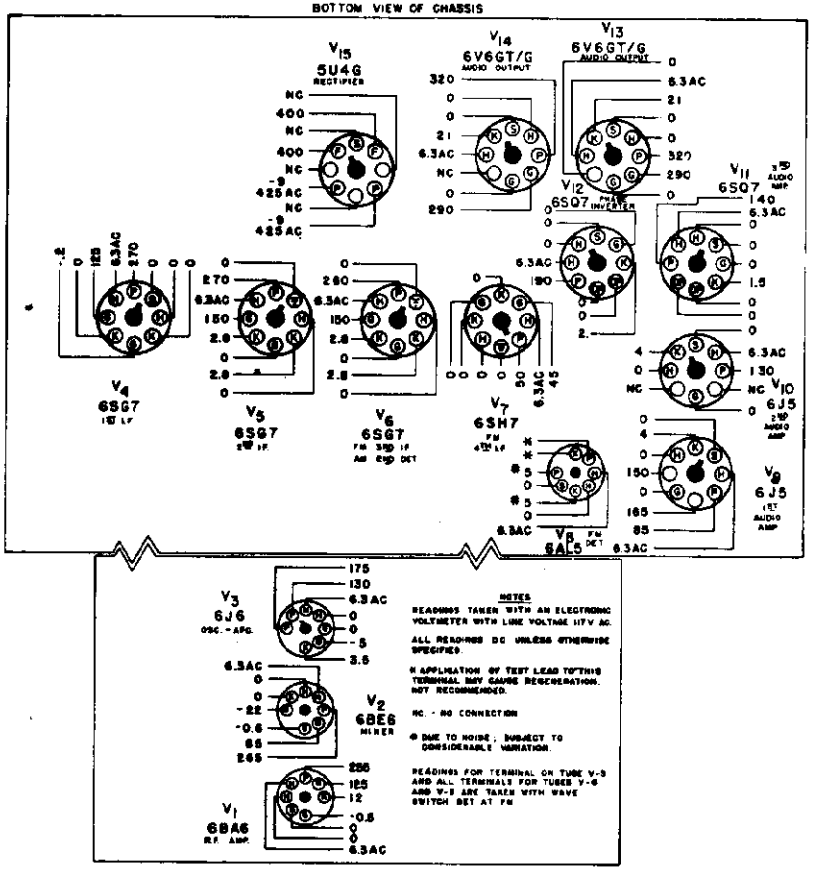

Fig. 12. Tube voltage chart.

©John F. Rider

MODELS 1-1500, 1-1501, 1-1502

CONCORD RADIO CORP.

SERVICE PARTS LIST

REF. NO.	DESCRIPTION
	CAPACITORS
C-1,4,5,6,8, 12,13,14,15,16, 17,18,20,21,22, 23,24,35,90	.01 mfd 600 V., tubular paper
C-2,3,26,27,28	.02 mfd 600 V., tubular paper
C-7,34	.003 mfd 600 V., tubular paper
C-11,31,32,50, 51,93	.05 mfd 600 V., tubular paper
C-25	.01 mfd 600 V., molded paper
C-33	.005 mfd 600 V., tubular paper
C-36	60-20 mfd 450 V., 20 mfd. 30 V., electrolytic
C-37	40-10 mfd 450 V., 20 mfd. 30 V., electrolytic
C-38,39	500 mmf 500 V., ceramic
C-40,42,43,44	1000 mmf 500 V., ceramic
C-41	10,000 mmf. 150 V., ceramic
C-45	10 mmf 500 V., ceramic
C-46,47	47 mmf 500 V., ceramic
C-48	1.5 mmf., 500 V., bakelite
C-49	10 mmf 500 V., mica
C-52,64	100 mmf 500 V., mica
C-54	22 mmf 500 V., mica.
C-55	22 mmf 500 V., mica.
C-56,57,58	220 mmf 500 V., mica.
C-60,61,62	47 mmf 500 V., mica
C-63	.001 mfd 500 V., mica.
C-65	.0039 mfd 500 V., mica.
C-66	Tuning condenser, "AM"
C-67	Tuning condenser, "FM"
C-68	570 mmf. trimmer.
C-69,70,71, 72,73,74	Trimmer assembly, ant. stage.
C-75	Trimmer, FM, mixer stage.
C-76	Trimmer, FM, ant. stage.
C-77,78,79,80,81, 82	Trimmer assembly, osc. stage.
C-83,84,85,86,87, 88	Trimmer assembly, mixer stage.
C-89	Trimmer, FM, osc. stage
C-92	39 mmf. 500 V., ceramic
	RESISTORS
R-1,2	330 ohms 5 watts, WW.
R-3	47 ohms 4 watts, Carbon.
R-4	2 meg-ohms, volume control
R-5,	10 ohms ½ watt, carbon
R-6,8	100 ohms ½ watt, carbon
R-9,10,12,13,14, 77	1000 ohms ½ watt, carbon
R-15	10,000 ohms ½ watt, carbon
R-16	15,000 ohms ½ watt. carbon
R-17,19,20,21,22, 23,24	100,000 ohms ½ watt, carbon
R-26,27,28,29, 30,31,83	1 meg-ohm ½ watt, carbon
R-32	150 ohms ½ watt, carbon
R-33,34	100,000 ohms ½ watt, carbon
R-35,36,37,38,39	220 ohms ½ watt. carbon
R-41,42	22,000 ohms ½ watt, carbon
R-43,44,52,64	220,000 ohms ½ watt,carbon
R-45,50,51	330,000 ohms ½ watt, carbon
R-46	100 ohms ½ watt. carbon
R-47,49	150,000 ohms ½ watt, carbon
R-48	3300 ohms ½ watt, carbon
R-53	3900 ohms ½ watt, carbon
R-54	12,000 ohms ½ watt, carbon
R-55	470 ohms ½ watt, carbon
R-58,59	47,000 ohms ½ watt, carbon.
R-60,61	68,000 ohms ½ watt, carbon.
R-62,65	470,000 ohms ½ watt, carbon
R-63	390,000 ohms ½ watt, carbon
R-66	100,000 ohms 1 watt, carbon
R-67	33,000 ohms 1 watt, carbon.
R-68,69,70	47,000 ohms 1 watt, carbon.
R-71	22,000 ohms 1 watt, carbon
R-72,73,74	10,000 ohms 2 watt, carbon
R-75	33,000 ohms 2 watts, carbon
R-76	330 ohms, plug-in ballast
R-79	470 ohms 2 watts, carbon

REF. NO.	DESCRIPTION
	RESISTORS (Continued)
R-80	6.8 ohms 1 watt, carbon
R-81	68,000 ohms 1 watt, carbon
R-82	4700 ohms ½ watt, carbon
R-84	33,000 ohms ½ watt, carbon
	TRANSFORMERS AND COILS
T-1	Transformer, FM detector
T-2,3	Transformer, interstage I.F.
T-4	Transformer, 1st. I.F.
T-5	Transformer, power
T-6	Transformer, audio output
L-1	Mixer coil for SW band
L-2	Antenna coil for BC band
L-4	Oscillator coil for SW band
L-5	Antenna coil for SW band
L-6	Mixer coil for BC band
L-7	Oscillator coil for BC band
L-8	Oscillator coil for FM band
L-9	Mixer coil for FM band
L-10	Antenna coil for FM band
L-11	Plate choke, osc. stage
L-12	Filament choke
L-13,14,15,16	R.F. choke
L-18	R.F. choke, ant. stage plate
	SWITCHES
SW-1	Power & Bass tone switch ass'y
SW-2	Treble switch ass'y.
SW-3	Band switch
SW-4	Muting switch
	PLUGS AND SOCKETS
PL-1	Line cord and plug
SO-1	Receptacle, phono motor
SO-2	Jack, phono pick-up
SO-3	Receptacle, ballast
	Socket, octal (tube)
	Socket, miniature (tube)
	Pilot light socket & bracket, L.H.
	Pilot light socket & bracket, R.H.
	TUBES, RECTIFIERS AND LAMPS
V-1	Type 6BA6, Antenna
V-2	Type 6BE6, Mixer
V-3	Type 6J6, Oscillator and A.F.C.
V-4,5,6	Type 6SG7, I.F. amplifier
V-7	Type 6SH7, I.F. amplifier
V-8	Type 6AL5, F.M. detector
V-9,10	Type 6J5, A.F. amplifier
V-11,12	Type 6SQ7, Phase inverter
V-13,14	Type 6V6GT/G, A.F. power amplifier
V-15	Type 5U4G, Rectifier
LM-1,2	Lamp, 6-8 V., 150 MA. G.E. #47
	MISCELLANEOUS COMPONENTS
	Shield base, tube (miniature tube)
	Shield, tube (miniature tube)
	Spring, tube retainer
	Carriage, pointer
	Pointer, FM
	Pointer, AM
	Spring, pointer
	Push-button (black)
	Insert, push-button, lucite
	Insert,push-button, metal
	Call letters
	Spring, dial
	Cord, dial
	Escutcheon
	Dial glass, upper
	Dial glass, lower
	Knob
TS-1	Terminal strip, antenna
TS-2	Terminal strip, speaker
	Shield, speaker terminal

© John F. Rider

MODEL 9-101
Revised

CROSLEY DIV.
AVCO MFG. CORP.

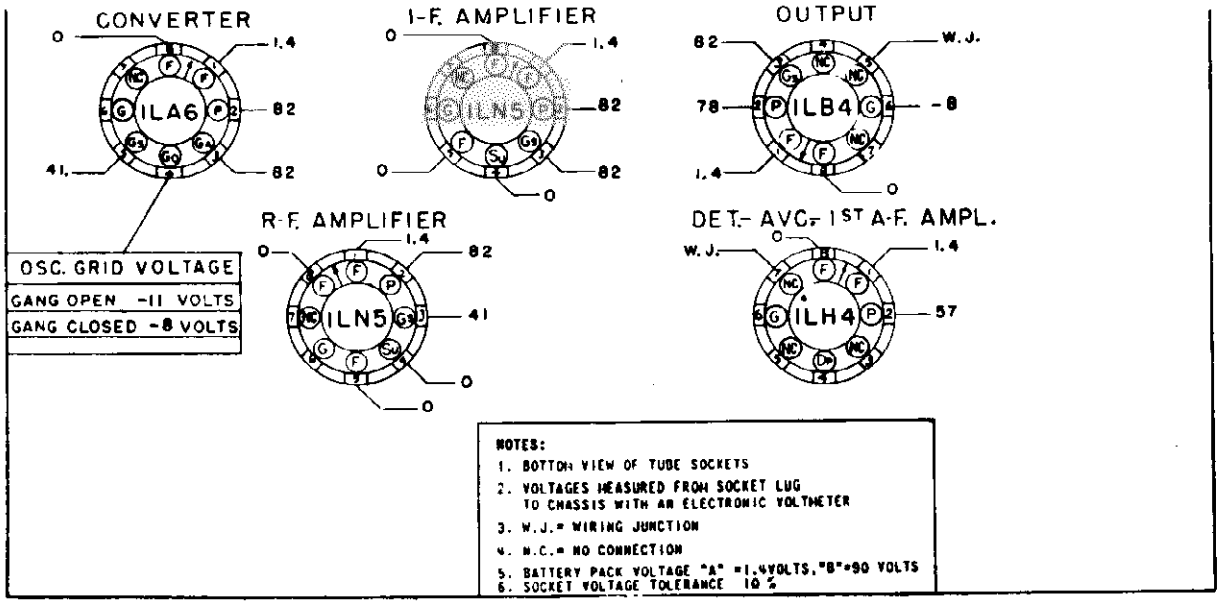

ALIGNMENT PROCEDURE

1. Turn the tuning condenser to the completely closed position against the stop and set the dial pointer to the reference line at the end of the dial scale.
2. Connect the output meter across the speaker voice coil.
3. The r.f. signal input from the signal generator should be fed to the receiver as indicated in the alignment chart. Connect the low side (ground) of the signal generator to the chassis.
4. Turn the tone control to its treble position.
5. Turn the volume control on full and adjust the signal generator output to produce approximately mid-scale deflection of the output meter, but maintain signal generator output as low as possible to prevent AVC action in the receiver.

ALIGNMENT CHART

Alignment adjustment locations are shown on page 1, Chassis, Rear View.

Alignment Sequence	Signal Generator Output			Position of Dial Pointer or Var. Cond.	Adjust for Maximum Output	Remarks
	Frequency in kc.	In Series With	To			
1	455	.01 mfd.	R.F. Grid	Closed	A & B	
2	600	.01 mfd.	R.F. Grid	600 kc.	C	Preset "G" to ¼ turn from the closed position and "E" to ½ turn from its closed position.
3	1620	.01 mfd.	Ant.	Open	E	
4	1400	200 mmf.	Ant.	Tune to Signal	D & F	
5	600	200 mmf.	Ant.	Tune to Signal	C	Rock Gang.
6	Repeat steps 3, 4, and 5 until circuits align and dial tracks.					
7	Conclude alignment by repeating step 4.					

CROSLEY DIV.
AVCO MFG. CORP.

MODEL 9-10
Revised

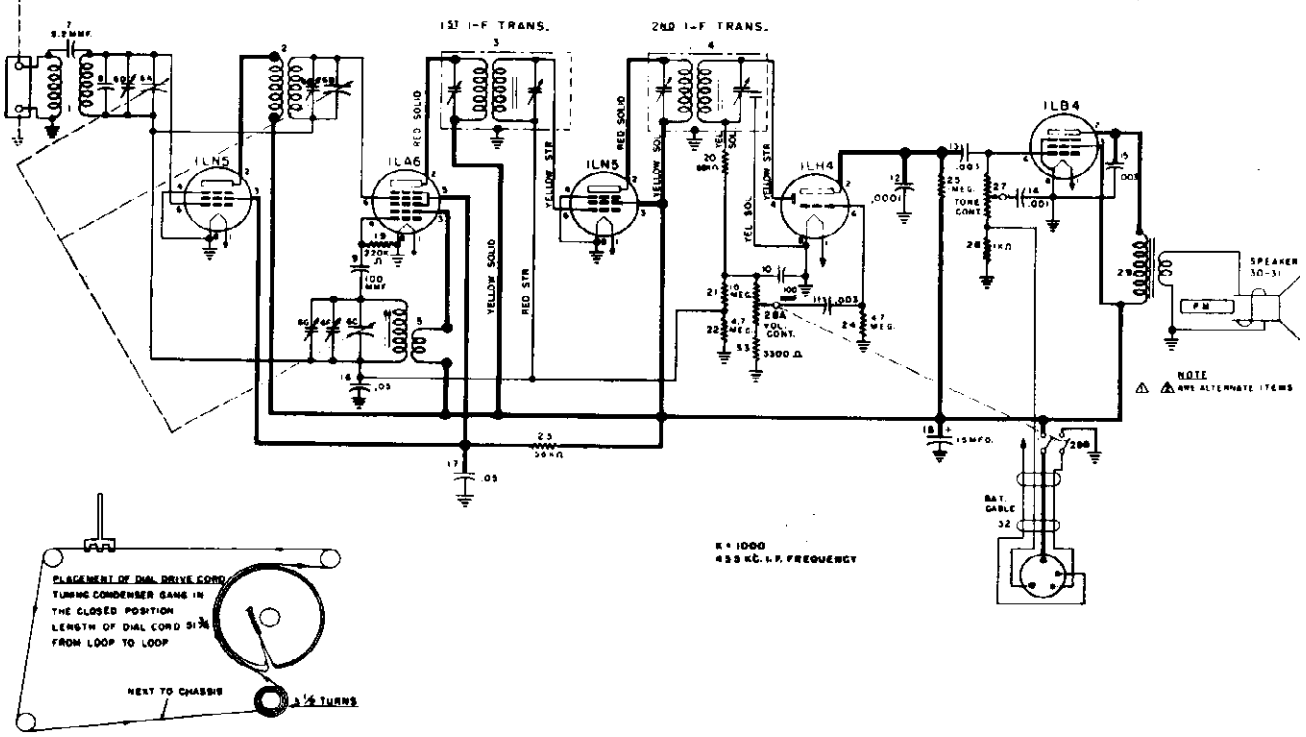

REPLACEMENT PARTS LIST—MODEL 9-101

Figures in first column correspond to figures in Schematic Diagram.

Item No.	Part No.	Description
1	AW-142997	Coil, Antenna
2	AW-142993	Coil, R.F.
3	AC-143013	Transformer, 1st I.F.
4	AC-143034	Transformer, 2nd I.F.
5	AW-145105	Coil, Oscillator
6A	AC-137073-20	Condenser, Variable } Three section
6B		Condenser, Variable } and Pulley
6C		Condenser, Variable } Assembly
6D	Part of Item 6A	Condenser, Trimmer
6E	Part of Item 6B	Condenser, Trimmer
6F	Part of Item 6C	Condenser, Trimmer
6G	Part of Item 6C	Condenser, Trimmer
7	W-137398-4	Condenser, 2.2 mmf., 500 v.
8	C-137727-47	Condenser, 10 mmf., 500 v., ceramic
9	C-137727-1	Condenser, 100 mmf., 300 v., ceramic
10	C-137727-1	Condenser, 100 mmf., 300 v., ceramic
11	39001-76	Condenser, .003 mfd., 600 v., paper
12	39001-1	Condenser, .0001 mfd., 600 v., paper
13	39001-76	Condenser, .003 mfd., 600 v., paper
14	39001-7	Condenser, .001 mfd., 600 v., paper
15	39001-76	Condenser, .003 mfd., 600 v., paper
16	39001-17	Condenser, .05 mfd., 600 v., paper
17	39001-17	Condenser, .05 mfd., 600 v., paper
18	39358-13	Condenser, 16 mfd., 150 v., Elect.
19	39373-80	Resistor, 220,000 ohm, ½ w.
20	39373-71	Resistor, 68,000 ohm, ½ w.
21	39373-107	Resistor, 10 megohm, ½ w.
22	39373-102	Resistor, 4.7 megohm, ½ w.
23	39373-69	Resistor, 56,000 ohm, ½ w.
24	39373-102	Resistor, 4.7 megohm, ½ w.
25	39373-92	Resistor, 1 megohm, ½ w.
26	39373-33	Resistor, 1000 ohm, ½ w.
27	39368-11	Control, Tone (2 megohm)
28A	39368-14	Control, Volume (1 megohm)
28B	39369-2	Switch, Power
29	B-143018	Transformer, Output
31	143688	Speaker
32	B-130493	Cable and Plug Assy., Battery
33	39373-44	Resistor, 3300 ohm, ½ w.
	R-138573-5	Cabinet
	C-143245	Dial Glass
	W-134055	Grommet, Var. Cond. Mtg.
	W-143041	Grommet, Battery Cable
	C-39012-81	Iron Core, Osc. Coil
	B-138574-4	Knob
	W-46065	Mounting (Rubber), Speaker
	W-132366-2	Nut, Locking (Osc. Iron Core)
	B-143115	Pointer, Dial
	W-137939-1	Pulley, Drive Cord Idler
	W-51071	Ring, Retaining (Drive Shaft)
	B-135075-5	Shaft, Dial Drive
	39441	Socket, Tube
	W-51752	Spring, Dial Drive Cord
	B-138649	Strip, Dial Glass
	W-138568	Strip, Dial Pointer
	AC-138443-3	Support and Pulley Assy., Dial
	W-134916	Washer, Spring (Drive Shaft)

MODELS 9-105, 9-106W

CROSLEY DIV.
AVCO MFG. CORP.

SCHEMATIC DIAGRAM (First Production)

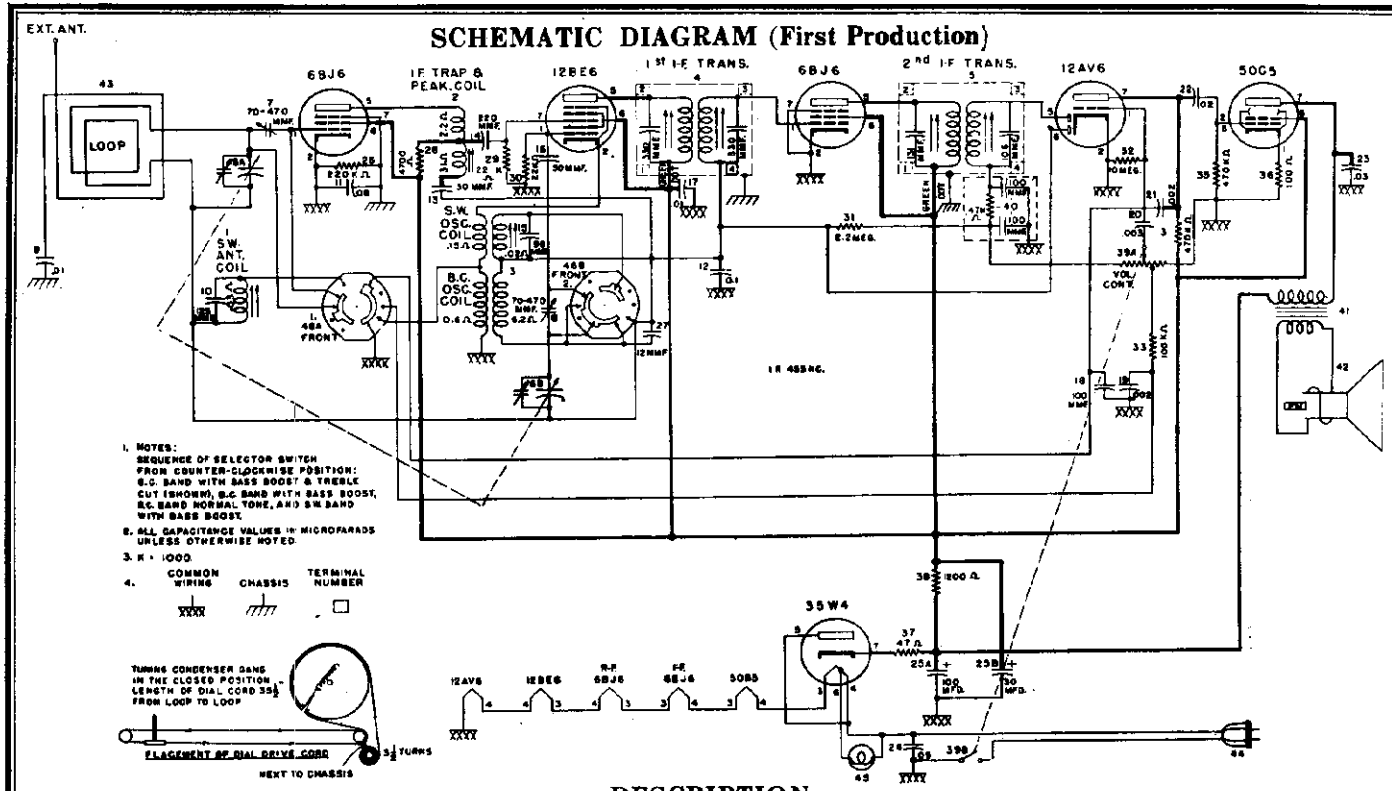

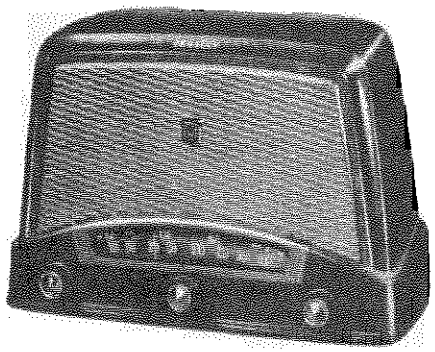

9-105

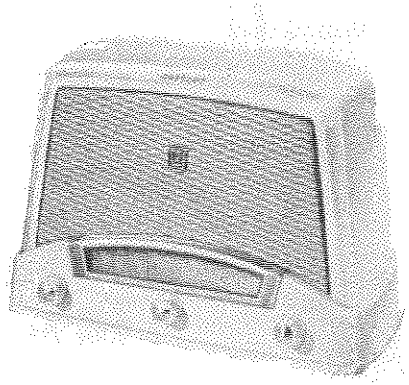

9-106W

DESCRIPTION

TYPE: Six-tube, two-band, superheterodyne.

FREQUENCY RANGE: Standard Broadcast Band, 540 to 1600 kc. (Selector Switch, Counter-clockwise or Left.)

Short-wave Band: 9.4 to 11.9 mc. (Selector Switch, Clockwise or Right.)

INTERMEDIATE FREQUENCY: 455 kc.

POWER SUPPLY: a.c.—d.c.

VOLTAGE RATING: 105-125 volts.

POWER CONSUMPTION: 30 watts nominal.

POWER OUTPUT: 1.5 watt maximum.

TUBE COMPLEMENT:

Type	Function
6BJ6	R.F. Amplifier
12BE6	Mixer
6BJ6	I.F. Amplifier
12AV6	Detector, AVC, 1st A.F. Amplifier
50C5	A.F. Power Output
35W4	Rectifier

DIAL BULB: Type 47, 6.3 volts, .15 amp.

CROSLEY DIV.
AVCO MFG. CORP.

MODELS 9-105
9-106W

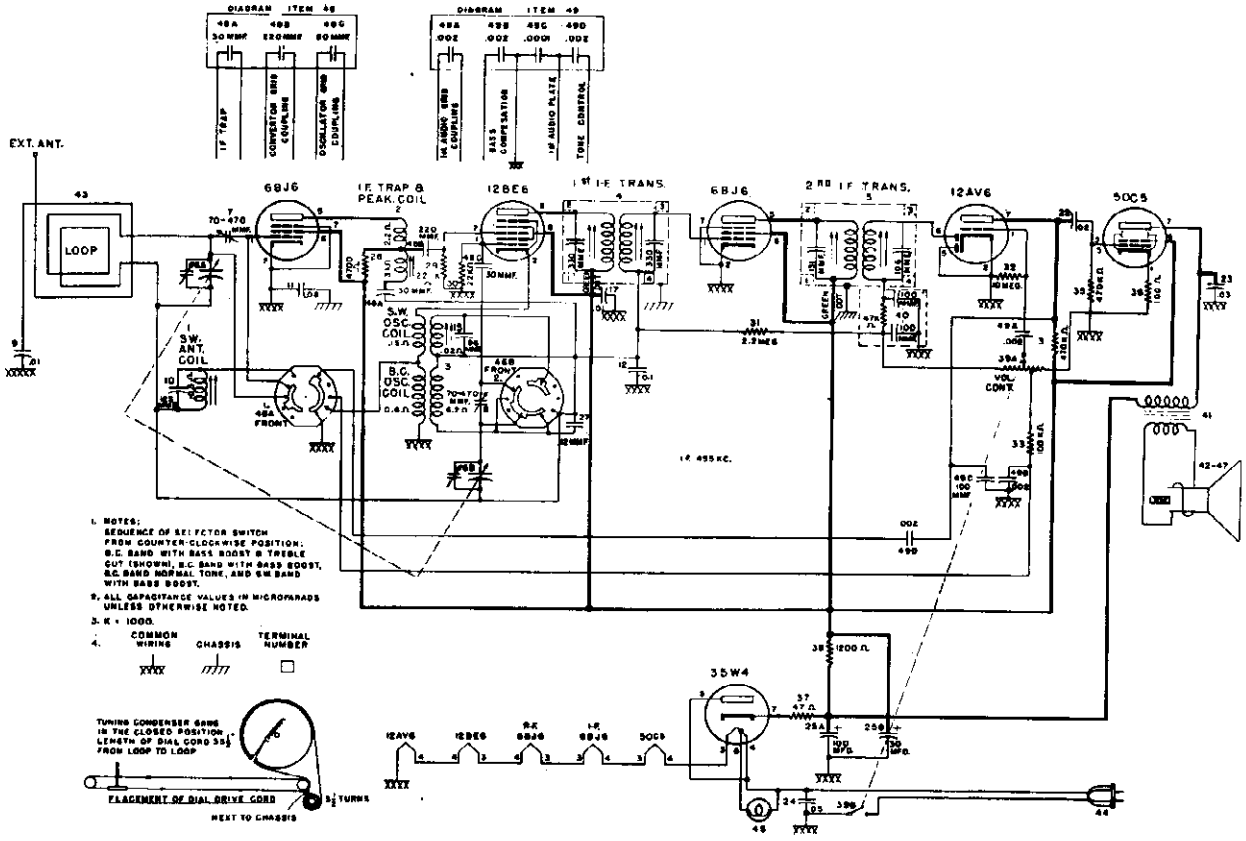

SCHEMATIC DIAGRAM (Second Production)

CHASSIS, TOP VIEW

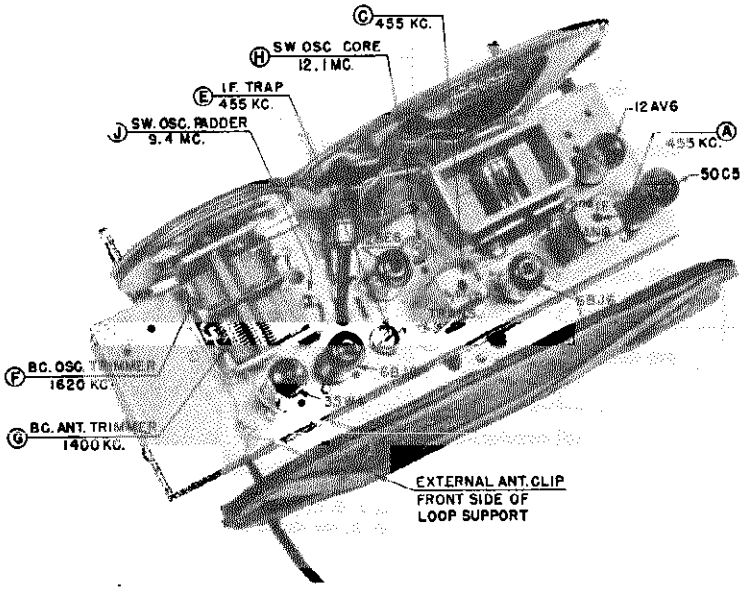

MODELS 9-105, 9-106W

CROSLEY DIV.
AVCO MFG. CORP.

When using direct current it may be necessary to reverse the position of the power plug in the electric outlet for correct polarity.

Reversing the position of the power plug when alternating current is used may reduce power hum.

Under no circumstances should a ground be connected to this receiver.

ALIGNMENT PROCEDURE

1. Turn the tuning condenser to the completely closed position against the stop and set the dial pointer to the reference line at the end of the dial scale.
2. Connect the output meter across the speaker voice coil.
3. The r.f. signal input from the signal generator should be connected to the external antenna lead. Connect the signal generator ground through a 0.1 mfd. condenser to B-- (pin 2 on 6BJ6 tube socket, R.F. Amplifier).
4. Turn the volume control on full and turn the tone switch to maximum treble position; then adjust the signal generator output to produce approximately mid-scale deflection of the output meter, but maintain signal generator output as low as possible to prevent AVC action in the receiver.

ALIGNMENT CHART

Alignment Adjustment Locations are shown on page 1, Chassis, Top View and on page 3, Socket Voltage Chart.

Alignment Sequence	Signal Generator Output			Position of		Adjust for Maximum Output
	Frequency	In Series with	To	Band Switch	Tuning Dial or Tuning Cond.	
*1	455 kc	200 mmf.	Ant.	BC	Open	A & B
2	455 kc	200 mmf.	Ant.	BC	Open	C & D
†3	455 kc	200 mmf.	Ant.	BC	Open	E
4	1620 kc	200 mmf.	Ant.	BC	Open 1620	F
5	1400 kc	200 mmf.	Ant.	BC	Tune in Signal	G
6	12.1 mc	400 ohm	Ant.	SW	Open	H
7	9.4 mc	400 ohm	Ant.	SW	Closed	J
	Repeat adjustments 6 and 7 until circuits align.					
△8	11.8 mc	400 ohm	Ant.	SW	Tune in Signal	K
9	9.6 mc	400 ohm	Ant.	SW	Tune in Signal	L
	Repeat adjustments 6 and 7 until circuits align.					

NOTES:

*I-F Trap Core "E" must be turned counter-clockwise, to stop, before adjusting A, B, C, and D.

†Adjust for minimum signal.—Before making alignment adjustments E through K, the chassis bottom should be in place, and the antenna loop should be moved as far from the chassis as the loop bracket will permit.

△Adjustments K and L must be made while rocking the tuning condenser.

CROSLEY DIV.
AVCO MFG. CORP.

MODELS 9-105
9-106W

SOCKET VOLTAGE CHART

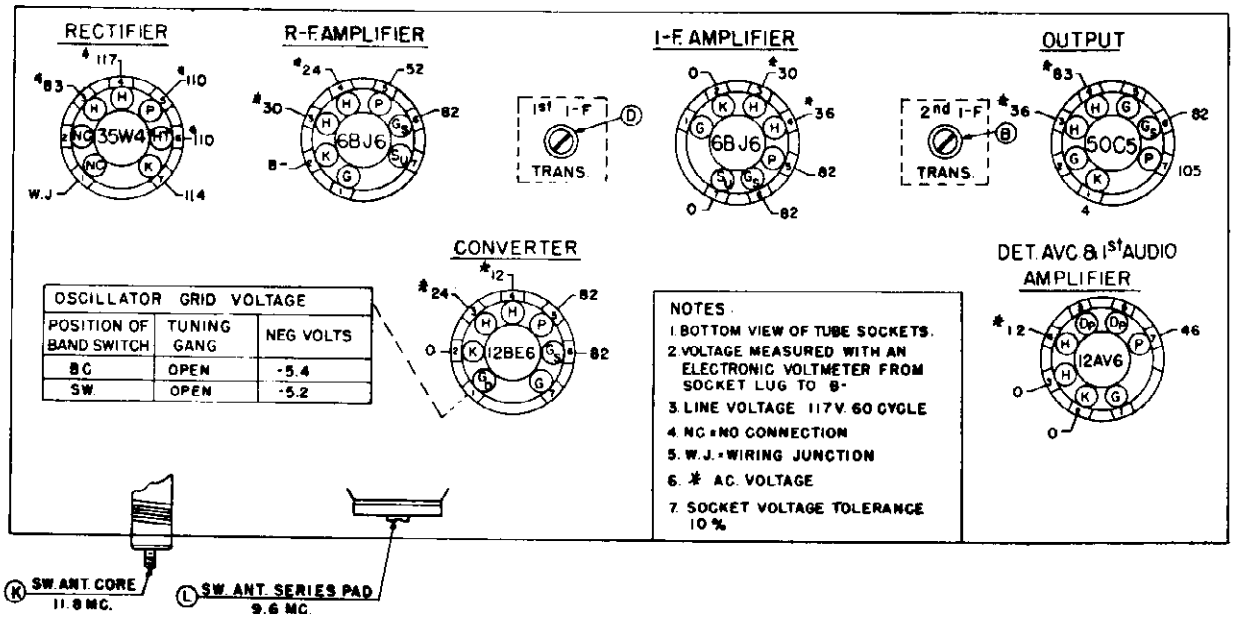

PARTS LIST—MODELS 9-105, 9-106W

Figures in first column correspond to figures in Schematic Diagram

Item No.	Part No.	Description
1	AW-144118	Coil (S. W. Antenna)
2	AW-144145	Coil (I. F. Trap & Peaking)
3	AW-144144	Coil (BC & SW Dual Osc.)
4	AC-139919-4	Trans. Assy. (1st I. F.)
5	AC-139919-3	Trans. Assy. (2nd I. F.)
6A	AC-137073-26	Capacitor, Variable & Pulley, Two
6B		(Part of 6A) Section
7	C-136327-39	Capacitor, Trimmer 70-470 mmf.
8	C-136327-39	Capacitor, Trimmer 70-470 mmf.
9	39001-13	Capacitor, .01 mfd., 600 v., paper
10	C-137727-77	Capacitor, 125 mmf., 500 v., ceramic
11	39001-19	Capacitor, .1 mfd., 600 v., paper
12	39001-19	Capacitor, .1 mfd., 600 v., paper
13	B-137498-12	Capacitor, 30 mmf., 500 v., mica
14	B-137498-38	Capacitor, 220 mmf., 500 v., mica
15	C-137727-83	Capacitor, 96 mmf., 500 v., ceramic
16	C-137727-21	Capacitor, 50 mmf., 500 v., ceramic
17	39001-13	Capacitor, .01 mfd., 600 v., paper
18	B-143686-3	Capacitor, 100 mmf., 500 v., ceramic
19	39001-74	Capacitor, .002 mfd., 600 v., paper
20	39001-76	Capacitor, .003 mfd., 600 v., paper
21	39001-74	Capacitor, .002 mfd., 600 v., paper
22	39001-80	Capacitor, .02 mfd., 600 v., paper
23	39001-17	Capacitor, .05 mfd., 600 v., paper
24	39001-17	Capacitor, .05 mfd., 600 v., paper
25A	B-143680	Capacitor, 100 mmf., 150 v., Two Sect.
25B		Capacitor, 30 mfd., 150 v., Elect.
27	C-137727-52	Capacitor, 12 mmf., 500 v., ceramic
28	39373-47	Resistor, 4700 ohm., ½ w.
29	39373-60	Resistor, 22,000 ohm., ½ w.
30	39373-60	Resistor, 22,000 ohm., ½ w.
31	39373-97	Resistor, 2.2 megohm, ½ w.
32	39373-107	Resistor, 10 megohm, ½ w.
33	39373-74	Resistor, 100,000 ohm, ½ w.
34	39373-87	Resistor, 470,000 ohm, ½ w.
35	39373-87	Resistor, 470,000 ohm, ½ w.
36	39373-14	Resistor, 100 ohm, ½ w.
37	39373-119	Resistor, 47 ohm, 1 w.
38	39373-144	Resistor, 1,200 ohm, 1 w.
39A	39368-18	Volume control (1 megohm, tap 300,000 ohm)
	39370-2	Shaft, Volume control
39B	39369-1	Switch, Power
40	B-142951-2	Capacitor-resistor
41	138131-1	Transformer (Output)
42	AD-143694	Speaker (4" x 6" P. M.)
43	AC-143698	Loop, Back & Bracket Assy.
44	C-132300-1	Cable & Plug Assy., Power
45	W-48858	Bulb (Dial), type 47, 6.3 v., .15 amp.
46A	B-144128	Switch, Band Change & Tone Control
46B		(Part of 46A)
*48A	B-144675-4	Capacitor, 30 mmf., 500 v., Three
*48B		Capacitor, 220 mmf., 500 v., Section
48C		Capacitor, 50 mmf., 500 v.
**49A	B-144675-5	Capacitor, .002 mfd., 500 v.
**49B		Capacitor, .002 mfd., 500 v., Four
**49C		Capacitor, 100 mmf., 500 v., Section
49D		Capacitor, .002 mfd., 500 v.
	R-143113	Cabinet (9-105)
	AW-143465	Cabinet (9-106W)
	C-143753	Cloth, Grille
	B-143844	Dial Background
	B-142922	Emblem
	B-143907	Escutcheon
	C-143176	Grille
	B-138576-8	Knob (9-105)
	B-138576-7	Knob (9-106W)
	B-143289	Pointer, Dial
	B-135075-2	Shaft, Drive
	W-46065	Shock Mount, Tuning Condenser
	D-136565	Socket, Dial Light
	39462-2	Socket, Miniature Tube
	W-93068	Speed Nut (for escutcheon)
	W-51752	Spring, Dial Drive Cord
	C-144179	Window, Dial

*Used in place of items 13, 14, & 16 on 2nd production receivers.
**Used in place of items 18, 19, 20, & 21 on 2nd production receivers.

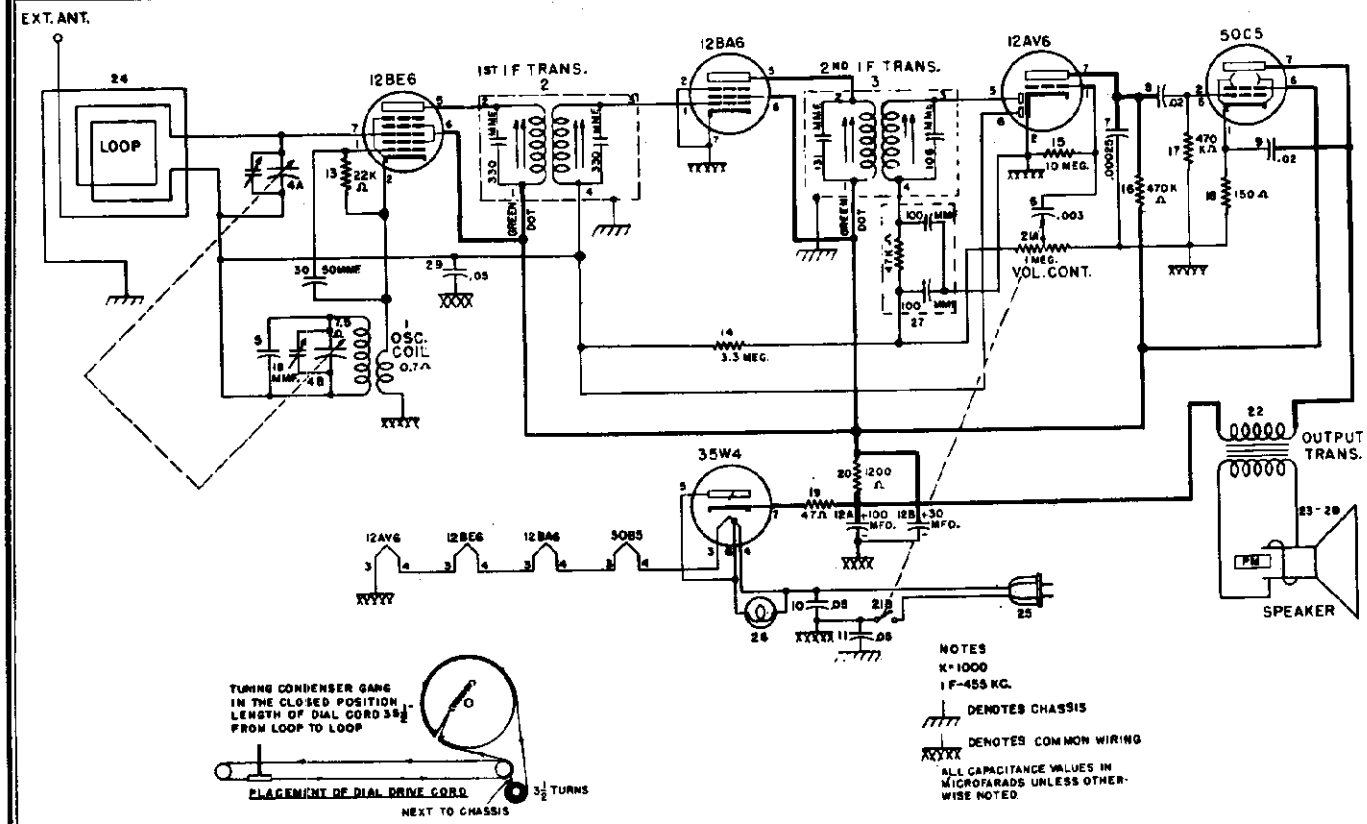

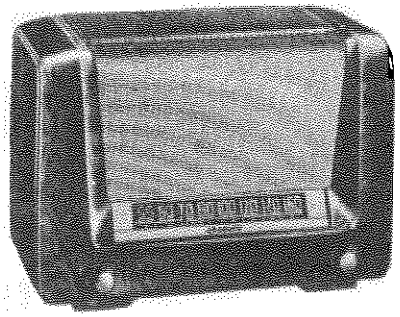

9-113

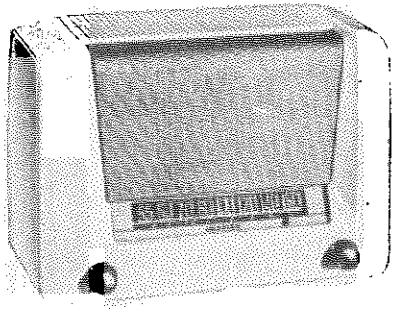

9-114W

SCHEMATIC DIAGRAM (First Production)

DESCRIPTION

TYPE: Five-tube, single band, Superheterodyne.

FREQUENCY RANGE: 540 to 1600 kc.

INTERMEDIATE FREQUENCY: 455 kc.

POWER SUPPLY: a.c.-d.c.

VOLTAGE RATING: 105-125 volts.

POWER CONSUMPTION: 35 watts maximum.

POWER OUTPUT: 1.3 watts maximum.

TUBE COMPLEMENT

Type	Function
12BE6	Converter
12BA6	I. F. Amplifier
12AV6	Detector, AVC, 1st A. F. Amplifier
50C5	A. F. Power Output
35W4	Rectifier

DIAL BULB: Type 47, 6.3 volts, .15 amp.

CROSLEY DIV.
AVCO MFG. CORP.

MODELS 9-113
9-114W

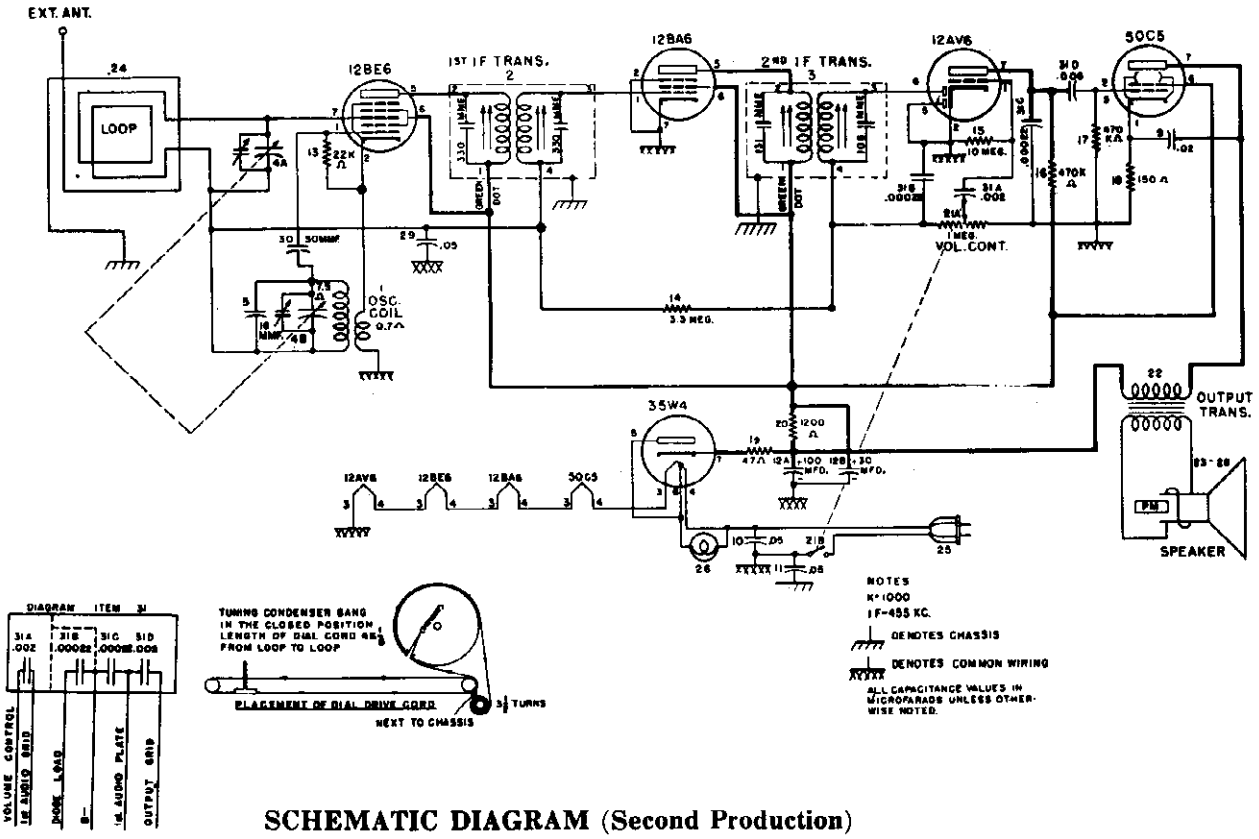

SCHEMATIC DIAGRAM (Second Production)

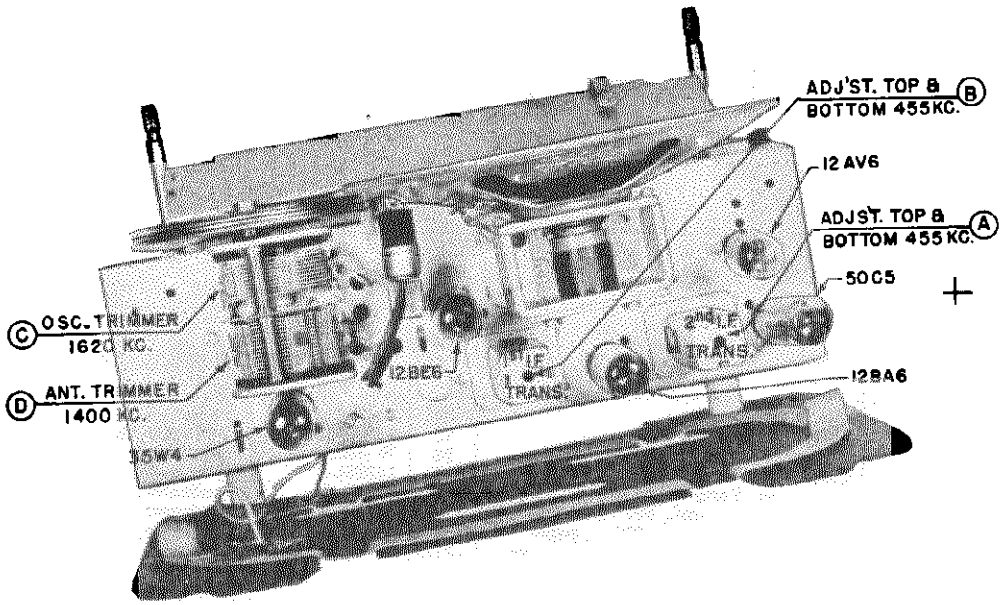

CHASSIS, TOP VIEW

When using direct current it may be necessary to reverse the position of the power plug in the electr outlet for correct polarity.

Reversing the position of the power plug when alternating current is used may reduce hum.

Under no circumstances should a ground be connected to this receiver.

MODELS 9-113, 9-114W

CROSLEY DIV.
AVCO MFG. CORP.

ALIGNMENT PROCEDURE

1. Connect an output meter across the speaker voice coil.
2. The r.f. signal input from the signal generator should be connected to the high side of loop antenna. Connect the signal generator ground through a 0.1 mfd. condenser to B—(see Socket Voltage Chart).
3. Turn the volume control on full and adjust the signal generator output to produce approximately midscale deflection of the output meter, but maintain signal generator output as low as possible to prevent AVC action in the receiver.

ALIGNMENT CHART

Alignment Sequence	Signal Generator Output			Position of Tuning Cond.	Adjust for Maximum Output
	Frequency in kc.	In Series with	To		
1	455	200 mmf.	High Side of Loop	Open	A & B
2	1620	*Radiated to Loop		Open	C
3	1400	*Radiated to Loop		Tune to Signal	D

* Place signal generator output lead near the loop antenna.

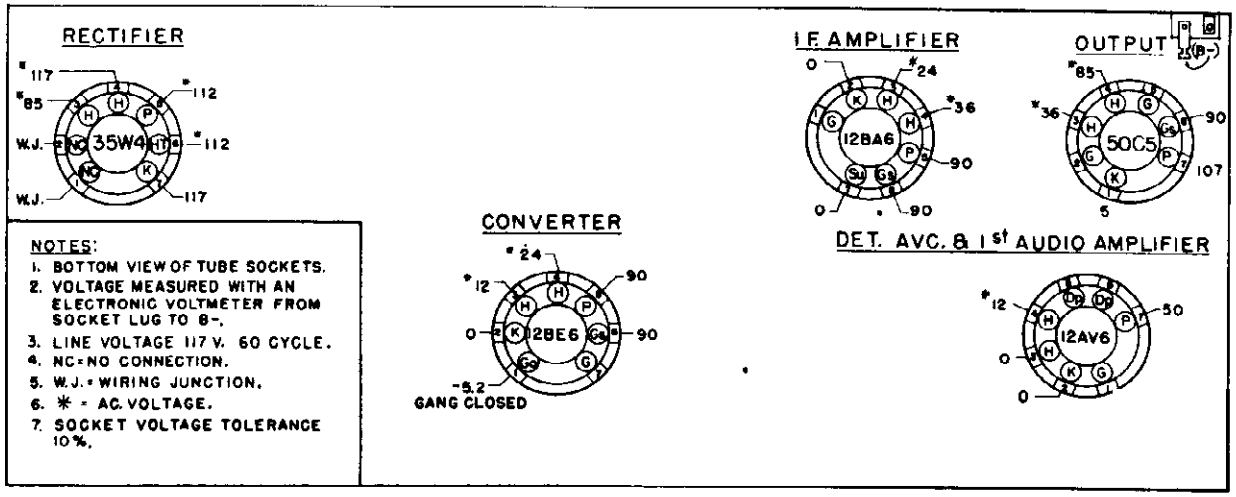

SOCKET VOLTAGE CHART

Item No.	Part Number	Description	Item No.	Part Number	Description
1	144325	Coil, Oscillator	24	144328	Antenna Loop and Back Assy.
2	139919-4	Transformer, 1st I. F.	25	132300-1	Cable and Plug Assy., Power
3	139919-3	Transformer, 2nd I. F.	26	W-48858	Bulb (Dial), Type 47, 6.3 v., .15 amp.
4A	137073-27	Condenser, Variable (Two	27	142951-2	Condenser Resistor
4B		Condenser, Variable (Section	29	39001-17	Condenser, .05 mfd., 600 v., paper
5	137727-66	Condenser, 18 mmf., 500 v., ceramic	30	137727-21	Condenser, 50 mmf., 500 v., ceramic
6	39001-76	Condenser, .003 mfd., 600 v., paper	31A	144675-1	Condenser, .002 mfd., 500 v.
7	39001-73	Condenser, .00025 mfd., 600 v., paper	31B		Condenser, .00022 mfd., 500 v. (Four
8	39001-80	Condenser, .02 mfd., 600 v., paper	*31C		Condenser, .00022 mfd., 500 v. (Sect.
9	39001-80	Condenser, .02 mfd., 600 v., paper	31D		Condenser, .005 mfd., 500 v.)
10	39001-17	Condenser, .05 mfd., 600 v., paper		144176	Background Assy., Dial
11	39001-17	Condenser, .05 mfd., 600 v., paper		144112	Bracket, Dial Light
12A	143680	Condenser, 100 mfd., 150 v. (Two Sect.		144034-1	Cabinet (9-113)
12B		Condenser, 30 mfd., 150 v. (Elec. Filter		144127	Cabinet (9-114W)
13	39373-60	Resistor, 22,000 ohm, ½ w.		144027	Dial, Glass
14	39373-100	Resistor, 3.3 megohm, ½ w.		144110	Grille and Baffle
15	39373-107	Resistor, 10 megohm, ½ w.		46065	Grommet, Var. Cond. Mtg.
16	39373-87	Resistor, 470,000 ohm, ½ w.		138576-10	Knob (9-113)
17	39373-87	Resistor, 470,000 ohm, ½ w.		138576-9	Knob (9-114W)
18	39373-16	Resistor, 150 ohm, ½ w.		144070	Pointer, Dial
19	39373-119	Resistor, 47 ohm, 1 w.		39220-36	Screw, Chassis Mtg.
20	39373-144	Resistor, 1200 ohm, 1 w.		135075-7	Shaft, Drive
21A	39368-14	Control, Volume, 1 megohm		131346	Socket (Miniature Tube)
21B	39369-1	Switch, Power		136565-17	Socket, Dial Light
22	138131-1	Transformer, Output		51752	Spring, Dial Drive Cord
23	143694	Speaker (Less Transformer)		132124SB	Trimount Stud

*Used on 2nd production receivers in place of items 6, 7, 8, and 27.

CROSLEY DIV.
AVCO MFG. CORP.

MODELS 9-204
9-205M



9-204

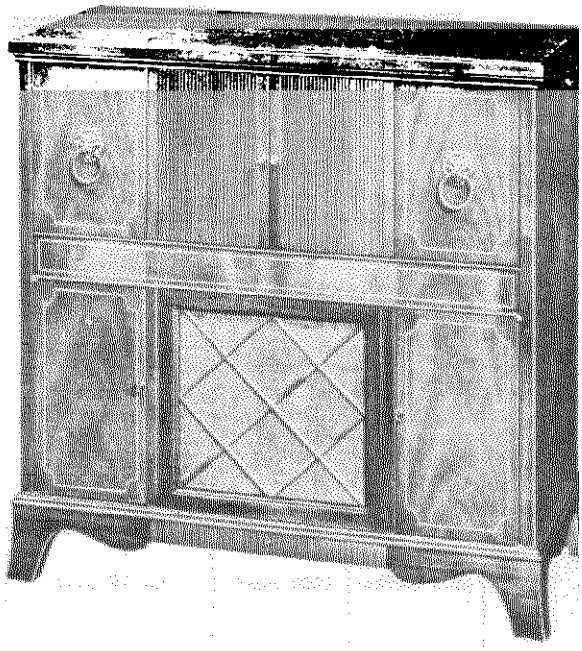

9-205M

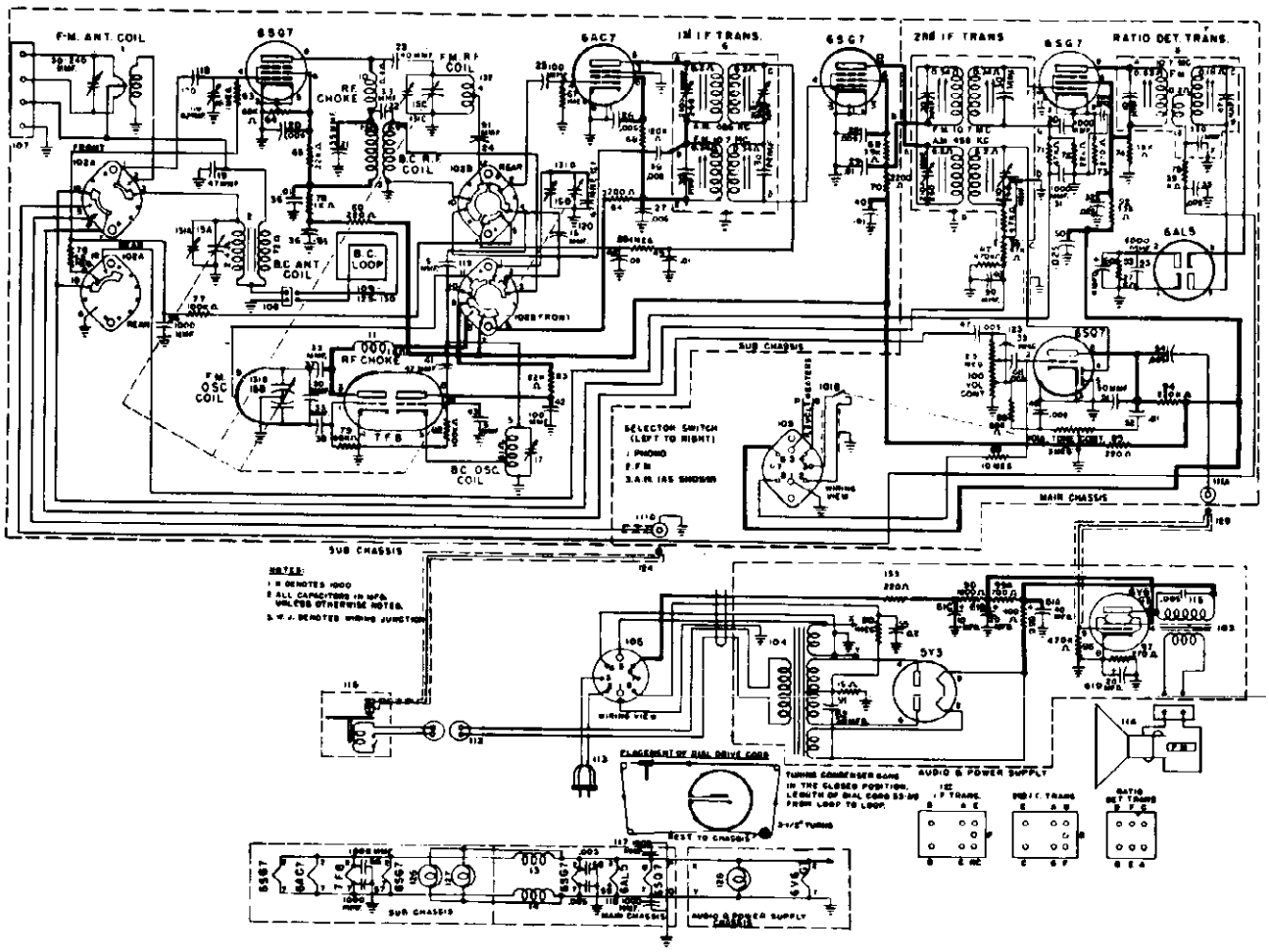

MODELS 9-204, 9-205M

CROSLEY DIV.
AVCO MFG. CORP.
ALIGNMENT CHART I (SCOPE METHOD)

	Signal Generator Output		To	Range Switch	Tuning Dial or Tuning Cap	Adjust	Curve	Remarks
	Frequency	In Series With						
1	455 KC	.01 mfd.	1st IF. grid	AM	Gang open	A		Note 1
2	455 KC	.01 mfd.	Stator 21 plate sect. rear of gang	AM	Gang open	B		Note 1
3	10.7 MC	1000 mmf.	2nd IF grid	FM	Gang closed	C	Zero Volts	Note 2
4	10.7 MC	1000 mmf.	2nd IF grid	FM	Gang closed	D	Max.DC output	Note 3
5	RF sweep 10.7 marker	1000 mmf.	1st IF grid	FM	Gang closed	E & F		Align for max. output & symetry note 4
6	RF sweep 10.7 marker	1000 mmf.	Stator 3 plate sect. rear of gang	FM	Gang closed	G & H		Align for max. output & symetry note 5
7	FM-RF 98MC	FM dummy antenna	Dipole Ant. Term.	FM	98MC	I	Peak	Note 6
8	104MC	FM dummy antenna	Dipole Ant. Term.	FM	104MC	J	Peak	Note 7
9	92MC	FM dummy antenna	Dipole Ant. Term.	FM	92MC	Form RF Coil "K"	Peak	Note 8
10	Repeat steps 8 and 9 until no further improvement in sensitivity is noted.							
11	FM sweep Gen. 92-98-104 MC markers.	FM dummy antenna	Dipole Ant. Term.	FM	Gang closed	L & M		Note 9 or 9a
12	AM-RF Gen. 1400 KC	200 mmf.	BC Ant. Term. and ground	AM	1400 KC	N		Note 10
13	AM-RF Gen. 1400 KC	200 mmf.	BC Ant. Term. and ground	AM	1400 KC	P & Q		Note 1 & Note 10

TUBE COMPLEMENT

Type	Function
6SG7	R. F. Amplifier
6AC7	Mixer
7F8	Oscillator
6SG7	1st. I. F. Amplifier
6SG7	2nd. I. F. Amplifier
6AL5	Discriminator
6SQ7	A. M. Det.—AVC 1st. A. F. Amplifier
6V6 (GT/G)	Output
5Y3 GT/G	Rectifier

DIAL BULB: Type 47, 6.3 volts, .15 amp.

CROSLEY DIV.
AVCO MFG. CORP.

MODELS 9-204
9-205M

ALIGNMENT CHART II

(Using output meter and electronic voltmeter)

Alignment Sequence	Signal Gen. Output		To	Position of		Adjust	Remarks
	Frequency	In Series With		Range Switch	Tuning Dial or Tun. Cap.		
1	455 KC	.01 mfd.	1st IF grid	AM	Gang open	A	Align for peak on output meter.
2	455 KC	.01 mfd.	Stator 21 plate sect. rear of gang	AM	Gang open	B	Align for peak on output meter.
3	10.7 MC	1000 mmf	2nd IF grid	FM	Gang closed	C	Adjust for zero volts on electronic voltmeter Note 1 & 2.
4	10.7 MC	1000 mmf	2nd IF grid	FM	Gang closed	D	Adjust for max. DC. output on Elect. voltmeter Note 3.
5	10.7 MC	1000 mmf	1st IF grid	FM	Gang closed	E & F	Adjust for max. DC. output Note 4.
6	10.7 MC	1000 mmf	Stator 3 plate sect. rear of gang	FM	Gang closed	G & H	Adjust for max. DC. output Note 4.
	Repeat steps 3 and 4, 5 and 6 if necessary.						
7	98 MC	FM dummy antenna	Dipole Ant. Terminals	FM	98 MC	I	Adjust for max. reading on output meter.
8	104 MC	FM dummy antenna	Dipole Ant. Terminals	FM	104 MC	J	Adjust for max. reading on output meter, rock gang if necessary while making adjustments.
9	92 MC	FM dummy antenna	Dipole Ant. Terminals	FM	92 MC	K	Adjust for max. sensitivity, the inductance of FM.RF. coil "K" by forming.
	Repeat steps 8 and 9 until no further improvement in sensitivity is noted.						
10	98 MC	FM dummy antenna	Dipole Ant. Terminals	FM	98 MC	L & M	See Note 5.
11	AM-RF Gen. 1400 KC	200 mmf	BC Ant. Term.	AM	1400 KC	N	See Note 6.
12	AM-RF Gen. 1400 KC	200 mmf	BC Ant. Term. and ground	AM	1400 KC	P & Q	Note 6. Adj. for max. reading on output meter.

DESCRIPTION

TYPE: Nine tube, two-band superheterodyne.
FREQUENCY RANGE: Standard Broadcast Band:
540 to 1600 kc. (Selector switch at AM position).
FREQUENCY MODULATION BAND: 88 to 108 mc.
Channels 201 to 300.
(Selector switch at FM position).

INTERMEDIATE FREQUENCY: AM Band: 455 kc. FM Band: 10.7 mc.
POWER SUPPLY: 60 cycle a. c.
VOLTAGE RATING: 105-125 volts.
POWER CONSUMPTION: 90 watts.
20 watts additional for record changer.
POWER OUTPUT: 7 watts maximum.

MODELS 9-204, 9-205M

CROSLEY DIV.
AVCO MFG. CORP.

ALIGNMENT CHART I NOTES (SCOPE METHOD)

1. Align for peak on output meter.
2. Connect two 100,000 ohm resistors in series and connect these resistors from the No. 2 lug of the 6AL5 to the chassis. Connect an electronic voltmeter from the center of these resistors to the shielded lead junction of the 39,000 ohm resistor (75) and the .002 mfd. condenser, (33). Adjust the ratio detector transformer secondary (C) for zero volts on the electronic voltmeter. Remove the two 100,000 ohm resistors.

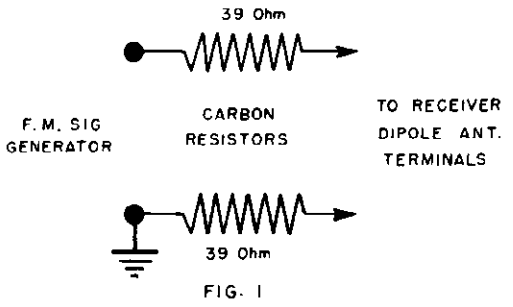

FIG. 1

3. Connect the electronic voltmeter across the 27,000 ohm load resistor (93) and adjust primary of core (D) of the ratio detector transformer (8) for maximum DC output.
4. Connect output of marker generator across sweep generator output. Connect CRO across the 22,000 ohm resistor (72) in the grid circuit of the second I.F. amplifier.

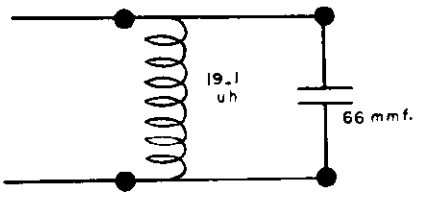

FIG. 2

5. CRO connections same as note 4.
6. For dummy antenna see figure 1.
7. Rock gang condenser if necessary while making adjustment.
8. Tune in signal and adjust for greatest sensitivity by forming FM.—R.F. coil.
9. Connect CRO in series with 100,000 ohm resistor to grid (pin 4) of R.F. amplifier and chassis. Remove 7F8 oscillator tube. Connect output of marker generator across output of sweep generator. Adjust (L-M) until pattern and markers approximate figure in alignment chart.

9a. Shunt primary of FM antenna transformer with a 10 ohm carbon resistor and adjust (M) for maximum output. Remove shunt and place it across FM antenna transformer secondary and adjust (L) for maximum output. Remove shunt.

10. Connect BC. dummy loop (Fig. 2) across loop terminals on rear of chassis.

ALIGNMENT CHART II NOTES

1. Use an unmodulated signal generator, with approximately 100,000 mv. output.
2. Connect two 100,000 ohm resistors in series and connect these resistors from the No. 2 lug of the 6AL5 to the chassis. Connect an electronic voltmeter from the center of these resistors to the shielded lead junction of the 39,000 ohm resistor (75) and the .002 mfd. condenser, (33). Adjust the ratio detector transformer secondary (C) for zero volts on the electronic voltmeter. Remove the two 100,000 ohm resistors.
3. Connect the electronic voltmeter across the 27,000 ohm load resistor (93) and adjust the primary of the core (D) of the ratio detector transformer (8) for maximum DC output.
4. Limit output of signal generator so that the reading on the electronic voltmeter will not exceed 4 volts.
5. Shunt the FM antenna transformer primary with a 10 ohm carbon resistor, and adjust the FM antenna secondary trimmer (M) for maximum output meter reading. Transfer the 10 ohm shunt to the secondary of FM antenna transformer. Adjust FM antenna primary trimmer (L) for maximum output meter reading. Remove the 10 ohm shunt resistor.
6. Connect the BC dummy loop antenna across the loop terminals on the rear of the chassis (see Figure 2,

CROSLEY DIV.
AVCO MFG. CORP.
MODELS 9-204
9-205M

SOCKET VOLTAGE NOTES

1. Bottom view of Sockets.
2. Voltage measured from Socket Lug to Chassis with an Electronic Voltmeter.
3. Voltage measured with Switch in BC position except where marked with delta(▲)
4. ▲=Selector Switch in F.M. position.
5. W.J.=Wiring Junction.
   N.C.=No Connection.
   *=A.C. Voltage.
6. All Voltages taken at Nominal Operating Voltage 117 V., 60 cycles.
7. Socket Voltage Tolerance ± 10%.

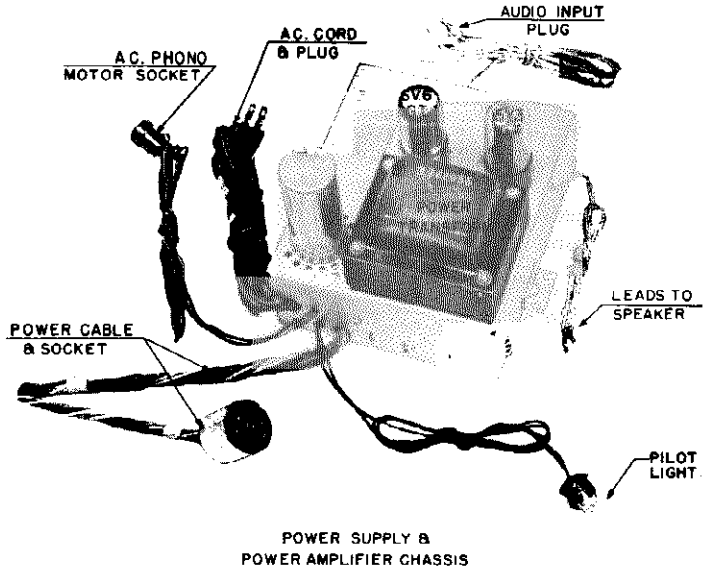

POWER SUPPLY & POWER AMPLIFIER CHASSIS

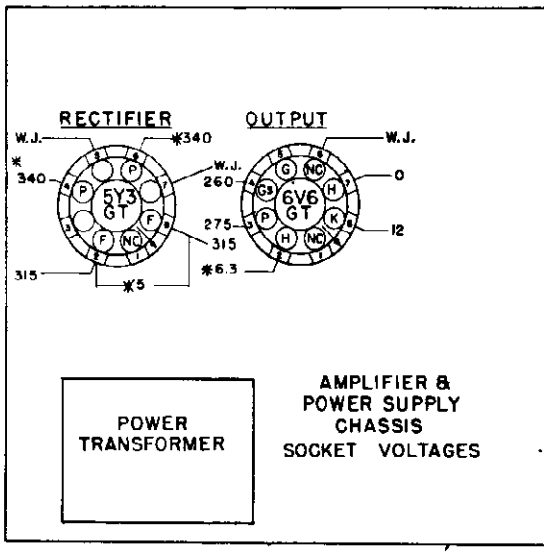

TOP VIEW—MODELS 9-204, 9-205M POWER SUPPLY AND AMPLIFIER CHASSIS,

RECEIVER SOCKET VOLTAGE CHART

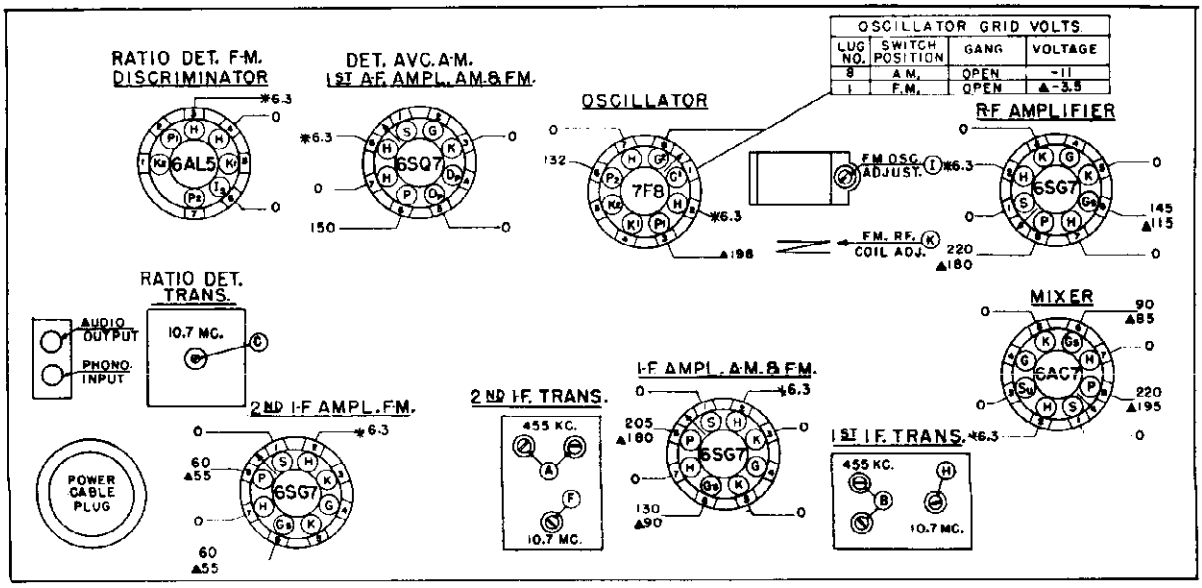

MODELS 9-204, 9-205M

CROSLEY DIV.
AVCO MFG. CORP.
ALIGNMENT PROCEDURE

1. This receiver has been aligned at the factory for best performance, and no attempt should be made to re-align it unless the proper test equipment is available.
2. Turn the tuning condenser to full mesh, against stop, and set the dial pointer at the edge of the clear section of the dial, left of "55."
3. Connect an output meter across the voice coil of the speaker (3.2 ohms).
4. Turn the volume control knob to maximum clockwise position and adjust the signal generator output to produce a noticeable output meter reading. Keep the signal generator output as low as possible to prevent excessive AVC action in the receiver.
5. Feed an R.F. amplitude modulated signal modulated 30% at 400 cycle to the receiver as indicated in the alignment procedure chart. Connect signal generator ground terminal to the chassis of the receiver. When F.M. generator is used, a 30% modulated signal is equal to a deviation of 22.5 kc.
6. Tone control is to be set for maximum treble response.
7. When aligning the broadcast band, the build-in loop antenna or a suitable dummy antenna, consisting of a coil with 19.1 u h. inductance shunted with a 66 mmf. capacitor must be used.
8. While aligning the set, the shorting link on the antenna terminal strip should be removed. After alignment replace the link, unless an external antenna is to be used.

Cross index between frequency calibrations in megacycles on the dial and channel numbers follow:

MEGACYCLES TO CHANNEL NUMBERS

Frequency in Megacycles	Channel No.
87.9	200
88.9	205
89.9	210
90.9	215
91.9	220
92.9	225
93.9	230
94.9	235
95.9	240
96.9	245
97.9	250
98.9	255
99.9	260
100.9	265
101.9	270
102.9	275
103.9	280
104.9	285
105.9	290
106.9	295
107.9	300

To find the frequency in megacycles for CHANNEL NUMBERS between those given above, add .2 megacycle for every whole number added to the CHANNEL NUMBER; for example channel 204 would be 88.7 megacycles and 251 would be 98.1 megacycles.

CHASSIS TOP VIEW

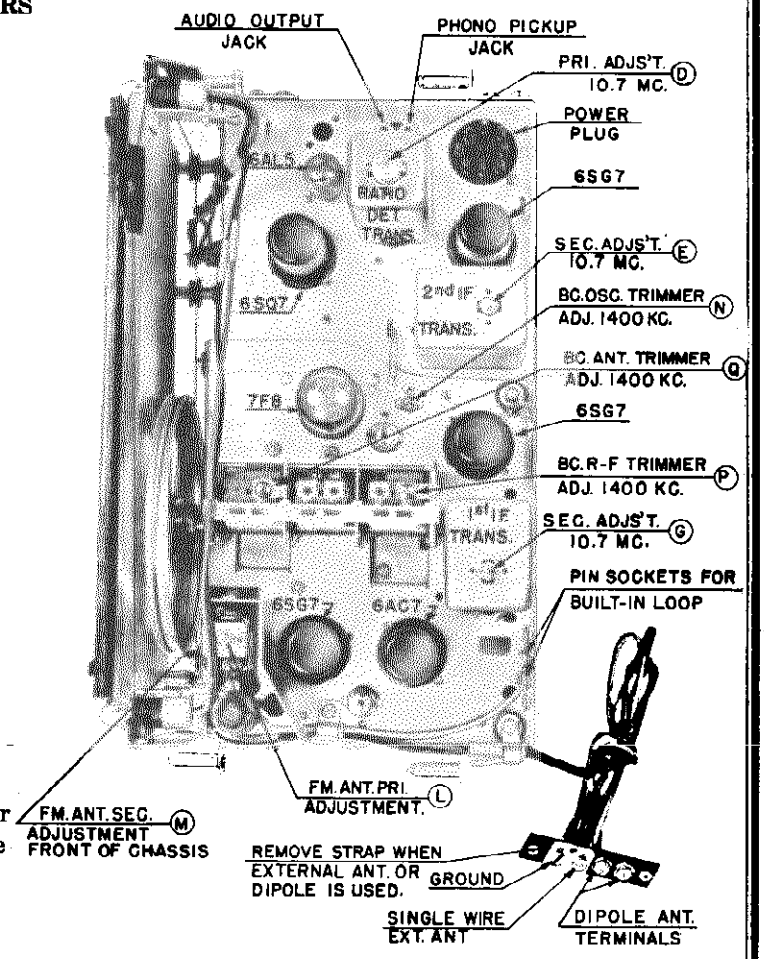

CROSLEY DIV.
AVCO MFG. CORP.

MODELS 9-204, 9-205M

Item No.	Part Number	Description
1	143784	Coil, Antenna (F.M.)
2	143267	Coil, Antenna Loading (B.C.)
3	143402	Coil, R.F. (B.C.)
4	143646	Coil, R.F. (F.M.);
5	143945	Coil, Osc. (B.C.)
6	143090	Transformer, 1st I. F.
7	143105	Transformer, 2nd I.F.
8	143378	Transformer, Ratio Det.
9	143305	Coil Assy., Osc. (F.M.)
10	143752	Coil, Choke
11	143837	Coil, Choke
13	143934	Coil, Coke R.F. (Heater)
14	143934	Coil, Coke R.F. (Heater)
15A	142848	Condenser, Variable (Four Section)
15B		Condenser, Variable (Four Section)
15C		Condenser, Variable (Four Section)
15D		Condenser, Variable (Four Section)
16	136327-43	Condenser, Trimmer
17	143014	Condenser, Trimmer
18	137727-12	Condenser, 120 mmf., 300 v., Ceramic
19	137727-31	Condenser, 47 mmf., 300 v., Ceramic
20	39001-11	Condenser, .005 mfd., 600 v., Paper
21	137727-45	Condenser, 56 mmf., 500 v., Ceramic
22	137398-5	Condenser, 3.3 mmf., 500 v., Ceramic
23	137727-73	Condenser, 40 mmf., 500 v., Ceramic
24	137727-20	Condenser, 91 mmf., 300 v., Ceramic
25	137727-25	Condenser, 100 mmf., 500 v., Ceramic
26	39001-11	Condenser, .005 mfd., 600 v., Paper
27	39001-11	Condenser, .005 mfd., 600 v., Paper
28	39001-11	Condenser, .005 mfd., 600 v., Paper
29	39001-13	Condenser, .01 mfd., 600 v., Paper
30	137727-8	Condenser, 1000 mmf., 300 v., Paper
31	137727-8	Condenser, 1000 mmf., 300 v., Ceramic
32	39001-80	Condenser, .02 mfd., 600 v., Paper
33	39001-74	Condenser, .002 mfd., 600 v., Paper
34	137727-8	Condenser, 1000 mmf., 3000 v., Paper
35	39001-13	Condenser, .01 mfd., 600 v., Paper
36	39001-13	Condenser, .01 mfd., 600 v., Paper
37	137727-53	Condenser, 33 mmf., 500 v., Ceramic
38	137727-53	Condenser, 33 mmf., 500 v., Ceramic
39	39001-11	Condenser, .005 mfd., 600 v., Paper
40	39001-13	Condenser, .01 mfd., 600 v., Paper
41	137727-31	Condenser, 47 mfd., 300 v., Ceramic
42	137727-8	Condenser, 1000 mmf., 300 v., Ceramic
43	137727-79	Condenser, 5 mmf., 500 v., Ceramic
44	39001-17	Condenser, .05 mfd., 600 v., Paper
45	39001-13	Condenser, .01 mfd., 600 v., Paper
46	143686-1	Condenser, 50 mmf., 500 v., Ceramic
47	39001-11	Condenser, .005 mfd., 600 v., Paper
48	39001-11	Condenser, .005 mfd., 600 v., Paper
49	39001-11	Condenser, .005 mfd., 600 v., Paper
50	39001-80	Condenser, .02 mfd., 600 v., Paper
51	143686-1	Condenser, 50 mmf., 500 v., Ceramic
52	39001-13	Condenser, .01 mfd., 600 v., Paper
53	137727-8	Condenser, 1000 mmf., 300 v., Ceramic
54	39001-11	Condenser, .005 mfd., 600 v., Paper
55	39001-87	Condenser, .25 mfd., 600 v., Paper
56	137727-8	Condenser, 1000 mmf., 300 v., Ceramic
57	137727-8	Condenser, 1000 mmf., 300 v., Ceramic
58	137727-38	Condenser, .005 mfd., 500 v., Ceramic
59	137727-38	Condenser, 005 mfd., 500 v., Ceramic
60	142958	Condenser, 4 mfd., 50 v., Elect.
61A	143089	Condenser, 40 mfd., 450 v. (Four Section Elect. Filter)
61B		Condenser, 20 mfd., 450 v. (Four Section Elect. Filter)
61C		Condenser, 10 mfd., 450 v. (Four Section Elect. Filter)
61D		Condenser, 20 mfd., 25 v. (Four Section Elect. Filter)
62	143062	Condenser, 30 mfd., 450 v., Elect.
63	39373-92	Resistor, 1.0 Megohm, ½ w.
64	39373-71	Resistor, 68,000 ohms, ½ w.
65	39373-170	Resistor, 22,000 ohms, 1 w.
67	39373-92	Resistor, 1.0 Megohm, ½ w.
68	39373-75	Resistor, 120,000 ohms, ½ w.
69	39373-65	Resistor, 39,000 ohms, ½ w.
70	39373-40	Resistor, 2,200 ohms, ½ w.
71	39373-67	Resistor, 47,000 ohms, ½ w.
72	39373-60	Resistor, 22,000 ohms, ½ w.
73	39373-21	Resistor, 270 ohms, ½ w.
74	39373-65	Resistor, 39,000 ohms, ½ w.
75	39373-65	Resistor, 39,000 ohms, ½ w.
76	39373-94	Resistor, 1.5 Megohm, ½ w.
77	39373-74	Resistor, 100,000 ohms, ½ w.
78	39373-33	Resistor, 1,000 ohms, ½ w.
79	39373-71	Resistor, 68,000 ohms, ½ w.
80	39373-19	Resistor, 220 ohms, ½ w.
82	39373-74	Resistor, 100,000 ohms, ½ w.
83	39373-170	Resistor, 22,000 ohms, 1 w.
84	39373-40	Resistor, 2,200 ohms, ½ w.
85	39373-92	Resistor, 1.0 Megohm, ½ w.
86	39373-67	Resistor, 47,000 ohms, ½ w.
87	39373-87	Resistor, 470 000 ohms, ½ w.
88	39373-71	Resistor, 68,000 ohms, ½ w.
89	39373-107	Resistor, 10 0 Megohms, ½ w.
90	39373-92	Resisor, 1.0 Megohm, ½ w.
91	39373-3	Resistor, 15 ohms, ½ w.
92	39373-174	Resistor, 33,000 ohms, 1 w.
93	39373-62	Resistor, 27 000 ohms, ½ w.
94	39373-80	Resistor, 220,000 ohms, ½ w.
95	39373-19	Resistor, 220 ohms, ½ w.
96	39373-87	Resistor, 470,000 ohms, ½ w.
97	39373-131	Resistor, 270 ohms, 1 w.
98	39373-253	Resistor, 1,000 ohms, 2 w.
99A	137021	Resistor, 700 ohms, (Wire Wound) (Two Sect.)
99B		Resistor, 700 ohms, (Wire Wound 4 w.) (Two Sect.)
100	39368-19	Cont., Vol., (2.5 Meg., Tap 750 k ohms)
	39370-2	Shaft, volume control (knurled)

MODELS 9-204, 9-205M

CROSLEY DIV. AVCO MFG. CORP.

Item No.	Part Number	Description
101A	39368-22	Control, Tone (3 megohm)
	39370-2	Shaft, Tone Control (knurled)
101B	39369-1	Switch, Power
102A	142969	Switch, Band Change (Two
102B		Switch. Band Change) Section
103	138131-2	Transformer, Output
104	135104	Transformer, Power
105	142918	Plug, Power
106	143742	Plug and Cable Assy., Power
107	143775	Cable Assy., Antenna
108	143404	Terminal Strip, Loop Antenna
109	143807	Antenna Loop (9-205-M)
111A	143126	Socket, Phono (Two
111B		Socket, Audio Input) Hole
112	139727-4	Cable, Phono Motor
113	132300-2	Cable and Plug Assy., Power
114	138762-5	Speaker
115	39001-11	Condenser, .005 mfd., 600 v., Paper
116	143513	Record Changer (W-148)
117	137727-8	Condenser, 1000 mmf., 300 v., Ceramic
118	137727-8	Condenser, 1000 mmf., 300 v., Ceramic
119	137727-79	Condenser, 5 mmf., 500 v., Ceramic
120	137727-43	Condenser, 15 mmf., 500 v., Ceramic
121	137398-6	Condenser, 4.7 mmf., 500 v. Ceramic
122	39001-80	Condenser, .02 mfd., 600 v., Paper
123	143686-2	Condenser, 33 mmf., 500 v., Ceramic
124	143818	Shielded Lead Assy., Phono
125	144527	Antenna Loop (9-204)
126	48858	Bulb (Dial), Type 47, 6.3 v., .15 amp.
127	48858	Bulb (Dial), Type 47, 6.3 v., .15 amp.
128	48858	Bulb (Dial), Type 47, 6.3 v., .15 amp.
129	143768	Shielded Lead Assy., Audio Input
133	39373-19	Resister, 220 ohms, ½ w.
	143729	Background Assy., Dial
	142756	Blade Assy., F.M. Osc. Tuning
	139477-1	Button, Loop (With Shoulder)
	139477-1	Button, Loop (without Shoulder)
	144045	Cabinet (9-204)
	143847	Cabinet (9-205 M)
	134220	Cotter, External
	136853	Cushion (Rubber), Dial Mtg.
	136201	Clip, Dial Glass
	144168	Dial, Calibrated
	143464	Escutcheon, Dial
	39012-85	Iron Core, Ratio Det. Transformer
	39012-84	Iron Core, 1st I.F.
	39012-84	Iron Core, 2nd I.F.
	138576-6	Knob
	143778	Knob (Band Switch)
	45580	Mounting Rubber (Speaker)
	136111	Mount, Rubber (Chassis)
	143769	Pointer, Dial
	143453	Pulley and Hub, Variable Condenser
	136979	Pulley, Dial Drive Idler
	51071	Ring, Retaining (Dial Drive Shaft)
	39220-30CP	Screw, Chassis Mtg.
	39220-38CP	Screw, Sub-Chassis Mtg.
	143455	Shaft, Dial Drive
	39232-2	Socket, Tube, Octal

Item No.	Part Number	Description
	136470	Socket, Tube, Loctal
	143146	Socket, Tube, Min.
	136565-25	Socket, Dial Light
	137148	Spacer
	51752	Spring, Dial Drive Cord
	46065	Shock Mount, Sub-Chassis Mtg.
	139040	Shock Mount, Sub-Chassis Mtg.
	143552	Strip, Dial Pointer
	134916	Washer, Spring (Dial Drive Shaft)
	135038-37	Terminal Strip, One Lug
	135038-12	Terminal Strip, Two Lug
	135038-13	Terminal Strip, Three Lug
	135038-47	Terminal Srip, Four Lug

CABINET PARTS

MODEL 9-204

143653	Bracket (R.H.), Radio Bin
143654	Bracket (L.H.), Radio Bin
143485	Bumper (Rubber), Door
143486	Bumper (Rubber), Radio Bin
144048	Drawer Frame Assembly
144053	Door, Center
144052	Door, (Right), Record Compartment
144054	Grille, Metal
144055	Grille, Cloth
144051	Hinge, Door
144057	Leg and Base Assembly
144049	Panels (Front), Drawer and Radio Bin
143856	Panel, Radio Dial
144050	Pull (Handle), Drawer and Radio Bin
142912	Pull, Record Compartment Door
143478	Slides (1pair), Drawer
144056	Speaker Baffle.
139319	Strike and Catch Assy., Door

CABINET PARTS

MODEL 9-205M

143859	Baffle, Speaker
143653	Bracket, R.H., Radio Bin
143654	Bracket, L.H., Radio Bin
143846	Bumper, Rubber, Radio Bin
143485	Bumper, Rubber, Door
142973	Button, Indicator
143857	Doors (matched pair), Record Compartment
143487	Doors (matched pair), Radio
143855	Frame Assy. only, Record Changer Dawer
143509	Grille Cloth
143942	Hinge, Record Compartment Door
143860	Leg and Base Assy.
143858	Panels (matched pair) Drawer and Radio Bin
143856	Panel, Radio Dial
143334	Pull, Radio Dial
143887	Pull, Radio Bin
142912	Pull, Record Storage Compartment
143478	Slide (one set), Record Changer
143913	Spring, Radio Bin
139319 S.B.	Strike and Catch Assy.

©John F. Rider

CROSLEY DIV.
AVCO MFG. CORP.

MODELS 9-209,
9-212M

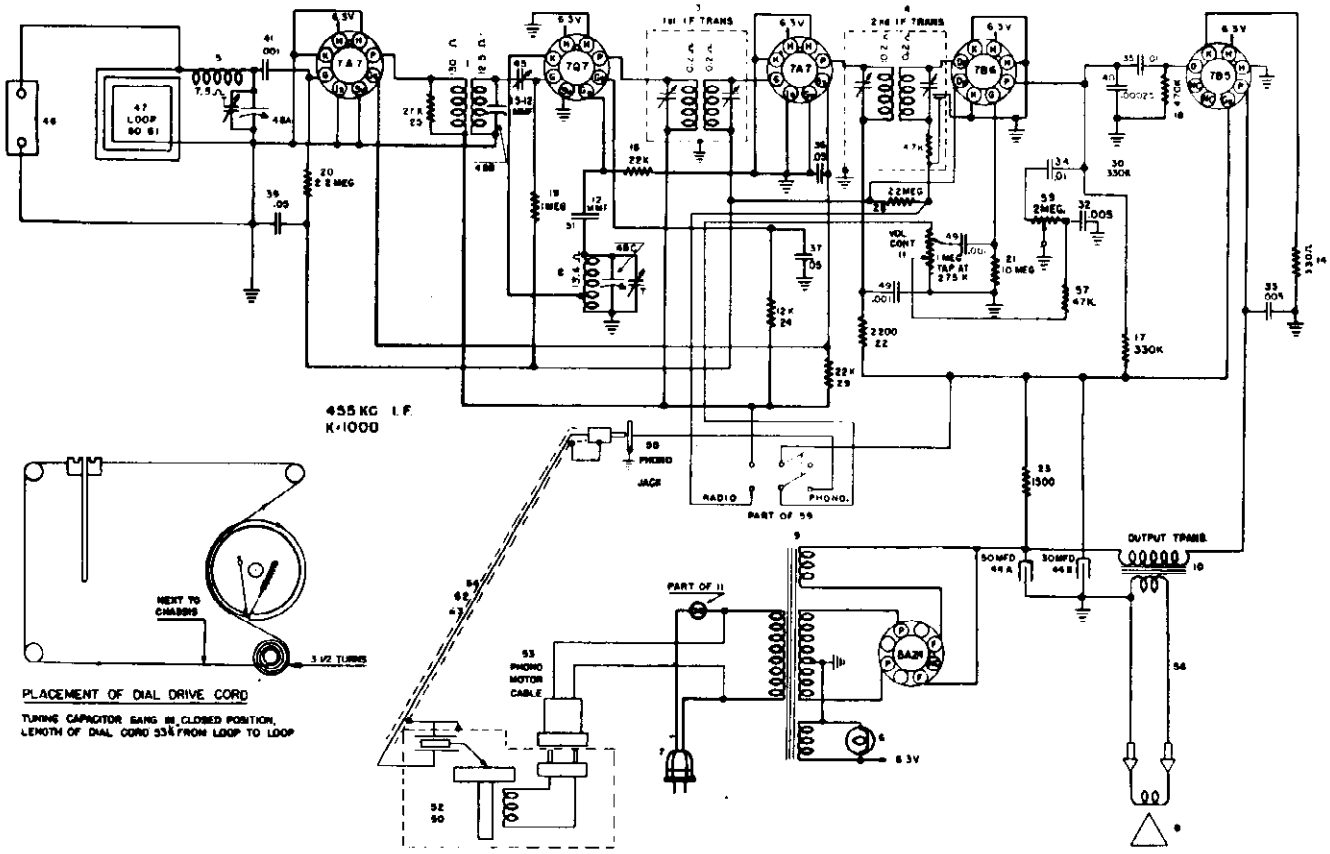

SCHEMATIC DIAGRAM—MODELS 9-209, 9-212M

SOCKET VOLTAGE CHART

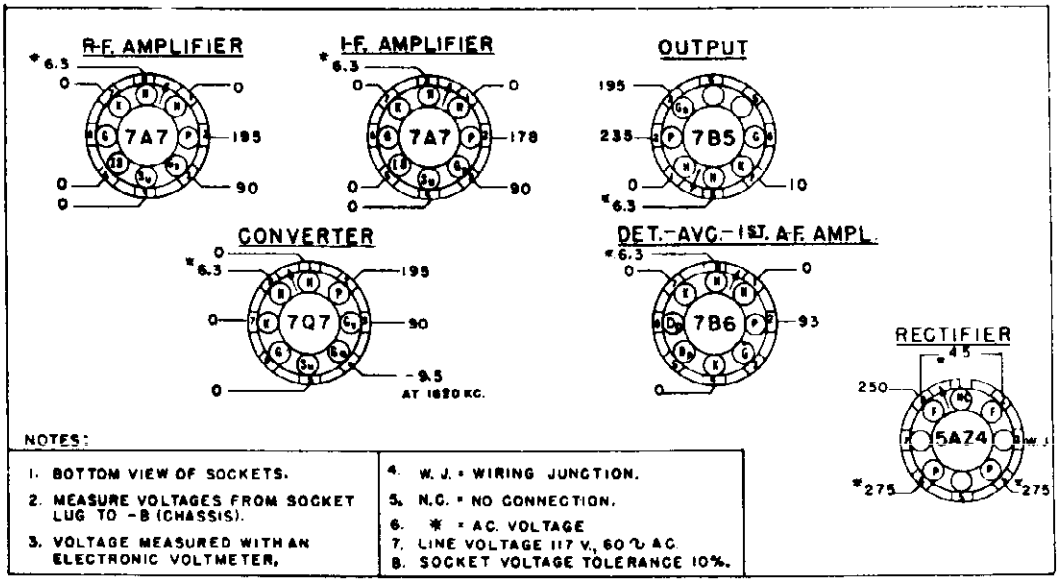

NOTES:

1. BOTTOM VIEW OF SOCKETS.
2. MEASURE VOLTAGES FROM SOCKET LUG TO -B (CHASSIS).
3. VOLTAGE MEASURED WITH AN ELECTRONIC VOLTMETER.
4. W. J. = WIRING JUNCTION.
5. N.C. = NO CONNECTION.
6. * = A.C. VOLTAGE
7. LINE VOLTAGE 117 V., 60 ~ A.C.
8. SOCKET VOLTAGE TOLERANCE 10%.

© John F. Rider

MODELS 9-209, 9-212M

CROSLEY DIV.
AVCO MFG. CORP.

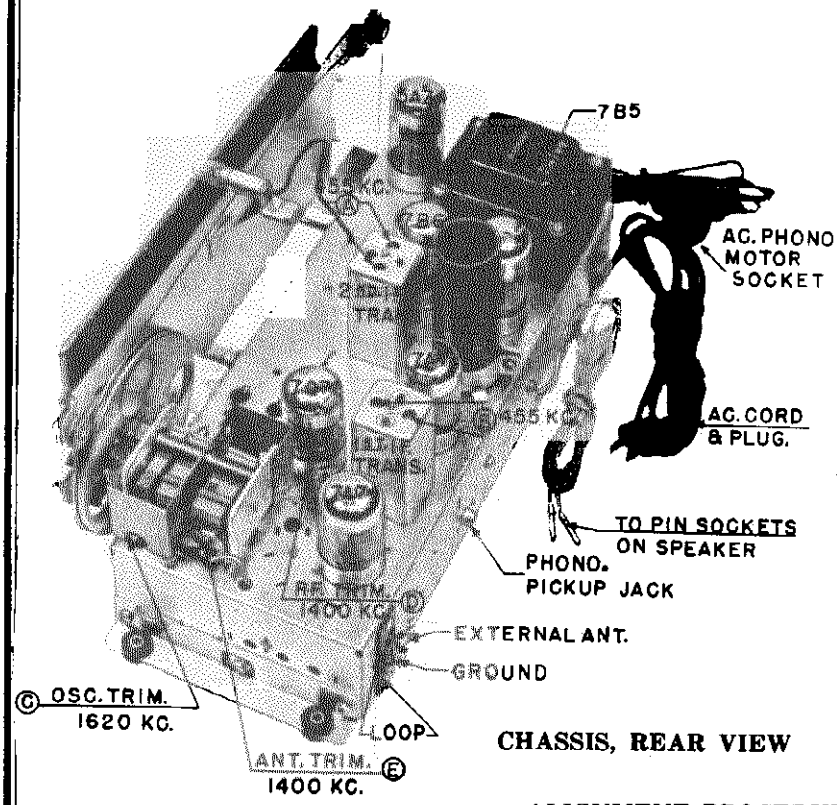

CHASSIS, REAR VIEW

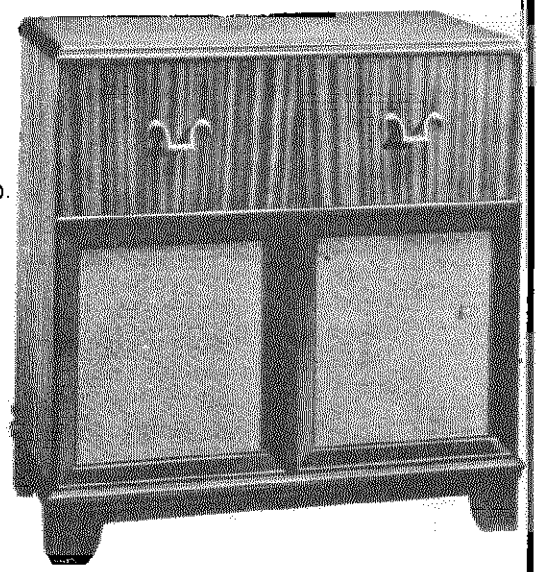

Model 9-209 (Walnut)—Model 9-212M (Mahogany)

ALIGNMENT PROCEDURE

1. Turn the tuning condenser to the completely closed position against the stop and set the dial pointer to the reference line at the low frequency end of the dial scale.
2. Turn the selector switch to radio position (extreme left).
3. Connect the output meter across the speaker voice coil.
4. The r.f. signal input from the signal generator should be connected through a condenser as indicated in the alignment chart. Connect the signal generator ground to the receiver chassis.

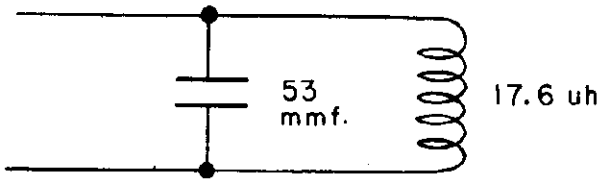

Fig. 1

5. Turn the volume control on full and adjust the signal generator output to produce approximately midscale deflection of the output meter, but maintain signal generator output as low as possible to prevent AVC action in the receiver.
6. Loop antenna must remain connected at all times or replaced by dummy antenna consisting of a coil with 17.6 uh inductance shunted with a 53 mmf. condenser. See Fig. 1.

Alignment Sequence	Signal Generator Output			Position of Tuning Dial or Var. Cond.	Adjust for Maximum Output
	Frequency in KC	In Series with	To		
1	455	.05 mfd.	Pin 6 7Q7	open	A & B
2	1620	15 mmf.	Top Ant. Clip	open 1620	C
3	1400	15 mmf.	Top Ant. Clip	1400	D
4	1400	15 mmf.	Top Ant. Clip	1400	E
5	1400	15 mmf.	Top Ant. Clip	1400	Rock var. cond. and repeat 3 & 4

CROSLEY DIV. MODELS 9-209, 9-212M
AVCO MFG. CORP.

REPLACEMENT PARTS LIST—MODELS 9-209, 9-212M

Figures in first column correspond to figures in Schematic Diagram

ITEM No.	Part Number	Description	No. ITEM	Part Number	Description
1	AW-137800	Coil, R. F.	45	W-132267-1	Condenser, Trimmer
2	AW-137724	Coil, Oscillator	46	AB-138584	Terminal Board
3	AC-137933	Transformer, 1st. I. F.	47	AW-144064	Loop Antenna
4	AC-137934	Transformer, 2nd. I. F.	48A	B-137972	Condenser, Variable } Three
5	AW-139604	Coil, Antenna Loading	48B		Condenser, Variable } Section
6	W-48858	Bulb (Dial), Type 47, 6.3 v., .15 amp.	48C		Condenser, Variable } Assy.
7	C-132300-1	Cable and Plug Assy., Power	49	39001-7	Condenser, .001 mfd., 600 v., paper
8	138762-5	Speaker	51	C-137727-52	Condenser, 12 mmf., 500 v., ceramic
9	135102	Transformer, Power	52	D-144489	Record Changer
10	138131-2	Transformer, Output	53	B-139727-6	Cable and Plus Assy., Phono Motor
11	39368-18	Control, Volume (1 meg., Tap at 300,000 ohm)	54	AW-143818	Cable & Plug Assy., (Shielded), Phono
			55	W-136998	Jack, Phono
	39369-1	Switch, power	56	AW-143361	Cable and Pins, Speaker
	39370-2	Shaft, Volume Control (plug-in)	57	39373-67	Resistor, 47,000 ohms, ½ w.
14	39373-23	Resistor, 330 ohm, ½ w.	59	B-144346	Control, Tone (2 Megohm) & Radio-Phono Switch
15	39373-60	Resistor, 22,000 ohm, ½ w.			
17	39373-84	Resistor, 330,000 ohm, ½ w.		AB-143417	Background Assy., Dial
18	39373-87	Resistor, 470,000 ohm, ½ w.		W-139477-1	Button, Loop Ant. Mtg. (4 required)
19	39373-92	Resistor, 1 megohm, ½ w.		W-139477-2	Button, Loop Ant. Mtg. (1 required)
20	39373-97	Resistor, 2.2 megohm, ½ w.		R-144134	Cabinet (9-209)
21	39373-107	Resistor, 10 megohm, ½ w.		R-144182	Cabinet (9-212 M)
22	39373-40	Resistor, 2200 ohm, ½ w.		W-136201	Clip, Dial Glass
23	39372-7	Resistor, 1500 ohm, 10 w.		C-143384	Dial Glass
24	39373-165	Resistor, 12,000 ohm, 1 w.		C-144785	Escutcheon
25	39373-62	Resistor, 27,000 ohm, ½ w.		W-134055	Grommet, Var. Cond. Mtg.
28	39373-97	Resistor, 2.2 megohm, ½ w.		B-144349	Knob
29	39373-60	Resistor, 22,000 ohm, ½ w.		B-143407	Pointer, Dial
32	39001-11	Condenser, .005 mfd., 600 v., paper		W-137939-1	Pulley, Dial Drive Idler
33	39001-11	Condenser, .005 mfd., 600 v., paper		W-51071	Ring, Drive Shaft retaining
34	39001-13	Condenser, .01 mfd., 600 v., paper		W-45580	Rubber Mtg., Speaker
35	39001-13	Condenser, .01 mfd., 600 v., paper		W-144498	Screw, Escutcheon Mtg.
36	39001-17	Condenser, .05 mfd., 600 v., paper		B-135075-5	Shaft, Dial Drive
37	39001-17	Condenser, .05 mfd., 600 v., paper		39441	Socket, Tube
39	39001-17	Condenser, .05 mfd., 600 v., paper		D-136565-16	Socket, Dial Light
40	39001-73	Condenser, .00025 mfd., 600 v., paper		W-51752	Spring, Dial Drive Cord
41	39001-7	Condenser, .001 mfd., 600 v., paper		W-138568	Strip, Dial Pointer
42	39001-13	Condenser, .01 mfd., 600 v., paper		W-134916	Washer, Spring (Drive Shaft)
44A	B-136596	Cond'r., 50 mfd., 300 v. } Two section			
44B		Cond'r., 30 mfd., 300 v. } Elect. Filter			

REPLACEMENT CABINET PARTS—MODEL 9-209

144152	Baffle, Speaker	137266	Hinge, Door
143485	Bumper (Rubber), Doors	144143	Panels (Front), Drawer and Radio Door
139319-SB	Catch & Strike Assy., Doors		
B-144173	Decal	144151	Pull (Handle), Drawer and Radio Door
144150	Drawer Frame Assy.,		
144169	Grille Cloth	143478	Slides, Drawer

REPLACEMENT CABINET PARTS—MODEL 9-212M

144183	Panels (Front), Drawer and Radio Door

DESCRIPTION

TYPE: Six-tube, single band, superheterodyne.

FREQUENCY RANGE: 540 to 1600 kc.

INTERMEDIATE FREQUENCY: 455 kc.

POWER SUPPLY: 60 cycle a. c. only

VOLTAGE RATING: 105-125 volts.

POWER CONSUMPTION: 50 watts nominal.
Phono 20 watts additional.

POWER OUTPUT: 2.5 watts maximum

TUBE COMPLEMENT:

TYPE	FUNCTION
7A7	R. F. Amplifier
7Q7	Converter
7A7	I. F. Amplifier
7B6	Detector, AVC, 1st A. F. Amplifier
7B5	A. F. Power Output
5AZ4	Rectifier

DIAL BULB: Type 47, 6.3 volts, .15 amp.

MODELS 9-121,
9-122W

CROSLEY DIV.
AVCO MFG. CORP.

SCHEMATIC DIAGRAM
Using 50B5 tube

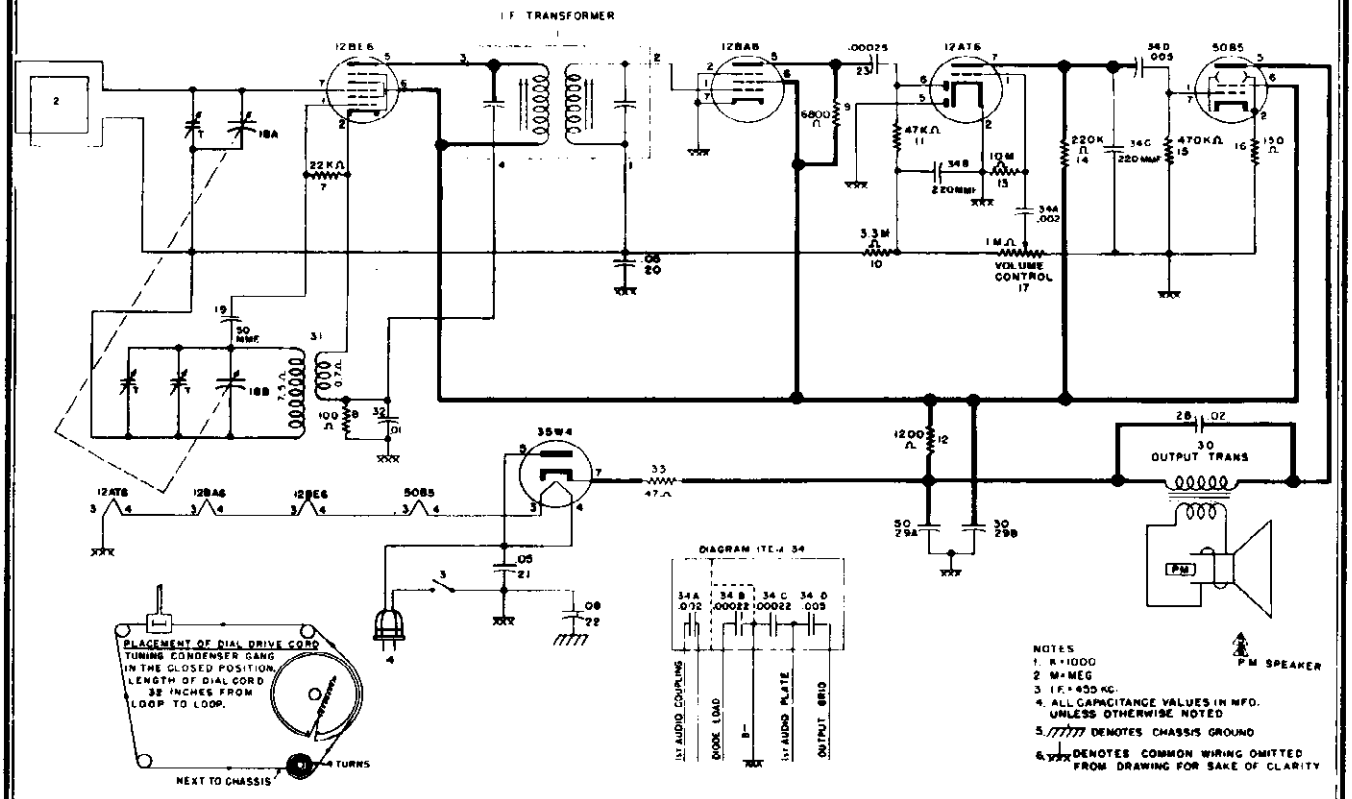

SCHEMATIC DIAGRAM
Using 50C5 tube

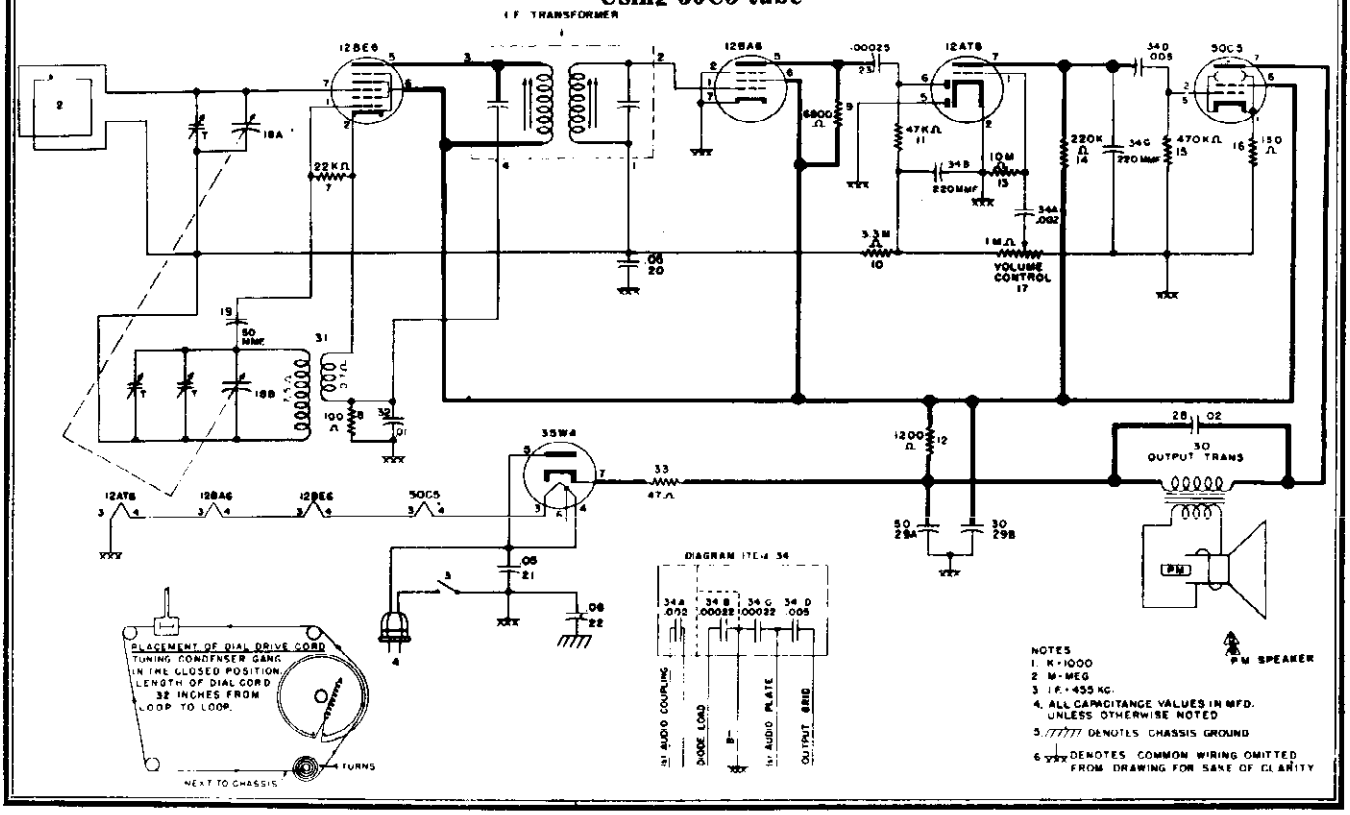

CROSLEY DIV.
AVCO MFG. CORP.

MODELS 9-121,
9-122W

NOTES:
1. BOTTOM VIEW OF TUBE SOCKETS.
2. VOLTAGE MEASURED WITH AN ELECTRONIC VOLTMETER FROM SOCKET LUG TO B-.(PIN 7 ON 12BA6)
3. LINE VOLTAGE 117V. 60 CYCLE.
4. NC=NO CONNECTION.
5. W. J.=WIRING JUNCTION.
6. * = AC. VOLTAGE.
7. SOCKET VOLTAGE TOLERANCE. 10%

I.F AMPLIFIER

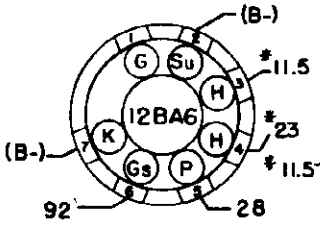

DET. AVC. 1ST AUDIO AMPL.

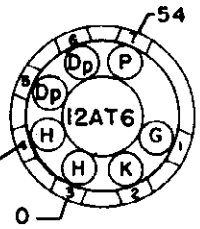

RECTIFIER

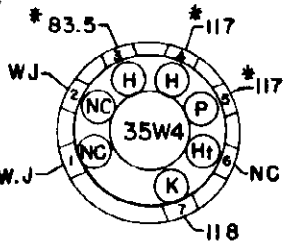

CONVERTER

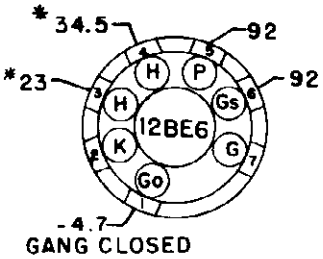

OUTPUT

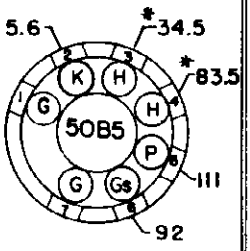

SOCKET VOLTAGE CHART

Using 50B5 tube

NOTES:
1. BOTTOM VIEW OF TUBE SOCKETS.
2. VOLTAGE MEASURED WITH AN ELECTRONIC VOLTMETER FROM SOCKET LUG TO B-.(PIN 7 ON 12BA6)
3. LINE VOLTAGE 117V. 60 CYCLE.
4. NC=NO CONNECTION.
5. W. J.=WIRING JUNCTION.
6. * = AC. VOLTAGE.
7. SOCKET VOLTAGE TOLERANCE. 10%

I.F AMPLIFIER

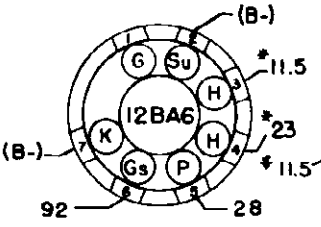

DET. AVC. 1ST AUDIO AMPL.

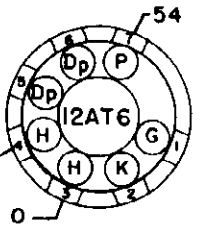

RECTIFIER

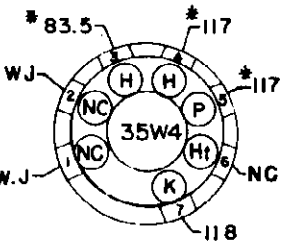

CONVERTER

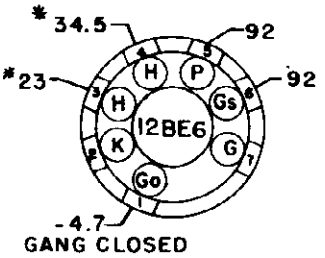

OUTPUT

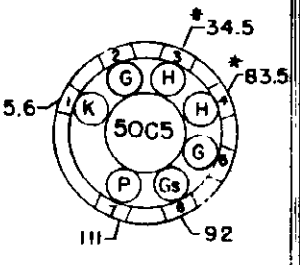

SOCKET VOLTAGE CHART

Using 50C5 tube

When using direct current it may be necessary to reverse the position of the power plug in the electric outl for correct polarity.

Reversing the position of the power plug when alternating current is used may reduce power hum.

Under no circumstances should a ground be connected to this receiver.

©John F. Rider

ALIGNMENT PROCEDURE

1. Turn the tuning condenser to the completely closed position against the stop and set the dial pointer to the reference line at the end of the dial scale.

2. Connect the output meter across the speaker voice coil.

3. The r. f. signal input from the signal generator should be connected to the external antenna clip. Connect the signal generator ground through a 0.1 mfd. condenser to B—(pin 7 on 12BA6 tube socket).

4. Turn the volume control on full and adjust the signal generator output to produce approximately mid-scale deflection of the output meter, but maintain signal generator output as low as possible to prevent AVC action in the receiver.

ALIGNMENT CHART

Alignment Sequence	Signal Generator Output			Position of Dial Pointer or Tuning Gang	Adjust for Maximum Output
	Frequency in kc.	In Series with	To		
1	455	.1 mfd.	To Loop	Open	A
2	1620	.1 mfd.	To Loop	1620	B
3	1400	.1 mfd.	To Loop	1400	C

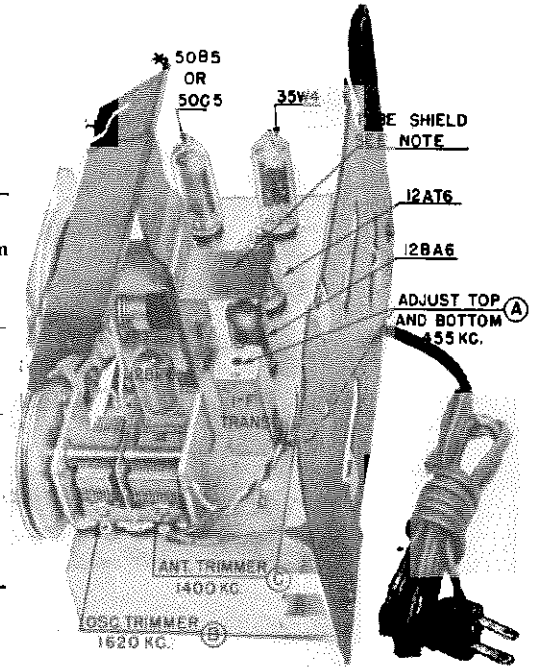

* NOTE:
RECEIVERS WITH TUBE SHIELD USE 5085 TUBE
RECEIVERS WITHOUT TUBE SHIELD USE 5005 TUBE

CHASSIS TOP VIEW

Note:
On some receivers, the tube shield that is attached to the speaker bracket is omitted.

CROSLEY DIV.
AVCO MFG. CORP.

MODELS 9-121, 9-122W

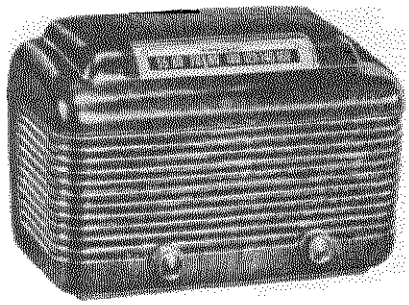

9-121

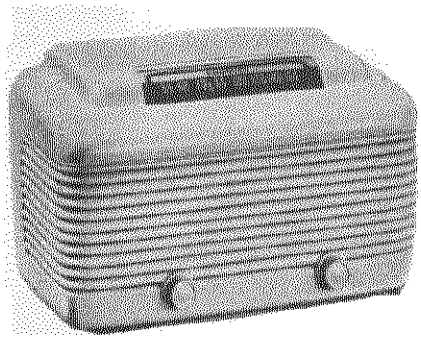

9-122W

DESCRIPTION

TYPE: Five-tube, single band, Superheterodyne.

FREQUENCY RANGE: 540 to 1600 kc.

INTERMEDIATE FREQUENCY: 455 kc.

POWER SUPPLY: a.c.—d.c.

VOLTAGE RATING: 105-125 volts.

POWER CONSUMPTION: 35 watts.

POWER OUTPUT: 1.5 watts maximum.

TUBE COMPLEMENT:

Type	Function
12BE6	Mixer
12BA6	I. F. Amplifier
12AT6	Detector, AVC, 1st A. F. Amplifier
50B5 or 50C5	A. F. Power Output
35W4	Rectifier

Item No.	Part No.	Description	Item No.	Part No.	Description
1	C-139919	Transformer, I.F.	30	138131-1	Transformer, Output
2	AC-144328	Loop Antenna & Back Assy.	31	AW-144325	Coil Assy., Oscillator
3	39369-1	Switch, Power	32	39001-13	Condenser, .01 mfd., 600 v., paper
4	C-142769-1	Cable & Plug Assy., Power	33	39373-119	Resistor, 47 ohm, 1 w.
5	139631	Speaker	34A	B-144675-1	Condenser,.002 mfd., 500 v. } Four
7	39373-60	Resistor, 22,000 ohm, ½ w.	34B		Condenser,.00022 mfd., 500 v. } Four
8	39373-14	Resistor, 100 ohm, ½ w.	34C		Condenser,.00022 mfd., 500 v } Sect.
9	39373-161	Resistor, 6,800 ohm, 1 w.	34D		Condenser,.005 mfd., 500 v. } Sect.
10	39373-100	Resistor, 3.3 megohm, ½ w.		AB-143318	Background & Bracket Assy., Dial
11	39373-67	Resistor, 47,000 ohm, ½ w.		R-144015-2	Cabinet (9-121)
12	39373-144	Resistor, 1200 ohm, 1 w.		AW-143988	Cabinet (9-122W)
13	39373-107	Resistor, 10 megohm, ½ w.		W-139784	Clip, Spring (Cabinet Back)
14	39373-80	Resistor, 220,000 ohm, ½ w.		C-144175	Dial Glass
15	39373-87	Resistor, 470,000 ohm, ½ w.		B-138540-1	Knob (9-121)
16	39373-16	Resistor, 150 ohm, ½ w.		B-138540-2	Knob (9-122W)
17	39368-14	Control, Volume (1 meg.)		B-144162	Pointer, Dial
18A	AC-137073-15	Condenser, Variable } Two Section		W-51071	Ring, Retaining (Drive Shaft)
18B		Condenser, Variable } Two Section		39220-28CP	Screw, Chassis Mtg.
19	C-137727-21	Condenser, 50 mmf., 500 v. ceramic		B-135075-2	Shaft, Dial Drive
20	39001-17	Condenser, .05 mfd., 600 v., paper		W-46065	Shock Mount (Rubber), Var. Cond. Mt
21	39001-17	Condenser, .05 mfd., 600 v., paper		39462-1	Socket, Tube
22	39001-19	Condenser, .1 mfd., 600 v., paper		W-51752	Spring, Dial Drive Cord
23	39001-73	Condenser, .00025 mfd., 600 v., paper		B-144135	Spring, Retaining (Dial Glass)
28	39001-80	Condenser, .02 mfd., 600 v., paper		W-134916	Washer, Spring (Drive Shaft)
29A	B-136770	Condenser, 50 mfd., 150 v. } Two Section			
29B		Condenser, 30 mfd., 150 v. } Elect. Filter			

MODELS 9-209L, 9-212ML, 9-213B

CROSLEY DIV.
AVCO MFG. CORP.

REVISED MODELS 9-209, 9-212M

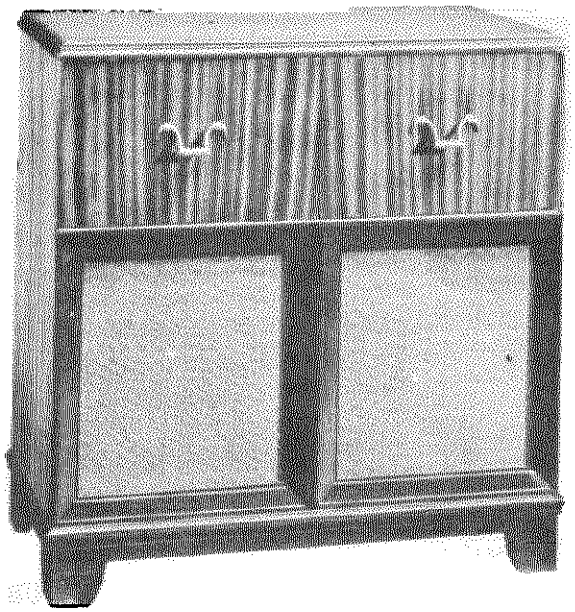

Models 9-209, 9-209L (Walnut) Models 9-212M, 9-212ML (Mahogany) Model 9-213B (Blond)

DESCRIPTION

TYPE: Six-tube, single band, superheterodyne.

FREQUENCY RANGE: 540 to 1600 kc.

INTERMEDIATE FREQUENCY: 455 kc.

POWER SUPPLY: 60 cycle a. c. only

VOLTAGE RATING: 105-125 volts.

POWER CONSUMPTION: 50 watts nominal.
Phono 20 watts additional.

POWER OUTPUT: 2.5 watts maximum

TUBE COMPLEMENT:

TYPE	FUNCTION
7A7	R. F. Amplifier
7Q7	Converter
7A7	I. F. Amplifier
7B6	Detector, AVC, 1st A. F. Amplifier
7B5	A. F. Power Output
5AZ4	Rectifier

DIAL BULB: Type 47, 6.3 volts, .15 amp.

SOCKET VOLTAGE CHART

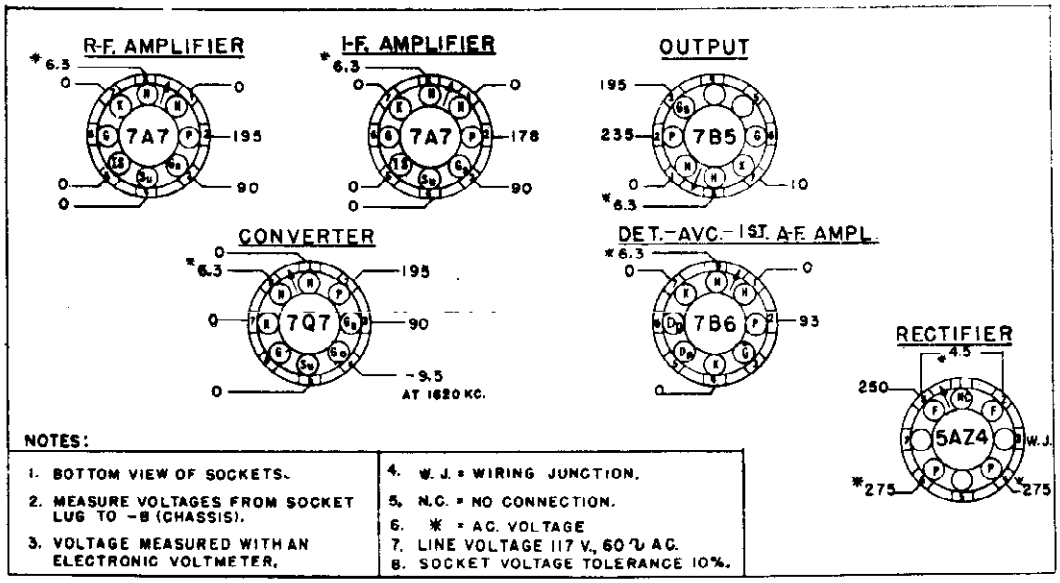

NOTES:

1. BOTTOM VIEW OF SOCKETS.
2. MEASURE VOLTAGES FROM SOCKET LUG TO -B (CHASSIS).
3. VOLTAGE MEASURED WITH AN ELECTRONIC VOLTMETER.
4. W. J. = WIRING JUNCTION.
5. N.C. = NO CONNECTION.
6. * = A.C. VOLTAGE
7. LINE VOLTAGE 117 V., 60 ~ A.C.
8. SOCKET VOLTAGE TOLERANCE 10%.

REVISED MODELS
9-209, 9-212M

CROSLEY DIV.
AVCO MFG. CORP.

MODELS 9-209L,
9-212ML, 9-213B

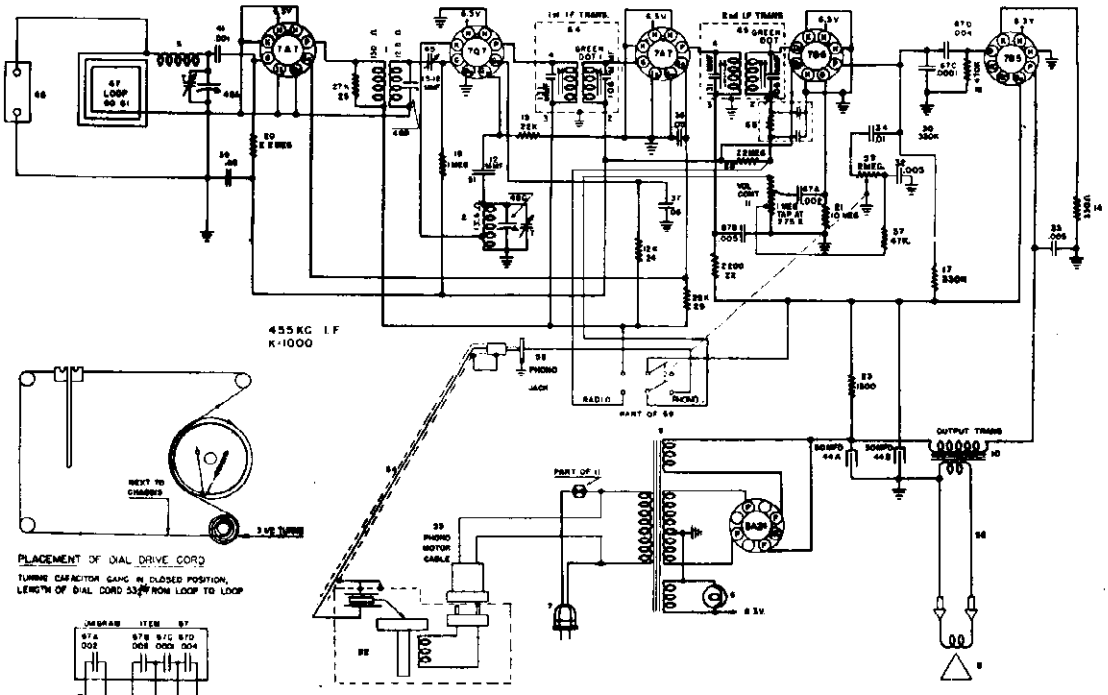

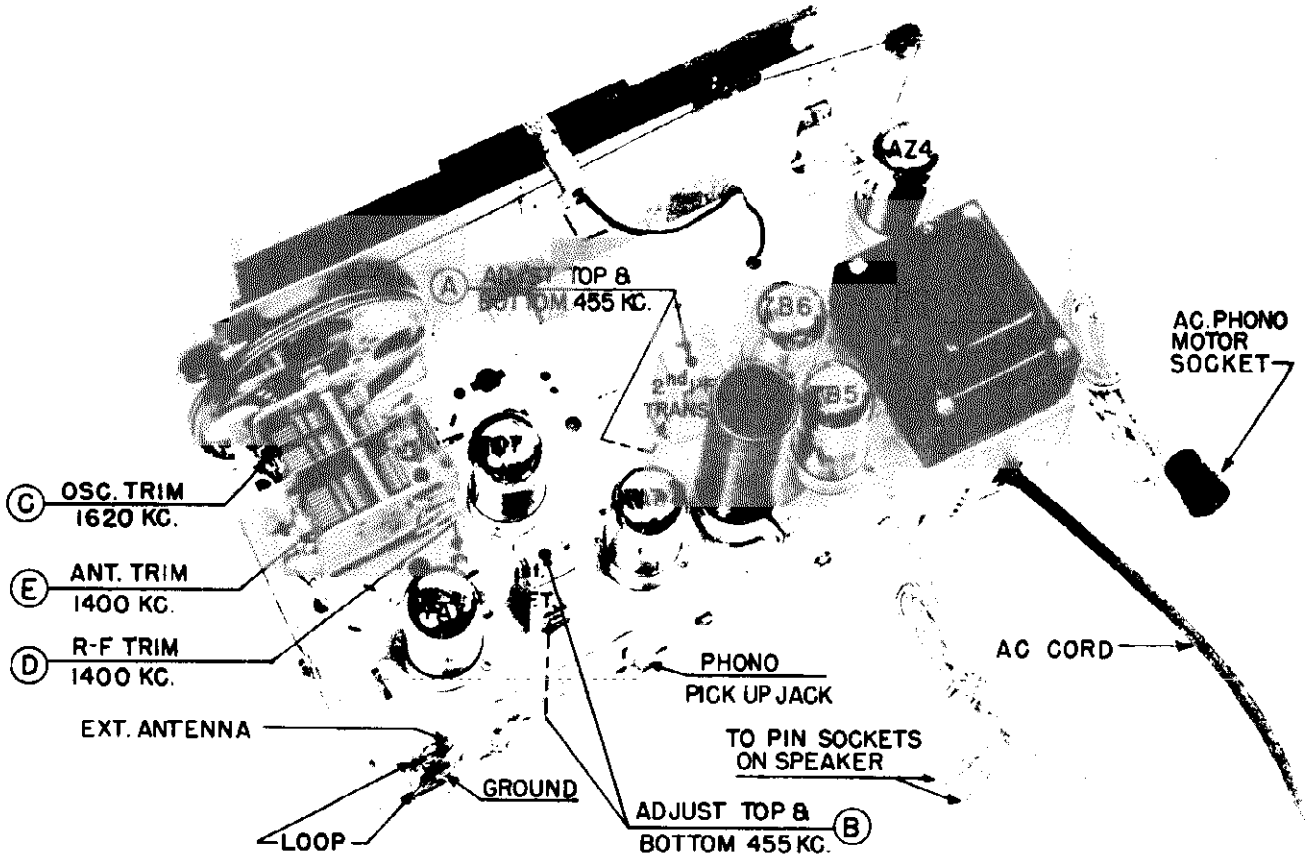

© John F. Rider

ALIGNMENT PROCEDURE

1. Turn the tuning condenser to the completely closed position against the stop and set the dial pointer to the reference line at the low frequency end of the dial scale.
2. Turn the selector switch to radio position (extreme left).
3. Connect the output meter across the speaker voice coil.
4. The r.f. signal input from the signal generator should be connected through a condenser as indicated in the alignment chart. Connect the signal generator ground to the receiver chassis.

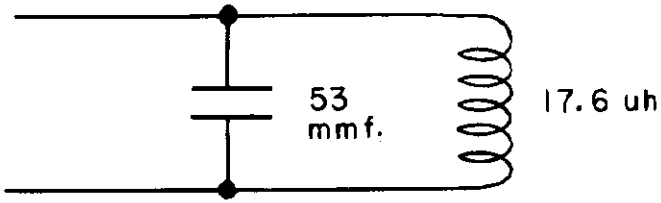

Fig. 1

5. Turn the volume control on full and adjust the signal generator output to produce approximately midscale deflection of the output meter, but maintain signal generator output as low as possible to prevent AVC action in the receiver.
6. Loop antenna must remain connected at all times or replaced by dummy antenna consisting of a coil with 17.6 uh inductance shunted with a 53 mmf. condenser. See Fig. 1.

ALIGNMENT CHART

Alignment adjustments are shown in "CHASSIS, REAR VIEW," page 2.

Alignment Sequence	Signal Generator Output			Position of Tuning Dial or Var. Cond.	Adjust for Maximum Output
	Frequency in KC	In Series with	To		
1	455	.05 mfd.	Pin 6 7Q7	open	A & B
2	1620	15 mmf.	Top Ant. Clip	open 1620	C
3	1400	15 mmf.	Top Ant. Clip	1400	D
4	1400	15 mmf.	Top Ant. Clip	1400	E
5	1400	15 mmf.	Top Ant. Clip	1400	Rock var. cond. and repeat 3 & 4

CROSLEY DIV.
AVCO MFG. CORP.

MODELS 9-209L,
9-212ML, 9-213
REVISED MODELS
9-209, 9-209M

REPLACEMENT PARTS LIST

Figures in first column correspond to figures in Schematic Diagram.

Item No.	Part Number	Description
1	AW-137800	Coil, R. F.
2	AW-137724	Coil, Oscillator
5	AW-139604	Coil, Antenna Loading (7.5 ohm)
*5	AW-145468	Coil, Antenna Loading (8.6 ohm)
6	138437-1	Bulb (Dial), Type 47, 6.3 v., .15 amp.
7	C-132300-1	Cable and Plug Assy., Power
8	138762-5	Speaker
9	135102	Transformer, Power
10	138131-2	Transformer, Output
11	39368-18	Control, Volume (1 meg., Tap at 300,000 ohm)
	39369-1	Switch, power
	39370-2	Shaft, Volume Control (plug-in)
14	39373-23	Resistor, 330 ohm, ½ w.
15	39373-60	Resistor, 22,000 ohm, ½ w.
17	39373-84	Resistor, 330,000 ohm, ½ w.
18	39373-87	Resistor, 470,000 ohm, ½ w.
19	39373-92	Resistor, 1 megohm, ½ w.
20	39373-97	Resistor, 2.2 megohm, ½ w.
21	39373-107	Resistor, 10 megohm, ½ w.
22	39373-40	Resistor, 2200 ohm, ½ w.
23	39372-7	Resistor, 1500 ohm, 10 w.
24	39374-214	Resistor, 12,000 ohm, 1 w.
25	39373-62	Resistor, 27,000 ohm, ½ w.
28	39373-97	Resistor, 2.2 megohm, ½ w.
29	39373-60	Resistor, 22,000 ohm, ½ w.
32	39001-11	Capacitor, .005 mfd., 600 v., paper
33	39001-11	Capacitor, .005 mfd., 600 v., paper
34	39001-13	Capacitor, .01 mfd., 600 v., paper
36	39001-17	Capacitor, .05 mfd., 600 v., paper
37	39001-17	Capacitor, .05 mfd., 600 v., paper
39	39001-17	Capacitor, .05 mfd., 600 v., paper
41	39001-7	Capacitor, .001 mfd., 600 v., paper
44A	B-136596	Cap., 50 mfd., 300 v. (Two Section
44B		Cap., 30 mfd., 300 v. (Elect. Filter
45	W-132267-1	Capacitor, Trimmer
46	AB-138584	Terminal Board
47	AW-144042	Loop Antenna
**47	39426-2	Loop Antenna (No. 22 wire, 144" long)
48A	B-137972	Capacitor, Variable } Three
48B		Capacitor, Variable } Section
48C		Capacitor, Variable }
51	C-137727-52	Capacitor, 12 mmf., 500 v., ceramic
52	D-144489	Record Changer (9-209, 9-212M, 9-213B
52	D-145113	Record Changer (9-209L, 9-212ML
53	B-139727-6	Cable and Plug Assy., Phono Motor
54	AW-143496	Cable & Plug Assy., (Shielded), Phono
55	W-136998	Jack, Phono
56	AW-143361	Cable and Pins, Speaker
57	39373-67	Resistor, 47,000 ohms, ½ w.
59	B-144346	Control, Tone (2 Megohm) & Radio-Phono Switch
64	AC-139919-3	Transformer, 1st. I. F.
65	AC-139919-3	Transformer, 2nd. I. F.
66	B-142951-2	Capacitor-Resistor
67A	B-144675-8	Capacitor, .002 mfd., 500 v. } Four
67B		Capacitor, .005 mfd., 500 v. } Four
67C		Capacitor, 100 mmf., 500 v. } Sect.
67D		Capacitor, .004 mfd., 500 v. }
	AB-143417	Background Assy., Dial
	W-139477-1	Button, Loop Ant. Mtg. (4 required)
	W-139477-2	Button, Loop Ant. Mtg. (1 required)
	R-144134	Cabinet (9-209, 9-209L)
	R-144182	Cabinet (9-212M, 9-212ML)
	R-144806	Cabinet (9-213B)
	W-136201	Clip, Dial Glass
	C-143384	Dial Glass
	C-144785	Escutcheon
	W-134055	Grommet, Var. Capacitor Mtg.
	B-144349-1	Knob (9-209, 9-212M, 9-209L, 9-212ML)
	B-144349-2	Knob (9-213B)
	B-143407	Pointer, Dial
	W-137939-1	Pulley, Dial Drive Idler
	W-51071	Ring, Drive Shaft retaining
	W-45580	Rubber Mtg., Speaker
	W-144498	Screw, Escutcheon Mtg.
	B-135075-5	Shaft, Dial Drive
	39441	Socket, Tube
	D-136565-16	Socket, Dial Light
	W-51752	Spring, Dial Drive Cord
	W-138568	Strip, Dial Pointer
	W-134916	Washer, Spring (Drive Shaft)

REPLACEMENT CABINET PARTS

	144152	Baffle, Speaker
	143485	Bumper (Rubber), Door
	139319-SB	Catch & Strike Assy., Door
	B-144173	Decal
	144150	Drawer Frame Assy. (9-209, 9-209L, 9-212M, 9-212ML)
	144810	Drawer Frame Assy. (9-213B)
	144169	Grille Cloth (9-209, 9-209L, 9-212M, 9-212ML)
	144811	Grille Cloth (9-213B)
	145173	Hinge, Door
	144149	Panels (Front), Drawer and Radio Door (9-209, 9-209L)
	144183	Panels (Front), Drawer and Radio Doo (9-212M, 9-212ML)
	144812	Panels (Front), Drawer and Radio Door (9-213B)
	144161	Pull (Handle), Drawer and Radio Door (9-209, 9-212M, 9-209L, 9-212ML)
	144809	Pull (Handle), Drawer and Radio Door (9-213B)
	143478	Slides, Drawer

*Used on sets equipped with single turn wire loop antenna (Item 47) mounted with staples.

**Used on sets equipped with loading coil AW-145468 (Item 5).

© John F. Rider

MODELS 9-214M,
9-214ML

CROSLEY DIV.
AVCO MFG. CORP.



DESCRIPTION

TYPE: Eleven tube, two-band superheterodyne.
FREQUENCY RANGE: Standard Broadcast Band:
540 to 1600 kc. (Selector switch at AM position).
FREQUENCY MODULATION BAND: 88 to 108 mc.
Channels 201 to 300.
(Selector switch at FM position).
INTERMEDIATE FREQUENCY: AM Band: 455 kc. FM Band: 10.7 mc.
POWER SUPPLY: 60 cycle a. c.
VOLTAGE RATING: 105-125 volts.
POWER CONSUMPTION: 90 watts.
20 watts additional for record changer.
POWER OUTPUT: 7 watts maximum.

TUBE COMPLEMENT

Type	Function
6SG7	R.F. Amplifier
7F8	Oscillator
6AC7	Mixer
6SG7	I.F. Amp., A.M. & F.M.
6SG7	2nd I.F. Amp. F.M.
6AL5	Ratio Det. F.M.
6SQ7	Det.—AVC. A.M. 1st A.F. Amp., A.M. & F.M.
6SQ7	Phase Inverter
6V6GT/G (2)	Push Pull Output
5Y3GT/G	Rectifier

DIAL BULBS: Type 47, 6.3 v., .15 amp.

NOTE:
Model 9-214M uses Model 700F automatic record changer (Part No. 144489).
See service sheet No. 364 for service information and parts list.
Model 9-214ML uses Model 700FLP automatic record changer (Part No. 145113).
See Service Bulletin No. 375 for service information and parts list.

CROSLEY DIV.
AVCO MFG. CORP.

MODELS 9-214M,
9-214ML

CHASSIS TOP VIEW

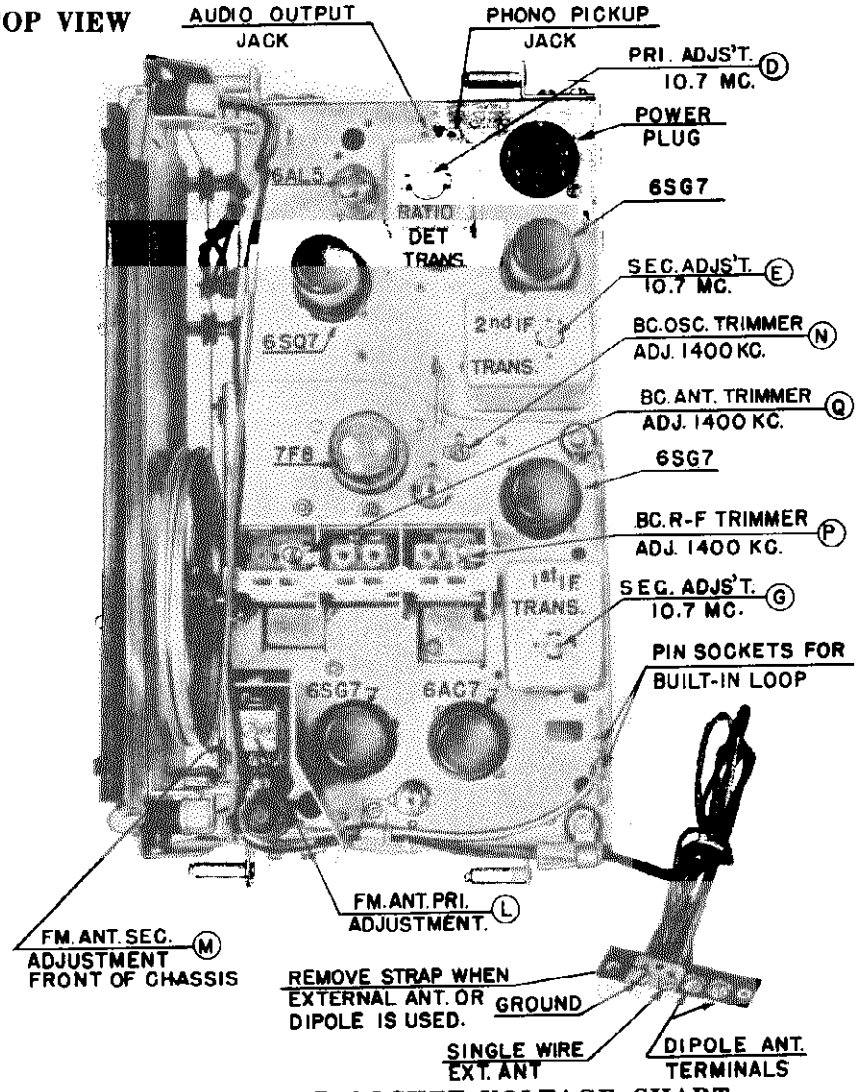

RECEIVER SOCKET VOLTAGE CHART

(See Socket Voltage Notes, Page 3)

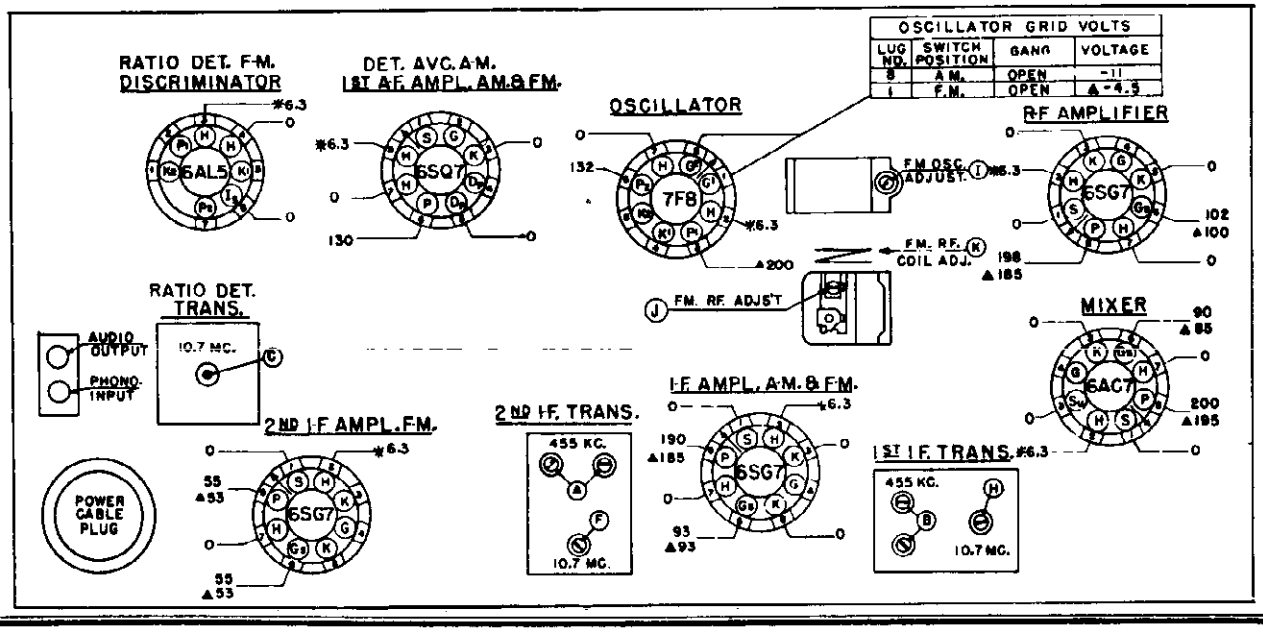

©John F. Rider

MODELS 9-214M.
9-214ML

CROSLEY DIV.
AVCO MFG. CORP.

SOCKET VOLTAGE NOTES

1. Bottom view of Sockets.
2. Voltage measured from Socket Lug to Chassis with an Electronic Voltmeter.
3. Voltage measured with Switch in BC position except where marked with delta(▲)
4. ▲=Selector Switch in F.M. position.
5. W.J.=Wiring Junction.
   N.C.=No Connection.
   *=A.C. Voltage.
6. All Voltages taken at Nominal Operating Voltage 117 V., 60 cycles.
7. Socket Voltage Tolerance ± 10%.

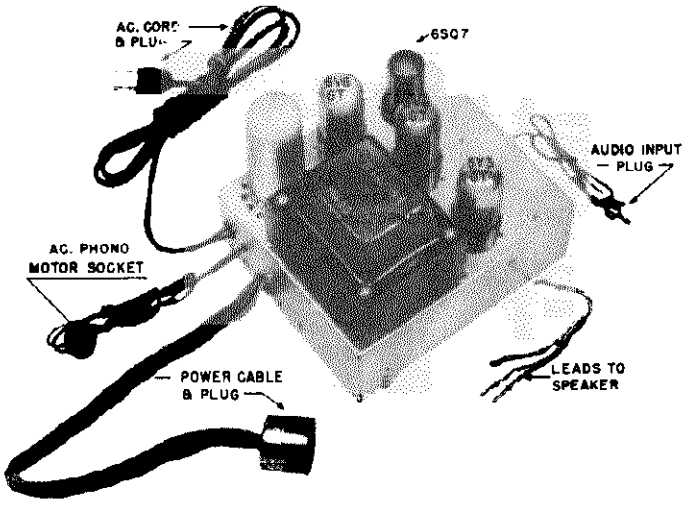

TOP VIEW—MODELS 9-214M, 9-214ML
POWER SUPPLY AND AMPLIFIER CHASSIS,

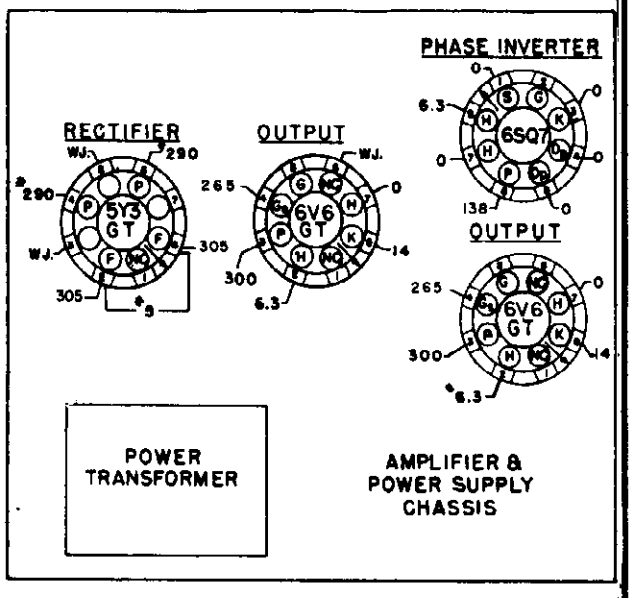

ALIGNMENT PROCEDURE

NOTE:

This receiver has been aligned at the factory for best performance, and no attempt should be made to re-align it unless the proper test equipment is available.

1. Turn the tuning condenser to full mesh, against stop, and set the dial pointer at the edge of the clear section of the dial, left of "55."
2. Connect an output meter across the voice coil of the speaker (3.2 ohms).
3. Feed an R.F. amplitude modulated signal modulated 30% at 400 cycles to the receiver as indicated in the alignment procedure chart. Connect signal generator ground terminal to the chassis of the receiver. When F.M. generator is used, a 30% modulated signal is equal to a deviation of 22.5 kc.
4. Turn the volume control knob to maximum clockwise position and adjust the signal generator output to produce a noticeable output meter reading. Keep the signal generator output as low as possible to prevent excessive AVC action in the receiver.
5. Set the tone control for maximum treble response.
6. When aligning the broadcast band, the built-in loop antenna or a suitable dummy antenna, consisting of a coil with 19.1 u h. inductance shunted with a 66 mmf. capacitor must be used.
7. While aligning the set, the shorting link on the antenna terminal strip should be removed. After alignment replace the link, unless an external antenna is to be used.

© John F. Rider

CROSLEY DIV.
AVCO MFG. CORP.
ALIGNMENT CHART I (SCOPE METHOD)

MODELS 9-214M
9-214ML

Alignment Sequence	Signal Gen. Output		To	Position of		Adjust	Curve	Remarks
	Frequency	In Series With		Range Switch	Tuning Dial or Tun. Cap.			
1	455 KC	.01 mfd.	1st I.F. grid	AM	Gang open	A		Note 1
2	455 KC	.01 mfd.	Stator 21 plate sect. rear of gang	AM	Gang open	B		Note 1
3	10.7 MC	1000 mmf.	2nd I.F. grid	FM	Gang closed	C	Zero Volts	Note 2
4	10.7 MC	1000 mmf.	2nd I.F. grid	FM	Gang closed	D	Max. D.C. output	Note 3
5	RF sweep 10.7 marker	1000 mmf.	1st I.F. grid	FM	Gang closed	E & F		Align for max. output & symmetry Note 4
6	RF sweep 10.7 marker	1000 mmf.	Stator 3 plate sect. rear of gang	FM	Gang closed	G & H		Align for max. output & symmetry Note 5
7	FM-RF 98MC	FM dummy antenna	Dipole Ant. Term.	FM	98MC	I	Peak	Note 6
8	104MC	FM dummy antenna	Dipole Ant. Term.	FM	104MC	J	Peak	Note 7
9	92MC	FM dummy antenna	Dipole Ant. Term.	FM	92MC	Form R.F. Coil "K"	Peak	Note 8
10	Repeat steps 8 and 9 until no further improvement in sensitivity is noted.							
11	FM sweep Gen. 92-98-104 MC markers	FM dummy antenna	Dipole Ant. Term.	FM	Gang closed	L & M		Note 9 or 9a
12	AM-RF Gen. 1400 KC	200 mmf.	BC Ant. Term. and ground	AM	1400 KC	N		Note 10
13	AM-RF Gen. 1400 KC	200 mmf.	BC Ant. Term. and ground	AM	1400 KC	P & Q		Note 1 & Note 10

NOTES:

1. Align for peak on output meter.
2. Connect two 100,000 ohm resistors in series and connect these resistors from the No. 2 lug of the 6AL5 tube socket to the chassis. Connect an electronic voltmeter from the center of these resistors to the shielded lead junction of the 39,000 ohm resistor (75) and the .002 mfd capacitor, (33). Adjust the ratio detector transformer secondary (C) for zero volts on the electronic voltmeter. Remove the two 100,000 ohm resistors.
3. Connect the electronic voltmeter across the 27,000 ohm load resistor (93) and adjust primary of core (D) of the ratio detector transformer (8) for maximum D.C. output.
4. Connect output of marker generator across sweep generator output. Connect CRO across the 22,000 ohm resistor (72) in the grid circuit of the second I.F. amplifier.
5. CRO connections same as note 4.
6. For dummy antenna see figure 1.
7. Rock gang capacitor if necessary while making adjustment.
8. Tune in signal and adjust for greatest sensitivity by forming FM.—R.F. coil.
9. Connect CRO in series with 100,000 ohm resistor to grid (pin 4) of R.F. amplifier and chassis. Remove 7F8 oscillator tube. Connect output of marker generator across output of sweep generator. Adjust (L-M) until pattern and markers approximate figure in alignment chart.

9a. Shunt primary of FM antenna transformer with a 10 ohm carbon resistor and adjust (M) for maximum output. Remove shunt and place it across FM antenna transformer secondary and adjust (L) for maximum output. Remove shunt.

10. Connect BC. dummy loop (Fig. 2) across loop terminals on rear of chassis.

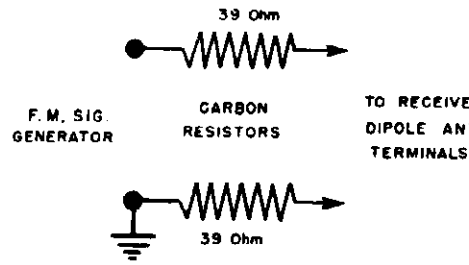

FIG. 1

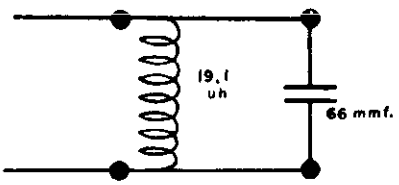

FIG. 2

MODELS 9-214M, 9-214ML

CROSLEY DIV.
AVCO MFG. CORP.

ALIGNMENT CHART II

(Using output meter and electronic voltmeter)

Alignment Sequence	Signal Gen. Output		To	Position of		Adjust	Remarks
	Frequency	In Series With		Range Switch	Tuning Dial or Tun. Cap.		
1	455 KC	.01 mfd.	1st I.F. grid	AM	Gang open	A	Align for peak on output meter.
2	455 KC	.01 mfd.	Stator 21 plate sect. rear of gang	AM	Gang open	B	Align for peak on output meter.
3	10.7 MC	1000 mmf.	2nd I.F. grid	FM	Gang closed	C	Adjust for zero volts on electronic voltmeter Note 1 & 2.
4	10.7 MC	1000 mmf.	2nd I.F. grid	FM	Gang closed	D	Adjust for max. D.C. output on Elect. voltmeter Note 3.
5	10.7 MC	1000 mmf.	1st I.F. grid	FM	Gang closed	E & F	Adjust for max. D.C. output Note 4.
6	10.7 MC	1000 mmf.	Stator 3 plate sect. rear of gang	FM	Gang closed	G & H	Adjust for max. D.C. output Note 4.
	Repeat steps 3 and 4, 5 and 6 if necessary.						
7	98 MC	FM dummy antenna	Dipole Ant. Terminals	FM	98 MC	I	Adjust for max. reading on output meter.
8	104 MC	FM dummy antenna	Dipole Ant. Terminals	FM	104 MC	J	Adjust for max. reading on output meter, rock gang if necessary while making adjustments.
9	92 MC	FM dummy antenna	Dipole Ant. Terminals	FM	92 MC	K	Adjust for max. sensitivity, the inductance of FM.RF. coil "K" by forming.
	Repeat steps 8 and 9 until no further improvement in sensitivity is noted.						
10	98 MC	FM dummy antenna	Dipole Ant. Terminals	FM	98 MC	L & M	See Note 5.
11	AM-RF Gen. 1400 KC	200 mmf.	BC Ant. Term.	AM	1400 KC	N	See Note 6.
12	AM-RF Gen. 1400 KC	200 mmf.	BC Ant. Term. and ground	AM	1400 KC	P & Q	Note 6. Adj. for max. reading on output meter.

NOTES:

1. Use an unmodulated signal generator, with approximately 100,000 mv. output.
2. Connect two 100,000 ohm resistors in series and connect these resistors from the No. 2 lug of the 6AL5 to the chassis. Connect an electronic voltmeter from the center of these resistors to the shielded lead junction of the 39,000 ohm resistor (75) and the .002 mfd. capacitor, (33). Adjust the ratio detector transformer secondary (C) for zero volts on the electronic voltmeter. Remove the two 100,000 ohm resistors.
3. Connect the electronic voltmeter across the 27,000 ohm load resistor (93) and adjust the primary of the core (D) of the ratio detector transformer (8) for maximum D. C. output.
4. Limit output of signal generator so that the reading on the electronic voltmeter will not exceed 4 volts.
5. Shunt the FM antenna transformer primary with a 10 ohm carbon resistor, and adjust the FM antenna secondary trimmer (M) for maximum output meter reading. Transfer the 10 ohm shunt to the secondary of FM antenna transformer. Adjust FM antenna primary trimmer (L) for maximum output meter reading. Remove the 10 ohm shunt resistor.
6. Connect the BC dummy loop antenna across the loop terminals on the rear of the chassis (see Figure 2,

CROSLEY DIV.
AVCO MFG. CORP.

MODELS 9-214M,
9-214ML

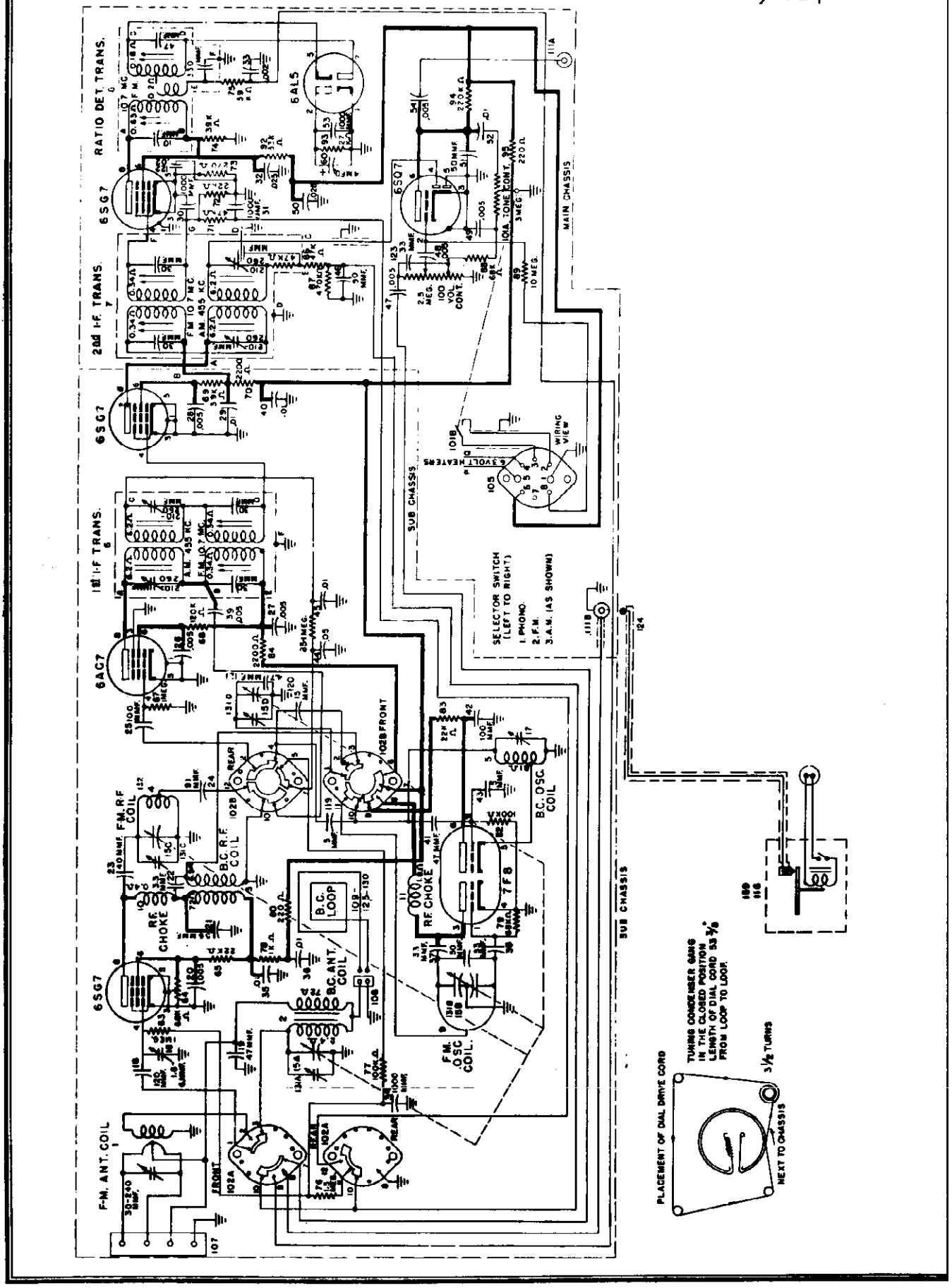

MODELS 9-214M,
9-214ML

CROSLEY DIV.
AVCO MFG. CORP.

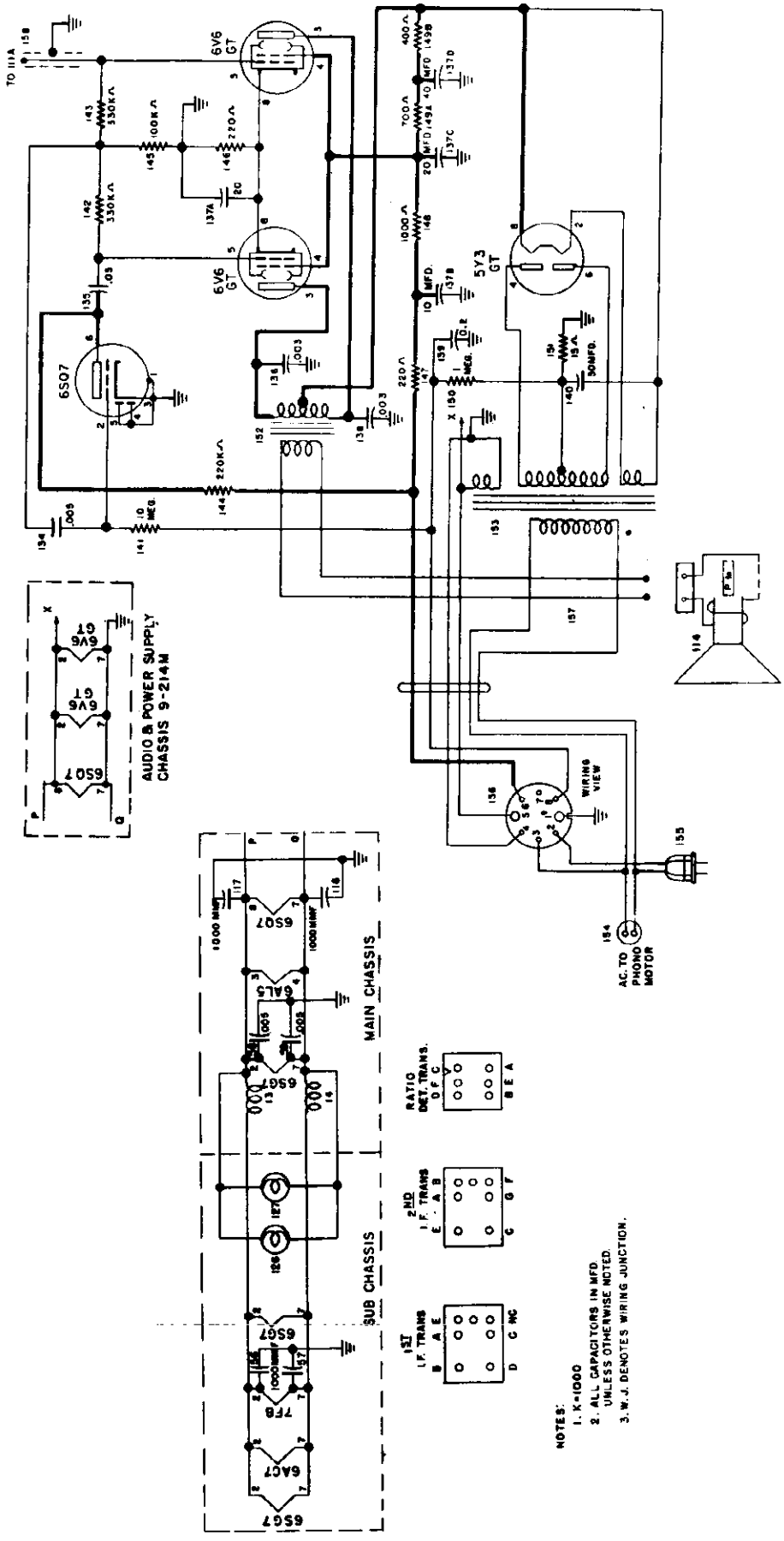

©John F. Rider

CROSLEY DIV.
AVCO MFG. CORP.
REPLACEMENT PARTS LIST, MODELS—9-214M, 9-214ML

MODELS 9-214M, 9-214ML

Figures in first column correspond to figures in Schematic Diagram

Item No.	Part Number	Description
1	AB-143784	Transformer, Antenna (F.M.)
2	AW-143267	Coil, Antenna Loading
3	AW-143402	Transformer, R.F. (B.C.)
4	AW-143646	Coil, R.F. (F.M.)
5	AW-143945	Coil, Oscillator (B.C.)
6	AC-143090	Transformer, 1st I.F.
7	AC-143105	Transformer, 2nd I.F.
8	AC-143378	Transformer, Ratio Detector
9	AC-143305	Coil, Oscillator (F.M.)
10	AW-143752	Choke, R.F.
11	AW-143837	Choke, R.F.
13	AW-143934	Choke, R.F. Heater
14	AW-143934	Choke, R.F. Heater
15A	C-142848	Capacitor, Variable } Four
15B		Capacitor, Variable } Section
15C		Capacitor, Variable }
15D		Capacitor, Variable }
16	C-136327-43	Capacitor, Trimmer
17	W-143014	Capacitor, Trimmer
18	C-137727-12	Capacitor, 120 mmf., 300 v., Ceramic
19	C-137727-31	Capacitor, 47 mmf., 300 v., Ceramic
20	39001-11	Capacitor, .005 mfd., 600 v., Paper
21	C-137727-45	Capacitor, 56 mmf., 500 v., Ceramic
22	W-137398-5	Capacitor, 3.3 mmf., 500 v.
23	C-137727-73	Capacitor, 40 mmf., 500 v., Ceramic
24	C-137727-20	Capacitor, 91 mmf., 300 v., Ceramic
25	C-137727-25	Capacitor, 100 mmf., 500 v., Ceramic
26	39001-11	Capacitor, .005 mfd., 600 v., Paper
27	39001-11	Capacitor, .005 mfd., 600 v., Paper
28	39001-11	Capacitor, .005 mfd., 600 v., Paper
29	39001-13	Capacitor, .01 mfd., 600 v., Paper
30	C-137727-8	Capacitor, 1000 mmf., 300 v., Ceramic
31	C-137727-8	Capacitor, 1000 mmf., 300 v., Ceramic
32	39001-80	Capacitor, .02 mfd., 600 v., Paper
33	39001-74	Capacitor, .002 mfd., 600 v., Paper
34	C-137727-8	Capacitor, 1000 mmf., 300 v., Ceramic
35	39001-13	Capacitor, .01 mfd., 600 v., Paper
36	39001-13	Capacitor, .01 mfd., 600 v., Paper
37	C-137727-53	Capacitor, 33 mmf., 300 v., Ceramic
38	C-137727-53	Capacitor, 33 mmf., 300 v., Ceramic
39	39001-11	Capacitor, .005 mfd., 600 v., Paper
40	39001-13	Capacitor, .01 mfd., 600 v., Paper
41	C-137727-31	Capacitor, 47 mmf., 300 v., Ceramic
42	C-137727-8	Capacitor, 1000 mmf., 300 v., Ceramic
43	C-137727-79	Capacitor, 5 mmf., 500 v., Ceramic
44	39001-17	Capacitor, .05 mfd., 600 v., Paper
45	39001-13	Capacitor, .01 mfd., 600 v., Paper
46	B-143686-1	Capacitor, 50 mmf., 500 v., Ceramic
47	39001-11	Capacitor, .005 mfd., 600 v., Paper
48	39001-11	Capacitor, .005 mfd., 600 v., Paper
49	39001-11	Capacitor, .005 mfd., 600 v., Paper
50	39001-80	Capacitor, .02 mfd., 600 v., Paper
51	143686-1	Capacitor, 50 mmf., 500 v., Ceramic
52	39001-13	Capacitor, .01 mfd., 600 v., Paper
53	C-137727-8	Capacitor, 1000 mmf., 300 v., Ceramic
54	39001-11	Capacitor, .005 mfd., 600 v., Paper
56	C-137727-8	Capacitor, 1000 mmf., 300 v., Ceramic
57	C-137727-8	Capacitor, 1000 mmf., 300 v., Ceramic
58	C-137727-38	Capacitor, .005 mfd., 500 v., Ceramic
59	C-137727-38	Capacitor, .005 mfd., 500 v., Ceramic
60	B-142958	Capacitor, 4 mfd., 50 v., Electrolytic
63	39373-92	Resistor, 1 Megohm, ½ w.
64	39373-71	Resistor, 68,000 ohms, ½ w.
65	39374-129	Resistor, 22,000 ohms, 1 w.
67	39373-92	Resistor, 1 Megohm, ½ w.
68	39374-50	Resistor, 120,000 ohms, ½ w.
69	39374-44	Resistor, 39,000 ohms, ½ w.
70	39373-40	Resistor, 2,200 ohms, ½ w.
71	39373-67	Resistor, 47,000 ohms, ½ w.
72	39374-41	Resistor, 22,000 ohms, ½ w.
73	39374-18	Resistor, 270 ohms, ½ w.
74	39374-44	Resistor, 39,000 ohms, ½ w.
75	39374-44	Resistor, 39,000 ohms, ½ w.
76	39373-94	Resistor, 1.5 Megohm, ½ w.
77	39373-74	Resistor, 100,000 ohms, ½ w.
78	39373-33	Resistor, 1,000 ohms, ½ w.
79	39374-47	Resistor, 68,000 ohms, ½ w.
80	39373-19	Resistor, 220 ohms, ½ w.
82	39373-74	Resistor, 100,000 ohms, ½ w.
83	39374-129	Resistor, 22,000 ohms, 1 w.
84	39373-40	Resistor, 2,200 ohms, ½ w.
85	39373-92	Resistor, 1 Megohm, ½ w.
86	39373-67	Resistor, 47,000 ohms, ½ w.
87	39373-87	Resistor, 470,000 ohms, ½ w.
88	39373-71	Resistor, 68,000 ohms, ½ w.
89	39373-107	Resistor, 10 Megohms, ½ w.
92	39374-131	Resistor, 33,000 ohms, 1 w.
93	39374-42	Resistor, 27,000 ohms, ½ w.
94	39373-80	Resistor, 220,000 ohms, ½ w.
95	39373-19	Resistor, 220 ohms, ½ w.
100	39368-19	Control, Volume (2.5 Meg., Tap 750k ohms
	39370-2	Shaft, Volume Control (knurled)
101A	39368-22	Control, Tone (3 megohm)
	39370-2	Shaft, Tone Control (knurled)
101B	39369-1	Switch, Power
102A	B-142969	Switch, Band Change } Two
102B		Switch, Band Change } Section
105	W-142918	Plug, Power
107	AB-143775	Cable Assy., Antenna
108	W-143404	Contact, Loop Antenna
111A	W-143126	Socket, Two Prong
111B	Part of 111A	
114	138762-5	Speaker
117	C-137727-8	Capacitor, 1000 mmf., 300 v., Ceramic
118	C-137727-8	Capacitor, 1000 mmf., 300 v., Ceramic
119	C-137727-79	Capacitor, 5 mmf., 500 v., Ceramic
120	C-137727-43	Capacitor, 15 mmf., 500 v., Ceramic
121	W-137398-6	Capacitor, 4.7 mmf., 500 v.
122	39001-80	Capacitor, .02 mfd., 600 v., Paper
123	B-143686-2	Capacitor, 33 mmf., 500 v.
126	138437-1	Bulb (Dial), Type 47, 6.3 v., .15 amp.
127	138437-1	Bulb (Dial), Type 47, 6.3 v., .15 amp.
130	AW-144527	Loop Antenna
134	39001-11	Capacitor, .005 mfd., 600 v., Paper
135	39001-17	Capacitor, .05 mfd., 600 v., Paper
136	39001-76	Capacitor, .003 mfd., 600 v., Paper
137A	B-143089	Capacitor, 20 mfd., 25 v. } Four
137B		Capacitor, 10 mfd., 450 v. } Section
137C		Capacitor, 20 mfd., 450 v. } Electrolytic
137D		Capacitor, 40 mfd., 450 v. }
138	39001-76	Capacitor, .003 mfd., 600 v., Paper
139	39001-87	Capacitor, .25 mfd., 600 v., Paper
140	B-143062	Capacitor, 30 mfd., 450 v., Electrolytic
141	39373-107	Resistor, 10 Megohms, ½ w.
142	39374-55	Resistor, 330,000 ohms, ½ w.
143	39374-55	Resistor, 330,000 ohms, ½ w.
144	39374-53	Resistor, 220,000 ohms, ½ w.
145	39374-49	Resistor, 100,000 ohms, ½ w.
146	39374-193	Resistor, 220 ohms, 2 w.
147	39373-19	Resistor, 220 ohms, ½ w.
148	39374-201	Resistor, 1000 ohms, 2 w.
149A	W-137021	Resistor, 700 ohms, 4 w. } Two
149B		Resistor, 400 ohms, 4 w. } Section
150	39373-92	Resistor, 1 Megohm, ½ w.
151	39373-3	Resistor, 15 ohms, ½ w.
152	B-137001	Transformer Output
153	135106	Transformer, Power
154	B-139727-6	Cable, Phone Motor
155	C-132300-2	Cable & Plug Assy., Power (AC)
156	AB-144819	Cable & Plug Assy., Power
157	AW-144823	Cable & Pins Assy., Speaker
158	AW-144818	Shielded Lead Assy., (Audio)
159	D-144489	Record Changer (700F), 9-214M
159	D-145113	Record Changer (700FLP), 9-214ML
	AB-143729	Background Assy., Dial
	W-139477-2	Button Loop Antenna (1 used)
	W-139477-1	Button, Loop Antenna (4 used)
	R-144841	Cabinet
	W-136201	Clip, Dial Glass
	W-134220	Cotter, External (Chassis Mtg.)
	W-136853	Cushion (Rubber), Dial Glass
	C-144768	Dial Glass
	D-144931	Escutcheon
	39012-85	Iron Core, Ratio Det. Transformer
	39012-84	Iron Core, 1st I.F.
	39012-84	Iron Core, 2nd I.F.
	B-138576-6	Knob (3 used)
	B-143778	Knob (1 used)

MODELS 9-214M,
9-214ML

CROSLEY DIV.
AVCO MFG. CORP.

REPLACEMENT PARTS LIST, MODELS—9-214M, 9-214ML

Item No.	Part Number	Description	Item No.	Part Number	Description
	B-143769	Pointer, Dial		39232-2	Socket, Tube (6SG7, 2nd I.F. Amp., F.M.)
	AB-143453	Pulley & Hub Assy., Var. Capacitor		W-143146	Socket, Tube (6AL5, Ratio Det., F.M.)
	W-136979	Pulley, Idler (Dial Drive)		39232-10	Socket, Tube (6SQ7, Det., AVC, A.M.; 1st A.F. Amp., A.M. & F.M.)
	W-51071	Ring, Retaining (Dial Drive Shaft)		39232-6	Socket, Tube (6SQ7, Phase Inverter)
	W-211101	Ring, Tube Socket Retaining		39232-12	Socket, Tube (6V6GT, Output)
	W-136111	Rubber Mtg., Main Chassis		39232-12	Socket, Tube (6V6GT, Output)
	W-45580	Rubber Mtg., Speaker		39232-1	Socket, Tube (5Y3GT, Rectifier)
	W-143455	Shaft, Dial Drive		W-51752	Spring, Dial Drive Cord
	AW-143496	Shielded Wire Assy., Phono.		W-143913	Spring, Chassis Mtg.
	W-46055	Shock Mount, Sub Chassis Mtg.		W-144221	Spring (Hook) Chassis Mtg.
	W-139040	Shock Mount, Sub Chassis Mtg.		W-143552	Strip, Dial Pointer
	D-136565-25	Socket, Dial Light		C-135038-12	Terminal Strip (2 Lug)
	39232-10	Socket, Tube (6SG7, R.F. Amp.)		C-135038-13	Terminal Strip (3 Lug)
	39232-10	Socket, Tube (6AC7, Mixer)		C-135038-47	Terminal Strip (4 Lug)
	W-136470-2	Socket, Tube (7F8, Oscillator)		C-135038-37	Terminal Strip (1 Lug)
	39232-10	Socket, Tube (6SG7, I.F. Amp., A.M. & F.M.)		W-134916	Washer (Spring), Dial Drive Shaft

REPLACEMENT CABINET PARTS

Item No.	Part Number	Description	Item No.	Part Number	Description
	144885	Baffle, Speaker		143956	Grille Cloth
	143653	Bracket (R.H.) Radio Bin		144637	Hinge, Storage Door
	143654	Bracket (L.H.) Radio Bin		144887	Knob, Storage Door
	143846	Bumper (Rubber) Radio Bin		144883	Panels (Front), Drawer & Radio Bin
	143485	Bumper (Rubber), Door & Drawer		144886	Pull (Handle), Drawer & Radio Bin
	144900	Door, Storage Compartment		143478	Slides, Drawer (1 pair)
	144884	Drawer Frame Assy.		139319SB	Strike & Catch Assy., Door

MEGACYCLES TO CHANNEL NUMBERS

Cross index between frequency calibrations in megacycles on the dial and channel numbers follow:

Frequency in Megacycles	Channel No.	Frequency in Megacycles	Channel No.
87.9	200	98.9	255
88.9	205	99.9	260
89.9	210	100.9	265
90.9	215	101.9	270
91.9	220	102.9	275
92.9	225	103.9	280
93.9	230	104.9	285
94.9	235	105.9	290
95.9	240	106.9	295
96.9	245	107.9	300
97.9	250		

To find the frequency in megacycles for CHANNEL NUMBERS between those given above, add .2 megacycle for every whole number added to the CHANNEL NUMBER; for example channel 204 would be 88.7 megacycles and 251 would be 98.1 megacycles.

© John F. Rider

CROSLEY DIV.
AVCO MFG. CORP.

MODELS 66XTW, 66XTW-10, 66XTW-20

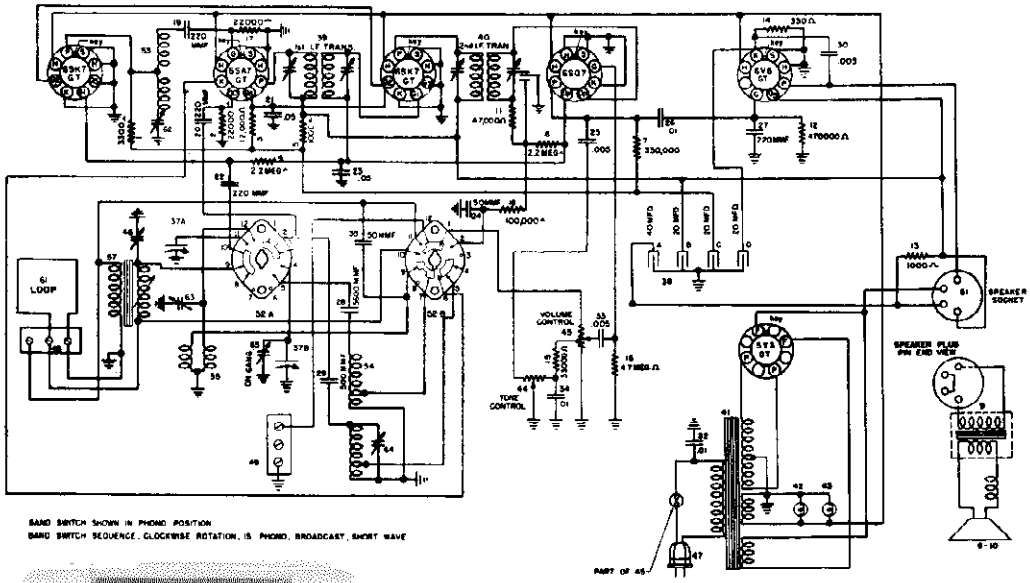

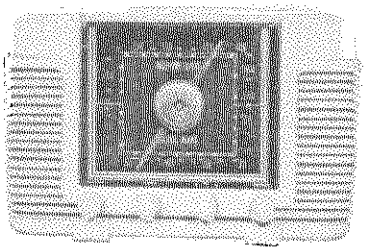

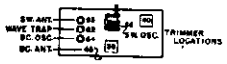

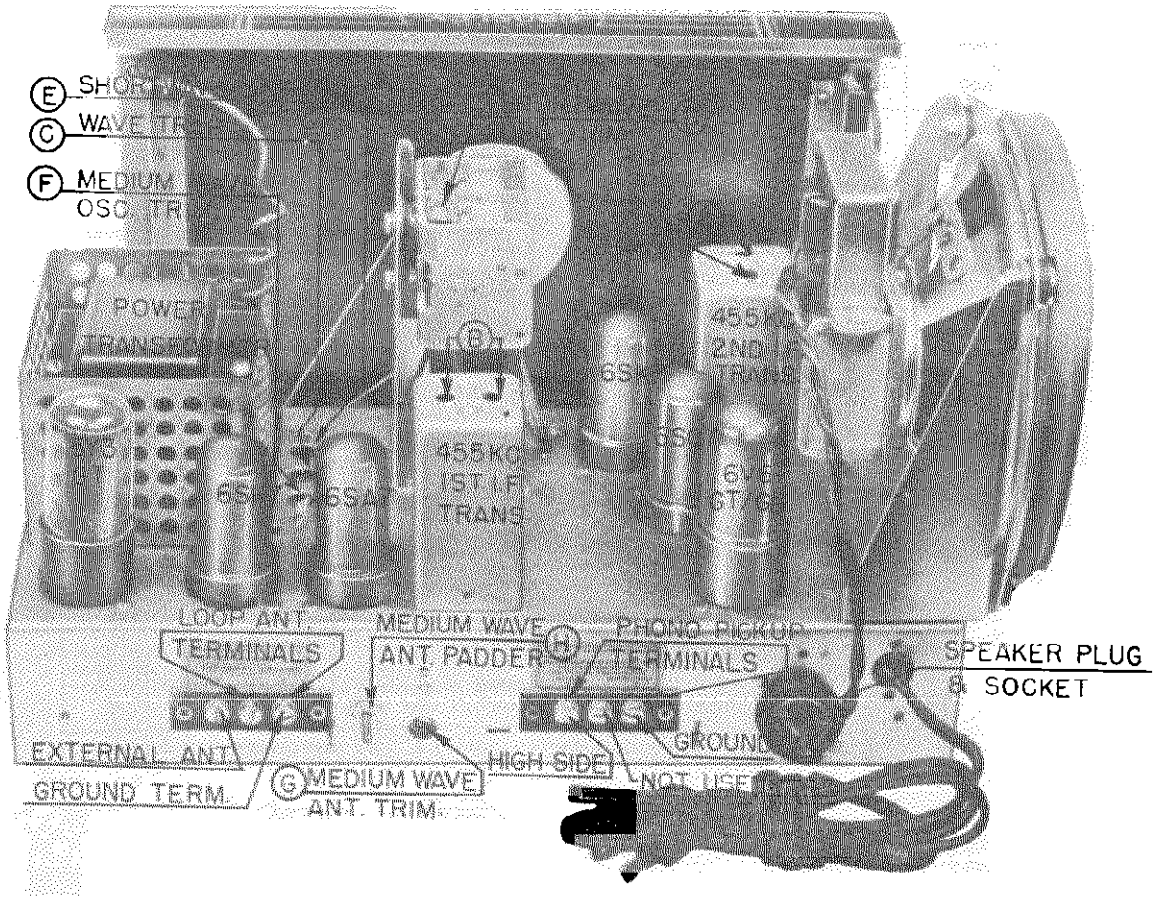

CHASSIS, REAR VIEW

MODELS 66XTW,
66XTW-10, 66XTW-20

CROSLEY DIV.
AVCO MFG. CORP.

ALIGNMENT PROCEDURE

1. Turn the tuning capacitor to the completely closed position against the stop, and set the dial pointer to the reference line at the end of the dial scale.
2. Turn the tone control to the high or treble position.
3. Connect the output meter across the speaker voice coil.
4. The r. f. signal input from the signal generator should be connected to the external antenna post. Connect the signal generator ground to the chassis.
5. Turn the volume control on full, and adjust the signal generator output to produce approximately mid-scale deflection of the output meter, but maintain signal generator output as low as possible to prevent AVC action in the receiver.
6. Loop antenna must be connected when making alignments.

ALIGNMENT CHART

Alignment Sequence	Signal Generator Output			Position of		Adjust for Maximum Output
	Frequency in k c.	In Series with	To	Band Switch	Tuning Dial	
1	455	200 mmf.	Ant.	M	1650 KC	A & B
2	455	200 mmf.	Ant.	M	1650 KC	C*
3	15,500	400 ohms	Ant.	S	15.5 MC	D
4	15,000	400 ohms	Ant.	S	20 M	E
5	1650	200 mmf.	Ant.	M	1650 KC	F
6	1400	200 mmf.	Ant.	M	1400 KC	G
7	600	200 mmf.	Ant.	M	500 M	H
*8	1400	200 mmf.	Ant.	M	1400 KC	Recheck G

*Adjust for minimum output (wavetrap). Reversing the position of the power plug may reduce power hum.

NOTE: When aligning the short-wave oscillator trimmer (D), be sure that the circuit is aligned at the correct frequency and not at the image frequency which is 910 kilocycles lower as indicated by the receiver dial. To check: Tune in the generator frequency, then increase the generator output and tune in the image frequency. The image frequency should be weaker than the fundamental and audible 910 kilocycles lower on the receiver dial. If the image cannot be tuned in, the oscillator trimmer is adjusted to the wrong peak. The correct peak is the second one heard as the trimmer adjustment screw is opened from the completely closed position.

SOCKET VOLTAGE CHART

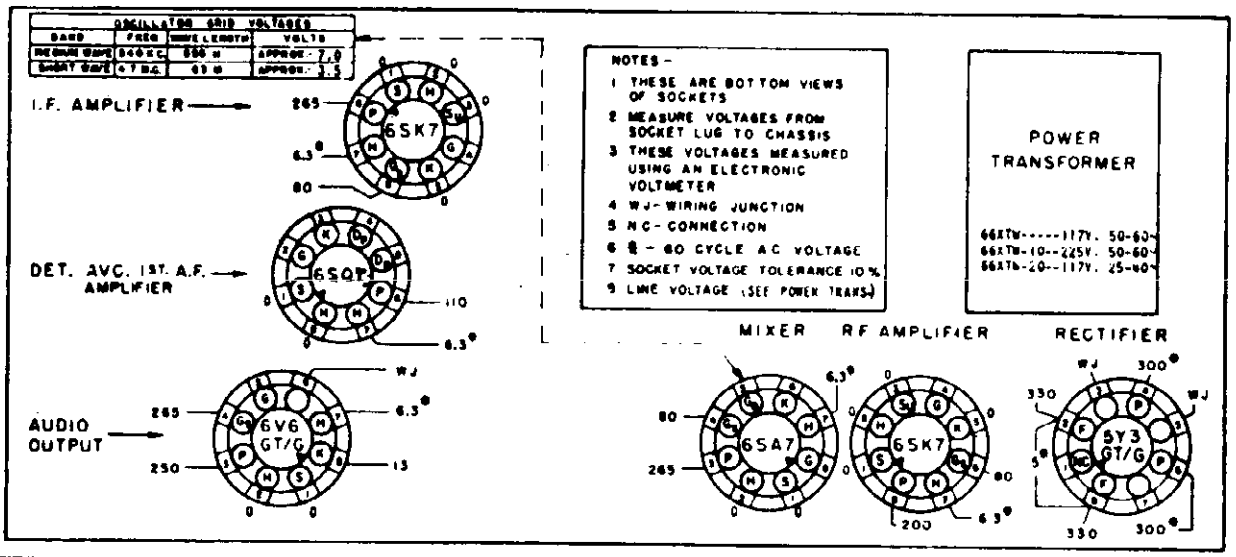

CROSLEY DIV.
AVCO MFG. CORP.

MODELS 66XTW,
66XTW-10, 66XTW-20

TYPE: Six-tube, two band superheterodyne with terminals provided for record player.

FREQUENCY RANGE: Medium wave band: 540 to 1650 kc. (555 to 182 meters), Band Switch at (M). Shortwave Band: 4.7 to 15.5 mc. (63 to 19.35 meters), Band Switch at (S).

INTERMEDIATE FREQUENCY: 455 kc.

POWER SUPPLY: Models 66XTW, 66XTW-10, 50-60 cycle a. c. only. Model 66XTW-20, 25-40 cycles a. c. only.

VOLTAGE RATING: Models 66XTW, 66XTW-20, 105-130 volts. Model 66XTW-10, 210-260 volts.

POWER CONSUMPTION: 65 watts maximum.

POWER OUTPUT: 4.5 watts maximum.

TUBE COMPLEMENT

Type	Function
6SK7	R. F. Amplifier
6SA7	Mixer
6SK7	I. F. Amplifier
6SQ7	Detector, AVC, 1st A. F. Amplifier
6V6 GT G	Power Amplifier
5Y3 GT G	Rectifier

DIAL BULB: Type 51, 7.5 volts, 0.2 amp.

PARTS LIST—MODEL 66XTW, 66XTW-10, 66XTW-20

Figures in first column correspond to figures in Schematic Diagram.

Item No.	Part No.	Description
1	39373-38	Resistor, 3300 ohm, ½ w.
2	39373-60	Resistor, 22,000 ohm, ½ w.
3	39373-275	Resistor, 12,000 ohm, 2 w.
4	39373-97	Resistor, 2.2 megohm, ½w.
5	39373-143	Resistor, 1,000 ohm, 1 w.
6	39373-97	Resistor, 2.2 megohm, ½ w.
7	39373-84	Resistor, 330,000 ohm, ½ w.
9	B-138131-2	Transformer, output
10	C-135933	Speaker and Transformer Assy.
11	39373-67	Resistor, 47,000 ohm, ½ w.
12	39373-87	Resistor, 470,000 ohm, ½ w.
13	39371-5	Resistor, 1,000 ohm, 10 w.
14	39373-133	Resistor, 330 ohm, 1 w.
15	39373-64	Resistor, 33,000 ohm, ½ w.
16	39373-102	Resistor, 4.7 megohm, ½ w.
17	39373-60	Resistor, 22,000 ohm, ½ w.
18	39373-74	Resistor, 100,000 ohm, ½ w.
19	39004-9	Condenser, 220 mmf., 500 v., mica
20	39004-9	Condenser, 220 mmf., 500 v., mica
21	39001-17	Condenser, .05 mfd., 600 v., paper
22	39004-9	Condenser, 220 mmf., 500 v., mica
23	39001-17	Condenser, .05 mfd., 600 v., paper
24	39004-5	Condenser, 50 mmf., 500 v., mica
25	39001-11	Condenser, .005 mfd., 600 v., paper
26	39001-13	Condenser, .01 mfd., 600 v., paper
27	39004-9	Condenser, 220 mmf., 500 v., mica
28	210685-188	Condenser, 5600 mmf., 500 v., mica
29	210685-165	Condenser, 500 mmf., 500 v., mica
30	39001-11	Condenser, .005 mfd., 600 v., paper
32	W-30805	Condenser, .01 mfd., 400 v., paper
33	39001-11	Condenser, .005 mfd., 600 v., paper
34	39001-13	Condenser, .01 mfd., 600 v., paper
35	39004-5	Condenser, 50 mmf., 500 v., mica
37A	B-136207	Condenser, Variable (Two
37B		Condenser, Variable (Section
38A	B-135934	Condenser, 40 mfd., 360 w.v. (Four Section Elec. Filter used on Models 66XTW, 66XTW-10
38B		Condenser, 20 mfd., 275 w.v.
38C		Condenser, 20 mfd., 245 w.v.
38D		Condenser, 20 mfd., 22 w.v.
38A	B-137372	Condenser, 40 mfd., 360 w.v. (Four Section Elec. Filter used on Model 66XTW-20
38B		Condenser, 20 mfd., 275 w.v.
38C		Condenser, 20 mfd., 245 w.v.
38D		Condenser, 20 mfd., 22 w.v.
39	AW-137495	Transformer, Assy., 1st I. F.
40	AW-134158	Transformer Assy., 2nd I. F.
41	B-135937	Transformer, Power (66XTW)
41	B-136132	Transformer, Power (66XTW-10)
41	B-136131	Transformer, Power (66XTW-20)
42	W-43567	Bulb (dial), Type 51, 7.5 v., 0.2 am
43	W-43567	Bulb (dial), Type 51, 7.5 v., 0.2 am
44	B-135651	Control, Tone (3 megohm)
*	39368-10	Control, Tone
45	B-135859	Control, Volume (1 megohm) and Switch Assy.
*	39368-18	Control, Volume
*	39370-1	Shaft, Volume (Plug in)
*	39369-1	Switch, Power
46	W-132267-1	Condenser, Trimmer
47	C-132300-2	Cable and Plug, Power
48	W-135479	Terminal Board Assy.
49	W-135479	Terminal Board Assy.
51	W-134968-2	Socket, Speaker
52A	B-135936	Switch, Band Change (Two
52B		Switch, Band Change (Section
53	AW-135907	Coil Assy., R. F.
54	AW-136360	Coil Assy., Osc.
55	AW-136361	Coil Assy., Ant.
57	AW-135954	Coil Assy., Ant. Loading
61	AC-138210	Antenna Loop and Back Assy.
62	B-132386-7	Condenser Trimmer (Three
63		Condenser Trimmer (Section
64		Condenser Trimmer (Assy.
65	Part of Item #37B	Condenser Trimmer
	39388	Socket, Tube
	39017-3	Socket, Dial Light
	G-39012-8	Iron Core
	W-132366-2	Nut, Iron Core Locking
	AW-137205	Dial Face Assy.
	B-134571	Pointer, Dial
	W-134667	Clip, Dial Pointer
	W-51752	Spring, Dial Drive Cord
	W-134917	Shaft, Drive
	W-51071	Ring, Retaining
	W-134916	Washer, Spring
	W-135164	Bumper
	W-134055	Grommet, Variable Cond. Mtg.
	AW-134737	Cabinet
	C-132688	Lens, Dial
	W-134635	Knob
	W-132766	Grille Cloth
	W-45580	Grommet
	B-134660	Gasket, Speaker
	W-132124	Stud, Trimount
	W-136584	Washer, Rubber

*These parts will replace the original equipment parts.

MODELS 68CP,
68CR

CROSLEY DIV.
AVCO MFG. CORP.

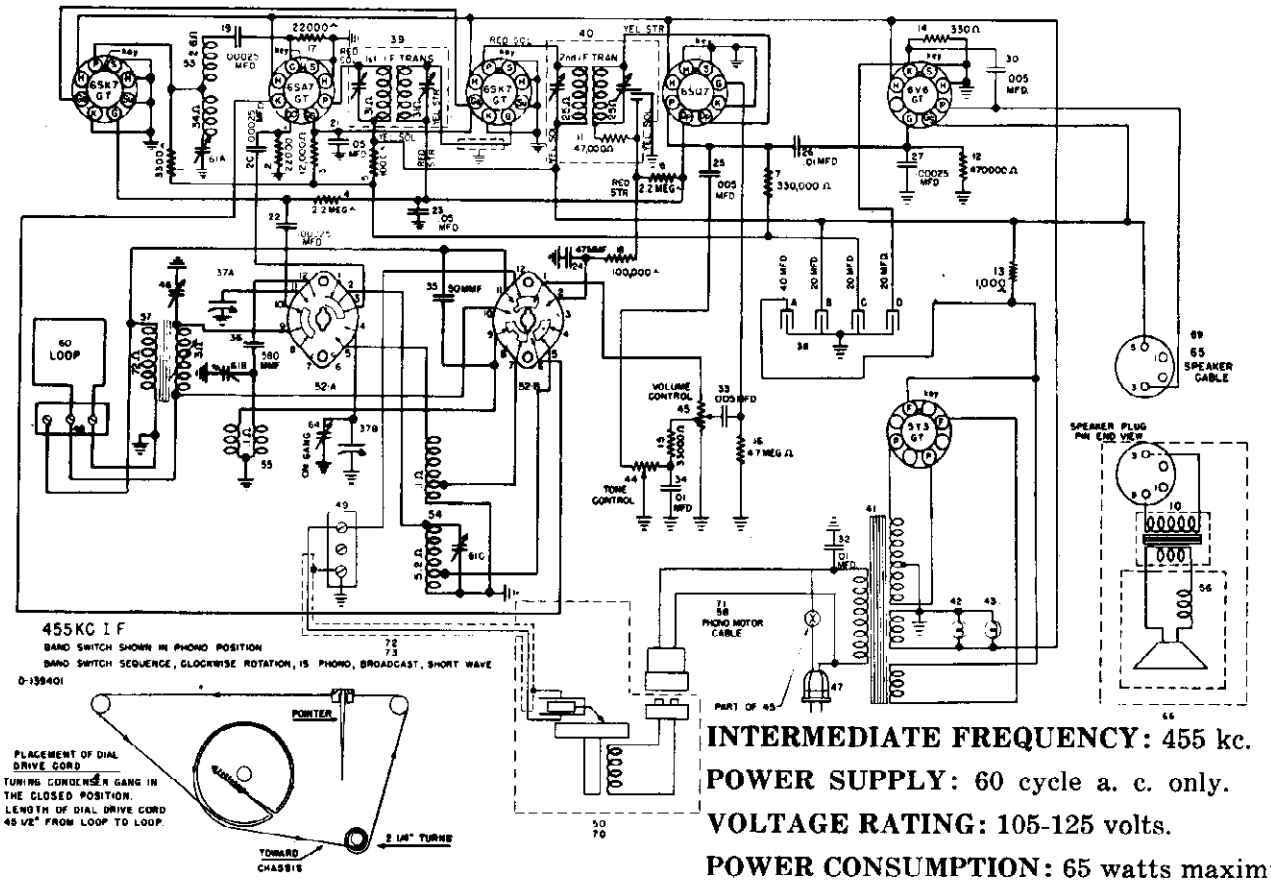

INTERMEDIATE FREQUENCY: 455 kc.

POWER SUPPLY: 60 cycle a. c. only.

VOLTAGE RATING: 105-125 volts.

POWER CONSUMPTION: 65 watts maximum. 20 watts additional for record changer.

POWER OUTPUT: 4.5 watts minimum.

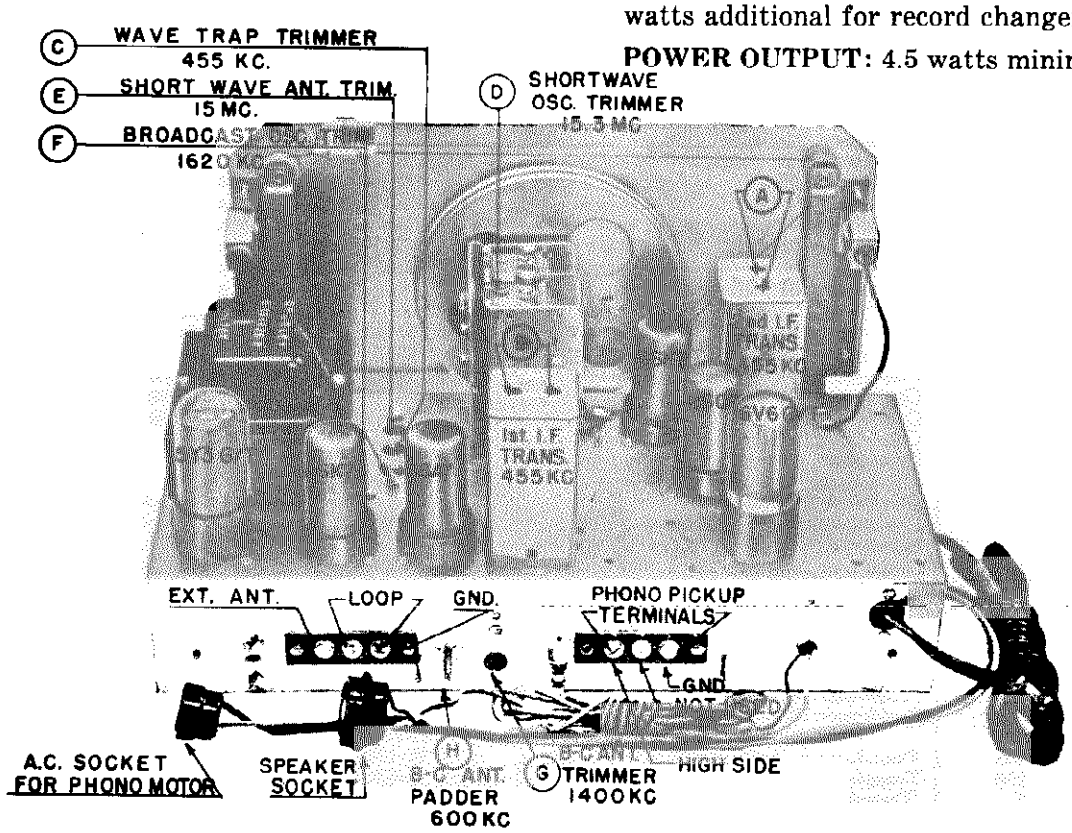

CHASSIS, REAR VIEW

RECORD CHANGERS: For 68CP Only Model 6666 RCP CH. 15-1

CROSLEY DIV.
AVCO MFG. CORP.

MODELS 68CP, 68CR

SOCKET VOLTAGE CHART

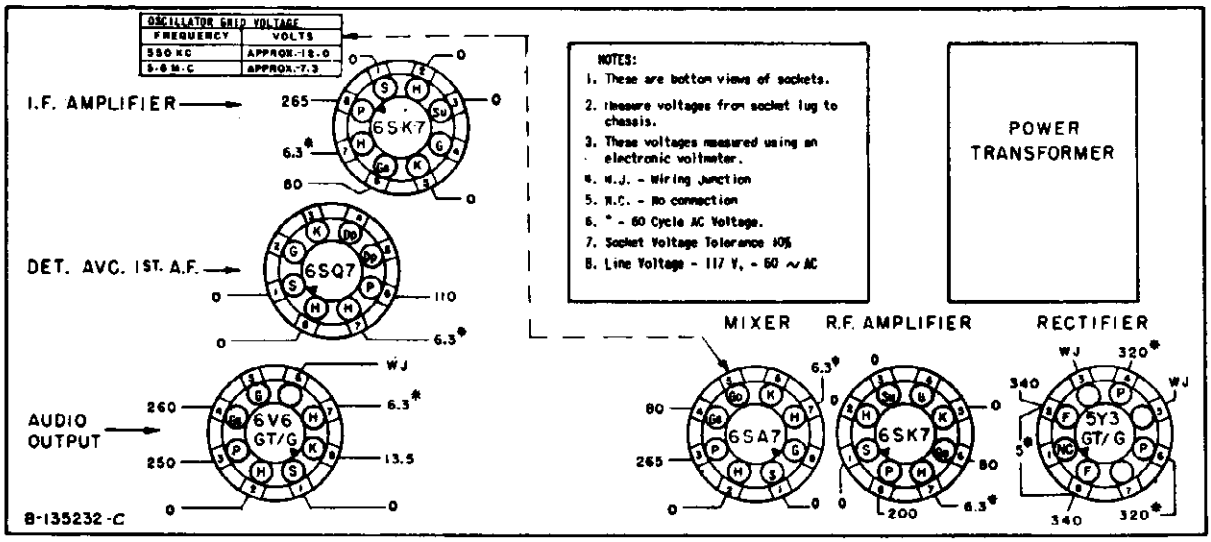

ALIGNMENT PROCEDURE

1. Turn the tuning condenser to the completely closed position against the stop and set the dial pointer to the notch at the right-hand end of the dial background.
2. Connect the output meter across the speaker voice coil and turn tone control to the treble position.
3. The r. f. signal input from the signal generator should be connected to the external antenna post as indicated in the alignment chart. Connect the low side (ground) of the signal generator to the chassis.
4. Turn the volume control on full and adjust the signal generator output to produce approximately mid-scale deflection of the output meter, but maintain the signal generator output as low as possible to prevent AVC action in the receiver.

NOTE: The signal web antenna must remain connected at all times. If the receiver is removed from cabinet, use a suitable dummy antenna of 4 uh.

ALIGNMENT CHART

Alignment adjustment locations are shown on Chassis, Rear View

Alignment Sequence	Signal Generator Output			Position of		Adjust for Maximum Output
	Frequency	In Series With	To	Band Switch	Variable Condenser	
1	455 kc.	200 mmf.	Ant.	BC	Open	A & B
2	455 kc.	200 mmf.	Ant.	BC	Open	C*
3	15.3 mc.	400 ohms	Ant.	SW	Open	D
4	15 mc.	400 ohms	Ant.	SW	To 15 mc. Signal	E
5	1620 kc.	200 mmf.	Ant.	BC	Open	F
6	1400 kc.	200 mmf.	Ant.	BC	To 1400 kc. Signal	G
7	600 kc.	200 mmf.	Ant.	BC	To 600 kc. Signal	H
8	1400 kc.	200 mmf.	Ant.	BC	To 1400 kc. Signal	Recheck G

*Adjust for Minimum Output (Wave Trap).

NOTE: When aligning the short-wave oscillator trimmer (D), be sure that the circuit is aligned at the correct frequency and not at the image frequency which is 910 kilocycles lower as indicated by the receiver dial. To check: tune in the generator frequency, then increase the generator output and tune in the image frequency. The image frequency should be weaker than the fundamental and audible 910 kilocycles lower on the receiver dial. If the image cannot be tuned in, the oscillator trimmer is adjusted to the wrong peak. The correct peak is the second peak of the trimmer from the closed position.

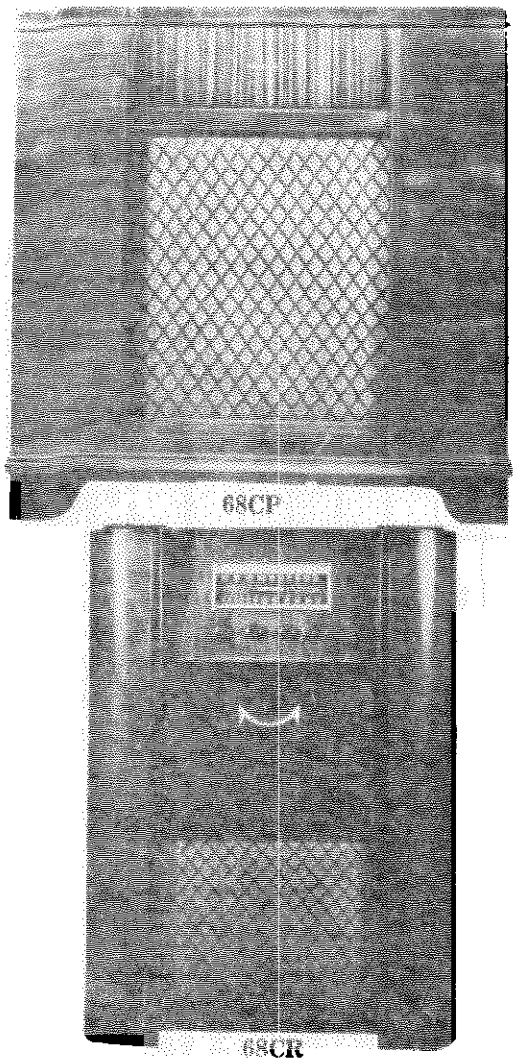

Item No.	Part No.	Description
1	39373-44	Resistor, 3300 ohm, ½ w.
2	39373-60	Resistor, 22,000 ohm, ½ w.
3	39373-275	Resistor, 12,000 ohm, 2 w.
4	39373-97	Resistor, 2.2 megohm, ½ w.
5	39373-143	Resistor, 1,000 ohm, 1 w.
6	39373-97	Resistor, 2.2 megohm, ½ w.
7	39373-84	Resistor, 330,000 ohm, ½ w.
10	B-138131-2	Transformer, Output
11	39373-67	Resistor, 47,000 ohm, ½ w.
12	39373-87	Resistor, 470,000 ohm, ½ w.
13	39371-5	Resistor, 1,000 ohm, 5 w.
14	39373-133	Resistor, 330 ohm, 1 w.
15	39373-64	Resistor, 33,000 ohm, ½ w.
16	39373-102	Resistor, 4.7 megohm, ½ w.
17	39373-60	Resistor, 22,000 ohm, ½ w.
18	39373-74	Resistor, 100,000 ohm, ½ w.
19	39001-73	Condenser, .00025 mfd., 600 v., paper
20	39001-73	Condenser, .00025 mfd., 600 v., paper
21	39001-17	Condenser, .05 mfd., 600 v., paper
22	39001-73	Condenser, .00025 mfd., 600 v., paper
23	39001-17	Condenser, .05 mfd., 600 v., paper
24	39004-5	Condenser, 47 mmf., 500 v., mica
25	39001-11	Condenser, .005 mfd., 600 v., paper
26	39001-13	Condenser, .01 mfd., 600 v., paper
27	39001-73	Condenser, .00025 mfd., 600 v., paper
30	39001-11	Condenser, .005 mfd., 600 v., paper
32	W-30805	Condenser, .01 mfd., 400 v., paper
33	39001-11	Condenser, .005 mfd., 600 v., paper
34	39001-13	Condenser, .01 mfd., 600 v., paper
35	B-137727-21	Condenser, 50 mmf., 500 v., ceramic
36	B-137498-14	Condenser, 580 mmf., 300 v., mica
37A	B-137073-3	Condenser, Variable } Two Section
37B		Condenser, Variable } Assy.
38A	B-137076	Condenser, 40 mfd., 450 v. } Four Sec. Elect. Filter
38B		Condenser, 20 mfd., 450 v.
38C		Condenser, 20 mfd., 450 v.
38D		Condenser, 20 mfd., 25 v.
39	AW-137495	Transformer, 1st I.F.
40	AW-139080	Transformer, 2nd I.F.
41	B-134625	Transformer, Power
42	W-48858	Bulb (Dial), Type 47, 6.3 v., .15 amp.
43	W-48858	Bulb (Dial), Type 47, 6.3 v., .15 amp.
44	B-135314	Control, Tone (3 megohm)
*	39368-22	Control, Volume
	39370-2	Shaft, Plug-in
45	B-135313	Control, Volume (1 megohm) and Switch Assy.
*	39368-18	Control, Volume
	39370-2	Switch, Power
	39369-1	Shaft, Plug-in

Item No.	Part No.	Description
46	W-132267-1	Condenser, Trimmer
47	B-132300-1	Cable and Plug Assy., Power
48	39019-3	Terminal Board Assy.
49	39019-3	Terminal Board Assy.
50	D-137057-1	Record Changer (68CP)
52A	B-135312	Switch, Band Change } Two
52B		Switch, Band Change } Section
53	AW-139073	Coil Assy., R.F.
54	AW-139079	Coil Assy., Oscillator
55	AW-139081	Coil Assy., Antenna (SW)
56	C-138762-5	Speaker (Less Transformer)
57	AW-139074	Coil Assy., Antenna Loading
58	B-139727-2	Cable, Phono Motor (68CP)
60	W-139692	Loop, Antenna (Transmission Line)
61A	B-132386-7	Condenser, Trimmer } Three
61B		Condenser, Trimmer } Section
61C		Condenser, Trimmer } Assy.
64	Part of Item 37B	Condenser, Trimmer
65	AB-139023	Cable and Plug Assy., Speaker (68CP)
69	AB-138935	Cable, Speaker (68CR)
70	D-142552	Record Changer (68CR)
71	B-139727-5	Cable, Phono Motor (68CR)
72	AW-142644	Shielded Cable Assy. (68CR)
73	Part of Item 50	Shielded Cable (68CP)
	R-139858	Cabinet (68CP)
	R-142615	Cabinet (68CR)
	W-131154-1	Cotter, External
	D-139376	Dial Glass
	C-139888	Escutcheon, Dial
	W-45580	Grommet, Speaker and Chassis Mtg.
	W-134055	Grommet, Variable Cond. Mtg.
	G-39012-8	Iron Core
	W-135309	Knob
	AB-134935	Needle, Floating Jewel Assy.
	W-132366-2	Nut, Iron Core Locking
	C-135234	Plate, Dial Background
	W-135274	Pointer, Dial
	W-135074	Pulley, Drive Cord Idler
	W-51071	Ring, Retaining
	B-135532	Shaft, Drive
	G-39204	Socket, Tube
	D-136565-3	Socket, Dial Light
	W-51752	Spring, Dial Drive Cord
	W-138136	Strip, Dial Pointer
	AC-137885	Support, Cabinet Lid (68CP)
	C-135038-46	Terminal Strip
	W-134916	Washer, Spring

TUBE COMPLEMENT:

Type	Function
6SA7 (GT/G)	Mixer
6SK7 (GT/G)	R. F. Amplifier
6SK7 (GT/G)	I. F. Amplifier
6SQ7 (GT/G)	Detector, AVC, 1st A.F. Amplifier
6V6 (GT/G)	A. F. Power Output
5Y3 GT/G	Rectifier

* These parts will replace the original equipment parts.

DIAL BULB: Type 47, 6.3 volts, .15 amp.

TYPE: Six-tube, two-band, superheterodyne.

FREQUENCY RANGE: Broadcast Band, 540 to 1600 kc. (Selector Switch at BC.)

Short-wave Band, 5.8 to 15 mc. (Selector Switch at SW.)

CROSLEY DIV.
AVCO MFG. CORP.

MODELS 68TA, 68TW

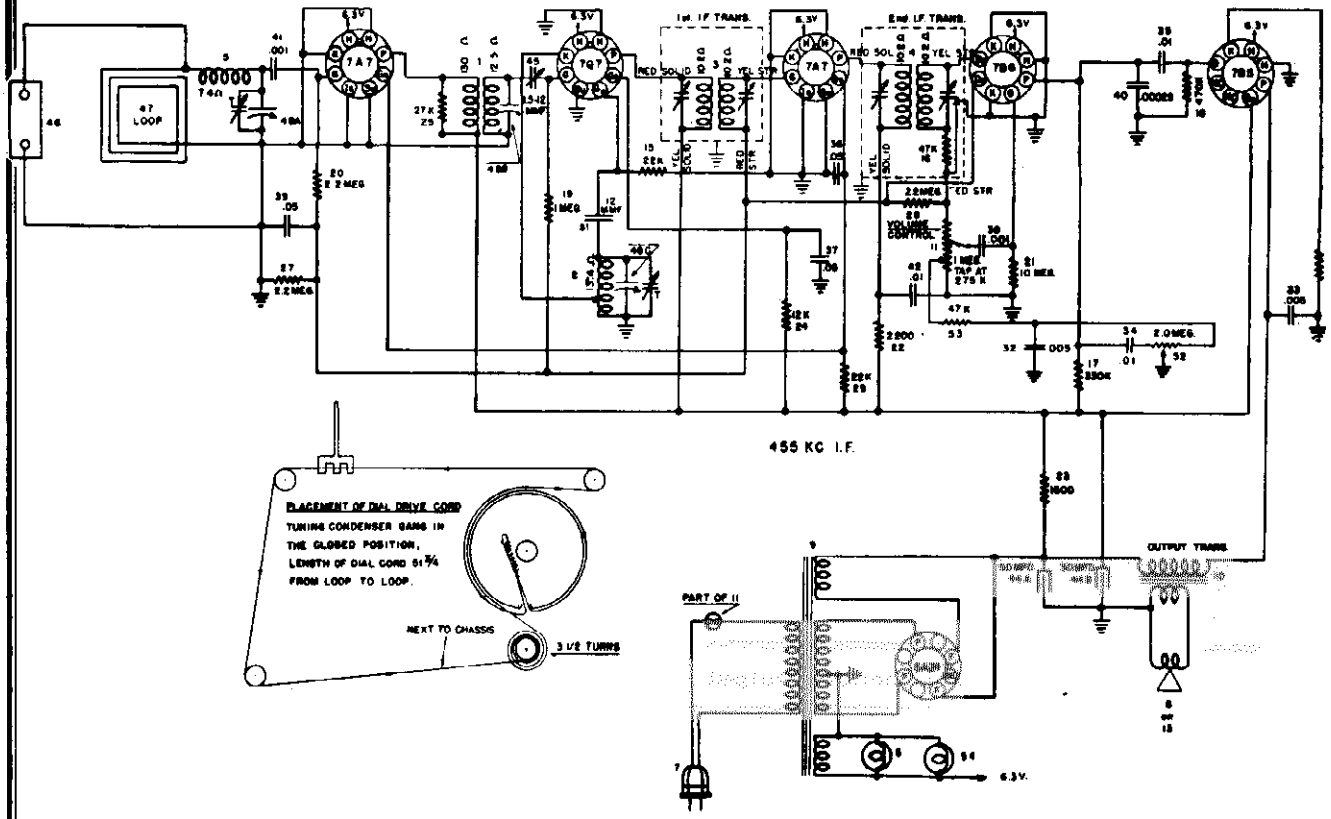

R. F. AMPLIFIER

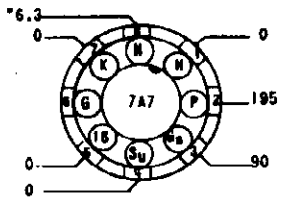

I. F. AMPLIFIER

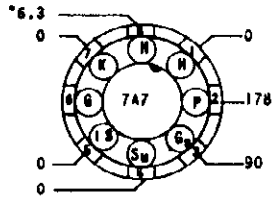

POWER OUTPUT

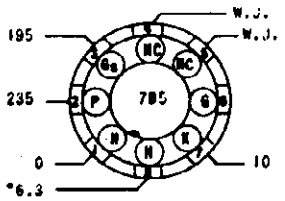

POWER TRANSFORMER

CONVERTER

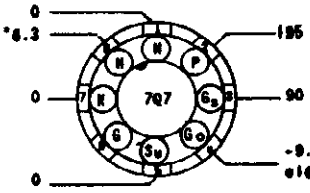

DET.-AVC.-1st. A.F.AMPL.

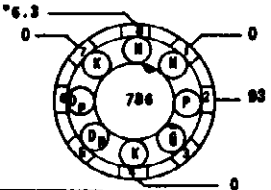

RECTIFIER

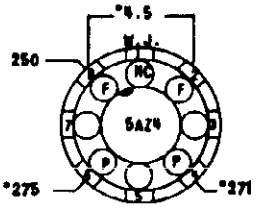

NOTES:
1. Bottom View Of Sockets
2. Measure Voltage From Socket Lug To -B(Chassis)
3. Voltages Measured With An Electronic Voltmeter
4. W.J. = Wiring Junction.
5. N.C. = No Connection.
6. * = A.C. Voltage.
7. Voltage Tolerance, 10%
8. Line Voltage 117 V. 60 ~ A.C.

SOCKET VOLTAGE CHART

MODELS 68TA, 68TW

CROSLEY DIV.
AVCO MFG. CORP.

ALIGNMENT PROCEDURE

1. Turn the tuning condenser to the completely closed position against the stop and set the dial pointer to the reference line at the low frequency end of the dial scale.
2. Turn the tone control to the treble (clockwise) position.
3. Connect the output meter across the speaker voice coil.
4. The r. f. signal input from the signal generator should be connected through a condenser as indicated in the alignment chart. Connect the signal generator ground to the receiver chassis.
5. Turn the volume control on full and adjust the signal generator output to produce approximately mid-scale deflection of the output meter, but maintain signal generator output as low as possible to prevent AVC action in the receiver.
6. Loop antenna must remain connected at all times.

ALIGNMENT CHART

Alignment adjustments are shown in "CHASSIS, SIDE VIEW,"

Alignment Sequence	Signal Generator Output			Position of Tuning Dial or Var. Cond.	Adjust for Maximum Output
	Frequency in KC	In Series with	To		
1	455	.05 mfd.	Pin 6 7Q7	open	A & B
2	1620	4 mmf.	Top Ant. Clip	open 1620	C
3	1400	4 mmf.	Top Ant. Clip	1400	D
4	1400	4 mmf.	Top Ant. Clip	1400	E
5	1400	4mmf.	Top Ant. Clip	1400	Rock var. cond. and repeat 3 & 4

DESCRIPTION

TYPE: Six-tube, single band, superheterodyne.

FREQUENCY RANGE: 540 to 1600 kc.

INTERMEDIATE FREQUENCY: 455 kc.

POWER SUPPLY: 60 cycle a. c. only

VOLTAGE RATING: 105-125 volts.

POWER CONSUMPTION: 50 watts nominal.

POWER OUTPUT: 2.5 watts maximum

TUBE COMPLEMENT:

TYPE	FUNCTION
7A7	R. F. Amplifier
7Q7	Converter
7A7	I. F. Amplifier
7B6	Detector, AVC, 1st A. F. Amplifier
7B5	A. F. Power Output
5AZ4	Rectifier

CROSLEY DIV.
AVCO MFG. CORP.

MODELS 68TA, 68TW

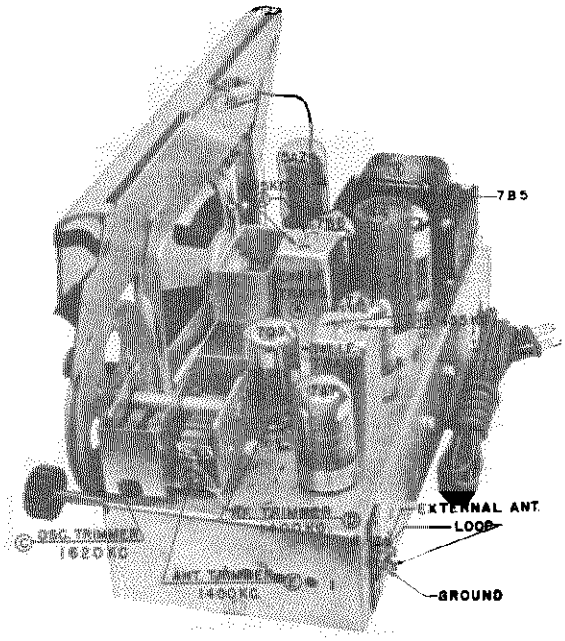

68TA

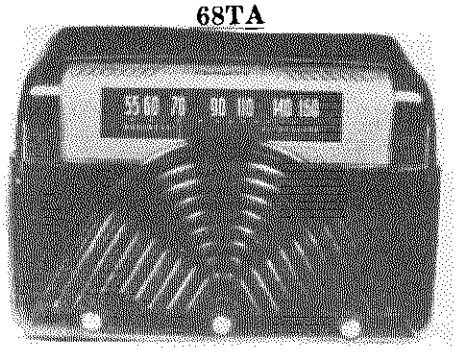

68 TW

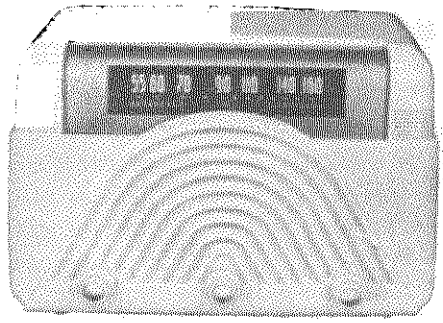

CHASSIS, SIDE VIEW

REPLACEMENT PARTS LIST

Figures in first column correspond to figures in Schematic Diagram

Item No.	Part No.	Description	Item No.	Part No.	Description
1	AW-137800	Coil, R. F.	40	39001-73	Condenser, .00025 mfd., 600 v., pa
2	AW-137724	Coil, Oscillator	41	39001-7	Condenser, .001 mfd., 600 v., pape
3	AC-137933	Transformer, 1st I. F.	42	39001-13	Condenser, .01 mfd., 600 v., paper
4	AC-137934	Transformer, 2nd I. F.	44 A	B-136596	Cond., 50 mfd., 300 v. } Two Sec.
5	AW-138546	Coil, Antenna Loading	44 B		Cond., 30 mfd., 300 v. } Elec. Filt.
6	W-48858	Bulb (Dial), Type 47, 6.3 v., .15 amp.	45	W-132267-1	Condenser, Trimmer
			46	AB-138584	Terminal Board
7	C-132300-1	Cable and Plug Assy., Power	47	AC-138464	Loop Antenna Assembly
9	B-136597	Transformer, Power	48 A	AC-138595-2	Condenser, Variable } Assembly
10	B-136598	Transformer, Output	48 B		Condenser, Variable }
11	B-136595	Control, Volume (1 meg., Tap 300K) and Switch Assy.	48 C		Condenser, Variable }
			51	C-137727-52	Condenser, 12 mmf., 500 v. ceram
*	39368-18	Control, Volume	52	B-142857	Control, Tone (2 megohm)
*	39370-2	Shaft, Plug in	*	39368-11	Control, Tone
*	39369-1	Switch, Power	53	39373-67	Resistor, 47,000 ohm, ½ w.
13	C-138246	Speaker	54	W-48858	Bulb (Dial), Type 47, 6.3 v., .15 a
14	39373-23	Resistor, 330 ohm, ½ w.		R-138573-1	Cabinet, (66TA)
15	39373-60	Resistor, 22 000 ohm, ½ w.		AW-138663	Cabinet (66TW)
16	39373-67	Resistor, 47,000 ohm, ½ w.		C-137750	Cabinet Back
17	39373-84	Resistor, 330,000 ohm, ½ w.		W-138490	Clip, Spring
18	39373-87	Resistor, 470,000 ohm, ½ w.		AC-138443-1A	Dial Plate and Pulley Assy.
19	39373-92	Resistor, 1 megohm, ½ w.		C-143138	Dial Glass
20	39373-97	Resistor, 2.2 megohm, ½ w.		W-134055	Grommet (Var. Cond. Mtg.)
21	39373-107	Resistor, 10 megohm, ½ w.		B-138574-5	Knob (66TA)
22	39373-40	Resistor, 2200 ohm, ½ w.		B-138574-2	Knob (66TW)
23	39372-7	Resistor, 1500 ohm, 10 w.		143142	Pointer, Dial
24	39373-165	Resistor, 12,000 ohm, 1 w.		W-137939-1	Pulley, Idler (Drive Cord)
25	39373-62	Resistor, 27,000 ohm, ½ w.		W-51071	Ring, Retaining (Drive Shaft)
27	39373-97	Resistor, 2.2 megohm, ½ w.		W-46065	Rubber Mtg., Speaker
28	39373-97	Resistor, 2.2 megohm, ½ w.		W-136613-3CP	Screw, Dial Glass Strip
29	39373-60	Resistor, 22,000 ohm, ½ w.		39220-36CP	Screw, Chassis Mtg.
32	39001-11	Condenser, .005 mfd., 600 v., paper		B-135075-5	Shaft, Drive
33	39001-11	Condenser, .005 mfd., 600 v., paper		39441	Socket, Tube
34	39001-13	Condenser, .01 mfd., 600 v., paper		D-136565-16	Socket, Dial Light
35	39001-13	Condenser, .01 mfd., 600 v., paper		W-138568	Strip, Dial Pointer
36	39001-17	Condenser, .05 mfd., 600 v., paper		C-139844	Strip, Dial Trim
37	39001-17	Condenser, .05 mfd., 600 v., paper		B-138649	Strip, Dial Glass
38	39001-7	Condenser, .001 mfd., 600 v., paper		W-132124	Trimount Stud, Cabinet Back
39	39001-17	Condenser, .05 mfd., 600 v., paper		W-134916	Washer, Spring (Drive Shaft)

*These parts will replace the original equipment parts.

MODELS 148CP, 148CP(W), 148CQ, 148CR

CROSLEY DIV.
AVCO MFG. CORP.

ALIGNMENT PROCEDURE NOTES

1. Sweep alignment (use approximately 500 kc. to sweep).
2. Sweep Generator Output .1 to 1 Volt RMS.
3. Scope connected to center terminal on phono switch.
4. Align for maximum peak amplitude. Peak separation should be 150 to 200 kc.
5. Scope connected to center terminal of 3rd I.F. through 200,000 ohms.
6. Repeat operations 8 and 9 until no charge can be noted in sensitivity.
7. Rock gang.
8. When aligning the shortwave oscillator trimmer, make certain the circuit is aligned at the correct frequency and not at the image frequency which is 910 kilocycles lower in frequency as indicated on the receiver dial. To check, tune in signal generator frequency, then increase the generator output and tune in the image frequency which should be audible, but weaker than the fundamental frequency. If the image can not be tuned in, the oscillator trimmer is adjusted to the wrong peak. The correct peak is the second peak of the trimmer from the closed position.

CIRCUIT

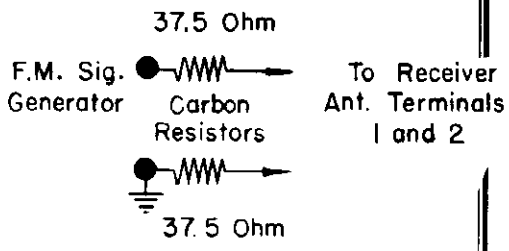

FIG. 1

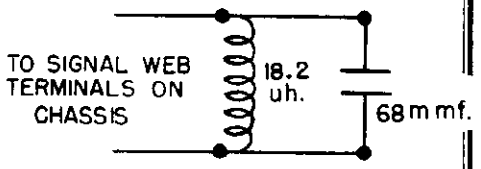

FIG. 2

MEGACYCLES TO CHANNEL NUMBERS

Cross index between frequency calibrations in megacycles on the dial and channel numbers follow:

Frequency in Megacycles	Channel No.	Frequency in Megacycles	Channel No.
87.9	200	98.9	255
88.9	205	99.9	260
89.9	210	100.9	265
90.9	215	101.9	270
91.9	220	102.9	275
92.9	225	103.9	280
93.9	230	104.9	285
94.9	235	105.9	290
95.9	240	106.9	295
96.9	245	107.9	300
97.9	250		

To find the frequency in megacycles for CHANNEL NUMBERS between those given above, add .2 megacycle for every whole number added to the CHANNEL NUMBER; for example Channel 204 would be 88.7 megacycles and 251 would be 98.1 megacycles.

CROSLEY DIV.
AVCO MFG. CORP.

MODELS 148CP, 148CP(W), 148CQ, 148CR

PUSH BUTTON ADJUSTMENT PROCEDURE

Each of the six push buttons, for automatic tuning, has two adjusting screws by which it may be set to any nearby American broadcast station whose frequency in kilocycles is within the kilocycle range covered by that button. To gain access to these screws, carefully pull off the push button. To set No. 1 push button to a desired position, proceed as follows:

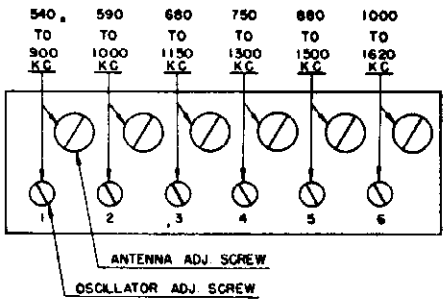

1. Turn the ANTENNA ADJ. SCREW clockwise until moderately tight, then turn the OSCILLATOR ADJ. SCREW counterclockwise until the threaded portion extends approximately ¾ inch. **Use a small screw-driver and do not exert pressure.**
2. Turn the band selector switch to the "AM" position and manually tune in the station to which the push button is to be set. The frequency of the station selected must be between 540 and 900 kilocycles. Carefully adjust the tuning control to the point of clearest reception.
3. Turn the band selector switch to the "AUTO" position and slowly turn the OSCILLATOR ADJ. SCREW clockwise until the same station is heard. Adjust the screw for maximum volume.
4. Adjust the ANTENNA ADJ. SCREW for maximum volume.
5. Turn the band selector switch from "AUTO" to "AM" and back again to check if the adjustment has been correctly made. There should be no change in tone quality when switched from one to the other.
6. Place the tab with the call letters of the station, to which the push button has been set, in a celluloid "V" and slide it into the button from the side.
7. The remaining push buttons may be set in a similar manner. No adjustment of master tone control push buttons is required.

ALIGNMENT PROCEDURE

1. This receiver has been aligned at the factory for best performance, and no attempt should be made to re-align it unless the proper test equipment is available.
2. Turn the tuning condenser to full mesh, against stop, and set the dial pointer to the reference line at the end of the dial scale.
3. Release all tone control buttons to the out position.
4. Connect the output meter across the speaker voice coil (3.2 ohms).
5. Feed an R. F. amplitude modulated signal modulated 30% at 400 cycle to the receiver as indicated in the alignment procedure chart. Connect signal generator ground terminal to the chassis of the receiver. When F. M. generator is used, a 30% modulated signal is equal to a deviation of 22.5 kc.
6. Turn the volume control knob to maximum clockwise position and adjust the signal generator output to produce a noticeable output meter reading. Keep signal generator output as low as possible to prevent excessive AVC action in the receiver.
7. The low impedence "Signal Web" antenna should remain connected at all times. If the chassis is removed from cabinet, use a dummy antenna consisting of a 18.2 u.h. coil in parallel with a 68 mmf. capacitor
8. The link must be connected in external antenna position.

TUBE COMPLEMENT

Type	Description
6SG7	R. F. Amplifier
6SA7	A. M. Converter
6AC7	F. M. Mixer
7F8	F. M. Oscillator
6SG7	1st I. F. Amplifier
6SG7	2nd I. F. Amplifier
6SH7	3rd I. F. Amplifier
6H6	Discriminator
6SQ7	A. M. Det.—AVC 1st A. F. Amplifier
6SQ7	Phase Inverter
6V6 GT/G	Output
6V6 GT/G	Output
5U4G	Rectifier
6E5	Tuning Indicator

DIAL BULB: Type 51, 7.5 v., 0.2 amp.

MODELS 148CP, 148CP(W), 148CQ, 148CR

CROSLEY DIV.
AVCO MFG. CORP.

ALIGNMENT PROCEDURE CHART

Alignment Sequence	Signal Generator Output			Position of		Adjust for Maximum Output	Remarks
	Frequency	In Series with	To	Band Switch	Tuning Dial		
1	455 kc.	.1 mfd.	2nd I.F. Grid	AM	Hi. Freq. stop	3rd I.F.	
2	455 kc.	.1 mfd.	1st I.F. Grid	AM	Hi. Freq. stop	2nd I.F.	
3	455 kc.	.1 mfd.	19 plate section of center gang	AM	Hi. Freq. stop	1st I.F.	Retouch 3rd, 2nd, 1st I.F.
4	10.7 mc.	100 mmf.	3rd I.F. Grid	FM	Hi. Freq. stop	Discriminator	Notes 1, 2, 3, 4
5	10.7 mc.	100 mmf.	2nd I.F. Grid	FM	Hi. Freq. stop	3rd I.F.	Notes 1 and 5
6	10.7 mc.	100 mmf.	1st I.F. Grid	FM	Hi. Freq. stop	2nd I.F.	Retouch 3rd I.F.
7	10.7 mc.	100 mmf.	3 plate section of center gang	FM	Hi. Freq. stop	1st I.F.	Retouch 3rd, 2nd, 1st I.F.
8	1400 kc.	200 mmf.	Ant. 1	AM	1400 kc.	BC.-Osc.-RF. & Ant. Trim	
9	600 kc.	200 mmf.	Ant. 1	AM	600 kc.	Broadcast Osc. Padder	Notes 6 and 7
10	6.0 mc.	400 ohm	Ant. 1	Police	6.0 mc.	Police Osc., R.F. & Ant. Trimmers	
11	18 mc.	400 ohm	Ant. 1	SW	18 mc.	Sw. Osc., R.F., & Ant. Trimmers	Note 9
12	98 mc.	See Circuit Diag.	Ant. 1 & 2	FM	98 mc.	FM-Osc. Core	
13	106 mc.	See Circuit Diag.	Ant. 1 & 2	FM	106 mc.	FM. R.F. & Ant. Trimmer	Note 7

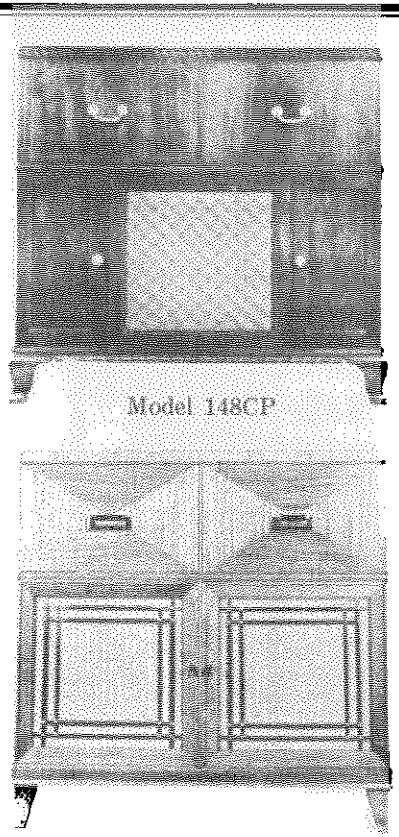

Model 148CP

Model 148CQ

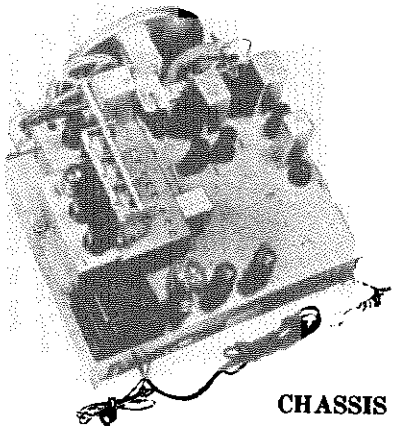

CHASSIS VIEW

CROSLEY DIV.
AVCO MFG. CORP.

MODELS 148CP, 148CP(W), 148CQ, 148CR

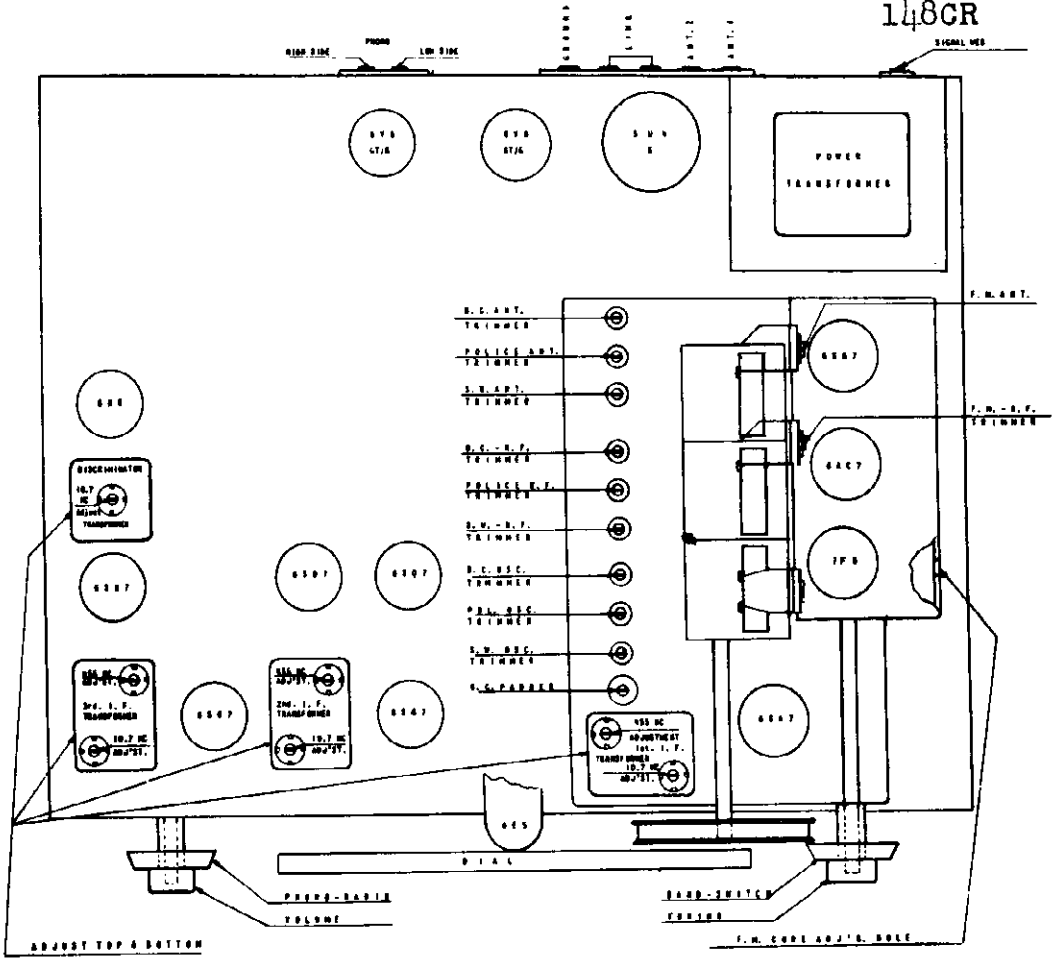

TOP VIEW OF CHASSIS SHOWING TRIMMERS AND TUBES—

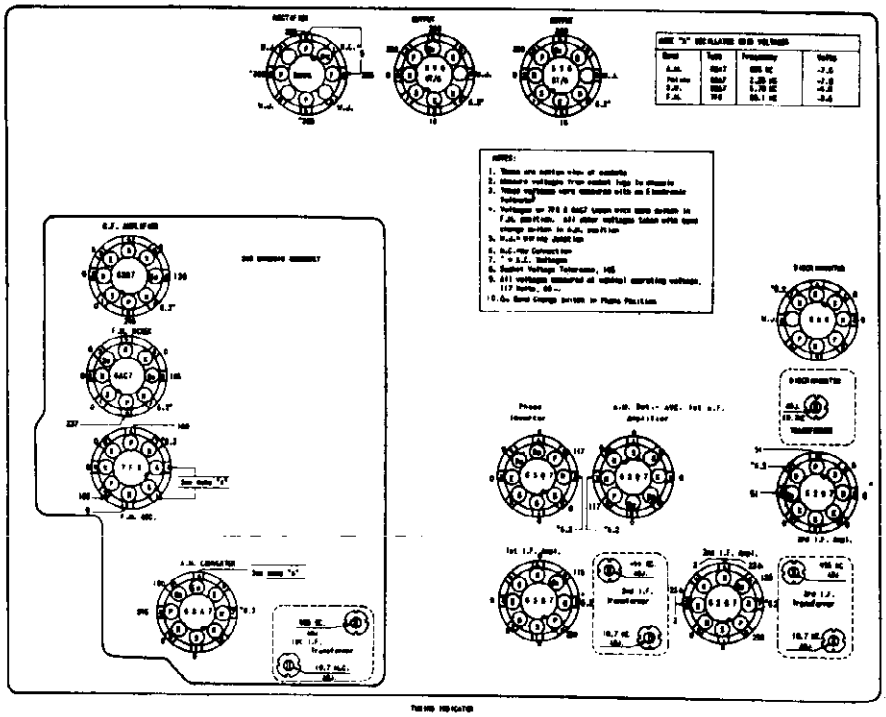

SOCKET VOLTAGE CHART

MODELS 148CP
148CP(W), 148CQ,
148CR

CROSLEY DIV.
AVCO MFG. CORP.

REPLACEMENT PARTS LIST

Figures in first column correspond to figures in Schematic Diagram

Item No.	Part No.	Description
142	G-39012-7	Iron Core (P. B. #6)
143	G-39012-7	Iron Core (P. B. #5)
144	G-39012-7	Iron Core (P. B. #4)
145	G-39012-7	Iron Core (P. B. #3)
146	G-39012-7	Iron Core (P. B. #2)
147	G-39012-7	Iron Core (P. B. #1)
148	Part of Item 180	Iron Core
149	B-139727-4	Cable and Plug, Power (Phono)
150	W-139692	Loop Assy., Transmission Line
151	W-135421	Switch, Power
152A	C-135976	Switch, Band Change (Four Section)
152B		Switch, Band Change (Four Section)
152C		Switch, Band Change (Four Section)
152D		Switch, Band Change (Four Section)
153	B-135828	Control, Volume (2.5 megohm, Tap 750,000 ohm)
*	39368-19	Control, Volume
*	39370-1	Shaft, Volume (Plug-in)
154	R-139882	Record Changer ("W56," Model 148CQ)
154	R-143055	RECORD CHANGER (W156) 148 CP(W)CR
155	W-135741	Switch Assy., P. B. (Tone)
156	AC-136090	Transformer, Discriminator
157	AC-136073	Transformer, 1st I.F.
158	AC-136059	Transformer, 2nd I.F.
159	AC-136112	Transformer, 3rd I.F.
161	AW-134089	Coil, P.B. Oscillator, (No. 2)
162	AW-134090	Coil, P.B. Oscillator, (No. 5)
163	AW-134091	Coil, P.B. Oscillator, (No. 6)
164	AW-134092	Coil, P.B. Oscillator, (No. 1)
165	AW-134230	Coil, P.B. Oscillator, (No. 3)
166	AW-134231	Coil, P.B. Oscillator, (No. 4)
167	C-137058	Speaker (Less Transformer)
168	39001-17	Condenser, .05 mfd., 600 v., paper
169	39373-33	Resistor, 1,000 ohm, ½ w.
170	W-43567	Bulb (Dial), Type 51, 7.5 v., 0.2 amp.
	138437-4	Bulb (Dial), Type 51, 7.5 v., 0.2 amp. (Carton of Ten Bulbs)
171	39001-76	Condenser, .003 mfd., 600 v., paper
172	39001-76	Condenser, .003 mfd., 600 v., paper
173	39373-71	Resistor, 68,000 ohm, ½ w.
174	39373-80	Resistor, 220,000 ohm, ½ w.
175	39373-80	Resistor, 220,000 ohm, ½ w.
176	W-135742	Switch, P.B. Tuning
177	AB-137433	Coupling, F.M. Antenna
178	AW-136737	Coil, Antenna Secondary
179	AW-136411	Coil, Antenna
180	AW-136396	Coil, Antenna Loading
181	AW-136726	Choke, R.F.
182	AW-136732	Choke, R.F. Primary
183	AW-136245	Coil, R.F. Secondary
184	AW-136406	Coil, R.F. (S. W. & Police)
185	AW-136362	Coil, R.F. (B. C.)
186	AW-136392	Coil, Oscillator (S. W.)
187	AW-136393	Coil, Oscillator (Police)
188	AW-136364	Coil, Oscillator (B. C.)
189	AW-136682	Coil, and Mtg. (H. F.)
190	39371-5	Resistor, 1,000 ohm, 10 w.
191	AW-136720	Choke, R.F. Heater
192	Part of Item 189	Iron Core, F.M. Oscillator
193	39019-2	Terminal Board, Phono
194	W-136316	Tie Bar
195	39373-60	Resistor, 22,000 ohm, ½ w.
196	39019-5	Terminal Board, Antenna
197	B-226638-31	Condenser, .001 mfd., 300 v., ceramic
198	B-226638-31	Condenser, .001 mfd., 300 v., ceramic
199	39373-33	Resistor, 1,000 ohm, ½ w.
200	138927	Record Changer (400-12 Model 148CP)
204	39232-5	Socket, Tube (6SG7)
205	39232-5	Socket, Tube (6AC7)
206	39232-5	Socket, Tube (6SG7)
207	39232-1	Socket, Tube (6SG7)
208	39232-5	Socket, Tube (6SH7)
209	39232-1	Socket, Tube (6H6)
210	39232-1	Socket, Tube (6SA7)
211	W-136470	Socket, Tube (7F8)
213	39232-1	Socket, Tube (6SQ7)
214	39232-1	Socket, Tube (6SQ7)
215	39204	Socket, Tube (6V6)

*These parts will replace the original equipment parts.

Item No.	Part No.	Description
216	39204	Socket, Tube (6V6)
217	39232-1	Socket, Tube (5U4G)
218	C-137727-64	Condenser, 300 mmf., 500 v., ceramic
219	C-137727-68	Condenser, 11.5 mmf., 500 v., ceramic
	AC-136187	Background Assy., Dial
	AW-135502	Brackets & Bushing Assy., Pointer Pulley
	W-41405-1	Bushing (Headed), Chassis Mtg., or Switch Mtg.
	W-41405-9	Bushing (Headed), R.F. Unit Mtg.
	B-135719-1	Button (On-Off) (Model 148CP)
	B-135717-1	Button (Station) (Model 148CP)
	B-135688-1	Button (Tone), Treble 1 (Model 148CP)
	B-135714-1	Button (Tone), Treble 2 (Model 148CP)
	B-135715-1	Button (Tone), Treble 3 (Model 148CP)
	B-135694-1	Button (Tone), Bass 1 (148 CP(W))
	B-135699-1	Button (Tone), Bass 2 (148 CR)
	B-135716-1	Button (Tone), Bass 3 (Model 148CP)
	B-135719-2	Button (On-Off) (Model 148CQ)
	B-135717-2	Button (Station) (Model 148CQ)
	B-135688-2	Button (Tone), Treble 1 (Model 148CQ)
	B-135714-2	Button (Tone), Treble 2 (Model 148CQ)
	B-135715-2	Button (Tone), Treble 3 (Model 148CQ)
	B-135694-2	Button (Tone), Bass 1 (Model 148CQ)
	B-135699-2	Button (Tone), Bass 2 (Model 148CQ)
	B-135716-2	Button (Tone), Bass 3 (Model 148CQ)
	W-136168	Call Letter Sheet
	W-136144	Call Letter Covers
	R-139505	Cabinet (148CP)
	R-139517	Cabinet (148CQ)
	W-135690	Clip, Escutcheon (148 CP, CQ)
	W-230529	Clip, Tube
	W-134595	Cord, Dial Drive
	D-136142	Dial Glass
	B-135970	Disc, Indicator
	D-135711-1	Escutcheon (148CP)
	D-135711-2	Escutcheon (148CQ)
	AW-138590	Flywheel & Pinion Gear Assy.
	W-136656	Gasket, Dial Glass
	W-135581	Gasket, Dial Lens
	AW-136203	Gear & Hub Assy.
	W-45580	Grommet (Rubber)
	AW-137266	Hinge Assy., Cabinet (148 CP, CQ)
	B-135981-1	Knob, Large (148CP) (CP(W), CR)
	W-135989-1	Knob, Small (148CP) (CP(W), CR)
	B-135981-2	Knob, Large (148CQ)
	W-135989-2	Knob, Small (148CQ)
	C-134880	Lens, Dial
	AB-136215	Link Assy., Toggle
	AB-134935	Needle, Floating Jewel Assy.
	W-132366-2	Nut (Locking), Iron Core
	W-135580	Nut (Special), Escutcheon
	B-135857	Pointer, Dial
	W-139573	Pull (Handle), Cabinet—148CP
	W-139574	Pull (Knob), Cabinet—148CP
	142,569	Pull (Handle), Cabinet—148CQ
	142568	Pull (Knob), Cabinet—148CQ
	AW-136310	Pulley & Sleeve Assy.
	W-51071	Ring (Retaining), Indicator Disc
	W-135499	Ring (Snap), Pointer Bearing
	W-211101	Ring (Retaining), Socket
	39311-60	Screw (#8-32x3/16 C. P. Headless Set)
	W-135752	Screw, Escutcheon
	W-136102	Screw, (#12-24 Hex. Hd. Ptd. Pilot Ma.)
	W-135350	Shaft, Drive
	D-136565-7	Socket, Dial Light
	W-132322	Spring, Chassis Mtg.
	W-136425	Spring (Comp.), Gear & Hub Assy.
	W-51752	Spring, Dial Drive Cord
	W-49829	Spring (Lock), Switch Shafts
	W-136113	Spring (Loop), Pointer
	W-136760	Spring, Grounding
	W-137430	Spring, Static
	C-135693	Support, Dial Lens
	AB-136283	Switch Assy. (Complete), Push Button
	AB-136233	Toggle Assy., Double
	W-134916	Washer (Spring), Indicator Disc

CROSLEY DIV.
AVCO MFG. CORP.

MODELS 148CP, 148CP(W), 148CQ, 148CR

REPLACEMENT PARTS LIST

Figures in first column correspond to figures in Schematic Diagram

Item No.	Part No.	Description
1	39372-10	Resistor, 6,200 ohm, 10 w.
2	39373-92	Resistor, 1.0 megohm, ½ w.
3	39373-97	Resistor, 2.2 megohm, ½ w.
4	39373-97	Resistor, 2.2 megohm, ½ w.
5	39373-97	Resistor, 2.2 megohm, ½ w.
6	39373-33	Resistor, 1,000 ohm, ½ w.
7	39373-33	Resistor, 1,000 ohm, ½ w.
8	39373-33	Resistor, 1,000 ohm, ½ w.
9	39373-33	Resistor, 1,000 ohm, ½ w.
10	39373-33	Resistor, 1,000 ohm, ½ w.
11	39373-75	Resistor, 120,000 ohm, ½ w.
12	39373-74	Resistor, 100,000 ohm, ½ w.
13	39373-51	Resistor, 6,800 ohm, ½ w.
14	39373-74	Resistor, 100,000 ohm, ½ w.
15	39373-74	Resistor, 100,000 ohm, ½ w.
16	39373-74	Resistor, 100,000 ohm, ½ w.
17	39373-71	Resistor, 68,000 ohm, ½ w.
18	39373-60	Resistor, 22,000 ohm, ½ w.
19	39373-77	Resistor, 150,000 ohm, ½ w.
20	39373-67	Resistor, 47,000 ohm, ½ w.
21	39373-107	Resistor, 10 megohm, ½ w.
22	39373-107	Resistor, 10 megohm, ½ w.
23	39373-80	Resistor, 220,000 ohm, ½ w.
24	39373-80	Resistor, 220,000 ohm, ½ w.
25	39373-80	Resistor, 220,000 ohm, ½ w.
26	39373-80	Resistor, 220,000 ohm, ½ w.
27	39373-157	Resistor, 4,700 ohm, 1 w.
28	39373-155	Resistor, 3,900 ohm, 1 w.
29	39373-239	Resistor, 220 ohm, 2 w.
30	39373-94	Resistor, 1.5 megohm, ½ w.
31	39373-94	Resistor, 1.5 megohm, ½ w.
32	39373-84	Resistor, 330,000 ohm, ½ w.
33	39373-84	Resistor, 330,000 ohm, ½ w.
34	Part of Item 157	Resistor, 39,000 ohm, ½ w.
35	Part of Item 158	Resistor, 39,000 ohm, ½ w.
36	Part of Item 159	Resistor, 39,000 ohm, ½ w.
37	39373-51	Resistor, 6,800 ohm, ½ w.
38	39373-19	Resistor, 220 ohm, ½ w.
39	39373-170	Resistor, 22,000 ohm, 1 w.
40	39373-170	Resistor, 22,000 ohm, 1 w.
41	39373-170	Resistor, 22,000 ohm, 1 w.
42	39373-278	Resistor, 18,000 ohm, 2 w.
43	39373-87	Resistor, 470,000 ohm, ½ w.
44	39001-13	Condenser, .01 mfd., 600 v., paper
45	39001-13	Condenser, .01 mfd., 600 v., paper
46	39001-13	Condenser, .01 mfd., 600 v., paper
47	39001-13	Condenser, .01 mfd., 600 v., paper
48	39001-13	Condenser, .01 mfd., 600 v., paper
49	39001-17	Condenser, .05 mfd., 600 v., paper
50	39001-17	Condenser, .05 mfd., 600 v., paper
51	39001-17	Condenser, .05 mfd., 600 v., paper
52	39001-78	Condenser, .006 mfd., 600 v., paper
53	39001-78	Condenser, .006 mfd., 600 v., paper
54	39001-1	Condenser, .0001 mfd., 600 v., paper
55	B-226638-2	Condenser, 100 mmf., 300 v., ceramic
56	39001-1	Condenser, .0001 mfd., 600 v., paper
57	39001-1	Condenser, .0001 mfd., 600 v., paper
58	39001-1	Condenser, .0001 mfd., 600 v., paper
59	39001-1	Condenser, .0001 mfd., 600 v., paper
60	39004-9	Condenser, 220 mmf., 500 v., mica
61	39004-9	Condenser, 220 mmf., 500 v., mica
62	B-226638-54	Condenser, 75 mmf., 500 v., ceramic
63	B-226638-54	Condenser, 75 mmf., 500 v., ceramic
64	B-226638-54	Condenser, 75 mmf., 500 v., ceramic
65	39001-17	Condenser, .05 mfd., 600 v., paper
66	39001-17	Condenser, .05 mfd., 600 v., paper
67	39001-17	Condenser, .05 mfd., 600 v., paper
68	39001-17	Condenser, .05 mfd., 600 v., paper
69	39001-17	Condenser, .05 mfd., 600 v., paper
70	39001-76	Condenser, .003 mfd., 600 v., paper
71	39001-76	Condenser, .003 mfd., 600 v., paper
72	39001-76	Condenser, .003 mfd., 600 v., paper
73	39001-11	Condenser, .005 mfd., 600 v., paper
74	39001-11	Condenser, .005 mfd., 600 v., paper
75	39001-17	Condenser, .05 mfd., 600 v., paper
76	39001-13	Condenser, .01 mfd., 600 v., paper
77	B-226638-53	Condenser, 50 mmf., 500 v., ceramic
78	39004-7	Condenser, 100 mmf., 500 v., mica
79	B-226638-31	Condenser, .001 mfd., 300 v., ceramic
80	B-226638-31	Condenser, .001 mfd., 300 v., ceramic
81	B-226638-31	Condenser, .001 mfd., 300 v., ceramic
82	Part of Item 158	Condenser, 30 mmf., 500 v., ceramic
83	Part of Item 159	Condenser, 30 mmf., 500 v., ceramic
84	Part of Item 159	Condenser, 30 mmf., 500 v., ceramic
85	Part of Item 158	Condenser, 30 mmf., 500 v., ceramic
86	W-137398-2	Condenser, 1 mmf., 500 v., silver mica
87	G-131502-20	Condenser, 680 mmf., 400 v., silver mica
88	G-131502-5	Condenser, 500 mmf., 400 v., silver mica
89	G-131502-5	Condenser, 500 mmf., 400 v., silver mica
90	Part of Item 157	Condenser, 1,000 mmf., 500 v., mica
91	Part of Item 157	Condenser, 1,000 mmf., 500 v., mica
92	Part of Item 158	Condenser, 1,000 mmf., 500 v., mica
93	Part of Item 158	Condenser, 1,000 mmf., 500 v., mica
94	Part of Item 159	Condenser, 1,000 mmf., 500 v., mica
95	Part of Item 159	Condenser, 1,000 mmf., 500 v., mica
96	Part of Item 156	Condenser, 180 mmf., 500 v., mica
97	Part of Item 156	Condenser, 180 mmf., 500 v., mica
98	Part of Item 156	Condenser, 82 mmf., 500 v., silver mica
99	GC-210685-179	Condenser, 1,460 mmf., 500 v., mica
100	GC-210685-178	Condenser, 4,140 mmf., 500 v., mica
101	GC-210685-168	Condenser, 3,300 mmf., 500 v., mica
102	39004-7	Condenser, 100 mmf., 500 v., mica
104	B-136327-12	Condenser, Trimmer
105	B-136327-24	Condenser, Trimmer
106	B-136327-24	Condenser, Trimmer
107	B-136327-25	Condenser, Trimmer
108	B-136327-26	Condenser, Trimmer
109	B-136327-27	Condenser, Trimmer
110	Part of Item 157	Condenser, 16 mmf., 500 v., ceramic
111	Part of Item 157	Condenser, 27 mmf., 500 v., ceramic
113	B-136327-29	Condenser, Trimmer
114	Part of Item 189	Condenser, 50 mmf., 500 v., ceramic
115	B-136327-22	Condenser, Trimmer
116	B-137001	Transformer, Output
117A	W-135818-2	Condenser, Trimmer } Four
117B		Condenser, Trimmer } Section
117C		Condenser, Trimmer } Assy.
117D		Condenser, Trimmer }
118A	W-135821	Condenser, Trimmer } Three
118B		Condenser, Trimmer } Section
118C		Condenser, Trimmer } Assy.
119A	W-135821	Condenser, Trimmer } Three
119B		Condenser, Trimmer } Section
119C		Condenser, Trimmer } Assy.
120A	C-134895	Condenser, Variable } Three
120B		Condenser, Variable } Section
120C		Condenser, Variable } Assy.
121	W-43567	Bulb (Dial), Type 51, 7.5 v., 0.2 amp.
122A	B-137003	Condenser, 40 mfd., 400 w.v., } Two Sec.
122B		Condenser, 20 mfd., 25 w.v., } Elec. Fil.
123A	B-137002	Condenser, 50 mfd., 400 w.v., } Two Sec.
123B		Condenser, 10 mfd., 300 w.v., } Elec. Fil.
124	W-135695	Socket, Tube (6E5)
125	B-135870	Switch, Phono
126	C-132300-2	Cable and Plug, Power
127	B-135600	Transformer, Power
128	Part of Item 156	Iron Core
129	Part of Item 156	Iron Core
130	Part of Item 159	Iron Core
131	Part of Item 159	Iron Core
132	Part of Item 158	Iron Core
133	Part of Item 158	Iron Core
134	Part of Item 157	Iron Core
135	Part of Item 157	Iron Core
136	Part of Item 159	Iron Core
137	Part of Item 159	Iron Core
138	Part of Item 158	Iron Core
139	Part of Item 158	Iron Core
140	Part of Item 157	Iron Core
141	Part of Item 157	Iron Core

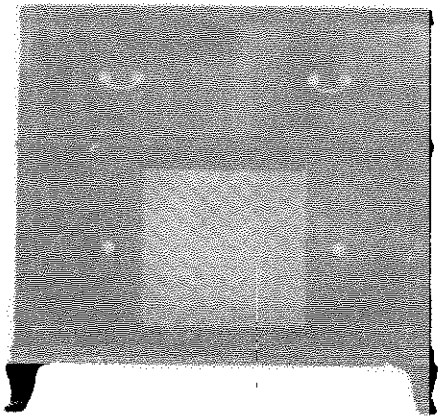

Model 148CP(W)

CABINET PARTS—MODEL 148CP(W)

Figures in first column correspond to figures in Schematic Diagram

Part No.	Description	Item No.	Part No.	Description
R-143379	Cabinet, only		143608	Grille, Metal
139319	Catch & Strike Assy., Door & Drawer		143609	Grille, Cloth
W-135690	Clip, Escutcheon		137266	Hinge, Door
143221	Door, Left Record Comp. } Matched		143263	Leg, Cabinet
	Door, Right Record Comp. } Set		C-134880	Lens, Dial
143220	Door, Radio Compartment } Matched		W-135580	Nut (Special), Escutcheon
	Panel (Front), Record } Set		143631	Panel, Radio Dial
	Changer Drawer }		W-139573	Pull (Handle), Drawer & Radio Door
143610	Drawer Frame Assy. only, Record Changer.		W-139574	Pull (Knob), Record Comp. Door
D-135711-1	Escutcheon		W-135752	Screw, Escutcheon
W-135581	Gasket, Dial Lens		139006	Slide, Drawer
			C-135693	Support, Dial Lens

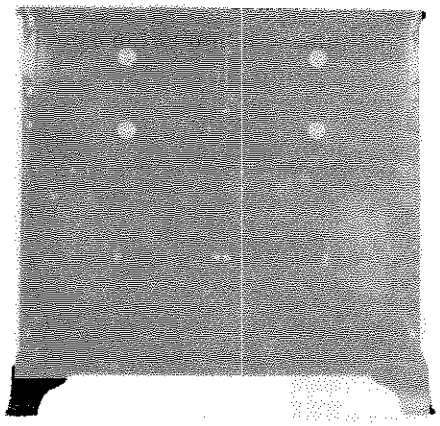

Model 148CR

CABINET PARTS—MODEL 148CR

143485	Bumper (Rubber), Door		W-135581	Gasket, Dial Lens
R-143169-1	Cabinet, only		143509	Grille, Cloth
139319-SB	Catch & Strike Assy., Door & Drawer		143620-SB	Hinge, Radio Compartment Door
143623	Door, Left Record Comp. } Matched		143333	Hinge, Record Compartment Door
	Door, Right Record Comp. } Set		143331	Knob, Drawer & Radio Comp. Door
143625	Door, Speaker (Left) }		143334	Knob, Speaker Door
	Door, Speaker (Right) } Matched		143629	Leg & Base Assembly
	Door, Speaker (Left Center) } Set		C-134880	Lens, Dial
	Door, Speaker (Right Center) }		W-135580	Nut (Special), Escutcheon
143621	Door, Radio Compartment } Matched		143630	Panel, Radio Dial
	Panel (Front), Record } Set		142912	Pull (Key Type) Record Comp. Door
	Changer Drawer }		139006	Slide, Drawer
143865	Drawer Frame Assy. only, Record Changer		C-135693	Support, Dial Lens
D-135711-1	Escutcheon		W-135752	Screw, Escutcheon
143619-SB	Equalizer, Speaker Door		143332	Support, Radio Compartment Door

MODELS 148CP,
148CP(W), 148CQ,
148CR

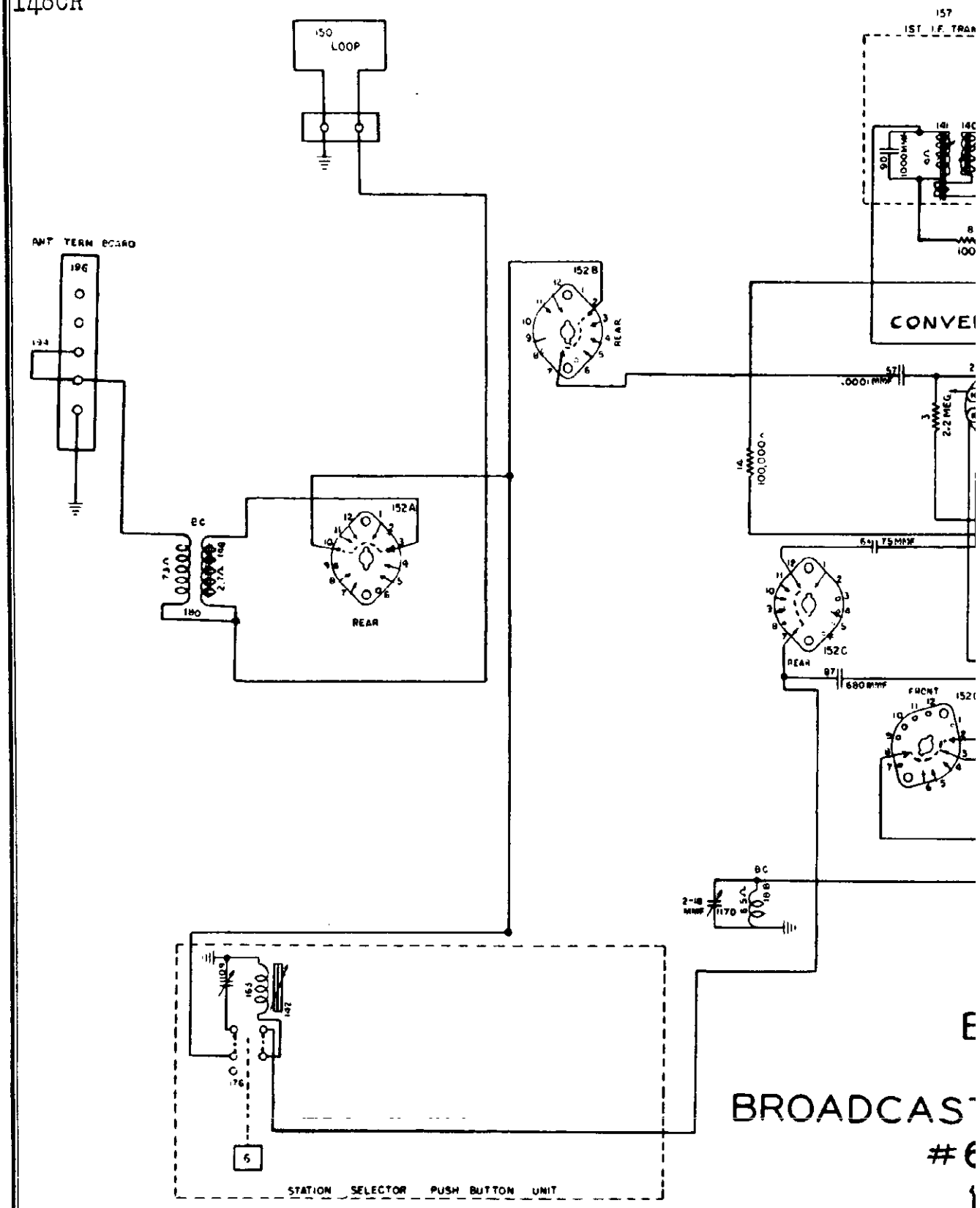

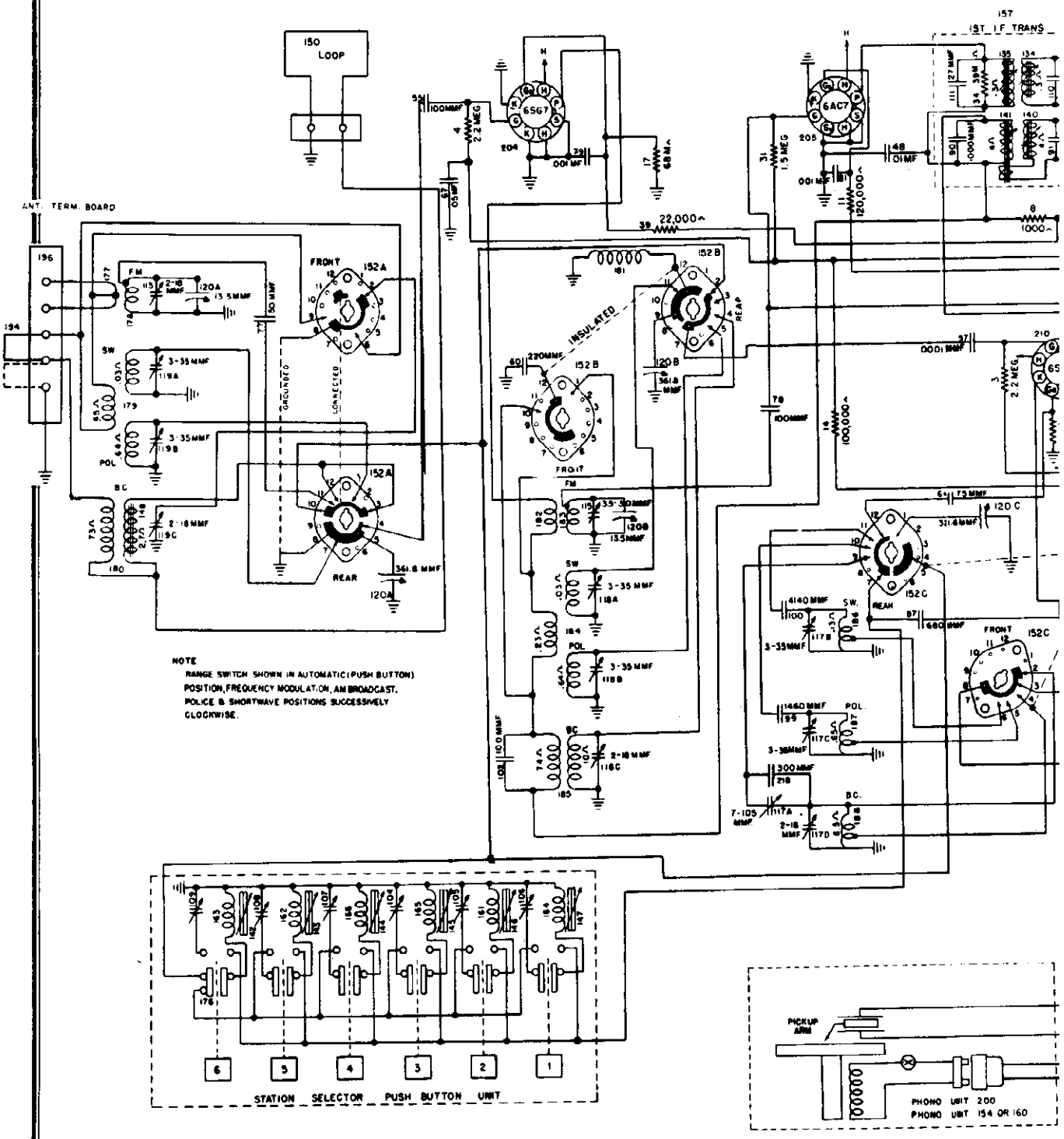

DESCRIPTION

TYPE: Fourteen tube, four-band superheterodyne.

FREQUENCY RANGE: American Broadcast Band: 535 to 1620 kc. (Selector switch at AM position).

Police Band: 2.25 to 6.7 mc. (Selector switch at POLICE position).

Short-wave Band: 6.7 to 18.5 mc. (Selector switch at SW position).

Frequency Modulation Band: 88.1 to (Selector switch at FM position).

INTERMEDIATE FREQUENCY: AM, SW Bands: 455 kc. FM Band: 10.7 mc.

POWER SUPPLY: 60 cycle a.c. only

VOLTAGE RATING: 105-125 volts.

POWER CONSUMPTION: 120 watts.

POWER OUTPUT: 18 watts maximun

©John F. Rider

LEY DIV.
IFG. CORP.

MODELS 148CP,
148CP(W), 148CQ,
148CR

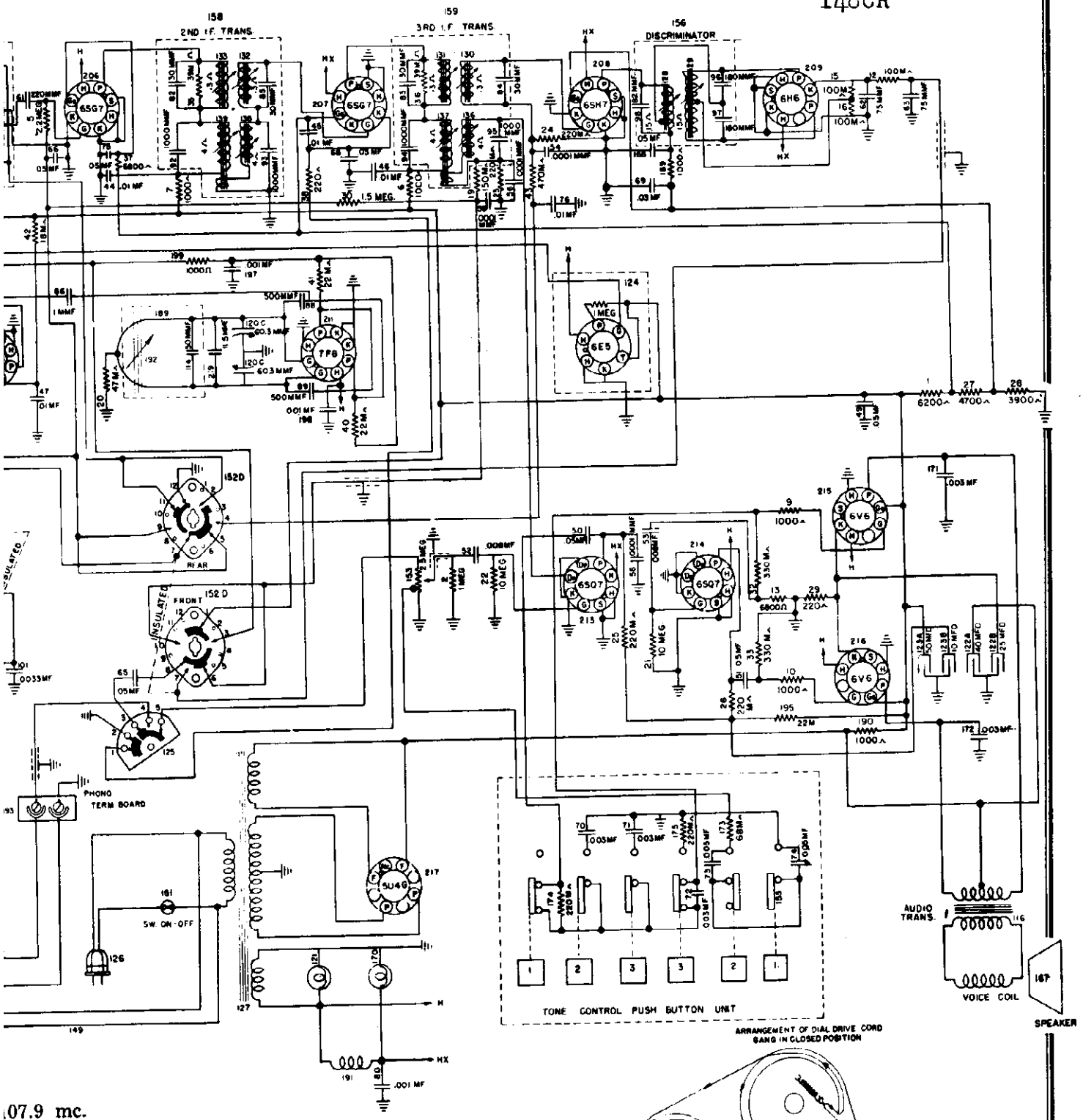

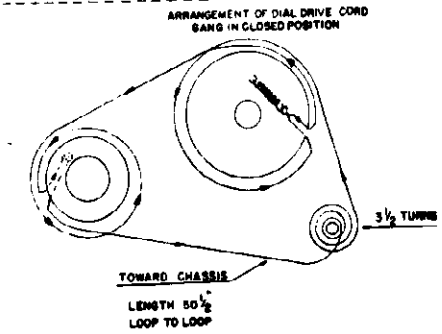

107.9 mc.

Police and

RECORD CHANGERS:
For 148CP, V-M Model 400, RCD.CH 15-1; for 148CP(W) and
R, Webster Model 156. RCD.CH. 19-1; for 148CQ, Webster 56, RCD.CH. 15-10.

KEMATIX
Trademark

Y DIV.
G. CORP.

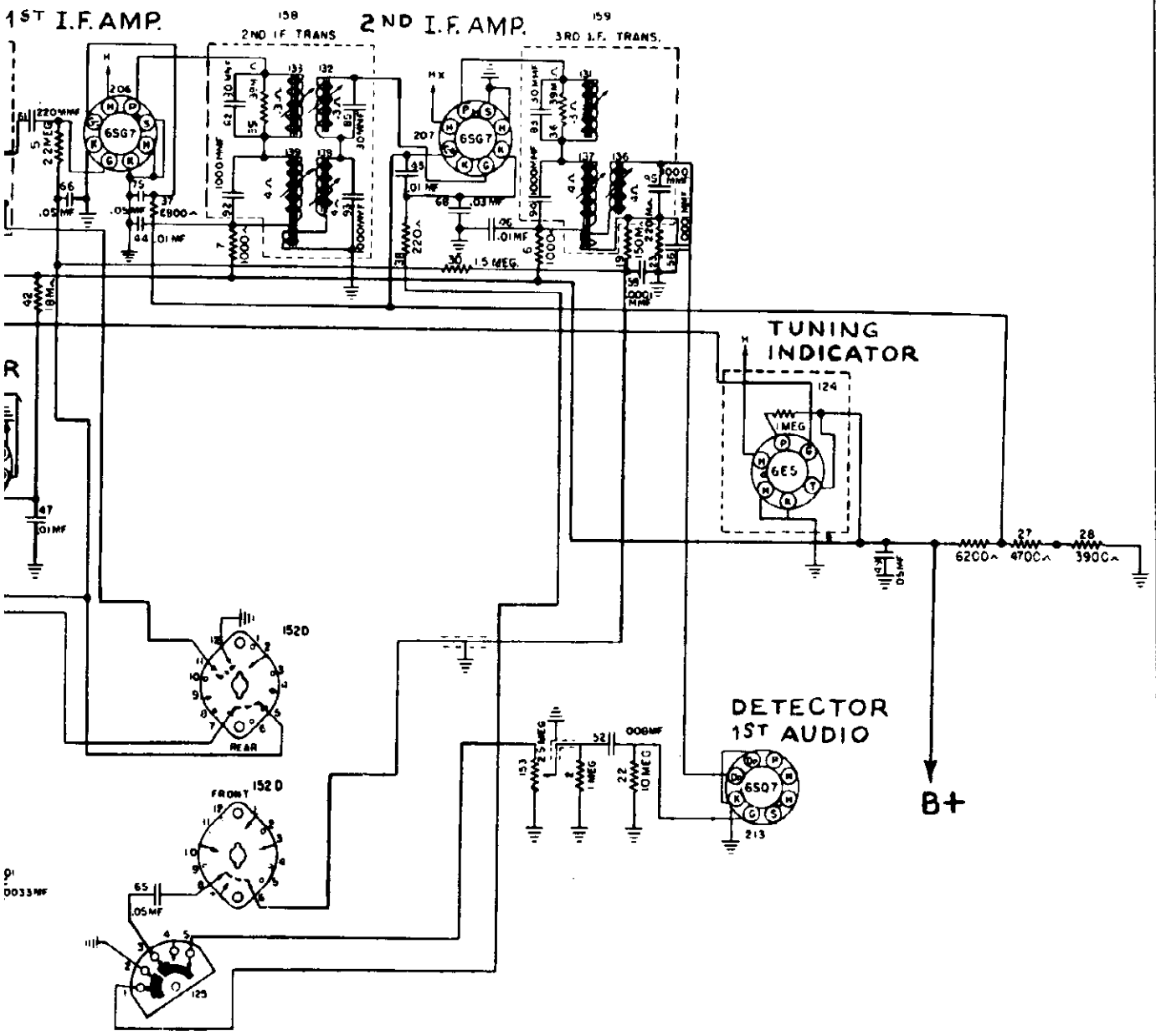

ND-SWITCH SHOWN
AT 1ST POSITION.

BAND PUSH BUTTON TUNING

UTTON DEPRESSED

)0 - 1620 KC

CROSLEY DIV.
AVCO MFG. CORP.

MODELS 148CP,
148CP(W), 148C
148CR

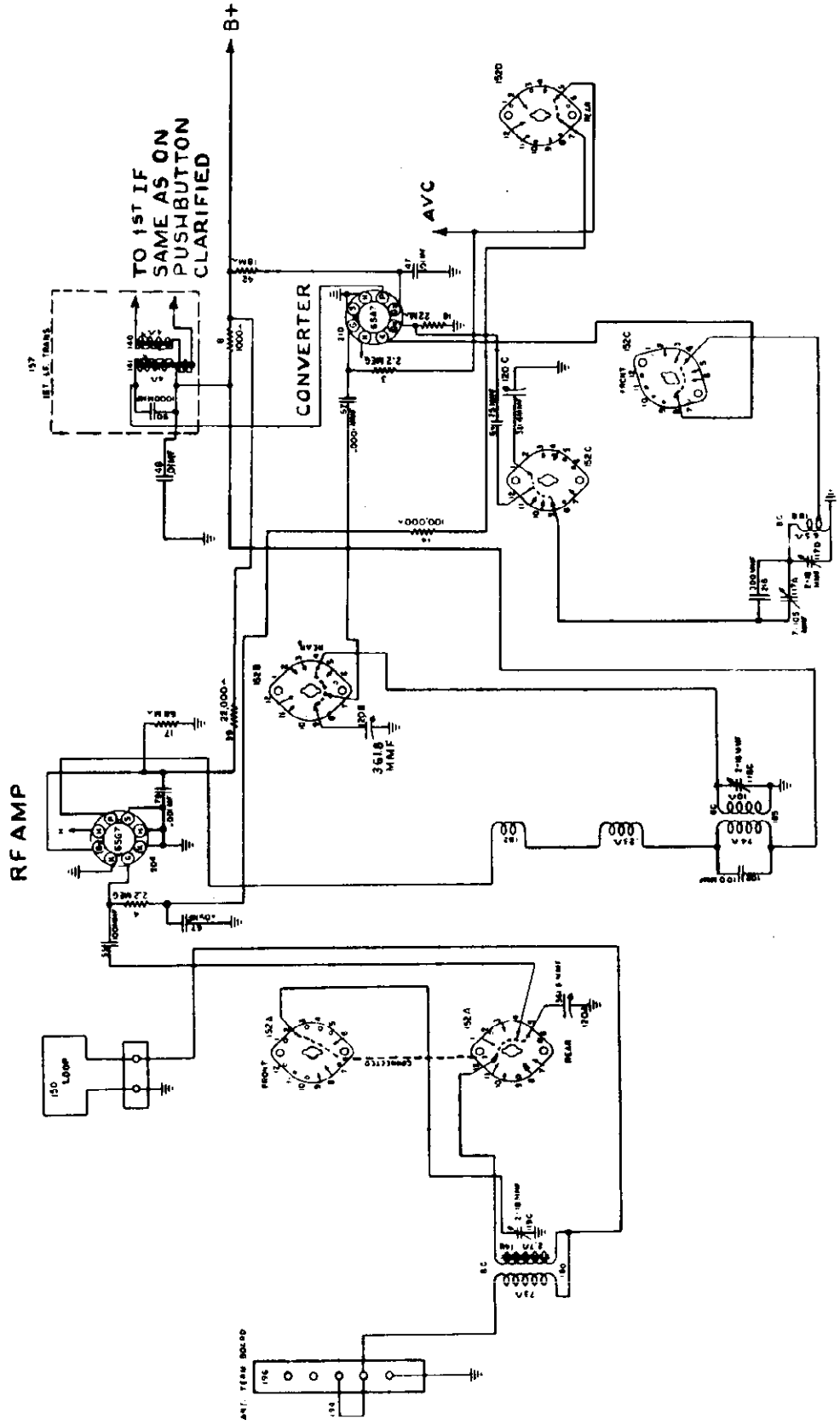

BAND-SWITCH SHOWN
AT 3RD POSITION CLOCKWISE.
BROADCAST BAND (MANUAL TUNING)
535 - 1620 KC

© John F. Rider

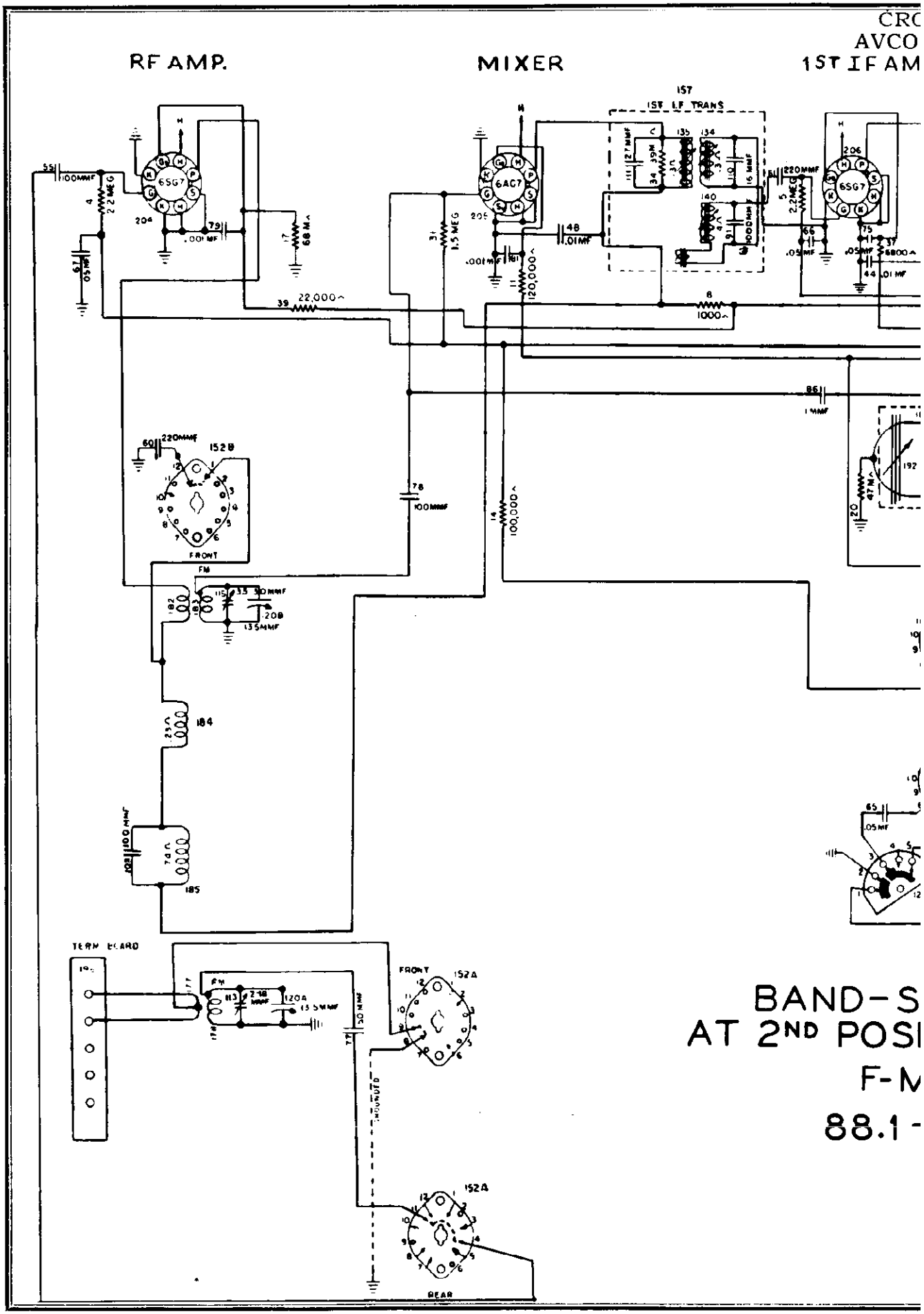
CRC
AVCO
RF AMP.
MIXER
1ST IF AM
1ST
1ST I.F. TRANS
6SG7
6AC7
6SG7
152B
FRONT
FM
184
185
TERM BOARD
FM
152A
FRONT
152A
REAR
BAND-S
AT 2ND POSI
F-M
88.1 -

©John F. Rider

SLEY DIV.
MFG. CORP.

MODELS 148CP, 148CP(W),
148CQ, 148CR

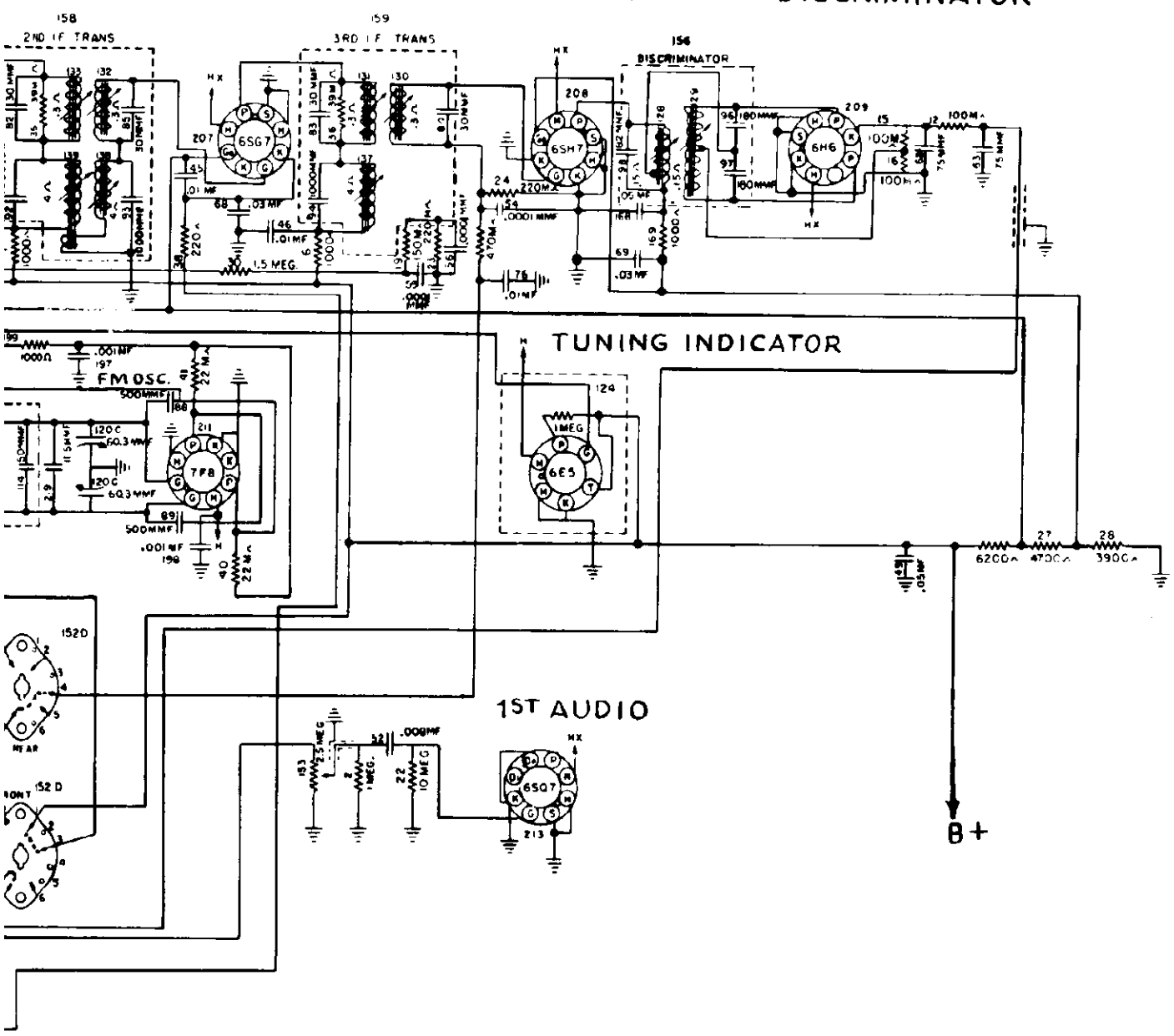

WITCH SHOWN
TION CLOCKWISE
BAND
107.9 MC

CLARI-SKEMATIX
Registered Trademark

MODELS 148CP, 148CP(W), 148CQ, 148CR

CROSLEY DIV.
AVCO MFG. CORP.

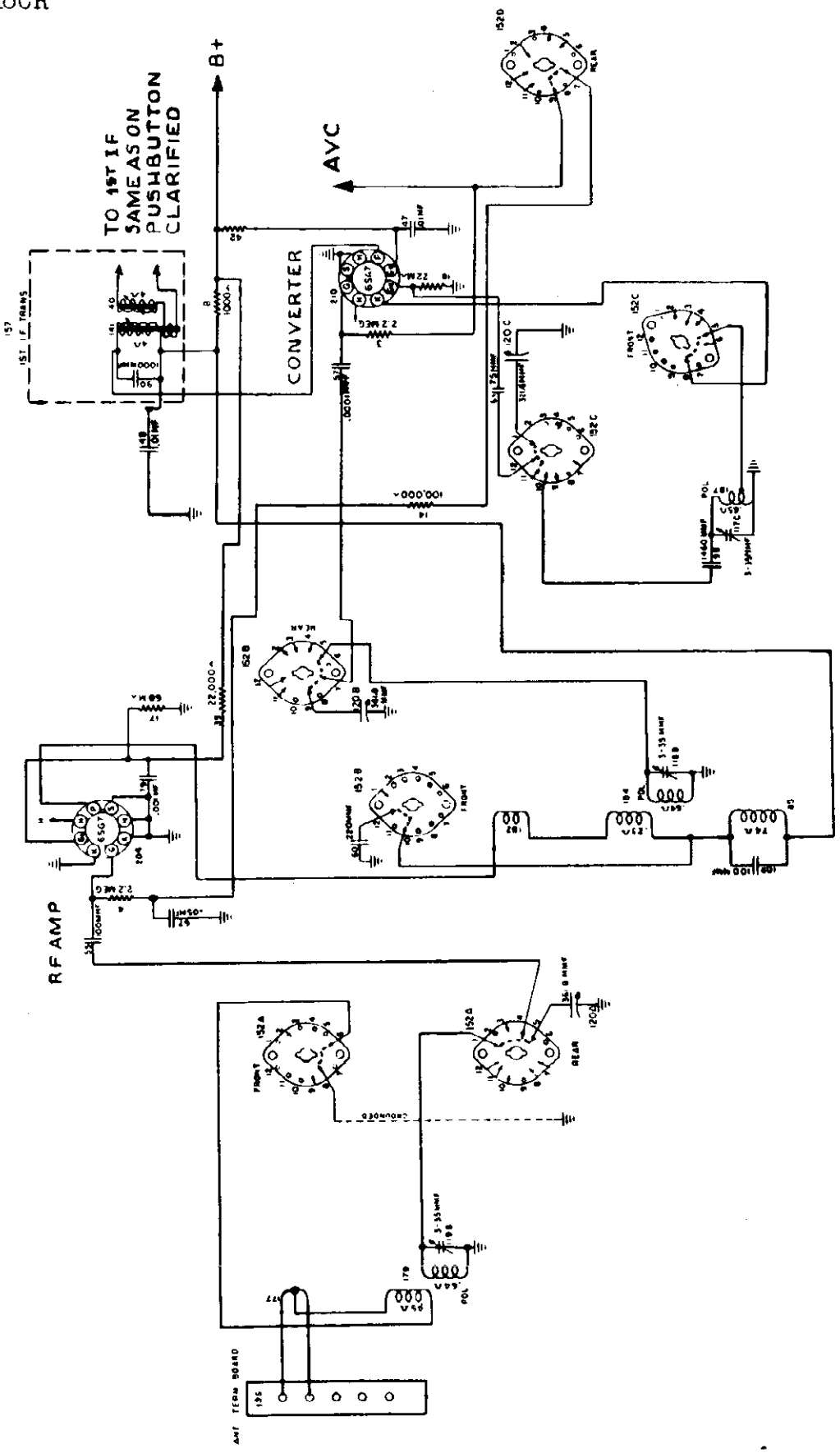

© John F. Rider

CROSLEY DIV.
AVCO MFG. CORP.

MODELS 148CP, 148CP(W), 148CQ, 148CR

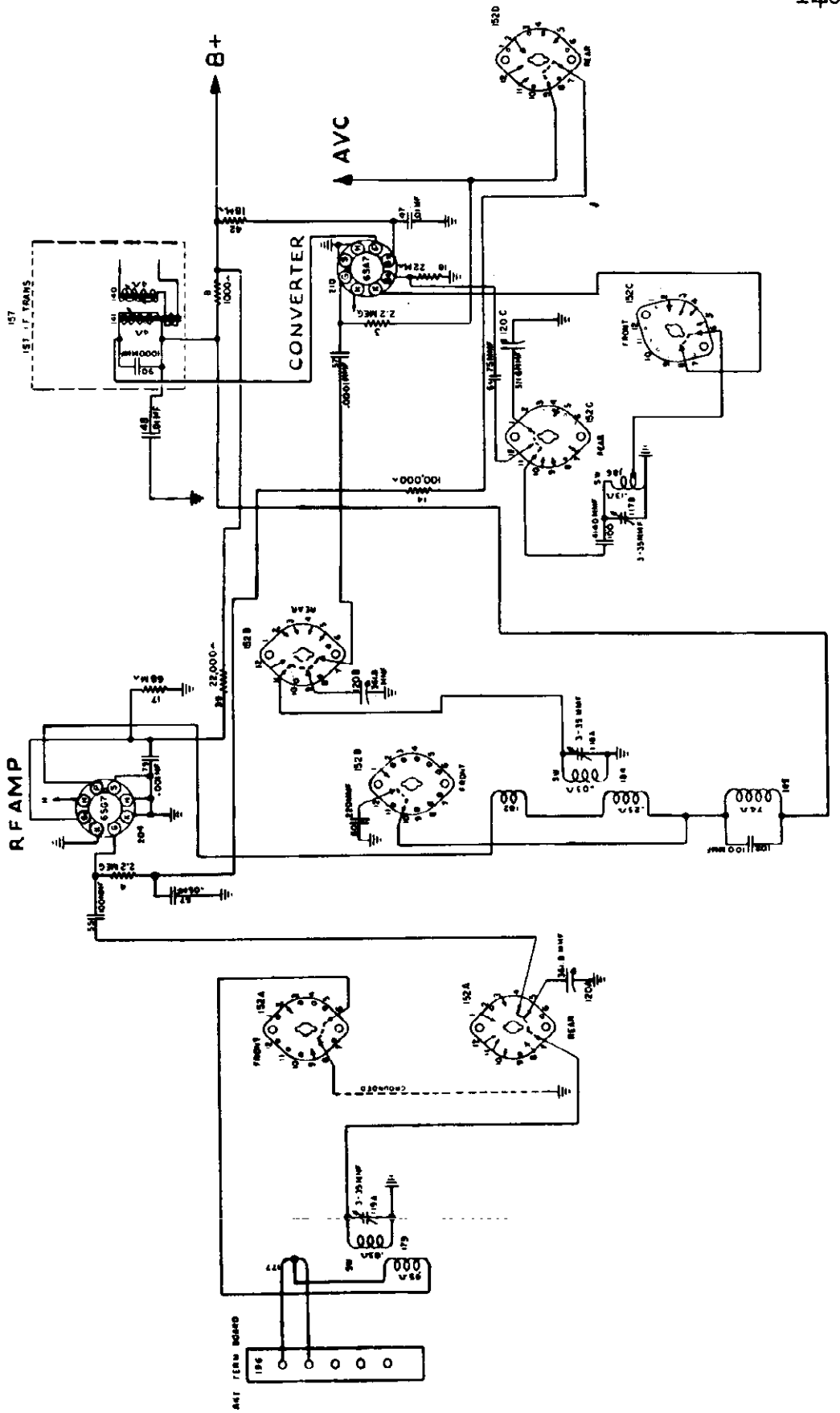

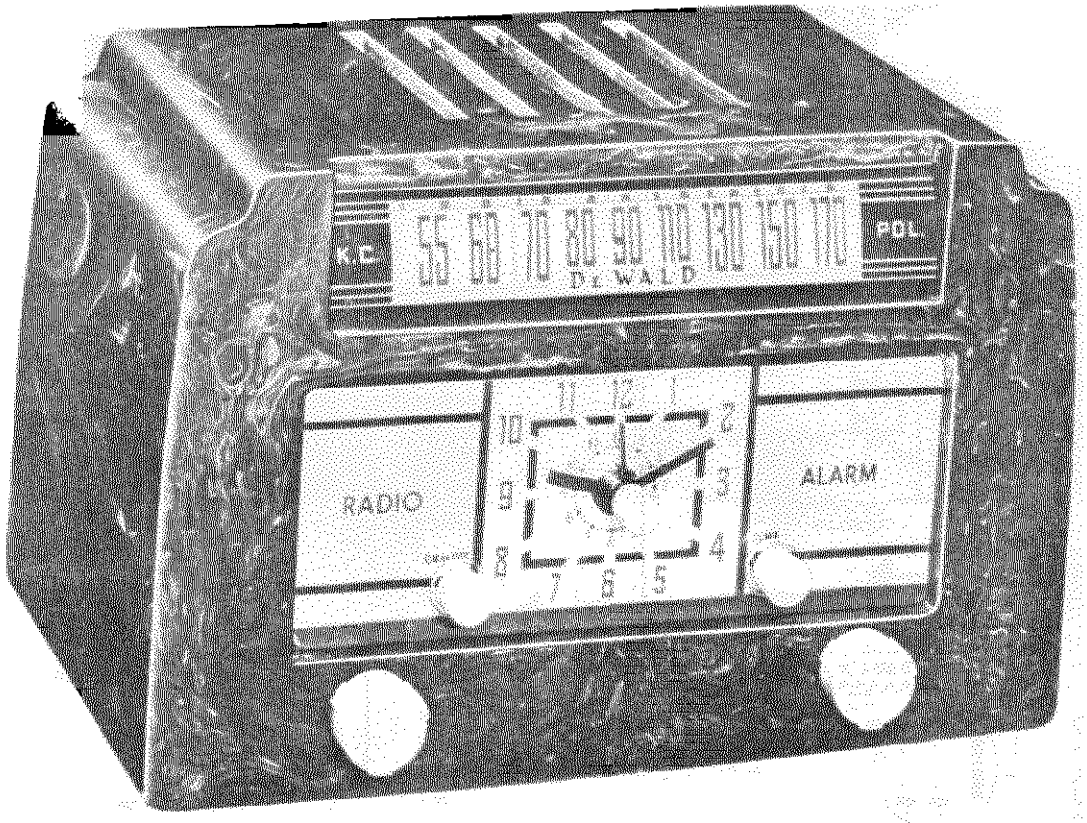

TO TURN RADIO ON AUTOMATICALLY:

Tune radio to station and volume desired. With timer switch set at "ON" press in "center" knob and turn until setting hand is at desired time. This operation turns radio off, but it will automatically turn on at the time set.

TO TURN RADIO OFF AUTOMATICALLY:

While radio is playing press in "center" knob and turn until setting hand is at desired time. This setting operation turns radio off. Turn "ON-OFF", by turning knob clockwise and radio will resume playing but will automatically turn off at the time set.

ANTENNA:

The looptenna incorporated in the DeWald Model B-512 receiver makes use of an outside antenna unnecessary in most localities. If additional pick-up is desired, weave an insulated wire through the outer holes of the cabinet back, connect one end to the outside antenna and the other end to an outside ground. See back of cabinet. The looptenna has a directional effect, it may be necessary to change the angle of the receiver for the best reception.

REPLACEMENT PARTS

1001 Antenna Loop
1003 Oscillator Coil
1000 1st I.F. Coil
1002 2nd I.F. Coil
2000 Paper Condensers
2001 Mica Condensers
2002 Comb. Electrolytic
2003 Variable Condenser
3000 Resistors
3002 Volume Cont. & Sw.
5000 Line Cord
6000 Dial Scale
7006 Speaker
8001 Pilot Lamp Socket
9000 Shaft
9762 Drive Spring
4000-2 Cabinet
8026 Clock
6013 Crystal Face
#47 Pilot Lamp
8027 Clock Face

MODEL B-512

DEWALD RADIO

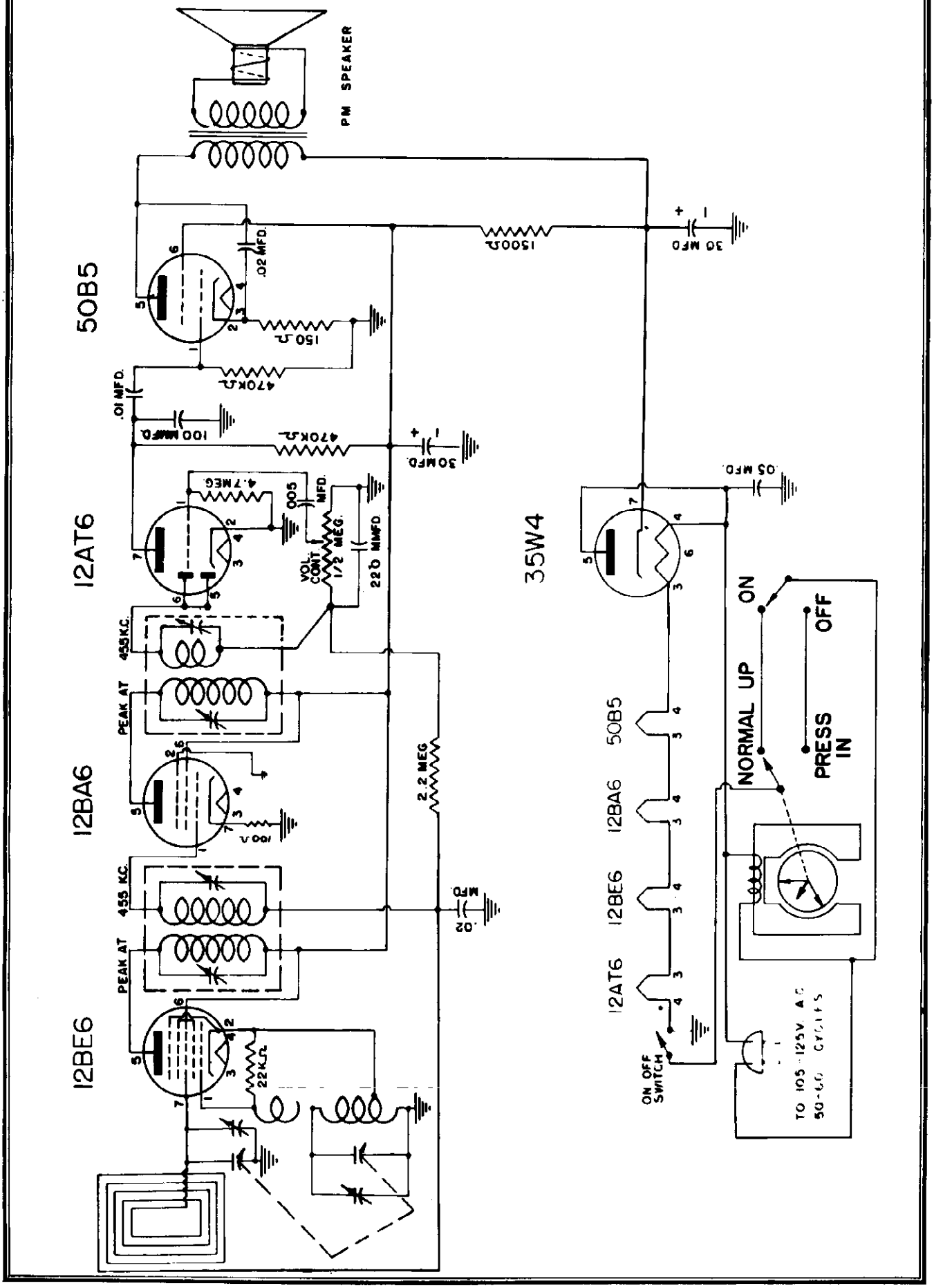

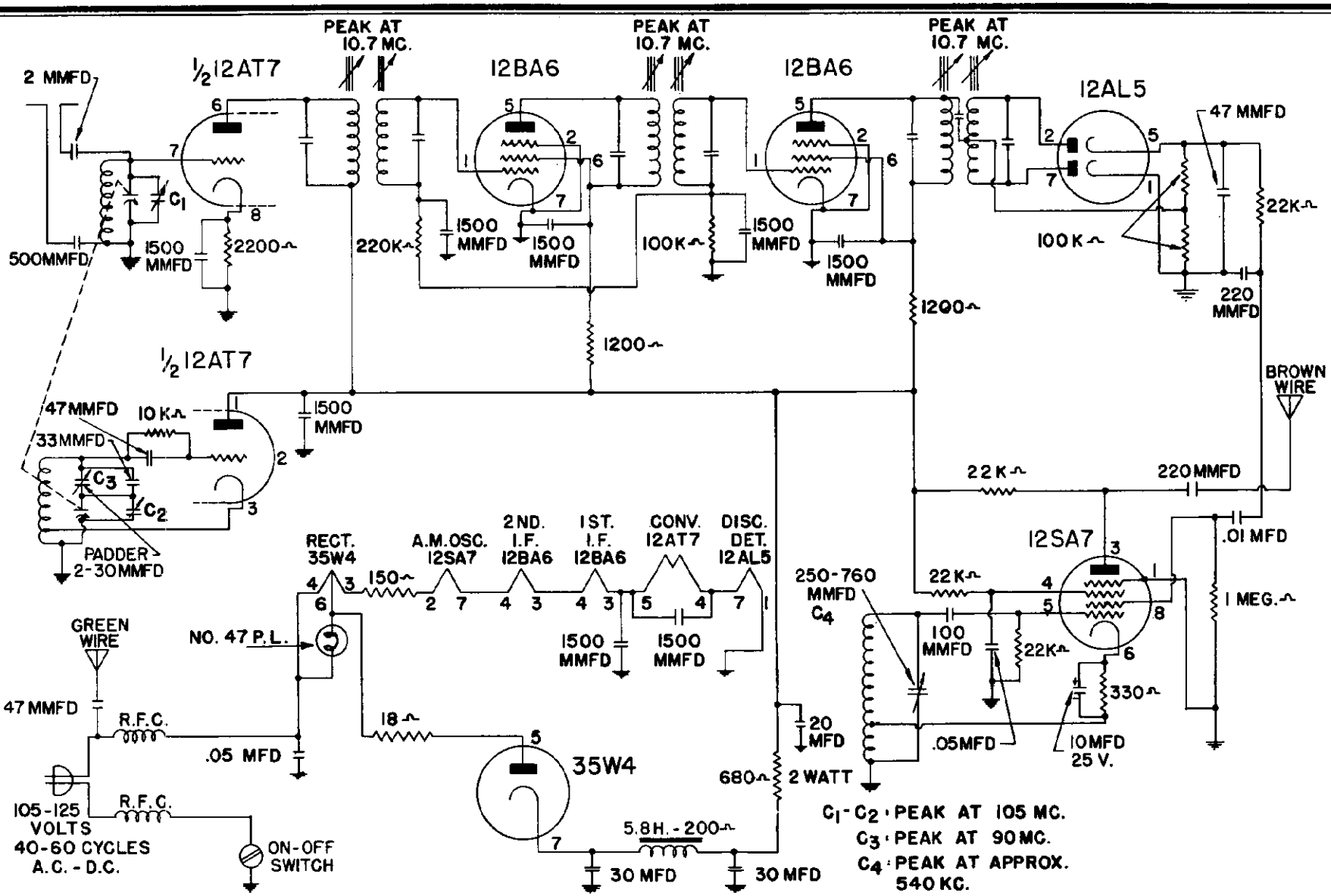

RE-BROADCAST OSCILLATOR FREQUENCY CONTROL:

This control is located on the rear of the tuner chassis and is accessible through the cabinet back. It is a screw driver adjustment to be set at about 540 K.C. on the standard broadcast receiver, or any unused neighboring frequency in the range of 500-750 K.C. This tuner at present is pre-set at 540 K.C. and adjustments are not necessary unless there is interference at this frequency.

MODEL B-612

DEWALD RADIO

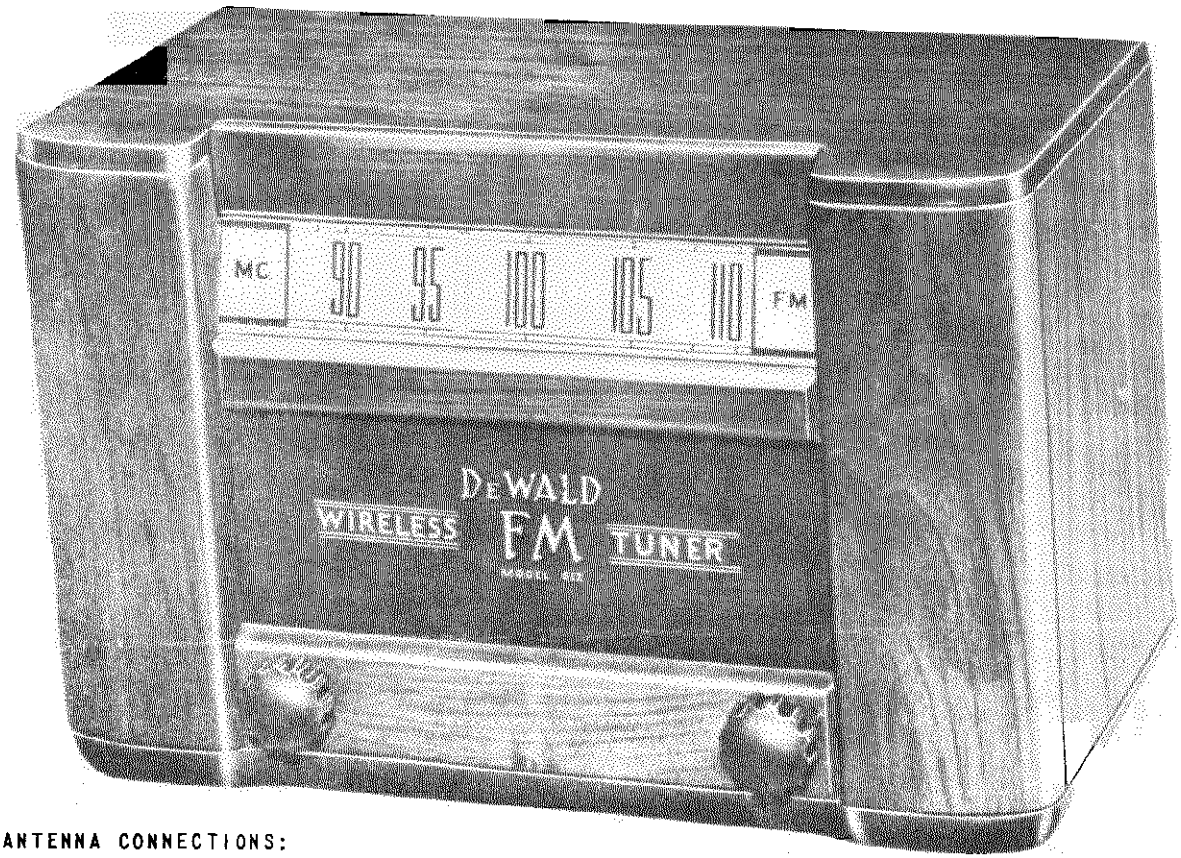

ANTENNA CONNECTIONS:

The choice of antenna to be used for the best F. M. reception depends on many factors: location, the type of building, power and distance of the F. M. station. The three main types of antennas are explained below. Test your DeWald F. M. Wireless Tuner and choose the one most practical for your use.

A. **For local high-powered F. M. stations:** The Wireless Tuner is equipped with a permanent built-in antenna that will be satisfactory for good reception of most local F. M. stations. This built-in antenna is connected internally by connecting the green wire to the red wire in the rear of the tuner. For best results when using the built-in antenna, keep the electric line cord extended to its full length.

B. **For distant F. M. stations: An outside F. M. dipole antenna** may be found to be necessary when the Wireless Tuner is operated at a great distance from the broadcasting station, or under unusual operating conditions. The outside dipole antenna (equipped with a 300 ohm flat lead-in) should be connected to the red and orange leads, at the rear of tuner, after the green wire has been disconnected from the red wire.

C. **For local weak-powered F. M. stations:** If it is not possible to erect an outside F. M. dipole antenna, an indoor type of antenna, made of 300 ohm flat lead-in wire, can be used. This indoor antenna must be installed so that its horizontal view faces the location of the desired stations.

OPERATION OF THE F. M. TUNER:

After the necessary installation has been made according to the instructions contained in the preceding paragraphs, the electric line cord of the Wireless Tuner may be plugged into an electric wall socket. Turn the ON-OFF switches of both the tuner and your radio receiver to the "ON" position. The brown wire coming out of the rear of the tuner is to be placed approximately 1 foot near the radio receiver loop or antenna lead, if radio receiver has no loop. The radio receiver is to be set at 540 Kc or any nearby clear channel, and the re-broadcast oscillator frequency control slightly adjusted until a rushing sound is heard from your radio receiver. The volume for F. M. reception is regulated by the volume control of your own radio receiver.

The F. M. band is ultra-high frequency. This necessitates precision tuning. Therefore, it is necessary to move the tuning knob of the Wireless Tuner very slowly when tuning in stations. Rotate the tuning knob back and forth several times over the station desired. You will note that the station is "on the button" when all side band noise disappears.

If the Wireless Tuner is connected to an AC-DC type radio receiver operated on AC, a very slight hum may occur when the radio receiver volume control is on full for reception on weak powered stations. If this hum is excessive, reverse the electric line cord plug of your radio receiver or of the Wireless Tuner, or both in the wall socket.

Alignment of the Wireless Tuner

Insulated alignment tools are necessary. The output meter should be a D. C. vacuum tube voltmeter with a range of at least 20 volts. The signal generator should cover the frequencies of 10.7, 90 and 105 M. C. Allow the Wireless Tuner to warm up for at least 5 minutes before making any adjustments. The location of the adjustment screws is indicated clearly on the license label. Follow the following sequence.

I. F. ALIGNMENT:

Connect the signal generator through a .01 mfd condenser to the grid of the 12AT7 converter tube. Connect the low side of the generator through a 1/10th mfd. condenser to tuner chassis. Adjust signal generator to 10.7 mc. Connect VTVM to junction of 100 M -Ohm diode load resistors. Adjust primary and secondary slugs or trimmers of each I. F. for maximum D. C. voltage output. Remove VTVM lead from junction point and connect lead to pin 5 of 12AL5 tube. Adjust secondary slug or trimmer of discriminator for zero D. C. voltage output, (check proper zero set of VTVM. Meter should register reverse polarity when slug or trimmer is rotated through zero output.)

R. F. ALIGNMENT:

Remove signal generator leads from 12AT7 control grid. Connect in series with each generator lead a carbon 150 ohm resistor. Connect the high side generator lead to the red wire, in rear of tuner, and the low side generator lead to the orange wire. Adjust signal generator to 109 Mc. Open the tuner variable condenser for minimum capacity. Peak oscillator section of tuner condenser for maximum signal. Next set signal generator to 105 Mc. Tune in this signal. Adjust R.F. section of receiver variable condenser for maximum signal strength. To adjust the low frequency end, set the tuner and signal generator to 90 Mc. Peak the oscillator padder for maximum output. The variable condenser should be rocked during this operation. Keep the signal generator output as low as possible when making all of these measurements. It is extremely necessary in making the R.F. adjustments, that the fundamental oscillator signal be tuned in and not the image frequency. This can be checked by using a calibrated wavemeter.

REPLACEMENT PARTS

1038-1	I. F. Coil	3003	1/2 Watt Resistors
1038-2	Discriminator Coil	3005	4 Watt Pigtail Resistor
1040-2	R. F. Chokes	4016	Cabinet
1041	A. M. oscillator Coil	4069	Cabinet Back
1042	Filter Choke	4044-2	Knob
1043	Antenna Coil	5000	Line Cord
1044	F. M. oscillator Coil	6014	Dial Scale
2000	Paper Capacitors	8001	Pilot Lamp Socket
2005	Electrolytic	8003	Power Switch
2012	Ceramic Condensers	9762	Dial Spring
2023	Variable Condensers	2018	Electrolytic
2040	Trimmer Condensers	#47	Pilot Lamp

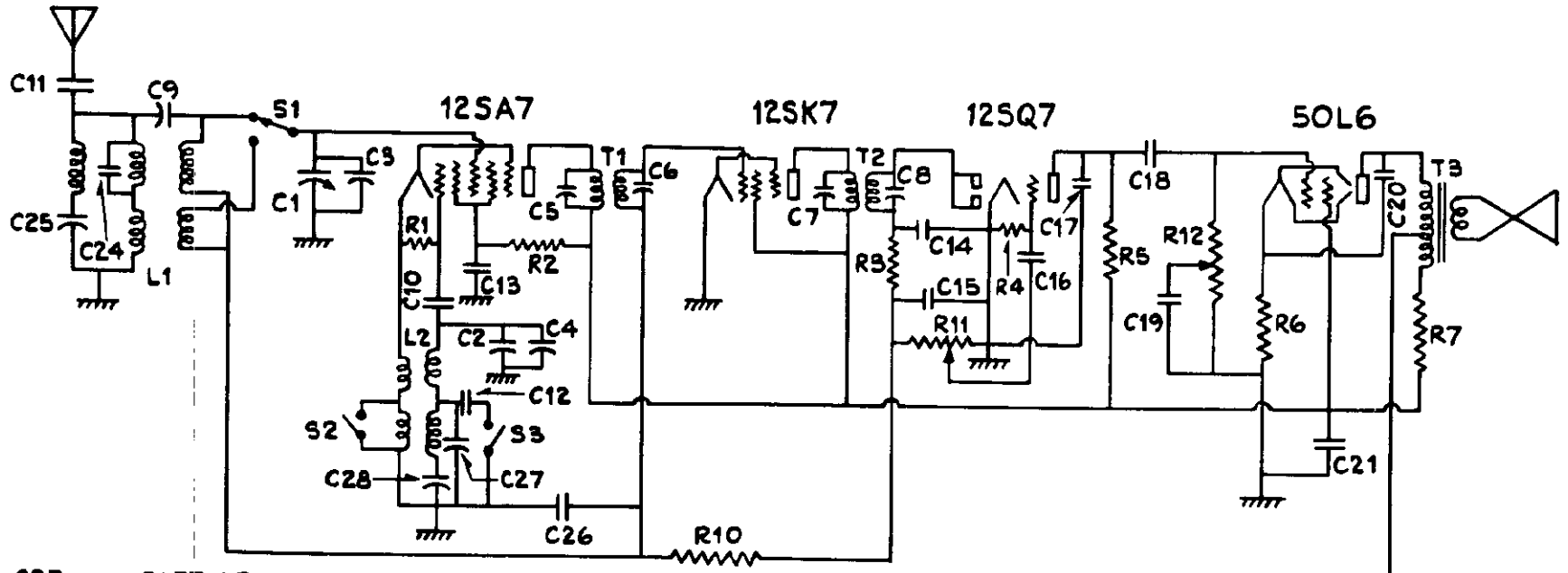

C27---- PART L2
C28--900021--BC PADDER

ITEM	PART Nº	DESCRIPTION
L1	710015	ANTENNA COIL
L2	716009	OSC. COIL
T1	720400	1ST I F TRANSFORMER
T2	720390	2ND IF TRANSFORMER
T3	734100	OUTPUT TRANSFORMER
C1 C2	900018	VARIABLE CONDENSER
C3 C4	----	PART OF C1 & C2
C5 C6	----	PART OF T1
C7 C8	----	PART OF T2
C9	----	PART OF L1
C10	910010	.00011 MF MICA
C11	920230	.005 MF 400V.
C12	910011	.0072 MF MICA
C26	920040	.1 MF 200V.

ITEM	PART Nº	DESCRIPTION
C13	925100	.8 MF ELECTROLYTIC
C14	----	PART OF T2
C15	910010	.00011 MF MICA
C16	920010	.002 MF 600V.
C17	910000	.00022 MF MICA
C18	920020	.02 MF 400V.
C19	920010	.002 MF 600V.
C20	920020	.02 MF 400V.
C21 C22	925012	50-50 MF ELECTROLYTIC
C23	920030	.05MF 400V.
C24	910250	.00005 MF MICA
C25	----	PART OF L1
R1	340810	22000 OHMS 1/2 W.
R2	340410	470 OHMS 1/2 W.
R3	----	PART OF T2
R4	397000	15 MEGOHMS 1/4 W.
R5	351130	470000 OHMS 1/2 W.
R6	340290	150 OHMS 1/2 W.

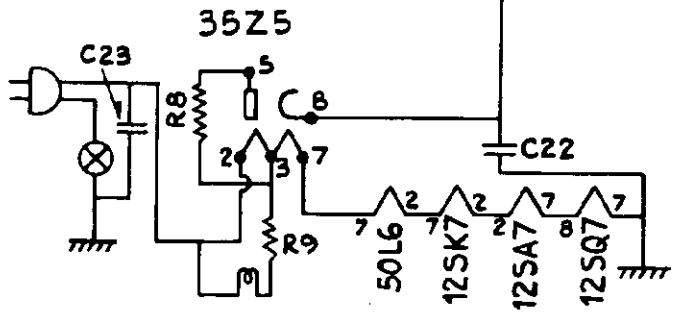

ITEM	PART Nº	DESCRIPTION
R7	370490	1000 OHMS 1 W.
R8	340050	15 OHMS 1/2 W.
R9	340010	10 OHMS 1/2 W.
R10	351330	3.3 MEG
R11	390190	VOLUME CONTROL
R12	390280	TONE CONTROL
S1 S2 S3	510300	BAND SWITCH

EMERSON RADIO AND PHONO. CORP. MODELS 512SW, 516SW, 531SW, 554, 555, CHASSIS 120057A

MODEL 537,
CHASSIS 120043

EMERSON RADIO AND PHONO. CORP.



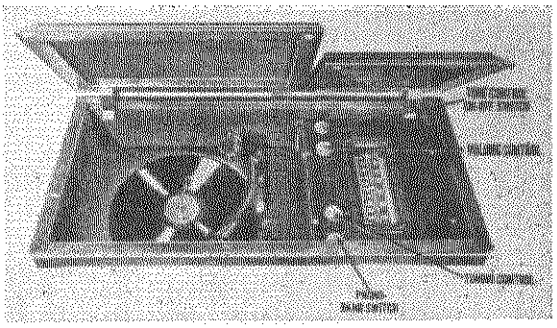

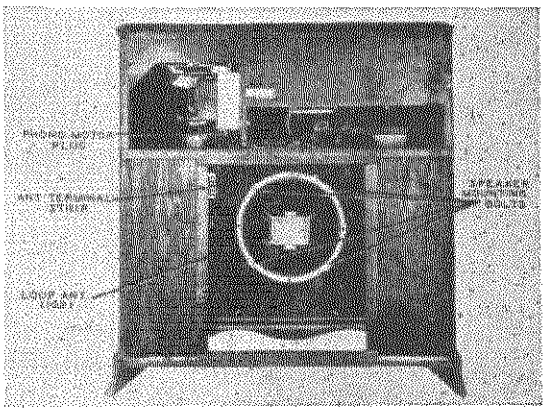

DESCRIPTION

TYPE: Console AM-FM superheterodyne with automatic record changer.

FREQUENCY RANGE:
Broadcast band (AM)—530-1620 kilocycles
Frequency modulation band (FM)—87.75-108.5 megacycles

TYPE OF TUBES:
1—6AG5, r-f amplifier
1—6BE6, converter
2—6BA6, i-f amplifier
2—6AU6, limiter and AM second detector; audio amplifier
1—6AL5, FM ratio detector
2—6V6GT, power output
1—5U4G, rectifier
1—6U5/6G5, tuning eye

POWER SUPPLY: 60-cycle a.c.

VOLTAGE RATING: 105-125 volts.

POWER CONSUMPTION: 125 watts.

CURRENT DRAIN: 1.0 amp. at 117 volts a.c.

GENERAL NOTES

1. If replacements are made or the wiring disturbed in the r-f section of the circuit, the receiver should be carefully realigned.
2. The color coding of the i-f transformer leads is as follows:

Grid—green	Plate—blue
Grid return—black	B+—red

3. A self-contained loop antenna is provided for broadcast band reception. If it is desired to improve reception of weak stations, however, an additional outdoor antenna may be used. Connect the external antenna to the *outside* terminal on the "AM" side of the terminal strip at the rear of the cabinet. Connect the ground to the adjoining terminal.
4. An internal power line antenna is provided for FM operation in relatively strong signal areas. An external dipole antenna is recommended for best FM operation. To connect dipole, remove the wire from the terminal on the "FM" side of the terminal strips and connect the two dipole leads to the two "FM" terminals. A ground connection is not required for FM operation.

DISASSEMBLY INSTRUCTIONS

1. Remove four push-on type control knobs from top of cabinet.
2. Remove phono motor plug, phono pickup plug, and two speaker plugs from chassis.
3. Remove two Phillips head screws holding antenna terminal strip to chassis.
4. Remove two nuts and washers fastening loop to cabinet.
5. Remove two Phillips head bolts in phono compartment retaining chassis to cabinet.
6. Remove two hex head bolts and washers retaining chassis to cabinet. Remove loop and chassis from rear of cabinet.
7. Remove four nuts fastening speaker to cabinet and remove speaker.

EMERSON RADIO AND PHONO. CORP.

MODEL 537,
CHASSIS 120043

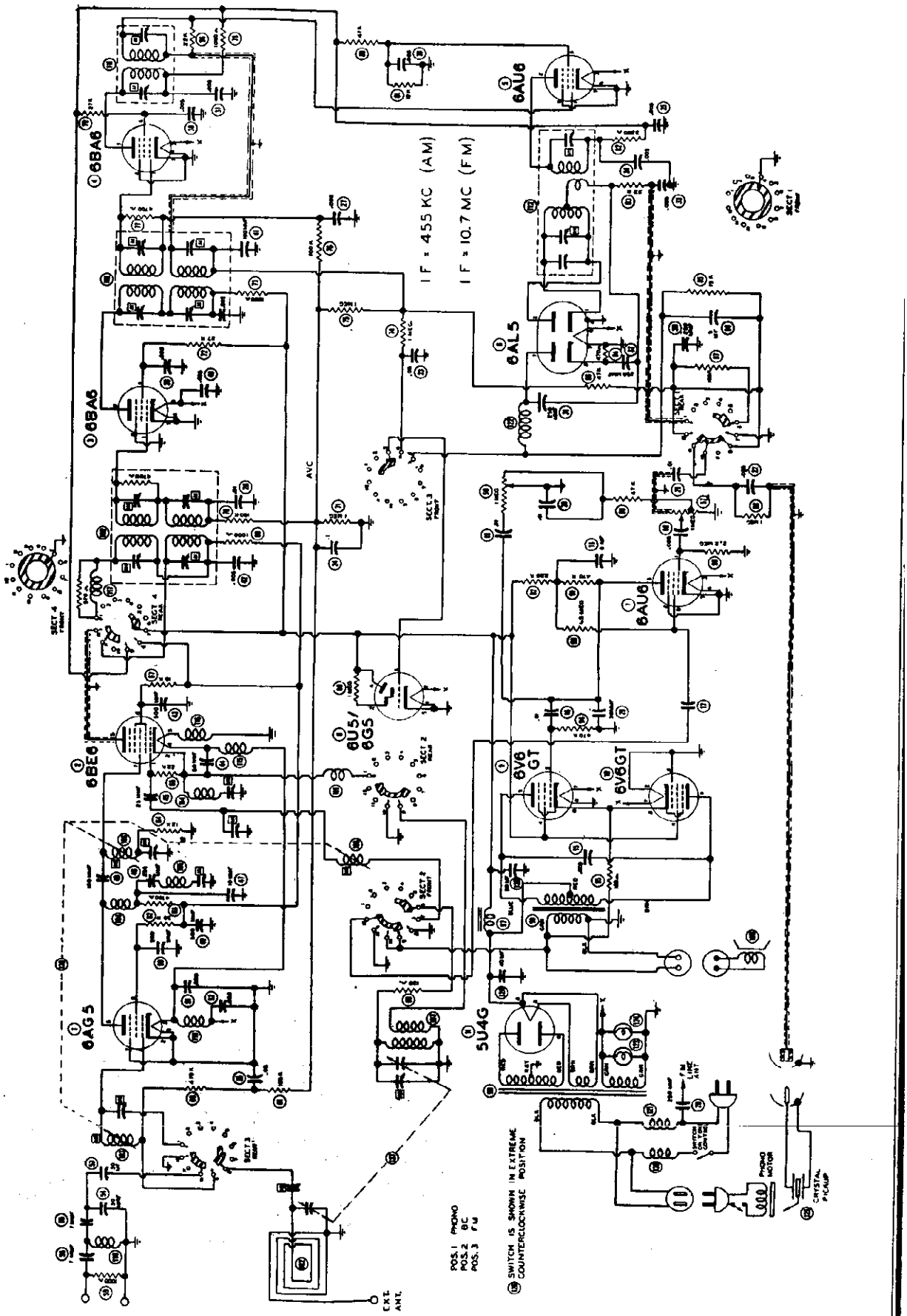

CLARI-SKEMATIX
Registered Trademark

MODEL 537,
CHASSIS 120043

EMERSON RADIO AND PHONO. CORP.

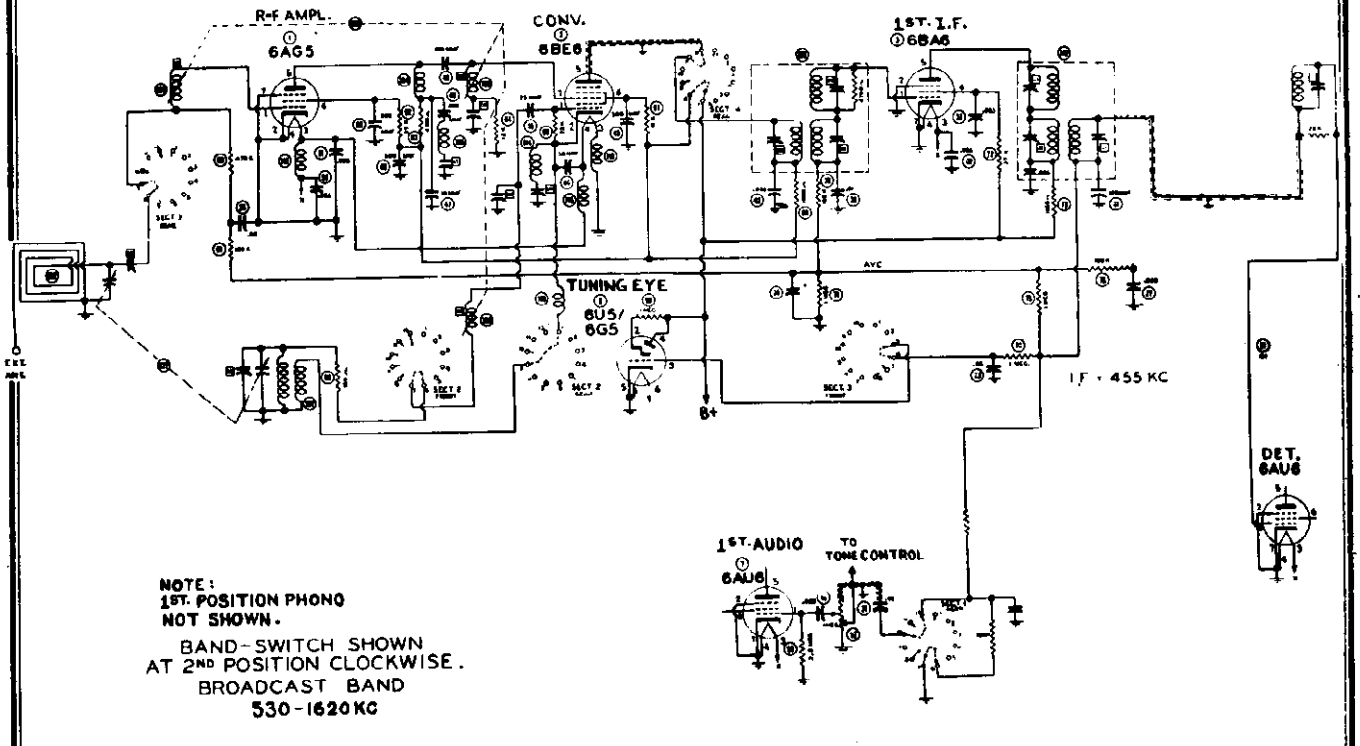

NOTE:
1ST. POSITION PHONO
NOT SHOWN.

BAND-SWITCH SHOWN
AT 2ND POSITION CLOCKWISE.
BROADCAST BAND
530-1620 KC

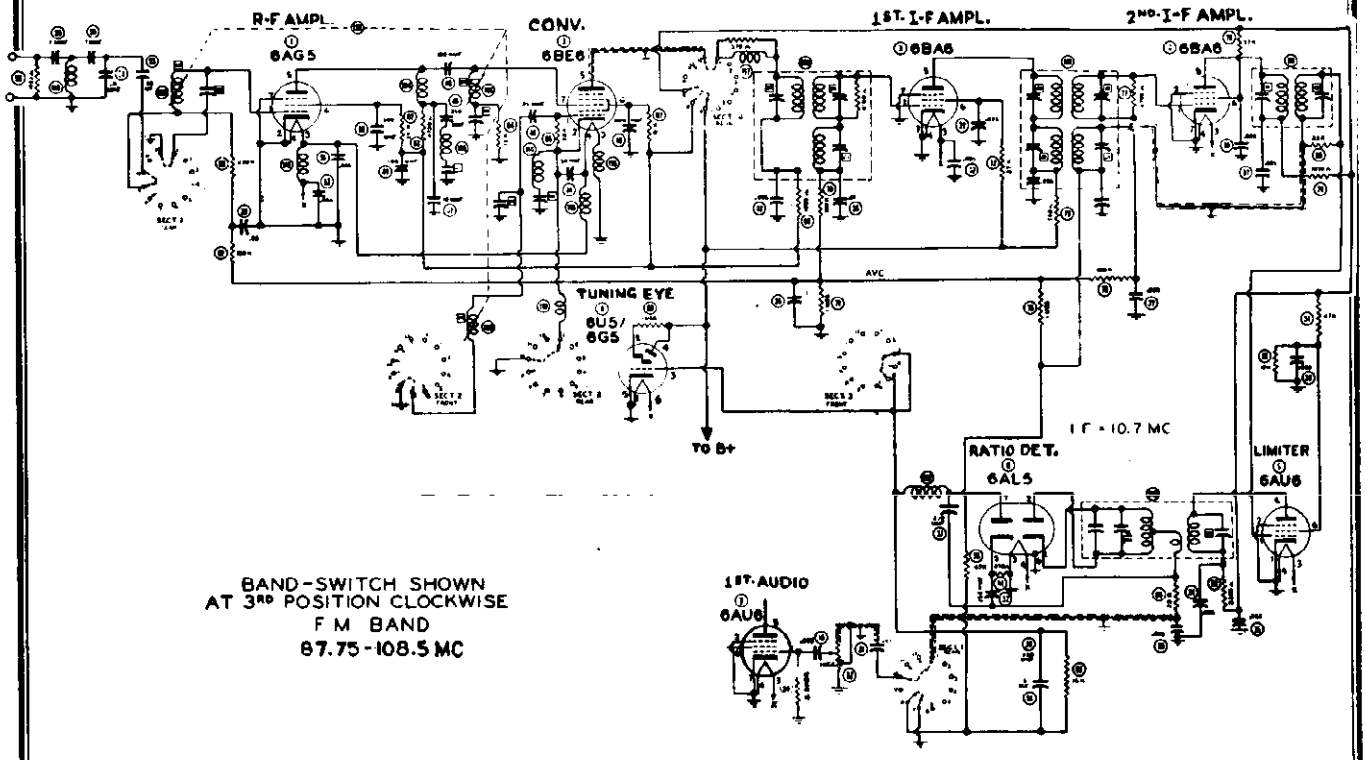

BAND-SWITCH SHOWN
AT 3RD POSITION CLOCKWISE
F M BAND
87.75-108.5 MC

EMERSON RADIO AND PHONO. CORP. MODEL 537, CHASSIS 12004

INSTRUCTIONS FOR VOLTAGE AND RESISTANCE READINGS

1. Voltage readings are in volts and resistance readings in ohms unless otherwise specified.
2. All readings taken in broadcast position except those for items 4, 5 and 6, which should be taken in FM position.
3. D-C voltage measurements are at 20,000 ohms per volt; a-c voltages measured at 1,000 ohms.
4. Socket connections are shown as bottom views.
5. Measured values are from socket pin to common negative.
6. Line voltage maintained at 117 volts for voltage readings.
7. Nominal tolerance on component values makes possible a variation of ± 15% in voltage and resistance readings.
8. Volume control at maximum, no signal applied for voltage measurements.
9. Resistance readings in the B+ circuits may vary widely according to the condition of the filter capacitors.

VOLTAGE READINGS

SYMBOL	TUBE	PIN 1	PIN 2	PIN 3	PIN 4	PIN 5	PIN 6	PIN 7	PIN 8
1	6AG5	-0.4DC	0	6.2AC	0	225DC	137DC	0	
2	6BE6	-0.3DC	0	0	6.2AC	270DC	100DC	0	
3	6BA6	-0.3DC	0	6.2AC	0	270DC	122DC	0	
4	6BA6	-0.5DC	0	6.2AC	0	260DC	110DC	0	
5	6AU6	-0.6DC	0	6.2AC	0	280DC	48DC	0	
6	6AL5	0	0	0	6.2AC	0.4DC	0	-11DC	
7	6AU6	-0.7DC	0	6.2AC	0	59DC	29DC	0	
9	6V6GT	0	0	320DC	290DC	0	59DC	6.2AC	15DC
10	6V6GT	0	0	320DC	290DC	0	0	6.2AC	15DC
11	5U4G	0	330DC	0	300AC	0	300AC	0	330DC

RESISTANCE READINGS

SYMBOL	TUBE	PIN 1	PIN 2	PIN 3	PIN 4	PIN 5	PIN 6	PIN 7	PIN 8
1	6AG5	1.1 meg.	0	0.2	0	85,000	120,000	0	
2	6BE6	22,000	0.7	0.2	0+4	80,000	98,000	12,000	
3	6BA6	650,000	0	0.1	0	80,000	110,000	0	
4	6BA6	650,000	0	0.1	0	45,000	70,000	0	
5	6AU6	45,000	0	0.1	0	45,000	10,000	0	
6	6AL5	inf.	inf.	0	0.1	450	0	15,000	
7	6AU6	2.4 meg.	0	0.1	0	770,000	1.8 meg.	0	
9	6V6GT	0	0	80,000	80,000	450,000	0.3	0.1	170
10	6V6GT	0	0	80,000	80,000	0	620,000	0.1	170
11	5U4G	inf.	80,000	inf.	69	inf.	72	inf.	80,000

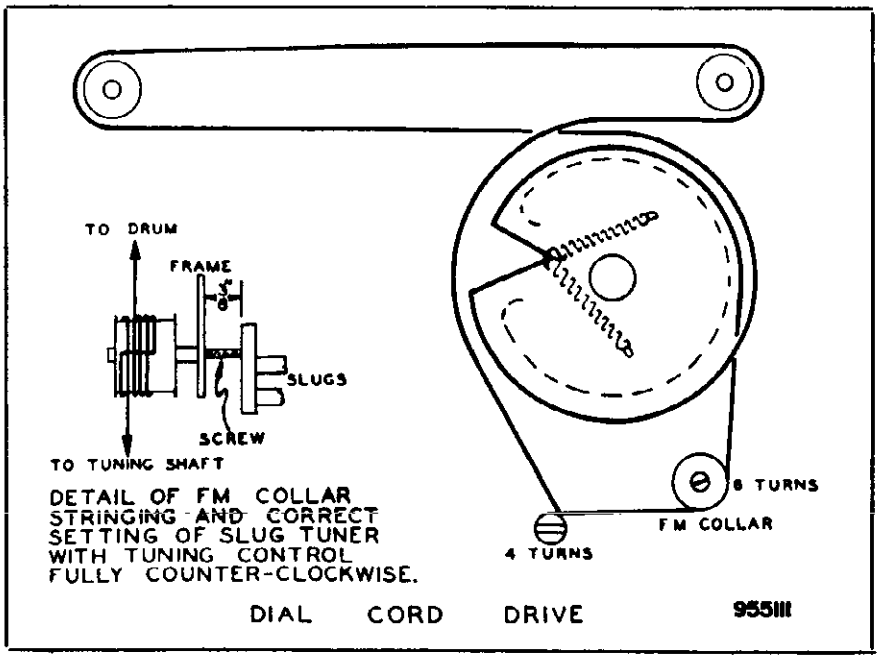

DETAIL OF FM COLLAR STRINGING AND CORRECT SETTING OF SLUG TUNER WITH TUNING CONTROL FULLY COUNTER-CLOCKWISE.

DIAL CORD DRIVE 955III

MODEL 537,
CHASSIS 120043

EMERSON RADIO AND PHONO. CORP.

ALIGNMENT

To set pointer turn variable condenser fully closed and set pointer to last reference mark at low frequency end of dial. To inject signal in Steps 5, 6 and 7, remove 6BE6 and connect wire to pin 1. Replace tube, making certain that wire does not short to shield base. In Step 9, connect two 100,000 ohm resistors in series from pin 7 of 6AL5 to chassis. These resistors should be equal within 5%. After Step 9, turn variable condenser fully counterclockwise and check adjustment of FM tuning unit per dial cord drawing. Loop should be maintained in same relative position to chassis as when receiver is in cabinet. Volume control should be at maximum position; output of signal generator should be no higher than necessary to obtain an output reading. Use an insulated alignment screwdriver for adjusting.

	DUMMY ANTENNA	SIGNAL GENERATOR COUPLING	SIGNAL GENERATOR FREQUENCY	BAND SWITCH POSITION	RADIO DIAL SETTING	OUTPUT METER	ADJUST	REMARKS
1	0.1 mfd.	High side to front stator of variable condenser. Low side to chassis.	455 kc	BC (center position)	High frequency end of dial.	Across voice coil.	A1, A2 A3, A4	Adjust for maximum output.
2	0.1 mfd.	High side to front stator of variable condenser. Low side to chassis.	455 kc	BC (center position)	Low frequency end of dial.	Across voice coil.	A5	Adjust for minimum output.
3	0.05 mfd.	High side to pin 1 (grid) of 6BA6, 2nd i-f tube (4). Low side to chassis.	10.7 mc (unmodulated)	FM (fully clockwise)	High frequency end of dial.	VTVM connected from pin 7 of 6AL5 to chassis.	A6, A7	Adjust for maximum deflection.
4	0.05 mfd.	High side to pin 1 (grid) of 6BA6, 1st i-f tube (3). Low side to chassis.	10.7 mc (unmodulated)	FM (fully clockwise)	High frequency end of dial.	VTVM connected from pin 7 of 6AL5 to chassis.	A8, A9	Adjust for maximum deflection.
5	0.05 mfd.	High side to pin 1 (grid) of 6BE6. Low side to chassis.	10.6 mc unmodulated)	FM (fully clockwise)	High frequency end of dial.	VTVM connected from pin 7 of 6AL5 to chassis.	A10	Adjust for maximum deflection.
6	0.05 mfd.	High side to pin 1 (grid) of 6BE6. Low side to chassis.	10.8 mc (unmodulated)	FM (fully clockwise)	High frequency end of dial.	VTVM connected from pin 7 of 6AL5 to chassis.	A11	Adjust for maximum deflection.
7	0.05 mfd.	High side to pin 1 (grid) of 6BE6. Low side to chassis.	10.7 mc (unmodulated)	FM (fully clockwise)	High frequency end of dial.	VTVM connected from pin 7 of 6AL5 to chassis.	A12	Adjust for maximum deflection.
8	0.05 mfd.	High side to pin 1 (grid) 6AU6, 3rd i-f tube (5). Low side to chassis.	10.7 mc (unmodulated)	FM (fully clockwise)	High frequency end of dial.	VTVM connected from pin 7 of 6AL5 to chassis.	A13	Adjust for maximum deflection.
9	0.05 mfd.	High side to pin 1 (grid) 6AU6, 3rd i-f tube (5). Low side to chassis.	10.7 mc (unmodulated)	FM (fully clockwise)	High frequency end of dial.	VTVM connected from junction of two 100,000 ohm resistors and junction of condensers 31 and 32. (See preliminary alignment notes).	A14	Adjust for zero deflection.
10	150 ohms in series with each lead.	High side to ungrounded FM antenna terminal. Low side to chassis. (Disconnect internal antenna.)	108 mc (unmodulated)	FM (fully clockwise)	108 mc	VTVM connected from pin 7 of 6AL5 to chassis.	A15	Adjust for maximum deflection.
11	150 ohms in series with each lead.	High side to ungrounded FM antenna terminal. Low side to chassis. (Disconnect internal antenna.)	88 mc (unmodulated)	FM (fully clockwise)	88 mc	VTVM connected from pin 7 of 6AL5 to chassis.	A16	Adjust iron core (hold brass in position) for maximum deflection.
12	150 ohms in series with each lead.	High side to ungrounded FM antenna terminal. Low side to chassis. (Disconnect internal antenna.)	98 mc (unmodulated)	FM (fully clockwise)	98 mc	VTVM connected from pin 7 of 6AL5 to chassis.	A16	Adjust iron and brass cores (single screw) for maximum deflection. Repeat steps 10, 11, 12 until no further improvement can be made.
13	150 ohms in series with each lead.	High side to ungrounded FM antenna terminal. Low side to chassis. (Disconnect internal antenna.)	106 mc (unmodulated)	FM (fully clockwise)	Tune for maximum deflection.	VTVM connected from pin 7 of 6AL5 to chassis.	A17, A18	Adjust for maximum deflection.
14	150 ohms in series with each lead.	High side to ungrounded FM antenna terminal. Low side to chassis. (Disconnect internal antenna.)	90 mc (unmodulated)	FM (fully clockwise)	Tune for maximum deflection.	VTVM connected from pin 7 of 6AL5 to chassis.	A19, A20	Adjust iron core (hold brass in position) for maximum deflection.
15	150 ohms in series with each lead.	High side to ungrounded FM antenna terminal. Low side to chassis. (Disconnect internal antenna.)	100 mc (unmodulated)	FM (fully clockwise)	Tune for maximum deflection.	VTVM connected from pin 7 of 6AL5 to chassis.	A19, A20	Adjust iron and brass cores (single screw) for maximum deflection. Repeat steps 13, 14, 15 until no further improvement can be made.
16	200 mmfd.	High side to AM ungrounded lug on antenna terminal strip. Low side to chassis.	1600 kc	BC	1600 kc	Across voice coil.	A21	Adjust for maximum output.
17	200 mmfd.	High side to AM ungrounded lug on antenna terminal strip. Low side to chassis.	1400 kc	BC	Tune for maximum output.	Across voice coil.	A22	Adjust for maximum output.

EMERSON RADIO AND PHONO. CORP.

MODEL 537,
CHASSIS 12004

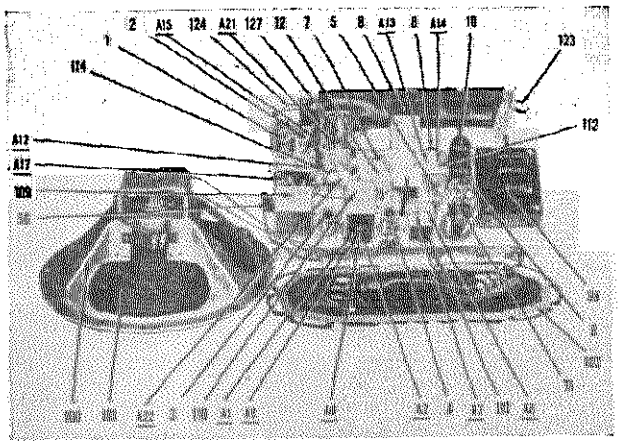

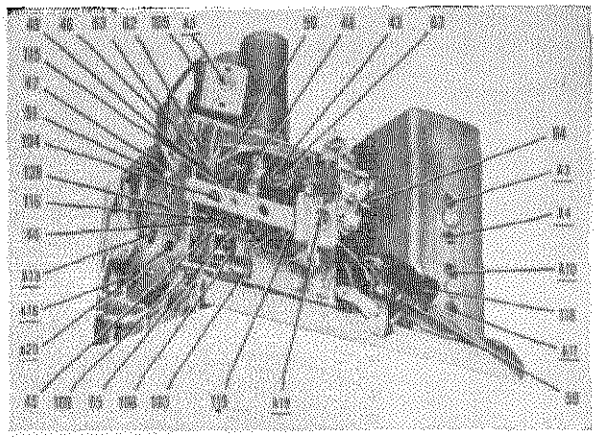

REPLACEMENT PARTS LIST

Symbol	†Part No.	DESCRIPTION
1	6AG5	Tube, r-f amplifier
2	6BE6	Tube, converter
3	6BA6	Tube, 1st i-f amplifier
4	6BA6	Tube, 2nd i-f amplifier
5	6AU6	Tube, limiter and AM 2nd detector
6	6AL5	Tube, FM ratio detector
7	6AU6	Tube, audio amplifier
8	6U5/6G5	Tube, tuning eye
9	6V6GT	Tube, power output
10	6V6GT	Tube, power output
11	5U4G	Tube, rectifier
12A, B	925006	40-30 mfd., 400 volt electrolytic condenser (filter)
13	925190	8 mfd., 450 volt electrolytic condenser (a-f plate decoupling)
14	925005	5 mfd., 50 volt electrolytic condenser (ratio detector bias)
15	920180	0.005 mfd., 400 volt condenser (tone compensation)
16	920090	0.01 mfd., 400 volt condenser (audio coupling)
17	920250	0.1 mfd., 400 volt condenser (feedback coupling)
18	920180	0.005 mfd., 400 volt condenser (audio coupling)
19	920090	0.01 mfd., 400 volt condenser (tone compensation)
20	920090	0.01 mfd., 400 volt condenser (tone compensation)
21	920090	0.01 mfd., 400 volt condenser (audio coupling)
22	920180	0.005 mfd., 400 volt condenser (phono coupling)
23	920060	0.05 mfd., 200 volt condenser (AM eye grid filter)
24	920040	0.1 mfd., 200 volt condenser (AVC filter)
25	920060	0.05 mfd., 200 volt condenser (AVC filter)
26	920090	0.01 mfd., 400 volt condenser (AVC filter)
27	920180	0.005 mfd., 500 volt mica condenser (AVC filter)
28	910320	0.00025 mfd., 500 volt mica condenser (FM antenna coupling)
29	928107	30 mmfd., 300 volt ceramic condenser (a-f plate bypass)
30	910320	0.00025 mfd., 500 volt mica condenser (diode filter)
31	910320	0.00025 mfd., 500 volt mica condenser (ratio detector load)
32	910320	0.00025 mfd., 500 volt mica condenser (ratio detector load)
33	920180	0.005 mfd., 500 volt mica condenser (deemphasis)
34	910356	0.005 mfd., 500 volt mica condenser (limiter plate decoupling)
35	910356	0.005 mfd., 500 volt mica condenser (r-f bypass power supply)
36	910356	0.005 mfd., 500 volt mica condenser (limiter screen bypass)
37	910356	0.005 mfd., 500 volt mica condenser (2nd i-f decoupling)
38	910356	0.005 mfd., 500 volt mica condenser 2nd i-f screen bypass)
39	910356	0.005 mfd., 500 volt mica condenser (1st i-f screen bypass)
40	910356	0.005 mfd., 500 volt mica condenser (1st i-f filament bypass)
41	910100	0.0001 mfd., 500 volt mica condenser (diode filter)
42	910356	0.005 mfd., 500 volt mica condenser (converter plate decoupling)
43	915003	0.0005 mfd., 300 volt mica condenser (converter screen bypass)
44	928102	50 mmfd., 300 volt ceramic condenser (converter cathode bypass)
45	928101	25 mmfd., 300 volt ceramic condenser (oscillator grid)
46	910320	0.00025 mfd., 500 volt mica condenser (wave trap)
47	928002	10 mmfd., 300 volt ceramic condenser (r-f plate decoupling)
48	928106	0.0001 mfd., 300 volt ceramic condenser (r-f coupling)
49	915003	0.0005 mfd., 300 volt mica condenser (r-f decoupling)
50	915003	0.0005 mfd., 300 volt mica condenser (r-f screen bypass)
51	910356	0.005 mfd., 300 volt mica condenser (r-f filament bypass)
52	910356	0.005 mfd., 300 volt mica condenser (r-f filament decoupling)
53	928107	30 mmfd., 300 volt ceramic condenser (r-f coupling)
54	928102	50 mmfd., 300 volt ceramic condenser (FM-r-f coupling)
55	928105	7 mmfd., 300 volt ceramic condenser (FM-r-f coupling)
56	928105	7 mmfd., 300 volt ceramic conden ser (FM-r-f coupling)
57	390004	Volume control, 1 meg.
58	390081	Tone control and switch, 1 meg.
59	320490	1000 ohms, ¼ watt resistor (FM antenna loading)
60	321130	470,000 ohms, ¼ watt resistor (r-f grid)
61	320970	100,000 ohms, ¼ watt resistor (AVC network)
62	370872	39,000 ohms, 1 watt resistor (r-f screen dropping)
63	310650	4,700 ohms, ¼ watt resistor (r-f plate decoupling)
64	310750	12,000 ohms, ¼ watt resistor (converter grid)
65	310810	22,000 ohms, ¼ watt resistor (oscillator grid)
66	320290	150 ohms, ¼ watt resistor (parasitic suppressor)
67	397070	18,000 ohms, 2 watt resistor (converter screen dropping)
68	320490	1,000 ohms, ¼ watt resistor (converter plate decoupling)

* Not supplied separately.

† Specify part numbers when ordering.

MODEL 537,
CHASSIS 120043

EMERSON RADIO AND PHONO. CORP.

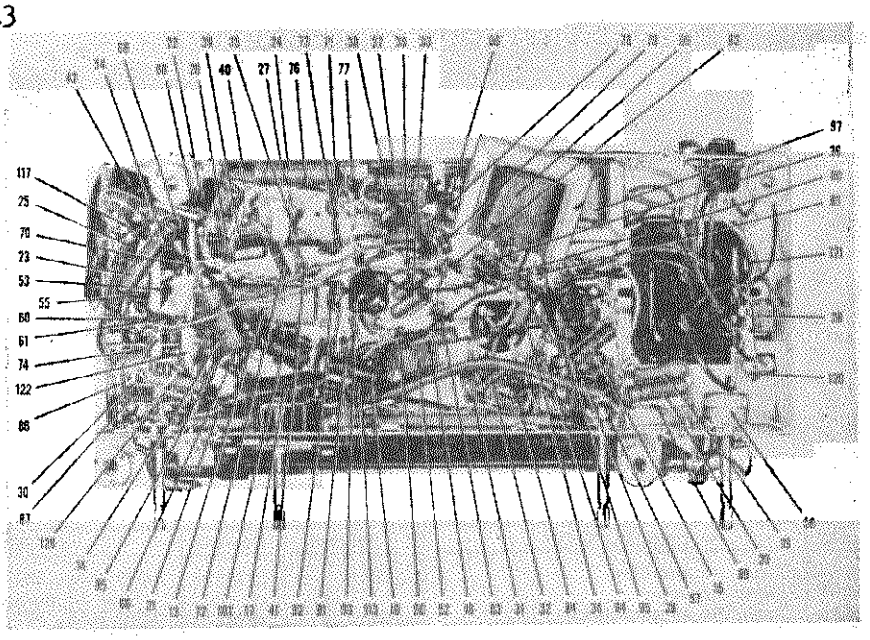

REPLACEMENT PARTS LIST (continued)

Symbol	†Part No.	DESCRIPTION
69	321210	1 meg., ¼ watt resistor (tuning eye plate load)
70	320970	100,000 ohms, ¼ watt resistor (AVC network)
71	311210	1 meg., ¼ watt resistor (AVC network)
72	370830	27,000 ohms, 1 watt resistor (1st i-f screen dropping)
73	320490	1,000 ohms, ¼ watt resistor (1st i-f plate decoupling)
74	321210	1 meg., ¼ watt resistor (AVC network)
75	321210	1 meg., ¼ watt resistor (AVC network)
76	320970	100,000 ohms, ¼ watt resistor (AVC network)
77	310650	4,700 ohms, ¼ watt resistor (2nd FM i-f transformer shunt)
78	320490	1,000 ohms, ¼ watt resistor (2nd i-f plate decoupling)
79	370830	27,000 ohms, 1 watt resistor (2nd i-f screen dropping)
80	370890	47,000 ohms, 1 watt resistor (limiter screen dropping)
81	370730	10,000 ohms, 1 watt resistor (limiter screen bleeder)
82	340610	3,300 ohms, ½ watt resistor (limiter plate decoupling)
83	350810	22,000 ohms, ½ watt resistor (de-emphasis)
84	340410	470 ohms, ½ watt resistor (ratio detector bias)
85	310771	15,000 ohms, ¼ watt resistor (ratio detector bias network)
86	310890	47,000 ohms, ¼ watt resistor (diode filter)
87	310970	100,000 ohms, ¼ watt resistor (diode load)
88	321210	1 meg., ¼ watt resistor (series phono)
89	310890	47,000 ohms, ¼ watt resistor (tone compensation)
90	321290	2.2 meg., ¼ watt resistor (a-f grid)
91	321130	470,000 ohms, ¼ watt resistor (a-f plate load)
92	321050	220,000 ohms, ¼ watt resistor (a-f plate decoupling)
93	311250	1.5 meg., ¼ watt resistor (a-f screen dropping)
94	321130	470,000 ohms, ¼ watt resistor (output grid)
95	394140	180 ohms, 2 watt resistor (output cathode)
96	310810	22,000 ohms, ¼ watt resistor (3rd i-f transformer shunt)
97	737002	Filter choke
98	730002	Power transformer
99	734004	Output transformer
100	180023	Speaker, 12 inch permanent magnet dynamic
*101		Speaker cone (part of 180023)
102	700003	Loop antenna
103	710014	FM antenna coil
104	705000	R-F plate choke
105	708001	AM wave trap
106	713013	FM r-f coil
107	716113	AM oscillator coil
108	716112	FM oscillator coil
109	720015	1st AM-FM i-f transformer
110	720016	2nd AM-FM i-f transformer
111	720014	3rd FM i-f transformer
112	708145	Ratio detector transformer
113	705002	R-F choke
114	705002	R-F choke
115	705002	R-F choke
116	705002	R-F choke
117	705005	Converter plate r-f choke
118	705003	R-F choke
119	705007	R-F choke
120	705002	R-F choke
121	705002	R-F choke
122	705000	R-F choke
123	807020	Dial light
124	807020	Dial light
125		Crystal pickup
126	510051	Band switch
127	900007	Two-gang variable condenser
128		FM tuning assembly
	500500	A-C receptacle
	508010	Phono receptacle
	555004	Terminal strip, speaker
	580032	Speaker pin terminal
	580033	Speaker pin terminal
	505005	A-C plug, phono motor
	505040	Connector plug, pickup
	583150	Line cord and plug
	507001	Dial light socket assembly
	585210	Tuning indicator socket and cable
	819020	Record Changer, curved spindle, brown
	819022	Record changer, straight spindle, blue
	140065	Cabinet
	620034	Knob, mahogany
	620035	Knob, mahogany, with indicator dot
	280002	Drive shaft, dial
	280505	Drive shaft, FM tuner
	520002	Dial back plate
	520003	Dial face
	525002	Pointer

* Not supplied separately.

† Specify part numbers when ordering.

EMERSON RADIO AND PHONO. CORP. MODELS 556, 557, 565, CHASSIS 120018

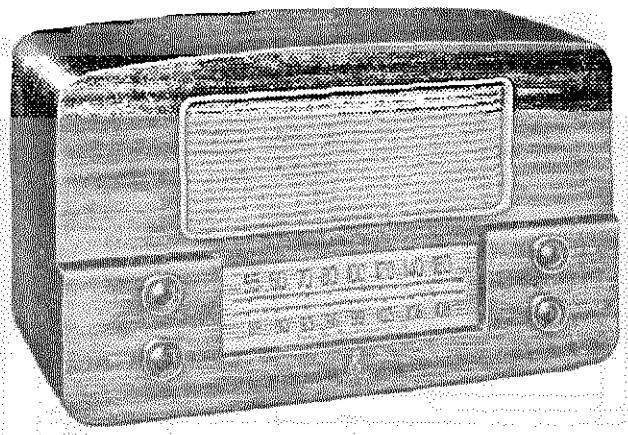

MODEL 565

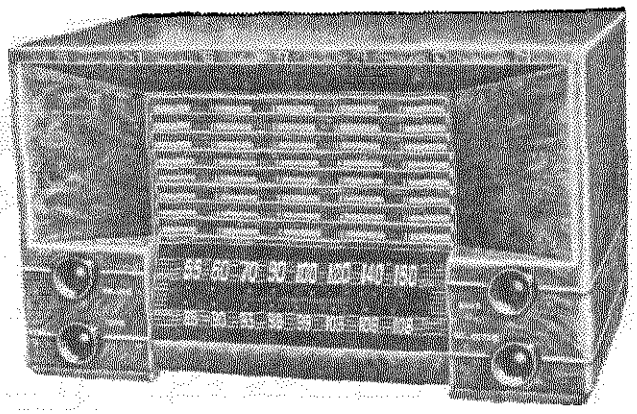

MODEL 557

DESCRIPTION

TYPE: Amplitude modulation (AM) and frequency modulation (FM) superheterodyne.

FREQUENCY RANGE:
Broadcast band (AM)—540-1620 kilocycles
Frequency modulation band (FM)—88-108 megacycles

TYPE OF TUBES:
1—12BA6 FM r-f amplifier
1—12BA7 FM and AM converter
1—12BA6 FM and AM first i-f amplifier
1—12AU6 FM limiter
1—19T8 FM discriminator, AM detector, a.v.c., audio amplifier
1—35B5 Power output
1—Selenium rectifier

POWER SUPPLY: 60 cycle a.c.

VOLTAGE RATING: 105-125 volts

POWER CONSUMPTION: 35 watts

CURRENT DRAIN: 0.30 amps. at 117 volts a.c.

GENERAL NOTES

1. If replacements are made or the wiring disturbed in the r-f section of the circuit, the receiver should be carefully realigned.
2. A self-contained loop antenna is provided for broadcast band reception. For permanent home installation, however, if it is desired to improve reception of weak stations, an additional outdoor antenna may be used. Connect the the outdoor antenna to the screw on the loop terminal strip marked "AM".
3. An internal power line antenna is provided for FM operation in relatively strong signal areas. The line cord should be completely uncoiled for effective operation of this antenna. An external dipole antenna is recommended for maximum FM operation. To connect the dipole, first remove the wire from the screw on the loop terminal strip marked "FM" and connect the dipole leads to the "FM" terminal and "G".
4. A ground connection is not required for AM and FM operation.

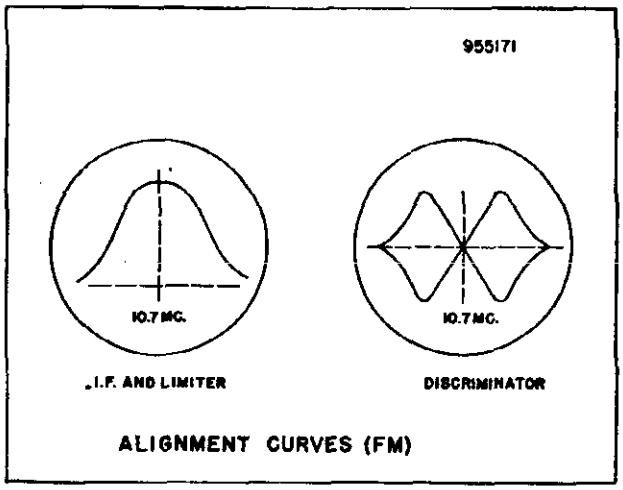

ALIGNMENT CURVES (FM)

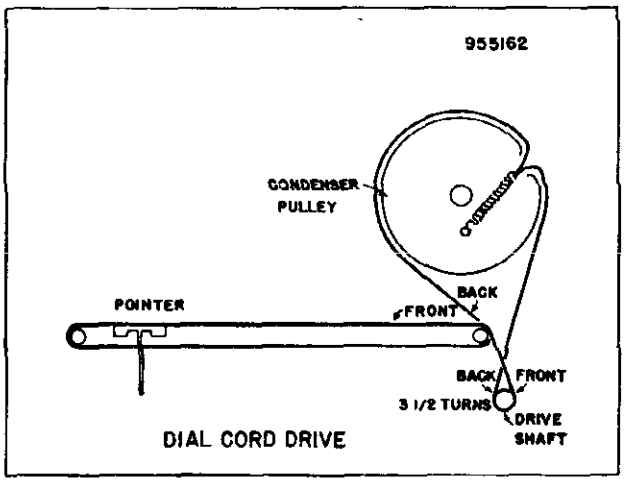

DIAL CORD DRIVE

MODELS 556, 557, 565, CHASSIS 120018B

EMERSON RADIO AND PHONO. CORP.

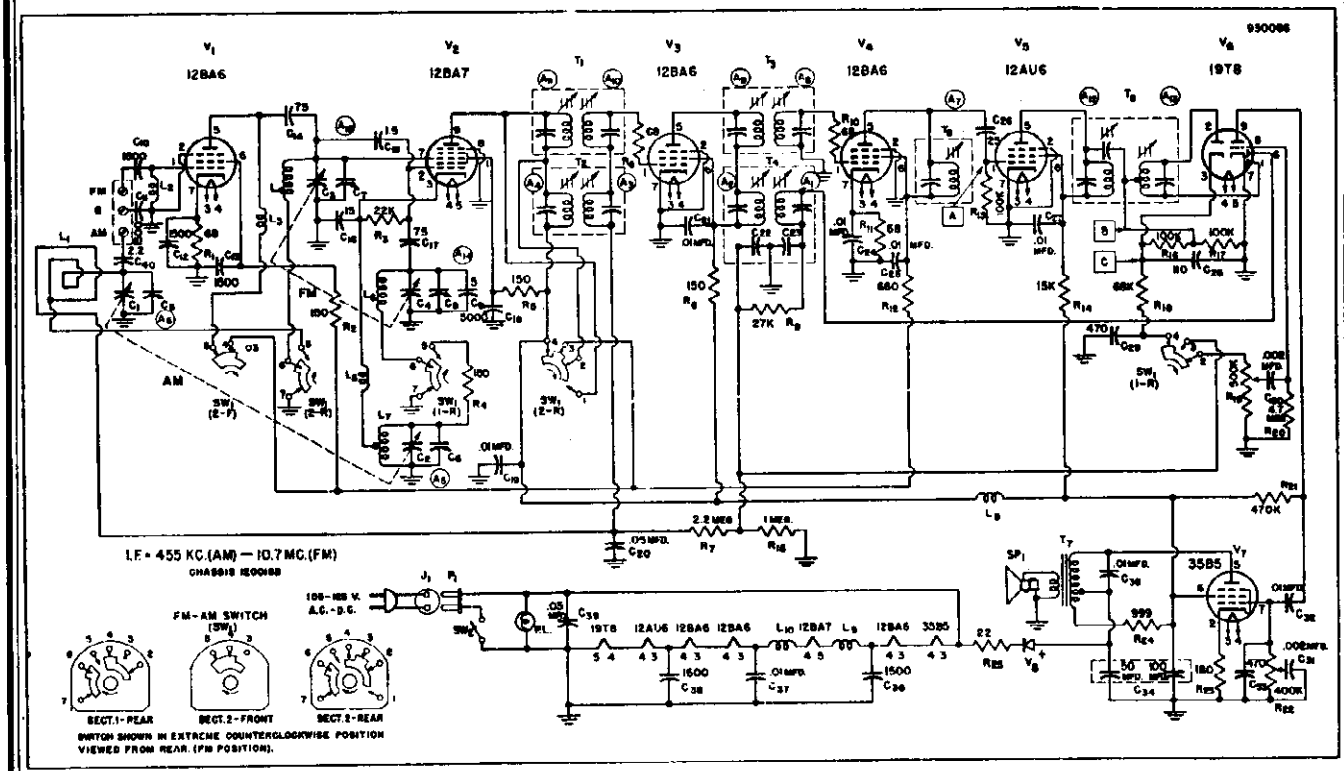

INSTRUCTIONS FOR VOLTAGE AND RESISTANCE READINGS

1. Voltages readings are in d.c. volts and resistance readings in ohms, unless otherwise specified.
2. D.c. voltage measurements are made at 20,000 ohms-per-volt and a.c. voltages are measured at 1000 ohms-per-volt.
3. Socket connections are shown as bottom views. Values are measured from socket pin to common negative.
4. Line voltage maintained at 117 volts a.c. for voltage readings.
5. Nominal tolerance on component values makes possible a variation of ± 15% in readings.
6. Volume control at maximum, with no sig— applied and bandswitch in broadcast position (unless otherwise noted), for voltage measurements.

VOLTAGE READINGS

SYMBOL	TUBE	PIN 1	PIN 2	PIN 3	PIN 4	PIN 5	PIN 6	PIN 7	PIN 8	PIN 9
V1	12BA6	0	0	80AC	67AC	76*	78*	.8*	—	—
V2	12BA7	100	-.5	0	67AC	55AC	0	-.5	0	95
V3	12BA6	-.2	0	55AC	43AC	93	98	0	—	—
V4	12BA6	0	0	43AC	30AC	70*	70*	.6*	—	—
V5	12AU6	-.4	0	30AC	18AC	50	50	0	—	—
V6	19T8	-.5	-.4	5.5*	18AC	0	-.8	0	-.5	33
V7	35B5	0	6	117AC	80AC	132	100	NC	—	—

NC denotes "no connection"; * for bandswitch in FM position only.

RESISTANCE READINGS

SYMBOL	TUBE	PIN 1	PIN 2	PIN 3	PIN 4	PIN 5	PIN 6	PIN 7	PIN 8	PIN 9
V1	12BA6	0	0	16	12	65K*	65K*	66	—	—
V2	12BA7	65K	24K	1	56	75	0	0	0	65K
V3	12BA6	2.8 meg.	0	56	44	65K	65K	0	—	—
V4	12BA6	68	0	44	32	65K	65K	68	—	—
V5	12AU6	100K	0	32	20	65K	65K	0	—	—
V6	19T8	90K	90K	150K	20	0	1 meg.	0	4 meg.	550K
V7	35B5	400K	190	112	80	65K	65K	NC	—	—

K—Kilohms; meg.—megohms.

EMERSON RADIO AND PHONO. CORP. MODELS 556, 557, 565, CHASSIS 120018

ALIGNMENT INSTRUCTIONS

1. To position pointer, turn variable condenser fully closed and set pointer to reference mark on dial backplate at the low frequency end of the dial.
2. Volume control should be set at maximum position. The output of the signal generator should be no higher than necessary to obtain an output reading. tenuate the signal input as alignment proceeds. Use an insulated alignment tool for all adjustments.
3. Use isolation transformer if available; otherwise connect a .1 mfd. condenser in series with low side of signal generator to chassis.

AM ALIGNMENT

	DUMMY ANTENNA	SIGNAL GENERATOR COUPLING	SIGNAL GENERATOR FREQUENCY	BAND SWITCH POSITION	RADIO DIAL SETTING	OUTPUT METER	ADJUST	REMARKS
1	.1 mfd.	High side to Pin 7 (grid) of 12BA7. Low side to chassis.	455 KC.	Broadcast	Tuning condenser fully open.	Across voice coil.	A1, A2, (Trans. T4). A3, A4, (Trans. T2).	Adjust for maximum output. Reduce dummy antenna to .001 mfd. if isolation trans. is not use
2		Loop	1600 KC.	Broadcast	Tuning condenser fully open.	Across voice coil.	A5, (Trimmer cond. C6).	Form loop of several tur of wire. Radiate signal in receiver loop. Adjust for maximum output.
3		Loop	1400 KC.	Broadcast	Tune for max. output.	Across voice coil.	A6, (Trimmer cond. C5).	Adjust for maximum output.

FM I-F and Disc. Alignment Using AM Signal Generator and VTVM

	DUMMY ANTENNA	SIGNAL GENERATOR COUPLING	SIGNAL GENERATOR FREQUENCY	BAND SWITCH POSITION	RADIO DIAL SETTING	CONNECT VTVM	ADJUST	REMARKS
1	.01 mfd.	High side to Pin 1 (grid) of 12BA6 2nd i-f (V4). Low side to chassis.	10.7 mc. (Unmodulated)	Frequency modulation	Tuning condenser fully open.	Connect d.c. probe to point "A". Common to chassis.	A7, (Trans. T5).	Adjust for maximum output.
2	.01 mfd.	High side to Pin 1 (grid) of 12BA6 1st i-f (V3). Low side o chassis.	10.7 mc. (Unmodulated)	Frequency modulation	Tuning condenser fully open.	Connect d.c. probe to point "A". Common to chassis.	A8, A9, (Trans. T3).	Adjust for maximum output.
3	.01 mfd.	High side to Pin 2 (osc. grid) of 12BA7 conv. (V2). Low side to chassis.	10.7 mc. (Unmodulated)	Frequency modulation	Tuning condenser fully open.	Connect d.c. probe to point "A". Common to chassis.	A10, A11, (Trans. T1).	Adjust for maximum output.
4	.01 mfd.	High side to Pin 1 (grid) of 12BA6 2nd i-f (V4). Low side to chassis.	10.7 mc. (Unmodulated)	Frequency modulation	Tuning condenser fully open.	Connect d.c. probe to point "B". Common to chassis.	A12, (Trans. T6).	Adjust for maximum output.
5	.01 mfd.	"	10.7 mc. (Unmodulated)	Frequency modulation	Tuning condenser fully open.	Connect d.c. probe to point "C". Common to chassis.	A13, (Trans. T6).	Adjust for zero output. Continue with FM r-f alignment.

FM I-F AND DISC. ALIGNMENT USING SWEEP SIGNAL GENERATOR AND OSCILLOSCOPE. Use frequency modulated signal, with 60 cycle modulation and 450 k sweep. Use 120 cycle sawtooth sweep voltage in oscilloscope for horizontal deflection.

	DUMMY ANTENNA	SIGNAL GENERATOR COUPLING	SIGNAL GENERATOR FREQUENCY	BAND SWITCH POSITION	RADIO DIAL SETTING	CONNECT OSCILLOSCOPE	ADJUST	REMARKS
1	.01 mfd.	High side to Pin 1 (grid) of 12BA6 1st i-f (V3). Low side to chassis.	10.7 mc. (Unmodulated).	Frequency modulation	Tuning condenser fully open.	Vertical input to Point "A". Ground to chassis.	A7, A8, A9, (Trans. T5 and T3).	Adjust for maximum output (height) and symmetry as per i-f alignment curve shown (page 3).
2	.01 mfd.	High side to Pin 2 (osc. grid) of 12BA7 conv. (V2). Low side to chassis.	10.7 mc. (Unmodulated).	Frequency modulation	Tuning condenser fully open.	Vertical input to Point "A". Ground to chassis.	A10, A11, (Trans. T1).	Adjust for maximum output (height) and symmetry as per i-f alignment curve shown (page 3).
3	.01 mfd.	High side to Pin 1 (grid) of 12BA6 2nd i-f (V4). Low side to chassis.	10.7 mc. (Unmodulated).	Frequency modulation	Tuning condenser fully open.	Vertical input to Point "C". Ground to chassis.	A12, A13, (Trans. T6).	Alternately adjust A12 for maximum amplitude and A13 for maximum straightness of cross-over lines, with cross-over occurring at center of pattern as per discriminator alignment curve (page 3). Continue with FM r-f alignment.

FM R-F ALIGNMENT

	DUMMY ANTENNA	SIGNAL GENERATOR COUPLING	SIGNAL GENERATOR FREQUENCY	BAND SWITCH POSITION	RADIO DIAL SETTING	CONNECT VTVM	ADJUST	REMARKS
1	150 ohm resistor in series with each gen. lead.	High side to FM ant. term. Low side to chassis.	108.0 mc. (Unmodulated).	Frequency modulation	Tuning condenser fully open (108.0 mc.)	Connect d.c. probe to point "A". Common to chassis.	A14 (Trimmer cond. C8).	Adjust for maximum output.
2	"	"	106.0 mc.	Frequency modulation	Tune for maximum output.	"	A15 (Trimmer cond. C7).	Adjust for maximum output.

REPLACEMENT PARTS LIST

Symbol	†Part No.	DESCRIPTION
V1	12BA6	FM r-f amplifier
V2	12BA7	FM and AM converter
V3	12BA6	FM and AM 1st i-f amplifier
V4	12BA6	FM 2nd i-f amplifier
V5	12AU6	FM limiter
V6	19T8	FM disc., AM det., a.v.c, audio amp.
V7	35B5	Power output
V8	817101	Selenium rectifier
C1, C2, C3, C4	900045	Two-gang, four section, variable condenser (alt. part. 900400 A).
C5, C6, C7, C8	*	Trimmers, part of C1-C2-C3-C4
C9	928017	5 mmf., ceramic condenser
C10, C11, C12, C13, C36, C38	928006	1500 mmf., ceramic condenser
C14, C17	928015	75 mmf., ceramic condenser
C15	915011	1.5 mmf., molded condenser
C16	928016	15 mmf., ceramic condenser
C18	928109	5000 mmf., ceramic condenser
C19, C21, C24, C25, C27	920092	.01 mfd., 200 volt paper condenser
C20, C39	920030	.05 mfd., 400 volt paper condenser
C22, C23	*	Part of T4 (2nd i-f, AM)
C26	928110	25 mmf., ceramic condenser
C28	910010	110 mmf., mica condenser
C29, C33	910014	470 mmf., mica condenser
C30, C31	920515	.002 mfd., volt paper condenser
C32, C35, C37	920090	.01 mfd., 400 volt paper condenser
C34	925126	100-50 mfd., 150 volt elect. cond.
C40	*	2.2 mmf., part of loop antenna L1
R1, R6, R10, R11	340210	68 ohms, ½ watt resistor
R2, R4, R5, R8	350290	150 ohms, ½ watt resistor
R3	340810	22 kilohms, ½ watt resistor
R7	351290	2.2 megohms, ½ watt resistor
R9	340830	27 kilohms, ½ watt resistor (may be part of T4)
R12	340450	680 ohms, ½ watt resistor
R13, R16, R17	340970	100 kilohms, ½ watt resistor
R14	350770	15 kilohms, ½ watt resistor
R15	351210	1 megohm, ½ watt resistor
R18	350930	68 kilohms, ½ watt resistor
R19	390057	500 kilohms, volume control
R20	351370	4.7 megohms, ½ watt resistor
R21	351130	470 kilohms, ½ watt resistor
R22	390046	400 kilohms, tone control
R23	370310	180 ohms, 1 watt resistor
R24	394042	999 ohms, 3 watt wire wound
R25	380090	22 ohms, 1 watt resistor
L1	700011	AM loop antenna (alternate part 700021) #
L2	710019	FM antenna coil
L3, L5, L9, L10	705002	FM oscillator choke
L4	713024	FM r-f coil
L6	716013	FM oscillator coil
L7	716015	AM oscillator coil
L8	705013	R-f choke
T1	720024	First i-f trans. (FM). (Alt. parts 720082, 720067) #
T2	720031	First i-f trans. (AM). (Alt. parts 720084, 720075) #
T3	720025	Second i-f trans. (FM). (Alt. parts 720082, 720067) #
T4	720032	Second i-f trans. (AM). (Alt. parts 720085, 720076) #
T5	720069	Third i-f trans. (FM). (Alt. parts 720083, 720077) #
T6	708005	Disc. trans. FM). (Alt. parts 708012, 708013) #
T7	734041	Output transformer
SW1	510037	Band switch, AM-FM
SW2	*	Line switch, part of vol. control
SP1	180031P	P.m. speaker, (6" oval)
P1	505007	Line cord connector plug
J1	500005	Line cord interlock socket
	583202	Line cord and internal ant.

CABINET AND DIAL PARTS

†Part No.	DESCRIPTION
140113	Cabinet, maroon plastic (Models 556, 557)
560041	Cabinet back (Models 556, 557)
140125	Cabinet, wood (Model 565)
560052	Cabinet back (Model 565)
460470	Knob, black
520071	Dial crystal
410177	Dial backplate
280039	Dial drive shaft
530002	Dial drive cord (44")
587070	Dial cord spring
525017	Pointer
410503	Speaker grille (Model 556)

DESCRIPTION

TYPE: Single band (AM) superheterodyne

FREQUENCY RANGE: 540-1620 KC.

TYPES OF TUBES:

1—12SG7 converter
1—6SS7 oscillator
1—6SS7 i-f amplifier
1—12AT6 detector, a.v.c., a-f amplifier
1—50L6GT power output
1—35Z5GT rectifier

POWER SUPPLY: A.c. or d.c.

VOLTAGE RATING: 105-125 volts

POWER CONSUMPTION: 30 watts

CURRENT DRAIN: 0.24 amp. at 117 volts a.c.

GENERAL NOTES

1. If replacements are made or the wiring disturbed in the r-f section of the circuit, the receiver should be carefully realigned.
2. In aperating the receiver on d.c., it may be necessary to reverse the line plug for correct polarity.
3. The receiver has a self-contained antenna, and does not require additional antenna connections. For permanent home installations, however, if it is desired to improve reception of weak stations, an additional outdoor antenna may be used. For this purpose a lead has been brought out in the rear near the line cord. Use no ground connection.
4. The self-contained loop antenna operates at maximum efficiency when its position is at right angles to the broadcasting source. It is important, therefore, once the station is tuned in, to rotate the cabinet back and forth through a quarter of a circle (90 degrees), leaving it at the position where the station is receiver with maximum volume.

950074

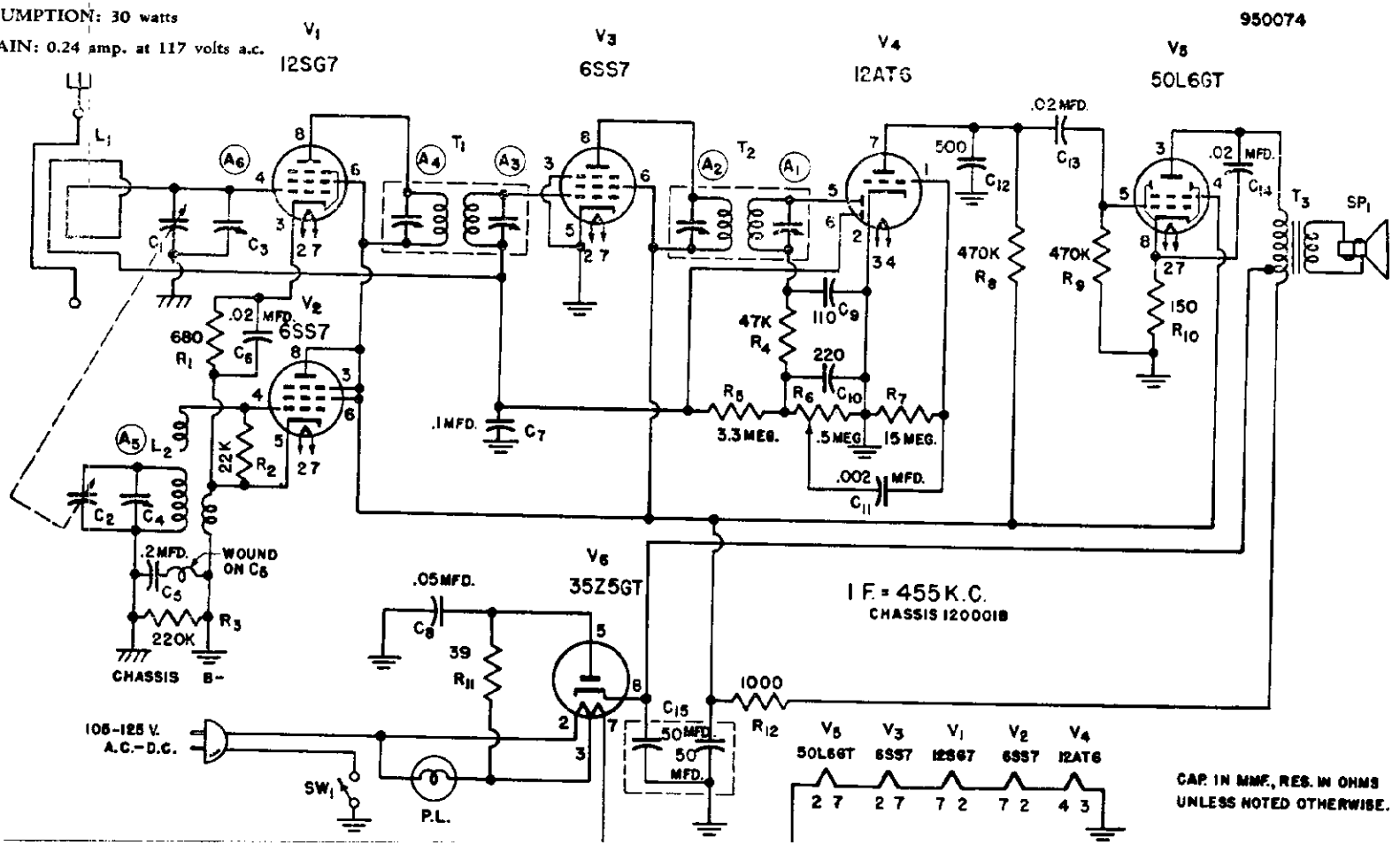

MODEL 561-615, EMERSON RADIO AND PHONO. CORP.
CHASSIS 120001B

INSTRUCTIONS FOR VOLTAGE AND RESISTANCE READINGS

1. Voltage readings are in d.c. volts and resistance readings in ohms unless otherwise specified.
2. D.c. voltage measurements are at 20,000 ohms-per-volt; a.c. voltages measured at 1,000 ohms-per-volt.
3. Socket connections are shown as bottom views.
4. Measured values are from socket pin to common negative (B—).
5. Line voltage maintained at 117 volts for voltage readings.
6. Nominal tolerance on component values makes possible a variation of ± 15% in voltage and resistance readings.
7. Volume control at maximum with no signal applied, for voltage measurements.

VOLTAGE READINGS

SYMBOL	TUBE	PIN 1	PIN 2	PIN 3	PIN 4	PIN 5	PIN 6	PIN 7	PIN 8
V1	12SG7	0	18 AC	1.2	-.5	NC	86	30 AC	82
V2	6SS7	0	12 AC	88	3	0	86	18 AC	86
V3	6SS7	0	36 AC	0	-.5	0	86	30 AC	86
V4	12AT6	-.7	0	0	12 AC	-.5	-.5	45	—
V5	50L6GT	NC	86 AC	105	86	0	NC	36 AC	5.5
V6	35Z5GT	NC	117 AC	112 AC	112	110 AC	NC	86 AC	112

RESISTANCE READINGS

SYMBOL	TUBE	PIN 1	PIN 2	PIN 3	PIN 4	PIN 5	PIN 6	PIN 7	PIN 8
V1	12SG7	250 K	22	70	3.5 meg.	NC	150 K	33	150 K
V2	6SS7	250 K	15	150 K	22 K	0	150 K	22	150 K
V3	6SS7	250 K	40	0	3.5 meg.	0	150 K	33	150 K
V4	12AT6	10 meg.	0	0	16	480 K	3.5 meg.	600 K	—
V5	50L6GT	Inf.	90	150 K	150 K	420 K	Inf.	40	160
V6	35Z5GT	Inf.	120	118	150 K	160	NC	90	150 K

NC = no connection; K = kilohm; meg. = megohm; Inf. = infinity

ALIGNMENT PROCEDURE

1. To set pointer, turn variable condenser fully closed and set pointer at mark near left end of dial backplate.
2. Use isolation transformer if available. If not, connect a 0.1 mfd. condenser in series with low side of signal generator and chassis.
3. Volume control should be at maximum position; output of signal generator should be no higher than necessary to obtain an output reading.
4. Use an insulated alignment screwdriver for adjusting.

	DUMMY ANTENNA	SIGNAL GENERATOR COUPLING	SIGNAL GENERATOR FREQUENCY	RADIO DIAL SETTING	METER OUTPUT	ADJUST	REMARKS
1	0.1 mfd.	High side to pin 4 (grid) of 12SG7 (V1). Low side to chassis.	455 kc	Variable condenser fully open.	Across voice coil.	A1, A2 (2nd i-f trans. T2) A3, A4 (1st i-f trans. T1)	Adjust for maximum output. If isolation transformer is not used, reduce dummy antenna to 0.001 mfd. to reduce hum modulation.
2	200 mmfd.	High side to external antenna lead. Low side to chassis.	1620 kc	Variable condenser fully open.	Across voice coil.	A5 (Trimmer cond. C4).	Adjust for maximum output.
3	200 mmfd.	High side to external antenna lead. Low side to chassis.	1400 kc	Tune for maximum output.	Across voice coil.	A6 (Trimmer cond. C3).	Adjust for maximum output.

REPLACEMENT PARTS LIST

Symbol	†Patr No.	DESCRIPTION
V1	12SG7	Converter
V2	6SS7	Oscillator
V3	6SS7	I-f amplifier
V4	12AT6	Detector, a.v.c., a-f amplifier
V5	50L6GT	Power output
V6	35Z5GT	Rectifier
C1, C2	900027	Two gang var. condenser
C3, C4	*	Trimmers, part of var. cond.
C5	920050	.2 mfd., 400 volt paper cond.
C6	920100	.02 mfd., 200 volt paper cond.
C7	920040	.1 mfd., 200 volt paper cond.
C8	920030	.05 mfd., 400 volt paper cond.
C9	910010	110 mmf., mica condenser
C10	910000	220 mmf., mica condenser
C11	920010	.002 mmf., 600 volt paper cond.
C12	920240	500 mmf., 600 volt paper cond.
C13, C14	920020	.02 mfd., 400 volt paper cond.
C15	925112	50-50 mfd., 150 volt electrolytic condenser
R1	340450	680 ohms, ½ watt resistor
R2	340810	22 kilohms, ½ watt resistor
R3	351050	220 kilohms, ½ watt resistor
R4	340890	47 kilohms, ½ watt resistor
R5	351330	3.3 megohms, ½ watt rsistor
R6	390044	.5 megohms, volume control
R7	351490	15 megohms, ½ watt resistor
R8, R9	351130	470 kilohms, ½ watt resistor
R10	340290	150 ohms, ½ watt resistor
R11	370150	39 ohms, 1 watt resistor
R12	370490	1000 ohms, 1 watt resistor
L1	700000	Loop antenna
L2	716025	Oscillator coil
T1	720061	First i-f transformer
T2	720036	Second i-f transformer
T3	734043	Output transformer
SP1	180045	P.m. speaker
SW1	*	Line switch, part of vol. control
P.L.	807000	Dial light, 6-8 v., .15 amp.
	583014	Line cord
	507006	Dial light socket

† Specify part numbers when ordering. * Not supplied separately.

CABINET AND DIAL PARTS

†Part No.	DESCRIPTION
140119	Cabinet, ivory plastic
450310	Knob, ivory
460072	Speaker grille
525024	Pointer
520050	Dial backplate
280042	Dial drive shaft
530002	Dial cord (30")
587070	Dial cord spring

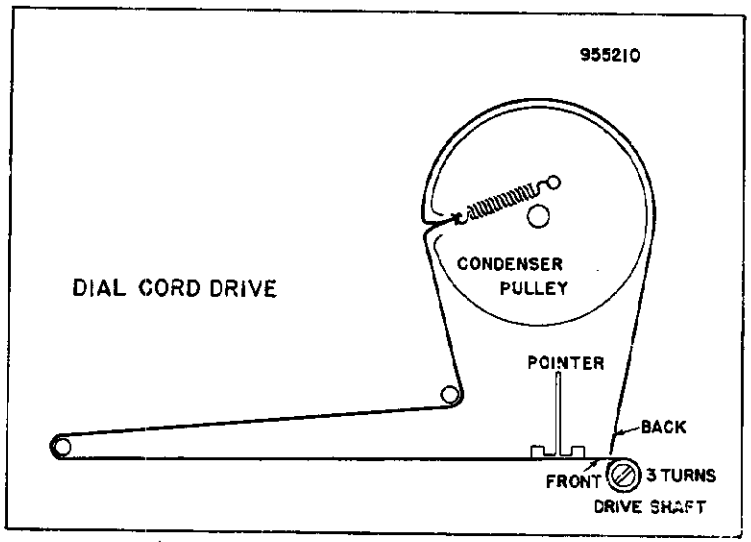

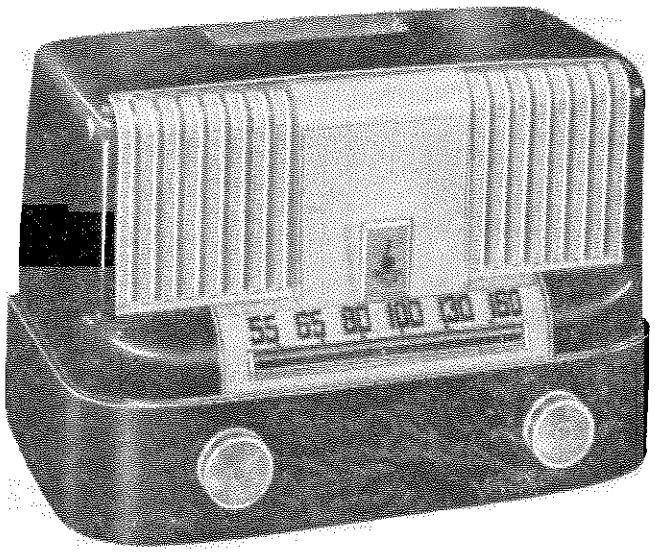

MODEL: 561 - 615

MODEL 568, CHASSIS 120070A, 120070B

EMERSON RADIO AND PHONO. CORP.

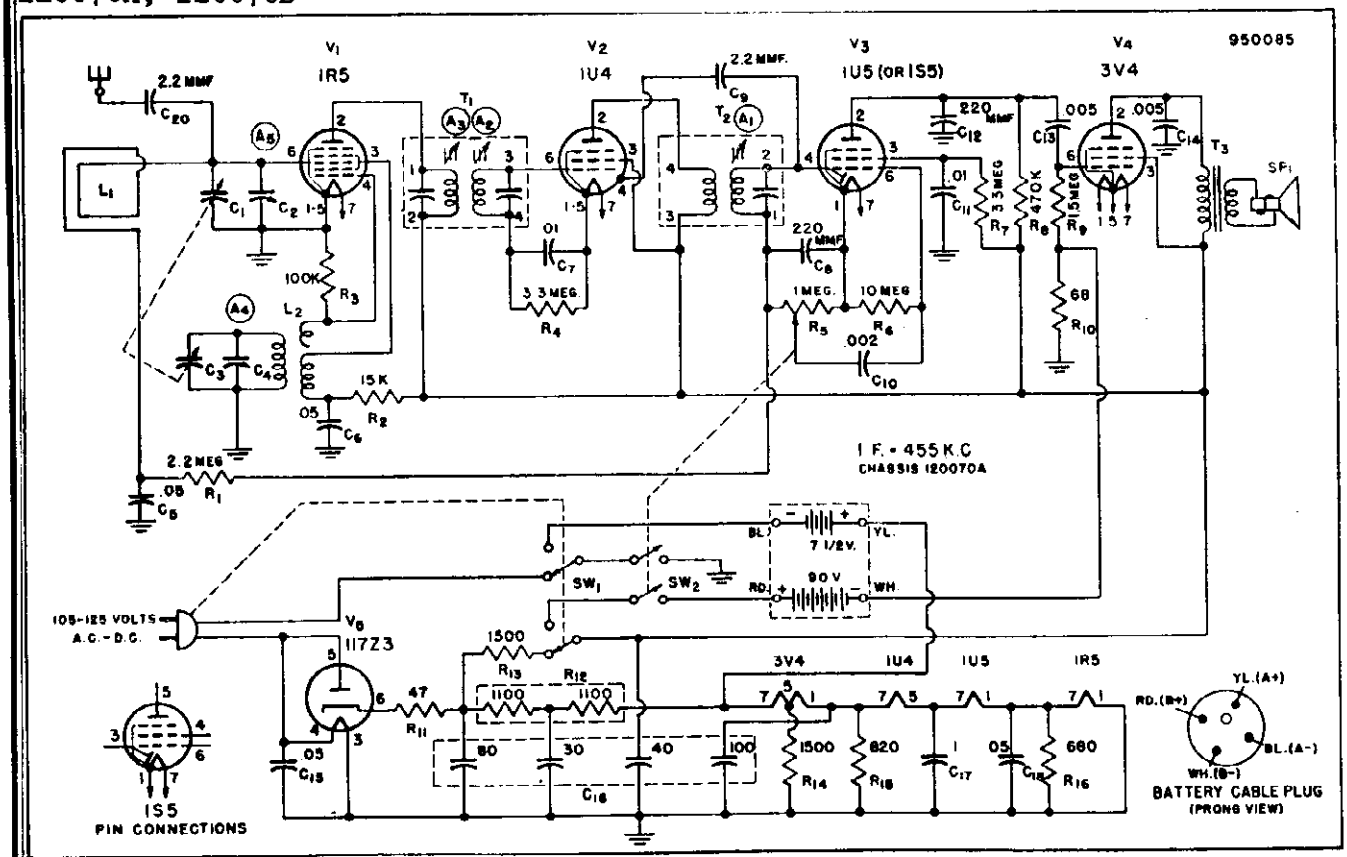

Schematic Circuit Diagram Model 568 Chassis 120070A

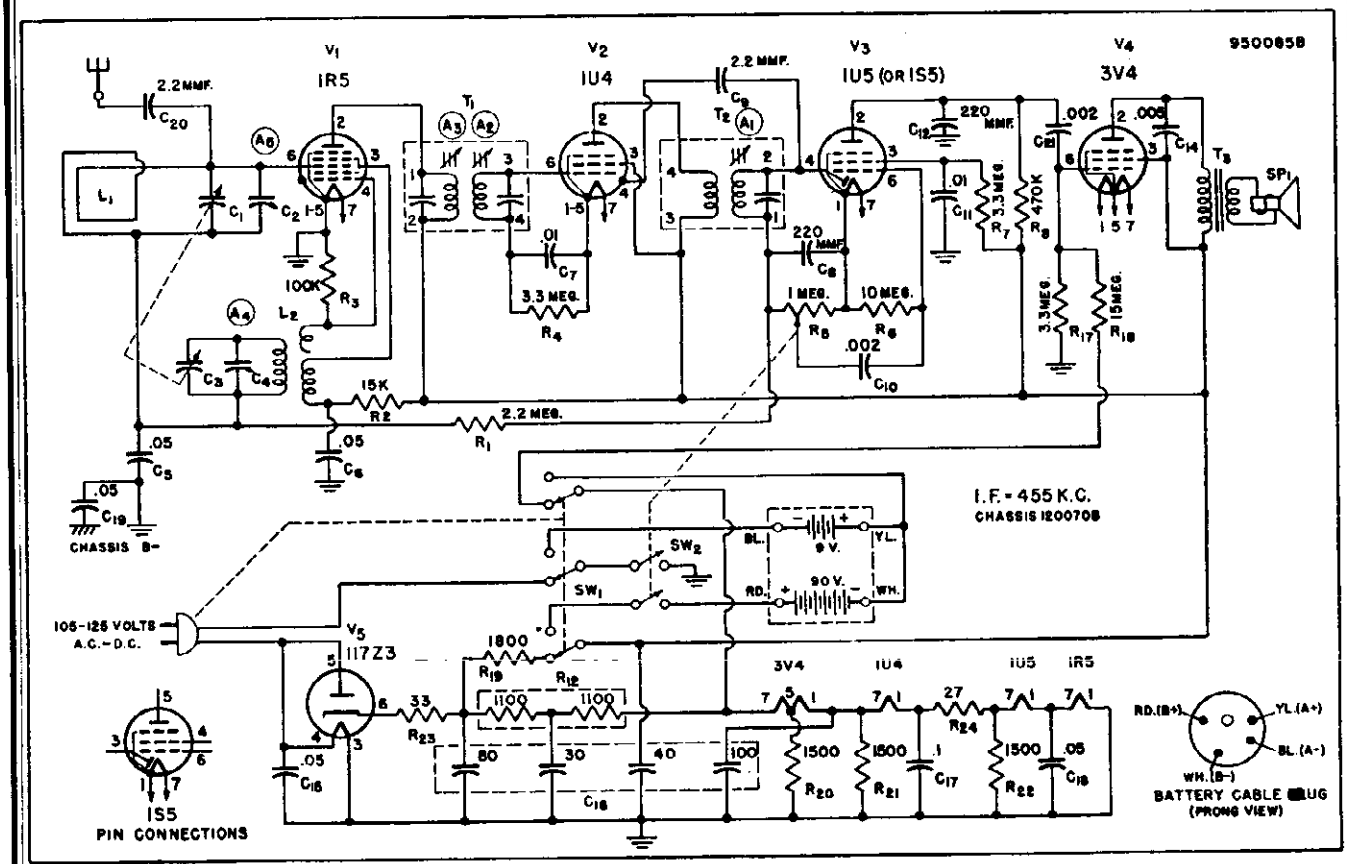

Schematic Circuit Diagram Model 568 Chassis 120070B

EMERSON RADIO AND PHONO. CORP. MODEL 568, CHASSIS 120070A, 120070B

ALIGNMENT PROCEDURE

1. Use battery power when available. When a.c. power is used, connect the line cord through an isolation transformer if available. Otherwise connect a 0.1 mfd. condenser in series with the low side of the signal generator and B—.
2. Set the volume control at maximum. The output of the signal generator should be no higher than that necessary to obtain an output reading. Attenuate the signal input as alignment proceeds. Use an insulated alignment tool.
3. Maintain the loop in the same position relative to the chassis as when the receiver is in the cabinet.

	DUMMY ANTENNA	SIGNAL GENERATOR COUPLING	SIGNAL GENERATOR FREQUENCY	RADIO DIAL SETTING	OUTPUT METER	ADJUST	REMARKS
1	0.1 mfd.	High side to grid (pin 6) of V1 (1R5). Low side to chassis.	455 KC.	Variable condenser fully open.	Across voice coil	A1, (2nd i-f trans), A2, A3 (1st i-f trans.)	Adjust for maximum output. If a.c. is used, without an isolation transformer, reduce dummy antenna to 200 mmf. to reduce hum modulation.
2	200 mmf.	High side to external antenna lead. Low side to chassis.	1620 KC.	Variable condenser fully open.	Across voice coil	A4 (trimmer cond. C4.)	Adjust for maximum output.
3	200 mmf.	"	1400 KC.	Tune for maximum output.	Across voice coil	A5 (trimmer cond. C2).	Adjust for maximum output.

INSTRUCTIONS FOR VOLTAGE AND RESISTANCE READINGS

1. Voltage and resistance readings are measured for 117 volt a.c. line operation. Socket connections are shown as bottom views. Measurements are taken from socket pin to chassis (chassis 120070A) or socket pin to common negative (chassis 120070B).
2. Voltages are d.c. unless otherwise indicated, measured with a 20,000 ohms-per-volt meter. A.c. voltages are measured at 1000 ohms-per-volt.
3. For voltage measurements, set volume control at maximum; no signal applied.
4. Nominal tolerance on component values makes possible a variation of ± 15% in voltage and resistance readings.
5. On the voltage and resistance analysis diagram NC denotes no connection; K—kilohms; meg.—megohms; inf.—infinity.

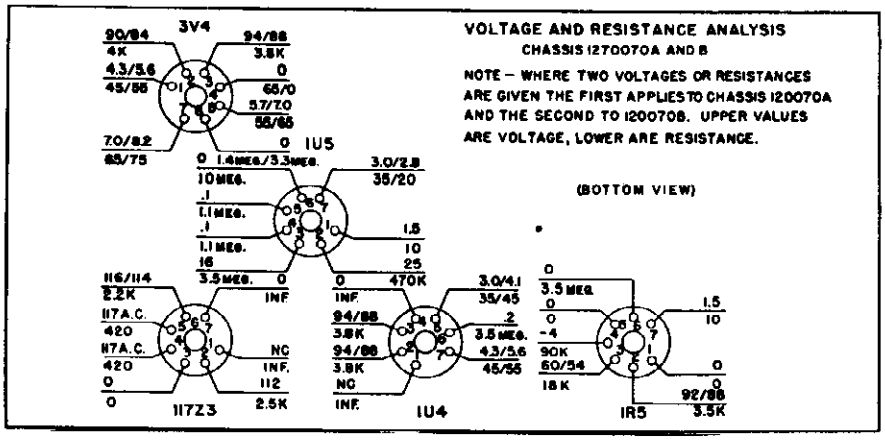

DESCRIPTION

TYPE: Three way (battery, a.c., d.c.) portable superheterodyne.

FREQUENCY RANGE: 540-1620 KC.

TYPE OF TUBES:
1—1R5, pentagrid converter
1—1U4, i-f amplifier
1—1S5, or 1U5, detector, a.v.c., a-f amplifier
1—3V4, power output
1—117Z3 rectifier

POWER SUPPLY: Battery powerpack, or a.c., or d.c.

VOLTAGE RATING:
Line operation—105-125 volts, a.c. or d.c.
Battery operation—7½ volts (chassis 120070A);
9 volts (chassis 120070B) "A" supply
90 volts "B" supply

POWER CONSUMPTION: Line operation 20 watts

CURRENT CONSUMPTION:
"A" battery—.053 amp. (chassis 120070A)
.055 amp. (chassis 120070B)
"B" battery—.013 amp.
117 volts a.c.—.170 amp.



MODEL: 568

© John F. Rider

MODEL 568, CHASSIS 120070A, 120070B

EMERSON RADIO AND PHONO. CORP.

REPLACEMENT PARTS LIST

Symbol	†Part No.	DESCRIPTION
V1	1R5	Converter
V2	1U4	1-f amplifier
V3	1S5 or 1U5	Detector, a.v.c., a-f amplifier
V4	3V4	Power output
V5	117Z3	Rectifier
C1, C3	900043	Two-gang variable condenser
C2, C4	*	Trimmers, part of var. condenser
C5, C18	920060	.05 mfd., 200 volt condenser
C6, C15, C19	920539	.05 mfd., 400 volt condenser
C7, C11	920092	.01 mfd., 400 volt condenser
C8, C12	910000	220 mmf., mica condenser
C9, C20	915005	2.2 mmf., molded condenser
C10, C21	920515	.002 mfd., 400 volt condenser
C13, C14	920180	.005 mfd., 400 volt condenser
C16	925059	80-40-30-100 mfd., 150-150-150-25 volt electrolytic condenser
C17	920040	.1 mfd., 200 volt condenser
R1	351290	2.2 megohms, ½ watt resistor
R2	340770	15 kilohms, ± 10%, ½ watt res.
R3	350970	100 kilohms, ½ watt resistor
R4, R7	351330	3.3 megohms, ½ watt resistor
R5	390063	1 megohm, volume control
R6	351450	10 megohms, ½ watt resistor
R8	351130	470 kilohms, ½ watt resistor
R9	351250	1.5 megohms, ½ watt resistor
R10	340210	68 ohms, ± 10%, ½ watt resistor
R11	370170	47 ohms, ± 10%, ½ watt resistor
R12	394041	1100-1100 ohms, ± 5%, wire-wound resistor
R13, R14, R20, R21, R22	340530	1500 ohms, ± 10%, ½ watt resistor
R15	340470	820 ohms, ± 10%, ½ watt resistor
R16	340450	680 ohms, ± 10%, ½ watt resistor
R17	341330	3.3 meghoms, ± 10%, ½ watt resistor
R18	341490	15 megohms, ± 10%, ½ watt resistor
R19	340550	1800 ohms, ± 10%, ½ watt resistor
R23	370132	33 ohms, ± 10%, ½ watt resistor
R24	340110	27 ohms, ± 10%, ½ watt resistor
L1	700039△	Loop antenna
	700042□	" "
L2	716029	Oscillator coil
T1	720525	First i-f transformer (alternate parts 720051 or 720062) #
T2	720066	Second i-f transformer
T3	734039△	Output transformer
	734039A□	" "
SW1	510008△	Power changeover switch, d.p.d.t.
	510043□	" " " , t.p.d.t.
SW2	*	On-off switch, part of volume control
	585031△	Battery cable ("A" and "B")
	585033□	" " " " "
	583012P△	Line cord
	583017P□	" "
		Battery power pack unit (7½ or 9 volts "A" and 90 volts "B"). Eveready No. 753 or Rayovac No. AB994.

CABINET AND DIAL PARTS

†Part No.	DESCRIPTION
140182°	Cabinet
140183S°	Cabinet back, with hinge springs
460081°	Speaker grille
520092	Dial Crystal
520085	Dial backplate
595006°	Handle, with rings
460082°	Knob
808205	Cabinet catch clip
280079	Cover catch stud
525041	Dial pointer
280070	Drive shaft
530002	Drive cord (30")
587040	Drive cord spring

† State part numbers when ordering.
* Not supplied separately.
# Replace with parts having same number as that removed.

△ Used on chassis 120070A.
□ Used on chassis 120070B.
° Specify color when ordering.

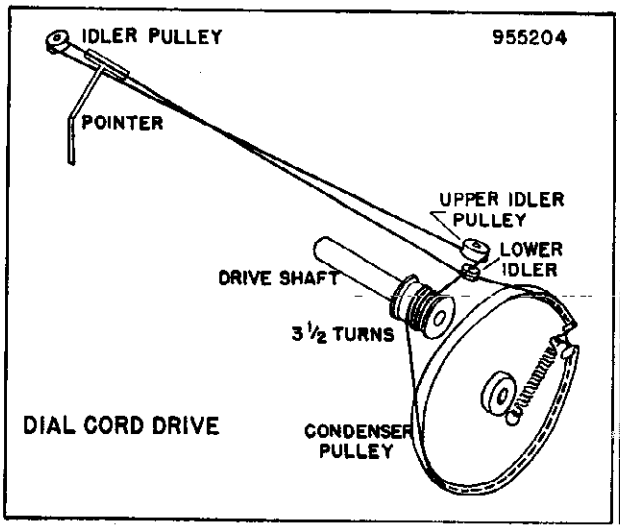

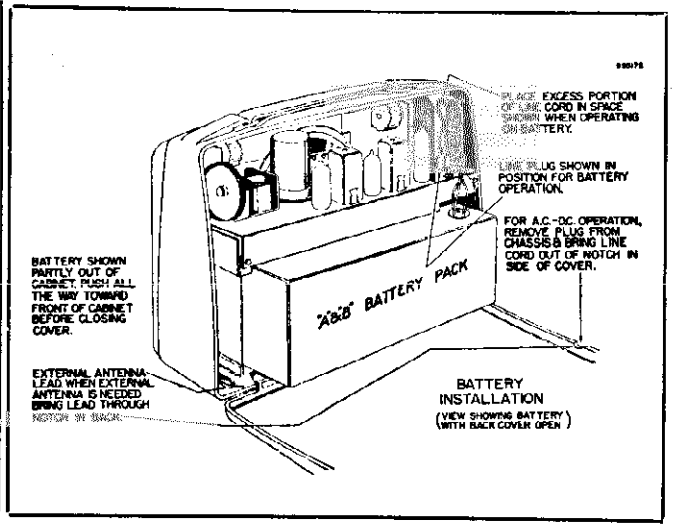

© John F. Rider

EMERSON RADIO AND PHONO. CORP. MODELS 563, 593, 603, CHASSIS 120063B

DESCRIPTION

TYPE: Console AM-FM superheterodyne with automatic record changer.
FREQUENCY RANGE:
Broadcast band (AM)—535-1620 kilocycles
Frequency modulation band (FM)—88.0 to 108.0 megacycles
1—6AG5, r-f amplifier
1—6BE6, converter
2—6SG7, i-f amplifiers
1—6U5/6G5, tuning eye
1—5U4G, rectifier
1—6S8/GT, AM detector, FM discriminator, audio amplifier
1—6SH7, FM limiter
2—6V6/GT, power output
1—6SQ7, phase inverter
POWER SUPPLY: 60-cycle a.c. only
VOLTAGE RATING: 105-125 volts
POWER CONSUMPTION: 140 watts

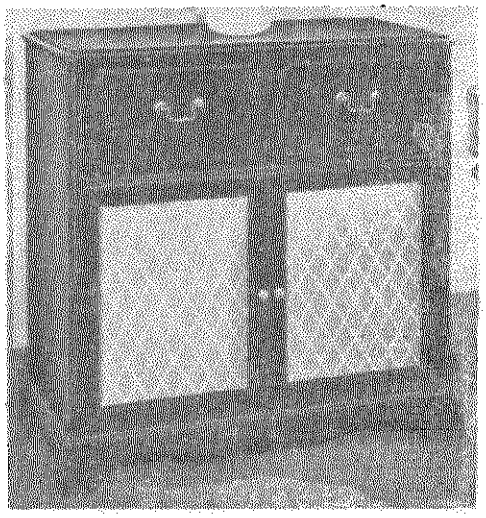

MODEL 563



MODEL 593

GENERAL NOTES

1. If replacements are made or the wiring disturbed in the r-f section of the circuit, the receiver should be carefully realigned.
2. The color coding of the i-f transformer leads is as follows:

Grid—green	Plate—blue
Grid return—black	B+—red

3. A self-contained loop antenna is provided for broadcast band reception. If it is desired to improve reception of weak stations, however, an additional outdoor antenna may be used. Connect the external antenna to the *outside* terminal on the "AM" side of the terminal strip at the rear of the cobinet. Connect the ground to the adjoining terminal.
4. An internal power line antenna is provided for FM operation in relatively strong signal areas. An external dipole antenna is recommended for best FM operation. To connect dipole, remove the wire from the terminal on the "FM" side of the terminal strips and connect the two dipole leads to the two "FM" terminals. A ground connection is not required for FM operation.

DISASSEMBLY INSTRUCTIONS

1. Remove four push-on type control knobs from front of cabinet.
2. Remove phone motor plug, phono pickup plug, and two speaker pin-terminals from chassis.
3. Remove two Phillips head screws holding antenna terminal strip to cabinet.
4. Remove two nuts and washers fastening loop to cabinet.
5. Remove for hex-head bolts in chassis shelf retaining chassis to cabinet.
6. Remove four nuts fastening speaker to cabiner and remove speaker.

©John F. Rider

MODELS 563, 593, 603,
CHASSIS 120063B

EMERSON RADIO AND PHONO. CORP.

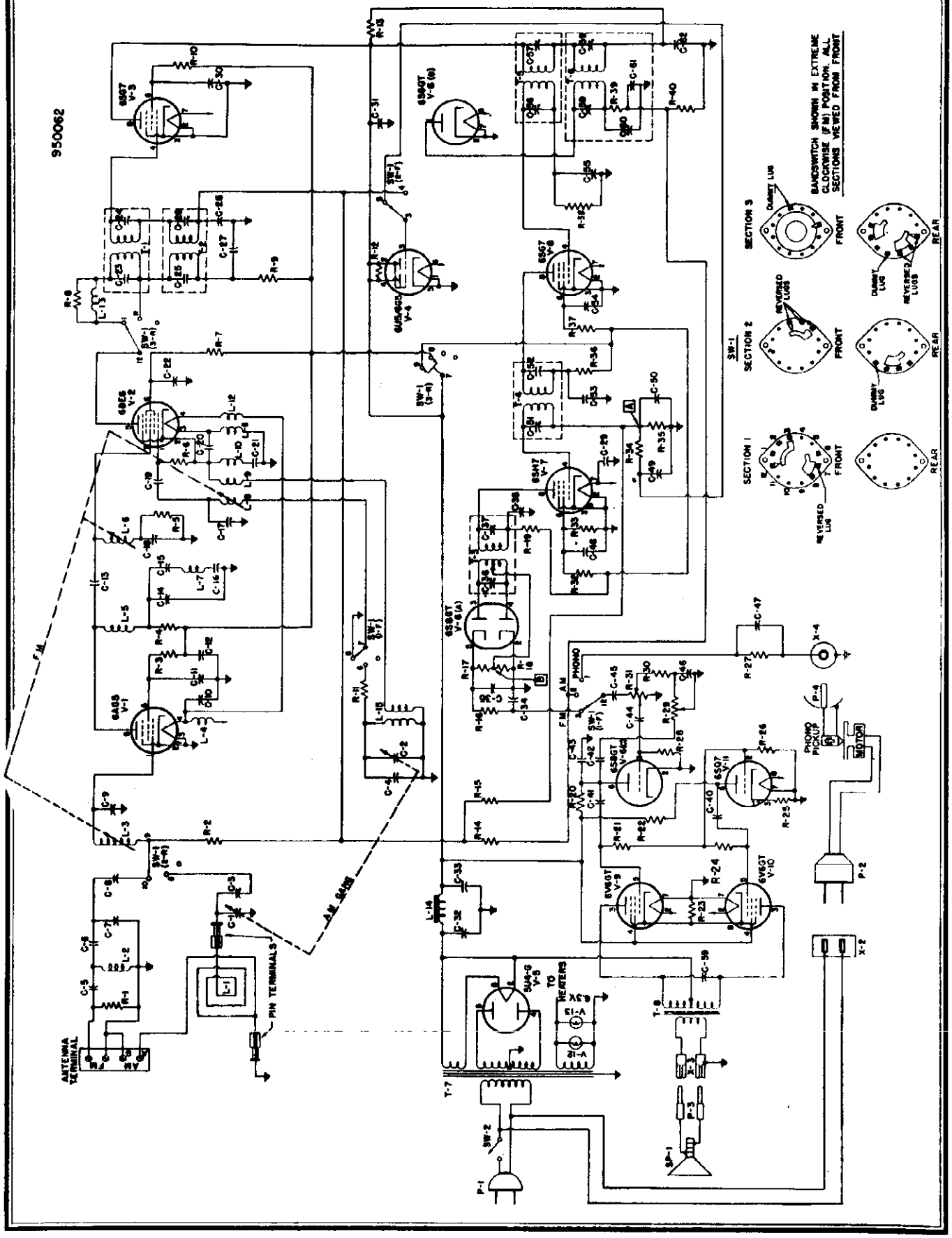

EMERSON RADIO AND PHONO. CORP. MODELS 563, 593, 603, CHASSIS 120063B

AM ALIGNMENT

Volume control should be at maximum position; output of signal generator should be no higher than necessary to obtain an output reading. Use an insulated alignment screw driver for adjusting.

	DUMMY ANTENNA	SIGNAL GENERATOR COUPLING	SIGNAL GENERATOR FREQUENCY	BAND SWITCH POS.	RADIO DIAL SETTING	OUTPUT METER	ADJUST	REMARKS
1	.1 mfd.	High side to Pin No. 1 of V2 6BE6. Low side to chassis.	455 kc	Center position BC.	High frequency end of dial.	Across voice coil.	C-25, C-26 C-58, C-59	Adjust all trimmers for maximum response.
2	.1 mfd.	"	455 kc	"	"	"	C-16 IF-trap trimmer	Adjust for minimum response.
3	200 mmfd.	High side to AM ungrounded lug on antenna terminal strip. Low side to chassis.	1620 kc	"	1620 kc Reference marker on dial backplate.	"	C-4	Adjust for maximum response.
4	200 mmfd.	"	1400 kc	"	Tune in 1400 kc for maximum output.	"	C-3	Adjust for maximum response.

FM IF ALIGNMENT USING FM SIGNAL GENERATOR AND VTVM
Use FM Signal with 60 Cycle Modulation and 500 KC Deviation

	DUMMY ANTENNA	SIGNAL GENERATOR SIGNAL	SIGNAL GENERATOR FREQUENCY	BAND SWITCH POS.	RADIO DIAL SETTING	CONNECT VTVM	ADJUST	REMARKS
1	.005 mfd.	High side to Pin No. 1 V2 6BE6. Low side to chassis.	10.7 mc freq. mod.	Fully clockwise FM position.	High frequency end of dial.	Point "A"	C-23, C-24 C-57, C-56 C-52, C-51	Adjust all trimmers for maximum deflection while attenuating signal so as to read approximately 2 volts at Point "A" during alignment.
2	.005 mfd.	"	10.7 mc freq. mod.	"	"	Point "A"	C-21	Adjust for maximum deflection.

FM IF ALIGNMENT USING AM SIGNAL GENERATOR AND VTVM

	DUMMY ANTENNA	SIGNAL GENERATOR COUPLING	SIGNAL GENERATOR FREQUENCY	BAND SWITCH POS.	RADIO DIAL SETTING	CONNECT VTVM	ADJUST	REMARKS
1	.05 mfd.	High side to Pin No. 1 V2 6BE6. Low side to chassis.	10.7 mc unmodulated	Fully clockwise FM pos.	High frequency end of dial.	Point "A"	C-52 C-51	Adjust for maximum deflection.
2	.05 mfd.	"	10.7 mc unmodulated	"	"	"	C-56 C-57	"
3	.05 mfd.	"	10.7 mc unmodulated	"	"	"	C-24 C-23	"
4	.05 mfd.	"	10.7 mc unmodulated	"	"	Point "B"	C-37	"
5	.05 mfd.	"	10.7 mc unmodulated	"	"	Pin No. 5 6S8-V6A	C-36	Adjust for zero minimum deflection

Vol. control in max. pos.

FM DISCRIMINATOR ALIGNMENT

	DUMMY ANTENNA	SIGNAL GENERATOR COUPLING	SIGNAL GENERATOR FREQUENCY	BAND SWITCH POS.	RADIO DIAL SETTING	CONNECT VTVM	ADJUST	REMARKS
1	.05 mfd.	High side to Pin No. 1 of 6BE6 V2. Low side to chassis.	10.7 mc freq. mod.	Fully clockwise Pos. FM.	High frequency end of dial.	Point "B"	C-37	Adjust for maximum deflection. Attenuate signal so that reading of approximately 2 volts indicates maximum response of discriminator alignment.
2	.05 mfd.	"	10.7 mc unmodulated	"	"	Connect scope or AC-VTVM across voice coil.	C-36	Adjust for minimum deflection. Making sure that a sharp rise can be obtained if the secondary of discriminator is aligned on either side of minimum deflection setting.

MODELS 563, 593, 603, EMERSON RADIO AND PHONO. CORP.
CHASSIS 120063B

Vol. control in max. pos.

FM RF ALIGNMENT USING AM GENERATOR AND VTVM

	DUMMY ANTENNA	SIGNAL GENERATOR COUPLING	SIGNAL GENERATOR FREQUENCY	BAND SWITCH POS.	RADIO DIAL SETTING	CONNECT VTVM	ADJUST	REMARKS
1	300 ohm carbon resistor	High side to FM antenna terminal. Low side to chassis. Disconnect interal antenna.	108 mc unmodulated	Fully clockwise FM pos.	108 mc	Point "A"	C-17	Adjust for maximum deflection.
2	"	"	88 mc unmodulated	"	88 mc	"	L-8	Adjust iron core only for maximum deflection. (Hold brass in position).
3	"	"	98 mc unmodulated	"	98 mc	"	L-8	Adjust iron and brass cores together (single screw). For maximum deflection repeat steps 1, 2, 3 until no further improvement can be obtained.
4	"	"	106 mc unmodulated	"	Tune for maximum deflection.	"	C-18 C-9	Adjust for maximum deflection
5	"	"	90 mc unmodulated	"	Tune for maximum deflection.	"	L-6 L-3	Adjust iron core only. For maximum deflection (Hold brass in position).
6	"	"	100 mc unmodulated	"	Tune for maximum deflection.	"	L-6 L-3	Adjust iron and brass cores together (single screw) for maximum deflection. Repeat 1, 2, 3 until no further improvement can be made.

FM-RF ALIGNMENT USING FM GENERATOR AND OSCILLOSCOPE

Vol. control in max. pos. Use FM Signal with 500 KC Deviation

	DUMMY ANTENNA	SIGNAL GENERATOR COUPLING	SIGNAL GENERATOR FREQUENCY	BAND SWITCH POS.	RADIO DIAL SETTING	CONNECT SCOPE	ADJUST	REMARKS
1	300 ohm carbon resistor	High side to FM antenna terminal. Low side to chassis. Disconnect internal antenna.	108 mc unmodulated	Fully clockwise FM pos.	108 mc	Point "A"	C-17	Adjust trimmer so as to center response curve on scope. Choose 108 mc peak at maximum capacity.
2	"	"	108 mc unmodulated	"	"	"	C-18 C-9	Adjust trimmers for maximum response—use maximum height of response curve as indication—See Fig. 1
3	"	"	88 mc unmodulated	"	88 mc	"	L-8	Adjust iron core only for maximum response. (Hold brass in position).
4	"	"	100 mc unmodulated	"	100 mc	"	L-8	Adjust iron and brass cores together (single screw) for maximum response—Repeat steps 1, 2, 3, 4 until no further improvement can be made.
5	"	"	88 mc unmodulated	"	88 mc	"	L-6 L-3	Adjust iron core only for maximum response. (Hold brass in position).
6	"	"	100 mc unmodulated	"	100 mc	"	L-6 L-3	Adjust iron and brass cores together (single screw) for maximum response.
7	"	"	108 mc unmodulated	"	108 mc	"	C-18 C-9	Adjust trimmers for maximum response to 108 mc signal. Repeat steps 5, 6, 7 until no further improvement can be made.

©John F. Rider

EMERSON RADIO AND PHONO. CORP. MODELS 563, 593, 603, CHASSIS 120063B

INSTRUCTIONS FOR VOLTAGE AND RESISTANCE READINGS

1. Voltage readings are in volts and resistance readings in ohms unless otherwise specified.
2. D-C voltage measurements are at 20,000 ohms per volt; a-c voltages measured at 1,000 ohms.
3. Socket connections are shown as bottom views.
4. Measured values are from socket pin to common negative.
5. Line voltage maintained at 117 volts for voltage readings.
6. Nominal tolerance on component values makes possible a variation of ± 15% in voltage and resistance readings.
7. Volume control at maximum, no signal applied for voltage measurements.
8. Resistance readings in the B+ circuits may vary widely according to the condition of the filter capacitors.

VOLTAGE READINGS

SYMBOL	TUBE	PIN 1	PIN 2	PIN 3	PIN 4	PIN 5	PIN 6	PIN 7	PIN 8	CAP.
1	6AG5	-0.4 DC	0	6.2 AC	0	195 DC	137 DC	0		
2	6BE6	-0.3 DC	0	0	6.2 AC	250 DC	100 DC	0		
3	6SG7	0	0	0	-0.75 DC	0	150 DC	6.2 AC	250 DC	
5	5U4G	0	260 DC	0	260 AC	0	260 AC	0	260 DC	
*6	6S8GT	-0.5 DC	0	-1.0 DC	-0.6 DC	-0.2 DC	100 DC	0	6.2 AC	-0.75 DC
*7	6SH7	0	0	0	-0.65 DC	0	35 DC	6.2 AC	175 DC	
*8	6SG7	0	0	0	-0.75 DC	0	125 DC	6.2 AC	235 DC	
9	6V6GT	0	6.2 AC	250 DC	240 DC	0	0	0	13 DC	
10	6V6GT	0	0	250 DC	240 DC	0	0	6.2 AC	13 DC	
11	6SG7	0	-0.25 DC	-0.5 DC	0	0	70 DC	6.2 AC	0	

RESISTANCE READINGS

SYMBOL	TUBE	PIN 1	PIN 2	PIN 3	PIN 4	PIN 5	PIN 6	PIN 7	PIN 8	CAP.
1	6AG5	1 meg.	0	0	0.2	60,000	110,000	0		
2	6BE6	22,000	0.7	0.2	0.4	50,000	100,000	12,000		
3	6SG7	0	0	0	800,000	0	70,000	0	50,000	
5	5U4G	Inf.	60,000	Inf.	60	Inf.	60	Inf.	60,000	
6	6S8GT	250,000	0	100,000	100,000	200,000	100,000	0	0.2	15 meg.
7	6SH7	0	0	0	47,000	0	75,000	0.2	100,000	
*8	6SG7	0	0	0	2.2 meg.	0	80,000	0.2	50,000	
9	6V6GT	Inf.	0.2	60,000	60,000	440,000	Inf.	0	180	
10	6V6GT	Inf.	0.2	60,000	60,000	440,000	Inf.	0	180	
11	6SQ7	0	220,000	1000	Inf.	Inf.	80,000	0	0.2	

* Taken in FM Position.

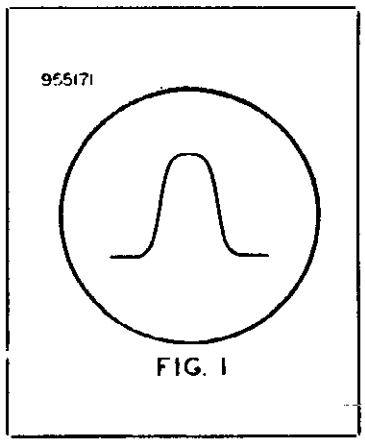

FIG. 1

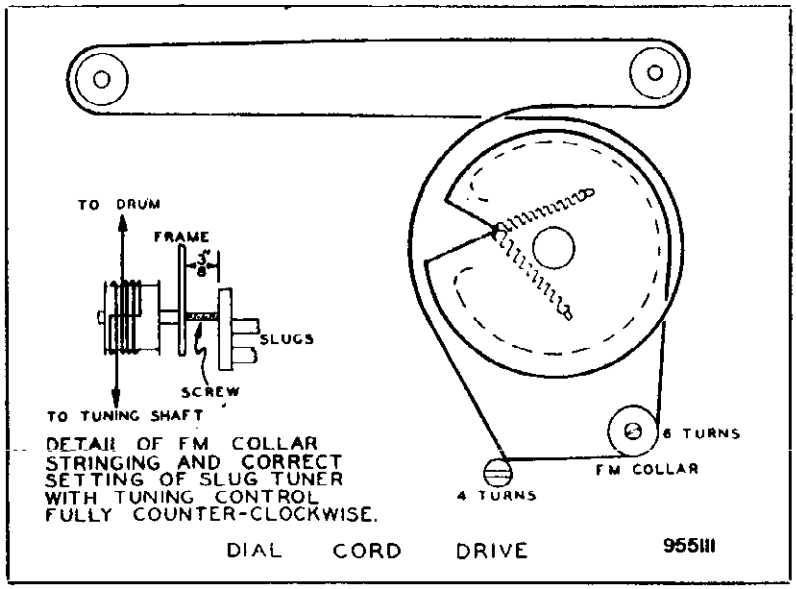

DETAIL OF FM COLLAR STRINGING AND CORRECT SETTING OF SLUG TUNER WITH TUNING CONTROL FULLY COUNTER-CLOCKWISE.

DIAL CORD DRIVE

955111

MODELS 563, 593, 603, EMERSON RADIO AND PHONO. CORP.
CHASSIS 120063B

REPLACEMENT PARTS LIST

Symbol	†Part No.	DESCRIPTION
C1, C2	900007	Variable Condenser
*C3, C4		Trimmers, part of variable condenser
C5, C6	928105	7 mmf., 300 volts ceramic condenser
C7, C20, C50	928102	50 mmf., 300 volts ceramic condenser
C8	928107	30 mmf., 300 volts ceramic condenser
C9	900313	1.6-18 mmf., trimmer
C10	928109	5000 mmf., ceramic condenser C.T.S.
C11, C12, C22	915003	500 mmf., 300 volts ceramic condenser
C13	928106	100 mmf., 300 volts ceramic condenser
C14	928002	10 mmf., 300 volts ceramic condenser
C15, C43	910320	250 mmf., 500 volts mica condenser
*C16		Trimmer, part of L-7
C17	900026	1—8 mmf., trimmer
C18	900314	10—60 mmf., trimmer
C19	928101	25 mmf., 300 volts ceramic condenser
C21	900012	10—60 mmf., trimmer
*C23, C24		Trimmers, part of T-1
*C25, C26		Trimmers, part of T-2
C27, C29, C31, C38, C40, C41, C44, C45, C46, C53, C62	920090	.01 mfd., 400 volts tubular paper condenser
C28, C49	920040	.1 mfd., 200 volts tubular paper condenser
C32, C33	925006	30—40 mfd., 400 volts dual electrolytic condenser
C30, C42 C48, C54	920180	.005 mfd., 400 volts tubular paper condenser
C34	920514	.001 mfd., 400 volts tubular paper condenser
C35	928013	100 mmf., 300 volts ceramic condenser
*C36, C37		Trimmers, part of T-3
C39	920544	.003 mfd., 600 volts tubular paper condenser
C47	910120	360 mmf., 400 volts mica condenser
*C51, C52		Trimmers, part of T-4
C55	920060	.05 mfd., 200 volts tubular paper condenser
*C56, C57		Trimmers, part of T-5
*C58, C59		Trimmers, part of T-6
*C60, C61		110 mmf., cond., part of T-6
V12, V13	807020	Pilot light
L1	700003	Antenna loop
L2	705003	R.F. choke
L3	710014	Antenna coil F.M.
L4, L10	705002	R.F. choke
L11, L12		
L5	705000	R.F. choke
L6	713013	R.F. coil F.M.
L7	708001	I.F. wave trap A.M.
L8	716112	Oscillator coil F.M.
L9	705007	R.F. choke
L13	705005	Converter plate R.F. choke
L14	737002	Filter choke
L15	716113	Oscillator coil A.M.
R1, R9, R13, R25, R36	350490	1000 ohms, ½ watt resistor
R2, R20, R22	351130	470,000 ohms, ½ watt resistor
R3	370872	39,000 ohms, 1 watt resistor
R4	340650	4,700 ohms, ½ watt resistor
R5	340750	12,000 ohms, ½ watt resistor
R6	340810	22,000 ohms, ½ watt resistor
R7	397070	18,000 ohms, 2 watt resistor
*R8		510 ohms, resistor, part of L-13
R10, R37	370830	27,000 ohms, 1 watt resistor
R11	350290	150 ohms, ½ watt resistor
*R12		1 meg., ½ watt resistor, part of tuning eye socket cable
R14, R34	351210	1 meg., ¼ watt resistor
R15, R27, R38	351290	2.2 meg., ¼ watt resistor
R16	350930	68,000 ohms, ½ watt resistor
R17, R18	340970	100,000 ohms, ½ watt resistor
R19, R30, R35	340890	47,000 ohms, ½ watt resistor
R21, R24 R26, R40	351050	220,000 ohms, ½ watt resistor
R23	394140	180 ohms, 2 watt wirewound resistor
R28	397000	15 meg., ½ watt resistor
R29	390081	1 meg., ½ watt tone control
R31	390004	1 meg., ½ watt volume control
R32	370890	47,000 ohms, 1 watt resistor
R33	370730	10,000 ohms, 1 watt resistor
*R39		27,000 ohms, resistor, part of T-6
T1	720046	First I.F. transformer F.M.
T2	720045	First I.F. transformer A.M.
T3	708005	Discriminator coil
T4	720049	Third I.F. transformer F.M.
T5	720047	Second I.F. transformer F.M.
T6	720048	Second I.F. transformer A.M.
T7	730011	Power transformer
T8	734004	Output transformer
SP1	180023	P.M. speaker
SW1	510018	Band change switch
*SW2		On-Off switch, part of R-29
X2	500500	Power outlet
X3	555004	Terminal strip-speaker
X4	540540	Pick-up socket
P1	583204	Line cord and plug
P2	505005	A.C. plug record changer
P3	580006	Pin terminal leads—speaker
P4	505040	Connector plug—pick-up
	507001	Dial light socket assembly
	585210	Tuning eye socket and cable
	140144	Cabinet (model 563)
	140187	Cabinet (model 593)
	140229	Cabinet (model 603)
	620034	Knob for models (603-563)
	620035	Knob for models (603-563)
	620094	Knob for model (593)
	620095	Knob for model (593)
	819022	Automatic record changer—rotating action record support, or
	819039	Automatic record changer—lever action record support
	280002	Drive shaft
	280505	Drive shaft for F.M. tuner
	520002	Dial backplate
	520058	Dial face
	525002	Pointer

† Specify part numbers when ordering.

* Not supplied separately.

© John F. Rider

EMERSON RADIO AND PHONO. CORP. MODELS 573, 583, CHASSIS 120039B

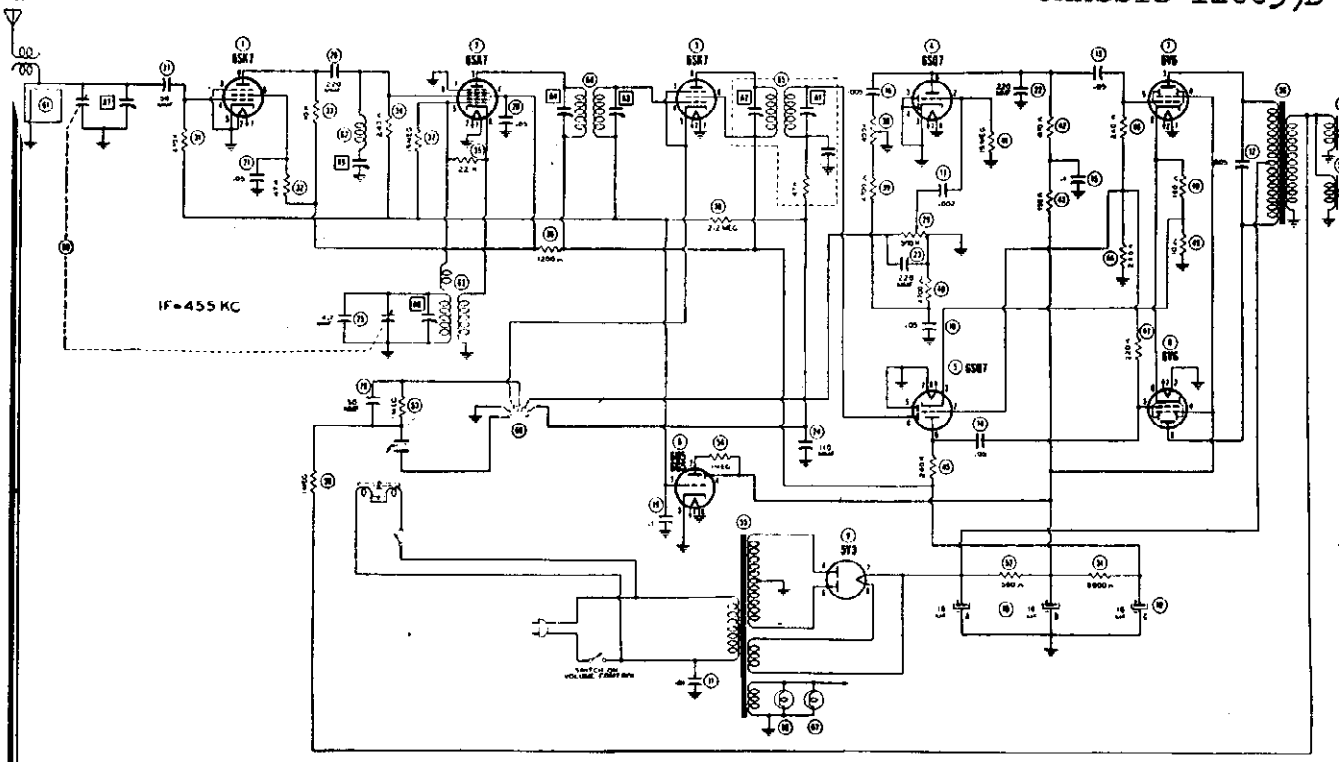

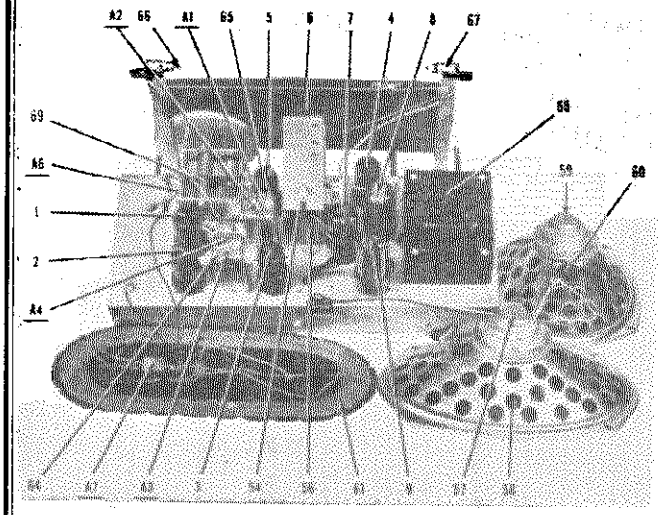

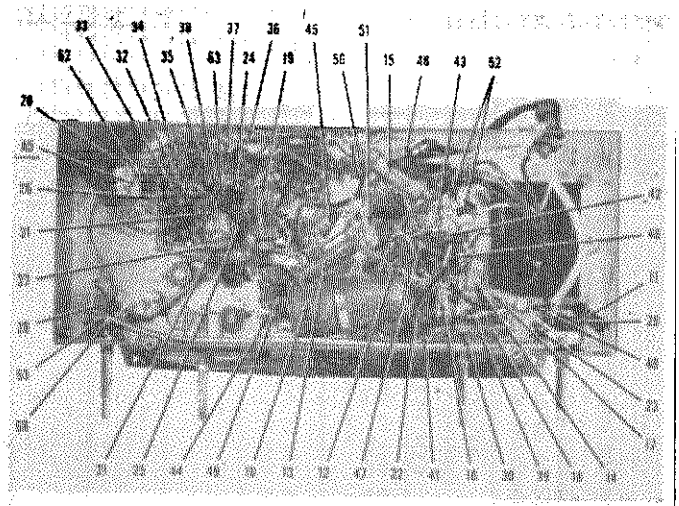

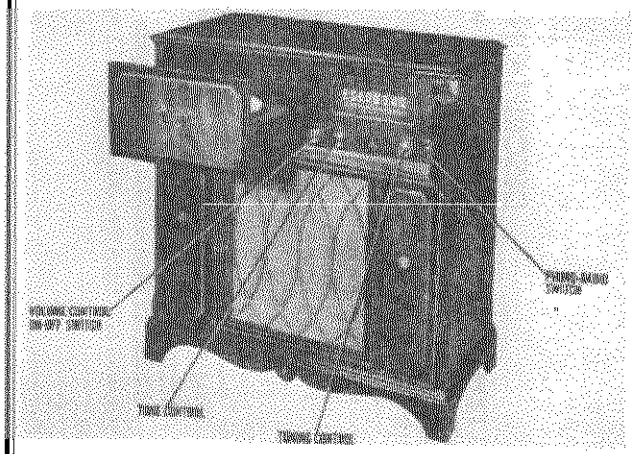

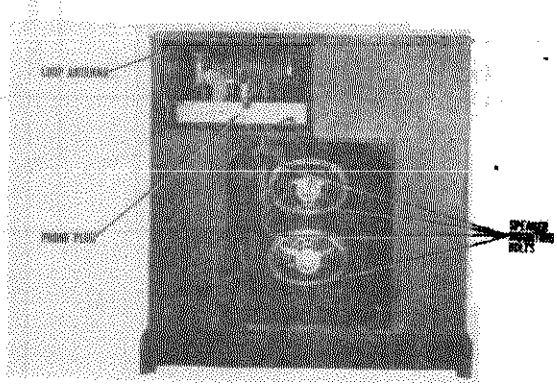

ALIGNMENT

To set pointer, turn tuning cap. fully closed and set pointer 2-3/8" from left edge of dial backplate. This is the calibration mark referred to below.

Loop should be maintained in same relative position to chassis as when receiver is in cabinet.

Volume control should be at maximum position; output signal generator should be no higher than necessary to obtain an output reading. Use an insulated alignment schewdriver for adjusting.

	DUMMY ANTENNA	SIGNAL GENERATOR COUPLING	SIGNAL GENERATOR FREQUENCY	RADIO DIAL SETTING	OUTPUT METER	ADJUST	REMARKS
1	.1 mfd.	High side to pin 8 (grid) of 6SA7. Low side to chassis.	455KC	Tuning cap. fully open.	Across voice coil.	A1, A2, A3, A4	Adjust for maximum output.
2	.1 mfd.	High side to ext. antenna lead. Low side to chassis.	"	Tuning cap. fully closed.	"	A5	Adjust for minimum output.
3	200 mmf.	"	1400KC	5" from calibration mark.	"	A6	Adjust for maximum output.
4	200 mmf.	"	"	Tune for maximum output.	"	A7	Adjust for maximum output.
5	200 mmf.	"	600KC	"	"		Use adjusting turn in rear of loop. Adjust for max. output.

DESCRIPTION

TYPE: Console A.C. superheterodyne phonoradio with automatic record changer.

FREQUENCY RANGE: 540-1620 K.C.

TYPE OF TUBES:

1—6SK7, r-f amplifier
1—6SA7 converter
1—6SK7, i-f amplifier
1—6SQ7, detector—a.v.c. phase inverter
1—6SQ7. a-f amplifier
1—6U5/6G5, tuning eye (omitted on Model 583)
2—6V6GT, power output
1—5Y3GT, rectifier

POWER SUPPLY: 60 cycle a.c.

VOLTAGE RATING: 105-125 volts

POWER CONSUMPTION: 110 watts

CURRENT DRAIN: .73 amp. at 117 volts a.c.

GENERAL NOTES

1. If replacements are made or the wiring disturbed in the r-f section of the circuit, the receiver should be carefully realigned.
2. The color coding of the i-f transformer leads is as follows:

Grid—green	Plate—blue
Grid return—black	B+—red

3. The receiver has a self-contained antenna and normally does not require additional antenna or ground connection. For permanent home installations, however, in a location far removed from broadcasting stations, an additional outside antenna may be used. The outside antenna connection should be made to the colored lead at the rear of the cabinet. Ground connection may be used. Connect ground to black lead at rear.
4. The grille-work and tuning eye are omitted on Model 583. Other change noted in parts list.

EMERSON RADIO AND PHONO CORP. MODELS 573, 583 CHASSIS 120039B

INSTRUCTIONS FOR VOLTAGE AND RESISTANCE READINGS

1—DC Voltage measurements are at 20,000 ohms per volt; AC Voltages measured at 1,000 ohms per volt.

2—Socket connections are shown as bottom views.

3—Measured values are from socket pin to common negative.

4—Line voltage maintained at 117 volts for voltage readings.

5—Nominal tolerance on component values makes possible variance of ± 10% in voltage and resistance readings.

6—Volume control at maximum, no signal applied for voltage measurements.

VOLTAGE READINGS

SYMBOL	TUBE	PIN 1	PIN 2	PIN 3	PIN 4	PIN 5	PIN 6	PIN 7	PIN 8
1	6SK7	0	0	0	-.3V DC	0	43V DC	6.6V AC	53V DC
2	6SA7	0	6.6V AC	95V DC	80V DC	-11V DC	0	0	-.2V DC
3	6SK7	0	6.6V AC	0	-.3V DC	0	95V DC	0	95V DC
4	6SQ7	0	-.5V DC	0	0	0	95V DC	6.6V AC	0
5	6SQ7	0	1.1V DC	.7V DC	-.1V DC	0	55V DC	0	6.6V AC
6	6U5/6G5	—	—	—	—	—	—	—	—
7	6V6GT	0	6.6V AC	280V DC	280V DC	0	90V DC	0	15V DC
8	6V6GT	0	0	295V DC	280V DC	0	-.1V DC	6.6V AC	15V DC
9	5Y3GT	0	300V DC	225V DC	300V AC	78V AC	300V AC	.7V DC	300V DC

† Taken with Vacuum Tube Voltmeter.

RESISTANCE READINGS

SYMBOL	TUBE	PIN 1	PIN 2	PIN 3	PIN 4	PIN 5	PIN 6	PIN 7	PIN 8
1	6SK7	0 ohm	0 ohm	0 ohm	3.1 meg.	0 ohm	200K ohm	.1 ohm	160K ohm
2	6SA7	0 ohm	.1 ohm	150K ohm	150K ohm	22K ohm	1 ohm	0 ohm	2.9 meg.
3	6SK7	0 ohm	.1 ohm	0 ohm	2.7 meg.	0 ohm	150K ohm	0 ohm	150K ohm
4	6SQ7	0 ohm	15 meg.	0 ohm	0 ohm	0 ohm	770K ohm	.1 ohm	0 ohm
5	6SQ7	0 ohm	240K ohm	10 ohm	550K ohm	0 ohm	370K ohm	0 ohm	.1 ohm
6	6U5/6G5	—	—	—	—	—	—	—	—
7	6V6GT	0 ohm	.1 ohm	150K ohm	150K ohm	460K ohm	150K ohm	0 ohm	190 ohm
8	6V6GT	0 ohm	0 ohm	150K ohm	150K ohm	460K ohm	220K ohm	.1 ohm	190 ohm
9	5Y3GT	inf.	150K ohm	300K ohm	85 ohm	inf.	88 ohm	10 ohm	150K ohm

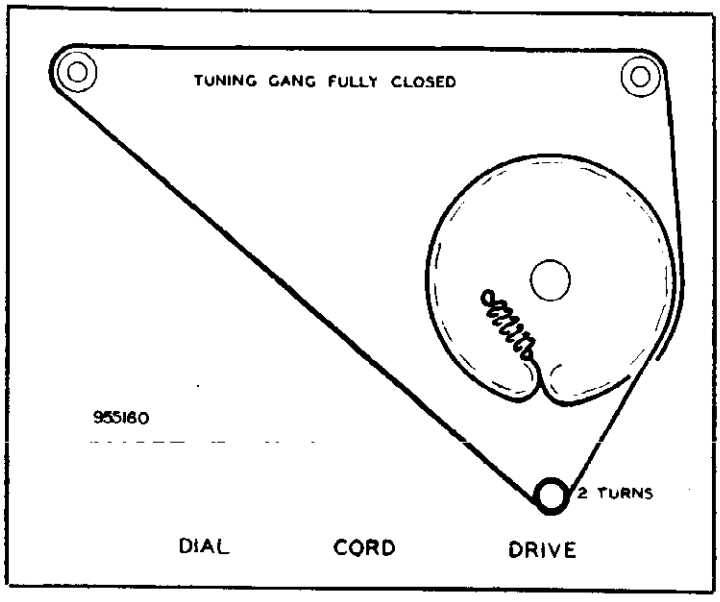

MODELS 573, 583,
CHASSIS 120039B

EMERSON RADIO AND PHONO. CORP.

REPLACEMENT PARTS LIST

Symbol	†Part No.	DESCRIPTION
1	6SK7	RF amplifier
2	6SA7	Converter
3	6SK7	IF amplifier
4	6SQ7	Det.-AVC-phase inverter
5	6SQ7	AF amplifier
6	6U5/6G5	Tuning eye (omitted on Model 583)
7	6V6GT	Power output
8	6V6GT	Power output
9	5Y3GT	Rectifier
10A	925007	Filter (elect.), 16 mfd., 450 volt condenser
B		Filter (elect.), 16 mfd., 450 volt condenser
C		Filter (elect.), 16 mfd., 450 volt condenser
11	922020	Line filter, .01 mfd., 400 volt condenser
12	920230	Output plate bypass, .005 mfd., 600 volt condenser
13	920030	Audio coupling, .05 mfd., 400 volt condenser
14	920030	Audio coupling, .05 mfd., 400 volt condenser
15	920250	AF plate decoupling, .1 mfd., 400 volt condenser on Model 573
15	920260	AF plate decoupling, .25 mfd., 400 volt condenser on Model 583
16	920230	Tone compensation, .005 mfd., 600 volt condenser
17	920010	Audio coupling, .002 mfd.. 600 volt condenser
18	920030	Tone compensation, .05 mfd., 400 volt condenser
19	920040	A V C filter, .1 mfd., 200 volt condenser
20	920030	Decoupling, .05 mfd., 400 volt condenser
21	920030	RF Screen bypass, .05 mfd., 400 volt condenser
22	910000	AF plate bypass, 220 mmf., 500 volt condenser
23	910000	Tone compensation, 220 mmf., 500 volt condenser
24	910010	Diode RF filter, 110 mmf., 500 volt condenser
25	923004	Fixed trimmer, 4.7 mmf., 300 volt condenser
26	910000	RF coupling, 220 mmf., 500 volt condenser
27	910250	RF coupling, 50 mmf., 500 volt condenser
28	910250	Phono tone compensation, 50 mmf., 500 volt condenser
29	390006	Volume control with switch, 500K ohms
30	390007	Tone control
31	351130	RF grid, 470K ohms, ½ watt resistor
32	340890	RF screen 47K ohms, ½ watt resistor
33	340730	RF plate load, 10K ohms, ½ watt resistor
34		Converter grid, 240K ohms, ½ watt resistor
35	340810	Oscillator grid, 22K ohms, ½ watt resistor
36	340510	Decoupling, 1200 ohms, ½ watt resistor
37	397000	AVC network, 15 meg., ½ watt resistor
38	351290	AVC network, 2.2 meg., ½ watt resistor
39	350650	Tone compensation, 4700 ohms, ½ watt resistor
40	350650	Tone compensation, 4700 ohms, ½ watt resistor
41	397000	AF grid, 15 meg., ¼ watt resistor
42	351130	AF plate load, 470K ohms, ½ watt resistor
43	351010	AF plate decoupling, 150K ohms, ½ watt resistor
44		Phase inverter grid, 240K ohms, ½ watt resistor
45		Phase inverter plate, 240K ohms, ½ watt resistor
46		Output grid, 240K ohms, ½ watt resistor
47	351050	Output grid, 220K ohms, ½ watt resistor
48	394140	Output cathode, 180 ohms, 2 watt resistor
49	340010	Phase inverter cathode feedback, 10 ohms, ½ watt resistor
50	351210	Phono feedback, 1 meg., ½ watt resistor
51	394002	Filter, 6800 ohms, 5 watt resistor
52	397001	Filter, 560 ohms, 2 watt resistor
53	351210	Series phono, 1 meg., ½ watt resistor
54	Part of 585001	Tuning eye plate load, 1 meg., ½ watt resistor
55	730017	Power transformer
56	734005	Output transformer
57	180037	6" x 9" oval speaker (PM)
58		Cone (part of 180037)
59	180037	6" x 9" oval speaker (PM)
60		Cone (part of 180037)
61A	700024	Loop antenna
B		Antenna coupling coil (part of 700024)
62	708060	Wave trap
63	716050	Oscillator coil
64	720532	Input i-f
65	720533	Output i-f
66	807020	Type 44 pilot lamp
67	807020	Type 44 pilot lamp
68	510002	Radio-phono switch
69	900008	2-gang variable capacitor
	520062	Dial crystal
	525027	Dial pointer
	520130	Dial backplate
	280004	Drive shaft
	587070	Drive cord spring
	460241	Knob and cover assembly
	505040	Phono pickup plug
	508010	Phono pickup socket
	585001	Tuning socket and cable
	507001	Pilot lamp socket
	583001	Line cord
	555004	Speaker terminal strip
	140141	Mahogany cabinet
	819022	Record changer, or
	819031	Record changer, or
	819039	Record changer

* Not supplied separately.

† Specify part numbers when ordering.

EMERSON RADIO AND PHONO. CORP. MODEL 576, CHASSIS 120069A

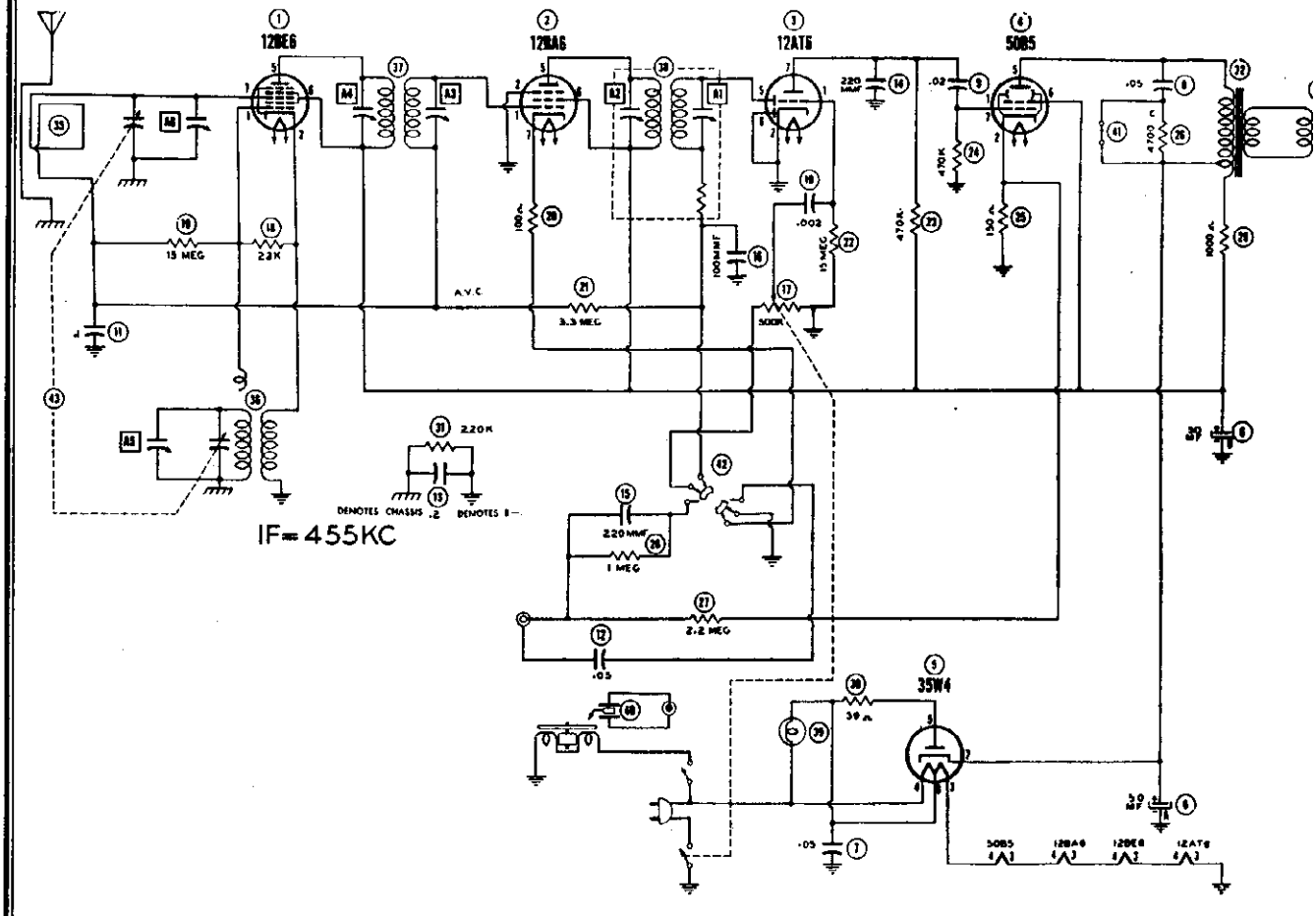



FREQUENCY RANGE: 540-1620 kc.

TYPE OF TUBES:
- 1—12BE6, converter
- 1—12BA6, i-f amplifier
- 1—12AT6, detector a.v.c.-a.f. amplifier
- 1—50B5, power output
- 1—35W4, rectifier

POWER SUPPLY: 60 cycle a.c.

VOLTAGE RATING: 105-125 volts

POWER CONSUMPTION: 50 watts

CURRENT DRAIN: .43 amp. at 117 volts a.c.

MODEL 576,
CHASSIS 120069A

EMERSON RADIO AND PHONO. CORP.

ALIGNMENT

To set pointer turn tuning cap. fully closed and set pointer 2¼" from top right edge of dial backplate. This is calibration mark referred to below.

Use isolation transformer if available. If not, connect, a .1 mfd. capacitor in series with low side of signal generator and B—.

Volume control should be at maximum position, output of signal generator should be no higher than necessary to obtain an output reading. Use an insulated alignment screwdriver for adjusting.

	DUMMY ANTENNA	SIGNAL GENERATOR COUPLING	SIGNAL GENERATOR FREQUENCY	RADIO DIAL SETTING	OUTPUT METER	ADJUST	REMARKS
1	.1 mfd.	High side to Pin 7 (grid) of 12BE6. Low side to B—.	455KC	Tuning cap. fully open.	Across voice coil.	A1, A2, A3, A4	Adjust for maximum output. If isolation transformer is not used, reduce dummy ant. to .001 mfd. to reduce hum modulation.
2	200 mmf.	High side to ext. ant. lead. Low side to ext. ground lead.	1600KC	4¼" from calibration mark.	"	A5	Adjust for maximum output.
3	200 mmf.	" "	1500KC	Tune for maximum output.	"	A6	" " " "

INSTRUCTIONS FOR VOLTAGE AND RESISTANCE READINGS

1—DC Voltage measurements are at 20,000 ohms per volt; AC Voltages measured at 1000 ohms per volt.
2—Socket connections are shown as bottom views.
3—Measured values are from socket pin to common negative.
4—Line voltage maintained at 117 volts for voltage readings.
5—Nominal tolerance on component values makes possible a variation of ± 15% in voltage and resistance readings.
6—Volume control at maximum, no signal applied for voltage measurements.

VOLTAGE READINGS

SYMBOL	TUBE	PIN 1	PIN 2	PIN 3	PIN 4	PIN 5	PIN 6	PIN 7	PIN 8
1	12BE6	-14V DC†	0	27V AC	13V AC	95V DC	95V DC	1.1V DC	
2	12BA6	-1V DC	0	27V AC	40V AC	95V DC	95V DC	.7V DC	
3	12AT6	-.7V DC	0	0	13V AC	-.6V DC	0	46V DC	
4	50B5	0	5.8V DC	85V AC	40V AC	108V DC	95V DC	0	
5	35W4	0	115V DC	85V AC	117V AC	111V AC	113V AC	115V DC	

† Taken with vacuum tube voltmeter, Radio-Phono switch in radio position.

RESISTANCE READINGS

SYMBOL	TUBE	PIN 1	PIN 2	PIN 3	PIN 4	PIN 5	PIN 6	- PIN 7	PIN 8
1	12BE6	22K ohm	.5 ohm	24 ohm	12 ohm	200K ohm	200K ohm	3.8 meg.	
2	12BA6	3.8 meg.	0 ohm	24 ohm	37 ohm	200K ohm	200K ohm	100 ohm	
3	12AT6	15 meg.	0 ohm	0 ohm	12 ohm	540K ohm	0 ohm	670K ohm	
4	50B5	470K ohm	150 ohm	85 ohm	37 ohm	200K ohm	200K ohm	470K ohm	
5	35W4	inf.	200K ohm	85 ohm	115 ohm	150 ohm	110 ohm	200K ohm	

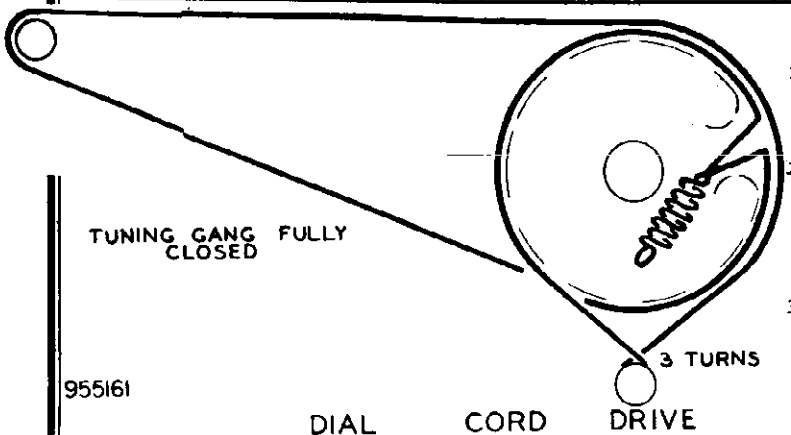

GENERAL NOTES

1. If replacements are made or the wiring disturbed in the i-f section of the circuit, the receiver should be carefully realigned.
2. The color coding of the i-f transformer leads is as follows:

Grid—green	Plate—blue
Grid return—black	B+—red

3. The receiver has a self-contained antenna and does not require additional antenna connections. For permanent home installations, however, if it is desired to improve reception of weak stations, an additional outdoor antenna should be used. For this purpose a lead has been brought out of the rear near the line cord.

EMERSON RADIO AND PHONO. CORP. MODEL 576
CHASSIS 120069A

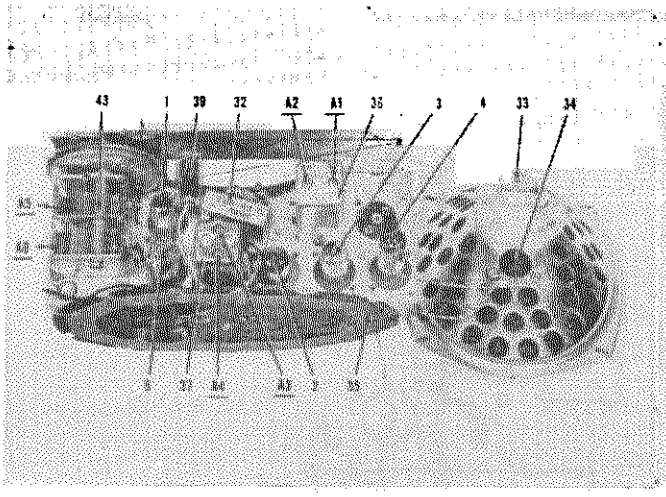

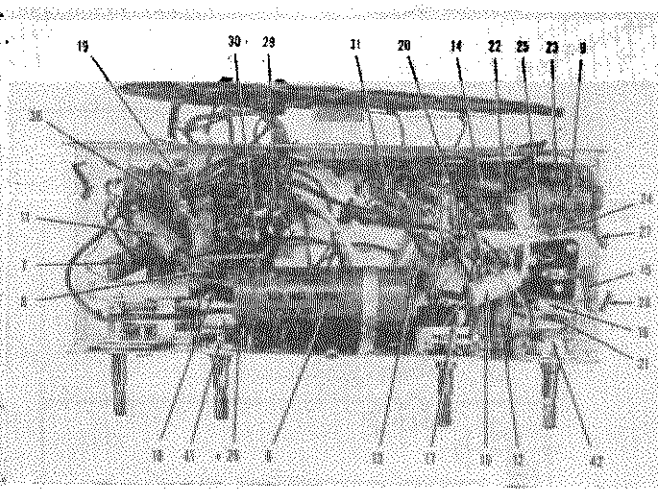

Symbol	†Part No.	DESCRIPTION
1	12BE6	Converter
2	12BA6	IF amplifier
3	12AT6	Detector - AVC - audio amplifier
4	50B5	Power output
5	35W4	Rectifier
6	925012	Filter (elect.), 50-50 mfd., 150 volt condenser
7	920030	Line filter, .05 mfd., 400 volt condenser
8	920030	Tone compensation, .05 mfd., 400 volt condenser
9	920020	Audio coupling, .02 mfd., 400 volt condenser
10	920010	Audio Coupling, .002 mfd., 600 volt condenser
11	920040	AVC filter, .1 mfd., 200 volt condenser
12	920030	Phono isolation, .05 mfd., 400 volt condenser
13	920050	Line isolation, .2 mfd., 200 volt condenser
14	910000	Audio plate bypass, 220 mmf., 300 volt condenser
15	910000	Phono tone compensation, 220 mmf., 300 volt condenser
16	910010	Diode r-f filter, 100 mmf., 300 volt condenser
17	390042	Volume control with switch, 500K ohm, resistor
18	340810	Oscillator grid, 22K ohms, ½ watt resistor
19	397000	AVC network, 15 megohms, ½ watt resistor
20	340250	IF cathode, 100 ohms, ½ watt resistor
21	351330	AVC network, 3.3 megohms, ½ watt resistor
22	397000	Audio grid, 15 megohms, ½ watt resistor
23	351130	Audio plate load, 470K ohms, ½ watt resistor
24	351130	Output grid, 470K ohms, ½ watt resistor
25	340290	Output cathode, 150 ohms, ½ wa resistor
26	340650	Tone compensation, 4700 ohms, watt resistor
27	351290	Feedback, 2.2 megohms, ½ watt resistor
28	351210	Phono tone compensation, 1.0 megohms, ½ watt resistor
29	370490	Filter, 1000 ohms, ½ watt resisto
30	370150	Rectifier ballast, 39 ohms, ½ watt resistor
31	35150	Line isolation, 220K ohms, ½ wa resistor
32	734080	Output transformer
33	180037	6" x 9" oval speaker
*34		Cone (part of 180037)
35	700025	Loop antenna
36	716010	Oscillator coil
37	720220	Input i-f coil
38	720039	Output i-f coil
39	807000	Type 47 pilot lamp
40	L-70	Phono cartridge
41	510120	Tone switch
42	510391	Phono-radio switch
43	900070	2-gang variable capacitor
	520062	Dial glass
	525028	Dial pointer
	520061	Dial backplate
	280313	Dial drive shaft
	587070	Drive cord spring
	520064	Escutcheon
	460470	Plastic knob
	140149	Cabinet, mahogany
	140159	Cabinet, toasted mahogany
	507060	Pilot lamp socket
	508010	Pickup socket
	505040	Pickup plug
	583016	Line cord
	819031	Record changer
	819032	Record changer

* Not supplied separately.

† Specify part numbers when ordering.

© John F. Rider

MODELS 579, 596,
CHASSIS 120034A

EMERSON RADIO AND PHONO. CORP.

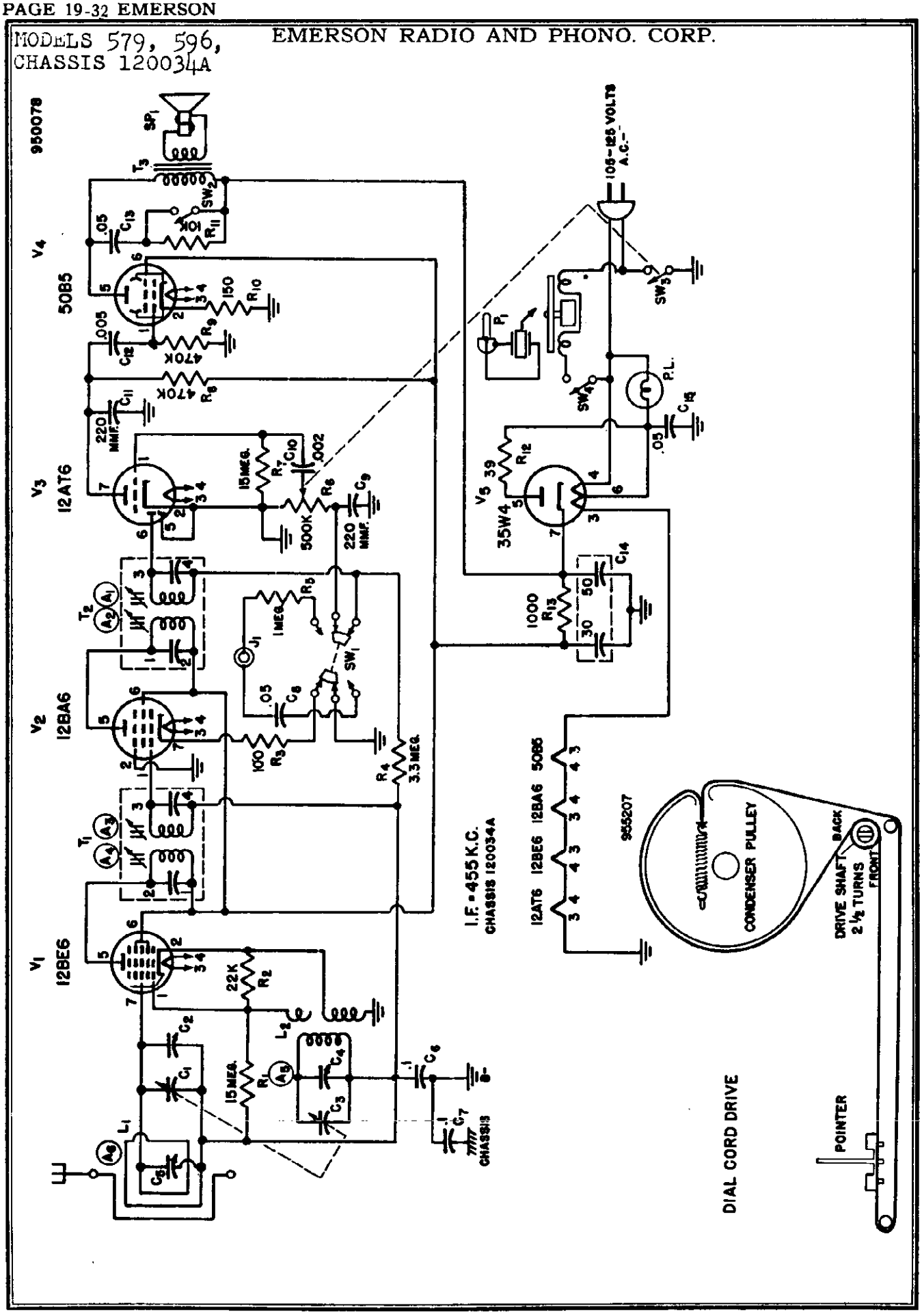

©John F. Rider

© John F. Rider

INSTRUCTIONS FOR VOLTAGE AND RESISTANCE READINGS

1. Voltages are d.c. volts; resistances in ohms unless otherwise indicated.
2. D.c. voltage measurements are at 20,000 ohms-per-volt; a.c. voltages are measured at 1000 ohms-per-volt.
3. Socket connections are shown as bottom viels. Values are measured from socket pin to common negative.
4. Line voltage maintained at 117 volts for voltage readings.
5. Volume control at maximum; radio-phono switch in radio position; no signal applied for voltage measurements.
6. Nominal tolerance on component valves makes possible a variation of ± 15% in voltage and resistance readings.

VOLTAGE READINGS

SYMBOL	TUBE	PIN 1	PIN 2	PIN 3	PIN 4	PIN 5	PIN 6	PIN 7
V1	12BE6	—4.5	0	25 A.C.	13 A.C.	95	96	—.1
V2	12BA6	—.1	0	25 A.C.	38 A.C.	95	96	.4
V3	12AT6	—.5	0	0	13 A.C.	0	—.3	42
V4	50B5	0	6.5	82 A.C.	38 A.C.	107	96	NC
V5	35W4	0	NC	82 A.C.	117 A.C.	110 A.C.	112 A.C.	115

RESISTANCE READINGS

SYMBOL	TUBE	PIN 1	PIN 2	PIN 3	PIN 4	PIN 5	PIN 6	PIN 7
V1	12BE6	24 K	.5	25	13	80 K	80 K	3 meg.
V2	12BA6	3 meg.	0	25	37	80 K	80 K	100
V3	12AT6	15 meg.	0	0	13	0	600 K	700 K
V4	50B5	550 K	150	82	37	80 K	80 K	Inf.
V5	35W4	0	Inf.	82	110	145	105	80 K

NC—no connection; K—kilohm; meg.—Megohm; Inf.—infinity.

ALIGNMENT INSTRUCTIONS

1. To position pointer, turn variable condenser fully closed and set pointer to reference mark at low-frequency end of dia backplate.
2. Use isolation transformer if available. If not, connect a .1 mfd. condenser in series with low side of signal generato and B—.
3. Volume control should be at maximum position; radio-phono switch in radio position. Output of signal generator shoul be no higher than necessary to obtain an output reading. Use an insulated screw driver for adjusting.

	DUMMY ANTENNA	SIGNAL GENERATOR COUPLING	SIGNAL GENERATOR FREQUENCY	RADIO DIAL SETTING	OUTPUT METER	ADJUST	REMARKS
1	.1 mfd.	High side to Pin 7 (grid) of 12BE6. Low side to B—.	455KC	Tuning cond. fully open.	Across voice coil.	A1, A2, A3, A4 (I-f trans. T2 and T1)	Adjust for maximum output. If isolation transformer is not used, reduce dummy ant. to .001 mfd. to reduce hum modulaltion.
2	200 mmf.	High side to ext. ant. lead. Low side to ext. ground	1600KC	Tuning cond. fully open.	Across voice coil.	A5 (Var. cond. trimmer C4).	Adjust for maximum output.
3		High side to ext. ant. lead. Low side to ext. ground	1400KC	Tune for maximum output.	Across voice coil.	A6 (Loop ant. trimmer C5).	Adjust for maximum output.

DESCRIPTION

TYPE: Single band superheterodyne and automatic record changer.

FREQUENCY RANGE: 540-1620 kc.

TYPE OF TUBES:
1—12BE6, pentagrid converter
1—12BA6, i-f amplifier
1—12AT6, detector, a.v.c., a-f amplifier
1—50B5, power output
1—35W4, rectifier

POWER SUPPLY: A.C. only, 60 cycles

VOTAGE RATING: 105-125 volts

POWER CONSUMPTION:
Receiver—30 watts
Phono motor—20 watts

CURRENT DRAIN: 0.24 amp. (for receiver), at 117 volts a.c.

GENERAL NOTES

1. If replacements are made or the wiring disturbed in the r-f section of the circuit, the receiver should be carefully realigned.
2. The receiver has a self-contained antenna and does not require an additional antenna. For permanent installations, however, if it is desired to improve reception of weak stations, an additional outdoor antenna may be connected to the white lead (with colored tracer) at the rear of the cabinet. Connect a ground to the black lead, if desired.
3. The self-contained loop antenna has directional properties. It is important, therefore, once a station is tuned in, that the cabinet be rotated back and forth through a quarter-turn and left at that position where maximum volum is obtained.

DISASSEMBLY INSTRUCTIONS

1. Remove four push-on type control knobs
2. Remove four corner cabinet supports
3. Disconnect phono-motor leads by unscrewing wirenut insulators. Remove phono pickup plug from chassis.
4. Remove remaining two screws holding chassis mounting plate to bottom of cabinet. Remove chassis from cabinet.
5. Remove two center screws holding chassis to mounting board.

MODELS 579, 596,
CHASSIS 120034A

EMERSON RADIO AND PHONO. CORP.

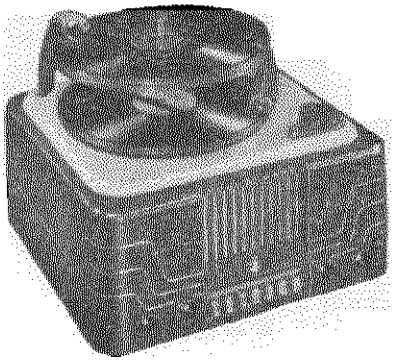

MODEL 579

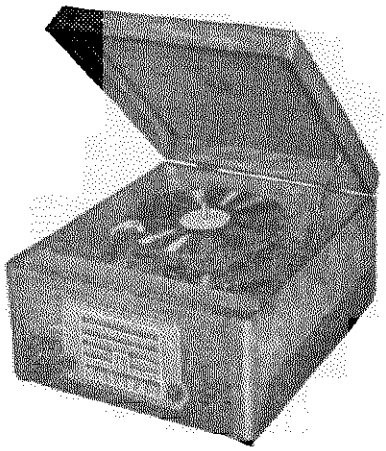

MODEL 596

REPLACEMENT PARTS LIST

Symbol	†Part No.	DESCRIPTION
V1	12BE6	Pentagrid converter
V2	12BA6	I-f amplifier
V3	12AT6	Detector, a.v.c., a-f amplifier
V4	50B5	Power output
V5	35W4	Rectifier
C1, C3	900023	Two-gang variable condenser
C2, C4	*	Trimmer, part of var. condenser
C5	*	Trimmer, part of loop antenna
C6, C7	920040	.1 mfd., 200 volt paper condenser
C8, C13, C15	920030	.05 mfd., 400 volt paper condenser
C9, C11	910000	220 mmf., mica condenser (alternate part 928104) #
C10	920515	.002 mfd., 400 volt paper condenser
C12	920180	.005 mfd., 400 volt paper condenser
C14	925061	30-50 mfd., 150 volt elect. condenser
R1, R7	351490	15 megohms, ½ watt resistor
R2	340810	22 kilohms, ½ watt resistor
R3	340250	100 ohms, ½ watt resistor
R4	351330	3.3 megohms, ½ watt resistor
R5	351210	1 megohm, ½ watt resistor
R6	390024	500 kilohms, volume control
R8, R9	351130	470 kilohms, ½ watt resistor
R10	340290	150 ohms, ½ watt resistor
R11	340730	10 kilohms, ½ watt resistor
R12	370150	39 ohms, 1 watt resistor
R13	370490	1000 ohms, 1 watt resistor
L1	700035	Loop antenna
L2	716026	Oscillator coil
T1, T2	720055	First and second i-f transformers
T3	734023	Output transformer
SP1	180032H	P.M. speaker
SW1	510027	Radio-phono switch, d.p.d.t.
SW2	510034	Tone control switch, s.p.s.t.
SW3	*	Line switch, part of volume control
SW4	*	Phono-motor switch, part of record changer
P1	505040	Phono pickup plug
J2	508010	Phono pickup socket
	583021	Line cord
	819032	Record changer (alternate part 819031) #
	807000	Dial light
	507003	Dial light socket

CABINET AND DIAL PARTS

520048	Dial backplate	
525023	Dial pointer	
280035	Drive shaft	
530002	Drive cord (26")	
587040	Drive cord spring	
140108	Cabinet, walnut plastic	
140196	Cabinet, walnut wood	
450115	Knob, black	
460076B	Speaker grille (Model 596 only)	

† Specify part numbers when ordering.
# Replace with part having same number as that removed.
* Not supplied separately.
Note: C9, C10, C11, C12 may be combined in one unit, part No. 470310, on some chassis.

© John F. Rider

EMERSON RADIO AND PHONO. CORP. MODEL 586, CHASSIS 120023B, 120083B

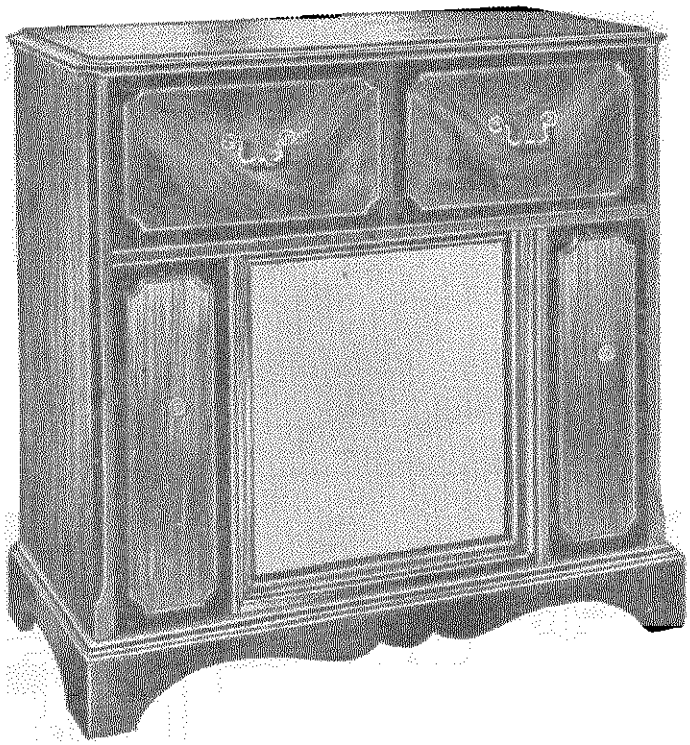

MODEL: 586

DESCRIPTION

TYPE: Console AM-FM superheterodyne, with automatic record changer.

FREQUENCY RANGE:
Broadcast band (AM)—540-1620 kilocycles.
Frequency modulation band (FM)—88-108 megacycles.

TYPE OF TUBES:
1—6BA6 FM r-f amplifier (chassis 120083B only)
1—6SB7Y FM and AM converter
1—6SG7 FM and AM first i-f amplifier
1—6SG7 FM second i-f amplifier
1—6SH7 FM limiter
1—6S8GT FM discriminator, AM detector, a.v.c., audio amplifier
1—6AT6 Phase inverter
2—25L6GT Push-pull power output
1—25Z6GT Rectifier

POWER SUPPLY: 60 cycle a.c.
VOLTAGE RATING: 105-125 volts
POWER CONSUMPTION: 90 watts
CURRENT DRAIN: 0.77 amp. at 117 volts a.c.

GENERAL NOTES

1. If replacements are made or the wiring disturbed in the r-f section of the circuit, the receiver should be carefully realigned.
2. A self-contained loop antenna is provided for broadcast band reception. For permanent home installation, however, if it is desired to improve reception of weak stations, an additional outdoor antenna may be used. Connect the outdoor antenna to the screw on the terminal strip marked "AM".
3. An internal power line antenna is provided for FM operation in relatively strong signal areas. The line cord should be completely uncoiled for effective operation of this antenna. An external dipole antenna is recommended for maximum FM operation. To connect the dipole, first remove the chassis cover at the rear of the cabinet. Then remove the wire from the screw on the terminal strip marked "FM" and connect the dipole leads to the "FM" terminal and "G".
4. A ground connection is not required for AM or FM operation.

DISASSEMBLY INSTRUCTIONS

1. Remove four push-on type knobs at front of cabinet.
2. Remove five screws holding chassis cover in place.
3. Remove phono plug at left side of chassis. Unscrew wire nuts from phono motor leads. Disconnect speaker leads.
4. Unfasten interlock socket by removing two screws from mounting bracket.
5. Remove four chassis mounting bolts and carefully withdraw chassis.

MODEL 586, CHASSIS 120023B, 120083B

EMERSON RADIO AND PHONO. CORP.

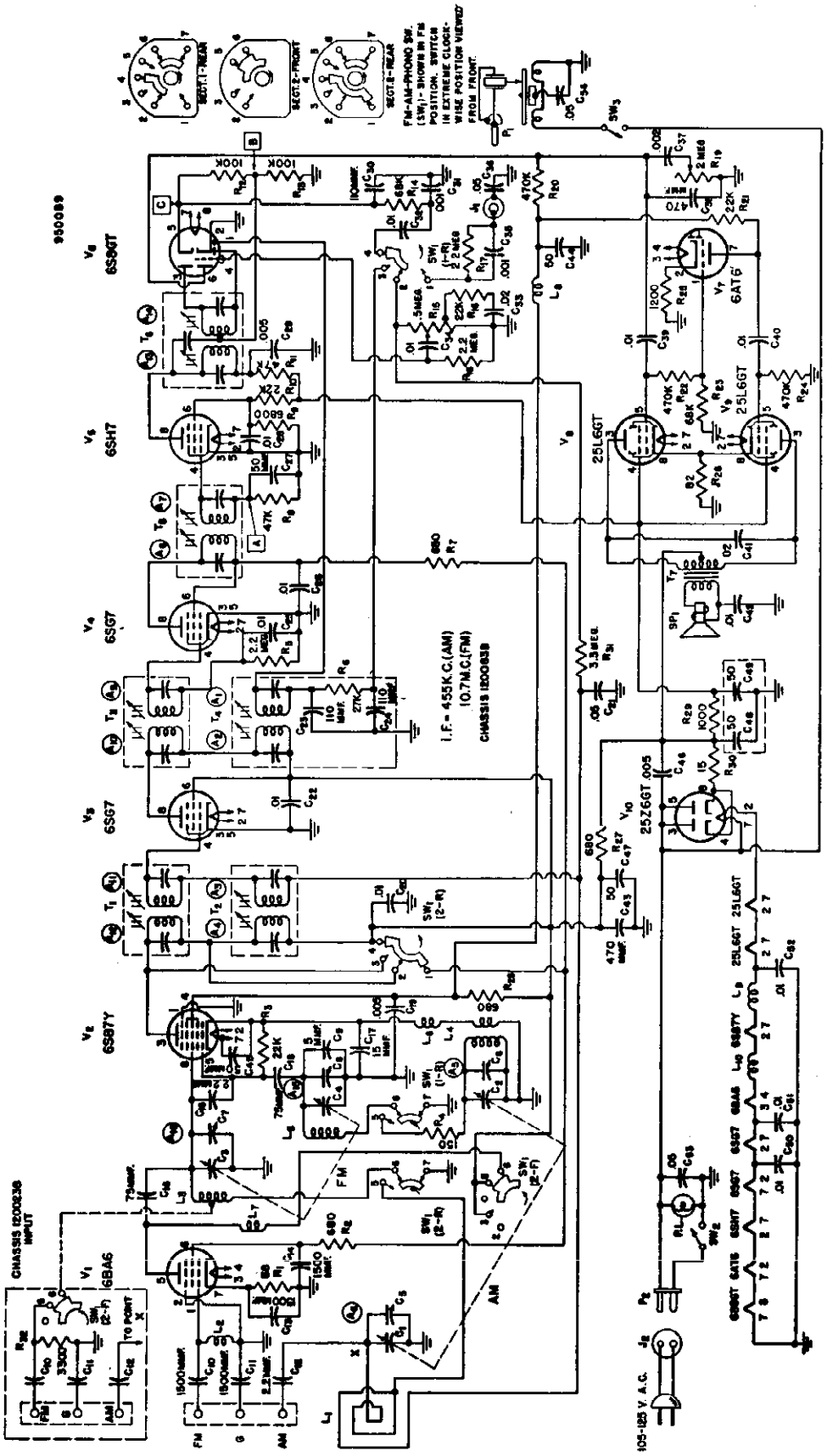

EMERSON RADIO AND PHONO. CORP. MODEL 586, CHASSIS 120023B, 120083B

ALIGNMENT INSTRUCTIONS

1. To position pointer, turn variable condenser fully closed and set pointer to reference mark on dial backplate at the low frequency end of the dial.
2. Volume control should be set at maximum position. The output of the signal generator should be no higher than necessary to obtain an output reading. Attenuate the signal input as alignment proceeds. Use an insulated alignment tool for all adjustments.
3. Use isolation transformer if available; otherwise connect a .1 mfd. condenser in series with low side of signal generator to chassis.

AM Alignment

	DUMMY ANTENNA	SIGNAL GENERATOR COUPLING	SIGNAL GENERATOR FREQUENCY	BAND SWITCH POSITION	RADIO DIAL SETTING	OUTPUT METER	ADJUST	REMARKS
1	.1 mfd.	High side to Pin 8 (grid) of 6SB7Y. Low side to chassis.	455 KC.	Broadcast	Tuning condenser fully open.	Across voice coil.	A1, A2, (Trans. T4). A3, A4, (Trans. T2).	Adjust for maximum output. Reduce dummy antenna to .001 mfd. if isolation trans. is not used.
2		Loop	1600 KC.	Broadcast	Tuning condenser fully open.	Across voice coil.	A5, (Trimmer cond. C6).	Form loop of several turns of wire. Radiate signal into receiver loop. Adjust for maximum output.
3		Loop	1400 KC.	Broadcast	Tune for max. output.	Across voice coil.	A6, (Trimmer cond. C8).	Adjust for maximum output.

FM I-F and Disc. Alignment Using AM Signal Generator and VTVM

	DUMMY ANTENNA	SIGNAL GENERATOR COUPLING	SIGNAL GENERATOR FREQUENCY	BAND SWITCH POSITION	RADIO DIAL SETTING	CONNECT VTVM	ADJUST	REMARKS
1	.01 mfd.	High side to Pin 4 (grid) of 6SG7 2nd i-f (V4). Low side to chassis.	10.7 mc. (Unmodulated)	Frequency modulation	Tuning condenser fully open.	Connect d.c. probe to point "A". Common to chassis.	A7, A8, (Trans. T5).	Adjust for maximum output.
2	.01 mfd.	High side to Pin 4 (grid) of 6SG7 1st i-f (V3). Low side to chassis.	10.7 mc. (Unmodulated)	Frequency modulation	Tuning condenser fully open.	Connect d.c. probe to point "A". Common to chassis.	A9, A10, (Trans. T3).	Adjust for maximum output.
3	.01 mfd.	High side to Pin 5 (osc. grid) of 6SB7Y conv. (V2). Low side to chassis.	10.7 mc. (Unmodulated)	Frequency modulation	Tuning condenser fully open.	Connect d.c. probe to point "A". Common to chassis.	A11, A12, (Trans. T1).	Adjust for maximum output.
4	.01 mfd.	High side to Pin 4 (grid) of 6SG7 2nd i-f (V4). Low side to chassis.	10.7 mc. (Unmodulated)	Frequency modulation	Tuning condenser fully open.	Connect d.c. probe to point "B". Common to chassis.	A13, (Trans. T6).	Adjust for maximum output.
5	.01 mfd.	"	10.7 mc. (Unmodulated)	Frequency modulation	Tuning condenser fully open.	Connect d.c. probe to point "C". Common to chassis.	A14, (Trans. T6).	Adjust for zero output. Continue with FM r-f alignment.

FM I-F and Disc. Alignment Using Sweep Signal Generator and Oscilloscope.

Use frequency modulated signal, with 60 cycle modulation and 450 kc. sweep. Use 120 cycle sawtooth sweep voltage in oscilloscope for horizontal deflection.

	DUMMY ANTENNA	SIGNAL GENERATOR COUPLING	SIGNAL GENERATOR FREQUENCY	BAND SWITCH POSITION	RADIO DIAL SETTING	CONNECT OSCILLOSCOPE	ADJUST	REMARKS
1	.01 mfd.	High side to Pin 4 (grid) of 6SG7 1st i-f (V3). Low side to chassis.	10.7 mc. (Unmodulated).	Frequency modulation	Tuning condenser fully open.	Vertical input to Point "A". Ground to chassis.	A7, A8, (Trans. T5). A9, A10, (Trans. T3).	Adjust for maximum output (height) and symmetry as per i-f alignment curve shown (page 5).
2	.01 mfd.	High side to Pin 5 (osc. grid) of 6SB7Y conv. (V2). Low side to chassis.	10.7 mc. (Unmodulated).	Frequency modulation	Tuning condenser fully open.	Vertical input to Point "A". Ground to chassis.	A11, A12, (Trans. T1).	Adjust for maximum output (height) and symmetry as per i-f alignment curve shown (page 5).
3	.01 mfd.	High side to Pin 4 (grid) of 6SG7 2nd i-f (V4). Low side to chassis.	10.7 mc. (Unmodulated).	Frequency modulation	Tuning condenser fully open.	Vertical input to Point "C". Ground to chassis.	A13, A14, (Trans. T6).	Alternately adjust A13 for maximum amplitude and A14 for maximum straightness of cross-over lines, with cross-over occurring at center of pattern as per discriminator alignment curve (page 5). Continue with FM r-f alignment.

FM R-F Alignment

	DUMMY ANTENNA	SIGNAL GENERATOR COUPLING	SIGNAL GENERATOR FREQUENCY	BAND SWITCH POSITION	RADIO DIAL SETTING	CONNECT VTVM	ADJUST	REMARKS
1	150 ohm resistor in series with each gen. lead.	High side to FM ant. term. Low side to chassis.	108.0 mc. (Unmodulated).	Frequency modulation	Tuning condenser fully open (108.0 mc.)	Connect d.c. probe to point "A". Common to chassis.	A15, (Trimmer cond. C8).	Adjust for maximum output.
2	"	"	106.0 mc.	Frequency modulation	Tune for maximum output.	"	A16, (Trimmer cond. C7).	Adjust for maximum output.

MODEL 586, CHASSIS 120023B, 120083B

EMERSON RADIO AND PHONO. CORP.

INSTRUCTIONS FOR VOLTAGE AND RESISTANCE READINGS

1. Voltage readings are in d.c. volts and resistance readings in ohms, unless otherwise specified.
2. D.c. voltage measurements are made at 20,000 ohms-per-volt and a.c. voltages are measured at 1000 ohms-per-volt.
3. Socket connections are shown as bottom views. Values are measured from socket pin to common negative.
4. Line voltage maitained at 117 volts a.c. for voltage readings.
5. Nominal tolerance on component values makes possible a variation of ± 15% in readings.
6. Volume control at maximum, with no signal applied and bandswitch in broadcast position (unless otherwise noted), for voltage measurements.

VOLTAGE READINGS

SYMBOL	TUBE	PIN 1	PIN 2	PIN 3	PIN 4	PIN 5	PIN 6	PIN 7	PIN 8	CAP
V1	6BA6	0	0	37AC	31AC	82*	80*	.7*	—	—
V2	6SB7Y	0	37AC	100	92	-.5	0	44AC	-.5	—
V3	6SG7	0	95	0	0	0	95	31AC	95	—
V4	6SG7	0	25AC	0	-.4	0	78*	19AC	78*	—
V5	6SH7	0	12AC	0	0	0	22	19AC	45	—
V6	6S8GT	-.5	0	0	0	5.5*	42	0	6AC	-.7
V7	6AT6	0	.8	6AC	12AC	0	0	74	—	—
V8	25L6GT	89	44AC	107	100	0	110	70AC	7.6	—
V9	25L6GT	0	70AC	107	100	0	74	95AC	7.6	—
V10	25Z6GT	107	95AC	117AC	107	117AC	83	117AC	107	—

RESISTANCE READINGS

SYMBOL	TUBE	PIN 1	PIN 2	PIN 3	PIN 4	PIN 5	PIN 6	PIN 7	PIN 8	CAP
V1	6BA6	0	0	26	20	30K*	30K*	68	—	—
V2	6SB7Y	0	29	30K	33K	25K	1	30	0	—
V3	6SG7	0	22	0	4 meg.	0	30K	26	30K	—
V4	6SG7	0	22	0	2 meg.	0	30K*	15	30K*	2.2 meg.
V5	6SH7	0	10	0	46K	0	8K	15	80K	—
V6	6S8GT	450K	0	100K	100K	200K	550K	0	5	—
V7	6AT6	68K	1200	5	10	Inf.	Inf.	50K	—	—
V8	25L6GT	30K	35	30K	30K	500K	30K	51	90	—
V9	25L6GT	Inf.	51	30K	30K	500K	65K	68	90	—
V10	25Z6GT	30K	68	86	30K	86	30K	86	40K	—

NC—No connection; * for bandswitch in FM position only

K—kilohms; meg.—megohms; Inf.—infinity

NOTE: Chassis 120023B does not contain the r-f amp. V1, (6BA6). Voltage and resistance measurements are substantially the same as chassis 120083B.

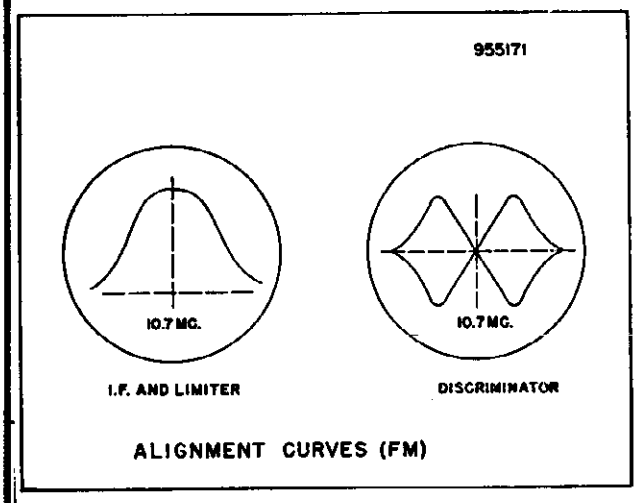

ALIGNMENT CURVES (FM)

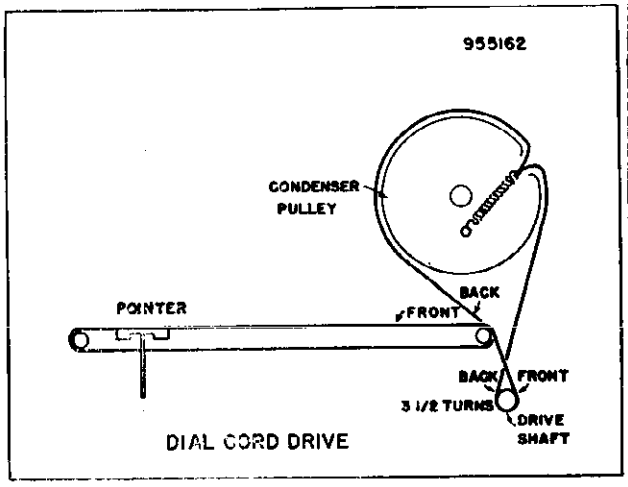

DIAL CORD DRIVE

EMERSON RADIO AND PHONO. CORP. MODEL 586, CHASSIS 120023B, 120083B

REPLACEMENT PARTS LIST

Symbol	†Part No.	DESCRIPTION
V1	6BA6	FM r-f amplifier (Chassis 120083B only)
V2	6SB7Y	FM and AM converter
V3	6SG7	FM and AM 1st i-f amplifier
V4	6SG7	FM 2nd i-f amplifier
V5	6SH7	FM limiter
V6	6S8GT	FM disc., AM detector, a.v.c., audio amplifier
V7	6AT6	Phase inverter
V8	25L6GT	Power output
V9	25L6GT	Power output
V10	25Z6GT	Rectifier
C1, C2	900046	Two gang, four section variable condenser
C3, C4		
C5, C6, C7, C8	*	Trimmers, part of C1, C2, C3, C4
C9	928023	5 mmf., ceramic condenser
C10, C11, C13, C14	928006	1500 mmf., ceramic condenser
C15, C18	928015	75 mmf., ceramic condenser
C16	915005	2.2 mmf., molded condenser
C17	928016	15 mmf., ceramic condenser
C19, C29	928109	.005 mfd., ceramic condenser
C20, C22, C25, C26, C28, C32	920092	.01 mfd., 200 volt paper cond.
C21	920060	.05 mfd., 200 volt paper condenser
C23, C24	*	110 mmf., part of i-f trans. T4
C27	928102	50 mmf., ± 10%, ceramic condenser
C30	910010	110 mmf., mica condenser
C31, C35	920514	.001 mfd., 400 volt paper condenser
C33	920100	.02 mfd., 200 volt paper condenser
C34, C39 C40, C42, C50, C51 C52	920090	.01 mfd., 400 volt paper condenser
C36, C53	920030	.05 mfd., 400 volt paper condenser
C37	920515	.002 mfd., 400 volt paper condenser
C38, C43	910014	470 mmf., mica condenser
C41	920020	.02 mfd., 400 volt paper condenser
C44, C47	925067	50-50 mfd., 150 volt elect. condenser
C45	928014	50 mmf., ceramic condenser
C46	920180	.005 mfd., 400 volt paper condenser
C48, C49	925101	50-50 mfd., 150 elect. condenser
C54	922101	.05 mfd., 400 volt molded condenser
R1	340210	68 ohms, ± 10%, ½ watt resistor
R2, R28	340450	680 ohms, ± 10%, ½ watt resistor
R3, R10	340810	22 kilohms, ± 10%, ½ watt resistor
R4	350290	150 ohms, ½ watt resistor
R5, R17, R18	351290	2.2 megohms, ½ watt resistor
R6	340830	27 kilohms, ± 10%, ½ watt resistor (may be part of i-f trans. T4)
R7	350450	680 ohms, ½ watt resistor
R8	340890	47 kilohms, ± 10%, ½ watt resistor
R9	340690	6800 ohms, ± 10%, ½ watt resistor
R11	350890	47 kilohms, ½ watt resistor
R12, R13	340970	100 kilohms, ± 10%, ½ watt resistor
R14, R23	350930	68 kilohms, ½ watt resistor
R15	390057	.5 megohms, tapped volume control
R16, R21	350810	22 kilohms, ½ watt resistor
R19	390046	2 megohms, tone control
R20, R22, R24	351130	470 kilohms, ½ watt resistor
R25	340510	1200 ohms, ± 10%, ½ watt resistor
R26	370230	82 ohms, ± 10%, ½ watt resistor
R27	370450	680 ohms, ± 10%, 1 watt resistor
R29	340490	1000 ohms, ± 10%, ½ watt resistor
R30	380050	15 ohms, ± 10%, ½ watt resistor
R31	351330	3.3 megohms, ½ watt resistor
R32	350610	3300 ohms, ½ watt resistor
L1	700011	AM loop antenna
L2	710019	FM antenna coil
L3	713008	FM r-f coil
L4	716015	AM oscillator coil
L5	716013	FM oscillator coil
L6, L7	705002	FM oscillator choke
L8	—	R.f. choke, plate supply
L9, L10	705011	R.f. choke, filament
T1	720024	First i-f trans. (FM) (Alt. part 720067) #
T2	720031	First i-f trans. (AM) (Alt. part 720075) #
T3	720025	Second i-f trans. (FM) (Alt. part 720067) #
T4	720032	Second i-f trans. (AM) (Alt. part 720076) #
T5	720026	Third i-f trans. (FM) (Alt. part 720067) #
T6	708005	Discriminator trans. (FM) (Alt. parts 708012, 708013) #
T7	734028	Output transformer
SW1	510038	Three position, band-phono switch
SW2	*	Line switch, part of vol. control
SW3	*	Phono switch, part of changer
SP1	180042	P.m. speaker, 12"
P1	505040	Phono pickup plug
J1	508100	Phono pickup socket
P2	508008	Line cord interlock socket
J2	500005	Line cord connector plug
	583202	Line cord and internal antenna
	807003	Dial light, 115 volts, 10 watts
	507008	Dial light socket

CABINET AND DIAL PARTS

Symbol	†Part No.	DESCRIPTION
	140181	Cabinet (for 819039 changer). (Alt. part 140233 for 819044 changer)
	560054	Cabinet back
	819039	Record changer (GI type 700 FS) (Alt. part 819044, Webster type 146)
	460470	Knob, black push-on
	460041	Knob, black, push-on, indicator type
	520071	Dial crystal
	410177	Dial backplate
	280039	Dial drive shaft
	530002	Dial drive cord (44")
	587070	Dial cord spring
	525017	Pointer

† Specify part numbers when ordering.
* Not supplied separately.
# Replace with part having same number as that removed.

© John F. Rider

950071

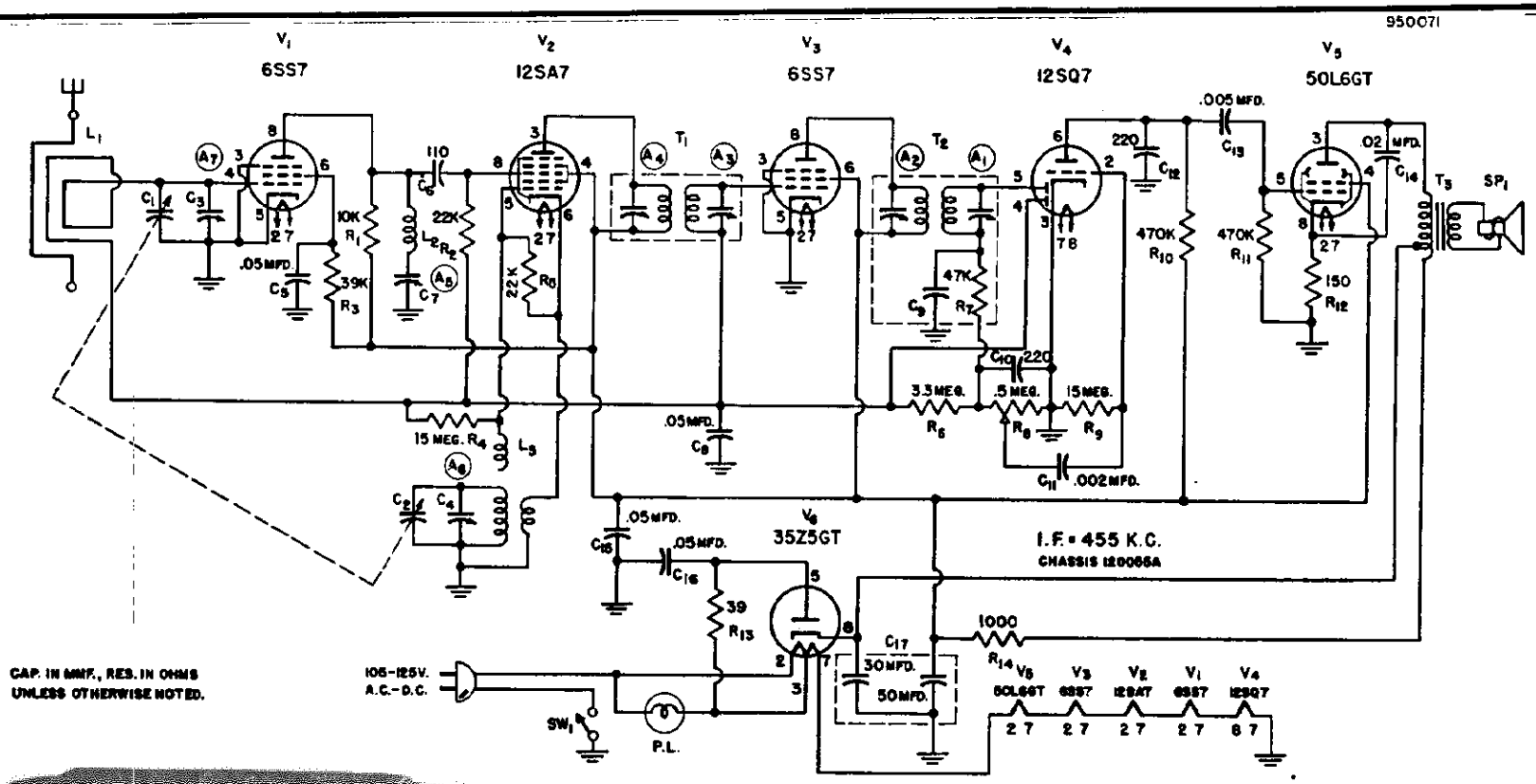

CAP. IN MMF., RES. IN OHMS UNLESS OTHERWISE NOTED.

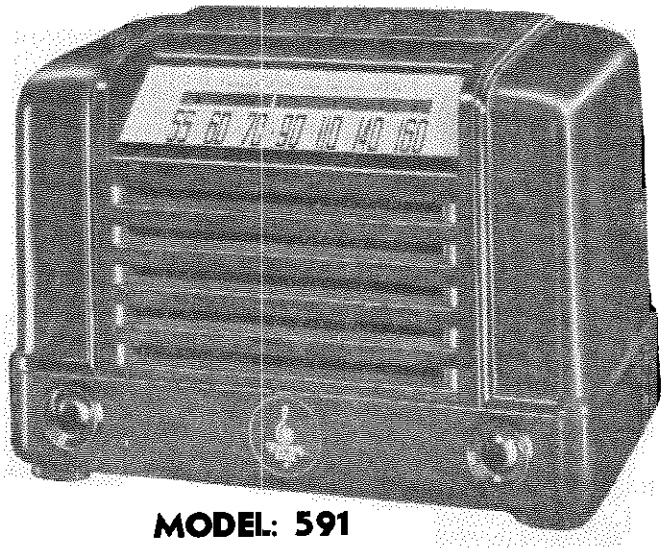

MODEL: 591

DESCRIPTION

TYPE: Single band (AM) superheterodyne

FREQUENCY RANGE: 540-1620 kc.

TYPES OF TUBES:

1—6SS7 r-f amplifier
1—12SA7 converter
1—6SS7 i-f amplifier
1—12SQ7 detector, a.v.c., audio amplifier
1—50L6GT power output
1—35Z5GT rectifier

POWER SUPPLY: A.c. or d.c.

VOLTAGE RATING: 105-125 volts

POWER CONSUMPTION: 30 watts

CURRENT DRAIN: 0.24 amp. at 117 volts a.c.

GENERAL NOTES

1. If replacements are made or the wiring disturbed in the r-f section of the circuit, the receiver should be carefully realigned.
2. The receiver has a self-contained antenna and does not require additional antenna connections. For permanent home installations, however, if it is desired to improve reception of weak stations, an additional outdoor antenna may be used. For this purpose a lead has been brought out of the rear near the line cord.
3. The self-contained loop antenna has directional properties. It is important, therefore, once the station is tuned in, that the cabinet be rotated on its base back and forth through a quarter of a circle (90 degrees), and left at the position where the station is received with maximum volume.
4. The color coding of the i-f transformer leads is as follows:

Grid return—black	Plate—blue
Grid—green	Blue+—red

EMERSON RADIO AND PHONO. CORP. MODEL 591, CHASSIS 120055A

INSTRUCTIONS FOR VOLTAGE AND RESISTANCE READINGS

1. Voltages are in volts d.c.; resistances in ohms unless otherwise specified.
2. D.c. voltage measurements are at 20,000 ohms-per-volt; a.c. voltages measured at 1000 ohms-per-volt.
3. Socket connections are shown as bottom views.
4. Measured values are from socket pin to common negative (chassis).
5. Line voltage maintained at 117 volts for voltage readings.
6. Nominal tolerance on component values makes possible a variation of ± 15% in voltage and resistance readings.
7. Volume contral at maximum with no signal applied, for voltage measurements.

VOLTAGE READINGS

SYMBOL	TUBE	PIN 1	PIN 2	PIN 3	PIN 4	PIN 5	PIN 6	PIN 7	PIN 8
V1	6SS7	0	19 AC	0	-.6	0	55	12 AC	50
V2	12SA7	0	31 AC	83	85	-.4.5	0	19 AC	-.5
V3	6SS7	0	37 AC	0	-.6	0	85	31 AC	83
V4	12SQ7	0	-.9	0	-.4	0	52	0	12 AC
V5	50L6GT	NC	87 AC	100	85	0	NC	37 AC	5.8
V6	35Z5GT	NC	117 AC	113 AC	106	112 AC	NC	87 AC	106

RESISTANCE READINGS

SYMBOL	TUBE	PIN 1	PIN 2	PIN 3	PIN 4	PIN 5	PIN 6	PIN 7	PIN 8
V1	6SS7	0	26	0	2.8 meg.	0	100 K	19	60 K
V2	12SA7	0	40	45 K	45 K	25 K	0	26	2.8 meg.
V3	6SS7	0	47	0	2.8 meg.	0	45 K	40	45 K
V4	12SQ7	0	15 meg.	0	2.8 meg.	600 K	540 K	0	19
V5	50L6GT	Inf.	110	45 K	45 K	450 K	Inf.	47	150
V6	35Z5GT	Inf.	160	150	45 K	190	Inf.	110	45 K

NC = no connection; K = kilohm; meg. = megohm; Inf. = infinity

ALIGNMENT PROCEDURE

1. To set pointer, turn variable condenser fully closed and set pointer at mark near left end of dial backplate.
2. Use isolation transformer if available. If not, connect a 0.1 mfd. condenser in series with low side of signal generator and chassis.
3. Volume control should be at maximum position; output of signal generator should be no higher than necessary to obtain an output reading.
4. Use an insulated alignment screwdriver for adjusting.

	DUMMY ANTENNA	SIGNAL GENERATOR COUPLING	SIGNAL GENERATOR FREQUENCY	RADIO DIAL SETTING	OUTPUT METER	ADJUST	REMARKS
1	0.1 mfd.	High side to pin 8 (grid) of 12SA7 (V2). Low side to chassis.	455 KC.	Variable condenser fully open.	Across voice coil.	A1, A2 (2nd i-f trans. T2). A3, A4 (1st i-f trans. T1).	Adjust for maximum output. If isolation transformer is not used, reduce dummy antenna to .001 mfd. to reduce hum modulation.
2	0.1 mfd.	High side to external antenna lead. Low side to chassis.	455 KC.	Variable condenser fully open.	Across voice coil.	A5 (Trimmer) cond. C7).	Adjust for minimum output.
3	200 mmf.	"	1620 KC.	Variable condenser fully open.	Across voice coil.	A 6 (Trimmer) cond. C4).	Adjust for maximum output.
4	200 mmf.	"	1400 KC.	Tune for maximum output.	Across voice coil.	A7 (Trimmer) cond. C3).	Adjust for maximum output.

MODEL 591,
CHASSIS 120055A

EMERSON RADIO AND PHONO. CORP.

REPLACEMENT PARTS LIST

Symbol	†Part No	DESCRIPTION	Symbol	†Part No.	DESCRIPTION
V1	6SS7	R-f amplifier	R4, R9	351490	15 megohms, ½ watt resistor
V2	12SA7	Converter	R5	*	22 kilohms, part of L3
V3	6SS7	I-f amplifier	R6	351330	3.3 megohms, ½ watt resistor
V4	12SQ7	Detector, a.v.c., audio amplifier	R7	*	47 kilohms, part of T2
V5	50LGGT	Power output	R8	390053	.5 megohms, volume control
V6	35Z5GT	Rectifier	R10, R11	351130	470 kilohms, ½ watt resistor
C1, C2	900037	Two-gang variable condenser	R12	340290	150 ohms, ½ watt resistor
C3, C4	*	Trimmers, part of var. cond.	R13	370150	39 ohms, 1 watt resistor
C5, C8	920060	.05 mfd., 200 volt paper cond.	R14	370490	1000 ohms, 1 watt resistor
C6	910010	110 mmf., mica condenser	L1	700033	Loop antenna
C7	*	Trimmer, part of wave trap L2	L2	708060	Wave trap
C9	*	Part of 2nd i-f trans. T2	L3	716024	Oscillator coil
C10, C11, C12, C13	470310	220 mmf.—.002 mfd.—220 mmf.—.005 mfd.coupling cond. assembly	T1	720038	First i-f transformer
			T2	720390	Second i-f transformer
C14	920020	.02 mfd., 200 volt paper cond.	T3	734046	Output transformer
C15, C16	920030	.05 mfd., 400 volt paper cond.	SP1	180043	P.m. speaker, 4"
C17	925104	30-50 mfd., 150 volt elect. cond.	SW1	*	Line switch, part of vol. control
R1	340730	10 kilohms, ½ watt resistor	P.L.	807000	Dial light
R2	340810	22 kilohms, ½ watt resistor		507060	Dial light socket
R3	340870	39 kilohms ½ watt resistor		583070	Line cord

CABINET AND DIAL PARTS

†Part No.	
140210	Cabinet, walnut plastic
140213	Cabinet, ivory plastic
560190	Cabinet back
460470	Knob, black
525035	Pointer
520076	Dial glass
520078	Dial back plate
280313	Dial drive shaft
530002	Dial drive cord (39")
587070	Dial drive spring

† Specify part numbers when ordering.

* Not supplied separately.

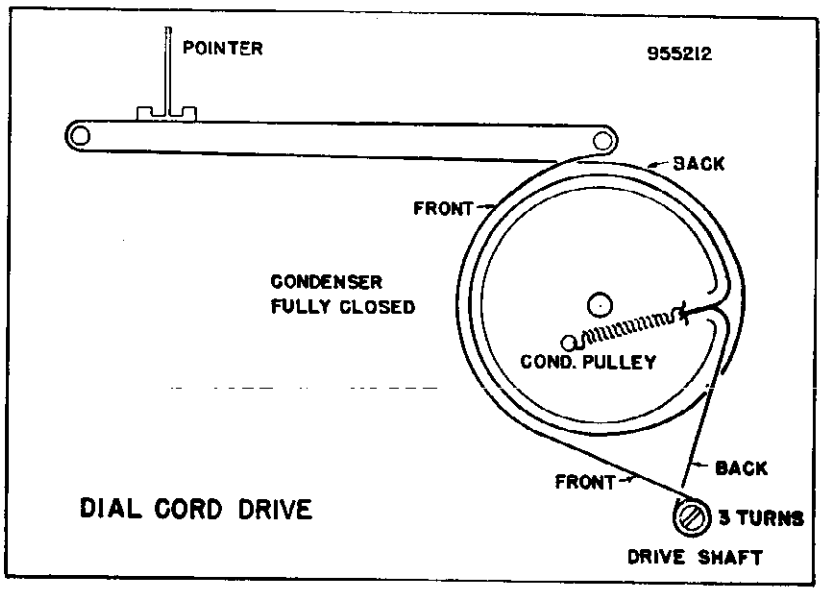

EMERSON RADIO AND PHONO. CORP. MODEL 605, CHASSIS 120076B

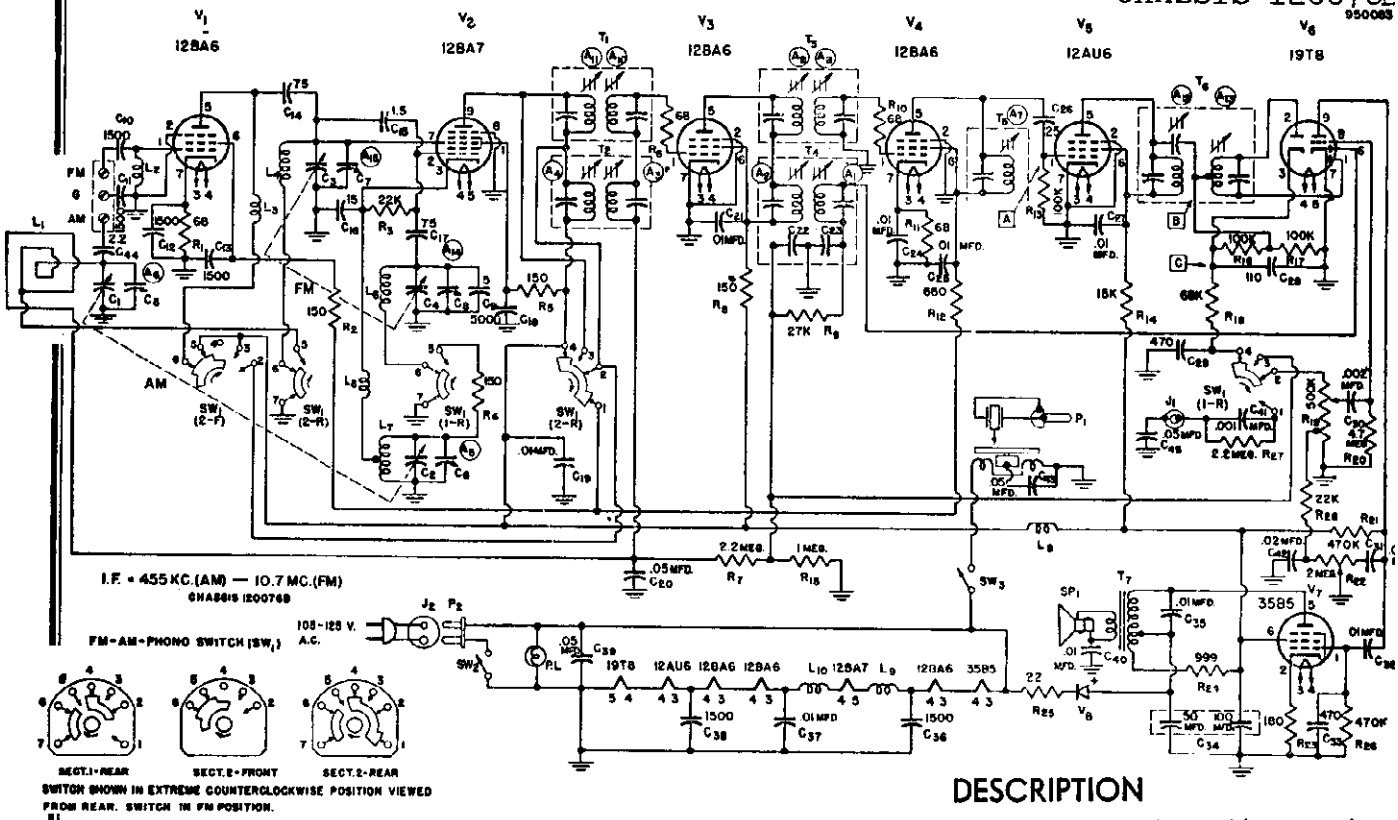

DISASSEMBLY INSTRUCTIONS

1. Remove four push-on type knobs at front of cabinet.
2. Remove chassis cover at rear of cabinet.
3. Disconnect speaker and phono-motor leads. Remove phono plug.
4. Remove chassis mounting bolts and carefully withdraw chassis.

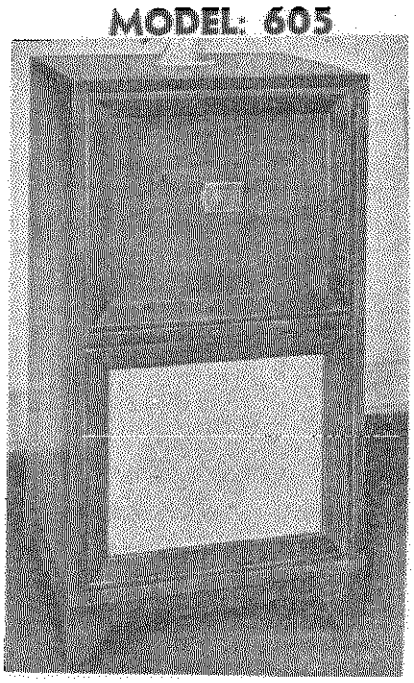

DESCRIPTION

TYPE: Consolette AM-FM superheterodyne, with automatic record changer.

FREQUENCY RANGE:
Broadcast band (AM)—540-1620 kilocycles.
Frequency modulation band (FM)—88.108 megacycles.

TYPE OF TUBES:
1—12BA6 FM r-f amplifier
1—12BA7 FM and AM converter
1—12BA6 FM and AM first i-f amplifier
1—12BA6 FM second i-f amplifier
1—12AU6 FM limiter
1—19T8 FM discriminator, AM detector, a.v.c., audio amplifier
1—35B5 Power output
1—Selenium rectifier

POWER SUPPLY: 60 cycle a.c.

VOLTAGE RATING: 105-125 volts

POWER CONSUMPTION: 90 watts

CURRENT DRAIN: 0.77 amp. at 117 volts a.c.

GENERAL NOTES

1. If replacements are made or the wiring disturbed in the r-f section of the circuit, the receiver should be carefully realigned.
2. A self-contained loop antenna is provided for broadcast band reception. For permanent home installation, however, if it is desired to improve reception of weak stations, an additional outdoor antenna may be used. Connect the the outdoor antenna to the screw on the loop terminal strip marked "AM".
3. An internal power line antenna is provided for FM operation in relatively strong signal areas. The line cord should be completely uncoiled for effective operation of this antenna. An external dipole antenna is recommended for maximum FM operation. To connect the dipole, first remove the wire from the screw on the loop terminal strip marked "FM" and connect the dipole leads to the "FM" terminal and "G".
4. A ground connection is not required for AM and FM operation.

© John F. Rider

MODEL 605, EMERSON RADIO AND PHONO. CORP.
CHASSIS 120076B

INSTRUCTIONS FOR VOLTAGE AND RESISTANCE READINGS

1. Voltages readings are in d.c. volts and resistance readings in ohms, unless otherwise specified.
2. D.c. voltage measurements are made at 20,000 ohms-per-volt and a.c. voltages are measured at 1000 ohms-per-volt.
3. Socket connections are shown as bottom views. Values are measured from socket pin to common negative.
4. Line voltage maintained at 117 volts a.c. for voltage readings.
5. Nominal tolerance on component values makes possible a variation of ± 15% in readings.
6. Volume control at maximum, with no signal applied and bandswitch in broadcast position (unless otherwise noted), for voltage measurements.

VOLTAGE READINGS

SYMBOL	TUBE	PIN 1	PIN 2	PIN 3	PIN 4	PIN 5	PIN 6	PIN 7	PIN 8	PIN 9
V1	12BA6	0	0	80AC	67AC	76*	78*	.8*	—	—
V2	12BA7	100	-.5	0	67AC	55AC	0	-.5	0	95
V3	12BA6	-.2	0	55AC	43AC	93	98	0	—	—
V4	12BA6	0	0	43AC	30AC	70*	70*	.6*	—	—
V5	12AU6	-.4	0	30AC	18AC	50	50	0	—	—
V6	19T8	-.5	-.4	5.5*	18AC	0	-.8	0	-.5	33
V7	35B5	0	6	117AC	80AC	132	100	NC	—	—

NC denotes "no connection"; * for bandswitch in FM position only.

RESISTANCE READINGS

SYMBOL	TUBE	PIN 1	PIN 2	PIN 3	PIN 4	PIN 5	PIN 6	PIN 7	PIN 8	PIN 9
V1	12BA6	0	0	16	12	65K*	65K*	66	—	—
V2	12BA7	65K	24K	1	56	75	0	0	0	65K
V3	12BA6	2.8 meg.	0	56	44	65K	65K	0	—	—
V4	12BA6	68	0	44	32	65K	65K	68	—	—
V5	12AU6	100K	0	32	20	65K	65K	0	—	—
V6	19T8	90K	90K	150K	20	0	1 meg.	0	4 meg.	550K
V7	35B5	400K	190	112	80	65K	65K	NC	—	—

K—Kilohms; meg.—megohms.

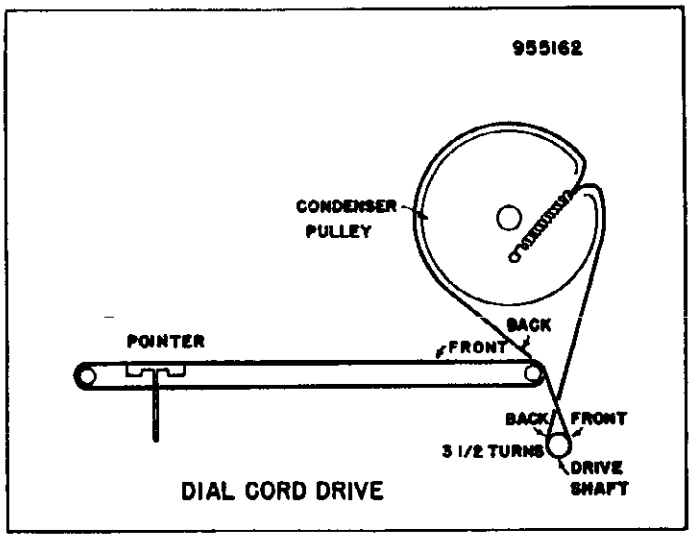

DIAL CORD DRIVE

EMERSON RADIO AND PHONO. CORP. MODEL 605, CHASSIS 120076E

ALIGNMENT INSTRUCTIONS

1. To position pointer, turn variable condenser fully closed and set pointer to reference mark on dial backplate at the low frequency end of the dial.
2. Volume control should be set at maximum position. The output of the signal generator should be no higher than necessary to obtain an output reading. Attenuate the signal input as alignment proceeds. Use an insulated alignment tool for all adjustments.
3. Use isolation transformer if available; otherwise connect a .1 mfd. condenser in series with low side of signal generator to chassis.

AM ALIGNMENT

	DUMMY ANTENNA	SIGNAL GENERATOR COUPLING	SIGNAL GENERATOR FREQUENCY	BAND SWITCH POSITION	RADIO DIAL SETTING	OUTPUT METER	ADJUST	REMARKS
1	.1 mfd.	High side to Pin 7 (grid) of 12BA7. Low side to chassis.	455 KC.	Broadcast	Tuning condenser fully open.	Across voice coil.	A1, A2, (Trans. T4). A3, A4, (Trans. T2).	Adjust for maximum output. Reduce dummy antenna to .001 mfd. if isolation trans. is not used.
2		Loop	1600 KC.	Broadcast	Tuning condenser fully open.	Across voice coil.	A5, (Trimmer cond. C6).	Form loop of several turns of wire. Radiate signal into receiver loop. Adjust for maximum output.
3		Loop	1400 KC.	Broadcast	Tune for max. output.	Across voice coil.	A6, (Trimmer cond. C5).	Adjust for maximum output.

FM I-F and Disc. Alignment Using AM Signal Generator and VTVM

	DUMMY ANTENNA	SIGNAL GENERATOR COUPLING	SIGNAL GENERATOR FREQUENCY	BAND SWITCH POSITION	RADIO DIAL SETTING	CONNECT VTVM	ADJUST	REMARKS
1	.01 mfd.	High side to Pin 1 (grid) of 12BA6 2nd I-F (V4). Low side to chassis.	10.7 mc. (Unmodulated)	Frequency modulation	Tuning condenser fully open.	Connect d.c. probe to point "A". Common to chassis.	A7, (Trans. T5).	Adjust for maximum output.
2	.01 mfd.	High side to Pin 1 (grid) of 12BA6 1st I-F (V3). Low side to chassis.	10.7 mc. (Unmodulated)	Frequency modulation	Tuning condenser fully open.	Connect d.c. probe to point "A". Common to chassis.	A8, A9, (Trans. T3).	Adjust for maximum output.
3	.01 mfd.	High side to Pin 2 (osc. grid) of 12BA7 conv. (V2). Low side to chassis.	10.7 mc. (Unmodulated)	Frequency modulation	Tuning condenser fully open.	Connect d.c. probe to point "A". Common to chassis.	A10, A11, (Trans. T1).	Adjust for maximum output.
4	.01 mfd.	High side to Pin 1 (grid) of 12BA6 2nd I-F (V4). Low side to chassis.	10.7 mc. (Unmodulated)	Frequency modulation	Tuning condenser fully open.	Connect d.c. probe to point "B". Common to chassis.	A12, (Trans. T6).	Adjust for maximum output.
5	.01 mfd.	"	10.7 mc. (Unmodulated)	Frequency modulation	Tuning condenser fully open.	Connect d.c. probe to point "C". Common to chassis.	A13, (Trans. T6).	Adjust for zero output. Continue with FM r-f alignment.

FM I-F AND DISC. ALIGNMENT USING SWEEP SIGNAL GENERATOR AND OSCILLOSCOPE. Use frequency modulated signal, with 60 cycle modulation and 450 k sweep. Use 120 cycle sawtooth sweep voltage in oscilloscope for horizontal deflection.

	DUMMY ANTENNA	SIGNAL GENERATOR COUPLING	SIGNAL GENERATOR FREQUENCY	BAND SWITCH POSITION	RADIO DIAL SETTING	CONNECT OSCILLOSCOPE	ADJUST	REMARKS
1	.01 mfd.	High side to Pin 1 (grid) of 12BA6 1st I-F (V3). Low side to chassis.	10.7 mc. (Unmodulated).	Frequency modulation	Tuning condenser fully open.	Vertical input to Point "A". Ground to chassis.	A7, A8, A9, (Trans. T5 and T3).	Adjust for maximum output (height) and symmetry as per I-F alignment curve shown (page 3).
2	.01 mfd.	High side to Pin 2 (osc. grid) of 12BA7 conv. (V2). Low side to chassis.	10.7 mc. (Unmodulated).	Frequency modulation	Tuning condenser fully open.	Vertical input to Point "A". Ground to chassis.	A10, A11, (Trans. T1).	Adjust for maximum output (height) and symmetry as per I-F alignment curve shown (page 3).
3	.01 mfd.	High side to Pin 1 (grid) of 12BA6 2nd I-F (V4). Low side to chassis.	10.7 mc. (Unmodulated).	Frequency modulation	Tuning condenser fully open.	Vertical input to Point "C". Ground to chassis.	A12, A13, (Trans. T6).	Alternately adjust A12 for maximum amplitude and A13 for maximum straightness of cross-over lines, with cross-over occurring at center of pattern as per discriminator alignment curve (page 3). Continue with FM r-f alignment.

FM R-F ALIGNMENT

	DUMMY ANTENNA	SIGNAL GENERATOR COUPLING	SIGNAL GENERATOR FREQUENCY	BAND SWITCH POSITION	RADIO DIAL SETTING	CONNECT VTVM	ADJUST	REMARKS
1	150 ohm resistor in series with each gen. lead.	High side to FM ant. term. Low side to chassis.	108.0 mc. (Unmodulated).	Frequency modulation	Tuning condenser fully open (108.0 mc.)	Connect d.c. probe to point "A". Common to chassis.	A14 (Trimmer cond. C8).	Adjust for maximum output.
2	"	"	106.0 mc.	Frequency modulation	Tune for maximum output.	"	A15 (Trimmer cond. C7).	Adjust for maximum output.

© John F. Rider

MODEL 605,
CHASSIS 120076B

EMERSON RADIO AND PHONO. CORP.

REPLACEMENT PARTS LIST

Symbol	†Part No.	DESCRIPTION
V1	12BA6	FM r-f amplifier
V2	12BA7	FM and AM converter
V3	12BA6	FM and AM 1st i-f amplifier
V4	12BA6	FM 2nd i-f amplifier
V5	12AU6	FM limiter
V6	19T8	FM disc., AM det., a.v.c., audio amp.
V7	35B5	Power output
V8	817101	Selenium rectifier
C1, C2, C3, C4	900045	Two-gang, four section variable condenser (alt. part 900400A)*
C5, C6, C7, C8	*	Trimmers, part of C1-C2-C3-C4
C9	928017	5 mmf., ceramic condenser
C10, C11, C12, C13, C36, C38	928006	1500 mmf., ceramic condenser
C14, C17	928015	75 mmf., ceramic condenser
C15	915011	1.5 mmf., molded condenser
C16	928016	15 mmf., ceramic condenser
C18	928109	5000 mmf., ceramic condenser
C19, C21, C24, C25, C27, C40	920092	.01 mfd., 200 volt paper cond.
C20, C39, C45	920030	.05 mfd., 400 volt paper cond.
C22, C23	*	Part of T4 (2nd i-f, AM)
C26	928110	25 mmf., ceramic condenser
C28	910010	110 mmf., mica condenser
C29, C33	910014	470 mmf., mica condenser
C30, C31	920515	.002 mfd., 400 volt paper cond.
C32, C35, C37	920090	.01 mfd., 400 volt paper cond.
C34	925126	100-50 mfd., 150 volt elect. cond.
C41	920514	.001 mfd., 400 volt paper cond.
C42	920100	.02 mfd., 200 volt paper cond.
C43	922101	.05 mfd., 400 volt molded paper condenser
C44	*	2.2 mmf., part of loop antenna L1
R1, R6, R10, R11	340210	68 ohms, ½ watt resistor
R2, R4, R5, R8	350290	150 ohms, ½ watt resistor
R3	340810	22 kilohms, ½ watt resistor, ± 10%
R7, R27	351290	2.2 megohms, ½ watt resistor
R9	340830	27 kilohm, ½ watt resistor (may be part of 2nd i-f T4)
R12	340450	680 ohms, ½ watt resistor
R13, R16, R17	340970	100 kilohms, ½ watt resistor
R14	350770	15 kilohms, ½ watt resistor
R15	351210	1 megohm, ½ watt resistor
R18	350930	68 kilohms, ½ watt resistor
R19	390057	500 kilohms, tapped volume control
R20	351370	4.7 megohms, ½ watt resistor
R21, R26	351130	470 kilohms, ½ watt resistor
R22	390046	.2 megohms, tone control
R23	370310	180 ohms, 1 watt resistor
R24	394042	999 ohms, 3 watt wire wound res.
R25	380090	22 ohms, 1 watt resistor
R28	350810	22 kilohms, ½ watt resistor
L1	700011	AM loop antenna (alternate part of 700021) #
L2	710019	FM antenna coil
L3, L5, L9, L10	705002	FM oscillator choke
L4	713024	FM r-f coil
L6	716013	FM oscillator coil
L7	716015	AM oscillator coil
L8	705013	R-f choke
T1	720024	First i-f trans. (FM). (Alternate parts 720082, 720067) #
T2	720031	First i-f trans. (AM). (Alt. parts 720084, 720075) #
T3	720025	Second i-f trans. (FM). (Alt. parts 720082, 720067) #
T4	720032	Second i-f trans. (AM). (Alt. parts 720085, 720076) #
T5	720069	Third i-f trans. (FM). (Alt. parts 720083, 720077) #
T6	708005	Disc. trans. (FM). (Alt. parts 708012, 708013) #
T7	734042	Output transformer
SW1	510038	Three position band-phono switch
SW2	*	Line switch, part of vol. control
SW3	*	Phono switch, part of changer
SP1	180051	P.M. speaker (12")
P1	505040	Phono pickup plug
J1	508100	Phono pickup socket
P2	505007	Line cord connector plug
J2	500005	Line cord interlock socket
	583202	Line cord and internal ant.
	807003	Dial light, 115 volt, 10 watt
	507008	Dial light socket

CABINET AND DIAL PARTS

	†Part No.	DESCRIPTION
	140206	Cabinet (for 819039 changer). (Alt. part 140246 for 819044 changer).
	560064	Cabinet back
	819039	Record changer (GI type 700FS). (Alt. part 819044, Webster type 146).
	460470	Knob, black push-on
	460041	Knob, black indicator, push-on
	410177	Dial backplate
	520071	Dial crystal
	280039	Dial drive shaft
	530002	Dial drive cord (44")
	587070	Dial cord spring
	525017	Pointer

* Not supplied separately. † Specify part numbers when ordering. # Replace with part having same number as that removed.

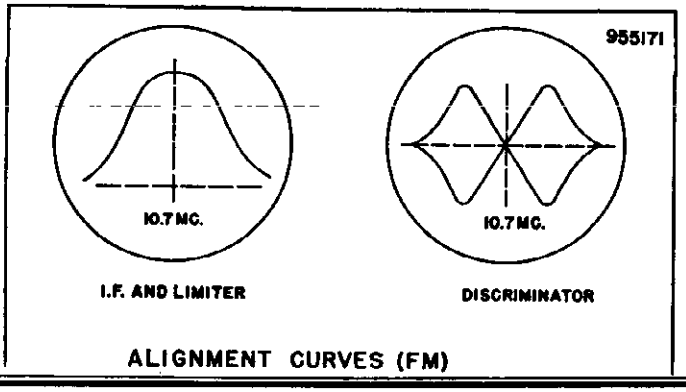

ALIGNMENT CURVES (FM)

© John F. Rider

ESPEY MFG. COMPANY, INC. MODEL 7B-12

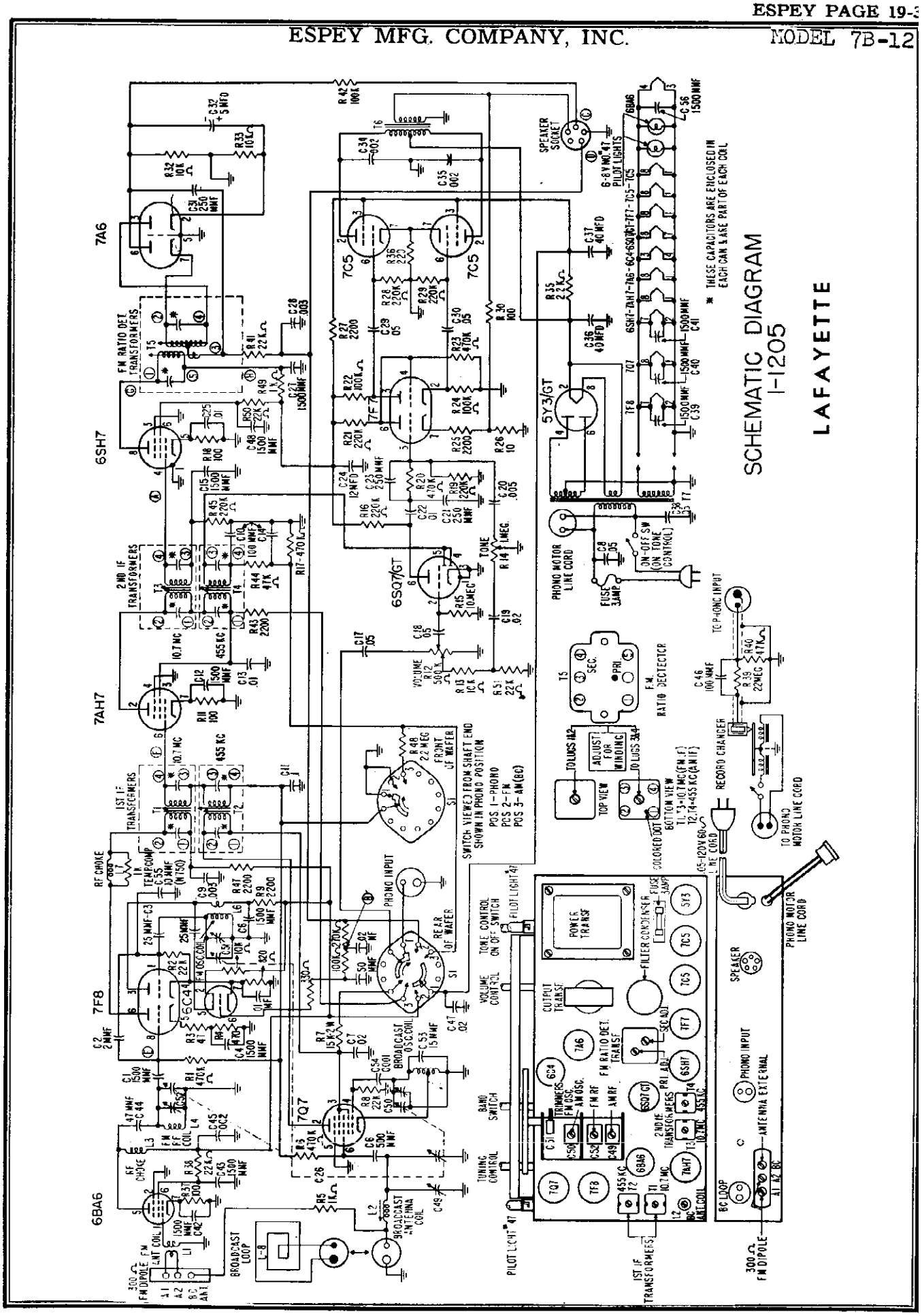

©John F. Rider

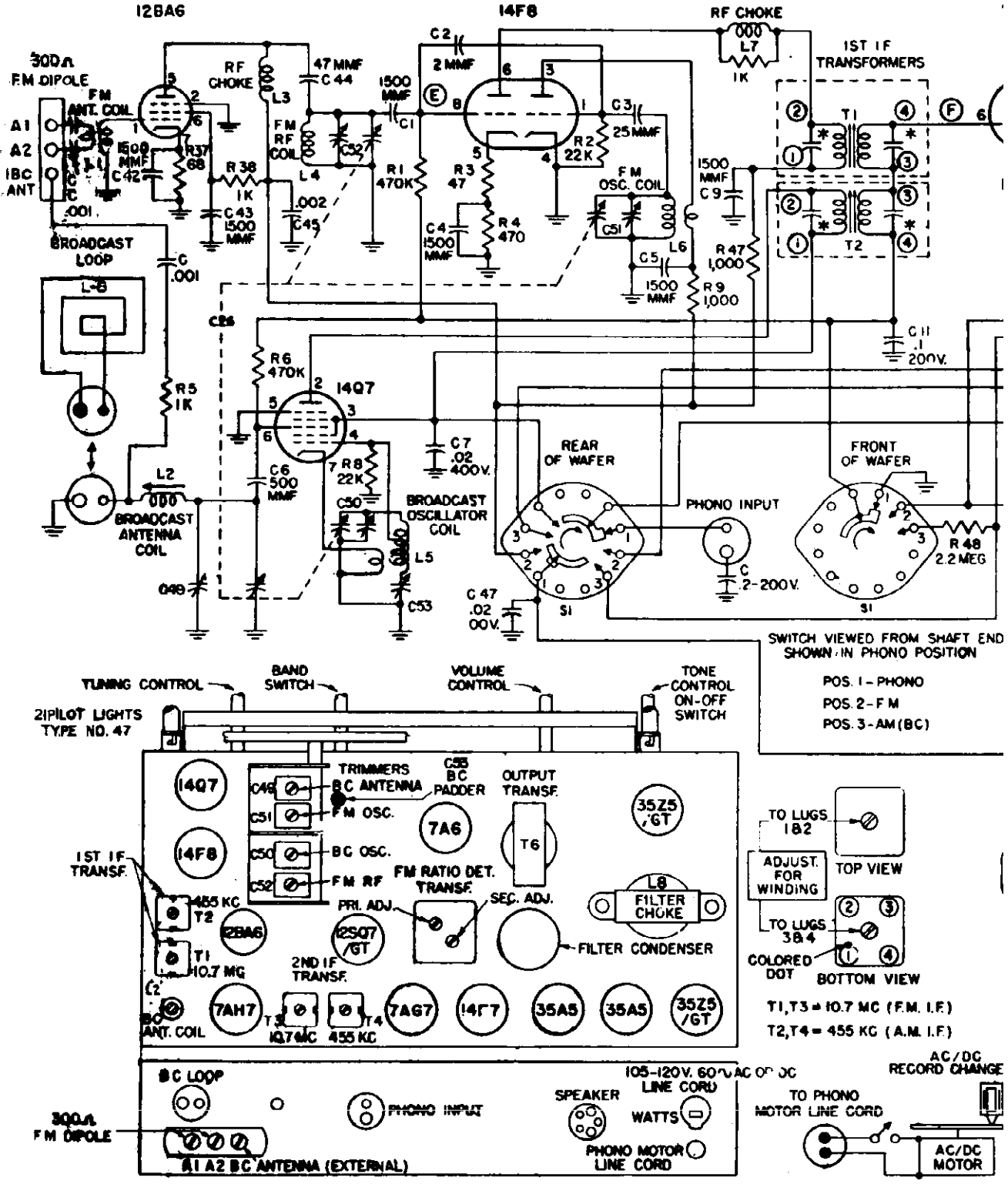
12BA6
14F8
RF CHOKE
1ST IF TRANSFORMERS
300Ω FM DIPOLE
FM ANT. COIL
RF CHOKE
47 MMF C44
1500 MMF
2 MMF
25 MMF
1K
A1
A2
IBC ANT
1500 MMF C42
R37 68
R38 1K
FM RF COIL
L4
C52
C1
R1 470K
R3 47
R2 22K
C3
FM OSC. COIL
C51
L6
C5
1500 MMF
R9 1,000
1500 MMF C9
R47 1,000
T1
T2
.001
.002 C45
C43 1500 MMF
C4 1500 MMF
R4 470
BROADCAST LOOP
L-8
C .001
C11 .1 200V.
R5 1K
R6 470K
14Q7
C7 .02 400V.
C6 500 MMF
R8 22K
C50
BROADCAST OSCILLATOR COIL
L5
L2
BROADCAST ANTENNA COIL
C48
C53
REAR OF WAFER
FRONT OF WAFER
PHONO INPUT
C 2-200V.
R48 2.2 MEG
C47 .02 00V.
S1
SWITCH VIEWED FROM SHAFT END SHOWN IN PHONO POSITION
POS. 1 - PHONO
POS. 2 - F M
POS. 3 - AM (BC)
TUNING CONTROL
BAND SWITCH
VOLUME CONTROL
TONE CONTROL ON-OFF SWITCH
2 PILOT LIGHTS TYPE NO. 47
TRIMMERS
C48 BC ANTENNA
C51 FM OSC.
C50 BC OSC.
C52 FM RF
C55 BC PADDER
OUTPUT TRANSF.
7A6
T6
35Z5/GT
1ST IF TRANSF.
455 KC T2
T1 10.7 MC
12BA6
12SQ7/GT
2ND IF TRANSF.
FM RATIO DET. TRANSF.
PRI. ADJ.
SEC. ADJ.
L8 FILTER CHOKE
FILTER CONDENSER
TO LUGS 1&2
ADJUST FOR WINDING
TOP VIEW
TO LUGS 3&4
COLORED DOT
BOTTOM VIEW
T1, T3 = 10.7 MC (F.M. I.F.)
T2, T4 = 455 KC (A.M. I.F.)
BC ANT. COIL
7AH7
T3 10.7MC
T4 455 KC
7AG7
14F7
35A5
35A5
35Z5/GT
BC LOOP
300Ω FM DIPOLE
A1 A2 BC ANTENNA (EXTERNAL)
PHONO INPUT
105-120V. 60~ AC OR DC LINE CORD
SPEAKER
WATTS
PHONO MOTOR LINE CORD
TO PHONO MOTOR LINE CORD
AC/DC RECORD CHANGE
AC/DC MOTOR

©John F. Rider

COMPANY, INC.

MODEL 7B
AC-DC

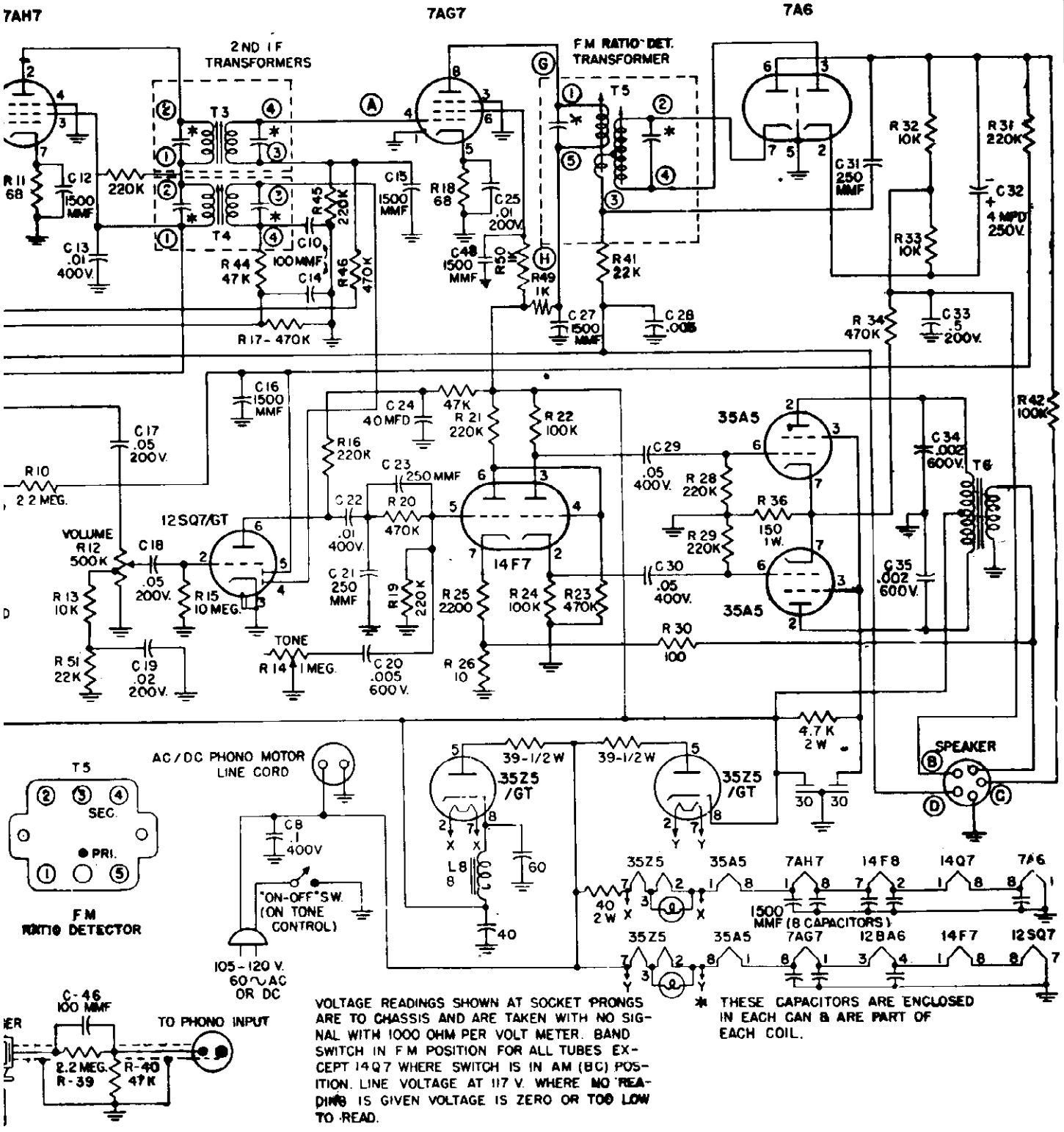

VOLTAGE READINGS SHOWN AT SOCKET PRONGS ARE TO CHASSIS AND ARE TAKEN WITH NO SIGNAL WITH 1000 OHM PER VOLT METER. BAND SWITCH IN F M POSITION FOR ALL TUBES EXCEPT 14Q7 WHERE SWITCH IS IN AM (BC) POSITION. LINE VOLTAGE AT 117 V. WHERE NO READING IS GIVEN VOLTAGE IS ZERO OR TOO LOW TO READ.

* THESE CAPACITORS ARE ENCLOSED IN EACH CAN & ARE PART OF EACH COIL.

MODEL 7B-12 ESPEY MFG. COMPANY, INC.

This Receiver features the latest in A. M. - F. M., Receiver Design. Eleven (11) tubes plus a Rectifier are used in the A. M. — F. M. superheterodyne circuit. separate antennas are supplied for A. M. and F. M. An automatic frequency control tube is used to stabilize the F. M. and simplify tuning.

TUBE COMPLEMENT:

1 Type 6BA6 — F. M. R F. Amplifier
1 Type 7F8 — F. M. Converter
1 Type 7Q7 — A. M. Converter
1 Type 6C4 — Automatic Frequency Control
1 Type 7AH7 — I. F. Amplifier
1 Type 6SH7 — Detector Driver (F.M.)
1 Type 6SQ7 — 1st Audio Amplifier, A. M. Detector
1 Type 7A6 — Ratio Detector
1 Type 7F7 — 2nd Audio Amplifier and phase inverter
2 Type 7C5 — Beam power output.
1 Type 5Y3/GT — Rectifier.

1. OPERATING CONTROLS:

1) The "ON-OFF" power switch and Tone Control is the knob at the extreme left of the set. Turn this control in a clockwise direction until the switch clicks and the dial becomes illuminated. Turning this control further in the same direction will change the tone.

2) The Volume Control is the second knob from the left. Turning this control in a clockwise direction will increase the volume.

3) The Band Switch is the third knob from the left. The extreme counterclockwise position of this knob is for phonograph operation. The center position is for F.M. reception. The extreme clockwise position is for A. M. reception.

4) The Tuning Control is the extreme right hand knob. Turning this knob in either direction will move the dial pointer and select the stations on the A. M. or F. M. Bands.

2. ANTENNAS:

In most cases it will not be necessary to use external antennas, since the receiver is equipped with a loop antenna for AM reception and an indoor type folded dipole antenna for FM reception.

When inadequate reception is obtained from a desired station, it may be necessary to reposition the antennas to favor that station. On AM, the loop should be turned so that the edge faces toward the station desired. On FM, the entire cabinet should be positioned so that the back is broadside to the direction from which the signals are transmitted.

For the reception of weak or distant stations, or for the operation of the receiver in unfavorable locations, provisions are made for the use of external antennas. The folded dipole should be disconnected when an external FM antenna is employed.

Do not disconnect the AM loop when an external antenna is used on standard broadcast.

3. SERVICE NOTES:

Failure of the Receiver to operate may be due to:

1) All tubes not firmly in sockets.
2) No current at power socket.
3) Band Switch in wrong position.
4) Speaker not plugged in.
5) Antennas not attached.
6) Defective fuse in Receiver.

4. ALIGNMENT PROCEDURE FOR A. M.:

Equipment Required:

a) Broadcast Band Signal Generator.
b) Output Meter.

1. Set band switch to AM, advance volume control to full volume setting.

2. Connect output meter across voice coil.

3. Connect the Signal Generator across the broadcast band antenna (Rear) section of the variable condenser. The "high" side of the Generator should connect to the stator section and the "ground" side to the chassis. Adjust the Signal Generator to 455 kc and with the receiver switched on, adjust the first and second I. F. transformers for peak output as shown on the output meter. The signal injected into the receiver should be as small in magnitude as possible, consistent with a useful deflection on the output meter.

4. Connect the "high" side of the Generator to the antenna terminal with a 200mmf condenser inserted in series. Connect the "ground" side of the Generator to the chassis. Tune receiver to 60 on the dial, adjust Signal Generator to 600kc. Adjust the BC antenna coil for maximum deflection on the output meter. Use a weak signal.

©John F. Rider

5. Tune receiver to 160 on the dial. Adjust Signal Generator to 1600kc. Adjust BC oscillator and BC antenna trimmers for maximum output.

6. Repeat operations 4 and 5.

5. *ALIGNMENT PROCEDURE FOR F. M.:*

NOTE: *Points A. B. C. D. E. F. G. and H are noted on circuit diagram. Points C, and D have been brought out to the unused contacts of the speaker socket at the rear of the chassis.*

Equipment Required:

a) High frequency Signal Generator with 88-108 Mc tuning range.

b) Signal Generator capable of delivering .1 Volt at 10.7mc.

c) Audio output meter.

d) D. C. vacuum tube voltmeter with zero center scale.

e) Tuning wand.

Disable A.F.C. during alignment of F.M. circuits by short circuiting point "B" to chassis.

A. Ratio Detector Alignment:

1. Connect V.T.V.M. across point "C" and ground, (Detector Voltage).

2. Feed 10.7mc unmodulated R.F. Signal into 6SH7 grid (point A) through .01 ufd. condenser. This signal should be .1 volt.

3. Adjust primary of Ratio Detector (T-5) for maximum voltage indication on V. T. V. M.

4. Connect zero centered V. T. V. M. across point "D" and ground.

5. Adjust secondary of Ratio Detector (T-5) for zero indication.

6. Tune 10.7mc Signal Generator higher in frequency (about 200kc) until maximum voltage reading is obtained on V. T. V. M.; note this voltage, then tune signal generator lower in frequency until maximum voltage of the opposite polarity is obtained. Note this voltage, then if necessary re-adjust primary of the Det. (T-5) until the voltages are about equal on either the high or low side of 10.7 mc.

B. 10.7 I. F. ALIGNMENT:

1. Shunt a 1,000-ohm carbon resistor across the primary of the detector (T-5) (Points G and H).

2. Connect output meter across speaker voice coil

3. Volume and tone controls at maximum clockwise position.

4. Connect 10.7mc (modulated 30%) signal generator through .01ufd. condenser across point "F" and ground.

5. Adjust secondary, then primary of (T-3) for maximum audio output. (Reduce input signal to maintain output at .5-watt level.)

6. Connect 10.7mc 30% modulated signal generator across point "E" and ground.

7. Adjust secondary, then primary of (T-1) for maximum audio output. (Reduce input signal to maintain output at .5-watt level.)

8. Remove 1000-ohm shunting resistor from across primary of (T-5).

C. OSCILLATOR AND R. F. ALIGNMENT:

1. Connect V. T. V. M. across point "C" and ground, (detector voltage).

2. Connect 108mc signal generator to FM antenna terminals. If generator impedance is low, put one 150-ohm carbon resistor in series with each of the generator leads. Tune receiver dial to 108 mc.

3. Adjust FM oscillator trimmer (C-51) for maximum V. T. V. M. reading.

4. Adjust FM R.F. trimmer (C-52) for maximum V. T. V. M. reading. During alignment reduce input signal to maintain Detector voltage at 2.V.

5. Repeat steps 3 and 4.

6. Feed a 90mc signal into antenna terminals (as in C-2), tune receiver dial to signal.

7. Test R. F. coil with tuning wand and if necessary adjust spacing of FM R.F. coil (L-4) for maximum V.T. V.M. reading at 90mc. During alignment reduce input signal to maintain Detector voltage at 2.V.

8. Repeat steps 2 and 4 if necessary.

9. Remove A.F.C. shorting jumper.

MODEL 502K ESPEY MFG. COMPANY, INC.

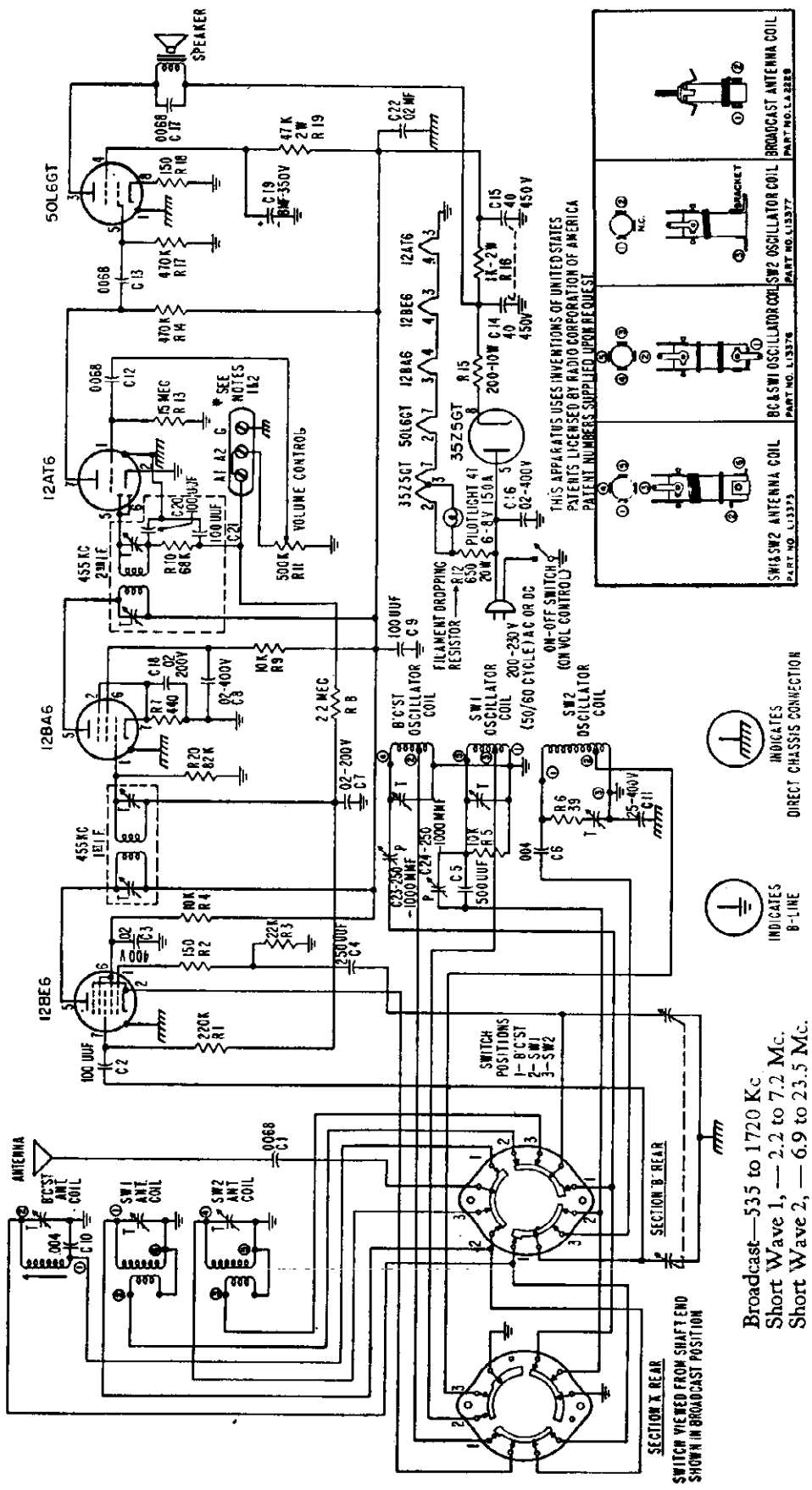

SCHEMATIC DIAGRAM (*figure 2*)

Broadcast—535 to 1720 Kc
Short Wave 1, — 2.2 to 7.2 Mc.
Short Wave 2, — 6.9 to 23.5 Mc.

TUBE COMPLEMENT:

1 type 12BE6 — Converter, Oscillator
1 type 12BA6 — I.F. Amplifier
1 type 12AT6 — Detector, A.V.C., First Audio Amplifier
1 type 50L6GT — Beam power output
1 type 35Z5GT — Rectifier

FAILURE OF THE RADIO RECEIVER TO OPERATE MAY BE DUE TO:

1. No current at power socket.
2. Tubes not firmly in sockets.
3. Antenna not connected.
4. Defective tube.
5. Band Switch in wrong position.
6. "Phono" terminal jumper missing or or incorrectly connected.

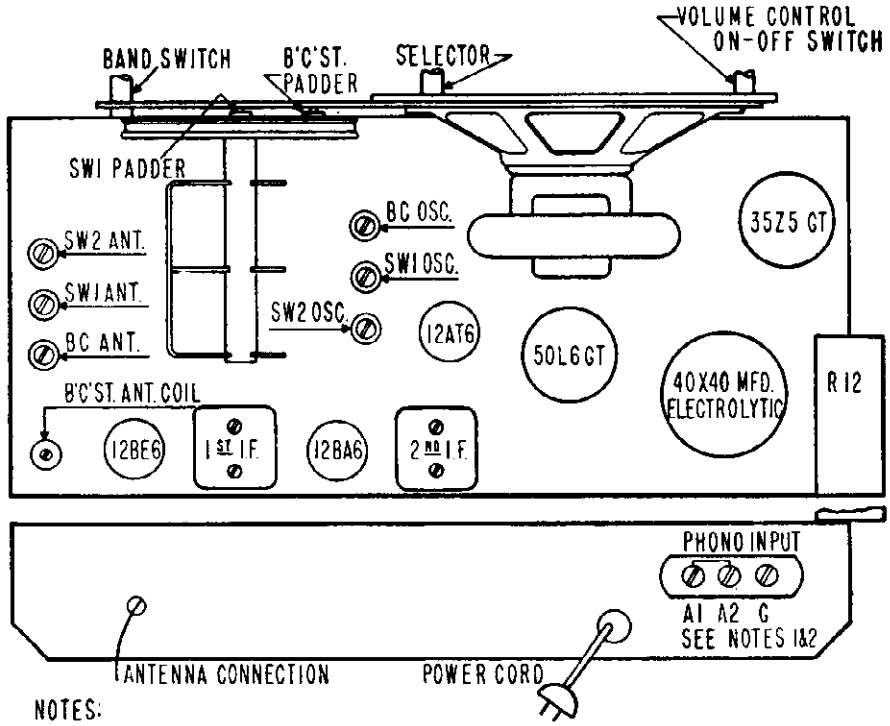

Figure 1 Tube and Trimmer Locations Radio Receiver Model 502K

ALIGNMENT PROCEDURE:

Steps	*Connect Output of Generator to*	*Tune Generator to*	*Band Switch to*	*Tune Radio to*	*Adjust the following for maximum peak output*
1.	Tuning condenser stator (RF) in series with .05 mfd.	455 kc	Bcst	Quiet point on high frequency end of dial.	2nd and 1st transformers.
2.	Ant in series with 200 mmf.	1500 kc	Bcst	1500 kc on dial.	BC Osc. Trimmer
3.	Same as above	1500 kc	Bcst	Sig. (1500 kc).	BC Ant. Trimmer
4.	Same as above	600 kc	Bcst	600 kc on dial.	BC Osc. padder. Ant. Coil core.
5.	Same as above	1500 kc	Bcst	1500 kc on dial.	BC Osc. trimmer. BC Ant. trimmer.
6.	Ant. in series with 400 ohm Carbon resistor	6Mc	SW1	6Mc on dial.	SW1 Osc. trimmer**
7.	Same as above	6Mc	SW1	6Mc	SW1 Ant. trimmer.
8.	Same as above	2.5Mc	SW1	2.5Mc	SW1 Ant. trimmer. Rock in SW1 Osc. padder.
9.	Same as above	6Mc	SW1	6Mc (sig.)	SW1 Ant. trimmer. SW1 Osc. trimmer.
10.	Same as above	21Mc	SW2	21Mc	SW2 Osc. trimmer.** SW2 Ant. trimmer.
11.	Same as above	21Mc	SW2	Sig. (21 Mc).	SW2 Ant. trimmer.

*Before alignment set dial pointer on dial point marker with condenser plate fully meshed.
**Caution adjust to peak closest to minimum trimmer capacity.

MODEL 528

ESPEY MFG. COMPANY, INC.

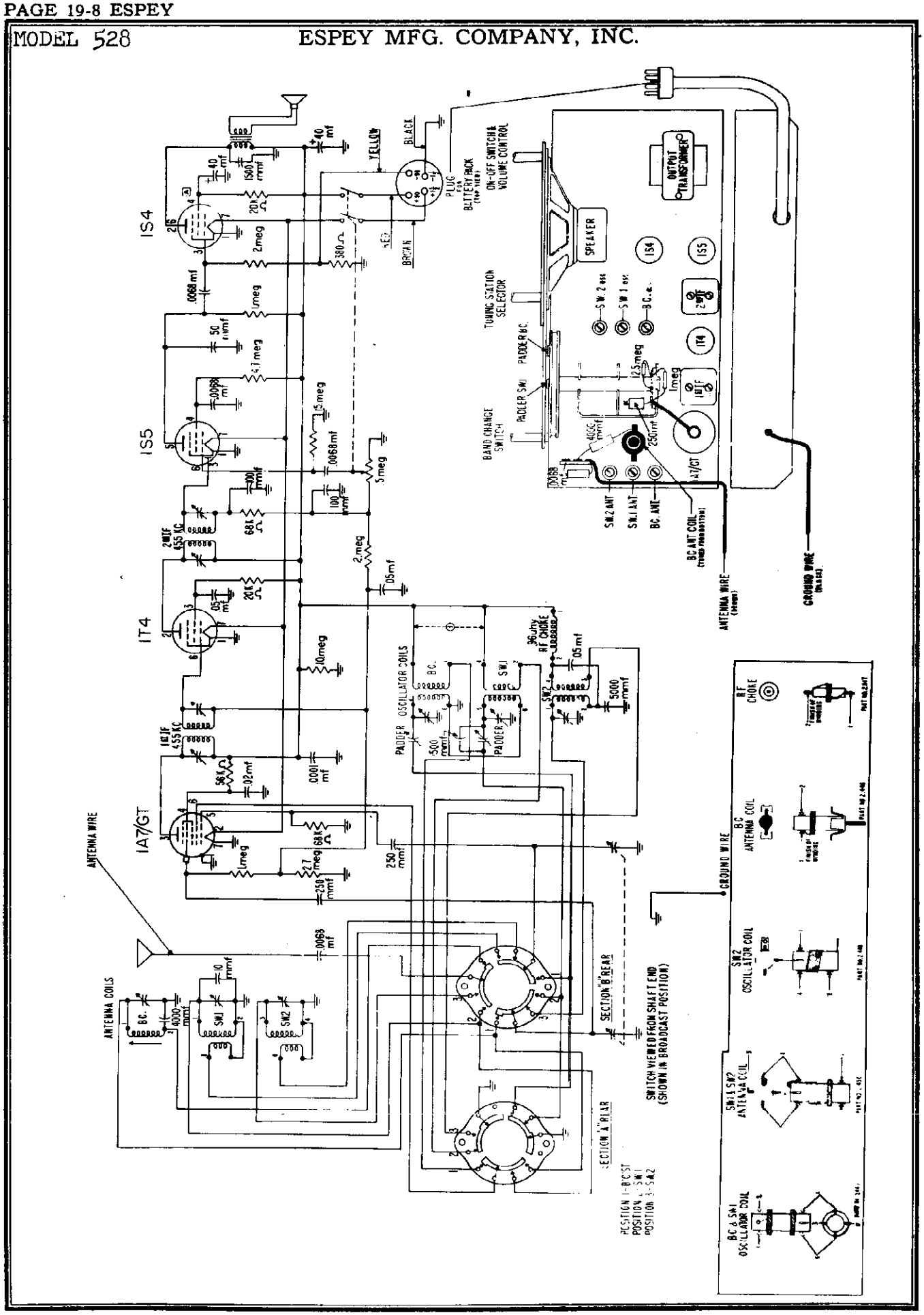

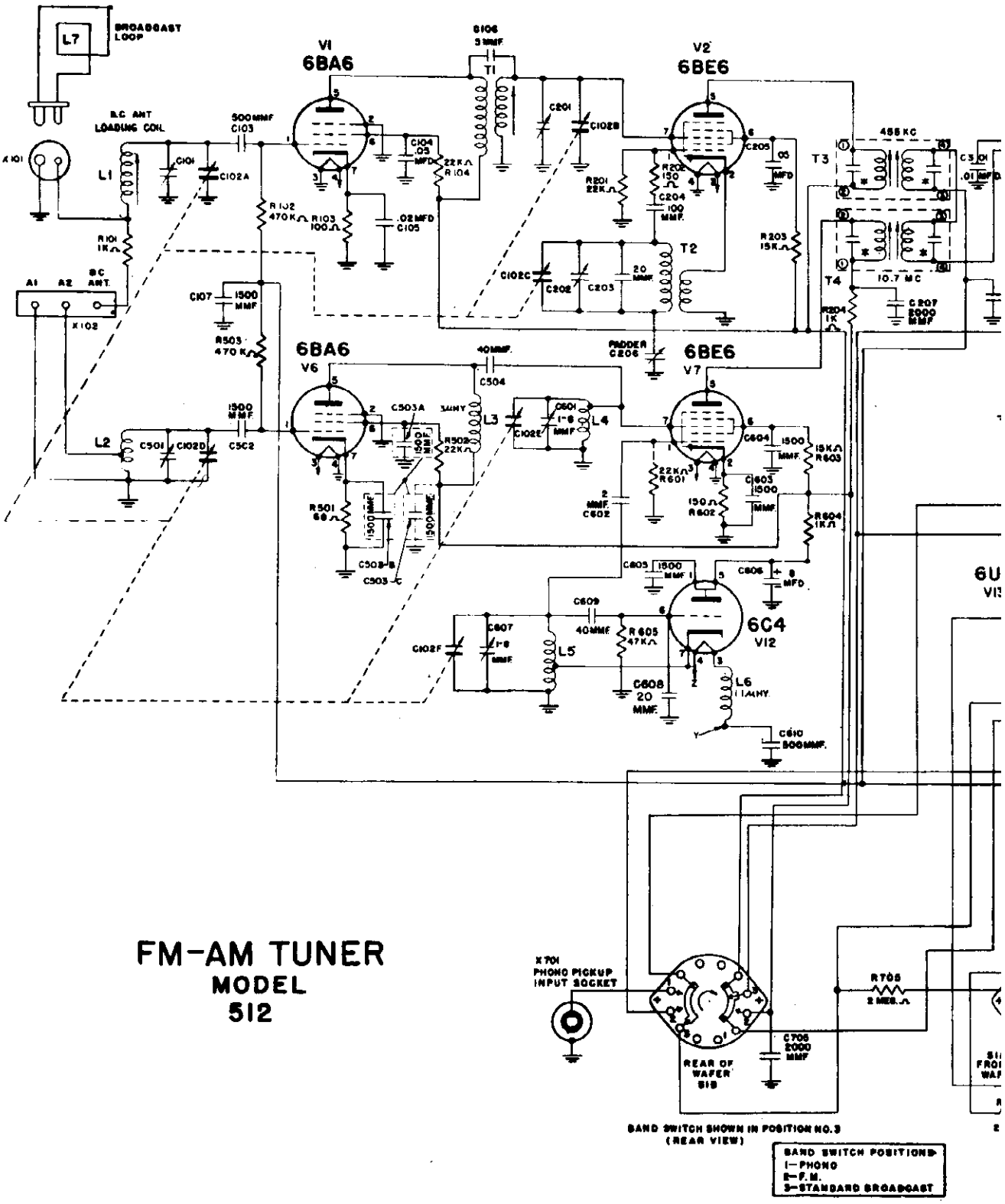

FM-AM TUNER
MODEL 512

©John F. Rider

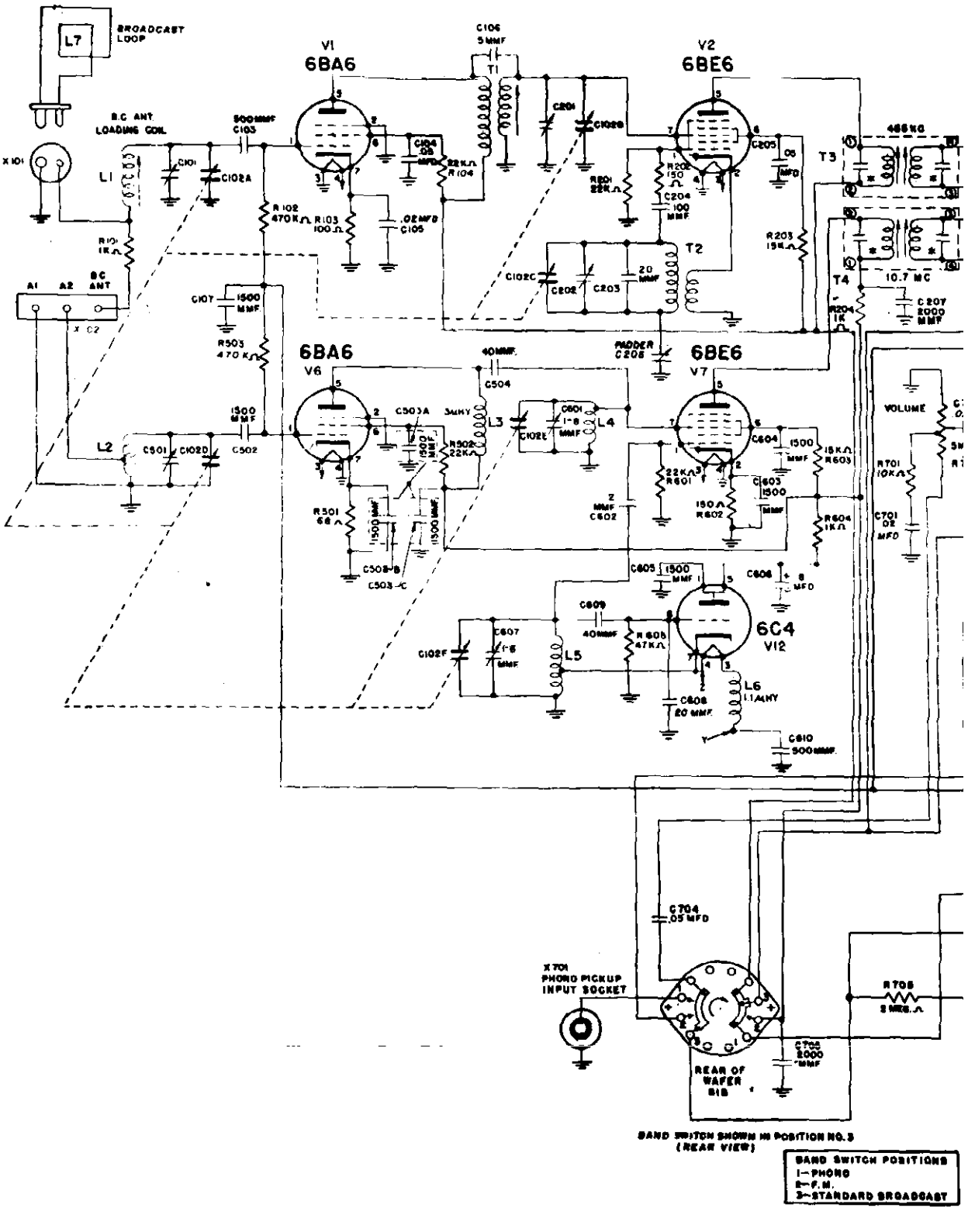
BROADCAST LOOP
L7
B.C. ANT. LOADING COIL
X101
L1
R101 1KΩ
A1 A2 BC ANT
X C2
V1
6BA6
C106 5MMF
T1
C201
C102B
V2
6BE6
C205 .05 MFD
T3
465 KC
R202 150 Ω
C204 100 MMF
R201 22KΩ
R102 470KΩ
R103 100Ω
.02MFD C105
C104 .05 MFD
22KΩ R104
C107 1500 MMF
R503 470KΩ
T2
C102C
C202
C203
20 MMF
R203 15KΩ
T4
10.7 MC
C207 2000 MMF
R204 1K
PADDER C206
6BA6
V6
40MMF
C504
C503A
3μHY
L3
C601 1-8 MMF
L4
C102E
6BE6
V7
C604 1500 MMF
15KΩ R603
VOLUME
R701 10KΩ
C701 .02 MFD
L2
C501
C102D
C502
1500 MMF
R502 22KΩ
R501 68Ω
1500 MMF
C503-B
C503-C
2 MMF C602
22KΩ R601
150Ω R602
C603 1500 MMF
R604 1KΩ
C605 1500 MMF
C606 8 MFD
C609 40MMF
R605 47KΩ
6C4
V12
C102F
C607 1-8 MMF
L5
L6 1.1μHY
C608 20 MMF
C610 500MMF
C704 .05 MFD
X701 PHONO PICKUP INPUT SOCKET
R705 2 MEG.Ω
C705 2000 MMF
REAR OF WAFER 81B
BAND SWITCH SHOWN IN POSITION NO. 3 (REAR VIEW)
BAND SWITCH POSITIONS
1—PHONO
2—F.M.
3—STANDARD BROADCAST

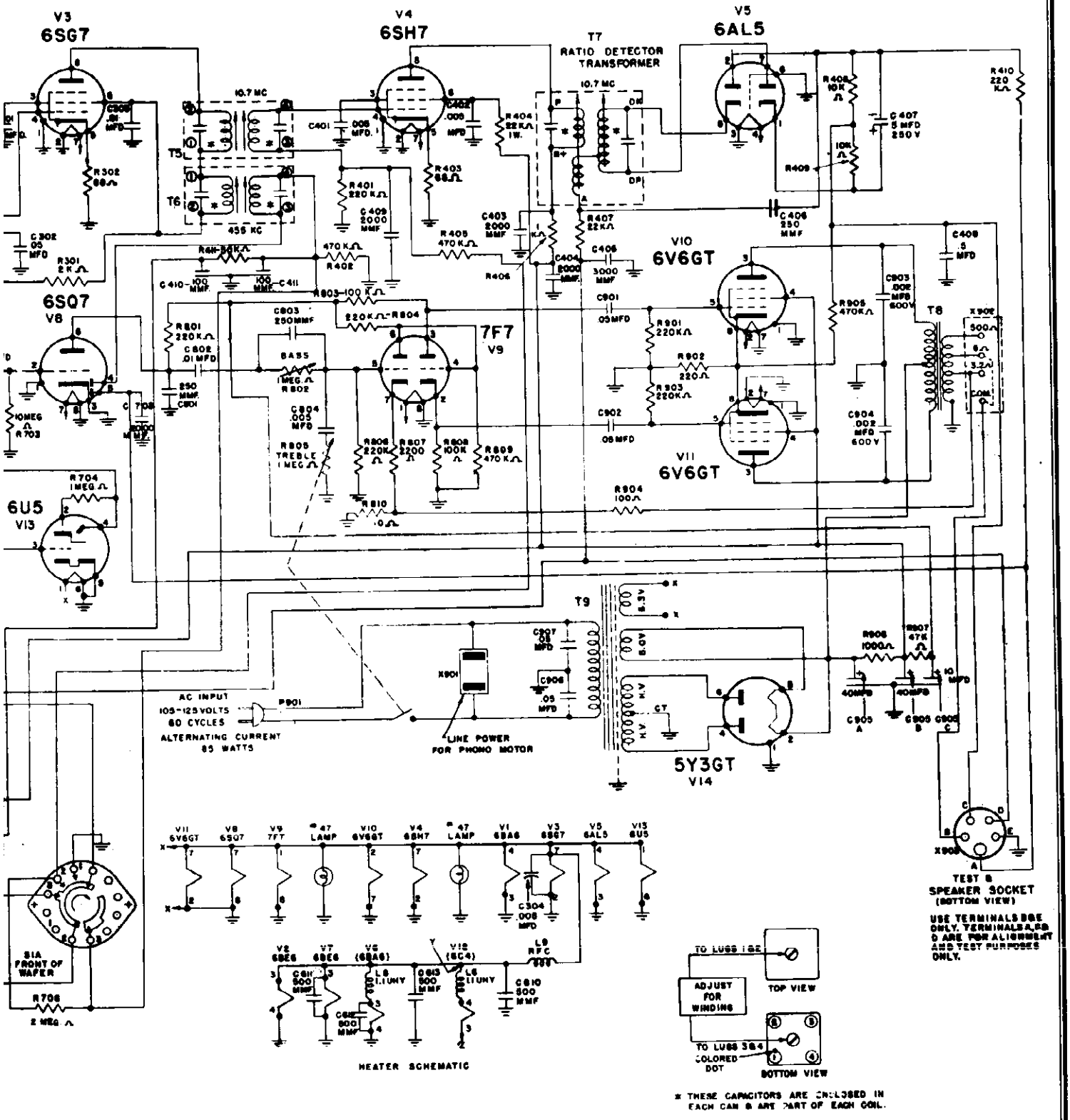
V3
6SG7
V4
6SH7
T7
RATIO DETECTOR TRANSFORMER
V5
6AL5
10.7 MC
T5
T6
455 KC
C401 .005 MFD.
C402 .005 MFD
R404 22 K Ω 1W.
R403 56Ω
R401 220 K Ω
C409 2000 MMF
C403 2000 MMF
R407 22 K Ω
C404 2000 MMF
C406 3000 MMF
C405 250 MMF
R405 470 K Ω
R406
R408 10K Ω
C407 5 MFD 250 V
R409 10K Ω
R410 220 K Ω
C408 .5 MFD
C302 .05 MFD
R301 2 K Ω
R411 56 K Ω
470 K Ω R402
C410 100 MMF
C411 100 MMF
R803 100 K Ω
V10
6V6GT
C901 .05 MFD
R901 220 K Ω
R902 220 Ω
R903 220 K Ω
C902 .05 MFD
V11
6V6GT
R905 470 K Ω
C903 .002 MFD 600 V
C904 .002 MFD 600 V
T8
X902
500 Ω
8
3.2
COM
6SQ7
V8
C801 250 MMF
R801 220 K Ω
C802 .01 MFD
250 MMF C801
10 MEG Ω R703
C803 250 MMF
R804 220 K Ω
7F7
V9
BASS 1 MEG. Ω R802
C804 .005 MFD
R805 TREBLE 1 MEG Ω
R806 220 K
R807 2200
R808 100 K Ω
R809 470 K Ω
R810 1.0 Ω
R904 100 Ω
6U5
V13
R704 1 MEG Ω
T9
C907 .01 MFD
C906 .05 MFD
X901
P901
AC INPUT
105-125 VOLTS
60 CYCLES
ALTERNATING CURRENT
85 WATTS
LINE POWER FOR PHONO MOTOR
5Y3GT
V14
R906 1000 Ω
R907 47 K Ω
40 MFD
10 MFD
C905 A
C905 B
C905 C
V11 6V6GT
V8 6SQ7
V9 7F7
#47 LAMP
V10 6V6GT
V4 6SH7
#47 LAMP
V1 6BA6
V3 6SG7
V5 6AL5
V13 6U5
C304 .005 MFD
V2 6BE6
V7 6BE6
V6 (6BA6)
V12 (6C4)
L8 RFC
C811 500 MMF
L8 LIUNY
C812 500 MMF
C813 500 MMF
L8 LIUNY
C810 500 MMF
HEATER SCHEMATIC
TO LUGS 1&2
ADJUST FOR WINDING
TOP VIEW
TO LUGS 3&4
COLORED DOT
BOTTOM VIEW
* THESE CAPACITORS ARE ENCLOSED IN EACH CAN & ARE PART OF EACH COIL.
TEST & SPEAKER SOCKET (BOTTOM VIEW)
USE TERMINALS B&E ONLY. TERMINALS A,C& D ARE FOR ALIGNMENT AND TEST PURPOSES ONLY.
SIA FRONT OF WAFER
R706 2 MEG. Ω

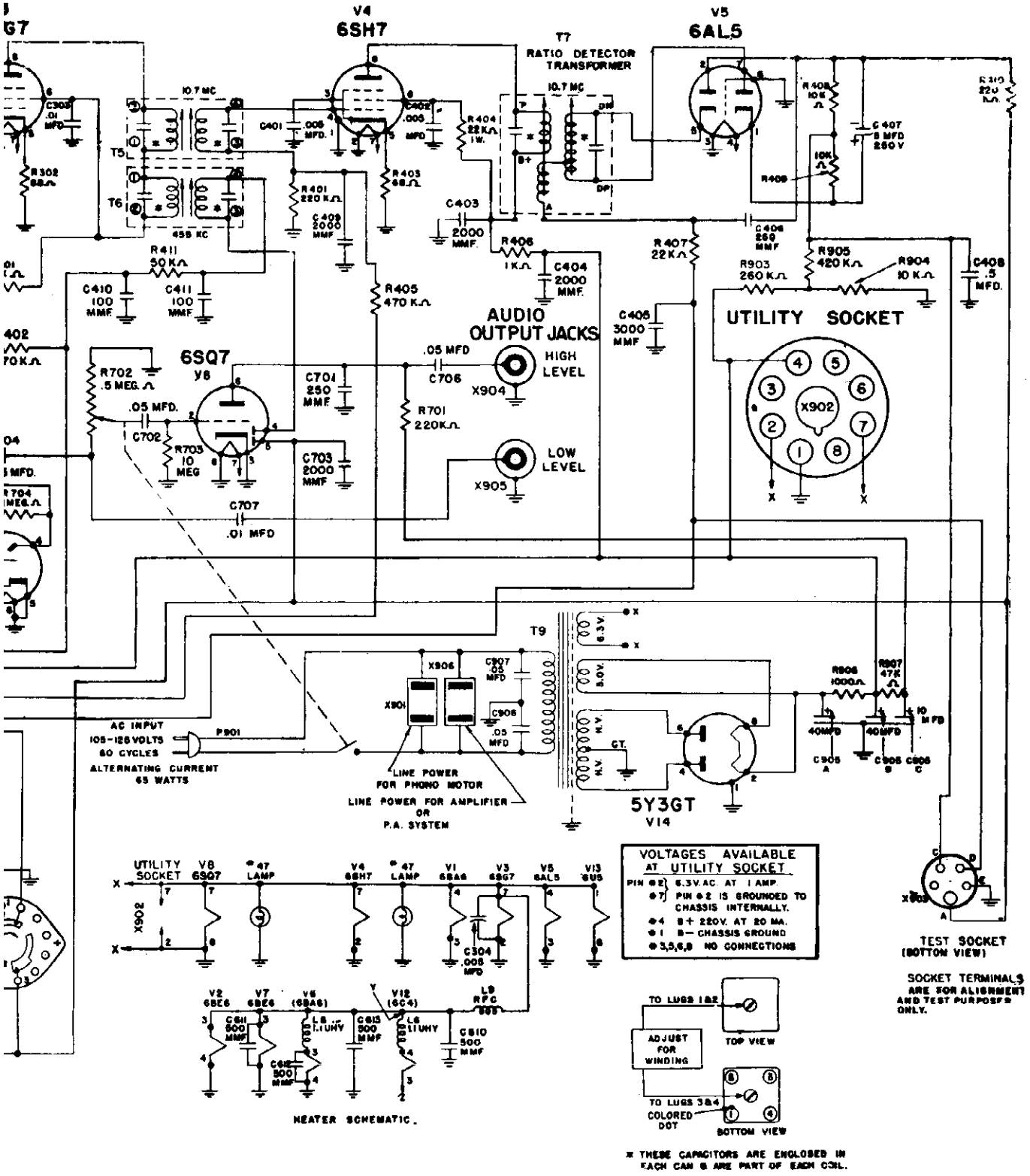
V4
6SH7
V5
6AL5
T7
RATIO DETECTOR TRANSFORMER
10.7 MC
T5
T6
455 KC
R411 50 K.Ω
C410 100 MMF
C411 100 MMF
R405 470 K.Ω
C401 .005 MFD.
C402 .005 MFD
R404 22 K.Ω 1 W.
R403 68.Ω
R401 220 K.Ω
C409 2000 MMF
C403 2000 MMF.
R406 1 K.Ω
C404 2000 MMF.
R407 22 K.Ω
C406 3000 MMF
C407 8 MFD 250 V
R408 10 K.Ω
R409
R410 220 Ω
R903 260 K.Ω
R905 420 K.Ω
R904 10 K.Ω
C408 .5 MFD.
UTILITY SOCKET
X902
AUDIO OUTPUT JACKS
HIGH LEVEL
X904
LOW LEVEL
X905
.05 MFD
C706
6SQ7
V6
R702 .5 MEG.Ω
.05 MFD.
C702
R703 10 MEG
C701 250 MMF
C703 2000 MMF
R701 220 K.Ω
C707 .01 MFD
T9
X906
X901
C907 .05 MFD
C908 .05 MFD
R906 1000 Ω
R907 47 K
10 MFD
40 MFD
40 MFD
C905 A
C905 B
C906 C
5Y3GT
V14
AC INPUT
105-125 VOLTS
60 CYCLES
ALTERNATING CURRENT
65 WATTS
P901
LINE POWER FOR PHONO MOTOR
LINE POWER FOR AMPLIFIER OR P.A. SYSTEM
UTILITY SOCKET
V8 6SQ7
#47 LAMP
V4 6SH7
#47 LAMP
V1 6BA6
V3 6SQ7
V5 6AL5
V13 6U5
X902
C304 .005 MFD
V2 6BE6
V7 6BE6
V6 (6BA6)
V12 (6C4)
L9 RFC
C611 500 MMF
C612 500 MMF
C613 500 MMF
C610 500 MMF
HEATER SCHEMATIC.
VOLTAGES AVAILABLE AT UTILITY SOCKET
PIN #2 6.3 V. AC. AT 1 AMP.
#7 PIN #2 IS GROUNDED TO CHASSIS INTERNALLY.
#4 B+ 220 V. AT 20 MA.
#1 B- CHASSIS GROUND
#3,5,6,8 NO CONNECTIONS
TO LUGS 1&2
ADJUST FOR WINDING
TOP VIEW
TO LUGS 3&4
COLORED DOT
BOTTOM VIEW
TEST SOCKET (BOTTOM VIEW)
SOCKET TERMINALS ARE FOR ALIGNMENT AND TEST PURPOSES ONLY.
* THESE CAPACITORS ARE ENCLOSED IN EACH CAN & ARE PART OF EACH COIL.

MODEL 514 ESPEY MFG. COMPANY, INC.

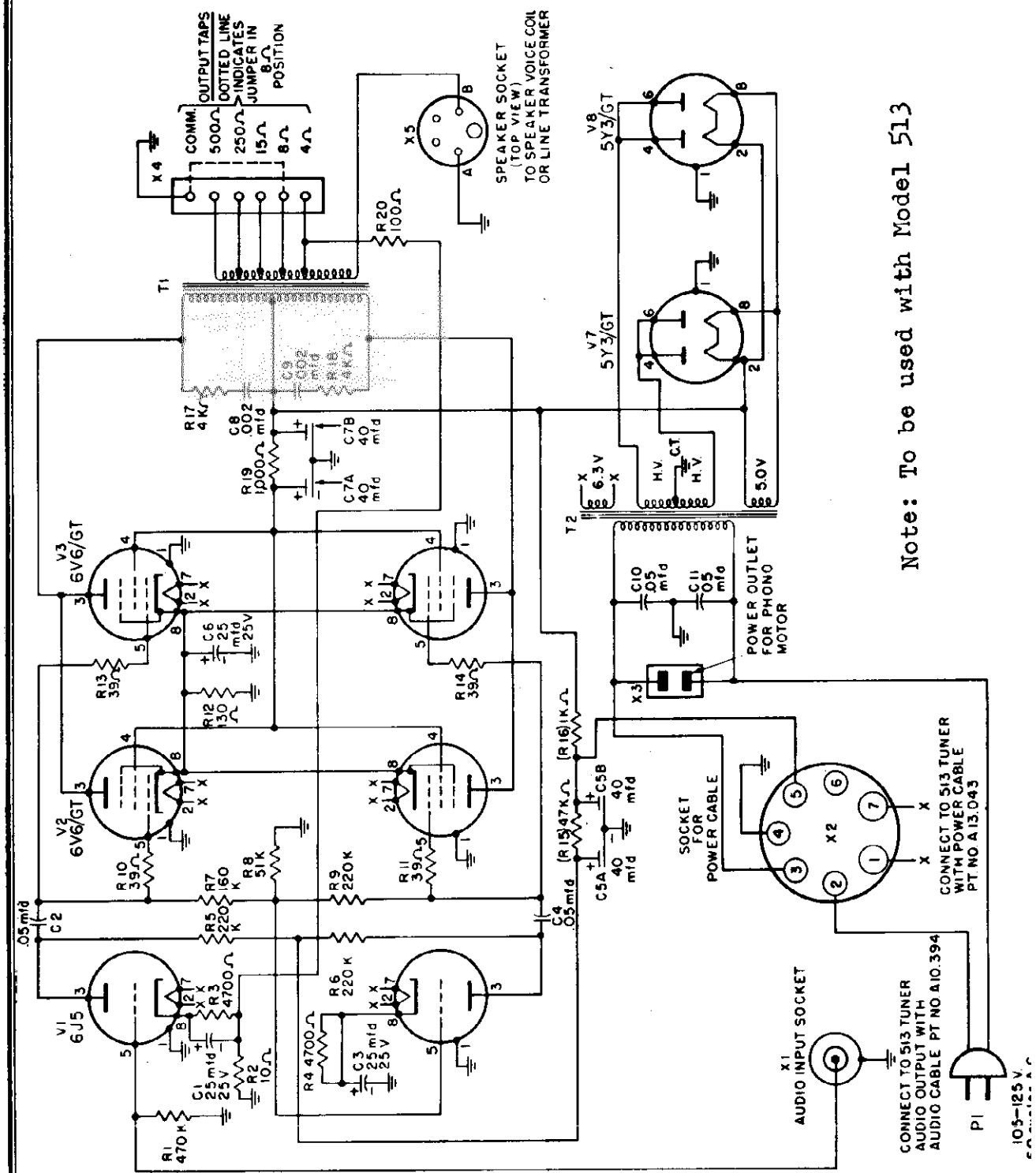

©John F. Rider

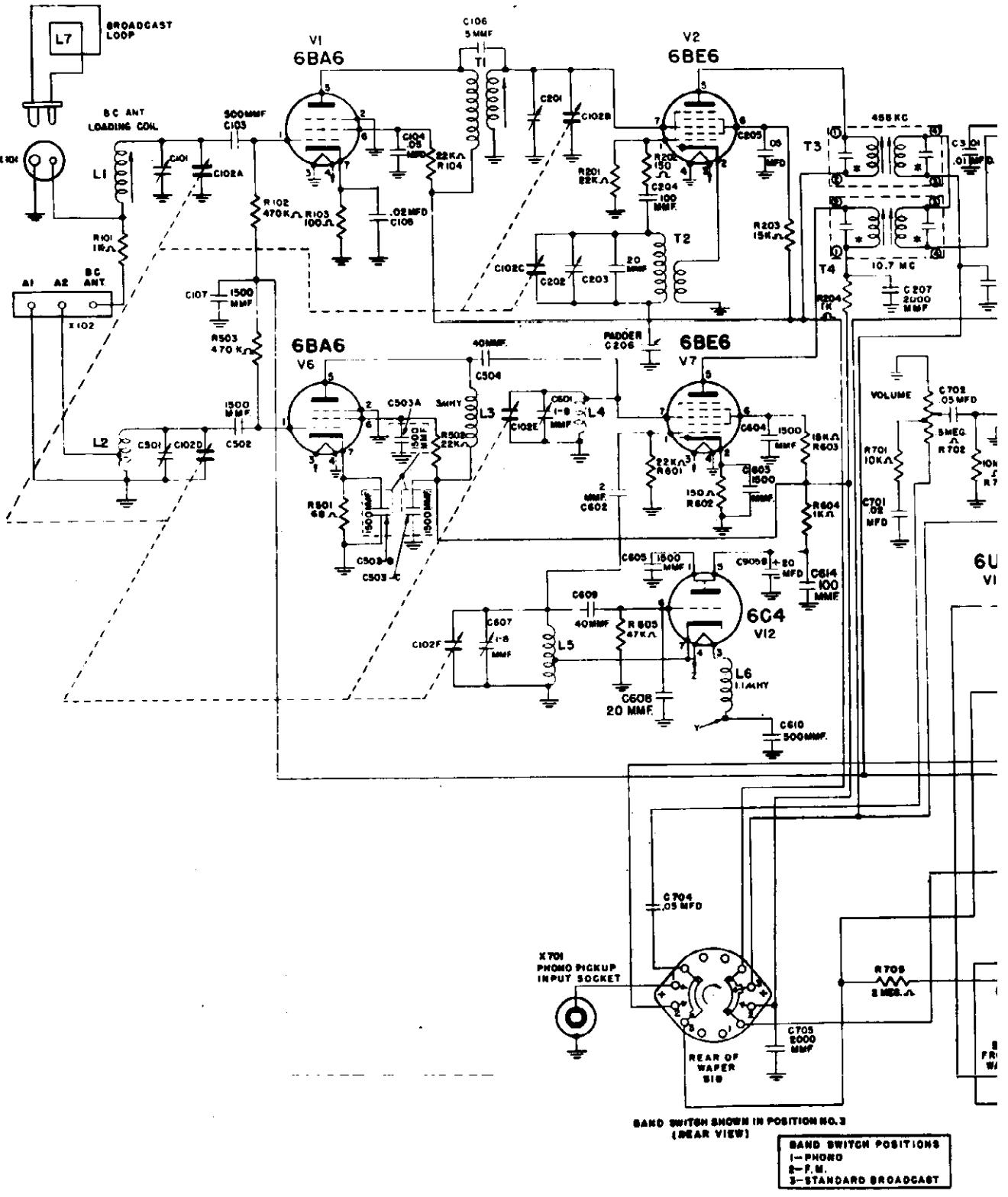
BROADCAST LOOP
L7
BC ANT LOADING COIL
L1
X101
R101 1KΩ
A1 A2 BC ANT
X102
V1
6BA6
C106 5 MMF
T1
V2
6BE6
C201
C102B
C104 .05 MFD
22KΩ R104
C101
C102A
R102 470KΩ
R103 100Ω
.02 MFD C105
C107 1500 MMF
R503 470KΩ
R201 22KΩ
R202 150Ω
C204 100 MMF
C205 .05 MFD
T2
C102C
C202
C203
20 MMF
R203 15KΩ
T3
455 KC
T4
10.7 MC
C207 2000 MMF
R204 1K
PADDER C206
6BA6
V6
40MMF C504
C503A
3MHY
L3
C601 1-8 MMF
L4
C102E
R502 22KΩ
1500 MMF C502
L2
C501
C102D
R501 68Ω
C503-B
C503-C
6BE6
V7
C604 1500 MMF
18KΩ R603
22KΩ R601
C603 1500 MMF
150Ω R602
2 MMF C602
R604 1KΩ
C605 1500 MMF
C905B 20 MFD
C614 100 MMF
C609 40MMF
R605 47KΩ
6C4
V12
C607 1-8 MMF
C102F
L5
L6 1.1MHY
C608 20 MMF
C610 500MMF
VOLUME
C702 .05 MFD
.5MEG R702
R701 10KΩ
C701 .02 MFD
6U
V1
C704 .05 MFD
X701 PHONO PICKUP INPUT SOCKET
R705 2 MEG.Ω
C705 2000 MMF
REAR OF WAFER SIB
BAND SWITCH SHOWN IN POSITION NO. 3 (REAR VIEW)
BAND SWITCH POSITIONS
1—PHONO
2—F.M.
3—STANDARD BROADCAST

©John F. Rider

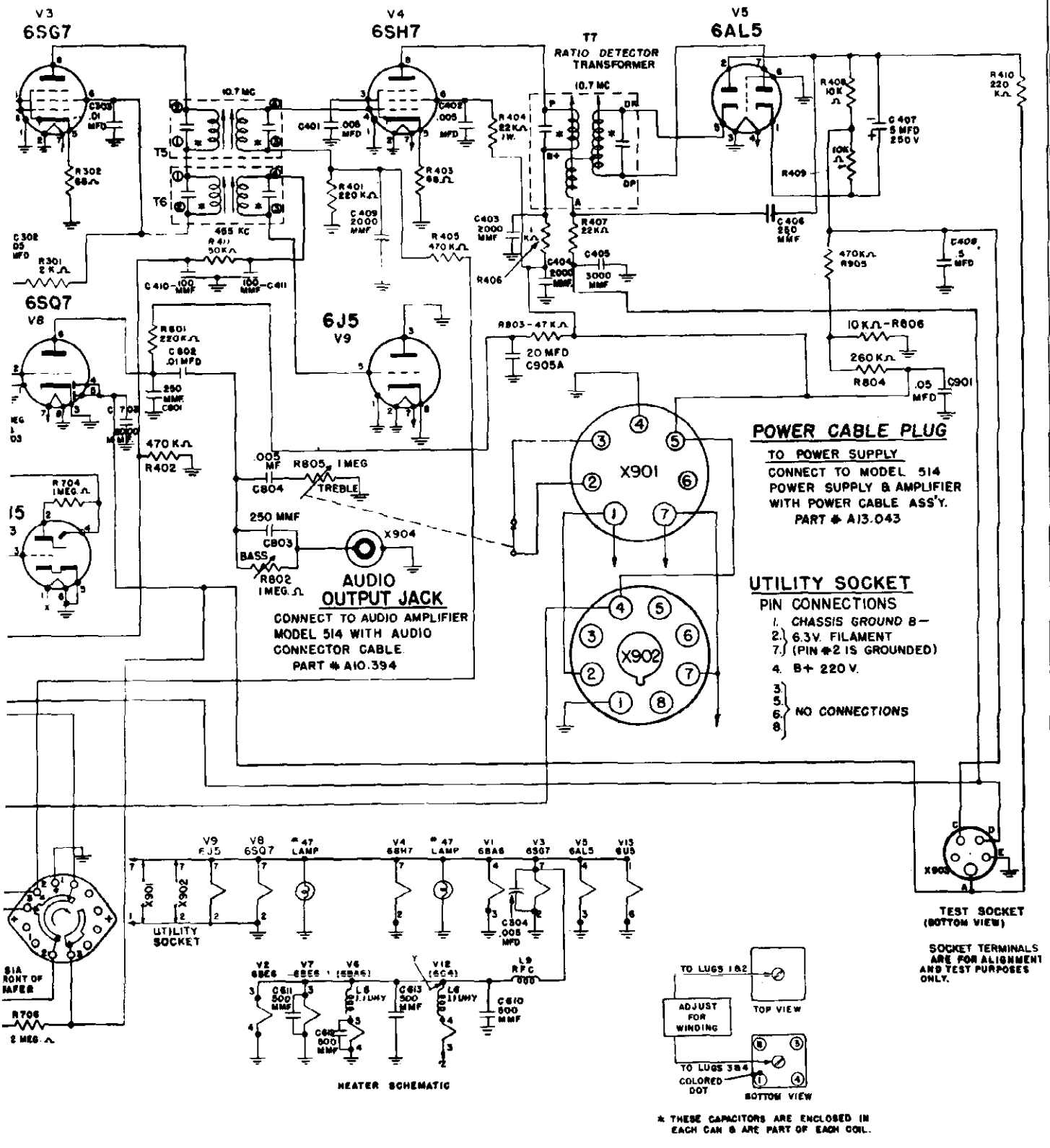
V3
6SG7
V4
6SH7
T7
RATIO DETECTOR
TRANSFORMER
V5
6AL5
10.7 MC
T5
T6
455 KC
6SQ7
V8
6J5
V9
X901
X902
X904
X903
POWER CABLE PLUG
TO POWER SUPPLY
CONNECT TO MODEL 514
POWER SUPPLY & AMPLIFIER
WITH POWER CABLE ASS'Y.
PART # A13.043
UTILITY SOCKET
PIN CONNECTIONS
1. CHASSIS GROUND B−
2. 6.3V. FILAMENT
7. (PIN #2 IS GROUNDED)
4. B+ 220 V.
3. 5. 6. 8. NO CONNECTIONS
AUDIO
OUTPUT JACK
CONNECT TO AUDIO AMPLIFIER
MODEL 514 WITH AUDIO
CONNECTOR CABLE.
PART # A10.394
TEST SOCKET
(BOTTOM VIEW)
SOCKET TERMINALS
ARE FOR ALIGNMENT
AND TEST PURPOSES
ONLY.
UTILITY
SOCKET
HEATER SCHEMATIC
TO LUGS 1&2
TOP VIEW
ADJUST
FOR
WINDING
TO LUGS 3&4
COLORED
DOT
BOTTOM VIEW
* THESE CAPACITORS ARE ENCLOSED IN
EACH CAN & ARE PART OF EACH COIL.

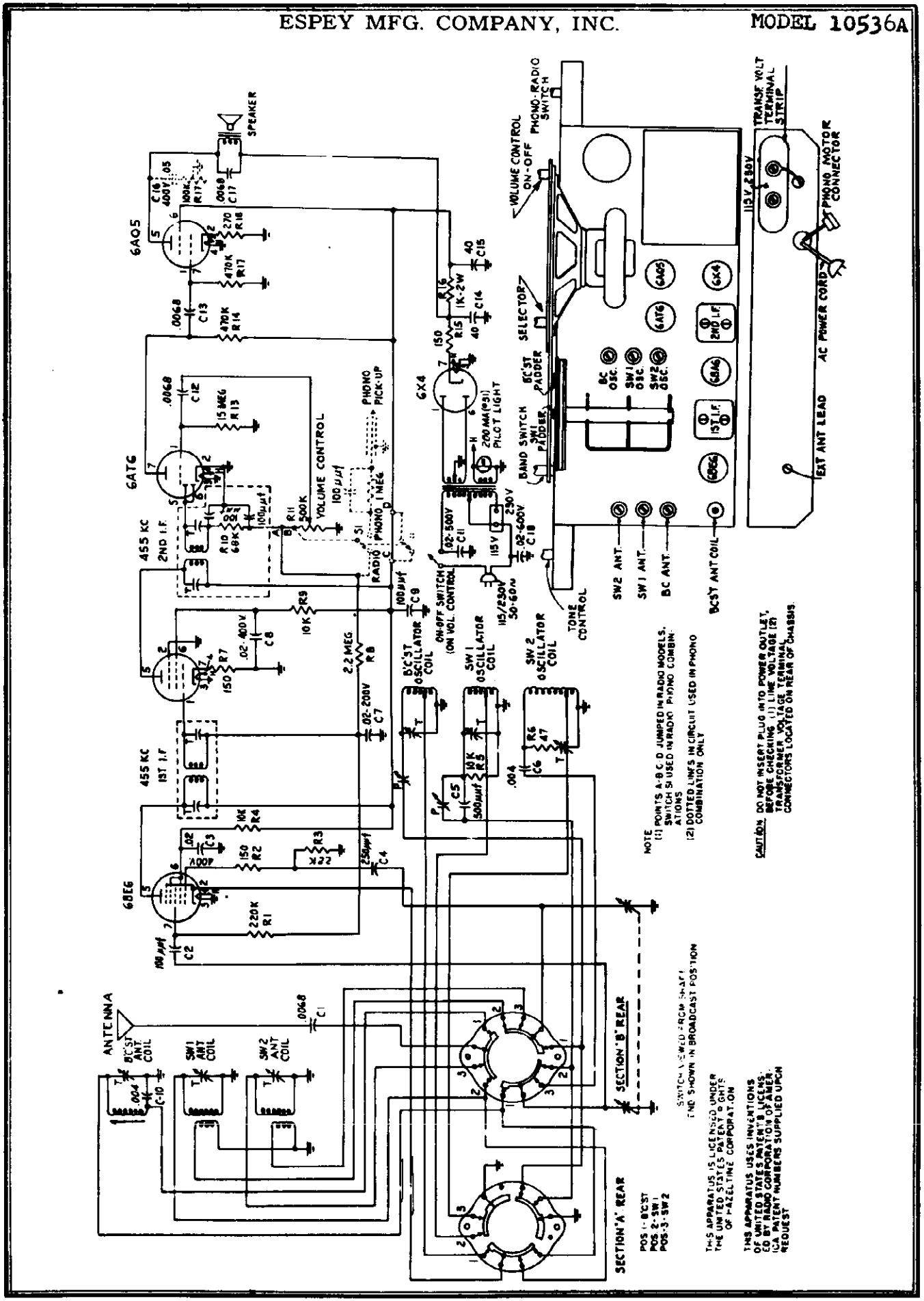
ESPEY MFG. COMPANY, INC.
MODEL 10536A
6AQ5
6AT6
6EA6
6BE6
6X4
SPEAKER
ANTENNA
VOLUME CONTROL
ON-OFF
PHONO-RADIO SWITCH
TRANSF VOLT TERMINAL STRIP
PHONO MOTOR CONNECTOR
AC POWER CORD
EXT ANT LEAD
SELECTOR
BAND SWITCH
PADDER
PILOT LIGHT
PHONO PICK-UP
TONE CONTROL
ON-OFF SWITCH (ON VOL. CONTROL)
455 KC 2ND I.F.
455 KC 1ST I.F.
BC OSC.
SW1 OSC.
SW2 OSC.
1ST I.F.
2ND I.F.
BC ANT
SW1 ANT
SW2 ANT
BC'ST ANT COIL
SW1 ANT COIL
SW2 ANT COIL
BC'ST OSCILLATOR COIL
SW1 OSCILLATOR COIL
SW2 OSCILLATOR COIL
SECTION 'A' REAR
SECTION 'B' REAR
POS 1 - BC'ST
POS 2 - SW1
POS 3 - SW2
NOTE
(1) POINTS A-B-C-D JUMPED IN RADIO MODELS. SWITCH IS USED IN RADIO PHONO COMBINATIONS
(2) DOTTED LINES IN CIRCUIT USED IN PHONO COMBINATION ONLY
CAUTION: DO NOT INSERT PLUG INTO POWER OUTLET, BEFORE CHECKING (1) LINE VOLTAGE (2) TRANSFORMER VOLTAGE TERMINAL CONNECTORS LOCATED ON REAR OF CHASSIS
THIS APPARATUS IS LICENSED UNDER THE UNITED STATES PATENTS AND RIGHTS OF WESTINGHOUSE CORPORATION
THIS APPARATUS USES INVENTIONS OF UNITED STATES PATENTS LICENSED BY RADIO CORPORATION OF AMERICA. USA PATENT NUMBERS SUPPLIED UPON REQUEST

©John F. Rider

FADA RADIO & ELECTRIC CO., INC.

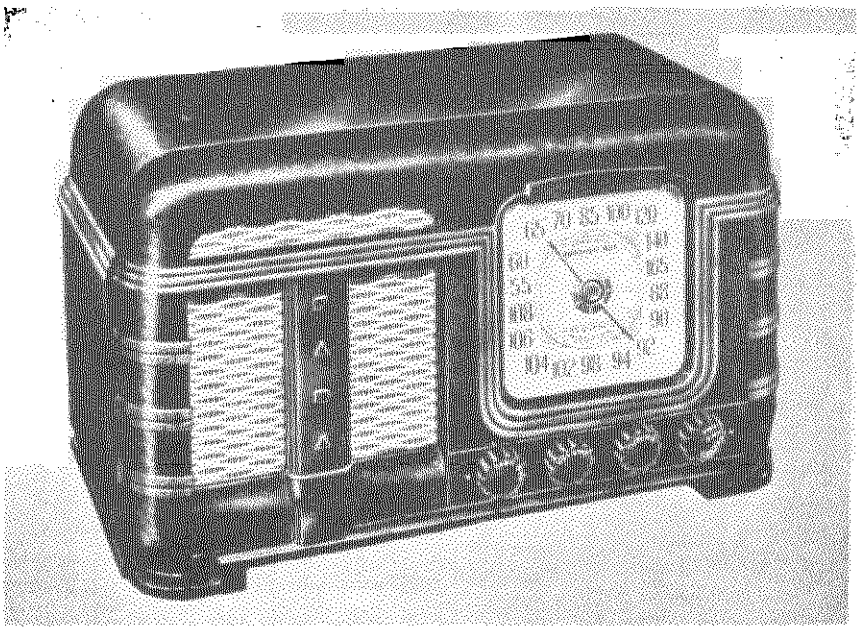

TUBE LAYOUT

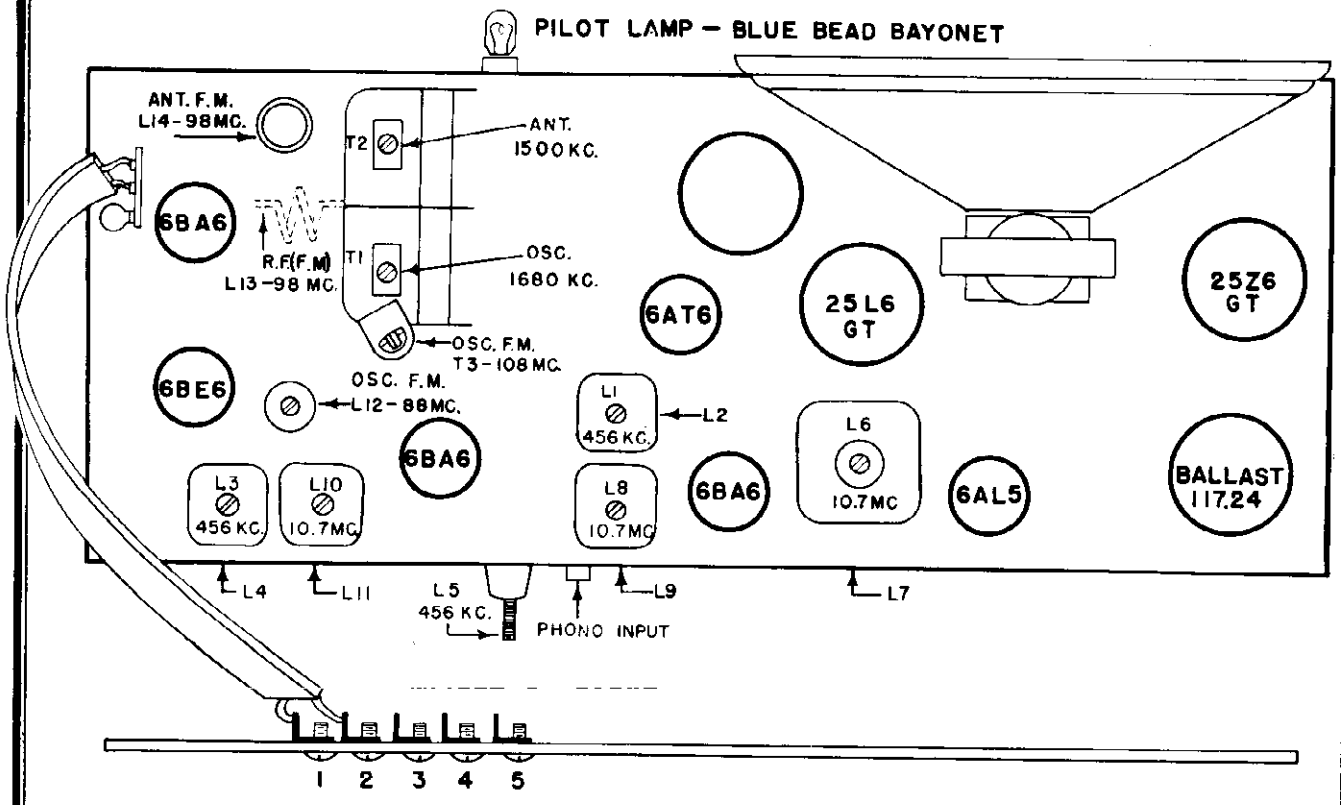

1 & 2 - EXT. F.M. ANT.
LINK 2 TO 3 FOR INT. F.M. ANT.
4 EXT. B.C. ANT.
5 GROUND.

TUNING RANGE
B.C. - 530 KC. - 1680 KC.
F.M. - 87MC. - 109MC.

MODEL 790

FADA RADIO & ELECTRIC CO., INC.

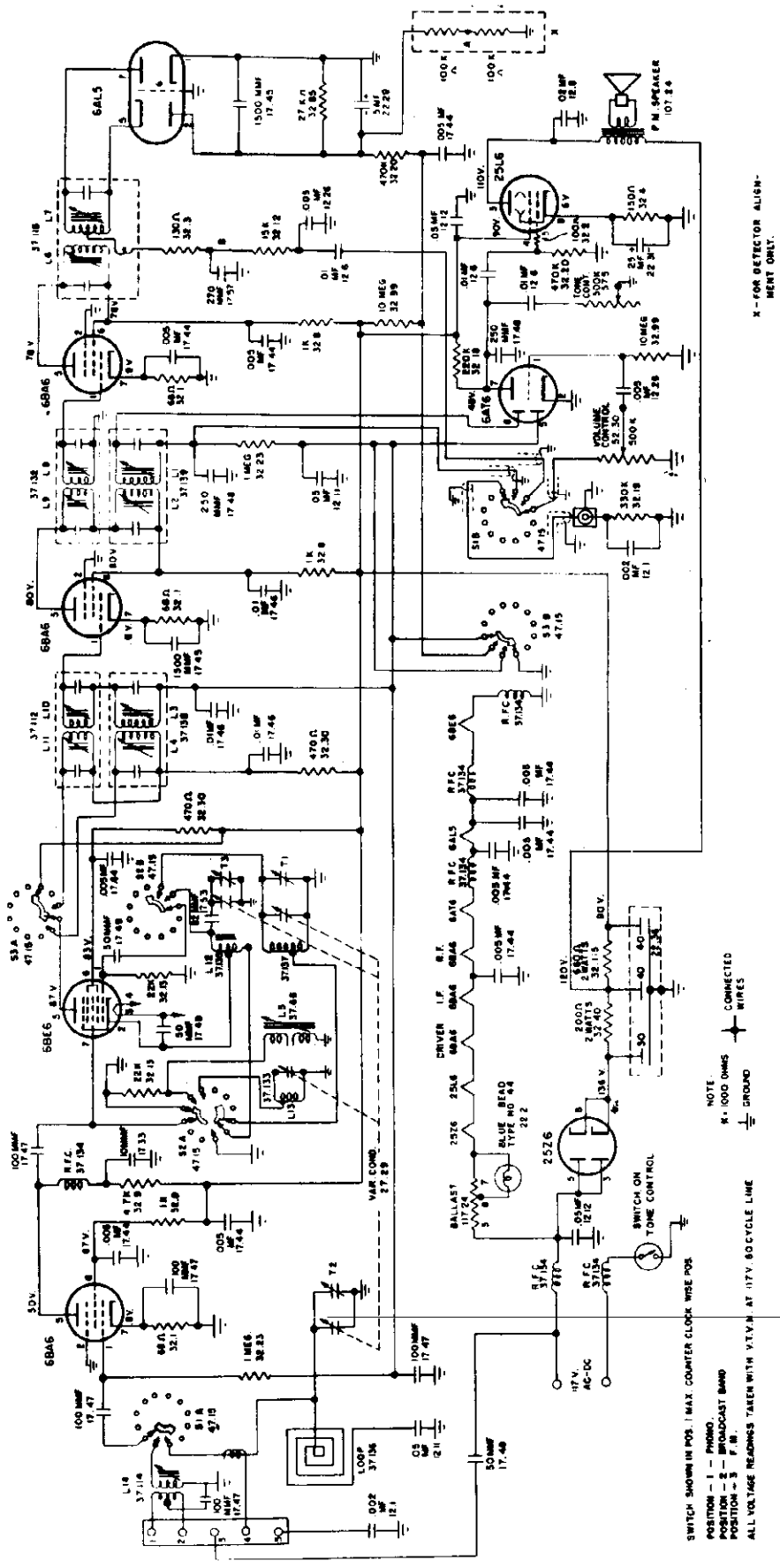

Tubes:
- 6BA6 R.F. Amplifier, A.M. and F.M.
- 6BE6 Osc. Converter, A.M. and F.M.
- 6BA6 I.F. stage, A.M. and F.M.
- 6BA6 Driver F.M.
- 6AT6 A.M. Detector and First Audio
- 6AL5 F.M. Detector
- 25L6GT Power output
- 25Z6GT Rectifier
- Ballast

Power supply: 40-60 cycles, 105-125V AC
Same voltage on DC

Power consumption: 60 watts

Frequency Range: Standard Broadcast—530-1680 KC
FM—87-109 MC

Speaker: 6" 1.47 oz. Alnico V Magnet
Speaker Transformer: 2000 ohms 400 cycles.
Speaker Voice Coil: 3.2 ohms

ALIGNMENT PROCEDURE

No attempt should be made to realign the various circuits until all other causes have been checked, unless the condition is so obvious as to indicate that realignment is necessary. Then proceed as follows:

A.M.:

Band switch in A.M. position
Volume Control and Tone Control in maximum clockwise position.
Low range A.C. meter connected across voice coil to indicate output.
Keep signal generator attenuated so as to maintain ½ scale reading on output meter.
Make certain that the dial pointer is exactly horizontal when variable condenser is fully meshed.

	Receiver Dial at	Signal Generator Frequency	Dummy Antenna	Connect Signal Generator To:	Refer to Chassis Layout for Location of component to be adjusted
1.	Variable Cond. fully open.	456 KC	1 MF	Control Grid 6BE6 tube, pin #7.	Adjust L1, L2, L3 and L4 for maximum output.
2.	Variable Cond. fully open.	456 KC	.1 MF	Top of first section of variable condenser (stator of the A.M.-R.F. section.)	Adjust L5 for minimum output.
3.	Variable Cond. fully open.	1680 KC	200 MMF	Terminal #4 on back of loop.	Adjust T1 for maximum output.
4.	1500 KC	1500 KC	200 MMF	Terminal #4 on back of loop.	Adjust T2 for maximum output.
5.	600 KC	600 KC	200 MMF	Terminal #4 on back of loop.	Check tracking and bend slotted end plate (first section) of variable if necessary.

F.M.:

Band switch F.M. position. Allow at least 10 minutes "warming up" period.
Use a standard V.T.V.M. with zero center setting.
Use an A.M. signal generator with no modulation, taking harmonics if fundamentals are not available.
Keep signal generator attenuated so as to maintain approximately a 3 volt reading.
Make certain that the dial pointer is exactly horizontal when variable condenser is fully meshed.

	Receiver Dial at:	Signal Generator Frequency	Signal Generator Connected to:	V.T.V.M. Connected to:	Refer to Chassis Layout for Location of Components to be adjusted
1.	98 MC	10.7 MC	Control grid Pin #1 6BA6 (2nd. I.F.) Socket Series with .01 Condenser.	Across the two 100,000 ohm resistors marked X.	Adjust L6 and L7 for maximum output.
2.	98 MC	10.7 MC	Control grid Pin #7 6BE6 Socket Series with .01 condenser.	"	Shunt L9 with a 680 ohm carbon resistor and adjust L8 for maximum output.
3.	98 MC	10.7 MC	"	"	Shunt L8 with a 680 ohm carbon resistor and adjust L9 for maximum output.
4.	98 MC	10.7 MC	"	"	Adjust L10, L11 and L6 for maximum output.
5.	98 MC	10.7 MC	"	Ground lead of V.T.V.M. to point A on schematic and probe to point B.	Adjust L7 for zero output. (Check zero setting of V.T.V.M.) Meter should register reverse when slug is rotated through zero output.
6.	108 MC	108 MC	Terminals 1 & 2 in series with 2 130 ohm carbon resistors.	Same as step #1.	Adjust T3 for maximum output. Starting with the trimmer at minimum capacity use the first peak.
7.	88 MC	88 MC	"	"	Adjust L12 for maximum output.
8.		Repeat steps 6 & 7 until L12 requires no further adjustment.			
9.	98 MC	98 MC	Same as step #6	Same as step #1.	Adjust L13 and L14 for maximum output.

Caution: If any adjustments are made in the A.M.-I.F.'s after the F. M. I.F.'s have been aligned, it would be necessary to readjust the F.M. I.F.'s.

Part No.	Description
12.26	Tubular Condenser .005 mfd—200 W.V.
12.6	Tubular Condenser .01 mfd—400 W.V.
12.8	Tubular Condenser .02 mfd—400 W.V.
12.1	Tubular Condenser .002 mfd—200 W.V.
12.11	Tubular Condenser .05 mfd—200 W.V.
12.12	Tubular Condenser .05 mfd—400 W.V.
17.47	Ceramic Condenser 100 mfd ±10% Insul.
17.49	Ceramic Condenser 50 mmfd ±10% "
17.48	Ceramic Condenser 250 mmfd ±10% "
17.33	Ceramic Condenser 10 mmfd ±20% "
17.44	Ceramic Condenser 5000 mmfd gmv "
17.46	Ceramic Condenser .01 mfd gmv "
17.57	Ceramic Condenser 270 mmfd ±10% "
17.53	Ceramic or Mica 82 mmfd ±5% "
17.45	Ceramic 1500 mmfd ±20% "
22.29	Electrolytic 5 mfd 25 W.V. Alu. can.
22.31	Electrolytic 25 mfd 25 W.V. Alu. can.
22.36	Electrolytic 30-40-40 150 W.V. Alu. can.
27.29	Variable Condenser (with drum)
32.1	Carbon Resistors 68 ohm ½ Watt ±10%
32.4	Carbon Resistors 150 ohm ½ Watt ±10%
32.3	Carbon Resistors 130 ohm ½ Watt ±10%
32.30	Carbon Resistors 470 ohm ½ Watt ±10%
32.8	Carbon Resistors 1000 ohm ½ Watt ±10%
32.9	Carbon Resistors 4700 ohm ½ Watt ±10%
32.85	Carbon Resistors 27,000 ohm ½ Watt ±10%
32.12	Carbon Resistors 15,000 ohm ½ Watt ±10%
32.13	Carbon Resistors 22,000 ohm ½ Watt ±10%
32.18	Carbon Resistors 220,000 ohm ½ Watt ±20%
32.19	Carbon Resistors 330,000 ohm ½ Watt ±20%
32.20	Carbon Resistors 470,000 ohm ½ Watt ±20%
32.23	Carbon Resistors 1 megohm ½ Watt ±20%
32.99	Carbon Resistors 10 megohm ½ Watt ±20%

Part No.	Description
32.40	Carbon Resistors 200 ohms 2 Watts ±10%
32.115	Carbon Resistors 660 ohms 2 Watts ±10%
32.2	Carbon Resistors 100 ohms ½ Watt ±10%
37.116	Coil Ratio Detector
37.112	Coil Fm I.F. 1st.
37.132	Coil FM I.F. 2nd.
37.138	Coil BC I.F. 1st.
37.139	Coil BC I.F. 2nd.
37.137	Coil BC Oscl.
37.135	Coil FM Oscl.
37.133	Coil FM R.F.
37.117	Coil FM Ant.
37.136	BC Loop
37.66	Wave Trap
37.134	R.F. Choke
47.15	Switch
52.30	Volume Control
57.5	Tone Control (with switch)
77.128	Crystal
77.126	Dial (Pointer)
77.127	Dial (Scale)
77.124	Dial (Vernier Drive)
97.141	Grille Silk
97.130	Back
97.131W	Cabinet (Walnut)
97.131V	Cabinet (Ivory)
97.142	Metal Grille (Speaker)
97.138	Baffle (Speaker)
107.24	Speaker with Transformer & Bracket 6" P.M.
117.24	Ballast Tube
132.7	Ceramic Trimmer 5-20 mmf N 500
142.45V	Knob Band Selector (Ivory)
142.45W	Knob Band Selector (Walnut)
142.46V	Knob Tuning (Ivory)
142.46W	Knob Tuning (Walnut)
142.47W	Knob Volume (Walnut)
142.47V	Knob Volume (Ivory)
142.48W	Knob Tone AC-On-Off (Walnut)
142.48V	Knob Tone AC-On-Off (Ivory)

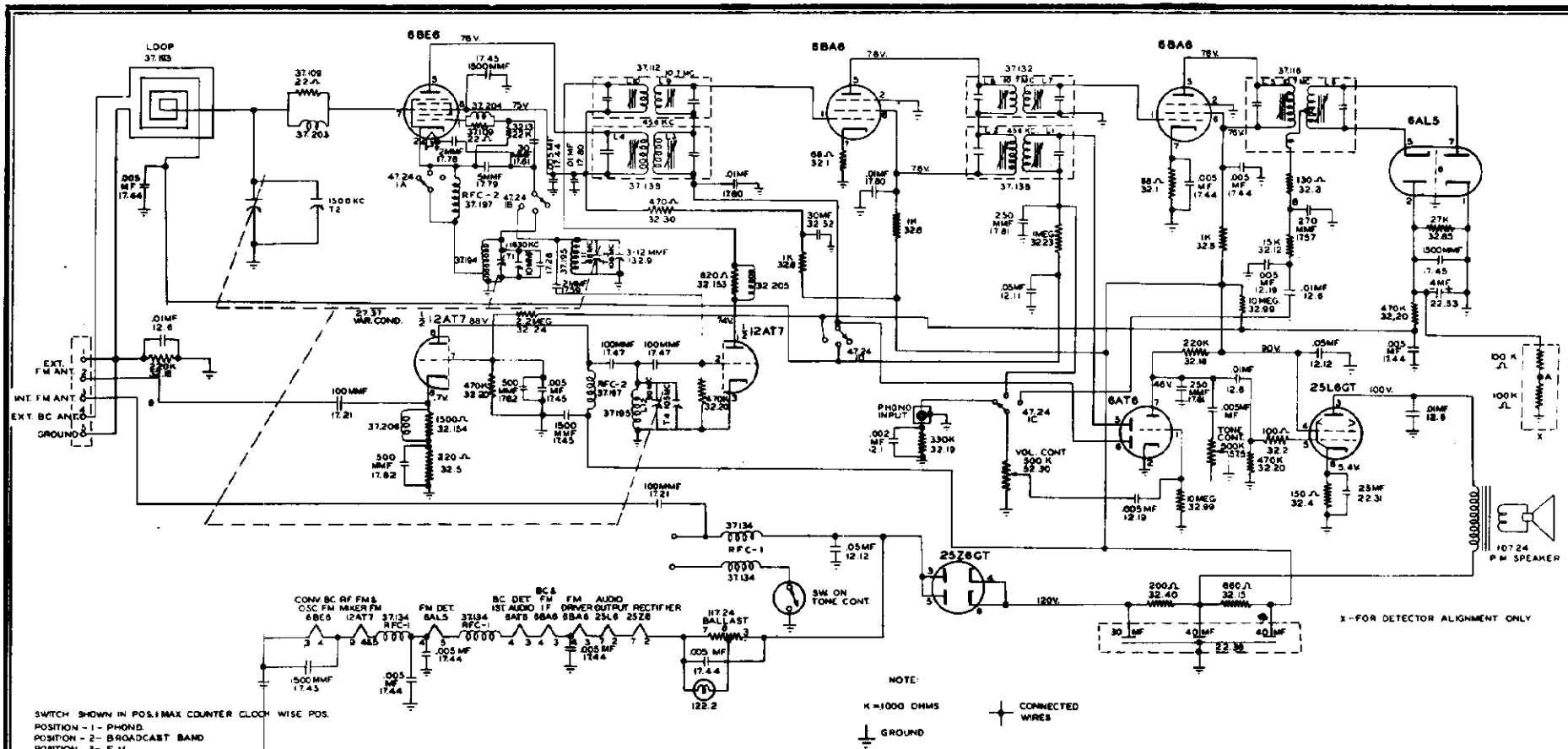
6BE6
6BA6
6BA6
6AL5
12AT7
6AT6
25L6GT
25Z6GT
LOOP
37.103
1500 KC
T2
RFC-2
37.197
RFC-1
37.134
RFC-2
37.197
T4
T5
T6
T7
T8
T9
T10
T11
T12
T13
T14
T15
T16
T17
T18
T19
T20
T21
T22
T23
T24
T25
T26
T27
T28
T29
T30
T31
T32
T33
T34
T35
T36
T37
T38
T39
T40
T41
T42
T43

MODEL 790
Series B etc.

FADA RADIO & ELECTRIC CO., INC.

ALIGNMENT PROCEDURE

No attempt should be made to realign the various circuits until all other causes have been checked, unless the condition is so obvious as to indicate that realignment is necessary. Then proceed as follows:

A.M.:

Band switch in A.M. position
Volume Control and Tone Control in maximum clockwise position.
Low range A.C. meter connected across voice coil to indicate output.
Keep signal generator attenuated so as to maintain ½ scale reading on output meter.
Make certain that the dial pointer is exactly horizontal when variable condenser is fully meshed.

	Receiver Dial at	Signal Generator Frequency	Dummy Antenna	Connect Signal Generator To:	Refer to Chassis Layout for Location of component to be adjusted
1.	Variable Cond. fully open.	456 KC	.1 MF	Control Grid 6BE6 tube, pin #7.	Adjust L1, L2, L3 and L4 for maximum output.
2.	Variable Cond. fully open.	1630 KC	200 MMF	Terminal #4 on back of loop.	Adjust T1 for maximum output.
3.	1500 KC	1500 KC	200 MMF	Terminal #4 on back of loop.	Adjust T2 for maximum output.
4.	600 KC	600 KC	200 MMF	Terminal #4 on back of loop.	Check tracking and bend slotted end plate (last section) of variable if necessary.

F.M.:

Band switch F.M. position. Allow at least 10 minutes "warming up" period.
Use a standard V.T.V.M. with zero center setting.
Use an A.M. signal generator with no modulation, taking harmonics if fundamentals are not available.
Keep signal generator attenuated so as to maintain approximately a 3 volt reading.
Make certain that the dial pointer is exactly horizontal when variable condenser is fully meshed.

	Receiver Dial at:	Signal Generator Frequency	Signal Generator Connected to:	V.T.V.M. Connected to:	Refer to Chassis Layout for Location of Components to be adjusted
1.	98 MC	10.7 MC	Control grid Pin #1 6BA6 (2nd. I.F.) Socket Series with .01 Condenser.	Across the two 100,000 ohm resistors marked X.	Adjust L5 and L6 for maximum output.
2.	98 MC	10.7 MC	Junction of L12 and T4 in Series with .01 condenser.	"	Shunt L8 with a 680 ohm carbon resistor and adjust L7 for maximum output.
3.	98 MC	10.7 MC	"	"	Shunt L7 with a 680 ohm carbon resistor and adjust L8 for maximum output.
4.	98 MC	10.7 MC	"	"	Adjust L9, L10 and L5 for maximum output.
5.	98 MC	10.7 MC	"	Ground lead of V.T.V.M. to point A on schematic and probe to point B.	Adjust L6 for zero output. (Check zero setting of V.T.V.M.) Meter should register reverse when slug is rotated through zero output.
6.	108 MC	108 MC	Ground to terminal 1 and hot side to terminal 2 in series with a 270 ohm carbon resistor.	Same as step #1.	Adjust T3 for maximum output. Starting with the trimmer at minimum capacity use the first peak.
7.	88 MC	88 MC	"	"	Adjust L11 for maximum output.
8.		Repeat steps 6 & 7 until L11 requires no further adjustment.			
9.	105 MC	105 MC	Same as step #6	Same as step #1.	Adjust T4 for maximum output.
10.	90 MC	90 MC	Same as step #6	Same as step #1	Adjust L12 for maximum output.
11.		Repeat steps 9 & 10 until T4 requires no further adjustment.			

Caution: If any adjustments are made in the A.M.-I.F.'s after the F. M. I.F.'s have been aligned, it would be necessary to readjust the F.M. I.F.'s.

TUBE LAYOUT

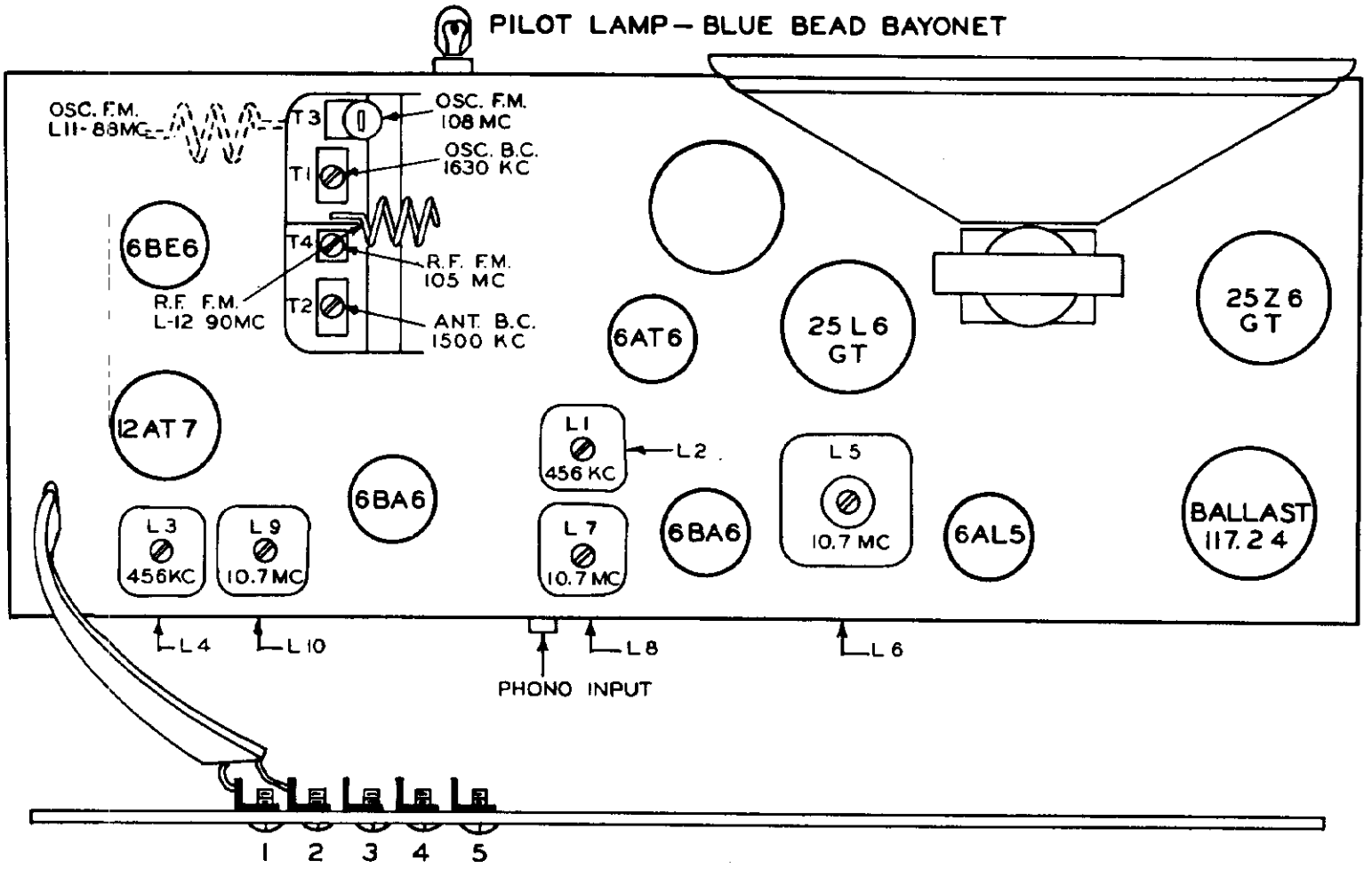

1 & 2 – EXT. F.M. ANT.
LINK 2 TO 3 FOR INT. F.M. ANT.
4 EXT. B.C. ANT.
5 GROUND.

TUNING RANGE
B.C. – 534 KC. – 1630 KC.
F.M. – 87.6 MC. – 108.4 MC.

Note: In some receivers L5 and L6 are interchanged.

MODEL 790 FADA RADIO & ELECTRIC CO., INC.
Series B etc.

PARTS LIST

Part No.	Description
12.1	Tubular Condenser .002 200 W.V.
12.19	Tubular Condenser .005 400 W.V.
12.6	Tubular Condenser .01 400 W.V.
12.11	Tubular Condenser .05 200 W.V.
12.12	Tubular Condenser .05 400 W.V.
12.56	Tubular Condenser .005 200 W.V. ±10%
17.59	Ceramic Cond. 2 mmf ±.5 mmf Insul.
17.78	Ceramic Cond. 2 mmf ±.5 mmf Insul. M750
17.79	Ceramic Cond. 5 mmf ±.5 mmf Insul.
17.61	Ceramic Cond. 30 mmf ±10% Insul.
17.47	Ceramic Cond. 100 mmf ±10% "
17.21	Ceramic Cond. 100 mmf ±20% "
17.81	Ceramic Cond. 250 mmf ±20% "
17.57	Ceramic Cond. 270 mmf ±10% "
17.62	Ceramic Cond. 500 mmf. ±20% "
17.45	Ceramic Cond. 1500 mmf ±20% "
17.44	Ceramic Cond. 5000 mmf gmv "
17.80	Ceramic Cond. 10,000 mmf gmv "
17.46	Ceramic Cond. 10,000 mmf gmv "
17.28	Ceramic Cond. 10 mmf ±20% "
22.36	Electrolytic 30-40-40 150 W.V. Alum. Can
22.52	Electrolytic 30 mf 150 W.V. Alum. Tube
22.31	Electrolytic 25 mf 25 W.V. Alum. Tube
22.53	Electrolytic 4 mf 50 W.V. Alum. Tube
27.37	Variable Cond. With drum
32.109	Carbon Res. 22 ohm ½ W. ±10% Carbon
32.1	Carbon Res. 68 ohms ½ W. ±10% Carbon
32.3	Carbon Res. 130 ohms ½ W. ±10% Carbon
32.4	Carbon Res. 150 ohm ½ W. ±10% Carbon
32.5	Carbon Res. 220 ohm ½ W. ±10% Carbon
32.30	Carbon Res. 470 ohm ½ W. ±10% Carbon
32.153	Carbon Res. 820 ohm ½ W. ±20% Carbon
32.8	Carbon Res. 1000 ohm ½ W. ±10% Carbon
32.12	Carbon Res. 15000 ohm ½ W. ±10% Carbon
32.85	Carbon Res. 27000 ohm ½ W. ±10% Carbon
32.13	Carbon Res. 22000 ohm ½ W. ±10% Carbon
32.18	Carbon Res. 220,000 ohm ½ W. ±20% Carbon
32.19	Carbon Res. 330,000 ohm ½ W. ±20% Carbon
32.20	Carbon Res. 470,000 ohm ½ W. ±20% Carbon
32.23	Carbon Res. 1 megohm ½ W. ±20% Carbon
32.24	Carbon Res. 2.2 megohm ½ W. ±20% Carbon
32.99	Carbon Res. 10 megohm ½ W. ±20% Carbon
32.41	Carbon Res. 1000 ohm 1 W. ±10% Carbon
32.40	Carbon Res. 200 ohm 2 W. ±10% Carbon
32.115	Carbon Res. 660 ohm 2 W. ±10% Carbon
32.154	Carbon Res. 1500 ohm 2 W. ±20% Carbon
32.2	Carbon Res. 100 ohm ½ W. ±10% Carbon
37.116	Coil Ratio Det.
37.112	Coil F.M. 1st. I.F.
37.132	Coil F.M. 2nd I.F.
37.138	Coil B.C. 1st. & 2nd I.F.
37.194	Coil B.C. Oscl.
37.195	Coil F.M. Oscl. (Made at Fada)
37.196	Coil F.M. R.F. (Made at Fada)
37.193	Coil B.C. Loop
77.128	Crystal
77.125	Dial Plate
77.126	Dial Pointer
77.152	Dial Scale
77.5	Dial Cord
77.4	Dial Spring
77.124	Vernier Drive
97.138	Baffle Speaker
97.141	Grille Silk
97.130	Back
97.131W	Cabinet (Walnut)
97.131V	Cabinet (Ivory)
97.142	Metal Grille
107.24	Speaker with Trans. & Bracket 6" PM
117.24	Ballast Tube
132.9	Ceramic Trimmer 3-12 mmf NPO
142.45V	Knob Band Selector (Ivory)
142.45W	Knob Band Selector (Walnut)
142.46V	Knob Tuning (Ivory)
142.46W	Knob Tuning (Walnut)
142.47W	Knob Volume (Walnut)
142.47V	Knob Volume (Ivory)
142.48W	Knob Tone AC-On-Off (Walnut)
142.48V	Knob Tone AC-On-Off (Ivory)

© John F. Rider

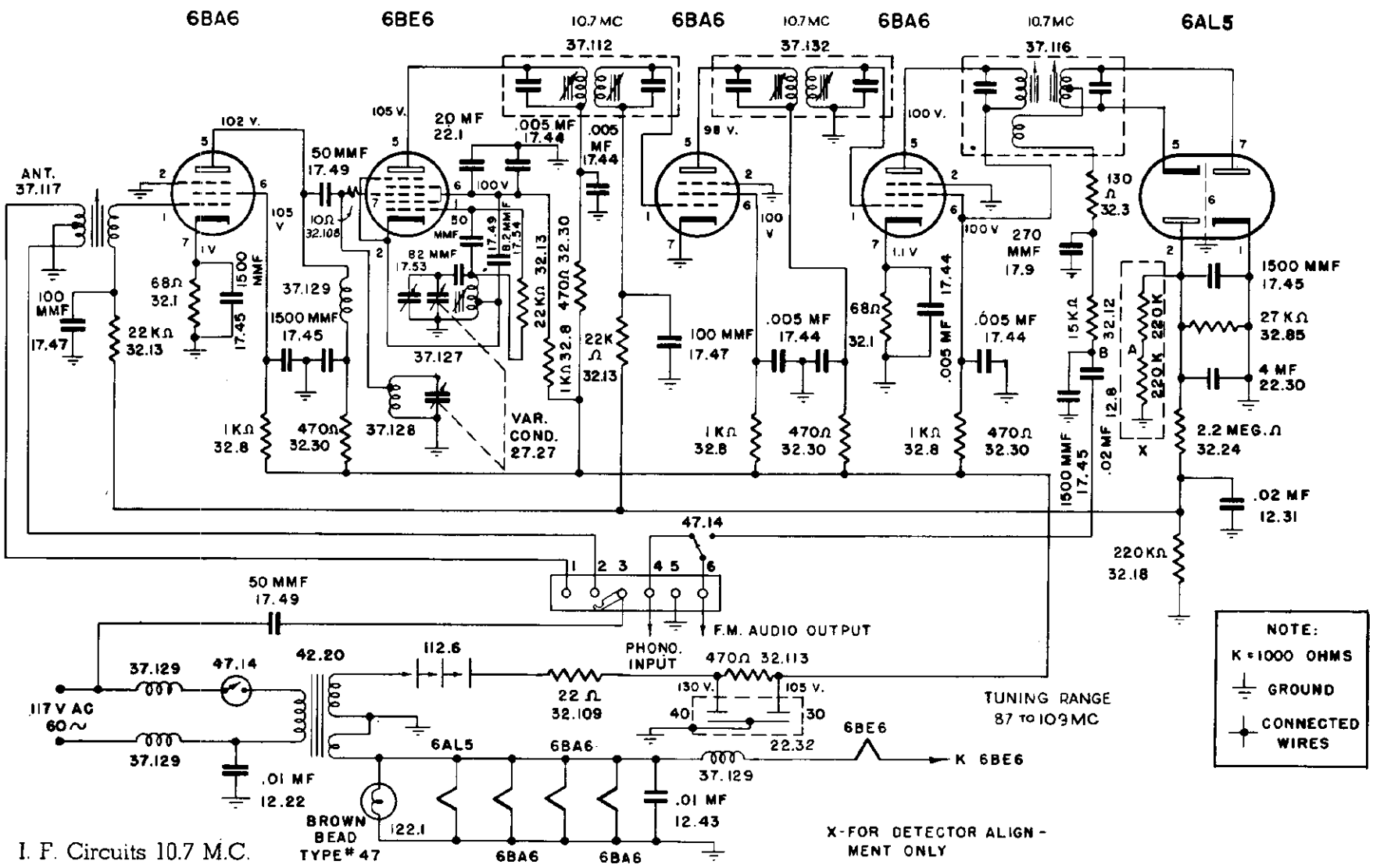

I. F. Circuits 10.7 M.C.

Power Supply 60 cycles 105-125 V A.C.

Power Consumption 30 Watts

Frequency Range 87-109 M.C.

Tubes: R.F. Amplifier	6BA6	Det. Avc.	6AL5
Osc. Converter	6BE6	Rectifier	Selenium
I.F. Stages	6BA6		
Driver	6BA6		

MODEL 795
F.M. Tuner

FADA RADIO & ELECTRIC CO., INC.

ALIGNMENT PROCEDURE

No attempt should be made to realign the various circuits until all other causes have been checked, unless the condition is so obvious as to indicate that re-alignment is necessary. Then proceed as follows:

Remove chassis from cabinet, turn on tuner and allow at least 10 minutes "warming up" period.

Use a standard V.T.V.M. with zero center setting.

Use an A.M. signal generator with no modulation, taking hormonics if fundamentals are not available.

Keep signal generator attenuated so as to maintain a 3 V reading.

Receiver Dial at:	Signal Generator Frequency	Signal Generator Connected to:	V.T. V.M. Connected to:	Refer to chassis Layout for location of trimmers.
98 MC 1.	10.7MC	Control Grid Pin #1 6BA6 (2nd I.F.) Socket Series with .01 cond.	Across the (2) 22000 ohm Resistors Pin #2 6AL5, Marked X.	Adjust L1, L2 for Maximum Output.
98 MC 2.	10.7MC	Control Grid Pin #7 6BE6 Socket Series with .01 Cond.	"	Shunt L4 with a 680 ohm ½ W carbon & adjust L3 for maximum output.
98 MC 3.	10.7MC	"	"	Shunt L3 with a 680 ohm ½ W carbon & adjust L4 for maximum output.
98 MC 4.	10.7MC	"	"	Adjust L5, L6 & L1 for maximum output.
98 MC 5.	10.7MC	"	Ground lead of V.T. V.M. to point A on schematic, and probe to point B.	Adjust L2 for zero output. (Check zero setting of V.T. V.M.) Meter should register reverse when slug is rotated through zero output.
Variable Condenser Fully open. 6.	109MC	Terminals 1 & 2 in series with (2) 130 ohm carbon ½ W resistors.	Same as Step #1	Adjust T1 for maximum output "Top" peak on trimmer.
Variable Condenser Fully closed. 7.	87 MC	"	"	Adjust L7 for maximum output.
Repeat steps 6 & 7 until L7 requires no further adjustment. 8				
98 MC 9	98 MC	Same as step #6	Same as Step #1	Adjust L8 & L9 for maximum output.

Part No.	Description
12.43	Tubular Condenser .01 mf 200 V
12.8	Tubular Condenser .02 mf 400 V
12.22	Tubular Condenser .01 mf 400 V
12.31	Tubular Condenser .02 mf 200 V
17.9	Mica Condenser 270 mmf ±10%
17.49	Ceramic Condenser 50 mmf ±10%
17.45	Ceramic Condenser 1500 mmf ±20%
17.44	Ceramic Condenser 5000 mmf Gmv. Disk type
17.53	Mica Condenser 82 mmf ±5%
17.47	Ceramic Condenser 100 mmf
17.54	Ceramic Condenser 8.2 mmf ±10% N 1800
22.30	Electrolytic Condenser 4 mf 50 WV
22.32	Electrolytic Condenser 30-40-20 mf 150 WV
27.27	Variable Condenser w/Drum
37.116	Coil Ratio Detector
37.112	Coil 1st. I.F. Transformer
37.132	Coil 2nd. I.F. Transformer
37.127	Coil Oscillator
37.128	Coil R. F.
37.117	Coil Antenna
37.129	Coil R. F. Choke
42.20	Power Transformer
47.14	Switch
77.16	Dial Pointer
77.123	Dial Scale
97.118	Cabinet Back
97.125W	Cabinet Walnut
97.125V	Cabinet Ivory
112.6	Selinium Rectifier
142.4W	Knob Walnut
142.4V	Knob Ivory

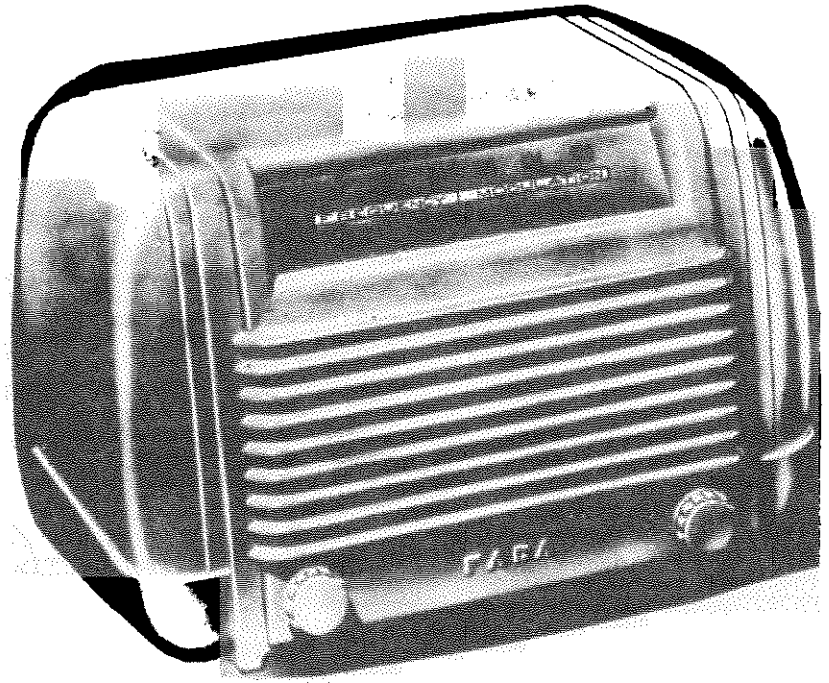

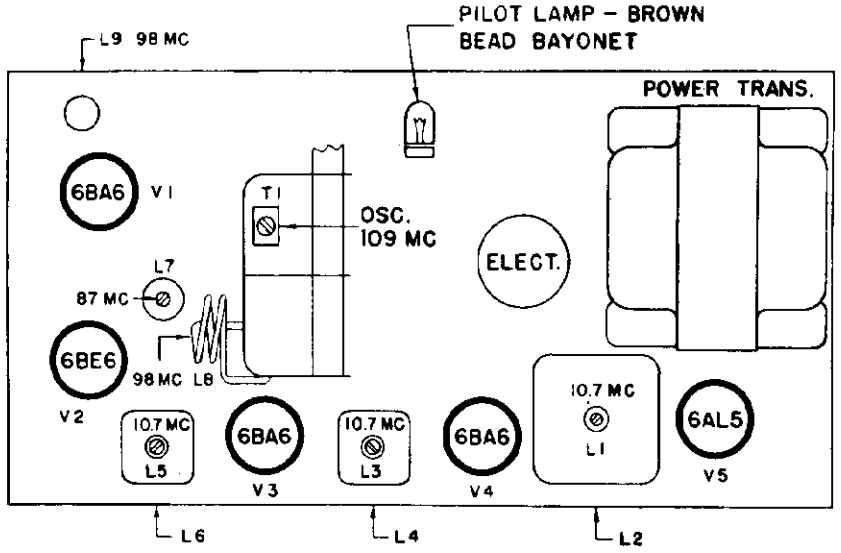

TUNING RANGE 87-109 MC

TUBE LAYOUT

MODEL 1005

FADA RADIO & ELECTRIC CO., INC.

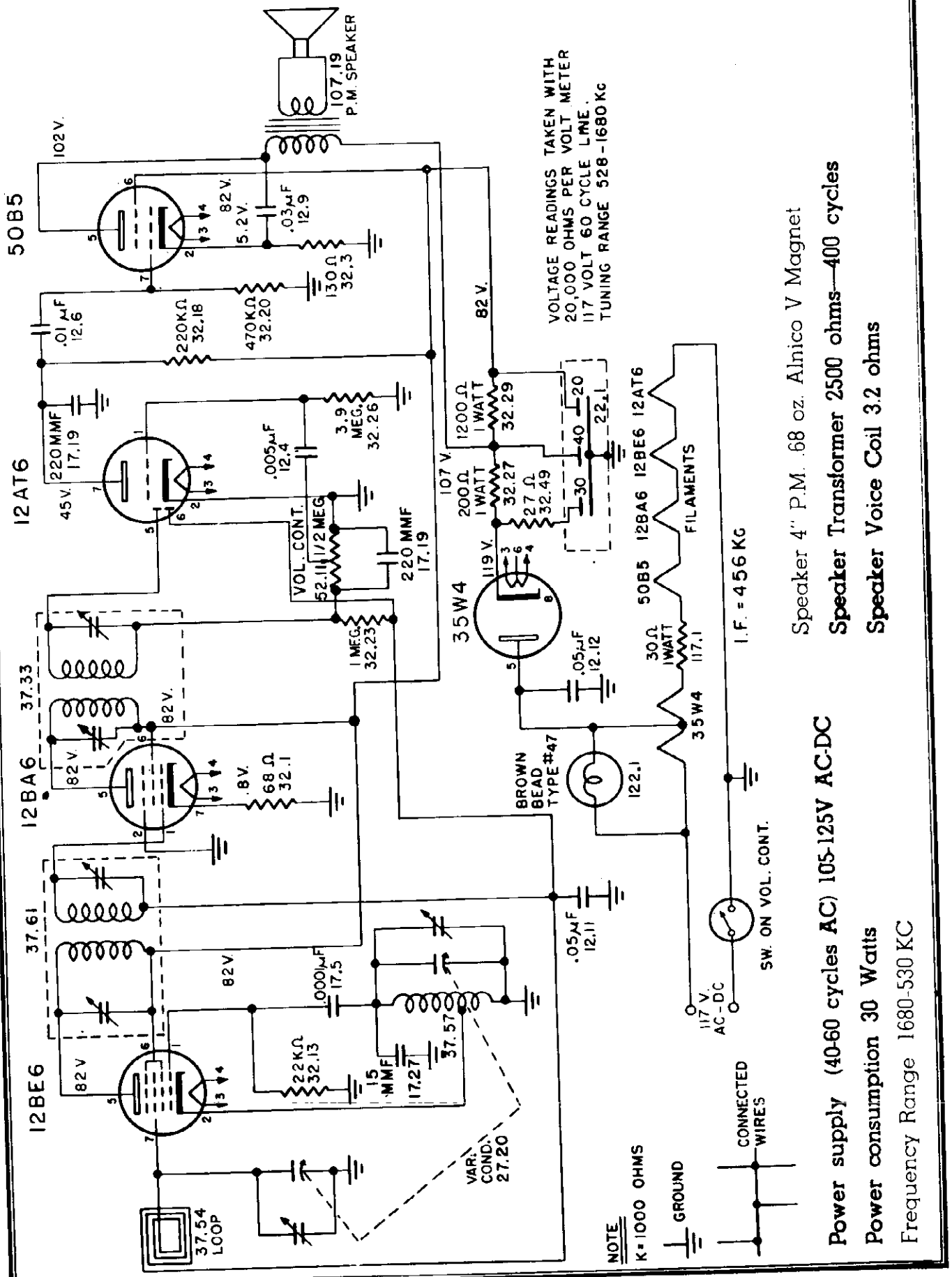

©John F. Rider

ALIGNMENT PROCEDURE

No attempt should be made to realign the various circuits until all other causes have been checked, unless the condition is so obvious as to indicate that realignment is necessary. Then proceed as follows:
Volume Control full on.
Low range A.C. meter connected across voice coil to indicate output.
Keep signal generator attenuated so as to maintain ½ scale reading on output meter.
Make certain that dial pointer is exactly horizontal when variable condenser is fully meshed.

Receiver Dial at:	Signal Generator	Dummy Antenna	Connect Signal Generator to:	Refer to Chassis Layout for Location of Trimmers
1 Full Open	Exactly 456 KC	.1 MF	Control Grid 12BE6 Tube (Top) Rear Section Variable Condenser	Adjust for Minimum Output T5 Note: On later production this trimmer is eliminated.
2 Full Open	Exactly 1680 KC		Radiating Loop (½ meter) 20" from Receiver	Adjust for Maximum Output T6
3 Approx. 1500 KC	Approx. 1500 KC		Radiating Loop (½ meter) 20" from Receiver	Adjust for Maximum Output T7
4 Approx. 600 KC	Approx. 600 KC		Radiating Loop (½ meter) 20" from Receiver	Check tracking and bend slotted end plate (rear section) of variable if necessary.
5				

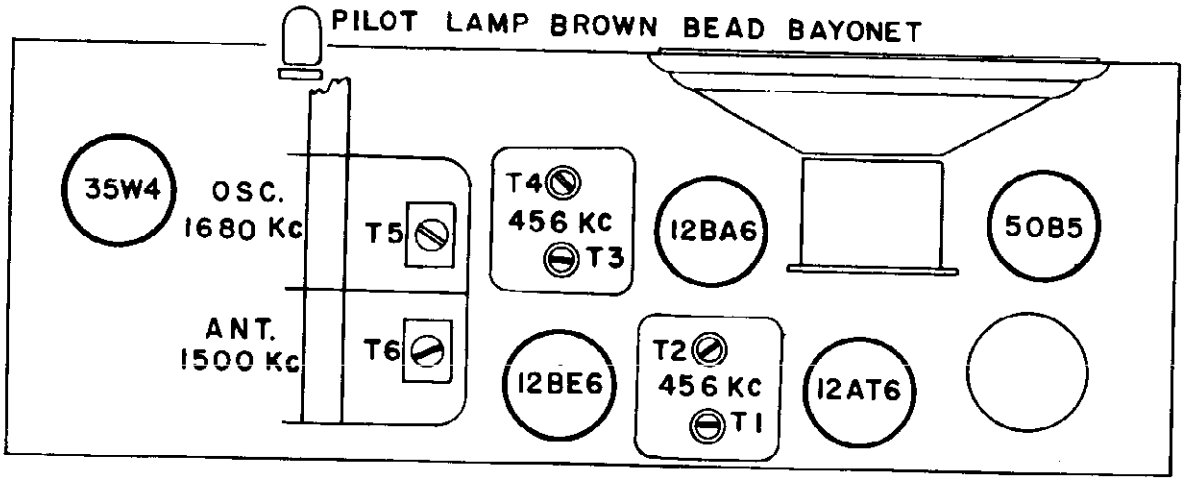

TUNING RANGE 530-1680 Kc

1005
TUBE LAYOUT

©John F. Rider

MODEL 1005 FADA RADIO & ELECTRIC CO., INC.

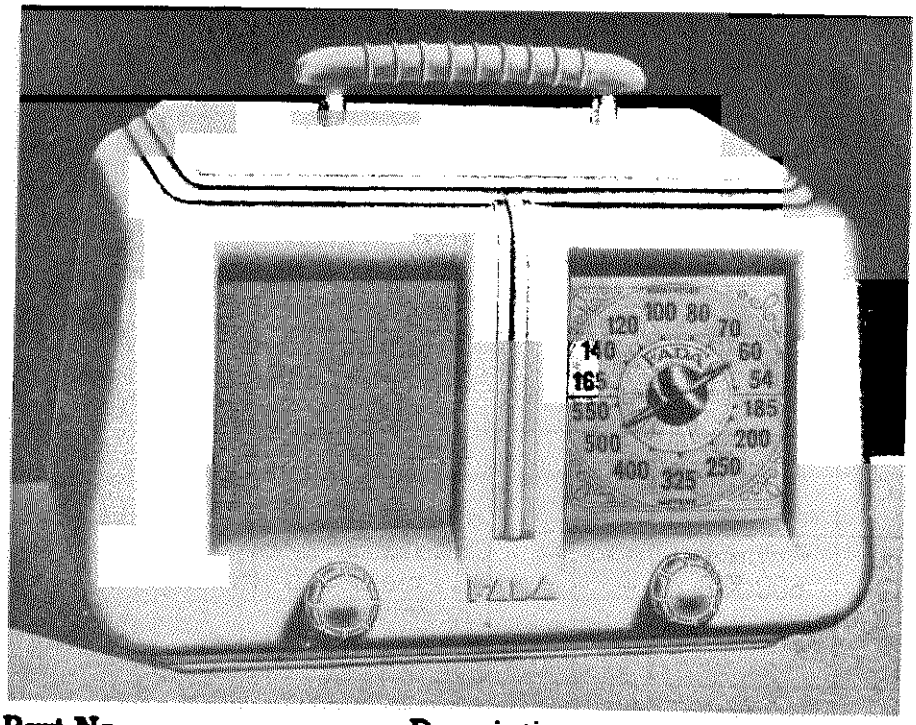

Part No.	Description
12.4	Tubular Condenser .005 mf 600 V
12.6	Tubular Condenser .01 mf 400 V
12.9	Tubular Condenser .03 mf 400 V
12.11	Tubular Condenser .05 mf 200 V
12.12	Tubular Condenser .05 mf 400 V
17.21	Mica Condenser 100 mmf ± 10%
17.22	Mica Condenser 220 mmf ± 10%
22.19	3 Section Electrolytic Condenser 30-40-20 mf 150 W.V.
27.20	Variable Condenser
37.57	Oscillator Coil
37.54	Loop Antenna & Back
37.61	Input I.F. Transformer complete
37.22	Output I.F. Transformer complete
52.1	Volume Control w/switch
72.1	Power Cord (Approved)
77.78	Dial Pointer
77.92	Dial Scale (Calibrated)
97.71	Cabinet — state color
142.25	Cabinet Knobs — state color
97.80	Cabinet Handle — state color
107.19T	4" P.M. Speaker with Transformer
107.19	4" P.M. Speaker less Transformer
42.2	Speaker Transformer for Above
117.1	30 ohm 1 W. Resistor

Tubes:

Osc. Converter	12BE6	Power Output	50B5
I.F. Amplifier	12BA6	Rectifier	35W4
Det. Avc. A.F.	12AT6		

©John F. Rider

FARNSWORTH TELEV. & RADIO CORP. MODELS ET-667BRV, CHASSIS C-172; ET-667BRX, CHASSIS C-164; ET-668WTV, CHASSIS C-172; ET-668WTX, CHASSIS C-164

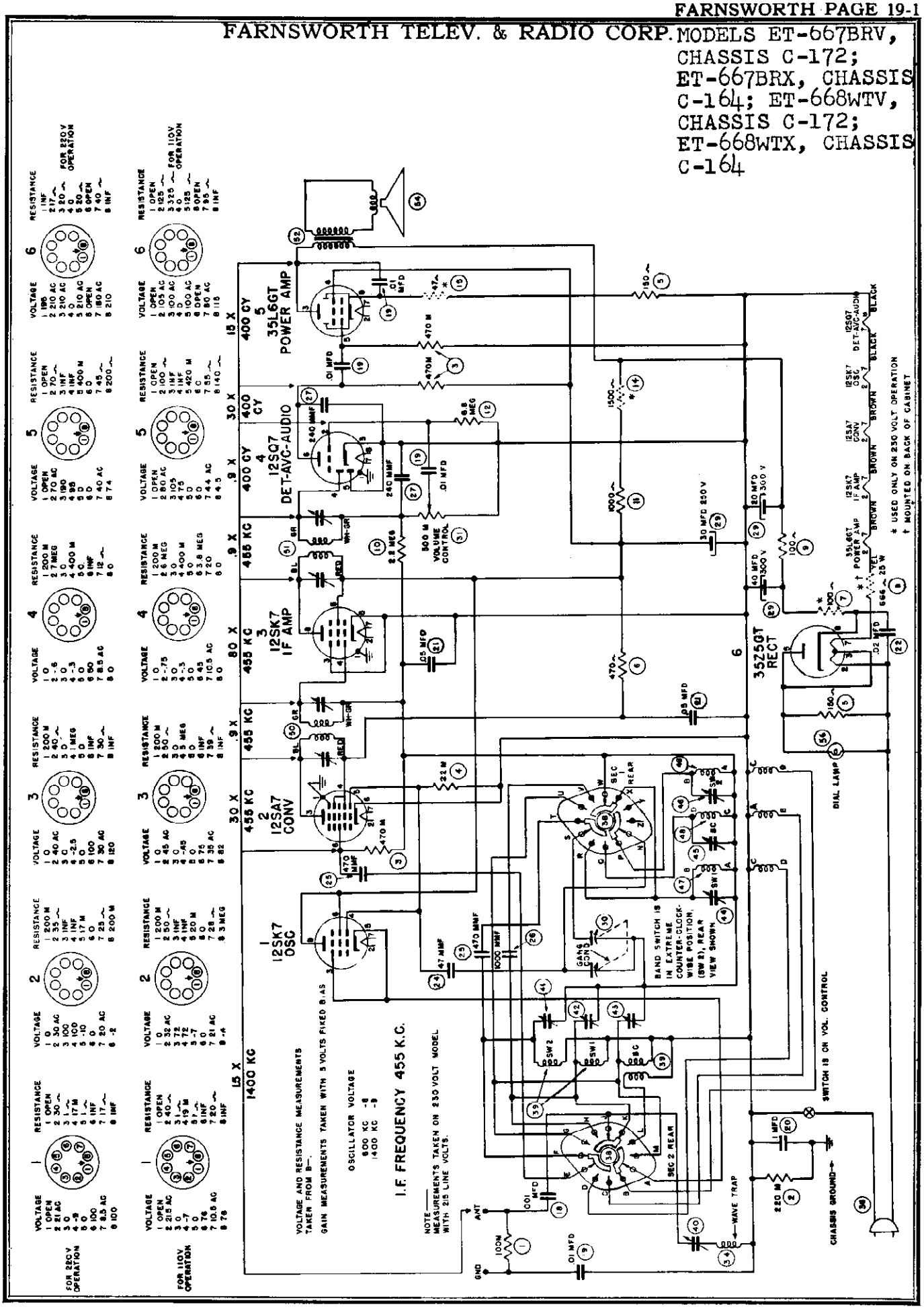

CLARI-SKEMATIX
Registered Trademark

MODELS ET-667BRV, CHASSIS C-172; ET-667BRX, CHASSIS C-164; ET-668WTV, CHASSIS C-172; ET-668WTX, CHASSIS C-164

FARNSWORTH TELEV. & RADIO CORP.

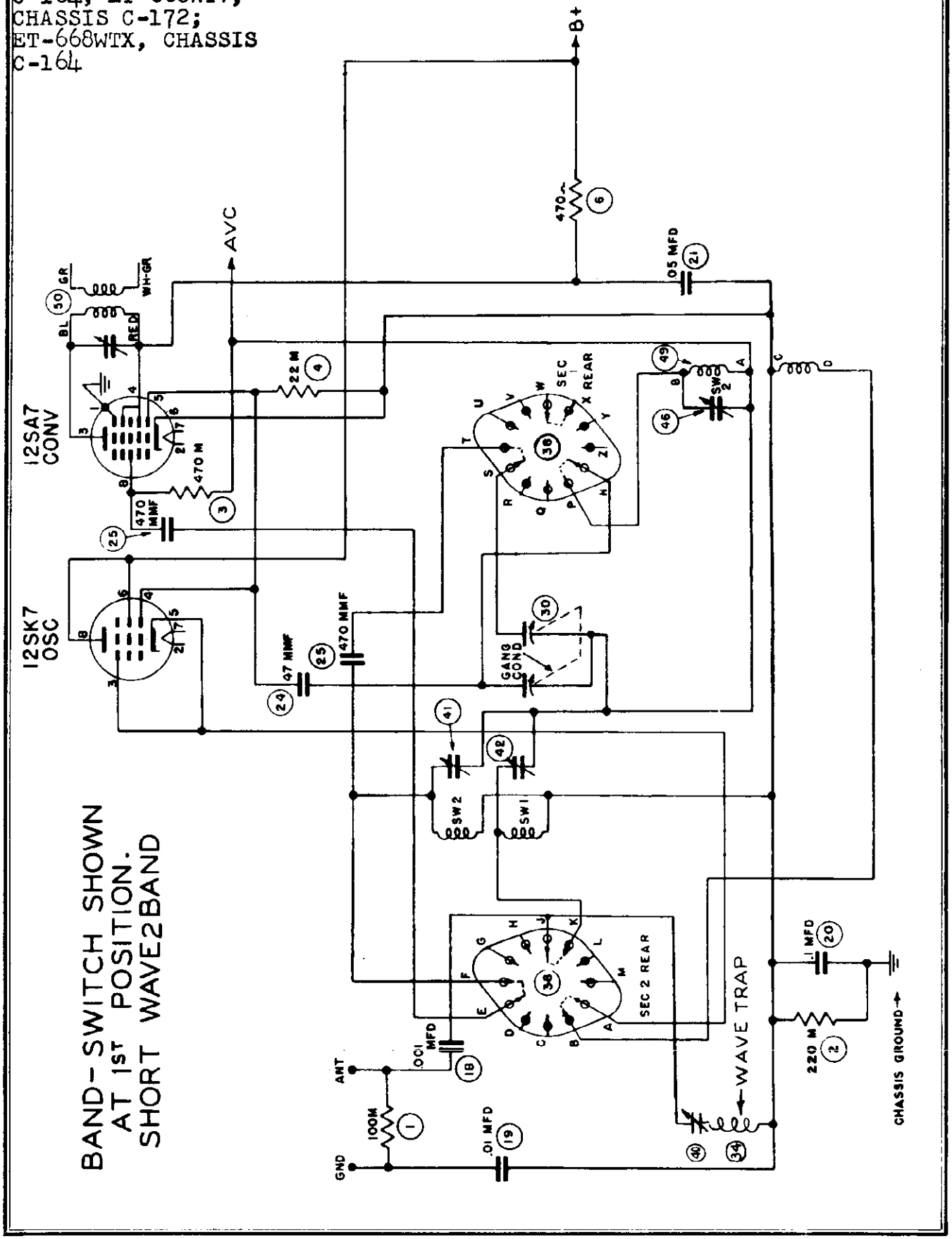

© John F. Rider

FARNSWORTH TELEV. & RADIO CORP. MODELS ET-667BRV, CHASSIS C-172; ET-667BRX, CHASSIS C-164; ET-668WTV, CHASSIS C-172; ET-668WTX, CHASSIS C-164

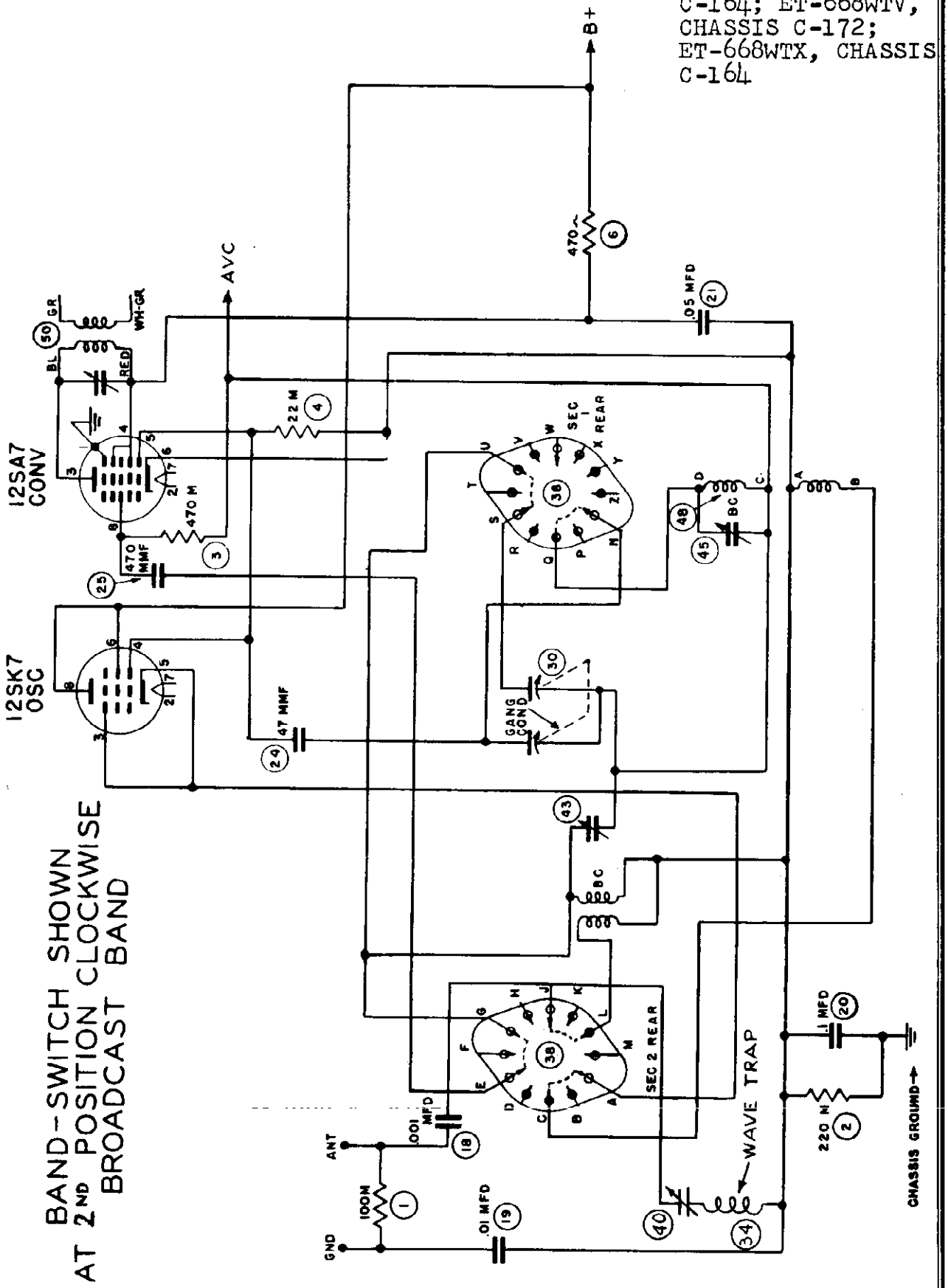

© John F. Rider

CLARI-SKEMATIX
Registered Trademark

MODELS ET-667BRV, FARNSWORTH TELEV. & RADIO CORP.
CHASSIS C-172;
ET-667BRX, CHASSIS
C-164; ET-668WTV,
CHASSIS C-172;
ET-668WTX, CHASSIS
C-164

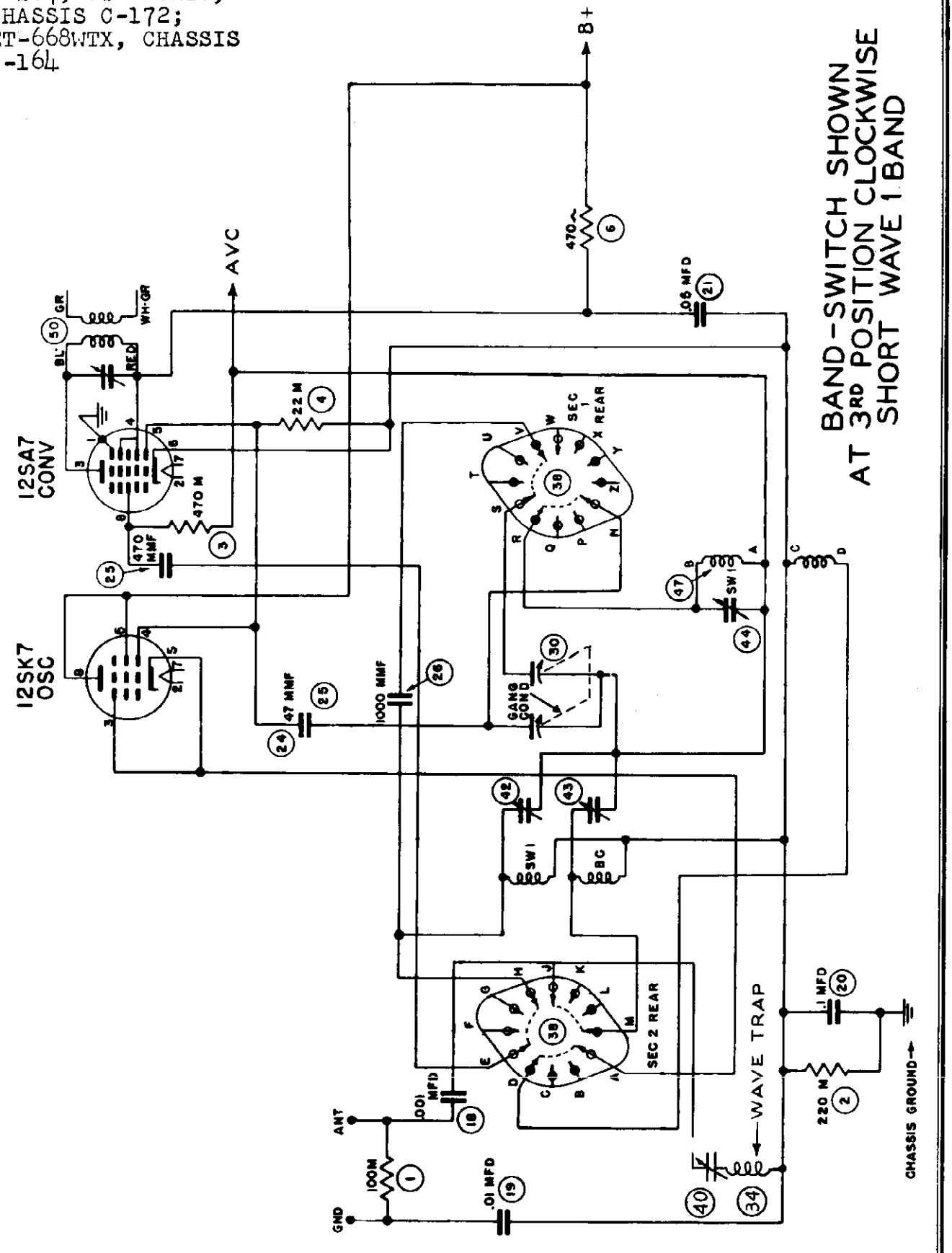

© John F. Rider

MODELS ET-668WTV, CHASSIS C-172; ET-668WTX, CHASSIS C-164

FARNSWORTH TELEV. & RADIO CORP.

MODELS ET-667BRV, CHASSIS C-172; ET-667BRX, CHASSIS C-164

EQUIPMENT AND PROCEDURE FOR ALIGNMENT

An output meter and a signal generator are required for proper alignment of these sets. The signal generator should be calibrated at the following points: 455 Kc., 600 Kc., 1000 Kc., 1500 Kc., 3.5 Mc., 8 Mc., 9 Mc. and 20 Mc. All adjustments should be made with the volume control set for maximum, keeping the signal generator output as low as possible to prevent AVC action and incorrect settings.

Connect the low side of the signal generator to the ground terminal on the chassis through a .1 Mfd. condenser. Connect the high side of generator to antenna terminal through dummy load of 200 MMF for broadcast band and a dummy load of 400 ohms for shortwave.

STEPS	DUMMY ANTENNA	SET GENERATOR AT	SET GANG AT	ADJUST	LOCATED	TO OBTAIN
1	SET VOLUME CONTROL AT MAXIMUM				Top of I.F. Trans.	Maximum Output
2	Broadcast 200 MMF	455 Kc.	Minimum	2nd. I.F. Trimmers		
3				1st. I.F. Trimmers		
4			1000 Kc.	Wave Trap Trimmer	See Illustration on page one	Minimum Output
5		1500 Kc.	1500 Kc.	B.C. Osc. Trimmer		MAXIMUM OUTPUT
6		1500 Kc.	1500 Kc.	B.C. RF Trimmer		
7		CHECK POINTER CALIBRATION AT 1000 Kc. & 600 Kc.				
8	S.W. 1 400 ohms	8 Mc.	8 Mc.	S.W. 1 Osc. Trimmer *	See Illustration on page one	
9		8 Mc.	8 Mc.	S.W. 1 RF Trimmer **		
10		CHECK 3.5 Mc.				
11	S.W. 2 400 ohms	20 Mc.	20 Mc.	S.W. 2 Osc. Trimmer *		
12		20 Mc.	20 Mc.	S.W. 2 RF Trimmer **		
13		CHECK 9 Mc.				

*When aligning the Shortwave oscillators use the peak found farthest out from maximum capacity on the oscillator trimmers.

**Use the peak nearest maximum capacity on the R.F. trimmers.

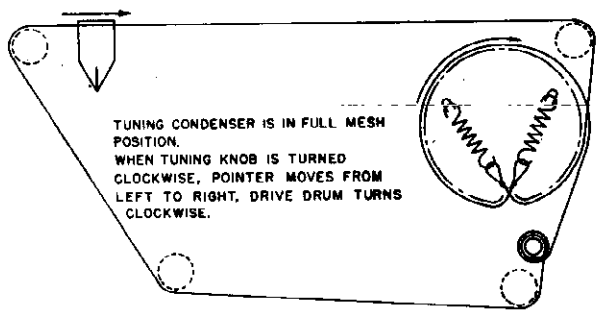

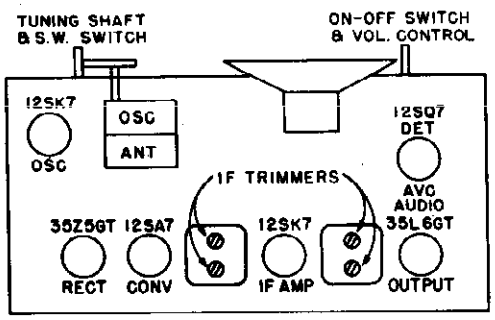

MODELS ET-667BRV, CHASSIS C-172; ET-667BRX, CHASSIS C-164

FARNSWORTH TELEV. & RADIO CORP.

MODELS ET-668WTV, CHASSIS C-172; ET-668WTX, CHASSIS C-164

Ref. No.	Part No.	DESCRIPTION
1	77214	100M ohms
2	77216	220M ohms
3	77217	470M ohms
4	77266	22M ohms
5	77259	150 ohms
6	77261	470 ohms
7	77417	100 ohms, 4 watt, wire wound
8	77344	666 ohms, 25 watt, wire wound
9	77258	100 ohms
10	77270	2.2 megohms
11	77304	1000 ohms, 2 watt
12	77273	6.8 megohms
14	77332	1500 ohms, 3 watt
15	77208	47 ohms
18	25360	.001 mfd. molded oil paper capacitor 600 V.
19	25365	.01 mfd. molded oil paper capacitor 600 V.
20	25361	.1 mfd. molded oil paper capacitor 400 V.
21	25362	.05 mfd. Molded oil paper capacitor 200 V.
22	25363	.02 mfd. molded oil paper capacitor 800 V.
24	25193	47 mmf. Mica capacitor
25	25284	470 mmf. Mica capacitor
26	25053	1000 mmf. Mica capacitor
27	25187	240 mmf. Mica capacitor
29	25283	Electrolytic Capacitor 40-20 mfd. 300 V., 30 mfd., 250 V.
30	26227	2 Gang Tuning Capacitor
31	78118	Volume Control
34	38650	Wave Trap Coil
36	27118	Line Cord
38	90198	Band Switch
39	38651	Antenna Coil
40	26229	Wave Trap Trimmer
41	26228	SW2 Antenna Trimmer
42	26228	SW1 Antenna Trimmer
43	26228	BC Antenna Trimmer
44	26228	SW1 Oscillator Trimmer
45	26228	BC Oscillator Trimmer
46	26238	SW2 Oscillator Trimmer
47	38648	SW1 Oscillator Coil
48	38647	BC Oscillator Coil
49	38649	SW2 Oscillator Coil
50	38536	1st. I.F. Transformer
51	38537	2nd I.F. Transformer
52	94179	Output Transformer
54	81146	Speaker
56	42186	Dial Lamp 150 Ma.
	80033	Antenna and Ground Terminal Strip
	31339	Dial Scale
	60431	Dial Background
	11329	Dial Pointer
	41106	Drive Cord (36" long approx.) and Springs
	56994	Drive Drum
	80167	Molded octal tube socket
	07412	Back cover Ass'y. ET-667 BRX and ET-668 WTX
	13541	Back cover Ass'y. ET-667 BRV and ET-668 WTV
	09277	Knob and Set screw
	54091	Band Switch Lever
	05098	Baffle Assembly ET-667 BRV and ET-667 BRX
	05099	Baffle Assembly ET-668 WTX and ET-668 WTX
	H-263	Cabinet for ET-667 BRX and ET-667 BRV
	H-264	Cabinet for ET-668 WTV and ET-668 WTX

BOTTOM VIEW OF CHASSIS

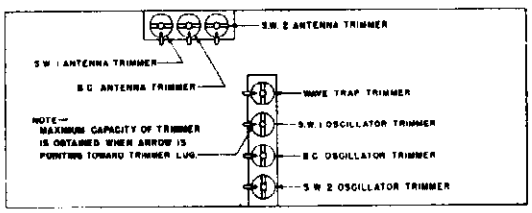

BAND SWITCH

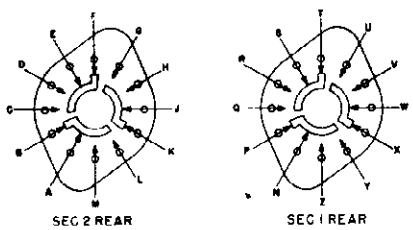

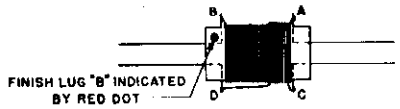

SHORT WAVE 1 OSCILLATOR COIL

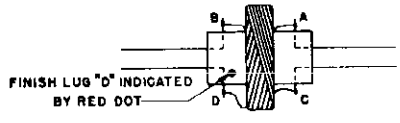

BROADCAST OSCILLATOR COIL

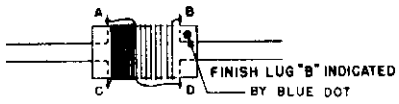

SHORT WAVE 2 OSCILLATOR COIL

FARNSWORTH TELEV. & RADIO CORP. MODEL K-262P

SPECIFICATIONS

CIRCUIT ..... Superheterodyne
POWER ..... 105-125 volts A.C.
50 watts at 117 volts A.C.
FREQUENCIES: Standard Broadcast Band ..... 540 Kc—1625 Kc
Intermediate Frequency ..... 455 Kc
TUBE COMPLEMENT

12SK7	RF Amplifier	12SQ7	Det, AVC, Audio
12SA7	Converter-Oscillator	35L6GT	Output
12SK7	IF Amplifier	35Z5GT	Rectifier

ANTENNA ..... Built-in loop (connection for external antenna)
SPEAKER ..... Alnico #5 PM—6 x 9 Elliptical
RECORD CHANGER ..... Type P-73

ALIGNMENT OF THE RECEIVER

EQUIPMENT REQUIRED

Signal generator, calibrated at 455 Kc, 600 Kc, and 1500 Kc.
Output Indicator
Insulated Screw Driver

PRELIMINARY INSTRUCTIONS

Volume control is set to maximum. Keep the signal generator output as low as possible to prevent A.V.C. action and incorrect alignment. The use of an excessively strong signal is almost certain to produce misalignment.

Connect the high side of the signal generator to one side of the loop primary. Connect the other side of the primary to the B-lead. The other side of the signal generator should then be connected to the B-lead.

TABULATION FOR ALIGNMENT

Steps	Connect Signal Generator	Set Generator At	Set Gang At	Adjust	Located	To Obtain
1	Set Volume Control For Maximum Output					
2	To Loop Primary	455 Kc.	Minimum Capacity	2nd I. F. Trimmers	Top of I.F. Transformer	Maximum Output
3				1st I. F. Trimmers		
4		1500 Kc.	1500 Kc.	Osc. Trimmer	On Tuning Condenser	
5		1500 Kc.	1500 Kc.	Ant. Trimmer	On Tuning Condenser	
6	Check Pointer Calibration at 600 Kc.					

MODEL K-262P FARNSWORTH TELEV. & RADIO CORP.

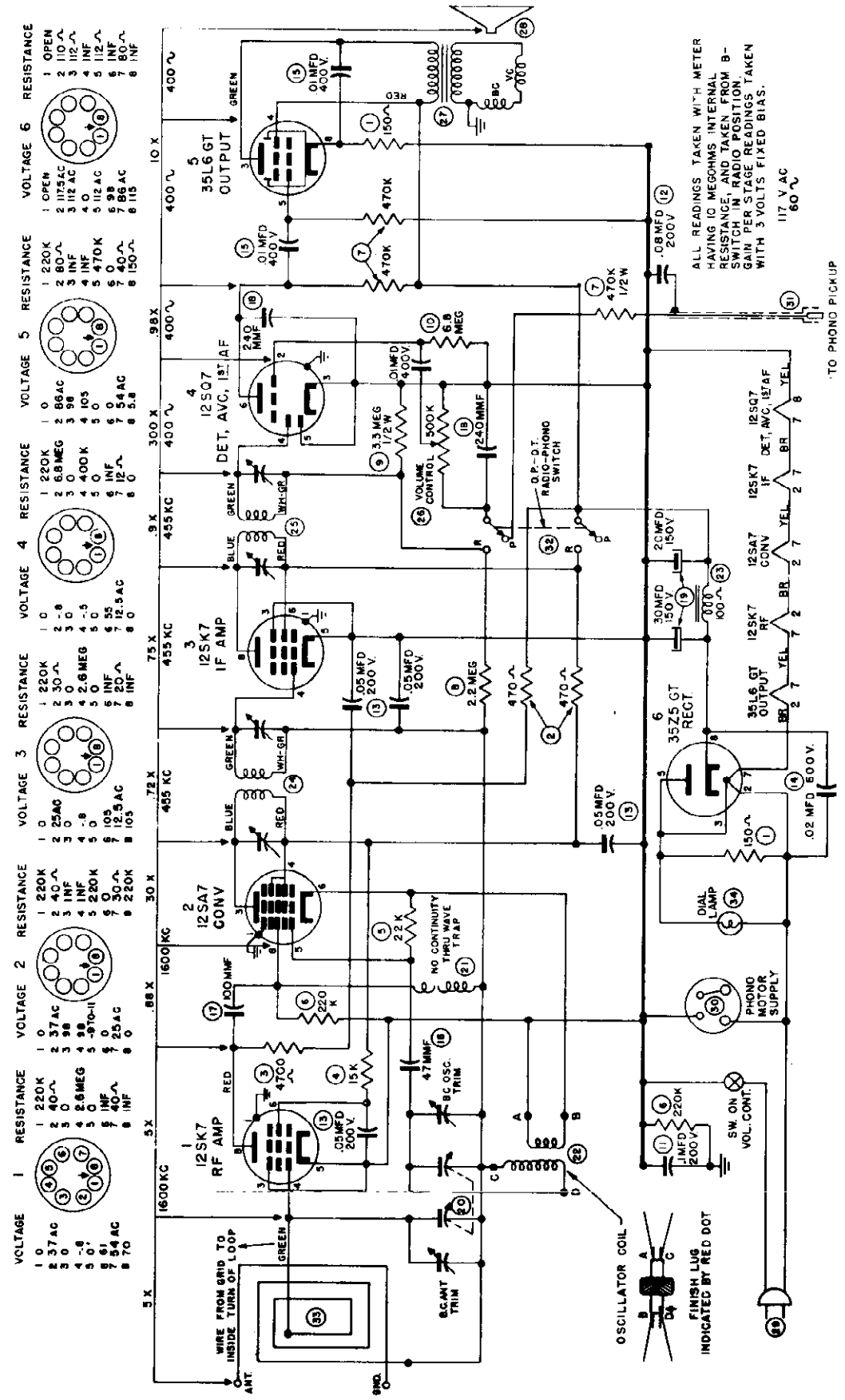

©John F. Rider

FARNSWORTH TELEV. & RADIO CORP. MODEL K-262P

DIAL STRINGING

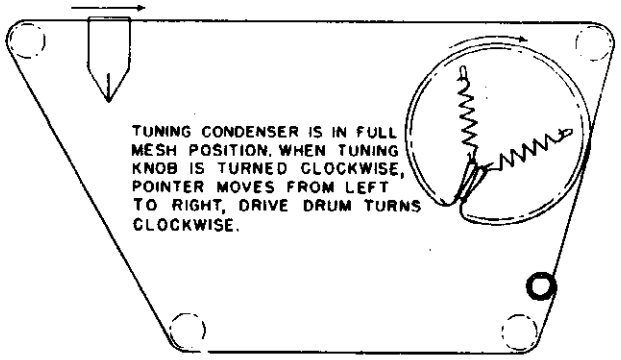

CHASSIS LAYOUT

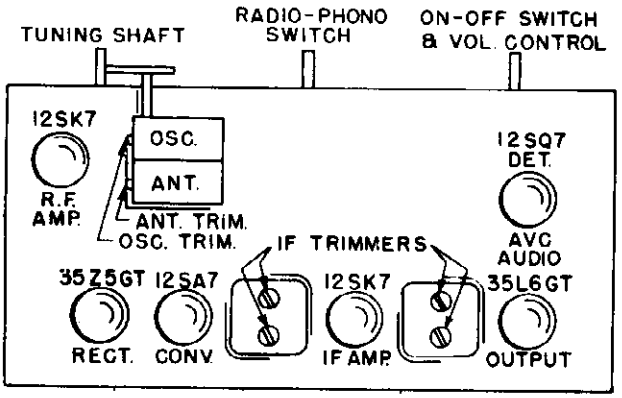

Ref. No.	Part No.	DESCRIPTION
1	77185	150 ohm. resistor
2	77170	470 ohm resistor
3	77168	4700 ohm resistor
4	77246	15K ohm resistor
5	77169	22K ohm resistor
6	77178	220K ohm resistor
7	77173	470K ohm resistor
8	77171	2.2 Megohm resistor
9	77223	3.3 Megohm resistor
10	47177	6.8 Megohm resistor
11	25182	.1 mfd. tubular cap., 200 volts
12	25494	.08 mfd. tubular cap., 200 volts
13	25181	.05 mfd. tubular cap., 200 volts
14	25195	.02 mfd. tubular cap., 600 volts
15	25186	.01 mfd. tubular cap., 400 volts
16	25193	47 mmfd. mica capacitor
17	25188	100 mmfd. mica capacitor
18	25187	240 mmfd. mica capacitor
19	25022	Electrolytic Cond. 30 mfd. & 20 mfd., 150 volt
20	11448	Tuning Capacitor Assembly
21	38484	Wavetrap Coil Ass'y.
22	38706	Oscillator Coil Ass'y.
23	94267	Filter Choke
24	38322	1st I.F. Transformer
25	38324	2nd I.F. Transformer
26	78048	500M Volume Control
27	94091	Output Transformer
28	81188	Speaker
29	27050	Line Cord
30	22198	Phone Accord
31	22169	Pickup Cable
32	90273	Band Switch
33	38984	Loop Antenna Ass'y.
34	42186	Pilot Lamp Mazda 47
	22199	Speaker Cable
	07692	Pointer Slide Ass'y.
	59183	Dial Pointer
	05047	Drive Cord Ass'y.
	92192	Drive Cord
	31265	Dial Scale
	18058	Dial Background Ass'y.
	59476	Knob
	H-313-1	Cabinet and Packing—Mahogany
	H-313-2	Cabinet and Packing—Walnut
	H-313-3	Cabinet and Packing—Maple

All Resistors are ½ watt, 20% Tolerance

MODELS 19N4, 24N4, 26N4, 31N4, 114N4, 116N4, 21P4, 24P4.

FARNSWORTH TELEV. & RADIO CORP. MODELS 29P4, 30P4, 31P4, 116P4, 118P4

Model	Cabinet	Record Changer
118P4	Georgian	41E-MP
116P4	Sheraton	41E-MP
31P4	Hepplewhite	P-71
30P4	French Provincial	P-71
29P4	Early American	P-71
24P4	Hepplewhite	P-71
21P4	Chippendale	P-71
116N4		Capehart 41E
114N4	Early Georgian	41E
31N4	Sheraton	Panamuse P-63
26N4	Modern	P-63
24N4	Hepplewhite	P-63
19N4	Hepplewhite	P-63

"Whistles" and Heterodynes

Check IF rejection ratio by application of signal generator at the intermediate frequency to the antenna terminals.

A defective wave trap will cause heterodynes.

Low Volume

If low volume of N4 combinations is experienced, we suggest the following:

1. Test tubes.
2. Check alignment of the receiver.

RECEIVER SPECIFICATIONS

SECTION 1

RECEIVER FREQUENCIES

AM Broadcast Band.....540 to 1600 Kc.
FM Band.....87.5 to 108.5 Mc.
IF (AM Band).....455 Kc.
IF (FM Band).....10.7 Mc.

TUBE COMPLEMENT

Application	Type	Type	Application
FM RF Ampl.	6AG5	6H6	FM Detector, AVC
FM Converter-Osc.	6SB7Y	6SC7*	Phono Pre-Amplifier
AM RF Converter-Osc.	6SA7	6SL7	Audio Ampl., Phase Inverter
AM RF Ampl. FM 1st IF Ampl.	6SG7	6V6	Power Output
AM IF Ampl., AM Det., FM 2nd IF Ampl.	6SF7	5Y3GT	Rectifier

*The N4 Uses a 6J7 as Phono Pre-Amplifier,

POWER AND VOLTAGE REQUIREMENTS

185 Watts at 117 Volts.....60 Cycles 105 to 125 Volts.....AC

DIAL SCALE

The AM Band conventionally calibrated in Kilocycles

The conversion of FM Dial Scale readings to frequency may be made from the following analysis:

The FM band extends from 88 to 108 mc., each station channel 200 kc., in width, Channel 201, that lowest in frequency, has center frequency at 88.1 mc. Each succeeding channel is successively 200 kc., higher, so channel 202 is centered at 88.3 (200 kc. higher) channel 203 is centered at 88.5 mc., etc.

FM Band is marked with the new Channel Numbers

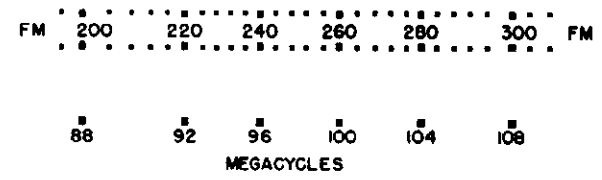

ANTENNAS

P4 & N4 series instruments both incorporate two internal antennas; a loop antenna used in broadcast band reception and a folded-dipole antenna used for FM reception.

These internal antennas are intended for use only in the presence of adequate field strength, as in large metropolitan areas where local stations supply the majority of desired programs. Neither a loop nor a dipole element which is within the confines of the cabinet can be considered as efficient signal pickup devices and, should field strength requirements be not fulfilled, it will be necessary, for satisfactory reception, to install an efficient outside antenna.

Both the loop and the dipole (internal or external) antennas exhibit certain characteristics of directivity, with which the experienced serviceman is familiar, which should be borne in mind when locating the receiver (or external antenna) in the home.

© John F. Rider

MODIFICATION KIT NO. 41140

The N4 tuner modification kit no. 41140 was issued for the purpose of revising the Phono Pre-Amplifier circuit of the tuner, in the field. This was so that P-71 record changers, using the variable reluctance pickup could be incorporated in N4 instruments already in the field. The kit is also applicable to N4 tuners that are used with the 41E record changers. A kit was also issued for the purpose of revising 41E changers to equal the new 41E-MP, by addition of the variable reluctance pickup, the Noise Eliminator and various other modernizations.

The N4 tuner which has been modified, following the instructions accompanying kit no. 41140, is the electrical equivalent of the P4 tuner

If the N4 tuner is of early production (C-175) then the circuit is different

N4 tuners that have not been modified by modification kit no. 41140 will have the Phono Pre-Amplifier circuit

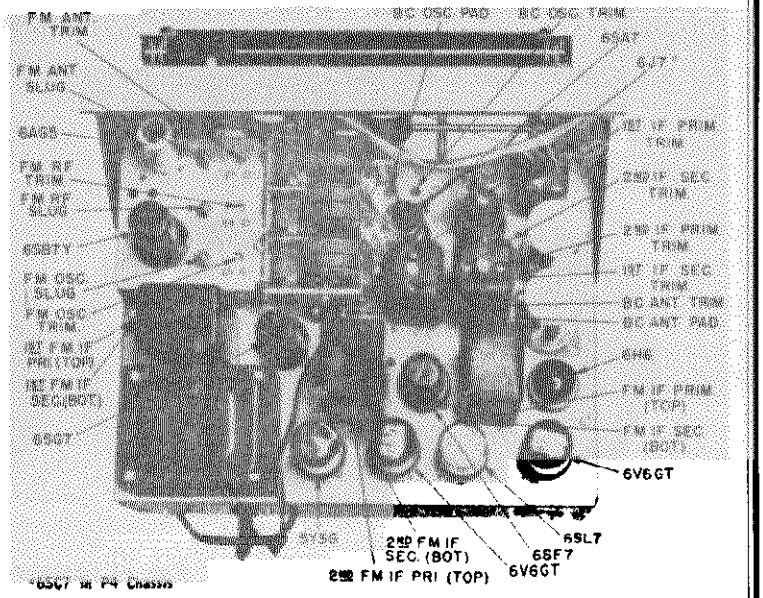

ALIGNMENT OF THE RECEIVER

Two methods of alignment of P4 & N4 receivers are presented. Service shops possessing a suitable sweep generator and oscilloscope will effect a considerable saving of time by using the first method.

The alternate method using an amplitude modulated signal generator is preferred by some servicemen. This method requires careful attention to details to attain accurate alignment.

GENERAL INSTRUCTIONS

1. Adjustment of Dial Pointer

To prevent misalignment, do not proceed with alignment until dial pointer has been checked for correct mechanical adjustment

2. Test Signal Conditions

All alignment shall be done with only sufficient signal amplitude to provide satisfactory signal to noise ratio, and acceptable pattern size on oscilloscope or readable output on output meter. The use of excessively strong signal is almost certain to produce misalignment.

ALIGNMENT OF FM BAND

1. Equipment required will be an oscilloscope, a frequency modulated signal generator covering the range 87.5 mc to 108.5 mc on fundamentals, a sweep generator producing a signal of 10.7 mc and sweeping at least 150 kc each side of 10.7 mc, and an output meter.

2. The vertical or "Y" axis terminals of the oscilloscope should be connected between pin 3 of the 6H6 discriminator and ground. The sweep voltage of the sweep generator should be fed to the horizontal or "X" axis terminals of the oscilloscope. The 10.7 mc output of the sweep generator should be fed into the grid of the 6SF7 tube through a condenser of approximately 3300 mmfd.

3. Remove the negative lead of the 4 mfd. electrolytic from pin #3 of 6H6 socket. Remove 6SL7 tube from socket. Turn the set on and turn both the tone control and the volume control all the way to the right. Detune the secondary of the third FM IF transformer by turning the bottom slug screw out as far as possible. Adjust the primary top slug screw, until pattern (A) appears on the oscilloscope. Adjust the secondary, bottom slug screw, until pattern "B" is obtained on the oscilloscope and until both sides of this pattern are symmetrical.

4. Remove the 10.7 mc output of the sweep generator from the grid of the 6SF7 tube and connect to the grid of the 6SG7. Align the second FM IF transformer as in paragraph "3."

5. Connect the 10.7 mc output of the sweep generator to the signal grid of the 6SB7Y, (pin 8) detune secondary of the first FM IF transformer and tune primary as before for pattern (A). Tune secondary for pattern "C" and make both sides of pattern as symmetrical as possible. This completes alignment of the FM IF transformers.

6. Reconnect the negative lead of the 4 mfd. electrolyitic to pin #3 of the 6H6 socket and move the oscilloscope leads to the middle terminal on third FM IF (to which tertiary winding connects) and ground. With the sweep generator connected to the 6SB7Y signal grid as before, the discriminator pattern (D) should appear on the oscilloscope if the IF alignment instructions have been followed carefully. Remove the oscilloscope and sweep generator leads and reinstall 6SL7 tube in socket. Never adjust AM IF transformers without rechecking FM IF alignment.

7. Connect the 87.5 to 108.5 mc signal generator to the antenna socket of the receiver through a 300 ohm resistor. The generator should be frequency modulated at some frequency in the audible range. Connect output meter across secondary of

© John F. Rider

output transformer. Tune receiver to channel 300 FM dial. With signal generator set at 107.9 mc adjust oscillator trimmer condenser, third from front, for maximum reading on output meter. Set signal generator to 87.9 mc and tune receiver to channel 200 on FM dial. Adjust oscillator coil screw, third from front, (see chassis layout) for maximum reading on output meter. Recheck oscillator setting for channel 300.

8. Tune signal generator and receiver to 105 mc (channel 285 approx.). Adjust converter signal grid trimmer condenser, second from front, for maximum reading on output meter. Tune signal generator and receiver to 92 mc, (channel 220 approx.) and adjust converter coil screw, (second from front), to maximum reading on output meter. Recheck converter trimmer setting at 105 mc (channel 285 approx.).

9. Repeat operations of paragraph (7) for antenna trimmer condenser and coil. This completes FM RF alignment.

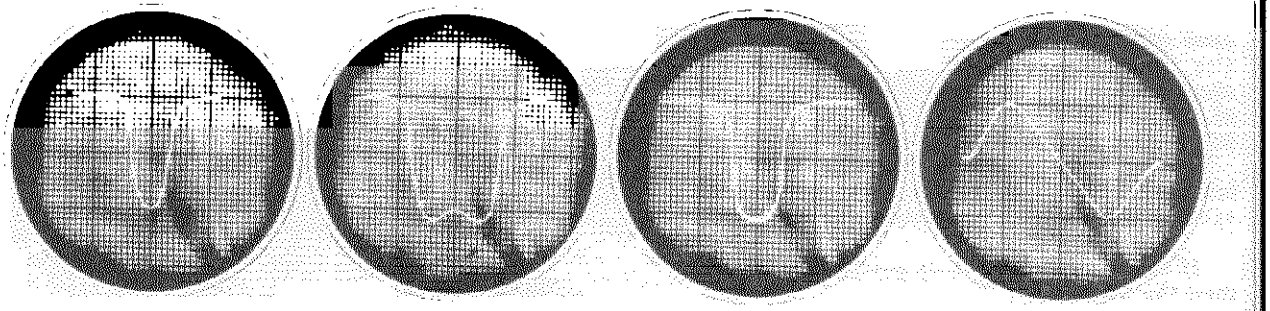

A B C D

ALTERNATE FM ALIGNMENT PROCEDURE

Necessary Equipment:

Signal generator.

Vacuum tube voltmeter or DC voltmeter 20,000 ohms per volt.

FM IF ALIGNMENT

Adjust dial pointer as outlined in section VII.

Connect voltohmyst from ground to pin #3 of 6H6. Connect generator tuned to 10.7 mc to pin #4 on 6SG7. Turn secondary slug of third FM IF (closest to chassis) out as far as it will turn. Tune primary of third IF for maximum negative voltage. Tune primary and secondary of the second FM IF for maximum output. Move generator to pin #8 of 6SB7Y and tune primary and secondary of first FM IF for maximum output. Next tune secondary of third FM IF to balance to zero volts, using high resistance voltmeter connected to middle terminal of FM IF transformer (tertiary winding).

FM RF ALIGNMENT

With high resistance voltmeter connected between ground and pin #3 on 6H6 socket, connect generator between ground and small pin of dipole antenna socket. Use very short leads on generator and a 300 ohm resistor as a dummy antenna. Set generator to 108.5 mc and gang to minimum and adjust oscillator trimmer for maximum voltage. Go back and check low frequency end. Next set generator at 92 mc, tune in signal on receiver, approximately 220 on dial. Adjust converter and antenna slug for maximum voltage output. Set generator at 105 mfd. Tune in signal on receiver, approximately 280 on dial. Tune converter and antenna trimmer for maximum voltage output. Check adjustment of antenna and converter slugs at 92 mc.

ALIGNMENT INSTRUCTIONS FOR AM BAND

An output meter and a signal generator calibrated at 455 Kc., 600 Kc., 1500 Kc. and 1600 Kc., are required to properly align these receivers on AM band. Keep the output of the signal generator as low as possible to prevent AVC action and false settings. Connect the high side of the generator to the blue wire found at rear of set and low side to the white wire.

STEPS	DUMMY ANTENNA	SET GENERATOR AT	SET GANG AT	ADJUST	LOCATED	TO OBTAIN
1	SET VOLUME AND TONE CONTROLS AT MAXIMUM					
2	.1 Mfd. to converter RF grid	455 Kc.	Minimum	2nd IF Trimmers*	Top of IF Transformers	MAXIMUM OUTPUT
3				1st IF Trimmers**		
4		1600 Kc.	1600 Kc.	B.C. Osc. Trimmer	See Trimmer Layout	
5	200 MMF.	1500 Kc.	1500 Kc.	B.C. RF Trimmer**	See Under Chassis	
6		1500 Kc.	1500 Kc.	B.C. Ant. Trimmer	On Loop	
7		600 Kc.	600 Kc. Rock Gang	600 Kc. Padder	See Trimmer Layout	
8		600 Kc.	600 Kc.	Peak loading coil slug	See Trimmer Layout	
9	Recheck 1500 Kc.					

* Recheck after FM alignment.
** Not used on early production.

FARNSWORTH TELEV. & RADIO CORP. MODELS N4, P4, Series, Capehart

RECEIVER RF-IF COILS

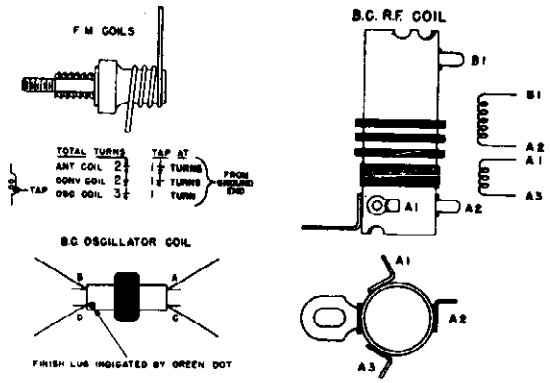

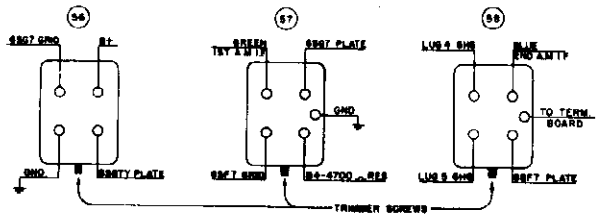

Letters on terminals of coils correspond to similarly lettered terminals on the coils shown in the circuit diagram.

MAINTENANCE OF THE TUNER

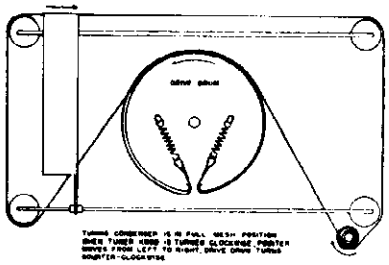

1. Adjustments of Dial Pointer

a. Tune receiver to extreme low frequency end of dial and set pointer to index at the last calibration mark of either scale.

b. Carefully determine that the gang condenser plates are completely meshed with the pointer in this position.

Warning: This adjustment is extremely important if subsequent alignment is to provide accurate calibration.

NOTE: The pointer remains dark when the band switch is in the phonograph position.

c. Tune the dial across the entire range and observe that the pointer line is a single sharply defined line of uniform brilliance. If this is not obtained, it indicates that mechanical adjustment of the spacing of the light-box from the dial glass is necessary.

2. "Sticking" Light-Boxes

The traveling light-box may be sticking, causing dial slippage. This may be due to (a) lubricant on rods, (b) bent rods, (c) rough rods, (d) misalignment of rods.

(a) The rods must be free of all lubricants. Lubrication, momentarily helpful, causes gum to form at the light-box mounting, resulting in "sticking." Clean well with carbon tetrachloride.

(b) Bent rods must be accurately straightened or replaced.

(c) Rough portions of the rod surface should be cleaned with crocus cloth until perfectly smooth.

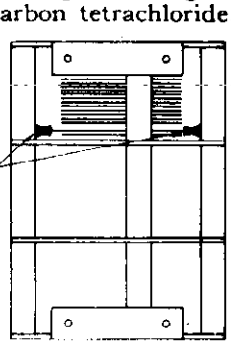

3. Dial Glass Plate

Paint scratched. This is due to the light-box assembly contacting the painted surface. Adjust the horizontal positioning of the light-box for optical focus of the projected line of light, so that (1) focus is maintained throughout the entire path of travel, (2) front of light-box assembly does not at any point touch the scale. The clamps which hold the glass rod in place may be clipped back if necessary.

Touch-up paint may be obtained at automobile service stations.

4. Control Knobs—Eccentric—Loose—How to Remove

A. Knobs eccentric (wobbly motion) or loose. This may be caused by pinching together the two halves of the split-shaft end. One-half section becomes bent toward the axis of the shaft to a greater degree than does the other. Re-form the split portions of the shaft so that they are symmetrical with respect to the axis of the shaft.

B. To remove control knobs.

Loop a heavy cord behind the knob, bringing out the two ends at opposite sides of the knob. Pull both ends firmly. If the cord (both ends) is brought out on one side only, there will be a tendency to cause the difficulty of 4A, above.

5. Microphonics and Feedback

A. Microphonic tubes.

B. Check the variable condenser stator plates to ascertain whether they are loose. If so, apply a laquer cement to the clamp which holds the stator plates to the insulating material.

C. "Twin lead" to antenna binding posts may be stapled to cabinet in taut condition, whereby feedback is introducted mechanically. Re-staple the twin lead, leaving somewhat free and loose.

D. On FM, microphonics and howl may be caused by the lead from stator plate to sub-chassis assembly being taut. Re-solder with less tension in the flat ribbon lead.

NOTE: Oscillator trimmer may have to be readjusted.

E. If howl on the FM position persists, the following may alleviate the condition: Sponge rubber bits added as shown in sketch. Rubbers must be trimmed so that they will not touch rotor plates when the condenser is fully-meshed. Observe dial calibration for any change resulting from increased capacity.

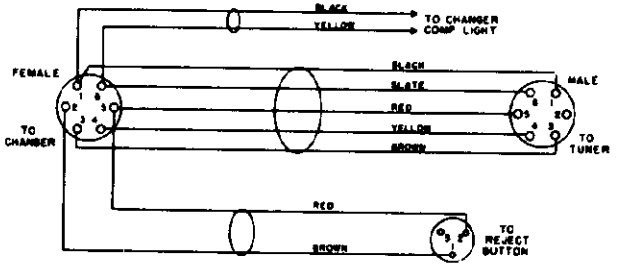

Record Changer AC Cable, Part No. 22182

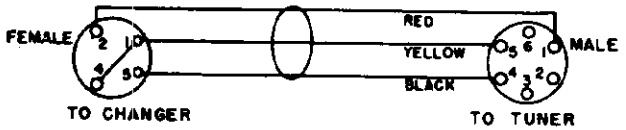

Record Changer AC Cable, Part No. 22184

CIRCUIT DIAGRAM MODIFICATIONS

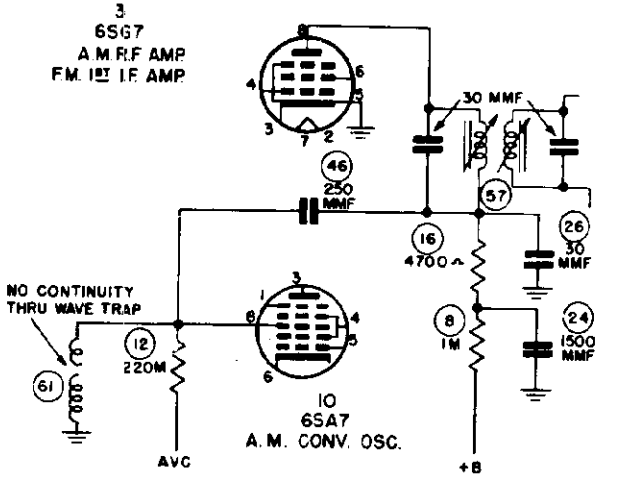

Early production N4 tuners used a two gang broadcast tuning capacitor and wave trap connected as indicated in the RF portion of the schematic reproduced above:

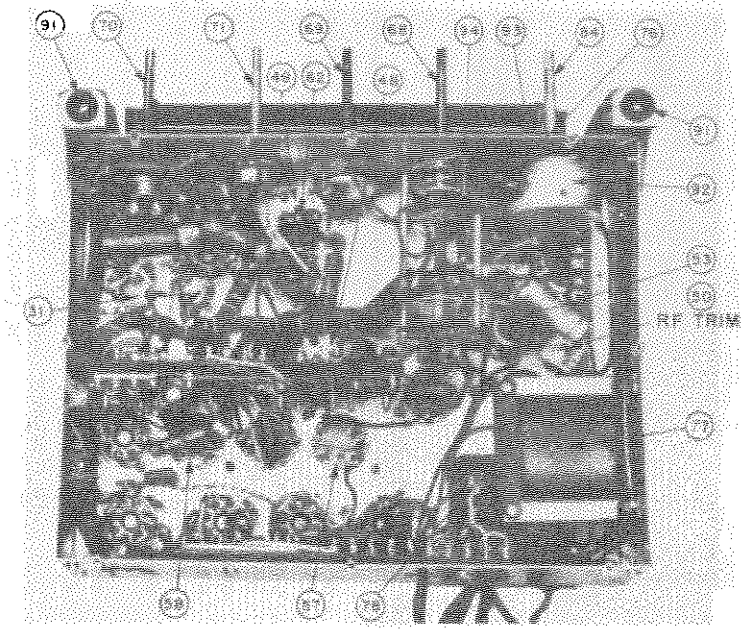

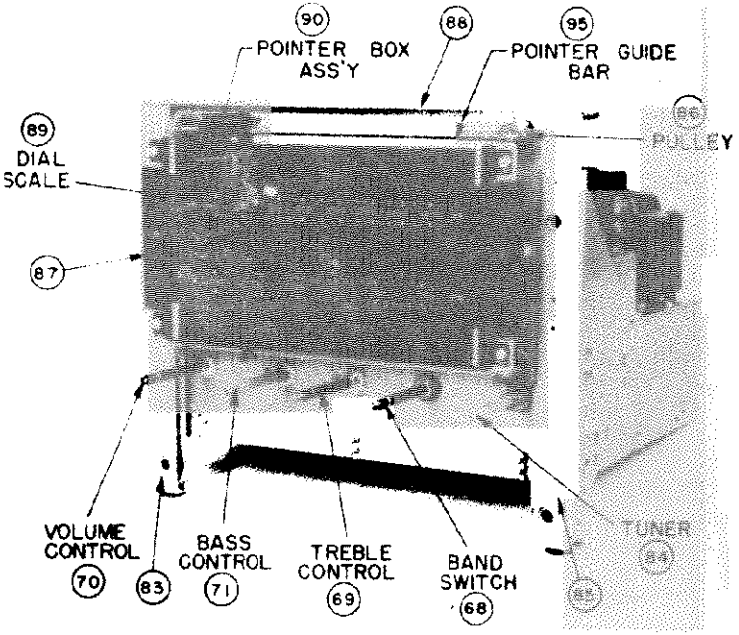

© John F. Rider

© John F. Rider

SPECIAL INFORMATION
P-4 SERIES

THE NOISE ELIMINATOR

P4 series instruments are divided into two groups, the instruments using the 41E-MP record changer (100P4 series) and those using the P-71 drop type record changer. The N4 series is also divided in a like manner.

The 41E-MP automatic record changer, used in the 100P4 series instruments, uses the new "Magnetic True Timbre" pickup, which is of the variable reluctance type. The Noise Eliminator used with these instruments is contained in a metal control box which is mounted on the inner wall of the record changer compartment. A schematic diagram of the noise eliminator circuit, as used in the 100P4 series is shown below:

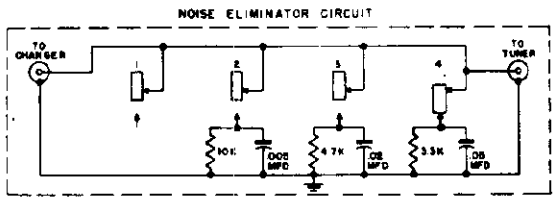

On P4 series instruments using the P-71 record changer the noise eliminator circuit and selector switch are included on the changer itself.

RECORD CHANGER AC CABLES

100P4 and 100N4 series instruments use the Record Changer AC Cable, part no. 22182. This cable is a multi-purpose cable, in that it not only supplies A.C. power to the 41E-MP record changer, but also supplies 110 volts to the record changer compartment light and in addition serves to connect the Reject Button to the record changer.

P4 instruments using the P-71 record changer and N4 instruments using the P-63 changer, both use the Record Changer AC Cable, part no. 22184. This cable serves merely as a power carrier to the record changer.

Schematic diagrams of both cables are shown

The 41E-MP & 41E record changers used in the P4 and N4 respectively are identified by a brown dot painted on the bearing cover plate of the main cam support bracket. Early production of the 41E, carrying either no dot or a red dot, are not directly interchangeable in the N4 and P4 without a modification in the wiring of the junction box. Reference should be made to the 41E manual.

This maintenance manual deals with the radio chassis of the instrument. For servicing information on the record changer, reference should be made to the manuals dealing with the 41E, P-71 or the P-63.

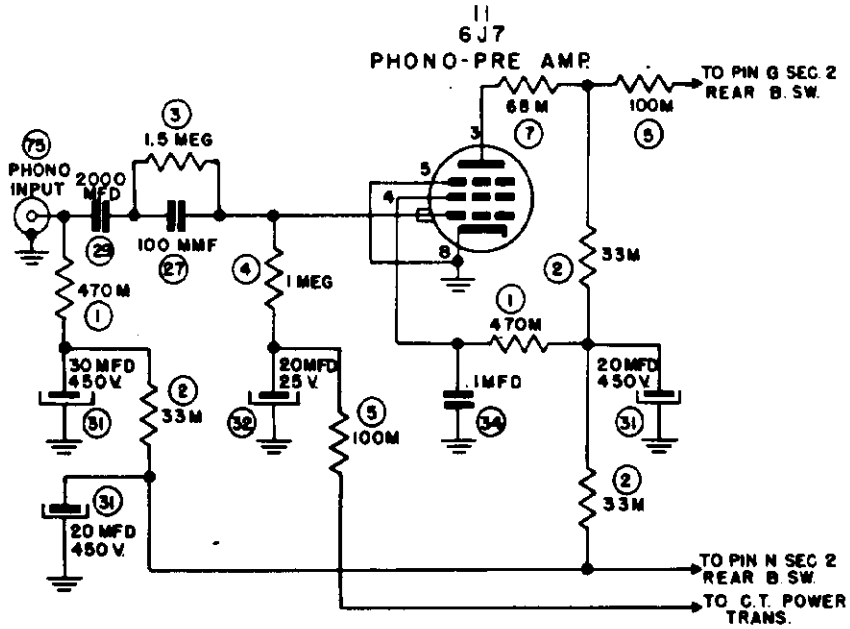

The N4 tuner is essentially the same as the P4 tuner, the schematic diagram with exception of the Phono Pre-Amplifier circuit. The Phono Pre-Amplifier, as used in the N4 tuner, is shown in that portion of the schematic reproduced above:

VOLTAGE 1	RESISTANCE	VOLTAGE 2	RESISTANCE	VOLTAGE 3	RESISTANCE	VOLTAGE 4	RESISTANCE	VOLTAGE 5	RESISTANCE	VOLTAGE 6
1 0	1 MEG	1 0	1 0	1 0	1 0	1 0	2 1.8 MEG.	1 0	1 0	1 0
2 0	2 0	2 6.3AC	2 1	2 5.3AC	2 1	2 1	3 0	2 0	2 0	2 6.3AC
3 6.3AC	3 1 ~	3 225	3 *	3 0	3 0	3 0	4 *	3-4	3 3.3 M	3 290
4 0	4 0	4 115	4 *	4 8	4 1 MEG	4 90	5 50 M	4 1	4 INF	4 270
5 250	5 *	5-5.5	5 92 M	5 0	5 0	5 6	6 *	5 1	5 INF	5 0
6 300	6 *	6 0	6 0	6 100	6 *	6 210	7 0	6 NC	6 NC	6 0
7 0	7 0	7 0	7 0	7 180	7 0	7 0	8 1	7 6.3 AC	7 1	7 0
		8 0	8 0		8 *	8 6.3AC		8 4	8 33 M	8 17

* 1 MEG OR MORE, DEPENDING UPON THE CONDITION OF THE FILTER CONDENSERS

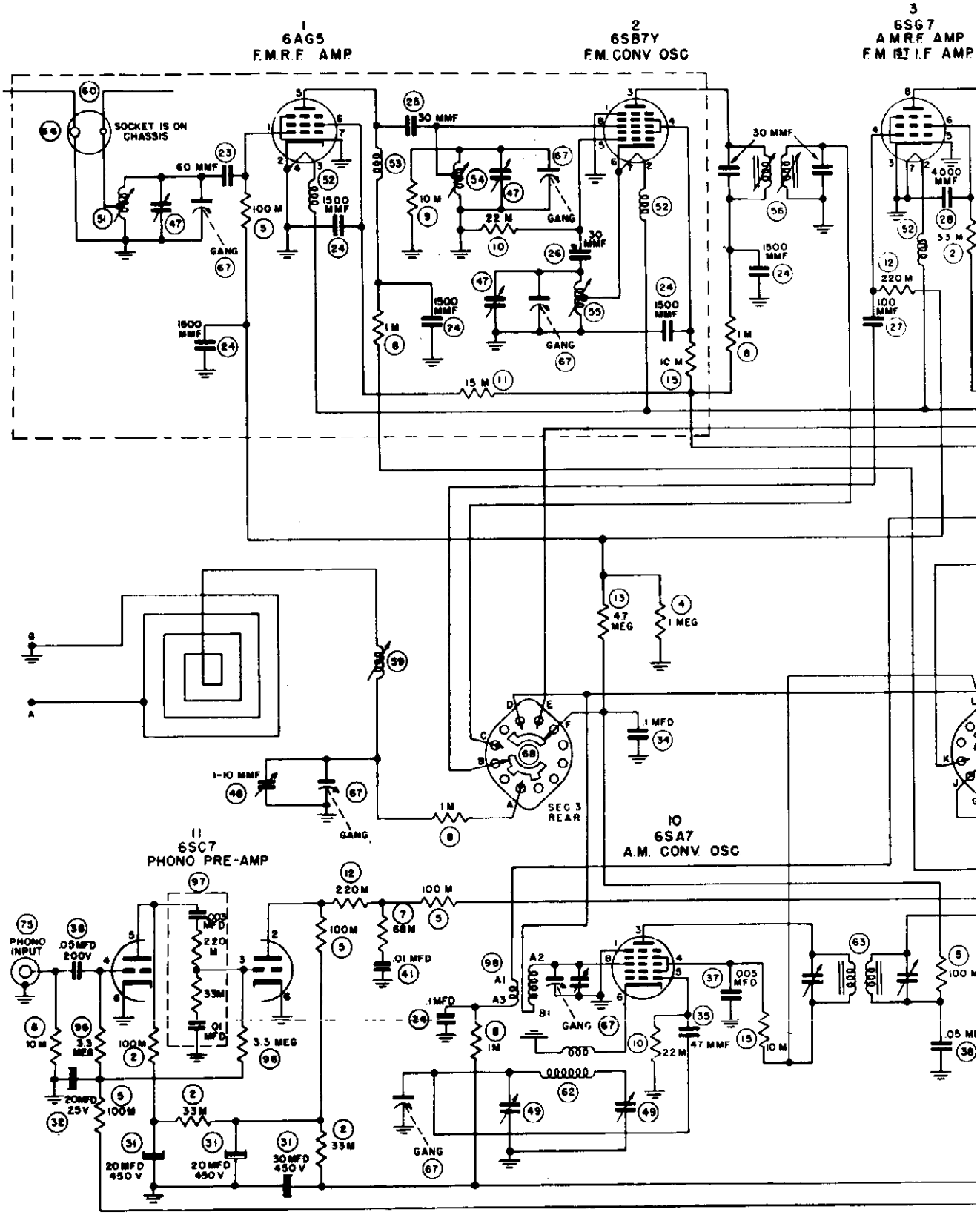

©John F. Rider

H TELEV. & RADIO CORP.

MODELS N4, P4,
Series, Capehart

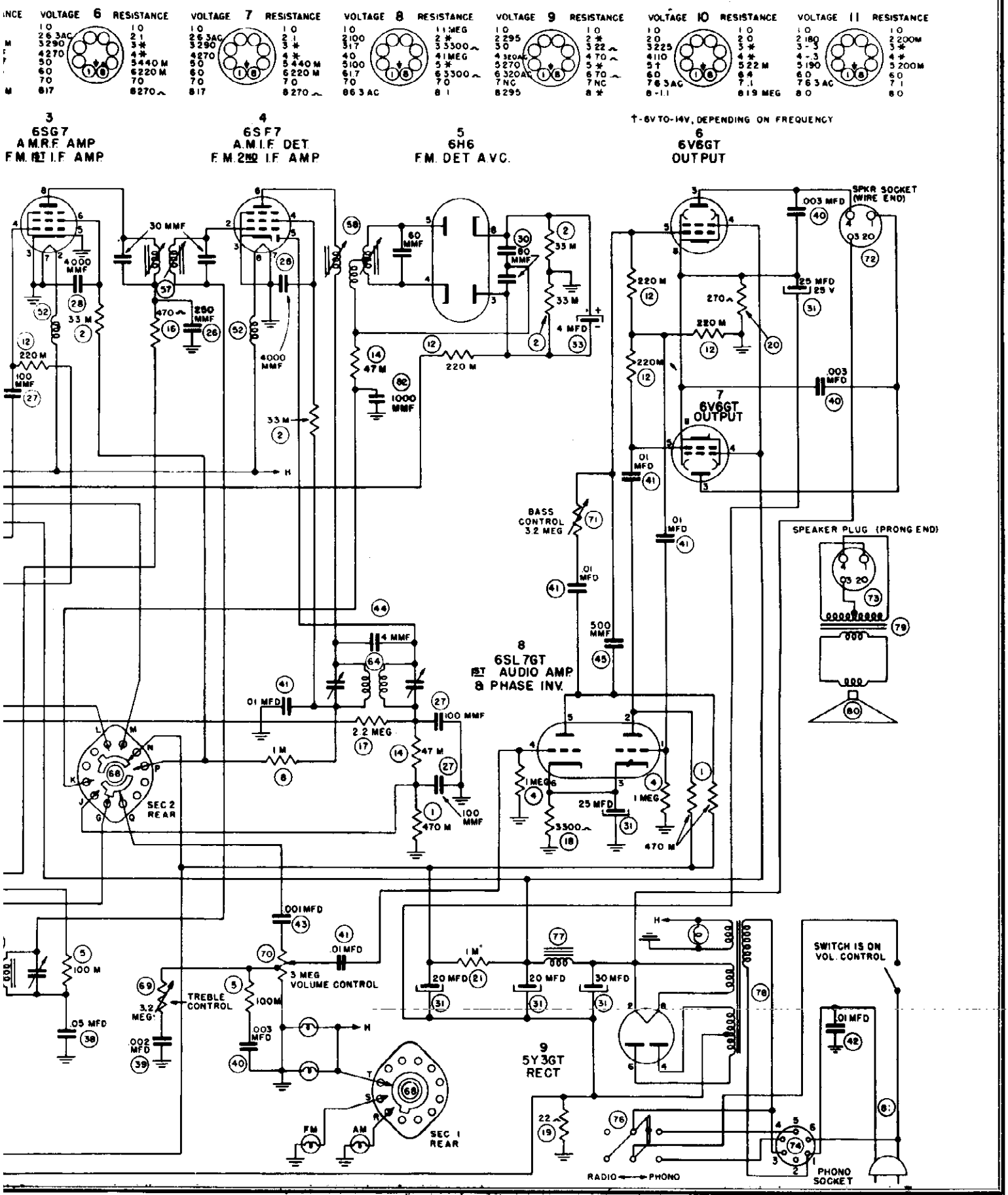

RECORD CHANGERS: For 114N4, 116N4, Model 41-E Capehart. RCD CH. 18-25.

PARTS LIST

Ref. No.	Part No.	Description
1	77217	470M ohm Resistor
2	77267	33M ohm Resistor
3	77351	1.5 Meg ohm Resistor
4	77218	1 Meg ohm Resistor
5	77214	100M ohm Resistor
6		
7	77305	68M ohm Resistor
8	77262	1000 ohm Resistor
9	77212	10M ohm Resistor
10	77266	22M ohm Resistor
11	77265	15M ohm Resistor
12	77216	220M ohm Resistor
13	77272	4.7 Meg ohm Resistor
14	77213	47M ohm Resistor
15	77013	10M ohm 2 Watt Carbon Resistor
16	77211	4700 ohm Resistor (used on 2 gang chassis)
17	77270	2.2 Meg ohm Resistor
18	77210	3300 ohm Resistor
19	77360	22 ohm Resistor
20	77189	270 ohm 2 Watt Carbon Resistor
21	77440	1000 ohm 5 Watt Wire Wound Resistor
22	77261	470 ohm Resistor
23	25333	60 mmf Ceramic Capacitor N-470
24	25273	1500 mmf (350V-20%+50%) (Hi-"K") Ceramic Capacitor
25	25332	30 mmf Ceramic Capacitor +5% N-150
26	25329	30 mmf Ceramic Capacitor +5% N-750
27	25188	100 mmf Molded Mica Capacitor
28	25271	4000 mmf Molded Mica Capacitor
29	25295	2000 mmf Molded Mica Capacitor
30	25406	80 mmf Ceramic Capacitor
31	25214	Filter Condenser (30 Mfd., 20 Mfd., 20 Mfd., at 450 V., 25 Mfd., at 25V)
32	25269	50 Mfd., 25 Volt Electrolyitc Condenser
33	25270	4 Mfd., 100 Volt Electrolytic Condenser
34	25215	.1 Mfd., 600 Volt Tubular Condenser
35	25193	47 mmf Molded Mica Capacitor
36		
37	25183	.005 Mfd., 600 Volt Tubular Condenser
38	25196	.05 Mfd., 600 Volt Tubular Condenser
39	25185	.002 Mfd., 600 Volt Tubular Condenser
40	25184	.003 Mfd., 600 Volt Tubular Condenser
41	25194	.01 Mfd., 600 Volt Tubular Condenser
42	25209	.01 Mfd., 600 Volt Condenser (Metal encased)
43	25197	.001 Mfd., 600 Volt Condenser
44	25327	4 mmf. Ceramic Capacitor
45	25189	500 mmf Mica Capacitor
46	25187	250 mmf Mica Capacitor (2 gang chassis)
47	26231	5-20 mmf Ceramic Trimmer Capacitor
48	26023	1-10 mmf Trimmer Condenser (Broadcast Antenna)
49	26240	Dual Trimmer Condenser Strip
50	26036	Trimmer Condenser for Broadcast Converter Coil
51	38690	FM Antenna Coil
52	38661	RF Choke
53	38913	Broadcast Converter Coil
54	38691	FM Converter Coil
55	38692	FM Osc. Coil
56	38824	1st FM Intermediate Freq. Trans.
57	38825	2nd FM Intermediate Freq. Trans.
58	38826	3rd FM Intermediate Freq. Trans.
59	38805	Loop Loading Coil Assy.
60	11325	FM Antenna & Plug Assy. (Mounted on Cabinet)
61	38484	Wave Trap Coil (Used with Two Gang Chassis)
62	38694	Broadcast Osc. Coil Assy.
63	38822	1st AM Intermediate Freq. Trans.
64	38823	2nd AM Intermediate Freq. Trans.
66	80361	Female Input Socket for FM Dipole
67	26275	Three Gang Tuning Condenser for C-226 N-4 Chassis and C-235 P-4 Chassis
	26237	Two Gang Tuning Condenser for C-175 N4 Chassis
68	90223	Band Switch
69	78123	Treble Tone Control
70	78101	Master Volume Control & Switch
71	78148	Bass Tone Control
72	80244	Five Prong Speaker Connecting Socket (Female)
73	80284	Five Prong Male Speaker Plug and Cap
74	80368	Six Prong Female Socket for Phono AC Cable
75	80030	Phono Signal Input Socket (Female)
76	90219	Phono AC Switch
77	94226	Filter Choke
78	94225	Power Transformer
79	94260	Output Trans. for 8115 Speaker on P4 & N4 series
80	81155	Speaker & Output Trans. Assy.
81	27118	AC Line Cord
82	25053	1000 mmf Capacitor
83	07524	Left Hand Dial Support Brkt. and Pulley Assy.
84	15174	Tuning Drive Shaft & Pulley Assy.
85	07525	Right Hand Dial Support Brkt. & Pulley Assy.
86	59279	Fibre Dial Cord Pulley
87	04070	Mount. Clamp for Dial Glass Scale
88	04098	Top Dial Support Angle Brkt.
89	13807	Dial Glass Scale Assy.
90	13631	Dial Pointer Box Assy.
91	62115	Rubber Grommet (on bottom of dial Support
92	55261	Tuning Fly Wheel
93	07410	Brg. Assy. for Lower Pointer Guide
94	58552	Mount. Brkt. for Phono AC Switch.
95	55259	Guide Rod (upper & lower) for Pntr. Box Assy.
96	77207	3.3 Meg. Ohm Resistor
97	13889	Pre-Amp. Equalizer Assy.

MISCELLANEOUS PARTS LIST

Part No.	Description
07529	Dial cord and spring assy.
11382	AC phono cable & plug assy. (for two gang N4 chassis, C-175)
17019	Tuning drive drum
22183	AC phono cable and plug assy. for C-226, N4 Chassis and C-235, P4 Chassis
25187	Molded mica cap. 240 mmf +10%
25270	Tubular Elec. cap. 4 mfd. 100V.
25325	Ceramic cap. 60 mmf. +5%
36927	Snap washer (for tuning drive shaft)
36936	Flange sleeve to mount tuning cond.
42185	Pilot light
54144	Bakelite mtg. wafer for fltr. cond.
54161	Ceramic spacer for mtg. trm. cond.
54193	Glass rod pointer for stat. pointer box
55260	Mtg. stud for fibre dial cord pulley
56183	Tuning shaft bearing
56518	Rear mtg. brkt. for tuning condenser
56528	Front mtg. brkt. for 2 gang tun. cond.
58302	Capacitor clip
58335	Min. tube shield
58446	Clamp to hold dial string to pntr. box
58524	Mtg. clip for glass rod sta. pointer
58880	Front mtg. brkt. for 3 gang cond.
59391	Plastic prism for sta. pntr. box
60315	N4 chassis bottom cover
62099	Rubber mtg. grommet for tuning cond.
64351	Spring only for dial cord
64382	Compression spring for pntr. guide bar
80139	Molded octal socket
80319	Miniature tube socket
80344	Pilot light socket and lead
2000-007	#2-56x5/16" R.H.M.S. (to mount plastic prism in pointer box)
2000-071	#3-48x1" lg. R.H.M.S. (adj. screw for pointer guide bar)
11325	Dipole antenna assy. (mounted on cab.)
13581	Speaker network term. board assy. (100 series P4 & N4)
22152	Pickup cable (100N4 & 100P4 series
22156	Pickup cable (for P4 & N4)
22182	Record changer AC cable (100N4 & 100 P4 series
22184	Record changer AC cable (P4 & N4 series)
31419	Escutcheon for Pan. N4 series
31429	Escutcheon for 100N4 & P4 series
36478	#3-48 x ½" lg. Phillips F.H.M.S. to mount escutcheon mtg. plate
41130	Mounting screw kit for dial escutch.
58461	Special #3-48 tapped nut for escutch. mtg. plate
58546	Escutcheon mtg. plate (metal)
59316	Tuning and volume knob
59373	Tone control knob
80284	5 prong male speaker plug with cap
80362	2 prong male plug for FM dipole ant.
80366	3 prong female connector on phono AC cable (100N4 & 100P4 series)
80368	6 prong female plug and cap for phono AC cable (100N4 & 100P4 series)
80373	Male connector plug for reject switch cable (100N4 & 100 P4 series)
80422	Ant. and ground terminal strip
80463	6 prong male plug and cap for phono AC cable (100N4 & 100P4 series)
81155	Speaker and output trans. assy. (12")
81183	Cone and voice coil assy. (12")
81184	Treble speaker only (100N4 & 100P4)
90194	Reject switch (100N4 & 100P4)

FARNSWORTH TELEV. & RADIO CORP. MODELS 35P7, 32P9, 33P9, 34P10

SECTION I

RECEIVER FREQUENCIES

Broadcast Band	540 to 1620 KC
Frequency Modulation Band	87.5 to 108.5 MC
Intermediate Frequency—AM Band	455 KC
FM Band	10.7 MC

TUBE COMPLEMENT

P7 Type	P7 Application	P9 & P10 Type	P9 & P10 Application
6AG5	AM-FM, RF Amplifier	6AG5	AM-FM, RF Amplifier
12AT7	FM Oscillator-Mixer	12AT7	FM Oscillator-Mixer
6BE6	AM Converter-Osc.	6BE6	AM Converter-Osc.
6SK7	1st IF Amplifier, FM-AM	6SK7	1st IF Amplifier, FM-AM
6SK7	2nd IF Amplifier, FM-AM	6SK7	2nd IF Amplifier, FM-AM
6SK7	3rd IF Amplifier, FM	6SK7	3rd IF Amplifier, FM
6T8	FM-AM Detector, AVC and 1st Audio Amp.	6T8	FM-AM Detector, AVC and 1st Audio Amp.
6SQ7	Phase Inv. and Gas Gate	6V6GT	Power Amplifier
6V6GT (2)	Push Pull Power Amps.	5Y3G/GT	Full Wave Rectifier
5Y3G/GT	Full Wave Rectifier	6SC7*	Phono. Pre-Amplifier
6SC7*	Phono. Pre-Amplifier		

* Used only in P7 and P9 instruments.

Total Number Of Tubes

P7—12 tubes P9—10 tubes P10—9 tubes

AMPLIFIER SPEAKER SYSTEM

P7		P9 & P10
12 watts	Power Output	8 watts
4 ohms	Voice Coil Impedance	4 ohms
12" PM	Type Speaker	12" PM
40 to 12,000 c. p. s.	Frequency Response	50 to 10,000 c. p. s.

AUTOMATIC RECORD CHANGER

P7		P9 & P10
P-71	Type	P-72 (P9)—P-73 (P10)
78 RPM	Speed	78 RPM

POWER AND VOLTAGE REQUIREMENTS

Power Consumption—105 watts at 117 volts. Voltage—105 to 125 volts at 60 cycles per second.

ANTENNAS--INTERNAL AND EXTERNAL

SECTION III

Two antennas are provided within the cabinet—a Capehart Low Impedence Loop and a Folded Dipole, constructed of 300 ohm "twin lead."

The loop antenna provides signal pickup for broadcast-band AM reception. This antenna is a directional device (its radiation pattern would show greatest signal pickup directly in front and in back of the loop, with very little if any pickup from its sides). Therefore, the reception of a desired weak signal may be improved by swinging the loop to a new position. The loop is fastened to the inner cabinet wall by means of two hinges which permit it to be adjusted. The built-in loop normally provides satisfactory reception, however in locations remote from broadcasting stations or where poor receiving conditions exists, an outdoor antenna will improve reception.

By shorting terminals 3 and 4 on the antenna terminal strip on the rear of the chassis, the outdoor FM dipole (if used) can be utilized as an outdoor antenna for AM reception. However, if a separate AM outdoor antenna is to be used the lead-in from the antenna should be connected to terminal 4 on the antenna terminal strip, on the rear of the chassis.

The half-wave folded dipole within the cabinet is for FM reception, connection being made by a section of 300 ohm transmission line. It should be borne in mind that the dipole is also a directional device. Should the reception of a desired FM station be inadequate after installation in the home, it may be possible to correct the condition by relocating the receiver in the room.

Internal antennas are intended for use only in the presence of adequate field strength, as

MODELS P7, P9, P10, FARNSWORTH TELEV. & RADIO CORP.
Series, Capehart

in large metropolitan areas where local stations supply the majority of desired programs. Neither a loop nor a dipole element which is confined within a cabinet can be considered as efficient signal pickup devices, therefore if field strength requirements are not met, it will be necessary for satisfactory reception, to install an efficient outside antenna.

When an outside dipole is used, disconnect the transmission line to the internal dipole from the Fahenstock clips on the rear of the cabinet and connect the transmission line from the outside dipole to these clips.

The same chassis as used in the P7 instruments is also used as an AM-FM chassis in Capehart Television-Radio-Phono Combinations. In this case an outside television antenna will be connected to the clips at the rear of the cabinet and it will be necessary to connect the antenna terminals on the video chassis to terminals 1 and 2 on the receiver antenna terminal strip.

MAINTENANCE OF THE RECEIVER

SECTION IV

1. *Adjustment of Dial Pointer*

a. Tune receiver to extreme low frequency end of dial and set pointer to index at the last calibration mark of either scale.

b. Carefully determine that the gang condenser plates are completely meshed with the pointer in this position.

Warning: This adjustment is extremely important if subsequent alignment is to provide accurate calibration.

2. *Dial Slippage*

a. The dial pointer may be sticking, causing dial slippage. This may be due to (a) lubricant on rod, (b) bent rod, (c) rough rod.

(a) The rod must be free of all lubricants. Lubrication, momentarily helpful, causes gum to form at the pointer mounting, resulting in "sticking." Clean well with carbon tetrachloride.

(b) Bent rods must be accurately straightened or replaced.

(c) Rough portions of the rod surface should be cleaned with crocus cloth until perfectly smooth.

3. *Replacing Miniature Tubes*

Inadvertently inserting miniature tubes in their sockets incorrectly will result in damage to the tube pins. Therefore extreme care should be taken to see that the tube pins are properly aligned with the tube socket before applying pressure to insert the tube. As an aid to the serviceman we have placed an indicating mark on the miniature tube sockets to show the correct position for the center of the separation space between the first and last pins on the tube. In this manner it is posible to line-up the tube with the socket before exerting pressure.

4 *Control Knobs—Eccentric—Loose—How to Remove*

a. Knobs eccentric (wobbly motion) or loose.

This may be caused by pinching together the two halves of the split-shaft end. One-half section becomes bent toward the axis of the shaft to a greater degree than does the other. Re-form the split portions of the shaft so that they are symmetrical with respect to the axis of the shaft.

b. To remove control knobs.

Loop a heavy cord behind the knob, bringing out the two ends at opposite sides of the knob. Pull both ends firmly. If the cord (both ends) is brought out on one side only, there will be a tendency to cause the difficulty of 4a, above.

5. *Microphonics and Feedback*

a. Microphonic tubes.

b. Check the variable condenser stator plates to ascertain whether they are loose. If so, apply a laquer cement to the clamp which holds the stator plates to the insulating material.

c. "Twin lead" to antenna binding posts may be stapled to cabinet in taut condition, whereby feedback is introduced mechanically. Re-staple the twin lead, leaving somewhat free and loose.

d. On FM, microphonics and howl may be caused by the lead from stator plate to subchassis assembly being taut. Re-solder with less tension in the flat ribbon lead.

NOTE: Oscillator trimmer may have to be readjusted.

REMOVING CHASSIS FROM CABINET

Following is the suggested procedure to be employed in removing the receiver and preamplifier chassis from the cabinet for service purposes.

Model 35P7

1. Remove the knobs.

2. Disconnect the A.C. cable and phono input cable from the record changer. To do this simply remove the two palnuts in the front of the record changer slide drawer and lift the drawer up just enough to reach in and remove the plugs from the power socket and the phono output jack on the changer. It will be necessary to unfasten the cables from the changer slide where they are held in place. Upon reassemblying the instrument, be certain that these cables are again fastened so that they will not become entangled in the changer mechanism.

3. Remove the Phono Pre-amplifier chassis by removing the three mounting screws which fasten it to the cabinet wall.

4. Remove the pre-amp output cable from the phono input jack on the receiver chassis and disconnect the pre-amp power cable.

5. Disconnect the speaker cable and antenna leads.

6. Remove the two mounting bolts in rear of the receiver chassis and slide the chassis out on the chassis mounting board. The mounting board will have to be removed to get at the underside of the chassis.

© John F. Rider

Models 32P9 and 33P9

1. Remove the knobs.
2. Disconnect the a.c. cable and phono input cable from the record changer. The underside of the changer is easily accessible from the rear of the cabinet. Both cables are fastened to the inner wall of the cabinet by means of insulated staples, it will be necessary to remove these staples. Upon reassembling the instrument, be certain that these cables are again fastened as they were.
3. Remove the phono preamplifier chassis by removing the three mounting screws which fasten it to the cabinet wall.
4. Remove the pre-amp output cable from the phono input jack on the receiver chassis and disconnect the pre-amp power cable.
5. Disconnect the speaker cable and antenna leads.
6. Remove the molding from around the glass escutcheon and remove the escutcheon.
7. Remove the chassis mounting bolts. (The chassis is mounted on the wall of the cabinet. The bolts, which are accessible from the record storage compartment, are concealed by plug buttons.) The two top bolts are to be removed first, then loosen the bottom bolt slightly. Grasp the chassis from the top, preferably by placing the fingers under the dial background panel, remove the final mounting bolt with the other hand and then lower the chassis to the bottom of the cabinet.

Model 34P10

1. Use the same procedure as described for models 32P9 and 33P9 with exception of steps 3 and 4. (The 34P10 does not use the phono preamplifier.)

NOTE: It is not necessary to remove the chassis from the cabinet to replace tubes or dial lights or to remove tubes for testing in any of these models. All tubes are accessible from the rear of the cabinet in the 35P7. In the other models there is a removable panel in the partition separating the receiver and record changer compartments. Tubes that are not accessible from the rear of the cabinet are accessible through the opening provided by this panel.

PARTS IDENTIFICATION

SECTION V

RF. OSCILLATOR AND MIXER COILS

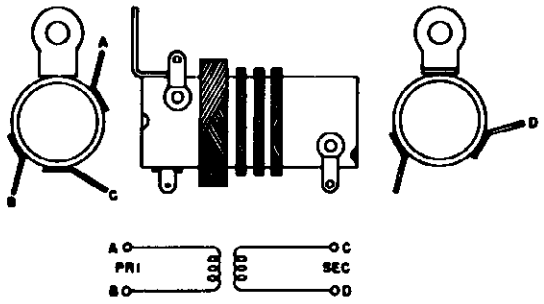

AM Conv. Coil

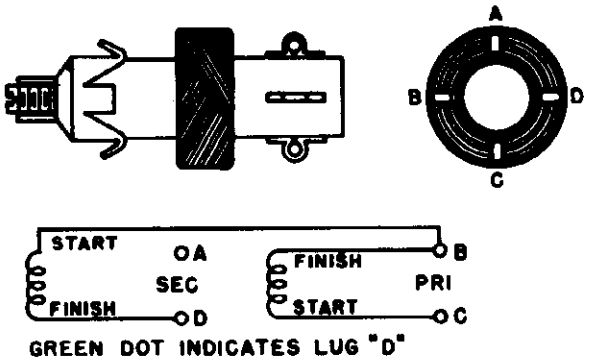

AM OSC. Coils

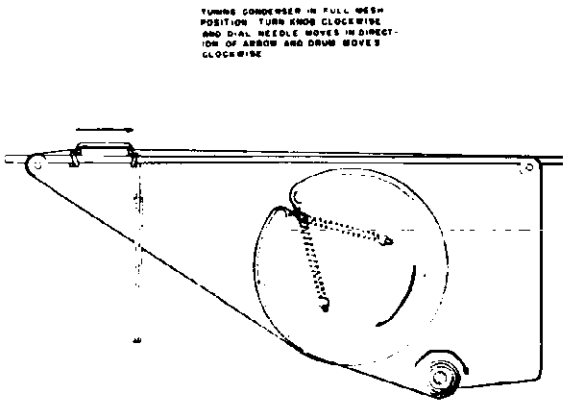

Dial Stringing

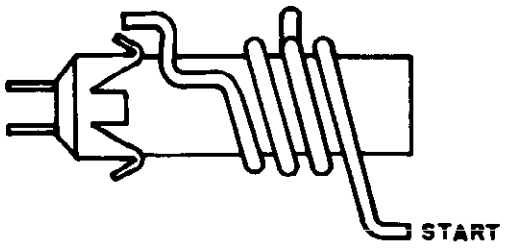

TOTAL TURNS	TAP AT
MIXER COIL — $3\frac{1}{4}$	$\frac{1}{2}$ TURN
OSC. COIL — $3\frac{1}{4}$	$1\frac{1}{8}$ & $2\frac{1}{8}$ TURNS

FM Coils

MODELS P7, P9, P10, FARNSWORTH TELEV. & RADIO CORP.
Series, Capehart

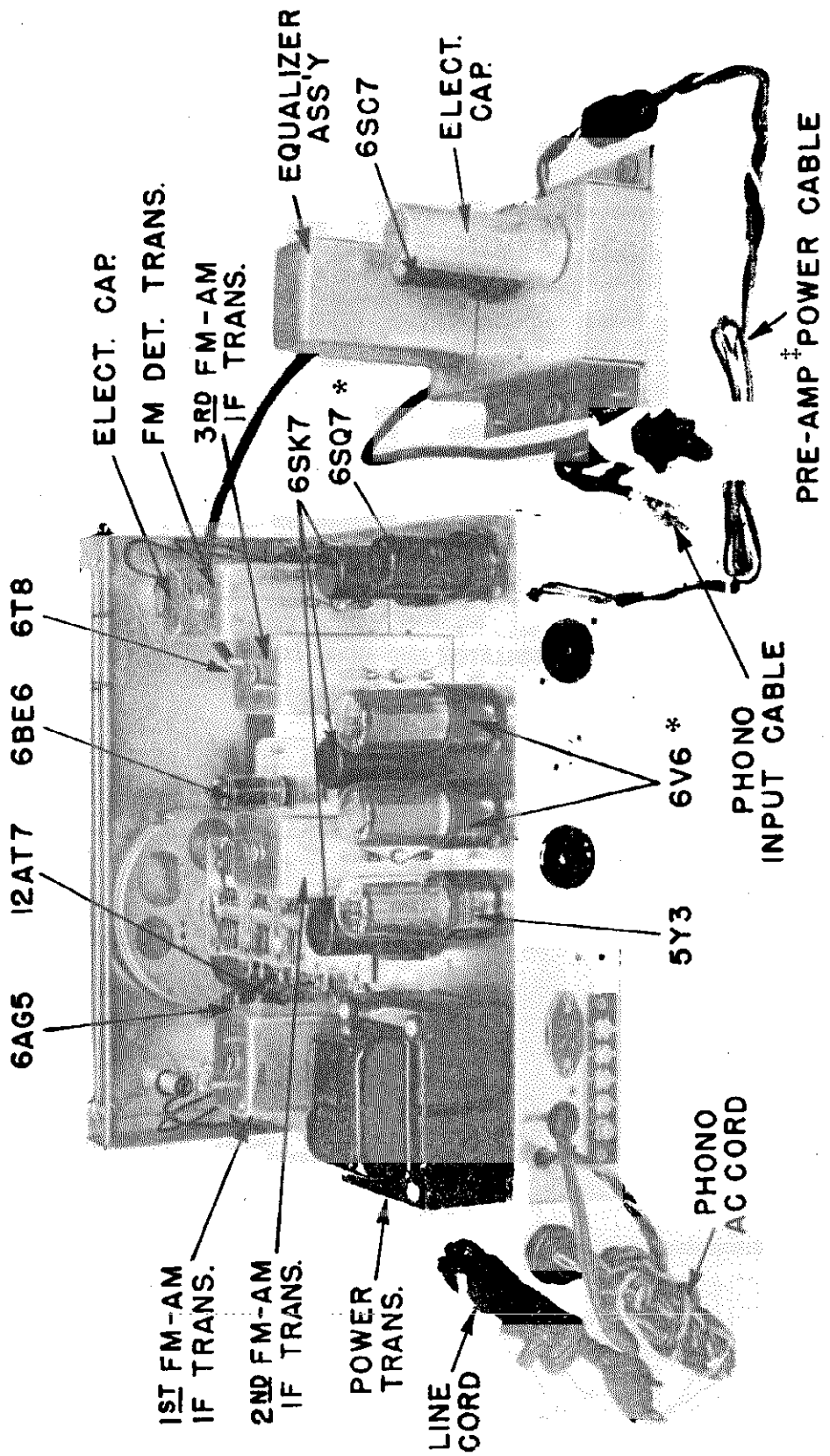

P7 CHASSIS

* P9 & P10 chassis have only (1) 6V6 and no 6SQ7.

‡ P10 does not use Pre Amplifier

©John F. Rider

FARNSWORTH TELEV. & RADIO CORP.

MODELS P7, P9, P10, Series, Capehart

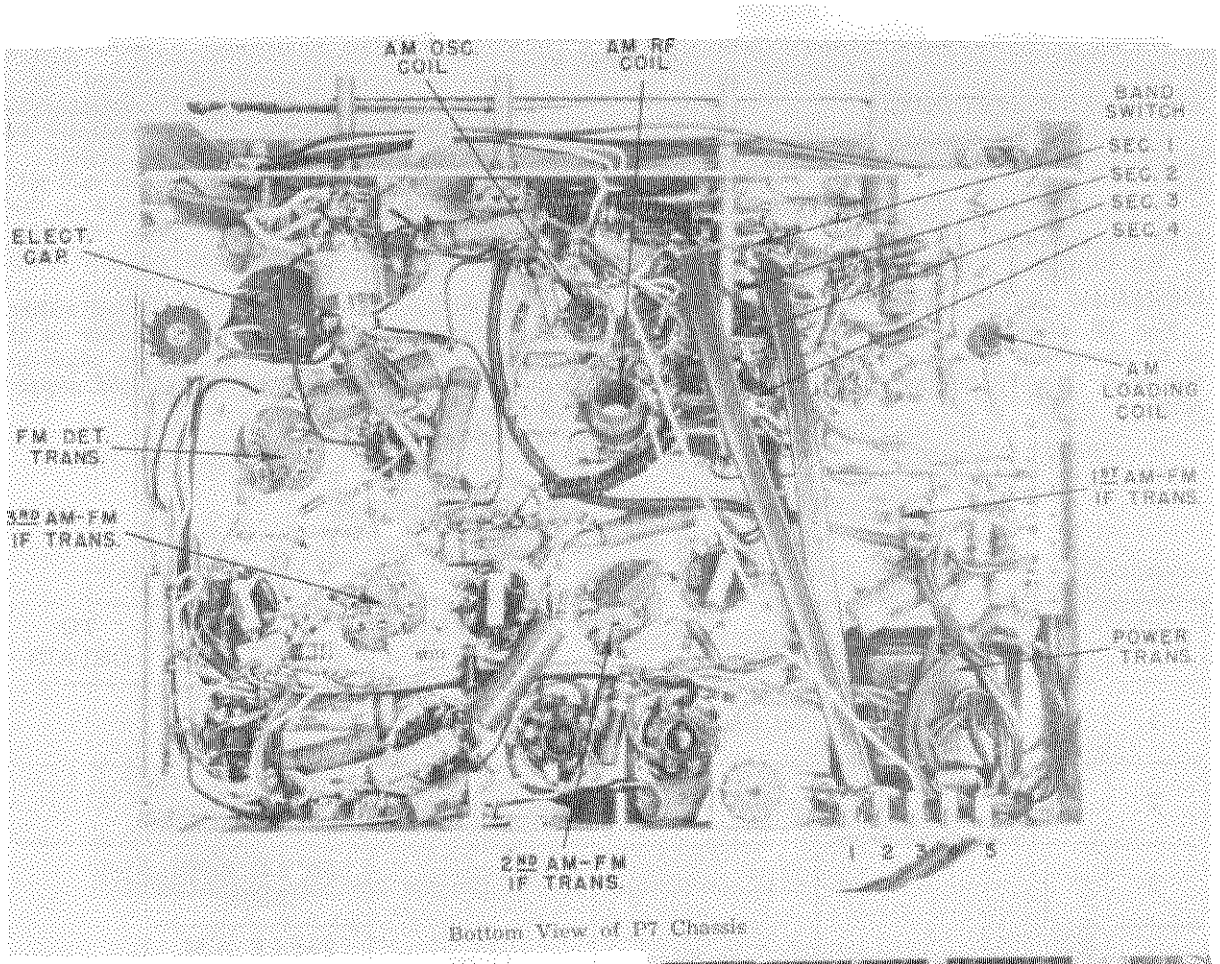

Bottom View of P7 Chassis

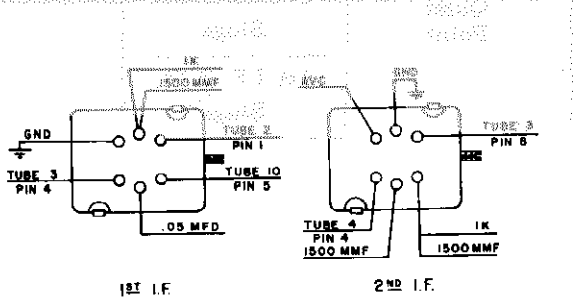



Rear View of Chassis

3RD I.F.

DISC. TRANS.

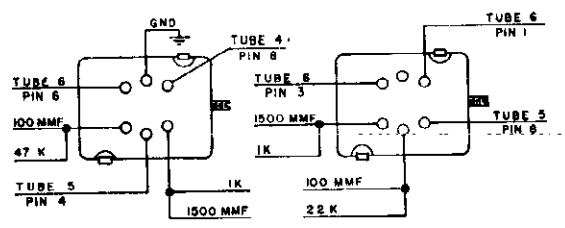

Bottom View of I.F. Cans

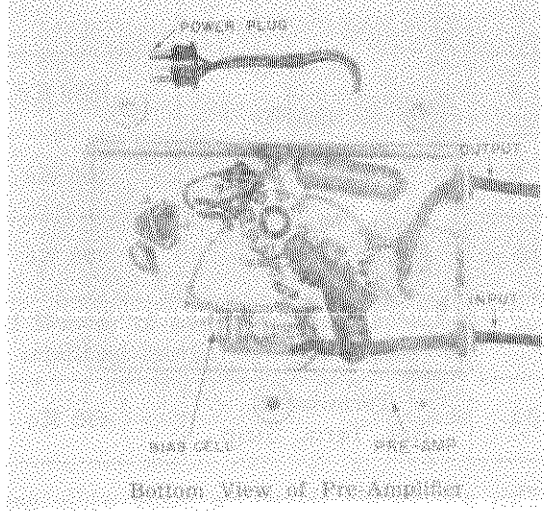

Bottom View of Pre-Amplifier

© John F. Rider

MODELS P7, P9, P10, Series, Capehart — FARNSWORTH TELEV. & RADIO CORP.

ALIGNMENT OF AM BAND

SECTION VI

EQUIPMENT REQUIRED

A calibrated RF Signal Generator having fundamental frequencies of from 455 KC to 1620 KC.

A Voltohmyst, or some such high resistance type AC voltmeter.

An insulated screwdriver.

GENERAL INSTRUCTIONS

For IF alignment the signal generator is to be connected through a .1 mfd. capacitor to the grid (pin 7) of the 6BE6 AM converter tube.

For RF alignment the signal generator is to be connected through a .1 mfd. capacitor to the RF section of the gang tuning capacitor.

For adjustment of the wavetrap the 455 KC signal should be connected to terminal 4 on the Antenna Terminal Strip on the rear of the chassis. The wavetrap is mounted on the loop antenna.

The AC voltmeter can be connected either across the voice coil of the loud speaker or if the meter range is high enough, from plate to plate of the output tubes, using a .1 mfd. capacitor for isolation.

TABULATION FOR AM ALIGNMENT

See page 11 for Trimmer locations

STEPS	CONNECT GENERATOR		SET GENERATOR AT	SET GANG AT	ADJUST	TO OBTAIN
1	Set Bandswitch in AM position					
2	Set Tone and Volume Controls at Maximum					
3	Through .1 Mfd.	Grid Conv. tube	455 Kc	Quiet Point	3rd I.F. A.M. Slugs	MAXIMUM OUTPUT
4					2nd I.F. A.M. Slugs	
5					1st I.F. A.M. Slugs	
6	Through .1 Mfd.	RF Section of GANG	1620 Kc	1620 Kc	A.M. Osc. Trimmer	
7					A.M. R.F. Trimmer	
8			1500 Kc	1500 Kc	A.M. Ant. Trimmer	
9			600 Kc	600 Kc	A.M. Ant. Padder	
10			600 Kc	600 Kc	A.M. Osc. Padder*	
11	Check dial calibration at several frequencies. If not reasonably correct, adjust oscillator padder. See Note †					
12	Terminal 4 Ant. Term. Strip		455 Kc	Quiet Point	Wave Trap on Loop	MINIMUM OUTPUT

* This adjustment should be made while gang is rocked.

† After any adjustment of oscillator padder, repeat steps 4 to 8 inclusive.

MODELS P7, P9, P10,
Series, Capehart

FARNSWORTH TEL

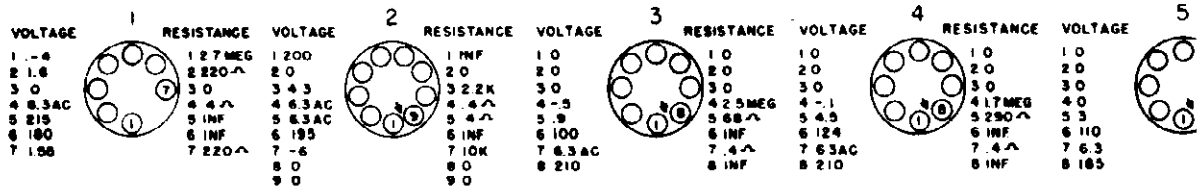

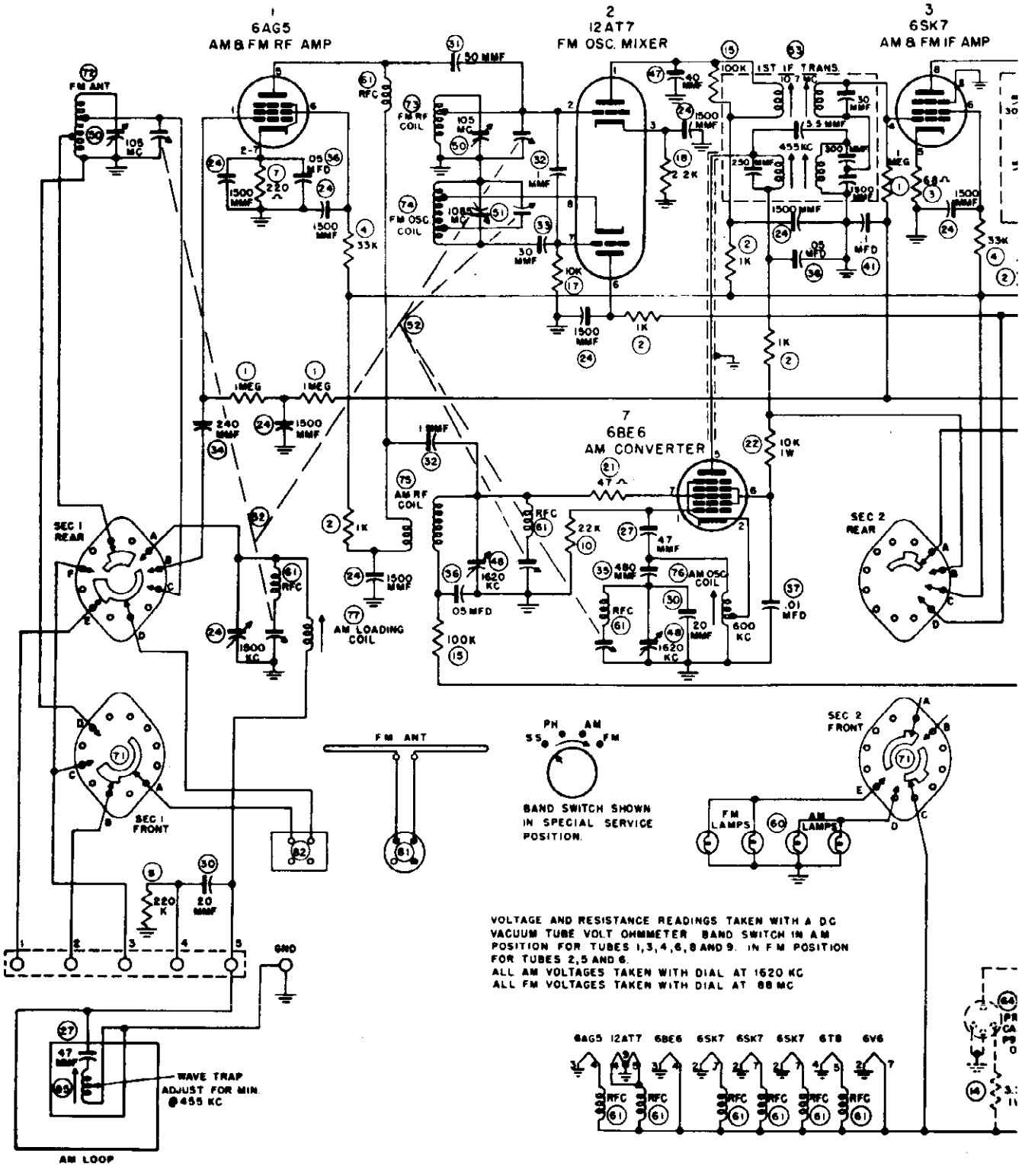

©John F. Rider

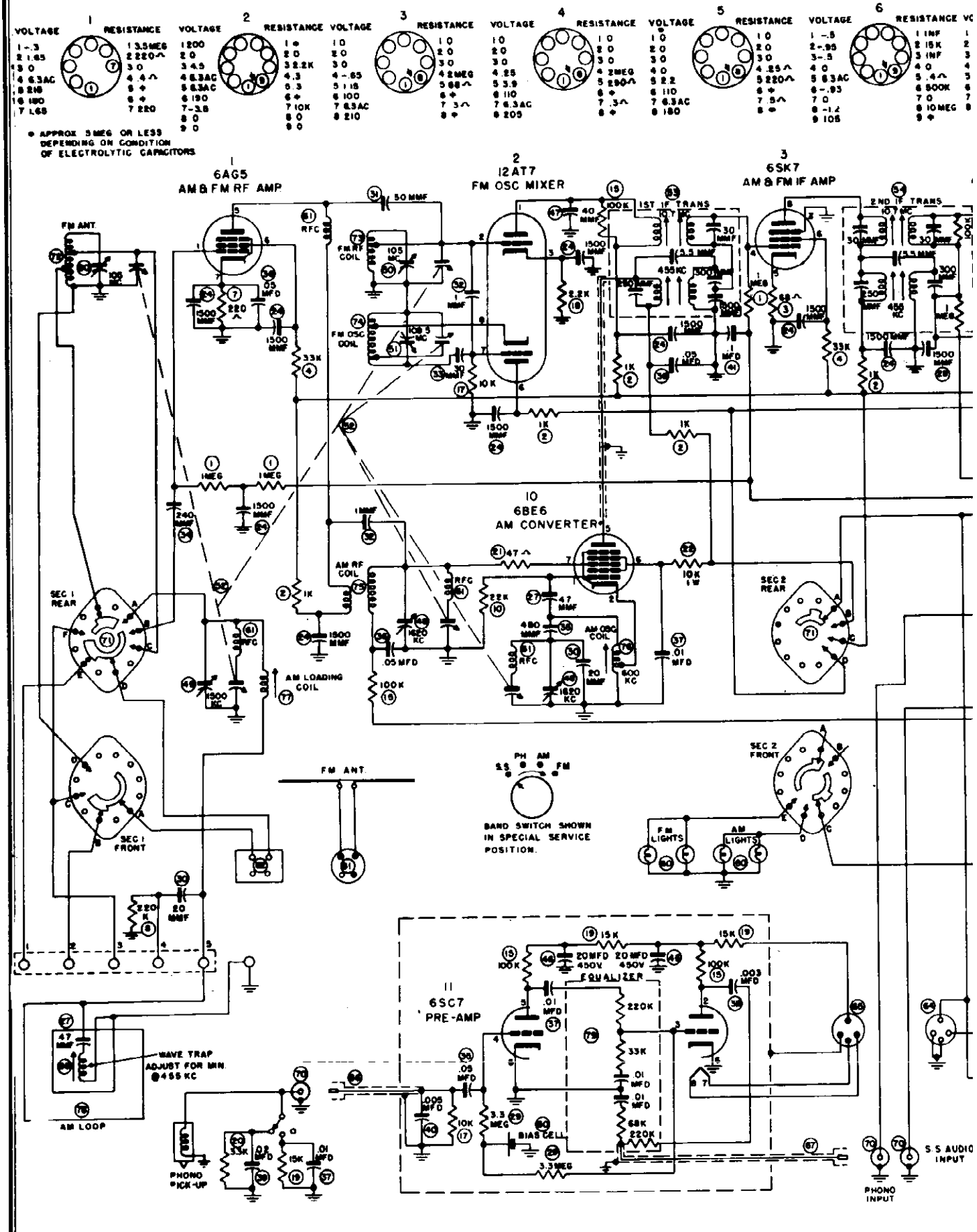
1
VOLTAGE
RESISTANCE
2
VOLTAGE
RESISTANCE
3
VOLTAGE
RESISTANCE
4
VOLTAGE
RESISTANCE
5
VOLTAGE
RESISTANCE
6
VOLTAGE
RESISTANCE
* APPROX 5 MEG OR LESS DEPENDING ON CONDITION OF ELECTROLYTIC CAPACITORS
1
6AG5
AM & FM RF AMP
2
12AT7
FM OSC MIXER
3
6SK7
AM & FM IF AMP
10
6BE6
AM CONVERTER
11
6SC7
PRE-AMP
FM ANT.
AM LOOP
WAVE TRAP ADJUST FOR MIN @ 455 KC
PHONO PICK-UP
BIAS CELL
EQUALIZER
BAND SWITCH SHOWN IN SPECIAL SERVICE POSITION.
FM LIGHTS
AM LIGHTS
PHONO INPUT
S S AUDIO INPUT
SEC 1 REAR
SEC 1 FRONT
SEC 2 REAR
SEC 2 FRONT
1ST IF TRANS
2ND IF TRANS
AM LOADING COIL
AM RF COIL
AM OSC COIL
FM RF COIL
FM OSC COIL

©John F. Rider

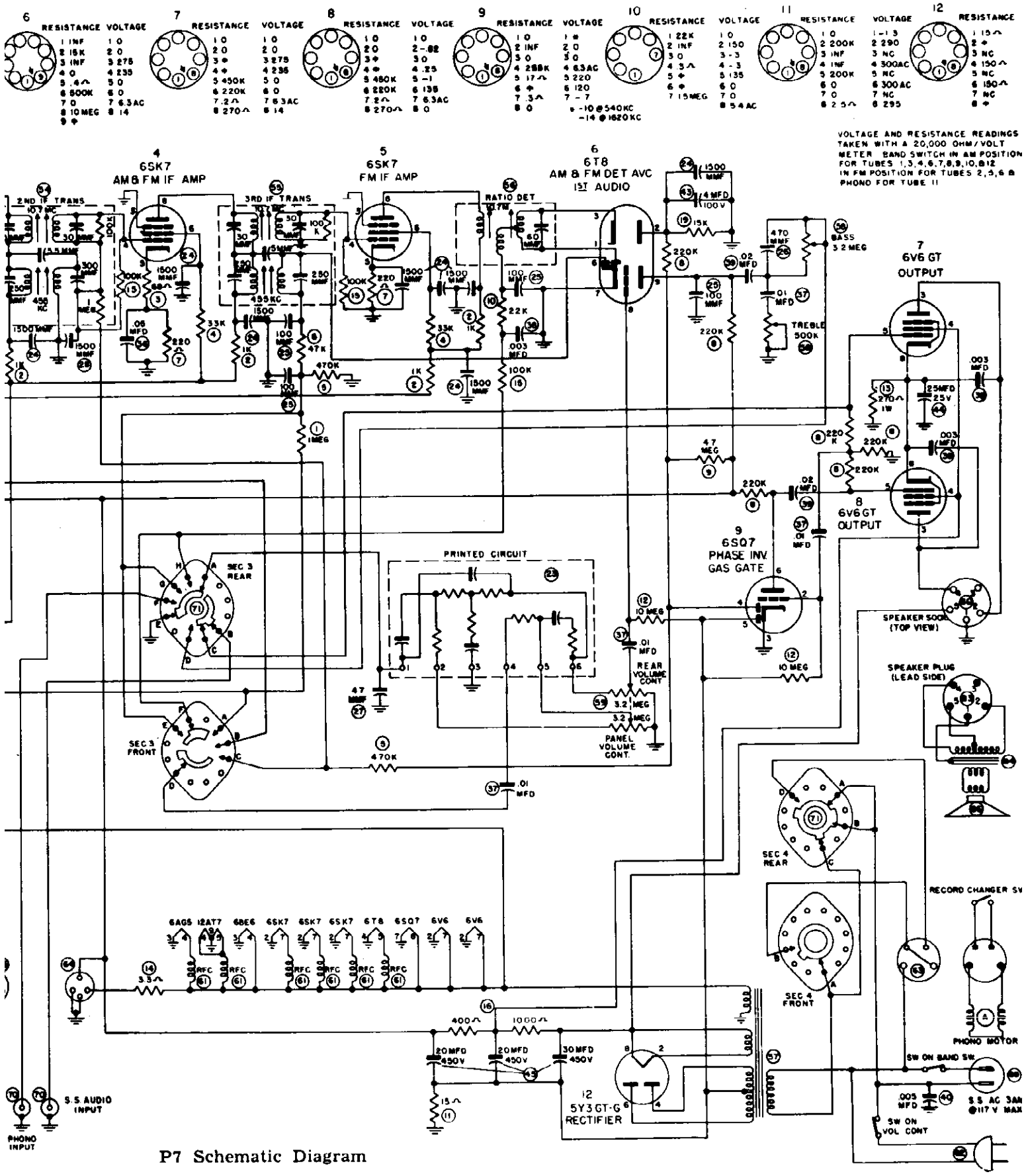

P7 Schematic Diagram

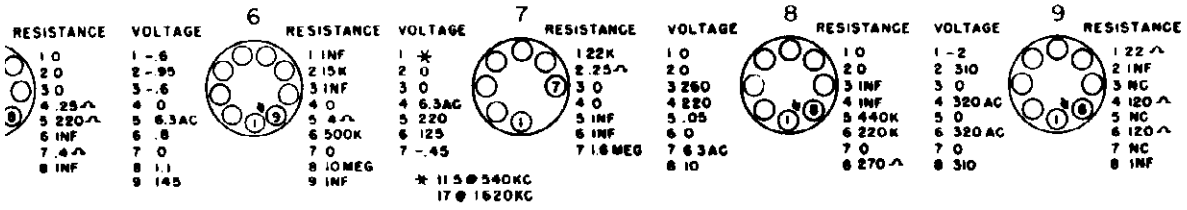

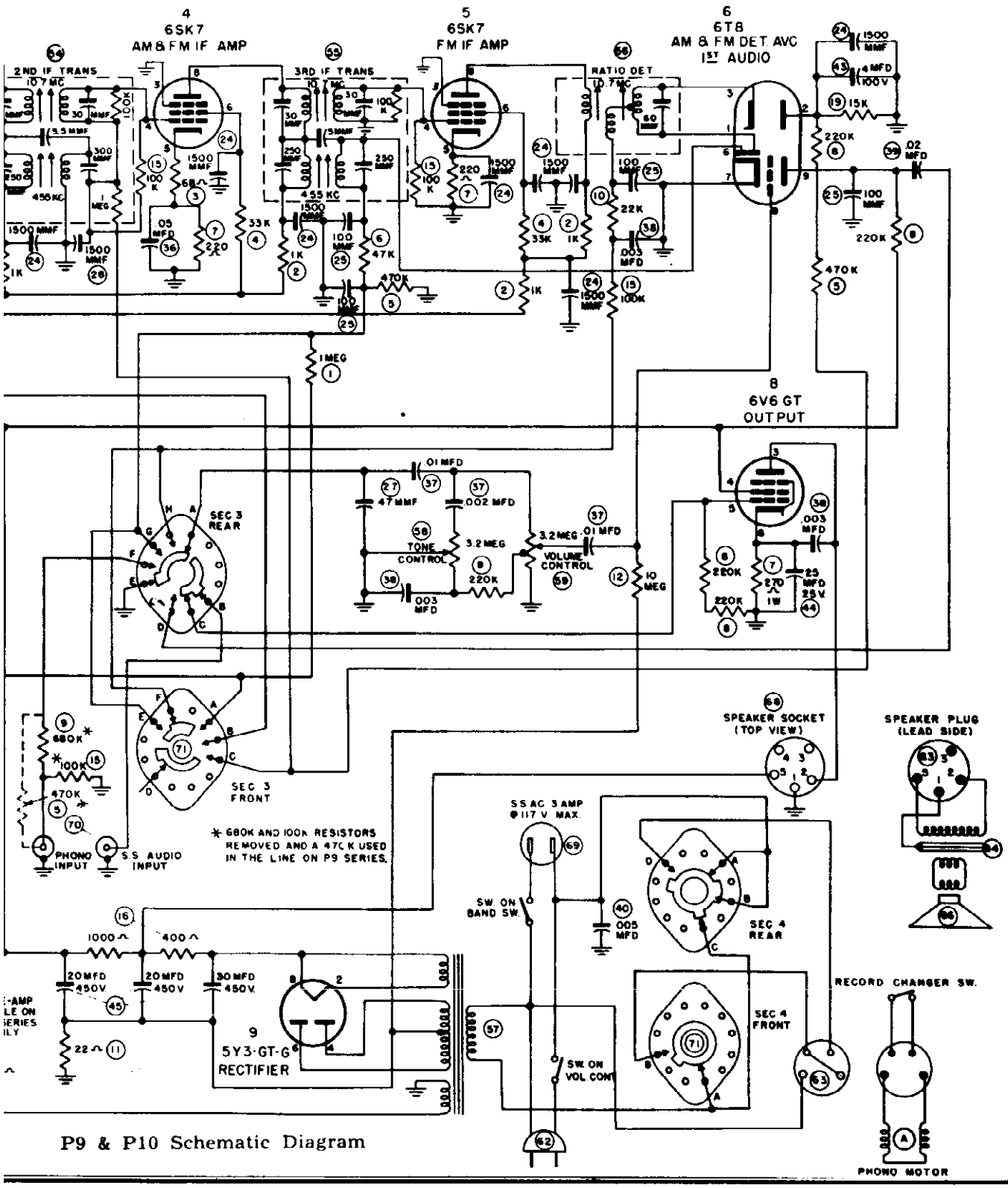

P9 & P10 Schematic Diagram

FARNSWORTH TELEV. & RADIO CORP. MODELS P7, P9, P10, Series, Capehart

LOCATION OF TRIMMERS

SECTION VIII

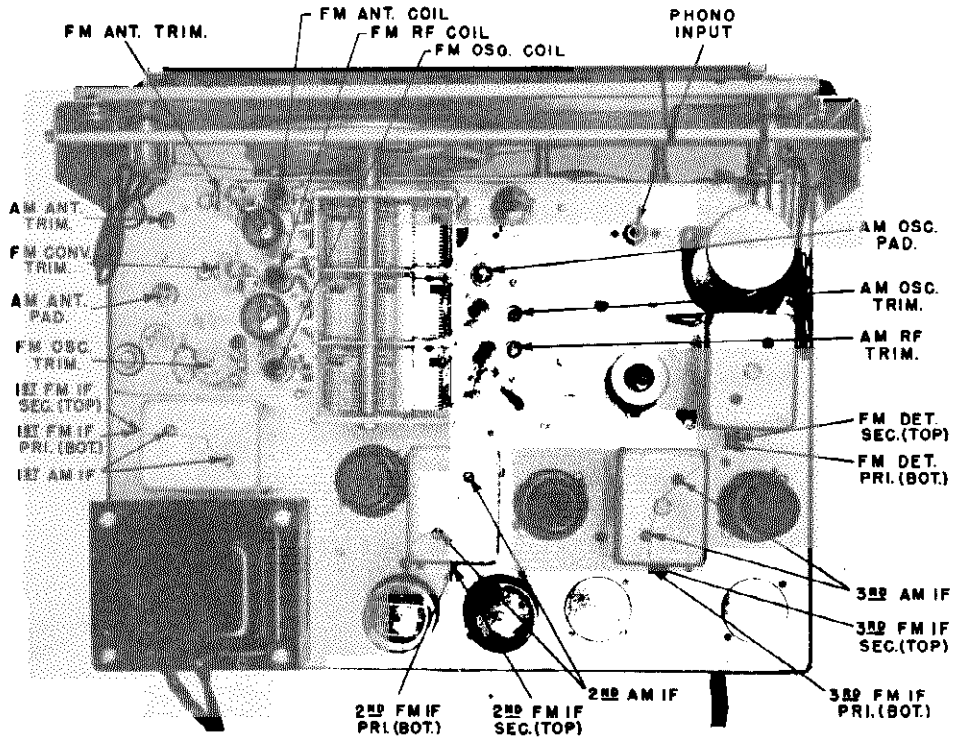

Top View of P9, P10 Chassis

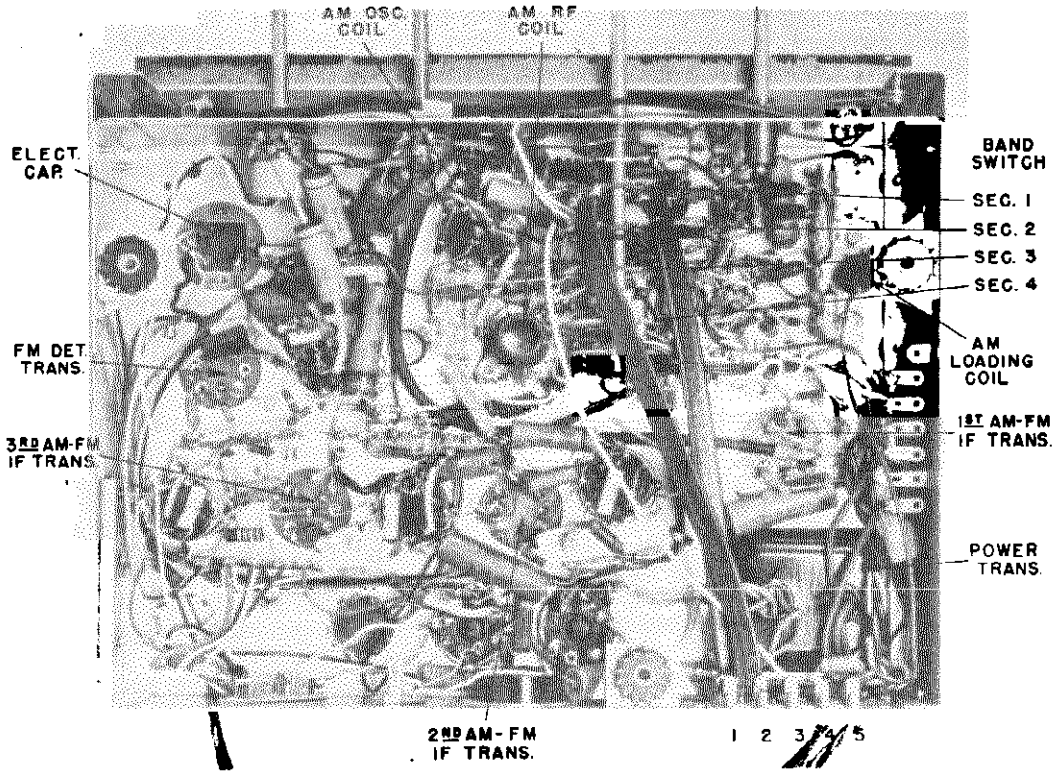

Bottom View of P9, P10 Chassis

MODELS P7, P9, P10, FARNSWORTH TELEV. & RADIO CORP.
Series, Capehart

FM ALIGNMENT

SECTION IX

This section presents information on two methods of alignment of Capehart receivers. Those service shops possessing a suitable Sweep Generator and Oscillograph will effect considerable saving of time, as well as assuring more precise alignment, by using the first method, the sweep generator method. This is the method used in factory alignment.

An alternative method, using an amplitude-modulated signal generator, is presented in the second portion of this section, which covers alignment of FM, IF and RF stages.

The conversion of FM dial scale readings to channel numbers can be made, with the help of the charts shown here, from the following analysis:

The FM band extends from 88 to 108 mc., each station channel 200 kc. in width. Channel 201, that lowest in frequency, has center frequency at 88.1 mc. Each succeeding channel is successively 200 kc. higher, so channel 202 is centered at 88.3 (200 kc. higher), channel 203 is centered at 88.5 mc., 206 at 89.1 mc., etc.

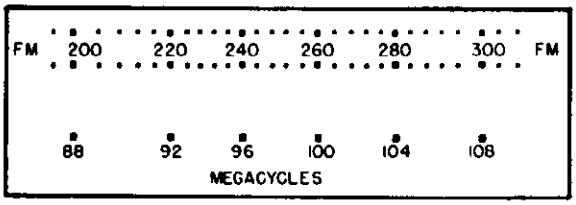

SWEEP GENERATOR METHOD OF FM IF ALIGNMENT

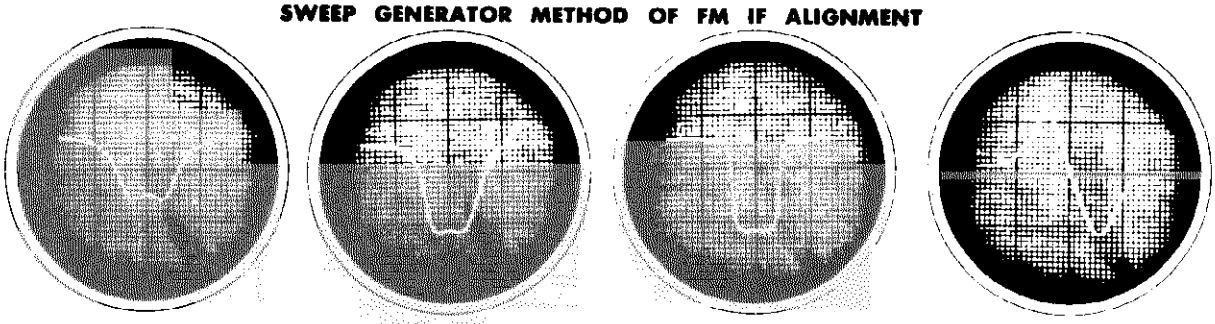

(1) (2) (3) (4)

These curves were obtained under ideal conditions and show curves to be expected. They should be duplicated as nearly as possible.

1. Equipment required: Oscilloscope, 10.7 MC Sweep Generator, Voltohmyst and RF Signal Generator.

2. Make connection from vertical deflection amplifier of oscilloscope to pin No. 2 of 6T8 discriminator tube. Make certain that the 4MFD electrolytic condenser is disconnected from this same circuit. It is necessary that the lead to the oscilloscope be shielded, of low total capacity and connection to the receiver isolated by means of a 47K resistor.

3. Connect Sweep Generator to last FM IF grid (pin 4 6SK7) through a .001 MFD coupling capacitor.

4. Connect a 350 mmf. capacitor across the discriminator secondary. Back out discriminator secondary slug (top slug) as far as it will turn. Align primary (bottom slug) to obtain a somewhat broad but single peaked curve. Then remove the 350 mmf. capacitor and tune the secondary to obtain a curve similar to figure 1. This does not constitute a final alignment of the discriminator, but is a convenient expedient to assist in IF alignment.

5. Shift connection of sweep signal generator to the grid of the second FM IF tube.

NOTE: As alignment moves from stage to stage, reduce input instead of reducing oscilloscope gain.

6. Align the third FM IF transformer by first turning the secondary slug all the way out, adjust the primary and then the secondary for a symmetrical flat top pattern, as in Fig. 2.

7. Align second IF transformer in same manner as described in Section 6. Note that the width of the nose of the curve is the same as before, but the sides have become steeper as in Fig. 3.

8. Connect the signal generator to the grid of the mixer tube, in series with a 10,000 resistor and a .001 MFD capacitor or loosely couple by stray capacitance of an insulated wire.

9. Align first FM IF Transformer in the same manner as in Section 6. Note that the sides of the curve have further steepened, but that the nose of the curve has retained approximately the same width as in Fig. 3.

10. Connect 4 MFD electrolytic capacitor, that was previously disconnected.

11. Connect oscilloscope to audio output terminal of the discriminator transformer.

12. With sweep signal input to converter grid, align discriminator transformer for conventional discriminator pattern, as in Fig. 4.

15. Connect the signal generator to the mixer tube grid. With an unmodulated signal at 10.7 MC adjust the input to 190 microvolts. Connect a voltohmyst to the AVC line. Rock the signal generator until the peak is obtained on the voltohmyst. With a 190 microvolt input this peak should read -1 volt.

SIGNAL GENERATOR METHOD

GENERAL INSTRUCTIONS

a. Tune receiver to extreme low frequency end of dial and set pointer to index at the last calibration mark.

b. Carefully determine that the gang condenser plates are completely meshed with the pointer in this position.

WARNING: This adjustment is extremely important if subsequent alignment is to provide accurate calibration.

c. With the pointer at the extreme low end of the range, rotate band switch through all positions and note that the pointer line is accurately indexed on both the AM and FM bands.

Unless otherwise indicated, the receiver controls shall be set as follows during all alignment operations:

a. Set treble tone control to maximum treble position.

b. Set bass tone control to maximum bass position.

c. Set volume control to maximum.

FM IF ALIGNMENT

1. Connect a voltohmyst or high resistance voltmeter on AVC line (negative lead to pin 2 of 6T8 and positive lead to chassis) through a .001 capacitor. Connect on AM signal generator, set at 10.7 MC, to the grid of the last FM IF amplifier. Connect output meter on voice coil of speaker.
2. Turn the secondary slug of the FM detector transformer (top slug) out as far as it will turn. Then, tune the primary (bottom slug) for maximum output (negative voltage) on the voltmeter.
3. Connect generator to grid of second FM IF amplifier (6SK7).
4. Detune the secondary of the 3rd IF transformer by turning out as far as possible.
5. Tune the primary of the 3rd IF transformer for maximum voltage, next tune the secondary for maximum voltage.

NOTE: In each step do not use an input greater than necessary to give three volts AVC.

6. Connect signal generator to grid of first IF amplifier (6SK7).
7. Detune the secondary of the 2nd IF amplifier by turning out as far as possible.
8. Tune the primary of the 2nd IF for maximum voltage, next tune the secondary for maximum voltage.
9. Connect the signal generator to the FM mixer grid (12AT7).
10. Tune the 1st IF transformer as in steps 7 and 8.
11. With the generator still connected to the FM mixer grid and modulated with 400 cycles, about 200 microvolts input, adjust the FM detector secondary slug for minimum output voltage on the output meter which is connected across the voice coil.

FM RF ALIGNMENT

1. Equipment required:
   a. RF Signal Generator. Range 88 to 108 MC.
   b. Output Meter.
   c. Insulated Screw Driver.
2. Connect RF signal generator in series with 330 ohm carbon resistor to "high" side of FM antenna socket. Connect output meter across voice coil of speaker.
3. Set tuning control for pointer to calibrate at 108.
4. Apply 108 MC Signal.
5. Set converter and antenna trimmers at minimum capacity.
6. Adjust oscillator trimmer by tuning from maximum capacity to first signal that is heard, and peak for maximum output.
7. Adjust antenna and converter trimmers for maximum output.
8. Set tuning controls so dial pointer calibrates at 88 MC.
9. Apply 88 MC signal.
10. Adjust oscillator, converter, and antenna slugs to maximum output.
11. Repeat operations 3 to 10 inclusive.

NOTE: The degree of adjustment required in the tuning of the oscillator slug will determine the number of times operations 3 to 10 must be repeated until no further gain in sensitivity is obtained.

12. Carefully tune across the entire FM band for the observance of the dead or weak spots that may be a resultant of improper alignment or defective components. This can be determined by carefully noting the degree of receiver noise, that is, high noise generally is accompanied by good sensitivity.

MODELS
P7, P9, P10,
Series, Capehart

FARNSWORTH TELEV. & RADIO CORP.

P7 INSTRUMENTS

Ref. No.	Part No.	Description
1	77181	Ins. Carbon Res. 1 Meg.
2	77233	Ins. Carbon Res. 1K
3	77245	Ins. Carbon Res. 68
4	77183	Ins. Carbon Res. 33K
5	77173	Ins. Carbon Res. 470K
6	77172	Ins. Carbon Res. 47K
7	77186	Ins. Carbon Res. 220
8	77178	Ins. Carbon Res. 220K
9	77187	Ins. Carbon Res. 4.7 Meg.
10	77169	Ins. Carbon Res. 22K
11	77491	Ins. Carbon Res. 15 ohms
12	77182	Ins. Carbon Res. 10 Meg.
13	77174	Ins. Carbon Res. 270 1W
14	77492	Ins. Carbon Res. 3.3 ohms 1W
15	77167	Ins. Carbon Res. 100K
16	77463	Molded Res. 1000 ohms, 400 ohms
17	77180	Ins. Carbon Res. 10K
18	77184	Ins. Carbon Res. 2.2K
19	77246	Ins. Carbon Res. 15K
20	77240	Ins. Carbon Res. 3.3K
21	77219	Ins. Carbon Res. 47 ohms
22	77022	Ins. Carbon Res. 10K 1W
23	77462	Printed Circuit
24	25273	Ceramic Cap. 1500 mmf.
25	25188	Ceramic Cap. 100 mmf.
26	25285	Ceramic Cap. 470 mmf.
27	25193	Ceramic Cap. 47 mmf.
28	25299	Mica Cap. 1500 mmf.
29	77223	Ins. Carbon Res. 3.3 Meg.
30	25492	Ceramic Cap. 20 Mmf.
31	25493	Ceramic Cap. 50 Mmf.
32	25497	Ceramic Cap. 1 Mmf.
33	25329	Ceramic Cap. 30 Mmf. (N750)
34	25427	Ceramic Cap. 240 Mmf.
35	25504	Silver Mica Cap. 480 Mmf. ±3%
36	25196	Tub. Paper Cap. .05-600V.
37	25186	Tub. Paper Cap. .01-400V.
38	25184	Tub. Paper Cap. .003-600V.
39	25195	Tub. Paper Cap. .02-600V.
40	25031	Tub. Paper Cap. .005-600V.
41	25182	Tub. Paper Cap. .1-200V.
42	25194	Tub. Paper Cap. .01-600V.
43	25270	Elect. Cap. 4 Mfd. 100V
44	25158	Elect. Cap. 25 Mf.-25V
45	25424	Elect. Cap. 30, 20, 20 Mf.-450V.
46	25463	Elect. Cap. 20, 20, Mf.-450V.
47	25507	Ceramic Cap. 40 Mmf. (N-750)
48	26278	AM Conv. Osc. Trim. Strip
49	26279	AM Ant. Trimmer
50	26280	FM Mixer-Ant. Trim. Strip
51	26231	FM Osc. Trimmer
52	17210	Gang Capacitor & Drive Drum Assembly
53	38957	1st IF Trans.
54	38950	2nd IF Trans.
55	38951	3rd IF Trans.
56	38952	Discriminator Trans.
57	94262	Power Trans.
58	78159	Tone Control
59	78158	Volume Control
60	42185	Dial Light Mazda #44
61	38884	RF Choke (heater)
62	27118	Line Cord
63	22193	Phono AC Cord & Socket
64	22173	Pre-Amp Power Cable (Fem.)
65	22171	Pre-Amp Power Cable (Male) (Pre-Amp Chassis)
66	22169	Pickup Cable (Pre-Amp Chassis)
67	22170	Output Cable (Pre-Amp Chassis)
68	80244	5 Prong Speaker Socket
69	80497	(SS) Power Adapter Socket
70	80030	Phono Socket
71	90269	Band Switch
72	38958	FM Ant. Coil Ass'y.
73	38959	FM Mixer Coil Ass'y.
74	38960	FM Osc. Coil Ass'y.
75	38961	AM Conv. Coil Ass'y.
76	38962	AM Osc. Coil Ass'y.
77	38963	AM Loading Coil Ass'y.
78	13893	Low Impedance Loop Antenna Assembly
79	13869	Equalizer Ass'y. (Pre-Amp Chassis)
80	95005	Bias Cell (Pre-Amp Chassis)
81	05150	Dipole Lead and Plug Assembly
82	80439	3 prong socket (FM dipole)
83	80469	Speaker Plug (part of #13897)
84	94239	Output Transformer
85	38996	Wave Trap Coil
86	13897	12" PM Speaker & Output Transformer
87	38898	Osc. Series choke
	31446	Dial Escutcheon (35P7)
	05144	Dial Drive Cord Ass'y.
	31439	AM Dial Glass
	31440	FM Dial Glass
	59492	Volume Knob
	59495	Tuning Knob
	59498	Band Switch Knob
	59496	Bass Tone Knob
	59497	Treble Tone Knob
	60428	Washer
	05151	Dipole Antenna Ass'y.
	15214	Drive Shaft Assembly
	80456	Miniature Tube Socket
	80479	Miniature 9-pin Tube Socket
	17213	Dial Back Plate Ass'y.
	55385	Drive Shaft Bearing
	62032	Rubber Grommet (R. F. Chassis)
	80139	Molded Octal Socket
	80239	Molded Octal Socket
	58939	9-pin Min. Tube Shieldbase
	58940-2	Tube Shield (9-pin Min)
	80494	Bias Cell Mounting (Pre-Amp Chassis)
	80491	9-pin Min. Mica Tube Socket (12AT7)
	62172	Rubber Grommet
	62189	Rubber Bushing
	36260-003	Phil Rd. Hd. Wood Screw, #6 x ⅝" (Pre-Amp. Mtg.)
	80348	Pilot Lamp Soc. & Cord
	80522	Pilot Lamp Soc. & Cord
	07674	Chassis End Brkt. Ass'y. (R.H.)
	07673	Chassis End Brkt. Ass'y. (L.H.)
	05154	Light Shield
	04133	Dial Pointer Ass'y.
	55383	Pointer Rod
	62099	Rubber Grommet
	H-321	Cabinet (35P7)
	2000-323 003	#10/32 x 1⅛" Rd. Hd. Mach. screw (Chassis Mtg.)
	2000-321 003	#10/32 x 1" Rd. Hd. Mach. screw (Chassis Mtg. Board)
	2015-005 003	#8/32 Steel Hex nut (Speaker Mtg.)
	09374	Mtg. Spring Assy. (P-71 Changer)
	37066-072	#10/32 Acorn Palnut (Changer Mtg.)
	13890	Air Compression Stay Arm (35P7)
	64481	Spring
	37662	Cup Hook
	36490	Spring Washer
	74611	Operating Instructions (35P7)

All resistors are ½ watt unless otherwise specified

©John F. Rider

FARNSWORTH TELEV. & RADIO CORP. MODELS P7, P9, P10, Series, Capehart

P9 & P10 INSTRUMENTS

Ref. No.	Part No.	Description
.1	77181	Ins. Carbon Res. 1 Meg.
2	77233	Ins. Carbon Res. 1K
3	77245	Ins. Carbon Res. 68
4	77183	Ins. Carbon Res. 33K
5	77173	Ins. Carbon Res. 470K
6	77172	Ins. Carbon Res. 47K
7	77186	Ins. Carbon Res. 220
8	77178	Ins. Carbon Res. 220K
9	77508	Ins. Carbon Res. 680K (P10 only)
10	77169	Ins. Carbon Res. 22K
11	77236	Ins. Carbon Res. 22
12	77182	Ins. Carbon Res. 10 Meg.
13	77174	Ins. Carbon Res. 270 1W
14	77492	Ins. Carbon Res. 3.3 ohms 1W
15	77167	Ins. Carbon Res. 100K
16	77463	Molded Res. 1000 ohms, 400 ohms
17	77180	Ins. Carbon Res. 10K
18	77184	Ins. Carbon Res. 2.2K
19	77246	Ins. Carbon Res. 15K
21	77219	Ins. Carbon Res. 47 ohms
22	77022	Ins. Carbon Res. 10K 1W
24	25273	Ceramic Cap. 1500 mmf.
25	25188	Ceramic Cap. 100 mmf.
27	25193	Ceramic Cap. 47 mmf.
28	25299	Mica Cap. 1500 mmf.
29	77223	Ins. Carbon Res. 3.3 Meg. (Pre-Amp Chassis)
30	25492	Ceramic Cap. 20 Mmf.
31	25493	Ceramic Cap. 50 Mmf.
32	25497	Ceramic Cap. 1 Mmf.
33	25329	Ceramic Cap. 30 Mmf. (N750)
34	25427	Ceramic Cap. 240 Mmf.
35	25504	Silver Mica Cap. 480 Mmf. ±3%
36	25196	Tub. Paper Cap. .05-600V.
37	25185	Tub. Paper Cap. .002-600V.
38	25184	Tub. Paper Cap. .003-600V.
39	25195	Tub. Paper Cap. .02-600V.
40	25031	Tub. Paper Cap. .005-600V.
41	25182	Tub. Paper Cap. .1-200V.
42	25194	Tub. Paper Cap. .01-600V.
43	25270	Elect. Cap. 4 Mfd. 100V
44	25158	Elect. Cap. 25 Mf.-25V
45	25424	Elect. Cap. 30, 20, 20 Mf.-450V.
46	25463	Elect. Cap. 20, 20, Mf.-450V. (Pre-Amp Chassis)
47	25507	Ceramic Cap. 40 Mmf. (N-750)
48	26278	AM Conv. Osc. Trim. Strip
49	26279	AM Ant. Trimmer
50	26280	FM Mixer-Ant. Trim. Strip
51	26231	FM Osc. Trimmer
52	17210	Gang Capacitor & Drive Drum Assembly
53	38957	1st IF Trans.
54	38950	2nd IF Trans.
55	38951	3rd IF Trans.
56	38952	Discriminator Trans.
57	94262	Power Trans.
58	78153	Tone Control
59	78155	Volume Control
60	42185	Dial Light Mazda #44
61	38884	RF Choke (heater)
62	27118	Line Cord
63	22193	Phono AC Cord & Socket
64	22173	Pre-Amp Power Cable (Fem.) (P9 only)
65	22171	Pre-Amp Power Cable (Male) (Pre-Amp Chassis)
66	22169	Pickup Cable (Pre-Amp Chassis)
67	22170	Output Cable (Pre-Amp Chassis)
68	80244	5 Prong Speaker Socket
69	80497	(SS) Power Adapter Socket
70	80030	Phono Socket
71	90269	Band Switch
72	38958	FM Ant. Coil Ass'y.
73	38959	FM Mixer Coil Ass'y.
74	38960	FM Osc. Coil Ass'y.
75	38961	AM Conv. Coil Ass'y.
76	38962	AM Osc. Coil Ass'y.
77	38963	AM Loading Coil Ass'y.
78	13893	Low Impedance Loop Antenna Assembly
79	13869	Equalizer Ass'y. (Pre-Amp Chassis)
80	95005	Bias Cell (Pre-Amp Chassis)
81	05150	Dipole Lead and Plug Assembly
82	80439	3 prong socket (FM dipole)
83	80469	Speaker Plug (part of #13897)
84	94235	Output Transformer
85	38996	Wave Trap Coil
86	13892	12" PM Speaker & Output Transformer
87	38898	Osc. Series choke
	31460	Dial Escutcheon (32P9)
	05144	Dial Drive Cord Ass'y.
	31437	AM Dial Glass
	31438	FM Dial Glass
	59495	Tuning Knob
	59508	Band Switch Knob
	59509	Bass Tone Knob
	31459	Dial Escutcheon (33P9 &34P10)
	60428	Washer
	05151	Dipole Antenna Ass'y.
	15214	Drive Shaft Assembly
	80456	Miniature Tube Socket
	80479	Miniature 9-pin Tube Socket
	17213	Dial Back Plate Ass'y.
	37609	Plug Button 1" dia.
	55385	Drive Shaft Bearing
	62032	Rubber Grommet (R. F. Chassis)
	80139	Molded Octal Socket
	80239	Molded Octal Socket
	58939	9-pin Min. Tube Shieldbase
	58940-2	Tube Shield (9-pin Min)
	80494	Bias Cell Mounting (Pre-Amp Chassis)
	80491	9-pin Min. Mica Tube Socket (12AT7)
	62172	Rubber Grommet
	62189	Rubber Bushing
	36260-003	Phil Rd. Hd. Wood Screw, #6 x 3/8" (Pre-Amp. Mtg.)
	80348	Pilot Lamp Soc. & Cord
	80522	Pilot Lamp Soc. & Cord
	07674	Chassis End Brkt. Ass'y. (R.H.)
	07673	Chassis End Brkt. Ass'y. (L.H.)
	05154	Light Shield
	04133	Dial Pointer Ass'y.
	55383	Pointer Rod
	62099	Rubber Grommet
	H-318	Cabinet ((33P9)
	H-319	Cabinet (34P10)
	H-320	Cabinet (32P9)
	2000-325 071	#10/32 x 1¼ Rd. Hd. Mach. screw (Chassis Mtg.)
	2000-321 003	#10/32 x 1" Rd. Hd. Mach. screw (Chassis Mtg. Board)
	2015-005 003	#8/32 Steel Hex nut (Speaker Mtg.)
	09373	Mtg. Spring Assy. (P72 & P73 Changers)
	37066-072	#10/32 Acorn Palnut (Changer Mtg.
	74605	Operating Instructions (32P9 & 33P9)
	74608	Operating Instructions (34P10)

All resistors are ½ watt unless otherwise specified.

MODEL 400M FARNSWORTH TELEV. & RADIO CORP.
Series, Capehart

PART I

SECTION I ELECTRICAL AND MECHANICAL SPECIFICATIONS

Receiver - Amplifiers - Speakers - Record Changer

Four Band Receiver — Broadcast - 540 to 1600 K.C. — Short Wave - 5.4 to 18 M.C. — Band Spread - 25 and 31 Meters — F.M. - 41.9 to 51 M.C.

Type Receiver Circuit. . . . . Superheterodyne
Intermediate Frequency - AM Band. . . . . 455 K.C.
Intermediate Frequency - FM Band. . . . . 4.3 M.C.

Tubes in Receiver - 13 — Total 31

TUBE COMPLEMENT

In Amplifiers - 18

1 6AB7 R.F. Amplifier (A.M. & F.M.)
1 6SA7 Converter (A.M. & F.M.)
1 6J5 Oscillator (A.M. & F.M.)
1 6SG7 1st I.F. Amplifier (A.M. & F.M.)
1 6SG7 2nd I.F. Amplifier (F.M.)
1 6SJ7 Limiter (F.M.)
1 6SN7 Eye Amplifier (A.M. & F.M.)
1 6SJ7 A.V.C. Amplifier (A.M.)
1 6B8 2nd I.F. and A.V.C. (A.M.)
1 6H6 Discriminator F.M.
1 6SN7 Silencer F.M.
1 6Q7 2nd Det. A.M. & 1st Audio (A.M. & F.M.)
1 6AF6G Tuning Eye (A.M. & F.M.)
2 6R7 Voltage Amplifiers
2 6C8G Duo Drivers
8 6V6G Power Output Tubes
6 5Y3G Rectifier Tubes

DUAL AMPLIFIER SYSTEM

Power output tubes each amplifier - four 6V6G - Push - Pull - Parallel - 20 Watts
Total Power Output - Audio Amplifier System. . . . . 40 Watts

DUAL SPEAKER EQUIPMENT

1 - 12" Treble Electrodynamic - 450 ohm field - 8 ohm voice coil at 400 cycles
1 - 14" Bass Electrodynamic - 450 ohm field - 8 ohm voice coil at 400 cycles

AUTOMATIC RECORD CHANGER

Type - Capehart 16-E. . . . . Fully Automatic
Record Capacity . . . . . 16 to 18 records either 10" or 12"
Turntable Speed . . . . . 78 R.P.M.
Drive . . . . . 78 Motor - Thru gear reduction unit
Pickup - Light Weight - Crystal Unit. . . . . 1-1/4 oz. Needle Pressure
True Tangent Tone Arm — Electric Play Control Unit

POWER AND VOLTAGE REQUIREMENTS

Power Watts. . . . 400 — At — 117 Volts — 60 Cycles
Voltage - 105 - 125 AC — Frequency - Either 50 or 60 Cycles
400-M Models not adaptable for 25 cycle operation

PUSH BUTTON SET UP

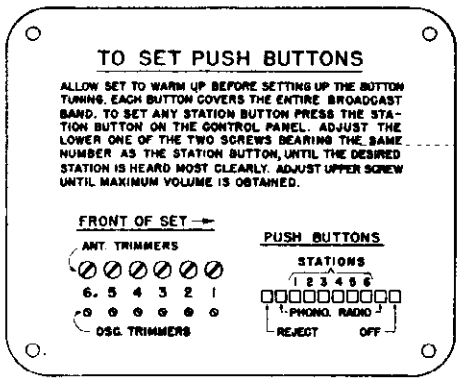

TUBE LOCATIONS

A-10 AMPLIFIER

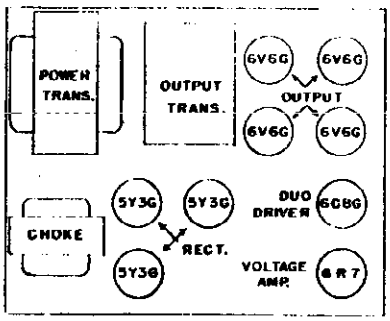

TUNER

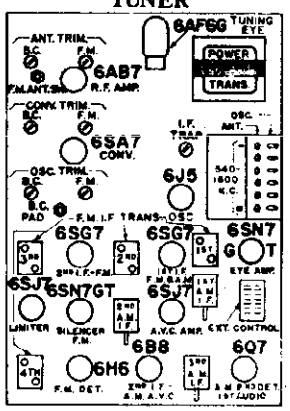

FARNSWORTH TELEV. & RADIO CORP. MODEL 400M Series, Capehart

GENERAL DESCRIPTION

SECTION 2

It has been our aim in this Service Brochure to include all of the necessary information to guide an experienced service man in locating and correcting all types of service difficulties that may be encountered during normal operation of the instrument. No attempt has been made to include an elementary discussion of the basic fundamentals or principles of operation of the component parts since it is assumed that no attempt will be made to service a Capehart DeLuxe Instrument unless the service man has sufficient technical training or experience to be familiar with the practice and theory involved in fundamental radio circuits and automatic record changing mechanisms.

In the design of the 400 M series Capehart DeLuxe Instruments we have endeavored to not only retain all of the desirable features incorporated in the "K" series, but to improve upon the performance of every unit in keeping with Capehart tradition. When considered as a whole each 400 M series Instrument represents a group of interconnected components of sound design offering the best in radio and record reproduction as we know it today.

The features retained in the tuner are the motor driven selector switch to permit extended and remote control; separate Bass, Master and Treble volume controls, the latter being used in conjunction with a high fidelity switch; and the "FM" band for the reception of frequency modulated signals. For record reproduction we have retained the famous Capehart 16-E Record Changer, which is the only fully automatic, continuous playing record changer on the market today, plus the play control feature which permits playing a predetermined number of selections and then automatically shuts the instrument off.

Again triple unit construction is employed, i.e., separate chassis for the tuner and each amplifier, resulting in improved circuit stability and performance, together with dual speakers for perfect Bass and Treble response. Authentic cabinet styling is a characteristic of all fine Capeharts. Each cabinet bears the stamp of approval of the Walnut and Mahogany Institutes.

The new improvements incorporated in the "M" series DeLuxe Capeharts are the electrically operated play control; improved broadcast and shortwave reception, due to improvements in tubes and circuits; superior "FM" performance, which includes an exclusive Capehart squelch circuit to prevent inter-station noise; band spread tuning on the important 25 and 31 meter bands for added ease of tuning, and improved performance in the motor driven selector switch which has been accomplished by modifications in design.

A brief review of features incorporated in the various units of this instrument will be of considerable assistance in following the circuit diagram and in analyzing circuit difficulties when present. In the event trouble is experienced with an instrument it is important to first localize the condition in a particular unit before an attempt at correction is made. For example, do not "pull a speaker" as has been done, when the pickup crystal is really at fault, and when switching from phono to radio would have disclosed the fact that the reproduction was only bad on record reproduction.

SECTION 3 THE RADIO TUNER

The radio tuner is an assembly complete in itself except for the plate voltage supply which is obtained from the amplifiers, The filament or heater transformer for tubes in the tuner, however, is mounted on the tuner chassis. Electrically, the tuner is of sound design utilizing the the highest quality of parts available and incorporates many modern improvements.

Features which contribute to its performance are as follows:

A. Provision for doublet or regular antenna system with a switch provided to rearrange the input circuit for maximum efficiency with either type system.

B. Tuned "RF" stage on all bands in manual tuning position, and use is made of a high gain 1853/6AB7 tube in this circuit.

C. Separate oscillator and mixer greatly improving stability and conversion gain.

D. Two "IF" stages using permeability tuned iron core "IF" transformers for increased over-all gain and selectivity.

E. Separate "IF" channel for "FM" using air core air tuned "IF" transformers for minimum drift and maximum gain.

F. In the "FM" position a second 6SG7 high gain pentode replaces a 6B8 tube used in the "AM" position, the change being automatically handled by the band switch.

G. Amplified "AVC" which tends to reduce fading and allows substantially constant output with wide variations in signal input.

©John F. Rider

MODEL 400M FARNSWORTH TELEV. & RADIO CORP.
Series,
Capehart

H. Tuning eye amplifier which assures sufficient deflection of the tuning eye for correct tuning even on weak signals.

I. An exclusive Capehart "FM" squelch circuit for the elimination of noise when tuning from station to station in the "FM" band. This arrangement makes use of a 6SN7GT tube, one section being used as an oscillator operating on approximately 200 KC. and used as a source of voltage for control of the bias on the first audio stage. The other section of the 6SN7GT is used as a grid controlled rectifier for the rectification and control of the squelch voltage applied to the first audio grid.

J. Improved system of push button tuning permitting the setting of any push button to any desired frequency within the broadcast band.

K. Motor driven selector switch allows selection of stations or other services at instrument or for Extended or Remote Control.

L. The incorporation of this switch and a 15 prong socket in the tuner chassis makes possible either remote or extended control of the complete instrument when the necessary extended or remote units are added. The remote and extended control feature of the 400 M instrument greatly increases its flexibility and operating convenience and opens added sales opportunities for the dealer who has not taken advantage of this feature previously.

M. Bass and Treble volume controls allow individual adjustment of the high or low frequency response.

SECTION 4 AUDIO AMPLIFIERS

The first audio stage is located in the tuner chassis. The output of this tube after passing through the Bass and Treble networks is fed into two separate 20 watt audio power amplifiers, the inputs of which are effectively in parallel. The audio power amplifiers make use of the most modern tubes and circuits. Inverse feedback is incorporated effectively lowering the plate impedance of the push-pull parallel connected output tubes and contributes to over-all noise and hum reduction. All of the tubes and components in the audio system are operated conservatively as evidenced by the use of three 5Y3G rectifiers in each amplifier. The operation of the push-pull parallel connected output tubes at conservative voltage rather than using only two such tubes in each output stage operating at higher potentials results in longer tube life.

SECTION 5 SPEAKERS

Two heavy duty electrodynamic speakers are incorporated in each 400 M series instrument. Adequate field excitation is provided and the construction of the speaker is such that the 14" speaker responds to the lower frequencies and the 12" speaker favors the highs. Careful consideration has been given to baffle and cabinet design for high fidelity reproduction.

SECTION 6 CAPEHART 16-E RECORD CHANGER

This record changer is fully automatic, is continuous in operation has a maximum capacity of 20 records, either 10" or 12" or intermixed, and will play either one or both sides of a record as desired. Because of variations in records (thickness and warpage) we recommend that 16 to 18 records generally be loaded in the record magazine.

An outstanding feature of the 16-E Changer is the "True Tangent Tone Arm" which maintains the needle or stylus at the correct tangent with respect to the record groove throughout the playing of the record.

Another important feature not found in other automatic record changers is the heavy duty drive motor and gear reduction unit. This gear reduction unit controls the speed or R.P.M. of the turntable which for perfect reproduction of records must be constant and even. This motor and gear reduction unit in addition to the use of a heavy cast turntable compares with the precision type of equipment generally found in broadcast stations.

SECTION 7 EXTENDED AND REMOTE CONTROL

The Capehart 400 M Series DeLuxe Instruments are designed to permit either Extended or Remote Control. Extended or Remote Control equipment may be added so that Radio or Record reproduction identical to that reproduced at the instrument may be controlled or distributed to any number of rooms around the house or grounds.

©John F. Rider

FARNSWORTH TELEV. & RADIO CORP. MODEL 400M Series, Capehart

PART 2
OPERATION AND MAINTENANCE RADIO TUNER

SECTION 8 SETTING INSTRUMENT UP FOR OPERATION

The importance of care in checking every part of the equipment in setting up an instrument for operation cannot be over emphasized. This applies when the instrument is being set up on the sales floor for sales demonstration purposes, as well as when delivered to the customer's home. It is obvious that an instrument not properly set up in the dealer's store may fail to perform to its best advantage when demonstrated. An improperly installed instrument in the customer's home means extra service calls, customer dissatisfaction and excessive service costs.

Following is a suggested Inspection Routine, covering "30" important items to check when installing a DeLuxe Capehart Instrument. We request that you at least cover all of these, and if you are thorough in your work, you undoubtedly will add to this list. We would also advise that a check of these "30" items will often be found to quickly isolate service difficulties when trouble is encountered.

SUGGESTED INSPECTION ROUTINE FOR THE INSTALLATION OF CAPEHART DELUXE 400 SERIES INSTRUMENTS

1. Unpacking...Remove the instrument from its shipping case carefully

2. Inspect condition of Cabinet. NOTE: Packing case should be checked carefully. If panel broken, look for concealed damage -- if cabinet damaged due to rough handling in transit consealed damage claim should be filed with "carrier."

3. Remove packing material around the record changer and shipping bolts which hold the changer in place during transit. Put plug buttons in changer base. Remove back covering tuner and amplifier compartments.

4. Insert tubes in proper position in the amplifier, by refering to tube complement label. Put "Eye Tuning" tube in position, making certain not to place tube too far forward as it is likely to press dial scale out of shape.

5. Put in Gear Reduction Unit "Bottle of Oil" supplied with instrument...Be sure to replace oil plug.

6. Important -- Make sure record changer is free floating on mounting rubbers and that all four support rubbers are in proper position. Changer unit position should be shifted slightly until there is no tendency to touch against any part of changer mounting frame.

7. Level Cabinet by adjustable glides. This is important for proper automatic phonograph operation.

8. Check adjustment of clutch tension and clutch shaft assembly connecting gear box to record changer, making certain that it is straight and in line...A tendency to MOTOR RUMBLE or HUM may be prevalent otherwise, and this may also cause uneven turntable speed.

9. Make sure Reverse Arm and Fork Assembly is in correct position by moving this through its normal reverse motion.

10. Make sure Automatic Trip Switch under turntable is in proper position. This means end of lever arm or quadrant should be in the center of the trip switch contacts.

11. Make sure Tone Arm Stop Lever, Part Number 64197, is adjusted properly.

12. Insert New Needle or desired type of permanent point stylus in Pickup.

13. Attach "Control Knobs" to Tuner, putting felts between the knobs and the Escutcheon.

14. Check Line Voltage and Frequency to determine if same agrees with electrical specifications plate on rear of the instrument. Plug instrument into proper source of power supply.

15. Read carefully Operating Instructions accompanying instrument, then...Turn Instrument On.

16. Place a blank phonograph record on turntable. Set all controls, Volume, Bass and Treble in wide open position for acoustic feedback test. RCA Record, Number 49196 is good for this purpose. This test will locate excessive noise or rumble. Shifting the changer into a "free floating position" while this record is playing should clear up any rumble which may be present. If this does not quiet operation, again check for proper positioning of drive shaft between gear box and record changer, try shifting motor and gear box "mounting board" assembly.

17. Properly load 16 or 18 assorted 10" and 12" records in record magazine. Warped or damaged records should not be used. Make sure all record edges are free of "flash"...Records with excessive "flash" and rough edges should be smoothed down with fine sand paper.

18. Put automatic "On-Off" switch in "On Position." Instruments are all shipped with this switch in "Automatic 'OFF' Position."

19. Put selector arm lever in "REPEAT" position. Play one record.
    Put selector arm lever in "ONE SIDE" position. Play one record.
    Put selector arm lever in "BOTH SIDES" position. Play one record.

The above tests check for proper action of the "Selector Arm Lever." At the same time that the

©John F. Rider

MODEL 400M Series, FARNSWORTH TELEV. & RADIO CORP.
Capehart

above tests are being made, a visual check for "Feed In" or "Indexing" of the pickup, Trip Action and setting down of records from magazine to turntable can be made.

20. Check Play Control action for indexing and shutting instrument off.

21. Operate Volume, Bass and Treble Controls to observe proper action.

22. Check next for maximum and minimum hum by lifting Pickup off record. When this has been done rotate Volume Control wide open. If excessive hum is present, reverse power line cord or attach good ground connection to instrument. Hum should be negligible except possibly with the volume control in "wide open" position which is seldom if ever necessary during normal operation of the instrument.

23. Check for Quality Reproduction. To do this, use a good record, the quality of and type of reproduction with which you are familiar. Check reproduction of the record at both High and Low Volume Levels.

24. Attach proper "Antenna System." A fine instrument deserves a good antenna. Check reception and calibration of radio tuner on all bands. If a new antenna is required, install a Capehart Stock Number 41-80, or Stock Number 41-79 Dipole especially efficient for reception of "FM" signals.

25. Check action of "Electric Eye" tube, and position, so tuning segments are horizontal.

26. Tap tubes in tuner gently to locate any excessively microphonic tubes.

27. By the time the foregoing tests have been conducted, the instrument will have been in operation for 35 or 40 minutes and should be sufficiently warmed up so that the "Push Buttons" may be set without subsequent drift. Set up "Push Buttons" according to instructions accompanying instrument.

28. Attach proper Station Tabs.

29. Replace "back" of cabinet. Carefully clean up cabinet to remove all finger marks. For this purpose a piece of cheese cloth folded into a pad and moistened with water and a few drops of vinegar is very good. The use of furniture polish on Capehart cabinets is not recommended.

30. Instruct customer on all phases of operation of the machine. Personally place in the customer's hands the operation manual which accompanies the instrument.

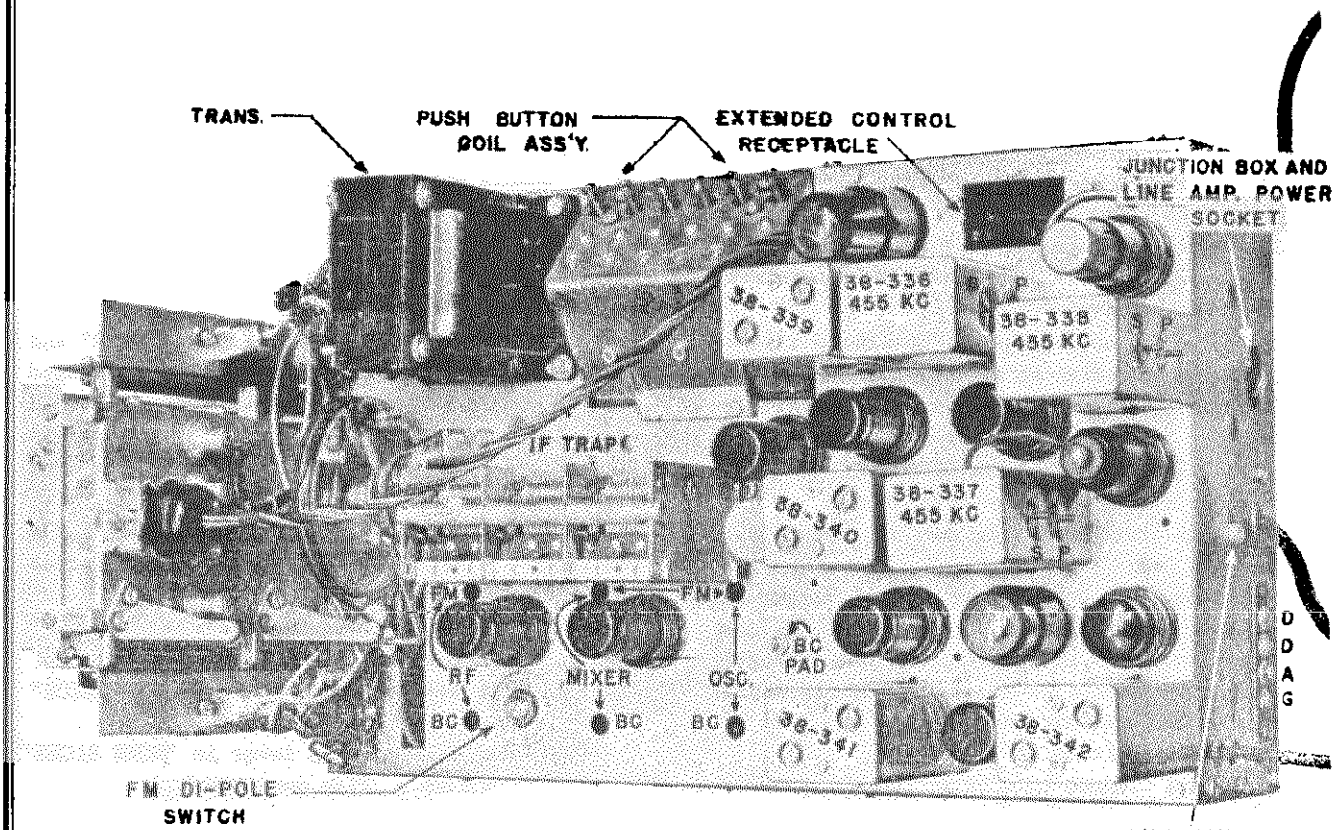

TOP DECK VIEW TUNER CHASSIS

©John F. Rider

FARNSWORTH TELEV. & RADIO CORP. MODEL 400M Series, Capehart

SECTION 9 DRIVE CORD ASSEMBLIES

Quite often in handling a radio chassis the "drive cord" may slip off the controls or pulleys on which it rides. So many different types of mechanical drive methods have been devised depending on the tuner construction or the mechanical genius who designed them that it is impossible for a service man to quickly figure out just how they should be restrung. In this connection we are sure that stringing diagrams below will be found most welcome.

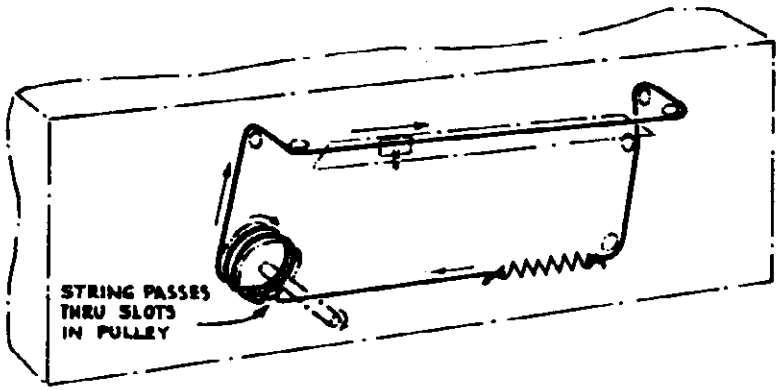

VOLUME CONTROL

Turning knob in clockwise direction causes pointer to move to right.

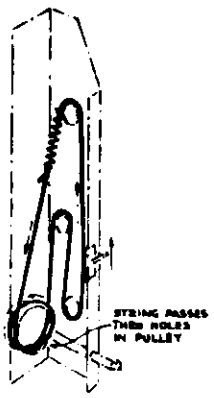

BASS TONE CONTROL

Shaft geared to tone control, turning knob in clockwise direction causes pointer to move upward.

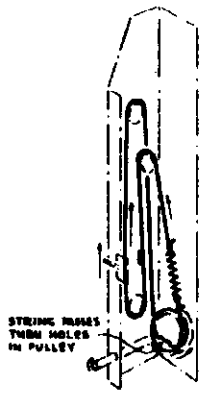

TREBLE TONE CONTROL

Shaft geared to tone control, turning knob in clockwise direction causes pointer to move upward.

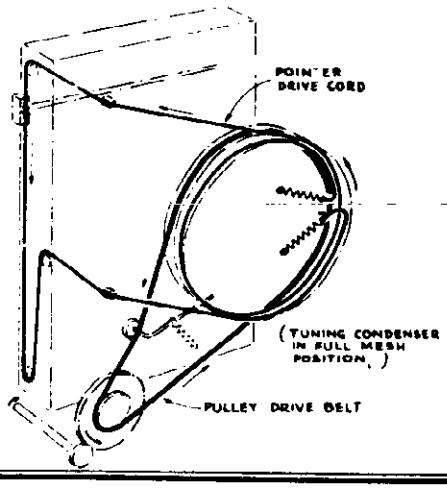

METHOD OF DIAL STRINGING

Turning tuning knob counter-clockwise moves pointer from top to bottom, drive drum turns clockwise, viewed from shaft end.

©John F. Rider

MODEL 400M Series, FARNSWORTH TELEV. & RADIO CORP.
Capehart

SECTION 10 ALIGNMENT OF AM BANDS

EQUIPMENT NECESSARY

A calibrated signal generator having fundamental frequencies from 455 Kc. to 20 Mc. In addition to the signal generator a crystal calibrator is a great convenience.

An indicating device for showing correct alignment, this may be a high resistance A.C. calibrator, a vacuum tube voltmeter, a high resistance D.C. voltmeter (20,000 ohms per volt minimum) or a Cathode Ray oscilloscope.

The A.C. voltmeter can be used either across the voice coil of one of the loud speakers or if the meter range is high enough from plate to plate in the output stage (don't forget a condenser (0.1 Mfd.)) to keep the D.C. out of the meter.

Either the vacuum tube voltmeter or high resistance D.C. voltmeter may be used to read the AVC voltage. This may be connected to pin #4 of the 6AB7 while aligning the I.F. and to pin #4 of the 6B8 while aligning the R.F. Converter and Oscillator.

The use of a Rider Volt Ohmist connected from ground to the AVC Bus is the preferred method as the high input impedance of the meter does not appreciably affect the alignment. And its high sensitivity allows the use of low input voltages.

Special care must be employed when aligning the short wave spread band, for the adjustment of the shunt trimmer affects the adjustment of the series pad. At the high frequency end of the band it is possible to peak the oscillator trimmer and the pad at the low frequency end at the image so in the alignment instructions we have indicated the fundamental frequency and the correct oscillator setting for the image so by resetting the signal generator it is possible to see if the alignment is correctly made. In each case the image is found at a frequency 910 Kc. higher than the fundamental that is if the set is aligned at 12 Mc. when the oscillator using high output is tuned to 12.91 Mc., the signal will be heard if the right peak has been used. This also applies to the short wave band.

TABULATION FOR ALIGNMENT

STEPS	IN SERIES WITH ANT	SET GENERATOR AT	SET GANG AT	ADJUST AND SEE FIG.	TO OBTAIN
1	250 MMF	455 KC	Quiet Point	3rd IF Trimmers	MAXIMUM OUTPUT
2				2nd IF Trimmers	
3				1st IF Trimmers	
4		1500 KC	1500 KC	B C Osc Trimmer	
5				B C Ant Trimmer	
6				B C R F Trimmer	
7		600 KC	600 KC	600 KC Pad	
8		455 KC	Press Any Push Button	IF Trap	Min Output
9	400 Ω	15 MC	15 MC Image At 15.91 MC	S W Osc Trimmer	MAXIMUM OUTPUT
10				S W Ant Trimmer	
11				S W R F Trimmer	
12	Check At		6 Mc		
13	400 Ω	12 MC	12 MC Image At 12.91 MC	B S Osc Trimmer	
14				B S Ant Trimmer	
15				B S R F Trimmer	
16	400 Ω	9.5 MC	9.5 MC Image At 10.41 MC	B S Osc Pad	
17				B S Ant Pad	
18				B S R F Pad	
19	Recheck Steps 13 to 18 Inclusive				

FARNSWORTH TELEV. & RADIO CORP. MODEL 400M Series, Capehart

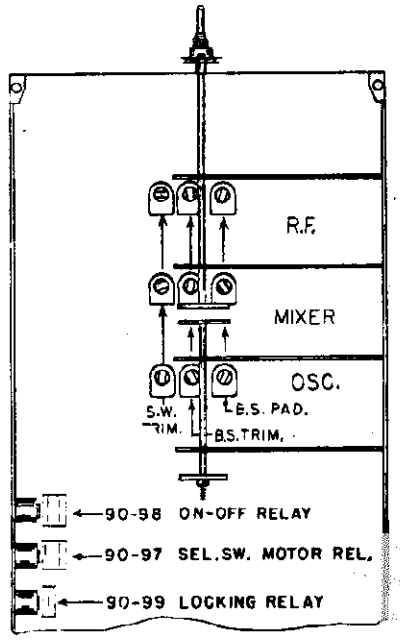

BOTTOM VIEW 400M

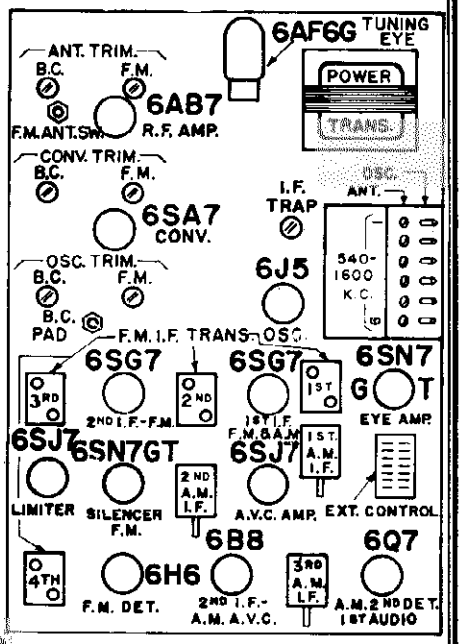

TUBE LOCATION LABEL

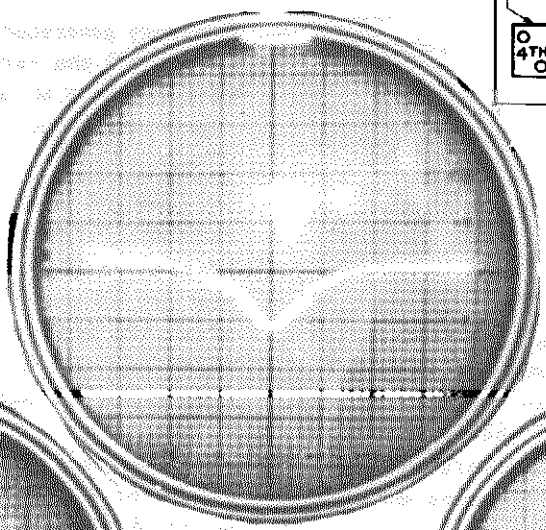

I.F. BEFORE ALIGNMENT FM

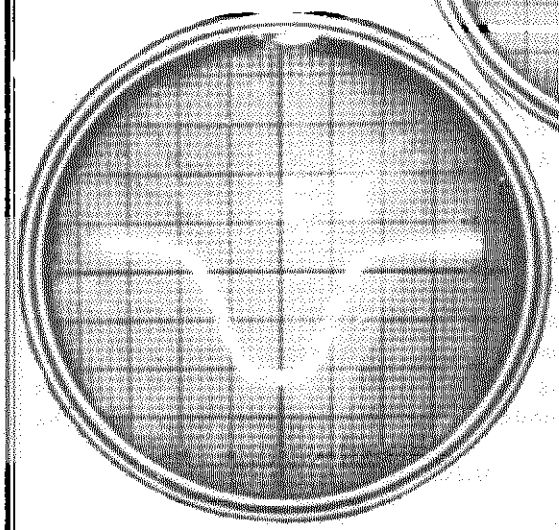

I.F. AFTER ALIGNMENT FM

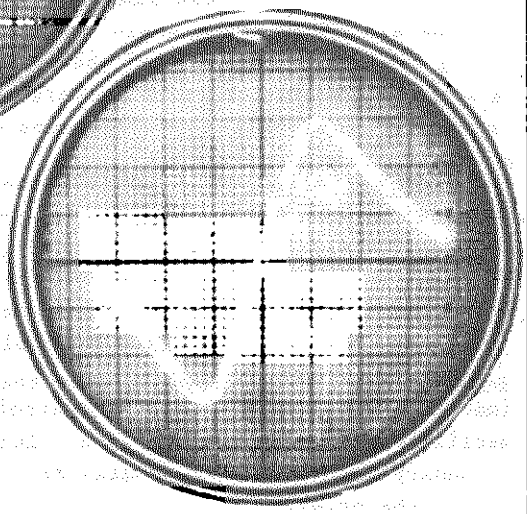

ALIGNMENT OF THE DISCRIMINATOR

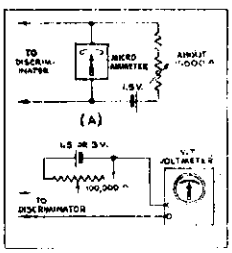

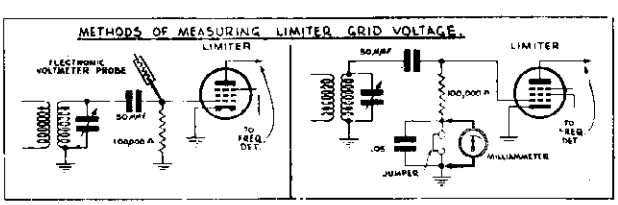

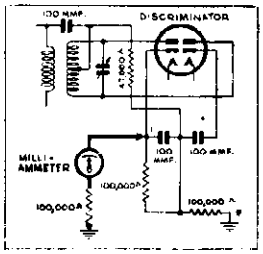

MODEL 400M Series, FARNSWORTH TELEV. & RADIO CORP.
Capehart

ALIGNMENT OF FM BAND

SECTION II

Following are described two (2) methods for the Alignment of the F.M. Band.

Method 1 will require the use of a Cathode Ray Oscilloscope, a sweep frequency generator providing a fundamental frequency at 4.3 Mc and a deviation of at least 150 Kc and also a signal generator with a fundamental high frequency range of 42-50 Mc.

As an indicating device, a meter with at least 10 Meg. ohm internal resistance can be used or as a second choice - a low range micro-ammetor with a 1 Meg. ohm resistor in series.

Method 2 will require the same equipment with the exception of the Oscilloscope and the 4.3 Mc sweep generator.

ALIGNMENT BY METHOD 1

Connect the vertical deflection input of the oscilloscope with a 1 Meg. ohm resistor in series to the grid of the limiter tube. Care must be exercised to maintain the connection of the resistor to the grid of the limiter tube as short as possible to avoid regeneration. The ground terminal of the oscilloscope must be connected to the chassis.

Limiter Alignment - Connect the ground terminal of the 4.3 Mc. I.F. sweep generator to the chassis. Connect the output of the signal generator to the grid of the second I.F. tube with a .1 Mfd. paper condenser in series, adjust the deviation control of the generator for a usable picture on the oscilloscope screen, with the input control of the oscilloscope set at maximum gain. Detune the secondary trimmer of the limiter transformer, adjust the primary trimmer until you obtain a pattern as shown in Figure 1 of the oscilloscope photos. Then adjust the secondary trimmer until you obtain a pattern as shown in Figure 2. The pattern should be kept centered on the oscilloscope screen.

Align 2nd I.F. - Move the signal generator to the grid of the 1st I.F. tube and repeat the same procedure as described for the limiter stage.

Align 1st I.F. - Move the signal generator to the grid of the Mixer tube and repeat the limiter stage procedure.

Align Discriminator - Connect the oscilloscope to the Cathode of the 6H6 F.M. detector which is not grounded. Connect the signal generator to the secondary of the limiter transformer as indicated by A in Figure 6. Adjust the secondary trimmer of the discriminator transformer with an insulated screw driver, for pattern as in Figure 2, then adjust the primary trimmer to obtain symetrical and linear trace and centering of the picture on the oscilloscope screen. It will be necessary to go over the primary and secondary trimmer several times to adjust the stage accurately.

R.F. Alignment F.M. Band - Connect the high frequency generator to the regular antenna terminal with a 400 ohm carbon resistor in series. Make certain the F.M. antenna Selector Switch is in regular position.

Set the signal generator at 50 Mc and adjust the Oscillator trimmer for correct dial calibration at this frequency. Connect high resistance Voltmeter to point A, Figure 4 and then adjust the signal generator to 49.5 Mc adjust the mixer and the R.F. Trimmers for maximum deflection of the meter.

Another indicating device for the R.F. alignment - connect a 0-1 millameter between point A and ground or a low range micro-ammeter with a 1 Meg. ohm resistor as series between C and ground. Tune for maximum deflection of the meter.

Lacking the above meters, the R.F. and Mixer alignment may be trimmed for minimum noise on signal. To avoid false peak when aligning the Mixer and the R.F. Trimmers the gang condenser must be rocked through the signal.

ALIGNMENT BY METHOD 2

Limiter Alignment - Connect one of the indicating meters as shown in Figure 4 or Figure 5.

Feed a 4.3 Mc signal through .1 Mfd. paper condenser to the grid of the second I.F. tube. Place a 1000 ohm carbon resistor across the secondary of the limiter transformer then tune the primary for maximum meter deflection. Remove the 1000 ohm carbon resistor from the secondary and place it across the primary and tune the secondary for maximum meter deflection.

©John F. Rider

FARNSWORTH TELEV. & RADIO CORP. MODEL 400M Series, Capehart

SECTION 11 ALIGNMENT OF FM BAND

To check how accurate this stage has been aligned tune the signal generator 75 Kc each side of 4.3 Mc. Only a slight loss in maximum meter deflection should be noted.

Align 2nd I.F.F.M. - Move the signal generator to the grid of the 1st I.F. tube and repeat the same procedure described above for the limiter stage.

Align 1st I.F.F.M. - Move the signal generator to the grid of the mixer tube and repeat alignment procedure as described above for the limiter stage.

Discriminator Alignment - Connect a meter to Point A as shown in accompanying illustrations to the ungrounded Cathode.

Feed a 4.3 Mc signal to the grid of the second I.F. tube.

With an insulated screw driver turn the secondary trimmer screw for maximum and minimum capacity. You will note that there are two points where you have maximum meter deflection. Tune to the point between the maximum meter deflections where the meter will read as near zero as possible.

Tune the signal about 150 Kc each side of 4.3 Mc. You will note that the meter deflection rises about equal distance each side of 4.3 Mc. Tune the primary trimmer until you have maximum meter deflection an equal distance each side of 4.3 Mc.

Note: The meter will have to be reversed when reading the other side of the signal.

Another indicating device for the R.F. alignment - connect a 0-1 millameter between point A and ground or a low range micro-ammeter with a 1 Meg. ohm resistor in series between C and ground. Tune for maximum deflection of the meter.

Lacking the above meters, the R.F. and Mixer alignment may be trimmed for minimum noise on signal. To avoid false peak when aligning the Mixer and the R.F. trimmers the gang condenser must be rocked through the signal.

Note: If a high frequency signal generator is not available a standard signal generator which will give good harmonic output between 42 - 50 Mc can be used.

Two methods using a micro-ammeter or a V.T. voltmeter may be used for the alignment of the discriminator are shown in the accompanying illustrations.

It will be necessary to go over the primary and secondary trimmers several times to accurately align this stage.

R.F. Alignment F.M. Band - Connect the high frequency generator to the regular antenna terminal with a 400 ohm carbon resistor in series. Make certain the F.M. antenna Selector Switch is in regular position.

Set the signal generator at 50 Mc and adjust the Oscillator trimmer for correct dial calibration at this frequency. Connect high resistance Voltmeter to point A, Figure 4 and then adjust the signal generator to 49.5 Mc adjust the mixer and the R.F. trimmer for maximum deflection of the meter.

SECTION 13 CABINET PARTS LIST & PRICES

Stock No.	Description
31-95	Capehart Decal
31-96	DeLuxe Decal
59-58	Dial Escutcheon
59-71	Dial Escutcheon (Bl.)
59-62	Push Button Knob
59-74	Push Button Knob (Bl.)
6058	Tuning Knob
77-176	Tuning Knob (Bl.)
6060	Bass or Treble Knob
67-177	Bass or Treble Knob (Bl.)
67-178	Band Switch Knob
67-179	Band Switch Knob (Bl.)
61163	Compartment Lamp
31-93	Push Button Trimmer Cover
13-368	Play Control & Cab Light (Comp.
36-468	Escutcheon Screws (Pkg. 10)
56-538	Soss Hinge for 506, 410, 411
13-219	Basic Glide ea.
36-383	16-F Mtg. Bolts ea.
5092	16-F Mtg. Rubbers ea.
50117	16-F Main Frame Pads
36-597	16-E Plug Buttons

MODEL 400M Series, FARNSWORTH TELEV. & RADIO CORP
Capehart

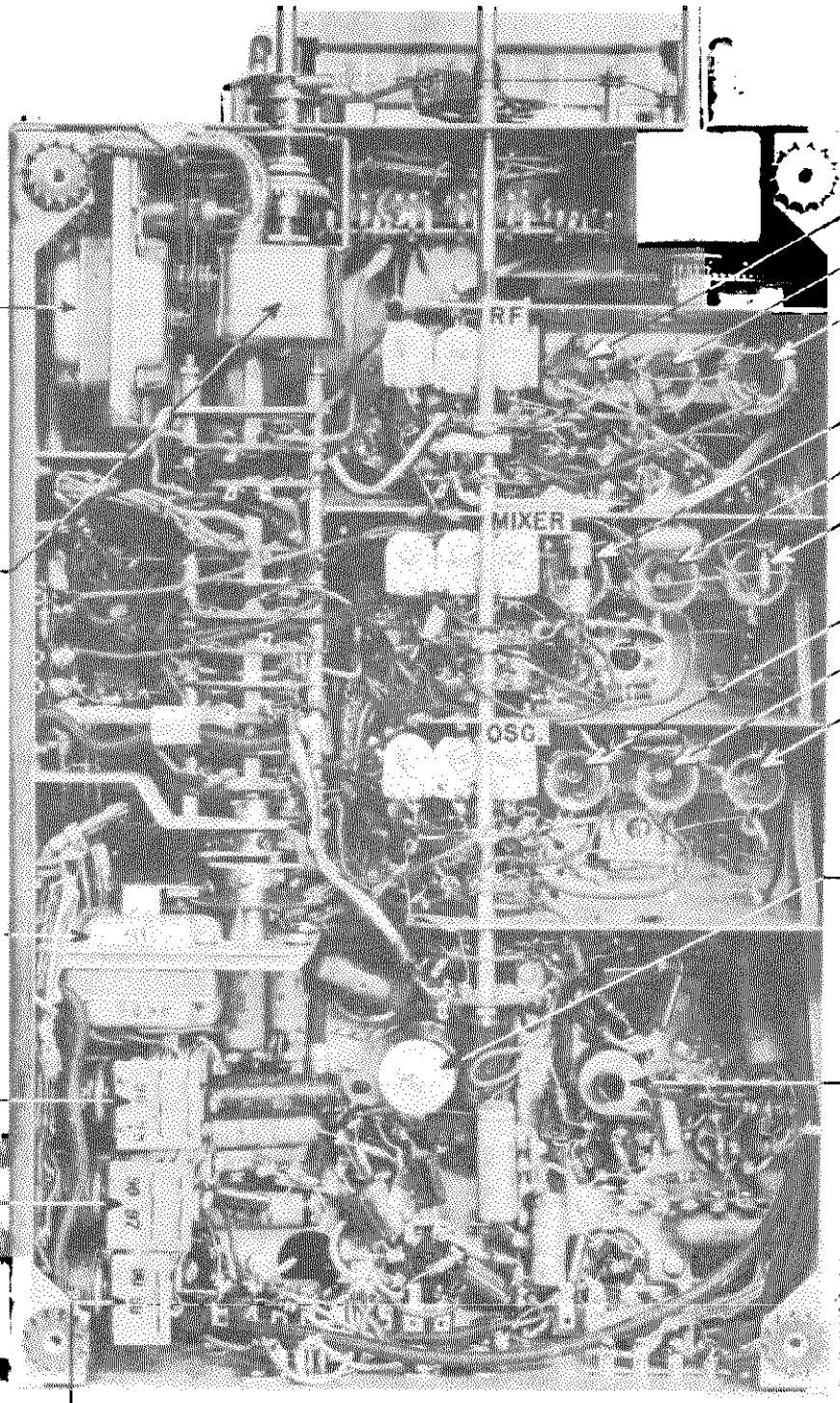

BOTTOM VIEW TUNER CHASSIS

FARNSWORTH TELEV. & RADIO CORP. MODEL 400M Series, Capehart

SECTION 14 — RADIO TUNER PARTS LIST

Reference No.	Part No.	Description
0	773-40	1500 Ohms
1	773-36	220 Ohms
2	773-55	2.2 Megohms
3	773-49	100 M Ohms
4	773-46	22 M Ohms
5	773-41	2200 Ohms
6	773-38	470 Ohms
7	773-80	150 M Ohms
8	773-78	47 M Ohms
9	773-39	1 M Ohms
10	77-98	6800 Ohms
11	773-42	3300 Ohms
12	773-54	1 Megohm
13	773-47	33 M Ohms
14	773-43	4700 Ohms
15	773-51	220 M Ohms
16	77-95	6.8 Ohms
17	78-49	3 Meg. Vol. Control
18	78-36	4 Meg. Treble Control
19	78-35	3 Meg. Bass Control
20	26-138	3 Gang Condenser
21	26-151	BC and FM Ant. and Mixer Trim.
22	26-147	BC and FM Osc. Trimmers
23	26-140	Short Wave Ceramic Trim.
24	26-141	BS Padder Ceramic Condenser
25	26-142	BS Trimmer Ceramic Condenser
26	263-1	BC Osc. Padder Condenser
27	26-33	Wave Trap Trimmer
28	26-66	Push Button Ant. Trim. Strip
29	25-136	80 MMF Silver Mica Cond.
30	253-1	100 MMF Cond.
31	25-141	500 MMF Cond.
32	25-140	15 MMF Cond.
33	25-166	10 MMF Cond.
34	258-2	350 MMF Silver Mica Cond.
35	253-5	50 MMF Cond.
36	25-52	200 MMF Silver Mica Cond.
37	25-68	300 MMF Cond.
38	25-53	1000 MMF Cond.
39	25-69	250 MMF Cond.
40	25-141	5000 MMF Cond.
41	25-134	.05 MF 600 V.
42	256-1	.05 MF 200 V.
43	255-1	.01 MF 600 V.
44	256-2	.1 MF 200 V.
45	25-97	.01 MF 200 V.
46	25-142	10 MF 25 V.
47	25-50	Dual 10 MF 450 V.
48	38-226	B C Ant Coil
49	38-361	FM Ant. Coil
50	38-360	SW Ant. Coil
51	38-356	BC Mixer Coil
52	38-358	FM Mixer Coil
53	38-357	SW Mixer Coil
54	38-353	BC Osc. Coil
55	38-355	FM Osc. Coil
56	38-354	SW Osc. Coil
57	38-343	Squelch Osc. Coil
58	38-352	Osc. Push Button Coil Assembly
59	38-351	Wave Trap Coil
60	38-344	A V C Amp. Plate Coil
61	38-339	1st I F FM Transformer
62	38-340	2nd I F FM Transformer
63	38-341	3rd I F FM Transformer
64	38-342	4th I F FM Transformer
65	38-336	1st I F AM Transformer
66	38-337	2nd I F AM Transformer
67	38-338	3rd I F AM Transformer
68	90-89	No. 1, 3 and 5 Band Switch Wafers
69	90-90	No. 2 and 8 Band Switch Wafers
70	90-91	No. 4 Band Switch Wafer
71	90-92	No. 6 Band Switch Wafer
72	90-93	No. 7 Band Switch Wafer
73	90-100	No. 1 Selector Switch Wafer
74	90-101	No. 2 Selector Switch Wafer
75	90-102	No. 3 Selector Switch Wafer
76	90-103	No. 4 and 5 Selector Switch Wafers
77	90-104	No. 6 Selector Switch Wafer
78	90-105	No. 7 Selector Switch Wafer
79	90-96	Ant. Selector Switch
80	90-88	Push Button Switch
81	94-90	18 V. and 6.3 V Transformer
82	44-20	Volume Motor
83	44-29	Selector Switch Motor
84	90-97	Selector Switch Motor Relay
85	90-98	On-Off Relay
86	90-99	Off Relay
87	80-84	Ant. Strip
88	38-359	FM RF Plate Choke
89	22-116	No. 1 Input Sig. Cable
90	22-117	No. 2 Input Sig. Cable
91	22-15	Plug and Cable to Junction Box
92	22-118	Power Plug and Cable to Amps.
93	80-132	Remote Line Amp. Power Socket and Cable
94	80-170	15 Prong Socket
95	80-30	Input Socket to Remote Line Amp
96	22-124	Phono Input Strip and Cable
	80-82	Octal Ceramic Socket
	80-175	Octal Ceramic Socket for Osc. only
	80-81	Octal Socket
	31-181	Dial Scale
	36-541	Dial Scale Fasteners (In lots of 10)
	31-97	Dial Glass Window
	56-453	Tone Control Pointers
	56-598	Volume Control Pointer
	56-462	Dial Pointer
	07-136	Bass Control Drive Cord Assembly
	07-137	Treble Control Drive Cord Assembly
	07-134	Volume Control Drive Cord Assembly
	07-135	Tuning Drive Cord Assembly
	92-82	Endless Belt for Gang Drive
	59-77	Small Pulley for Tone and Volume Control
	13-175	Split Gear Assembly
	22-115	Tuning Eye Cable and Socket Assembly
	56-983	Coupling Arm on Selector Switch
	421-2	Pilot Lamp
	73-522	Operating Instruction Book

MODEL 400M Series, FARNSWORTH TELEV. & RADIO CORP.
Capehart

PART 3 MAINTENANCE - AMPLIFIERS - JUNCTION BOX - SPEAKERS

SECTION 15 AUDIO AMPLIFIER CIRCUIT WIRING DIAGRAM

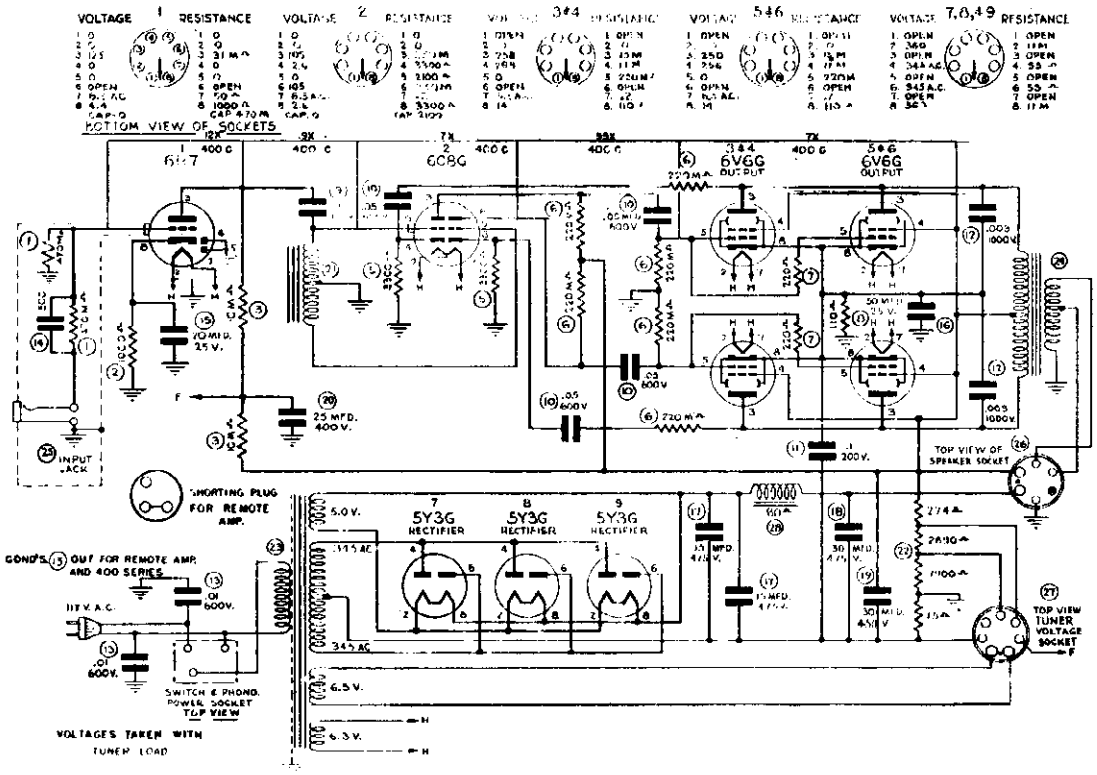

SECTION 16 A-10 AUDIO AMPLIFIER PARTS LIST

Reference No.	Part No.	Description
1	773-53	470 M Ohms ½ Watt
2	773-39	1000 Ohms ½ Watt
3	77-32	10 M Ohms ½ Watt
4	773-41	2200 Ohms ½ Watt
5	773-72	3300 Ohms ½ Watt
6	773-81	220 M Ohms ½ Watt
7	773-51	220 Ohms ½ Watt
8	77-71	110 Ohms 10 Watt
9	25-54	.25 Mfd. 600 V.
10	254-8	.05 Mfd. 600 V.
11	256-2	.1 Mfd. 200 V.
12	25-46	.003 Mfd. 1000 V.
13	257-2	.01 Mfd. 600 Line Buffer
14	253-3	500 M.M.F. Mica
15	25-52	20 Mfd. 25 V.
16	25-38	50 Mfd. 25 V.
17	25-138	15 Mfd. 475 V.
18	25-139	30 Mfd. 475 V.
19	35-146	30 Mfd. 450 V.
20	24-42	25 Mfd. 400 V.
21	94-85	Phase Conector Reactor
22	77-102	Voltage Divider
23	94-61	Power Trans.
24	94-32	Output Trans.
25	805-1	Input Jack
26	80-57	Speaker Socket
27	80-50	Tuner Voltage Socket
28	94-65	Choke
	27-118	A.C. Line Cord
	13-204	Shorting Plug

SECTION 17 LOUD SPEAKER PARTS LIST

Stock No.	Description
81-72	Treble Speaker 12"
81-73	Bass Speaker 14"
81-114	Field Coil for 81-72 Speaker
38-287	Field Coil for 81-73 Speaker
81-101	Cone & Voice Coil for 81-72 Speaker
81-113	Cone & Voice Coil for 81-73 Speaker

Should it be necessary to replace either the cone and voice coil assembly or the field coil, care should be taken in order to insure proper phasing.

FARNSWORTH TELEV. & RADIO CORP. MODEL 400M Series, Capehart

SECTION 18 JUNCTION BOX CIRCUIT WIRING DIAGRAM

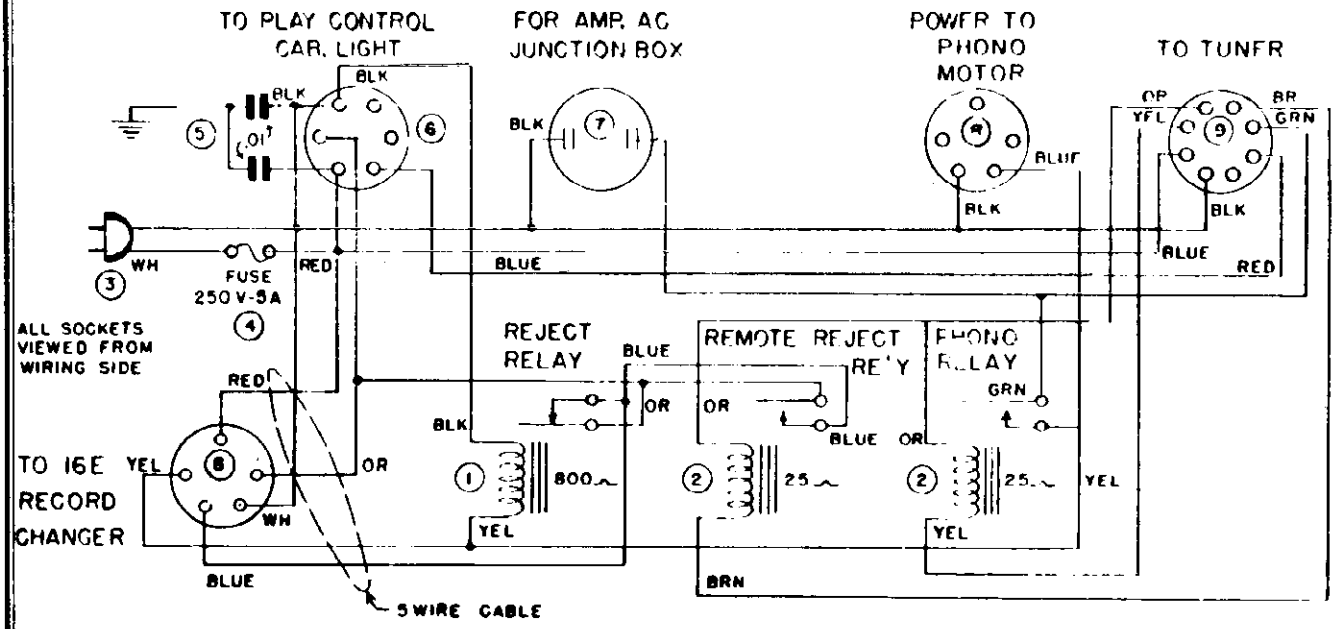

SECTION 19 JUNCTION BOX SERVICE PARTS

Reference No.	Stock No.	Description
1	90-109	Reject Relay 50-60 Cycle
2	90-110	Motor Relay 50-60 Cycle
3	27-134	AC Line Cord
4	48-6	Fuse 250 V 5 A.
5	2512-1	.01 Mfd. 600 V. Condenser
6	80-61	6 Prong Socket
7	80-69	2 Pole AC Socket
8	80-57	5 Prong Socket
9	80-71	Octal Socket (8 Prong)
	22-9	Cable and Socket Assy.
	80-68	Fuse Socket

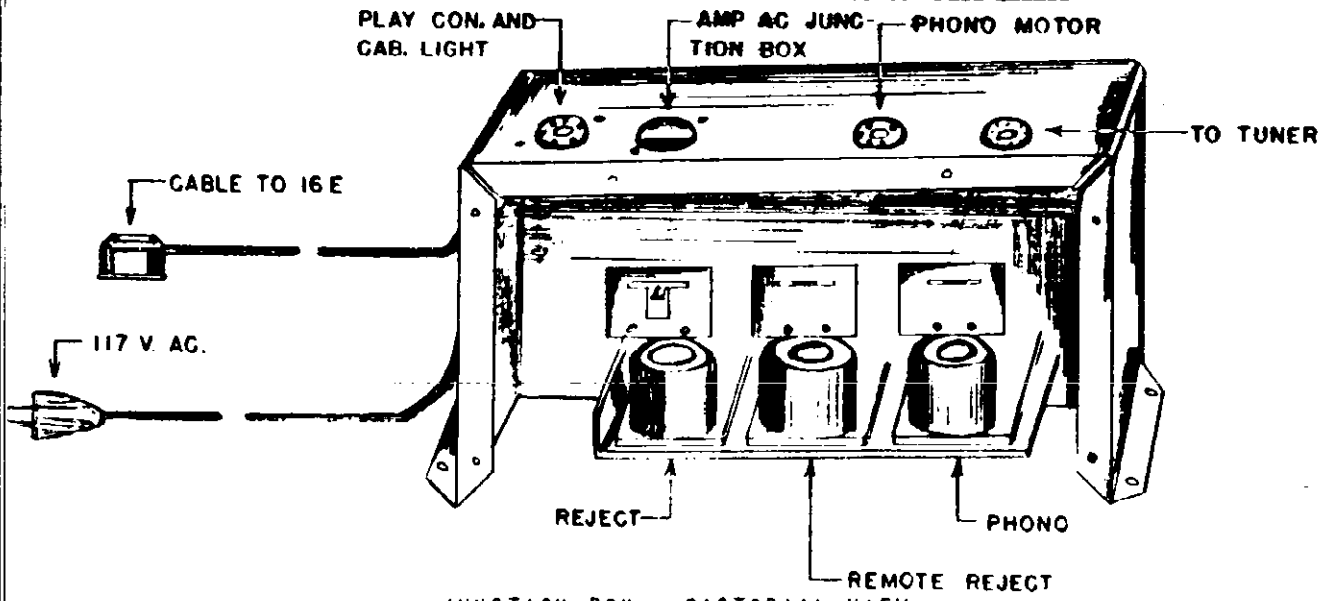

JUNCTION BOX - PICTORIAL VIEW

©John F. Rider

MODEL 400M Series, FARNSWORTH TELEV. & RADIO CORP.
Capehart

SECTION 20 OPERATION AND MAINTENANCE - RECORD REPRODUCING EQUIPMENT **PART 4**

It is not the purpose in these Service Notes to cover the 16-E Record Changer completely because a separate publication is devoted to that instrument. In the event of some difficulty with the 16-E Record Changer we urge technicians not to attempt any service adjustments until they have carefully analized the trouble. Too many service men have the habit of aimlessly delving into the instrument and often attempt adjustments which are entirely foreign to the fault, and thereby, disturb adjustments which were entirely proper. We urge you to first read all service material available covering the operation and servicing of the 16-E Changer before attempting any extensive adjustments.

Because of rough handling an instrument may be subjected to intransit between factory and the customer, each instrument should be carefully checked in the customer's home. Once the record changer has been adjusted and properly set up in the customer's home it seldom requires attention, barring misuse by those operating the machine, or because of a faulty record product.

Before considering adjustments that may be required from time to time it would be well to consider a few factors which are quite often responsible for unnecessary service calls.

1. Failure to carefully instruct the customer as to the proper procedure to be followed in loading and operating the record changer.

2. Variations in records such as trip groove, thickness, feed-in groove, diameter, rough edges, improperly centered spindle hole, pinched recording grooves and warpage.

3. Failure of customer or dealer to insist upon a complete periodic inspection of the instrument for lubrication and cleaning.

OPERATING SEQUENCE

In order to more easily understand the operation of the 16-E we should consider it as being able to perform as four individual or separate record playing devices all built into one machine. If this thought is kept in mind a clearer comprehension of its structure and operating sequence will be possible.

MANUAL OPERATION

On the top rear right hand corner of the base plate is located the automatic On-Off switch. When this switch is in the "Off" position the circuit to the clutch solenoid relay is opened. When such is the case, and the record changer motor is turned on, the turntable revolves and records may be played manually.

REPEAT POSITION

When the selector lever is moved to the repeat position and the previously mentioned automatic "On-Off" switch is changed to the "On" position, the tone arm and trip mechanism operates automatically. In the repeat position it will be noted that when the needle moves into the trip groove it operates the trip. The record magazine tips but does not discharge a record to the turntable and the record tray does not lift. The record originally placed on the turntable will continue to repeat as many times as desired.

ONE SIDE

When the selector lever is moved to the "One Side" position, the record tray is in gear and will operate to remove the record from the turntable and return it to the record magazine, as this record returns to the magazine another record is discharged from the bottom of the stack and placed on the turntable by the record tray, then the tone arm swings into the playing position. At the completion of the record the mechanism trips and the above cycle is repeated.

TURNOVER POSITION

When it is desired to play the stack of records in the record magazine in sequence on both sides, the selector lever is moved to the "Both Sides" position.

In addition to the cycle outlined under "One Side" the operation of turning the record over is introduced. That is, after the first side is played, the reverse arm intercepts the record before being fully returned to the magazine and returns it to the turntable with the other side up ready for playing. A new record is discharged from the magazine only after the complete record (both sides) has been played.

To facilitate repairs or adjustments to the electrical circuits we have prepared a complete wiring diagram of the 16-E control circuits which has been included in this booklet.

Starting in the tuner when the "Phono" button is pressed the "On Off" relay shelf holding through the "Off" relay whose contacts are closed except when energized by "Off" button.

FARNSWORTH TELEV. & RADIO CORP. MODEL 400M Series, Capehart

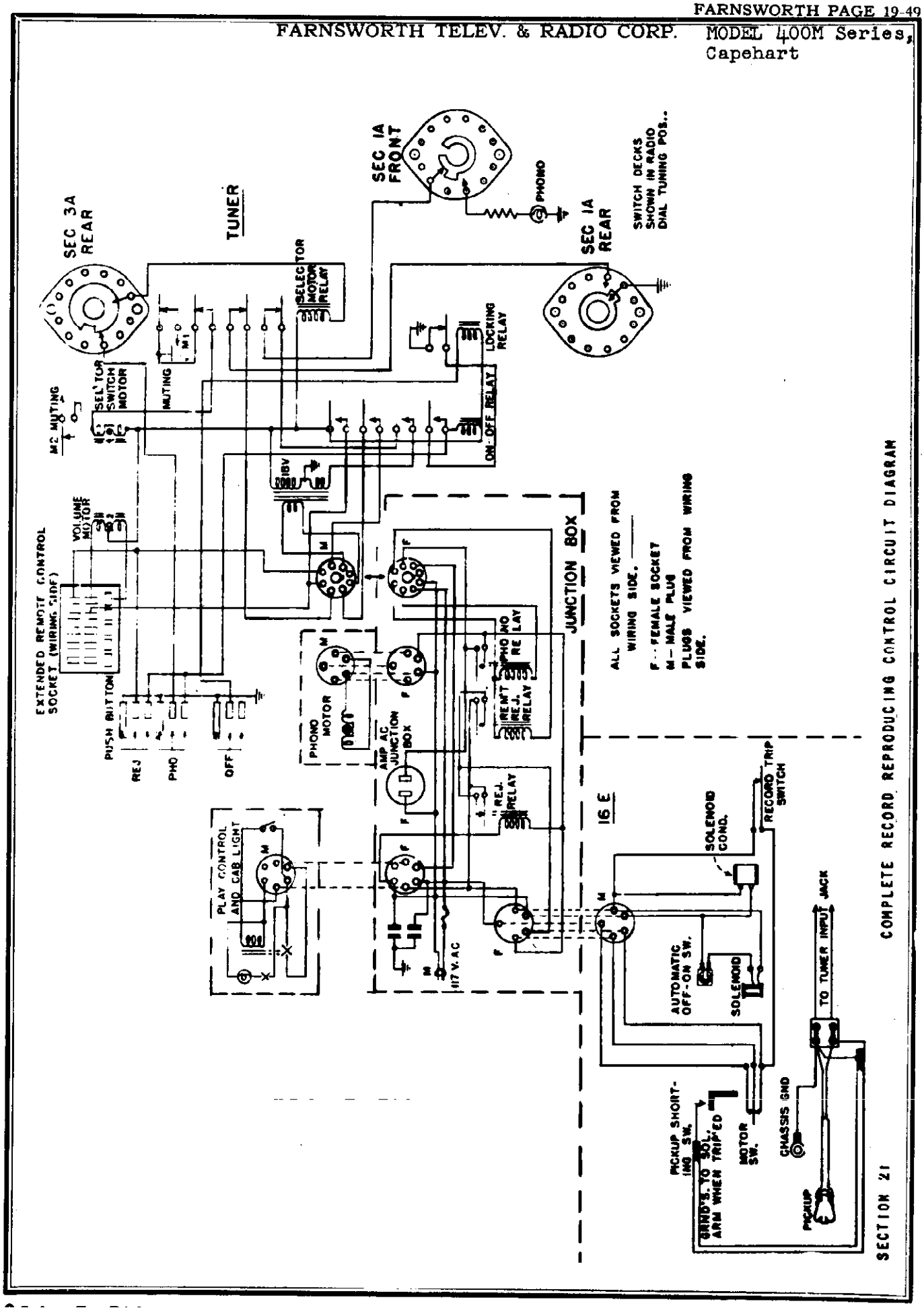

MODEL 400M Series, FARNSWORTH TELEV. & RADIO CORP.
Capehart

SECTION 22 MOTOR DRIVE - GEAR REDUCTION UNIT - DRIVE SHAFT ALIGNMENT

A silent and smooth operating drive motor, and gear reduction unit properly coupled to the record changer is of utmost importance for perfect reproduction of records. Unless these parts are all functioning properly there is a possibility that waver, or wows may be noticed in the sound reproduction from records. It is also possible that objectionable hum or rumble may be discernable during low passages in records or the change cycle. If such conditions are apparent we suggest a careful check and adjustment in accordance with the procedures which follow.

After freeing the record changer by removing the four hold down bolts used in shipment, make certain that the record changer is floating freely on its rubber mounting supports and that it does not touch the record changer mounting shelf at any point. There should be a feeling of entirely free floating motion when the changer is shaken slightly. If such is the case, it is a good indication of full free floating action. By making sure that the record changer is "free floating" the possibility of acoustic feedback, hum or rumble is eliminated.

Because of the importance for positioning the record changer into a free floating position it is always advisable to check the alignment relation of the record changer drive shaft with respect to the gear reduction unit and between this unit and the drive motor. Unless the correct alignment relationship is maintained excessive hum or rumble may be present as well as the possibility of uneven turntable speed causing waver or wows in the record reproduction.

If the above conditions are apparent with record changer in free floating position, try shifting the gear reduction and motor assembly slightly until a position is found where the difficulty is eliminated or negligible.

NOTE: Drive motors and gear reduction units are "run-in" and aligned on the mounting board at the factory, and will seldom, if ever, require adjustment in the field unless they have been tampered with or in the event the motor has shifted due to rough handling in transit. If hum or rumble persists after trying previous suggestions, loosen the motor and shift slightly locking same back in place when minimum hum position is located.

SECTION 23 SAFETY CLUTCH - PURPOSE AND ADJUSTMENT

The purpose of this feature is to uncouple the record changer from the gear reduction unit in the event a faulty record or improper operation of the machine causes the record changer to jam during some portion of the change cycle.

Essentially this device consists of two metal discs with a leather washer between. The driving power is transmitted from the lower to the upper disc through the leather washer because of the pressure developed by the nut, part 368-2, controlling the pressure of the spring, part 3938. Pressure of the spring determines the amount of back pressure and by its adjustment it may be set so as to cause the clutch to slip if more than normal drive tension or load developes soemwhere in the record changer during its change cycle, thereby acting as a "safety" feature.

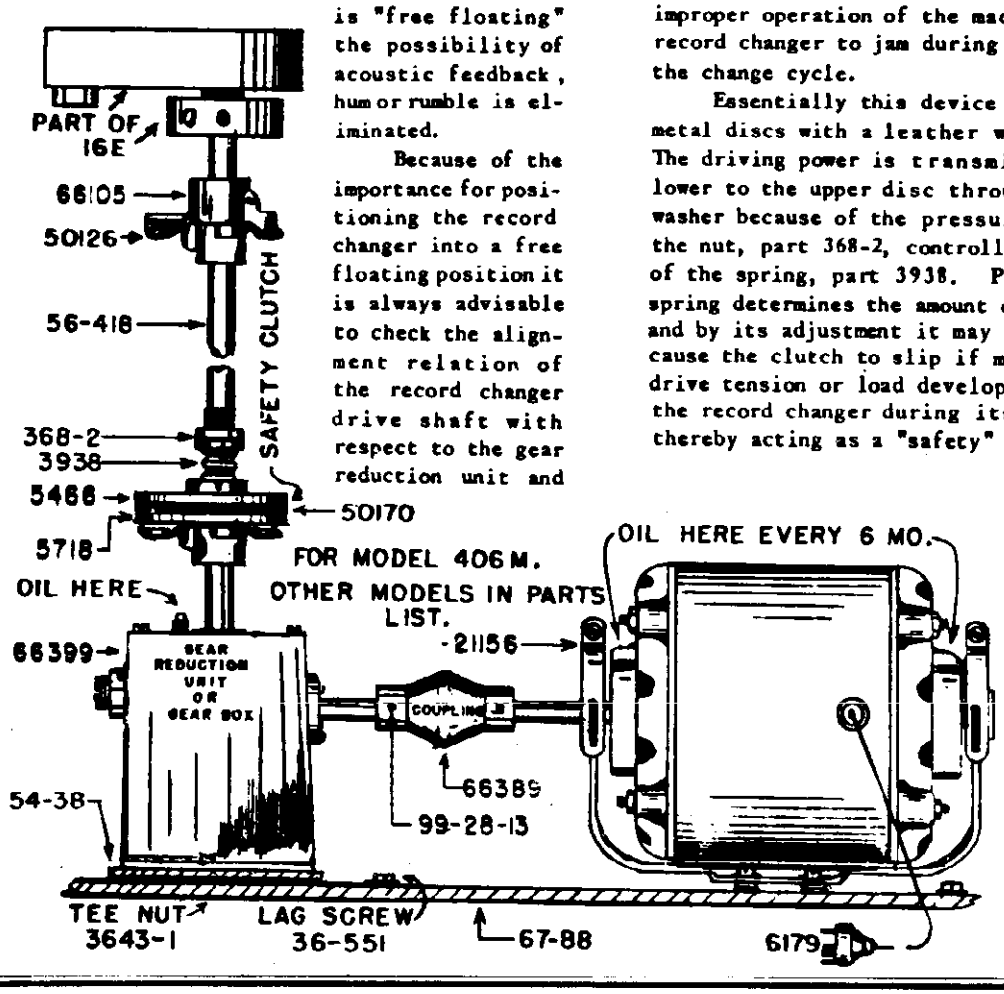

© John F. Rider

FARNSWORTH TELEV. & RADIO CORP. MODEL 400M Series, Capehart

SECTION 25 PLAY CONTROL - INSTALLATION - ADJUSTMENTS & MAINTENANCE

1. The following parts comprise a complete play control installation. Play control with cables, plug and switch, compartment light, mounting bracket, two bracket mounting screws, two switch mounting bolts, and four wood screws. Check packing material so no parts are overlooked.

2. The mounting bracket should be installed on the record changer first. See illustration 3.

3. The bracket is mounted on the boss which supports the clutch fork shaft and the reverse cam shaft, on the side of the boss away from the main cam, so the clutch fork shaft sets in the cutout. Pass the two screws that fit the tapped holes in the switch bracket through the old play control bracket holes when mounting the bracket.

4. Remove the plug button from the partition between radio and changer, put the six prong plug, the switch and the cables through the holes in the partition. Fasten the play control on the partition by means of the wood screws being careful not to crack the plastic case by drawing the screws too tight or driving the screws in crooked. Also be sure the record tray clears the play control housing before driving any screws.

5. Fasten the switch to the bracket by means of the two bolts. See illustration. This puts the switch in such a position that the throw out cam can actuate the switch. Of course, the switch goes on the bracket with the leads at the bottom and pointing toward the left (when looking in the back of the cabinet), this brings the spring finger in line with the throw out cam.

6. Remove play control shorting plug (six prong) from junction box and plug in cable from play control. Set play control at any number except zero (off) and run changer through several cycles, if the switch is too close to the throw out cam the relay in the play control will buzz, if not close enough the action will be erratic. Be sure the bolts holding the switch and the screws holding the bracket are properly tightened.

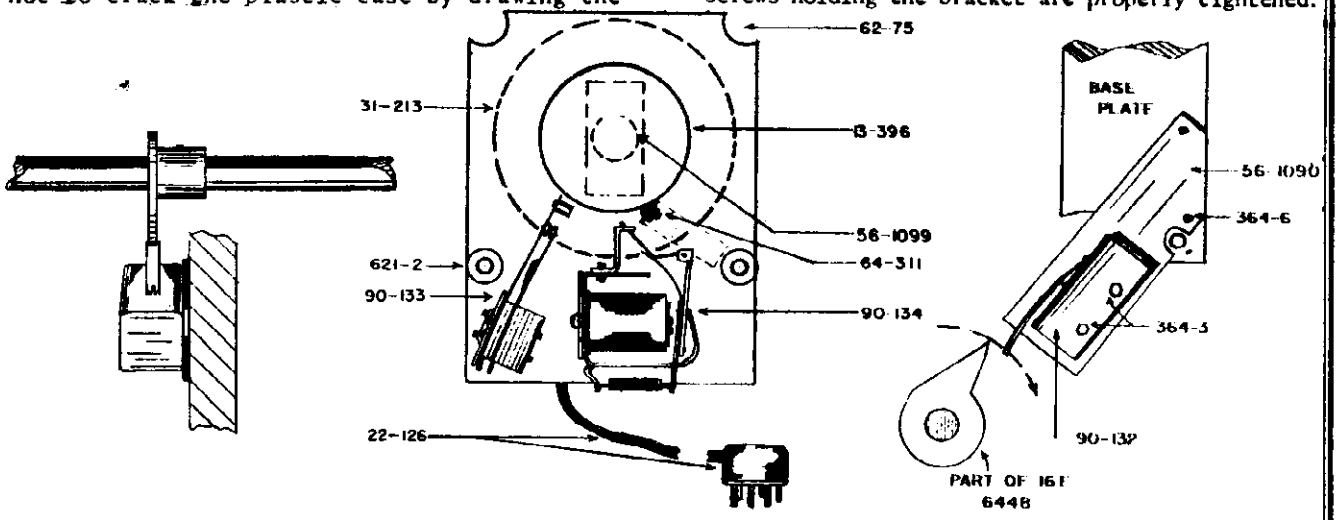

SECTION 26 400M SERIES PLAY CONTROL PARTS LIST

Stock No.	Description	Stock No.	Description
13-396	Ratchet Ass'y	64-311	Dog Spring
22-126	Cable and Plug	90-125	Light Switch
31-213	Dial Scale	92-140	Back Cushion
56-1099	Shaft	61163	Light Bulb
56-1100	Steel Ball Bearing	90-133	Relay (Complete)
59-142	Control Knob	90-134	Switch
59-143	Housing	621-2	Rubber Grommet
62-75	Rubber Grommet	13-368	Play Control & Cabinet Assembly (Complete)

©John F. Rider

FARNSWORTH TELE

1 VOLTAGE	1 RESISTANCE	2 VOLTAGE	2 RESISTANCE	3 VOLTAGE	3 RESISTANCE	4 VOLTAGE	4 RESISTANCE	5 VOLTAGE	5 RESISTANCE	6 VOLTAGE
1 0	1 -	1 0	1 0	1 0	1 0	1 0	1 0	1 0	1 0	1 0
2 0	2 0	2 0	2 0	2 0	2 0	2 0	2 0	2 0	2 0	2 0
3 0	3 0	3 208	3 354 M	3 125	3 355 M	3 -	3 -	3 220	3 327 M	3 0
4-L5	4 -	4 84	4 525 M	4 -	4 523 M	4-16	4 16	4 250 M	4 132 M	4 0
5 0	5 0	5-6.4	5 22 M	5 5.8	5 -	5 16	5 124	5 0	5 0	5-1.7
6 105	6 114 M	6 0	6 0	6 -	6 -	6 124	6 63	6 52 M	6 62 M	6 30
7 6.3	7 2	7 6.3	7 2	7 6.3	7 2	7 6.3	7 6.3	7 2	7 2	7 6.3
8 200	8 33 M	8-1.7	8 4.4 MEG	8 0	8 0	8 20C	8 30 M	8 0	8 0	8 195

CAP 2.3 MEG

BOTTOM VIEW OF SOCKETS

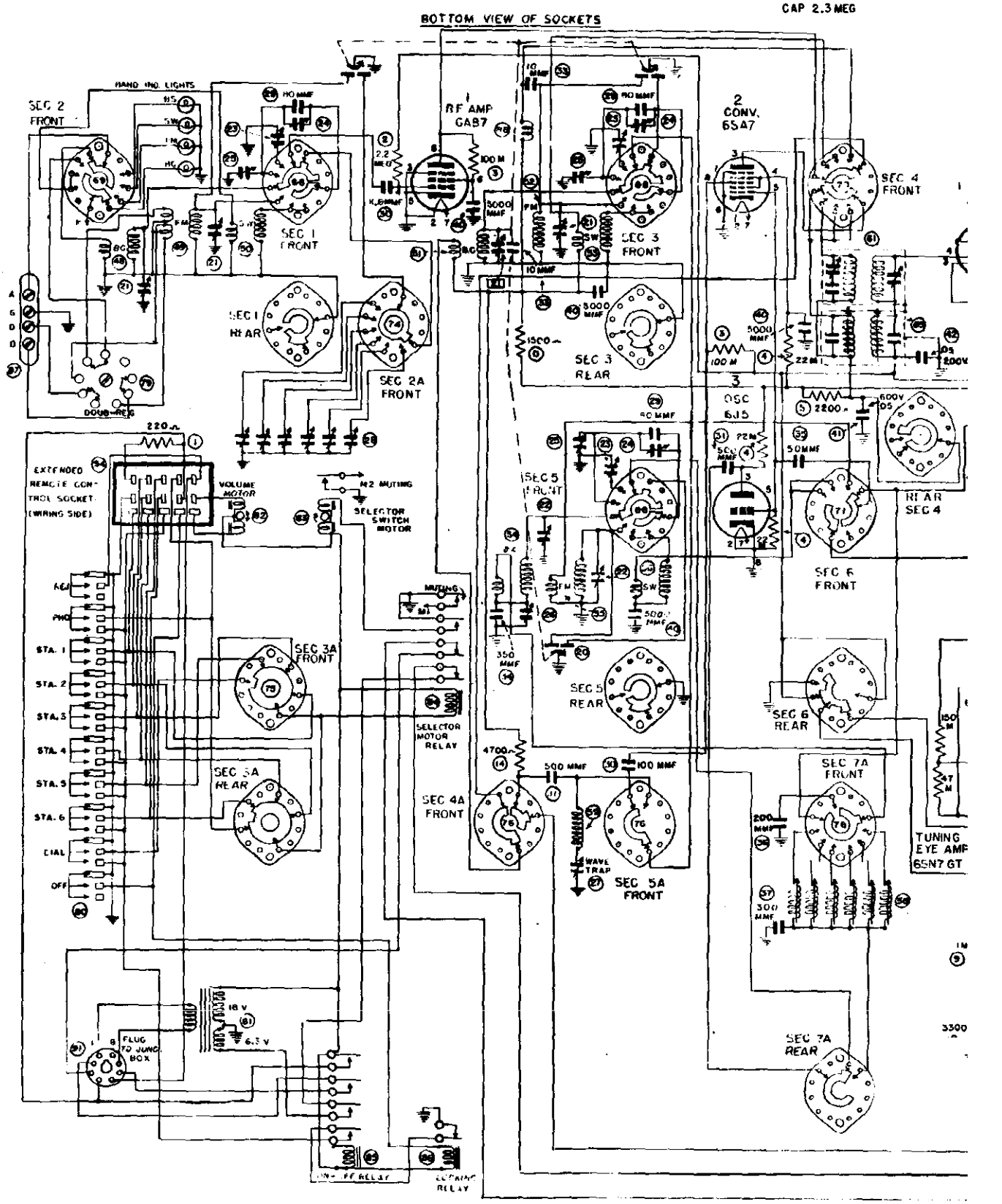

'ELEV. & RADIO CORP. MODEL 400M Series, Capehart

6 RESISTANCE	VOLTAGE	7 RESISTANCE	VOLTAGE	8 RESISTANCE	VOLTAGE	9 RESISTANCE	VOLTAGE	10 RESISTANCE	VOLTAGE	11 RESISTANCE	VOLTAGE	12 RESISTANCE
10	10	10	10	10	1-5	1.48 M	10	10	10	10	1-	1-
20	20	20	20	20	2-1	2 INF	20	20	20	20	20	20
3215	30	30	3-1.3	3120 M	3-	30	317.5	33200	350	4.26 M	428	390 M
424	4-.7	4120 M	4-2.7	465 M	4-.75	4 1 MEG	40	41 MEG	40	428 M	428	4100 M
200	5.6	50	5.8	5140 M	5-.5	5 1 MEG	517.5	53 M	50	50	5175	5 6.5 M
.0 M	6	665 M	6-2.2	675 M	60	60	6110	628 M	60	613 MEG	6-	6-
	7	7.2	76.3	7.2	70	70	76.3	7.2	76.3	72	763	7.2
.0 M	8.	866 M	80	80	86.3	8.2	8200	828 M	8.8	8.2 M	812	8 6.8 M

CAP 3.2 MEG

13. VOLTAGE	RESISTANCE
1-14	1.14 MEG
2 37	242 M
30	31 M
4-1.4	4 1.4 MEG
5 3.9	5 90 M
6-	6 1 M
70	70
86.3	8.2

ON DC VOLTAGE READINGS, METER SHOULD HAVE AT LEAST 10 MEG INTERNAL RESISTANCE. TAKEN FROM GROUND WITH NO SIGNAL.

FRONT AND REAR DECKS OF BAND SWITCH SHOWN IN EXTREME CLOCKWISE (R'CAST) POSITION- NEXT POS. COUNTER CLOCKWISE, F.M. BAND; NEXT S.W., AND THEN BAND SPREAD.

SELECTOR SWITCH SHOWN WITH KEY LETTER "A"

AM IF — 455 KC
FM IF — 4.3 MC

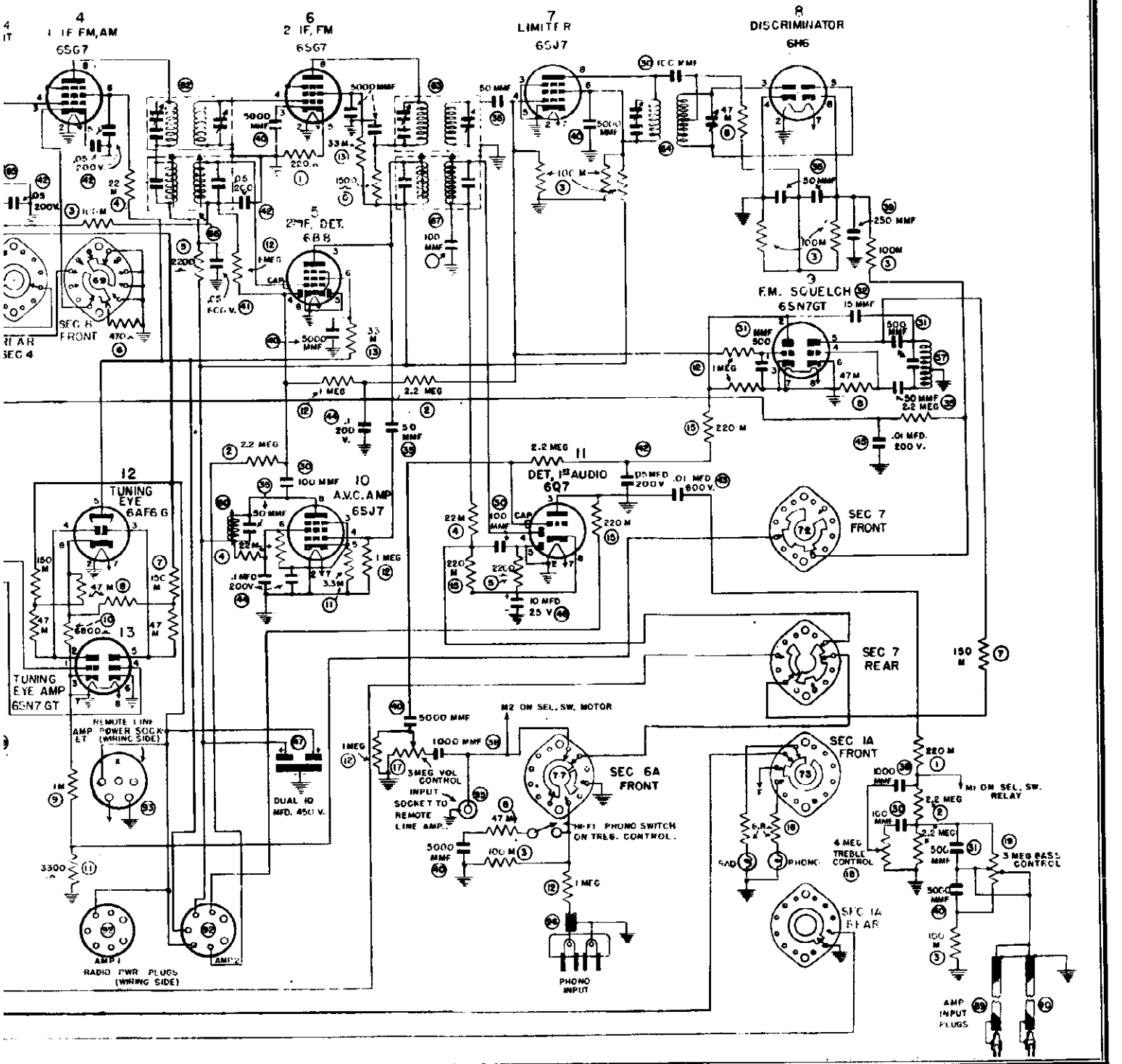

MODEL 400M Series, FARNSWORTH TELEV. & RADIO CORP.
Capehart

SECTION 20 OPERATION AND MAINTENANCE 16-E RECORD CHANGER

The "On-Off" relay is used to turn on the 117 volts for the entire set. Due to the fact 117 volts are always on the transformer in the set, the 6.3 volts for the heaters is supplied through one set of contacts on the relay. Another set of contacts supplies the audio amplifiers and another set in conjunction with the selector switch energizes the Reject Relay located in the Junction Box.

This latter relay closes the AC circuit to the Phono motor and the "Phono Relay" also in the Junction Box. Due to the fact the "Phono Relay" contacts are closed until it is energized the AC is also applied to the Clutch Solenoid in the 16-E Changer causing the clutch to be engaged. Thus whenever the "Phono" button is pushed the 16-E goes into cycle to permit the tubes to reach operating temperature before a record is played.

In the 16-E Changer the Clutch Solenoid is energized by the above starting cycle, pressing the Reject Button or by the Automatic Trip Switch. As soon as the change cycle starts the Solenoid Motor Switch opens the Solenoid circuit and shunts the reject relay to keep the motor running until the change cycle is completed even if the "Off" button is pushed.

The Automatic Trip Switch, located under the turntable is actuated by the tone arm moving the trip lever when the needle enters the trip or change groove.

The "Automatic On-Off" switch is used to open the Clutch Solenoid circuit when it is desirable to play records manually.

SECTION 23 SAFETY CLUTCH - PURPOSE AND ADJUSTMENT

The proper method of checking the adjustment of the safety clutch follows. With the record changer in cycle and the record magazine fully loaded apply a slight downward pressure on the bottom of the record magazine, while the magazine is tilting backward. When such pressure is applied it should cause the safety clutch to slip and the turntable should stop revolving. In the event the action of the safety clutch is not as described loosen nut, part 368-2, thereby releasing pressure on spring, 3938, this will permit safety clutch to unload sooner. After this adjustment is made the changer should be put through a number of cycles to make certain that the clutch does not slip at any point in the normal change cycle as this would cause the changer to stall.

The action of this safety clutch should always be checked when the instrument is permanently set up in the customer's home since it acts as a safety device to prevent record breakage or damage to changer in the event of a jam because of reasons previously mentioned.

CAUTION: The leather clutch facing should be kept free of oil or grease.

GEAR REDUCTION UNIT

At least once a year the gear reduction unit should be removed, the oil drained, gear box flushed and refilled with 1/2 ounce, No. 10 S.A.E. oil. Stock No. 1315-1.

LUBRICATION

At lesst every six months a few drops of oil should be applied to the drive motor oil cups. See illustration. For this purpose use the special electrical motor oil which is carried by most all oil companies for electric fans, sewing machine motors, etc.

SECTION 24 MOTOR DRIVE ASSEMBLY PARTS

Stock Number	Description	Stock Number	Description
13-151	406M Frict. Drive Ass'y.	66105	Flexible Coupl. Set Screw 99-28-13
56-418	406M Shaft	50126	Leather Disc
5466	406M Upper Frict. Drive Disc.	21156	Motor 60 Cycle
5718	405M Lower Frict. Drive Disc.	21157	Motor 50 Cycle
50170	406M Drive Facint (Leather)	66399	Gear Box 60 Cycle
36-501	"C" for Friction Drive	66435	Gear Box 50 Cycle
41-89	"C" Washer Pkg. 12	1315-1	Reduct Unit Oil SAE 10, 1/2 oz.
99-34-7	406M Cotter Pin	6019	1/4" Allen Wrench
3938	406M Spring	67-88	Mtg. Board
368-2	406M 3/8 x 32" Hex Nut	54-38	Reduction Unit Shim
13-151	410 M Frict. Drive Ass'y.	62-46	Motor Grommet
56-119	Shaft for Friction Drive	36-258	Spacers
13-148	411M Friction Drive Ass'y.	36-136	#10 Plain Washer
56-415	411M Shaft for Friction Drive	36-550	#10/32xx 3/4" Slotted RHMS
13-150	412M Friction Drive Ass'y	3611-4	#10 S.T. Lock Washer
56-417	412M Shaft for Friction Drive	3643-1	#10/32 Hex Nut
66389	Motor Couplings (rubber)	6179	5 Prong Motor Plug
99-28-13	1/4 x 20 x 4" Allen Set Screw	36-551	Lag Screw

©John F. Rider

FEDERAL TELEPHONE AND RADIO CORP. MODEL 6001 PO

©John F. Rider

Power Supply: 105-125V., 40-60 cyles AC
Same Voltage DC, 15 Watts Power Consumption
Battery Operation: 9 V.A — 90 V.B
Frequency Range: 1650 - 540 KC
I.F. Circuits: 456 KC

Tubes: 1T4 R.F. Amplifier — 1S5 Det Avc. A.F.
1R5 Osc. Converter — 3Q5 Power Output
1T4 I.F. Amplifier — 117z3 Rectifier

Speaker: 5" P.M., 1.47 oz. Alnico V Magnet
Speaker Transformer: 8500 ohms - 400 cycles
Speaker Voice Coil: 3.2 ohms

Part No.	Description
12.2	Tubular Condenser .002 mf 600 V
12.5	Tubular Condenser .01 mf 200 V
12.11	Tubular Condenser .05 mf 200 V
12.12	Tubular Condenser .05 mf 400 V
12.14	Tubular Condenser .1 mf 200 V
12.17	Tubular Condenser .25 mf 400 V
12.26	Tubular Condenser .005 mf 400 V
12.27	Tubular Condenser .15 mf 200 V
17.20	Mica Condenser 50 mmf ±10%
17.22	Mica Condenser 220 mmf ±10%
17.21	Mica Condenser 100 mmf ±10%
22.9	Electrolytic Condenser 150-150mf — 15 W.V.
22.11	Electrolytic Condenser 40-30-20 mf — 150 W.V.
27.10	3 Section Variable Condenser 397 mmf
37.26	Loop Antenna w Trimmer
37.27	Input I.F. Transformer
37.33	Diode I.F. Transformer
37.35	Oscillator Coil
37.38	R. F. Coil
52.9	Volume Control
47.5	Battery Electric Changeover Switch
77.54	Dial Pointer
77.50	Dial Scale (Calibrated)
97.92	Cabinet
42.3	Output Transformer
107.6	5" P. M. Speaker
117.9	1850 ohm 10-W W.W. Resistor
132.1	Padder Condenser
142.30	Tuning Knob
142.29	Volume Knob
142.28	Battery-Off-Electric Knob
	The following apply to Model P6x only.
97.51	Cabinet
117.1	30 ohm 1 W — W.W. Resistor
142.12	Tuning Knob (wood)
142.13	Volume Knob (wood)
142.14	Battery-Off-Electric Knob (wood)

ALIGNMENT PROCEDURE

No attempt should be made to realign the various circuits until all other causes have been checked, unless the condition is so obvious as to indicate that realignment is necessary. Then proceed as follows:

Volume Control full on.

Low range A.C. meter connected across voice coil to indicate output.

Keep signal generator attenuated so as to maintain ½ scale reading on output meter.

Make certain that dial pointer is exactly on index line (top left side of dial plate) when variable condenser is fully meshed.

REMOVE CHASSIS BOTTOM PLATE

	RECEIVER DIAL AT:	SIGNAL GENERATOR	DUMMY ANTENNA	CONNECT SIGNAL GENERATOR TO:	REFER TO CHASSIS LAYOUT FOR LOCATION OF TRIMMERS
1	Fully closed	Exactly 456 KC	.1 MF	Common Ground and Control Grid 1R5 top front section var. cond.	Adjust for maximum output T1, T2, T3, and T4
2	Fully closed	Approx. 538 KC	.1 MF	Control Grid 1T4 top rear section var. condenser	Adjust for maximum output T8
3	Fully open	Exactly 1650 KC	.1 MF	Control Grid 1T4 top rear section var. cond.	Adjust for maximum output T5
	REPEAT OPERATIONS 2 and 3.				
4	Approx. 1500 KC	Approx. 1500 KC	.1 MF	Control Grid 1T4 same as No. 3	Adjust for maximum output T6
	The next two operations are performed with the bottom plate on and the chassis in the cabinet — with lid closed				
5	Approx. 1500 KC	Approx. 1500 KC	.1 MF	Radiating Loop 20" from Receiver	Adjust T7 for maximum output
6	Approx. 600 KC	Approx. 600 KC		Radiating Loop 20" from Receiver	Adjust T8 for maximum while rocking variable condenser

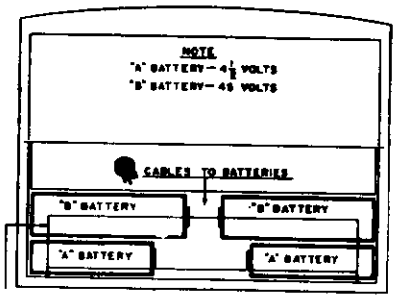

Battery Block Battery Layout

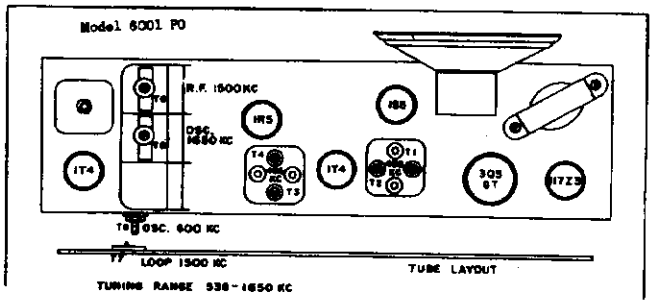

©John F. Rider

THE FIRESTONE TIRE & RUBBER CO. MODEL S-7425-1

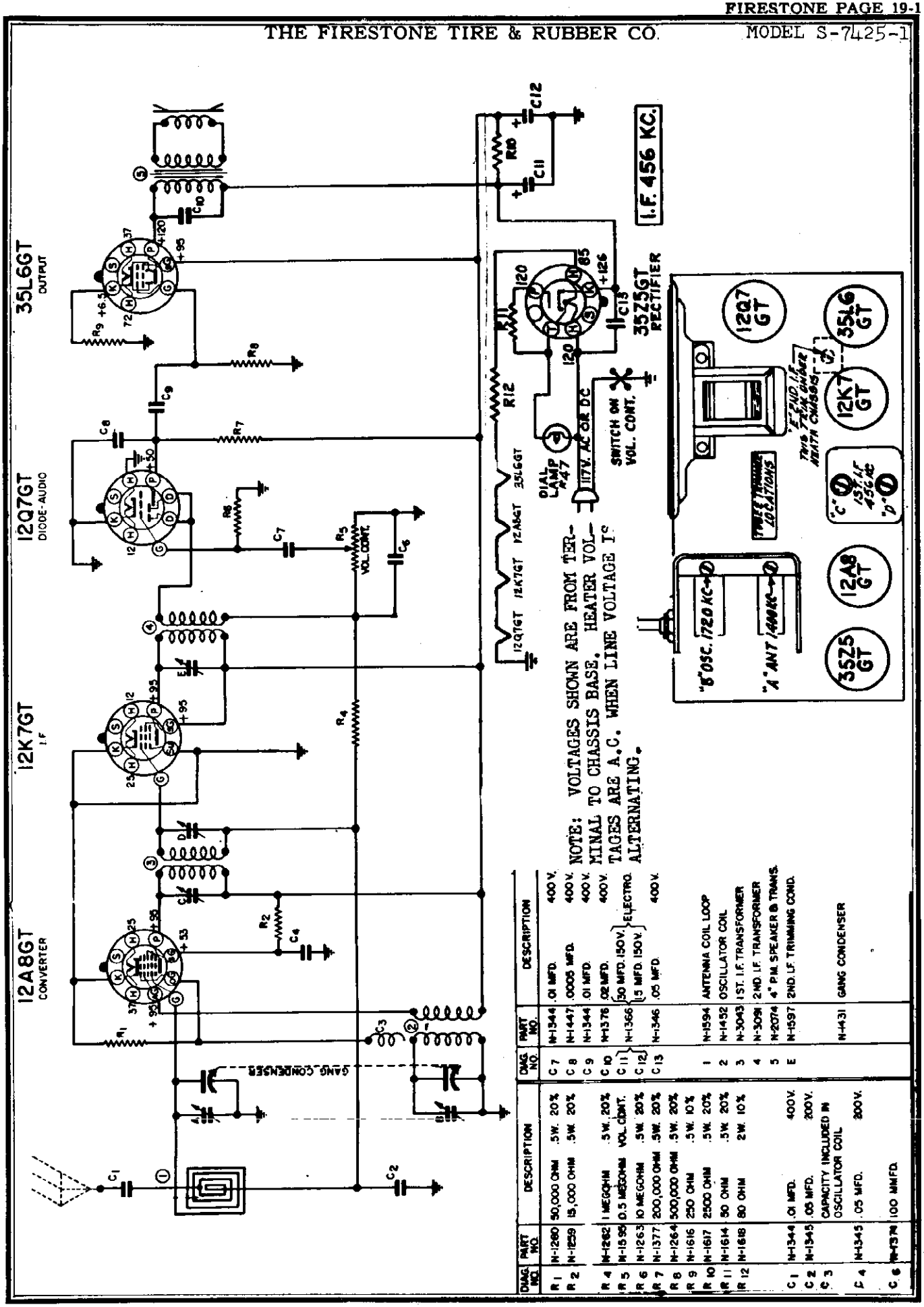

DIAG. NO.	PART NO.	DESCRIPTION	DIAG. NO.	PART NO.	DESCRIPTION
R 1	N-1280	50,000 OHM .5W. 20%	C 7	N-1344	.01 MFD. 400 V.
R 2	N-1239	15,000 OHM .5W. 20%	C 8	N-1447	.0005 MFD. 400 V.
R 4	N-1282	1 MEGOHM .5W. 20%	C 9	N-1344	.01 MFD. 400 V.
R 5	N-1595	0.5 MEGOHM VOL. CONT.	C 10	N-1376	.02 MFD. 400 V.
R 6	N-1263	10 MEGOHM .5W. 20%	C 11	N-1366	30 MFD. 150 V. ELECTRO.
R 7	N-1377	200,000 OHM .5W. 20%	C 12		15 MFD. 150 V.
R 8	N-1264	500,000 OHM .5W. 20%	C 13	N-1346	.05 MFD. 400 V.
R 9	N-1616	250 OHM .5W. 10%	1	N-1594	ANTENNA COIL LOOP
R 10	N-1617	2500 OHM .5W. 20%	2	N-1452	OSCILLATOR COIL
R 11	N-1614	50 OHM .5W. 20%	3	N-3043	1ST. I.F. TRANSFORMER
R 12	N-1618	80 OHM 2W. 10%	4	N-3091	2ND. I.F. TRANSFORMER
			5	N-2074	4" P.M. SPEAKER & TRANS.
C 1	N-1344	.01 MFD. 400 V.	E	N-1597	2ND. I.F. TRIMMING COND.
C 2	N-1345	.05 MFD. 200 V.			
C 3		CAPACITY INCLUDED IN OSCILLATOR COIL		N-1431	GANG CONDENSER
C 4	N-1345	.05 MFD. 200 V.			
C 6	N-1378	100 MMFD.			

©John F. Rider

CIRCUIT DESCRIPTION

The chassis utilized in these modern Firestone radio receivers incorporates a basic superheterodyne type of circuit that is designed to provide reception from standard broadcast stations in the frequency range of 540 to 1600 KC as well as reception from the new frequency modulation stations that are located in the 88 to 108 MC band. Many of the stages of the complete circuit will be readily recognized as necessary elements of a typical superheterodyne system, however, the detection method that is used for frequency modulation reception embodies an entirely new principle that will be fully explained in this pamphlet. All sections of the circuit have been developed in accordance wtih the most modern radio engineering technique and some of the more prominent features are described in the following paragraphs.

Built-in antennas are provided for reception of AM as well as FM stations. In locations where signal strength is adequate, these built-in antennas will give satisfactory performance but where FM signals are weak, it is desirable to obtain greater signal pick-up by installing an outdoor antenna such as:

FIRESTONE
FOLDED DIPOLE
FM ANTENNA
STOCK NO. 4-D-126

The built-in antenna used for AM reception is a high impedance loop that is mounted on rear edge of cabinet. A specially arranged and accurately cut length of "ribbon-type" high frequency transmission line serves to form the built-in folded dipole antenna for FM reception.

Tuning of the radio frequency circuits of the receiver is accomplished by a sturdily constructed permeability ("slug") tuner. This tuning system provides a means of minimizing the effects of "microphonism" that are inherent in other tuning devices. A high degree of accuracy in calibration and alignment of tuned circuits is also obtained with the permeability tuning system.

An R. F. amplifier stage is utilized to give maximum sensitivity and selectivity as well as high image rejection on FM and manual tuning AM reception.

Both transformer coupled I.F. stages are used for FM and one stage is used for AM. The first and second I.F. transformers have two sets of windings; one set is tuned to 455 KC for AM operation and the other is tuned to 10.7 MC for FM operation. Switching of the windings, to alleviate undesired beat frequencies, is necessary only in the first I.F. transformer.

Detection of amplitude modulated 455 KC signals is accomplished by the 6SQ7 diode rectification circuit and the resulting audio signal is passed to a conventional 6SJ7 audio amplifier stage.

Frequency modulation detection is obtained by an entirely new circuit that is known as the "RATIO DISCRIMINATOR." This FM detector circuit has the unusual ability to reject noise or other brief variations in the amplitude of the signal. The relative insensitivity of the Ratio Discriminator to signal amplitude variation makes it possible to eliminate the use of a "limiter" stage that ordinarily precedes the discriminator in other types of FM detector systems. It will therefore be noted that this receiver utilizes a normal I.F. amplifier stage instead of a low gain limiter stage preceding the FM discriminator. The theory of operation of the Ratio Discriminator is given in a subsequent section.

Two stages of voltage amplification (6SQ7 and 6SJ7) are provided for the audio frequency output from the FM discriminator circuit. The final audio power amplifier stage incorporates a 6V6GT tube in a special inverse feedback arrangement which reduces distortion and contributes to exceptionally good tone quality.

When the receiver is used for phonograph operation, audio voltage and power amplification is accomplished by the 6SJ7 and 6V6GT audio stages. Gain of this system is intentionally limited so that the output tube will not be driven into the high distortion region. This design permits the volume control to be advanced to its maximum position before reaching an audio level where distortion would otherwise cause unintelligible blasting—hence the maximum volume control position approximates the highest sound level that would be obtainable with an acceptable percentage of distortion.

THE RATIO DISCRIMINATOR

(Theory of Operation)

With the introduction of frequency modulated radio transmission it was necessary to devise a means of "detecting" or extracting the audio frequency intelligence from a carrier wave after it was appropriately amplified at the receiver. Since the frequency modulation process involves variation of a given carrier frequency for as much as 75 KC in either direction, it is apparent that the intelligence (or modulating signal) can best be extracted from the wave by a circuit that is capable of "discriminating" or recognizing the frequency of the carrier at any instant. Thus, the receiver circuit which converts FM carrier frequency variations into a corresponding voltage variation has become known as a discriminator.

When considering the function of a discriminator it is important to keep in mind that the output voltage amplitude is determined by the extent of the carrier frequency deviation from its center frequency; **the greater the deviation, the greater the amplitude of the discriminator output voltage—this determines volume of the resultant audible signal.**

The rate at which the FM carrier frequency is being deviated above and below its center value determines the rate at which the discriminator output voltage will vary and therefore it will be seen that **this rate of variation of output voltage corresponds to the audio frequency of the intelligence that was to be extracted from the carrier wave;** rapid variation of carrier frequency causes the discriminator to produce high audio frequencies and vice versa.

Unfortunately the conventional type of discriminator circuit is also sensitive to amplitude variations in the carrier wave and it must be preceded by a limiter stage that is capable of delivering a constant amplitude FM carrier wave to the discriminator. If the limiter stage were omitted, noise signals, which cause a variation in signal amplitude, would pass through the discriminator and would be audible in the output system.

With the advent of the "RATIO" Discriminator, an FM detector circuit was devised which was found to be relatively insensitive to amplitude variation of the incoming signal and therefore the use of a limiter stage could be dispensed with. After careful consideration of the performance of the Ratio Discriminator, Firestone engineers selected it as the means of FM detection in this receiver.

The outstanding difference between the "Ratio" Discriminator and other discriminators is as its name implies—the output voltage is dependent upon the **ratio** of two voltages rather than upon a comparison of these voltages on the basis of magnitude alone. Full significance of this feature will become apparent after studying the following description of the Ratio Discriminator circuit.

Operation of the Ratio Discriminator can best be understood by starting with a simple 3 wire D.C. circuit as an analogy and building up the discriminator circuit in easily comprehended sections. A typical 3 wire D.C. circuit is therefore shown in Fig. 1 and the following performance characteristics should be particularly noted.

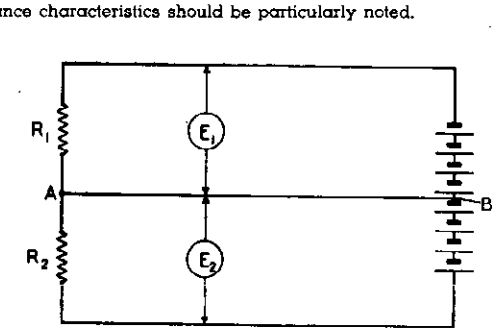

Fig. 1

When resistors R_1 and R_2 are equal, the circuit is said to be balanced and no current will flow in the center conductor A-B providing point B is a center tap on the battery supply voltage. In addition the voltage drop E_1 across resistor R_1 equal to voltage drop E_2 across resistor R_2. If we now introduce batteries of equal voltage in the R_1 and R_2 sec-

tions of the circuit as shown in Fig. 2, the system will remain balanced and although the current changes, there will be no change in the reading of voltmeters E_1 and E_2. It should be noted that the introduction of the batteries (with polarity as indicated), has caused a reduction in current. This current reduction results in a lower voltage drop across both load resistors but the sum of the drop across either resistor plus the battery voltage V must be equal to one-half of the supply voltage which is E_1 or E_2.

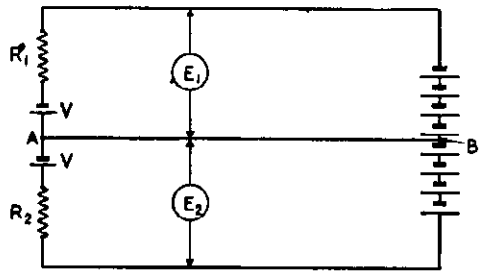

Fig. 2

This principle is made use of in the Ratio Discriminator so as to make it relatively insensitive to variation in amplitude of the incoming signal. By substituting the center tapped secondary winding of an I.F. transformer as shown in Fig. 3 for the two batteries labelled V in Fig. 2 it will be seen that a comparable condition is produced as equal voltages are induced in both halves of the secondary winding. Diode rectifier tubes are substituted for resistor R_1 and R_2 since we are now dealing with A.C. induced voltages that must be rectified. Do not overlook the fact that the plate resistance of the diodes creates a voltage drop and is analogous in that respect to the action of R_1 and R_2.

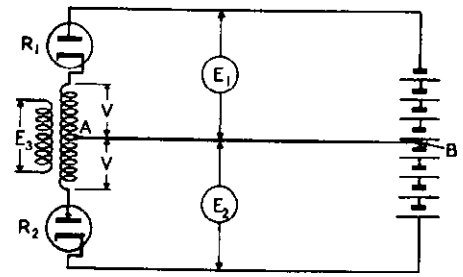

Fig. 3

Observe that irrespective of the magnitude of incoming signal voltage E_3, the voltage V induced in each half of the secondary winding will be equal since it is center-tapped. It has been previously shown that as long as equal voltages V are added to each load section of the 3 wire system, there would be no change in the reading of meters E_1 and E_2 and thus these voltages remain the same irrespective of the variation in the input signal voltage E_3. The ratio of the voltages E_1/E_2 also may be said to remain constant with variation in magnitude of incoming signal.

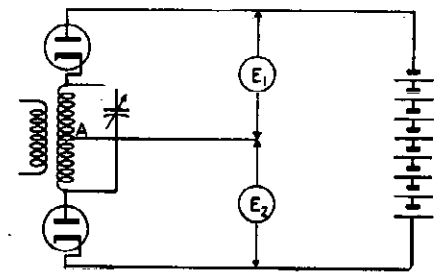

Fig. 4

Fig. 4 shows a slight rearrangement of the same circuit that was illustrated in Fig. 3 with the exception that the I.F. transformer has a condenser across the secondary in order to resonate it to the desired frequency. In addition, the conductor between points A and B has been eliminated since current will not flow thru it as long as the system is balanced. Center tap A on transformer secondary is still retained.

The foregoing circuit has been shown to be insensitive to variations in amplitude of the incoming signal and if it can now be arranged so that it will be capable of "discriminating" between variations in the frequency of the incoming signal, it will prove to be an ideal FM detector. Frequency discrimination can be accomplished by introducing some voltage from the primary of the I.F. transformer in series with the resonant voltage of the secondary so that the vector sum of these two voltages will effectively determine the instantaneous voltage between points A and E as well as between A and F. (These are the voltages that are measured by meters E_1 and E_2). The circuit of Fig. 5 shows how a portion of the primary voltage of the I.F. transformer is introduced into the secondary circuit by means of a tertiary winding on the transformer.

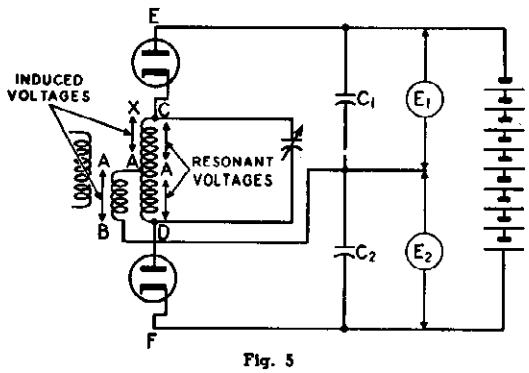

Fig. 5

Condensers C_1 and C_2 have low reactance at the I.F. frequency, however, their reactance is appreciable at audio frequencies and therefore the voltage drop across these condensers will readily follow circuit voltage variations that occur at an audio rate.

If an examination is now made of the conditions that would prevail under each of the following circumstances, it will be possible to determine whether the voltages E_1 and E_2 can be made to vary in accordance with the variation of carrier frequency since that action would follow the intelligence that is contained in the FM signal.

1. Ratio of voltage E_1 to E_2 when frequency of incoming signal is exactly equal to the I.F.
2. Ratio of voltage E_1 to E_2 when frequency of incoming signal is above I.F.
3. Ratio of voltage E_1 to E_2 when frequency of incoming signal is below I.F.

CONDITION #1: INCOMING SIGNAL EQUAL TO I.F.: When this condition prevails, the vector diagram shown in Fig. 6 illustrates how the voltage across tertiary winding AB is added vectorially to the resonant secondary voltage across AC or across AD to produce a resultant voltage that determines the voltage indicated by meters E_1 and E_2.

AX and AB represent the voltages that are coupled into the secondary and tertiary windings of the I.F. transformer. When the secondary is tuned to resonance, the voltage AC (across one-half the resonant circuit) will be 90 degrees ahead of induced voltage AX as well as induced voltage AB. It should be remembered that the phase difference between applied voltage (or induced voltage as in this case) and the voltage developed across an inductance in an A.C. circuit will vary with frequency and only at the resonant frequency will the phase difference be equal to 90 degrees.

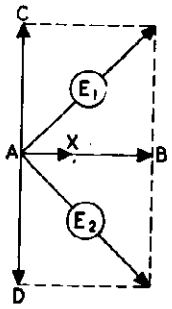

Fig. 6

By again examining the circuit shown in Fig. 5 it may now be appreciated that the voltages read on meters E_1 and E_2 will be respectively proportional to the vector resultant voltages E_1 and E_2 illustrated in Fig. 6 (these resultants represent the vector sum of voltage AB and AC or the vector sum of AB and AD). Since the resultant voltages E_1 and E_2 are equal in magnitude, the voltage from point A to E will equal the voltage from point A to F and hence **meters E_1 and E_2 will have identical readings.**

CONDITION #2: INCOMING SIGNAL ABOVE I.F.: When this condition prevails, the vector diagram shown in Fig. 7 illustrates the phase relation of the induced voltage in the tertiary winding and the resonant voltage in the tuned secondary. Note that the resonant secondary voltage AC does not lead the voltage AB by 90 degrees as was the case when the incoming signal was exactly equal to the I.F.

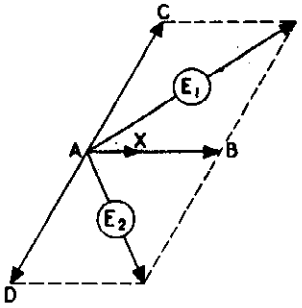

Fig. 7

Vector addition of voltages AB plus AC and AB plus AD produces the respective resultants E_1 and E_2. Since E_1 is obviously larger than E_2, the voltage that appears across the A to E portion of the circuit will be greater than the voltage that appears across the A to F portion. Hence, the reading of meter E_1 is larger than that of meter E_2 and the ratio of E_1/E_2 is **greater than unity.**

CONDITION #3: INCOMING SIGNAL BELOW I.F.: When this condition prevails, the vector diagram shown in Fig. 8 illustrates the phase relation of induced voltage in the tertiary winding and the resonant voltage in the tuned secondary. Note that the resonant secondary voltage AC leads the voltage AB by more than 90 degrees and that the vector resultant E_1 is now smaller than the resultant E_2. In this case the voltage that appears across the A to E portion of the circuit will be smaller than the voltage from A to F. Hence, the reading of meter E_1 is smaller than that of meter E_2 and the ratio of E_1/E_2 is **less than unity.**

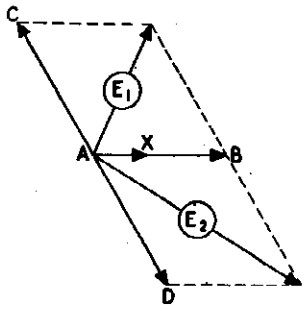

Fig. 8

The manner in which a Ratio Discriminator extracts the intelligence from a frequency modulated carrier by means of a variation in the **ratio between two voltages should now be apparent** from the foregoing discussion and Fig. 9 illustrates the complete discriminator circuit as used in this receiver.

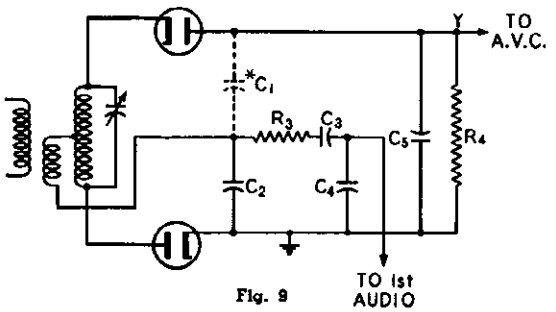

Fig. 9

*Condenser C_1 is represented in the actual circuit by distributed capacitance of associated wiring.

Elimination of the battery that was shown in previous illustrations is accomplished by using a long time constant resistor-condenser combination consisting of R_4 and C_5. Since the two diodes in the discriminator circuit are in series, they will conduct on the same half cycle, and the rectified current thru R_4 will charge condenser C_5 so that the point labelled Y becomes negative. The time constant of R_4-C_5 is about 0.1 second so that the negative potential at point Y will remain constant at even the lowest audio frequencies.

A rapid increase in carrier voltage cannot momentarily increase the voltage across R_4-C_5 due to the large time constant; similarly, a sudden reduction in carrier voltage will not be accompanied by a change in voltage across R_4-C_5. Thus, the voltage across this R-C combination stabilizes the Ratio Discriminator against amplitude modulation. In addition it should be noted that the same voltage serves as an excellent A.V.C. voltage and is used for that purpose in this receiver.

The "threshold" effect that is noticeable in other types of FM limiter-discriminator combinations is absent in the ratio type discriminator and there is no specific minimum carrier level that must be applied (as in the case of a limiter stage) to prevent noise from reaching the audio system.

Since the higher audio frequencies are intentionally emphasized in the frequency modulation transmission process, de-emphasis is used at the receiver in order to provide normal tone rendition and to reduce high frequency noises. De-emphasis is accomplished by resistor R_3 and condensers C_3 and C_4 in the discriminator circuit shown in Fig. 9.

©John F. Rider

THE FIRESTONE TIRE & RUBBER CO. MODEL 4-A-60

BROADCAST BAND — "AM" — ALIGNMENT PROCEDURE

1. Disconnect leads from FM antenna terminal strip (labelled "A-G-A") at back of chassis; also disconnect speaker plug, AM loop antenna plug and phono plugs. Remove chassis from cabinet.

2. It will be necessary to perform this alignment procedure with the chassis placed relatively close to the cabinet in order to avoid removing the AM loop antenna that is attached to cabinet frame.

3. After conveniently locating chassis with respect to the cabinet, reconnect AM loop antenna plug, speaker plug and brown lead of "External Antenna" coupling turn to blue lead at back of receiver.

4. Connect an output meter across speaker voice coil or from plate of 6V6GT tube to chassis through a 0.1 Mfd. condenser.

5. Connect ground lead of signal generator to receiver chassis.

6. Set volume control to the maximum volume position and use a weak signal from the signal generator.

7. If alignment of both AM and FM channels is required, it is necessary to align the AM channel first; then align FM channel as instructed in preceding section.

8. R.F. leads from slug tuner assembly should be dressed away from wave trap coil and close to chassis.

9. After alignment procedure is completed and chassis has been reinstalled in cabinet, arrange leads to loop antenna so that they are separated from each other as much as possible—avoid twisting or taping these leads together.

DUMMY ANT. IN SERIES WITH SIGNAL GENERATOR	CONNECT HIGH SIDE OF SIGNAL GENERATOR TO	SIGNAL GENERATOR FREQUENCY	FM-AM PHONO SWITCH POSITION	RECEIVER DIAL SETTING	TRIMMER OR SLUG NUMBER	TRIMMER DESCRIPTION	TYPE OF ADJUSTMENT
0.1 MFD. Condenser	Terminal K on tuner unit (see Fig. 11).	455 KC	"AM" Center Position	Any position where it does not affect the signal.	1-2	2nd I.F.	Adjust for maximum output. Then repeat adjustment.
					3-4	1st I.F.	
0.1 MFD. Condenser	Terminal K on tuner unit (see Fig. 11).	455 KC	"AM" Center Position	Any position where it does not affect the signal.	5	Wave Trap	Adjust for minimum output.
If positions of movable slugs in the slug tuner assembly have been disturbed (examine cement seal near top of threaded stem on each slug) or if a coil or slug has just been replaced in the tuner assembly, omit the next 5 instructions in this chart and start with the procedure entitled "Slug Tuner Adjustment Procedure—AM Section." Where the tuner assembly has not been disturbed, ignore this instruction and proceed with the next step.							
500 MMFD. Mica Condenser	External Antenna clip at back of Cabinet.	535 KC	"AM" Center Position	Set Slug tuner assembly to fully closed position. Disregard position of dial pointer.	6	Oscillator Trimmer	Adjust for maximum output.
500 MMFD. Mica Condenser	External Antenna clip at back of Cabinet.	1000 KC	"AM" Center Position	Tune to 1000 KC generator signal and check position of dial pointer. If it is set incorrectly, release clip on pointer and repcsition to 1000 KC calibration mark. Note that the 1000 KC mark is located under the last "0" in the numeral "100." Exercise care to set pointer accurately.			
500 MMFD. Mica Condenser	External Antenna clip at back of Cabinet.	1500 KC	"AM" Center Position	Tune to 1500 KC generator signal.	7	Antenna Trimmer	Note the difference between the dial pointer setting and the 1500 KC mark on the scale—do not disturb pointer position even if pointer does not coincide with 1500 KC mark. If the difference does not exceed 20 KC, adjust trimmer No. 7 for maximum output and proceed with next two instructions in this chart. Where the calibration error exceeds 20 KC it is advisable to omit the next two instructions in this chart and adjust the slug tuner as described in the following section.
500 MMFD. Mica Condenser	External Antenna clip at back of Cabinet.	600 KC	"AM" Center Position	Tune to 600 KC generator signal.	8	Antenna Padder	Adjust for maximum output. Try to increase output by detuning padder and retuning receiver dial until maximum output is obtained.

Repeat adjustment of trimmers 7 and 8 until one no longer detunes the other. This completes the AM band alignment procedure. The following procedure should only be used where the conditions described under the heading are encountered.

©John F. Rider

MODEL 4-A-60 THE FIRESTONE TIRE & RUBBER CO.

"AM" ALIGNMENT PROCEDURE CONTINUED

SLUG TUNER ADJUSTMENT PROCEDURE — AM SECTION

This procedure is to be used only where the positions of slugs in the slug tuner have been disturbed or in event of a coil or slug replacement, or where a serious calibration or tracking error is noted after attempting to align the receiver as described in the preceding section.

DUMMY ANT. IN SERIES WITH SIGNAL GENERATOR	CONNECT HIGH SIDE OF SIGNAL GENERATOR TO	SIGNAL GENERATOR FREQUENCY	FM-AM PHONO SWITCH POSITION	RECEIVER DIAL SETTING	TRIMMER OR SLUG NUMBER	TRIMMER DESCRIPTION	TYPE OF ADJUSTMENT
500 MMFD. Mica Condenser	External Antenna clip at back of Cabinet.	535 KC	"AM" Center Position	Set Slug tuner assembly to fully closed position. Disregard position of dial pointer.	9	Oscillator Tuning Slug	The object of this adjustment is to set slug #9 to a position where the oscillator coil reaches maximum inductance at 535 KC. That is accomplished by first backing off trimmer condenser #6 until its plates are well spaced (lowest capacity); then rotate slug #9 and note whether a peak can be obtained on the output meter. If a peak cannot be reached, turn trimmer condenser #6 to a slightly higher capacity setting and repeat adjustment of slug #9 for peak output. **When adjusting this slug, always approach the peak output setting by rotating the slug so that it is moving down into the coil form.** The correct setting of slug #9 is determined when a definite peak can be reached with trimmer #6 at the lowest capacity position that permits the coil and condenser to resonate at 535 KC.
500 MMFD. Mica Condenser	External Antenna clip at back of Cabinet.	1500 KC	"AM" Center Position	Set Accurately to 1500 KC mark on scale.	6	Oscillator Trimmer	Adjust for maximum output.
500 MMFD. Mica Condenser	External Antenna clip at back of Cabinet.	535 KC	"AM" Center Position	Set Slug tuner assembly to fully closed position.	10	Oscillator Padder Slug	Adjust to receive 535 KC signal and for maximum output.
Repeat adjustment of oscillator trimmer #6 at 1500 KC and oscillator padder slug at 535 KC until both points are correctly calibrated with the dial scale.							
500 MMFD. Mica Condenser	External Antenna clip at back of Cabinet.	1500 KC	"AM" Center Position	Tune to 1500 KC generator signal.	7	Antenna Trimmer	Adjust for maximum output.
500 MMFD. Mica Condenser	External Antenna clip at back of Cabinet.	1000 KC	"AM" Center Position	Tune to 1000 KC generator signal.	11	Antenna Tuning Slug	Adjust for maximum output.
500 MMFD. Mica Condenser	External Antenna clip at back of Cabinet.	600 KC	"AM" Center Position	Tune to 600 KC generator signal.	8	Antenna Padder	Adjust for maximum output. Try to increase output by detuning padder and retuning receiver dial until maximum output is obtained.
Repeat the three preceding adjustments until no further improvement can be made in output at 1500 KC, 1000 KC and 600 KC. Apply a coating of speaker cement at top of each tuning slug stem to prevent movement.							

DIAL AND POINTER DRIVE CORD ARRANGEMENT

To string dial cord, turn the main drive drum to maximum **counter-clockwise** position and use following parts:

114955—Clip on end of cord

117057—Cord (7 feet)

119087—Ring for dial cord

113177—Tension Spring

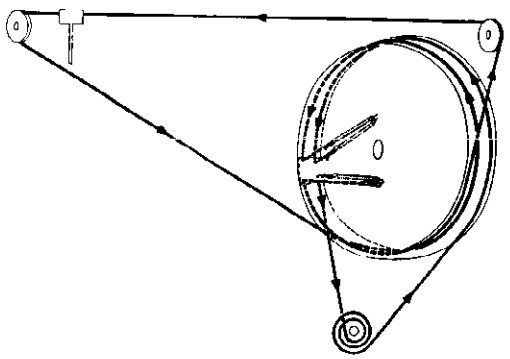

THE FIRESTONE TIRE & RUBBER CO. MODEL 4-A-60

FREQUENCY MODULATION — "FM" — ALIGNMENT PROCEDURE

INSTRUMENTS: Alignment of the FM circuits in this receiver may be accomplished with either a conventional AM type signal generator or an FM signal generator. The output indicator should be an oscilloscope or a vacuum tube voltmefer.

Although it is preferable to use an FM generator and an oscilloscope, reasonably accurate alignment is obtainable when using a conventional AM generator and vacuum tube voltmeter providing proper care is exercised in adjusting the discriminator circuit trimmer condenser.

IMPORTANT: If an AM signal generator is used, it should be capable of producing fundamental frequencies of 10.7 MC and 88 to 108 MC—avoid using an AM generator which produces signals in the 88 to 108 MC range by using harmonics higher than the second. Generators which are dependent upon third, fourth or fifth harmonics for output frequencies of 88 to 108 MC will generally produce undesirable spurious beat signals with the local oscillator in the receiver and alignment will be exceedingly difficult.

The following procedure is adaptable for use with either an AM or FM generator and oscilloscope or vacuum tube voltmeter—merely follow the instructions which are applicable to the instruments that are used.

1. If alignment of both AM and FM channels is required it is necessary to align the AM channel first, then align the FM channel as instructed in adjacent chart (AM alignment procedure is given on page 9). Do not attempt to reposition pointer by releasing it from clip on dial cord this is done only during AM alignment.

2. Disconnect leads from FM antenna terminal strip (labelled "A-G-A") at back of chassis; also disconnect all other plugs on rear of chassis and remove chassis from cabinet. It is not necessary to remove the built in antennas.

3. Remove speaker from cabinet and reconnect plug to receiver chassis.

4. A specific setting of the receiver volume control is not required, however, it will be found convenient to leave it in the maximum volume position so that alignment signals will be audible even though the output indication is obtained by a V-T voltmeter or 'scope connected to points in the discriminator circuit.

5. FM circuit leads should be dressed as short and straight as possible, particularly those in the oscillator circuit. I.F. plate and grid leads should also be kept short and straight.

6. Alignment of receiver circuits may now be accomplished by using the procedure in the adjoining chart.

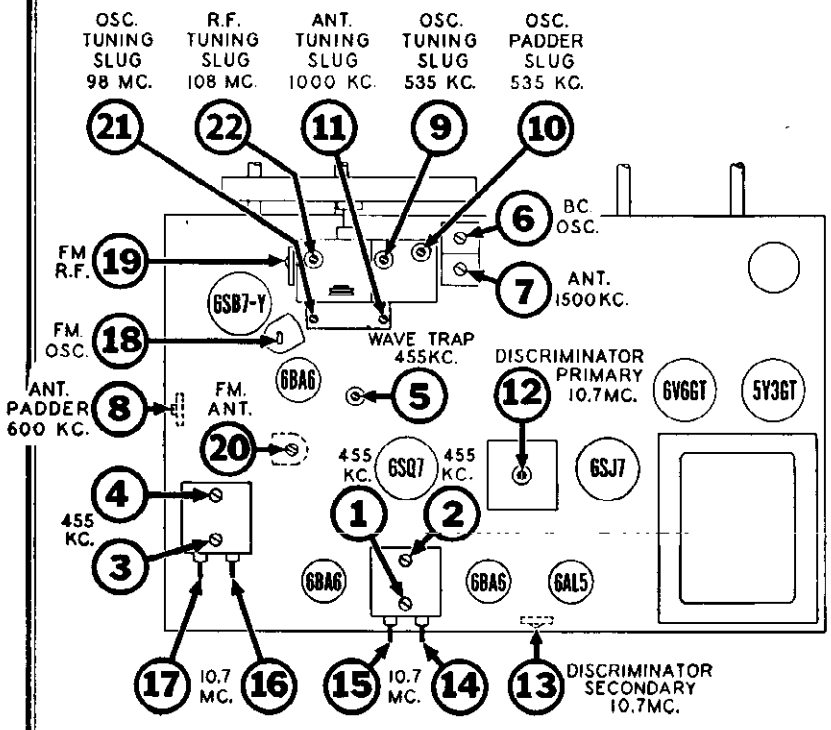

TRIMMER LOCATION CHART

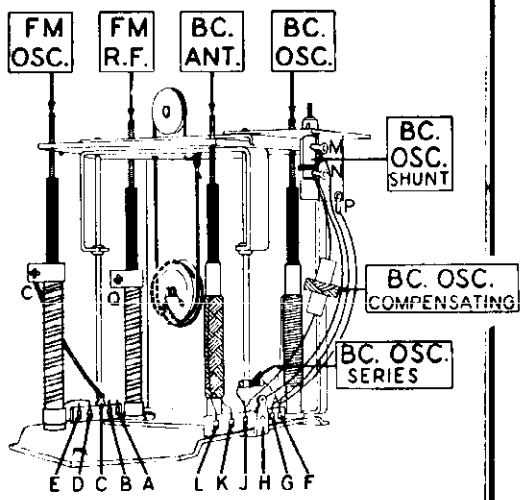

SLUG TUNER ASSEMBLY

©John F. Rider

©John F. Rider

STAGE GAIN MEASUREMENT PROCEDURE

REQUIRED INSTRUMENTS: The amount of amplification or "gain" of each of the stages of this receiver should be measured with an A. C. Vacuum Tube Voltmeter of the high frequency type (uniform response up to 100 MC). A conventional "AM" type signal generator may be used but it must be capable of producing **fundamental** frequencies of 600 KC. and 98 MC—**avoid using a generator that produces the 98 MC. signal by means of harmonics.**

PROCEDURE: It is exceedingly important to adhere to the procedure outlined below since the accuracy of these measurements will be affected to a considerable extent by the failure to establish proper operating conditions.

1. Be sure that R.F., I.F. and Discriminator stages are carefully and accurately aligned by utilizing the alignment procedure given in this manual.
2. Connect Signal Generator as shown below. Note that generator connections differ for "AM" and "FM" measurements.
3. For "AM" measurements, set signal generator to 600 KC. and then carefully tune radio receiver to this signal by using an output meter to indicate peak output. If a local station interferes, set generator to a nearby frequency and re-tune the receiver.
4. For "FM" measurements, set signal generator to 98 MC. and then carefully tune radio receiver to this signal by using a D. C. Vacuum Tube Voltmeter as an output indicator—meter must be connected between pin #7 of 6AL5 tube and chassis. If a local station interferes, set generator to a nearby frequency and re-tune the receiver.
5. The values of stage gain which are given here were measured with a fixed bias of 3 volts on the control grids of all R.F. and I.F. tubes which are connected to the A.V.C. circuit. Therefore, these values are not intended to indicate the full capability of a stage but they will serve as a convenient basis for determining proper operation. In order to duplicate the fixed bias voltage, connect the negative terminal of a 3 volt battery to A.V.C. at terminal 7 of the 1st I.F. transformer and connect the positive battery lead to the receiver chassis.
6. R.F. and I.F. circuits are slightly de-tuned when contact is made with an instrument probe and this action, which is indicated by a change in the output meter reading, may seriously affect the gain measurement. Therefore, it is important to adjust the associated circuit trimmer for a maximum output meter reading and to set the input signal level to a convenient reference point on the gain measuring instrument while the probe is making contact. After removing the probe it is again necessary to adjust the trimmer so as to obtain the same output meter reading and thereby assure that the signal voltage at the specified point has not changed as a result of circuit-detuning.

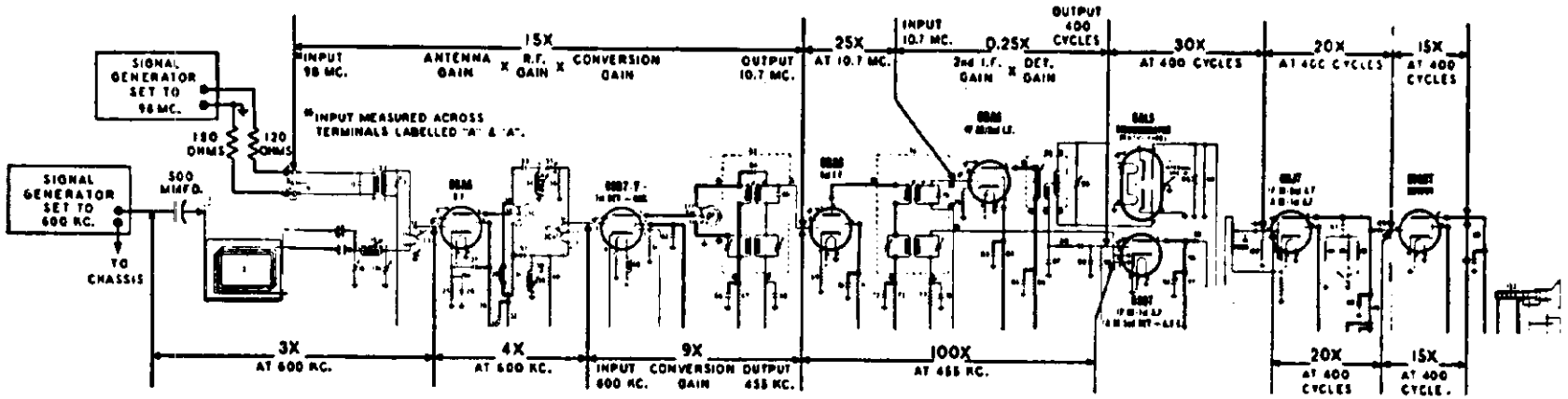

DIFFERENCES in tube characteristics, tolerance of parts, adjustment of tuned circuits and variations in line voltage will influence stage gain. These factors should be given due attention in event the gain of a stage varies extensively from the values shown above.

THE FIRESTONE TIRE & RUBBER CO. MODEL 4-A-60

BOTTOM VIEW OF CHASSIS

117 VOLT 60 CYCLE A. C.
POWER SUPPLY USED
FOR THESE MEASUREMENTS.
ALL VOLTAGES MEASURED BETWEEN
SOCKET TERMINALS AND CHASSIS.

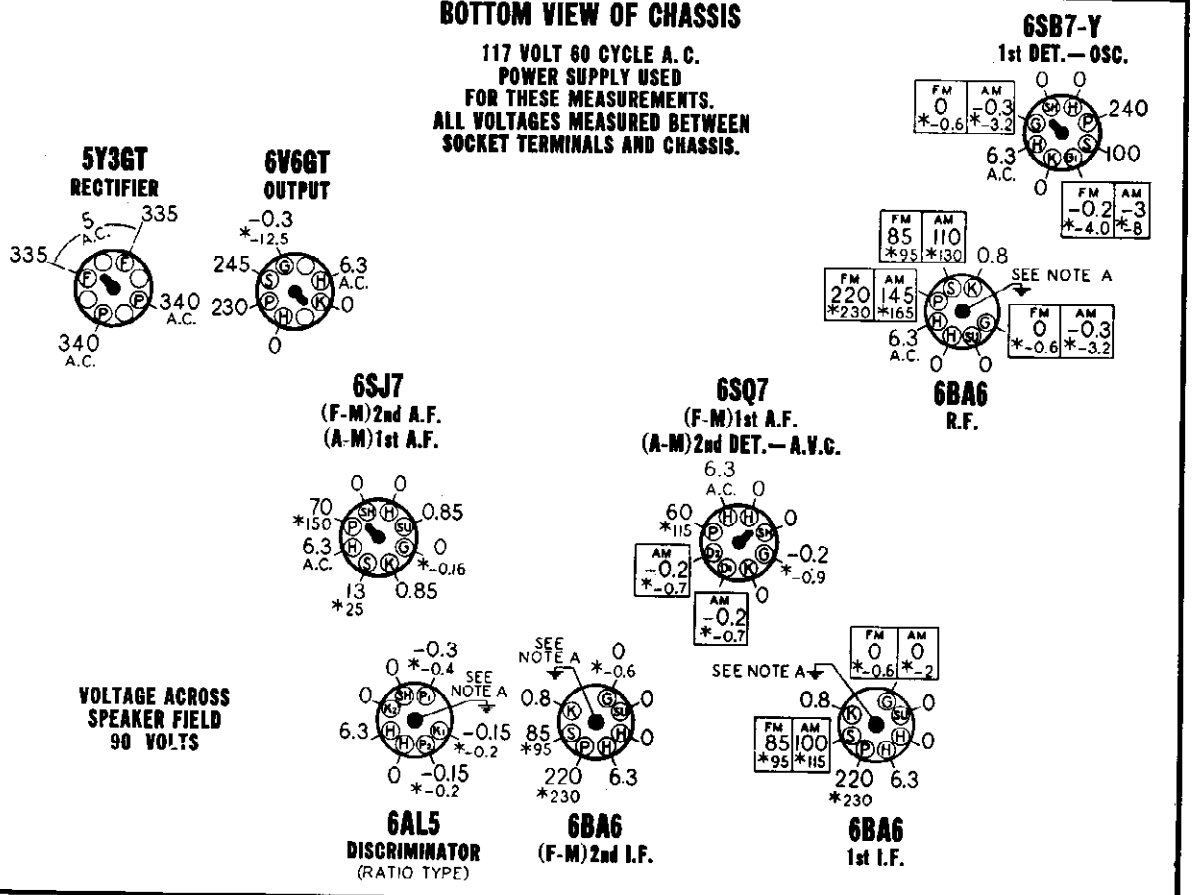

REAR OF CHASSIS

NOTE A: Grounding of center stud on tube socket is necessary to reduce capacity coupling between other pins. Oscillation may result if this ground is omitted.

SOCKET VOLTAGES

Measured with voltmeter having sensitivity of 1000 ohms per volt except where indicated by (*). The (*) symbol designates a vacuum tube voltmeter measurement.

ALL MEASUREMENTS MADE WITH FM-AM-PHONO SWITCH IN "FM" POSITION UNLESS OTHERWISE INDICATED
DIAL TUNED TO 108MC. FOR "FM" MEASUREMENTS
DIAL TUNED TO 540KC. FOR "AM" MEASUREMENTS
VOLUME CONTROL SET TO MINIMUM WITH NO SIGNAL
TONE SWITCH IN SPEECH POSITION

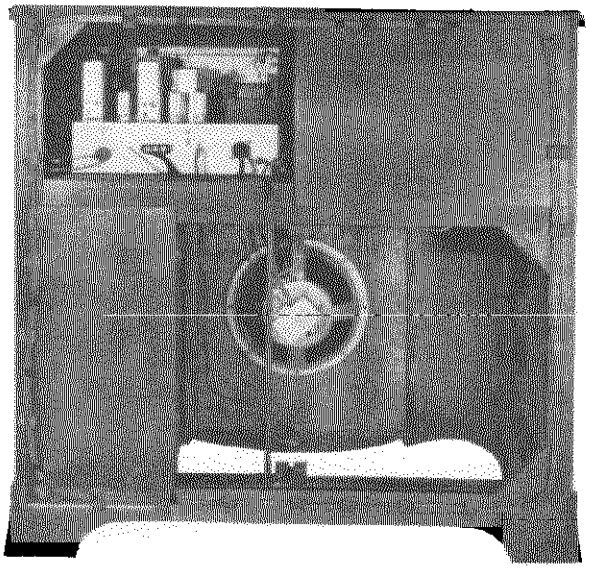

REAR VIEW OF RECEIVER

©John F. Rider

CLARI-SKEMATIX
Registered Trademark

MODEL 4-A-60

THE FIRESTONE TIRE & RUBBER CO.

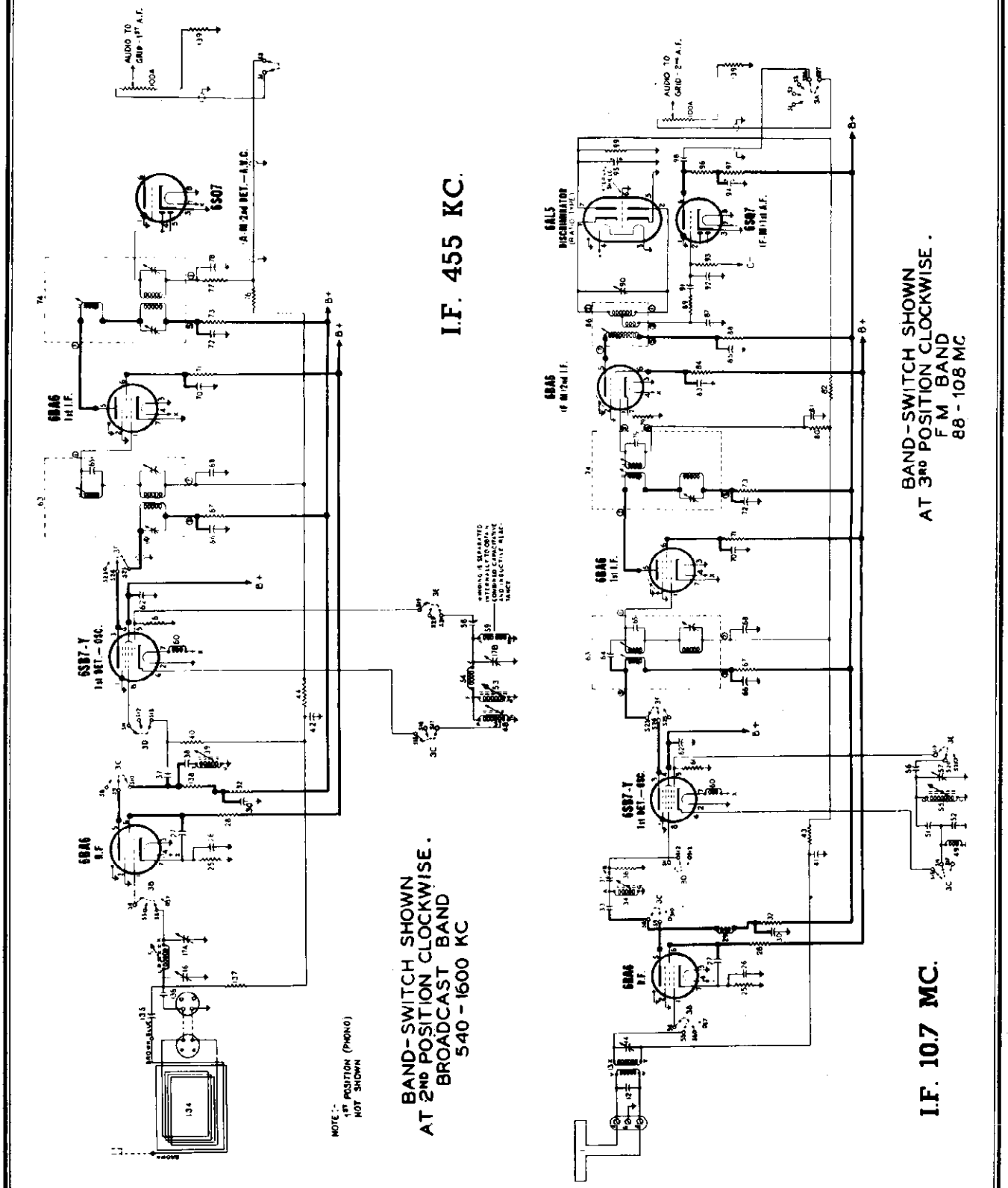

© John F. Rider

"FM" ALIGNMENT

INSTRUCTIONS GIVEN ON PRECEDING PAGE

SIGNAL GENERATOR CONNECTIONS			OSCILLOSCOPE OR V-T VOLTMETER CONNECTIONS		
CONNECT HIGH SIDE OF SIGNAL GENERATOR TO	CONNECT GROUND LEAD OF SIGNAL GENERATOR TO	FREQUENCY & TYPE OF MODULATION	IF AN OSCILLOSCOPE IS USED, CONNECT IT AS FOLLOWS:	IF A V-T VOLTMETER IS USED, CONNECT IT AS FOLLOWS:	FM-AM-PHONO SWITCH POSITION
Pin #1 of 6BA6 (FM) 2nd I.F. use a .01 MFD. condenser in series with generator lead.	Receiver chassis in vicinity of 6BA6 (FM) 2nd I.F. tube.	**10.7 MC** AM signal may be 400 cycle modulated or FM signal should preferably be modulated ±300 KC.	Connect vertical amplifier "high" lead in series with an 0.1 MFD. condenser to pin #6 of 6SQ7 tube. Connect scope ground lead to receiver chassis.	Connect common (or ground) terminal of meter to receiver chassis. D.C. probe lead of meter is then connected to pin #7 of the 6AL5 tube.	**FM** Maximum clockwise position
Same as above	Same as above	Same as above	Same as above	Before connecting V-T voltmeter, it is necessary to connect two 68,000 ohm resistors (resistance of both units must compare within 1%) in series from pin #7 of the 6AL5 tube to the chassis. Then connect common (or ground) terminal of V-T voltmeter to the junction of these two resistors. D.C. probe lead of meter is now connected to junction of resistor #89 (3300 ohms) and condenser # 91 (.01 MFD.) which are in the discriminator output circuit.	Same as above
Recheck the two preceding adjustments to be sure that both trimmers are set as accurately as possible to obtain the specified output indication on vacuum					
Pin #1 of 6BA6 (FM) 1st I.F. tube; use a .01 MFD. condenser in series with generator lead.	Receiver chassis in vicinity of 6BA6 (FM) 1st I.F. tube.	Same as above	Same as above	Connect common (or ground) terminal of meter to receiver chassis. D.C. probe lead of meter is then connected to Pin #7 of the 6AL5 tube.	Same as above
Terminal "B" on slug tuner unit (see Fig. 11); use a .01 MFD. condenser in series with generator lead.	Receiver chassis in vicinity of slug tuner unit.	Same as above	Same as above	Same as above	Same as above
If positions of movable slugs in the slug tuner assembly have been disturbed (examine cement seal near top of threaded stem on each slug) or if a coil or slu FM Section." Where the tuner assembly has not been disturbed, ignore this instruction and proceed with the next step.					
Generator output leads must be connected to the two terminals labelled "A" on the "A-G-A" terminal strip at back of chassis. Connect "high" lead to one "A" terminal in series with a 120 ohm resistor and connect generator ground lead to the other "A" terminal in series with a 150 ohm resistor.		**98 MC** AM signal may be 400 cycle modulated or FM signal should preferably be modulated ±300 KC.	Same as above	Same as above	**FM** Maximum clockwise position
Same as above		Same as above	Same as above	Same as above	Same as above
Same as above		**90 MC** AM signal may be 400 cycle modulated or FM signal should preferably be modulated ±300 KC.	Same as above	Same as above	Same as above
Check calibration and tracking of receiver with input signals of 88 and 108 MC. If difference between dial pointer setting and 88 or 108 MC. calibration mar calibration error is greater than ±0.4 MC. It is advisable to adjust the slug tuner as described in the following section.					
SLUG TUNER ADJUSTME This procedure is to be used only where the positions of slugs in slug tuner have been disturbed or in event of a coil or slug replacement, or where a seric					
Same as above		**88 MC** AM signal may be 400 cycle modulated or FM signal should preferably be modulated ±300 KC.	Same as above	Same as above	Same as above
Same as above		**98 MC**	Same as above	Same as above	Same as above
Same as above		**108 MC**	Same as above	Same as above	Same as above
Repeat the three preceding adjustments until satisfactory calibration and tracking is obtained at 88 MC., 98 MC., and 108 MC. Apply a coating of speake					

©John F. Rider

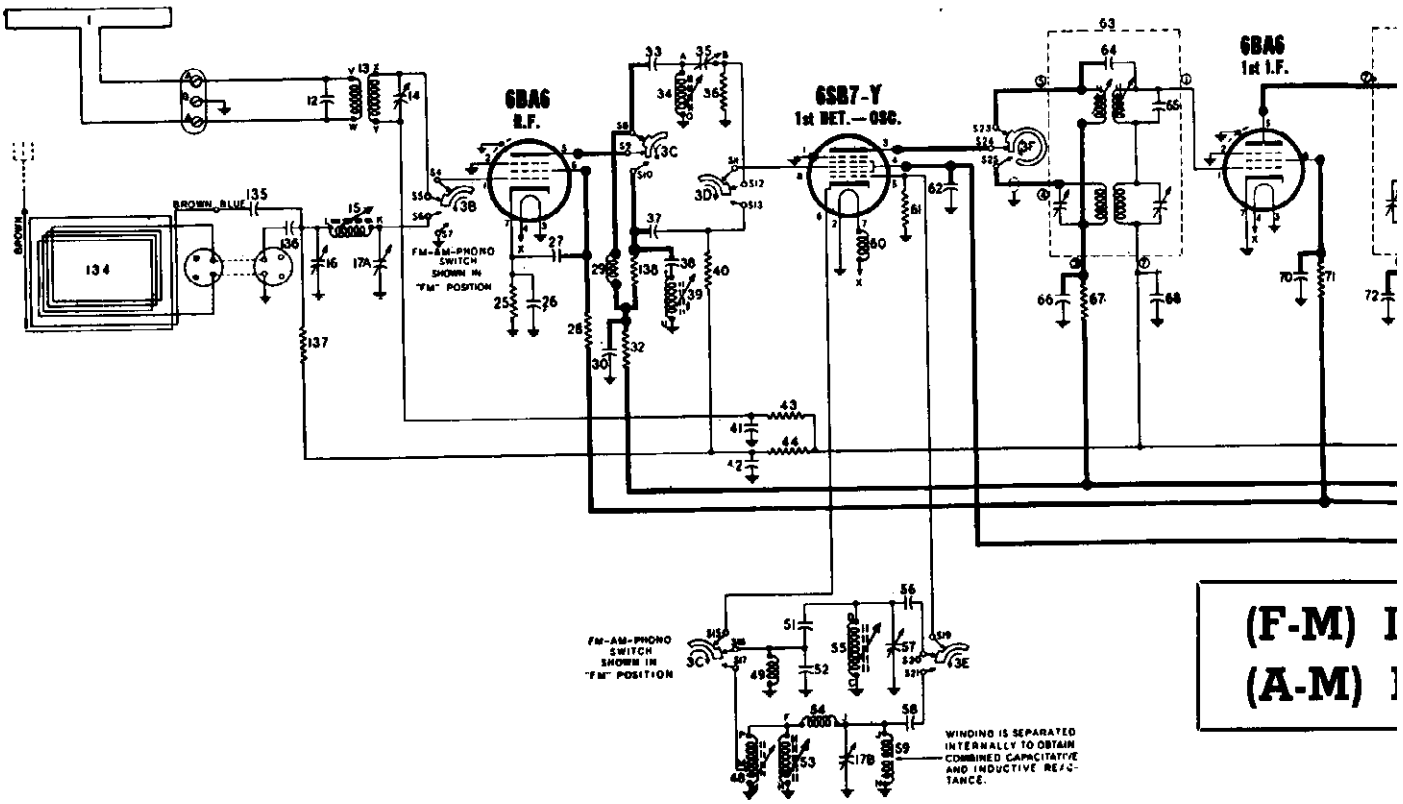

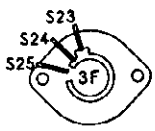

SECTION 1
FRONT VIEW

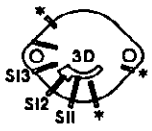

SECTION 1
REAR VIEW

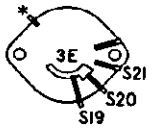

SECTION 2
FRONT VIEW

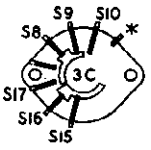

SECTION 2
REAR VIEW

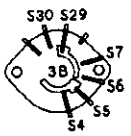

SECTION 3
FRONT VIEW

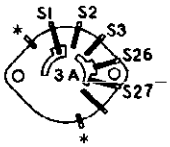

SECTION 3
REAR VIEW

★Not used; may serve as wiring junction point.

BAND SWITCH
504593

Lettered terminals in illustrations correspond to similarly lettered terminals on the circuit diagram.

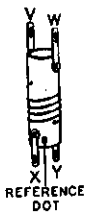

FM ANT. COIL
504692



FM R.F. COIL
505159



FM OSC. COIL
505159

SLUGS FOR MANUAL TUNING COILS

FM R.F. } 505160
FM OSC. }

BC. ANT. } 505152
BC. OSC. }



BC. ANT. COIL
505151

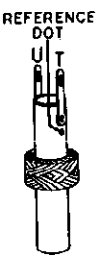

WAVE TRAP COIL
504670



BC. OSC. COIL
505153

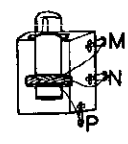

BC. OSC. COIL (SHUNT)
505155

RESTONE TIRE & RUBBER CO.

MODEL 4-A-60

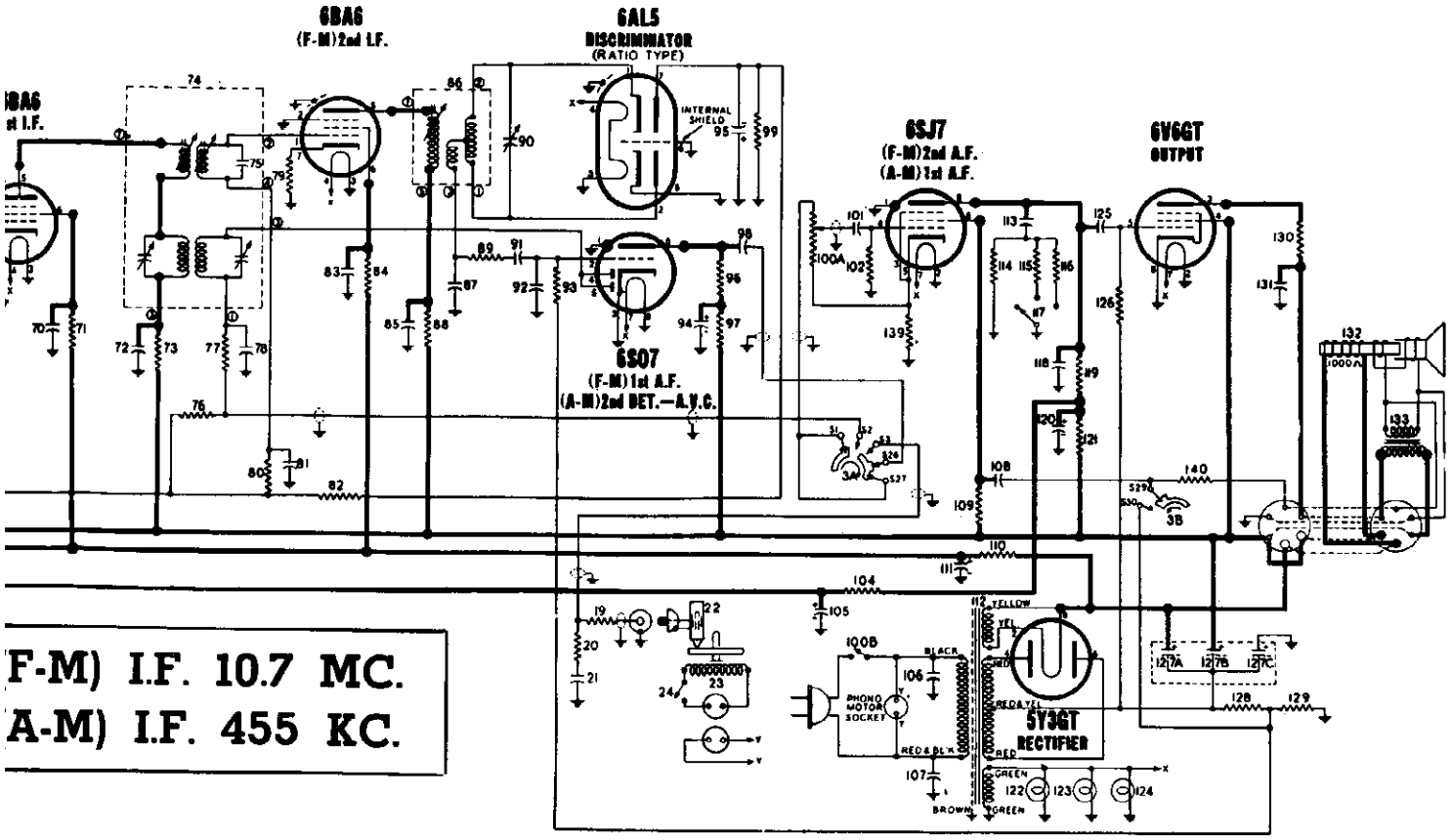

(F-M) I.F. 10.7 MC.
(A-M) I.F. 455 KC.

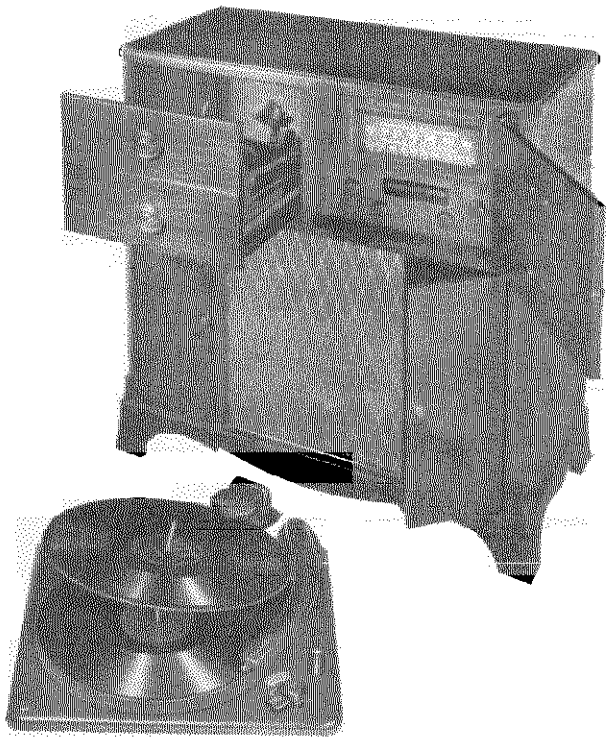

W-504138
RECORD CHANGER

FREQUENCY RANGES:
Standard Broadcast } 540-1600 KC.
FM — 88-108 MC.

POWER OUTPUT:
Undistorted — 3.5 watts
Maximum — 6.0 watts

MANUAL TUNING DEVICE:
Permeability tuned coils; shock resistant mounting.

POWER SUPPLY:
117 volts
60 cycles A.C.
85 watts (radio)
20 watts (phono)

BUILT-IN ANTENNA:
AM — High efficiency loop.
FM — "Ribbon Type" folded dipole.

SPEAKER:
10 inch Electro-Dynamic Voice coil impedance — 3.5 ohms

RECORD CHANGER: Webster Model 50. RCD.CH. 15-1

›ROCEDURE CONTINUED
: MUST BE FOLLOWED BEFORE USING THIS CHART

RECEIVER			TYPE OF ADJUSTMENT AND OUTPUT INDICATION	
DIAL SETTING	TRIMMER OR SLUG NUMBER	TRIMMER DESCRIPTION	ADJUSTMENT AND OUTPUT INDICATION WHEN USING A V-T VOLTMETER	ADJUSTMENT AND OUTPUT INDICATION WHEN USING AN OSCILLOSCOPE
Any position where it does not affect the signal.	12	Discriminator Primary	Set meter to a low D.C. voltage range and adjust trimmer ⌅12 for maximum meter read.ng. (This voltage will be negative.)	Set vertical amplifier of scope for maximum amplification. Where FM signal generator provides an output voltage for synchronization, connect this voltage to "sync" terminals of the scope. Then adjust setting of trimmer ⌅13, before attempting to adjust trimmer ⌅12, until a pattern similar to the following appears on the screen. If pattern does not remain stationary, operate sweep frequency control on scope and also "sync" control until desired result is obtained. 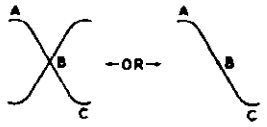 This double "S" curve pattern results when 'scope uses "Sawtooth" horizontal deflection voltage. This single "S" curve pattern results when 'scope uses properly phased "sine wave" horizontal deflection voltage. Adjust trimmer ⌅12 for maximum amplitude and steepness of that portion of the curve between "A" and "C".
Same as above	13	Discriminator Secondary **Use an insulated phasing tool to adjust this trimmer.**	Set meter for operation on its lowest D.C. voltage range. Note that as trimmer ⌅13 is rotated a point will be found where voltmeter will swing rather sharply from a positive to a negative reading or vice versa. Correct setting of trimmer ⌅13 is obtained when meter reads zero as trimmer is moved through this point. The adjustment is somewhat critical and considerable care must be exercised to set the trimmer for a zero meter indication.	With the 'scope set up as described above, adjust trimmer ⌅13 until the cross-over point "B" is centrally located in both the horizontal and vertical directions; in addition, the portion of the curve between "A" and "C" should be as linear (straight) as possible.
tube voltmeter or oscilloscope. Then disconnect and remove the two 68,000 ohm resistors that were used for the vacuum tube voltmeter connection in the 2nd step.				
Same as above	14 and 15	2nd I.F.	Adjust trimmers ⌅14 and ⌅15 for maximum meter reading.	With 'scope set up as described above, adjust trimmers ⌅14 and ⌅15 for maximum amplitude and steepness of that portion of the pattern between "A" and "C".
Same as above	16 and 17	1st I.F.	Adjust trimmers ⌅16 and ⌅17 for maximum meter reading.	Adjust trimmers ⌅16 and ⌅17 for maximum amplitude and steepness of pattern as described above. If the enlarged pattern now indicates a lack of symmetry, readjust trimmer ⌅13 for correct cross-over point.
has just been replaced in the tuner assembly, omit the next 4 instructions in this chart and start with the procedure entitled "Slug Tuner Adjustment Procedure—				
98 MC	18	Oscillator Trimmer	Set trimmer ⌅18 to receive 98 MC. signal and adjust for maximum meter reading.	Adjust trimmer ⌅18 to obtain the symmetrical pattern shown above. Correct setting of trimmer ⌅18 is obtained when cross-over point in pattern is centrally located.
98 MC	19	R.F. Trimmer	Adjust trimmer ⌅19 for maximum meter reading.	Adjust trimmer ⌅19 for maximum amplitude of pattern.
	16 and 17	1st I.F.	Recheck adjustment of these trimmers for maximum meter reading.	Recheck adjustment of these trimmers for maximum amplitude and symmetry of pattern.
Tune to 90 MC. generator signal.	20	Antenna Trimmer	Adjust trimmer ⌅20 for maximum meter reading.	Adjust trimmer ⌅20 for maximum amplitude of pattern.
does not exceed ±0.4 MC. and R.F. circuit is tracking properly, then alignment may be considered satisfactory and no further adjustment is necessary. Where				

IT PROCEDURE — FM SECTION
as calibration or tracking error is noted after attempting to align the receiver as described in the preceding section.

By means of tuning control knob, set dial pointer to 88 MC. mark on dial.	18	Oscillator Trimmer	Set trimmer ⌅18 to receive 88 MC. signal.	Adjust trimmer ⌅18 to obtain the symmetrical pattern shown above.
	19	R.F. Trimmer	Adjust trimmers ⌅19 and ⌅20 for maximum meter reading.	Adjust trimmers ⌅19 and ⌅20 for maximum amplitude of pattern.
	20	Antenna Trimmer		
By means of tuning control knob, set dial pointer to 98 MC. mark on dial.	21	Oscillator tuning slug	Set slug ⌅21 to receive 98 MC. signal and adjust for maximum meter reading.	Adjust slug ⌅21 to obtain the symmetrical pattern shown above.
By means of tuning control knob, set dial pointer to 108 MC. mark on dial.	—	—	Note heavy braided lead connection to osc. coil; adjust position of this braid until 108 MC. signal is received and meter reading is maximum. Coat braid with speaker cement after correct position is located.	Note heavy braided lead connection to osc. coil; adjust position of this braid until symmetrical pattern shown above is obtained. Coat braid with speaker cement after correct position is located.
	22	R.F. tuning slug	Adjust slug ⌅22 for maximum meter reading.	Adjust slug ⌅22 for maximum amplitude of 'scope pattern.
cement at top of each tuning slug stem to prevent movement.				

THE FIRESTONE TIRE & RUBBER CO. MODEL 4-A-60

DIA-GRAM NO.	PART NO.	DESCRIPTION
		CONDENSERS
12	504723	Condenser mica 30 Mmfd. 500 volt
14	504663	Condenser trimmer 5-20 Mmfd.
16	504956	Condenser trimmer 390-550 Mmfd.
17-A, B	504712	Condenser trimmer assembly] A - 50 to 120 Mmfd. } B 220 to 340 Mmfd.]
21	502261	Condenser .01 Mfd. 600 volt
26	504447	Condenser .05 Mfd. 150 volt
27	504724	Condenser mica 1000 Mmfd. 500 volt
30	502261	Condenser .01 Mfd. 600 volt
33	502929	Condenser mica 47 Mmfd. 500 volt
35	502757	Condenser trimmer; 6.5 to 35 Mmfd.
37	502931	Condenser mica 100 Mmfd. 500 volt
38	504659	Condenser ceramic 39 Mmfd. 500 volt
41	504725	Condenser .02 Mfd. 200 volt
42	502153	Condenser .05 Mfd. 200 volt
51	504905	Condenser ceramic 5 Mmfd. 500 volt
52	502929	Condenser mica 47 Mmfd. 500 volt
56	504733	Condenser ceramic 15 Mmfd. 500 volt
57	502757	Condenser trimmer; 6.5 to 35 Mmfd.
58	502929	Condenser mica 47 Mmfd. 500 volt
62	502261	Condenser .01 Mfd. 600 volt
64	504983	Condenser ceramic 1.0 Mmfd. 500 volt
65	504982	Condenser ceramic 39 Mmfd. 500 volt
66	502261	Condenser .01 Mfd. 600 volt
68	502153	Condenser .05 Mfd. 200 volt
70	502261	Condenser .01 Mfd. 600 volt
72	502261	Condenser .01 Mfd. 600 volt
75	504982	Condenser ceramic 39 Mmfd. 500 volt
78	502931	Condenser mica 100 Mmfd. 500 volt
81	504727	Condenser mica 500 Mmfd. 500 volt
83	502261	Condenser .01 Mfd. 600 volt
85	502261	Condenser .01 Mfd. 600 volt
87	502202	Condenser ceramic 150 Mmfd. 500 volt
90	504662	Condenser trimmer 35-55 Mmfd.
91	502261	Condenser .01 Mfd. 600 volt
	504725	Condenser .02 Mfd. 200 volt (used only in chassis stamped with letter "S")
92	502157	Condenser .05 Mfd. 400 volt
94	504719	Condenser electrolytic 4 Mfd. 450 volt
95	504937	Condenser electrolytic 5 Mfd. 50 volt
98	502261	Condenser .01 Mfd. 600 volt
101	502150	Condenser .004 Mfd. 600 volt
105	505150	Condenser electrolytic 16 Mfd. 400 volt
106, 107	502804	Condenser .01 Mfd. 400 volt
108	502405	Condenser .25 Mfd. 400 volt
111	505150	Condenser electrolytic 16 Mfd. 400 volt
113	502261	Condenser .01 Mfd. 600 volt
118	502271	Condenser mica 260 Mmfd. 500 volt
120	504719	Condenser electrolytic 4 Mfd. 450 volt
125	502152	Condenser .02 Mfd. 400 volt
127-A,B,C	161193	Condenser electrolytic) A 20 Mfd. 450 volt) B 15 Mfd. 450 volt) C 10 Mfd. 25 volt
131	502479	Condenser .006 Mfd. 600 volt
135	502931	Condenser mica 100 Mmfd. 500 volt
136	502261	Condenser .01 Mfd. 600 volt
		RESISTORS
19	502132	Resistor carbon 100,000 Ohms 1/4 watt
20	502408	Resistor carbon 68,000 Ohms 1/4 watt
25	502794	Resistor carbon 68 Ohms 1/4 watt
28	502466	Resistor carbon 33,000 Ohms 1 watt
32	502128	Resistor carbon 2,200 Ohms 1/4 watt
36	502130	Resistor carbon 22,000 Ohms 1/4 watt
40	502133	Resistor carbon 22,000 Ohms 1/4 watt
43	504907	Resistor carbon 560,000 Ohms 1/4 watt
44	502134	Resistor carbon 470,000 Ohms 1/4 watt
61	502130	Resistor carbon 22,000 Ohms 1/4 watt
67	502128	Resistor carbon 2,200 Ohms 1/4 watt
71	502466	Resistor carbon 33,000 Ohms 1 watt
73	502128	Resistor carbon 2,200 Ohms 1/4 watt
76	502267	Resistor carbon 680,000 Ohms 1/4 watt
77	502131	Resistor carbon 47,000 Ohms 1/4 watt
79	502794	Resistor carbon 68 Ohms 1/4 watt
80	502133	Resistor carbon 220,000 Ohms 1/4 watt
82	502135	Resistor carbon 2.2 Meg. 1/4 watt
84	502466	Resistor carbon 33,000 Ohms 1 watt
88	502128	Resistor carbon 2,200 Ohms 1/4 watt
89	502514	Resistor carbon 3,300 Ohms 1/4 watt
93	502136	Resistor carbon 10 Meg. 1/4 watt
96	502132	Resistor carbon 100,000 Ohms 1/4 watt
97	502892	Resistor carbon 330,000 Ohms 1/4 watt
99	502130	Resistor carbon 22,000 Ohms 1/4 watt
100 A, B	502148	Volume control 500,000 Ohms (with switch)
102	502468	Resistor carbon 4.7 Meg. 1/4 watt
104	504731	Resistor carbon 12,000 Ohms 2 watt
109	502135	Resistor carbon 2.2 Meg. 1/4 watt
110	504731	Resistor carbon 12,000 Ohms 2 watt
114	502468	Resistor carbon 4.7 Meg. 1/4 watt
115	502131	Resistor carbon 47,000 Ohms 1/4 watt
116	502291	Resistor carbon 4,700 Ohms 1/4 watt
119	502133	Resistor carbon 220,000 Ohms 1/4 watt
121	502478	Resistor carbon 1,000 Ohms 1/4 watt
126	502134	Resistor carbon 470,000 Ohms 1/4 watt
128	504729	Resistor carbon 130 Ohms 2 watt
129	504728	Resistor carbon 11 Ohms 1/2 watt

DIA-GRAM NO.	PART NO.	DESCRIPTION
130	502454	Resistor wire wound 47 Ohms 1 watt
137	502267	Resistor carbon 680,000 Ohms 1/4 watt
138	502406	Resistor carbon 1,500 Ohms 1/4 watt
139	502478	Resistor carbon 1,000 Ohms 1/4 watt
140	502126	Resistor carbon 470 Ohms 1/4 watt
		COILS & TRANSFORMERS
1	504895	Antenna FM ("Twin Lead" Assembly)
13	504692	Coil FM antenna
15	505151	Coil- BC. antenna (less slug)
	505152	Tuning slug for BC. ant. coil (may have end colored yellow, green, blue or violet)
29	504675	Coil R.F. choke
34	505159	Coil FM R.F. (less slug)
	505160	Tuning slug for FM R.F. coils (may have end colored black, grey, red or orange)
39	504670	Coil wave trap (455 Kc.)
	504671	Slug core for wave trap
48	505155	Coil BC. oscillator; shunt (less slug)
	505156	Slug core for BC. osc. shunt coil (505155)
49	504675	Coil R.F. choke (FM)
53	505153	Coil BC. oscillator (less slug)
	505152	Tuning slug for BC. osc. coil (may have end colored yellow, green, blue or violet)
54	505157	Coil BC. oscillator; series
55	505159	Coil -FM oscillator (less slug)
	505160	Tuning slug for FM osc. coil (may have end colored black, grey, red or orange)
59	505158	Coil BC. oscillator; compensating
60	504675	Coil- R.F. choke (FM)
63	504645	Transformer- 1st I.F.
74	504646	Transformer 2nd I.F.
86	504690	Transformer -discriminator
112	504643	Transformer power
133	502994	Transformer output for M-502302 speaker
	505029	Transformer output for E-502302 speaker
	505394	Transformer output for O-502302 speaker
134	505668	Loop antenna for AM
		OTHER ELECTRICAL PARTS
3-A to F	504593	Switch FM-AM Phono
22	502461	Crystal cartridge (Astatic L-71)
23	504201	Motor- for type "W"-504138 Record Changer 115 volt 60 cycle
24	504203	Switch- "ON-OFF" for type "W"-504138 Record Changer
117	504592	Switch- tone
122, 123, 124	110629	Lamp -dial (Mazda #44) 6.3V 0.25 Amps.
132	502302	Speaker electro-dynamic (10 in.)
		MISCELLANEOUS PARTS
	506099	Background for Dial
	116467	Base for mtg. electrolytic condenser
	117131	Bulls Eye for indicator light
	506100	Cabinet (mahogany)
	119989	Clamp for dial glass
	114955	Clip- retainer on end of dial cord
	504691	Clip coil mtg.; wave trap
	505368	Clip- for tube shield
	117057	Cord dial drive (7 ft. required) per ft.
	506147	Dial Scale
	505417	Door radio compartment; upper right (mahogany)
	505420	Door record storage compartment; lower right (mahogany)
	505426	Drawer record changer compartment
	506101	Escutcheon Firestone
	505433	Handle -for upper door or drawer
	505432	Hinges for all doors (supplied in pairs)
	504835	Knob volume or tuning
	504837	Knob tone or band
	505431	Knob -for record storage compartment doors
	502460	Needle- phonograph
	504711	Perm. tuning mechanism (less coils)
	500966	Plug--phono. pick-up cable
	501031	Plug phono. motor cable
	504097	Plug -speaker
	504838	Pointer
	505430	Rail for drawer (supplied in sets)
	504138	Record Changer
	119087	Ring for dial cord
	17843	Rubber grommets for mtg. FM coils
	85078	Rubber grommets for mtg. BC. coils
	113463	Rubber pad for mtg. chassis
	116584	Rubber spacer for mtg. dial scale

SOCKET VOLTAGES

Measured with voltmeter having sensitivity of 1000 ohms per volt except where indicated by (*). The (*) symbol designates a vacuum tube voltmeter measurement.

ALL MEASUREMENTS MADE WITH BAND SWITCH IN "FM" POSITION UNLESS OTHERWISE INDICATED
DIAL TUNED TO 88 MC. FOR "FM" MEASUREMENTS
DIAL TUNED TO 540 KC. FOR "AM" MEASUREMENTS
VOLUME CONTROL SET TO MINIMUM WITH NO SIGNAL
GROUND ALL ANTENNA TERMINALS

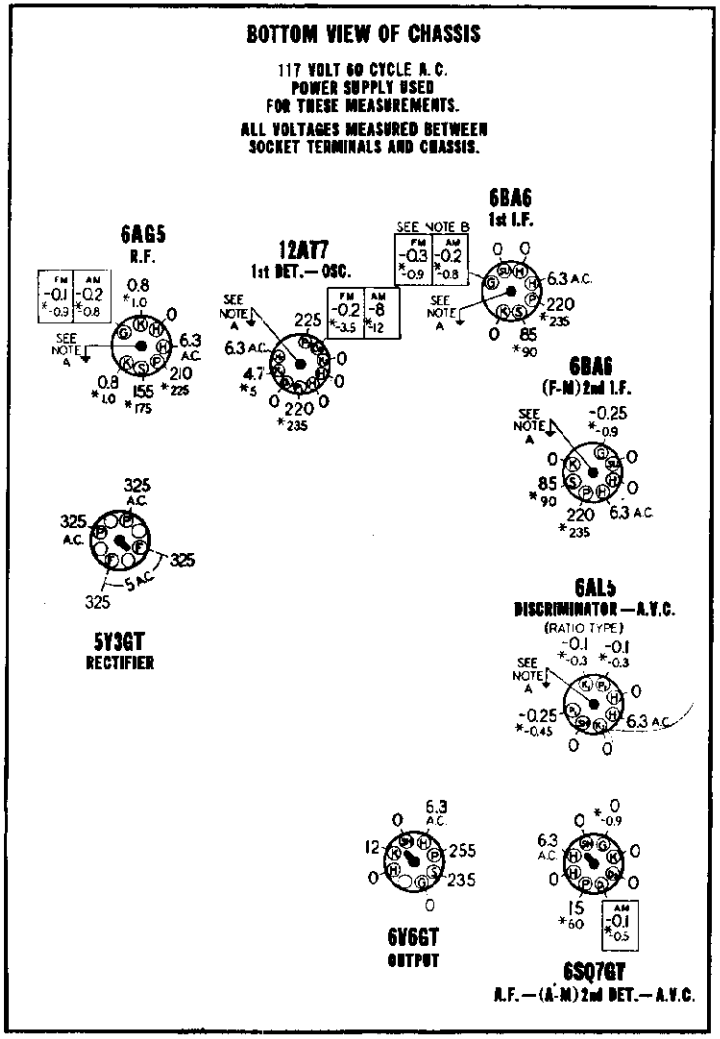

REAR OF CHASSIS

NOTE A: Grounding of center stud on tube socket is necessary to reduce capacity coupling between other pins. Oscillation may result if this ground is omitted.

NOTE B: Oscillation may occur when meter probe contacts this tube pin. In that event, the vacuum tube voltmeter measurement will be approximately -4.5 volts.

USE OF WIRE RECORDER CONNECTION

A special cable and socket, extending from the rear of the chassis, is provided for the connection of a wire recorder unit which may be obtained as an accessory.

IMPORTANT: It should be noted that a dummy plug is inserted in this socket. The dummy plug contains a jumper connection which is necessary to maintain continuity of the B+ voltage supply line to the R.F., Mixer, and Oscillator stages of the receiver.

Where a wire recorder has been installed, it is necessary that the recorder controls be properly set when normal radio operation is desired otherwise the aforementioned B+ circuit will remain open. See instructions accompanying the recorder unit for proper setting of controls.

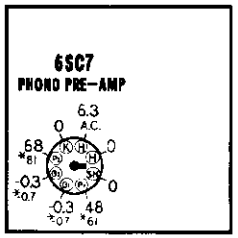

PHONO PRE-AMP CHASSIS



4-A-64

THE CONTEMPORARY



4-A-65

THE CANTERBURY

THE FIRESTONE TIRE & RUBBER CO. MODELS 4-A-64, 4-A-65

STAGE GAIN MEASUREMENT PROCEDURE

REQUIRED INSTRUMENTS: The amount of amplification or "gain" of most of the stages of this receiver can be measured with an A.C. Vacuum Tube Voltmeter of the high frequency type. An AM (600 KC.) as well as an FM (98 MC.) signal source is required. For gain measurements in the FM antenna- FM converter—FM 1st I.F. stages, a microvolt calibrated FM signal generator should preferably be used.

PROCEDURE: It is exceedingly important to adhere to the procedure outlined below since the accuracy of these measurements will be affected to a considerable extent by the failure to establish proper operating conditions.

1. Be sure that R.F., I.F. and Discriminator stages are carefully and accurately aligned by utilizing the alignment procedure given in this manual.
2. Connect Signal Generator as shown below. Note that generator connections differ for "AM" and "FM" measurements.
3. For "AM" measurements, set signal generator to 600 KC. (400 cycle modulation) and then carefully tune radio receiver to this signal by using an output meter to indicate peak output. If a local station interferes, set generator to a nearby frequency and re-tune the receiver.
4. For "FM" measurements, set signal generator to 98 MC. (400 cycle modulation with 22½ KC. deviation) and then carefully tune radio receiver to this signal by using a D.C. Vacuum Tube Voltmeter as an output indicator meter must be connected between pin No. 7 of 6AL5 tube and chassis. If a local station interferes, set generator to a nearby frequency and re-tune the receiver.
5. The values of stage gain which are given here were measured with a fixed bias of —3 volts on the control grids of all R.F. and I.F. tubes which are connected to the A.V.C. system. Therefore, these values are not intended to indicate the full capability of a stage but they will serve as a convenient basis for determining proper operation. In order to duplicate the fixed bias voltage, connect the negative terminal of a 3 volt battery to both A.V.C. supply lines by effecting a common connection to terminal 4 of 2nd FM-I.F. transformer and terminal 2 of 1st AM-I.F. transformer. Then connect the positive battery lead to the receiver chassis.
6. R.F. and I.F. circuits are slightly de-tuned when contact is made with an instrument probe and this action, which is indicated by a change in the output meter reading, may seriously affect the gain measurement. Therefore, it is important to adjust the associated circuit trimmer for a maximum output meter reading and to set the input signal level to a convenient reference point on the gain measuring instrument while the probe is making contact. After removing the probe it is again necessary to adjust the trimmer so as to obtain the same output meter reading and thereby assure that the signal voltage at the specified point has not changed as a result of circuit de-tuning.

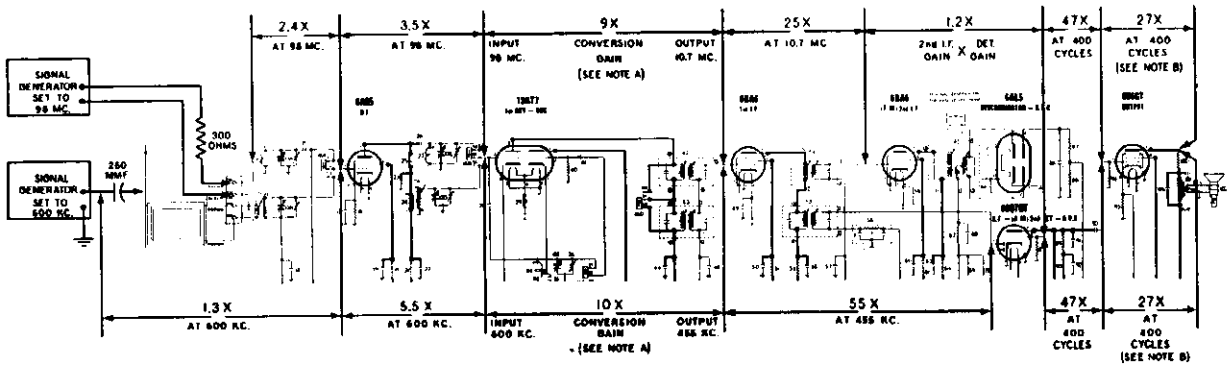

NOTE A: Short oscillator grid (pin 2 of 12AT7) to ground when measuring input voltage at signal grid (pin 7) of 12AT7 tube.

NOTE B: Measured with input voltage of 0.3.

NOTE C: Measured with input voltage of 0.05.

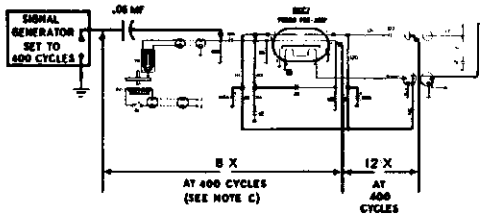

DIFFERENCES in tube characteristics, tolerance of parts, adjustment of tuned circuits and variations in line voltage will influence stage gain. **These factors should be given due attention in event the gain of a stage varies extensively** from the values shown.

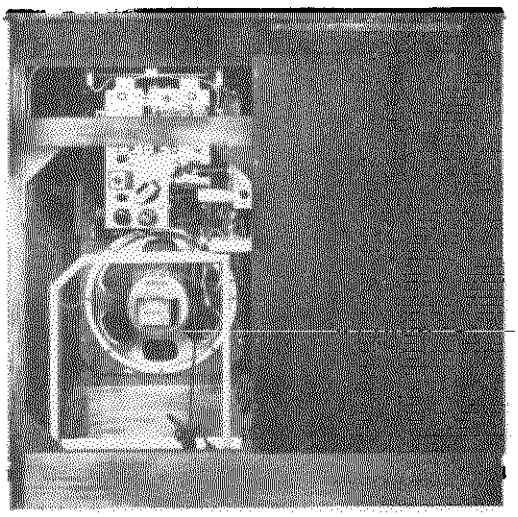

Rear View
Model 4-A-64

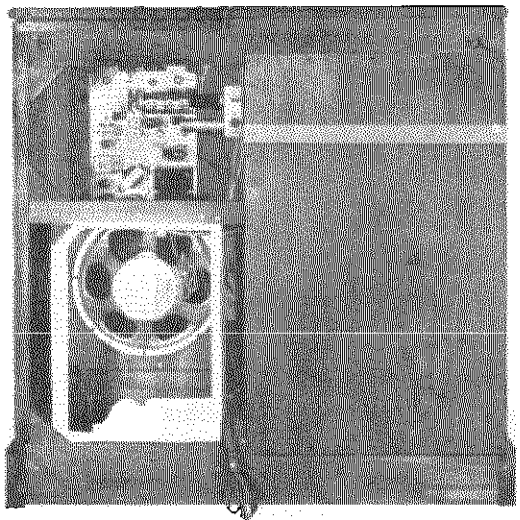

Rear View
Model 4-A-65

© John F. Rider

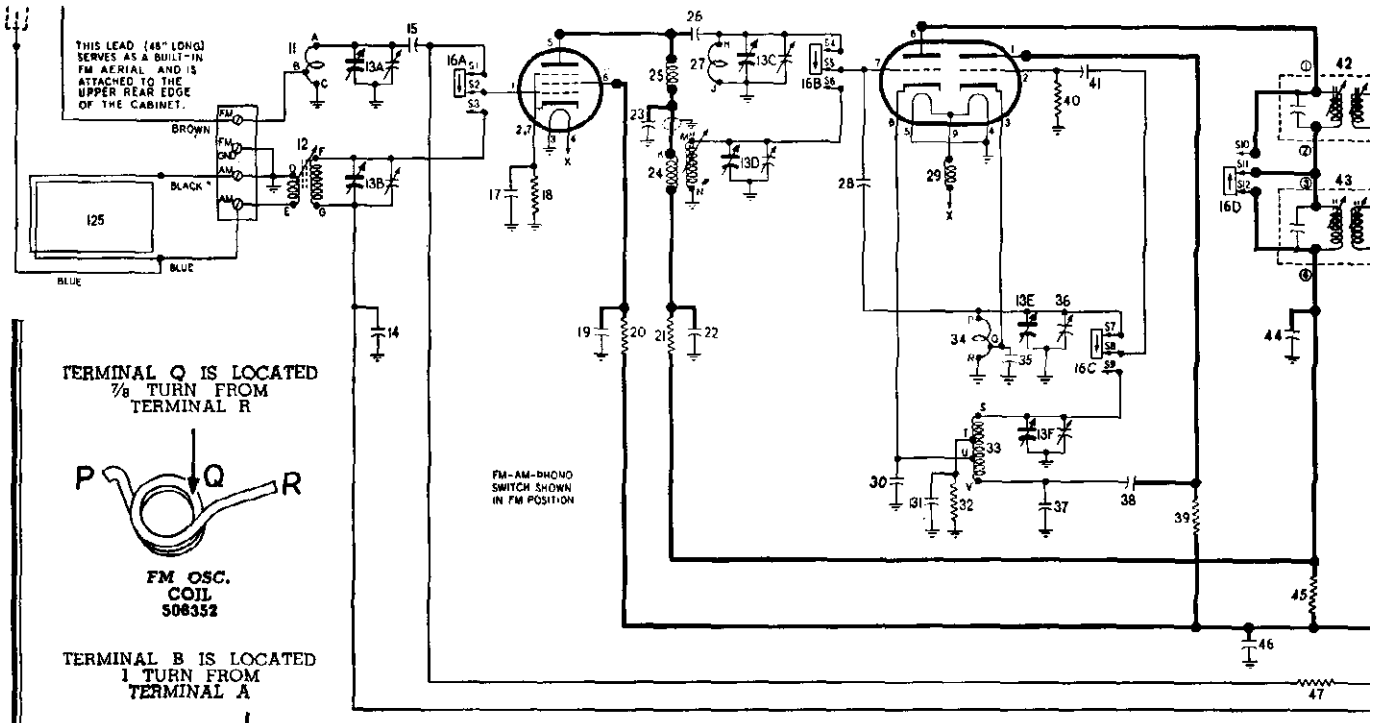

TERMINAL Q IS LOCATED 7/8 TURN FROM TERMINAL R

FM OSC. COIL 506352

TERMINAL B IS LOCATED 1 TURN FROM TERMINAL A

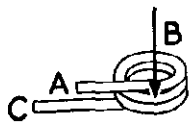

FM ANT. COIL 506353

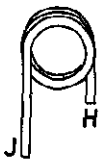

FM R.F. COIL 506351



AM OSC. COIL 506335

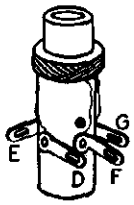

AM ANT. COIL 506354



AM R.F. COIL 506345

(F-M) I. F. 10.7 MC.
(A-M) I. F. 455 KC.

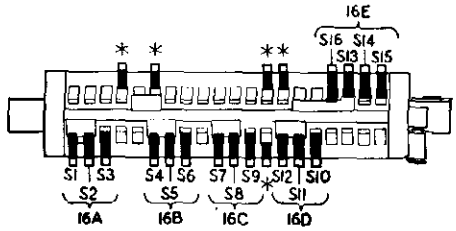

★ Not used; may serve as wiring junction point.

BAND SWITCH 506347

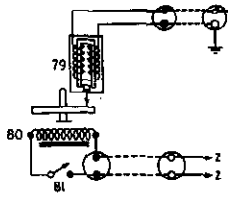

FREQUENCY RANGES:

STANDARD } —540-1700 KC.
BROADCAST }
FM — 88-108 MC.

DIAL AND POINTER DRIVE CORD ARRANGEMENT

SIDE VIEW

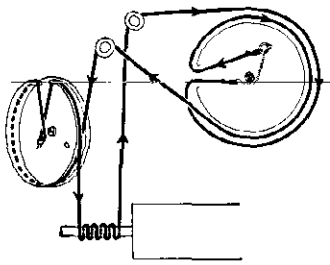

To string dial cord, set gang condenser to fully open position and use the following parts:
114955 Clip on end of cord
117057 Cord (3 feet)
119087 Ring for dial cord
505161 Tension spring

MANUAL TUNING DEVICE:

3 section gang condenser; shock resistant mounting.

FIRESTONE TIRE & RUBBER CO.

MODELS 4-A-64, 4-A-65

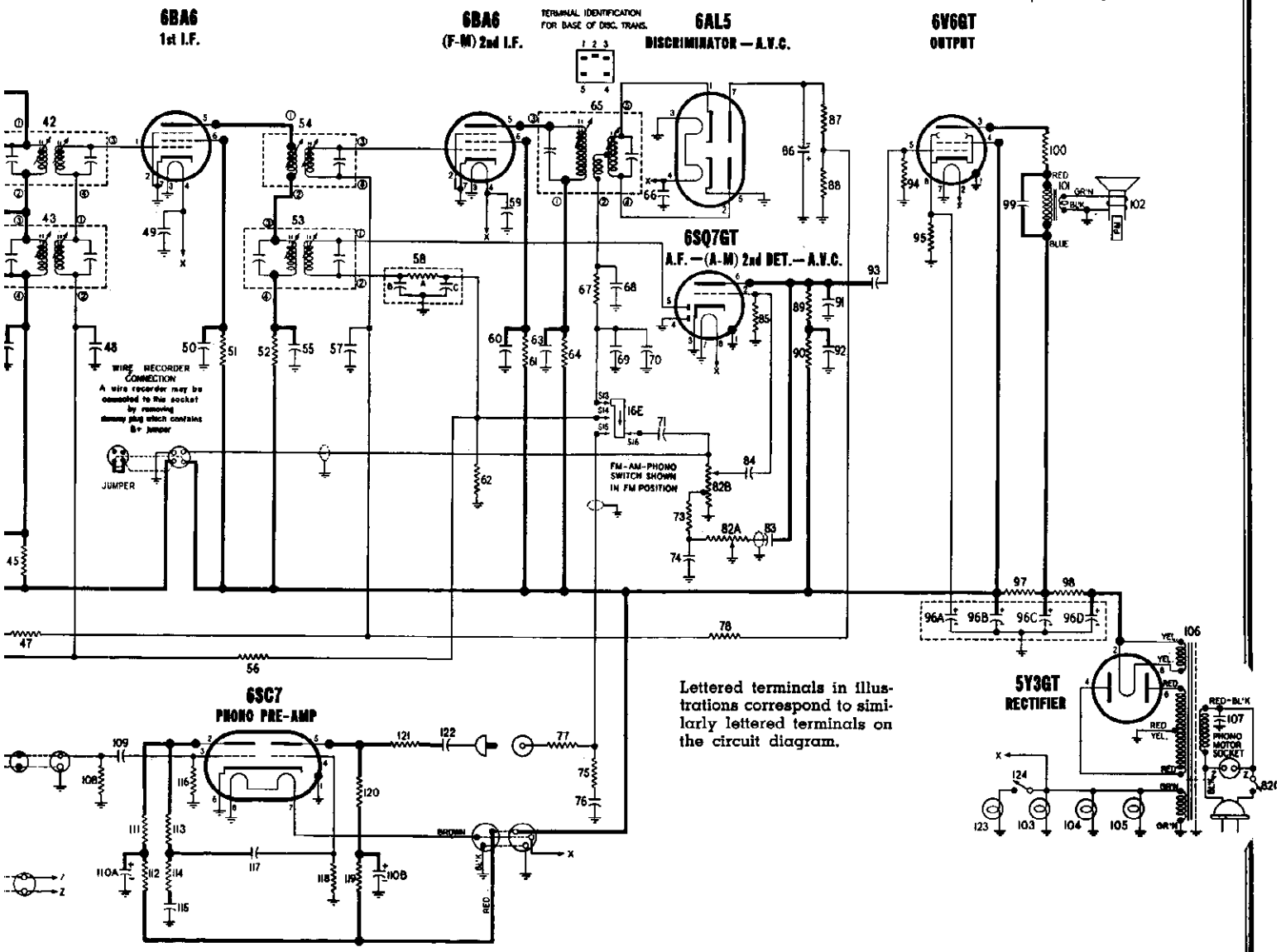

Lettered terminals in illustrations correspond to similarly lettered terminals on the circuit diagram.

SPECIFICATIONS

POWER SUPPLY:

117 volts
60 cycles A.C.
85 watts (radio)
30 watts (phono)

BUILT-IN AERIALS:

AM — High efficiency loop.
FM — Single ended half-wave aerial.

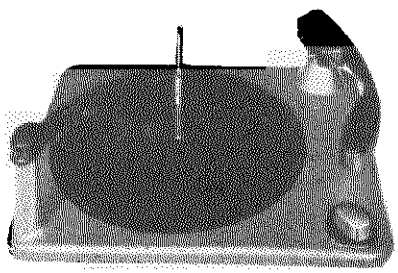

VM-506569
RECORD CHANGER

SPEAKER:

10 inch P-M Dynamic
Voice coil impedance—3.2 ohms

POWER OUTPUT:

Undistorted — 2.8 watts
Maximum — 5.4 watts

MODELS 4-A-64, 4-A-65

THE FIRESTONE TIRE & RUBBER CO.

BROADCAST BAND —"AM"—ALIGNMENT PROCEDURE

1. Disconnect leads from FM-AM aerial terminal strip (labeled FM-FM-AM-AM) at back of chassis; also disconnect speaker leads and phono plugs. Remove chassis and speaker. If desired, allow speaker to remain in cabinet and connect to receiver by extension leads.
2. Stand chassis on one edge so that all trimmers are accessible.
3. Built-in loop aerial leads do not have to be connected to terminal strip on rear of chassis while I. F. stages are being aligned. Before starting alignment of Ant., R.F., and Osc. stages, the loop aerial must be reconnected to chassis—do not attempt to use extension leads, remove loop aerial from cabinet to facilitate connection to chassis. Loop can be taken out of cabinet by merely lifting so as to release pivot dowel at bottom of frame; then remove screw which holds external aerial clip on top support block so as to release connecting lead.
4. With the gang condenser fully meshed, dial pointer should be in the position indicated by the last division below 55 on the dial. If it is set incorrectly, hold tuning shaft steady and reposition pointer.
5. Connect an output meter across speaker voice coil, or from plate of 6V6GT tube to chassis through a 0.1 Mfd. condenser.
6. Connect ground lead of signal generator to the receiver chassis.
7. Set volume control at maximum volume position and use a weak signal from the signal generator.

DUMMY ANT. IN SERIES WITH SIGNAL GENERATOR	CONNECT HIGH SIDE OF SIGNAL GENERATOR TO	SIGNAL GENERATOR FREQUENCY	BAND SWITCH POSITION	RECEIVER DIAL SETTING	TRIMMER OR SLUG NUMBER	TRIMMER DESCRIPTION	TYPE OF ADJUSTMENT
.1 MFD. Condenser	Lug on trimmer No. 6 at top of gang (see figure below for location of trimmer).	455 KC	AM Broadcast (Middle)	Any point where it does not affect the signal.	1-2	2nd I.F.	Adjust for maximum output. Then repeat adjustment.
					3-4	1st I.F.	
260 MMFD. Mica Condenser	External Aerial Clip	1500 KC	AM Broadcast (Middle)	1500 KC	5	Broadcast Oscillator	Adjust for maximum output.
280 MMFD. Mica Condenser	External Aerial Clip	1500 KC	AM Broadcast (Middle)	Tune to 1500 Kc. generator signal.	6	Broadcast R.F.	Adjust for maximum output.
					7	Broadcast Antenna	Adjust for maximum output.
280 MMFD. Mica Condenser	External Aerial Clip	600 KC	AM Broadcast (Middle)	Tune to 600 Kc. generator signal.	8	Adjustable core of Broadcast R.F. Coil.	Adjust for maximum output.
					9	Adjustable core of Broadcast Antenna Coil.	Adjust for maximum output.

Repeat adjustment of trimmers 6 & 7 and slugs 8 & 9 until one no longer detunes the other.

NOTE: It is preferable to check the alignment of the I.F. stages in the FM channel after completing AM alignment.

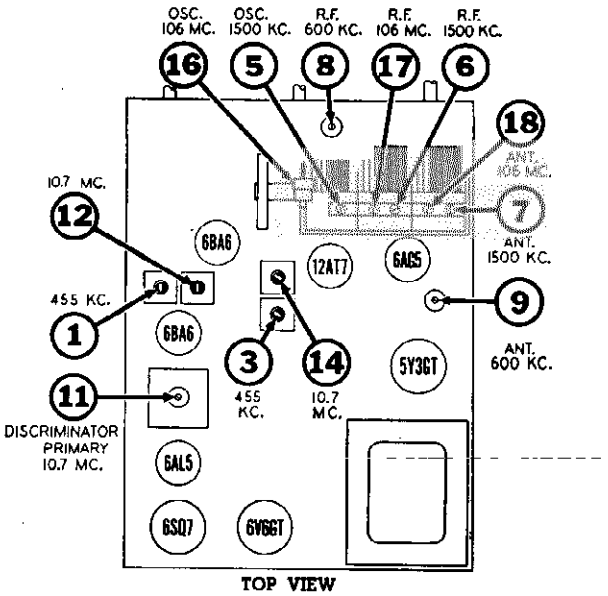

TOP VIEW

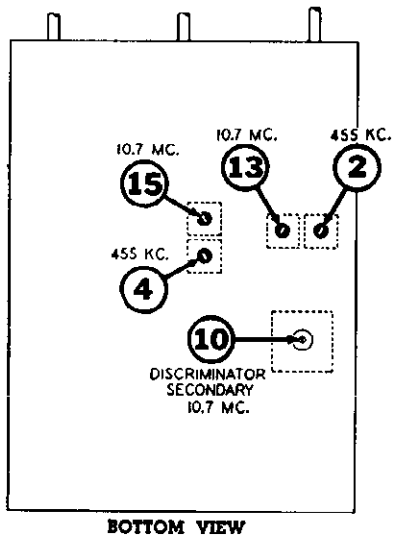

BOTTOM VIEW

This single "S" curve pattern results when scope uses properly phased "sine wave" horizontal deflection voltage.

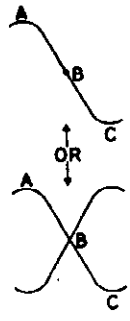

This double "S" curve pattern results when scope uses properly phased "Sawtooth" horizontal deflection voltage whose frequency is twice the modulation frequency of signal generator.

TRIMMER LOCATION CHART

©John F. Rider

THE FIRESTONE TIRE & RUBBER CO. MODELS 4-A-64, 4-A-65

FREQUENCY MODULATION—"FM"—ALIGNMENT PROCEDURE
(USING AN OSCILLOSCOPE AND FM "SWEEP" GENERATOR)

INSTRUMENTS: Alignment of the FM circuits in this receiver can be most conveniently accomplished with an FM signal generator. When using this type generator, the output indicator must be an oscilloscope.

1. If alignment of both AM and FM channels is required it is necessary to align the AM channel first, then align the FM channel as instructed in chart below (AM alignment procedure is given on page 8).
2. Disconnect leads from FM-AM aerial terminal strip (labelled FM-FM-AM-AM) at back of chassis; also disconnect speaker leads and phono plugs. Remove chassis and speaker. (If desired, allow speaker to remain in cabinet and connect to receiver by extension leads.)
3. With the gang condenser fully meshed, dial pointer should be in the position indicated by the last division below 88 on the dial. If it is set incorrectly, hold tuning shaft steady and reposition pointer.
4. A specific setting of the receiver volume control is not required, however, it will be found convenient to leave it in the maximum volume position so that alignment signals will be audible even though the output indication is obtained by an oscilloscope connected to points in the discriminator circuit.
5. Dress FM circuit leads as short and straight as possible, particularly those in the oscillator circuit. I.F. plate and grid leads should also be kept short and straight.
6. Set band switch to the FM (extreme counter-clockwise) position.
7. Set tone control to fully counter-clockwise position.

SIGNAL GENERATOR CONNECTIONS	FREQUENCY & TYPE OF MODULATION	OSCILLOSCOPE CONNECTIONS	RECEIVER DIAL SETTING	TRIMMER OR SLUG NUMBER	TRIMMER DESCRIPTION	TYPE OF ADJUSTMENT AND OUTPUT INDICATION
Connect high side in series with an .01 Mfd condenser to lug on trimmer No. 17 at top of gang (see illustration on page 8 for location of trimmer). Connect ground lead to receiver chassis in vicinity of 12AT7 tube.	**10.7 MC** FM signal should preferably be modulated ±400 KC.	Connect vertical amplifier "high" lead to junction of resistor No. 67 (18000 ohms) and condenser No. 70 (.003 Mfd.) which are in discriminator output circuit. Connect scope ground lead to receiver chassis. Set vertical amplifier of scope for maximum amplification. Where FM signal generator provides an output voltage for synchronization, connect this voltage to "sync" terminals of the scope.	Any position where it does not affect the signal.	10	Discriminator Secondary	Before attempting to adjust trimmer No. 10, set trimmers No. 11, 12, 13, 14 and No. 15 for approximately maximum sound output from the speaker (output meter not required). This is done to obtain sufficient signal for an oscilloscope pattern of desirable amplitude when making the following discriminator trimmer adjustment. Adjust setting of trimmer No. 10 until a pattern similar to that shown in Fig. 2 appears on the screen. If pattern does not remain stationary operate sweep frequency control on 'scope and also "sync" control until desired result is obtained. Correct setting of trimmer No. 10 is obtained when crossover point "B" (Fig. 2) is centrally located in both the horizontal and vertical directions; in addition that portion of the curve between "A" and "C" should be as linear (straight) as possible.
Same as above	Same as above	Same as above	Same as above	11	Discriminator Primary	Adjust these trimmers for maximum amplitude and steepness of that portion of the pattern between "A" and "C" (see Fig. 2).
				12 and 13	2nd I.F.	
				14 and 15	1st I.F.	
Recheck adjustments of trimmers No. 10 and No. 11 to be sure that both are set as accurately as possible to obtain correct cross-over point or symmetry of pattern.						
Connect generator "high" side in series with a 300 ohm carbon resistor to end terminal marked "FM" on strip at back of chassis. Generator ground lead must connect to next terminal marked "GND".	**106 MC** FM signal should preferably be modulated ±400 KC.	Same as above	106 MC	16	Oscillator Trimmer	Adjust trimmer No. 16 to obtain the symmetrical pattern shown in Fig. 2. Correct setting of trimmer No. 16 is obtained when cross-over point in pattern is centrally located. **IMPORTANT:** It will be noted that there are two different settings of trimmer No. 16 at which the desired 'scope pattern can be obtained—always select the trimmer setting which is nearest to the low capacity end of its range.
Same as above	Same as above	Same as above	Tune to 106 MC. generator signal.	17	R.F. Trimmer	Adjust trimmer No. 17 for maximum amplitude of pattern.
				18	Antenna Trimmer	Adjust trimmer No. 18 for maximum amplitude of pattern.
				14 and 15	1st I.F.	Recheck adjustment of these trimmers for maximum amplitude of pattern.

Check calibration and tracking of receiver with input signals of 90 and 98 MC. If difference between dial pointer setting and 90 or 98 MC. calibration mark does not exceed ± 0.3 MC. and antenna and R.F. circuits are tracking properly, then alignment may be considered satisfactory and no further adjustment is necessary.

Where the calibration error is greater than ± 0.3 MC. it is advisable to make the following adjustments:

1. If pointer falls above the 90 MC. calibration point, it will be necessary to slightly spread the windings of the FM oscillator coil. Then repeat the two preceding adjustments of trimmers 16, 17 and 18 at 106 MC. Should it be found impossible to obtain the 106 MC. signal at the proper point on the dial by adjustment of the trimmers it will then be necessary to adjust the spacing of the gang condenser plates.
2. If pointer falls below the 90 MC. calibration point, it will be necessary to push the windings together on the FM oscillator coil. Then repeat the two preceding adjustments of trimmers 16, 17 and 18 at 106 MC. Should it be found impossible to obtain the 106 MC. signal at the proper point on the dial by adjustment of the trimmers it will then be necessary to adjust the spacing of the gang condenser plates.
3. Correction for mistracking of antenna and R.F. may be accomplished by adjusting coil turns and gang plate spacing in the same manner.

MODELS 4-A-64, 4-A-65

THE FIRESTONE TIRE & RUBBER CO.

FREQUENCY MODULATION—"FM"—ALIGNMENT PROCEDURE
(USING A VACUUM TUBE VOLTMETER AND AM SIGNAL GENERATOR)

INSTRUMENTS: Although it is preferable to use on FM generator and an oscilloscope, reasonably accurate alignment is obtainable when using a conventional AM generator and vacuum tube voltmeter providing proper care is exercised in adjusting the discriminator circuit trimmer.

IMPORTANT: When using an AM signal generator, it should be capable of producing fundamental frequencies of 10.7 MC and 88 to 108 MC -- avoid using an AM generator which produces signals in the 88 to 108 MC range by using harmonics higher than the second. Generators which are dependent upon third, fourth or fifth harmonics for output frequencies of 88 to 108 MC will generally produce undesirable spurious beat signals with the local oscillator in the receiver and alignment will be exceedingly difficult.

1. If alignment of both AM and FM channels is required it is necessary to align the AM channel first, then align the FM channel as instructed in chart below (AM alignment procedure is given on the preceding page).
2. Disconnect leads from FM-AM aerial terminal strip (labelled FM-FM-AM-AM) at back of chassis; also disconnect speaker leads and phono plugs. Remove chassis and speaker. If desired, allow speaker to remain in cabinet and connect to receiver by extension leads.
3. With the gang condenser fully meshed, dial pointer should be in the position indicated by the last division below 88 on the dial. If it is set incorrectly, hold tuning shaft steady and reposition pointer.
4. A specific setting of the receiver volume control is not required. However, it will be found convenient to leave it in the maximum volume position so that alignment signals will be audible even though the output indication is obtained by a V-T voltmeter connected to points in the discriminator circuit.
5. Dress FM circuit leads as short and straight as possible, particularly those in the oscillator circuit. I.F. plate and grid leads should also be kept short and straight.
6. Set band switch to the FM (extreme counter-clockwise) position.

SIGNAL GENERATOR CONNECTIONS	FREQUENCY & TYPE OF MODULATION	VACUUM TUBE VOLTMETER CONNECTIONS	RECEIVER DIAL SETTING	TRIMMER OR SLUG NUMBER	TRIMMER DESCRIPTION	TYPE OF ADJUSTMENT AND OUTPUT INDICATION
Connect high side in series with an .01 Mfd condenser to lug on trimmer No. 17 at top of gang (see illustration on page 8 for location of trimmer). Connect ground lead to receiver chassis in vicinity of 12AT7 tube.	**10.7 MC** AM signal may be 400 cycle modulated.	Connect common (or ground) terminal of meter to receiver chassis. D.C. probe lead of meter is then connected to pin No. 7 of the 6AL5 tube.	Any position where it does not affect the signal.	11	Discriminator Primary	Adjust these trimmers for maximum meter reading—the output voltage will be of negative polarity.
				12 and 13	2nd I.F.	
				14 and 15	1st I.F.	
Same as above	Same as above	Connect common (or ground) terminal of V-T voltmeter to the junction of resistors 87 and 88 in the discriminator circuit. D.C. probe lead of meter is then connected to junction of resistor No. 87 (18,000 ohms) and condenser No. 70 (.003 MFD.) which are in the discriminator output circuit. Set meter for operation on its lowest D.C. voltage range.	Same as above	10	Discriminator Secondary	Note that as trimmer No. 10 is rotated a point will be found where voltmeter will swing from a positive to a negative reading or vice versa. Correct setting of trimmer No. 10 is obtained when meter reads zero as trimmer is moved through this point. The adjustment is somewhat critical and considerable care must be exercised to set the trimmer for a zero meter indication.
Recheck adjustment of trimmers No. 10 and No. 11 to be sure that both are set as accurately as possible to obtain the specified output indication.						
Connect generator "high" side in series with a 300 ohm carbon resistor to end terminal marked "FM" on strip at back of chassis. Generator ground lead must connect to next terminal marked "GND".	**106 MC** AM signal may be 400 cycle modulated.	Connect common (or ground) terminal of meter to receiver chassis. D.C. probe lead of meter is then connected to Pin No. 7 of the 6AL5 tube.	106 MC	16	Oscillator Trimmer	Set trimmer No. 16 to receive 106 MC. signal as indicated by maximum meter reading. **IMPORTANT:** It will be noted that there are two different settings of trimmer No. 16 at which the 106 MC. signal will be received—always select the trimmer setting which is nearest to the low capacity end of its range.
Same as above	Same as above	Same as above	Tune to 106 MC. generator signal.	17	R.F. Trimmer	Adjust trimmer No. 17 for maximum meter reading.
				18	Antenna Trimmer	Adjust trimmer No. 18 for maximum meter reading.
				14 and 15	1st I.F.	Recheck adjustment of these trimmers for maximum meter reading.

Check calibration and tracking of receiver with input signals of 90 and 98 MC. If difference between dial pointer setting and 90 or 98 MC. calibration mark does not exceed ± 0.3 MC. and antenna and R.F. circuits are tracking properly, then alignment may be considered satisfactory and no further adjustment is necessary.

Where the calibration error is greater than ± 0.3 MC. it is advisable to make the following adjustments:

1. If pointer falls above the 90 MC. calibration point, it will be necessary to slightly spread the windings of the FM oscillator coil. Then repeat the two preceding adjustments of trimmers 16, 17 and 18 at 106 MC. Should it be found impossible to obtain the 106 MC. signal at the proper point on the dial by adjustment of the trimmers it will then be necessary to adjust the spacing of the gang condenser plates.
2. If pointer falls below the 90 MC. calibration point, it will be necessary to push the windings together on the FM oscillator coil. Then repeat the two preceding adjustments of trimmers 16, 17 and 18 at 106 MC. Should it be found impossible to obtain the 106 MC. signal at the proper point on the dial by adjustment of the trimmers it will then be necessary to adjust the spacing of the gang condsenser plates.
3. Correction for mistracking of antenna and R.F. may be accomplished by adjusting coil turns and gang plate spacing in the same manner as outlined above for the oscillator stage.

CONDENSERS

DIA. GRAM NO.	PART NO.	DESCRIPTION
13 A to F	506348	Condenser-variable gang (with drum)
14	512026	Condenser-.05 Mfd. 200 volt
15	504973	Condenser-ceramic 22 Mmfd. 500 volt
17	504974	Condenser-ceramic 47 Mmfd. 500 volt
19	505873	Condenser-ceramic .005 Mfd. 450 volt
22	505873	Condenser-ceramic .005 Mfd. 450 volt
23	504974	Condenser-ceramic 47 Mmfd. 500 volt
26	504905	Condenser-ceramic 5 Mmfd. 500 volt ± 10%
28	504983	Condenser-ceramic 1.0 Mmfd. 500 volt
30	506341	Condenser-ceramic 330 Mmfd. 500 volt
31	512009	Condenser-.01 Mfd. 200 volt
35	513429	Condenser-ceramic 10 Mmfd. 500 volt ± 10%
36	506336	Condenser-trimmer; 3 to 30 Mmfd.
37	506544	Condenser-ceramic 10 Mmfd. 500 volt
38	505873	Condenser-ceramic .005 Mfd. 450 volt
41	513408	Condenser-ceramic 39 Mmfd. 500 volt ± 5%
44	505873	Condenser-ceramic .005 Mfd. 450 volt
46	505873	Condenser-ceramic .005 Mfd. 450 volt
48, 49, 50	505873	Condenser-ceramic .005 Mfd. 450 volt
55	505873	Condenser-ceramic .005 Mfd. 450 volt
57	505873	Condenser-ceramic .005 Mfd. 450 volt
58-B, C	506338	Condenser-ceramic 100 Mmfd. 400 volt (part of diode filter unit)
59, 60	505873	Condenser-ceramic .005 Mfd. 450 volt
63	505873	Condenser-ceramic .005 Mfd. 450 volt
66	505873	Condenser-ceramic .005 Mfd. 450 volt
68	506341	Condenser-ceramic 330 Mmfd. 500 volt
69	506340	Condenser-ceramic 100 Mmfd. 500 volt
70	512004	Condenser-.003 Mfd. 600 volt
71	512006	Condenser-.005 Mfd. 600 volt
74	512006	Condenser-.005 Mfd. 600 volt
76	505873	Condenser-ceramic .005 Mfd. 450 volt
83, 84	512006	Condenser-.005 Mfd. 600 volt
86	504937	Condenser-electrolytic 5 Mfd. 50 volt
91	506340	Condenser-ceramic 100 Mmfd. 500 volt
92	512034	Condenser-.1 Mfd. 400 volt
93	512016	Condenser-.02 Mfd. 400 volt
96-A to D	505908	Condenser-electrolytic A-20 Mfd. 25 volt B-10 Mfd. 450 volt C-30 Mfd. 450 volt D-40 Mfd. 450 volt
99	512006	Condenser-.005 Mfd. 600 volt
107	512256	Condenser-.01 Mfd. 600 volt
109	512026	Condenser-.05 Mfd. 200 volt
110 A, B	506527	Condenser-electrolytic A — 15 Mfd. 400 volt B — 15 Mfd. 400 volt
115	512010	Condenser-.01 Mfd. 400 volt
117	512028	Condenser-.05 Mfd. 400 volt
122	512016	Condenser-.02 Mfd. 400 volt

RESISTORS

18	510017	Resistor-carbon 82 Ohms ¼ watt ± 10%
20	510164	Resistor-carbon 33,000 Ohms ½ watt
21	510137	Resistor-carbon 1000 Ohms ½ watt
32	510041	Resistor-carbon 1800 Ohms ¼ watt
39	510137	Resistor-carbon 1000 Ohms ½ watt
40	510055	Resistor-carbon 10,000 Ohms ¼ watt
45	510137	Resistor-carbon 1000 Ohms ½ watt
47	510067	Resistor-carbon 47,000 Ohms ¼ watt
51	510165	Resistor-carbon 39,000 Ohms ½ watt
52	510137	Resistor-carbon 1000 Ohms ½ watt
56	510083	Resistor-carbon 2.2 Meg. ¼ watt
58-A	506338	Resistor-carbon 47,000 Ohms 1/5 watt. (part of diode filter unit)
61	510165	Resistor-carbon 39,000 Ohms ½ watt
62	510085	Resistor-carbon 470,000 Ohms ¼ watt
64	510137	Resistor-carbon 1000 Ohms ½ watt
67	510059	Resistor-carbon 18,000 Ohms ¼ watt
73	510070	Resistor-carbon 68,000 Ohms ¼ watt
75	510070	Resistor-carbon 68,000 Ohms ¼ watt
77	510079	Resistor-carbon 220,000 Ohms ¼ watt
78	510083	Resistor-carbon 2.2 Meg. ¼ watt
82-A, B, C	505911	Volume and tone control (with switch) A-2 Megohms B-2 Megohms C-"ON-OFF" switch
95	510098	Resistor-carbon 15 Meg. ¼ watt
87, 88	510053	Resistor-carbon 8200 Ohms ¼ watt ± 10%
89	510093	Resistor-carbon 2.2 Meg. ¼ watt
90	510079	Resistor-carbon 220,000 Ohms ¼ watt
94	510085	Resistor-carbon 470,000 Ohms ¼ watt
95	510128	Resistor-carbon 330 Ohms ½ watt
97, 98	510709	Resistor-wire wound 600 Ohms 5 watt
100	510013	Resistor-carbon 47 Ohms ¼ watt
108	510152	Resistor-carbon 6800 Ohms ½ watt
111	510170	Resistor-carbon 68,000 Ohms ½ watt
112	510179	Resistor-carbon 220,000 Ohms ½ watt
113	510173	Resistor-carbon 100,000 Ohms ½ watt
114	510162	Resistor-carbon 27,000 Ohms ½ watt ±10%
116	510194	Resistor-carbon 3.3 Meg. ½ watt
118	510194	Resistor-carbon 3.3 Meg. ½ watt
119	510179	Resistor-carbon 220,000 Ohms ½ watt
120	510164	Resistor-carbon 33,000 Ohms ½ watt
121	510170	Resistor-carbon 68,000 Ohms ½ watt

COILS AND TRANSFORMERS

11	506353	Coil—Antenna (FM)
12	506354	Coil—Antenna (AM)
	506349	Slug core for AM antenna coil
24	506345	Coil—R. F. (AM)
	506344	Slug core for AM R. F. coil
25	506337	Coil—R. F. choke (FM)
27	506351	Coil—R. F. (FM)
29	505075	Coil—R. F. choke (FM)
33	506335	Coil—Oscillator (AM)
34	506352	Coil—Osc. (FM)
42	506080	Transformer-1st I. F. (FM)
43	506333	Transformer-1st I. F. (AM)
53	505797	Transformer-2nd I. F. (AM)
54	505905	Transformer-2nd I. F. (FM)
65	506332	Transformer-discriminator
101	505812	Transformer-output
106	506709	Transformer-power
125	506670	Loop Aerial

OTHER ELECTRICAL PARTS

16-A to E	506347	Switch—FM-AM-Phono
58-A, B, C	506338	Diode filter unit A-Resistor-carbon 47,000 Ohms 1/5 watt B-Condenser-ceramic 100 Mmfd. 400 volt C-Condenser-ceramic 100 Mmfd. 400 volt
79	506707	Pick-up Cartridge (includes sapphire point)
80	506789	Motor for type "VM"-506569 Record Changer 115 volt 60 cycle
	505274	Motor for type "VM"-506569 Record Changer 115 volt 50 cycle
81	505269	Switch-"ON-OFF" for type "VM"-506569 Record Changer
102	506667	Speaker-P.M. (12 inch)
103 to 105	118921	Lamp-dial (Mazda No. 47) 6-8 V. 150 Ma.
123	118921	Lamp-Record Changer compartment (Mazda No. 47) 6-8 V. 150 Ma.
124	506685	Socket and Switch for light in Changer compartment
	506659	Record Changer

MISCELLANEOUS PARTS

	506369	Background for dial
	160026	Base for mtg. elect. cond. (pre-amp.)
	401270	Base for mtg. electrolytic condenser
	506371	Bull's eye for indicator light
	506883	Cabinet — Stock No. 4-A-64
	506864	Cabinet — Stock No. 4-A-65
	500420	Clamp — dial glass
	506343	Clip-coil mtg. for R. F. and Ant. coil (AM)
	505101	Clip-I. F. transformer mtg.
	114955	Clip-retainer on end of dial cord
	160326	Clip-retains dial background
	160832	Clip-retains escutcheon
	117057	Cord-dial drive (3 ft. required) per ft.
	505165	"C" Washer-tuning and band switch shaft
	506368	Dial scale-glass
	506747	Door for Record Storage compartment; Stock No. 4-A-64 (less hardware)
	506693	Door for Record Changer and Storage compartment; Stock No. 4-A-65 (less hardware)
	506642	Door Pull for Radio compartment; Stock No. 4-A-64
	506749	Door Pull for Record Storage compartment; Stock No. 4-A-64
	506694	Door Pull for Record Changer and storage compartment; Stock No. 4-A-65
	506696	Drawer for Record Changer; Stock No. 4-A-65
	506763	Escutcheon
	506476	Hinge-lid; Stock No. 4-A-64
	506748	Hinge-door; Stock No. 4-A-64 (supplied in pairs)
	506695	Hinge-door; Stock No. 4-A-65 (supplied in pairs)
	506692	Hinge-lid; Stock No. 4-A-65
	506381	Knob-"VOLUME"
	506382	Knob-"TONE"
	506383	Knob-"TUNING"
	506384	Knob-"FM-AM-PHONO"
	506744	Lid for Record Changer compartment; Stock No. 4-A-64 (less hardware)
	506690	Lid for Radio Compartment; Stock No. 4-A-65 (less hardware)
	506745	Lid Support for Stock No. 4-A-64
	506691	Lid Support for Stock No. 4-A-65
	506795	Plug for phono pick-up cable
	500966	Plug for phono input to receiver
	501031	Plug for phono motor cable
	506652	Plug for Pre-amp power cable
	506751	Plug (contains jumper)-wire-recorder socket
	506370	Pointer
	506697	Rail for Record Changer Drawer; Stock No. 4-A-65 (supplied in pairs)
	119087	Ring for dial cord
	38501	Rubber bushing for band switch
	160496	Rubber pad for mounting chassis
	116584	Rubber spacer for mtg. dial scale
	170167	Screw-No. 8-32x⅞" for mounting chassis
	503588	Shaft and drum assembly-dial
	503757	Shaft and Link assy'-band switch
	505923	Shaft-tuning
	506349	Slug core for antenna coil (AM)
	506344	Slug core for R. F. coil (AM)
	506470	Socket-phono pick-up plug
	160039	Socket-phono input to receiver
	505307	Socket and phono motor cable
	506626	Socket-Pre-amp power cable
	506750	Socket and Cable assembly-wire recorder connection
	506372	Socket-dial lamp; pair (with leads)
	504595	Socket-indicator lamp at base of cabinet
	503780	Socket and Mtg. Ring assy.—Pre-amp tube
	504597	Socket-miniature
	506331	Socket-noval base
	116690	Socket-octal base
	160392	Socket-octal (rectifier)
	505161	Spring-dial cord tension
	505924	Terminal strip (FM-FM-AM-AM)
	506689	Tilt Door assembly—Stock No. 4-A-64 (less hardware)

MODEL 4-A-67

THE FIRESTONE TIRE & RUBBER CO.

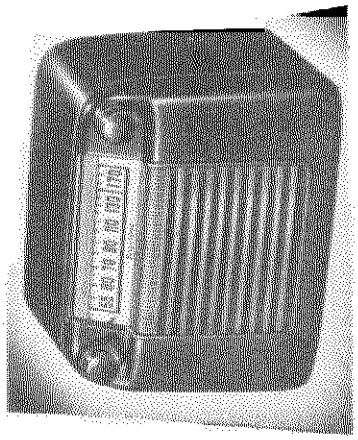

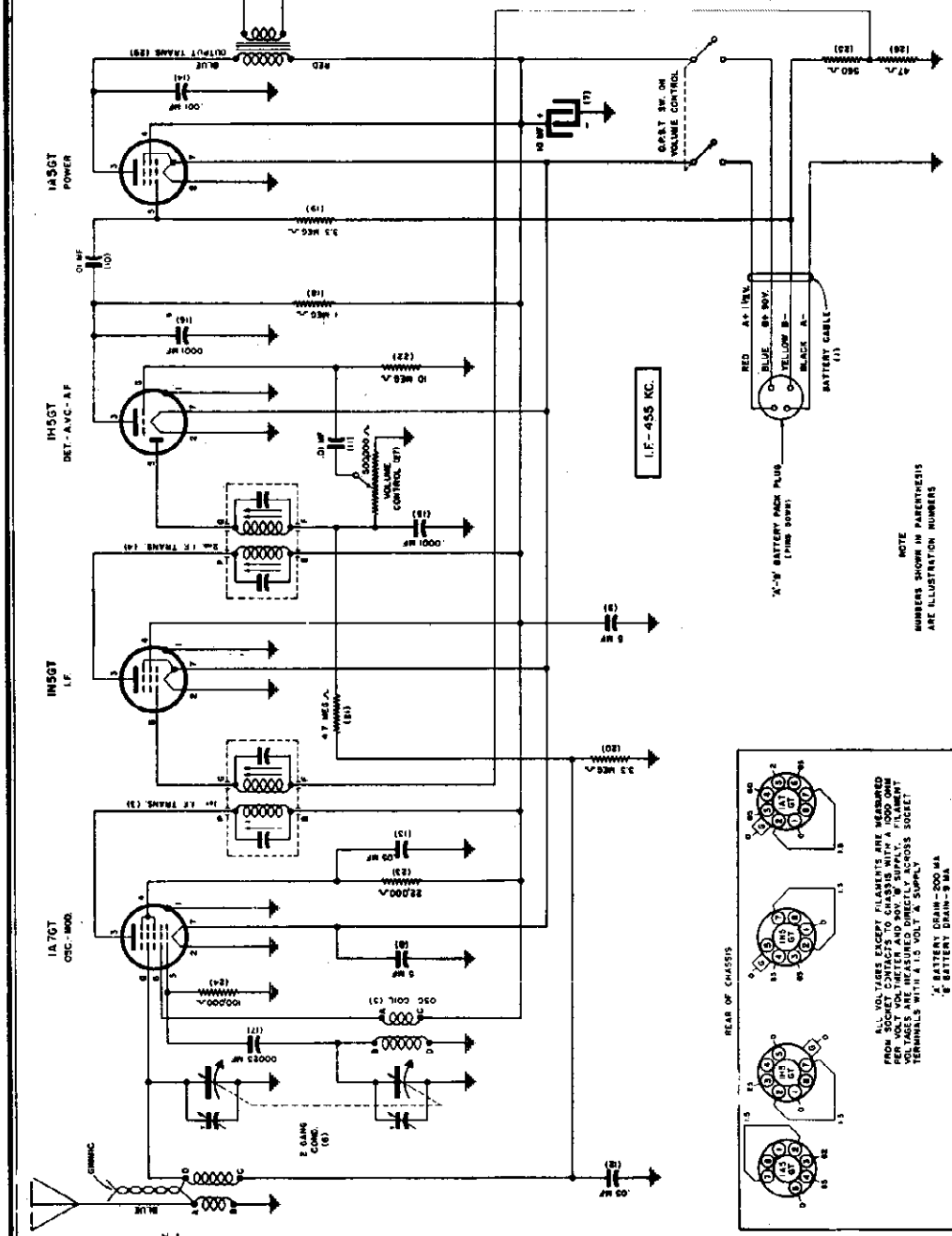

POWER SUPPLY Battery Operated

BATTERY SPECIFICATIONS 1000 hour Firestone Battery
Stock No. 4-D-1

TUNING RANGE 528 to 1730 KC

INTERMEDIATE FREQUENCY 455 KC

LOUD SPEAKER 5 Inch P.M.

VOICE COIL IMPEDANCE 3.2 OHM at 400 Cycles

POWER OUTPUT Undistorted - 100 Milliwatts
Maximum - 200 Milliwatts

TUBE COMPLEMENT 1A7GT Oscillator Modulator,
1N5GT IF, 1H5GT Det. AVC,
1A5GT Power Output.

ALIGNMENT PROCEDURE

Be sure to follow procedure carefully and in the order given—otherwise the receiver will be insensitive and the dial calibration incorrect. For alignment procedure read tabulations from left to right. Make the adjustment marked (1) first, (2) next, etc.

Before starting alignment:

(a) Check tuning dial adjustment by tuning gang condenser until plates touch maximum capacity stop (completely in mesh) at which point the dial needle must be exactly even with the last line at the low frequency end of the dial calibration. If dial needle does not point exactly to last line move to correct position.

(b) Use an accurately calibrated test oscillator with some type of output measuring device.

Steps	Set receiver dial to:	TEST OSCILLATOR			Refer to parts layout diagram for location of trimmers mentioned below:
		Adjust test oscillator frequency to:	Use dummy antenna in series with output of test oscillator consisting of:	Attach output of test oscillator to:	
1	I.F. Any point where no interference signal is received	455 K. C.	.02 MFD. condenser	High side to grid terminal of 1A7GT tube DO NOT REMOVE CAP. Low side to receiver black ground lead.	Adjust each of the second I.F. transformer trimmers for maximum output—then adjust each of the first I.F. trimmers for maximum output.
2	Exactly 1730 K. C.	Exactly 1730 K. C.	.00025 MFD. condenser	Receiver blue antenna lead Receiver black ground lead	Adjust 1730 K. C. oscillator trimmer for maximum output.
3	Exactly 1400 K. C.	Exactly 1400 K. C.	.00025 MFD. condenser	Receiver blue antenna lead Receiver black ground lead	While rocking gang condenser adjust 1400 K. C. antenna trimmer for maximum output.

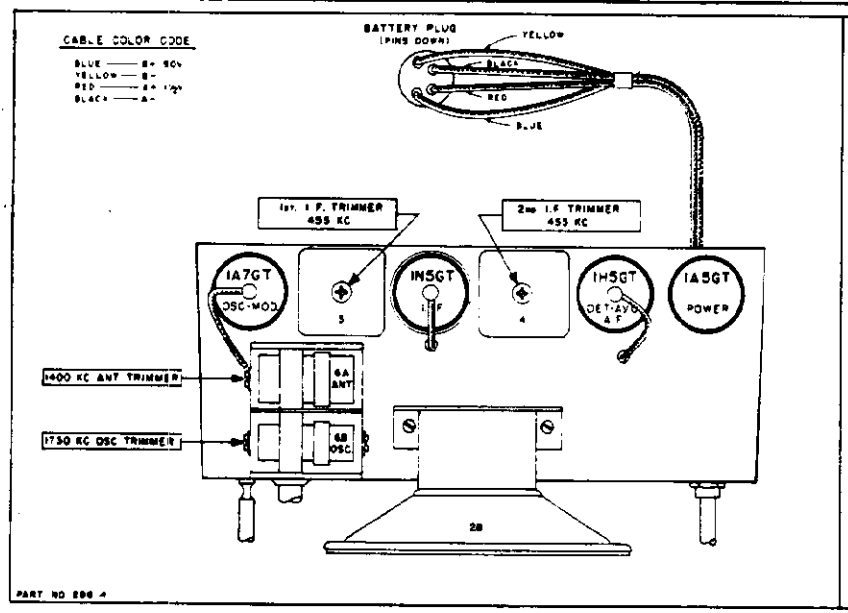

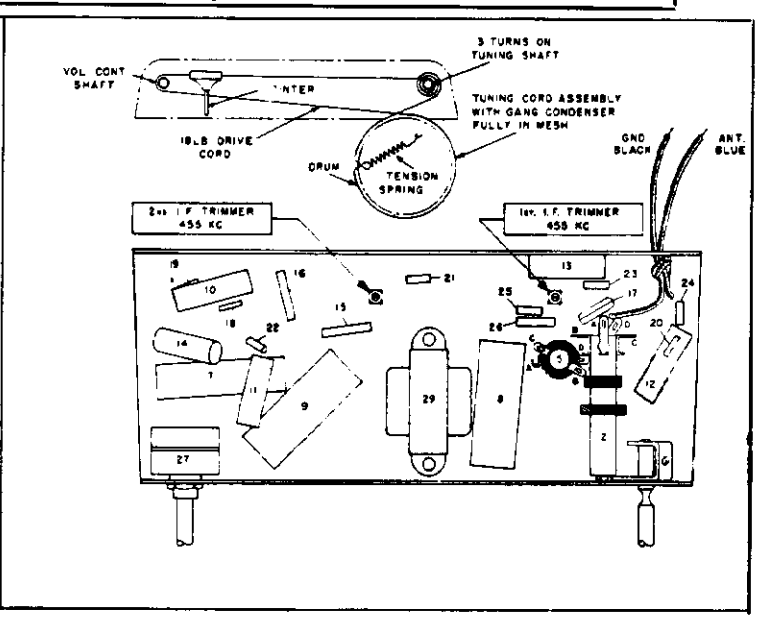

MODEL 4-A-07 THE FIRESTONE TIRE & RUBBER CO.

Be sure R.F. and I.F. stages are accurately aligned before measuring gain. R.F. gains can be measured with a "channel" type instrument containing a tuned and calibrated R.F. amplifier. Avacuum tube voltmeter may be used for audio gain measurements. Observe following precautions.

1. For all gain measurements connect signal generator as shown. Use 600 KC. signal with 400 cycle modulation (use nearby frequency if local station interferes.)
2. Be sure radio is carefully tuned to generator signal (use weak signal for sharp tuning.)
3. When using a "channel" type instrument carefully tune it for maximum output at desired frequency before making measurements.

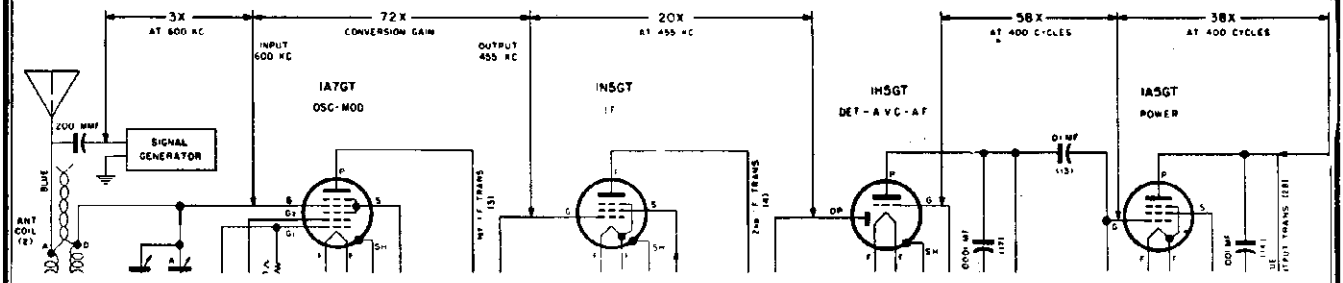

Differences in tube characteristics, tolerance of parts, adjustment of tuned circuits, and variations of line voltage will influence stage gains. Accuracy of measurements is dependent upon careful tuning of receiver to generator signal and experience in using your test equipment. These factors may create considerable variation in gain measurements.

PARTS LIST

Illus. No.	Part No.	Part Name	Description
1	20E94-2	Cable	Battery with 4 Prong Plug
2	20E32	Coil	Antenna
3	20E261	Coil	1st I.F. Transformer
	or		
	20E307	Coil	1st I.F. Transformer
4	20E261-3	Coil	2nd I.F. Transformer
	or		
	20E307-3	Coil	2nd I.F. Transformer
5	20E77	Coil	Oscillator
6	**24E2**	**Condenser**	**Tuning, 2 Gang**
7	**25E9**	**Condenser**	**Tubular, Dry Elect. 10 Mfd. 100 V.**
8	23E224	Condenser	Tubular, .5 Mfd. 200 V.
9	23E224	Condenser	Tubular, .5 Mfd. 200 V.
10	23E151	Condenser	Tubular, .01 Mfd. 120 V.
11	23E151	Condenser	Tubular, .01 Mfd. 120 V.
12	23E216	Condenser	Tubular, .05 Mfd. 200 V.
13	23E216	Condenser	Tubular, .05 Mfd. 200 V.
14	23E204	Condenser	Tubular, .001 Mfd. 200 V.
15	23E11	Condenser	Fixed Ceramic, .0001 Mfd. 500 V.
16	23E11	Condenser	Fixed Ceramic, .0001 Mfd. 500 V.
17	23E42	Condenser	Mica, .00025 Mfd. 500 V.
18	27E105	Resistor	Carbon, 1 Megohm, 1/3 Watt
19	27E335	Resistor	Carbon, 3.3 Megohm, 1/3 Watt
20	27E335	Resistor	Carbon, 3.3 Megohm, 1/3 Watt
21	27E475	Resistor	Carbon, 4.7 Megohm, 1/3 Watt
22	27E106	Resistor	Carbon, 10 Megohm, 1/3 Watt
23	27E223	Resistor	Carbon, 22,000 Ohm, 1/3 Watt
24	27E104	Resistor	Carbon, 100,000 Ohm, 1/3 Watt
25	27E561	Resistor	Carbon, 560 Ohm, 1/3 Watt
26	27E470	Resistor	Carbon, 47 Ohm, 1/3 Watt
27	**28E11**	**Vol. Control**	**With D.P.S.T. Switch, 500,000 Ohm**
28	1E9	Speaker	5" P.M.
29	22E25	Transformer	Output

MISCELLANEOUS PARTS

Part No.	Part Name	Description
7E76-4	**Cabinet**	**Walnut Cabinet**
7E83	Cabinet Back	Back for Cabinet
20E253-11	Dial Cord	Drive, Cord Assembly
65E2	Dial Cord Spring	Dial Cord Tension Spring
20E270-3	Dial Shaft Assembly	Drive Shaft Assembly
36E40	**Dial Scale**	**Calibrated Scale**
35E8	Dial Pointer	Dial Needle
35E15	Dial Indicator	"ON-OFF" Indicator
37E27-41	Knob	Walnut Knob
17E3-4	Plug	4 Prong Battery Plug
46E14	Throw-Arm	Operates "ON-OFF" Indicator

MOUNTING HARDWARE

Part No.	Part Name	Description
12E6-F10	Washer	Metal Washer used with 82E36 Screw for Mtg. Back —Lower Right & Left Corners
82E36	Screw	6—20x5/16 Rd. Rec. Hd. Shakeproof Type No. 25 used with 12E6 Washer
82E3	Screw	4—24x1 4 Rd. Rec. Hd. Shakeproof Type No. 25 For Mtg. Dial Scale
10E43	Stud	Trimount Stud to Mount Cabinet Back
12E52	Washer	Fibre Washer for Mounting Dial Scale
12E104	Washer	Spring Washer for Mounting Dial Scale
13E103-2	Washer	Speed Clip Washer for Mtg. Dial Scale
82E55	Screw	8—18x1/2 Rd. Rec. Hd. Shakeproof Type No. 25 Chassis Mounting Screw
12E114	Washer	Special Washer Used with 82E55 Chassis Mounting Screw

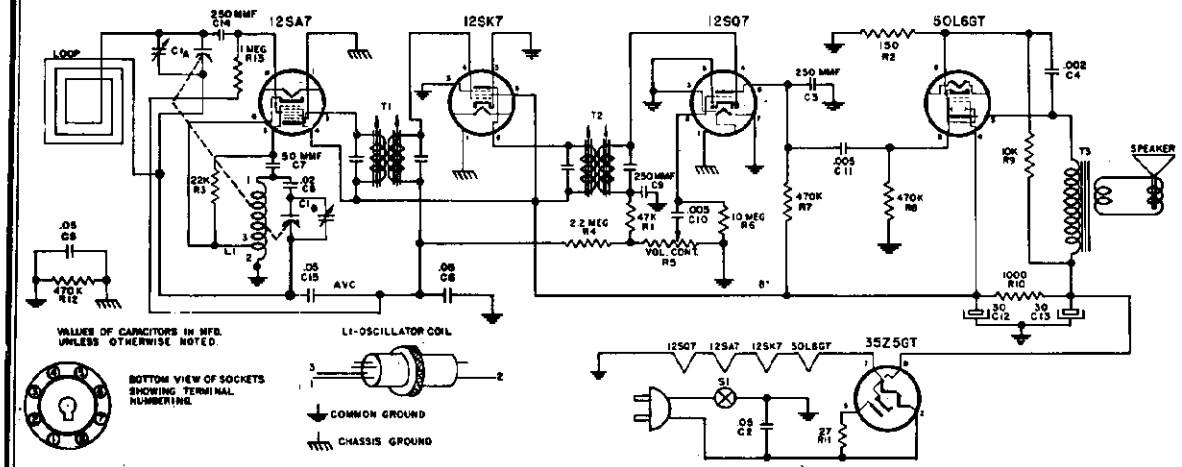

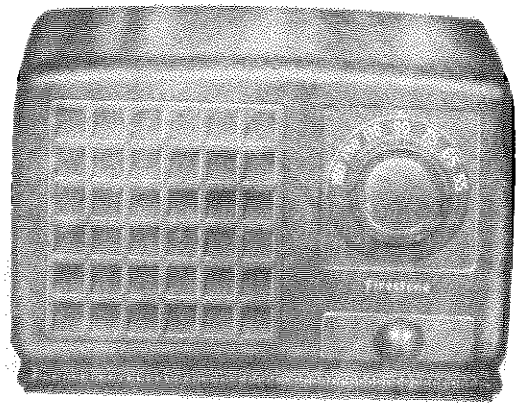

Before proceeding with stage measurements be sure the receiver is properly aligned. R.F. gains can be measured by a "channel" type instrument containing a tuned and calibrated R.F. amplifier. A vacuum tube voltmeter may be used for audio gain measurements. Observe the following precautions:

1. **For all gain measurements connect the "high" side of a signal generator to the grid of the tuning condenser, C1A, through a .00025 mica condenser. The ground side of the signal generator should be connected to common negative. Use a 600 KC signal with 400 cycle modulation (use nearby frequency if local station interferes).**
2. **Be sure radio is carefully tuned to generator signal (use weak signal for sharp tuning.)**
3. **When using a "channel" type instrument carefully tune it for maximum output at desired frequency before making measurements.**

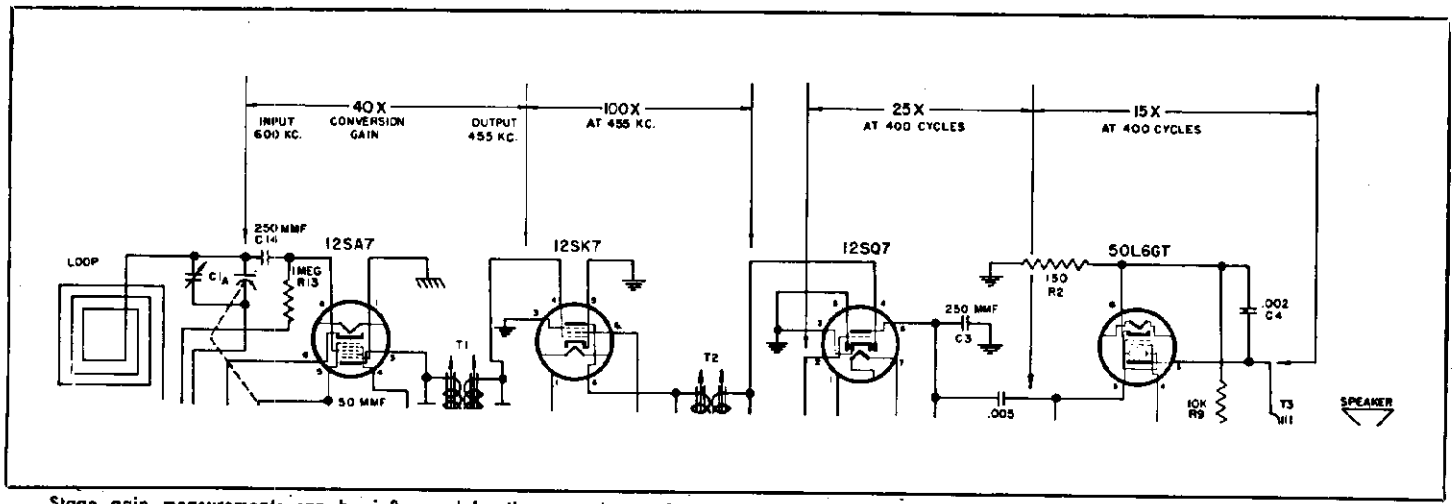

Stage gain measurements can be influenced by the normal manufacturers tolerances allowed in parts, differences in individual tube characteristics, the adjustment of the tuned circuits and variations in line voltage. Careful tuning of the receiver as well as experience in using your test equipment will determine the accuracy of the measurements taken. Due to all of these factors, the stage gains shown in the above diagram are approximate values rather than absolute as it is possible to introduce many variations in these measurements.

ALIGNMENT PROCEDURE

The alignment should be made with volume control fully on, and the output from the signal generator as low as possible, to prevent A.V.C. action from interfering with correct alignment.

For alignment procedure read tabulations from left to right, and make the adjustment marked (1) first, (2) next, (3) third. When making alignment:

(a) Use an accurately calibrated test oscillator with some type of output measuring device.

(b) PLACE LOOP ANTENNA IN THE SAME POSITION IT WILL BE IN WHEN THE SET IS IN THE CABINET.

Steps	Set receiver dial to:	TEST OSCILLATOR			Refer to parts layout diagram for location of trimmers mentioned below:
		Adjust test oscillator frequency to:	Use dummy antenna in series with output of test oscillator consisting of:	Attach output of test oscillator to:	
1	Minimum capacity (fully open)	455 K.C.	.1 MFD. condenser	High side to grid of tuning condenser, C1A. Low side to common negative. (through .25 MFD. Cond.)	Adjust each trimmer on the second I. F. transformer for maximum output—then adjust each trimmer on the first I. F. transformer for maximum output.
2	Minimum capacity (fully open)	Exactly 1630 K.C.	.00025 MFD. condenser	High side to grid of tuning condenser, C1A. Low side to common negative.	Adjust 1630 K.C. oscillator trimmer for maximum output.
3	Approx. 1400 K.C.	Approx. 1400 K.C.	.00025 MFD. condenser	Loosely coupled to loop.	While rocking gang condenser adjust 1400 K.C. antenna trimmer for maximum output.

SPECIFICATIONS

I. F. Frequency
455 KC

Loud Speaker
.5 inch P. M.

Voice Coil Impedance
3.2 ohms at 400 cycles

Power Output
Maximum 1.65 watts

Tube Complement

12SA7 — Oscillator Converter
12SK7 — I. F. Amplifier
12SQ7 — AVC, Detector, 1st Audio
50L6GT — Power Output
35Z5GT — Rectifier

Power Supply
105-125 volts, 50-60 cycles, AC or DC

Tuning Range
540 to 1630 KC

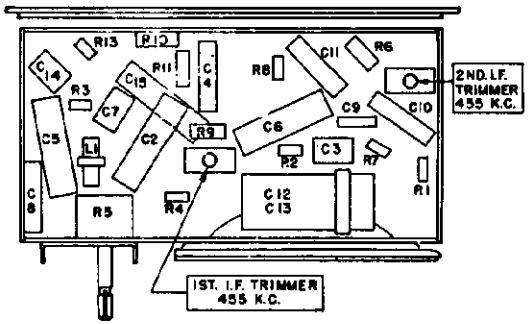

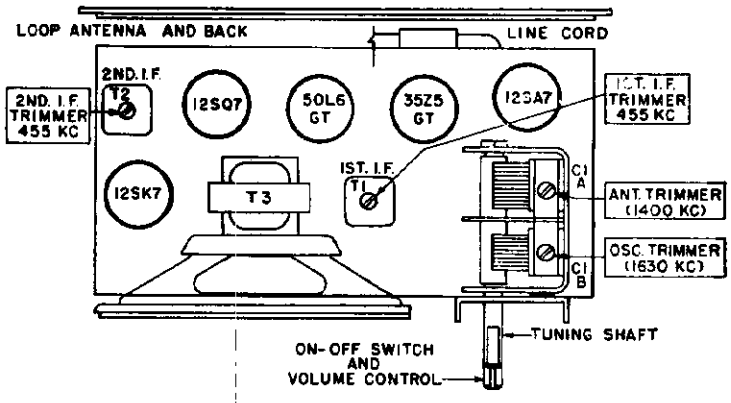

VOLTAGE TABLE

(BOTTOM OF CHASSIS)

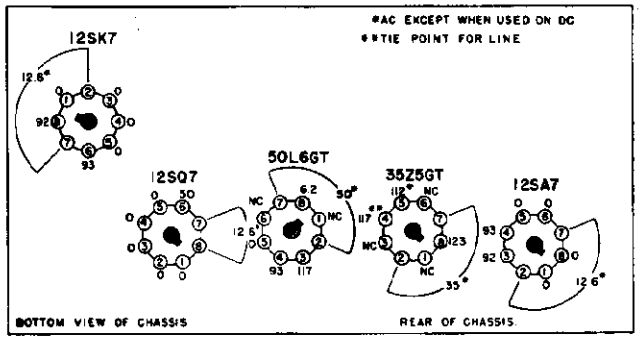

REAR OF CHASSIS

All voltages except heaters are measured from socket contacts to "common negative." Heater voltages are measured across socket contacts. All voltages measured with a 20,000 ohms per volt meter.

*AC except when used on DC.

Code No.	Part No.	Description
C1A, C1B	B19-199	Variable condenser
C2, C5	A16-158	.05 MFD 400 volt condenser
C3, C9, C14	A15-176	250 MMF mica condenser
C4	A16-155	.002 MFD 600 volt condenser
C6, C15	A16-152	.05 MFD 200 volt condenser
C7	A15-175	50 MMF mica condenser
C8	A16-150	.02 MFD 400 volt condenser
C10, C11	A16-153	.005 MFD 600 volt condenser
C12, C13	B18-283	30 x 30 MFD 150 volt electrolytic condenser
R1	A60-685	47K ohm ½ watt resistor
R2	A60-686	150 ohm ½ watt resistor
R3	A60-659	22K ohm ½ watt resistor
R4	A60-684	2.2 megohm ½ watt resistor
R5	A24-174	Volume control and switch, 1 megohm
R6	A60-663	10 megohm ½ watt resistor
R7, R8, R12	A60-662	470K ohm ½ watt resistor
R9	A60-698	10K ohm 1 watt resistor
R10	A60-732	1000 ohm 1 watt resistor
R11	A60-690	27 ohm ½ watt resistor
R13	A60-668	1 megohm ½ watt resistor
T1, T2	A10-479	1st and 2nd I. F. Transformer
T3		Output transformer (part of speaker)
L1	B10-502	Oscillator coil

MISCELLANEOUS PARTS

C42-449	Cabinet, molded
C52-274	Knob, tuning, calibrated
A52-275	Knob, volume control
A23-151	Line cord
SB82-56	Loop antenna, with cabinet back
B79-363	Speaker, 5" P.M. (includes output transformer)

©John F Dilas

Before proceeding with stage measurements be sure the receiver is properly aligned. R.F. gains can be measured by a "channel" type instrument containing a tuned and calibrated R.F. amplifier. A vacuum tube voltmeter may be used for audio gain measurements. Observe the following precautions:

1. For all gain measurements connect the "high" side of a signal generator to the flexible antenna lead. The ground side of the signal generator is connected through a .25 Mfd. condenser to receiver chassis. Use a 600 K.C. signal with 400 cycle modulation. (Use nearby frequency if local station interferes.)

2. Be sure radio is carefully tuned to generator signal. (Use weak signal for sharp tuning.)

3. When using a "channel" type instrument, carefully tune it for maximum output at desired frequency before making measurements.

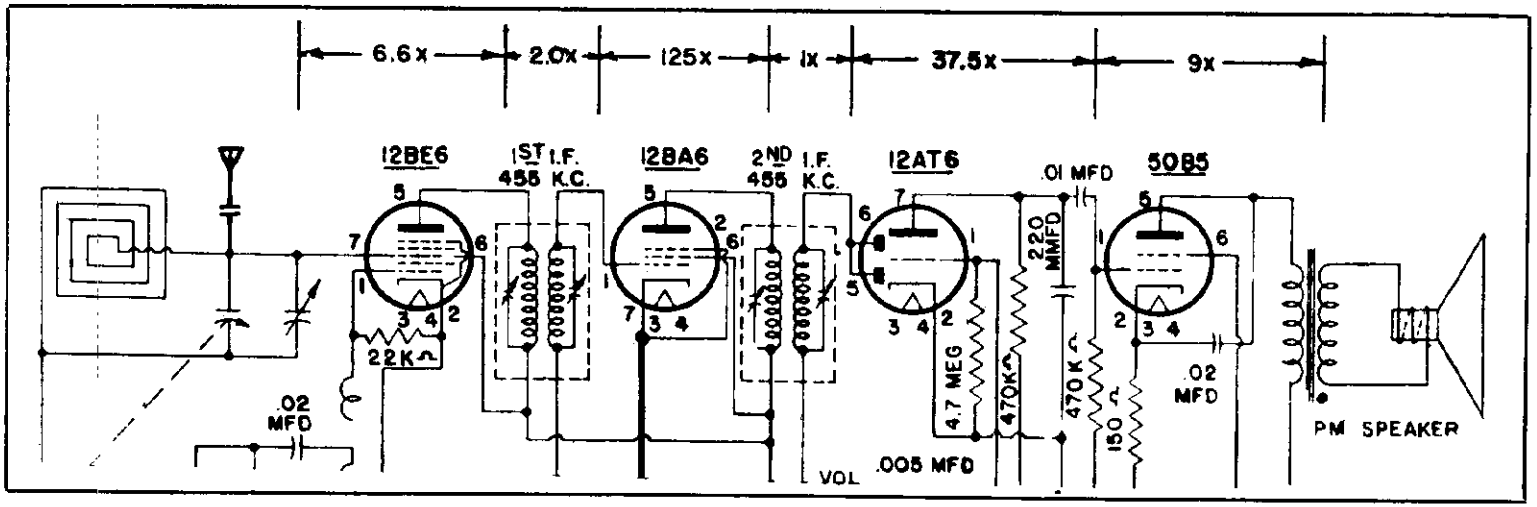

Stage gain measurements can be influenced by the normal manufacturers tolerances allowed in parts, differences in individual tube characteristics, the adjustment of the tuned circuits and variations in line voltage. Careful tuning of the receiver as well as experience in using your test equipment will determine the accuracy of the measurements taken. Due to all of these factors, the stage gains shown in the above diagram are approximate values rather than absolute as it is possible to introduce many variations in these measurements.



I. F. Frequency
455 KC

Loud Speaker
4 inch P. M.

Voice Coil Impedance
3.2 ohms at 400 cycles

Power Output
Maximum 1.25 watts

Power Supply
105-125 Volt, 60 Cycle. A.C. only

Tuning Range
535 to 1700 KC

©John F. Rider

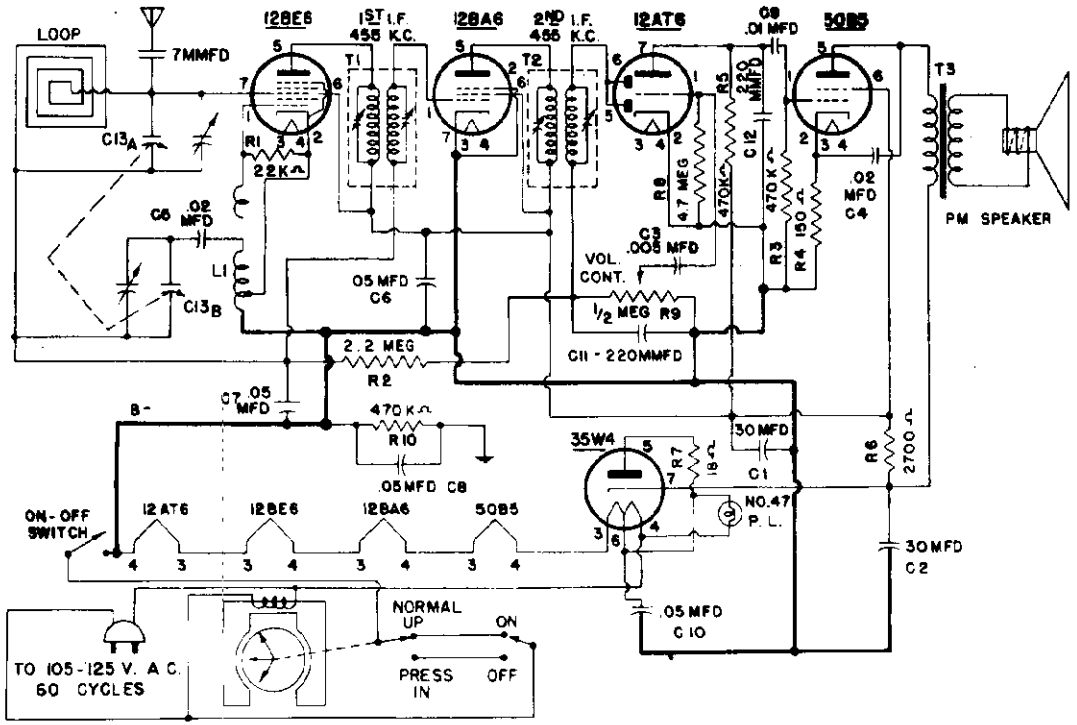

VOLTAGE TABLE
(BOTTOM OF CHASSIS)

ALL VOLTAGES EXCEPT HEATERS ARE MEASURED FROM SOCKET CONTACTS TO B MINUS. HEATER VOLTAGES ARE MEASURED ACROSS SOCKET CONTACTS. ALL VOLTAGES MEASURED WITH A 1000 OHMS PER VOLT METER.

SYM	DESCRIPTION
SH	SHELL
H	HEATER
HT	HEATER TAP
P	PLATE
S	SCREEN
G	CONTROL GRID
G1	OSC. GRID
DP	DIODE PLATE
SU	SUPPRESSOR
K	CATHODE
NC	NO CONNECTION

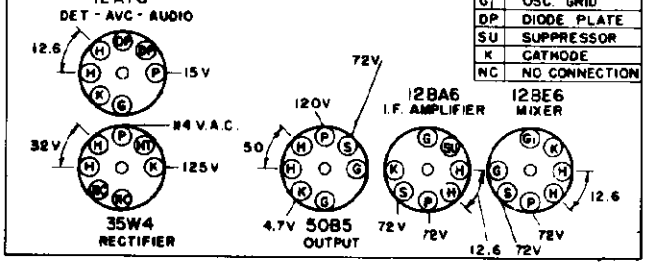

Tube Complement

12BE6	— Oscillator Converter
12BA6	— I. F. Amplifier
12AT6	— AVC, Detector, 1st Audio
50B5	— Power Output
35W4	— Rectifier

Code No.	Part No.	Description
C1, C2	2033-2	30 x 30 MFD 150 volt electrolytic condenser
C3	2000-5	.005 MFD 400 volt condenser
C4, C5	2000-2	.02 MFD 400 volt condenser
C6, C7, C10	2000-4	.05 MFD 400 volt condenser
C8	2000-25	.05 MFD 600 volt condenser
C9	2000-1	.01 MFD 400 volt condenser
C11, C12	2012-1	220 MMFD ceramicon condenser
C13A, C13B	2003 C	Variable condenser
R1	3003-16	22K ohm ½ watt resistor
R2	3003-14	2.2 Megohm ½ watt resistor
R3, R5, R10	3003-13	470K ohm ½ watt resistor
R4	3003-11	150 ohm ½ watt resistor
R6	3004-3	2700 ohm 2 watt resistor
R7	3003-12	18 ohm ½ watt resistor
R8	3003-15	4.7 Megohm ½ watt resistor
R9	3013-3	½ Megohm volume control and switch
		Dial Cord, 40" long

Code No.	Part No.	Description
T1	1046-3	1st I.F. transformer
T2	1046-4	2nd I.F. transformer
T3	1048	Output transformer
L1	1049	Oscillator coil
	1073	Loop antenna
	7009	Speaker, 4 inch P.M.
	5008	Line Cord
	8026-2	Clock
	6017 B	Clock face
	6013C	Clock Crystal
	9113	Dial pointer
	6016	Dial scale (glass)
	8001	Pilot lamp socket
		#47 Pilot lamp
	4077A	Cabinet, molded, mahogany
	4079	Cabinet back
	4080-3	Knob, mahogany
	4066-2	Clock knob, mahogany

ALIGNMENT PROCEDURE

The alignment should be made with volume control fully on, and the output from the signal generator as low as possible, to prevent A.V.C. action from interfering with correct alignment.

For alignment procedure read tabulations from left to right, and make the adjustment marked (1) first, (2) next, (3) third. Before starting alignment:

(a) Check tuning dial adjustment by tuning gang condenser until plates touch maximum capacity stop (completely in mesh) at which point the dial pointer must be exactly even with the last mark at the low frequency end of the dial calibration. If dial pointer is incorrectly set, release pointer clip on dial cord and reposition pointer.

(b) Use an accurately calibrated test oscillator with some type of output measuring device.

(c) PLACE LOOP ANTENNA IN THE SAME POSITION IT WILL BE IN WHEN THE SET IS IN THE CABINET.

Steps	Set receiver dial to:	TEST OSCILLATOR: Adjust test oscillator frequency to:	TEST OSCILLATOR: Use dummy antenna in series with output of test oscillator consisting of:	TEST OSCILLATOR: Attach output of test oscillator to:	Refer to parts layout diagram for location of trimmers mentioned below:
1	Minimum capacity (fully open)	455 K.C.	.1 MFD. condenser	High side to grid of tuning condenser. Low side to B— buss (through .25 MFD. Cond.)	Adjust each trimmer on the second I. F. transformer for maximum output—then adjust each trimmer on the first I. F. transformer for maximum output.
2	Minimum capacity (fully open)	Exactly 1700 K.C.	NONE	High side to receiver antenna lead. Low side to chassis. (Through .25 Mfd. Cond.)	Adjust 1700 K.C. oscillator trimmer for maximum output.
3	Approx. 1500 K.C.	Approx. 1500 K.C.	NONE	High side to receiver antenna lead. Low side to chassis. (Through .25 Mfd. Cond.)	While rocking gang condenser adjust 1500 K.C. antenna trimmer for maximum output.

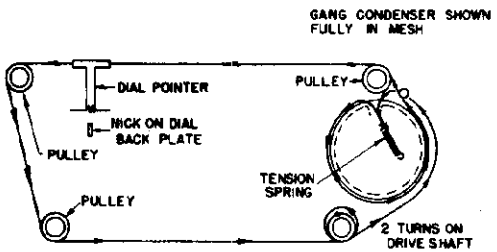

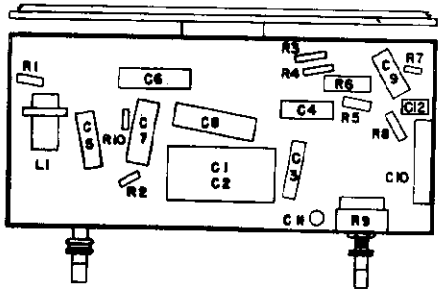

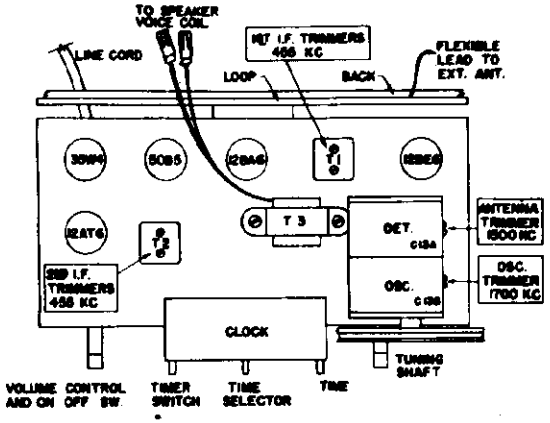

©John F. Rider

THE FIRESTONE TIRE & RUBBER CO. MODEL 4-B-31 THE ROAMER

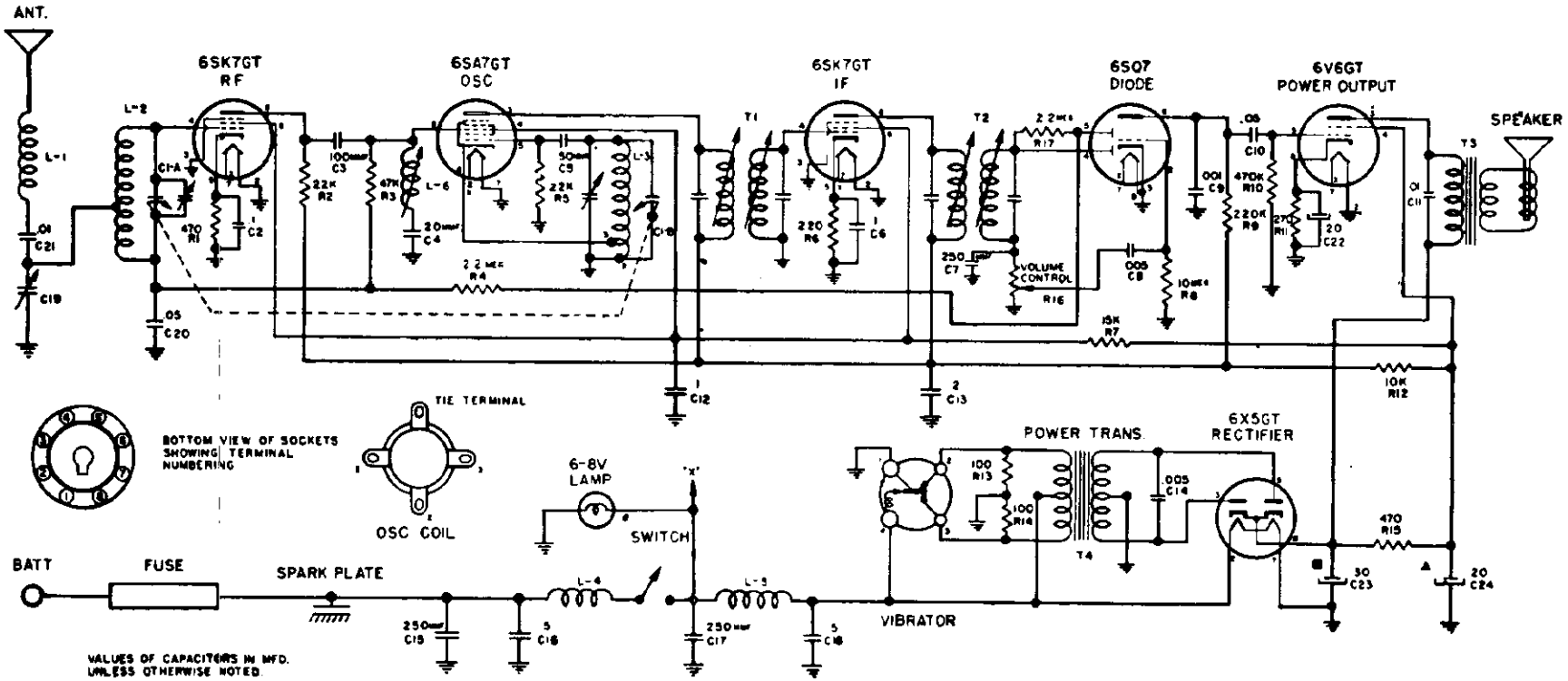

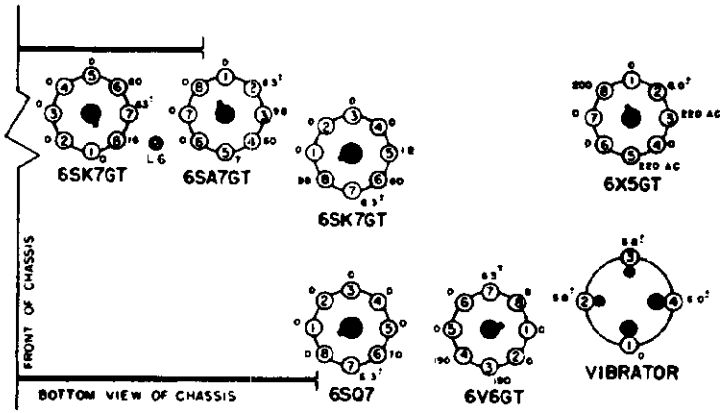

Socket Voltages

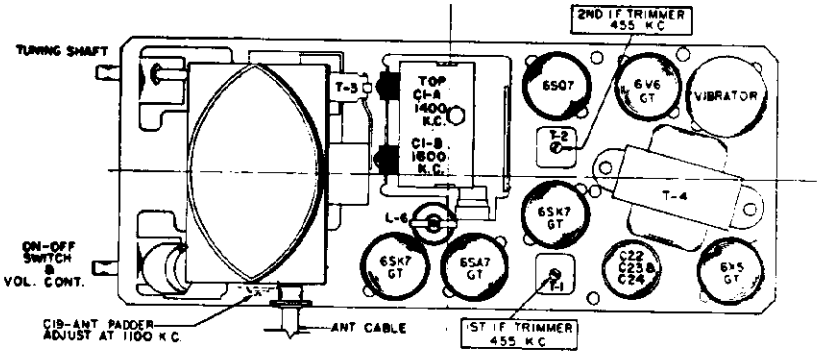

Tube and Trimmer Locations

Before proceeding with stage measurements be sure the receiver is properly aligned. R.F. gains can be measured by a "channel" type instrument containing a tuned and calibrated R.F. amplifier. A vacuum tube voltmeter may be used for audio gain measurements. Observe the following precautions:

1. For all gain measurements connect the "high" side of a signal generator to the antenna lead through a .00025 mica condenser. The ground side of the signal generator should be connected to the chassis. Use a 600 KC signal with 400 cycle modulation (use nearby frequency if local station interferes).
2. Be sure radio is carefully tuned to generator signal (use weak signal for sharp tuning.)
3. When using a "channel" type instrument carefully tune it for maximum output at desired frequency before making measurements.

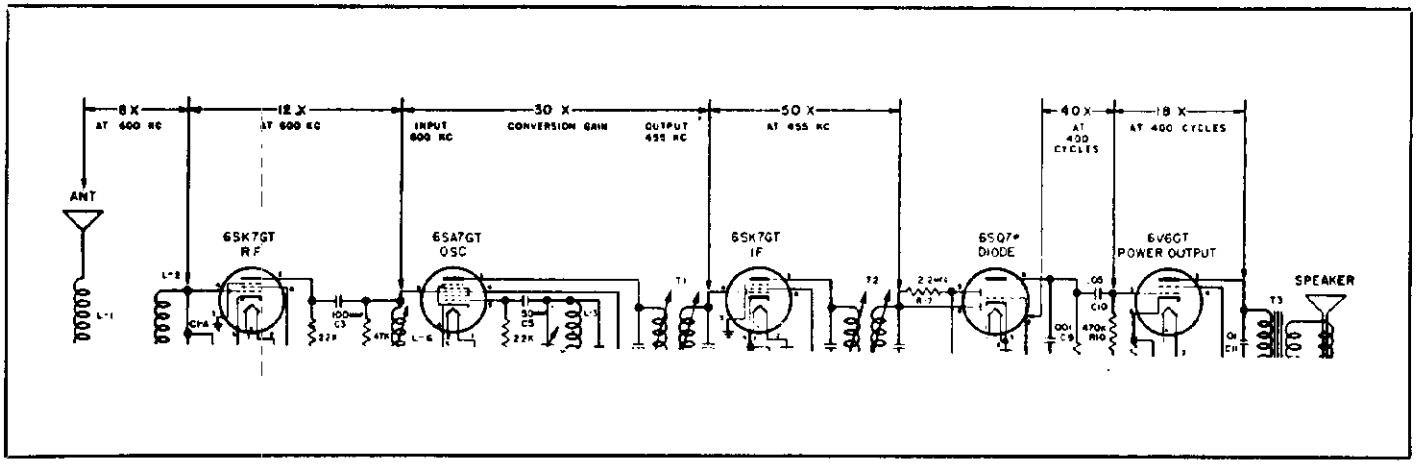

Stage gain measurements can be influenced by the normal manufacturers tolerances allowed in parts, differences in individual tube characteristics, the adjustment of the tuned circuits and variations in input voltage. Careful tuning of the receiver as well as experience in using your test equipment will determine the accuracy of the measurements taken. Due to all of these factors, the stage gains shown in the above diagram are approximate values rather than absolute as it is possible to introduce many variations in these measurements.

Tube Complement

1—6SK7GT	R.F. Amplifier
1—6SA7GT	Converter
1—6SK7GT	I.F. Amplifier
1—6SQ7	Det., AVC, Audio
1—6V6GT	Power output
1—6X5GT	Rectifier

Voice Coil Impedance
3.2 ohms at 400 cycles

Power Output
1.2 watts, undistorted
2.5 watts, maximum

Sensitivity
10 microvolts average for 1 watt output

Selectivity
50 KC broad at 1000 times signal, at 1000 KC

Power Supply
6.3 volts DC
4.8 amp. average

Tuning Range
540 to 1600 KC

I.F. Frequency
455 KC

Loud Speaker
4" P.M.

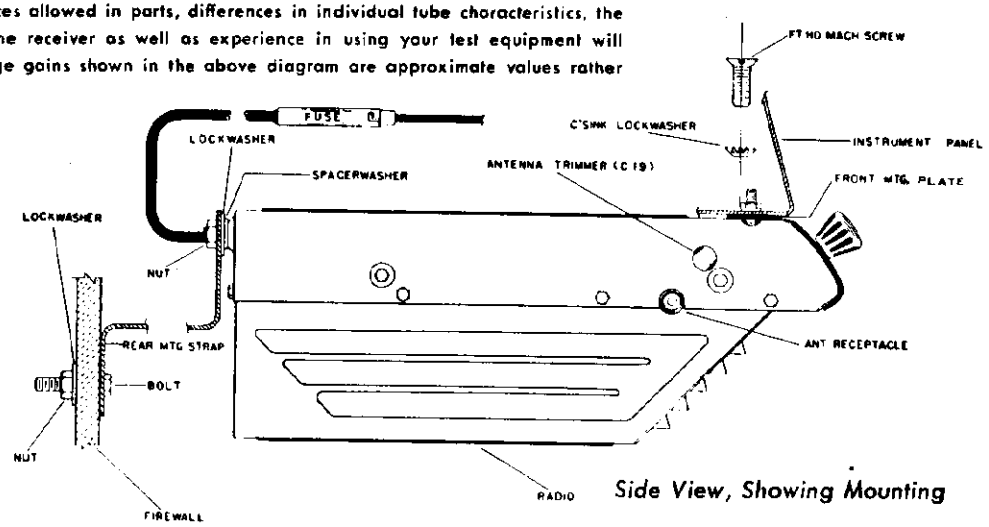

Side View, Showing Mounting

ALIGNMENT PROCEDURE

Volume control—Maximum, all adjustments.

No signal applied to antenna.

Power input—6.3 volts

Connect dummy antenna in series with output lead of signal generator.

Connect output meter across voice coil.

Connect ground lead of signal generator to chassis.

Repeat alignment procedure as a final check.

The following equipment is necessary for proper alignment:

Signal generator that will provide the test frequencies as listed.

Non-metallic screwdriver.

Output meter.

Dummy antennas—.1 MFD., .00025 MFD.

For alignment points refer to Figures 4, 5 and 8.

Dial Setting	*Generator Frequency*	*Dummy Ant.*	*Generator Connections*	*Trimmer Reference*	*Trimmer Adjustment*	*Trimmer Function*
Fully Open	455 KC	.1 MFD.	6SA7 Grid	T2	Maximum	Output I.F.
Fully Open	455 KC	.1 MFD.	6SA7 Grid	T1	Maximum	Input I.F.
Fully Open	455 KC	.00025 MFD.	Ant. lead	L6	Minimum	Wave trap
Fully Open	1600 KC	.00025 MFD.	Ant. lead	C1B	Maximum	Oscillator
Tune in signal from generator	1400 KC	.00025 MFD.	Ant. lead	C1A	Maximum	Antenna

NOTE: The antenna padder condenser, C19, (see Fig. 1) should be adjusted after the radio is installed in the car. Tune the receiver to a weak station at about 1100 KC and adjust this trimmer for maximum volume.

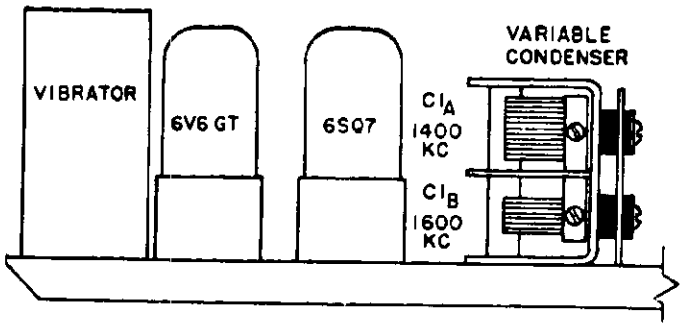

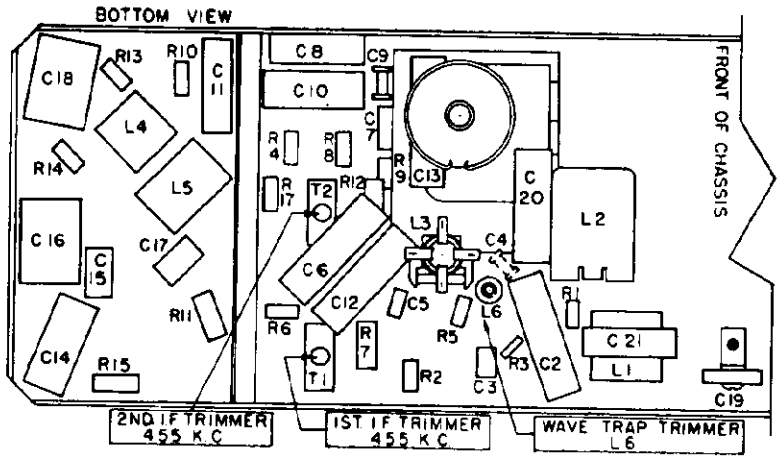

Component Parts Location

MODEL 4-B-31,
THE ROAMER

THE FIRESTONE TIRE & RUBBER CO.

SERVICE NOTES

Voltages taken from the different points of the circuit to the chassis are measured with volume control in maximum position, all tubes in their sockets, no signal applied, and with a volt meter having a resistance of 20,000 ohms per volt. These voltages are clearly shown on the voltage chart, (Fig. 7).

All voltages should be measured with an input voltage of 6.3 volts DC.

To check for open by-pass condensers, shunt each condenser with another one having the same capacity and voltage rating which is known to be good until the defective unit is located.

ALIGNING INSTRUCTION

Never attempt any adjustments on this receiver unless it becomes necessary to replace a coil or transformer, or the adjustments have been tampered with in the field. Always make certain that other circuit components, such as tubes, condensers, resistors, etc., are normal before proceeding with realignment.

If realignment is necessary follow the instructions given under the heading "ALIGNMENT PROCEDURE". After realignment has been completed repeat the procedure as a final check.

DIAL POINTER ADJUSTMENT

If it should become necessary to readjust the dial pointer for correct calibration, this may be easily done without removing the radio from the car by proceeding as follows:

A. Turn tuning knob to the right (clockwise) as far as it will go.

B. Remove snap button located on the right side of the case (viewed from the front), in the extreme upper front corner.

C. Insert screwdriver through hole in case and move dial pointer directly over white dot at high end of dial (1600KC).

D. Tune receiver to station of known frequency in the center of the dial and readjust pointer for more accurate indication, if necessary.

E. Replace snap button into hole in case.

CAUTION: Be careful not to scratch or damage dial scale or dial pointer when making this adjustment.

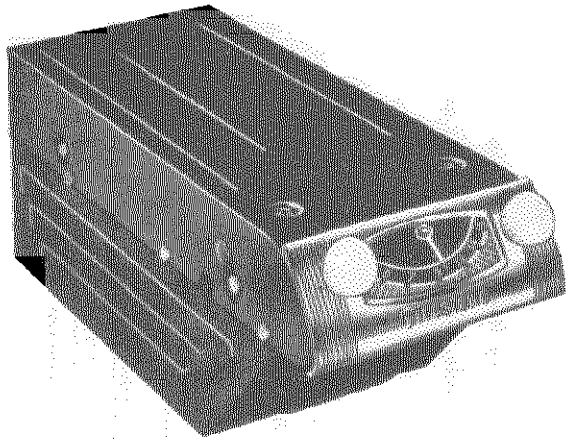

INSTRUCTIONS FOR REMOVING CHASSIS FROM THE CASE

The bottom cover (the one with the speaker louvers) can be removed to permit servicing of major components, such as tubes and vibrator, by removing the eight (8) screws holding it to the top cover. There are three (3) screws on each side, one (1) in the rear, and one (1) in the front.

CAUTION: Before attempting to remove the top cover, to service condensers, resistors, etc., the screw connecting the spark plate to the "A" terminal (inside case) must be removed. This is a round head screw, and is located on the rear of the case, close to the mounting stud bolt. It is recessed in a ½ inch hole in the case itself, thereby permitting contact with the spark plate.

After removing the spark plate screw, remove the two knobs by pulling forward and remove the eight (8) screws securing the cover to the chassis. Lift the chassis at the rear, at the same time moving it away from the front of the case so that the volume and tuning shafts will clear the holes in the cover.

NOTE: When reinstalling the chassis into the case, be sure the screw connecting the spark plate to the "A" terminal (inside case) is tightened very securely, otherwise the receiver will not operate properly.

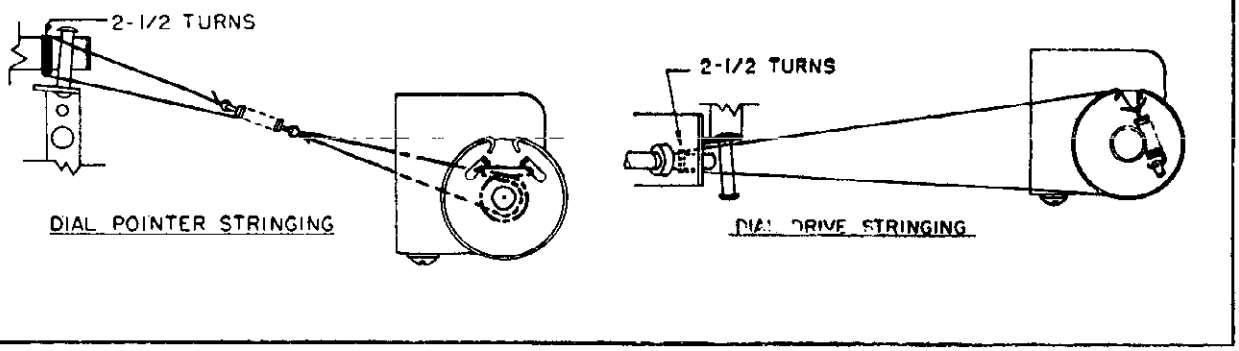

©John F. Rider

THE FIRESTONE TIRE & RUBBER CO. MODEL 4-B-31, The Roamer

Schematic Diagram Reference	Part No.	Description
		CONDENSERS
C1A, C1B	B19-196	Variable Condenser
C2, C6, C12	A16-187	.1 MFD. 400 Volt Condenser
C3	A15-196	100 MMFD Ceramic Condenser
C4	A15-202	20 MMFD Ceramic Condenser
C5	A15-204	50 MMFD Ceramic Condenser
C7, C15, C17	A15-176	250 MMFD Mica Condenser
C8	A16-190	.005 MFD. 600 Volt Condenser
C9	A16-195	.001 MFD. Ceramic Condenser
C10	A16-193	.05 MFD. 600 Volt Condenser
C11, C21	A16-192	.01 MFD. 400 Volt Condenser
C13	A16-188	.2 MFD. 400 Volt Condenser
C14	A16-185	.005 MFD. 1600 Volt Oil Filled Condenser
C16, C18	A16-184	.5 MFD. 100 Volt Condenser
C19	A20-145	Trimmer Condenser
C20	A16-189	.05 MFD. 400 Volt Condenser
C22	A18-289	20 MFD 25 Volt Electrolytic Condenser
C23		30 MFD 350 Volt Electrolytic Condenser
C24		20 MFD. 350 Volt Electrolytic Condenser
		RESISTORS
R1	A60-722	470 Ohm ½ Watt 20% Resistor
R13, R14	A60-752	100 Ohm ½ Watt 10% Resistor
R2, R5	A60-744	22K Ohm ½ Watt 10% Resistor
R3	A60-685	47K Ohm ½ Watt 20% Resistor
R4, R17	A60-726	2.2 Megohm ½ Watt 20% Resistor
R6	A60-753	220 Ohm ½ Watt 10% Resistor
R7	A60-716	15K Ohm 1 Watt 10% Resistor
R8	A60-728	10 Megohm ½ Watt 20% Resistor
R9	A60-667	220K Ohm ½ Watt 20% Resistor
R10	A60-731	470K Ohm ½ Watt 20% Resistor
R11	A60-754	270 Ohm 1 Watt 10% Resistor
R12	A60-698	10K Ohm 1 Watt 10% Resistor
R15	A60-694	470 Ohm 1 Watt 10% Resistor
R16	A24-177	Volume Control, 500,000 Ohms, with Switch
		COILS
L1	A10-513	Antenna Loading Coil
L2	B10 511	Antenna Coil
L3	A10-512	Oscillator Coil
L4	A33-229	Choke, "A" Line
L5	A33-228	Choke, Vibrator Hash
L6	A10-510	I.F. Trap Coil
T1	A10-508	1st I.F. Transformer
T2	A10-509	2nd I.F. Transformer
		TRANSFORMERS
T3	B80-242	Output Transformer (Part of Speaker)
T4	B80-243	Power Transformer
		DIAL PARTS
	A11-303	Bracket, Dial Scale
	A11-304	Bracket, String Guide
	A72-29	Bushing, Tuning Shaft Bearing
	A70-130	Clip, Spring, for Tuning Shaft
	B48-44	Dial Crystal
	C40-144	Dial Escutcheon
	A58-55	Dial Pointer
	B67-526	Dial Scale
	A52-270	Knob
	A89-10	Pilot Light, Type 47
	A71-39	Pilot Light Shield
	A65-37	Rivet, Shoulder, for String Guide Bracket
	A75-68	Shaft, Tuning
	A75-67	Shaft, for Dial Pointer
	A70-132	Spring, for Pilot Light Socket
	A70-133	Spring, String Tension, Pointer Drive and Tuning
		MISCELLANEOUS
	A83-421	Clip, I.F. Transformer Mounting
	A83-517	Clip, Oscillator Coil Mounting
	A43-10	Fuse, 15 Amp.
	A28-101	Gasket for Speaker
	A47-112	Grommet, Rubber (for Mounting Speaker and Variable Condenser)
	B31-134	Mounting Strap, Rear
	A31-140	Mounting Plate, Front
	S84-192	Mounting Parts Kit
	A87-38	Receptacle, Antenna Cable
	B79-362	Speaker, 4" P.M. (includes Output Transformer)
	S84-232	Suppression Kit Assembly
	A34-105	Vibrator
	A83-519	Wiper, Grounding, for Case Covers

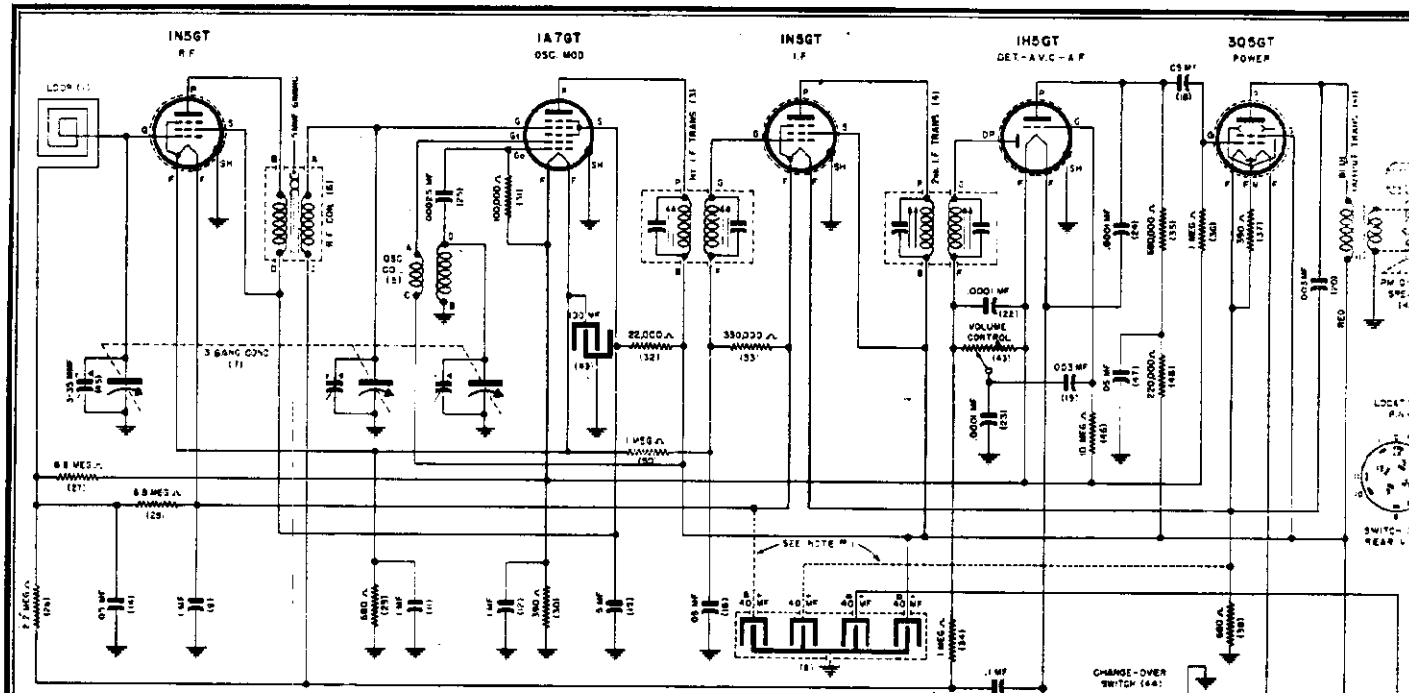

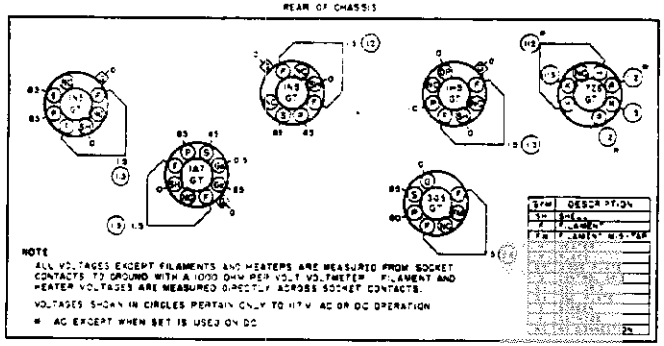

VOLTAGE TABLE
(BOTTOM VIEW OF CHASSIS)

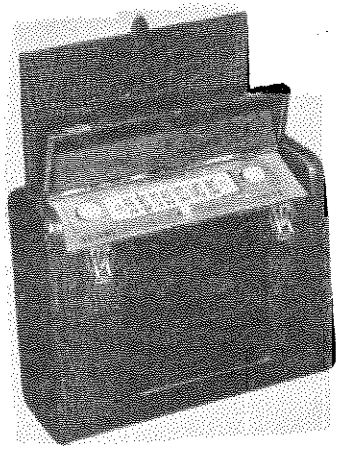

TUBE COMPLEMENT

1N5GT R.F., 1N5GT I.F.,
1A7GT Oscillator Modulator,
1H5GT Det., AVC, 3Q5GT Power Output, 117Z6GT Rectifier.

POWER SUPPLY	110-120 Volt AC-DC & Battery	LOUD SPEAKER	5 Inch P. M.
BATTERIES	Two 4½ Volt "A" Firestone Type 4-D-86 Two 45 Volt "B" Firestone Type 4-D-85	VOICE COIL IMPEDANCE	3.2 Ohms at 400 Cycles
TUNING RANGE	1620 to 530 K. C.	POWER OUTPUT	Undistorted — .25 Watts Maximum — .4 Watts
INTERMEDIATE FREQ	455 K. C.		

Be sure R.F. and I.F. stages are accurately aligned before measuring gain. R.F. gains can be measured with a "channel" type instrument containing a tuned and calibrated R.F. amplifier. A vacuum tube voltmeter may be used for audio gain measurements. Observe following precautions:

1. For all gain measurements connect signal generator as shown. Use 600 KC. signal with 400 cycle modulation (use nearby frequency if local station interferes.)
2. Be sure radio is carefully tuned to generator signal (use weak signal for sharp tuning.)
3. When using a "channel" type instrument carefully tune it for maximum output at desired frequency before making measurements.

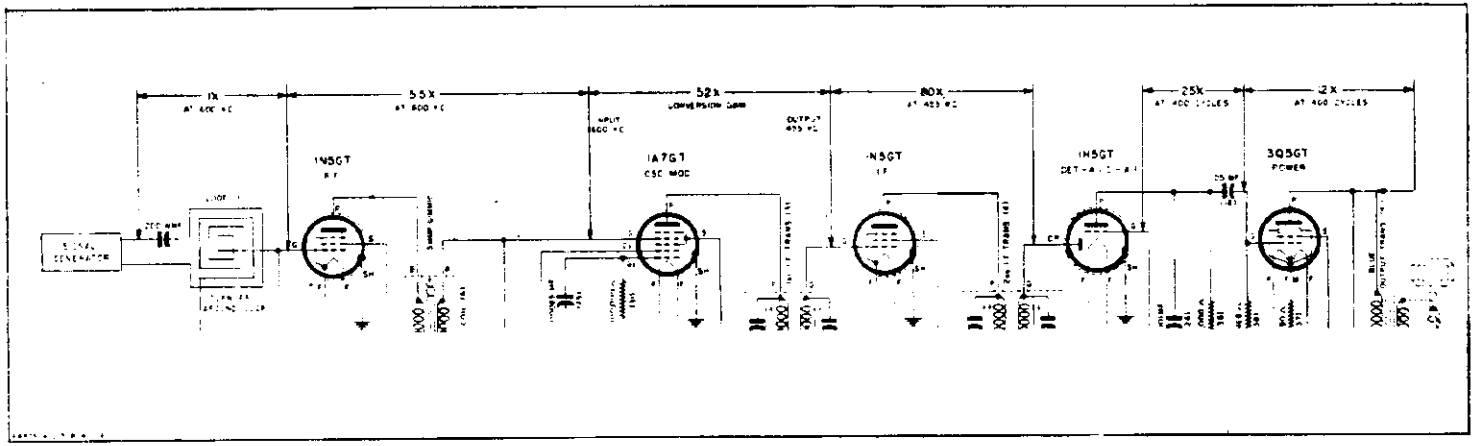

Differences in tube characteristics, tolerance of parts, adjustment of tuned circuits, and variations of line voltage will influence stage gain. Accuracy of measurements is dependent upon careful tuning of receiver to generator signal and experience in using your test equipment. These factors may create considerable variation in gain measurements.

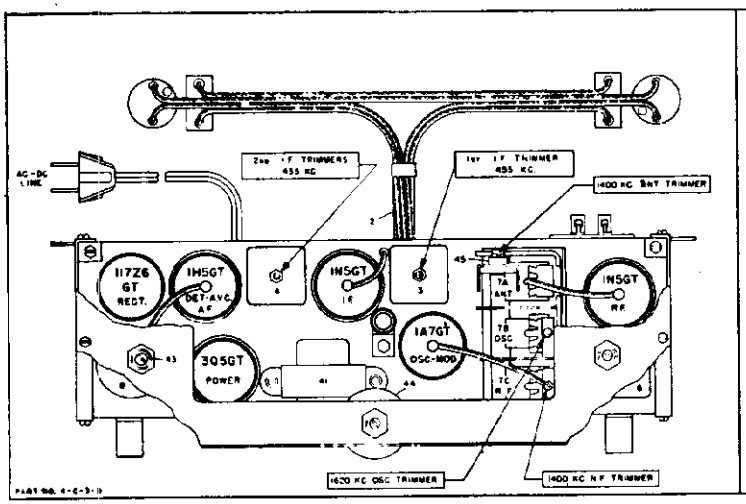

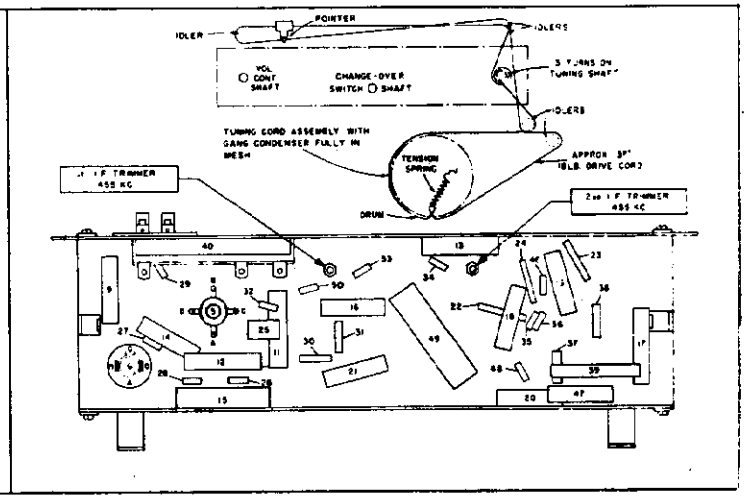

MODEL 4-C-3 THE FIRESTONE TIRE & RUBBER CO.

ALIGNMENT PROCEDURE

Be sure to follow procedure carefully and in the order given—otherwise the receiver will be insensitive and the dial calibration incorrect. For alignment procedure read tabulations from left to right. Make the adjustment marked (1) first, (2) next, (3) third, etc.

Before starting alignment:

(a) Check tuning dial adjustment by tuning gang condenser until plates touch maximum capacity stop (completely in mesh) at which point the dial needle must be exactly even with the last line at the low frequency end of the dial calibration. If dial needle does not point exactly to last line, move to correct position.

(b) Use an accurately calibrated test oscillator with some type of output measuring device.

(c) WHEN ADJUSTING 1620 KC OSCILLATOR TRIMMER AND 1400 KC R. F. TRIMMER, remove chassis from cabinet and disconnect the white-green and white-black loop connection wires from the two Fahenstock clips mounted on rear of chassis. Attach a 1 megohm resistor across these Fahenstock clips and feed output of test oscillator across the 1 megohm resistor.

(d) THE 1400 KC LOOP ANTENNA TRIMMER is accessible from the rear of the chassis when the inner back is removed. It should be adjusted only after all other adjustments have been made and with the set mounted in the cabinet, and the loop in an upright position. When aligning the 1400 KC Antenna Trimmer, couple test oscillator to receiver loop by: (1) make loop consisting of five to ten turns of No. 20 to No. 30 size wire, wound on a 2" or 3" form; (2) connect this loop across output of test oscillator; (3) place test oscillator loop near radio loop. BE SURE THAT NEITHER LOOP MOVES WHILE ALIGNING.

Steps	Set receiver dial to:	TEST OSCILLATOR: Adjust test oscillator frequency to:	TEST OSCILLATOR: Use dummy antenna in series with output of test oscillator consisting of:	TEST OSCILLATOR: Attach output of test oscillator to	Refer to parts layout diagram for location of trimmers mentioned below:
1	Any point where no interfering signal is received	Exactly 455 K. C.	0.2 Mfd. Condenser	High side to grid of 1A7GT tube. Low side to chassis (if non-Underwriter Approved) or Common Negative (if Underwriter Approved).	Adjust each of the 2nd I.F. transformer trimmer adjustment screws for maximum output, then adjust each of the 1st I.F. transformer trimmer adjustment screws for maximum output.
2	Rotate gang condenser to minimum capacity	Exactly 1620 K. C.	See paragraph (C) above	See paragraph (C) above	Adjust 1620 Osc. Trimmer for maximum 1620 K. C. signal.
3	Rotate gang condenser to 1400 K.C.	Exactly 1400 K. C.			Adjust 1400 K.C. R.F. Trimmer for maximum output.
4	Approximately 1400 K. C.	Approx. 1400 K. C.	See paragraph (D) above	See paragraph (D) above	Adjust 1400 K.C. antenna trimmer for maximum output.

PARTS LIST

Ill. No.	Part No.	Part Name	Description
1	20E120-1	Antenna	Cabinet Door Assembly Complete with Hinges & Door Stop
2	20E118	Cable	Battery Cable with "A" & "B" Plugs
3	20E53	Coil	1st I.F. Transformer
4	20E54	Coil	2nd I.F. Transformer
*5	20E237	Coil	Oscillator (use with 24E7A Cond.)
	OR		
*5	20E248	Coil	Oscillator (use with 24E7B Cond.)
6	20E48	Coil	R. F.
*7	24E7A	Condenser	Tuning, 3 Gang (use with 20E237 Osc. Coil).
	OR		
*7	24E7B	Condenser	Tuning, 3 Gang (use with 20E248 Osc. Coil).
8	25E11	Condenser	Tubular, Dry Elect. {40-40 Mfd. 150 V. / 40-40 Mfd. 25 V.}
9	23E218	Condenser	Tubular, .1 Mfd. 200 V.
10	23E218	Condenser	Tubular, .1 Mfd. 200 V.
11	23E218	Condenser	Tubular, .1 Mfd. 200 V.
12	23E218	Condenser	Tubular, .1 Mfd. 200 V.
13	23E218	Condenser	Tubular, .1 Mfd. 200 V.
14	23E216	Condenser	Tubular, .05 Mfd. 200 V.
15	23E224	Condenser	Tubular, .5 Mfd. 200 V.
16	23E216	Condenser	Tubular, .05 Mfd. 200 V.
17	23E416	Condenser	Tubular, .05 Mfd. 400 V.
18	23E216	Condenser	Tubular, .05 Mfd. 200 V.
19	23E406	Condenser	Tubular, .003 Mfd. 400 V.
20	23E406	Condenser	Tubular, .003 Mfd. 400 V.
21	23E408	Condenser	Tubular, .005 Mfd. 400 V.
22	23E39	Condenser	Mica, .0001 Mfd.
23	23E39	Condenser	Mica, .0001 Mfd.
24	23E39	Condenser	Mica, .0001 Mfd.
25	23E42	Condenser	Mica, .00025 Mfd.
26	27E225	Resistor	Carbon, 2.2 Megohm, 1/3 W.
27	27E685	Resistor	Carbon, 6.8 Megohm, 1/3 W.
28	27E685	Resistor	Carbon, 6.8 Megohm, 1/3 W.
29	27E681	Resistor	Carbon, 680 Ohm, 1/3 W.
30	27E391	Resistor	Carbon, 390 Ohm, 1/3 W.
31	27E104	Resistor	Carbon, 100,000 Ohm, 1/3 W.
32	27E223	Resistor	Carbon, 22,000 Ohm, 1/3 W.
33	27E334	Resistor	Carbon, 330,000 Ohm, 1/3 W.
34	27E105	Resistor	Carbon, 1 Megohm, 1/3 W.
35	27E684	Resistor	Carbon, 680,000 Ohm, 1/3 W.
36	27E105	Resistor	Carbon, 1 Megohm, 1/3 W.
37	27E391	Resistor	Carbon, 390 Ohm, 1/3 W.
38	27E681	Resistor	Carbon, 680 Ohm, 1/3 W.
39	27E1001	Resistor	Flexible Wire Wound, 75 Ohm, 2 W.
40	27E1000	Resistor	Wire Wound 500 & 1900 Ohms
41	22E15	Transformer	Output
42	1E18	Speaker	5" P.M. Dynamic
43	28E13	Volume Control	500,000 Ohms
44	29E10	Switch	4 Pole 3 Pos.
45	24E21	Condenser	Trimmer 3-35 Mmf.
46	27E106	Resistor	Carbon, 10 Megohm, 1/3 W.
47	23E216	Condenser	Tubular, .05 Mfd. 200 V.
48	27E224	Resistor	Carbon, 220,000 Ohm, 1/3 W.
**49	25E19	Condenser	Tubular, Dry Elect. 100 Mfd. 25 V.
50	27E105	Resistor	Carbon, 1 Megohm, 1/3 W.

MISCELLANEOUS PARTS

Part No.	Part Name	Description
17E3-2	"A" Battery Plug	2 Prong "A" Battery Plug
17E3-5	"B" Battery Plug	3 Prong "B" Battery Plug
7E63	Cabinet	Cabinet less Loop Door & Inner Barrier
41E1	Cord	6 Ft. Rubber Line Cord
20E121	Door Stop Assembly	Stop for Door & Loop Assembly
5E17	Dial Plate Assembly	Dial Back Plate Assembly less Dial Scale
5E16	Dial Front Plate	Metal Control Plate for Cabinet, less Crystal
9E6	Dial Crystal	Crystal for Front Plate
36E22	Dial Scale	Calibrated Scale
4E1	Dial Cord	18 lb. Dial Drive Cord
68E10	Dial Shaft	Complete Shaft Assem.
10E43	Dial Scale Fastener	Trimount Stud for fastening Scale
35E20-1	Dial Pointer	Dial Indicator
65E2	Dial Spring	Tension Spring for Drive Cord
37E1-1	Knob	1-1/8" Dia. for Tuning & Volume Control
37E2-1	Knob	½" Dia. for Changeover Switch
55E18	Hinge	Hinge for Cabinet Door & Loop Assembly
17E17	Pilot Lamp Socket Assembly	Pilot Lamp Socket Assembly less Lamp
40E2	Pilot Lamp	6-8 volt .250 amp. Type No. 44 Lamp
69E72F47	Rivet	For Hinge
69E92F47	Rivet	For Door Stop

**NOTE No. 1: In early production, the two low voltage sections of filter condenser, Illus. No. 8, Part 25E11, shown in dotted lines on circuit diagram, were not used and in their place the 100 Mfd., Illus. No. 49, Part 25E19 was used.
In later production all four sections of Illus. No. 8, Part 25E11, were used and condenser, Illus. No. 49, Part 25E19, was eliminated.

*NOTE No. 2: CHASSIS MARKED WITH LETTER "A" adjacent to serial number use Part 24E7A Gang Condenser and Part 20E237 Oscillator Coil.
CHASSIS MARKED WITH LETTER "B" adjacent to serial number use Part 24E7B Gang Condenser and Part 20E248 Oscillator Coil.
THESE GANG CONDENSERS AND OSCILLATOR COILS ARE NOT INTERCHANGEABLE.
DO NOT use Part 24E7A Gang Condenser with Part 20E248 Osc. Coil, or Part 24E7B Gang Condenser with Part 20E237 Osc. Coil.

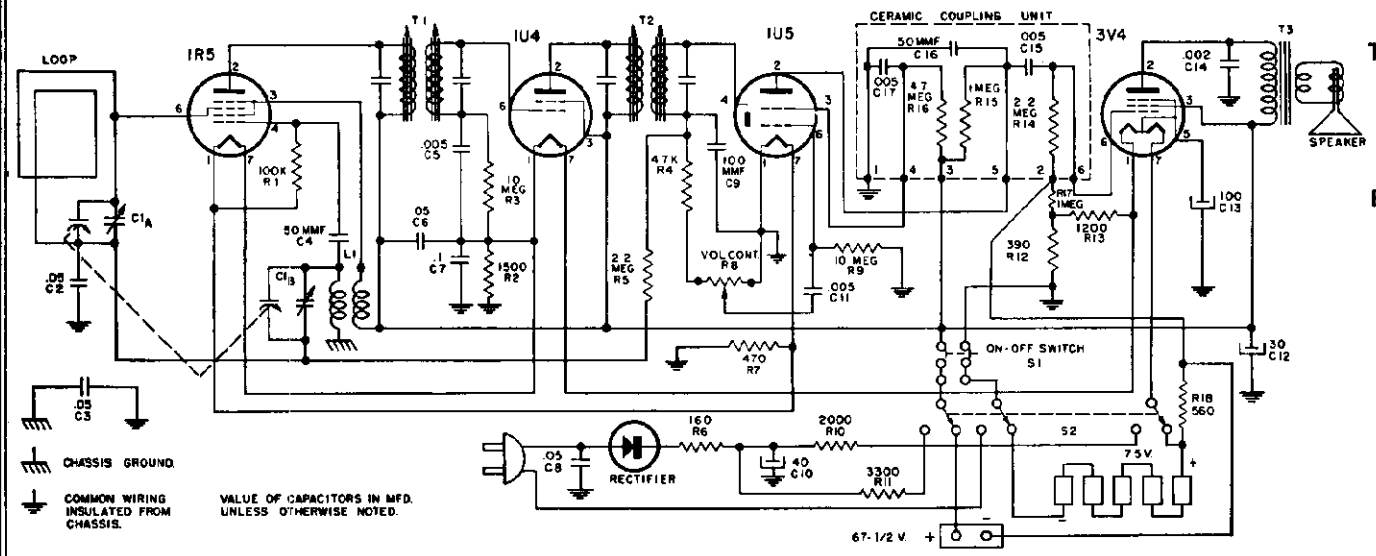



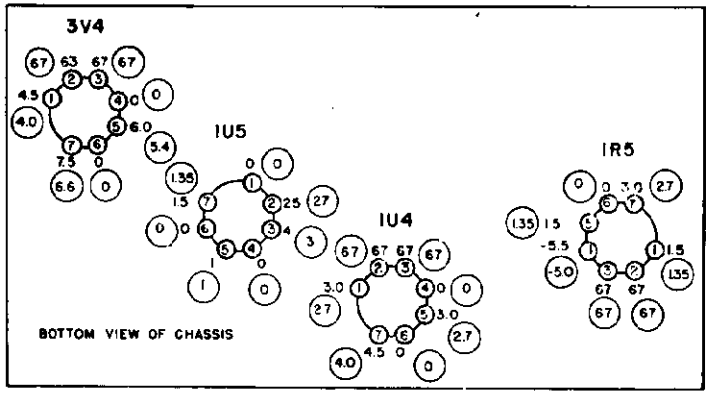

VOLTAGE CHART

All voltages are measured from tube pin to common "B" negative with a 20,000 ohm per volt voltmeter.

Voltages shown in circles are obtained when set is operated on 117 volt current.

Voltages shown outside the circles are obtained when the set is operated on batteries. New batteries in good condition should be used for these measurements.

Tube Complement
- 1R5—Oscillator Converter
- 1U4—I. F. Amplifier
- 1U5—AVC, Detector, 1st Audio
- 3V4—Power Output

Batteries
- Five 1½ volt "A" Firestone Stock No. 7-C-1
- One 67½ volt "B" Firestone Stock No. 4-D-84

I. F. Frequency
455 KC

Loud Speaker
4 inch P.M.

Voice Coil Impedance
3.2 ohms at 400 cycles

Power Output
Maximum 100 milliwatts

Power Supply
105-125 volt 60 cycle AC-DC or Self-Contained batteries

Tuning Range
545 to 1610 KC

ALIGNMENT PROCEDURE

The alignment should be made with volume control fully on, and the output from the signal generator as low as possible, to prevent A.V.C. action from interfering with correct alignment.

For alignment procedure read tabulations from left to right, and make the adjustment marked (1) first, (2) next, (3) third. Before starting alignment:

(a) Check calibrated dial knob to see that it is positioned correctly. Turn Variable Condenser to its maximum capacity, plates completely in mesh. Adjust the knob so that the right hand edge of the small 5 in the 55 calibration number is in line with the indicator (dot) on the cabinet.

(b) Use an accurately calibrated test oscillator with some type of output measuring device.

Steps	Set receiver dial to:	TEST OSCILLATOR: Adjust test oscillator frequency to:	TEST OSCILLATOR: Use dummy antenna in series with output of test oscillator consisting of:	TEST OSCILLATOR: Attach output of test oscillator to:	Refer to parts layout diagram for location of trimmers mentioned below:
1	Minimum capacity (fully open)	455 K.C.	.1 MFD. condenser	High side to grid of 1R5 tube. Low side to common negative. (through .25 MFD. Cond.)	Adjust each trimmer on the second I. F. transformer for maximum output—then adjust each trimmer on the first I. F. transformer for maximum output.
2	Minimum capacity (fully open)	Exactly 1610 K.C.	.1 MFD. condenser	High side to grid of 1R5 tube. Low side to common negative.	Adjust 1610 K.C. oscillator trimmer for maximum output.
3	Approx. 1400 K.C.	Approx. 1400 K.C.		Loosely coupled to Loop Antenna	Adjust 1400 K.C. antenna trimmer for maximum output.

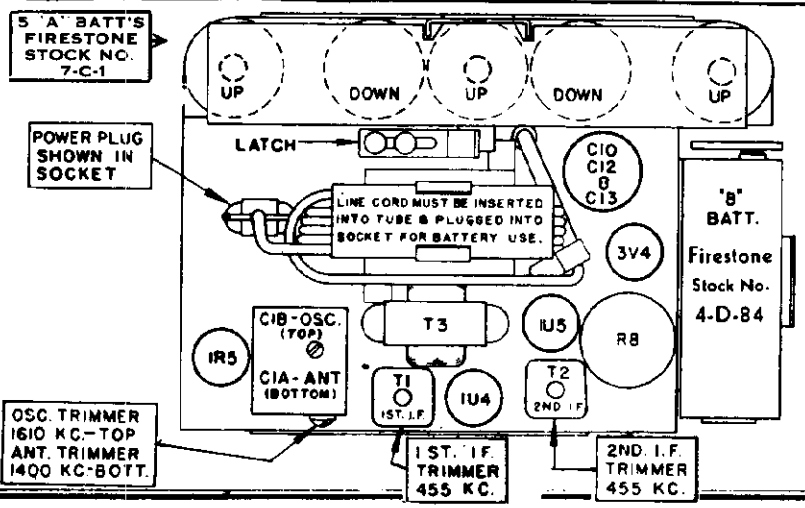

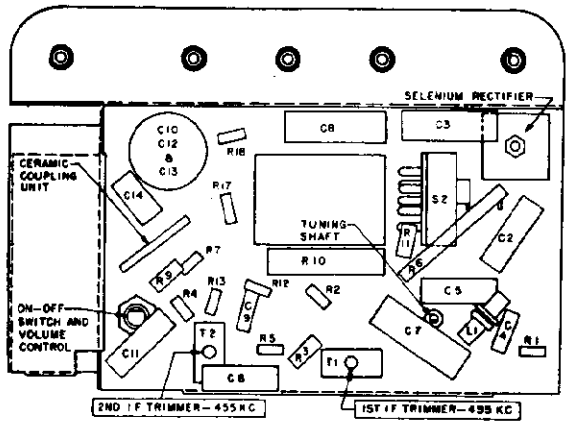

Before proceeding with stage measurements be sure the receiver is properly aligned. R.F. gains can be measured by a "channel" type instrument containing a tuned and calibrated R.F. amplifier. A vacuum tube voltmeter may be used for audio gain measurements. Observe the following precautions:

1. For gain measurements connect the high side of the signal generator through a .1 MFD condenser to the appropriate point as indicated on the diagram below. The ground of the signal generator should be connected to common negative. The RF and IF measurements are made using 30% 400 cycle modulation.
2. Be sure radio is carefully tuned to generator signal (use weak signal for sharp tuning).
3. When using a "channel" type instrument carefuly tune it for maximum output at desired frequency before making measurements.

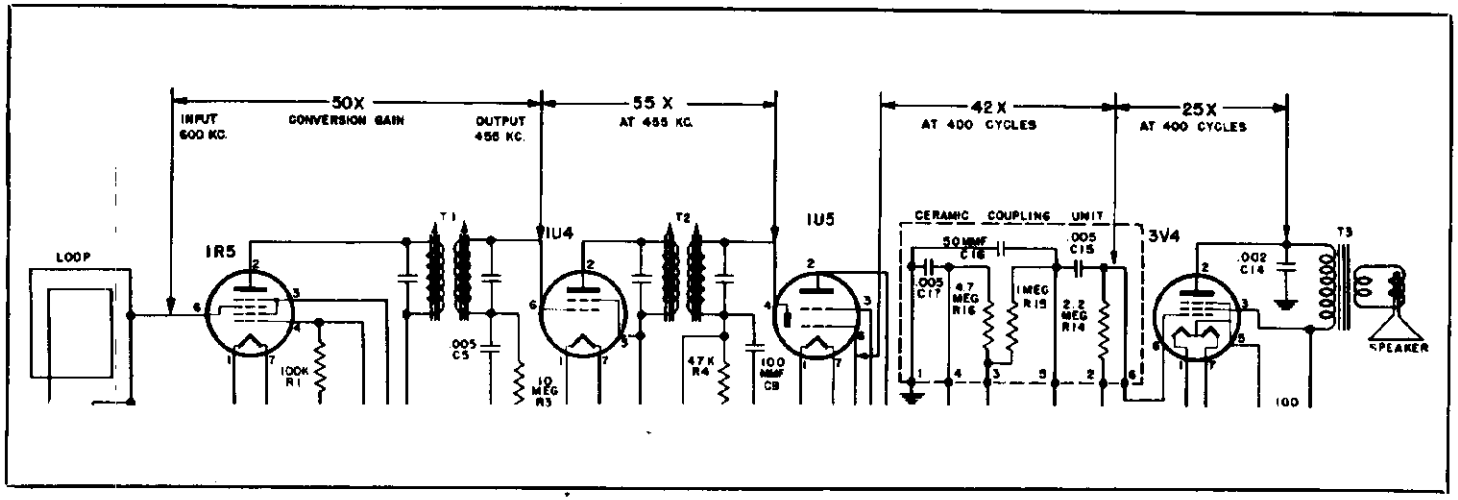

Stage gain measurements can be influenced by the normal manufacturers tolerances allowed in parts, differences in individual tube characteristics, the adjustment of the tuned circuits and variations in line voltage. Careful tuning of the receiver as well as experience in using your test equipment will determine the accuracy of the measurements taken. Due to all of these factors, the stage gains shown in the above diagram are approximate values rather than absolute as it is possible to introduce many variations in these measurements.

Code No.	Part No.	Description
C1A, C1B	B19-197	Variable condenser
C2, C6	A16-152	.05 MFD 200 volt condenser
C3	A16-158	.05 MFD 400 volt condenser
C4	A15-175	50 MMF mica condenser
C5, C11	A16-153	.005 MFD 600 volt condenser
C7	A16-157	.1 MFD 200 volt condenser
C8	A16-189	.05 MFD 400 volt condenser
C9	A15-188	100 MMF mica condenser
C10 C12 C13	A18-290	40 MFD 150 volt electrolytic cond. 30 MFD 150 volt electrolytic cond. 100 MFD 10 volt electrolytic cond.
C14	A16-182	.002 MFD 200 volt condenser
C15 C16 C17	*A17-100	.005 MMF .005 MFD 50 MMF See Note Below
R1	A60-671	100K ohm ½ watt 20% resistor
R2	A60-680	1500 ohm ½ watt 10% resistor

Code No.	Part No.	Description
R3, R9	A60-663	10 megohm ½ watt 20% resistor
R4	A60-685	47K ohm ½ watt 20% resistor
R5	A60-684	2.2 megohm ½ watt 20% resistor
R6	A60-725	160 ohm 5 watt 10% resistor
R7	A60-722	470 ohm ½ watt 10% resistor
R8, S1	A24-178	Volume control, with switch
R10	A60-757	2000 ohm 10 watt 10% resistor
R11	A60-724	3300 ohm 1 watt 10% resistor
R12	A60-655	390 ohm ½ watt 10% resistor
R13	A60-756	1200 ohm ½ watt 10% resistor
R14 R15 R15	*A17-100	2.2 megohm 1 megohm 4.7 megohm See Note Below
L1	A10-514	Oscillator coil
T1, T2	C10-475	1st and 2nd I.F. transformer
T3	B80-245	Output transformer
S2	A69-182	Switch, AC-DC, battery

*NOTE: C15, C16, C17, R14, R15, R16 are contained in the Ceramic Coupling Unit Part No. A17-100

MODEL 43-5006, GAMBLE-SKOGMO, INC.

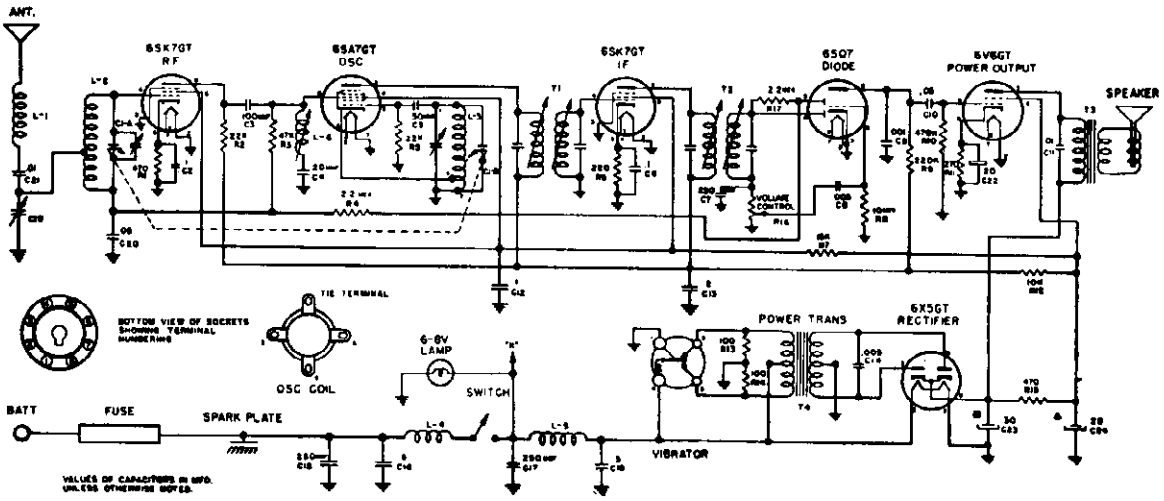

Fig. 3 Schematic Diagram

ALIGNMENT PROCEDURE

Volume control—Maximum, all adjustments.

No signal applied to antenna.

Power Input—6.3 volts.

Connect dummy antenna in series with output lead of signal generator.

Connect output meter across voice coil.

Connect ground lead of signal generator to chassis.

Repeat alignment procedure as a final check.

The following equipment is necessary for proper alignment:

Signal generator that will provide the test frequencies as listed.

Non-metallic screwdriver.

Output meter.

Dummy antennas—.1 MFD., .00025 MFD.

For alignment points refer to Figures 4 ad 5.

Dial Setting	Generator Frequency	Dummy Ant.	Generator Connections	Trimmer Reference	Trimmer Adjustment	Trimmer Function
Fully Open	455 KC	.1 MFD.	6SA7 Grid	T2	Maximum	Output I.F.
Fully Open	455 KC	.1 MFD.	6SA7 Grid	T1	Maximum	Input I.F.
Fully Open	455 KC	.00025 MFD.	Ant. lead	L6	Minimum	Wave trap
Fully Open	1600 KC	.00025 MFD	Ant. lead	C1B	Maximum	Oscillator
Tune in signal from generator	1400 KC	.00025 MFD.	Ant. lead	C1A	Maximum	Antenna

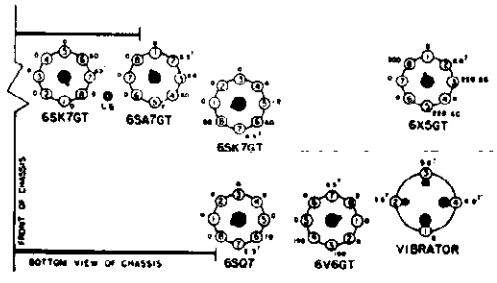

Fig. 4 Socket Voltages

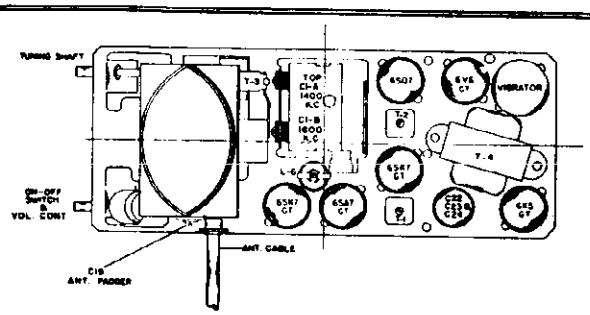

Fig. 5 Tube and Trimmer Locations

SERVICE NOTES

Voltages taken from the different points of the circuit to the chassis are measured with volume control in maximum position, all tubes in their sockets, no signal applied, and with a volt meter having a resistance of 20,000 ohms per volt. These voltages are clearly shown on the voltage chart, (Fig. 4).

All voltages should be measured with an input voltage of 6.3 volts DC.

FINAL ADJUSTMENTS

The input circuit has been especially designed to be used with a low capacity antenna, of the fish pole or whip type.

To adjust the antenna trimmer condenser, carefully tune the receiver to a weak station at approximately 600 kilocycles (K.C.). Remove the snap button covering the antenna trimmer (See Figure 2) and adjust the trimmer for maximum volume. A small screw driver will be needed for this purpose.

ALIGNING INSTRUCTION

Never attempt any adjustments on this receiver unless it becomes necessary to replace a coil or transformer, or the adjustments have been tampered with in the field. Always make certain that other circuit components, such as tubes, condensers, resistors, etc., are normal before proceeding with realignment.

INSTRUCTIONS FOR REMOVING CHASSIS FROM THE CASE

The bottom cover (the one with the speaker louvers) can be removed to permit servicing of major components, such as tubes and vibrator, by removing the eight (8) screws holding it to the top cover. There are three (3) screws on each side, one (1) in the rear, and one (1) in the front.

CAUTION: Before attempting to remove the top cover, to service condensers, resistors, etc., the screw connecting the spark plate to the "A" terminal (inside case) must be removed. This is a round head screw, and is located on the rear of the case, close to the mounting stud bolt. It is recessed in a ½ inch hole in the case itself, thereby permitting contact with the spark plate.

After removing the spark plate screw, remove the two knobs by pulling forward and remove the eight (8) screws securing the cover to the chassis. Lift the chassis at the rear, at the same time moving it away from the front of the case so that the volume and tuning shafts will clear the holes in the cover.

NOTE: When reinstalling the chassis into the case, be sure the screw connecting the spark plate to the "A" terminal (inside case) is tightened very securely, otherwise the receiver will not operate properly.

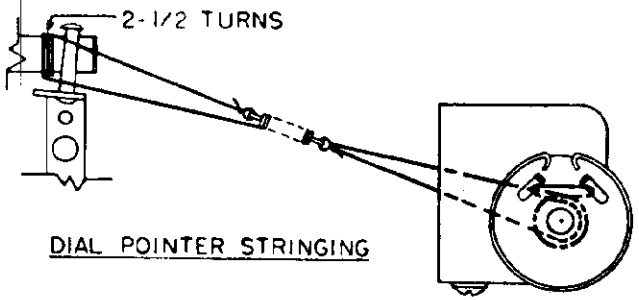

DIAL POINTER STRINGING

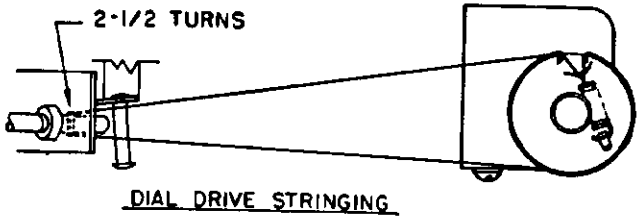

DIAL DRIVE STRINGING

MODEL 43-5006, GAMBLE-SKOGMO, INC.

SYMBOL	PART NO.	DESCRIPTION	VALUE	TOL.	RATING
		CONDENSERS			
C1A, C1B	B19-196	Variable condenser			
C2, C6, C12	A16-187	Condenser	.1 MFD		400 volt
C3	A15-196	Ceramic condenser	100 MMFD		
C4	A15-202	Ceramic condenser	20 MMFD		
C5	A15-204	Ceramic condenser	50 MMFD		
C7, C15, C17	A15-176	Mica condenser	250 MMFD		
C8	A16-190	Condenser	.005 MFD		600 volt
C9	A16-195	Ceramic condenser	.001 MFD		
C10	A16-193	Condenser	.05 MFD		600 volt
C11, C21	A16-192	Condenser	.01 MFD		400 volt
C13	A16-188	Condenser	.2 MFD		400 volt
C14	A16-185	Oil filled condenser	.005 MFD		1600 volt
C16, C18	A16-184	Condenser	.5 MFD		100 volt
C19	A20-145	Trimmer condenser			
C20	A16-189	Condenser	.05 MFD		400 volt
C22		Electrolytic condenser	20 MFD		25 volt
C23	A18-289	Electrolytic condenser	30 MFD		350 volt
C24		Electrolytic condenser	20 MFD		350 volt
		RESISTORS			
R1	A60-722	Resistor	470 ohm	20%	1/2 watt
R13, R14	A60-752	Resistor	100 ohm	10%	1/2 watt
R2, R5	A60-744	Resistor	22K ohm	10%	1/2 watt
R3	A60-685	Resistor	47K ohm	20%	1/2 watt
R4, R17	A60-726	Resistor	2.2 megohm	20%	1/2 watt
R6	A60-753	Resistor	220 ohm	10%	1/2 watt
R7	A60-716	Resistor	15K ohm	10%	1 watt
R8	A60-728	Resistor	10 megohm	20%	1/2 watt
R9	A60-667	Resistor	220K ohm	20%	1/2 watt
R10	A60-731	Resistor	470K ohm	20%	1/2 watt
R11	A60-754	Resistor	270 ohm	10%	1 watt
R12	A60-698	Resistor	10K ohm	10%	1 watt
R15	A60-694	Resistor	470 ohm	10%	1 watt
R16	A24-177	Volume Control, w/switch	500,000 ohm		
		COILS AND TRANSFORMERS			
L1	A10-513	Antenna loading coil			
L2	B10-511	Antenna coil			
L3	A10-512	Oscillator coil			
L4	A33-229	Choke, "A" line			
L5	A33-228	Choke, vibrator hash			
L6	A10-510	I.F. trap coil			
T1	A10-508	1st I.F. transformer			
T2	A10-509	2nd I.F. transformer			
T3	B80-242	Output transformer (part of speaker)			
T4	B80-243	Power transformer			
		CABINET, DIAL, AND TUNING PARTS			
	A11-303	Bracket, dial scale			
	A11-304	Bracket, string guide			
	A72-29	Bushing, tuning shaft bearing			
	A70-130	Clip, spring, for tuning shaft			
	D40-141	Dial escutcheon			
	A58-55	Dial pointer			
	B67-522	Dial scale			
	A28-101	Gasket for speaker			
	A52-257	Knob			
	A89-10	Pilot light, type G.E. No. 422			
	A65-37	Rivet, shoulder, for string guide bracket			
	A75-68	Shaft, tuning			
	A75-67	Shaft, for dial pointer			
	A70-132	Spring, for pilot light socket			
	A70-133	Spring, string tension, pointer drive, and tuning			
		MISCELLANEOUS			
	A83-421	Clip, I.F. transformer mounting			
	A83-517	Clip, oscillator coil mounting			
	A43-10	Fuse, 15 Amp.			
	A47-112	Grommet, rubber (for mounting speaker and variable condenser)			
	B31-134	Mounting strap, rear			
	A31-139	Mounting plate, front			
	S84-192	Mounting parts kit			
	A87-38	Receptacle, antenna cable			
	B79-362	Speaker, 4" P.M. (includes output transformer)			
	S84-193	Suppression kit assembly			
	A34-105	Vibrator			
	A83-519	Wiper, grounding, for case covers			

©John F. Rider

GAMBLE-SKOGMO, INC. MODEL 43-6927

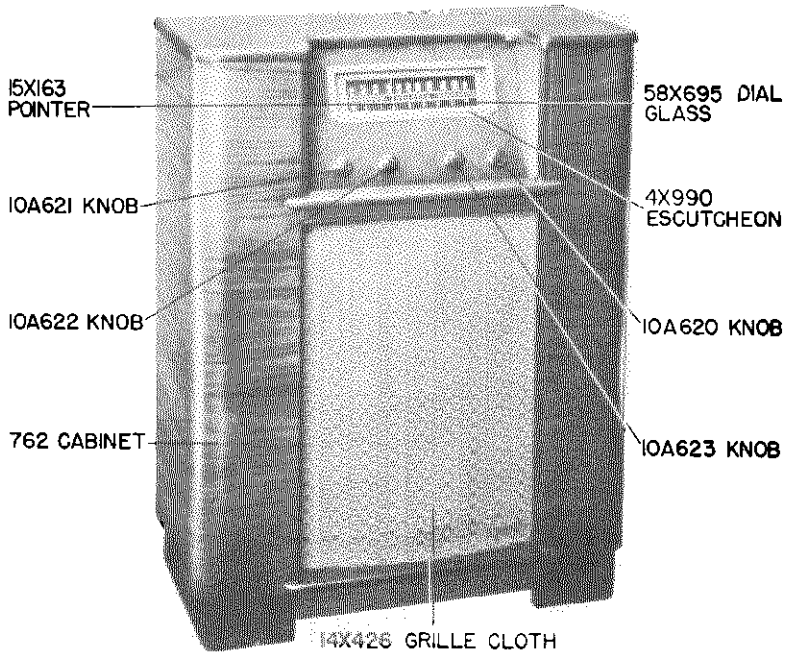

ALIGNMENT PROCEDURE

Volume Control—Maximum all adjustments.
Connect radio chassis to ground post of signal generator with a short heavy lead.
Allow chassis and signal generator to "heat up" for several minutes.
The following equipment is required for aligning:

An All Wave Signal Generator which will provide an accurately calibrated signal at the test frequencies as listed.
Output Indicating Meter—Non-metallic screwdriver.
Dummy Antennas—.1 mf., 50 mmf., and 400 ohms.

	SIGNAL GENERATOR FREQUENCY SETTING	CONNECTION AT RADIO	DUMMY ANTENNA	BAND SWITCH SETTING	CONDENSER SETTING	ADJUST TRIMMERS TO MAXIMUM
I. F.	455 Kc.	Grid of 6SA7 Pin 8	.1 mf.	B Range	Turn Rotor to Full Open	2nd I.F. (Pri.) and (Sec.) 1st I.F. (Pri.) and (Sec.)
RANGE B	1,620 Kc.	Antenna Lead	50 mmf.	B Range	Turn Rotor to Full Open	Oscillator Range B
	1,400 Kc.	Antenna Lead	50 mmf.	B Range	Tune Rotor to Max. Output Set Pointer to 1,400 Kc. (See Note A)	Antenna Range B
	600 Kc.	Antenna Lead	50 mmf.	B Range	Tune Rotor to Max. Output	Oscillator (600 Kc. Padder) Rock Rotor See Note B
	Repeat above steps at 1,620 and 600 Kc. until readjusting the oscillator. Range B Trimmer causes no further improvement of output.					
RANGE D	18.3 Mc.	Antenna Lead	400 ohm	D Range	Turn Rotor to Full Open	Oscillator Range D
	16 Mc.	Antenna Lead	400 ohm	D Range	Tune Rotor to Max. Output	Antenna Range D Rock Rotor—See Note B
LOOP RANGE B	Reassemble chassis in cabinet.					
	1,400 Kc.	Antenna Lead	50 mmf.	B Range	Tune Rotor to Max. Output	Antenna Range B

NOTE A—Set pointer at the 1,400 KC. mark on the dial scale. Attach pointer to drive cord.

NOTE B—Turn Rotor back and forth and adjust the trimmer until the peak of greatest intensity is obtained.

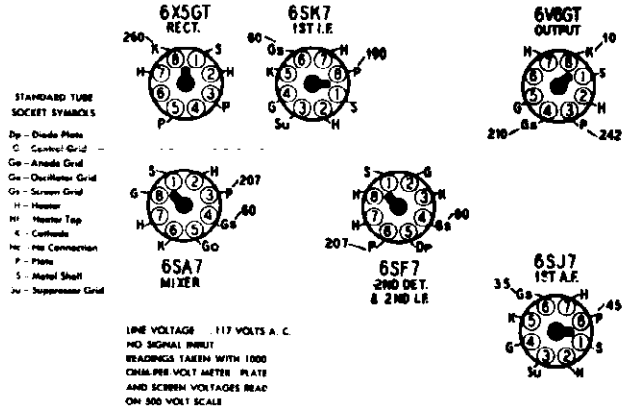

MODEL 43-6927 GAMBLE-SKOGMO, INC.

SPECIFICATIONS

6 Tube Superheterodyne, Including Rectifier Tube
Speaker.....10" PM Dynamic
Intermediate Frequency.....455 KC
Selectivity.....40 KC Broad at 1000 Times Signal
Sensitivity (For 0.5 Watt Output, with External Ant.
B Range.....9 Microvolts Average
D Range.....20 Microvolts Average

Power Supply.....105-125 Volts, 50 Cycles
Power Consumption.....(at 117 Volts AC) 46 Watts
Power Output...4 Watts Max. 2.3 Watts, 10% Harmonics
Tuning Frequency Range
B Range.....540-1600 Kilocycles
D Range.....5.75 - 18.3 Megacycles

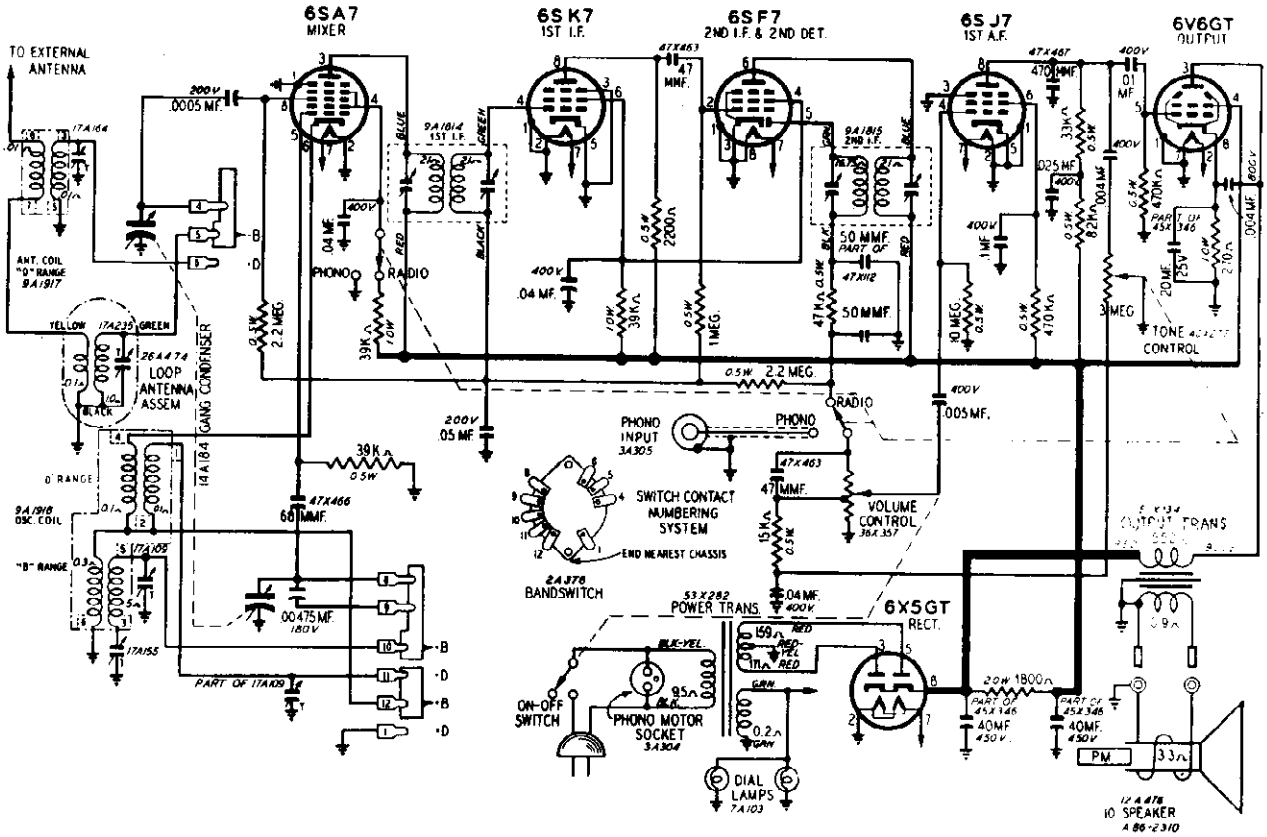

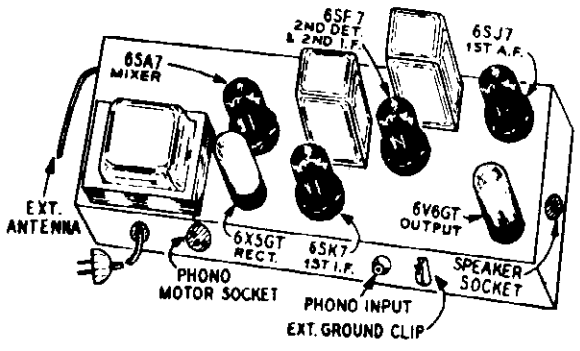

The Cicuit and tube complement of the receiver are as follows:

1 -	6SA7	1st Detector and Oscillator
1 -	6SK7	1st I-F Amplifier
1 -	6SF7	2nd I-F Amplifier and 2nd Dectector
1 -	6SJ7	1st Audio Amplifier
1 -	6V6GT	Power Output
1 -	6X5GT	Rectifier

2 - No. 47 dial lamps are used for dial illumination.

A jack is provided at the rear of the chassis for record player or other special service connections. This jack is switched in and out of the audio circuit with a switch controlled by the tone control knob. This switch also shorts out the R-F signal when it is turned to the phono position.

© John F. Rider

GAMBLE-SKOGMO, INC. MODEL 43-6927

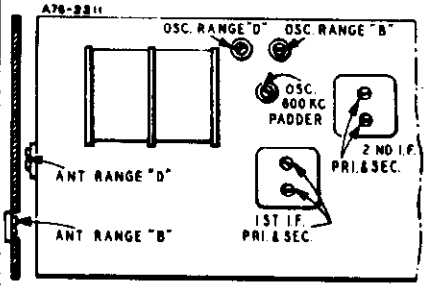

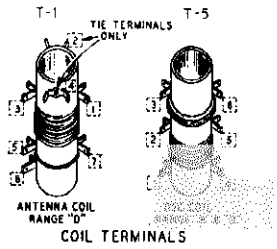

COIL TERMINALS

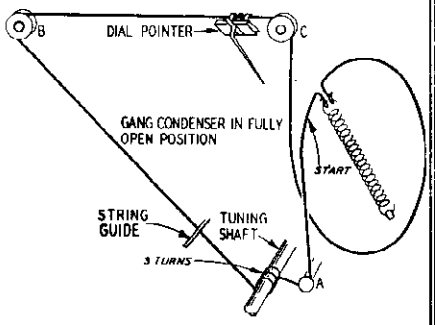

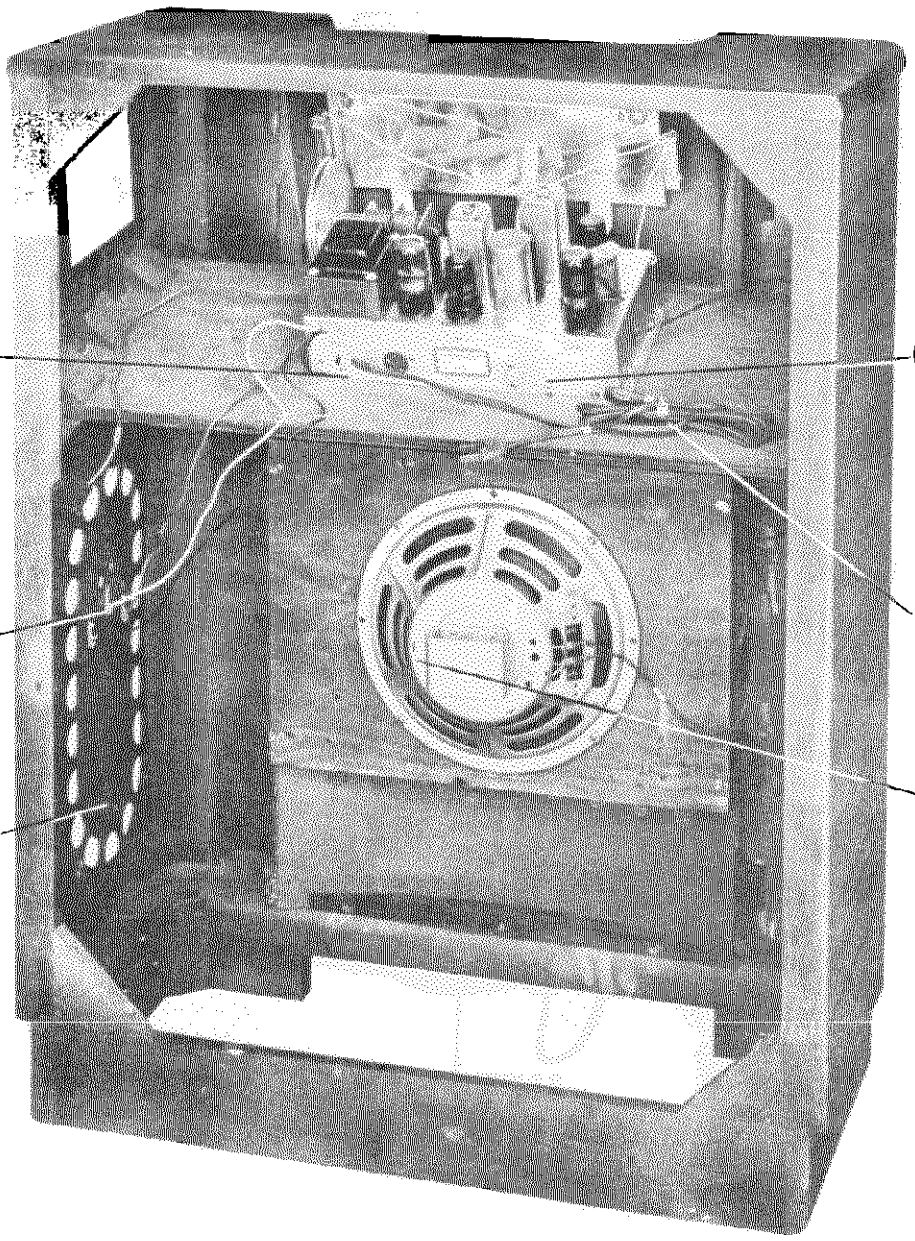

REAR CABINET VIEW

MODEL 43-6927 GAMBLE-SKOGMO, INC.

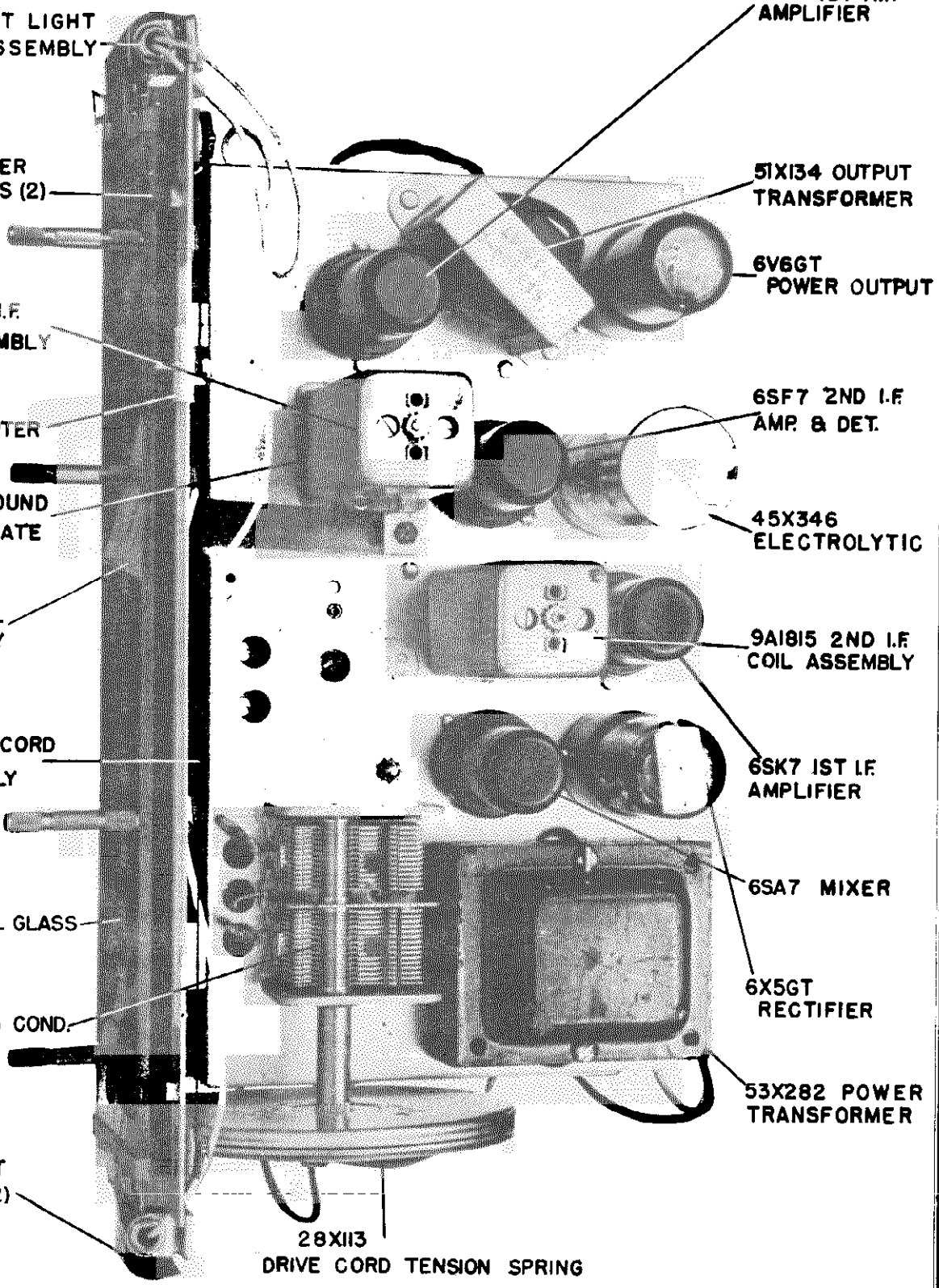

TOP CHASSIS VIEW

© John F. Rider

GAMBLE-SKOGMO, INC.

MODEL 43-6927

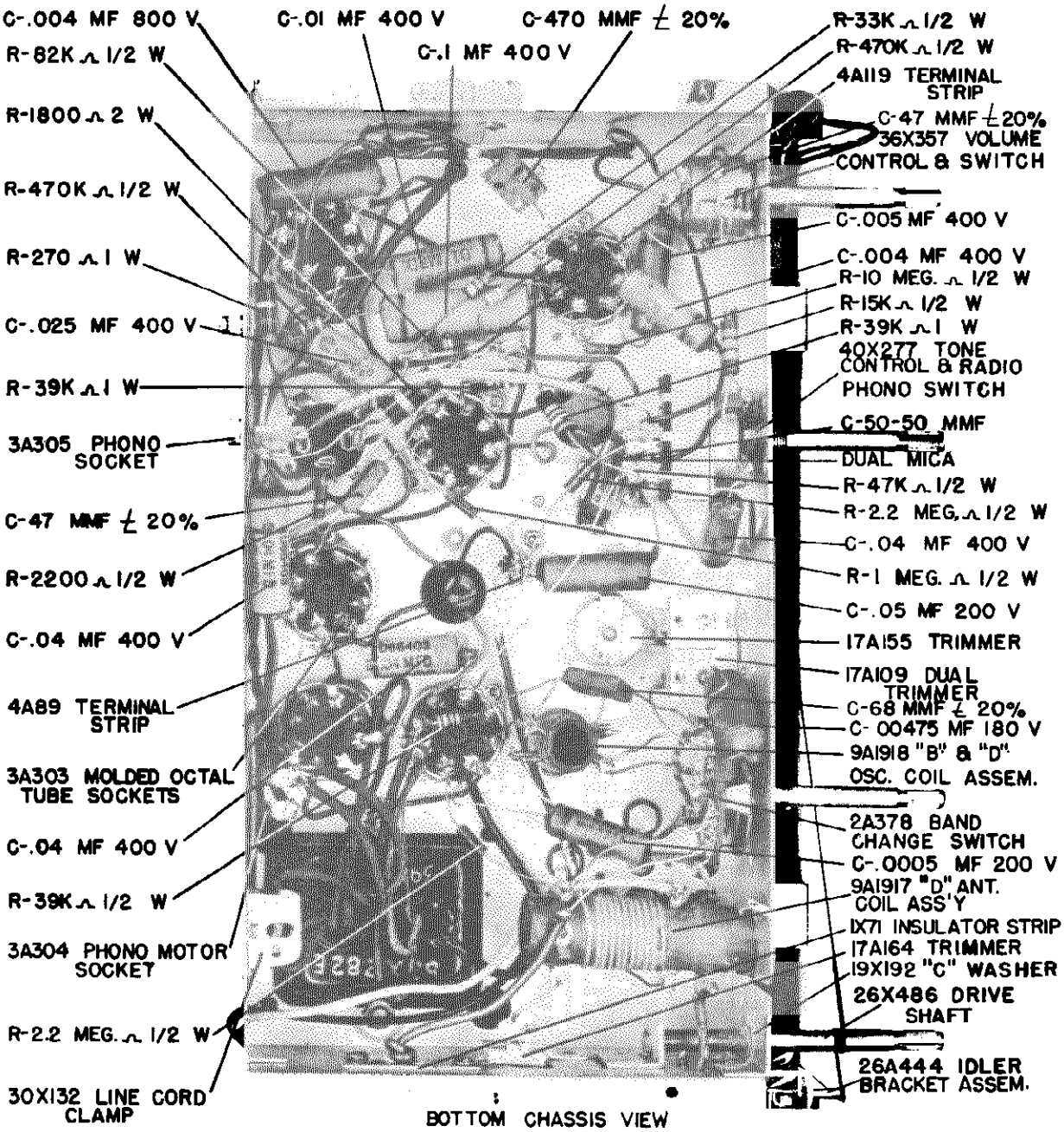

BOTTOM CHASSIS VIEW

Part No.	Description	Quantity
2A378	Band Change Switch	
3A303	Molded Octal Tube Socket	6
3A304	Phono Motor Socket	
3A304	Phono Socket	
4A89	Terminal Strip	
4A119	Terminal Strip	
7A103	#47 Pilot Light	2
7A199	Pilot Light Socket Assembly	
9A1814	1st I-F Coil Assembly	
9A1815	2nd I-F Coil Assembly	
9A1917	"D" Antenna Coil Assembly	
9A1918	"B" and "D" Oscillator Coil Assembly	
10A620	Knob (Tuning)	
10A621	Knob (Volume)	
10A622	Knob (Tone R.P.)	
10A623	Knob (SW-BC)	
12A476	Speaker, 10" P.M.	
14A184	Gang Condenser	
17A109	Trimmer Condenser, Dual, 2.5-55 mmf	
17A155	Trimmer Condenser, 350-430 mmf	
17A164	Trimmer Condenser, 5-50 mmf	

MODEL 43-6927 GAMBLE-SKOGMO, INC.

26A444	Idler Bracket consisting of:	
	25X1488 Idler Bracket	
	20X1450 Rivet	
26A474	"B"Range Loop Antenna Assembly consisting of:	
	9A1919 "B" Range Loop Antenna	
	17A235 Trimmer Condenser	
	#1701 Tubular Rivet 3/16"	
S58X10	Dial Assembly consisting of:	
	7X42 Cardboard Spacer	2
	S25X6 Dial Bracket & String Guide Assembly	
	58X695 Dial Glass	
	41X26 Light Diffuser	2
	20X268 Rivet	4
1X71	Insulator Strip	
2X310	Felt Washer	
4X990	Escutcheon	
6X21	Rubber Grommet	3
7X42	Cardboard Spacer	2
8X93	Rubber Bumpers	2
10X38	Drive Cord Assembly	
13X328	Line Cord and Plug Assembly	
15X163	Pointer	
19X8	Flat Washer (Mtg. chassis to cabinet)	4
19X25	Flat Washer	
19X45	#8 Washer (Mtg. power transformer)	2
19X192	"C" Washer (Mtg. drive shaft)	2
20X329	Condenser Cushion Stud	3
20X1449	#6-32 x $\frac{1}{2}$ Washer Hd. Machine Screw	
20X1491	Eyelet	
26X486	Drive Shaft	
27X56	Bottom Plate	
28X113	Drive Cord Tension Spring	
28X208	Coil Mounting Spring	
28X265	Ground Plate	
30X128	Solder Lug	
30X132	Line Cord Clamp	
30X138	Fahnestock Clip (External ground)	
30X522	Terminal	
30X523	Terminal	
36X357	Volume Control and Switch	
40X277	Tone Control and Radio Phono Switch	
41X26	Light Diffuser	2
45X346	3 Section Electrolytic Condenser	
	40 mfd, 450V - 40 mf, 450V - 20 mf, 25 V.	
46X289	Capacitor Tubular, .00475-180V	
47X112	50-50 mmf, Dual Mica Condenser	
47X463	Capacitor, Molded Mica, 47 mmf ± 20%	2
47X466	Capacitor, Molded, 68 mmf	
47X467	Capacitor, Molded, 470 mmf ± 20%	
51X134	Output Transformer	
53X282	Power Transformer (60 cycles)	
58X695	Dial Glass	
B66501	Capacitor, Tubular - .0005 mf - 200 V.	
B66503	Capacitor, Tubular - .05 mf 200 V, 25%	
B84153	Resistor, Carbon - 15,000 Ohms $\frac{1}{2}$ W	
B84222	Resistor, Carbon - 2200 Ohms $\frac{1}{2}$ W	
B84333	Resistor, Carbon - 33,000 ohms $\frac{1}{2}$ W	
B84393	Resistor, Carbon - 39,000 ohms $\frac{1}{2}$ W	
B84823	Resistor, Carbon - 82,000 ohms $\frac{1}{2}$ W	
B85105	Resistor, Carbon - 1 Megohm $\frac{1}{2}$ W	
B85106	Resistor, Carbon - 10 Megohm $\frac{1}{2}$ W	
B85225	Resistor, Carbon - 2.2 Megohm $\frac{1}{2}$ W	
B85473	Resistor, Carbon - 47,000 ohms $\frac{1}{2}$ W	2
B85474	Resistor, Carbon - 470,000 ohms $\frac{1}{2}$ W	
C84271	Resistor, Carbon - 270 ohms 1 W	2
C84393	Resistor, Carbon - 39,000 ohms 1 W	
C64253	Capacitor, Tubular - .025 mf 400 V	2
D64403	Capacitor, Tubular - .04 mf 400 V	
D66103	Capacitor, Tubular - .01 mf 400 V	
D66402	Capacitor, Tubular - .004 mf 400 V	
D66403	Capacitor, Tubular - .04 mf 400 V	
D66502	Capacitor, Tubular - .005 mf 400 V	2
D67104	Capacitor, Tubular - .10 mf 400 V	
D84182	Resistor, Carbon - 1800 ohms 210 W	
H66402	Capacitor, Tubular - .004 mf 800 V	
	8-32 Hex Nut, Cad. Pl. Mounting Power Transformer	2
	#8 Lockwasher, E. T. Shakeproof	2
	#6 x 1/4 Slotted Hex Hd. P-K Type "Z" Screw (Mounting Idler Bracket, Dial Bracket and Bottom Plate)	6
	#6 Lockwasher Mounting Oscillator and I-F Coils	5
	#6-32 Hex Nut	5
	3/8" Palnut, Type 9N1 (Mtg. Tone Control, Band Switch and Volume Control)	3
	#2 x 3/8" French Oval Hd. Wood Screw, Statuary Bronze (Mounting Escutcheon)	4
	10 x $\frac{1}{2}$" Slotted Hex Hd. P-K Type "Z" Screw (Mounting Chassis to Cabinet)	4
	#10 x 3/4" Washer Hd. Wood Screw (Mtg. Speaker	4
	#16 x 5/8" Flat Hd. Blue Finish Nail (Loop to Cabinet)	4
	#1701 5/32" Tubular Rivet (Mounting Parts)	8

©John F. Rider

GAMBLE-SKOGMO, INC.

MODEL 43-6951

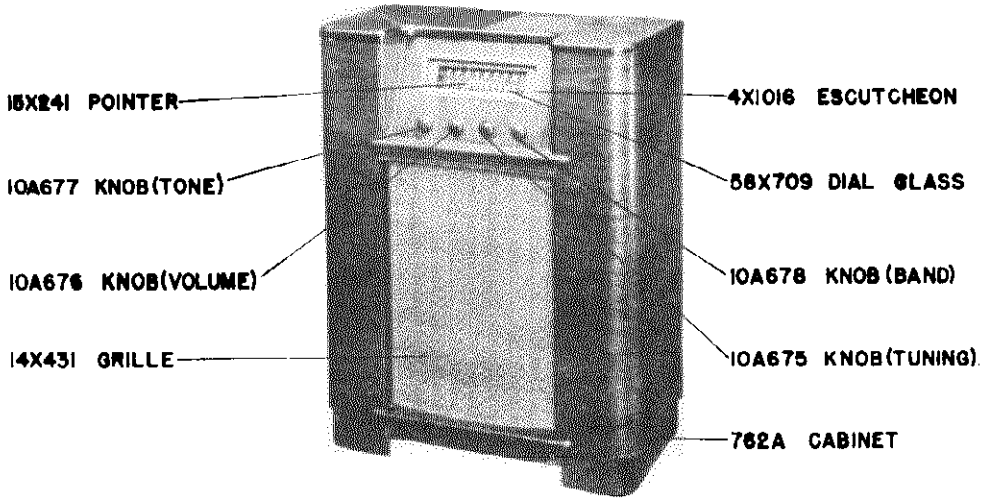

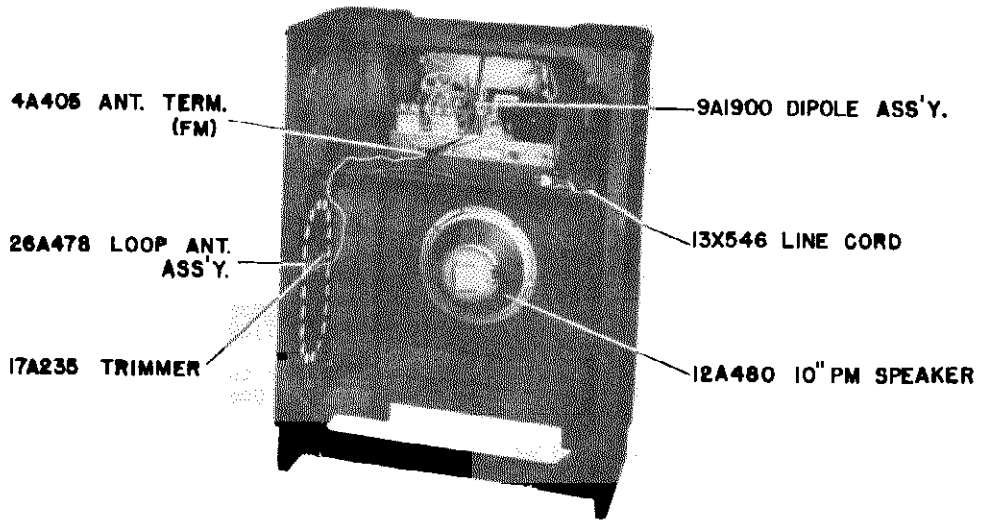

REAR CABINET VIEW

SPECIFICATIONS

7 Tube Superheterodyne.....Including Rectifier Tube
Power Consumption.....(at 117 Volts AC)...60 Watts
Selectivity.....AM-50KC Broad at 1000 Times Signal
I.F. FM-200KC Broad at 2 Times Down
I.F. FM-800KC Broad at 200 Times Down
AM Sensitivity...(For 0.5 Watt Output, with external Antenna) 20 mv avg
FM Sensitivity.....(For 0.5 Watt Output) 200 mv avg
Intermediate Frequency.....AM-455KC; FM-10.7 MC
Tuning Range.....AM-540-1600 KC, FM-88-108 MC
Speaker.....10" P.M. Dynamic
Power Output.....4.5 W Max.; 2.5 W 10% Harmonics
Power Supply.....105-125 Volts, AC 50-60 cycles

REMOVAL OF CHASSIS FROM CABINET

Before the chassis can be removed from the cabinet, it will be necessary to pull off the 4 control knobs, remove the three chassis mounting bolts and disconnect the leads from the chassis to the loop antenna, dipole terminals and speaker.

ALIGNMENT PROCEDURE

AM STAGES

Volume Control Maximum all adjustments.

Connect Radio Chassis to Ground Post of Signal Generator with a Short Heavy Lead.

Allow Chassis and Signal Generator to "Heat Up" for Several Minutes.

The following is required for aligning.

An All Wave Signal Generator Which Will Provide an Accurately Calibrated Signal at the Test Frequencies as Listed.

Output Indicating Meter, Non-Metallic Screwdriver Dummy Antennas - .1 mf, and 50 mmf.

MODEL 43-6951 GAMBLE-SKOGMO, INC.

FREQUENCY SETTING	SIGNAL GENERATOR CONNECTION AT RADIO	GROUND CONNECTION	DUMMY ANTENNA	GANG CONDENSER SETTING	ADJUST TUNING SLUGS (I-F ONLY) GRIMMERS (OSC. & ANT.)
455 KC	Control Grid 1st 6BA6 Pin No. 1	Chassis Base	.1 mf	Turn Rotor to Full Open	2nd I.F. Pri. & Sec.
455 KC	Control Grid 6BE6 Pin No. 7 1st Det.	Chassis Base	.1 mf	Turn Rotor to Full Open	1st I.F. Pri. & Sec.
1620 KC	Control Grid 6BE6 Pin No. 7	Chassis Base	.1 mf	Turn Rotor to Full Open	Oscillator Trimmer (AM)
1400 KC	External Antenna Lead	Chassis Base	50 mmf	Turn Pointer to 1400 KC See Note A	Antenna Trimmer (AM)

NOTE A - If the pointer is not at 1400 KC on the dial, reset pointer to the 1400 KC mark on the dial scale.

FM STAGES

Allow chassis and signal generator to warm up for several minutes. The following equipment is required for aligning:
An accurately calibrated signal generator providing unmodulated signals at the test frequencies listed below.
Non-metallic screwdriver.
Dummy Antennas and I-F Loading Resistor- .01 mf 300 ohms and 100 K ohms.

Zero center scale DC vacuum voltmeter having a range of approximately 3 volts.

(If a zero center scale meter is not available, a standard scale vacuum tube voltmeter may be used by reversing the meter connections for

SIGNAL GENERATOR

	FREQUENCY SETTING	CONNECTION AT RADIO	DUMMY ANTENNA	BAND SWITCH SETTING	CONDENSER SETTING	ADJUSTMENT FOR MAX. METER DEFLECTION
Discriminator	10.7 MC	6BA6 2nd I-F Pin 1 & Chassis	.01 mf	FM	Rotor to Full Open	Disc. Pri. Note A
	10.7 MC	6BA6 2nd I-F Pin 1 & Chassis	.01 mf	FM	Rotor to Full Open	Disc. Sec. Note B
	10.7 MC	6BA6 2nd I-F Pin 1 & Chassis	.01 mf	FM	Rotor to Full Open	Disc. Pri. Note A
	10.7 MC	6BA6 2nd I-F Pin 1 & Chassis	.01 mf	FM	Rotor to Full Open	Disc. Sec. Note B
I-F	10.7 MC	6BA6 1st IF Pin 1 & Chassis	.01 mf	FM	Rotor to Full Open	2nd I-F Pri. 2nd I-F Sec. Note C
	10.7 MC	Unsolder lead from Pin 7 to band switch. Insert 100K ohm resistor between Pin 7 & Ground and feed signal into Pin 7 of 6BE6	.01 mf	FM	Rotor to Full Open	1st I-F Pri. 1st I-F Sec. Note C
		RECHECK I-F ADJUSTMENTS IN ORDER GIVEN				
Ant. & Osc.	108.5 Note D	Disconnect dipole and connect generator to dipole terminals with resistor in series.	300ohms	FM	Rotor to Full Open	Osc. Trimmer (FM)
	104.5	Same as above	300ohms	FM	Tune rotor for max. AVC voltage	Ant. Trimmer (FM)
		RECHECK ANTENNA & OSC. ADJUSTMENTS IN ORDER GIVEN				

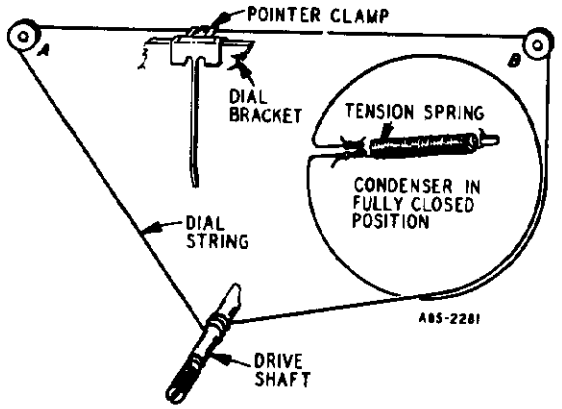
POINTER CLAMP
DIAL BRACKET
TENSION SPRING
CONDENSER IN FULLY CLOSED POSITION
DIAL STRING
DRIVE SHAFT
A
B
ABS-2281

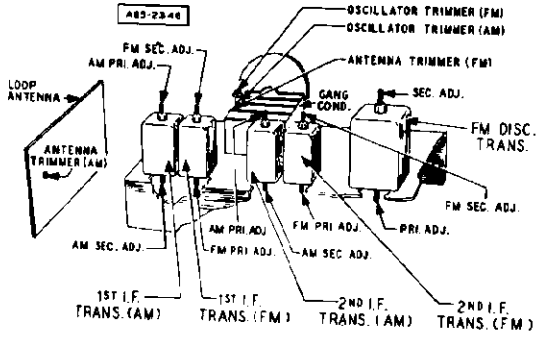
ABS-2346
OSCILLATOR TRIMMER (FM)
OSCILLATOR TRIMMER (AM)
FM SEC. ADJ.
AM PRI. ADJ.
ANTENNA TRIMMER (FM)
LOOP ANTENNA
GANG COND.
SEC. ADJ.
FM DISC. TRANS.
ANTENNA TRIMMER (AM)
FM SEC. ADJ.
AM PRI. ADJ.
FM PRI. ADJ.
PRI. ADJ.
AM SEC. ADJ.
FM PRI. ADJ.
AM SEC. ADJ.
1ST I.F. TRANS. (AM)
1ST I.F. TRANS. (FM)
2ND I.F. TRANS. (AM)
2ND I.F. TRANS. (FM)

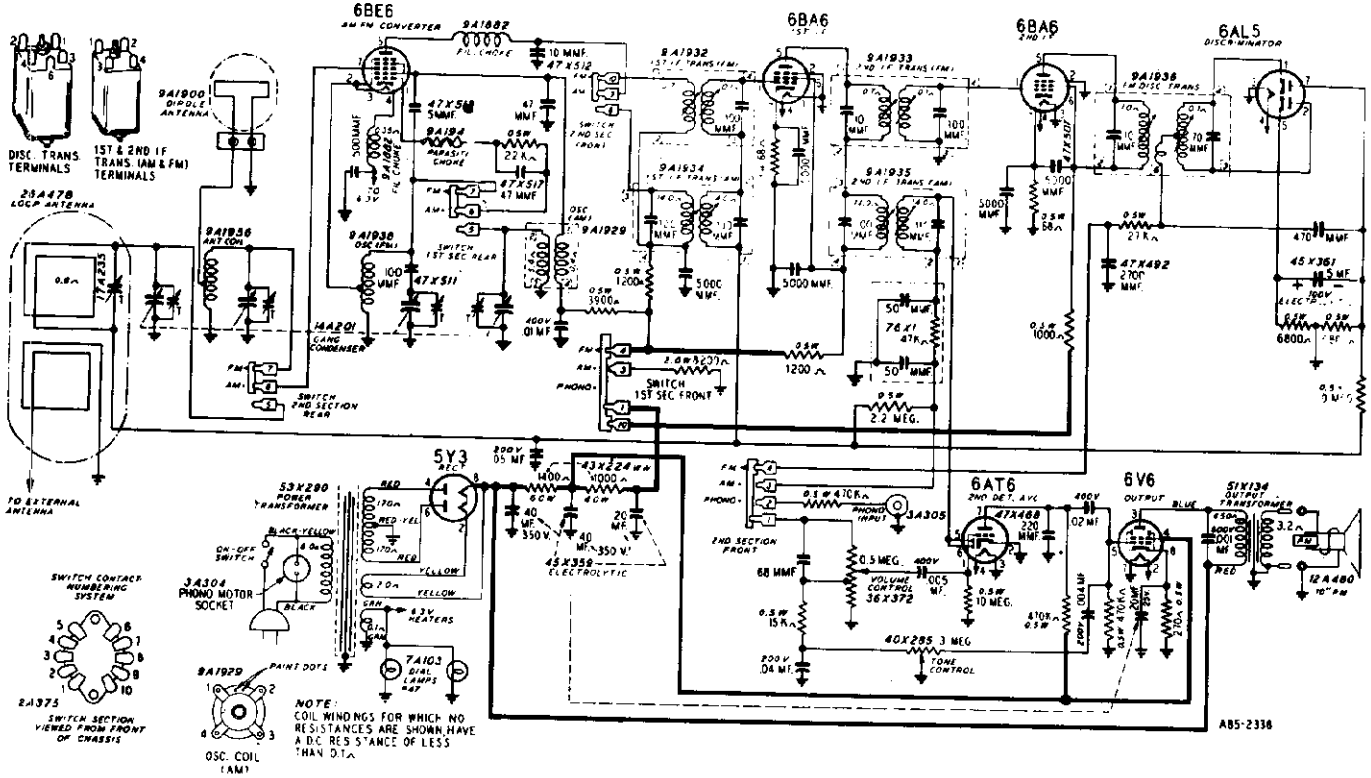
6BE6
6BA6
6BA6
6AL5
5Y3
6AT6
6V6
DISC. TRANS. TERMINALS
1ST & 2ND I.F. TRANS. (AM & FM) TERMINALS
TO EXTERNAL ANTENNA
LOOP ANTENNA
GANG CONDENSER
SWITCH CONTACT NUMBERING SYSTEM
SWITCH SECTION VIEWED FROM FRONT OF CHASSIS
3A304 PHONO MOTOR SOCKET
OSC. COIL (AM)
NOTE: COIL WINDINGS FOR WHICH NO RESISTANCES ARE SHOWN HAVE A D.C. RESISTANCE OF LESS THAN 0.1Ω
ABS-2338

MODEL 43-6951 GAMBLE-SKOGMO, INC.

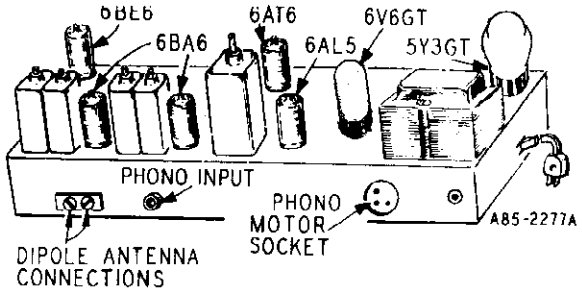

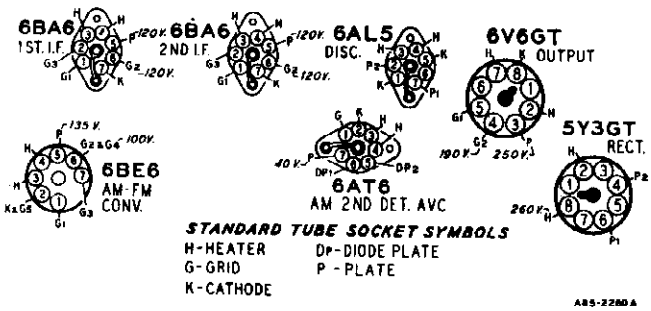

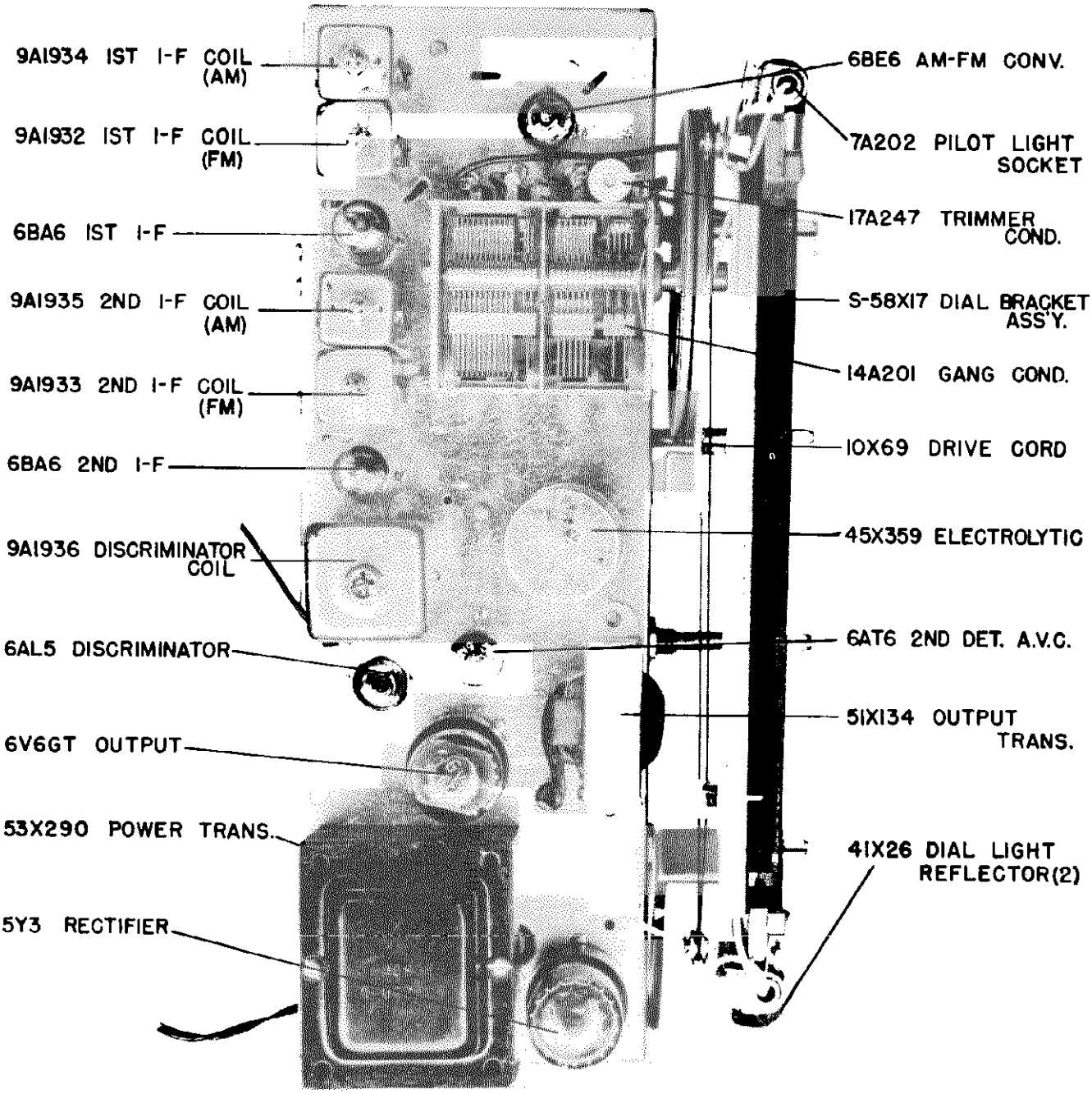

TOP CHASSIS VIEW

© John F. Rider

GAMBLE-SKOGMO, INC.

MODEL 43-6951

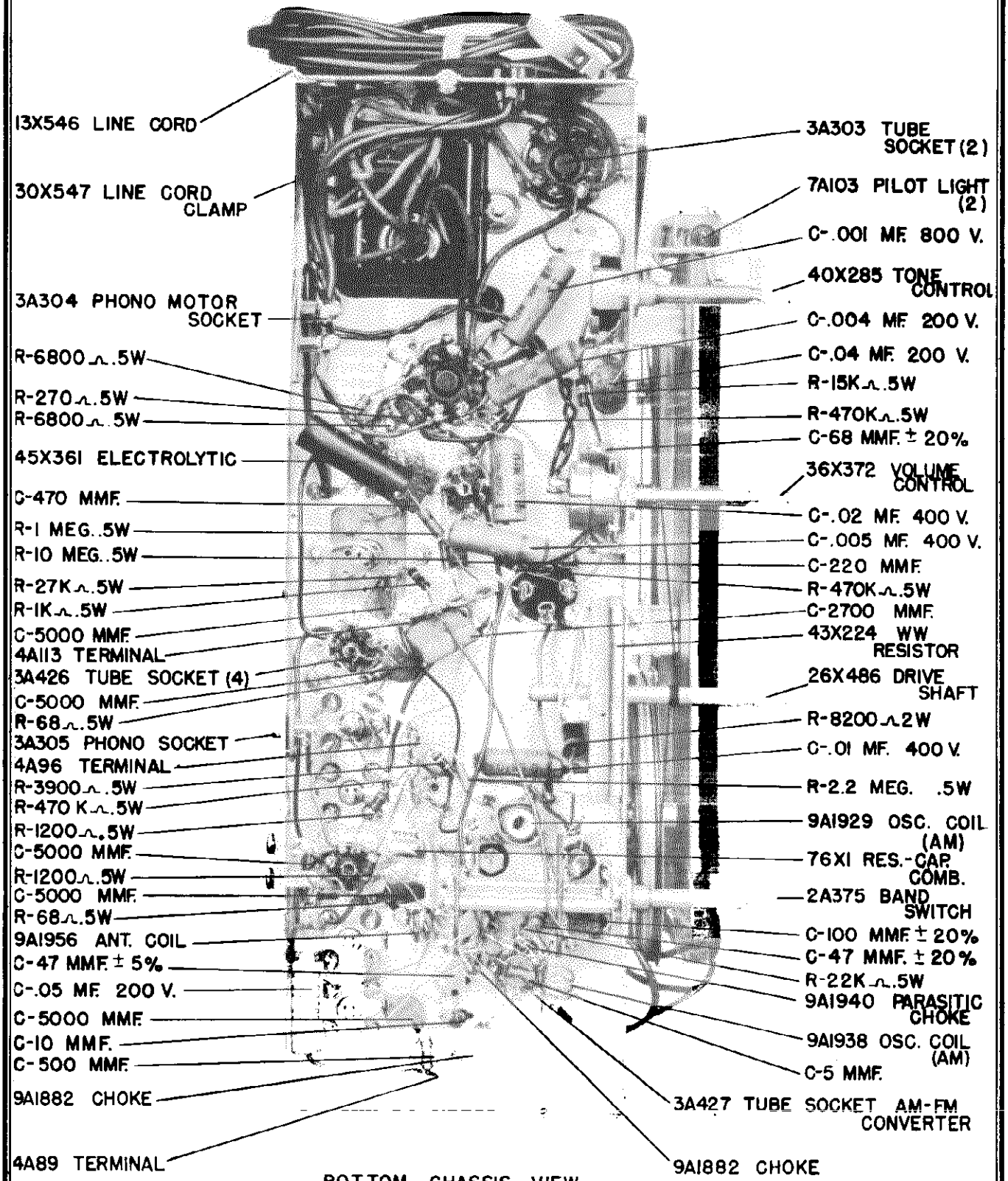

BOTTOM CHASSIS VIEW

PREFIX "C" INDICATES CONDENSER
PREFIX "R" INDICATES RESISTOR

© John F. Rider

MODEL 43-6951 GAMBLE-SKOGMO, INC.

Part No.	Description
2A375	Band Change Switch
3A303	Molded Octal Tube Socket (2)
3A304	Phono Motor Socket
3A305	Phono Socket (Single Pin)
3A426	Tube Socket (minature) (4)
3A427	Tube Socket (Miniature for AM-FM Converter)
4A89	Terminal Strip
4A96	Terminal Strip
4A113	Terminal Strip
4A405	Antenna Terminal Strip
7A103	#47 Pilot Light (2)
7A202	Pilot Light Socket Assembly
9A1882	Filament Choke (2)
9A1900	Di-Pole Antenna Assembly
9A1929	Oscillator Coil Assembly (AM)
9A1932	1st I.F. Coil Assembly (FM)
9A1933	2nd I.F. Coil Assembly (FM)
9A1934	1st I.F. Coil Assembly (AM)
9A1935	2nd I.F. Coil Assembly (AM)
9A1936	Discriminator Coil Assembly
9A1938	Oscillator Coil Assembly (FM)
9A1940	Parasitic Choke
9A1956	Antenna Coil Assembly
10A675	Knob (Tuning)
10A676	Knob (Off-On Volume)
10A677	Knob (Tone)
10A678	Knob (Ph-BC-FM)
12A480	10" P.M. Speaker
14A201	Gang Condenser & Pulley
17A247	Trimmer Condenser 3-12 mmf
26A478	"B" Range Loop Antenna Ass'y consists of: 9A1939 "B" Range Loop Antenna 17A235 Trimmer Condenser 1701 3/16" Tunular Rivet
S-58X17	Dial Bracket Assembly consisting of: 7X42 Cardboard Spacer (2) 8X185 Rubber Bands (2) 20X268 Rivets (6) 24X446 Idler Pulley (2) 25X1569 Dial Bracket 41X26 Dial Light Reflector (2) 58X709 Dial Glass
4X1016	Escutcheon
6X21	Rubber Grommet (4)
10X69	Drive Cord Assembly
13X546	Line Cord and Plug Assembly
15X241	Pointer
19X107	Flat Washer (Mtg. Speaker) (4)
19X145	#8 Flat Washer (Mtg. 53X290) (2)
19X179	Flat Washer (Mtg. Set to Cabinet) (3)
19X192	"C" Washer (drive shaft) (2)

Part No.	Description
20X329	Condenser Cushion Stud (3)
22X462	Chassis Base (with bracket)
26X486	Drive Shaft
25X1488	Idler Bracket
28X113	Drive Cord Tension Spring
28X208	Coil Mounting Spring
30X547	Line Cord Clamp
36X372	Volume Control & Switch
40X285	Tone Control
41X26	Dial Light Reflector (2)
43X224	W.W. Resistor, 1000 ohms 4W-1400 ohms 6W
45X359	4 Section Electrolytic, 40 mf, 350V-40 mf, 350V, 20 mf, 350V-20 mf, 25V
45X361	Dry Electrolytic, 5 mf, 100V
47X463	Capacitor, Ceramic; 47 mmf 20%
47X468	Capacitor, Ceramic; 220 mmf 20%
47X471	Capacitor, Molded Mica; 68 mmf 20%
47X492	Capacitor, Molded Mica; 2700 mmf 10%
47X507	Capacitor, Silvered Mica; 5000 mmf
47X508	Capacitor, Ceramic; 500 mmf 20%
47X510	Capacitor, Silvered Mica; 470 mmf 5%
47X511	Capacitor, Ceramic; 100 mmf 5%
47X512	Capacitor, Ceramic; 10 mmf 5%
47X513	Capacitor, Ceramic; 5.0 mmf 5%
47X517	Capacitor, Ceramic; 47 mmf 10%
47X518	Capacitor, Ceramic; 100 mmf 20%
51X134	Output Transformer
53X290	Power Transformer
57X709	Dial Glass
76X1	Resistor Capacitor Combination
B66402	Capacitor Tubular .004 mf 200V 25%
B66403	Capacitor Tubular .04 mf 200V 25%
B66503	Capacitor Tubular .05 mf 200V 25%
B83392	Resistor, Carbon; 3900 ohms $\frac{1}{2}$W
B83680	Resistor, Carbon; 68 ohms $\frac{1}{2}$W
B84102	Resistor, Carbon; 1000 ohms $\frac{1}{2}$W
B84122	Resistor, Carbon; 1200 ohms $\frac{1}{2}$W (2)
B84153	Resistor, Carbon; 15 K ohms $\frac{1}{2}$W
B84223	Resistor, Carbon; 22 K ohms $\frac{1}{2}$W
B84271	Resistor, Carbon; 270 ohms $\frac{1}{2}$W
B84273	Resistor, Carbon; 27 K ohms $\frac{1}{2}$W
B84682	Resistor, Carbon; 6800 ohms $\frac{1}{2}$W (2)
B85105	Resistor, Carbon; 1 megohm $\frac{1}{2}$W
B85106	Resistor, Carbon; 10 megohms $\frac{1}{2}$W
B85225	Resistor, Carbon; 2.2 megohms $\frac{1}{2}$W
B85474	Resistor, Carbon; 470 K ohms $\frac{1}{2}$W (3)
D66103	Capacitor, Tubular; .01 mf 400V 25%
D66203	Capacitor, Tubular; .02 mf 400V 25%
D66502	Capacitor, Tubular; .005 mf 400V 25%
D84822	Resistor, Carbon; 8200 ohms 2.0 W
H66102	Capacitor, Tubular; .001 mf 800V 25%

FM ALIGNMENT NOTES

Note A - The zero center scale DC vacuum tube voltmeter is to be connected between chassis ground and the A.V.C. line at the 27 K. ohm resistor and its junction with terminal strip. A signal of .1 volt must be fed into the receiver for this adjustment. Note output voltage on the zero center DC vacuum tube voltmeter.

Note B - Disconnect zero center DC vacuum tube voltmeter from A.V.C. and connect it to the audio takeoff point at the 1 megohm resistor and its junction with the terminal strip. Adjust for zero voltage indication.

Note C - Connect zero center DC vacuum tube voltmeter as in Note A. Adjust input to give same output on the zero center DC vacuum tube voltmeter as in Note A.

Note D - Remove the 100 K ohm load resistor and solder the lead from pin 7 of 6BE6 tube to the banc switch before attempting to check the antenna and oscillator adjustments.

© John F. Rider

GAMBLE-SKOGMO, INC.

MODELS 43-7603, 43-7604

SPECIFICATIONS

6 Tube Superheterodyne, Including Rectifier Tube
Speaker.....10" PM Dynamic
Intermediate Frequency.....455 KC
Selectivity..... 40 KC Broad at 1000 Times Signal
Sensitivity (For 0.5 Watt Output, with External Antenna)
B Range .....9 Microvolts Average
D Range .....20 Microvolts Average

Power Supply ..... 102-125 Volts, 60 cycle
Power Consumption (at 117 Volts AC) 45 Watts (norma
65 Watts (phono)
Power Output ..... 4 Watts Maximum 2.3 Wat
10% Harmonics
Tuning Frequency Range
B Range .....540-1600 Kilocycles
D Range .....5.75 - 18.3 Megacycles
Record Changer .....Plays ten 12" or twelve 10"

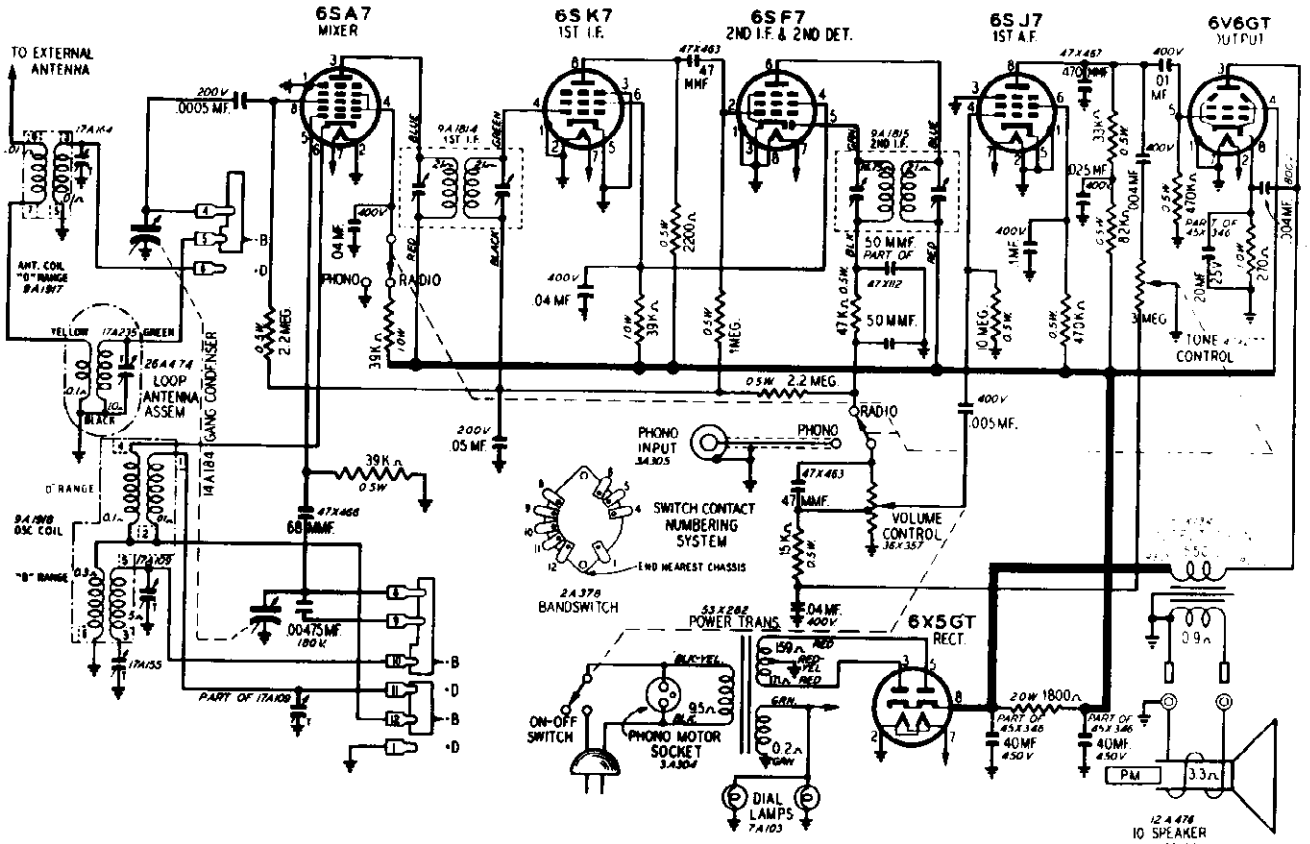

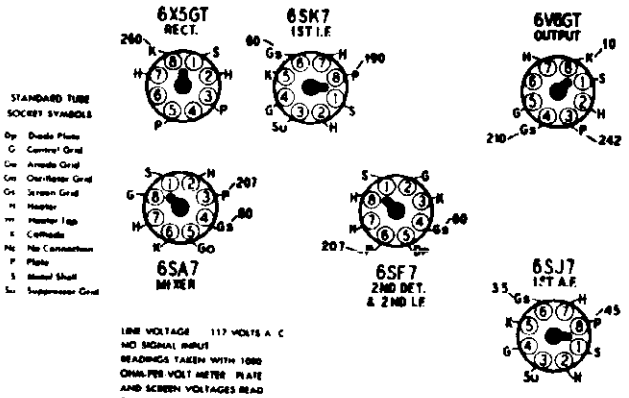

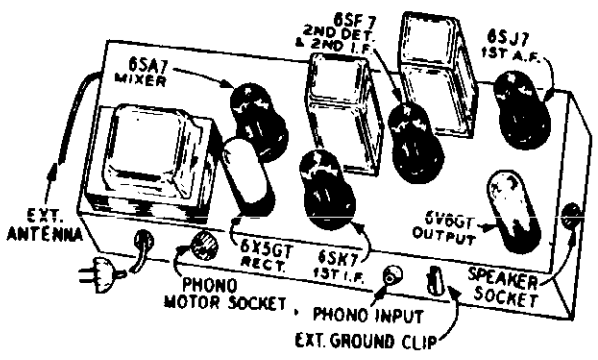

MODELS 43-7603, 43-7604

GAMBLE-SKOGMO, INC.

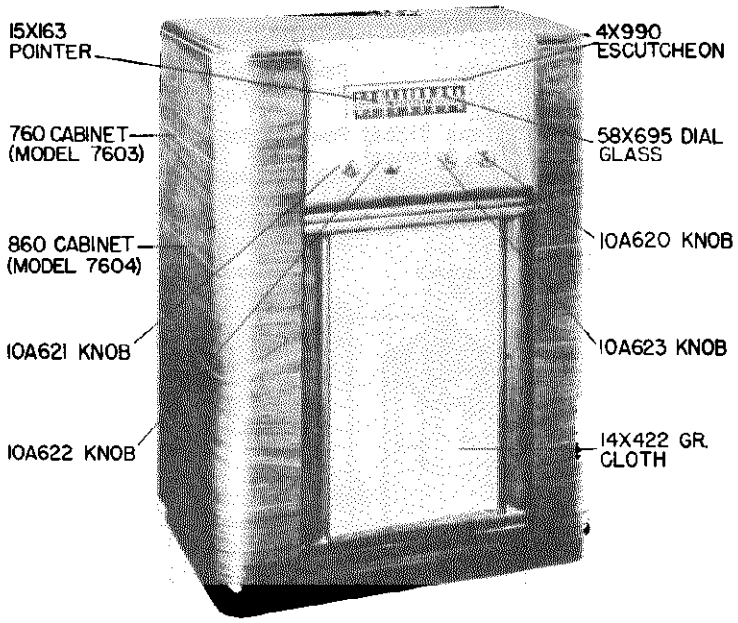

The automatic record changer is connected to the rear of the chassis through jacks marked "Phono" and "Phono Motor". The "Phono" jack is switched in or out of the audio circuit by a switch controlled by the tone control knob. This switch also shorts out the r-f signal when it is turned to the phono position

ALIGNMENT PROCEDURE

Volume Control—Maximum all adjustments.
Connect radio chassis to ground post of signal generator with a short heavy lead.
Allow chassis and signal generator to "heat up" for several minutes.
The following equipment is required for aligning:

An All Wave Signal Generator which will provide an accurately calibrated signal at the test frequencies as listed.
Output Indicating Meter—Non-metallic screwdriver.
Dummy Antennas—.1 mf., 50 mmf., and 400 ohms.

	SIGNAL GENERATOR FREQUENCY SETTING	CONNECTION AT RADIO	DUMMY ANTENNA	BAND SWITCH SETTING	CONDENSER SETTING	ADJUST TRIMMERS TO MAXIMUM
I. F.	455 Kc.	Grid of 6SA7 Pin 8	.1 mf.	B Range	Turn Rotor to Full Open	2nd I.F. (Pri.) and (Sec.) 1st I.F. (Pri.) and (Sec.)
RANGE B	1,620 Kc.	Antenna Lead	50 mmf.	B Range	Turn Rotor to Full Open	Oscillator Range B
	1,400 Kc.	Antenna Lead	50 mmf.	B Range	Tune Rotor to Max. Output Set Pointer to 1,400 Kc. (See Note A)	Antenna Range B
	600 Kc.	Antenna Lead	50 mmf.	B Range	Tune Rotor to Max. Output	Oscillator (600 Kc. Padder) Rock Rotor See Note B
	Repeat above steps at 1,620 and 600 Kc. until readjusting the oscillator. Range B Trimmer causes no further improvement of output.					
RANGE D	18.3 Mc.	Antenna Lead	400 ohm	D Range	Turn Rotor to Full Open	Oscillator Range D
	16 Mc.	Antenna Lead	400 ohm	D Range	Tune Rotor to Max. Output	Antenna Range D Rock Rotor—See Note B
LOOP RANGE B	Reassemble chassis in cabinet. 1,400 Kc.	Antenna Lead	50 mmf.	B Range	Tune Rotor to Max. Output	Antenna Range B

NOTE A—Set pointer at the 1,400 KC. mark on the dial scale. Attach pointer to drive cord.

NOTE B—Turn Rotor back and forth and adjust the trimmer until the peak of greatest intensity is obtained.

GAMBLE-SKOGMO, INC.

MODELS 43-7603, 43-7604

The circuit and tube complement of the receiver are as follows:

1 -	6SA7	1st Detector and Oscillator
1 -	6SK7	1st I-F Amplifier
1 -	6SF7	2nd I-F Amplifier and 2nd Detector
1 -	6SJ7	1st Audio Amplifier
1 -	6V6GT	Power Output
1 -	6X5GT	Rectifier

2 - No. 47 lamps are used for dial illumination.

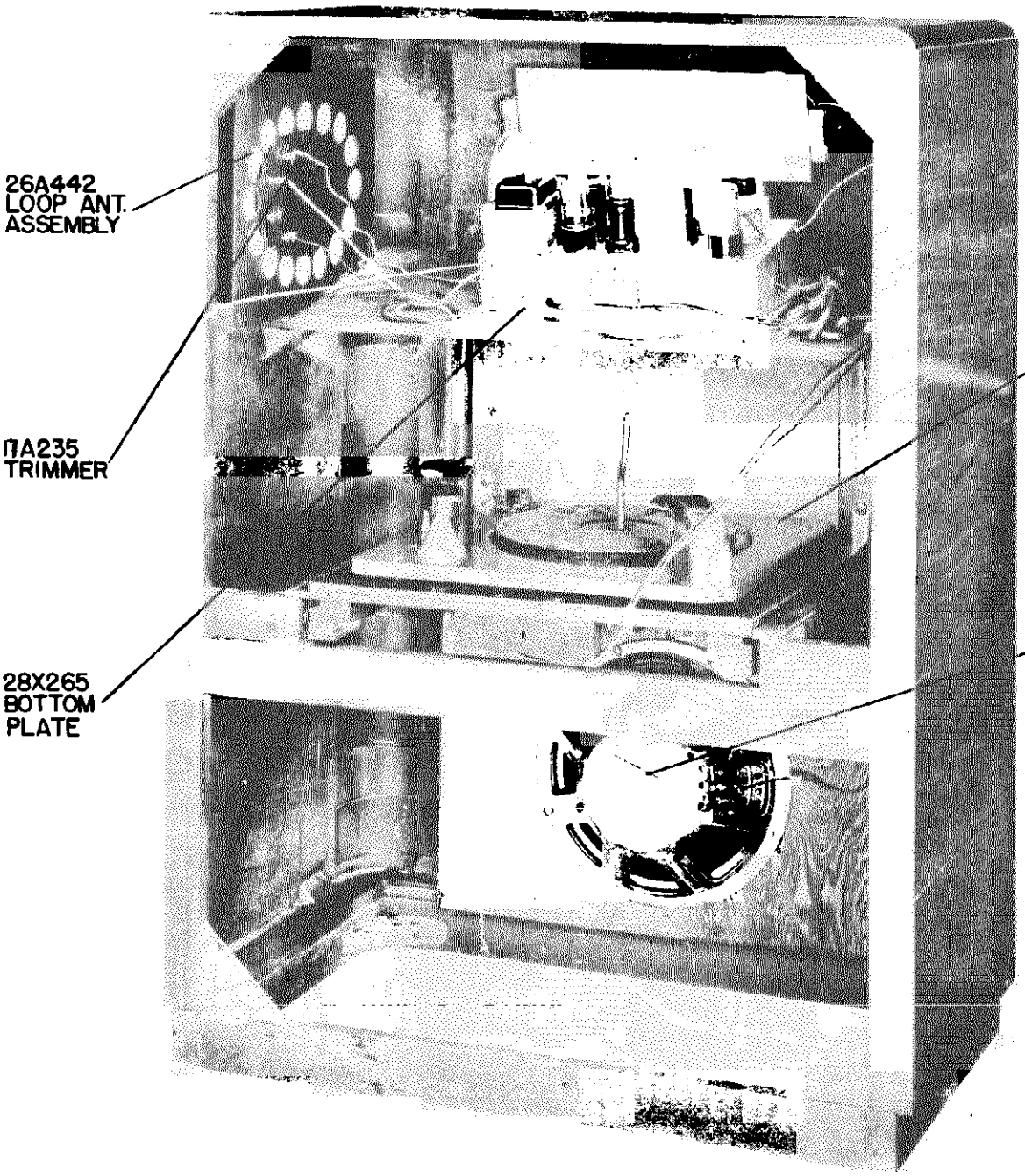

REAR CABINET VIEW

© John F. Rider

MODELS 43-7603, 43-7604

GAMBLE-SKOGMO, INC.

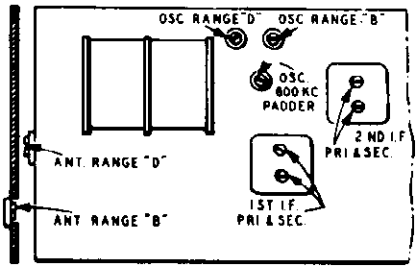

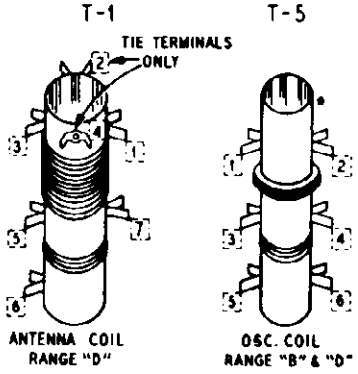

COIL TERMINALS

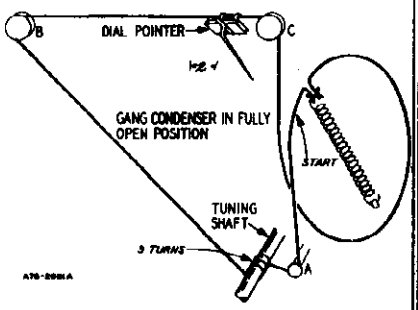

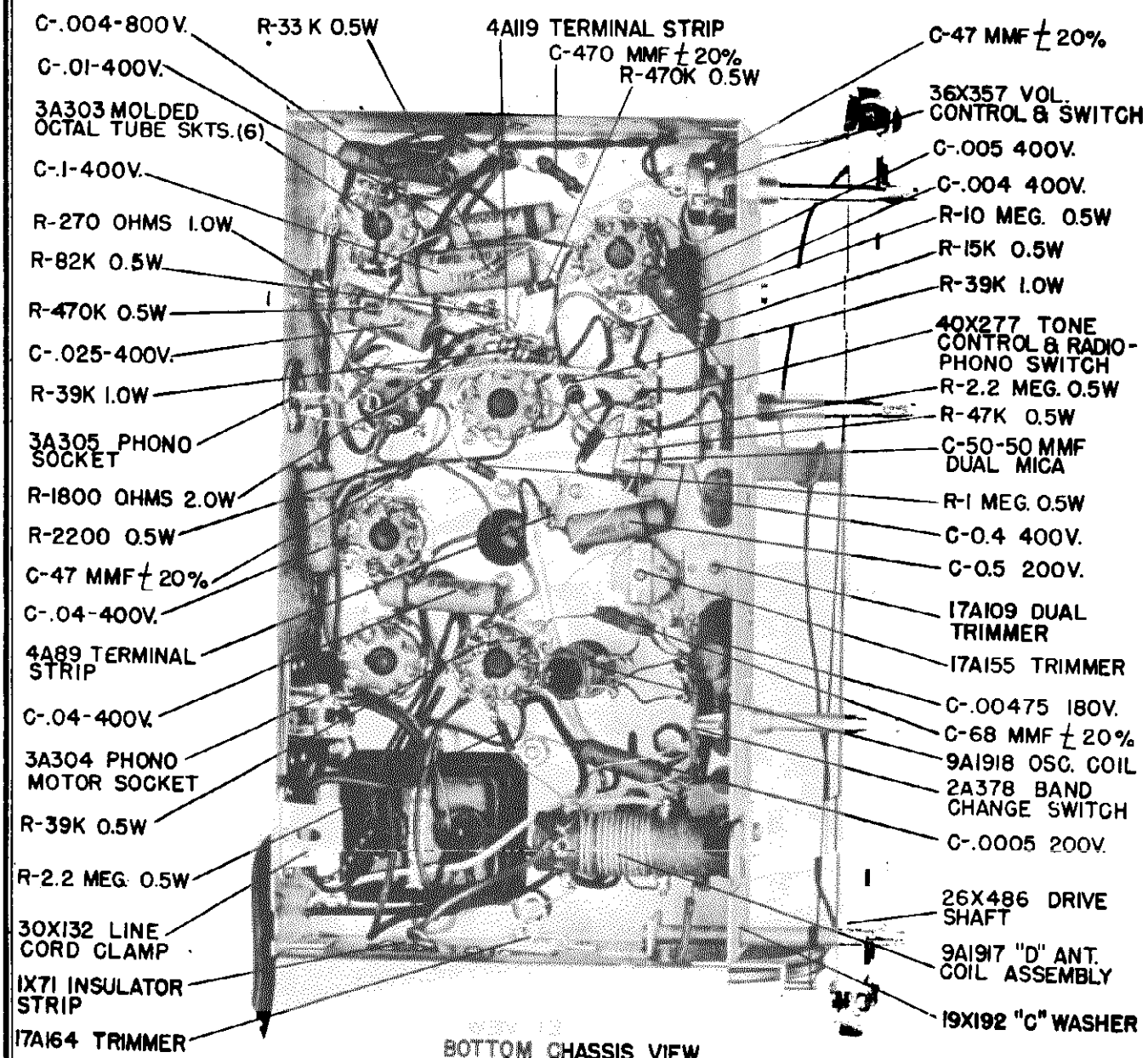

BOTTOM CHASSIS VIEW

GAMBLE-SKOGMO, INC.

MODELS 43-7603, 43-7604

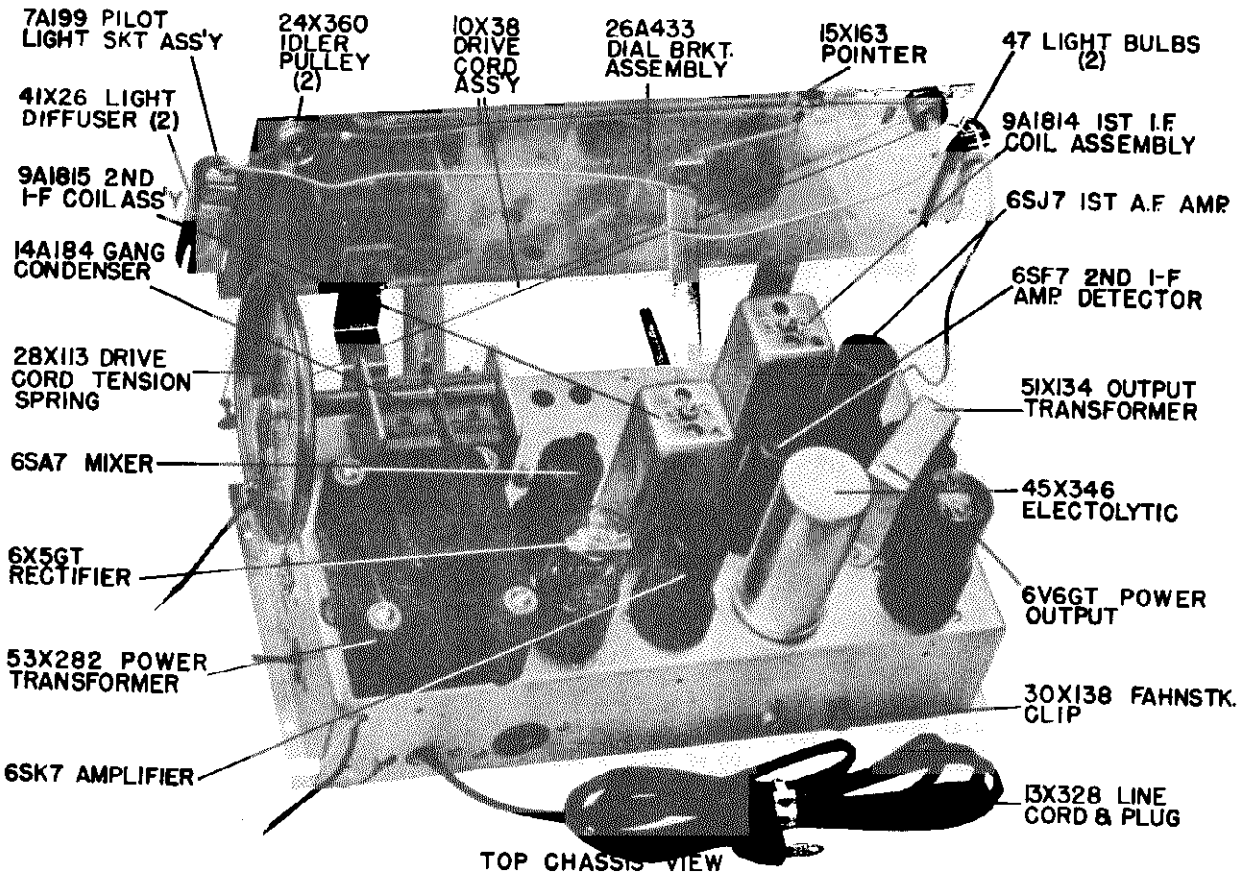

TOP CHASSIS VIEW

Part No.	Description	Quantity
2A378	Band Change Switch	
3A303	Molded Octal Tube Socket	6
3A304	Phono Motor Socket	
3A305	Single Pin Jack	
4A89	Terminal Strip	
4A119	Terminal Strip	
7A103	#47 Pilot Light	2
7A199	Pilot Light Socket Assembly	
9A1814	1st I-F Coil Assembly	
9A1815	2nd I-F Coil Assembly	
9A1917	"D" Antenna Coil Assembly	
9A1918	"B" & "D" Oscillator Coil Assembly	
10A620	Knob (Tuning)	
10A621	Knob (Volume)	
10A622	Knob (Tone, R.P.)	
10A623	Knob (SW-BC)	
12A476	Speaker, 10" P.M.	
14A184	Gang Condenser	
17A109	Trimmer Condenser (dual) 2.5-35 mmf	
17A155	Trimmer Condenser, 350-430 mmf	
17A164	Trimmer Condenser, 5-50 mmf	
26A442	"B" Range Loop Antenna Ass'y consisting of:	
	9A1821 "B" Range Loop Antenna	
	17A235 Trimmer Condenser	
	#1701 Tubular Rivet 3/16"	
26A443	Dial Bracket Assembly	
	7X42 Cardboard Spacer	2
	58X615 Dial Background	
	25X1495 Dial Bracket	
	24X360 Idler Pulley	2
	41X26 Light Diffuser	2
	20X268 Rivet	6
26A444	Idler Bracket Assembly consisting of:	
	25X1488 Idler Bracket	
	20X1450 Rivet	
1X71	Insulator Strip	
2X310	Felt Washer (mtg. 28X113)	
4X990	Escutcheon	

MODELS 43-7603, 43-7604

GAMBLE-SKOGMO, INC.

Part No.	Description	Quantity
6X21	Rubber Grommet	3
8X93	Rubber Bumpers	2
10X38	Drive Cord Assembly	
13X328	Line Cord and Plug	
15X163	Pointer	
19X8	Flat Washer (Mtg. chassis to cabinet)	4
19X45	#1 Flat Washer (Mtg. power transformer)	2
19X192	"C" Washer (Mtg. drive shaft)	2
20X329	Condenser Cushion Stud	3
20X1449	6-32 x $\frac{1}{2}$" Washer Hd. Machine Screw	
20X1491	Eyelet	
26X486	Drive Shaft	
27X56	Bottom Plate	
25X1488	Idler Bracket	
28X113	Drive Cord Tension Spring	
28X208	Coil Mounting Spring	
28X265	Ground Plate	
30X132	Line Cord Clamp	
30X138	Fahnestock Clip (External Ground)	
30X522	Terminal (connecting 27X56 to chassis)	
30X523	Terminal (connected to 27X56)	
36X357	Volume Control and Switch	
40X277	Tone Control & Radio-Ohono Switch	2
41X26	Light Diffuser	
45X346	3 Section Electrolytic Condenser 40mf, 450V. - 40mf, 450V. - 20mf, 25V.	
46X289	Capacitor, Tubular - .00475 mf, 180 V.	
47X112	Capacitor, Dual Mica - 50-50 mmf ± 20%	
47X463	Capacitor, Molder Mica - 47 mmf ± 20%	2
47X466	Capacitor, Molder - 68 mmf ± 10%	
47X467	Capacitor, Molded Mica - mmf ± 20%	
51X134	Output Transformer	
53X282	Power Transformer (60 cycles)	
57X184	Locking Plate	
58X615	Dial Background	
58X695	Dial Glass	
B66501	Capacitor, Tubular - .0005 mf 200V. ± 20%	
B66503	Capacitor, Tubular - .05 mf 200V. ± 25%	
B84153	Resistor, Carbon - 15,000 ohms .5W	
B84222	Resistor, Carbon - 2200 ohms .5W	
B84333	Resistor, Carbon - 33,000 ohms .5W	
B84393	Resistor, Carbon - 39,000 ohms .5W	
B84824	Resistor, Carbon - 82,000 ohms .5W	
B85105	Resistor, Carbon - 1 megohm .5W	
B85106	Resistor, Carbon - 10 megohms .5W	
B85225	Resistor, Carbon - 2.2 megohms .5W	2
B85473	Resistor, Carbon - 47,000 ohms .5W	
B85474	Resistor, Carbon - 470,000 ohms .5W	2
C84271	Resistor, Carbon - 270 ohms 1.0W	
C84393	Resistor, Carbon - 39,000 ohms 1.0W	2
D64253	Capacitor, Tubular - .025 mf 400V. ± 10%	
D64403	Capacitor, Tubular - .04 mf 400V. ± 10%	
D66103	Capacitor, Tubular - .01 mf 400V. ± 25%	
D66402	Capacitor, Tubular - .004 mf 400V. ± 25%	
D66403	Capacitor, Tubular - .04 mf 400V. ± 25%	2
D66502	Capacitor, Tubular - .005 mf 400V.	
D67104	Capacitor, Tubular - .10 mf 400V. -10% + 30%	
D84182	Resistor, Carbon - 1800 ohms 2.0W	
H66402	Capacitor, Tubular - .004 mf 800V. ± 25%	
	#1701 3/16" Tubular Rivet (mtg. parts)	2
	#1701 5/32" Tubular Rivet (mtg. parts)	8
	#1701 1/8" Tubular Rivet (mtg. parts)	20
	3/8" Palnut (Mtg. tone control, band switch, Type 9N1 and volume control)	3
	#8 Lockwasher E. T. } Mtg. Power Transformer	2
	#8 - 32 Hex Nut }	2
	#6 x 1/4" Slotted Hex. Hd. P.K Type "X" Screw (Mtg. idler bracket, dial bracket, and bottom plate & S-27X1)	6
	#2 x 3/8" French Oval Hd. Wood Screw Statuary Bronze (mtg. escutcheon)	4
	#6 (1106) Lockwasher, E.T. Shakeproof, Cad. Pl.	6
	#10 x $\frac{1}{2}$" Slotted Hex. Hd. P-K Type "Z" Screw (mtg. chassis to cabinet)	4
	#10 x 3/4" Washer Hd. Wood Screw Steel (mtg. speaker)	4
	#16 x 5/8" Flat Hd. Blue Finished Nail (mtg. loop to cabinet)	4
	#10 x 5/8" Washer Hd. Wood Screw, Steel (Mtg. 57X184)	
28A139	Record Changer VM #800	
	#1114 1/4" Lockwasher, E. T. Shakeproof (Mtg. 57X184)	
	1/4-20 x 1 1/4 R.H.M.S. Steel, Cad. Pl. (Mtg. 58X184)	
	#6-32 Hex Nut Cad. Pl.	5
	#6 Split Lockwasher (Mtg. 1X71)	2

© John F. Rider

CLARI-SKEMATIX
Registered Trademark

MODELS 43-7651, 43-7652

GAMBLE-SKOGMO, INC.

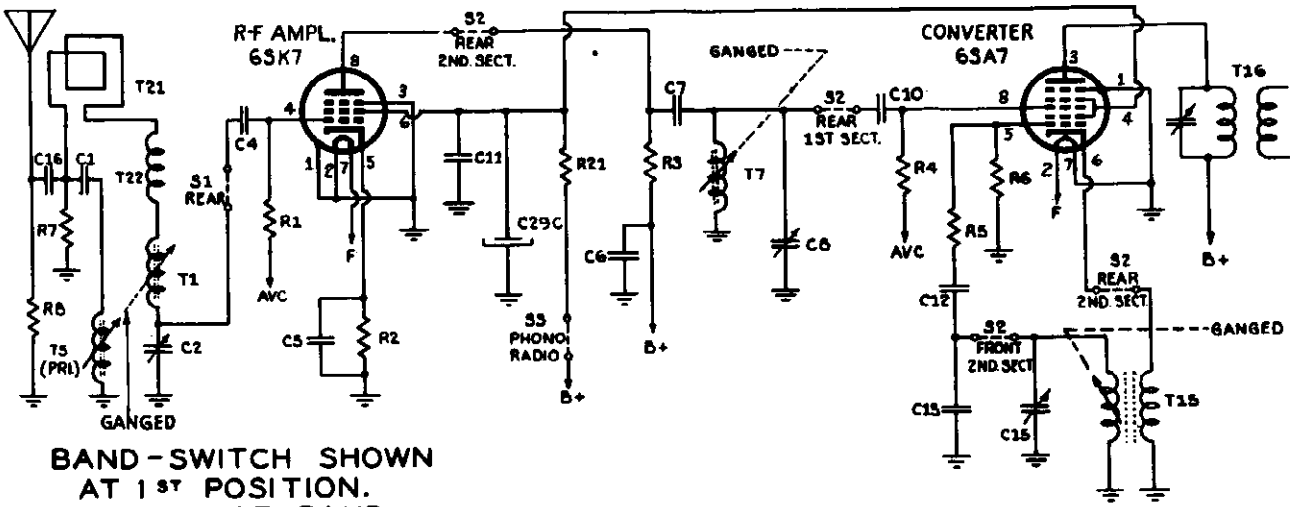

BAND-SWITCH SHOWN AT 1ST POSITION.
BROADCAST BAND
540-1600 KC

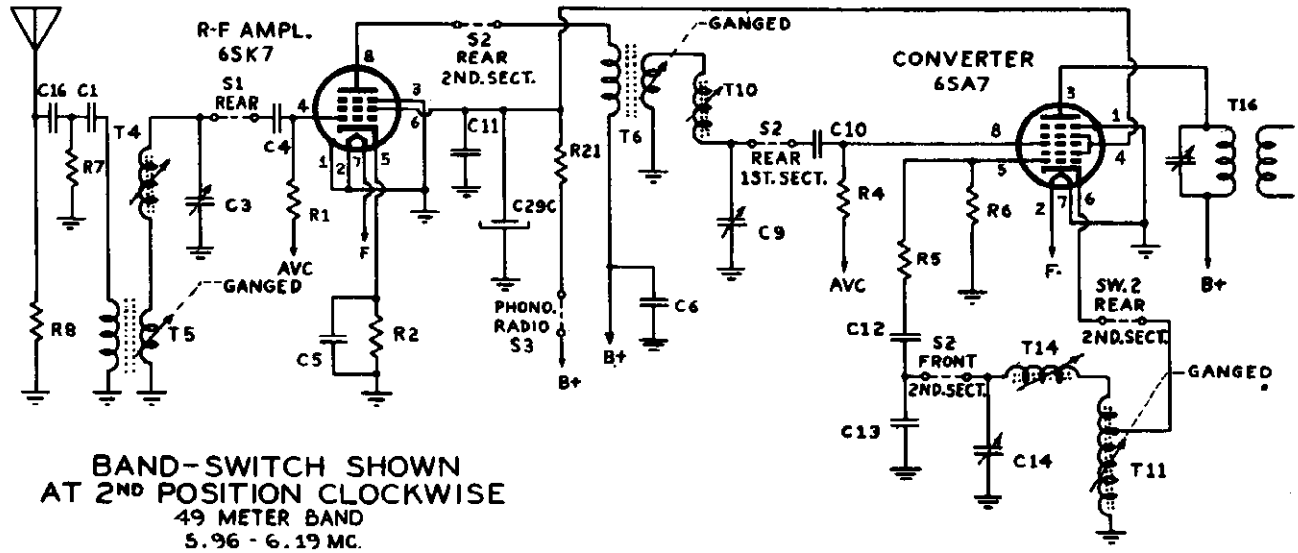

BAND-SWITCH SHOWN AT 2ND POSITION CLOCKWISE
49 METER BAND
5.96 - 6.19 MC.

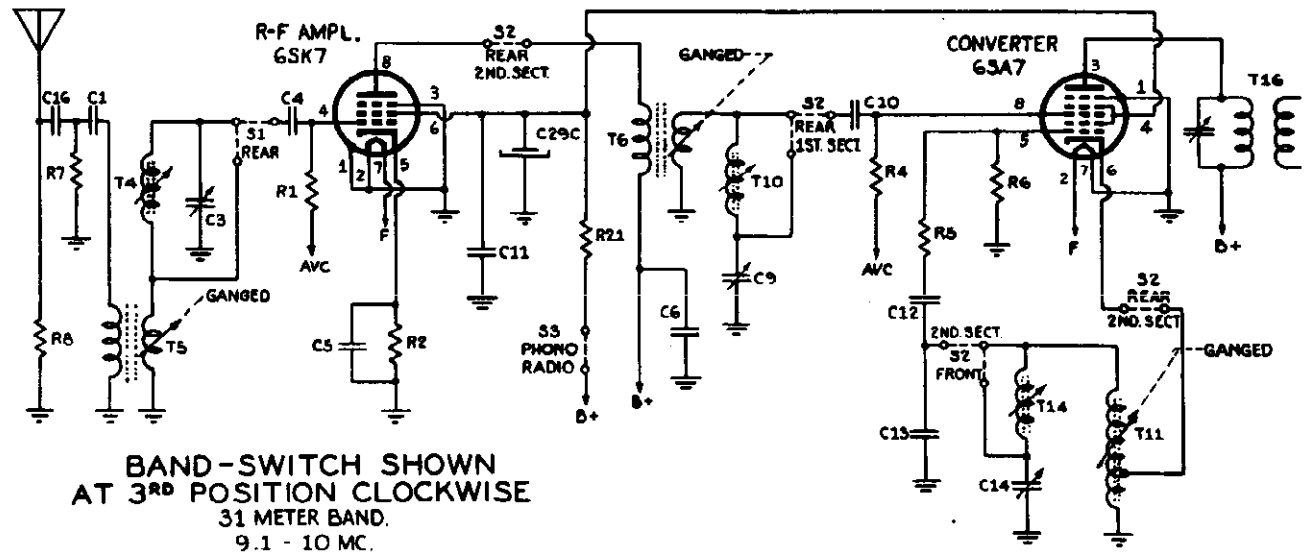

BAND-SWITCH SHOWN AT 3RD POSITION CLOCKWISE
31 METER BAND.
9.1 - 10 MC.

GAMBLE-SKOGMO, INC.

MODELS 43-7651, 43-7652

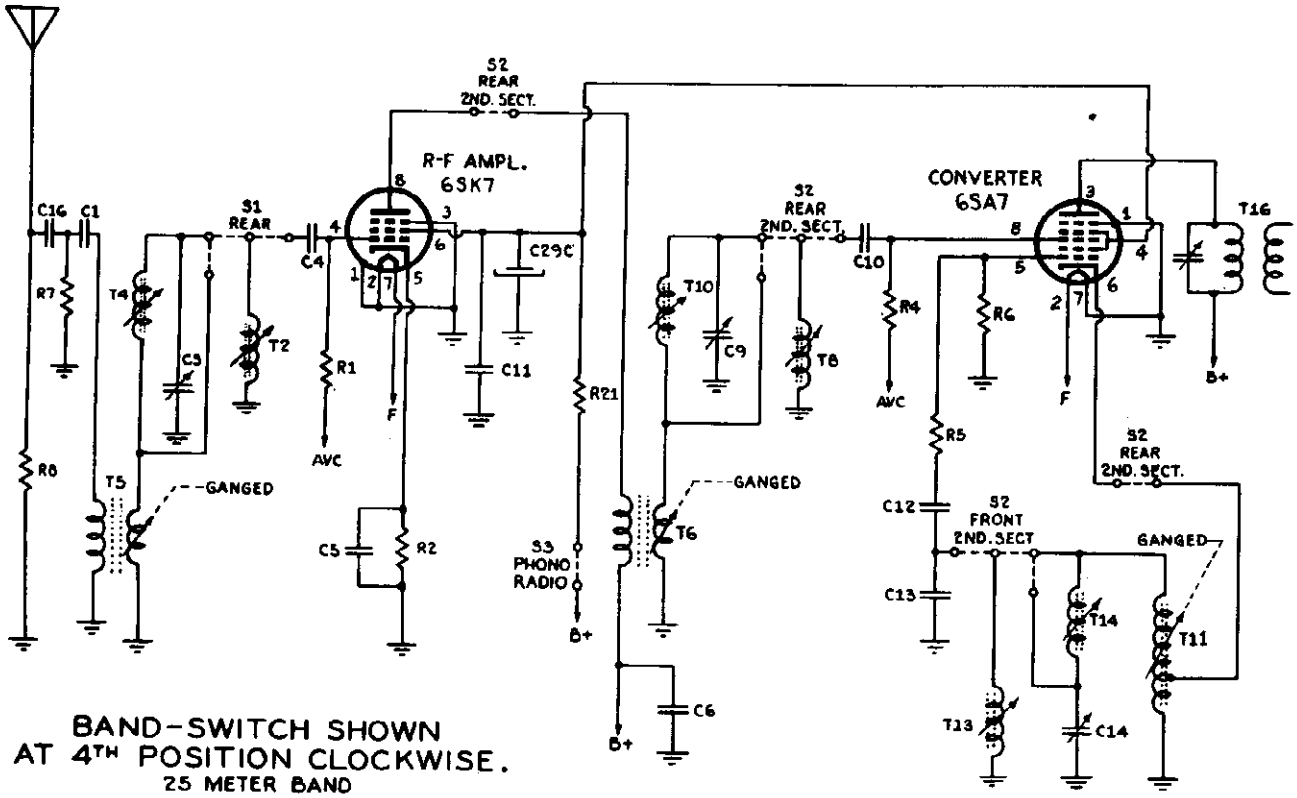

BAND-SWITCH SHOWN AT 4TH POSITION CLOCKWISE.
25 METER BAND
11.45 - 12.16MC.

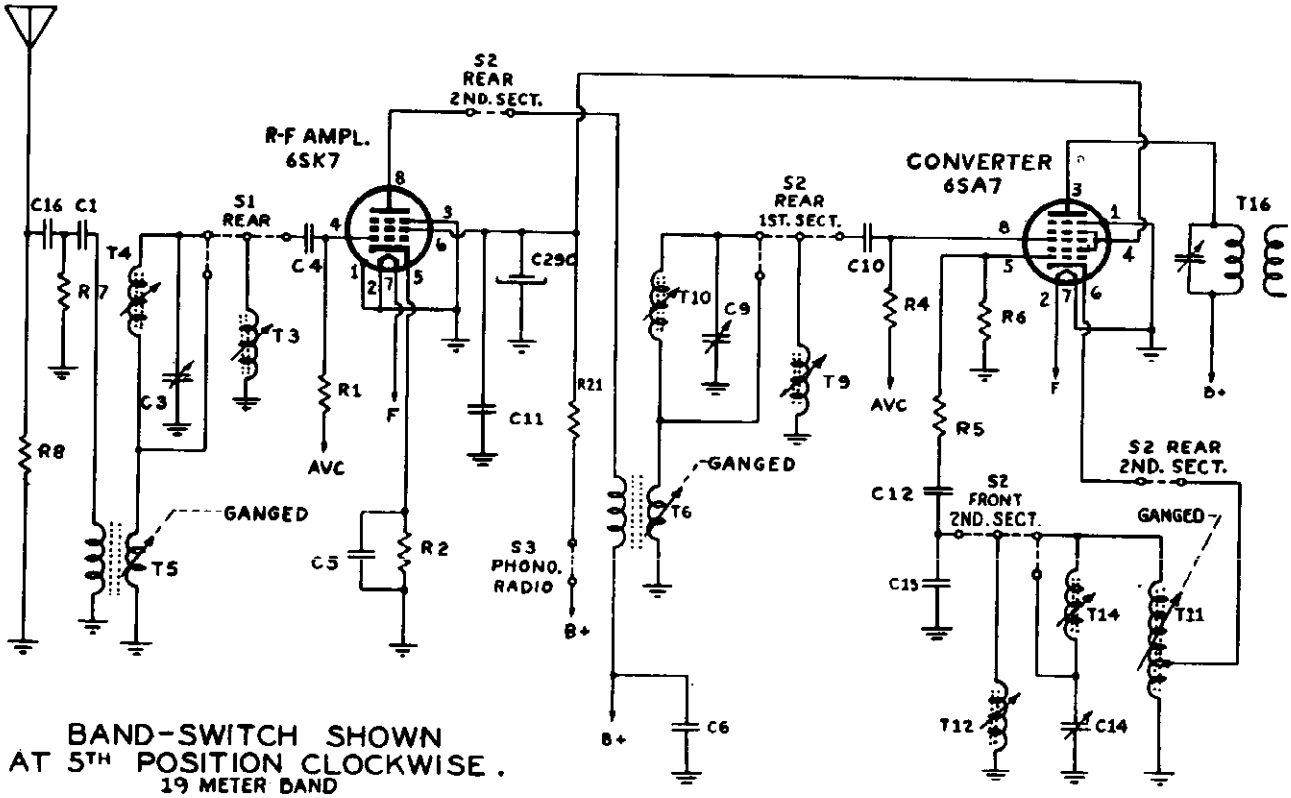

BAND-SWITCH SHOWN AT 5TH POSITION CLOCKWISE.
19 METER BAND
14.94 - 15.46 MC.

MODELS 43-7651, 43-7652

GAMBLE-SKOGMO, INC.

MODEL 43-7651

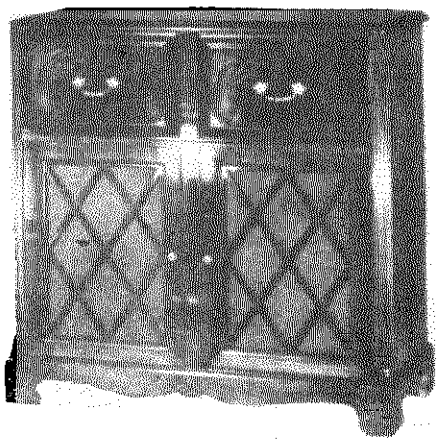

MODEL 43-7652

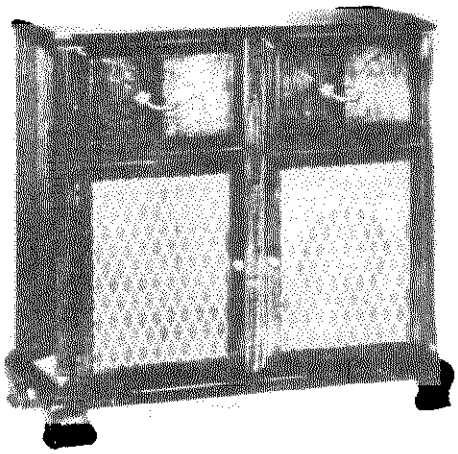

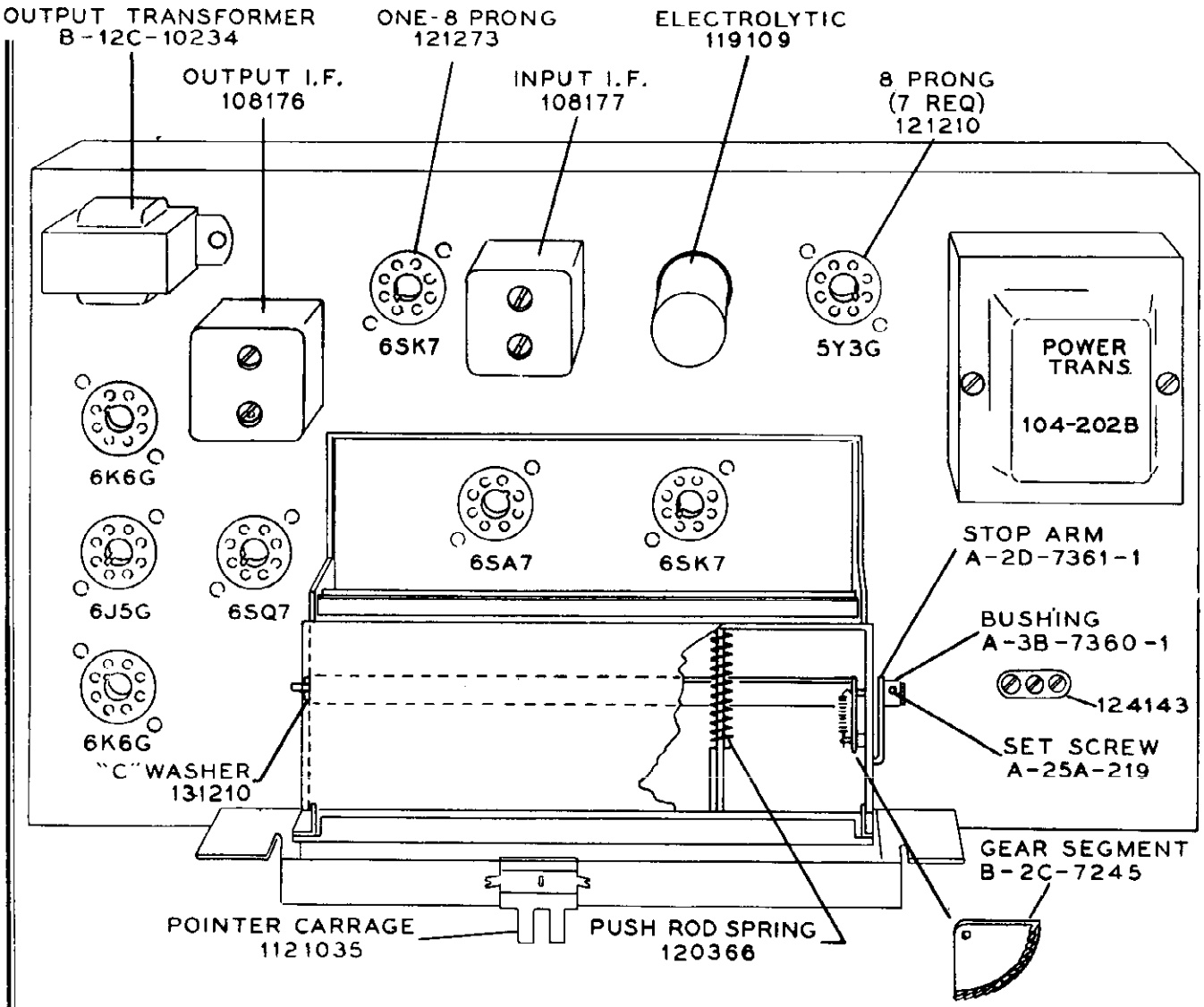

GAMBLE-SKOGMO, INC.

MODELS 43-7651, 43-7652

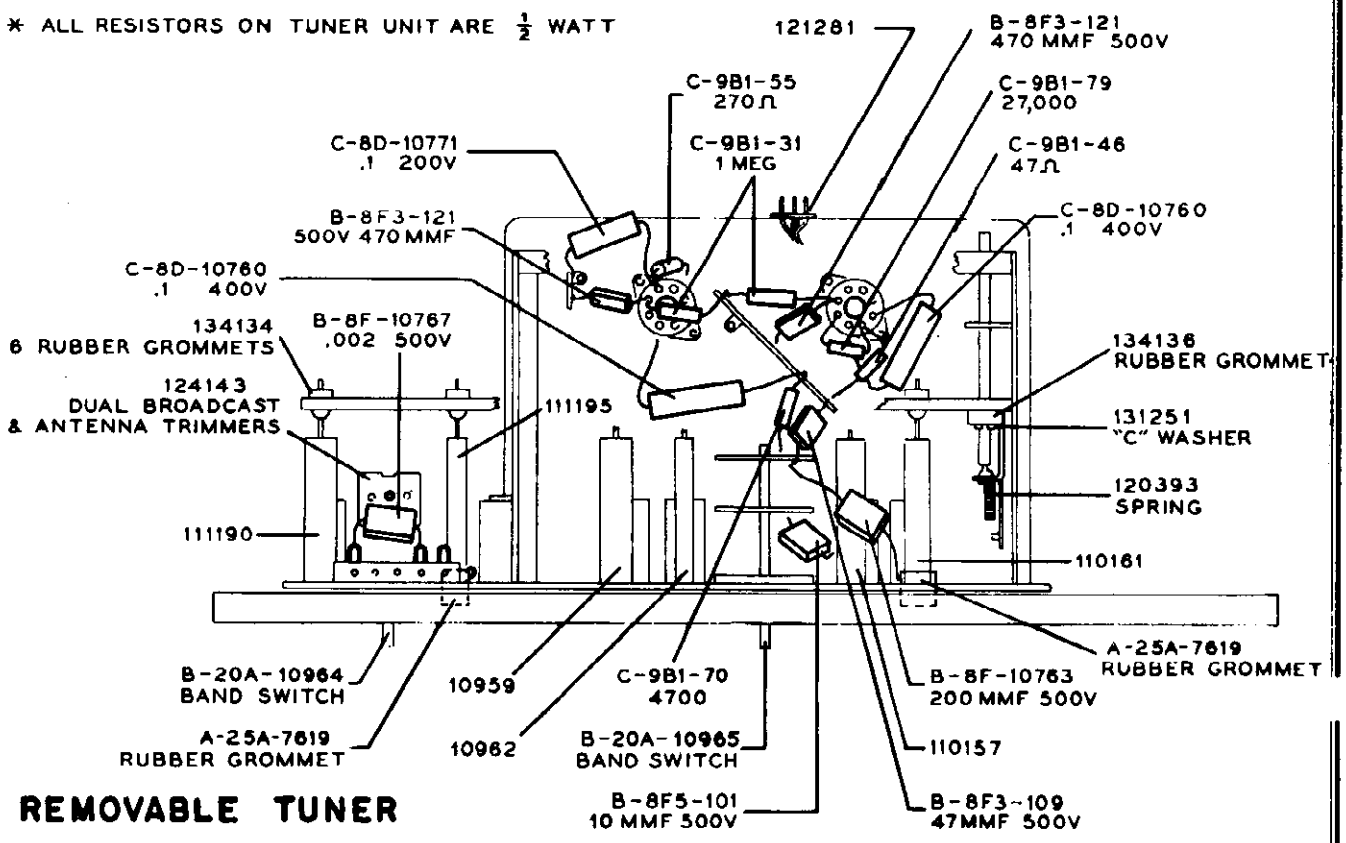

REMOVABLE TUNER

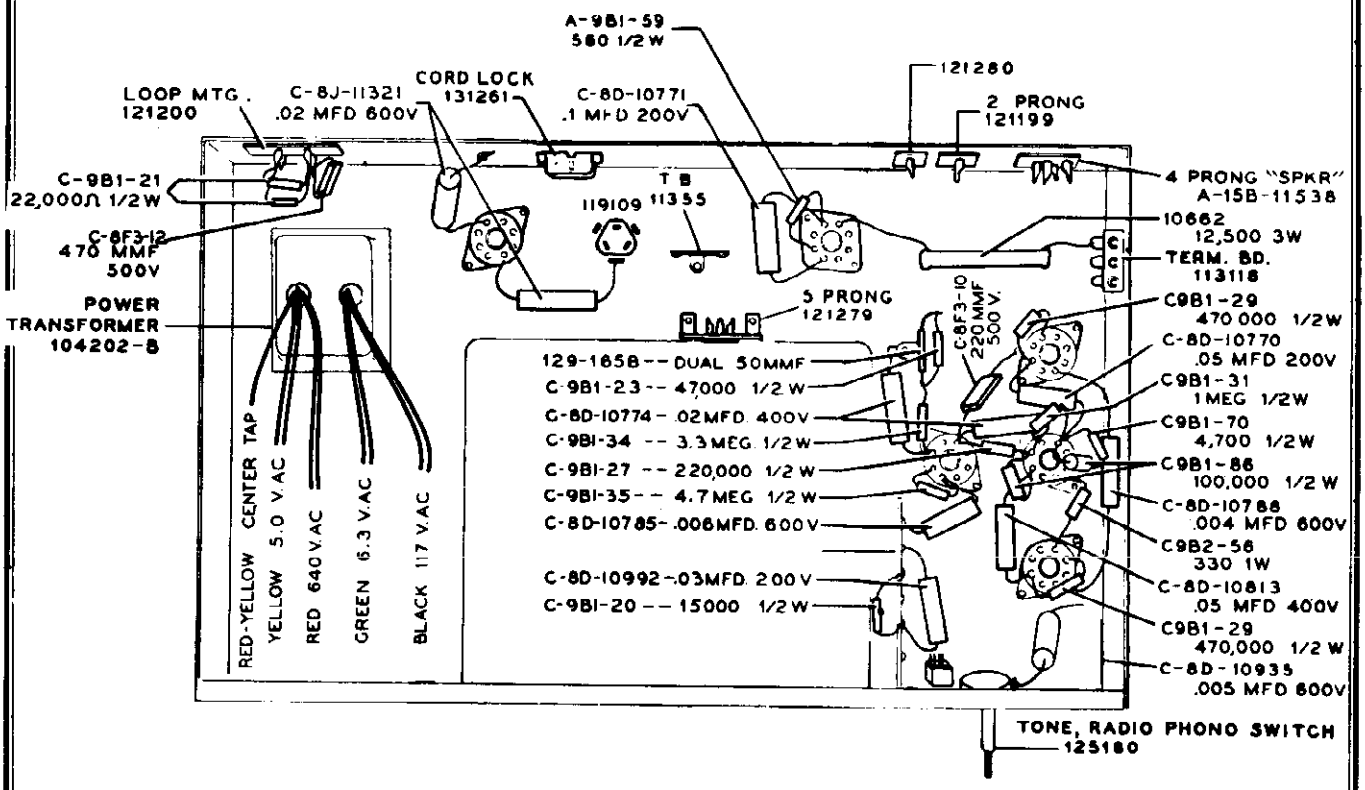

MODELS 43-7651, 43-7652

GAMBLE-SKOGMO, INC.

REMOVAL OF CHASSIS FROM CABINET

Before removing chassis, take off escutcheon and pull pointer from pointer carriage.

SPECIFICATIONS

8 Tube Superheterodyne, including rectifier tube
Power Output.....7.5 w. max., 5.5 w. undistorted
Selectivity.....35 kc. broad at 1,000 times signal at 1,000 kc.
Intermediate Frequency.....455 kc.
Speaker.....10 inch electrodynamic. Voice coil impedence 3.2 ohms
Sensitivity.....4 mv .avg. for ½ w. output
Power Supply..105-125 v. A.C. 60 cycles 95 w. (118 w. with phono motor operating)
Tuning.....All bands permeability-tuned
Frequency Ranges.....Broadcast band 540-1,600 kc.
49-meter band 5.96-6.19 mc.
31-meter band 9.1-10 mc.
25-meter band 11.65-12.16 mc.
19-meter band 14.94-15.46 mc.
Antenna.....Built-in; provisions also for external antenna and ground.

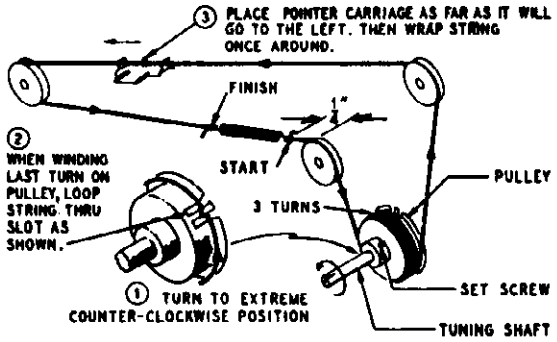

WHEN FINISHED WITH STRINGING, SPRING MUST BE ¼" FROM IDLER AS SHOWN. TO DO THIS:

4. LOOSEN SET SCREW ON PULLEY.
5. HOLD TUNING SHAFT FIRM IN POSITION INDICATED AND TURN PULLEY BY HAND UNTIL SPRING IS ¼" AWAY FROM IDLER.
6. TIGHTEN SET SCREW. NOW SPRING SHOULD TRAVEL BACK AND FORTH WITHOUT TOUCHING THE IDLERS.
7. REPLACE CHASSIS IN CABINET. REPLACE POINTER ON CARRIAGE. TUNE IN STATION OF KNOWN FREQUENCY. HOLD TUNING SHAFT FIRM AND SLIDE POINTER TO CORRECT POSITION ALONG DIAL.
8. GLUE POINTER TO STRING.

8074

Coils and Trimmers

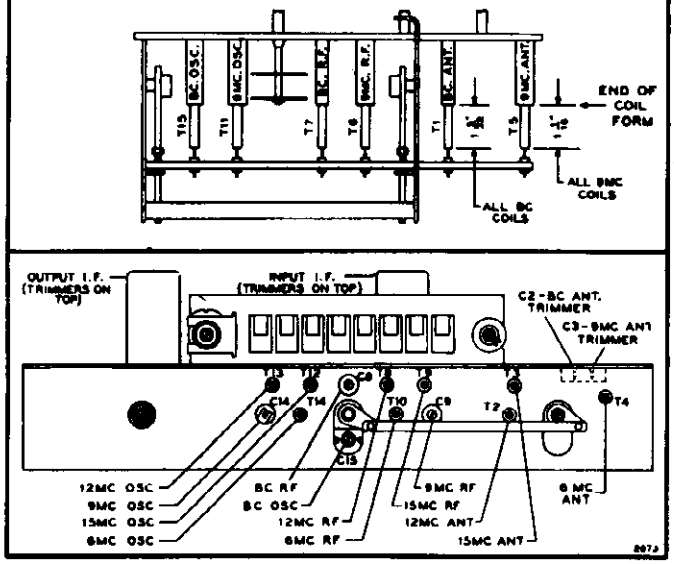

Replacement of Drive Cord

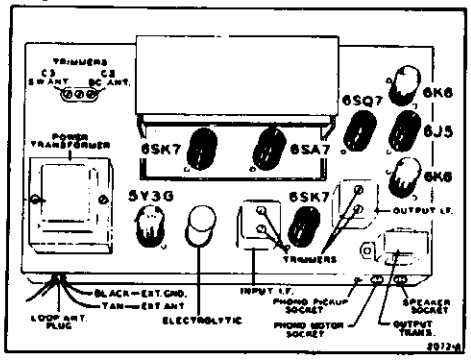

ALIGNMENT PROCEDURE

CHASSIS VIEW

Mechanical Adjustment—The core tuning bar (see illustration of iron cores) and dial pointer must be adjusted mechanically before any electrical alignment is attempted. Rotate the manual tuning control until the core bar is farthest from the coils. For proper adjustment the bar should be approximately 1/32 of an inch from the two rod guide angles.

With the core bar in this position, adjust the dial pointer to coincide with 1,600 kc. on the dial scale.

Rotate each of the three broadcast coils (see illustration) until the end of the coil is 1-5/32 inches from the end of the coil form. Rotate the three 9-mc. coils until this dimension is 1-1/16 inches from these coils. After these adjustments have been made, the unit can be aligned electrically.

Electrical Adjustment—To align the set make the following preliminary adjustments: Set the tone pushbutton for treble tone; set the volume control at maximum; connect the ground post of the signal generator to the radio chassis; connect the output meter across a 3.2 ohm output load; and allow the receiver and signal generator to warm up for several minutes.

Align the set according to the sequence given in the chart. The indicated dummy antenna is to be connected in series between the signal generator output lead and the receiver. Adjust the set for maximum output; reduce the input as needed to keep the output near 1.3 volts.

Locations of all the trimmers and coils are shown in the illustrations. After adjustment, seal the coil cores with collodion or a similar substance (do not use cement).

BAND SWITCH SETTING	Frequency	SIGNAL GENERATOR Coupling Capacitor	Connection to Radio	Dial POINTER SETTING	ADJUST TO MAXIMUM OUTPUT (in order shown)
Broadcast (for I.F.)	455 kc.	.1 mf.	Grid (pin 8) of converter (6SA7)	1,600 kc.	Trimmers on output and input I.F. cans
Broadcast	1,600 kc.	200 mmf.	Antenna lead	1,600 kc.	BC Osc. trimmer C15 BC R.F. trimmer C8 BC Ant. trimmer C2
	1,400 kc.	200 mmf.	Antenna lead	1,400 kc.	Rotate cores of BC R.F. coil T7 and BC Ant. coil T1
31 Meter	9.6 mc.	400 ohms	Antenna lead	9.6 mc.	9 mc. Osc. trimmer C14 9 mc. R.F. trimmer C94 9 mc. Ant. trimmerC3
49 Meter	6.1 mc.	400 ohms	Antenna lead	6.1 mc.	6 mc. Osc. coil T14 6 mc. R.F. coil T10 6 mc. Ant. coil T4
25 Meter	11.8 mc.	400 ohms	Antenna lead	11.8 mc.	12 mc. Osc. coil T13 12 mc. R.F. coil T8 12 mc. Ant. coil T2
19 Meter	15.2 mc.	400 ohms	Antenna lead	15.2 mc.	15 mc. Osc. coil T12 15 mc. R.F. coil T9 15 mc. Ant. coil T3

GAMBLE-SKOGMO, INC.

MODELS 43-7651, 43-7652

Ref. No.	Part No.	Description

MAIN CHASSIS

CAPACITORS*

C16	C-8F3-12	470 mmf, 20%, mica
C17, C19	C-8D-10774	.02 mf, 400 volts, 20%
C18	C-8D-10771	.1 mf, 200 volts, +20%—10%
C20-A C20-B	129165B	Dual, 50 mmf each section, mica, 20%
C21	C-8D-10813	.05 mf, 400 volts, 20%
C22	C-8D-10935	.005 mf, 600 volts, +40%—15%
C23	C-8F3-10	220 mmf, 20%, mica
C24	C-8D-10770	.05 mf, 200 volts, 20%
C25	C-8D-10788	.004 mf, 600 volts, 20%
C27	C-8D-10992	.03 mf, 200 volts, 20%
C28	C-8D-10785	.006 mf, 600 volts, 20%
C29-A, -B, -C	119109	Electrolytic, 15 mf x 450 volts, 15 mf x 450 volts, 10 mf x 350 volts
C30, C31	C-8J-11321	.02 mf, 600 volts, 20%

RESISTORS*

R7, R8	C-9B1-21	22,000 ohms, ½ watt, 20%
R9	C-9B1-59	560 ohms, ½ watt, 10%
R10	C-9B1-23	47,000 ohms, ½ watt, 20%
R11	C-9B1-34	3.3 megohms, ½ watt, 20%
R12, S3	125180	Tone control (1 megohm) and radio-phono switch
R13	C-9B1-27	220,000 ohms, ½ watt, 20%
R14, R17	C-9B1-86	100,000 ohms, ½ watt, 10%
R15	C-9B1-31	1 megohm, ½ watt, 20%
R16	C-9B1-70	4700 ohms, ½ watt, 10%
R18, R19	C-9B1-29	470,000 ohms, ½ watt, 20%
R20	C-9B2-56	330 ohms, 1 watt, 10%
R21	10662	12,500 ohms, 3 watts, 10%
R23	C-9B1-20	15,000 ohms, ½ watt, 20%
R24, S4	A-10A-10586	Volume control (500,000 ohms) and on-off switch
R25	C-9B1-35	4.7 megohms, ½ watt, 20%

COILS AND TRANSFORMERS

T16	108177	Input IF coil complete in can (Range of trimmers: 110-210 mmf)
T17	108176	Output IF coil complete in can (Range of trimmers: 80-140 mmf)
T18	B-12C-10234	Output transformer
T20	104202B	Power transformer

SOCKETS

	121200	Socket, 4-terminal, for loop antenna
	121279	Socket, 5-terminal, for tuner
	A-15B-11538	Socket, 4-terminal, for speaker
	121280	Socket, 1-terminal, for phono pick-up
	121199	Socket, 2-terminal, for phono motor
	121210	Socket, octal, molded (all tubes except 6SK7, IF amp.)
	121273	Socket, octal, laminated (for 6SK7, IF amplifier)
	B-47A-10808	Socket assembly for dial light

MISCELLANEOUS

T19	B-18B-10617	Speaker, 10-inch, electrodynamic
	A-19A-11539	Plug on speaker leads
T21	A-14MA-11066-3	Loop antenna (ribbon only)
T22	A-16A-11113	Choke on loop terminal board
	A-19A-11322	Plug on loop antenna leads
	107401	Phono motor cable assembly
	10724	Connector, for phono pickup leads
	B-6D-10984	Dial scale
	10794	Dial light, 6-8 volts, type T-44 (2 used)
	B-2G-10588-1	Dial pointer
	A-2J-11041	Pointer spring
	1121035	Pointer carriage
	B-53A-10989	String for dial pointer
	120377	Spring for dial pointer string
	107266	Line cord and plug (9 feet)
	112985-14	Escutcheon (for walnut cabinet)
	112985-41	Escutcheon (for mahogany cabinet)
	A-5B-10893-14	Knob, band switch or radio-phono-tone (for walnut cabinet)
	A-5B-10893-41	Knob, band switch or radio-phono-tone (for mahogany cabinet)
	128523-14	Knob, tuning or volume (for walnut cabinet)
	128523-41	Knob, tuning or volume (for mahogany cabinet)
	A-2L-11293	Bandswitch link
	112961	Station call letters

REMOVABLE TUNER ASSEMBLY

CAPACITORS

C1	B-8F-10767	.002 mf, 500 volts, 10%, mica
C2, C3	124143	Dual, broadcast (67-123 mmf) and 9 mc (95-175 mmf) ant. trimmers
C4, C10	B-8F3-121	470 mmf, 500 volts, 10%, mica
C5	C-8D-10771	.1 mf, 200 volts, +20%—10%
C6, C11	C-8D-10760	.1 mf, 400 volts, +20%—10%
C7	B-8F5-101	10 mmf, 500 volts, 10%, silver mica
C8	A-8G-7205	Broadcast RF trimmer (120-220 mmf)
C9	A-8G-7206	9 mc RF trimmer (60-110 mmf)
C12	B-8F3-109	47 mmf, 500 volts, 10%, mica
C13	B-8F-10763	200 mmf, 500 volts, 3%, silver mica
C14	124145	9 mc oscillator trimmer (7-35 mmf)
C15	124144	Broadcast oscillator trimmer (15-27 mmf)

RESISTORS

R1, R4	C-9B1-31	1 megohm, ½ watt, 20%
R2	C-9B1-55	270 ohms, ½ watt, 10%
R3	C-9B1-70	4700 ohms, ½ watt, 10%
R5	C-9B1-46	47 ohms, ½ watt, 10%
R6	C-9B1-79	27,000 ohms, ½ watt, 10%

COILS (complete with cores)

T1	111195	Broadcast antenna coil
T2	111191	12-mc antenna coil
T3	111192	15-mc antenna coil
T4	111189	6-mc antenna coil
T5	111190	9-mc antenna coil
T6	10959	9-mc RF coil
T7	10962	Broadcast RF coil
T8	10960	12-mc RF coil
T9	10961	15-mc RF coil
T10	10958	6-mc RF coil
T11	110157	9-mc oscillator coil
T12	110159	15-mc oscillator coil
T13	110158	12-mc oscillator coil
T14	110156	6-mc oscillator coil
T15	110161	Broadcast oscillator coil

MISCELLANEOUS

S1	B-20A-10964	Band switch, antenna
S2	B-20A-10965	Band switch, oscillator and RF
	121210	Socket, molded, for 6SA7
	121171	Socket, laminated, for 6SK7GT
	117907	Tuning shaft
	117798	Pinion gear on tuning shaft
	120393	Spring, intermediate link, under ends of treadle bar
	131251	Washer, "C," on slug tuning bar
	B-2C-7245	Gear segment
	A-2J-7439	Spring clip, for coils
	131316B	Washer "C", for 9-mc coils
	134134	Grommet for core mounting (all broadcast and 9-mc coils)
	134126	Grommet for coil mounting (broadcast RF and antenna coils)
	134125	Grommet for coil mounting (broadcast oscillator coil)
	A-25A-7619	Grommet for all 9-mc coils
	B-202-10475	Pushrod assembly
	120366	Spring, pushrod return
	121281	Plug, 5-prong
	128759-14	Pushbutton, walnut
	128759-41	Pushbutton, mahogany
	131210	Washer, "C", on end plate

MODEL 43-7851 GAMBLE-SKOGMO, INC.

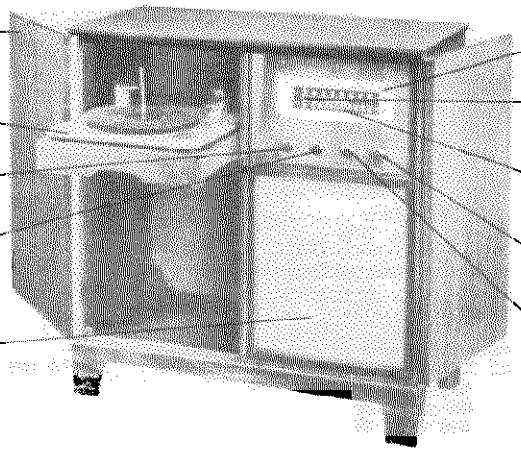

SPECIFICATIONS

7 Tube Superheterodyne.....Including Rectifier Tube
Power Consumption (at 117 Volts AC) 60 Watts (normal) 80 Watts (phono operating)
Selectivity.....AM-50KC Broad at 1000 Times Signal
I.F. FM-200KC Broad at 2 Times Down
I.F. FM-800KC Broad at 200 Times Down
AM Sensitivity...(For 0.5 Watt Output, with external Antenna) 20 mv avg
FM Sensitivity.....(For 0.5 Watt Output) 200 mv avg
Intermediate Frequency.....AM-455KC; FM-10.7 MC
Tuning Range.....AM-540-1600 KC, FM-88-108 MC
Speaker.....10" P.M. Dynamic
Power Output.....4.5 W Max.; 2.5 W 10% Harmonics
Power Supply.....105-125 Volts AC 60 cycles only
Record Changer.....Plays ten 12" or twelve 10"

REMOVAL OF CHASSIS FROM CABINET

Before the chassis can be removed from the cabinet, it will be necessary to pull off the 4 control knobs, remove the three chassis mounting bolts and disconnect the leads from the chassis to the loop antenna, record changer and speaker.

ALIGNMENT PROCEDURE

AM STAGES

Volume Control Maximum all adjustments.

Connect Radio Chassis to Ground Post of Signal Generator with a Short Heavy Lead.

Allow Chassis and Signal Generator to "Heat Up" for Several Minutes.

The following is required for aligning.

An All Wave Signal Generator Which Will Provide an Accurately Calibrated Signal at the Test Frequencies as Listed.

Output Indicating Meter, Non-Metallic Screwdriver Dummy Antennas - .1 mf, and 50 mmf.

GAMBLE-SKOGMO, INC. MODEL 43-7851

FREQUENCY SETTING	SIGNAL GENERATOR CONNECTION AT RADIO	GROUND CONNECTION	DUMMY ANTENNA	GANG CONDENSER SETTING	ADJUST TUNING SLUGS (I-F ONLY) GRIMMERS (OSC. & ANT.)
455 KC	Control Grid 1st 6BA6 Pin No. 1	Chassis Base	.1 mf	Turn Rotor to Full Open	2nd I.F. Pri. & Sec.
455 KC	Control Grid 6BE6 Pin No. 7 1st Det.	Chassis Base -	.1 mf	Turn Rotor to Full Open	1st I.F. Pri. & Sec.
1620 KC	Control Grid 6BE6 Pin No. 7	Chassis Base	.1 mf	Turn Rotor to Full Open	Oscillator Trimmer (AM)
1400 KC	External Antenna Lead	Chassis Base	50 mmf	Turn Pointer to 1400 KC See Note A	Antenna Trimmer (AM)

NOTE A - If the pointer is not at 1400 KC on the dial, reset pointer to the 1400 KC mark on the dial scale.

FM STAGES

Allow chassis and signal generator to warm up for several minutes. The following equipment is required for aligning:

An accurately calibrated signal generator providing unmodulated signals at the test frequencies listed below.

Non-metallic screwdriver

Dummy Antennas and I-F Loading Resistor- .01 mf 300 ohms and 100 K ohms.

Zero center scale DC vacuum voltmeter having a range of approximately 3 volts.

(If a zero center scale meter is not available, a standard scale vacuum tube voltmeter may be used by reversing the meter connections for

	SIGNAL GENERATOR FREQUENCY SETTING	CONNECTION AT RADIO	DUMMY ANTENNA	BAND SWITCH SETTING	CONDENSER SETTING	ADJUSTMENT FOR MAX. METER DEFLECTION
Discriminator	10.7 MC	6BA6 2nd I-F Pin 1 & Chassis	.01 mf	FM	Rotor to Full Open	Disc. Pri. Note A
	10.7 MC	6BA6 2nd I-F Pin 1 & Chassis	.01 mf	FM	Rotor to Full Open	Disc. Sec. Note B
	10.7 MC	6BA6 2nd I-F Pin 1 & Chassis	.01 mf	FM	Rotor to Full Open	Disc. Pri. Note A
	10.7 MC	6BA6 2nd I-F Pin 1 & Chassis	.01 mf	FM	Rotor to Full Open	Disc. Sec. Note B
I-F	10.7 MC	6BA6 1st IF Pin 1 & Chassis	.01 mf	FM	Rotor to Full Open	2nd I-F Pri. 2nd I-F Sec. Note C
	10.7 MC	Unsolder lead from Pin 7 to band switch. Insert 100K ohm resistor between Pin 7 & Ground and feed signal into Pin 7 of 6BE6	.01 mf	FM	Rotor to Full Open	1st I-F Pri. 1st I-F Sec. Note C
	RECHECK I-F ADJUSTMENTS IN ORDER GIVEN					
Ant. & Osc.	108.5 Note D	Disconnect built-in line antenna and connect generator to dipole terminals with resistor in series	300ohms	FM	Rotor to Full Open	Osc. Trimmer (FM)
	104.5	Same as above	300ohms	FM	Tune rotor for max. AVC voltage	Ant. Trimmer (FM)
	RECHECK ANTENNA & OSC. ADJUSTMENTS IN ORDER GIVEN					

MODEL 43-7851 GAMBLE-SKOGMO, INC.

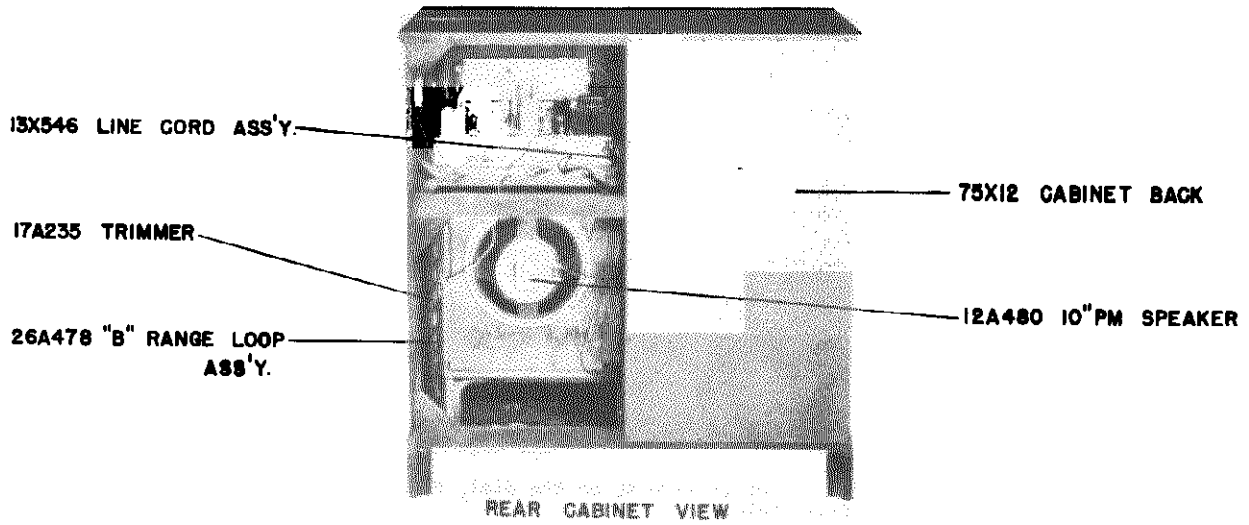

REAR CABINET VIEW

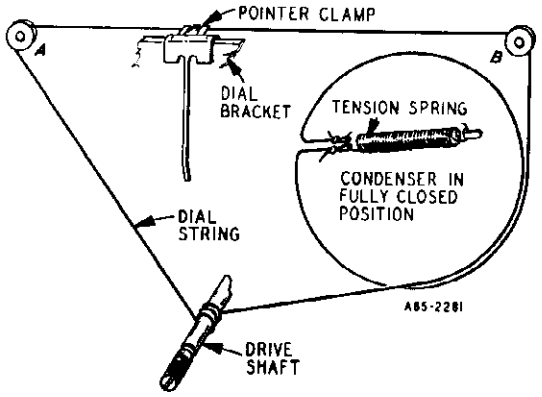

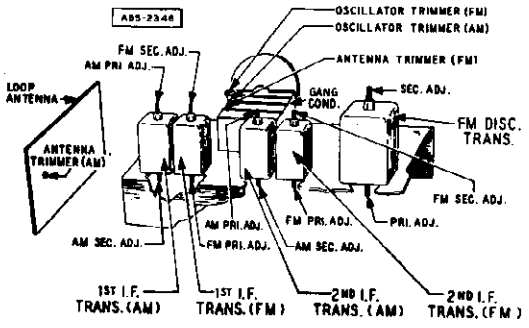

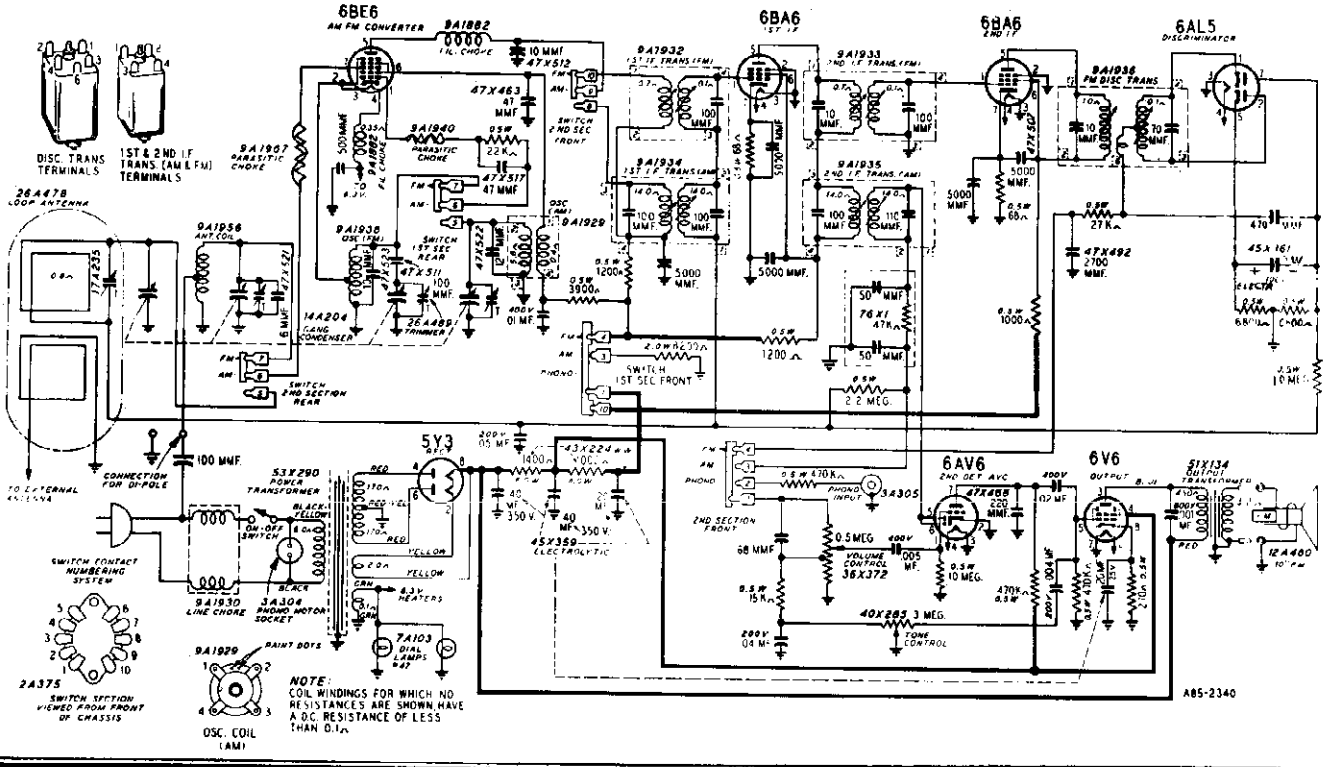

© John F. Rider

GAMBLE-SKOGMO, INC. MODEL 43-7851

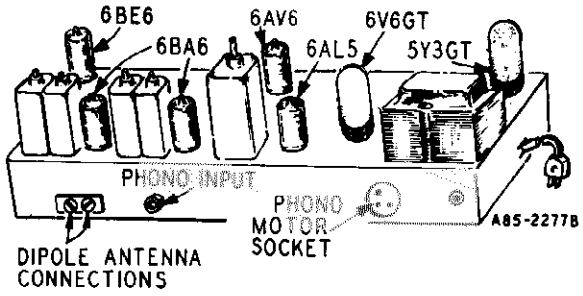

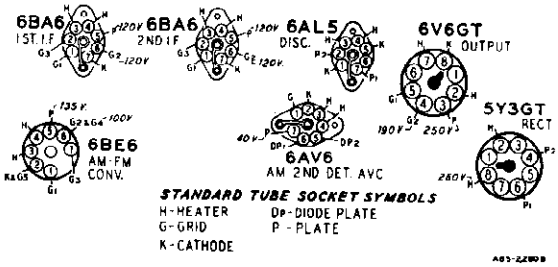

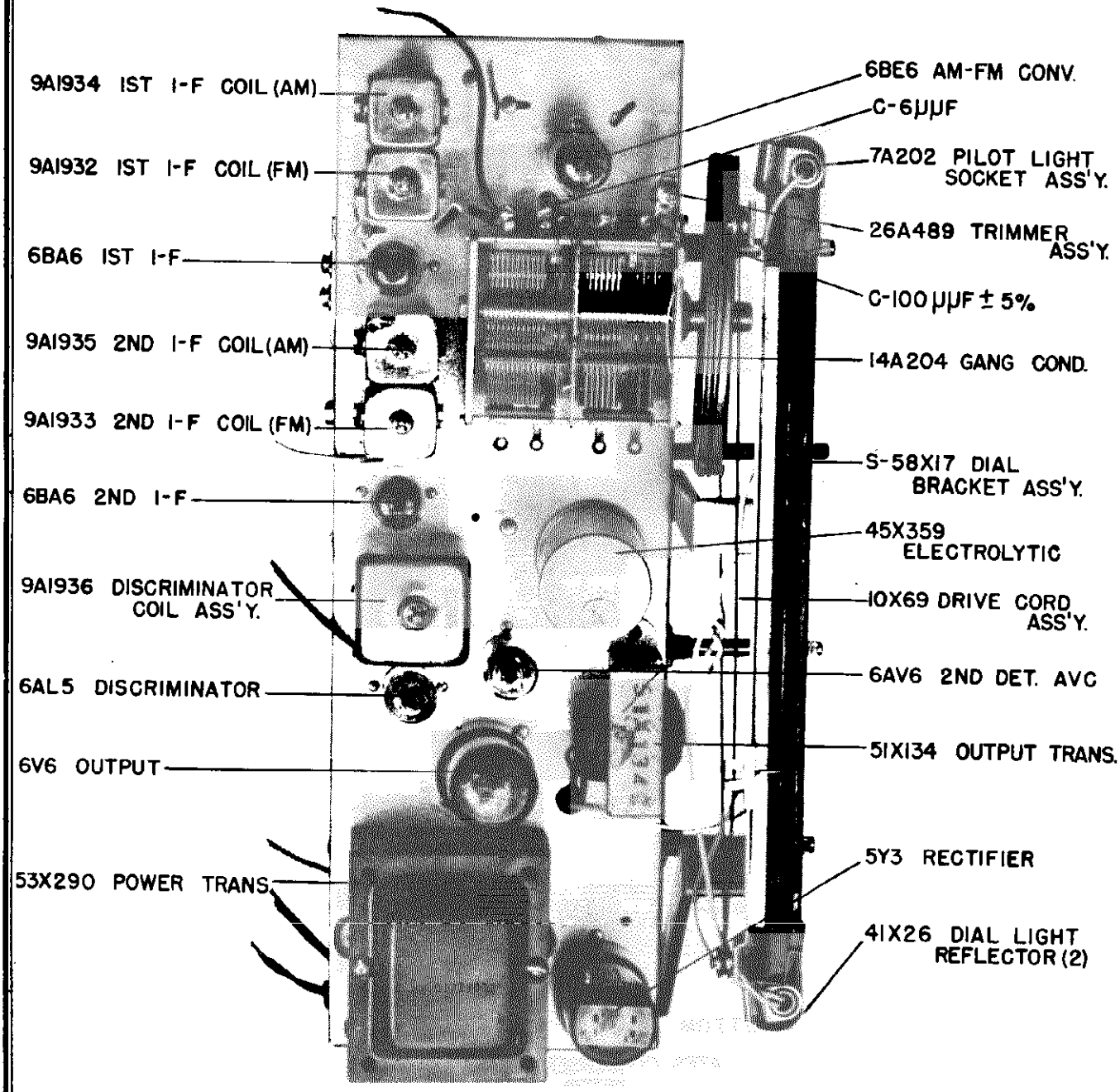

TOP CHASSIS VIEW

© John F. Rider

MODEL 43-7851 GAMBLE-SKOGMO, INC.

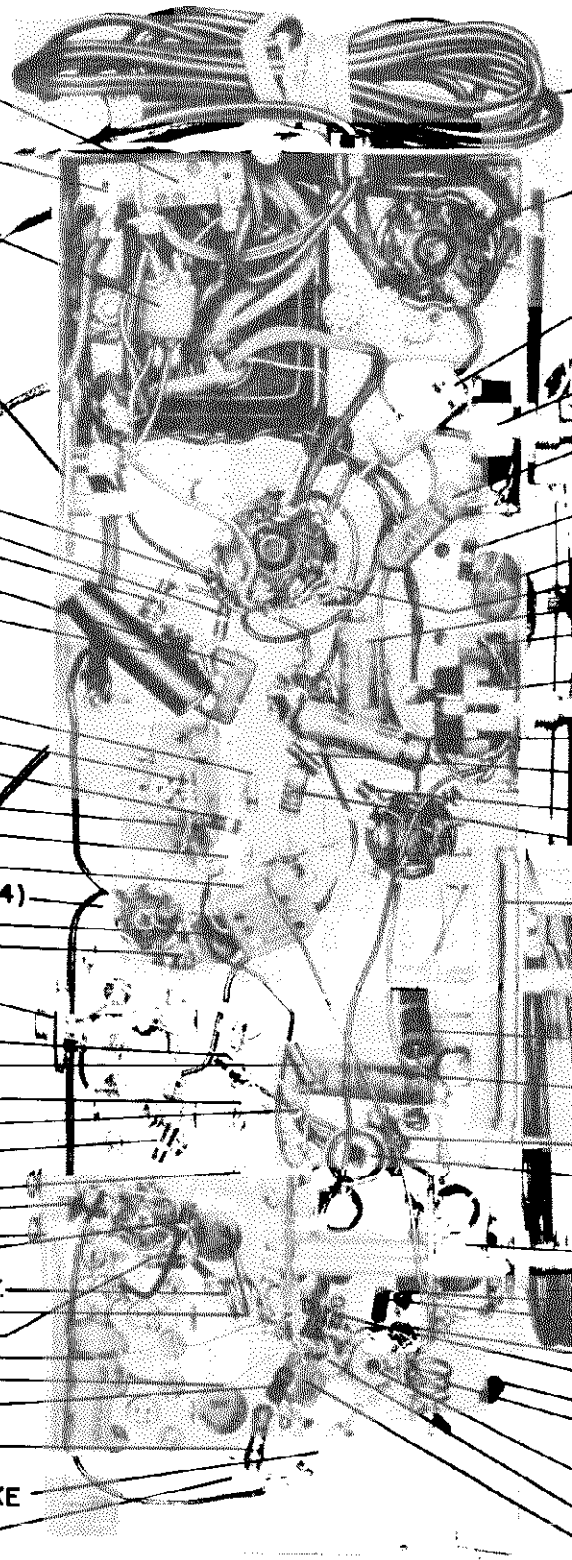

C-100 MMF. ± 20%
4A92 TER. STRIP
9A1930 LINE CHOKE ASS'Y.
3A304 PHONO MOTOR SOCKET
R-270Ω 0.5W
R-6800Ω 0.5W
R-6800Ω 0.5W
C-470 MMF.
45X361 ELECTROLYTIC
R-10 MEG. 0.5W
R-27K Ω 0.5W
R-1000Ω 0.5W
C-5000 MMF.
4A113 TER. STRIP
C-2700 MMF.
3A426 TUBE SOCKET (4)
C-5000 MMF.
R-68Ω 0.5W
3A305 PHONO SOCKET
R-470K Ω 0.5W
R-2.2 MEG. 0.5W
4A96 TER. STRIP
R-3900Ω 0.5W
R-1200Ω 0.5W
76X1 RES. CAP. COMB.
C-5000 MMF.
4A305 TER. STRIP
R-1200Ω 0.5W
9A1956 ANT. COIL ASS'Y.
C-5000 MMF.
R-68Ω 0.5W
C-.05 MF. 200V.
C-5000 MMF.
C-10 MMF. ± 10%
C-500 MMF.
9A1882 FILAMENT CHOKE
4A89 TER. STRIP

30X547 LINE CORD CLAMP
3A303 TUBE SOCKET (2)
C-.001 MF. 800V.
7A103 #47 PILOT LIGHT (2)
40X285 TONE CONTROL
C-.004 MF. 200V.
R-15KΩ 0.5W
C-.04 MF. 200V.
R-470KΩ 0.5W
C-.02 MF. 400V.
C-68 MMF.
36X372 VOL. CONTROL
C-.005 MF. 400V.
R-1 MEG. 0.5W
R-470KΩ 0.5W
C-220 MMF.
43X224 W.W. RESISTOR
26X486 DRIVE SHAFT
R-8200Ω 2W
C-.01 MF. 400V.
C-12 MMF.
9A1929 OSC. COIL (AM)
2A375 BAND CHANGE SWITCH
C-47 MMF. ± 10%
R-22KΩ 0.5W
9A1940 PARASITIC CHOKE
9A1967 PARASITIC CHOKE
C-10 MMF. ± 5%
9A1938 OSC. COIL (FM)
3A427 TUBE SOCKET (AM-FM) CONVERTER
9A1882 PLATE CHOKE
C-47 MMF. ± 20%

BOTTOM CHASSIS VIEW

PREFIX "C" INDICATES CONDENSER
PREFIX "R" INDICATES RESISTOR

© John F. Rider

GAMBLE-SKOGMO, INC. MODEL 43-7851

Part No.	Description
2A375	Band Change Switch
3A303	Molded Octal Tube Socket (2)
3A304	Phono Motor Socket
3A305	Phono Socket (Single Pin)
3A426	Tube Socket (miniature) (4)
3A427	Tube Socket (miniature for AM-FM converter)
4A89	Terminal Strip
4A92	Terminal Strip
4A96	Terminal Strip
4A113	Terminal Strip
4A405	Antenna Terminal Strip
7A103	Pilot Light #47 (2)
7A202	Pilot Light Socket Assembly
9A1882	Choke Assembly (2)
9A1929	Oscillator Coil Assembly (AM)
9A1930	Line Choke Assembly
9A1932	1st I.F. Coil Assembly (FM)
9A1933	2nd I.F. Coil Assembly (FM)
9A1934	1st I.F. Coil Assembly (AM)
9A1935	2nd I.F. Coil Assembly (AM)
9A1936	Discriminator Coil Assembly
9A1938	Oscillator Coil Assembly (FM)
9A1940	Parasitic Choke
9A1956	Antenna Coil Assembly
9A1967	Parasitic Choke Assembly
10A675	Knob (Tuning)
10A676	Knob (Off-On Volume)
10A677	Knob (Tone)
10A678	Knob (Ph-BC-FM)
12A480	10" P.M. Speaker
14A204	Gang Condenser & Pulley
28A139	Record Changer V.M. #800
26A478	"B" Range Loop Antenna Assembly made up of:
	9A1939 "B" Range Loop Antenna
	17A235 Trimmer Condenser
	1701 3/16" Tubular Rivet
26A489	Trimmer Assembly consisting of:
	17A257 Tubular Trimmer Slug
	17A258 Tubular Trimmer Sleeve
S-58X17	Dial Bracket Assembly consisting of:
	7X42 Cardboard Spacer
	8X185 Rubber Bands
	20X268 Rivets
	24X446 Idler Pulley
	25X1569 Dial Bracket
	41X26 Dial Light Reflector
	58X709 Dial Glass
	AS. Req. Brown Lacquer Enamel
4X1017	Escutcheon
6X21	Rubber Grommet (4)
10X69	Drive Cord Assembly
13X546	Line Cord & Plug Assembly
14X435	Grille Cloth
15X241	Pointer
19X179	Flat Washer (Mtg. Set to Cabinet) (3)
19X192	"C" Washer (Drive Shaft) (2)
19X434	#8 Flat Washer (Mtg. 53X290) (2)
20X260	Condenser Cushion Stud (3)
22X472	Chassis Base (with bracket)
26X486	Drive Shaft
25X1488	Idler Bracket
28X113	Drive Cord Tension Spring
30X547	Line Cord Clamp
36X372	Volume Control & Switch
40X285	Tone Control
41X26	Dial Light Reflector (2)
43X224	W.W. Resistor, 1000 ohms 4 W-1400 ohms 6 W
45X359	4 Section Electrolytic, 40 mf, 350 V-40 mf 350 V - 20 mf, 350 V - 20 mf, 25 V
45X361	Dry Electrolytic, 5 mf, 100 V
47X463	Capacitor, Ceramic; 47 mmf 20%
47X468	Capacitor, Ceramic; 220 mmf 20%
47X471	Capacitor, Molded Mica; 68 mmf 20%
47X476	Capacitor, Molded Mica; 100 mmf 20%
47X492	Capacitor, Molded Mica; 2700 mmf 10%
47X507	Capacitor, Silvered Mica; 5000 mmf (5)
47X508	Capacitor, Ceramic; 500 mmf 20%
47X510	Capacitor, Silvered Mica; 470 mmf 5%
47X511	Capacitor, Ceramic; 100 mmf 5%
47X512	Capacitor, Ceramic; 10 mmf 5%
47X517	Capacitor, Ceramic; 47 mmf 10%
47X521	Capacitor, Ceramic; 6 mmf 10%
47X522	Capacitor, Ceramic; 12 mmf 10%
47X523	Capacitor, Ceramic; 10 mmf 10%
51X134	Output Transformer
53X290	Power Transformer
58X709	Dial Glass
75X12	Cabinet Back
76X1	Resistor Capacitor Combination
B66402	Capacitor Tubular .004 mf 200 V 25%
B66403	Capacitor Tubular .04 mf 200 V 25%
B66503	Capacitor Tubular .05 mf 200 V 25%
B83392	Resistor, Carbon; 3900 ohms .5 W
B83680	Resistor, Carbon; 68 ohms .5 W (2)
B84102	Resistor, Carbon; 1000 ohms .5 W
B84122	Resistor, Carbon; 1200 ohms .5 W (2)
B84153	Resistor, Carbon; 15 K ohms .5 W
B84223	Resistor, Carbon; 22 K ohms .5 W
B84271	Resistor, Carbon; 270 ohms .5 W
B84273	Resistor, Carbon; 27 K ohms .5 W
B84682	Resistor, Carbon; 6800 ohms .5 W (2)
B85105	Resistor, Carbon; 1 megohm .5 W
B85106	Resistor, Carbon; 10 megohms .5 W
B85225	Resistor, Carbon; 2.2 megohms .5 W
B85474	Resistor, Carbon; 470 K ohms .5 W (3)
D66103	Capacitor, Tubular; .01 mf 400 V 25%
D66203	Capacitor, Tubular; .02 mf 400 V 25%
D66502	Capacitor, Tubular; .005 mf 400 V 25%
D84822	Resistor, Carbon; 8200 ohms 2.0 W
H66102	Capacitor, Tubular; .001 mf 800 V 25%

FM ALIGNMENT NOTES

Note A - The zero center scale DC vacuum tube voltmeter is to be connected between chassis ground and the A.V.C. line at the 27 K. ohm resistor and its junction with terminal strip. A signal of .1 volt must be fed into the receiver for this adjustment. Note output voltage on the zero center DC vacuum tube voltmeter.

Note B - Disconnect zero center DC vacuum tube voltmeter from A.V.C. and connect it to the audio takeoff point at the 1 megohm resistor and its junction with the terminal strip. Adjust for zero voltage indication.

Note C - Connect zero center DC vacuum tube voltmeter as in Note A. Adjust input to give same output on the zero center DC vacuum tube voltmeter as in Note A.

Note D - Remove the 100 K ohm load resistor and solder the lead from pin 7 of 6BE6 tube to the band switch before attempting to check the antenna and oscillator adjustments.

MODELS 43-8129A,
43-8130A, 43-8130B,
43-8131A, 43-8131B

GAMBLE-SKOGMO, INC.

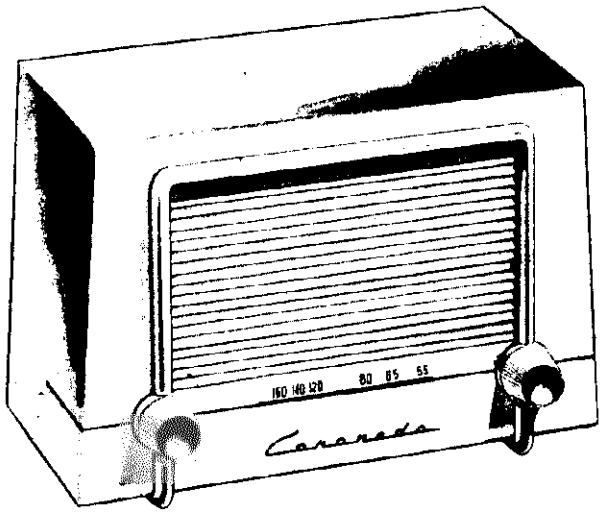

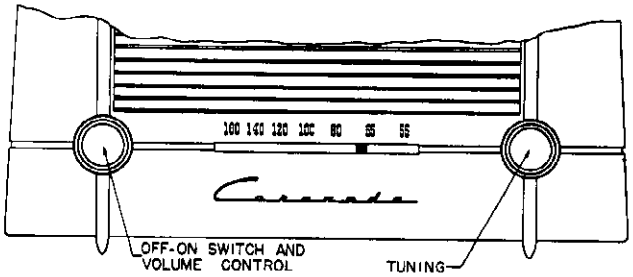

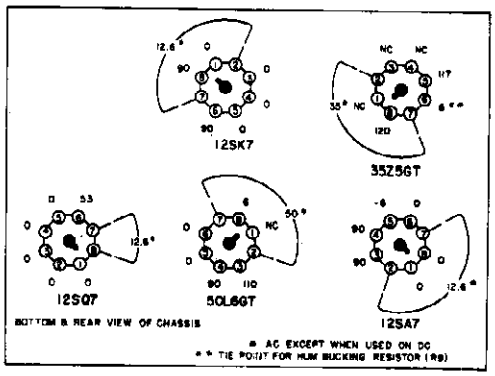

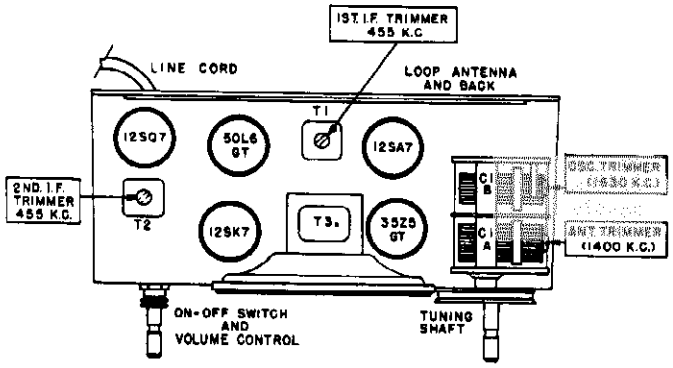

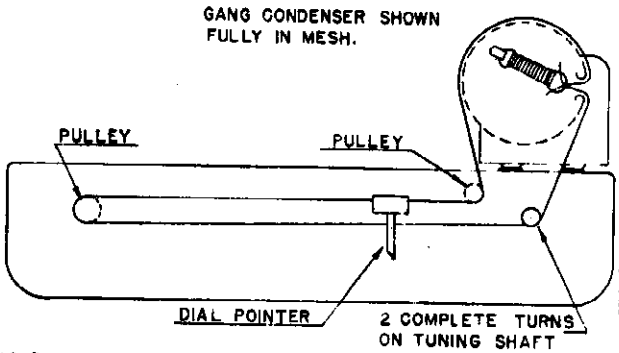

SPECIFICATIONS

Power Supply	117 volts 60 cycle AC, 117 volts DC, 29 watts
Frequency Range	535 KC to 1630 KC
Intermediate Frequency	455 KC
Antenna	Built-in Loop
Tuning	Variable Capacity
Speaker	4", P.M., voice coil impedance 3.2 ohms
Power Output	0.75 watt undistorted, 1.8 watts maximum
Sensitivity	500 uv/m average for 50 milliwatts output
Selectivity	65 KC broad at 1000 times, signal at 1000 KC

Tubes used are as follows:

12SA7 Oscillator-Converter
12SQ7 AVC, Detector and Audio
12SK7 I.F. Amplifier
50L6GT Power Output
35Z5GT Power Rectifier

©John F. Rider

GAMBLE-SKOGMO, INC. MODELS 43-8129A, 43-8130A, 43-8130B, 43-8131A, 43-8131B

ALIGNMENT PROCEDURE

The following procedure is for use only by competent servicemen having the proper equipment.

The alignment should be made with volume control fully on, and the output from the Signal Generator as low as possible, to prevent AVC action from interfering with proper alignment.

With the output meter connected across the voice coil of the speaker, the output meter reading for 50 milliwatts is 0.4 volts, using a signal which is modulated 400 c.p.s.

Adjust all trimmers for maximum output. Repeat the alignment procedure given below as a final check.

CAUTION: This is an AC/DC receiver and when aligning the set it is necessary to isolate the Signal Generator or the Receiver from the line by use of a transformer, or to place a .2 MFD condenser in each test lead of the Signal Generator.

SIGNAL GENERATOR Frequency	Dummy Antenna	Connection to Radio	POSITION OF VARIABLE	ADJUST FOR MAXIMUM OUTPUT
455 KC	.1 MFD	12SA7 Grid	Fully	T1 & T2
		Stator C1A	Open	
1630 KC	.1 MFD	12SA7 Grid	Fully	C1B
		Stator C1A	Open	Oscillator
		Loosely	Tune in	
1400 KC		Coupled	Signal	C1A
		To Loop	Generator	Antenna

Connect low side of Signal Generator to common negative.

SYMBOL	PART NO.	DESCRIPTION	VALUE	TOL.	RATING
		CONDENSERS			
C1A, C1B	B19-198	Condenser, 2 gang			
C2, C5	A16-158	Condenser, paper	.05 MFD	20%	400 volts
C3, C9, C15	A15-176	Condenser, mica	250 MMF	20%	500 volts
C4, C10, C11	A16-153	Condenser, paper	.005 MFD	20%	600 volts
C6, C14	A16-152	Condenser, paper	.05 MFD	20%	200 volts
C7	A15-175	Condenser, mica	50 MMF	20%	500 volts
C8	A16-151	Condenser, paper	.02 MFD	20%	600 volts
C12	A18-280	Electrolytic	40 MFD		150 volts
C13	A18-272	Electrolytic	20 MFD		150 volts
		RESISTORS			
R1	A60-685	Resistor	47K ohm	20%	1/2 watt
R2, R8, R12	A60-662	Resistor	470K ohm	20%	1/2 watt
R3,	A60-659	Resistor	22K ohm	20%	1/2 watt
R4, R13	A60-668	Resistor	1 megohm	20%	1/2 watt
R5	A24-180	Volume control and switch	1 megohm	20%	1/2 watt
R6	A60-663	Resistor	10 megohm	20%	1/2 watt
R7	A60-702	Resistor	120 ohms	10%	1/2 watt
R9	A60-698	Resistor	10K ohm	10%	1 watt
R10	A60-732	Resistor	1000 ohms	10%	1 watt
R11	A60-690	Resistor	27 ohms	10%	1/2 watt
		COILS AND TRANSFORMERS			
T1, T2	A10-479	Input and output I.F. transformers			
L1	B10-480	Oscillator coil			

CABINET, DIAL AND TUNING PARTS

PART NO.	DESCRIPTION
A42-453	Cabinet, polystyrene, brown
D42-450	Cabinet, polystyrene, white
A42-452	Cabinet, polystyrene, black
A52-282	Knob, tenite, brown
B52-281	Knob, tenite, white
A51-105	Dial cord
A58-73	Pointer, slide type
A70-122	Spring, dial cord tension

MISCELLANEOUS

PART NO.	DESCRIPTION
A11-187	Clamp, line cord
A23-151	Line cord
A83-421	Clip, I.F. trans. mounting
B79-369	Speaker, 4", P.M. w/output trans.
C21-139	Cover, chassis bottom
SD84-275	Loop and back (for U/L models)
SD84-305	Loop and back (for non U/L models)
68-11	Tube socket

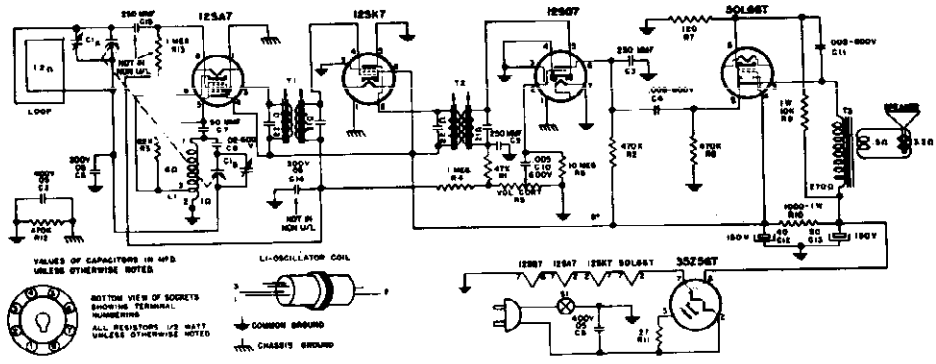

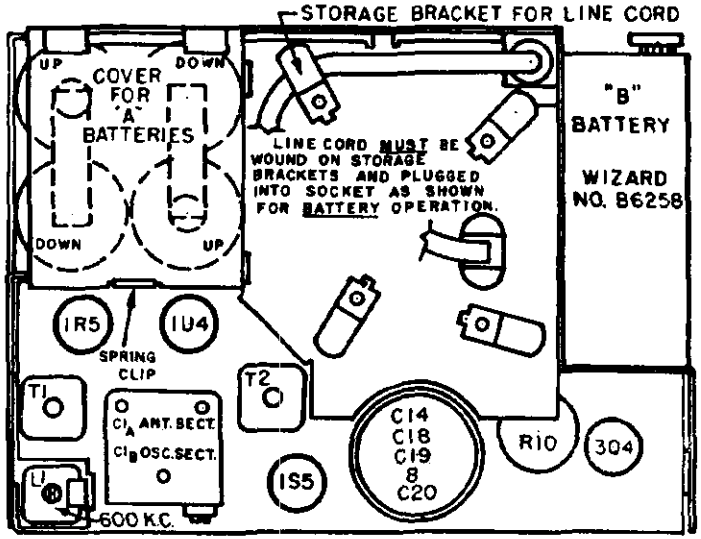

FIG. 2 PICTORIAL DIAGRAM

ELECTRICAL SPECIFICATIONS

Power Supply	117 volts AC/DC, 14 watts
Battery Operation	1 - 67.5 volt "B", 4 - 1.5 volt "A"
Frequency Range	535 KC to 1600 KC
Intermediate Frequency	455 KC
Tuning	Variable Capacity
Speaker	3.5" P.M., 3.2Ω
Power Output	130 Milliwatts max., 65 mw at 10%
Sensitivity for 50 milliwatts	225 μv/m
Selectivity at 1000X, Signal at 1000 KC	60 KC broad

THE TUBES USED ARE:

1R5	Oscillator-Converter	3Q4	Power Output
1U4	I.F. Amplifier		
1S5	Detector, AVC, Audio		Selenium Rectifier 75 ma.

VOLTAGE CHART

All voltages are measured from minus "B" with a 20,000 ohm per volt meter, volume control at maximum, no signal applied, and the radio operating from a 117 volt AC power supply.

NOTE: Normal tolerance on component values may cause a plus or minus of 10% in voltage readings.

TUBE	Pin Numbers						
	1	2	3	4	5	6	7
1R5	1.6	65	67	—8	1.5	0	2.8
1U4	2.8	65	65	0	2.8	0	4.2
1S5	0	0	0	18	20	0	1.5
3Q4	4.2	64	0	65	5.9	64	6.8

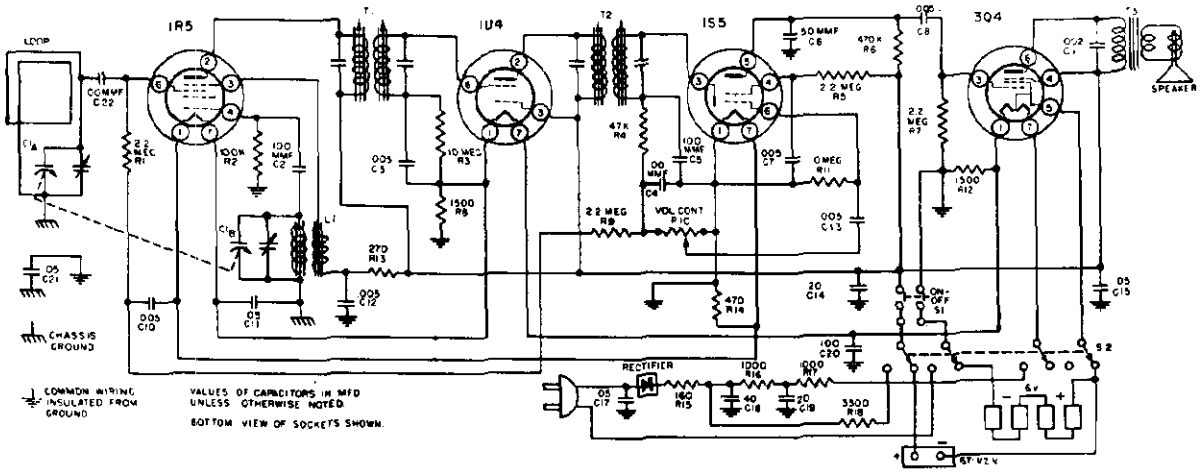

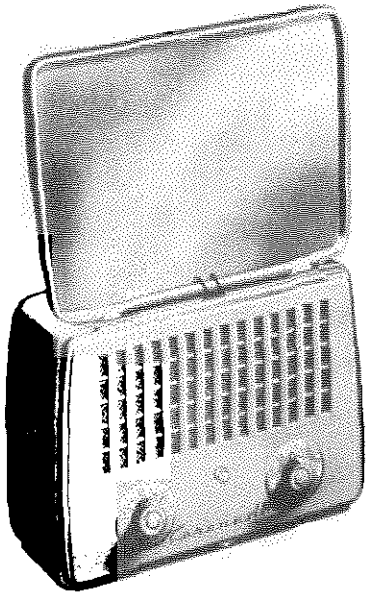

ALIGNMENT PROCEDURE

Volume control—Maximum: all adjustments.

Connect ground lead of signal generator to common "B."

Connect dummy antenna in series with output lead of signal generator.

Connect output meter across voice coil of speaker.

For alignment points refer to Figure No. 2.

The following equipment is necessary for proper alignment:

Signal generator that will provide the test frequencies as listed, 30% modulated, 400 c.p.s.

Output meter.

Non-metallic screwdriver.

Dummy antennas— .1 mfd.,

Position of Variable	Generator Frequency	Dummy Ant. Mfd.	Generator Connections	Trimmer Adjustment	Trimmer Function
Fully open	455 KC	.1	*1R5 Grid (Stator of C1A)	T2	Output I.F
Fully open	455 KC	.1	*1R5 Grid (Stator of C1A)	T1	Input I.F.
Fully open	1600 KC	.1	*1R5 Grid (Stator of C1A)	C1B	Oscillator
Tune in signal from generator	1400 KC	—	Loosely coupled to loop	C1A	Antenna
**Tune in signal from generator	600 KC	—	Loosely coupled to loop	L1	600 KC Padder

*Connect ground lead of signal generator to chassis.

**When making this adjustment the variable should be rocked back and forth.

SYMBOL	PART NO.	DESCRIPTION	VALUE	RATING
		CONDENSERS		
C2, C4, C5, C22	A15-190	Mica condenser	100 MMF	
C1A, C1B	B19-190	Variable condenser		
C3, C7, C8 C10, C12, C13	A16-181	Condenser	.005 MFD	150 volts
C6	A15-191	Mica condenser	50 MMF	
C11, C17, C21	A16-172	Condenser	.05 MFD	400 volts
C14, C19		Electrolytic condenser	20 MFD	150 volts
C18	A18-282	Electrolytic condenser	40 MFD	150 volts
C20		Electrolytic condenser	100 MFD	25 volts
C15	A16-171	Condenser	.05 MFD	200 volts
C9	A16-182	Condenser	.002 MFD	200 volts
		RESISTORS		
R1, R5, R7, R9	A60-726	Resistor	2.2 megohm	1/2 watt
R2	A60-727	Resistor	100K ohm	1/2 watt
R3, R11	A60-728	Resistor	10 megohm	1/2 watt
R4	A60-730	Resistor	47K ohm	1/2 watt
R6	A60-731	Resistor	470K ohm	1/2 watt
R8, R12	A60-729	Resistor	1500 ohm	1/2 watt
R10	A24-172	Volume Control	1 megohm	
R13	A60-723	Resistor	270 ohm	1/2 watt
R14	A60-722	Resistor	470 ohm	1/2 watt
R15	A60-725	Resistor	160 ohm	3 watt
R16, R17	A60-713	Resistor (1000 ohms ea. sec.)	2000 ohm	10 watt
R18	A60-724	Resistor	3300 ohm	1 watt
		COILS AND TRANSFORMERS		
T1, T2	C10-475	1st and 2nd I.F. Transformer		
T3	A80-231	Output transformer		
L1	B10-477	Oscillator coil		
		MISCELLANEOUS		
	S84-112	Cover assembly for "A" batteries		
	S84-214	Front cover ass'y. for case, with loop		
	S84-217	Rear cover assembly for case		
	S84-111	Hub and Pointer assembly		
	A52-227	Knob, On-Off switch		
	A52-229	Knob, tuning		
	A52-232	Knob, volume control		
	A83-561	Selenium Rectifier		
	B79-353	Speaker, P.M.		
	A69-174	Switch, AC-DC Battery		
	A69-175	Switch, On-Off		
	A75-34	Terminal for "B" battery		
	B23-156	Line cord		
	D21-108	End Cap, for handle		
	A83-494	Handle		

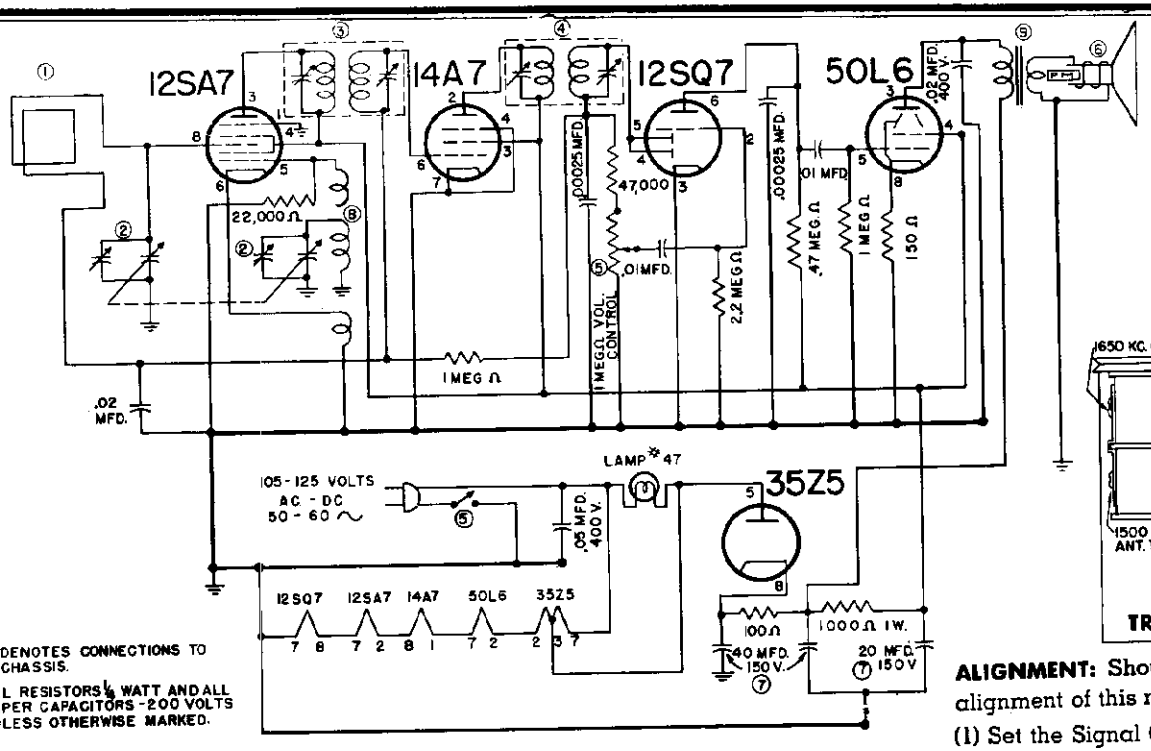

I.F. - 455 K.C.

① 1.469 LOOP ASSEMBLY
② 2.163 2 GANG VARIABLE COND.
③ 1.259 1 ST. I.F. TRANSFORMER
④ 1.409 2 ND. I.F. TRANSFORMER
⑤ 8.201-3 VOLUME CONTROL & SWITCH
⑥ 30.318 P.M. 5" SPEAKER
⑦ 5.400-8 ELECTROLYTIC CAP. 40-40-20 MFD.
⑧ 1.402-1 OSCILLATOR COIL
⑨ 9.219 OUTPUT TRANSFORMER

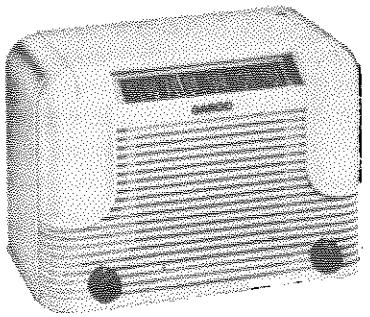

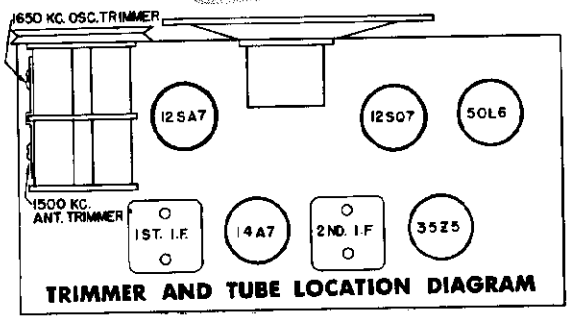

TRIMMER AND TUBE LOCATION DIAGRAM

LINE VOLTAGE: This receiver is designed for operation on 105-125 Volts, 50-60 Cycles, either Alternating or Direct Current (AC-DC).

POWER CONSUMPTION: 30 Watts.

TUNING RANGE: Broadcast: 540 to 1650 Kilocycles (180 to 555 meters).

DIAL: The Dial Scale is calibrated in Kilocycles times 10 to correspond with newspaper or periodical listings.

TUBES: The tubes used, and their functions, are as follows:

12SA7 Converter — 12SQ7 Detector, Avc and Audio Amp.
14A7 I.F. Amplifier — 50L6 Beam Power Amplifier
35Z5 Rectifier

ALIGNMENT: Should it become necessary at any time to check the alignment of this receiver, proceed as follows:

(1) Set the Signal Generator to 455 KC and connect to the stator lug on the rear section of the Variable Capacitor. Connect the Signal Generator Ground lead to the chassis. Connect a suitable output meter across the Speaker Voice Coil Connections. Turn the Volume Control to the maximum position. Turn the Variable Capacitor to the extreme clockwise position.

(2) Adjust the trimmers located at the top of the first and second I. F. Transformers or the iron cores located at the top and bottom of each I. F. for maximum output as indicated on the Output Meter.

(3) Loosely couple the Signal Generator lead to the Loop and set to 1650 KC.

(4) With Variable Capacitor set at the extreme clockwise position, tune in the 1650 KC signal by means of the Oscillator Trimmer on the Variable Capacitor (front section).

(5) Set the Signal Generator to 1500 KC and turn the Tuning Control so that this frequency is indicated on the dial. Adjust the Antenna Trimmer on the Variable Capacitor (rear section) for maximum output. No other adjustments are necessary.

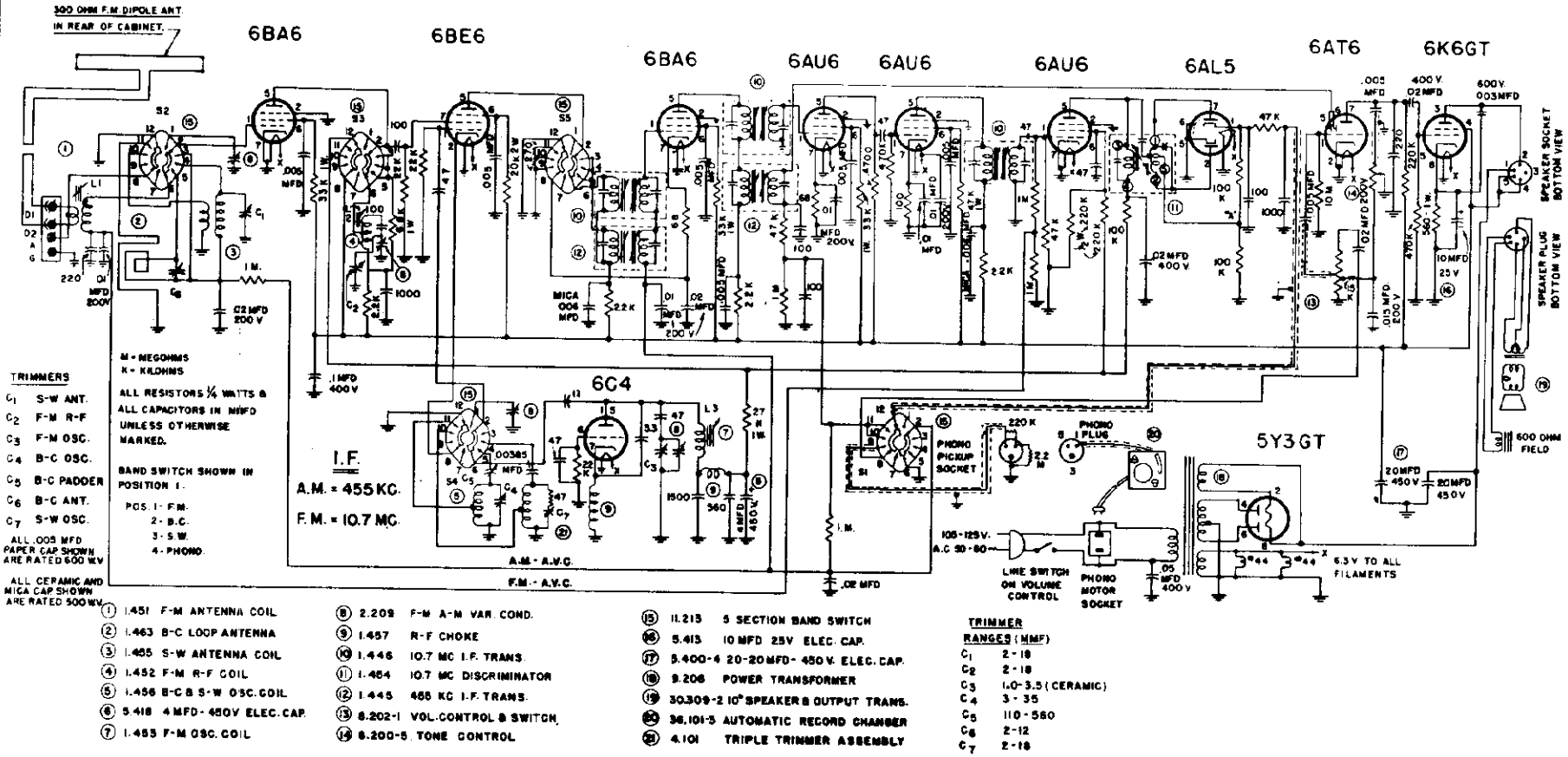

①	1.451 F-M ANTENNA COIL	⑧	2.209 F-M A-M VAR. COND.
②	1.463 B-C LOOP ANTENNA	⑨	1.457 R-F CHOKE
③	1.465 S-W ANTENNA COIL	⑩	1.446 10.7 MC I.F. TRANS.
④	1.452 F-M R-F COIL	⑪	1.464 10.7 MC DISCRIMINATOR
⑤	1.456 B-C & S-W OSC. COIL	⑫	1.445 455 KC I.F. TRANS.
⑥	5.418 4 MFD - 450V ELEC. CAP.	⑬	8.202-1 VOL. CONTROL & SWITCH
⑦	1.455 F-M OSC. COIL	⑭	8.200-5 TONE CONTROL

⑮	11.213 5 SECTION BAND SWITCH		
⑯	5.413 10 MFD 25V ELEC. CAP.		
⑰	5.400-4 20-20 MFD - 450 V. ELEC. CAP.		
⑱	9.206 POWER TRANSFORMER		
⑲	30.309-2 10" SPEAKER & OUTPUT TRANS.		
⑳	36.101-5 AUTOMATIC RECORD CHANGER		
㉑	4.101 TRIPLE TRIMMER ASSEMBLY		

TRIMMER RANGES (MMF)

C_1	2 - 18
C_2	2 - 18
C_3	1.0 - 3.5 (CERAMIC)
C_4	3 - 35
C_5	110 - 560
C_6	2 - 12
C_7	2 - 18

TUNING RANGE:

Broadcast Band: 540 to 1650 Kilocycles (180 to 555 Meters)

Short Wave Band: 5.3 to 18.5 Megacycles (16 to 56 Meters)

F-M Band: 87.5 to 108.5 Megacycles (2.7 to 3.4 Meters)

DIAL SCALES: The Dial Scale is calibrated in Kilocycles for the Broadcast Band, and in Megacycles for the Short Wave and F-M Bands, corresponding with newspaper or periodical listings.

LINE VOLTAGE: This receiver is designed for operation on 105-125 Volts; 60 Cycles, Alternating Current (AC) only.

POWER CONSUMPTION INCLUDING RECORD CHANGER: 100 Watts.

ANTENNA:

(A) Broadcast Band: A highly selective rotatable loop antenna is provided in the cabinet of the receiver for broadcast reception. The loop antenna should be rotated for maximum signal strength and minimum noise depending on the location of the receiver.

(B) F-M Band: A folded 300 ohm dipole antenna is provided at the rear of the cabinet and is connected to the antenna strip F-M terminal posts marked "D1", "D2" for F-M reception. The folded dipole antenna will give excellent results in most locations providing F-M reception. In unfavorable locations where poor reception is encountered a well constructed outdoor dipole antenna (equipped with a 300 ohm flat lead-in) should be installed by your authorized dealer. The folded dipole connections on the antenna strip at the rear of the cabinet should be disconnected and the outdoor dipole 300 ohm flat lead-in connected to the F-M terminals if used.

(C) Short Wave Band: The folded dipole antenna provided at the rear of the cabinet or an outdoor dipole is automatically connected for use on the shortwave band as an efficient antenna.

In unfavorable locations where distant reception is required, a well constructed outdoor antenna about fifty feet long may be used for broadcast or shortwave reception. The antenna should be connected to the antenna strip terminal post marked "A".

Although the receiver will operate without a ground connection in most locations, a good ground will often reduce noise pick-up on the broadcast and shortwave bands. A good ground connection can be made by connecting to a water pipe, radiator or a pipe driven into the ground. A clamp should be used for making the actual connection. The ground wire from the clamp should be connected to the antenna strip terminal post marked "G" at the rear of the chassis.

During the alignment procedure, all adjustments should be made under the following conditions:

(A) Line voltage set at 117 volts A.C.

(B) Volume control at maximum position.

(C) Tone control set at extreme left position (tremble).

(D) Minimum input from the signal generator. This procedure should be adhered to, otherwise adjustments will be broad, due to the action of the automatic volume control.

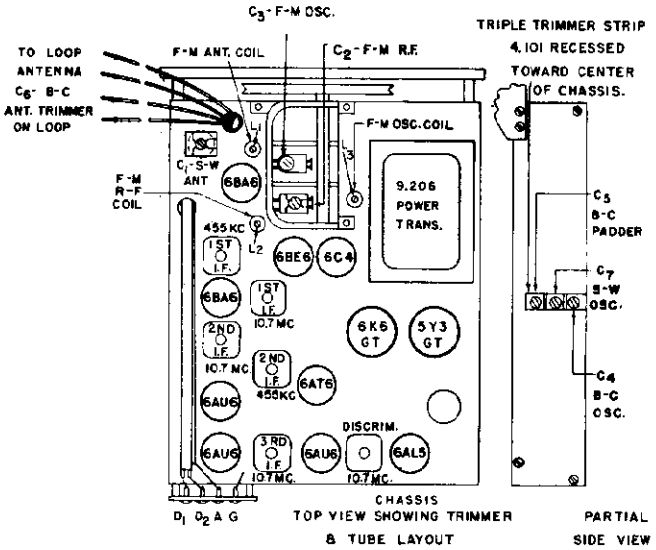

TUBES: The Tubes used, and their function, are as follows:

6BA6 R.F. Amplifier
6BE6 A.M. Converter, F.M. Mixer
6C4 F.M. Oscillator
6BA6 1st I.F. Amp. (AM)
6AU6 2nd I.F. Amp. (FM)
6AU6 3rd I.F. Amp. (FM)
6AU6 FM Limiter
6AL5 FM Discriminator
6AT6 AM Det., AVC and AM-FM Audio Amp.
6K6GT Power Amplifier Pentode
5Y3GT Rectifier

MODEL 11FMP GAROD RADIO CORP.

ALIGNMENT CHART

(Follow Sequence as Indicated)

CIRCUIT ALIGNED	STEP	RCVR. DIAL POINTER	SIGNAL GENERATOR FREQUENCY	SIGNAL GENERATOR CONNECTIONS	METER	METER CONNECTIONS	TRIMMER OR CORE ADJ.	PROCEDURE
B.C. I.F.	1	1650 KC. B.C. Band	455 KC. 30% Mod.	Through .1 MFD CAP. TO GRID of 6BE6.	A.C. Output Meter	Across voice coil	Cores on top and bottom of 1st and 2nd I.F. trans.	Adjust for maximum output
F-M I.F.	2	108.5 MC. F-M Band	10.7 MC. unmod.	Through .01 MFD. Cap. to grid of 6BE6.	D.C. VTVM	From Pin 1 limiter grid and ground	Top and bottom cores of 1st, 2nd and 3rd I.F. Trans. F-M	Same as step 1
F-M I.F.	3							Repeat step 2
F-M Disc.	4	108.5 MC. F-M Band	10.7 MC. unmod.	Same as step 2	D.C. VTVM	From junction of 100K disc. load resistor point "A" and ground	Bottom core of 10.7 MC Disc. Trans.	Same as step 1
F-M Disc.	5	108.5 MC. F-M Band	10.7 MC. unmod.	Same as step 2	D.C. VTVM	From Pin 1 6AL5 and ground	Top core of 10.7 Mc Disc. Trans.	Adjust for zero between positive and negative meter reading
F-M Osc. (high) Freq. end)	6	108.5 MC. F-M Band	108.5 MC. unmod.	Through balanced 300 ohm dummy ant. to D1, D2 and ground terminals	D.C. VTVM	From Pin 1 limiter grid and ground	C3	Same as step 1
F-M Osc. (low freq. end)	7	87.5 MC. Band 1	87.5 MC. unmod.	Same as #6	D.C. VTVM	Same as #6	Oscillator coil core L3	Same as step 1
F-M Osc.	8	REPEAT STEPS 6 AND 7 AS NECESSARY						
F-M R.F. Circuit	9	105 MC. Band 1	105 MC. unmod.	Same as #6	D.C. VTVM	Same as #6	C2	Same as step 1
F-M ANT. Circuit	10	90 MC. Band 1	90 MC. unmod.	Same as #6	D.C. VTVM	Same as #6	R.F. coil core L2	Same as step 1
	11	REPEAT STEPS 9 AND 10 AS NECESSARY						
	12	95 MC. Band 1	95 MC. unmod.	Same as #6	VTVM D.C.	Same as #6	Antenna coil core L1	Same as step 1
B.C. Osc.	13	1650 KC. Band 2	1650 KC. 30% mod.	Through loop, or coupled to receiver loop by a 2 or 3 turn loop.	Output meter	Across voice coil	C4	Same as step 1
B.C. Osc.	14	540 KC. Band 2	540 KC. 30% mod.	Same as #13	Output meter	Across voice coil	C5	Same as step 1
	15	REPEAT STEP #13						
	16	1500 KC. Band 2	1500 KC. 30% mod.	Same as #13	Output meter	Across voice coil	C6	Same as step 1
B.C.R.F.	17	600 KC. Band 2	600 KC. 30% mod.	Same as #13	Output meter	Across voice coil	C5	Adjust for maximum output while rocking gang
	18	REPEAT STEP 16						
S.W. Osc.	19	18.5 MC. Band 3	18.5 MC. 30% mod.	Through 400 ohm resistor to ant. and gnd. terminals.	Output meter	Across voice coil	C7	Adjust all the way open, then carefully turn in until output is maximum
S.W. R.F.	20	16.0 MC. Band 3	16.0 MC. 30% mod.	Same as #19	Output meter	Across voice coil	C1	Adjust for maximum output while rocking gang

©John F. Rider

GENERAL ELECTRIC CO.

MODELS GD-50, GD-506, GD-550

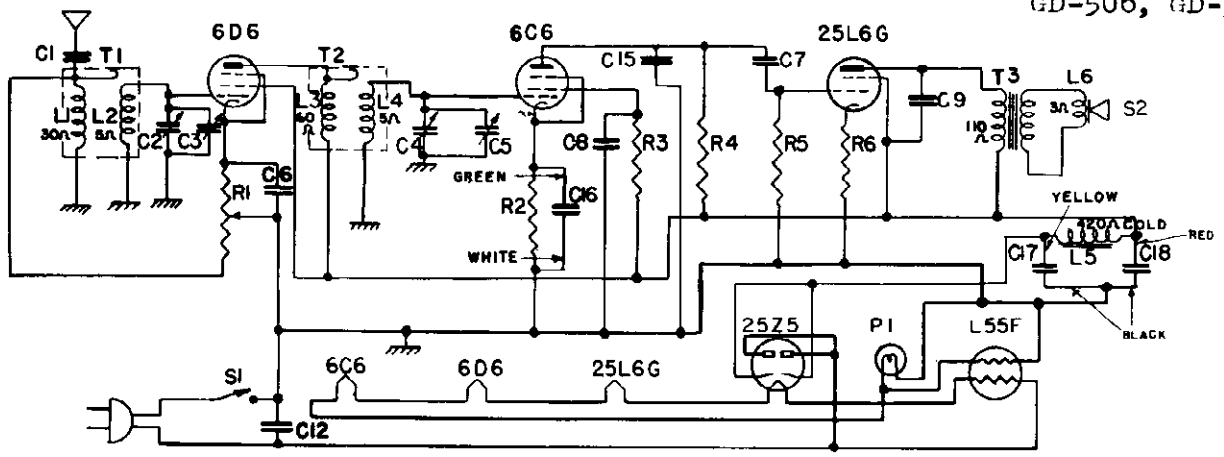

540-1800 kc.

Symbol	Description	Symbol	Description	Symbol	Description
C-1	Capacitor—.01 Mfd. (GD-41)	C-12	Capacitor—Paper .05 Mfd.	R-5	Resistor—1 Megohm
C-2	Capacitor—Variable	C-15	Capacitor—Mica 100 Mmf.	R-6	Resistor—150 Ohms
C-3	Capacitor—Trimmer on gang	C-16	Capacitor—Elect. 5 Mfd. 25 V.	T-1	Antenna Transformer
C-4	Capacitor—Variable	C-17	Capacitor—Elect. 16 Mfd. 150 V.	T-2	R.F. Transformer
C-5	Capacitor—Trimmer on gang	C-18	Capacitor—Elect. 10 Mfd. 150 V.	T-3	Output Transformer (on speaker)
C-6	Capacitor—Paper .05 Mfd.	R-1	Resistor—25,000 Ohms Volume Control	S-1	Power Switch (Comb. with R-1)
C-7	Capacitor Paper .01 Mfd.	R-2	Resistor—35,000 Ohms	S-2	Loud-speaker—5-inch
C-8	Capacitor—Paper .01 Mfd.	R-3	Resistor—3 Megohms		
C-9	Capacitor—Paper .02 Mfd.	R-4	Resistor—1 Megohm		

ALIGNMENT

Connect the high side of the signal generator through a 250-mmf. condenser to the antenna lead. The low side of the signal generator output should be connected to the receiver chassis through a .05-mfd. condenser. Connect a suitable output meter across the voice coil leads; then proceed as follows:

1. With gang condenser plates completely closed, the dial pointer should coincide with the horizontal dial line.

2. Tune receiver to the 1500-kc. point on the dial; then align trimmers (C-3 and C-5) on the gang condenser at 1500 kc. for a maximum output meter reading.

Precaution—One side of the power supply is connected to the chassis—do not connect chassis to any external ground.

Electrical Specifications

Power Supply (Volts)	Frequency (Cycles on AC)	Power Consumption (Watts)
105-125 AC or DC	40-100	48

Electrical Power Output

Undistorted.....1.0 watt
Maximum.....2.0 watt

Tubes

RF Amplifier.....GE-6D6
Detector.....GE-6C6
Power Output.....GE-25L6G
Rectifier.....GE-25Z5
Ballast Tube Resistor.....L55F
Dial Lamp.....Mazda No. 44

SOCKET VOLTAGES

Tube No.	Plate to −B Volts DC		Screen to −B Volts DC		Cathode to −B Volts DC		Cathode Current M.A. DC		Heater Volts	
	AC	DC	AC	DC	AC	DC	AC	DC	AC	DC
6D6	113	90	113	90	9.0	7.4	0.7	0.6	6.35	6.06
6C6	20 *	16.4 *	45	37	3.1	2.5	0.1	0.08	6.35	6.06
25L6G	108	88	113	90	7.6	6.2	40.5	33.1	25.0	23.5
25Z5	.....	.....			133	108	43.0	35.0	26.0	24.0

Line voltage 115 AC or DC—No signal input—1000 ohms per volt meter.
Dial pointer at 540 kc. Volume control at minimum.
* Measured on 250-volt scale.

MODEL XFM-1 GENERAL ELECTRIC CO.

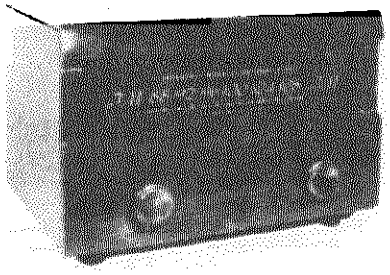

SPECIFICATIONS

CABINET:

Model	XFM-1
Material	Wood
Color	Walnut
Height	10¾ in.
Width	11½ in.
Depth	15¾ in.

ELECTRICAL RATING:

Nominal Voltage:	110	Range in Volts:	103–117
	125		117–133
	150		140–160
	200		185–213
	225		213–234
	245		234–260
Frequency			50–60 cycles
Wattage			65

OPERATING FREQUENCIES:

88 mc to 108 mc
Antenna Input
FM—300-ohm input for folded dipole.

TUBE COMPLEMENT:

(V1) R-F Amplifier	Type 6AG5
(V2) Oscillator	Type 6AK5
(V3) Converter	Type 6AK5
(V4) 1st I-F Amplifier	Type 6SG7
(V5) 2nd I-F Amplifier	Type 6SV7
(V6) Limiter	Type 6SH7
(V7) Discriminator and Audio Amplifier	Type 6AQ7GT
(V8) Rectifier	Type 5Y3GT/G
Dial Lamp (2)	Mazda No. 44

GENERAL INFORMATION

INTRODUCTION

Model XFM-1, Frequency Modulation Translator, is used in conjunction with any radio receiver designed for quality phono operation.

The r-f stage of this translator is unusual in a number of respects. Variable inductance tuning is employed instead of using a conventional tuning capacitor. This design has two distinct advantages. It provides a highly efficient circuit in our range (88 to 108 megacycles) which would not be possible with the more conventional methods of tuning.

Tuning is accomplished by an "elevator" which consists of a rigid plastic horizontal plate (Figure 1-A) raised and lowered by means of a windlass (Figure 1-B) controlled by the tuning knob at the panel. From this plate are suspended three tuning "vanes" (Figure 1-C) which tune three low-inductance circuits. They are called "guillotine" tuners because of their appearance.

FACTS ABOUT "GUILLOTINE" TUNING

The "guillotine" tuners are designed for the ultra-high frequency of the FM band where special technique is needed to attain high gain and circuit stability. The efficiency of a tuned circuit with a fixed capacity decreases with the inductance so that for high frequencies demanding very low inductance the circuit will be very inefficient. The stray capacities of every wiring assembly represent shunt capacities which offer only a low resistance at high frequencies. This resistance damps the tuned circuit, causing an appreciable drop in the gain. It is, therefore, imperative to reduce the length of any connecting wire as much as possible. Another disadvantage of standard tuning arrangements at these frequencies is that common coupling is obtained through the shaft of a ganged tuning capacitor unless insulated single sections are used (cumbersome and costly). Common coupling of this type tends to cause oscillation or general instability and preclude high gain per stage. The guillotines make possible short leads, completely isolated sections, stable tuning,

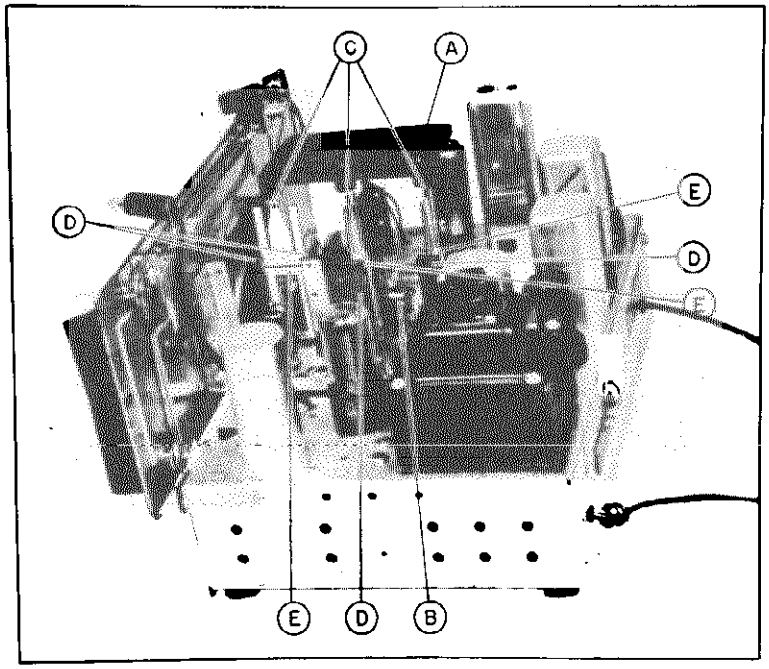

Fig. 1. Chassis with Tuner Assembly

© John F. Rider

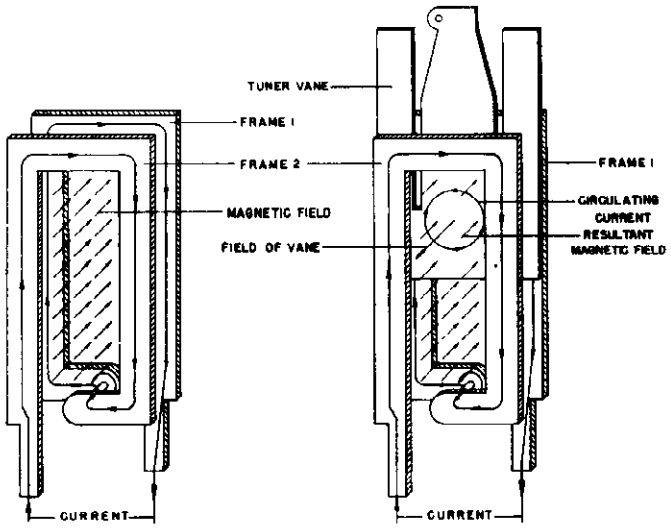

Fig. 2. Principle of Guillotine Tuner

high Q circuits, low shunt capacity, and location of each tuner in the best physical and electrical position in the assembly. Furthermore, since the shunt capacity is small and the inductance is consequently at its highest corresponding value, the additional unavoidable inductance introduced with wiring, band switch, etc., produces a minimum of circuit losses and unbalance.

GUILLOTINE TUNER

The guillotine tuner consists of two identical silver-plated brass frames (Figure 1-E) which form a two-turn square coil when connected at their open ends (Figure 2). They are mounted rigidly between two plastic posts (Figure 1-D). The magnetic field of this two-turn inductance is varied by the insertion of a brass blade between the frames (Figure 2). This solid vane slides up and down between the two turns guided in grooves in the plastic posts so that it passes between the two frames of the coil with a constant clearance. The posts are so moulded and the coil so constructed that the whole assembly is held rigidly at a predetermined spacing. The tuning vane is raised and lowered by the tuning elevator (Figure 1-B). When the elevator is all the way up (set tuned to the lowest frequency), the vane is completely above the coil which then acts as a simple two-turn coil. As the set is tuned towards the high frequencies, the vane moves downwards into the magnetic field of the coil unit, finally it is all the way in. The direction of the field is given by the arrows in Figure 2-A. It should be kept in mind that the inductance of the coil is proportional to the intensity of the linked field. If the vane is inserted between the two frames, the magnetic field (which is fluctuating at a rate determined by the FM frequency) induces in it a circulating current whose direction is such that the field produced by it is directed opposite to the original field (arrow in the opposite direction, Figure 2-B). The result is a decrease of field intensity, and subsequently a lower inductance of the coil. A sliding movement of a metal vane accomplishes, therefore, a change of the inductance of the coil.

The vane reduces this inductance through two principles. First, it acts as a shorted turn and thus reduces inductance directly; second it provides a barrier between the two turns of the coil which reduces the mutual coupling and this, also, the inductance. It is desirable that the increase of the inductance is uniform with the movement of the vanes. To obtain the desired tuning curve, slots are cut in the blade the form of which once calculated can be kept within the required limits throughout production. The entire unit can be mechanically assembled and does not need any adjustment to insure proper tracking. Since the moving vane is ungrounded, there are no sliding contacts to produce noise while tuning in stations.

The tuners described above are identified as T1, T2, and T3 on the schematic diagram, Figure 5.

STAGE GAIN AND VOLTAGE CHECKS

Stage gain measurements by vacuum tube voltmeter or similar measuring devices may be used to check circuit performance and isolate trouble. The gain values listed may have tolerances of 20%. Readings taken with low signal so that AVC is not effective.

(1) R-F AND I-F STAGE GAINS

Signal applied through 300-ohm resistor, including signal generator impedance (remove 6AG5):

Dipole terminals to grid of R-F amplifier 6AG5 ..... 2 at 98 mc

This check with oscillator tube 6AK5 removed:

Grid of R-F amplifier tube 6AG5 to grid converter tube 6AK5 ..... 9 at 98 mc

These checks with oscillator tube 6AK5 removed:

Grid of converter tube 6AK5 to grid of 6SG7 ..38 at 10.7 mc

Grid of 6SG7 to grid of 6SV7 .....37 at 10.7 mc

(Adjust grid trimmers with VTVM in place.)

(2) OSCILLATOR GRID BIAS

D-C voltage developed across R5 .....10 volts at 98 mc

(3) SOCKET PIN VOLTAGES

Figure 6 shows typical tube pin voltages. All readings should be made from the pins to ground unless otherwise stated.

REPLACEMENT OF DRIVE CORDS

DIAL STRINGING

Push the tuning elevator all the way down and string the dial as shown in Figure 3. This illustration shows the stringing as viewed from behind the dial scale, as you would see it when working on it. The number and arrows indicate the progression of the dial cord from start to finish. The procedure will be easier if pulley C is by-passed until the rest of the work is finished. After which, the cord can be pulled tight over that pulley. During the procedure, locate the two brass eyelets so that they fall between pulleys A and B. When finished, crimp the eyelets on the cord in the proper position to act as minimum and maximum stops for the tuning mechanism and clip the pointer on the cable halfway between the eyelets.

Separate detail drawing is given to show the method of attaching the ends of the cord. When stringing the mechanism, load the spring by pulling the hook over the projection at the other end of the spring, string the dial and, as a final step, release the hook so that it pulls up the slack in the dial cord.

ELEVATOR STRINGING

The step-by-step procedure for stringing the elevator windlass is shown in Figure 4. (The view is from the rear of the mechanism.) This is done with the elevator up. Start by inserting the metallic cord in the slot as shown in 1. Then loop the left-hand free and over (2) and solder it to the lug provided at the bottom of the vertical shaft (3). The other free end is then given two turns around the pulley, first on one side of the first half-turn (4–5) and then on the other side (6–7). In making the two loops, the free end of the cord passes on *this* side of the end which is already secured. Similarly, in view 2, the end of which is to be secured to the bottom of the shaft, passes on *this* side of the right-hand free end of the cord. Observe these relationships. Finally, after completing the seven steps shown, pull the upper end of the cord through the hole in the top of the elevator mechanism and solder it to the spring provided.

CONCLUDING COMMENTS

After replacing the dial cord, it may be found that some correction in relative positioning is needed. This can be done by loosening the setscrews in the large drive pulley directly behind the dial scale and repositioning it on the shaft. The object, of course, is to permit the tuning control to drive the elevator through its full tuning range. Slight errors in final settings are not serious since leeway is provided in the location of the dial pointer itself.

ALIGNMENT

EQUIPMENT REQUIRED

1. Test Oscillator with tone modulation. (See Table.)
2. D-C Voltmeter or Microammeter. (See notes 2 and 3.)
3. A-C Voltmeter, 2 volts. (See note 6.)
4. Insulated hex wrench, ¼". (See steps 1, 7.)
5. .01 MF Paper Capacitor. (See Steps 1 to 5.)

Important detailed instructions and references in connection with the Alignment Table which follows are keyed in by means of column 7, headed "See Note." The notes are included in numerical order after the table. They are important—refer to them carefully.

MODEL XFM-1 GENERAL ELECTRIC CO.

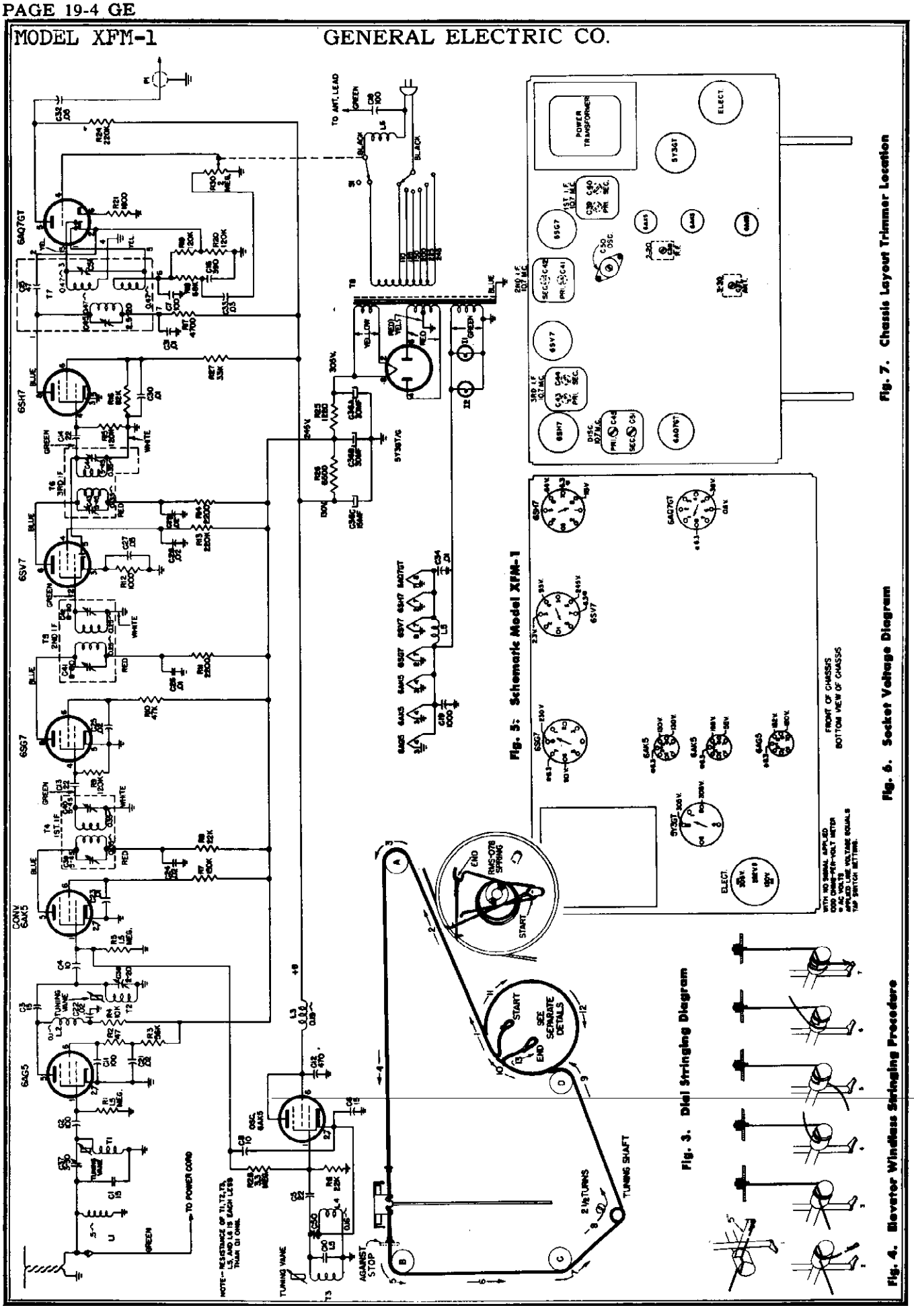

Fig. 5: Schematic Model XFM-1

Fig. 6. Socket Voltage Diagram

Fig. 7. Chassis Layout Trimmer Location

Fig. 3. Dial Stringing Diagram

Fig. 4. Elevator Windless Stringing Procedure

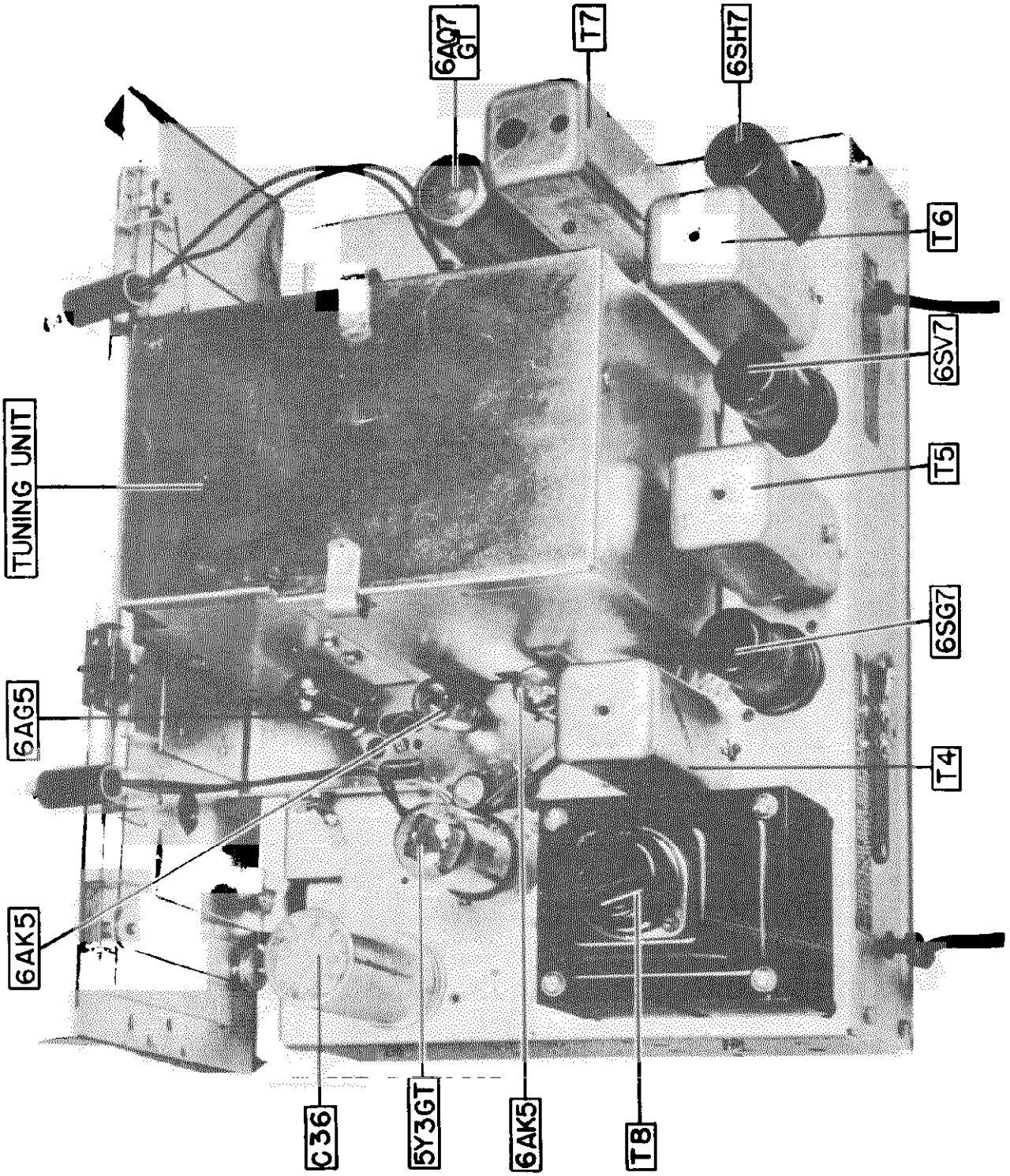

Fig. 8. Top View

©John F. Rider

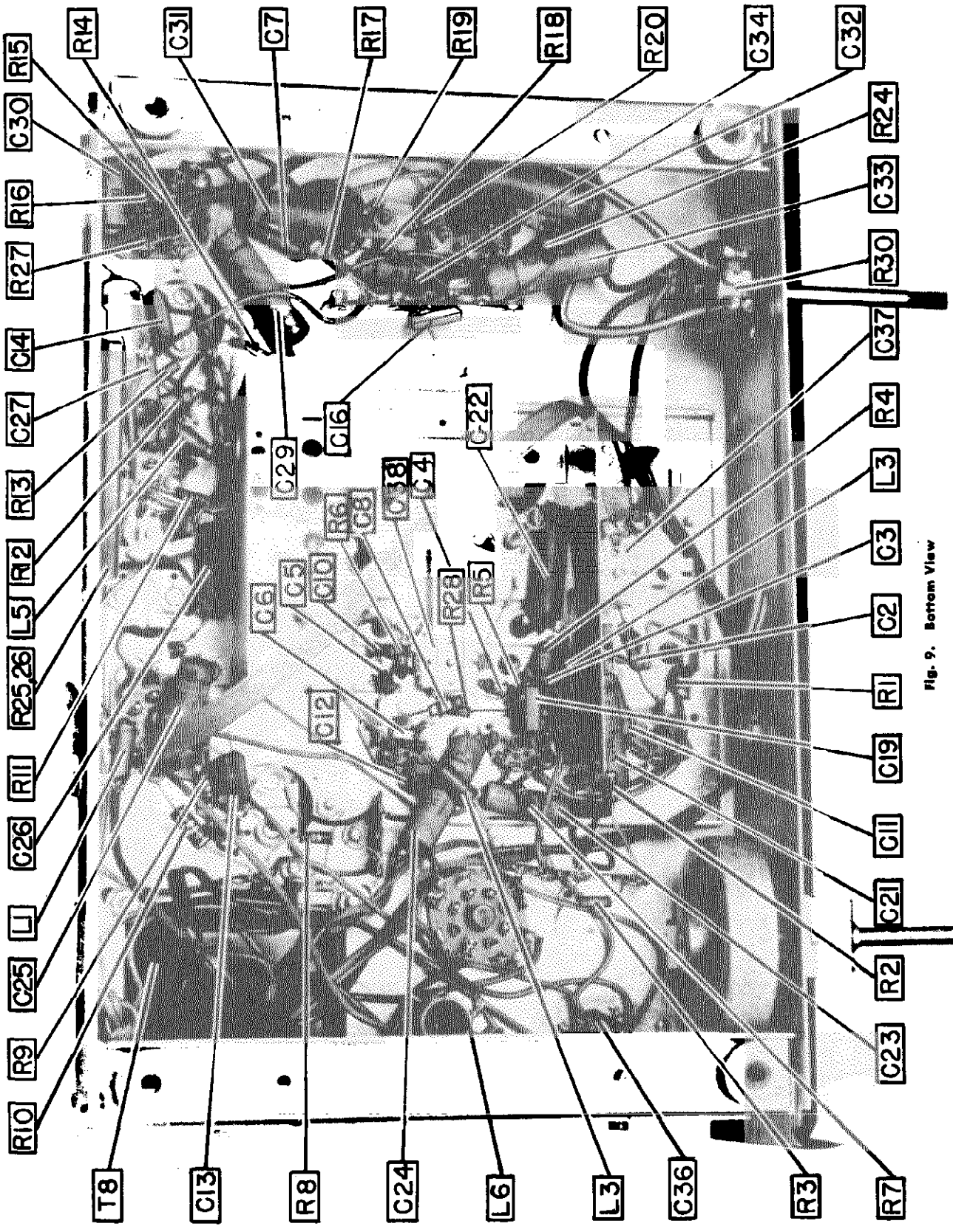

Fig. 9. Bottom View

ALIGNMENT TABLE

Step	Signal Generator Frequency	Signal Input Point	Dial Setting	Adjust	See Note	Remarks
		I-F ALIGNMENT				
1	10.7 mc	6SH7 grid thru .01 mf.	....	C51 for zero**	1, 2	Adjust C51 for zero meter reading. Apply 1 volt signal input.
2	See last column	6SH7 grid thru .01 mf.	....	Signal Generator	1, 2	Detune signal generator to point of max. meter reading.
3	As in Step 2	6SG7 grid thru .01 mf.	....	Peak C45	1, 2	
4	10.7 mc	6SV7 grid thru .01 mf.	....	Peak C43 and C44	1, 3	6AQ7GT tube removed from its socket.
5	10.7 mc	6SG7 grid thru .01 mf.	....	Peak C41 and C42	1, 3	6AQ7GT tube removed from its socket.
6	10.7 mc	Conv. grid directly	....	Peak C39 and C40	1, 3, 4	6AQ7GT tube removed from its socket.
		R-F ALIGNMENT				
7	88 mc	Dipole terminals	88 mc—6, 8 to 6.9 in.*	Peak C50	1, 3, 5	Set dial accurately—then adjust C50.
8	98 mc	Dipole terminals	For max. output	Peak C38	1, 3, 6	Tune dial for max. min. output, then peak C38 while rocking dial.
9	98 mc	Dipole terminals	Do not change	Peak C37	1, 3	

*Important! See Note 7.
**Use insulated hex wrench, ¼".

NOTES IN CONNECTION WITH ALIGNMENT TABLE

1. Use unmodulated signal.
2. Connect 20,000-ohm/volt meter from junction of R18 and R16 to chassis. Use ten-volt scale (Steps 1–3).
3. Connect 20,000-ohm/volt meter from grid 4 of 6SH7 to chassis with a 200,000-ohm resistor in series. The resistor must be connected directly to the grid so that capacity loading will be negligible and so that the meter is isolated from the i-f signal voltage. Keep signal generator output down so that the meter indicates not more than one volt at the grid (5 microamperes through 200,000 ohms). (Alignment Steps 4 to 6.)
4. Connect signal generator directly to the converter grid at some convenient point. The generator lead must be shielded up to this connection so that no more than 1/16 inch of exposed lead exists. Ground the shield solidly by clamping it firmly to the chassis or a shield as close to the connection as possible. (Step 6.)
5. Two oscillator settings will give response. The higher frequency response point is the correct one, the other is the image. If in doubt, start with the trimmer screw loosened completely and adjust for the first response.
6. "Rocking" consists of adjusting the indicated adjuster while turning the dial a small amount back-and-forth through peak output. The object is to find the maximum peak. Rocking is necessary and is permissible only when interlocking circuits are being adjusted.
7. Index pointer as follows: Turn pointer to right-hand limit of travel. Mark the dial backplate at a reference edge of the pointer slider. Then set pointer by turning dial knob until the indicated dimension exists between the reference edge and the mark.

UNIVERSAL REPLACEMENT PARTS

Cat. No.	Symbol	Description
UCC-040	C23, 26, 30, 31, 34	Capacitor—.01 Mfd.; 600V.; Paper
UCC-041	C21, 22, 24, 25, 28, 29	Capacitor—.02 Mfd.; 600V.; Paper
UCC-042	C33	Capacitor—.03 Mfd.; 600V.; Paper
UCC-045	C27, 32	Capacitor—.05 Mfd.; 600V.; Paper
UCU-512	C14	Capacitor—22 MMF; Mica
UCU-520	C15	Capacitor—47 MMF; Mica
UCU-528	C11, 18	Capacitor—100 MMF; Mica
UCU-1042	C16	Capacitor—390 MMF; Mica
UCU-1512	C13	Capacitor—22 MMF; Mica
UCU-1544	C12	Capacitor—470 MMF; Mica
UCW-1028	C2, 7	Capacitor—100 MMF; Ceramic
UIC-001		Cement—Speaker Cone Replacement Cement
UJB-014		Terminal—Terminal Board
URC-034	R30	Volume Control—2 Meg. Potentiometer Tapped at 1 Meg.
URD-017	R2	Resistor—47 Ohm; ½W.; Carbon
URD-049	R12	Resistor—1000 Ohm; ½W.; Carbon
URD-055	R21	Resistor—1800 Ohm; ½W.; Carbon
URD-057	R11, 14	Resistor—2200 Ohm; ½W.; Carbon
URD-065	R17	Resistor—4700 Ohm; ½W.; Carbon
URD-081	R6, 8	Resistor—22,000 Ohm; ½W.; Carbon
URD-085	R27	Resistor—33,000 Ohm; ½W.; Carbon
URD-091	R3	Resistor—56,000 Ohm; ½W.; Carbon
URD-093	R18	Resistor—68,000 Ohm; ½W.; Carbon
URD-095	R16	Resistor—82,000 Ohm; ½W.; Carbon
URD-099	R9, 15, 19, 20	Resistor—120,000 Ohm; ½W.; Carbon
URD-101	R7	Resistor—150,000 Ohm; ½W.; Carbon
URD-105	R13, 24	Resistor—220,000 Ohm; ½W.; Carbon
URD-125	R1, 5	Resistor—1.5 Meg.; ½W.; Carbon
URD-133	R28	Resistor—3.3 Meg.; ½W.; Carbon
URE-073	R4	Resistor—10,000 Ohm; ½W.; Carbon
URE-089	R10	Resistor—47,000 Ohm; ½W.; Carbon
USB-001	S1	Switch—A-C Switch for Volume Control

SPECIALIZED REPLACEMENT PARTS

RAB-063		Back—Cabinet Back
RAX-008		Bracket—Bracket and Roller Fork for Elevator Shaft
RCE-057	C36A, B, C	Capacitor—30 Mf, 400V.; 30 Mf, 400V.; 15 Mf, 400V.; Dry Electrolytic
RCU-282	C19	Capacitor—1000 MMF; Mica
RCW-013	C4, 8	Capacitor—10 MMF; Ceramic
RCW-014	C1, 5, 6	Capacitor—15 MMF; Ceramic
RCW-017	C10	Capacitor—1.5 MMF; Ceramic
RCW-024	C5	Capacitor—22 MMF; Ceramic
RCW-1028	C7	Capacitor—100 MMF; Ceramic
RCY-017	C50	Capacitor—Air Trimmer 3-30 MMF
RCY-035	C37	Capacitor—Trimmer Strip; 3–30 MMF; Mica
RCY-036	C38	Capacitor—Trimmer Strip; 2–20 MMF; Mica
RDC-019		Cord—Hoist Cord 6 ½" Long
RDC-033		Cord—Dial Cord 10 Yd. Roll
RDK-114		Knob—Black Plain Knob
RDP-028		Pointer—Pointer Assembly
RDS-056		Scale—Tuning Dial Scale
RHC-010		Spring Clip—Holds Coil Assembly
RHG-009		Grommet—For Tuning Unit
RHM-024		Link—Hoist Link Holding End of Hoist Cord
RHM-025		Ring—Retaining Ring for Flywheel
RHM-026		Coil Link—Rectangular Coil Link for Coils T1 and T2
RHM-027		Coil Link—Rectangular Coil Link for Coil T3
RII-001		Post—Insulated Posts for Assembly FM Coils
RJP-004	P1	Plug—Output Plug
RJS-003		Socket—Tube Socket for V5, V6, and V7
RJS-030		Socket—Tube Socket for V4 and V8
RJS-044		Socket—Tube Socket for V1, V2, and V3
RJS-099		Socket—Pilot Light Socket and Leads
RLA-011	L1	Choke—Antenna Choke Core
RLB-005	T1, T2	Coils—Antenna Coil and RF Coil
RLB-007	L4	Choke—Oscillator Cathode Choke
RLB-010	L2	Choke—RF Plate Choke Coil
RLC-013	T3	Coil—Oscillator Coil
RLF-003	L5	Choke—Filament Choke Coil
RLI-002	L6	Choke—Power Line Choke
RLP-006	L3	Choke—Oscillator Plate Choke Coil
RMM-010		Vane—Tuner Vane for FM Coils T1 and T2
RMM-011		Vane—Tuner Vane for FM Coil T3
RMR-002		Roller—Hoist Shaft Roller
RMS-040		Spring—Flat Hoist Pulley Shaft Spring
RMS-041		Spring—Hoist Pulley Shaft Spring
RMS-042		Spring—Hoist Cord Tension Spring
RMS-044		Spring—Guide Wire in Elevator Plate
RMU-022		Shaft—Tuning Shaft
RMW-017		Pulley—Small Idler Pulley
RMW-032		Pulley—Drive Pulley
RMX-018		Flywheel—Flywheel with Setscrew
RMX-019		Pulley—Hoist Pulley and Shaft
RMX-021		Plate and Shaft—Elevator Top Plate and Vertical Shaft
RRT-003	R25, 26	Resistor—1220 and 6500 Ohms, Wire Wound
RTD-001	T7	Transformer—Discriminator
RTL-059	T4	Transformer—1st I.F. Transformer
RTL-060	T5	Transformer—2nd I.F. Transformer
RTL-061	T6	Transformer—3rd I.F. Transformer
RTP-053	T8	Transformer—Power Transformer
RWX-004		Wire—Guide Wire on Tuning Unit

o John F. Rider

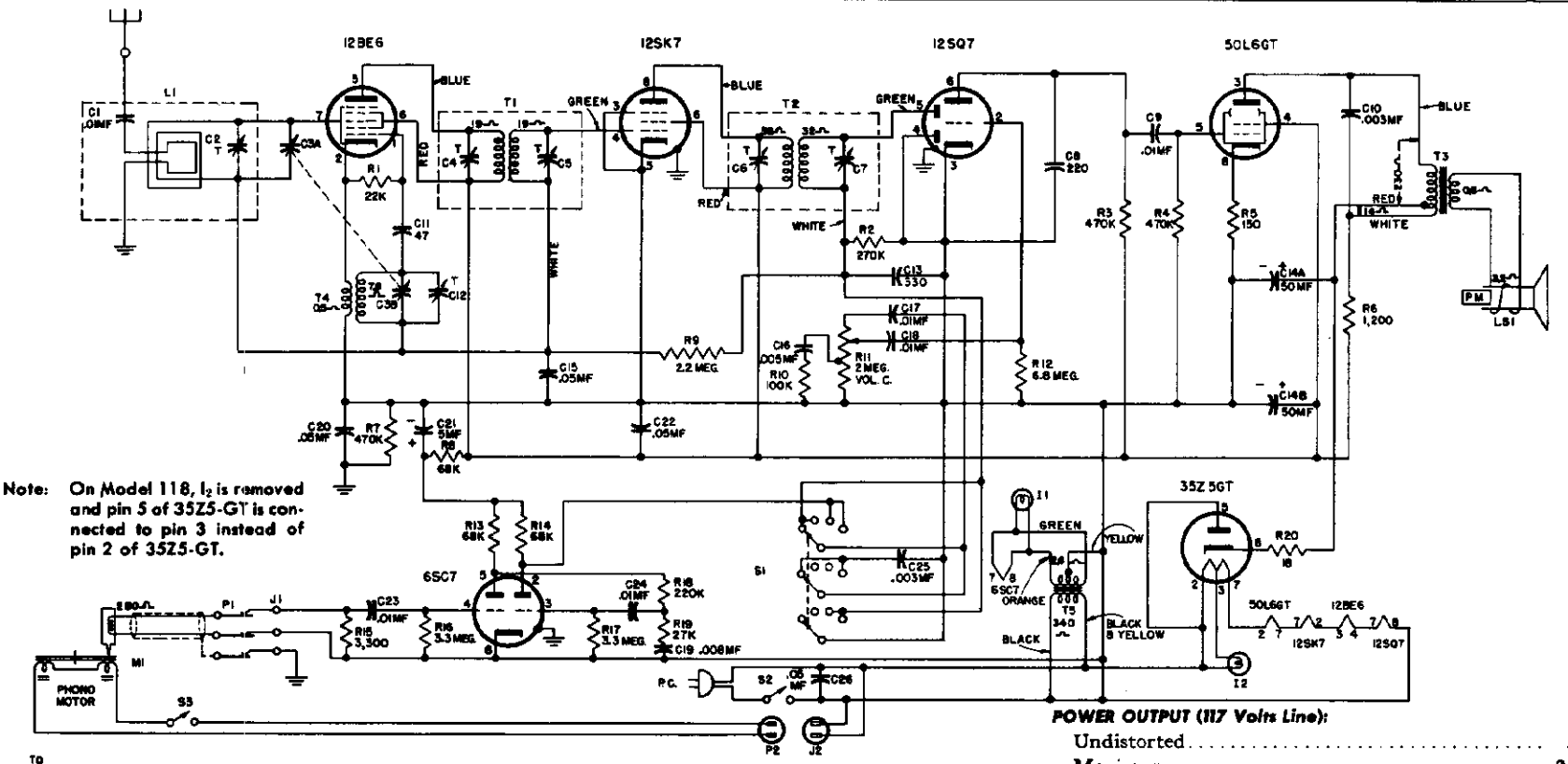

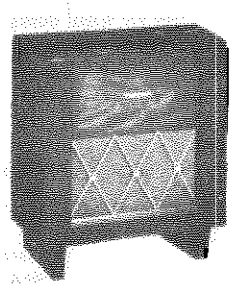

119M and 119W

OPERATING FREQUENCIES: Dial cord stringing

Broadcast Band	540-1600 kc
I-F Amplifier	455 kc

ELECTRICAL (INPUT):

	A5	A6
Voltage (A-C only)	105-125	105-125
Frequency	50 cps	60 cps
Wattage (on Radio)	35	35
Wattage (on Phono)	70	55

POWER OUTPUT (117 Volts Line):

Undistorted	.95 watts
Maximum	2.2 watts

LOUDSPEAKER:

Model	118	119
Type	Alnico PM	Alnico PM
Outside Cone Diameter	5.25 inches	12 inches
Voice Coil Impedance at 400 cps	3.2 ohms	3.2 ohms

PHONOGRAPH PICK-UP:

Type	Variable Reluctance
D-C Resistance	280 ohms

TUBE COMPLEMENT:

Converter-Oscillator	Type 12BE6
I-F Amplifier	Type 12SK7
Detector and Audio Amplifier	Type 12SQ7
Output	Type 50L6
Phono Preamplifier	Type 6SC7
Rectifier	Type 35Z5
Pilot Lamps	Mazda No. 47

STAGE GAIN AND VOLTAGE CHECKS

Stage gain measurements may be made with a vacuum tube voltmeter to check circuit performance and to locate stages which are not operating properly. The gain values listed may have a tolerance of 20 per cent. Readings should be taken with the AVC shorted to B minus.

1. R-F STAGE GAINS.

Antenna to 12BE6 Grid..... 3.5 at 1000 kc
12BE6 Grid to 12SK7 Grid..... 50. at 455 kc

2. AUDIO GAIN.

The power output across the speaker voice coil should be approximately ½ watt with .95 volts at 400 cps applied between the high side of the volume control (R11) and ground.

3. OSCILLATOR GRID BIAS.

The d-c voltage developed across the oscillator grid leak resistor (R1) averages 4.5 volts at 1000 kc.

4. SOCKET PIN VOLTAGES.

Figure 4 shows typical tube pin voltages. All readings should be made from the pins to B minus unless otherwise indicated.

ELECTRICAL CIRCUIT ALIGNMENT

EQUIPMENT REQUIRED:

1. Test oscillator with audio tone modulation.
2. A-C output meter, 1½ volts full scale.
3. Insulated screwdriver.

ALIGNMENT PROCEDURE:

The Alignment Procedure is given in table form. All i-f alignments may be made with the chassis removed from the cabinet. However, the r-f alignments should be made with the chassis and loop mounted in the cabinet, as the relative position of the loop antenna with respect to the chassis materially affects the alignment.

The oscillator trimmer is accessible by tilting the chassis slightly in the cabinet. The antenna trimmer is on the loop and is accessible from the rear of the cabinet. The locations of these trimmers are shown in Figure 3.

The output meter should be connected across the loudspeaker voice coil terminals. The low side of the test oscillator should be connected to B minus; the high side should be connected as indicated in the Alignment Chart. During the entire alignment procedure, the radio volume control should be in its maximum position. The test oscillator output signal should be attenuated so that the output meter reading never exceeds 1¼ volts.

ALIGNMENT CHART

Step	Connect Test-Oscillator To:	Test Oscillator Setting	Dial Setting	Adjust Trimmers For Max. Output
1	12SK7 grid (Pin 4) in series with .05 mf.	455 kc	—	C6 and C7
2	12BE6 grid (Pin 7) in series with .05 mf.	455 kc	—	C4 and C5 Readjust C6 and C7
3	Blue wire on loop in series with 200 mmf. and 470 ohms.	1500 kc	1500 kc	C12 (Osc.); C2 (Ant.)*

* Rock gang condenser when making alignment.

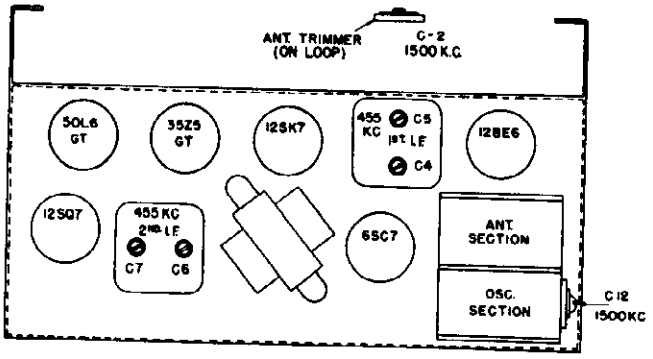

Tube and Trimmer Location

Socket Voltage Diagram

BOTTOM VIEW OF CHASSIS

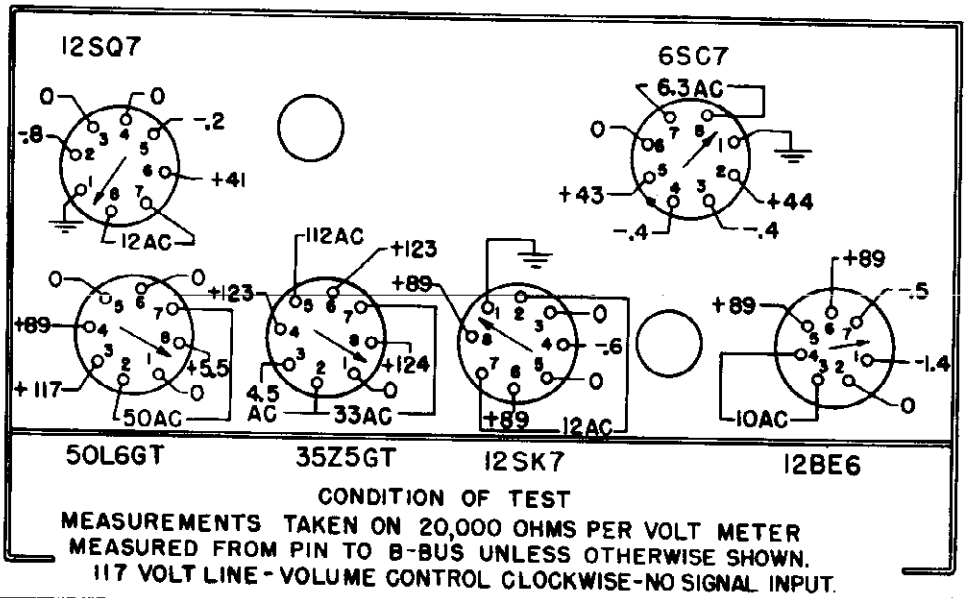

CONDITION OF TEST

MEASUREMENTS TAKEN ON 20,000 OHMS PER VOLT METER MEASURED FROM PIN TO B-BUS UNLESS OTHERWISE SHOWN. 117 VOLT LINE - VOLUME CONTROL CLOCKWISE - NO SIGNAL INPUT.

MODELS 118, 119M, 119W
MODEL 150

GENERAL ELECTRIC CO.

REPLACEMENT PARTS LIST—MODELS 118, 119W AND 119M

Cat. No.	Symbol	Description
		UNIVERSAL REPLACEMENT PARTS
UCC-008	C23	CAPACITOR .01 mf., 200 v., paper
UCC-025	C17	CAPACITOR—.01 mf., 400 v., paper
UCC-028	C15, C20, C22	CAPACITOR—.05 mf., 400 v., paper
UCC-040	C1, C24	CAPACITOR—.01 mf., 600 v., paper
UCC-045	C26	CAPACITOR—.05 mf., 600 v., paper, Model 119
UCC-623	C25	CAPACITOR—.003 mf., 400 v., paper
UCU-020	C11	CAPACITOR—47 mmf., mica
UCU-036	C8	CAPACITOR—220 mmf., mica
UCU-040	C13	CAPACITOR—330 mmf., mica
UOP-557		SPEAKER Model 118. Same as S525D-7
UOP-1247		SPEAKER—Model 119. Same as S1200D7
UOX-005		SPEAKER REPAIR KIT—For Model 119
UOX-008		SPEAKER REPAIR KIT—For Model 118
URD-029	R5	RESISTOR—150 ohms, ½ w., carbon
URD-061	R15	RESISTOR—3300 ohms, ½ w., carbon
URD-081	R1	RESISTOR—22,000 ohms, ½ w., carbon
URD-083	R19	RESISTOR—27,000 ohms, ½ w., carbon
URD-093	R8, R13, R14	RESISTOR—68,000 ohms, ½ w., carbon
URD-097	R10	RESISTOR—100,000 ohms, ½ w., carbon
URD-105	R18	RESISTOR—220,000 ohms, ½ w., carbon
URD-107	R2	RESISTOR 270,000 ohms, ½ w., carbon
URD-113	R3, R4, R7	RESISTOR—470,000 ohms, ½ w., carbon
URD-129	R9	RESISTOR—2.2 meg., ½ w., carbon
URD-133	R16, R17	RESISTOR—3.3 meg., ½ w., carbon
URF-051	R6	RESISTOR—1200 ohms, 2 w., carbon
		SPECIALIZED REPLACEMENT PARTS
RAC-050		LID—For Model 119 walnut
RAC-051		LID—For Model 119 mahogany
RAL-001		BEZEL—For pilot light
RAM-002		BASE 2 for Model 119 walnut
RAM-003		BASE 2 for Model 119 mahogany
RAV-044		CABINET—Walnut Model 119W
RAV-045		CABINET—Mahogany Model 119M
RAY-054		CABINET—Model 118
RCC-040	C9	CAPACITOR—.01 mf., 600 v., paper
RCC-074	C10	CAPACITOR—.003 mf., 600 v., paper
RCC-082	C18	CAPACITOR—.01 mf., 200 v., paper
RCC-084	C19	CAPACITOR—.008 mf., 400 v., paper
RCC-085	C16	CAPACITOR—.005 mf., 200 v., paper
RCE-050	C14A, C14B	CAPACITOR—50 50 mfd., electrolytic, 150 v.

Cat. No.	Symbol	Description
RCE-056	C21	CAPACITOR—5 mf., 150 v., electrolytic
RCN-014	C26	CAPACITOR—Phenolic capacitor for Model 118
RCT-026	C3A, C3B	CAPACITOR—Tuning capacitor
RCY-005	C2	CAPACITOR—Trimmer for Model 118
RCY-034	C2	CAPACITOR—Trimmer for Model 119
RDC-032		CORD—Dial cord (10 yds. min.)
RDK-036		KNOB—Plain
RDK-039		KNOB—With arrow
RDS-055		SCALE—Dial scale
RDX-033		POINTER Dial scale pointer assembly
RHC-008		CLIP—For mounting filter capacitor
RHG-015		GROMMET—Rubber grommet for mounting tuning capacitor
RHJ-005		SPACER—For mounting tuning capacitor
RHM-001		RING—Tuner shaft retaining ring
RHM-014		STUD—For dial idler pulley
RHM-016		CLIP—Oscillator coil clip
RHM-037		CLIP—For mounting dial scale
RHR-003		STUD—For mounting scale
RHS-004		SPACER—Between loop and cabinet
RJP-003	P3	PLUG—Phono power plug
RJS-003		SOCKET—Octal tube socket
RJS-027		SOCKET For dial light
RJS-031		SOCKET—Tube socket for 6SC7
RJS-033		SOCKET—Bezel pilot light socket
RJS-049	J2, J3	SOCKET—Phono power
RJS-092		SOCKET—Miniature for 12BE6
RJS-097	J1	SOCKET—Phono pickup
RLC-001	T4	COIL—Oscillator coil
RLL-026	L1	LOOP ASSEMBLY—Model 119
RLL-028	L1	LOOP ASSEMBLY—Model 118
RMM-034		HOOD—Hood for dial light
RMM-054		SUPPORT—Lid support
RMS-118		SPRING—Dial cord tension spring
RMU-036		SHAFT Tuning shaft
RMW-037		PULLEY—Dial cord idler pulley
RRC-060	R11	VOLUME CONTROL—2 meg.
RRW-005	R21	RESISTOR—70 ohms, wirewound, for 50-cycle operation of phono motor
RRW-008	R20	RESISTOR—18 ohms, 1 w., wirewound
RSW-043	S1	SWITCH—Radio phono switch
RTF-001	T5	TRANSFORMER—Filament transformer for 6SC7
RTL-050	T1	TRANSFORMER—1st I-F transformer
RTL-051	T2	TRANSFORMER—2nd I-F transformer
RTO-038	T3	TRANSFORMER—Output transformer
RWL-009		CORD—Power cord

MODEL 150—REPLACEMENT PARTS LIST

Cat. No.	Symbol	Description
		UNIVERSAL REPLACEMENT PARTS
UCC-623	C13	CAPACITOR .003 mf., 600 v., paper
UCC-625	C12*	CAPACITOR .005 mf., 600 v., paper
UCC-631	C7	CAPACITOR .02 mf., 600 v.
UCC-633	C14	CAPACITOR—.03 mf., 600 v., paper
UCC-635	C3, 8, 9	CAPACITOR—.05 mf., 600 v., paper
UCE-067	C10	CAPACITOR—100 mf., 6 v., electrolytic
UOP-488	LS1	LOUDSPEAKER 4-in. permanent magnet
URD-009	R1	RESISTOR 22 ohms, ½ w., carbon
URD-041	R6	RESISTOR—470 ohms, ½ w., carbon
URD-053	R4, 5	RESISTOR—1500 ohms, ½ w., carbon
URD-067	R11	RESISTOR 5600 ohms, ½ w., carbon
URD-073	R10	RESISTOR 10,000 ohms, ½ w., carbon
URD-085	R8	RESISTOR—33,000 ohms, ½ w., carbon
URD-097	R9	RESISTOR—100,000 ohms, ½ w., carbon
URD-113	R7, 15	RESISTOR—470,000 ohms, ½ w., carbon
URD-129	R12, 16, 18	RESISTOR—2.2 meg., ½ w., carbon
URD-133	R14, 19	RESISTOR—3.3 meg., ½ w., carbon
URD-137	R17	RESISTOR—4.7 megs, ½ w., carbon
URE-059	R2	RESISTOR—2700 ohms, 1 w., carbon
		SPECIALIZED REPLACEMENT PARTS
RAB-076		CABINET BACK—Plastic cabinet back (maroon)
RAB-080		CABINET BACK—Plastic (mahogany and gray)
RAS-001		STRAP—Battery strap
RAU-038		CABINET—Plastic cabinet (maroon)
RAU-041		CABINET—Plastic cabinet (mahogany)
RAU-042		CABINET—Plastic cabinet (gray)
RCE-069	C2A, B, C	CAPACITOR—200 mf., 25 v., electrolytic; 50-50 mfd., 150 v., electrolytic
RCT-032	C1	CAPACITOR—Tuning capacitor
RCW-177	C21	CAPACITOR—330 mmf., ceramic
RCW-1073	C6	CAPACITOR—47 mmf., ceramic

Cat. No.	Symbol	Description
		SPECIALIZED REPLACEMENT PARTS (CONT'D)
RCW-1074	C5	CAPACITOR—100 mmf., ceramic
RCW-3013	C11A,B,C,D	CAPACITOR—.002-220-220-.005, ceramic
RDC-032		DIAL CORD—Roll of 25 yards
RDK-136		KNOB Maroon knob
RDK-148		KNOB Mahogany knob
RDP-040		POINTER—Dial pointer
RDS-072		SCALE Dial scale
RER-001	SR	SELENIUM RECTIFIER
RHB-004		BUTTON—Monogram button
RHC-015		CLIP Clip for oscillator coil
RHC-016		HAIRPIN COTTER
RHG-018		GROMMET—Grommet for tuning condenser
RHI-005		HINGE—Hinge for back
RHJ-005		SPACER—For tuning condenser
RHM-052		CLIP—For loop antenna
RHM-053		BOSS CAP FOR HANDLE
RHR-005		RIVET—Tubular rivet for door hinge
RHS-010		SHIELD—Tube shield
RHX-013		HANDLE—Handle assembly
RJP-025		PLUG—Battery plug
RJS-024		MOUNTING PLATE—For electrolytic capacitor
RJS-068		SOCKET—Tube socket
RJS-100		SOCKET—Tube socket
RLC-068	L2	COIL—Oscillator coil
RLL-029	L1	LOOP—Loop antenna
RMS-039		CLIP—"C" clip
RMS-118		SPRING—Dial spring
RMS-154		SPRING CATCH
RMW-009		PULLEY—Idler pulley
RRC-065	R13, S1, AB	VOLUME CONTROL—Volume control and switch
RRW-027	R3	RESISTOR—2300 ohms, 10 w.
RSW-058	S2A, B	SWITCH—Power switch
RTL-052	T1	TRANSFORMER—1st I-F transformer
RTL-079	T2	TRANSFORMER—2nd I-F transformer
RTO-050	T3	TRANSFORMER—Output transformer
RWL-005		CORD—Power cord
SJS-068		CONNECTING PIN FOR LOOP ANTENNA

*Some receivers have UCC-635 instead.

©John F. Rider

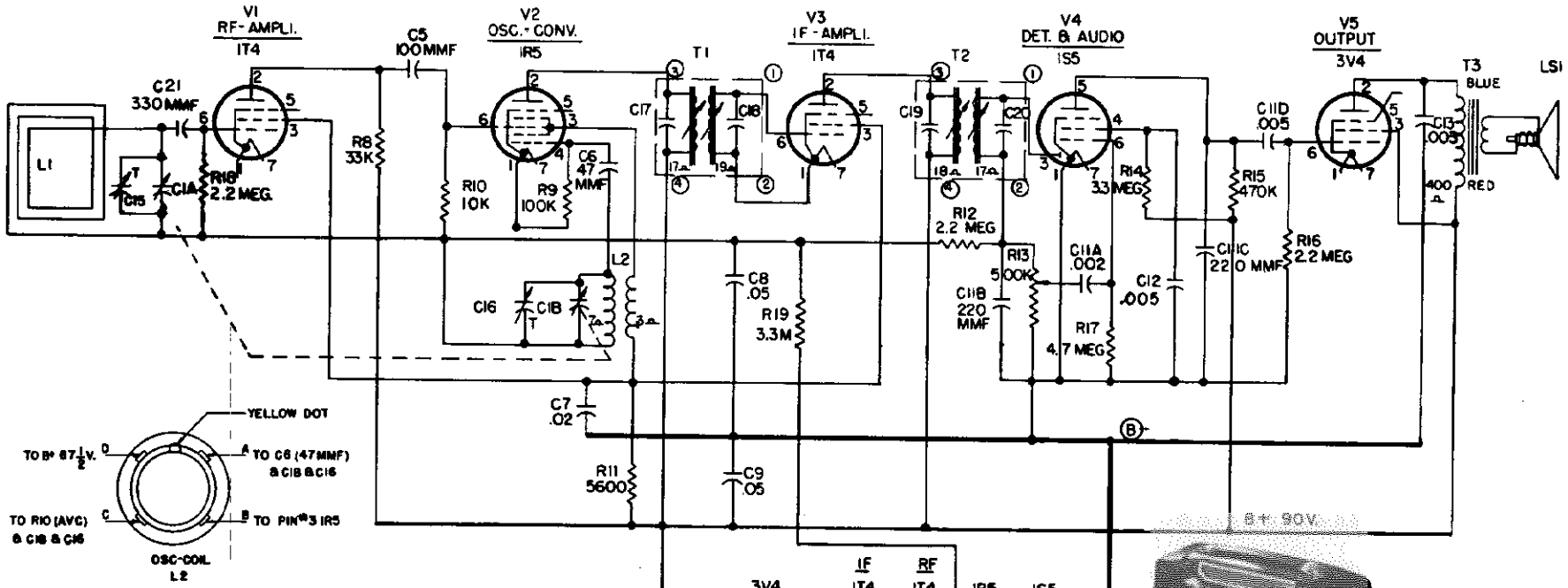

OPERATING FREQUENCIES:

Standard Wave Band	540-1600 KC
I-F Amplifier	455 KC

POWER OUTPUT:

Undistorted	180 milliwatts
Maximum	250 milliwatts

LOUDSPEAKER:

Type	Alnico PM
Outside Cone Diameter	4 inches
Voice Coil Impedance (400 cycles)	3.2 ohms

TUBE COMPLEMENT:

R-F Amplifier	Type 1T4
Oscillator-Converter	Type 1R5
I-F Amplifier	Type 1T4
Detector—1st Audio	Type 1S5
Audio Output	Type 3V4

POWER SUPPLY:

(AC-DC Operation)

Voltage	105-125 volts
Frequency	50-60 cycles
Power Consumption	25 watts

(Battery Operation)

Battery....Battery Pack Eveready No. 753 or equivalent

ALL CAPACITIES ARE IN MFD. UNLESS OTHERWISE INDICATED

Dial Stringing Diagram

GENERAL INFORMATION

The Model 150 portable radio is a five-tube superheterodyne broadcast receiver with a range of 540 to 1600 kc. The power source may be either 105 to 125 volts, 50 to 60 cycles, or direct current when a power outlet is available. The receiver will also operate from its battery source, thus making it independent of external electric power providing excellent operation in any location where external power is not available.

BATTERY—AC or DC Operation.

The left knob turns on the battery provided that the power plug is well inserted into the socket in the chassis.

For AC or DC supply (105-125 volts, 50 to 60 cycle operation) the same knob switches on the power when the power plug is pulled out of its socket in the chassis and inserted into the house outlet.

ELECTRICAL CIRCUIT ALIGNMENT

R-F ..... 1500 KC
I-F ..... 455 KC

EQUIPMENT REQUIRED

1. Test Oscillator with Tone Modulation.
2. AC Output Meter.
3. .05 mf. Paper Capacitor.
4. Insulated Screwdriver.

PROCEDURE—GENERAL

The Alignment Chart gives the alignment procedure with correct sequence of trimmer adjustments. The chassis must be removed from the cabinet during i-f alignment.

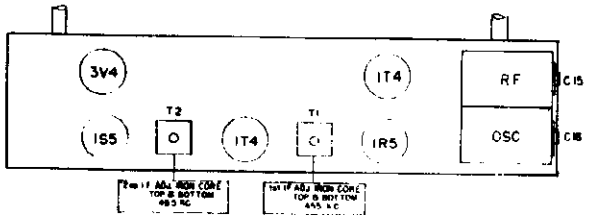

Tube and Trimmer Location

The test oscillator output signal should be attenuated so that the output meter reading never exceeds ½ volt. Connect the capacitor listed in column 2 of the Alignment Chart between the "high side" of the test oscillator and the point of input specified.

The output meter should be connected across the voice coil terminals on the speaker. The "low side" of the test oscillator output should be connected to the chassis ground; the "high side" of the oscillator output should be connected as indicated in the Alignment Chart. During the entire alignment procedure, the volume control should be at its maximum position. For alignment of the oscillator and r-f trimmers, the input signal should be inductively coupled to the radio loop antenna by connecting a 4-turn, 6-inch diameter loop of bell wire across the signal generator output terminals, and locate the loop about one foot from the radio loop antenna. To prevent possible errors in peak readings, the position of the loop with respect to the radio loop antenna should not be changed any one set of adjustments.

ALIGNMENT CHART

Step	Test-Osc. Connected to:	Test-Osc. Setting	Pointer Setting	Adjust for Max. Output
1	1T4 I-F grid in series with .05 mfd.	455 KC	550 KC	Iron cores of I-F Transformer T2.
2	1R5 converter grid in series with .05 mfd.	455 KC	550 KC	Iron cores of I-F Transformer T1.
3	Repeat Steps 1 and 2.			
4	Inductively coupled	1500 KC	1500 KC	C15* C16

* Chassis in cabinet and cabinet back (with loop) closed; remove plug button to adjust C15.

STAGE GAIN AND VOLTAGE CHECKS

Stage gain by vacuum tube voltmeter or similar measuring device may be used to check circuit performances and isolate trouble. The gain values listed may have tolerances of 20 per cent. Readings should be taken with low signal input so that the AVC is not effective.

(1) R-F STAGE GAINS

1T4 R-F Grid (Pin 6) to 1R5 Grid (Pin 6) . . . 2.5 @ 1000 KC
1R5 Grid (Pin 6) to 1T4 Grid (Pin 6) . . . . . 30 @ 1000 KC
1T4 Grid (Pin 6) to 1S5 Diode Plate (Pin 3) . . 50 @ 455 KC

(2) AUDIO GAIN

.020 volt at 400 cycles across volume control (R13) with control set at maximum will give approximately .05 watts output across speaker voice coil.

(3) DC voltage developed across oscillator grid resistor (R9) averages −8 volts at 1000 kc with respect to B minus.

(4) SOCKET PIN VOLTAGES

Figure 3 shows voltages from all tube pins to B−. Voltage readings much lower than those specified may help localize defective components or tubes.

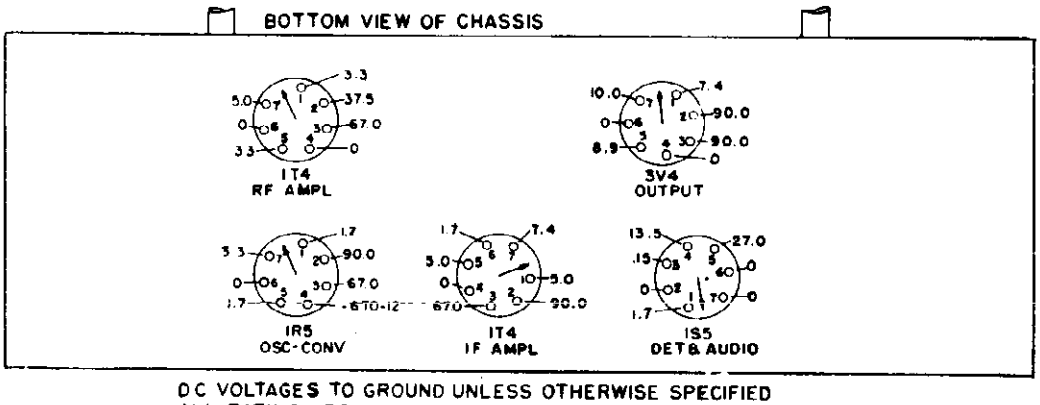

DC VOLTAGES TO GROUND UNLESS OTHERWISE SPECIFIED
ALL RATINGS ARE A.C OPERATION MEASURED WITH REFERENCE TO B-
RATINGS FOR BATTERY ARE SIMILAR TO AC RATINGS
VOLTAGE IS MEASURED WITH 20,000 OHMS PER VOLT METER

Socket Voltages



SPECIFICATIONS

CABINET:

Height	7⅝ inches
Width	10⅝ inches
Depth	2¾ inches

POWER SUPPLY:

(AC-DC Operation)

Voltage	105–120 volts
Frequency on A-C	50– 60 cycles
Power Consumption	10 watts

(Battery Operation)

2— 1½ volt "A" Batteries, Eveready No. 950 or equivalent.

1—67½ volt "B" Battery, Eveready No. 467 or equivalent.

OPERATING FREQUENCIES:

Broadcast Band	540–1600 KC
I-F Amplifier	455 KC

POWER OUTPUT:

Undistorted	.06 watts
Maximum	.12 watts

LOUDSPEAKER:

Type	Alnico 5 permanent magnet
Size	4 inches
Voice Coil Impedance at 400 Cycles	3.2 ohms

TUBE COMPLEMENT:

Oscillator-Converter	1R5
I-F Amplifier	1T4
Detector Audio Amplifier	1S5
Power Output	3V4

GENERAL INFORMATION

The Model 145 is a portable superheterodyne receiver designed to operate on the broadcast band range of 540 to 1600 kilocycles. This receiver may be operated from a 105 to 120 volt d-c or 50–60 cycle a-c power source, or it may be operated from its own self-contained batteries by switching to the "Bat." position.

A selector switch (S2) on the front panel is used to switch the radio to battery operation or AC-DC operation. The switch on the volume control will turn on and off either battery or AC-DC power depending on the position of switch S2.

ELECTRICAL CIRCUIT ALIGNMENT

EQUIPMENT REQUIRED:

1. Test Oscillator with Tone Modulation.
2. A-C Output Meter.
3. .05 mfd. Capacitor.
4. Insulated Screwdriver.

PROCEDURE:

1. The alignment procedure is given in table form. All i-f adjustments may be made with the chassis removed from the cabinet. The locations of the i-f and r-f adjustments are shown in Figure 1.

2. The output meter should be connected across the voice coil terminals of the speaker. The low side of the test oscillator should be connected to B minus. The high side of the test oscillator should be connected as indicated in the alignment chart.

PRECAUTION: *If the signal generator is A-C operated, use an isolating transformer between the power supply and the radio receiver power input. The use of an isolating capacitor is not recommended, as A-C through the capacitor will introduce hum modulation and/or create the possibility of a burned out signal generator attenuator.*

3. During the entire alignment procedure the volume control should be rotated fully clockwise in its maximum position. The test oscillator should be attenuated so that the output meter doesn't exceed .4 volt.

4. For alignment of the oscillator and r-f trimmer, the input signal should be inductively coupled to the radio loop antenna by connecting a 4-turn, 6-inch diameter loop of bell wire across the signal generator output terminals, and locate the loop about one foot from the radio loop for alignment. To prevent possible errors in peak readings, the position of the loop with respect to the radio loop should not be changed during any one set of adjustments. The chassis should be installed in the cabinet when the r-f adjustment (step 4) is made.

ALIGNMENT CHART

Step	Connect Test Oscillator To:	Test Oscillator Setting	Dial Setting	Adjust for Maximum Output
1	1T4 grid (Pin 6) in series with .05 mfd. cap.	455 KC	550 KC	2nd i-f transformer (T2) primary and secondary cores.
2	1R5 grid (Pin 6) in series with .05 mfd. cap.	455 KC	550 KC	1st i-f transformer (T1) primary and secondary cores.
3	Inductively coupled (see Note 4)	1620 KC	Gang condenser completely open.	C2B for maximum.
4	Inductively coupled (see Note 4)	1500 KC	For max. signal. Set dial pointer at 1500 KC mark on dial scale.	C1B for maximum.

STAGE GAINS AND VOLTAGE CHECKS

Stage gain by vacuum tube voltmeter or similar device may be used to check circuit performance and to isolate trouble. The gain values listed may have tolerances of 20 per cent. Readings should be taken with low signal input so that AVC is not effective.

1. R-F STAGE GAINS.
   1R5 Grid (Pin 6) to 1T4 Grid (Pin 6) . . . . . 27 at 1000 KC
   1R5 Grid (Pin 6) to 1T4 Grid (Pin 6) . . . . . 33 at 455 KC
   1T4 Grid (Pin 6) to 1S5 Diode Plate (Pin 3) . . 60 at 455 KC
2. AUDIO GAIN.
   .05 volt at 400 cycles across the volume control (R6) with volume control set fully clockwise will give approximately .05 watt output or .4 volts across the speaker voice coil.
3. D-c voltage developed across oscillator grid resistor R1 averages 18 volts at 1000 kc.
4. SOCKET PIN VOLTAGES.
   Figure 4 shows voltages from all tube pins to B−. Voltage readings much lower than those specified may help localize defective components or tubes.

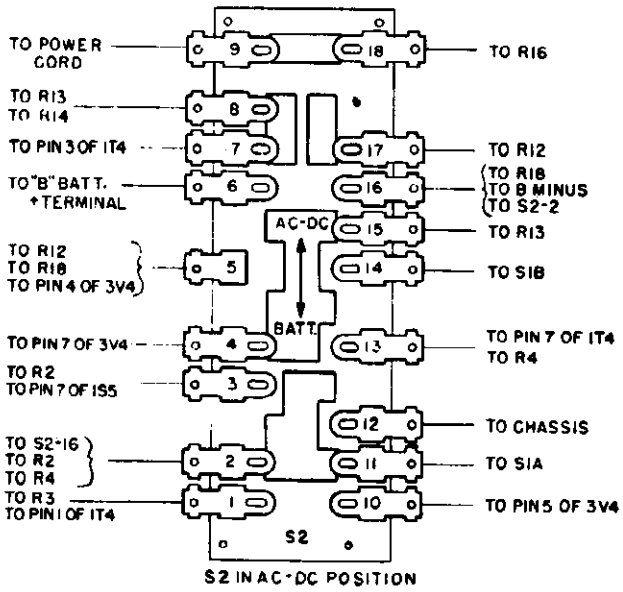

Fig. 2. Switch Connections

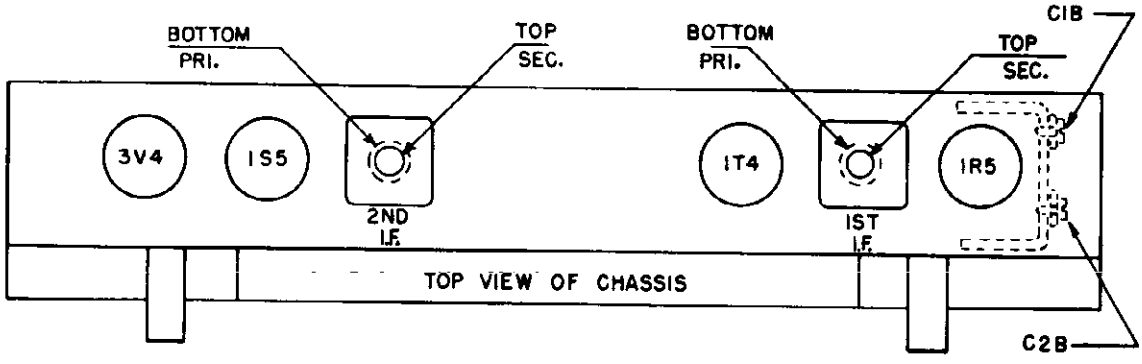

Fig. 1. Tube and Trimmer Location

GENERAL ELECTRIC CO. MODEL 145

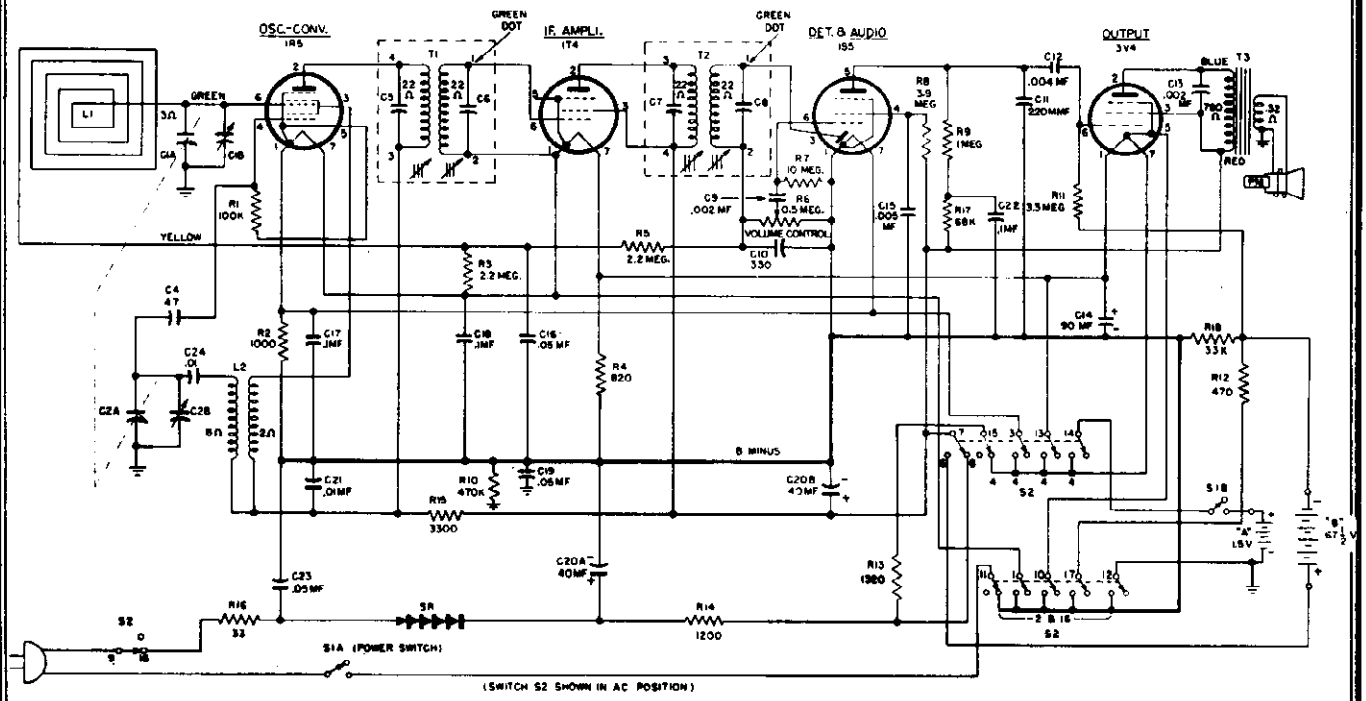

Fig. 3. Schematic Diagram. Model 145

BATTERY OPERATION

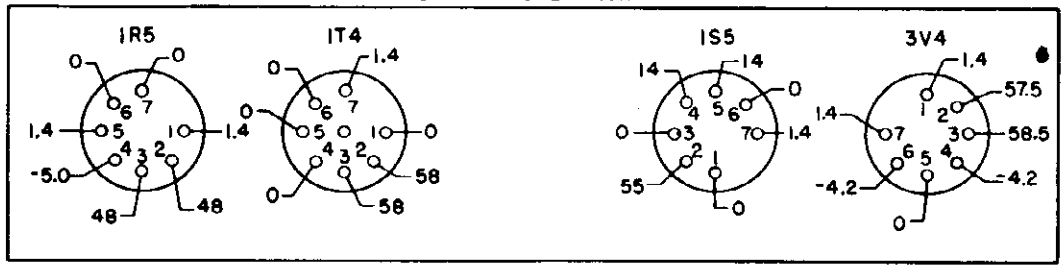

CONDITIONS OF TEST: RECEIVER POWERED BY BATTERY SUPPLY MEASURED WITH 20,000 OHMS/VOLT PER METER. ALL VOLTAGES TAKEN FROM B- TO SOCKET PIN.

BOTTOM VIEW OF CHASSIS

AC - OPERATION

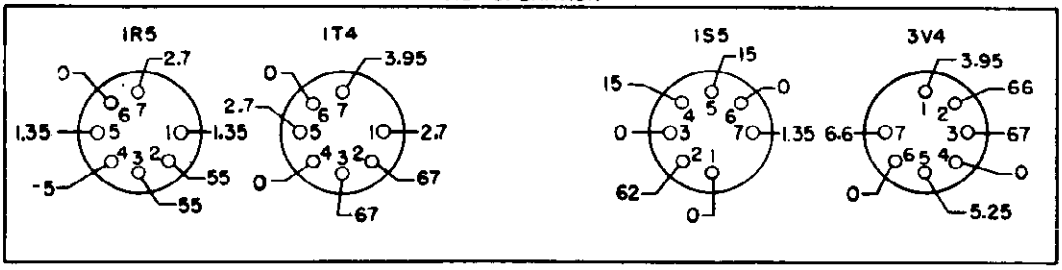

CONDITIONS OF TEST: RECEIVER POWERED BY AC LINE 117 VOLTS MEASURED WITH 20,000 OHM/VOLT METER. ALL VOLTAGES TAKEN FROM B- TO SOCKET PIN

VOLTAGE ON INPUT SECTION OF ELECTROLYTIC 135 VOLTS

Fig. 4. Socket Voltage Diagram

© John F. Rider

MODEL 145 GENERAL ELECTRIC CO.

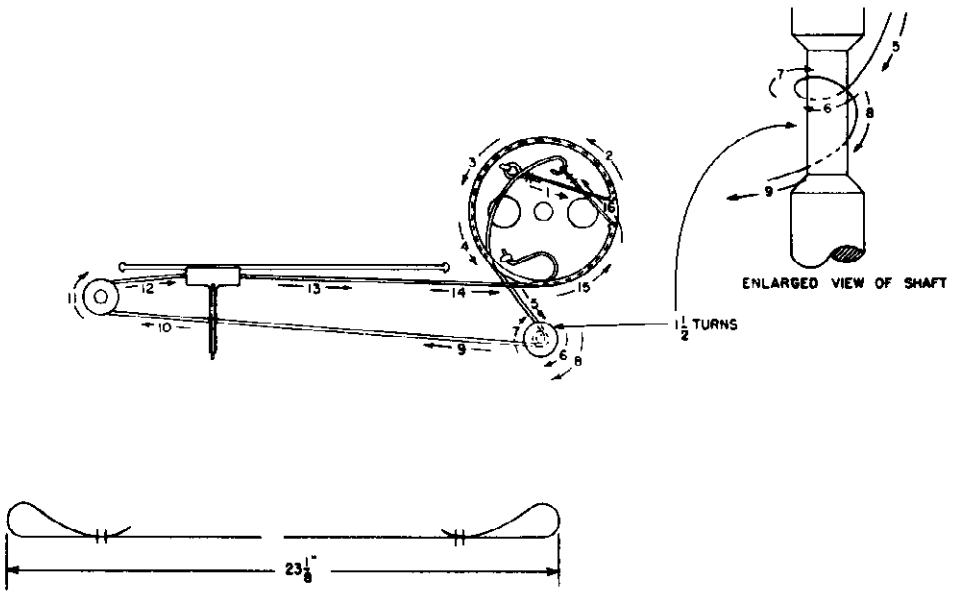

Fig. 5. Dial Stringing Diagram

MODEL 145—REPLACEMENT PARTS LIST

Cat. No.	Symbol	Description
		UNIVERSAL REPLACEMENT PARTS
UCC-028	C23	CAPACITOR—.05 mfd., 400 v.
UCU-020	C4	CAPACITOR—47 mmf. ±20%, mica
UOP-489		SPEAKER
URD-041	R12	RESISTOR—470 ohms, ½ w., carbon
URD-047	R4	RESISTOR—820 ohms, ½ w., carbon
URD-049	R2	RESISTOR—1000 ohms, ½ w., carbon
URD-061	R15	RESISTOR—3300 ohms, ½ w., carbon
URD-081	R18	RESISTOR—33,000 ohms, ½ w., carbon
URD-093	R17	RESISTOR—68,000 ohms, ½ w., carbon
URD-097	R1	RESISTOR—100,000 ohms, ½ w., carbon
URD-113	R10	RESISTOR—470,000 ohms, ½ w., carbon
URD-121	R9	RESISTOR—1 meg., ½ w., carbon
URD-129	R3, 5	RESISTOR—2.2 meg., ½ w., carbon
URD-133	R11	RESISTOR—3.3 meg., ½ w., carbon
URD-135	R8	RESISTOR—3.9 meg., ½ w., carbon
URD-145	R7	RESISTOR—10.0 meg., ½ w., carbon
		SPECIALIZED REPLACEMENT PARTS
RAB-082		CABINET BACK COVER
RAC-055		CABINET FRONT COVER ASSEMBLY—Includes two hinges (RHI-007) and four screws (RHS-023)
RAC-056		CABINET BODY ASSEMBLY—Includes back cover hinges (RHI-008) and four screws (RHS-023)
RAC-057		LOOP COVER
RCC-075	C21	CAPACITOR—.01 mfd., 400 v., paper
RCC-077	C17, 18, 22	CAPACITOR—.1 mfd., 400 v., paper
RCC-078	C16, 19	CAPACITOR .05 mfd., 400 v., paper
RCE-051	C20A, B	CAPACITOR—40-40 mfd., 150 v., electrolytic
RCE-052	C14	CAPACITOR—90 mfd., 10 v., electrolytic
RCT-035	C1A, B; 2A, B	CAPACITOR—Tuning
RCW-3018	C13	CAPACITOR—.002 mfd., ceramic
RCW-3015	C9, 10, 11, 12, 15	CAPACITOR—Ceramic
RDC-032		CORD—Dial drive cord, 25 yd.
RDE-034		ESCUTCHEON
RDE-035		ESCUTCHEON—Brass for fastening handle to the cabinet

Cat. No.	Symbol	Description
		SPECIALIZED REPLACEMENT PARTS (Cont.)
RDK-149		KNOB and Clip
RDP-044		POINTER—Dial pointer assembly
RDS-080		SCALE—Dial scale
REC-001		CONNECTOR—For "B" battery
REC-004		CONTACT—For "A" battery
REX-005	SR	RECTIFIER Selenium
RHI-007		HINGE—Front cover hinge
RHI-008		HINGE—Back cover hinge
RHJ-009		SPACER—For switch S2 (four req.)
RHM-055		SPEED NUT—$\frac{1}{32}$"
RHR-002		RIVET—.121 dia. x ⅛" long
RHR-006		RIVET—.121" dia. x $\frac{7}{16}$" long for mounting RDE-035
RHS-015		SCREW—Self-tapping screw for mounting loop assembly door
RHS-022		SCREW—Self-tapping for mounting the brass latch plate
RHS-023		SCREW—Self-tapping for mounting hinges
RHY-008		HANDLE
RII-019		INSULATOR—For "A" battery contact
RII-020		BARRIER—Shield around "A" battery
RJS-100		SOCKET—For 1R5, 1S5, and 3V4 tube
RJS-125		SOCKET—For 1T4 tube
RLC-080	L2	COIL—Oscillator coil
RLL-037	L1	LOOP
RMC-028		KNOB Catch knob
RMC-029		LATCH PLATE—On front cover, fastened by screws RHS-022
		CATCH—Front cover catch
RMC-031		CATCH COVER—Front cover, fastened with screws RHS-022
RMC-032		LATCH PLATE—On back cover, fastened with screws RHS-022
RMC-033		LATCH—Back cover latch
RMC-036		NAMEPLATE AND CATCH
RMC-037		CLIP—For "A" battery
RMM-085		BARRIER
RMS-130		SPRING—Dial cord tension spring
RMW-042		PULLEY—½-in. pulley for dial cord
RRC-094	R6, S1	VOLUME CONTROL AND SWITCH
RRW-030	R16	RESISTOR—33 ohms, 3 w., w.w.
RRW-031	R13	RESISTOR—1320 ohms, w.w.
RRW-032	R14	RESISTOR—1200 ohms, w.w.
RSW-061	S2	SWITCH—AC-DC Batt. switch
RTL-052	T1, T2	TRANSFORMER—1st and 2nd I-F transformer
RTO-057	T3	TRANSFORMER—Output
RWL-009		CORD Power cord

SPECIFICATIONS

CABINET:	***Plastic***
Height	10 1/8 in.
Length	12 1/4 in.
Width	5 3/4 in.
Weight	17 pounds

ELECTRICAL RATING:

Charging from A-C Line:

Voltage	105–125 volts
Frequency	50/60 cps
Wattage	10 watts

Operating from Internal Battery.

Voltage	2.1 volts
Current	1.7 amp
Wattage	3.6 watts
Hours of Operation without Charging Battery	Approx. 12–15 hours

BATTERY REQUIREMENT:

Willard 2.0 volt No. 25–2 rechargeable battery or equivalent

OPERATING FREQUENCIES:

Broadcast Band	540–1600 KC
I-F Amplifier	455 KC
Power Output (at 2.1 Battery Voltage)	
Undistorted	170 milliwatts
Maximum	210 milliwatts

LOUDSPEAKER:

Type	Alnico PM
Outside Cone Diameter	5 1/4 in.
Voice Coil Impedance (400 CPS)	3.2 ohms

TUBE COMPLEMENT:

R.F Amplifier	Type 1U4
Oscillator-Converter	Type 1R5
I-F Amplifier	Type 1U4
Detector—1st Audio	Type 1S5
Audio Output	Type 3V4

GENERAL INFORMATION

The Model 160 Portable Radio is a five-tube superheterodyne broadcast receiver which operates from a built-in rechargeable battery or from 105–125 volts, 50 or 60 cps with a battery in place.

The following paragraphs describe special tests for checking the power supply and the battery of the receiver, and explain some of the special constructional features which will be encountered while servicing the receiver.

1. POWER SUPPLY

All power necessary for the operation of the receiver is supplied by the 2-volt rechargeable battery mounted within the radio. Power to the 1.4 volt tube filaments is supplied by the battery through suitable voltage dropping resistors. The high voltage for the screens and plates of the tubes is furnished by a synchronous vibrator used in conjunction with a step-up power transformer and its associated filter circuit. The synchronous vibrator operates directly from the battery.

The receiver power is obtained from the battery at all times in the manner just described, whether the power cord is connected to a power source or not. When the power cord is connected to a receptacle supplying from 105 to 125 volts, 50 or 60 cps, a-c and the power selector is in either the CHARGE or ON position, the power supplied from the line will be used to charge the battery. The CHARGE position on the three-position power selector switch allows the battery to be charged from the house current when the receiver is not operating. The ON position of the switch permits the radio to be operated with the battery floating on the charger. Under this condition the battery filters the charger's output, maintains the voltage at its proper value and acquires a slow charge, if the voltage is adequate.

The battery charging unit consists of a step-down transformer which converts the line voltage of 117 volts to approximately 5.8 volts center-tapped, and a full wave copper-oxide rectifier which supplies the battery with the d-c charging current.

A charging cable is available which provides an easy means of charging the radio battery from an automobile or a 6-volt storage battery. The cable plug is inserted over the pins provided, see Figure 3, and the plug and socket on the other end of the cable are connected to a 6-volt supply. Complete installation instructions are provided with each cable.

2. CHARGER CHARACTERISTICS

Testing the Operation of the Rectifier Unit—A 1/4 ampere fuse is used in series with the primary of the charger transformer. If the battery does not show any signs of becoming charged after a reasonable length of time, check the fuse. If it is necessary to replace the fuse, use a 1/4-ampere (G.E. No. 2548 or REF-001) fuse.

If one or more of the copper-oxide discs of the rectifier unit are defective, the charger will not operate properly. To test the rectifier unit operation, remove the battery from the unit and reconnect it in series with a d-c ammeter capable of reading at least two amperes. Plug the power cord into a 105–125 volts, 50 or 60 cps, a-c supply, and turn the power selector switch to the CHARGE position. With the a-c line voltage at 117 volts, the average charging current should read about 1.8 amperes at 2.1 volts battery voltage. Care must be exercised in making this test as the charging circuit is of extremely low resistance. Very heavy leads must be used, and the use of an ammeter having only 0.05 ohms resistance will introduce considerable error. If the line voltage is greater than 117 volts, or the battery voltage is lower than 2.1 volts, the charging current will be greater. If the current is much less than 1.8 amperes at the rated line voltage of 117 volts, one or more of the copper-oxide discs may be defective.

Testing the Individual Rectifier Disc—Two rectifier assemblies are used in the receiver, each assembly consisting of two rectifier discs held together by an eyelet. A cross section of a rectifier as-

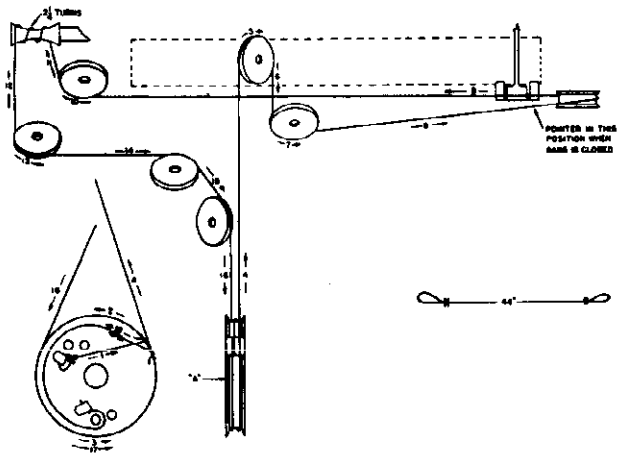

Fig. 1. Dial Stringing Diagram

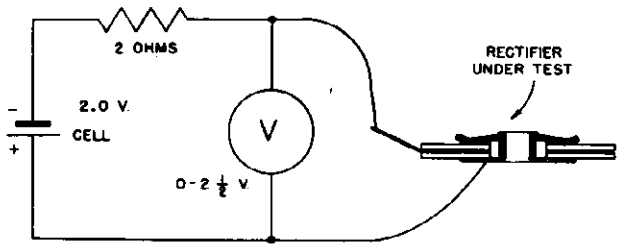

Fig. 2. Rectifier Test Circuit

sembly is shown in Figure 2. The center plate of the assembly is positive and is provided with a soldering tab. A copper-oxide rectifier disc is located on each side of the center plate. The rectifier disc conducts when the proper polarity potential is applied to the copper-oxide surface. The copper oxide is a dark coating which has been plated with nickel to afford a good surface contact to the copper oxide. If either or both of the rectifier discs in an assembly become defective, the entire assembly should be replaced.

To check the rectifier assembly, the following tests are recommended. In the conducting direction, the rectifier assembly should pass 0.5 ampere or more when ½ volt is impressed across it. If a d-c ammeter is not available for measuring currents as high as 0.65 ampere, the circuit shown in Figure 2 can be used for this check. The 2.0-ohm resistor should be fairly accurate. The voltage across the rectifier assembly should read 0.7 volt or less; if this voltage exceeds 0.7 volt, the assembly is defective and should be replaced.

The reverse current flow is as important as the above test and is made as follows: Reverse the battery polarity in the test circuit described for current check, disconnect the voltmeter, and place a milliammeter that will read 10 ma. in series with a lead to one of the battery terminals. A suitable meter fuse should be used in series with the milliammeter to prevent damage to the meter in case the assembly under test is shorted. The reversed current should not exceed 10 ma. If this current is considerably above this value, the rectifier assembly should be discarded.

If a milliammeter is not available, a rough check may be made by measuring the resistance of the assembly in the non-conducting direction on the low resistance range of an ohmmeter. The resistance should measure at least 300 ohms.

3. *REPLACEMENT OF VIBRATORS*

After many hours of service, the reception might become very noisy or fail due to a faulty vibrator. The type used in this receiver is REU-001.

In order to gain access to the vibrator, proceed as follows:

1. Pull out the pins on the handle of the cabinet (Figure 3).
2. Unscrew the five hex screws which hold the chassis in cabinet (one screw at the bottom of cabinet).
3. Slide the chassis out of the cabinet, being careful not to strain the loop leads.
4. Unscrew the three screws at the bottom and one on the top of the power unit.
5. Lift up the outer shield and then replacement of the vibrator is as easy as changing a normal radio tube.

BATTERY INFORMATION

The receiver uses a 2-volt Willard Radio Battery No. 25-2 or equivalent. It has a 25 ampere-hour capacity and should be cared for in the same manner as any storage battery.

CHARGE INDICATORS

The degree of charge of the battery can be determined by raising the back cover of the radio and referring to the charge ball indicators visible through the hole in the metal battery case.

If the battery is fully charged, two indicator balls will be visible at the surface of the liquid in the battery. When the battery discharges, these ball indicators will sink and disappear in the following order:

1. Green indicator sinks when approximately 20 per cent of battery capacity has been discharged.
2. The red ball sinks when battery is 80 per cent discharged.

On charge, the balls rise or float in the reverse order and the charge may be stopped when both balls appear in the opening.

TO CHARGE BATTERY

The battery is charged by merely plugging the receiver power cord in the rated ac power outlet and turning the selector switch to CHARGE. Frequent check should be taken of the charge indicator and when both indicator balls are visible, the battery is adequately charged. Charging the battery after both indicator balls are visible will not harm the battery except it will evaporate the water faster. A completely discharged battery will be restored, usually within 20 to 30 hours.

When operating the receiver from the a-c house current, the battery floats or is being charged at a slow rate. Thus if you wish to operate the receiver even with a fully discharged battery, plug in the power cord in the ac receptacle and turn the power selector switch to the ON position. Prolonged operation in this manner usually will cause the battery potential to stabilize at some voltage determined by the line voltage and the characteristics of the charging circuit components. The degree of charge obtainable with this method of operation likewise is dependent on the line voltage and the characteristics of the charging circuit components.

BATTERY OPERATING INSTRUCTIONS.

1. Add distilled or tap water in the filler cap at sufficiently frequent intervals to keep liquid level at indicator mark as viewed through opening in battery case. Do not overfill as this impairs the nonspill feature. Distilled water is to be preferred, as it does not contain any chemical compound which can contaminate the battery.

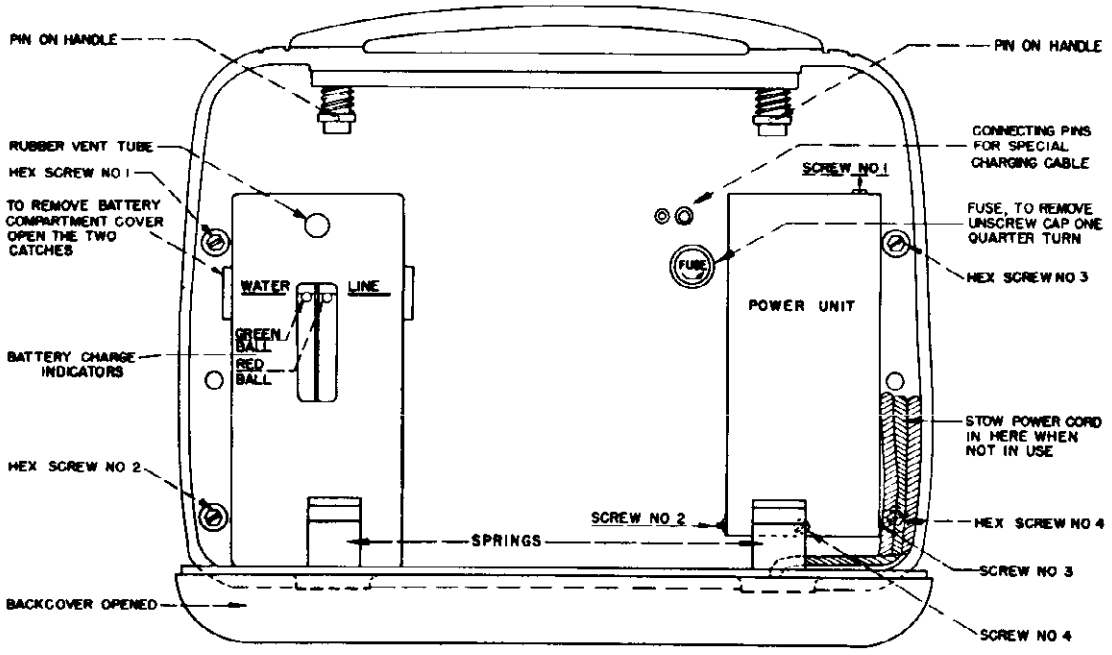

Fig. 3. Rear Compartment Assembly

© John F. Rider

2. A fully charged battery will operate the radio in the ON position without being connected to an a-c outlet for about 12 to 15 hours before recharging is required. Whenever possible, it is best not to allow the battery to become discharged to the extent that both indicators disappear. However, if both indicators have sunk, the battery should be recharged immediately or within 24 hours.

3. A battery will continually discharge at a slow rate even when not in use. For this reason, monthly checks should be made of the charge condition and the battery placed on charge when necessary. This will prevent damage to the battery, such as freezing during cold weather.

BATTERY INSTALLATION

The following instructions should be carefully followed in installing a battery, or replacing an old one:

1. Remove battery from packing carton.
2. If needed, add water to bring liquid level to indicator mark on battery container. Do not overfill.
3. Raise back cover on radio, remove battery case cover. The latter is removed by lifting two catches.
4. Unplug old battery if present, and replace with new battery.
5. Place battery on charge, if necessary, as described in a previous paragraph, until both indicators are showing in the opening in the case cover.

ELECTRICAL CIRCUIT ALIGNMENT

EQUIPMENT REQUIRED

1. Signal generator with audio tone modulation.
2. A-C output meter, 1 or ½ volts full scale, 1000 ohms/volt.
3. Insulated screwdriver.
4. .05 mf. capacitor.
5. Antenna loop.
6. Shorted one turn loop (for "wanding").
7. Powdered iron cores.

ALIGNMENT PROCEDURE

1. *General*—The alignment procedure is given in table form for convenience. Reference is made to Figure 5 for the trimmer locations. The low side of the signal generator should be connected to the chassis of the receiver for i-f alignment; the high side should be connected as indicated in the Alignment Chart. A meter or some other suitable indicating device must be connected to the output of the receiver.

When aligning the receiver, the volume control on the receiver should be turned to its maximum position. The output signal of the signal generator should be kept as low as possible at all times, the reading of a meter connected across the voice coil leads of the receiver should be kept below ½ volt by changing the signal generator output. If the signal level is too high, the AVC becomes effective and alignment errors might result.

The following paragraphs give greater details regarding the connections of the output meter and the signal generator to the receiver during alignment.

2. *Connecting the Output Meter*—In aligning the receiver some means for indicating differences in the output voltage will be required. A rectifier type a-c meter of 1 or 1½ volts full scale deflection is connected across the speaker voice coil terminals. For alignment of the i-f amplifier, the chassis and the back cover have to be removed from the cabinet (see paragraph 3 of General Information).

In order to be able to tune the i-f amplifier with ease, it is advisable to unsolder the two leads connecting the loop antenna, and solder them together avoiding any undesirable shorting to ground. Now remove the four self-tapping screws holding the speaker mounting plate and slide it out to gain access to the inside of the chassis. Due to the fact that the rectifier discs are mounted on this mounting plate, it is necessary to ground this plate temporarily to the chassis by means of a metal strip or wire to avoid excessive hum.

For the r-f alignment, the chassis can be left in the cabinet and the output meter connected between the auxiliary green voice coil lead provided and chassis.

3. *Connecting the Signal Generator*—After aligning the i-f transformer T3, the output of the signal generator should be coupled through a 0.05 mf. capacitor to the grid of the 1R5 oscillator-converter tube. This may be accomplished easily by connecting the capacitor to the stator of C2-B, the middle section of the tuning gang, as this stator is connected directly to the converter grid. The low side of the signal generator output should be connected to the chassis ground to complete the circuit.

For aligning the oscillator and r-f coils, the r-f signal should be inductively coupled by connecting a three- or four-turn, 6-inch diameter loop of bell wire across the signal generator output terminals and then locating the loop about one foot from the radio cover. To prevent possible error in peak readings, the position of the loop with respect to the receiver should not be changed during any one set of adjustments. The adjustment of the iron cores must be made with the cover opened, and during the reading of the output meter the loop must be in normal position (the cover of the receiver must be closed).

For the oscillator adjustment, it is advisable to use the method of "wanding" the radio loop antenna. "Wanding" is the procedure where more or less gain will be indicated by an increase or decrease in output meter readings when a shorted one-turn loop (approximately 10 in. by 5 in.) is coupled to the radio antenna loop. If a gain is indicated, we have to increase the inductance by screwing in the iron core of the oscillator coil T6. In a similar manner, a field of powdered iron cores may be coupled to the loop. In this case a gain would indicate that the oscillator inductance must be decreased. When no gain is apparent with either the shorted turn wand or the iron field wand, the adjustment of the oscillator iron core is peaked.

After the alignment of the oscillator, the r-f transformer T1 should be aligned as follows:

1. The signal is fed over the loop coupled to the radio antenna loop with cover closed. Note the output meter reading.
2. Open the back cover and turn the tuning slug of T1 approximately ½ turn clockwise.
3. Close the back cover and note the new output meter reading. If it has increased, continue to turn the core in the same direction; if it has decreased, reverse the direction. Repeat this procedure until a definite maximum reading is obtained.

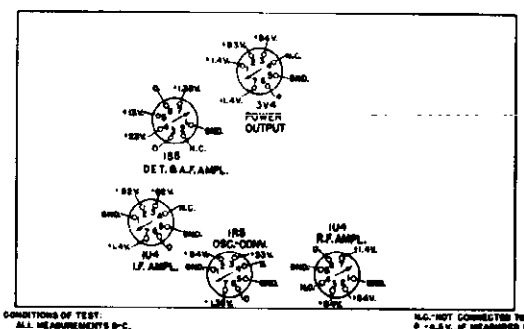

Fig. 4. Socket Voltage Diagram

ALIGNMENT CHART

Step	Test-Oscillator Connected to:	Test-Oscillator Setting	Pointer Setting	Adjust for Maximum Output
1	1U4 (i-f amplifier) grid (Pin 6) in series with 0.5 mf capacitor.	455 KC	1600 KC (gang condenser open)	Iron cores of i-f transformer T3
2	1R5 converter grid (Pin 6) in series with .05 mf capacitor.	455 KC	1600 KC (gang condenser open)	Iron cores of i-f transformer T2
3	1R5 converter grid (Pin 6) in series with .05 mf capacitor.	455 KC	1600 KC (gang condenser open)	Repeak T3 and T2
4	Inductively coupled to loop antenna.	580 KC	580 KC	Iron core of T6*
5	Inductively coupled to loop antenna.	580 KC	580 KC	Iron core of T1**
6	Inductively coupled to loop antenna.	1500 KC	1500 KC	C3B, C2B, and C1B***
7	Repeat Steps 4, 5, and 6 until both peaks reach maximum.			

*Use "Wanding" method described in text.
**See text for details.
***Chassis in cabinet and cabinet back (with loop) closed; remove plug buttons to adjust trimmers.

© John F. Rider

STAGE GAINS AND VOLTAGE CHECKS

Stage gain measurements may be made with a vacuum tube voltmeter to check circuit performance and to locate stages which are not operating properly. The gain values listed may have tolerance of 20%.

1. R-F STAGE GAINS.
   R-F Amplifier Grid (1U4 Pin 6) to Oscillator-Converter Grid (1R5 Pin 6) ..... 13 at 1000 KC
   Oscillator-Converter Grid (1R5 Pin 6) to I-F Amplifier Grid (1U4, Pin 6) ..... 26 at 1000 KC
   Oscillator-Converter Grid (1R5, Pin 6) to I-F Amplifier Grid (1U4, Pin 6) ..... 31 at 455 KC
2. AUDIO GAIN
   The power output across the speaker voice coil should be approximately 50 milliwatts with a 400 cps signal of .03 volt applied across the volume control.
3. OSCILLATOR GRID BIAS
   The d-c voltage developed across the oscillator grid leak (Resistor R2) averages 13 volts at 1000 KC.
4. SOCKET PIN VOLTAGE
   Fig. 4 shows typical tube pin voltages. All readings should be made from the pins to ground unless otherwise indicated.
5. HUM LEVEL
   Across the primary of the output transformer T4 measured in series with 1 mf paper capacitor in series with the meter ..... 3 volts (With the line cord plugged in; with battery operation alone, the voltage thus measured will be negligible.)

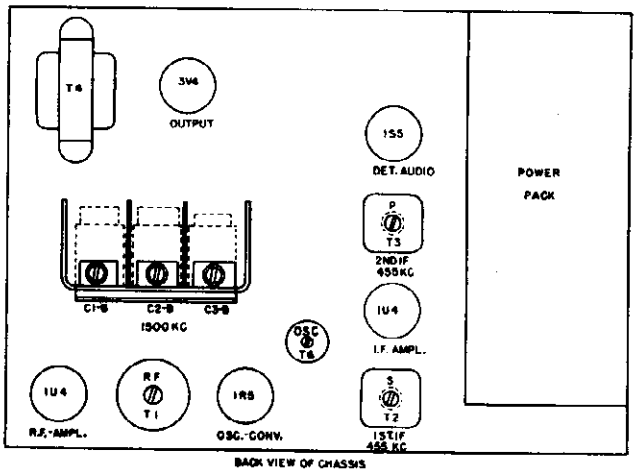

Fig. 5. Tube and Trimmer Location

MODEL 160—REPLACEMENT PARTS LIST

CAT. NO.	SYMBOL	DESCRIPTION
UNIVERSAL REPLACEMENT PARTS		
UCC-625	C9, 17	CAPACITOR—.005 mf., 400 v., paper
UCC-630	C6, 12, 13	CAPACITOR—.01 mf., 600 v., paper
UCC-631	C11, 16	CAPACITOR—.02 mf., 400 v., paper
UCC-635	C4, 15, 23	CAPACITOR—.05 mf., 400 v., paper
UCU-028	C7, 8, 10	CAPACITOR—100 mmf., mica
UOP-611		SPEAKER—PM speaker
URD-049	R16	RESISTOR—1000 ohms, ½ w., carbon
URD-057	R15	RESISTOR—2200 ohms, ½ w., carbon
URD-073	R13, 14	RESISTOR—10,000 ohms, ½ w., carbon
URD-077	R2	RESISTOR—15,000 ohms, ½ w., carbon
URD-097	R1	RESISTOR—100,000 ohms, ½ w., carbon
URD-121	R9, 12	RESISTOR—1 meg., ½ w., carbon
URD-129	R6	RESISTOR—2.2 meg., ½ w., carbon
URD-133	R10	RESISTOR—3.3 meg., ½ w., carbon
URD-137	R8	RESISTOR—4.7 meg., ½ w., carbon
URE-059	R11	RESISTOR—2,700 ohms, ½ w., carbon
SPECIALIZED REPLACEMENT PARTS		
RAC-053		COVER—Battery box cover
RAD-033		DOOR—Cabinet door
RAG-017		GRILLE—Loudspeaker grille
RAU-040		CABINET—Maroon
RBC-001	B2	CELL—Bias cell
RCC-068	C20, 21	CAPACITOR—.05 mf., 120 v., paper
RCC-090	C22	CAPACITOR—.003 mf., 1500 v., paper
RCE-007	C14A, B, C	CAPACITOR—Electrolytic
RCT-034		CAPACITOR—Tuning capacitor
RCW-1060	C19	CAPACITOR—10 mmf., ceramic
RCW-1075	C5	CAPACITOR—4 mmf., ceramic
RDC-032		DRIVE CORD—25 yards
RDK-142		KNOB—Tuning knob
RDK-143		KNOB—Knob volume and switch
RDP-041		ASSEMBLY—Slider and pointer assembly
RDS-075		SCALE—Dial scale
REF-001	F1	FUSE—¼ ampere
REV-001	V1	VIBRATOR—Vibrator unit
REX-001		RECTIFIER—Disc rectifier
RHC-013		HAIRPIN COTTER
RHE-006		EYELET—For handle
RHG-018		GROMMET—Rubber grommet

CAT. NO.	SYMBOL	DESCRIPTION
SPECIALIZED REPLACEMENT PARTS		
RHG-019		GROMMET—For battery box
RHI-006		HINGE—Door hinge
RHQ-002		VENT TUBE—For battery
RHS-010		TUBE SHIELD—For 1S5 tube
RHS-018		SHIELD—Spiral shield
RHY-007		HANDLE—Cabinet handle
RJP-014		PLUG—Battery plug
RJP-026		PLUG BUTTON
RJS-091		SOCKET—Tube socket shock mounting
RJS-105		SOCKET—Tube socket
RJS-121		SOCKET—Vibrator socket
RJW-002		HOLDER—Fuse holder
RLB-028	T1	TRANSFORMER—R-F transformer
RLC-078	T6	TRANSFORMER—Oscillator transformer
RLF-014	L3	CHOKE—B + filter choke
RLF-015	L4	CHOKE—A + filter choke
RLI-026	L2	CHOKE—Hash filter choke
RLL-032	L1	LOOP—Antenna loop
RMA-006		ARM—Switch arm
RMC-022		CATCH—Catch for cabinet door
RMC-023		CATCH—Battery box catch
RMC-025		CLAMP—Clamp for bias cell
RML-019		LINK—Link for lever
RML-020		LEVER—Lever for switch control shaft
RML-021		LEVER—Lever for volume control
RMM-082		RUBBER CUSHION—For battery box cover
RMP-017		PIN—Handle retaining pin
RMS-120		SPRING—Drive cord spring
RMS-156		SPRING—For handle
RMU-044		SHAFT—Shaft for switch
RMU-045		SHAFT—Tuning shaft
RMW-027		PULLEY
RMW-077		WINDLASS
RRC-092	R7	VOLUME CONTROL—.5 meg.
RRW-018	R3, 4, 5	RESISTOR—7.5 ohms, wirewound
RSW-060	S1	SWITCH—Power switch
RTL-052	T2	TRANSFORMER—1st I-F transformer
RTL-054	T3	TRANSFORMER—2nd I-F transformer
RTO-003	T5	TRANSFORMER—Charging transformer
RTO-055	T4	TRANSFORMER—Output transformer
RTV-003	T7	TRANSFORMER—Vibrator transformer
RWL-009		POWER CORD

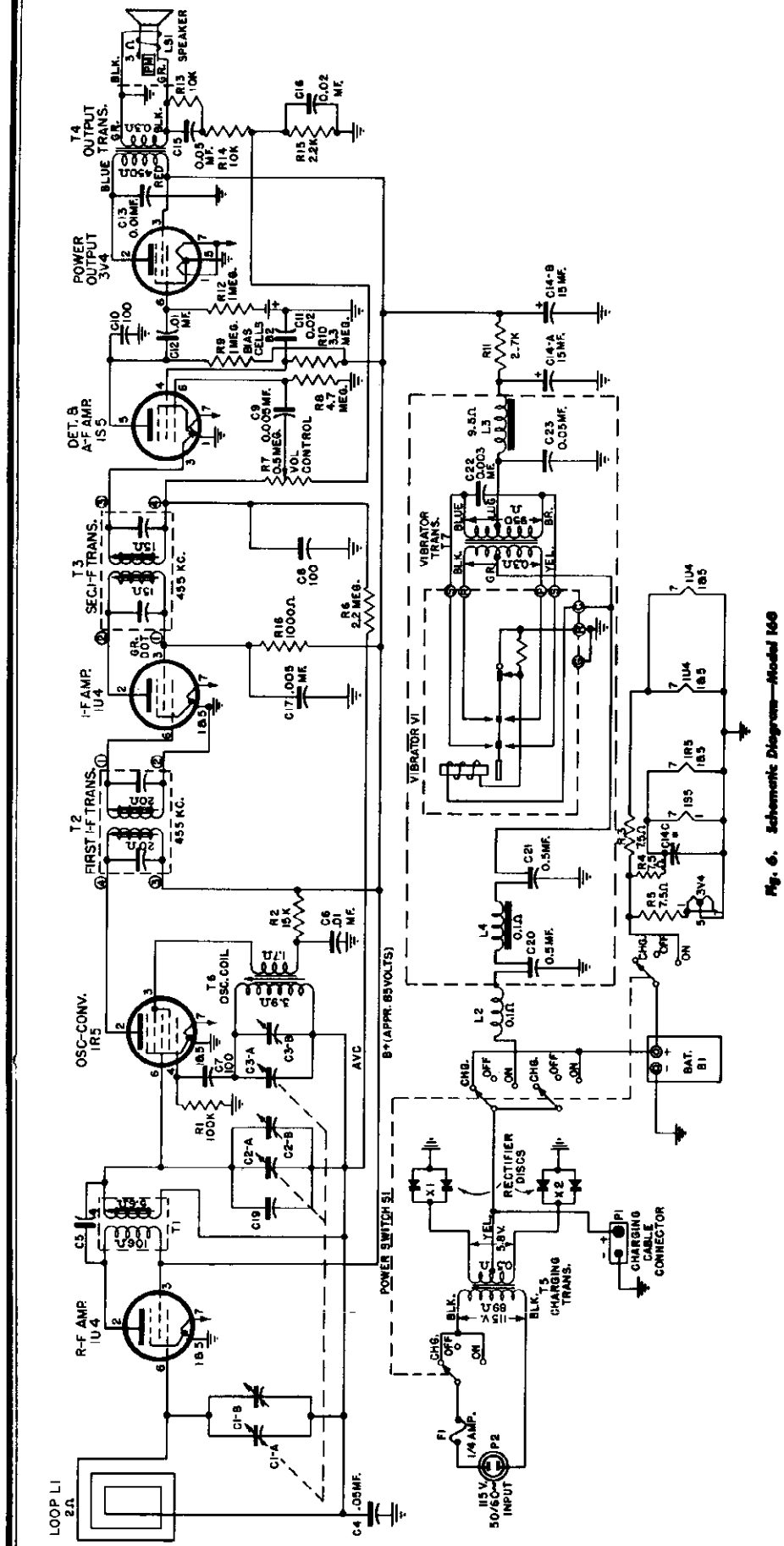

Fig. 6. Schematic Diagram—Model 160

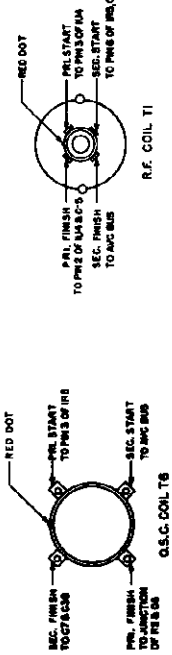

Fig. 7. Coil and Switch Terminal Identification

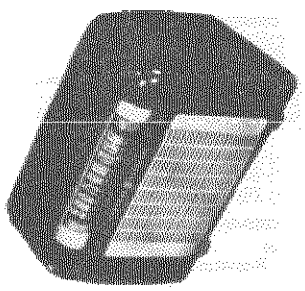

MODELS 324, 328

GENERAL ELECTRIC CO.

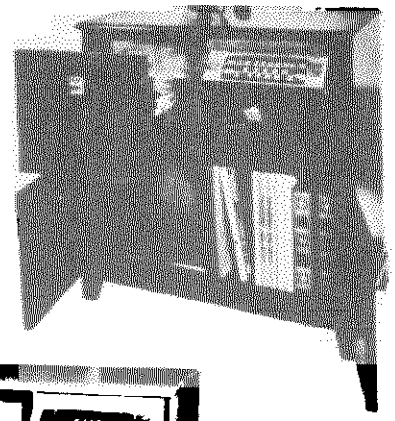

MODEL 324

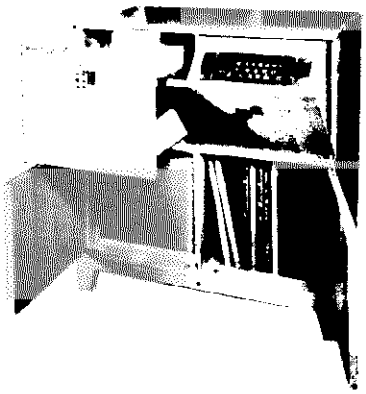

MODEL 328

SPECIFICATIONS

CABINET

	324	328
Model	324	328
Material	Wood	Wood
Color	Mahogany	Blonde
Height	32½ in.	32½ in.
Width	31⅝ in.	31⅝ in.
Depth	16 1/16 in.	16 1/16 in.

ELECTRICAL

Voltage	105–125
Frequency	60 c.p.s
Wattage (Radio)	65 watts
Wattage (Phono)	80 watts

OPERATING FREQUENCIES

AM	540–1620 kc
FM	88–108 mc

INTERMEDIATE FREQUENCIES

AM	455 kc
FM	10.7 mc

POWER OUTPUT

Undistorted	3.0 watts
Maximum	5.0 watts

LOUDSPEAKER

Type	Alnico permanent magnet
Outside Diameter of Cone	12 inches
Voice Coil Impedance at 400 Cycles	3.2 ohms

TUBE COMPLEMENT

(V1) Converter	6BE6
(V2) R-F and 1st FM-IF Amplifier	6BA6
(V3) Second FM and 1st AM-IF Amplifier	6BA6
(V4) FM Limiter	6AU6
(V5) AM Detector, FM Discriminator, and Audio Amplifier	6T8
(V6) Power Output	6V6
(V7) Rectifier	5Y3GT
(V8) Phono Preamplifier	6SC7

PHONOGRAPH PICK-UP

Type	Variable reluctance
D-c Resistance	250 ohms

ANTENNA

AM	Built-in loop or outside ahtenna
FM	Power cord antenna, or 300 ohm FM dipole antenna

GENERAL

Models 324 and 328 are alike except for cabinet. For service information on the record changer, refer to General Electric publication ER-S-P6.

These models are designed to operate either from built-in antennas or from an external AM antenna or FM dipole antenna. On AM it is merely necessary to connect an external antenna to the terminal screw marked "Antenna." On FM, to operate the receiver from the built-in power line antenna, it is necessary to connect the green wire coming out of the rear of the chassis, to the left-hand terminal screw of the antenna terminal strip. For operation from a 300-ohm FM dipole (G.E. Cat. No. UKA-006 or UKR-006), remove this green wire from the terminal and connect the 300-ohm transmission line (G.E. Cat. No. UWT-002) to the terminals marked "DIPOLE."

On AM operation, the set operates as a five-tube set with the signal being fed directly into the converter grid.

On FM, the set uses a reflex circuit, the Armstrong type discriminator, and a special limiter circuit.

In the reflex circuit, V2 (6BA6) acts both as an r-f amplifier and as the 1st i-f amplifier. The r-f signal is fed into the grid of V2 through the secondary of T1. It is amplified by V2 and tuned at the converter grid by L4, C1B, and trimmer C6. In the converter, the r-f is changed to 10.7 mc i-f, and fed into the primary of T1 and again inserted into the grid of V2, which now acts as an i-f amplifier. The i-f signal is fed from the plate of V2 through choke L9 into the second i-f transformer.

L1 and C3 form a 10.7 mc wave trap to eliminate any i-f signal from the antenna circuit to prevent interference. C4 and L2 are designed to peak at 98 mc with strays to increase the FM r-f sensitivity. At the FM r-f frequencies, the capacitor C46 offers little series impedance to the r-f signal. L9 and C7 form a high-pass filter to pass the FM r-f signal into the converter grid and to shunt the FM i-f frequency into the primary of the second FM i-f transformer.

It should be noted that the FM oscillator coil L8 is a section of 300-ohm line shorted at one end to form a one-turn loop. C11 and C10 are tapped in at each side of the shorted end.

L13 and C27 in the cathode circuit of the limiter tube are series tuned to 10.7 mc. This effectively grounds the cathode for IF. The presence of R21, however, provides a highly degenerative condition for any amplitude modulation applied to the limiter grid. The cathode bias developed by R21 is approximately 85 volts, which makes it necessary to insert onto the grid of V4 from B+80 volts through R38.

In late models of 324 and 328, the variable reluctance pick-up with replaceable stylus was used. When this pick-up was used, the resistor R49 was changed to 15,000 ohms, ½ watt from 6800 ohms, ½ watt.

STAGE GAIN AND VOLTAGE CHECKS

Stage gain measurements by a vacuum tube voltmeter or similar measuring device may be used to check circuit performance and isolate trouble. The gain values listed may have tolerances of ±20 per cent. Readings should be taken with low signal voltage so that AVC is not effective.

I. R-F AND I-F STAGE GAINS

Signal applied through IRE dummy antenna:

Antenna Post to V2 Grid	4 at 1000 kc
V2 Grid to V3 Grid	60 at 455 kc
Dipole Terminals to V2 Grid	1.3 at 98 mc
V2 to V1 Grid	5 at 98 mc
V1 to V2 Grid	2.6 at 10.7 mc
V2 to V3 Grid	18 at 10.7 mc
V3 to V4 Grid	54 at 10.7 mc

©John F. Rider

2. AUDIO GAIN

0.05 volts at 400 cps across volume control with volume control set at maximum will give approximately ½ watt output across the speaker voice coil.

3. OSCILLATOR GRID BIAS

D-c voltage developed across R3:
6.5 volts at 1000 kc. (Use 220 K resistor to isolate V.T.V.M.)
4.5 volts at 98 mc. (Use 220 K resistor to isolate V.T.V. M.)

4. SOCKET PIN VOLTAGES

Fig. 3 shows typical tube pin voltages. All readings should be made from the pins to ground, unless otherwise indicated.

5. HUM MEASUREMENT

Hum measured across the voice coil of the speaker with volume control at minimum and Band switch on AM should not exceed 7 millivolts.

On FM, ground limiter grid and measure hum across voice coil with volume control at maximum. Hum should not exceed 15 millivolts.

ALIGNMENT

Two methods of alignment are given: (1) The regular meter alignment as previously used; and (2) Visual alignment, which allows for more precision in aligning the i-f transformers and particularly the discriminator alignment where it is necessary that the negative and positive half cycles of the output wave have equal amplitude and symmetry.

EQUIPMENT REQUIRED FOR METER ALIGNMENT

1. Test oscillator with tone modulation.
2. 20,000 ohm-per-volt voltmeter or microammeter.
3. A-c voltmeter, 2 volts.
4. .01 mfd., paper capacitor.
5. 200,000-ohm resistor, ½ watt.

NOTES IN CONNECTION WITH METER ALIGNMENT CHART

1. Use unmodulated signal.

2. Connect 20,000 ohm-per-volt meter from junction of R26 and R48 to chassis. Use 10-volt scale. Steps 4 and 5.

3. Connect 20,000 ohm-per-volt meter from junction of C40 and R38 to cathode of limiter (Pin 7 of V4) in series with a 200,000-ohm resistor. The resistor must be connected directly to the cathode pin to minimize capacity loading and to isolate the i-f signal from the meter. Keep signal generator down so that meter indicates not more than 1 volt (*5 microamps through 200,000 ohms*).

4. Use 400-cycle modulation.

5. Connect a standard output meter across speaker voice coil. Turn volume control full on. Keep signal generator output down so that output meter indicates not more than ½ watt output during alignment.

6. For alignment of the AM oscillator and R-F trimmer, the signal should be inductively coupled to the loop antenna by connecting a four-turn, six-inch diameter loop of bell wire across the signal generator terminals, and then locate the loop about one foot from the radio loop antenna. To prevent possible errors in peak readings, the position of the loop in respect to the radio loop should not be changed during any one set of adjustments.

7. To align the first FM i-f transformer T1, it is necessary to disconnect the copper strap from the band switch to Pin 7 of V1 (6BE6) by unsoldering the strap from the tube pin connection. Resolder the strap after T1 is aligned.

8. When tuning the secondary of T6 three minimum points will be obtained. The center one is the correct setting. As the transformer is tuned either side of 10.7 mc, the meter reading should increase.

9. Termination impedance of signal generator should be 300 ohms.

10. When detuning the signal generator in Step (4), two maximum meter readings will be obtained, one on each side of 10.7 mc. The primary of T6 should be aligned to maximum when the signal generator is tuned to the smaller of these two peaks.

METER ALIGNMENT CHART

Step No.	Signal Generator Frequency	Signal Input Point	Band Switch	Dial Setting	Adjust	See Note
			AM-IF ALIGNMENT			
1	455 KC	6BE6 grid (Pin 7 of V1) through .01 mfd.	AM	550 KC	Primary and secondary cores of T5 for maximum	4, 5
2	455 KC	6BE6 grid (Pin 7 of V1) through .01 mfd.	AM	550 KC	Primary and secondary cores of T2 for maximum	4, 5
			FM DISCRIMINATOR AND I-F ALIGNMENT			
3	10.7 MC	6BA6 grid (Pin 1 of V3)	FM	. . . . .	T6 secondary core for minimum	4, 5, 8
4	See Note 10	6BA6 grid (Pin 1 of V3)	FM	. . . . .	Detune signal generator to point of maximum meter reading	1, 2, 10
5	See Note 10	6BA6 grid (Pin 1 of V3)	FM	. . . . .	T6 primary for maximum	1, 2
6	Repeat Step 3.					
7	10.7 MC	6BA6 grid (Pin 1 of V3)	FM	. . . . .	Primary and secondary cores of T4 for maximum	1, 3
8	10.7 MC	6BA6 grid (Pin 1 of V2)	FM	. . . . .	Primary and secondary cores of T3 for maximum	1, 3
9	10.7 MC	6BE6 grid (Pin 7 of V1)	FM	. . . . .	Primary and secondary cores of T1 for maximum	1, 3, 7
			AM-RF ALIGNMENT			
10	1620 KC	Inductively coupled	AM	C1 completely open	Adjust C9 for maximum	4, 5, 6
11	1500 KC	Inductively coupled	AM	For maximum output	Adjust C5 for maximum while rocking generator. Set pointer to 1500 KC or 161 mark on scale on backplate.	4, 5, 6

MODELS 324, 328

GENERAL ELECTRIC CO.

FM-RF ALIGNMENT

12	108 MC	Dipole terminals	FM	C1 completely open	Adjust C12 for maximum	1, 3, 9
13	108 MC	Dipole terminals	FM	For maximum output	Adjust C6 for maximum while rocking generator	1, 3, 9
14	10.7 MC	Dipole terminals	FM	.....	Adjust C3 for minimum.	1, 3

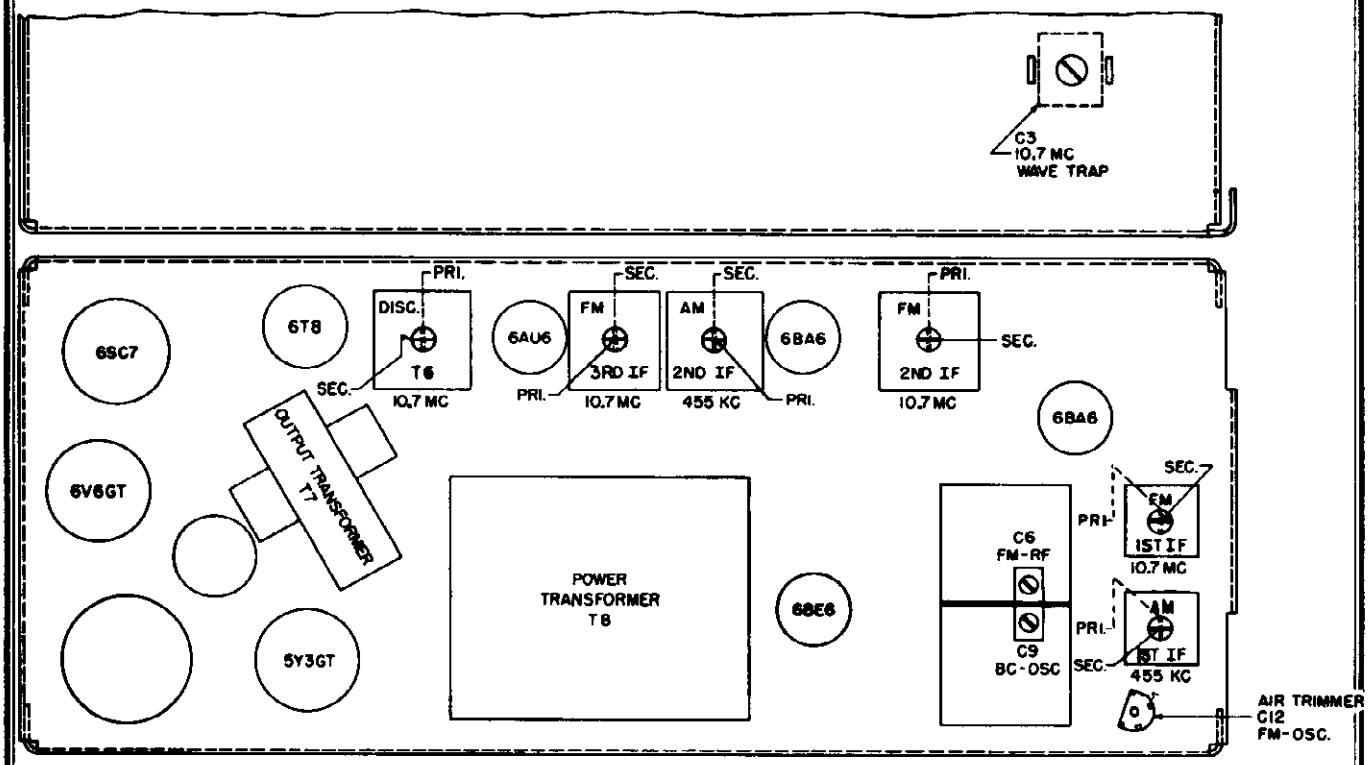

Fig. 1 Tube and Trimmer Location

EQUIPMENT REQUIRED FOR VISUAL ALIGNMENT:

1. General Electric YGS-3 AM and FM signal generator, or equivalent.
2. General Electric CRO-5A oscilloscope, or equivalent.
3. 200,000 ohm, ½ watt resistor.
4. 20,000 ohm-per-volt meter.
5. .01 mfd. paper capacitor.
6. 8 to 10 mfd. Pyranol capacitor.

NOTES IN CONNECTION WITH METER ALIGNMENT CHART

1. Connect vertical plates of scope to the limiter cathode (Pins 2 or 7 of V4) through a 200,000-ohm resistor and chassis. Connect an 8 to 10 mfd. pyranol capacitor between junction of C40 and R38 and ground.

2. Connect vertical plates of scope at junction of R18 and C28 and chassis.

3. Use a 60-cycle, amplitude-modulated signal.

4. In some cases tuning of the converter grid will cause "pulling" of the oscillator and will change the oscillator frequency. After centering the response curve, if peaking of C5 or C6 causes the curve to move off the scope screen, it is necessary to recalibrate the oscillator as in Steps 10 and 12.

5. The termination impedance of the signal generator 300 ohms to properly match the input impedance of this receiver.

6. To align the 1st i-f transformer T1, it is necessary to disconnect the copper strap from Pin 7 of V1 (6BE6) by unsoldering it. Resolder after alignment.

7. For alignment of the AM oscillator and r-f trimmers, the signal should be inductively coupled to the loop antenna by connecting a four-turn six-inch diameter loop of bell wire across the signal generator terminals, and then locate this loop about one foot from the radio loop antenna. To prevent possible errors in peak readings, the position of the loop with respect to the radio loop should not be changed during any one set of adjustments.

8. When using a sweep signal, it is necessary to apply the same sweep voltage to the horizontal plates of the scope as is used to sweep the r-f frequency. It may be necessary to use an RC phase shift network. This may be done by putting a .005 mfd. capacitor across the horizontal plate terminals of the scope and a ½-megohm potentiometer in series with the high side of the horizontal sweep voltage line. The potentiometer should be adjusted for a single trace.

©John F. Rider

GENERAL ELECTRIC CO. MODELS 324, 328

VISUAL ALIGNMENT CHART

Step No.	Signal Generator Frequency	Signal Input Point	Band Switch	Dial Setting	Adjust	See Note
			AM-IF VISUAL ALIGNMENT			
1	455 KC ±20 KC at 60-cycle sweep rate	6BE6 grid (Pin 7 of V1) through .01 mfd.	AM	.....	Two slugs of T5 for maximum amplitude and symmetry.	2
2	455 KC ±20 KC at 60-cycle sweep rate	6BE6 grid (Pin 7 of V1) through .01 mfd.	AM	.....	Two slugs of T2 for maximum amplitude and symmetry.	2
			FM-IF AND DISCRIMINATOR VISUAL ALIGNMENT			
3	10.7 MC ±300 KC at 60-cycle rate	6BA6 grid (Pin 1 of V2)	FM	.....	Two slugs of T4 for maximum amplitude of wave and symmetry.	1
4	10.7 MC ±300 KC at 60-cycle rate	6BA6 grid (Pin 1 of V2)	FM	.....	Two slugs of T3 for maximum amplitude symmetry of wave.	1
5	10.7 MC ±300 KC at 60-cycle rate	6BE6 grid (Pin 7 of V1). (See Note 7.)	FM	.....	Tuning slugs of T1 for maximum amplitude and symmetry of wave.	1, 6
6	10.7 MC ±300 KC at 60-cycle rate	6BA6 grid (Pin 1 of V3)	FM	.....	Primary of T6 for maximum amplitude.	2
7	10.7 MC ±300 KC at 60-cycle rate	6BA6 grid (Pin 1 of V3)	FM	.....	Secondary of T6 for vertical symmetry with respect to the midpoint horizontal trace.	2
8	10.7 MC ±300 KC at 60-cycle sweep rate	6BA6 grid (Pin 1 of V3)	FM	.....	Primary of T6 for straightest line between positive and negative peaks.	2
9	Recheck Step 7					
			AM-RF VISUAL ALIGNMENT			
10	1620 KC	Inductively coupled	AM	C1 completely open	C9 for steepest slope of straight-line trace on scope.	2, 3, 7
11	1500 KC ±20 KC at 60 cps sweep rate	Inductively coupled	AM	For maximum output	C5 for maximum amplitude. Set pointer to 1500 KC or 161 mark on scale on backplate.	2, 3, 7
			FM-RF VISUAL ALIGNMENT			
12	108 MC	Dipole terminals	FM	C1 completely open	C12 for steepest slope of straight line trace on scope.	1, 3, 5
13	98 MC ±300 KC at 60 cps sweep rate	Dipole terminals	FM	For maximum output	C6 for maximum amplitude and minimum distortion.	1, 5
14	10.7 MC ±300 KC at 60 cps rate	Dipole terminals	FM	.....	C3 for minimum amplitude.	1, 5

©John F. Rider

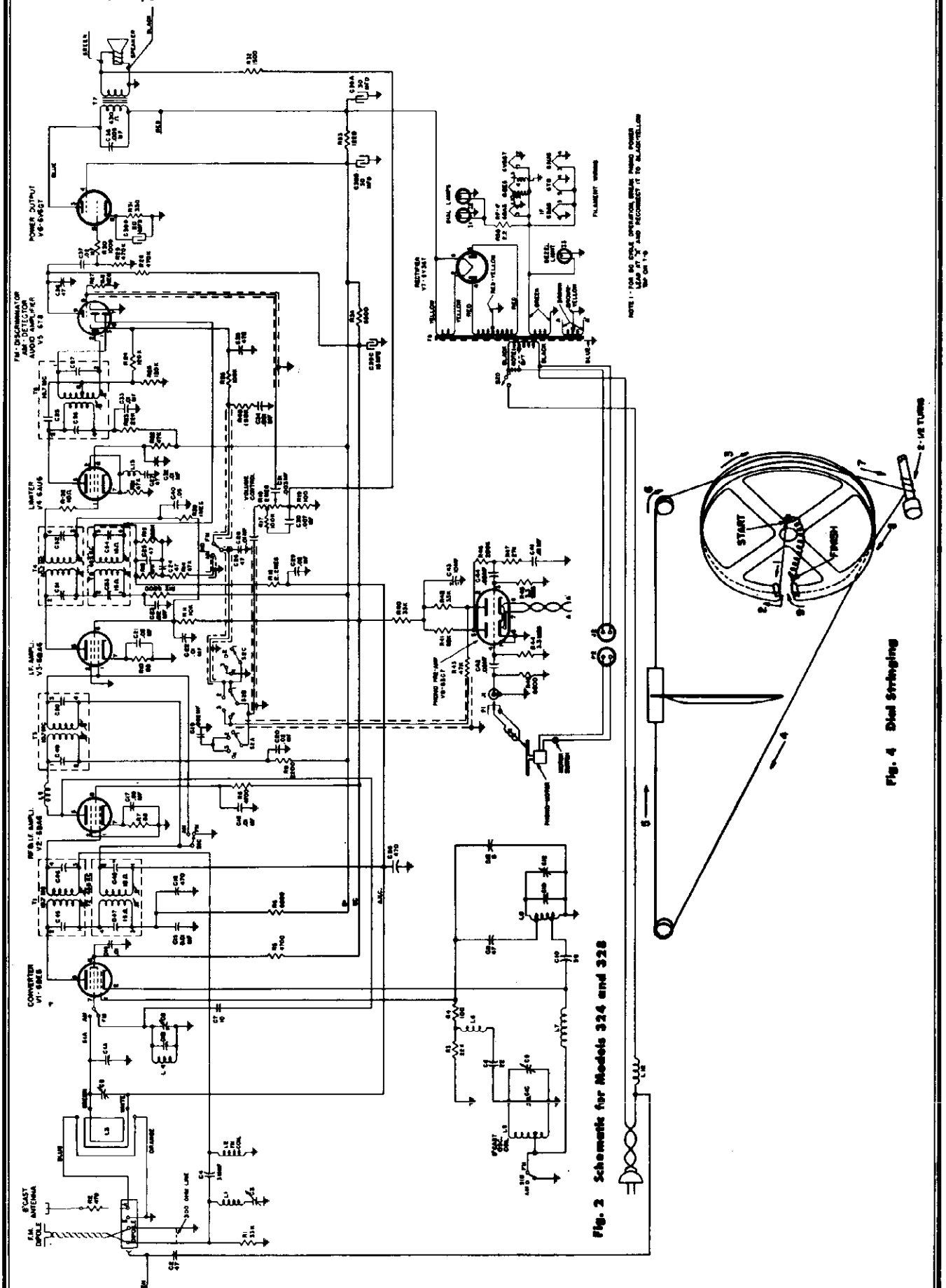

Fig. 2 Schematic for Models 324 and 328

Fig. 4 Dial Stringing

Cat. No.	Symbol	Description
UNIVERSAL REPLACEMENT PARTS		
UCC-620	C34	CAPACITOR—.001 mfd., 600 v., paper
UCC-621	C19	CAPACITOR—.002 mfd., 600 v., paper
UCC-623	C31	CAPACITOR—.003 mfd., 600 v., paper
UCC-630	C14, 15, 16, 22, 28, 32, 33, 41	CAPACITOR—.01 mfd., 600 v., paper
UCC-631	C20, 23, 37	CAPACITOR—.02 mfd., 600 v., paper
UCC-635	C40, 44, 17, 21, 29, 42	CAPACITOR—.05 mfd., 600 v., paper
UCC-1625	C38	CAPACITOR—.005 mfd., 1600 v., paper
UCU-020	C2, 24, 25, 26, 36	CAPACITOR—47 mmf., ±20%, mica
UCU-044	C35	CAPACITOR—470 mmf., ±20%, mica
UOP-1247		SPEAKER—12-inch PM, same as S1200D7
URD-001	R39	RESISTOR—10 ohms, ½ w., carbon
URD-021	R7, 10	RESISTOR—68 ohms, ½ w., carbon
URD-025	R4, 19	RESISTOR—100 ohms, ½ w., carbon
URD-041	R2	RESISTOR—470 ohms, ½ w., carbon
URD-049	R30	RESISTOR—1000 ohms, ½ w., carbon
URD-053	R32	RESISTOR—1500 ohms, ½ w., carbon
URD-057	R9	RESISTOR—2200 ohms, ½ w., carbon
URD-065	R5, 8	RESISTOR—4700 ohms, ½ w., carbon
URD-069	R6, 12, 43 49	RESISTOR—6800 ohms, ½ w., carbon
URD-073	R11	RESISTOR—10,000 ohms, ½ w., carbon
URD-081	R3, 23	RESISTOR—22,000 ohms, ½ w., carbon
URD-085	R1, 40, 42	RESISTOR—33,000 ohms, ½ w., carbon
URD-089	R13, 14, 21, 22	RESISTOR—47,000 ohms, ½ w., carbon
URD-093	R41	RESISTOR—68,000 ohms, ½ w., carbon
URD-097	R17, 26	RESISTOR—100,000 ohms, ½ w., carbon
URD-099	R24, 25	RESISTOR—120,000 ohms, ½ w., carbon
URD-101	R48	RESISTOR—150,000 ohms, ½ w., carbon
URD-105	R15	RESISTOR—220,000 ohms, ½ w., carbon
URD-113	R28, 29	RESISTOR—470,000 ohms, ½ w., carbon
URD-121	R38	RESISTOR—1 meg., ½ w., carbon
URD-129	R16	RESISTOR—2.2 meg., ½ w., carbon
URD-133	R44, 45	RESISTOR—3.3 meg., ½ w., carbon
URD-141	R27	RESISTOR—6.8 meg., ½ w., carbon
URD-1104	R46	RESISTOR—200,000 ohms, 5%, ½ w., carbon
URE-037	R31	RESISTOR 330 ohms, 1 w., carbon
URE-083	R47	RESISTOR—27,000 ohms, 1 w., carbon
SPECIALIZED REPLACEMENT PARTS		
RAL-001		BEZEL—Pilot light bezel
RAV-058		CABINET—For Model 324
RAV-060		CABINET—For Model 328
RCC-001	C30	CAPACITOR—.007 mfd., 600 v.
RCE-029	C39A, B, 39C, D	CAPACITOR—Electrolytic capacitor 15 mfd., 400 v.; 20 mfd., 25 v.; 30 mfd., 400 v.; 30 mfd., 400 v.
RCE-042	C43	CAPACITOR—10 mfd., 250 v., electrolytic capacitor
RCT-033	C1A, B, 1C, D	CAPACITOR—Tuning capacitor and drum assembly
RCW-176	C18, 58	CAPACITOR—470 mmf., ±20%, Hi k, ceramic
RCW-1043	C11	CAPACITOR—47 mmf., ±20%, max. neg., ceramic
RCW-1053	C8	CAPACITOR—22 mmf., ±20%, max. neg., ceramic
RCW-1057	C10	CAPACITOR—39 mmf., ±10%, max. neg., ceramic
RCW-1060	C7	CAPACITOR—10 mmf., ±20%, zero coef., ceramic
RCW-1066	C4	CAPACITOR—3 mmf., ±10%, zero coef., ceramic
RCW-2010	C27	CAPACITOR—47 mmf., ±5%, zero coef., ceramic
RCW-2033	C13	CAPACITOR—8 mmf., ±10%, max. neg., ceramic
RCY-020	C3	CAPACITOR—Trimmer, 36-146 mmf.
RCY-034	C5	CAPACITOR—Trimmer, 2-20 mmf.
RCY-038	C12	CAPACITOR—Air trimmer, 1 to 8 mmfd.
RDC-033		CORD—Dial drive cord (25 yds.)
RDE-032		ESCUTCHEON
RDK-037		KNOB—Plain (for Model 328)
RDK-040		KNOB—With arrow (for Model 328)
RDK-137		KNOB—With arrow (for Model 324)
RDK-138		KNOB—Plain (for Model 324)
RDS-074		SCALE—Dial scale
RDX-035		POINTER—Dial pointer assembly
RHC-017		CLIP—To hold coil
RHG-010		GROMMET—Rubber mounting grommet for preamplifier tube
RHG-015		GROMMET—For mounting tuning capacitor
RHJ-006		SPACER—For mounting tuner condenser
RJP-010	J1	JACK—Phono jack
RJS-003		SOCKET—Tube socket for V6 and V7
RJS-049	J2	SOCKET—Phono power female socket
RJS-085		SOCKET—Tube socket for V8
RJS-105		SOCKET—Tube socket for V1, V2, V3, V4
RJS-118		SOCKET—Tube socket for V5
RLA-012	L6	COIL—FM oscillator grid choke
RLB-027	L4	COIL—FM r-f coil
RLC-066	L5	COIL—B-C oscillator coil
RLC-067	L8	COIL—FM oscillator coil
RLI-005	L1, 10, 11	COIL—Choke coil
RLI-044	L12	COIL—FM power line choke coil
RLI-056	L2	COIL—FM antenna choke coil
RLI-057	L7, 9	COIL—FM choke coil
RLI-058	L13	COIL—FM limiter choke
RLL-030	L3	LOOP—Broadcast loop
RMS-155		SPRING—For Receiver chassis bin
RMS-044		SPRING—Dial cord tension
RRC-074	R18	VOLUME CONTROL
RRN-006	R35	RESISTOR—2.2 ohms, ±10%, ½ w., carbon
RRT-003	R33, 34	RESISTOR—6500 and 1220 ohms, ±10%, w.w.
RSW-048	S2A, B, 2C, D	SWITCH—Tone control and power switch
RSW-059	S1A, B, 1C, D	SWITCH—Band change switch
RTD-006	T6	TRANSFORMER—Discriminator transformer
RTL-054	T5	TRANSFORMER—2nd AM i-f transformer
RTL-078	T2	TRANSFORMER—1st AM i-f transformer
RTL-080	T1, 3, 4	TRANSFORMER—1st, 2nd, 3rd FM i-f transformer
RTO-051	T7	TRANSFORMER—Output transformer
RTP-061	T8	TRANSFORMER—Power transformer (60 cy.)

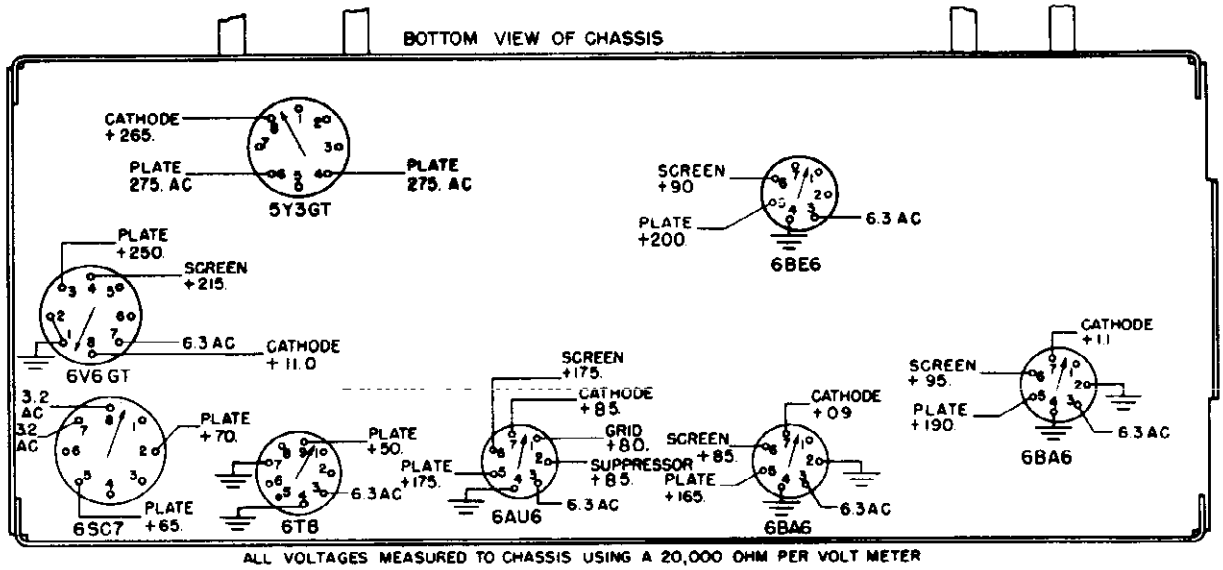

Fig. 3 Socket Voltage Diagram

©John F. Rider

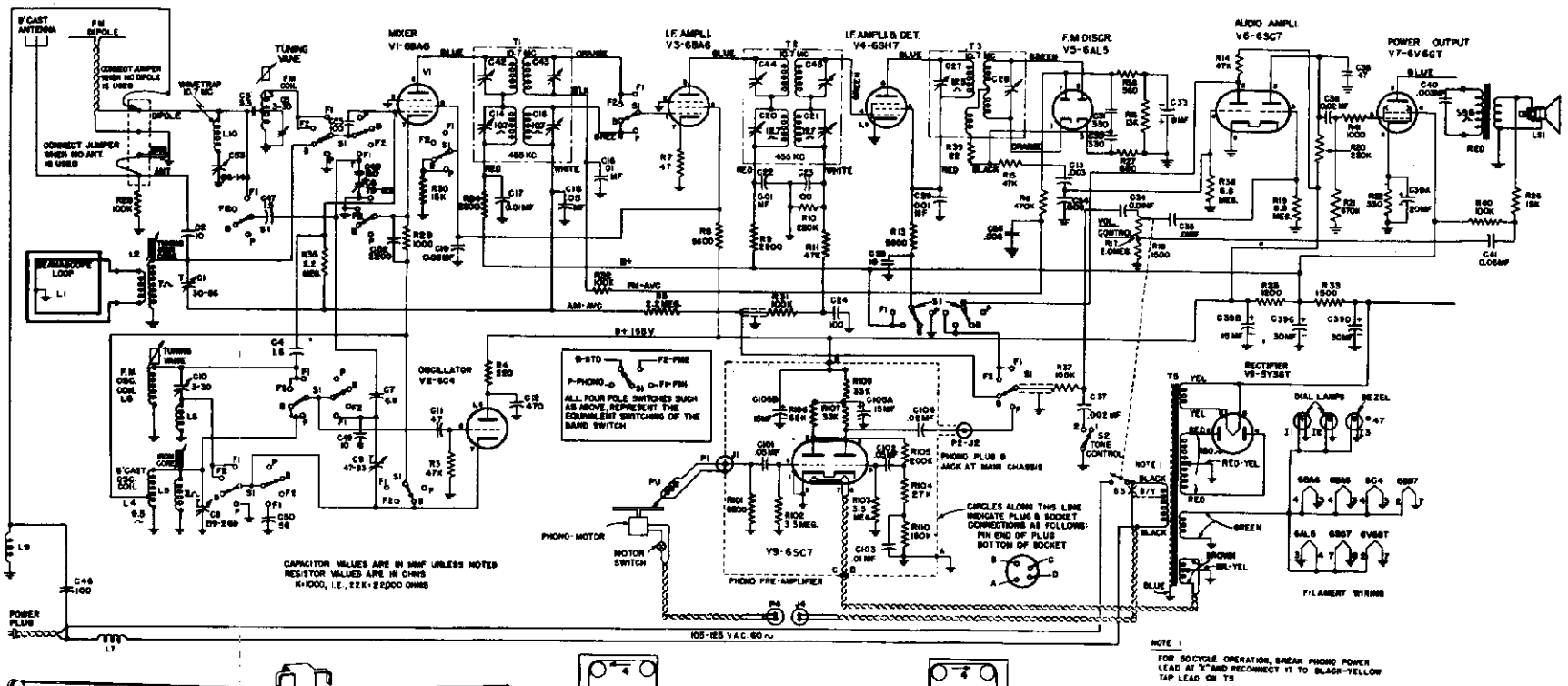

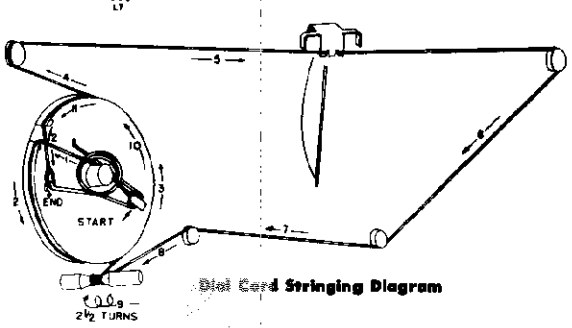

Dial Cord Stringing Diagram

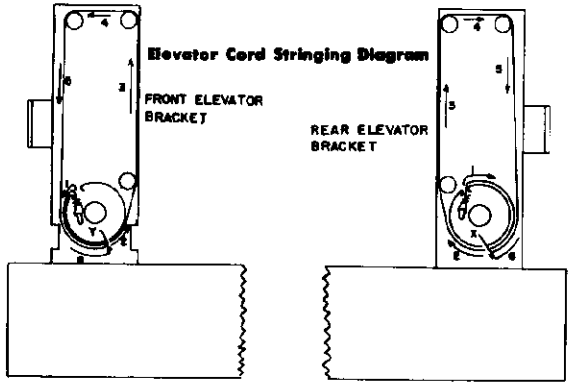

Elevator Cord Stringing Diagram

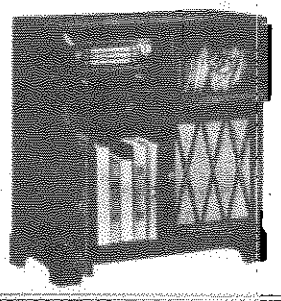

TUBE COMPLEMENT:

(V1) Converter	6BA6
(V2) Oscillator	6C4
(V3) 1st I-F Amplifier	6BA6
(V4) 2nd I-F and AM Detector	6SH7
(V5) FM Ratio Detector	6AL5
(V6) Audio Amplifier	6SC7
(V7) Power Output	6V6GT
(V8) Rectifier	5Y3GT
(V9) Phono Preamplifier	6SC7
I1, I2, I3 Pilot Lights	Mazda No. 47

ELECTRICAL RATING:

	A5	A6
Rating		
Voltage	105–125	105–125
Frequency	50	60
Wattage	85	85

OPERATING FREQUENCIES

Standard Band	540 to 1600 kc
Frequency Modulation 1	42 to 49 mc
Frequency Modulation 2	88 to 108 mc

POWER OUTPUT (117 Volts Line):

Undistorted	3 watts
Maximum	5 watts

PHONOGRAPH PICK-UP:

Type	Variable reluctance
D-C Resistance	250 ohms

LOUD-SPEAKER:

Type	Alnico P.M.
Size	12 inches
Voice coil impedance at 400 C.P.S.	3.2 ohms

RECORD CHANGER SECTION MODEL RA-1 • RA-2 • RA-3 • RA-4 • RA-5 • RA-6

GENERAL ELECTRIC CO.

MODELS 354, 355

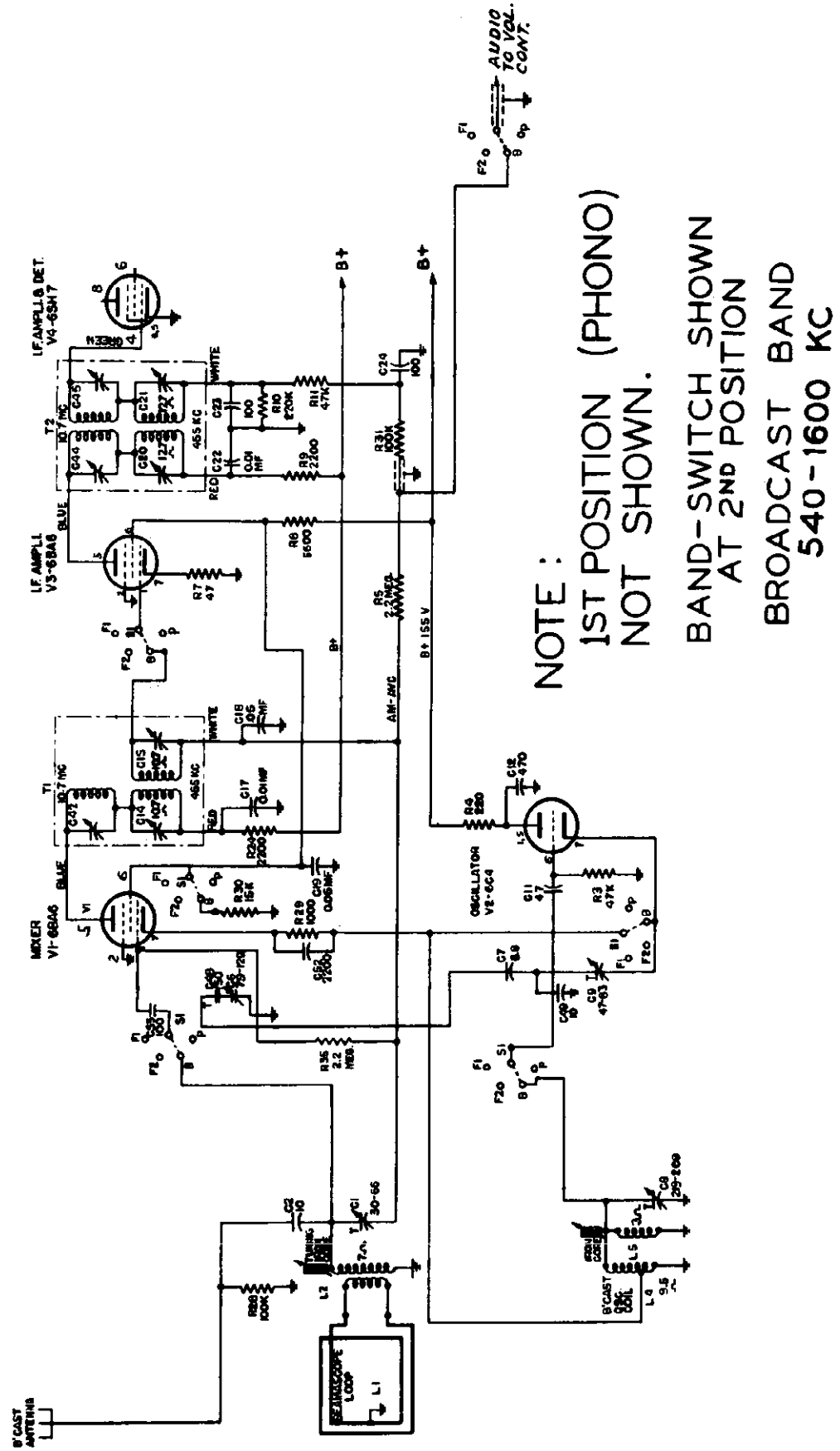

CLARI-SKEMATIX
Registered Trademark

MODELS 354, 355 GENERAL ELECTRIC CO.

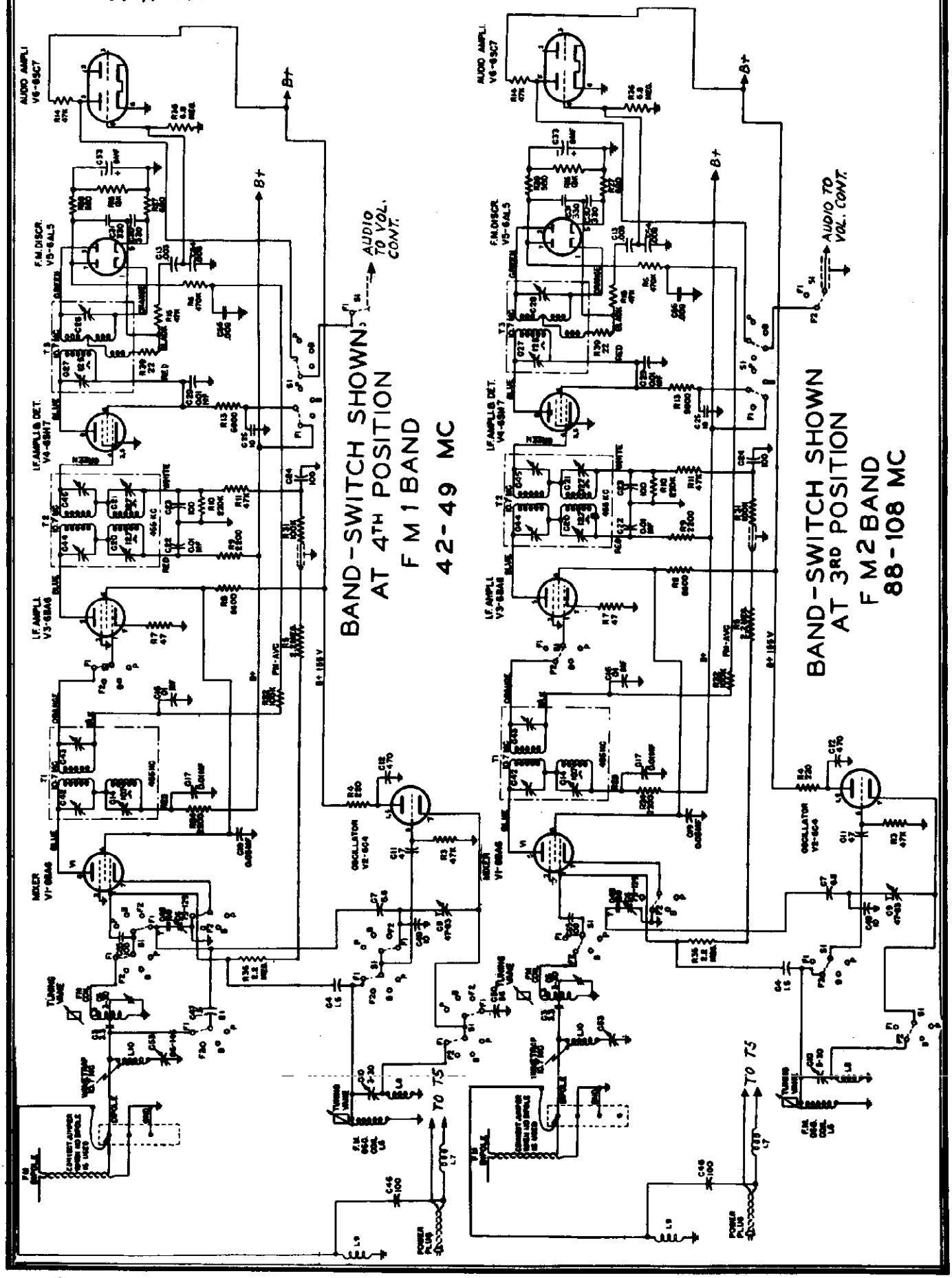

© John F. Rider

THE TUNING SYSTEM:

Variable inductance tuning is employed instead of using a conventional tuning capacitor. It provides a high efficiency FM circuit in the 88-108 megacycle range which would not be possible with the more conventional methods of tuning. Other advantages are also gained but the one mentioned above is the most important.

Tuning is accomplished by an "elevator" which consists of two rigid metal elevator support bars raised and lowered by means of a windlass controlled by the tuning knob at the panel. From these elevator bars are suspended two powdered iron cores which tune the broadcast converter and oscillator coils; and two tuning "vanes" which tune two low-inductance circuits. These latter circuits are employed in both FM bands. They are called "guillotine" tuners because of their appearance.

FACTS ABOUT "GUILLOTINE TUNING":

The "guillotine" tuners are designed primarily for the 88-108 megacycle FM band where special technique is needed to realize high gain and circuit stability. Ordinary coils, tuned by a variable capacitor are inefficient at these frequencies, first because of the low inductances required to reach these frequencies when a variable tuning capacitor is used and, second, because shunt capacity reduces the gain of the amplifier circuit; shunt capacity must be kept very low. Another disadvantage of standard tuning arrangements at these frequencies is that common coupling is obtained through the shaft of a ganged tuning capacitor unless insulated single sections are used which are cumbersome and costly. Common coupling of this type tends to cause oscillations or general instability and precludes high gain per stage. The guillotines make possible short leads, completely isolated sections, stable tuning high Q circuits, low shunt capacity, and location of each tuner in the best physical and electrical position in the assembly. Furthermore, since the shunt capacity is small and the inductance is consequently at its highest corresponding value, the additional unavoidable inductance introduced in the wiring, bandswitch, etc., produces a minimum of circuit losses and unbalance.

The guillotine tuner consists of a heavy, silver-plated, two-turned square coil, rigidly supported between two plastic posts. A flat, solid vane slides up and down between the two turns. It is guided in grooves in the plastic posts so that it passes between the two sections of the coil without touching them. The posts are so moulded and the coil so constructed that the whole assembly is held rigidly at a predetermined spacing. The tuning vane is raised and lowered by the tuning elevator. When the elevator is all the way up (set tuned to the lowest frequency), the vane is completely above the coil which then acts as a simple, two-turn coil. As the set is tuned toward the higher frequencies, the vane moves downward into the field of the coil until, finally, it is all the way in.

The vane reduces the inductance of the coil through two principles. First, it acts as a shorted turn, and thus reduces inductance directly; second, it provides a barrier between the two turns of the coil which reduces the mutual coupling and thus reduces the inductance.

The tuners described above are L3 and L6.

FM BANDS:

Guillotine tuners L3 and L6 are used as the tuned circuits for the converter and local oscillator respectively, in both FM bands. In the higher frequency band, the tuner is used with only a small shunt trimmer for adjusting distributed capacity. In the lower band, a higher value shunt trimmer is used to reduce the frequency. The layout of the band switch tuners and tube sockets is arranged to give the shortest possible leads when the FM bands are in use. The lead lengths in the other band are not nearly so critical.

STANDARD BROADCAST BAND:

This receiver employs a converter and an oscillator which are tuned by iron slugs suspended from the tuning elevator. These tuners are L2 and L5 respectively.

I-F AMPLIFIER:

The i-f amplifier consists of a composite 455 kc and 10.7 mc circuit. The electrical changes required to transfer AM and FM service are made by the band switch. When the switch is in either the FM-1 or FM-2 position, the amplifier operates at 10.7 megacycles and delivers the i-f signal into an FM discriminator circuit. When the switch is in the broadcast position, the amplifier operates at 455 kc. Screen and plate voltage is removed from the 6SH7 amplifier and the tube acts as an AM diode detector. Thus, the AM audio signal appears across R10 while the FM audio signal appears across C54. A section of the band switch switches the audio input circuit from one to the other.

RATIO DETECTOR:

In the ratio detector as used in this set the a-c voltages as applied to the diodes of a ratio detector are the same as the a-c voltages applied to the diodes in a conventional discriminator circuit. The method of obtaining audio from the FM carrier distinguishes the ratio detector from the conventional discriminator.

At resonant frequency the d-c voltage to which C31 and C30 are charged are equal and additive. When the frequency of the FM carrier goes above the center frequency the d-c voltage to which C30 is charged increases and the d-c voltage to which C31 is charged decreases proportional to the increase in frequency. The sum of the voltage of C30 and C31, however, remains the same. When the frequency goes below the center frequency the ratio of the charge on C30 and C31 reverses. The d-c charge of C30 decreases below its charge at center frequency and the d-c charge of C31 increases above its charge at center frequency. The increase and decrease of d-c charge is proportional to the change in frequency while the sum of the two remains constant at all times. The audio is tapped off between C30 and C31 to ground. The d-c voltage across C30 has been shown to vary proportionately to the change in frequency applied to the diodes of the detector tube 6AL5.

The ratio detector is also different from the discriminator in that it needs no limiter stage before it. The large condenser C33—8 mfd. combined with the resistor R16, has a long time constant and serves to limit any sudden change in d-c charge across C30 and C31, which might result from noise impulses.

REPLACEMENT OF DRIVE CORDS

DIAL STRINGING

The dial pointer should be strung as shown in Figure 1.

The tuning elevators should be strung, as shown in Figure 2, with the dial pointer at the extreme right of the dial. The front drum and stringing procedure is shown viewed from the rear of the chassis and the rear drum and stringing procedure is shown viewed from the front of the chassis. Ends X and Y at the conclusion of step 6, in stringing the front and rear elevators, should be connected at opposite ends of spring RMS-004 (not shown) after making one-half turn each around the shaft in opposite directions.

To position the elevator bar for the FM tuner, turn the dial pointer to the extreme right. Loop the elevator strings through the two notches at the end of the elevator bars and adjust the elevator bar above the FM coils to be 2 5/8 inches from the top of the chassis to the top of the elevator bar and cement to the cord with Glyptal. With the guillotine tuning vanes at the bottom, the adjusting screws set at their midpoints on the elevator bar and with spring and guide wires in place, solder guide wire to tuning vane.

To position the elevator bar for the AM slug tuner, turn the dial pointer to the extreme left and set the elevator bar 2⅝ inches from the top of the chassis to top of the elevator bar. Loop the elevator cord through the notches at the ends of the bar and cement to cord with Glyptal. Then turn the dial pointer to extreme right and with the adjusting screws at their midpoints on the elevator bar, position the tuning slugs in the antenna and oscillator coils 3 9/16 inches from the top of the chassis to the top of the slug and solder the guide wire to the top of the adjusting screw.

STAGE GAINS AND VOLTAGE CHECKS

Stage gain measurements by vacuum tube voltmeter or similar measuring devices may be used to check circuit performance and isolate trouble. The gain values listed may have tolerances of 20%. Readings should be taken at low signal input so that AVC is not effective.

1. R-F AND I-F STAGE GAINS.

Signal applied through IRE dummy antenna:
Antenna Post to V1 Grid.....3 at 1000 KC
These checks with oscillator tube V2 removed:
V1 Grid to V3 Grid.....78 at 455 KC
V1 Grid to V3 Grid.....38 at 10.7 MC
V3 Grid to V4 Grid.....22.5 at 10.7 MC

2. AUDIO GAIN.

.01 volts at pin 4 of V6 with volume control full clockwise will give approximately ½ watt output across the speaker voice coil.

3. OSCILLATOR GRID BIAS.

D-c voltage developed across R.3
11.5 Volts at 1000 KC
3.0 Volts at 45 MC
3.9 Volts at 98 MC

4. SOCKET PIN VOLTAGES.

Figure 4 shows typical tube pin voltages. All readings should be made from the pins to ground unless otherwise indicated.

MODELS 354, 355 GENERAL ELECTRIC CO.

EQUIPMENT FOR VISUAL ALIGNMENT:

1. General Electric YGS-3 AM and FM signal generator or equivalent.
2. General Electric CRO5A oscilloscope or equivalent.
3. 330,000-ohm resistor, ½ watt.
4. .01 mf. capacitor.
5. 20,000 ohms-per-volt meter.

NOTES IN CONNECTION WITH VISUAL ALIGNMENT TABLE:

1. Connect scope to pin 4 of V4 (6SH7) through resistor 330,000 ohms.
2. The over-all i-f curve on FM with sufficient signal input should have fairly steep skirts, a relatively flat top and symmetry of form.
3. The output curve when aligning the discriminator transformer should have symmetry and the curve should extend an equal distance above and below the horizontal reference axis.
4. Connect scope to V6 (6SC7) pin 4 through 330,000 ohms.

VISUAL ALIGNMENT CHART

STEP	SIGNAL GENERATOR FREQUENCY	SIGNAL INPUT POINT	BAND SWITCH SETTING	DIAL SETTING	ADJUST	SEE NOTE	REMARKS
			I-F VISUAL ALIGNMENT (AM)				
1	455 kc ±20 kc at 60-cycle sweep	6BA6 (V3) grid thru .01 mfd.	STD	.....	Adjust C20 and C21 for maximum amplitude and symmetry of curve.	1	
2	455 kc ±20 kc at 60-cycle sweep	6BA6 (V1) grid thru .01 mfd.	STD	.....	Adjust C14 and C15 for maximum amplitude and symmetry of curve.	1	
			I-F VISUAL ALIGNMENT (FM)				
3	10.7 mc ±300 kc at 60-cycle sweep	6BA6 (V3) grid thru .01 mfd.	FM2	.....	Adjust C44 and C45 for maximum amplitude and symmetry.	1	
4	10.7 mc ±300 kc at 60-cycle sweep	6BA6 (V1) grid thru .01 mfd.	FM2	.....	Adjust C42 and C43 for maximum amplitude of wave and symmetry of curve.	1, 2	
			VISUAL ALIGNMENT OF RATIO DETECTOR				
5	10.7 mc ±300 kc at 60-cycle sweep	6SH7 (V4) pin 4 (grid)	FM2	.....	Adjust C27 to maximum amplitude.	4	
6	10.7 mc ±300 kc at 60-cycle sweep	Same as Step 5	FM2	.....	Adjust C28 for symmetry of curve on scope*	3, 4	*Negative and positive half cycles of curve should have equal amplitude.
7	10.7 mc ±300 kc at 60-cycle sweep	6BA6 (V1) grid thru .01 mfd.	FM2	.....	Adjust C44, C45, C42, and C43 for maximum amplitude	1, 2	
8	10.7 mc ±300 kc at 60-cycle sweep	6BA6 (V1) grid thru .01 mfd.	FM2	.....	Readjust C27 and C28 as in steps 5 and 6	4	

METER ALIGNMENT CHART

STEP	SIGNAL GENERATOR FREQUENCY	SIGNAL INPUT POINT	BAND SWITCH	DIAL SETTING	ADJUST	SEE NOTE	REMARKS
			I-F ALIGNMENT (A-M)				
1	455 kc	6BA6 (V3) grid thru .01 mfd.	STD	.....	C20 and C21 for maximum	4, 5	
2	455 kc	6BA6 (V1) grid thru .01 mfd.	STD	.....	C14 and C15 for maximum	4, 5	
			I-F ALIGNMENT (F-M)				
3	10.7 mc	6SH7 grid thru .01 mfd.	FM2	.....	C27 for maximum	1, 2	Sufficient i-f input to give approx. 0.8 volt across C33.
4	10.7 mc	6SH7 grid thru .01 mfd.	FM2	.....	Peak C28 for minimum audio output	4, 5	Use insulated screwdriver for alignment.
5	10.7 mc	6BA6 (V3) grid thru .01 mfd.	FM2	.....	C44 and C45 for maximum	1, 2	
6	10.7 mc	6BA6 (V1) grid thru .01 mfd.	FM2	.....	C42 and C43 for maximum. Retrim C27, C44 and C45 for maximum.	1, 2	
			R-F ALIGNMENT—FM2 BAND				
7	Align dial pointer with dots at extreme right of scale when tuning knob is turned full clockwise.						
8	98 mc	Dipole terminal	FM2	98 mc	Adjust C10 for maximum	1, 2	
9	98 mc	Dipole terminal	FM2	98 mc	Adjust C5 for maximum*	1, 2	*Rock tuning knob during alignment.
			R-F ALIGNMENT—FM1 BAND				
10	46 mc	Dipole terminal	FM1	46 mc	Adjust C9 for maximum	1, 2	
11	46 mc	Dipole terminal	FM1	46 mc	Adjust C6 for maximum*	1, 2	*Rock tuning knob during alignment.
			R-F ALIGNMENT—BROADCAST				
12	1620 kc	Antenna Post**	STD	Note 6	Adjust C8 and C1 for maximum	4, 5, 6	**Remove green lead from Ant. term. board. Beam-a-scope loop L1 must be connected to chassis.
13	1000 kc	Antenna Post	STD	1000 kc	Adjust iron core in L5 for maximum	4, 5	
14	1000 kc	Antenna Post	STD	1000 kc	Adjust iron core in L2 for maximum	4, 5	
15	Recheck step 12						

ALIGNMENT NOTES

1. Use *unmodulated* signal.
2. Connect 20,000 ohms-per-volt meter across C33.
3. Connect 20,000 ohms-per-volt meter from junction of R15 and C13 to chassis.
4. Use 400-cycle modulation.
5. Connect a standard output meter across the speaker voice coil. Turn volume control fully on. Keep signal generator output down so that the meter indicates not more than ½-watt output during alignment.
6. Turn the tuning knob clockwise until the dial pointer is at extreme right of dial scale.

MODELS 354, 355 GENERAL ELECTRIC CO.

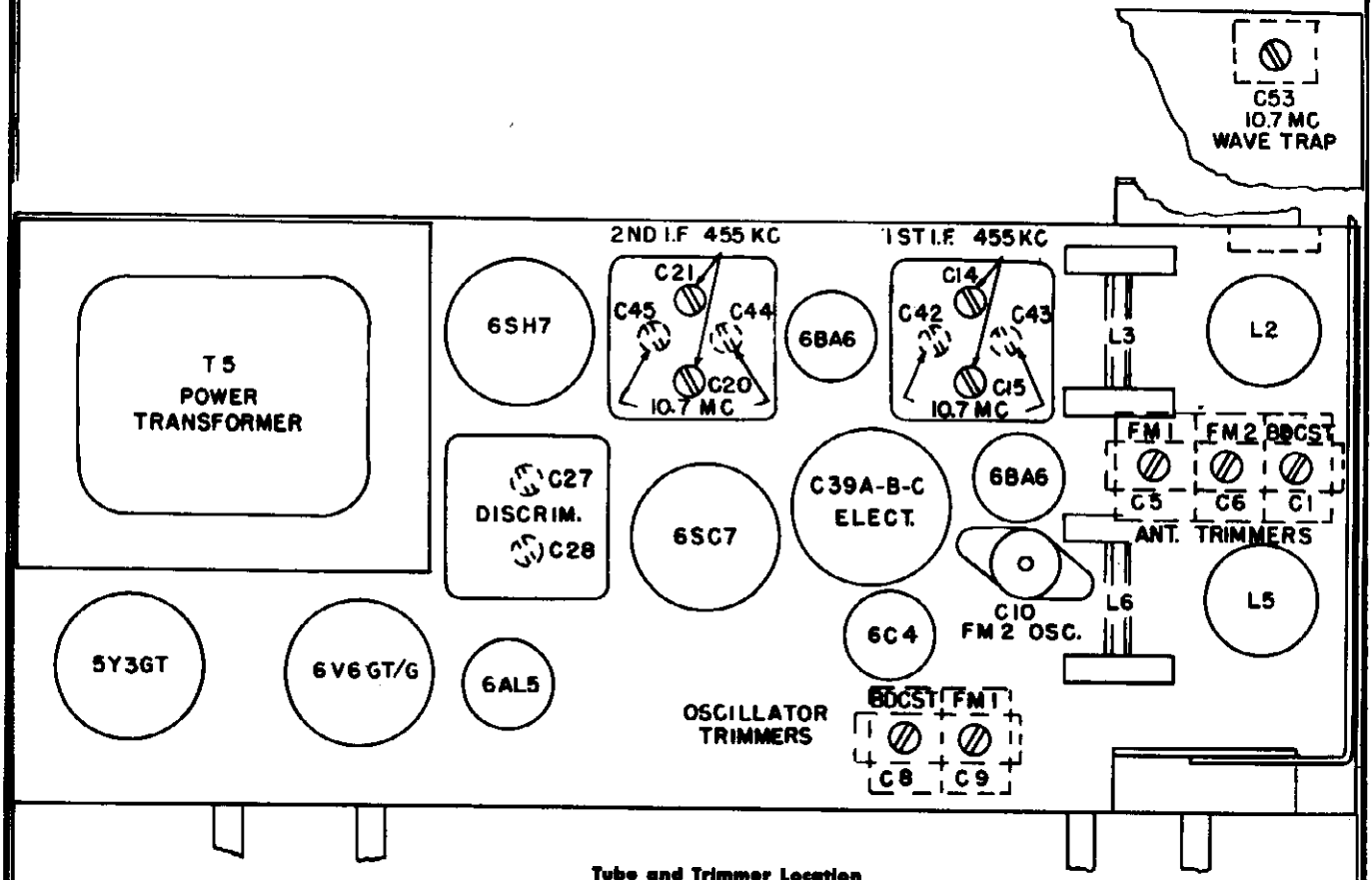

Tube and Trimmer Location

BOTTOM VIEW OF CHASSIS

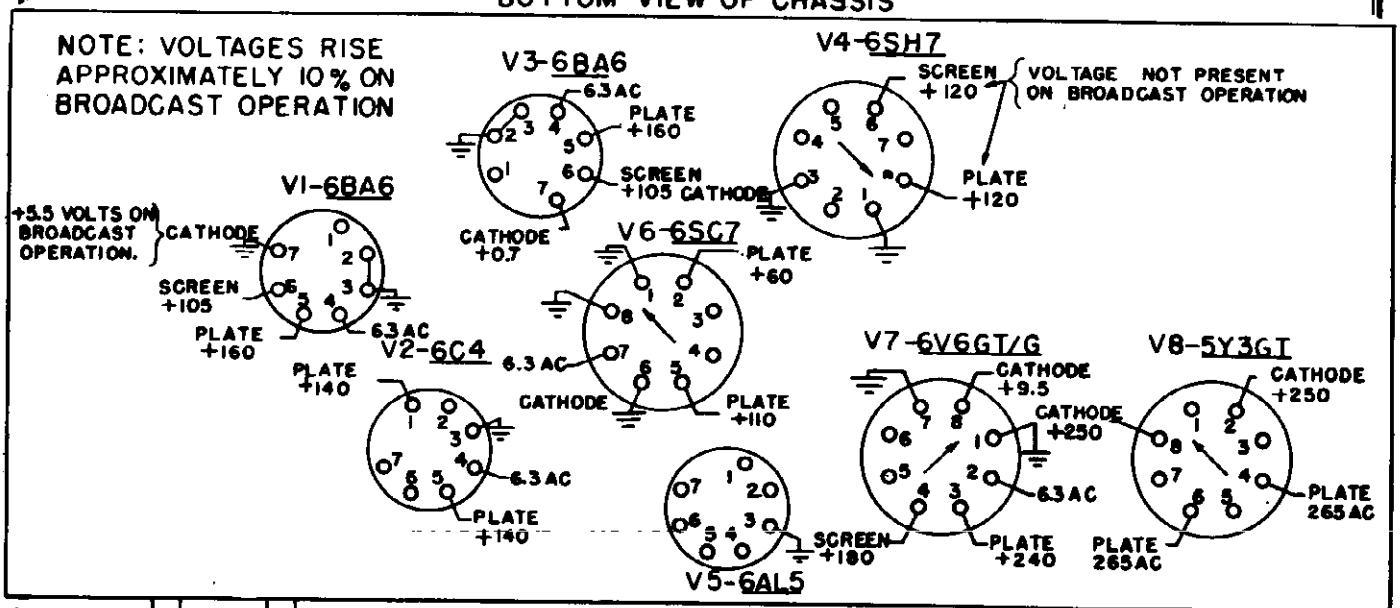

ALL VOLTAGES MEASURED TO CHASSIS USING A 20,000 OHM PER VOLT METER

Socket Voltage Diagram

©John F. Rider

GENERAL ELECTRIC CO.

MODELS 354, 355

Cat. No.	Symbol	Description
UNIVERSAL REPLACEMENT PARTS		
UCC-011	C41	CAPACITOR—.05 mf., paper 200 v.
UCC-020	C13	CAPACITOR—.003 mf., paper 400 v.
UCC-024	C54, 56	CAPACITOR—.008 mf., paper 400 v.
UCC-028	C18	CAPACITOR—.05 mf., paper 400 v.
UCC-036	C37	CAPACITOR—.002 mf., paper 600 v.
UCC-040	C16, 17, 22, 34, 35	CAPACITOR—.01 mf., paper 600 v.
UCC-041	C38	CAPACITOR—.02 mf., paper 600 v.
UCC-045	C19	CAPACITOR—.05 mf., paper 600 v.
UCN-504	C3	CAPACITOR—3.3 mmf., ceramic
UCN-1506	C7	CAPACITOR—6.8 mmf., ceramic
UCU-004	C2	CAPACITOR—10 mmf., mica
UCU-020	C23, 24, 46	CAPACITOR—100 mmf., mica
UCU-044	C12	CAPACITOR—470 mmf., mica
UCU-060	C52	CAPACITOR—2200 mmf., mica
UCU-1032	C48	CAPACITOR—150 mmf., mica
UCU-1040	C30, 31	CAPACITOR—330 mmf., mica
UCW-1022	C50	CAPACITOR—56 mmf., ceramic
UOP-1206		SPEAKER—12-inch speaker
URD-017	R7	RESISTOR—47 ohms, ½ w., carbon
URD-033	R4	RESISTOR—200 ohms, ½ w., carbon
URD-049	R29, 41	RESISTOR—1000 ohms, ½ w., carbon
URD-053	R18	RESISTOR—1500 ohms, ½ w., carbon
URD-057	R9, 24	RESISTOR—2200 ohms, ½ w., carbon
URD-077	R26	RESISTOR—15,000 ohms, ½ w., carbon
URD-089	R3, 11, 14, 15	RESISTOR—47,000 ohms, ½ w., carbon
URD-097	R40, 28, 31, 32, 37	RESISTOR—100,000 ohms, ½ w., carbon
URD-105	R10, 20	RESISTOR—220,000 ohms, ½ w., carbon
URD-113	R6, 21	RESISTOR—470,000 ohms, ½ w., carbon
URD-133	R5, 35	RESISTOR—2.2 meg., ½ w., carbon
URD-141	R19, 36	RESISTOR—6.8 meg., ½ w., carbon
URD-1043	R38	RESISTOR—56 ohms, ½ w., carbon
URD-1045	R27	RESISTOR—680 ohms, ½ w., carbon
URD-1076	R16	RESISTOR—13,000 ohms, ½ w., carbon
URE-037	R22	RESISTOR—330 ohms, 1 w., carbon
URF-051	R23	RESISTOR—1200 ohms, 2 w., carbon
URF-067	R8, 13	RESISTOR—5600 ohms, 2 w., carbon
URF-077	R30	RESISTOR—15,000 ohms, 2 w., carbon
SPECIALIZED REPLACEMENT PARTS		
RAA-006		ARM—Band switch
RAA-007		ARM—Tone switch
RAB-038		BACK—Cabinet
RAL-001		BEZEL—on cabinet front
RAV-031		CABINET—Model 355
RAV-034		CABINET—Model 354
RCC-014	C40	CAPACITOR—.005 mfd., paper
RCC-040	C29	CAPACITOR—.01 mfd., oil
RCE-038	C33	CAPACITOR—.8 mfd., 25 v., electrolytic
RCE-039	C39A, C39B, C39C, D	CAPACITOR—20 mfd., 25 v. CAPACITOR—15 mfd., 300 v. CAPACITOR—30 mfd., 350 v.
RCW-001	C11	CAPACITOR—ceramic
RCW-013	C49	CAPACITOR—10 mmf., ceramic
RCW-017	C4, 47	CAPACITOR—1.5 mmf., ceramic

Cat. No.	Symbol	Description
SPECIALIZED REPLACEMENT PARTS (Cont'd)		
RCW-1028	C55	CAPACITOR—100 mmf., ceramic
RCY-017	C10	CAPACITOR—Air trimmer
RCY-018	C1, 5, 6	CAPACITOR—Trimmer, 3-30 mmf., 30-60 mmf., 79-129 mmf.
RCY-019	C8, 9	CAPACITOR — Trimmer, 219-269 mmf., 47-83 mmf.
RCY-020	C53	CAPACITOR—Trimmer, 86-146 mmf.
RDC-032		CORD—Elevator drive cord, NF28
RDC-033		CORD—Dial drive cord, NF40
RDE-022		ESCUTCHEON—Dial scale
RDK-061		KNOB—Inner knob (black)
RDK-110		KNOB—Outer knob (black)
RDP-020		POINTER—Dial scale pointer assem'bly
RDS-033		SCALE—Dial scale
RDX-026		PLATE—Backplate assembly
RHC-010		CLIP—Insulator spring clip
RHM-016		CLIP—Oscillator coil clip
RHM-026	L3	COIL—Antenna tuner coil (two-turn frame)
RHM-027	L6	COIL—Oscillator tuner coil (two-turn frame)
RHW-010		WASHER—(Two required on guide wire of tuner vane)
RII-001		INSULATOR—(Insulator for Mounting L3 and L6, 4 per set)
RJP-004	P1	PLUG—Phono plug
RJP-010	J2	JACK—Phono jack
RJS-003		SOCKET—Tube socket (Octal)
RJS-011		SOCKET—Pilot lamp socket for Bezel
RJS-014	J5	SOCKET—Preamplifier
RJS-044		SOCKET—Miniature for V1, V3, and V5
RJS-049	J4	SOCKET—Phono-power
RJS-055		SOCKET—Miniature for V2
RJS-056		SOCKET—Dial light
RLA-013	L2	COIL—B-C antenna
RLC-022	L4	PADDER—B-C oscillator
RLC-023	L5	COIL—B-C oscillator
RLI-004	L7	CHOKE—Power line choke
RLI-005	L8, L9, L10	CHOKE—Oscillator and FM antenna
RLL-013		LOOP—Assembly
RMM-050		VANE—Antenna tuner vane for coil L3
RMM-051		VANE—Oscillator tuner vane for coil L6
RMM-052		GUIDE WIRE—Connects vanes to elevator bar
RMS-043		ADJUSTING SCREW—On elevator bar
RMS-115		SPRING—Spring on tuning vane guide wires
RPX-010		PICKUP—Variable reluctance
RRC-033	R17, S3	VOLUME—Control, 2 meg. and switch
RSW-024	S1	SWITCH—Band
RSW-025	S2	SWITCH—Tone control
RTD-004	T3	TRANSFORMER—Discriminator
RTL-031	T1	TRANSFORMER—1st I-F transformer
RTL-032	T2	TRANSFORMER—2nd I-F transformer
RTP-028	T5	TRANSFORMER—Power transformer (60 cycles)
RTP-033	T5	TRANSFORMER—Power transformer (50 cycles)
RWL-004		CORD—Power cord

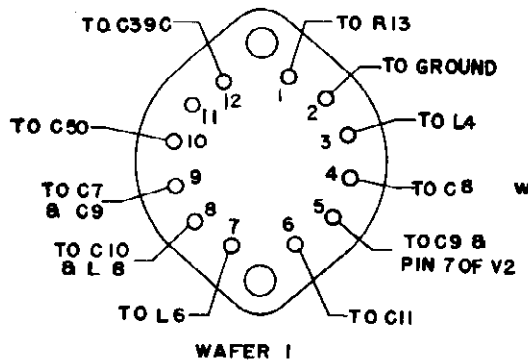

Wiring of Band Switch

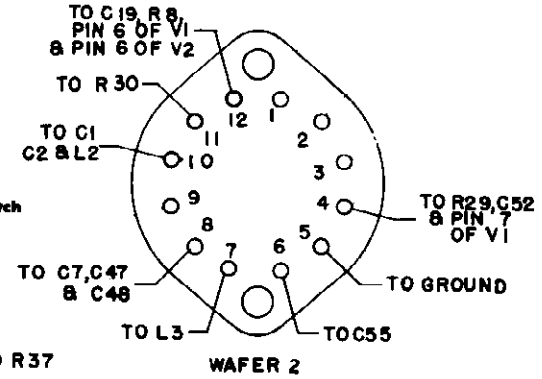

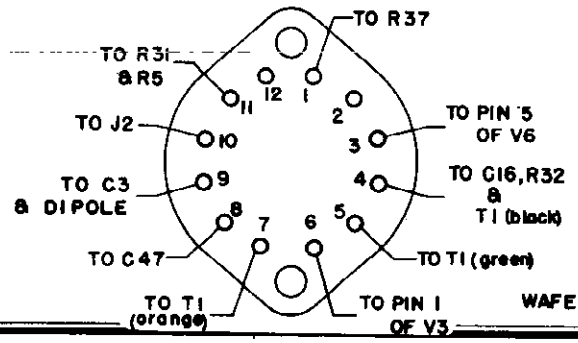

©John F. Rider

MODELS 376, 377, 378

GENERAL ELECTRIC CO.

ELECTRICAL RATING (INPUT):

Voltage	105-125 volts
Frequency	50 cycles, 60 cycles
Wattage (Radio)	75 watts
Wattage (Phono)	105 watts

OPERATING FREQUENCIES:

Standard Band	540 to 1600 KC
FM Band	88 to 108 MC

POWER OUTPUT:

Undistorted	3 watts
Maximum	5.5 watts

LOUDSPEAKER:

Type	Alnico PM
Size	12 inches
Voice Coil Impedance	3.2 ohms

INTERMEDIATE FREQUENCY:

Standard Band	455 KC
FM Band	10.7 MC

ANTENNA INPUT:

Standard Band	Conventional antenna
FM Band	300-ohm input for folded dipole

PHONOGRAPH PICK-UP:

Type	Variable reluctance
D-C Resistance	250 ohms

TUBE COMPLEMENT:

(V1) R-F Amplifier	6AG5
(V2) Converter	6BE6
(V3) 1st I-F Amplifier	6BA6
(V4) 2nd I-F Amplifier	6AU6
(V5) FM Limiter	6AU6
(V6) FM Discriminator, AM Detector, and Audio Amplifier	6S8GT
(V7) Power Output	6V6GT
(V8) Rectifier	5Y3GT
(V9) Phono-preamplifier	6SC7
(I1, I2) Dial Lamps	Mazda No. 47
(I3) Bezel Lamp	Mazda No. 47

STAGE GAIN AND VOLTAGE CHECKS:

Stage gain measurements by vacuum tube voltmeter or similar measuring devices may be used to check circuit performance and isolate trouble. The gain values listed may have tolerances of ±20%. Readings should be taken with low signal voltage so that AVC is not effective.

1. R-F AND I-F STAGE GAINS.

Signal applied through IRE dummy antenna:

Antenna Post to V1 Grid	3.0 at 1000 kc
Dipole Terminals to V1 Grid	0.7 at 98 mc
V1 Grid to V2 Grid	8.5 at 1000 kc
V1 Grid to V2 Grid	10 at 98 mc
V2 Grid to V3 Grid	22 at 455 kc
V2 Grid to V3 Grid	3.0 at 10.7 mc
V3 Grid to V4 Grid	2.0 at 455 kc
V3 Grid to V4 Grid	57 at 10.7 mc
V4 Grid to V5 Grid	40 at 10.7 mc

2. AUDIO GAIN.

.07 volts at 400 cps across volume control with control set at maximum will give approximately ½ watt output across the speaker voice coil.

3. OSCILLATOR GRID BIAS.

D-c Voltage Developed Across R5:
8.5 volts at 1000 kc.
3.5 volts at 98 mc.

4. SOCKET PIN VOLTAGES.

Figure 3 shows typical tube pin voltages. All readings should be made from the pins to chassis unless otherwise indicated.

ALIGNMENT

Two methods of alignment, (1) the regular meter alignment method as previously used on AM sets, and (2) the visual alignment which allows for much more precision in aligning the i-f transformers and, particularly the discriminator where you can check the output wave shape for distortion, oscillations, and to see that the negative and positive half cycles of the wave have equal amplitude and are symmetrical.

EQUIPMENT REQUIRED FOR METER ALIGNMENT:

1. Test Oscillator with tone modulation.
2. D-C Voltmeter or Microammeter.
3. A-C Voltmeter, 2 volts.
4. .01 mf. paper capacitor.
5. ½ watt resistor of required resistance (note 9).
6. 200 mmf. mica capacitor.

EQUIPMENT REQUIRED FOR VISUAL ALIGNMENT:

1. General Electric YGS-3 AM and FM signal generator, or equivalent.
2. General Electric CRO-5A oscilloscope, or equivalent.
3. 330,000 ohm resistor, ½ watt.
4. 20,000 ohm per volt meter.

NOTES IN CONNECTION WITH METER ALIGNMENT:

(1) Use unmodulated signal.

(2) Connect 20,000 ohm-per-volt meter from junction of R29 and R41.

(3) Connect 20,000 ohm-per-volt meter from grid pin 1 of (V5) 6AU6 limiter to chassis with a 200,000-ohm resistor in series. The resistor must be connected directly to the grid to minimize capacity loading and to isolate the meter from the i-f voltage. Keep signal generator output down so that meter indicates not more than one volt at the grid (5 microamperes through 200,000 ohms) (Alignment Steps 7 through 13).

(4) Use 400-cycle modulation (Steps 1, 2, 3, 15, 16, 17, and 18).

(5) Connect a standard output-meter across speaker voice coil. Turn volume control full on. Keep signal generator output down so that meter indicates not more than ½ watt output (1.26 volts) during alignment. (Steps 1, 2, 3, 15, 16, 17 and 18.)

(6) Two oscillator settings will give response. The higher frequency response is the correct one; the other is the image response. If in doubt, start with the trimmer screw loosened completely and adjust for the first response.

(7) For alignment of the standard band oscillator and r-f trimmers, the input signal should be inductively coupled to the radio loop antenna by connecting a 4-turn, 6-inch diameter loop of bell wire across the signal generator terminals, and then locate the loop about one foot from the radio loop antenna to prevent possible errors in peak readings. The position of the loop in respect to the radio loop antenna should not be changed during any one set of adjustments. Steps 15, 16, 17 and 18.

(8) The lead from the signal generator must be kept as short as possible and it must be kept away from later stages to prevent regeneration. The signal may also be fed in to the tube pin connection from the top of the chassis to prevent regeneration.

(9) A dummy antenna is a resistor in series with the hot lead of the signal generator. The resistance of the resistor plus the termination impedance of the signal generator should equal 300 ohms.

(10) If a dial scale is not available, index the dial pointer as follows: Turn the pointer to the left-hand limit of travel and mark the dial plate at a reference edge of the pointer slide. Then set the pointer by turning the dial knob until the indicated dimension exists between the reference edge and the mark.

NOTES IN CONNECTION WITH VISUAL ALIGNMENT TABLE:

(1) Use FM signal modulated at 60 cps ±300 kc.

(2) Connect vertical plates of scope to the limiter grid (pin 1 of V5) (6AU6) through 200,000 ohm resistor.

(3) Connect vertical plates of scope to the junction of R29 and R41 (FM audio) through 200,000 ohms.

(4) Connect vertical plates of scope at junction of R13 and C28 (AM audio output) through 200,000 ohms.

(5) Use FM signal modulated at 60 cps ±20 kc.

(6) Use a 60 cycle amplitude modulated signal.

(7) If a dial scale is not available, index the dial pointer as follows: Turn the pointer to the left-hand limit of travel and mark the dial plate at a reference edge of the pointer slide. Then set the pointer by turning dial knob until the indicated dimension exists between the reference edge and the mark.

(8) Two oscillator settings will give a response. The higher frequency response is the correct one, the other response is the image. If in doubt, start with the trimmer screw loosened completely and adjust for the *first* response.

(9) In some cases tuning of the converter grid will cause "pulling" of oscillator which will change the oscillator frequency. After centering the response curve on the scope, if peaking of L4 causes the response curve to move off of the screen it is necessary to realign the oscillator for calibration.

(10) A dummy antenna is a resistor in series with the hot lead of the signal generator. The resistance of the resistor plus the termination impedance of the signal generator should equal 300 ohms.

(11) Leads from the signal generator must be kept as short as possible and away from later stages to prevent regeneration. The signal may also be fed to the tube pin connection from the top of the chassis to prevent regeneration.

©John F. Rider

GENERAL ELECTRIC CO.

MODELS 376, 377, 378

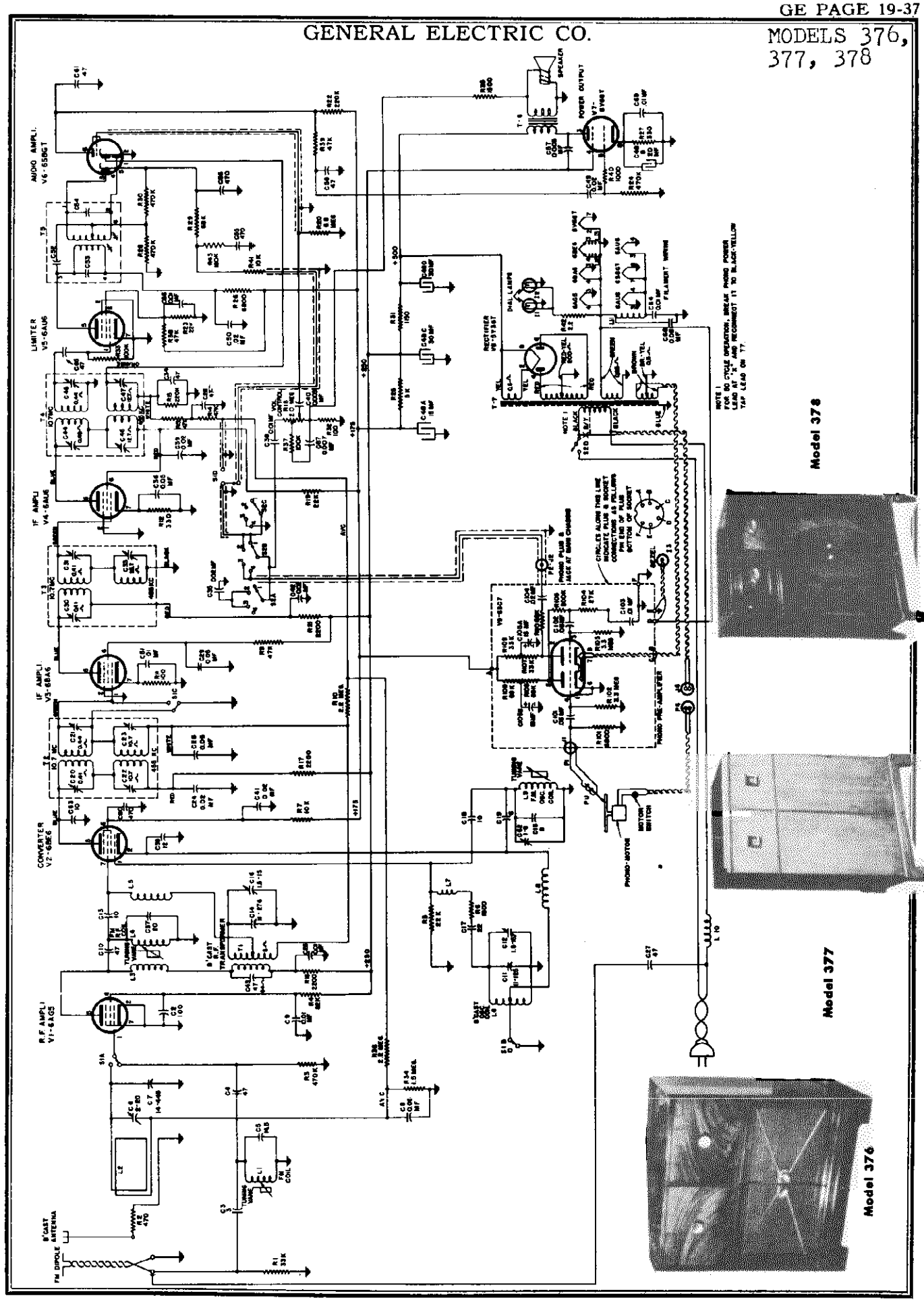

MODELS 376, 377, 378

GENERAL ELECTRIC CO.

ALIGNMENT CHART

STEP	SIGNAL GENERATOR FREQUENCY	SIGNAL INPUT POINT	BAND SWITCH	DIAL SETTING	ADJUST	SEE NOTE	REMARKS
				AM I-F METER ALIGNMENT			
1	455 kc	Conv. grid directly thru .01 mfd	STD	....	Peak C47 and C46	4, 5	Adjust for max.
2	455 kc	Conv. grid directly thru .01 mfd	STD	....	Peak C33	4, 5	Adjust for max.
3	455 kc	Conv. grid directly thru .01 mfd	STD	....	Peak C23 and C22	4, 5	Adjust for max.
				FM DISCRIMINATOR AND I-F METER ALIGNMENT			
4	10.7 mc	Pin 1 of V5 (6AU6) thru .01 mf	FM	....	Discrim. Secondary for zero meter	1, 2	Apply 1 volt signal input.
5	Detune signal generator	Pin 1 of V5 (6AU6) thru .01 mf	FM	....	*Signal Generator	1, 2	*Detune signal generator to point of maximum meter reading.
6	As in Step 5	Pin 1 of V5 (6AU6) thru .01 mf	FM	....	Peak discr. primary	1, 2	Adjust for max.
7	10.7 mc	Pin 1 of V4 (6AU6) thru .01 mf	FM	....	Peak C45 and C44	1, 3	Adjust for max.
8	10.7 mc	Pin 1 of V3 (6BA6) thru .01 mf	FM	....	C31 and C30	1, 3	Adjust for max.
9	10.7 mc	Pin 7 of V2 (6BE6) thru .01 mf	FM	....	C21 and C20	1, 3, 8	Adjust for max.
				FM R-F METER ALIGNMENT			
10	98 mc	Dipole terminals thru dummy antenna	FM	98 mc or $3\frac{1}{8}$ inches	Peak C62	1, 3, 6, 9, 10	
11	98 mc	Dipole terminals thru dummy antenna	FM	For max. output	Peak L4 vane	1, 3, 9	
12	Repeat steps 10 and 11 until no further improvement in sensitivity.						
13	98 mc	Dipole terminals thru dummy antenna	FM	98 mc	Peak L1 vane	1, 3, 9	
14	Repeat steps 10, 11, and 12.						
				AM R-F METER ALIGNMENT			
15	1500 kc	Inductively coupled	STD	1500 kc or 5 inches	Peak C12	4, 5, 7, 10	
16	1500 kc	Inductively coupled	STD	For max. output	Peak C16	4, 5, 7	
17	Repeat steps 15 and 16 until no further improvement in sensitivity.						
18	1500 kc	Inductively coupled	STD	Do not change from Step 16	Peak C6	4, 5, 7	

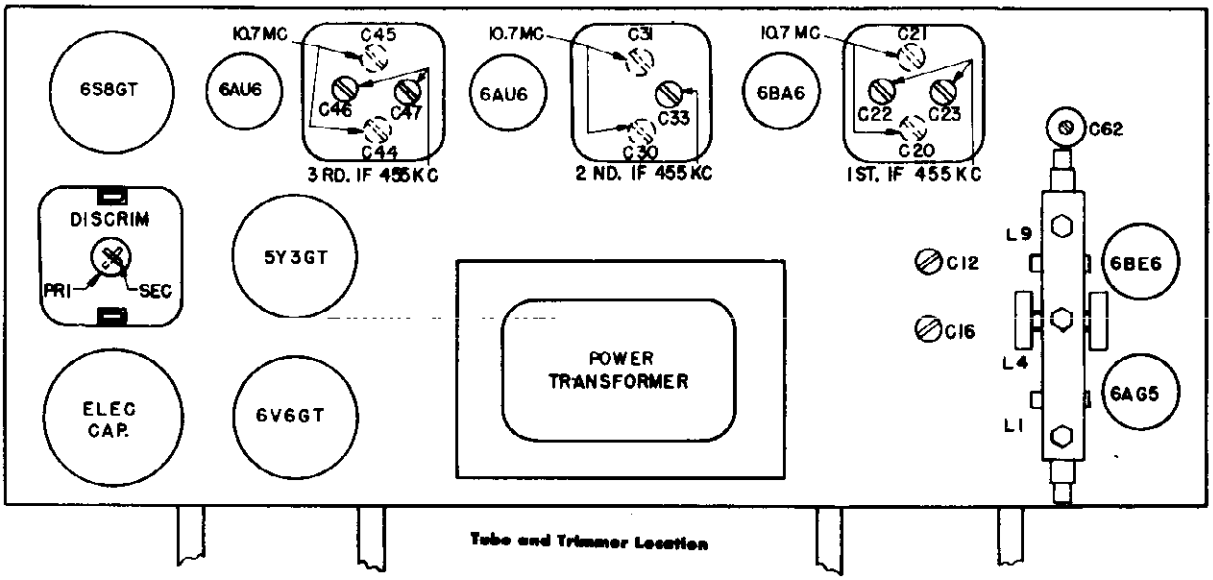

Tube and Trimmer Location

©John F. Rider

GENERAL ELECTRIC CO.

MODELS 376, 377, 378

STEP	SIGNAL GENERATOR FREQUENCY	SIGNAL INPUT POINT	BAND SWITCH	DIAL SETTING	ADJUST	SEE NOTE	REMARKS
			AM I-F VISUAL ALIGNMENT				
1	455 kc ±20 kc at 60-cycle sweep	Conv. grid directly pin 7 V2 (6BE6) thru .01 mf	AM	....	C47 and C46*	4, 5	*Adjust for max. amplitude and min. distortion of curve on scope screen.
2	Same as Step 1	Same as Step 1	AM	.....	C33	4, 5	Same as Step 1.
3	Same as Step 1 and 2	Same as Step 1 and 2	AM	....	C23 and C22	4, 5	Same as Steps 1 and 2.
			FM I-F VISUAL ALIGNMENT				
4	10.7 mc ±.3 mc at 60-cycle sweep	Conv. grid directly pin 7 V2 (6BE6) thru .01 mf	FM	....	C45 and C44	1, 2, 11	Adjust for max. amplitude and min. distortion.
5	Same as Step 4	Same as Step 4	FM	.....	C31 and C30	1, 2, 11	Same as Step 4.
6	Same as Steps 4 and 5	Same as Steps 4 and 5	FM	....	C21 and C20	1, 2, 11	Same as Steps 4 and 5.
			DISCRIMINATOR VISUAL ALIGNMENT				
7	10.7 mc ±.3 mc at 60-cycle rate	Conv. grid directly pin 7 V2 (6BE6) thru .01 mf	FM	....	Primary of T5 discrim. transformer	1, 3, 11	Adjust primary for max. amplitude.
8	Same as Step 7	Same as Step 7	FM	....	Secondary of T5	1, 3, 11	Adjust secondary for vertical symmetry with respect to mid-point horizontal traces.
9	Same as Step 7	Same as Step 7	FM	....	Primary of T5	1, 3, 11	Adjust for straightest possible slope of straight line trace.
			FM R-F VISUAL ALIGNMENT				
10	98 mc Note 6	Dipole terminals thru dummy antenna	FM	98 mc or $3\frac{1}{16}$ in.	Adjust C62*	2, 6, 7, 8, 10	*Set dial pointer accurately, then adjust for steepest slope of straight line trace on scope.
11	98 mc Note 1	Dipole terminals thru dummy antenna	FM	98 mc	Peak L4 vane	1, 2, 9, 10	Center response curve on scope, then peak for max. amplitude.
12	98 mc Note 1	Dipole terminals thru dummy antenna	FM	98 mc	Peak L1 tuning vane	1, 2, 10	Peak for max. amplitude.
			AM R-F VISUAL ALIGNMENT				
13	1500 kc Note 6	Antenna thru 200 mmf	STD	1500 kc or 5 in.	Adjust C12	4, 6, 7	Adjust C12 for steepest slope of straight line trace on scope.
14	1500 kc Note 5	Antenna thru 200 mmf	STD	1500 kc	Adjust C16	4, 5, 7, 9	Adjust C16 for max. amplitude.
15	1500 kc Note 5	Antenna thru 200 mmf	STD	1500 kc	Adjust C6	4, 5, 7	Adjust C6 for max. amplitude.

MODELS 376, 377, 378

GENERAL ELECTRIC CO.

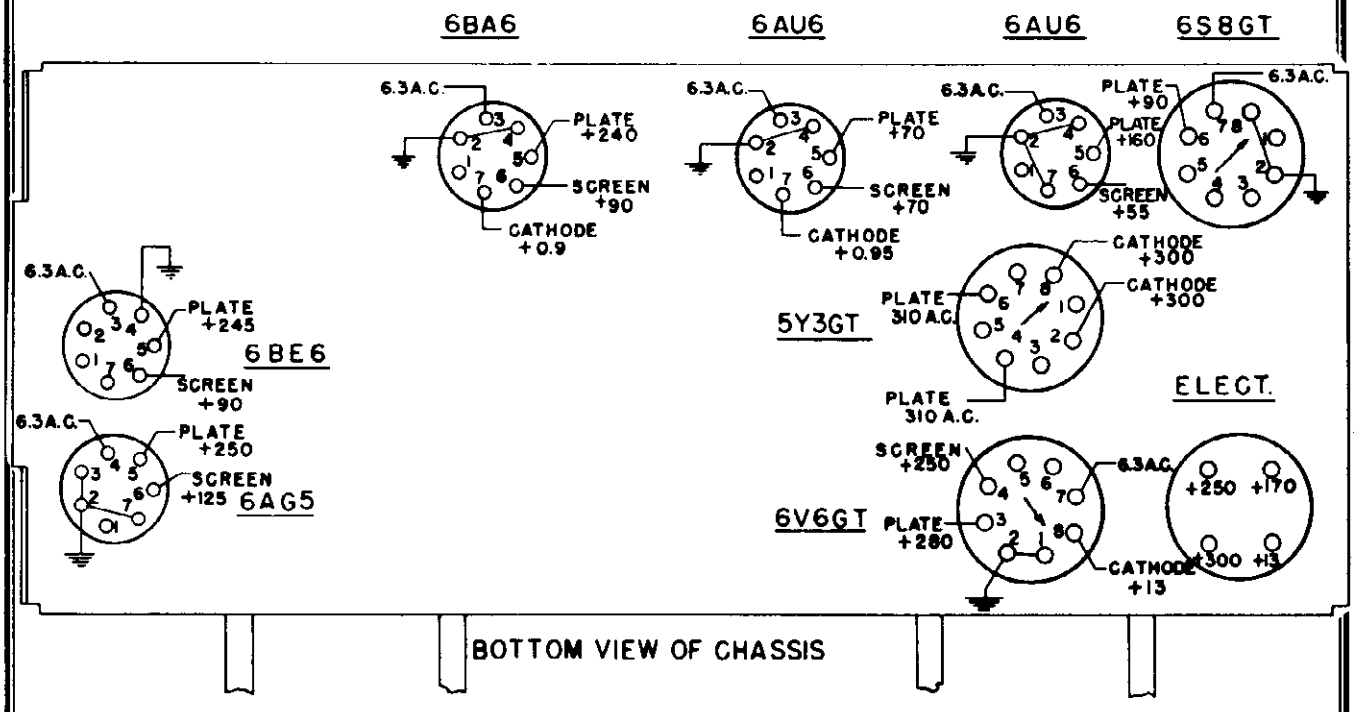

Socket Voltage Diagram

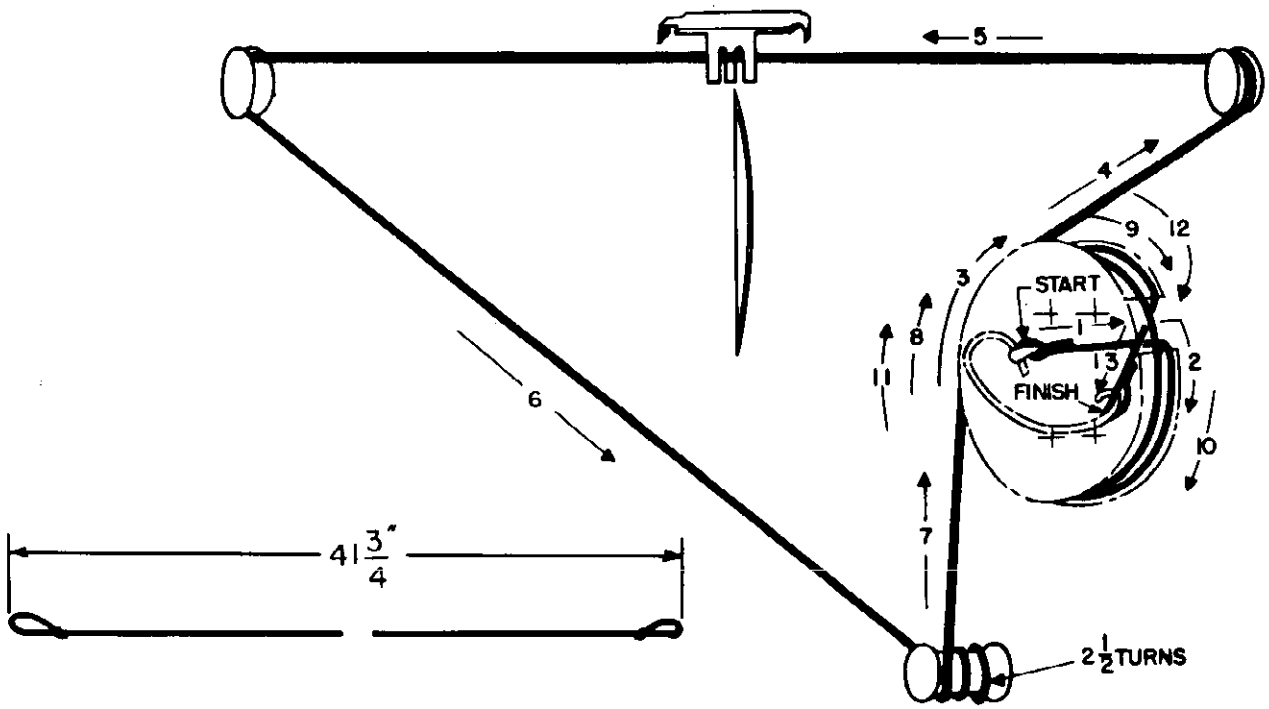

Dial String Diagram

GENERAL ELECTRIC CO.

MODELS 376, 377, 378

MODELS 376, 377, 378 REPLACEMENT PARTS LIST

Cat. No.	Symbol	Description
UNIVERSAL REPLACEMENT PARTS		
UCC-621	C35	CAPACITOR—.002 mf., 600 v., paper
UCC-623	C40	CAPACITOR—.003 mf., 600 v., paper
UCC-630	C38, 51, 69, 64, 66, 9, 26, 103	CAPACITOR—.01 mf., 600 v., paper
UCC-631	C24, 41, 42, 49, 50, 39, 104	CAPACITOR—.02 mf., 600 v., paper
UCC-635	C29, 101, 102, 8, 25, 68	CAPACITOR—.05 mf., 600 v., paper
UCU-020	C27, 28, 34, 58	CAPACITOR—47 mmf., mica
UCU-028	C2	CAPACITOR—100 mmf., mica
UCU-044	C56, 55	CAPACITOR—470 mmf., mica
UCU-520	C61	CAPACITOR—47 mmf., mica
UCU-1034	C55	CAPACITOR—180 mmf., mica
UCW-044	C60	CAPACITOR—470 mmf., ceramic
UCW-1020	C43	CAPACITOR—47 mmf., ceramic
UCW-2004	C18	CAPACITOR—10 mmf., ceramic
UCW-2006	C59	CAPACITOR—12 mmf., ceramic
UCW-2011	C37	CAPACITOR—20 mmf., ceramic
UOP-1206		SPEAKER—12-inch PM speaker same as S1200D-7
UOX-005		SPEAKER REPAIR KIT—Cone, voice coil and spider assembly, dust cap and gasket
URD-009	R5, 19, 23	RESISTOR—22,000 ohms, ½ w., carbon
URD-013	R1, 107, 109	RESISTOR—33,000 ohms, ½ w., carbon
URD-017	R9, 13, 14, 38, 39	RESISTOR—47,000 ohms, ½ w., carbon
URD-021	R11	RESISTOR—68 ohms, ½ w., carbon
URD-025	R32	RESISTOR—100 ohms, ½ w., carbon
URD-033	R12	RESISTOR—220 ohms, ½ w., carbon
URD-041	R2	RESISTOR—470 ohms, ½ w., carbon
URD-049	R40	RESISTOR—1000 ohms, ½ w., carbon
URD-053	R35	RESISTOR—1500 ohms, ½ w., carbon
URD-055	R6	RESISTOR—1800 ohms, ½ w., carbon
URD-057	R16, 17, 21	RESISTOR—2200 ohms, ½ w., carbon
URD-069	R26, 101	RESISTOR—6800 ohms, ½ w., carbon
URD-073	R7, 41	RESISTOR—10,000 ohms, ½ w., carbon
URD-083	R104	RESISTOR—27,000 ohms, ½ w., carbon
URD-093	R29, 106, 108, 110	RESISTOR—68,000 ohms, ½ w., carbon
URD-095	R4	RESISTOR—82,000 ohms, ½ w., carbon
URD-097	R33, 37	RESISTOR—100,000 ohms, ½ w., carbon
URD-103	R43	RESISTOR—180,000 ohms, ½ w., carbon
URD-105	R15, 22	RESISTOR—220,000 ohms, ½ w., carbon
URD-113	R3, 24, 28, 30	RESISTOR—470,000 ohms, ½ w., carbon
URD-125	R34	RESISTOR—1.5 meg., ½ w., carbon
URD-129	R10, 36	RESISTOR—2.2 meg., ½ w., carbon
URD-133	R102, 103	RESISTOR—3.3 meg., ½ w., carbon
URD-141	R20	RESISTOR—6.8 meg., ½ w., carbon
URD-1104	R105	RESISTOR—200,000 ohms, ½ w., carbon
URE-037	R27	RESISTOR—330 ohms, 1 w., carbon
SPECIALIZED REPLACEMENT PARTS		
RAL-001		BEZEL—Pilot light
RAV-047		CABINET—For Model 376
RAV-048		CABINET—For Model 377
RAV-049		CABINET—For Model 378
RCC-001	C67	CAPACITOR—.007 mf., 200 v., paper
RCC-014	C57	CAPACITOR—.003 mf., 1000 v., paper
RCC-086	C36	CAPACITOR—.05 mf., paper
RCE-029	C48A, B, C, D	CAPACITOR—Electrolytic
RCE-030	C105A, B	CAPACITOR—Electrolytic for preamp
RCT-028	C7, 11, 14	CAPACITOR—Tuning
RCW-020	C13, 63	CAPACITOR—10 mmf., ceramic

Cat. No.	Symbol	Description
SPECIALIZED REPLACEMENT PARTS (Cont'd)		
RCW-1048	C3	CAPACITOR—3 mmf., ceramic
RCW-1049	C5	CAPACITOR—14.5 mmf., ceramic
RCW-1050	C19	CAPACITOR—6 mmf., ceramic
RCW-1051	C15	CAPACITOR—9 mmf., ceramic
RCW-1052	C4, 10	CAPACITOR—47 mmf., ceramic
RCW-1053	C17	CAPACITOR—22 mmf., ceramic
RCY-037	C6	CAPACITOR—Trimmer, 2-20 mmf.
RCY-038	C62	CAPACITOR—Trimmer, 1-8 mmf.
RDC-033		CORD—Dial drive cord, 10 yard length
RDD-009		DRUM
RDE-005		ESCUTCHEON
RDK-030		KNOB—With Arrow
RDK-031		KNOB—Plain
RDK-079		KNOB—Plain, for Model 377
RDK-116		KNOB—With Arrow, for Model 377
RDM-007		BUSHING—For tuning shaft
RDS-058		SCALE—Dial scale
RDX-035		POINTER—Dial pointer assembly
RHG-010		GROMMET—Rubber grommet for mounting tube socket on preamplifier
RHJ-006		SPACER—For mounting tuner assembly
RHM-038	L1, 4, 9	COIL—For guillotine tuner, 2 required per coil
RHM-039		CLIP (For pilot lights)
RHX-011		GROMMET (Tuner mounting grommet)
RII-010		INSULATOR—Mounting insulator for guillotine tuner
RJJ-004	J3	SOCKET—Preamplifier power socket
RJP-003		PLUG—Phono motor power
RJP-004	P1	PLUG—Pick-up output plug
	P2	PLUG—Preamplifier output plug
	P3, 4	PLUG—Preamplifier power plug
RJP-010	J2	SOCKET—Preamplifier output socket
RJP-018	J1	SOCKET—Phono input to preamplifier
RJS-003		SOCKET—Tube socket for V6
RJS-049	J4	SOCKET—Phono power socket
RJS-085		SOCKET—Octal socket for preamplifier
RJS-106		SOCKET—Pilot light
RLA-012	L3, 5, 7	COIL—FM choke coil
RLB-024	T1	TRANSFORMER—Broadcast R-F
RLC-060	L6	COIL—B-C oscillator coil
RLF-007	L11, 8	COIL—FM oscillator choke and filament choke coil
RLI-005	L12, 13	COIL—Filament choke
RLI-044	L10	COIL—FM power line choke coil
RLL-027	L2	LOOP—Broadcast loop
RMM-006		SHIELD—Pilot light
RMM-055		HOOD—Lamp hood
RMS-044		SPRING—Vane holder spring
RMS-130		SPRING—Dial cord tension spring
RMS-125		SPRING—Lever plate spring
RMS-126		SPRING—Vane holder
RMW-042		PULLEY—Dial cord idler
RMX-108	L1, 4	TUNER VANE AND GUIDE WIRE ASSEMBLY
RMX-109		TUNING SHAFT ASSEMBLY
RMX-110	L9	TUNER VANE AND GUIDE WIRE ASSEMBLY
RRC-074	R18	VOLUME CONTROL
RRN-006	R42	RESISTOR—2.2 ohms, ½ w.
RRW-010	R25, 31	RESISTOR—5000 ohms, wirewound
RSW-047	S1	SWITCH—Bandchange switch
RSW-048	S2	SWITCH—Radio, phono and tone control
RTD-006	T5	TRANSFORMER—Discriminator transformer
RTL-062	T2	TRANSFORMER—1st I-F transformer
RTL-063	T3	TRANSFORMER—2nd I-F transformer
RTL-064	T4	TRANSFORMER—3rd I-F transformer
RTO-040	T6	TRANSFORMER—Output transformer
RTP-058	T7	TRANSFORMER—Power transformer (60 cycles)
RTP-059	T7	TRANSFORMER—Power transformer (50 cycles)
RWL-004		CORD—Power cord

GENERAL TELEV. AND RADIO CORP. MODEL 5A5

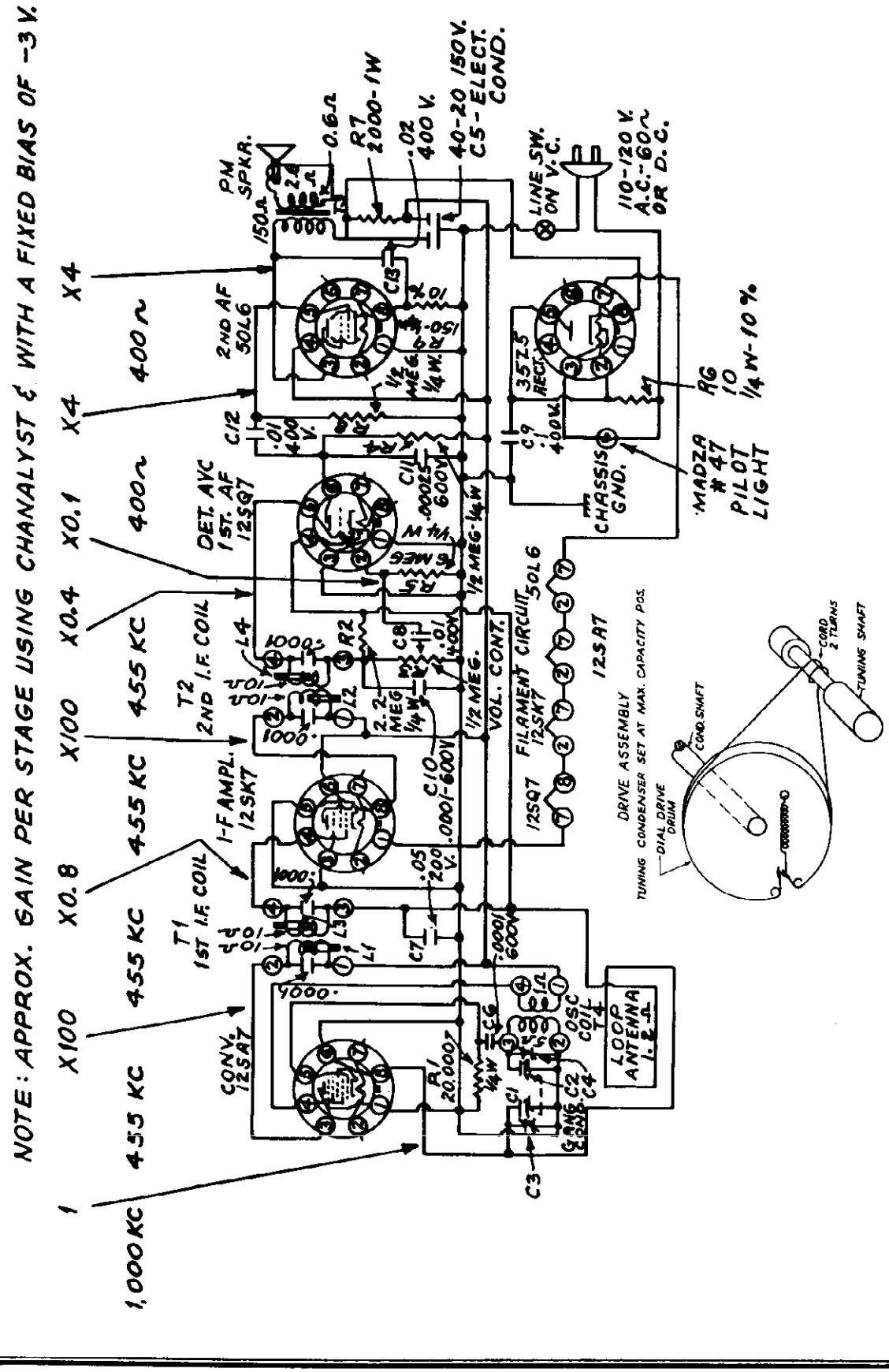

Tube	Pin	D-C Voltage VTVM	20000 ohms/volt	1000 ohms/volt	Resistance
12SA7	1	0	C	0	0
	2	0	0	0	26Ω
	3	+80	+80	+80	over 500K
	4	+80	+80	+80	over 500K
	5	-6	-5.6	-2.6	19 K
	6	0	0	0	0
	7	0	0	0	40Ω
	8	-1	-0.4	-0.4	5 Megs.
12SK7	1	0	0	0	0
	2	0	0	0	15Ω
	3	0	0	0	0
	4	-1	-0.4	-0.4	5 Megs.
	5	0	0	0	0
	6	+80	+80	+78	Over 500K
	7	0	0	0	26Ω
	8	+80	+80	+78	Over 500K
12SQ7	1	0	0	0	0
	2	-1.2	-0.8	-0.5	10 Megs.
	3	0	0	0	0
	4	-1	-0.45	-0.4	5 Megs.
	5	-0.7	-0.5	-0.2	500 K
	6	+54	+48	+42	Over 500K
	7	0	0	0	15Ω
	8	0	0	0	0
50L6	1	0	0	0	0
	2	0	0	0	40Ω
	3	+125	+120	+120	Over 500K
	4	+80	+80	+80	Over 500K
	5	0	0	0	450 K
	6	0	0	0	Infinite
	7	0	0	0	90Ω
	8	+5.2	+5	+5	140Ω
35Z5	1	0	0	0	Infinite
	2	0	0	0	120Ω
	3	0	0	0	120Ω
	4	0	0	0	Infinite
	5	0	0	0	120Ω
	6	0	0	0	120Ω
	7	0	0	0	90Ω
	8	+130	+125	+125	Over 500K

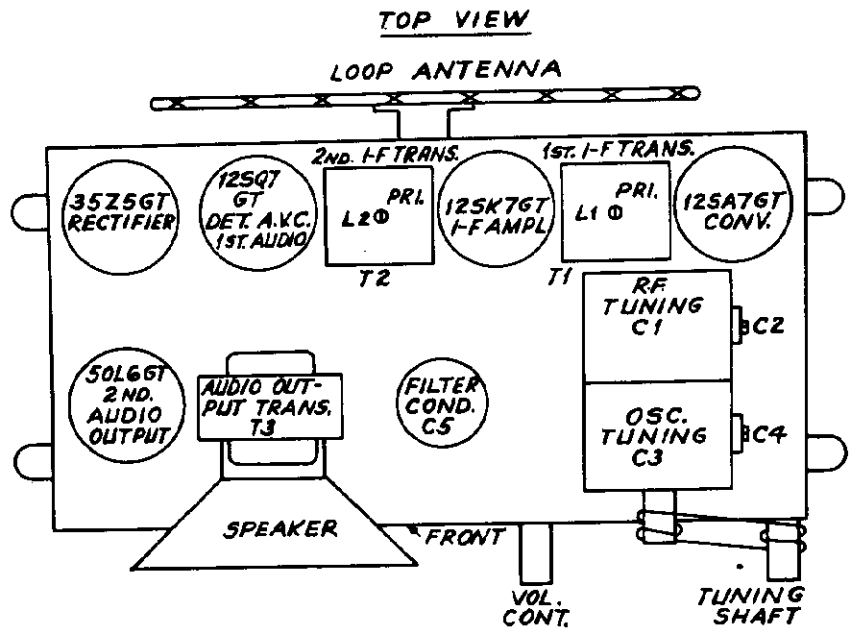

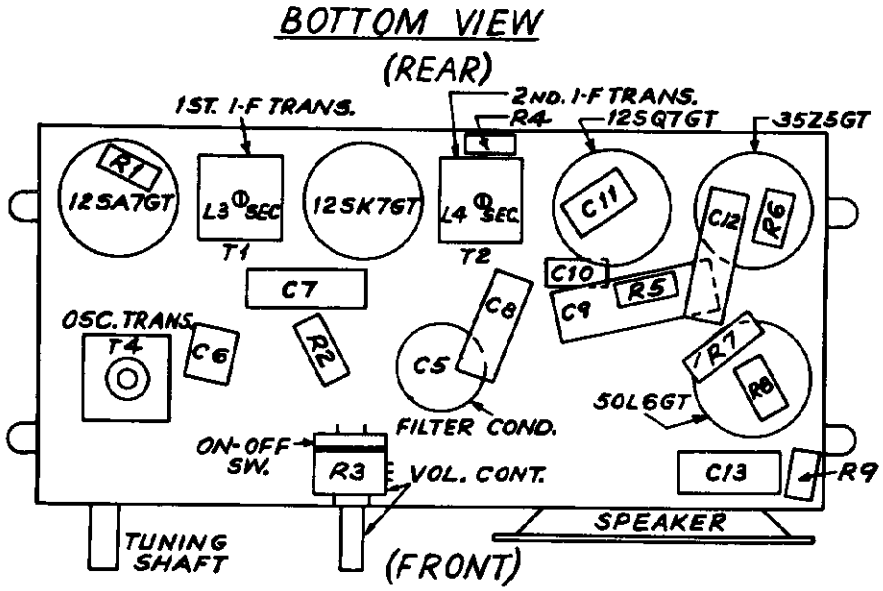

GENERAL TELEV. AND RADIO CORP. MODEL 605

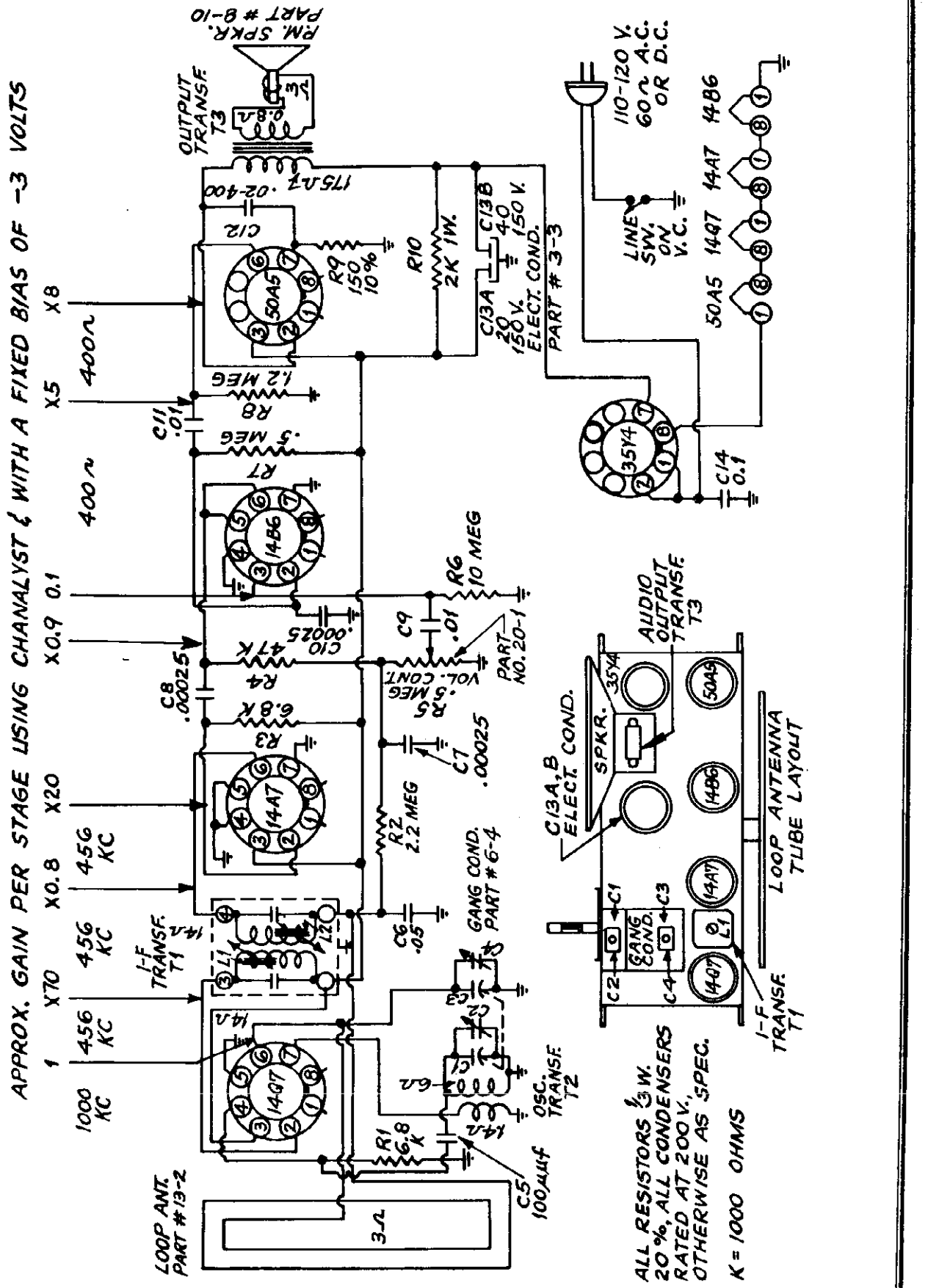

©John F Rider

TUBE	PIN	VTVM	1,000 OHM/V	RESISTANCE
14Q7	1	A.C.	A.C.	35 ohm
converter	2	80	80	over 500K
	3	80	80	over 500K
	4	-5	-4	6.8K
	5	GND.Q	GND.	GND.
	6	-1	-0.3	2.5 meg.
	7	0	0	1.4 ohm
	8	A.C.	A.C.	50 ohm
14A7	1	A.C.	A.C.	18 ohm
I.F AMPL.	2	24	22	over 500K
	3	80	80	over 500K
	4	GND.	GND.	GND.
	5	GND.	GND.	GND.
	6	-1	-0.3	2.5 meg.
	7	GND.	GND.	GND.
	8	A.C.	A.C.	35 ohm
14B6	1	GND.	GND.	GND.
DET. A.V.C.	2	46	12	over 500K
1st audio AMPL.	3	-1	-0.3	10 meg's
	4			
	5	-1	-0.3	500K
	6	-1	-0.3	500K
	7	GND.	GND.	GND.
	8	A.C.	A.C.	18 ohm
50A5	1	A.C.	A.C.	100 ohm
audio output	2	120	120	over 500K
	3	80	80	over 500K
	4			
	5			
	6	-0.5	0	1.2 meg
	7	5	5	150 ohm
	8	A.C.	A.C.	40 ohm
35Y4	1	A.C.	A.C.	135 ohm
rectifier	2	A.C.	A.C.	135 ohm
	3			
	4			
	5			
	6	GND. through On-off SW.	GND. through on-off SW.	GND. through on-off SW.
	7	125	125	over 500K
	8	A.C.	A.C.	100 ohm

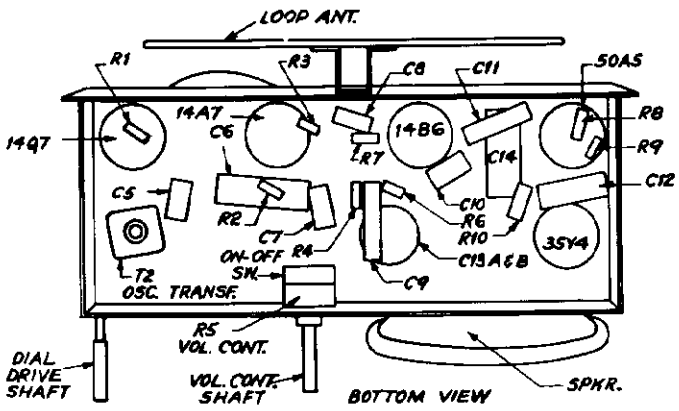

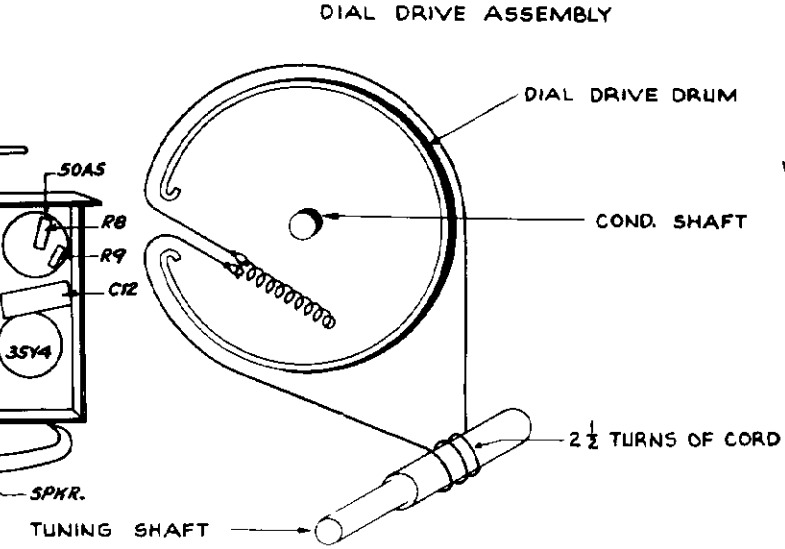

NOTE: TUNING COND. IN MAX. CAPACITY POSITION

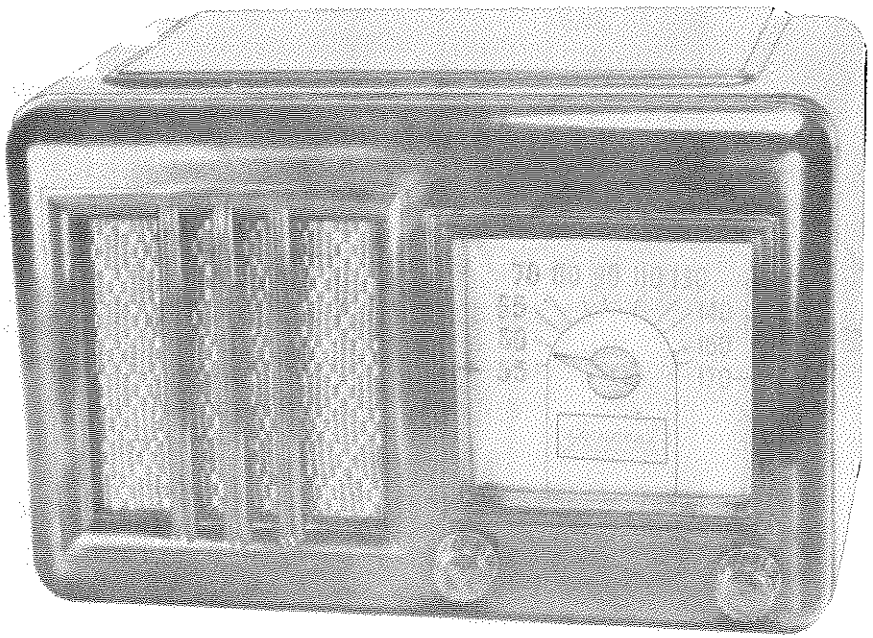

ALL VOLTAGE AND RESISTANCE MEASUREMENTS MADE WITH RESPECT TO CHASSIS GROUND, AND WITH A LINE VOLTAGE OF 116 V.A.C.

ALIGNMENT PROCEDURE.

Connect output meter across voice coil.

Connect the signal generation to the standard Hazeltine Loop Model 1150 and couple it loosely to the receiver loop. Set the volume control at maximum, and fully mesh the tuning capacitor.

The output of the signal generator should be just sufficient to give a readable deflection on the output meter.

Set the signal generator to 456 kc and adjust i-f slugs for maximum output in the following order: L2, L1. Repeat sequence if trimmers were badly maladjusted.

Set the signal generator and receiver to 1600 kc and adjust the oscillator trimmer C2 for maximum output.

Set the signal generator and receiver to 1400 kc and adjust the antenna trimmer C4 for maximum output.

Set the signal generator and receiver to 1600 kc and readjust oscillator trimmer C2 for maximum output.

APPROX. GAIN PER STAGE USING CHANALYST & WITH A FIXED BIAS OF -3 VOLTS.

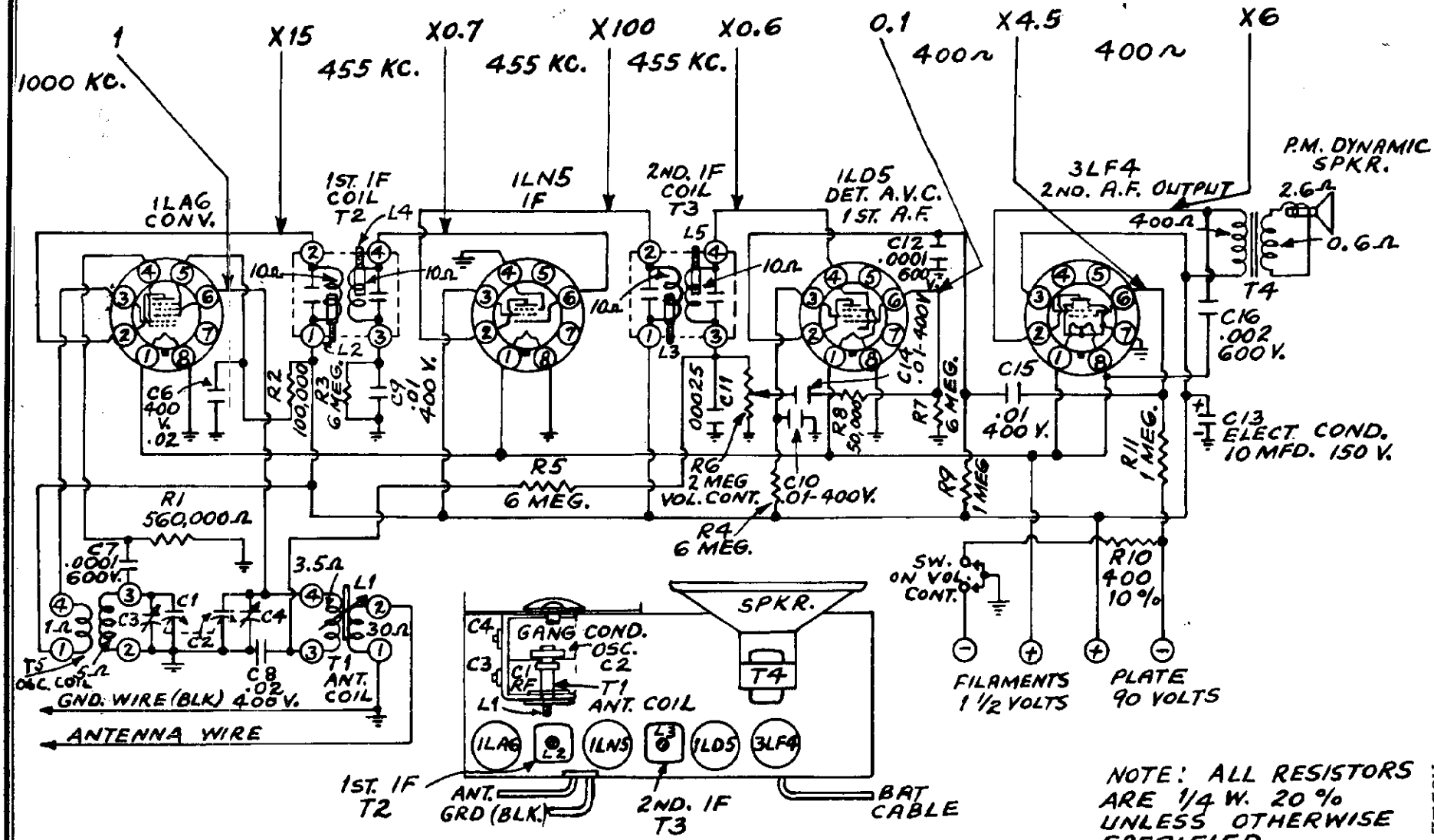

TUBE LAYOUT

NOTE: ALL RESISTORS ARE 1/4 W. 20 % UNLESS OTHERWISE SPECIFIED.

Tube	Pin	D-C Voltage VTVM	20000 ohms/volt	1000 ohms/volt	Resistance
1LA6	1	+1.5	+1.4	+1.4	4
	2	+90	+90	+88	Infinite
	3	+90	+90	+88	Infinite
	4	-3.4	-0.5	0	600,000
	5	+34	+33	+26	Infinite
	6	-0.3	-0.1	0	7,000,000
	7	0	0	0	Infinite
	8	0	0	0	0
1LN5	1	+1.5	+1.4	+1.4	4
	2	+90	+90	+88	Infinite
	3	+90	+90	+88	Infinite
	4	0	0	0	0
	5	0	0	0	Infinite
	6	-0.3	-0.1	0	Infinite
	7	-0.3	-0.1	0	7,000,000
	8	0	0	0	0
1LD5	1	+1.5	+1.4	+1.4	4
	2	+26	+20	+20	Infinite
	3	+21	+16	+10	Infinite
	4	-0.4	-0.2	0	2,000,000
	5	0	0	0	Infinite
	6	-0.2	0	0	7,500,000
	7	-0.2	0	0	7,700,000
	8	0	0	0	0
3LF4	1	+1.5	+1.4	+1.4	4
	2	+86	+86	+84	Infinite
	3	+90	+90	+83	Infinite
	4	0	0	0	0
	5	-5.4	-5	-5	450
	6	-5	-1	0	1,700,000
	7	0	0	0	0
	8	+1.5	+1.4	+1.4	4

DRIVE ASSEMBLY

TUNING CONDENSER SET AT MAX. CAPACITY POS.

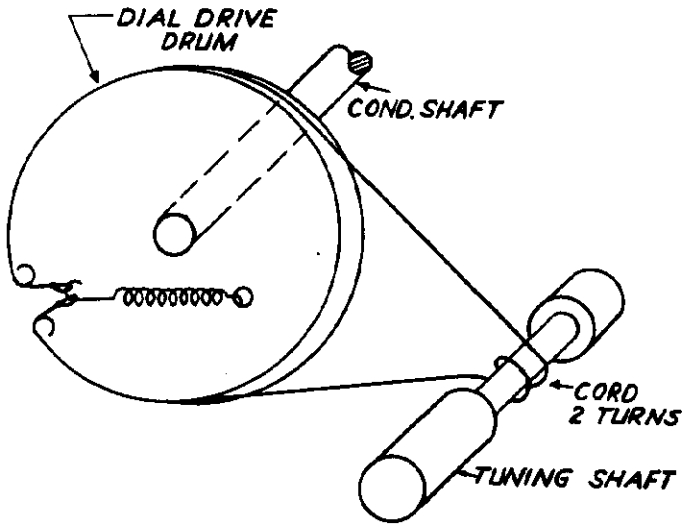

BOTTOM VIEW

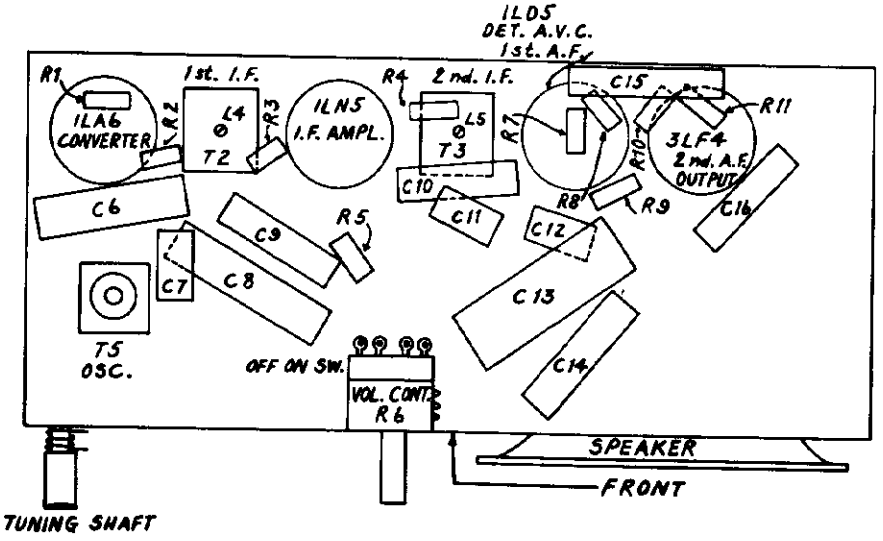

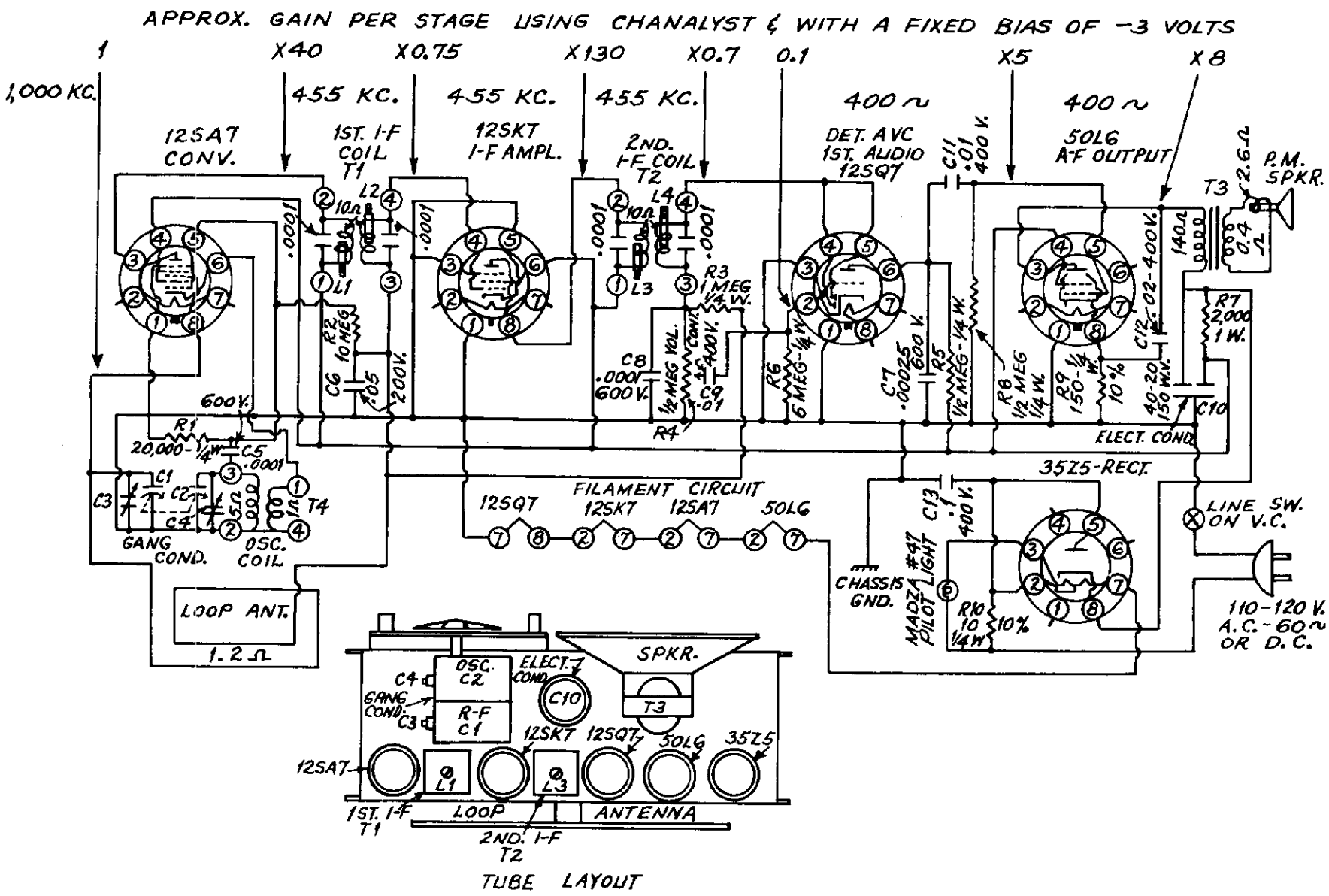
APPROX. GAIN PER STAGE USING CHANALYST & WITH A FIXED BIAS OF -3 VOLTS
1
X40
X0.75
X130
X0.7
0.1
X5
X8
1,000 KC.
455 KC.
455 KC.
455 KC.
400 ~
400 ~
12SA7 CONV.
1ST. I-F COIL T1
12SK7 I-F AMPL.
2ND. I-F COIL T2
DET. AVC 1ST. AUDIO 12SQ7
50L6 A-F OUTPUT
P.M. SPKR.
T3
2.6Ω
0.4Ω
140Ω
C11 .01 400 V.
C12 .02-400V.
R7 2,000 1 W.
C10
ELECT. COND.
35Z5-RECT.
LINE SW. ON V.C.
110-120 V. A.C.-60~ OR D.C.
R1 20,000-1/4W
C5 .0001
C1
C2
C3
C4
T4
GANG COND.
OSC. COIL
LOOP ANT.
1.2Ω
600 V.
.0001
.1000
.05
200V.
L1
L2
L3
L4
10Ω
R2 10 MEG
C6
R3 1 MEG 1/4 W.
C8 .0001 600 V.
½ MEG VOL. CONT.
400V.
C9 .01
R4
R6 6 MEG-1/4 W.
C7 .00025 600 V.
R5 ½ MEG-1/4 W.
R8 ½ MEG 1/4 W.
R9 150-½ W.
10%
40-20 150 V.W.
FILAMENT CIRCUIT
12SQ7
12SK7
12SA7
50L6
CHASSIS GND.
C13 .1 400 V.
MAZDA #47 PILOT LIGHT
R10 10 1/4 W
10%
OSC. C2
C4
GANG COND. C3
R-F C1
ELECT. COND.
C10
SPKR.
T-3
12SA7
12SK7
12SQ7
50L6
35Z5
L1
L3
1ST. I-F T1
LOOP
ANTENNA
2ND. I-F T2

TUBE LAYOUT

Tube	Pin	D-C Voltage VTVM	20000 ohms/volt	1000 ohms/volt	Resistance
12SA7	1	0	0	0	0
	2	0	0	0	24
	3	+80	+80	+78	Infinite
	4	+80	+80	+78	Infinite
	5	-10	-9.5	-4.8	20,000
	6	0	0	0	1
	7	0	0	0	40
	8	-1.5	-0.8	-0.2	1,200,000
12SK7	1	0	0	0	0
	2	0	0	0	12
	3	0	0	0	0
	4	-1.5	-0.6	-0.2	1,200,000
	5	0	0	0	0
	6	+80	+80	+78	Infinite
	7	0	0	0	26
	8	+80	+80	+78	Infinite
12SQ7	1	0	0	0	0
	2	-0.5	-0.4	-0.2	6,000,000
	3	0	0	0	0
	4	-0.5	-0.4	-0.2	400,000
	5	-0.5	-0.4	-0.2	400,000
	6	+46	+42	+40	Infinite
	7	0	0	0	14
	8	0	0	0	0
50L6	1	0	0	0	0
	2	0	0	0	40
	3	+120	+120	+120	Infinite
	4	+80	+80	+78	Infinite
	5	0	0	0	460,000
	6	0	0	0	Infinite
	7	0	0	0	90
	8	+4.5	+4.5	+4.5	150
35Z5	1	0	0	0	Infinite
	2	0	0	0	120
	3	0	0	0	120
	4	0	0	0	Infinite
	5	0	0	0	120
	6	0	0	0	120
	7	0	0	0	90
	8	+120	+120	+120	Infinite

DIAL DRIVE ASSEMBLY

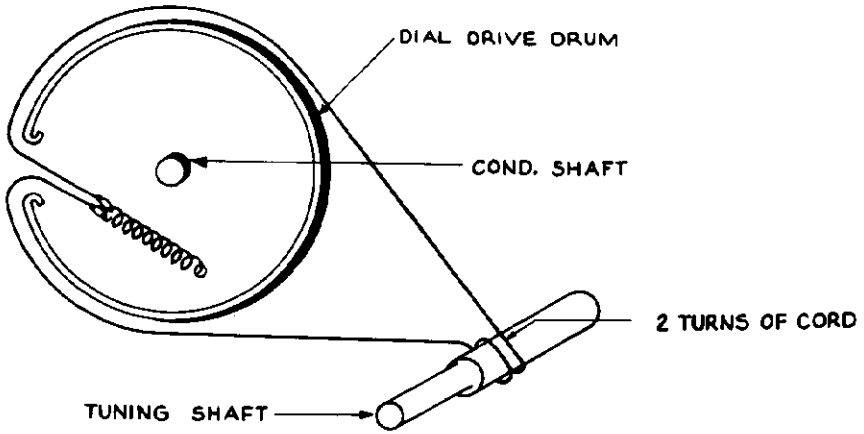

NOTE: TUNING COND. IN MAX. CAPACITY POSITION

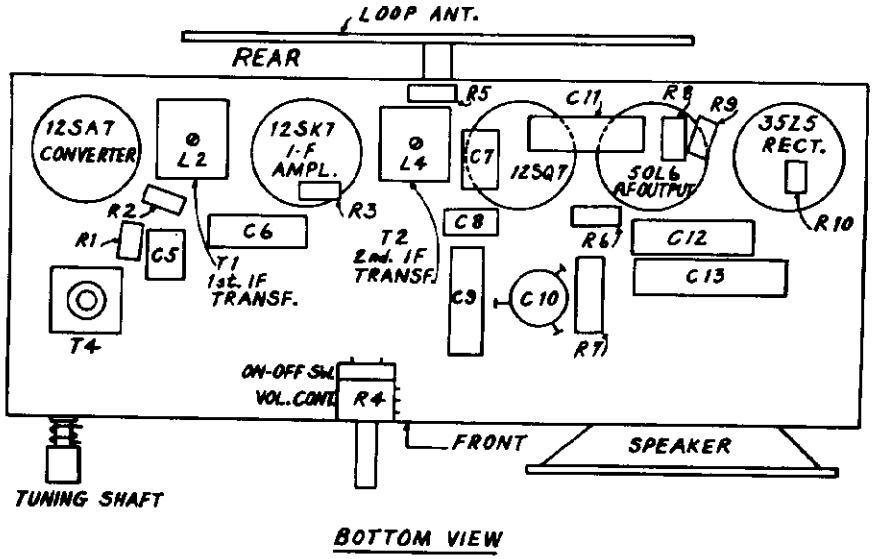

BOTTOM VIEW

GENERAL TELEV. AND RADIO CORP. MODEL 63

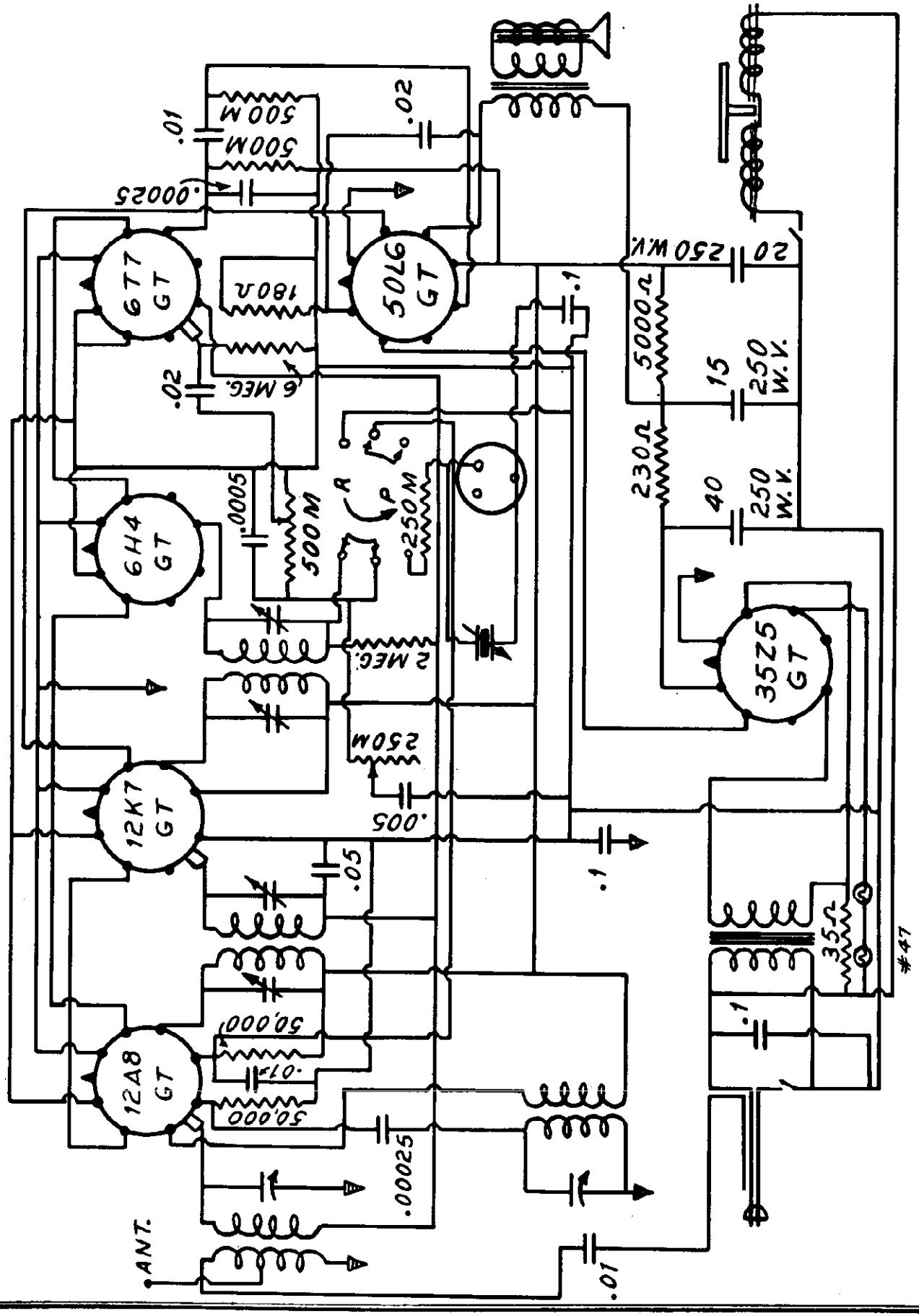

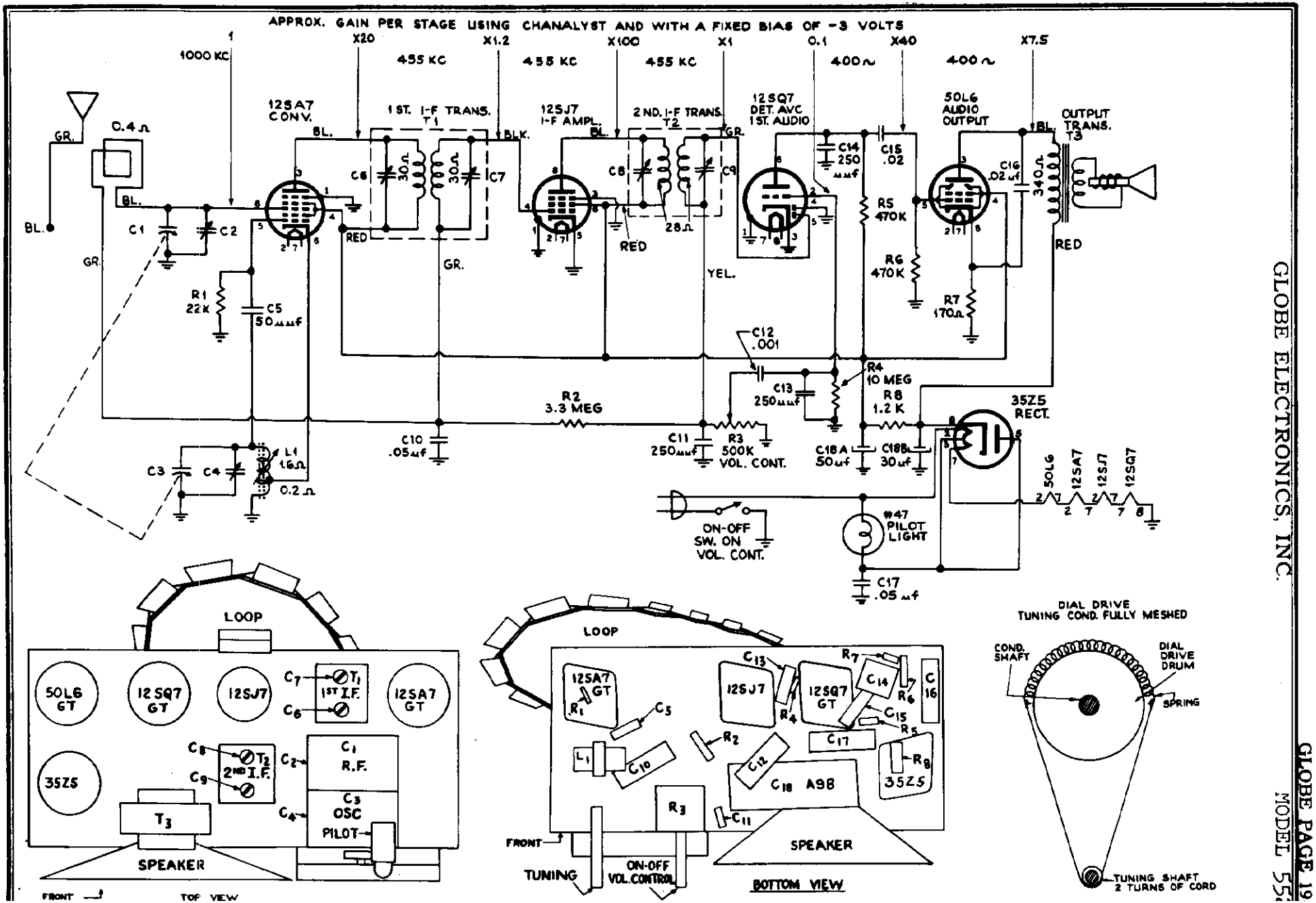
APPROX. GAIN PER STAGE USING CHANALYST AND WITH A FIXED BIAS OF -3 VOLTS
1000 KC
X20
455 KC
X1.2
455 KC
X100
455 KC
X1
0.1
400 ~
X40
400 ~
X7.5
12SA7 CONV.
1ST. I-F TRANS. T1
12SJ7 I-F AMPL.
2ND. I-F TRANS. T2
12SQ7 DET. AVC 1ST. AUDIO
50L6 AUDIO OUTPUT
OUTPUT TRANS. T3
0.4 Ω
GR.
BL.
BLK.
RED
YEL.
C1
C2
C3
C4
C5 50 mmf
C6 30 Ω
C7 30 Ω
C8
C9
28 Ω
C10 .05 mf
C11 250 mmf
C12 .001
C13 250 mmf
C14 250 mmf
C15 .02
C16 .02 mf
C17 .05 mf
C18A 50 mf
C18B 30 mf
R1 22K
R2 3.3 MEG
R3 500K VOL. CONT.
R4 10 MEG
R5 470K
R6 470K
R7 170 Ω
R8 1.2 K
L1 1.6 Ω
0.2 Ω
340 Ω
35Z5 RECT.
ON-OFF SW. ON VOL. CONT.
#47 PILOT LIGHT
LOOP
50L6 GT
12SQ7 GT
12SJ7
12SA7 GT
35Z5
1ST I.F.
2ND I.F.
R.F.
OSC
PILOT
SPEAKER
FRONT
TOP VIEW
TUNING
ON-OFF VOL. CONTROL
BOTTOM VIEW
DIAL DRIVE
TUNING COND. FULLY MESHED
COND. SHAFT
DIAL DRIVE DRUM
SPRING
TUNING SHAFT
2 TURNS OF CORD

©John F Rider

TUBE	PIN	VTVM	20,000Ω/V	1,000Ω/V	RESISTANCE
12SA7	1	0	0	0	0
CONV.	2	AC	AC	AC	34Ω
	3	82V	82V	82V	2.0 Meg
	4	82V	82V	82V	2.0 Meg
500 KC	5	-8.6V	-7.4	-4.0	22K
1600 KC		-9.8V	-9.2	-5.4	22K
	6	0	0	0	0.2Ω
	7	AC	AC	AC	22Ω
	8	-1.1V	-0.24V	-0.05	5 Meg
12SJ7	1	0	0	0	0
IF	2	AC	AC	AC	22Ω
AMPL.	3	0	0	0	0
	4	-1.1V	-0.24V	-0.08	5 Meg
	5	0	0	0	0
	6	82V	82V	82V	2.0 Meg
	7	AC	AC	AC	12Ω
	8	82V	82V	82V	2.0 Meg
12SQ7	1	0	0	0	0
DET. AVC	2	-1.44	-0.72	-0.25	10 Meg
1st AUDIO	3	0	0	0	0
	4	0	0	0	0
	5	-0.8V	-0.44	-0.06V	500K
	6	54V	50V	14V	2 Meg
	7	AC	AC	AC	10Ω
	8	0	0	0	0
50L6	1	--	--	--	---
AUDIO	2	AC	AC	AC	75Ω
OUTPUT	3	92V	92V	92V	2 Meg
	4	82V	82V	82V	2 Meg
	5	0	0	0	500K
	6	--	--	--	---
	7	AC	AC	AC	30Ω
	8	0	0	0	0

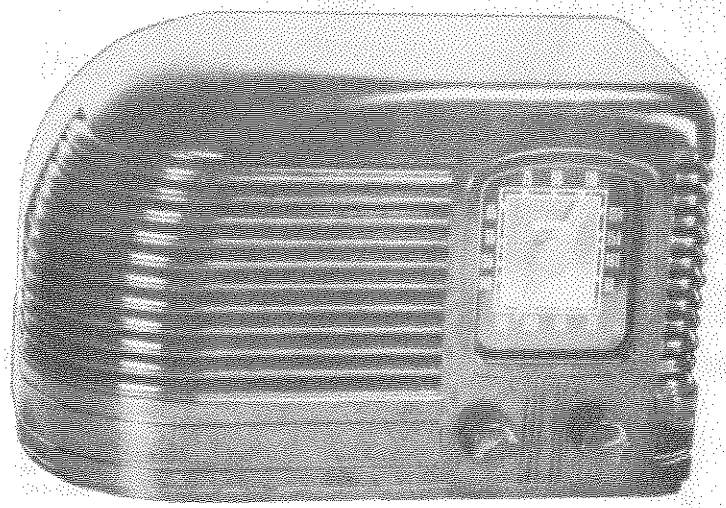

ALIGNMENT PROCEDURE

Connect output meter across the voice coil.

Connect the signal generator to the standard Hazeltine Loop Model 1150 and couple it loosely to the receiver loop. Set the volume control at maximum, and fully mesh the tuning capacitor.

The output of the signal generator should be just sufficient to give a readable deflection on the output meter.

Set the signal generator to 455 kc and adjust i-f trimmers for maximum output in the following order: C9, C8, C7, C6. Repeat sequence if trimmers were badly maladjusted.

Set the signal generator and receiver to 1550 kc and adjust the oscillator trimmer C4 for maximum output.

Set the signal generator and receiver to 1400 kc and adjust the antenna trimmer C2 for maximum output.

Set the signal generator and receiver to 600 kc and adjust the oscillator padder L1 for maximum output while rocking the tuning capacitor.

Set the signal generator and receiver to 1550 kc and readjust oscillator trimmer C4 for maximum output.

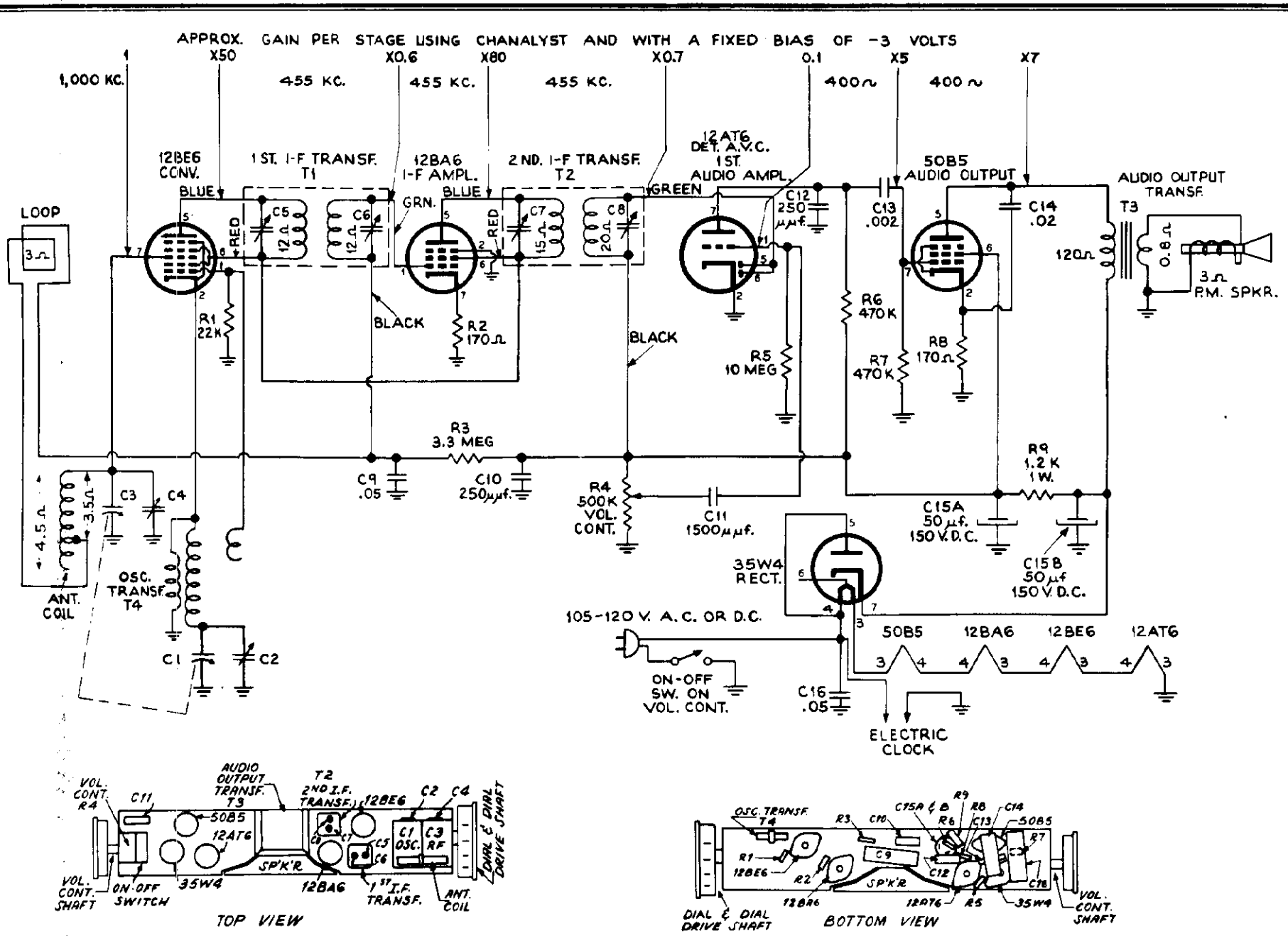

GLOBE ELECTRONICS, INC.

GLOBE PAGE 19-

MODEL 55

TUBE	PIN	VTVM	1,000 OHM/V	RESISTANCE
12BE6	1	-8	-4	22K
conv.	2	0	0	0.6 ohm
	3	A.C.	A.C.	15 ohm
	4	A.C.	A.C.	30 ohm
	5	95	95	over 500K
	6	95	95	over 500K
	7	-0.8	0	2.5 megs
12BA6	1	-0.8	0	2 megs
1.-F. AMPL.	2	GND.	GND.	GND.
	3	A.C.	A.C.	30 ohm
	4	A.C.	A.C.	40 ohm
	5	95	95	over 500K
	6	9	95	over 500K
	7	1.6	1.6	170 ohm
12AT6	1	-1.3	-0.5	10 meg's
DET. A.V.C.	2	GND.	GND.	GND.
1st audio AMPL.	3	GND.	GND.	GND.
	4	A.C.	A.C.	15 ohm
	5	-0.9	-0.3	600K
	6	-0.9	-0.3	600K
	7	45	18	over 500K
50B5	1			470K
audio output	2	6.5	6.5	170 ohm
	3	A.C.	A.C.	100 ohm
	4	A.C.	A.C.	40 ohm
	5	125	125	over 500K
	6	95	95	over 500K
	7	0	)0	470K
35W4	1	6.5 tie point	6.5 tie point	170 ohm
rect.	2	—	—	—
	3	A.C.	A.C.	100 ohm
	4	A.C.	A.C.	135 ohm
	5	A.C.	A.C.	135 ohm
	6	A.C.	A.C.	130 ohm
	7	130	130	over 500K

ALL VOLTAGE AND RESISTANCE MEASUREMENTS MADE WITH RESPECT TO CHASSIS GROUND. AND WITH A LINE VOLTAGE OF 116 V.A.C.

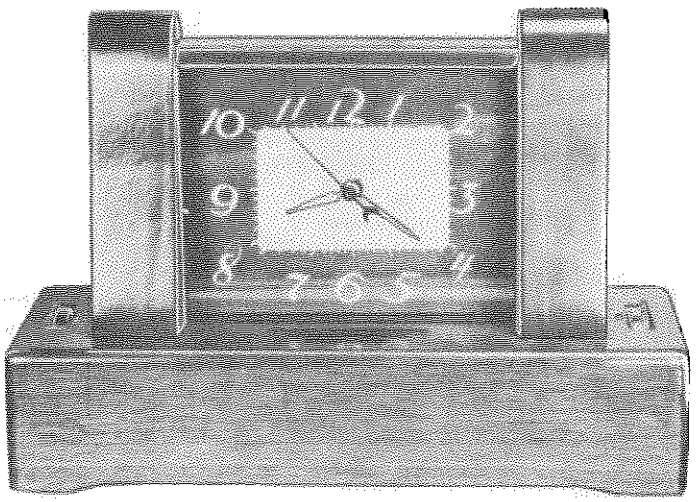

ALIGNMENT PROCEDURE

Connect output meter across voice coil.

Connect the signal generation to the standard Hazeltine Loop Model 1150 and couple it loosely to the receiver loop. Set the volume control at maximum, and fully mesh the tuning capacitor.

The output of the signal generator should be just sufficient to give a readable deflection on the output meter.

Set the signal generator to 455 kc and adjust i-f trimmers for maximum output in the following order: C8, C7, C6, C5. Repeat sequence if trimmers were badly maladjusted.

Set the signal generator and receiver to 1600 kc and adjust the oscillator trimmer C2 for maximum output.

Set the signal generator and receiver to 1400 kc and adjust the antenna trimmer C4 for maximum output.

Set the signal generator and receiver to 1600 kc and readjust oscillator trimmer C2 for maximum output.

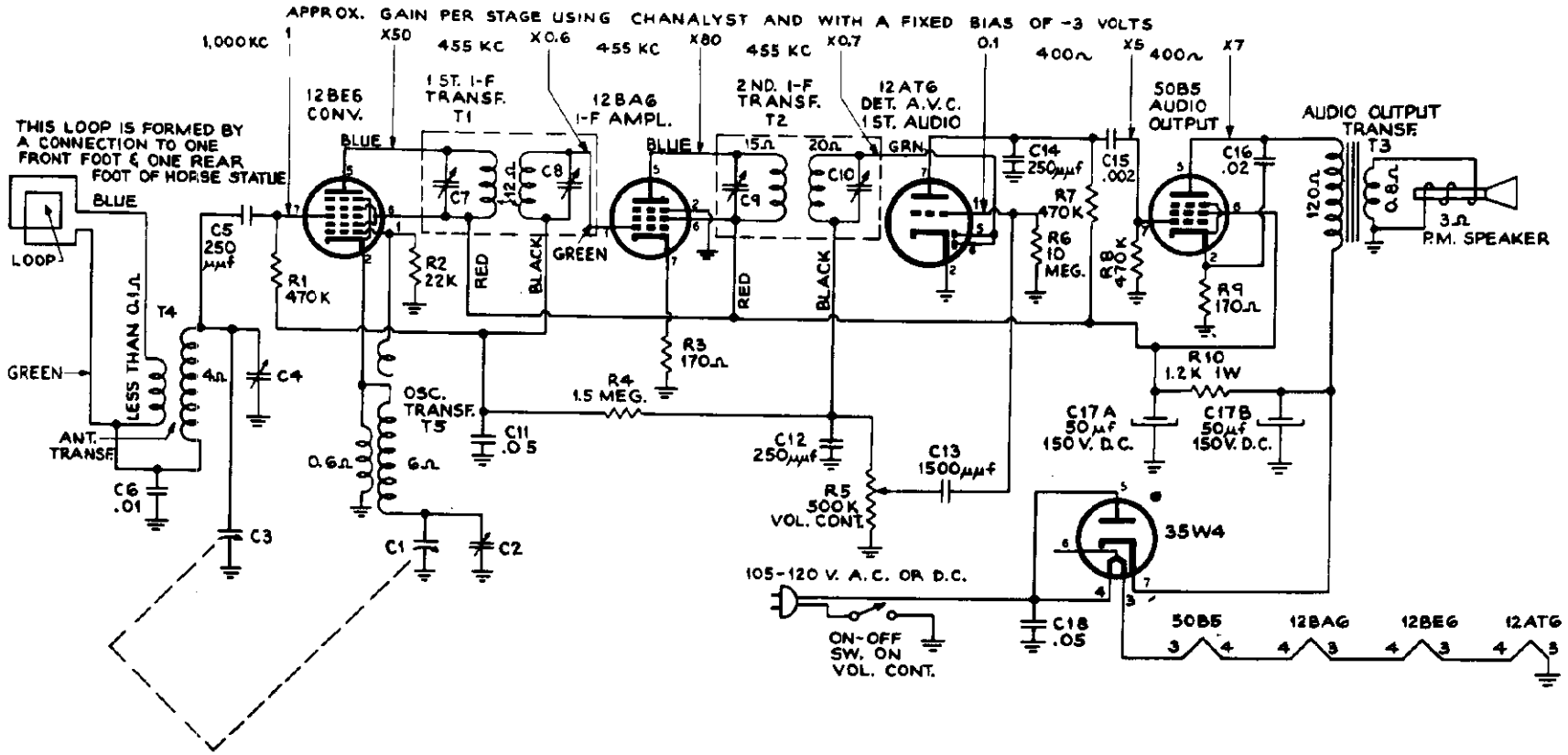

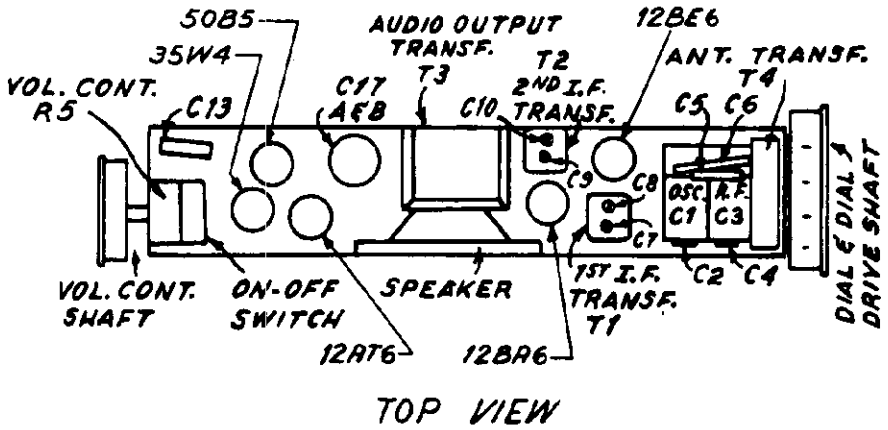

TOP VIEW

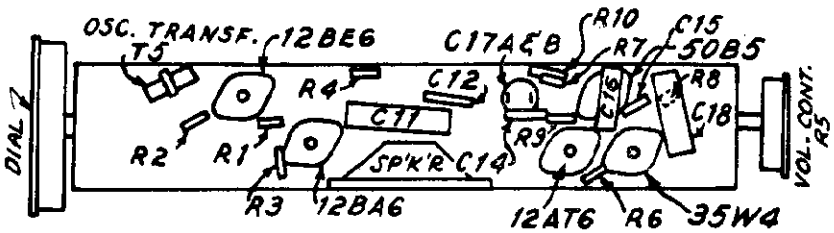

BOTTOM VIEW

©John F. Rider

TUBE	PIN	VTVM	1,000 OHM/V	RESISTANCE
12BE6	1	-8	-4	22K
conv.	2	0	0	0.6 ohm
	3	A.C.	A.C.	15 ohm
	4	A.C.	A.C.	30 ohm
	5	95	95	over 500K
	6	95	95	over 500K
	7	-0.6	0	2.5 meg's
12BA6	1	-0.6	0	2 meg's
1-F AMPL.	2	GND.	GND.	GND.
	3	A.C.	A.C.	30 ohm
	4	A.C.	A.C.	40 ohm
	5	95	95	over 500K
	6	95	95	over 500K
	7	1.6	1.6	170 ohm
12AT6	1	-1	-0.3	10 meg's
DET. A.V.C.	2	GND.	GND.	GND.
1st audio AMPL.	3	GND.	GND.	GND.
	4	A.C.	A.C.	15 ohm
	5	-0.7	-0.2	600K
	6	-0.7	-0.2	600K
	7	45	18	over 500K
50B5	1			470K
audio output	2	6.5	6.5	170 ohm
	3	A.C.	A.C.	100 ohm
	4	A.C.	A.C.	40 ohm
	5	125	125	over 500K
	6	95	95	over 500K
	7	0	0	470K
35W4	1	6.5 tie point	6.5 tie point	170 ohm
rect.	2			
	3	A.C.	A.C.	100 ohm
	4	A.C.	A.C.	135 ohm
	5	A.C.	A.C.	135 ohm
	6	A.C.—	A.C.—	130 ohm
	7	130	130	over 500K

ALL VOLTAGE AND RESISTANCE MEASUREMENTS MADE WITH RESPECT TO CHASSIS GROUND. AND WITH A LINE VOLTAGE OF 116 V.A.C.

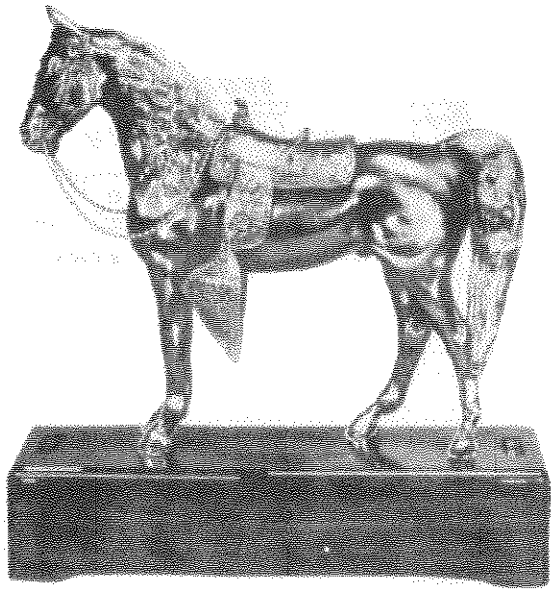

ALIGNMENT PROCEDURE

Connect output meter across voice coil.

Connect the signal generation to the standard Hazeltine Loop model 1150 and couple it loosely to the receiver loop. Set the volume control at maximum, and fully mesh the tuning capacitor.

The output of the signal generator should be just sufficient to give a readable deflection on the output meter.

Set the signal generator to 455 kc and adjust i-f trimmers for maximum output in the following order: C10, C9, C8, C7. Repeat sequence if trimmers were badly maladjusted.

Set the signal generator and receiver to 1600 kc and adjust the oscillator trimmer C2 for maximum output.

Set the signal generator and receiver to 1400 kc and adjust the antenna trimmer C4 for maximum output.

Set the signal generator and receiver to 1600 kc and readjust oscillator trimmer C2 for maximum output.

THE B. F. GOODRICH COMPANY MODEL 11-701

CIRCUIT DIAGRAM

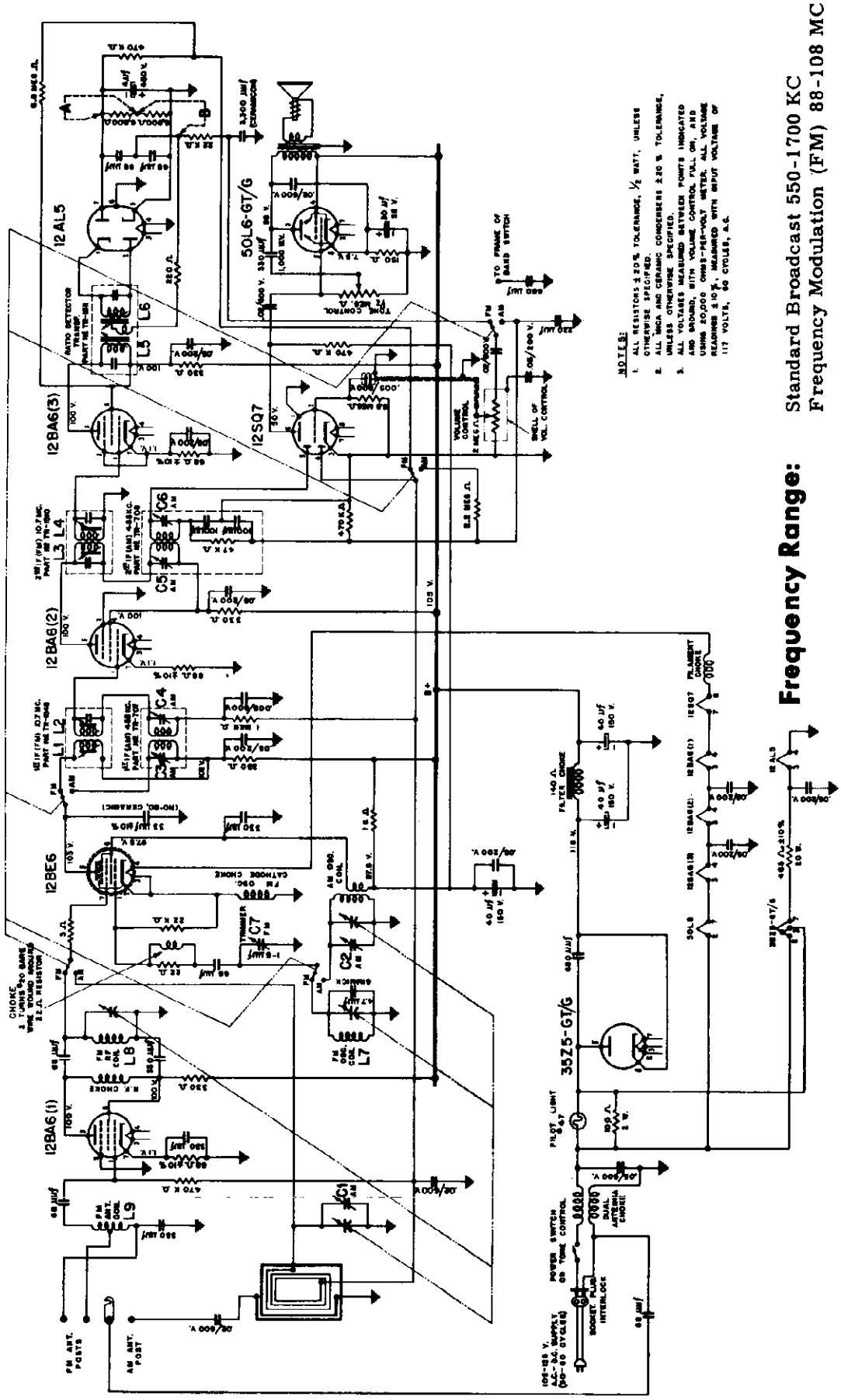

Frequency Range: Standard Broadcast 550-1700 KC
Frequency Modulation (FM) 88-108 MC

Power Requirement: 105-125 volts ac 50-60 cycles
or 105-125 volts dc

Power Consumption: 50 watts

REPLACEMENT PARTS LIST

Condensers

CCA332M	3300 mmfd ±20% ceramicon
CCAL300K	30 mmfd ±10% ceramicon
CO-111	40+40/150 W.V. and 50/25 W.V. electrolytic
CO-1056	4 mmfd/450 W.V. electrolytic
CO-1083	4.7 mfd ±20% condenser
CO-1248	40 mfd/150 W.V. electrolytic
CT-1036-1	1-8 mmfd trimmer
CV-1461	2 gang A.M.-F.M. variable condenser
RCM20A221M	220 mmfd ±20% mica
RCM20A331M	330 mmfd ±20% mica
RCM20A680M	68 mmfd ±20% mica
RCM30A681M	680 mmfd ±20% mica
RCM40A331M	330 mmfd ±20% mica
RCP10W2503A	.05/200 W.V. paper tubular
RCP10W6203A	.02/600 W.V. paper tubular
RCP10W6502A	.005/600 W.V. paper tubular
RCP10W6503A	.05/600 W.V. paper tubular

Resistors

RE-1464	465 ohms ±10% 20 watt
REB100M	10 ohms ±20% 1/2 watt two used in parallel
REB102M	1000 ohms ±20% 1/2 watt
REB105M	1 megohm ±20% 1/2 watt
REB151K	150 ohms ±10% 1/2 watt
REB220M	22 ohms ±20% 1/2 watt wind two turns of #20 bare wire over resistor
REB221M	220 ohms ±20% 1/2 watt
REB223M	22,000 ohms ±20% 1/2 watt
REB225M	2.2 megohm ±20% 1/2 watt
REB331M	330 ohms ±20% 1/2 watt
REB474M	470,000 ohms ±20% 1/2 watt
REB680K	68 ohms ±10% 1/2 watt
REB682M	6800 ohms ±20% 1/2 watt
REB685M	6.8 megohm ±20% 1/2 watt
RED101M	100 ohms ±20% 2 watt

Transformers and Coils

CK-114	85 mils-140 ohm choke
CK-1058	filament choke
CK-1109	dual antenna choke
CK-1127	r-f choke
CK-1452	f-m oscillator cathode choke
CL-1457	f-m antenna coil
CL-1458	f-m oscillator coil
CL-1459	f-m r-f coil
CL-1466	a-m oscillator coil
TR-707	455 kc input I.F. transformer
TR-708	455 kc output I.F. transformer
TR-904	output transformer
TR-1510	10.7 mc f-m output I.F. transformer
TR-1511	ratio detector transformer
TR-1548	10.7 mc f-m input I.F. transformer

Miscellaneous

BU-187	#47 pilot light bulb
CA-154-1W	walnut bakelite cabinet
CA-154-1V	ivory bakelite cabinet
DL-1444	dial scale
KN-671	walnut knob marked "Volume"
KN-672	walnut knob marked "Off-On-Tone"
KN-673	walnut knob marked "Tuning"
KN-1117	walnut knob marked "AM-FM"
KN-675	ivory knob marked "Volume"
KN-676	ivory knob marked "Off-On-Tone"
KN-677	ivory knob marked "Tuning"
KN-1118	ivory knob marked "AM-FM"
LP-1463	loop
PO-334	dial pointer
PT-105	2 megohm volume control
PT-106	1/2 megohm tone control
SD-855	miniature tube shield
SK-792	6" PM speaker
SO-313	insulated pilot light socket assembly
SP-218	pointer drive spring
ST-1450	masonite back
ST-1465	light diffuser
SW-1435	band switch
WA-302	C washer for drive shaft

TUBE & TRIMMER LAYOUT

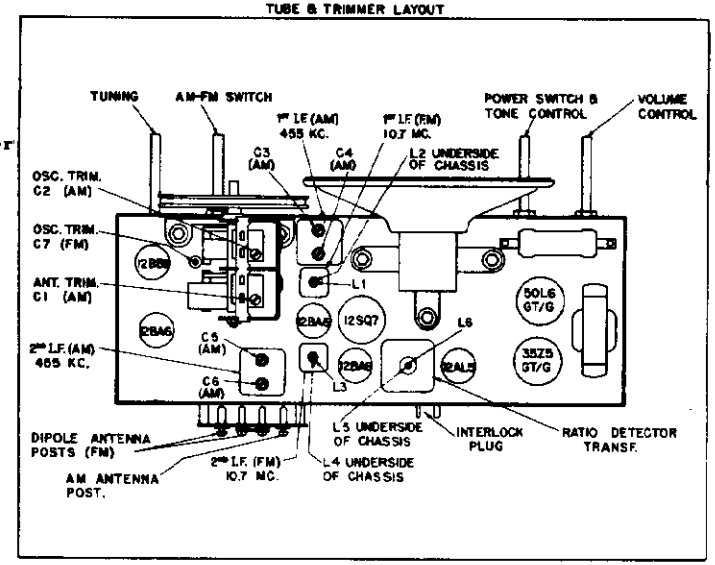

SERVICE AND ALIGNMENT INSTRUCTIONS

CAUTION: The chassis of this receiver is directly connected to one side of the line. When servicing this receiver do not place chassis on a grounded metallic bench.

ALIGNMENT:

Equipment Required: Vacuum tube voltmeter; modulated A-M and F-M signal generator; output meter radiation loop; one .1/400 WV condenser; one 300 ohm resistor; one insulated screw driver.

To insure proper alignment on A-M, the use of a radiation loop is recommended. To radiate a signal connect a loop of about 6" to 8" diameter one turn of #14 or #12 wire across the output of the signal generator and place this loop parallel to the loop of the receiver to be aligned at a distance of 8" or 10".

FOR COMPLETE ALIGNMENT INSTRUCTIONS ON AM AND FM BANDS SEE ALIGNMENT CHART.

To facilitate alignment of the receiver when removed from cabinet, calibration points are provided on the light diffuser plate, which is mounted to the chassis.

CAUTION: The diffuser plate is assembled to the chassis with two P.K. screws. The one at the left is fastened down tight. The one at the right should be backed off about two turns from the tight position in order to permit free expansion of the plate and thereby avoid warpage which may interfere with proper movement of the pointer.

Before aligning close the variable condenser fully counter-clockwise (plates fully closed) and check that pointer coincides with the reference dot (extreme left dot) on diffuser plate.

ALIGNMENT PROCEDURE CHART

STEP	SET BAND SWITCH ON	CONNECT HIGH SIDE OF SIGNAL GENERATOR TO-	SET SIGNAL GENERATOR TO	TURN POINTER TO-	READ OUTPUT ON -	ADJUST THE FOLLOWING - KEEP SIGNAL FROM SIGNAL GENERATOR AS LOW AS POSSIBLE
BEFORE ALIGNING CLOSE VARIABLE CONDENSER FULLY COUNTER-CLOCKWISE (PLATES FULLY CLOSED) AND ADJUST POINTER TO COINCIDE WITH THE REFERENCE DOT (EXTREME LEFT DOT) ON CALIBRATION STRIP.						
1	FM	PIN NO. 1 OF 12BA6 (3) TUBE FOR 1 VOLT SIGNAL	10.7 MC UNMODULATED SIGNAL	EXTREME RIGHT HAND POSITION (CONDENSER FULLY OPEN).	VACUUM TUBE VOLTMETER ACROSS 6800 OHM RESISTOR (SHOWN AS "A" ON CIRCUIT DIAGRAM)	(RATIO DETECTOR PRIMARY) L6, FOR MAXIMUM READING (SLUG ON UNDER-SIDE OF CHASSIS).
2	FM				VACUUM TUBE VOLTMETER ACROSS "B" ON CIRCUIT DIAGRAM.	L6 (RATIO DETECTOR SECONDARY) FOR ZERO READING (SLUG ON TOP OF CHASSIS).
3	FM	PIN NO. 7 OF 12BE6 TUBE IN SERIES WITH A .1/400 VOLT COND.			VACUUM TUBE VOLTMETER ACROSS 6800 OHM RESISTOR AS SHOWN AS "A" ON CIRCUIT DIAGRAM.	L4 (UNDER-SIDE OF CHASSIS) L3 (TOP OF CHASSIS) 2ND I.F. TRANSFORMER FOR MAXIMUM READING.
4	FM					L2 (UNDER-SIDE OF CHASSIS) L1 (TOP OF CHASSIS) 1ST I.F. TRANSFORMER FOR MAXIMUM READING
5	AM	R.F. SECTION OF VARIABLE CONDENSER OR PIN NO. 7 OF 12BE6 TUBE IN SERIES WITH A.1/400 VOLT COND.	455 KC		OUTPUT METER ACROSS SPEAKER-VOICE-COIL	C5 AND C6 (2ND I.F. TRANSFORMER) FOR MAXIMUM READING
6	AM					C3 AND C4 (1ST I.F. TRANSFORMER) FOR MAXIMUM READING
7	FM	REPEAT STEPS 3 AND 4				
8	FM	CONNECT FM SIGNAL GENERATOR TO DIPOLE TERMINAL POST USING A 300 OHM RESISTOR IN SERIES WITH THE HIGH SIDE LEAD. USE A 30% MODULATED FM SIGNAL	88 MC	88 MC ON CALIBRATION STRIP	OUTPUT METER ACROSS SPEAKER-VOICE-COIL	(OSCILLATOR COIL) *L7 UNDER-SIDE OF CHASSIS ADJUST BY COMPRESSING OR EXPANDING COIL SLIGHTLY FOR MAXIMUM OUTPUT COINCIDING WITH 88 MC ON CALIBRATION STRIP
9	FM		108 MC	108 MC ON CALIBRATION STRIP		C7 (OSCILLATOR TRIMMER) FOR MAXIMUM OUTPUT
10	FM		REPEAT STEPS 8 AND 9 UNTIL OSCILLATOR RANGE IS 88MC TO 108MC ON CALIBRATION STRIP			
11	FM		98 MC	RESONANCE APPROXIMATELY 98 MC ON CALIBRATION STRIP	OUTPUT METER ACROSS SPEAKER-VOICE-COIL	*L8 AND *L9 UNDERSIDE OF CHASSIS ADJUST BY COMPRESSING OR EXPANDING COIL SLIGHTLY FOR MAXIMUM OUTPUT
12	AM	USE RADIATED SIGNAL CONNECT BOTH SIDES OF SIGNAL GENERATOR TO RADIATION LOOP	1700 KC	EXTREME RIGHT HAND POSITION, CONDENSER FULLY OPEN		C2 (OSCILLATOR TRIMMER) FOR MAXIMUM OUTPUT
13	AM		1500 KC	RESONANCE APPROXIMATELY 1500 KC ON CALIBRATION STRIP		C1 (R.F. TRIMMER) FOR MAXIMUM OUTPUT
14	AM		600 KC	RESONANCE APPROXIMATELY 600 KC ON CALIBRATION STRIP		CHECK THAT 600 KC RESONANCE CORRESPONDS WITH 600 KC POINT ON CALIBRATION STRIP

* THESE ADJUSTMENTS ARE PERMANENTLY SET AT THE FACTORY AND NORMALLY DO NOT REQUIRE RE-ADJUSTMENT UNLESS THEY ARE DISPLACED OR REPLACED IN SERVICING

MODELS 93-104, 93-105, 93-106

THE B. F. GOODRICH COMPANY

ELECTRICAL AND MECHANICAL DATA

Frequency Range ..... (AM) 535 KC to 1620 KC
Intermediate (FM) 87.25 MC to 108.75 MC
Frequency ..... (AM) 455 KC (FM) 10.7 MC
Power Supply ..... 117 volts AC, 60 cycles

Speaker ..... 10-inch PM
V.C. Impedance ..... 3.2 ohms at 400 cycles
Power Output (Undistorted) ..... 3.5 watts
Power Output (Maximum) ..... 5 watts

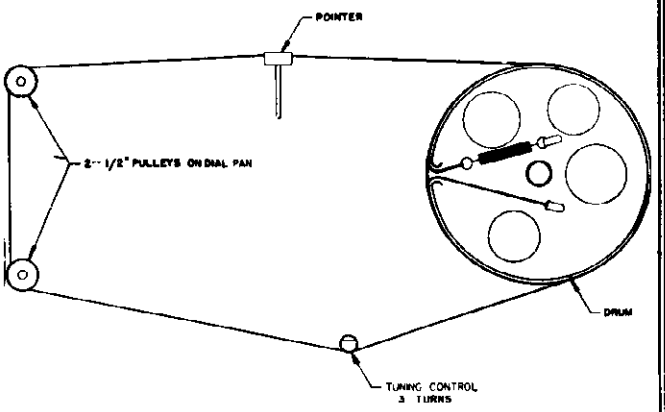

DIAL STRINGING

TUBE COMPLEMENT

1	6BA6	RF Amplifier	1	6AT6	AM Detector—AVC—1st Audio (AM-FM)
1	6BE6	Oscillator-Converter	1	6H6	FM Detector
1	6BA6	1st IF Amplifier	1	6V6GT	Power Output
1	6BA6	2nd IF Amplifier	1	5Y3GT	Rectifier

SOCKET VOLTAGES

TUBE	POSITION	1	2	3	4	5	6	7	8
6BA6	RF Amplifier	—.2	0	0	6.3 AC	130	90	.75	.....
6BE6	Oscillator-Converter	—2.5	0	6.3 AC	0	140	95	0	.....
6BA6	1st IF. Amplifier	—.5	0	6.3 AC	0	120	90	.75	.....
6BA6	2nd IF. Amplifier	0	0	0	6.3 AC	90	90	.75	.....
6AT6	AM Detector—AVC—1st Audio (AM-FM)	—.3	0	0	6.3 AC	—.3	0	55	.....
6H6	FM Detector	0	0	8	8	8	8	6.3 AC	8
6V6GT	Power Output	0	0	210	175	0	8	6.3 AC	0
5Y3GT	Rectifier	0	5V AC To Pin 8	NC	235	NC	235 AC	NC	225

NOTE: All DC voltages measured with RCA Voltohmyst from B— to socket contact indicated. All voltages are positive DC unless otherwise marked.
Volume control full on. Zero signal input.
Tone control in clockwise position.
Band switch in "AM" position.
Line voltage 117 volts, 60 cycle AC.

Reference Notes to Alignment Chart

Note 1—Either spread or compress the R.F. section gang plates for maximum output.

Note 2.—The FM section of this receiver operates with delayed A.V.C. This delay must be removed for the alignment procedure, this is accomplished by shorting pin No. 6 on the 6V6. The A.V.C. point is on terminal board at end of 2.2 meg. resistor coming from pin 1 of 6BA6 1st I.F. amplifier. Audio point is on high end of volume control.

Note 3—The F.M. R.F. and osc. coils are air coils constructed of stiff wire. To adjust these coils for band coverage and tracking, move turns of coil together or apart as required.

RATIO DETECTOR

Proper operation of the ratio detector stage is extremely important for best performance on the FM band of this receiver.

The performance of the ratio detector stage may be checked by closely following the procedure and diagram given below.

RATIO DETECTOR

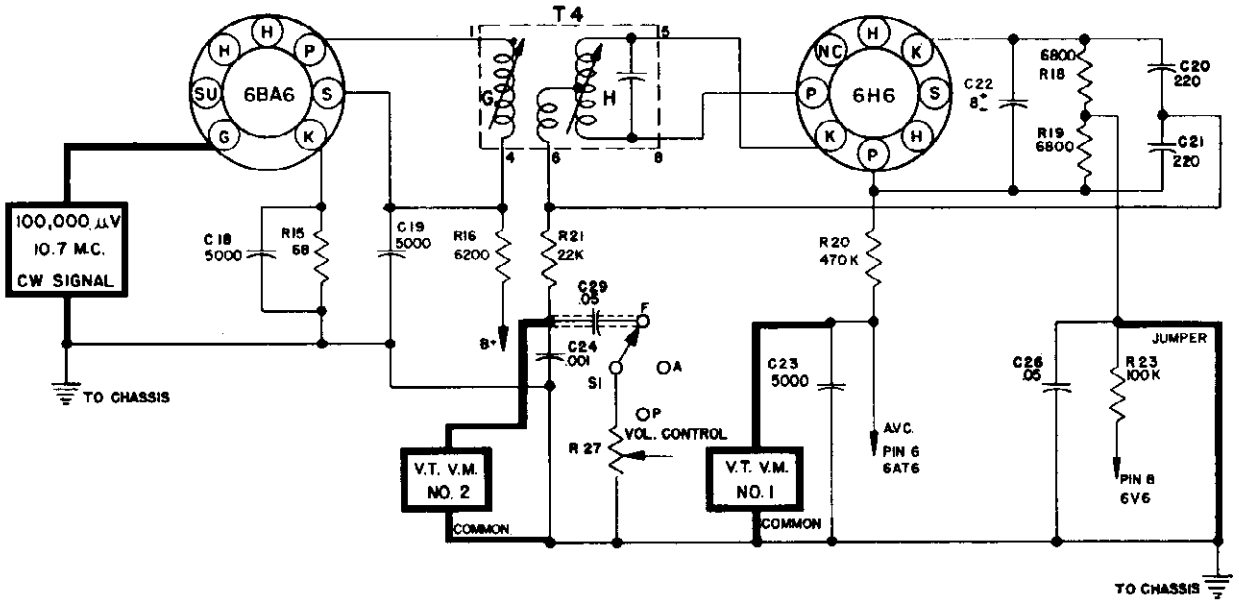

1. After setting up the S.G. and V.T.V.M., turn the trimmer adjustment screws G & H counter clockwise until the slugs are in the extreme outward position. Trimmer adjustment screw G is located at the underside of the chassis. Trimmer adjustment screw H is located on top of the chassis. For exact locations of these adjustment screws see trimmer location diagram.

2. Now turn adjustment "G" clockwise until VTVM in No. 1 position indicates maximum voltage. This maximum value should be from 1 to 2 volts with input as indicated in above diagram. Then slowly turn adjustment "H" in a clockwise direction, observing VTVM in No. 2 position. It will approach a maximum value and then rapidly drop to zero. If adjustment "H" is turned beyond this point, VTVM in No. 2 position will indicate a polarity change. The proper adjustment of "H" is at the point where the VTVM indicates zero volts between the polarity change.

3. Shift the 10.7 mc. signal to 10.725 mc. (10.7 mc. +25 kc.). VTVM in No. 2 position should now indicate a minus .25 volts minimum.

4. Change the 10.725 mc. signal to 10.675 mc. (10.7 mc. —25 kc.). VTVM in No. 2 position should indicate a plus .25 volts minimum. STEPS 3 and 4 constitute a sensitivity check on the ratio detector transformer.

5. Place the polarity switch of VTVM in No. 2 position to "minus" position and observe VTVM as the frequency of the signal generator is increased above 10.7 mc. It should indicate an increasing positive voltage. Continue increasing the frequency until the meter indicates a peak and begins to decrease. Reduce the generator frequency slightly until the peak is obtained. Record the generator frequency.

6. Set the polarity switch of VTVM to "plus" position. Repeat STEP 5, reducing the generator frequency from 10.7 mc. instead of increasing. Record the generator frequency when VTVM in No. 2 position indicates a peak.

7. The difference between the generator frequencies noted in STEPS 5 and 6 is the "Static Band Width" of the Ratio Detector transformer. This should be approximately 285 kc.

MODELS 93-104, 93-105, 93-106

THE B. F. GOODRICH COMPANY

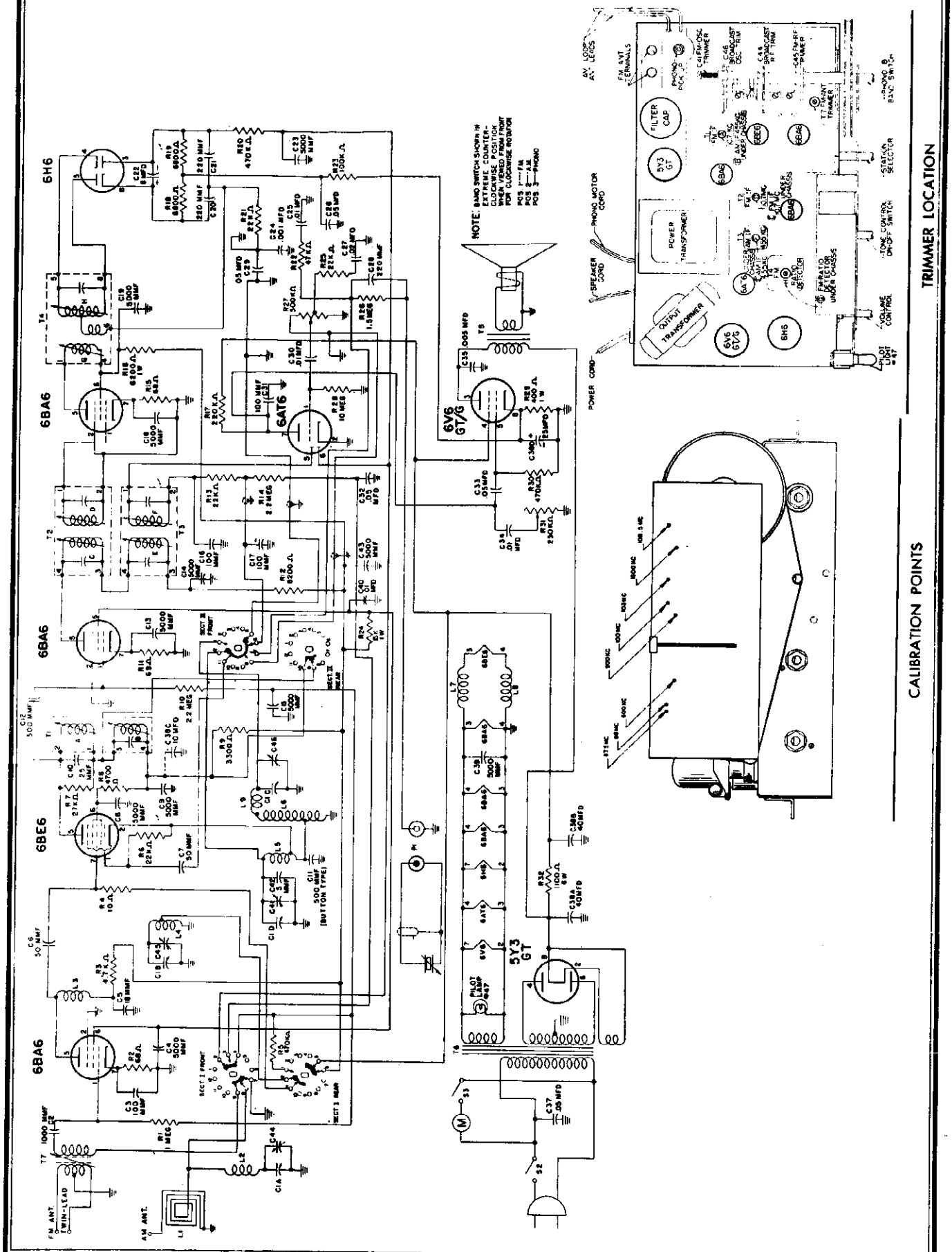

THE B. F. GOODRICH COMPANY

MODELS 93-104, 93-105, 93-106

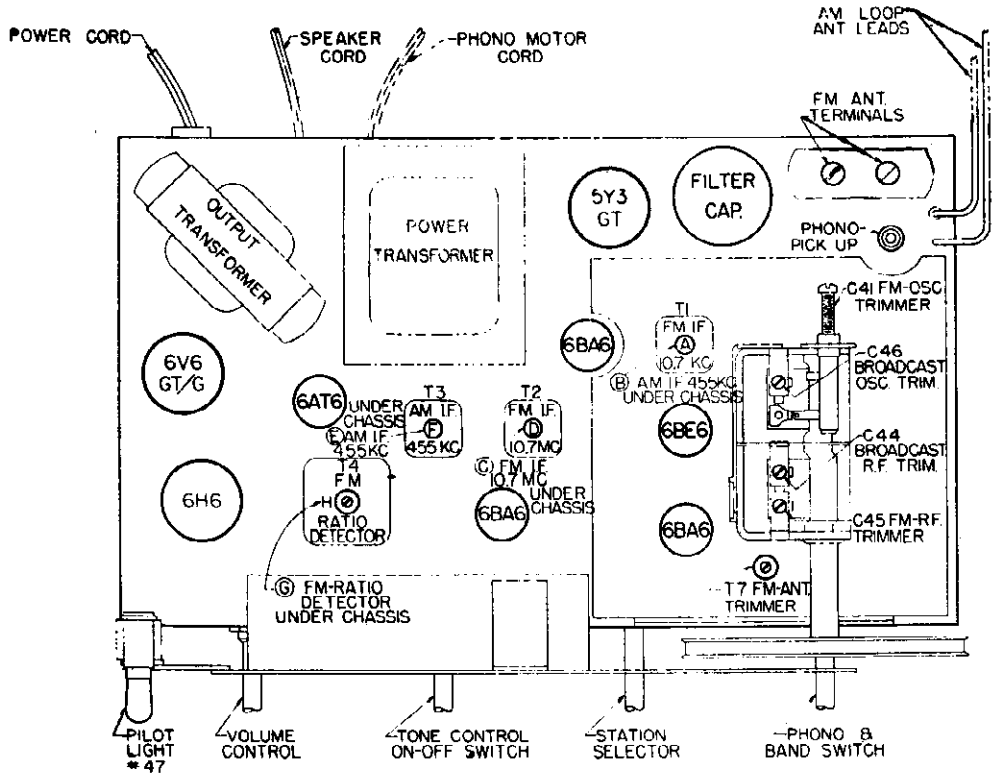

TUBE LAYOUT

GENERAL—Operate this receiver on 117 volt, 60 cycle alternating current (AC). Do not connect this equipment to any other source.

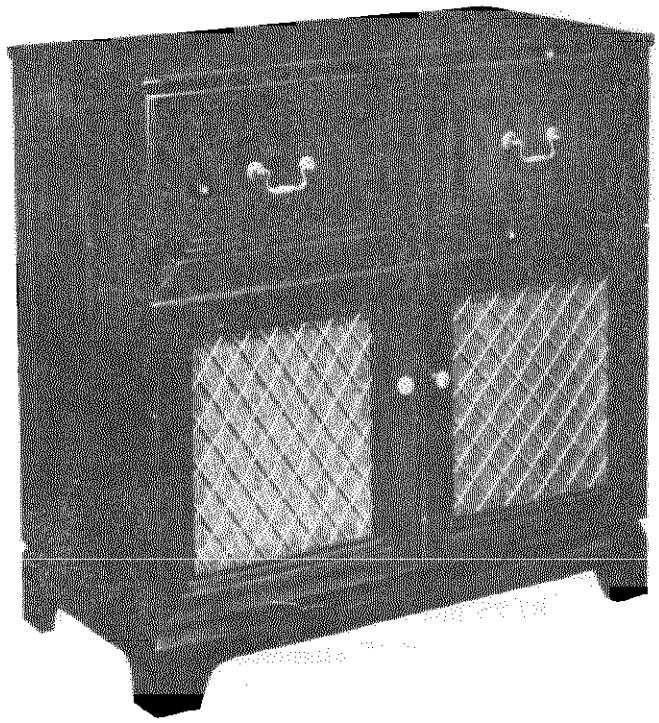

ANTENNA—A built-in loop and folded dipole antennae are provided for reception of AM and FM stations, which eliminate the need for external antennae in the average installation.

If this receiver is installed where AM reception is poor, attach an external antenna to the lead at the back of the built-in loop antenna.

To connect an external FM antenna, first remove the two dipole wires from the "FM" terminals on the top of the radio chassis. Connect the two wires from the external FM antenna to the terminals marked "FM" as shown in above illustration.

GROUND—A ground connection is not required for installation of this receiver.

MODELS 93-104, 93-105, 93-106

THE B. F. GOODRICH COMPANY

ALIGNMENT CHART

Step No.	Band Switch Position	Signal Generator	Connection at Receiver	Dummy Antenna	Dial Setting	Adjust Trimmer	Remarks
1	AM	Mod. 455 kc.	6BE6 Conv. Grid Pin 7	0.1 Mfd.	Mid Band	B, E, F	Adjust for Maximum Output
2	AM	1500	Receiver Loop	Radiating Loop	1500	C-46 BC osc. Trim	Adjust for Maximum Output
3	AM	1500 kc.	Receiver Loop	Radiating Loop	1500	C-44 BC RF Trim	Adjust for Maximum Output
4	AM	1000 kc.	Receiver Loop	Radiating Loop	1000	See Note 1	See Note 1.
5	AM	600 kc.	Receiver Loop	Radiating Loop	600	See Note 1	See Note 1
6	FM	10.7 mc. CW	FM Antenna Terminals	0.1 Mfd.	Mid Band	A, C, D, G See Note 2	Adjust for Maximum AVC using VTVM at Terminal Board.
7	FM	10.7 mc. CW	FM Antenna Terminals	0.1 Mfd.	Mid Band	H See Note 2	Adjust for Zero Audio Volts using VTVM. No. 2
8	FM	108.5 mc. FM	FM Antenna Terminals	300 ohms Carbon Res.	HF end	C-41 FM osc. Trim	Adjust for Maximum Output.
9	FM	87.5 mc. FM	FM Antenna Terminals	300 ohms Carbon Res.	LF end	Adjust FM osc. coil See Note 3	Adjust for Maximum Output.
10	FM	103 mc. FM	FM Antenna Terminals	300 ohms Carbon Res.	103 mc.	C-45 FM RF Trim	Adjust for Maximum Output.
11	FM	100 mc. FM	FM Antenna Terminals	300 ohms Carbon Res.	100 mc.	T7 FM Ant. Trim	Adjust for Maximum Output.
12	FM	88 mc. FM	FM Antenna Terminals	300 ohms Carbon Res.	88 mc.	Adjust FM RF Coil See Note 3	Adjust for Maximum Output.

Before starting alignment, pointer must be set to 87.5 MC. mark with gang fully closed.

ALIGNMENT PROCEDURE

The following equipment is necessary to properly align this receiver:

1. AM signal generator with frequency coverage from 455 kc. to 1700 kc.
2. FM or CW signal generator covering the FM band from 87.25 mc. to 108.75 mc. and the 10.7 mc. frequency for FM IF alignment.
3. Vacuum Tube Voltmeter (VTVM).
4. Output meter—to match 4 ohms, 5 watts maximum.
5. Insulated alignment screwdriver.
6. Dummy antenna—0.1 mfd. capacitor, 300 ohm carbon resistor and inductive loop (fashioned from several turns of wire).

NOTE: Oscilloscope equipment not required if aligned according to the following procedure:

© John F. Rider

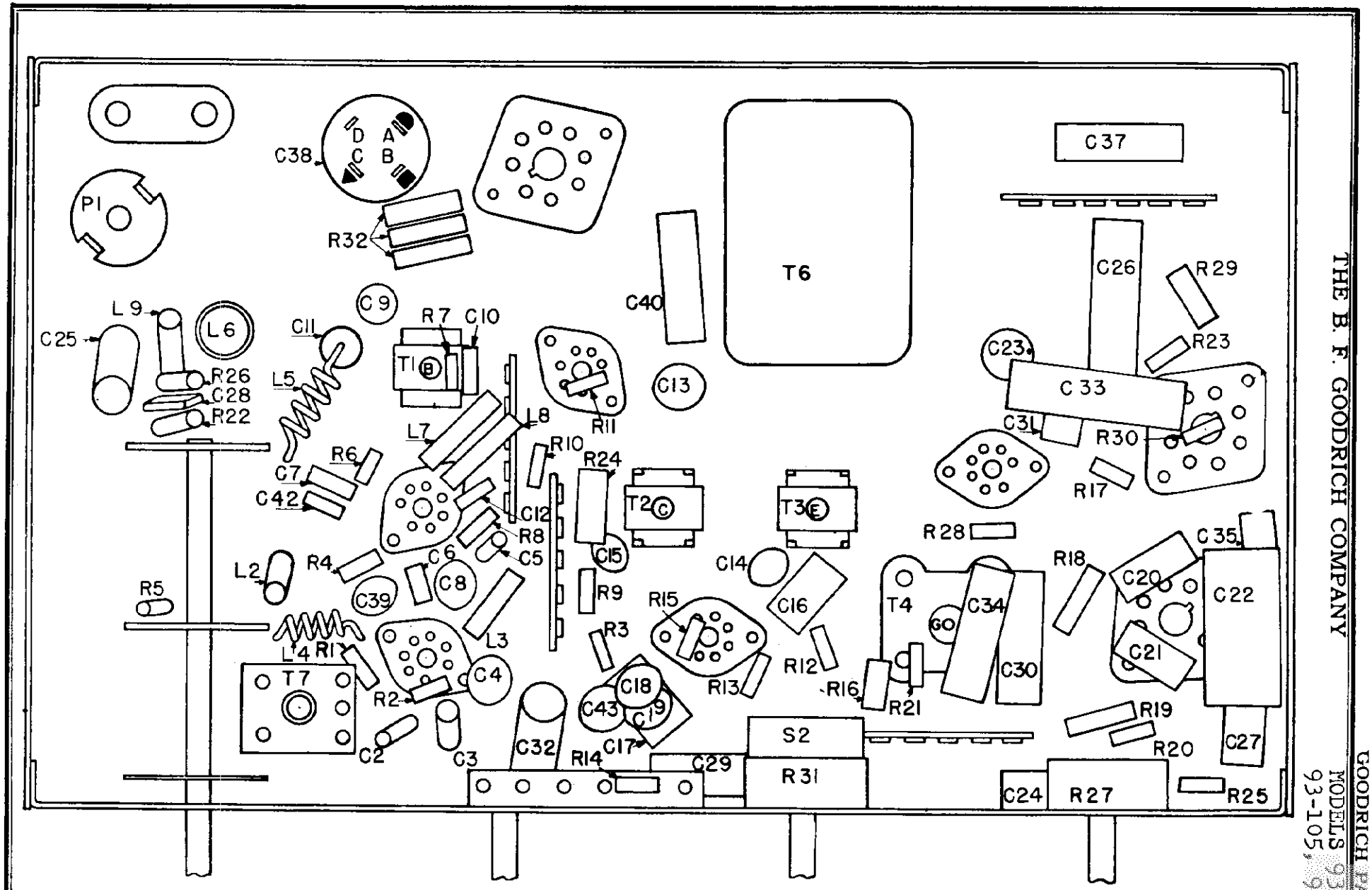

BOTTOM VIEW — PARTS LAYOUT

MODELS 93-104, 93-105, 93-106

THE B. F. GOODRICH COMPANY

SERVICE PARTS LIST

Symbol	Part No.	Description
		Cabinet, Mahogany
		Cabinet, Blonde
		Cabinet, Walnut
CI	1698	Capacitor, variable
C5		Capacitor, ceramic 18 mmf G.P.
C10		Capacitor, ceramic 25 mmf G.P.
C6, C7		Capacitor, ceramic 50 mmf G.P.
C3		Capacitor, ceramic 100 mmf G.P.
C2		Capacitor, ceramic 1000 mmf G.P.
C4, C8, C9 C13, C14, C15, C18, C19, C23, C39, C43		Capacitor, ceramic 5000 mmf G.P.
C12		Capacitor, ceramic 500 mmf G.P.
C42		Capacitor, ceramic 5mmf (—750 P.M.)
C20, C21, C28		Capacitor, Mica 220 mmf
C16, C17, C31		Capacitor, Mica 100 mmf
C29, C26, C33, C32		Capacitor, Paper .05 MFD 400 V.
C40, C30, C34, C25		Capacitor, paper .01 MFD 400 v.
C35		Capacitor, paper .005 mfd 400 v.
C22		Capacitor, electrolytic 8 mfd 50 v.
C38a, C38b, C38c, C38d	20120	Capacitor, electrolytic 10, 40, 40 mfd 300 v. 25 mfd 25 v.
C11	1985	Capacitor, mica 500 mmf
C24		Capacitor, paper .001 mfd 400 v.
C27		Capacitor, paper .02 mfd 400 v.
C37		Capacitor, oil .05 mfd 400 v.
L2, L9, L7, L8	28229	Choke, filament
L3	28242	Choke, plate
L6	28244	Coil, B.C. Osc.
L5	28221	Coil, F.M. Osc.
L4	28222	Coil, F.M. R.F.
R-27	2494	Control, volume ½ meg
R-31	2522	Control, tone, w/switch .25 meg
	5592	Cord, power
	4278	Dial crystal
	54503	Holder, dial crystal
	39184-1	Knob, Mahogany (selector)
	39183-1	Knob, Mahogany (volume, tone, tuning)
	39183-2	Knob, Walnut (volume, tone, tuning)
	39184-2	Knob, Walnut (selector)
	39184-3	Knob, White (selector)
	39183-3	Knob, White (volume, tone, tuning)
L1	28243	Loop, antenna
	41111	Pointer, dial
R1		Resistor 1 meg ohm ¼ w.
R5, R20, R30		Resistor 470,000 ohms ¼ w.
R6, R13, R21, R25		Resistor 22,000 ohms ¼ w. 10%
R7		Resistor 27,000 ohms ¼ w. 10%
R10, R14		Resistor 2.2 meg ohms ¼ w.
R4		Resistor 10 ohms ¼ w. 10%
R2, R11, R15		Resistor 68 ohms ¼ w.
R18, R19		Resistor 6800 ohms ¼ w. 10%
R3, R8		Resistor 4700 ohms ¼ w.
R28		Resistor 10 meg ohms ¼ w.
R29		Resistor 390 ohms 1 w. 10%
R17		Resistor 220,000 ohms ¼ w.
R12		Resistor 8200 ohms ½ w.
R24		Resistor 15,000 ohms 1 w.
R23		Resistor 100,000 ohms ¼ w.
R32		Resistor 1100 ohms 7 w. 10%
R22		Resistor 47,000 ohms ¼ w.
R26		Resistor 1.5 meg ohms ¼ w.
R16		Resistor 6800 ohms 1 w.
R9		Resistor 3300 ohms ¼ w.
	54523	Shaft, dial drive
	18149	Socket, dial light
	18150	Socket, miniature
		Socket, octal
P1	18104	Socket, Phono
	58112	Speaker, 10" P.M.
	54335	Spring, dial cable
S1	3797	Switch, band
T1	3382	Transformer, A.M., F.M. I.F.
T2	3381	Transformer, F.M. I.F.
T3	3383	Transformer, A.M. I.F.
T7	28239	Transformer, antenna
T4	3539	Transformer, Discriminator
T5	1349	Transformer, output
T6	1092	Transformer, power
C41		Trimmer, F.M.



TUBE LOCATION

ANTENNA—A built-in loop and folded dipole antennas are provided for reception of AM and FM stations, which eliminate the need for external antennas in the average installation.

If this receiver is installed where reception is poor, separate antennas may be desirable for AM and/or FM reception. For AM reception, a single wire antenna 25 to 100 feet long can be attached to the external antenna clip located near the center of the AM antenna loop fastened to the center panel of the radio compartment. For FM reception, an external dipole antenna can be connected to the right-hand pair of antenna terminals located on the back of the radio chassis (after removing the leads from the cabinet dipole antenna).

GROUND—A ground connection is not required for installation of this receiver.

INSTALLATION

GENERAL—Operate this receiver on 117 volt, 60 cycle alternating current (AC) only.

Before connecting the plug to an electrical outlet, be sure that all the packing material is removed from the set. See that the record changer is floating freely on its mountings.

Be sure that all tubes are firmly seated in their sockets as shown in the tube layout illustration.

© John F. Rider

MODELS 93-107, 93-108

THE B. F. GOODRICH COMPANY

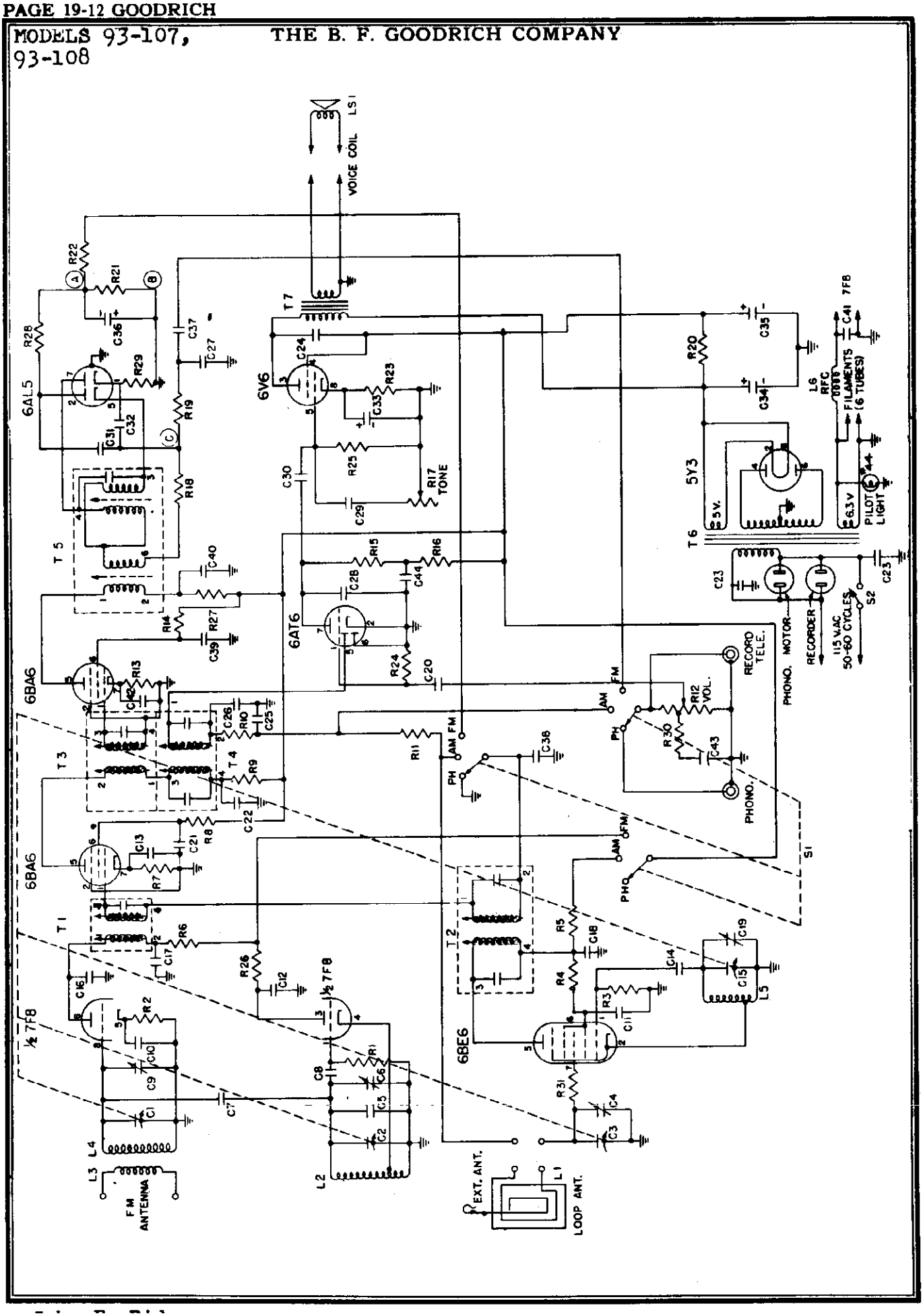

THE B. F. GOODRICH COMPANY

MODELS 93-107, 93-108

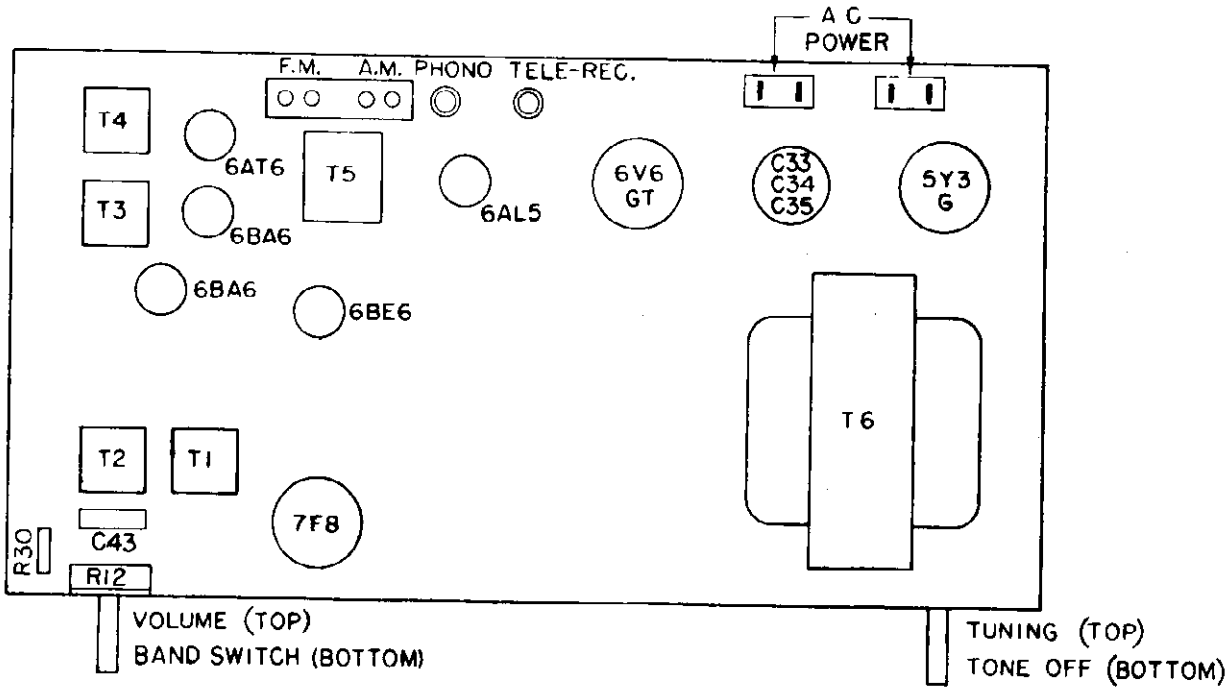

TOP VIEW OF CHASSIS

ELECTRICAL AND MECHANICAL DATA

Frequency Range (AM) 535 KC to 1650 KC
(FM) 88 MC to 108 MC
Intermediate Frequency .....(AM) 455 KC, (FM) 10.7 MC
Power Supply ..... 117 volts AC, 60 cycles

Speaker .....10-inch PM
V.C. Impedance .....3.2 ohms at 400 cycles
Power output (Undistorted) .....3.5 watts
Power output (Maximum) .....5 watts

TUBE COMPLEMENT

1	7F8	FM Oscillator—Converter	1	6AL5	FM Detector
1	6BE6	AM Oscillator—Converter	1	6AT6	AM Detector—AVC 1st Audio (AM-FM)
1	6BA6	AM-FM 1st IF Amplifier	1	6V6GT	Power Output
1	6BA6	FM 2nd IF Amplifier	1	5Y3GT	Rectifier

SOCKET VOLTAGES

Tube	Position	1	2	3	4	5	6	7	8	Band Switch
7F8	FM Osc.—Conv.	—2*	0	230	0	4	240	6.3 AC	0	FM
6BE6	AM Osc.—Conv.	—12*	0	0	6.3 AC	230	120	0	—	AM
6BA6	FM-AM IF	—0.8*	0	0	6.3 AC	230	95	1	—	FM
6BA6	FM 2nd IF	0	0	0	6.3 AC	230	85	1	—	FM, AM
6AT6	AM Det.- 1st AF	—1.5*	0	0	6.3 AC	—2.7*	0	100	—	AM
6AL5	FM Disc.	0	—1*	0	6.3 AC	—0.5*	NC	—0.5*	—	FM
6V6GT	AF Output	0	0	280	250	0	NC	6.3 AC	14	FM, AM
5Y3GT	Rect.	—	5V AC to pin 8	NC	260 AC	NC	260 AC	NC	300	FM, AM

All voltages measured to chassis unless otherwise noted.
DC voltages measured with 20,000 ohm/volt meter.
All voltages DC unless otherwise noted.

All measurements made with no signal input to receiver.
* Must be measured with VTVM with 100,000 ohm composition resistor in series with probe.

CHASSIS REMOVAL—Remove the receiver power cord from the electrical outlet before starting to remove the chassis.

1. Close the tuning condenser by setting to the low end of the band.
2. Remove the four knobs by pulling.
3. Disconnect loop and dipole leads from their respective chassis terminals.
4. Pull the phono-motor plug from the chassis socket.
5. Pull out the phono-pickup plug.
6. Unsolder the speaker leads at the speaker.
7. Remove the four long chassis bolts and slide the chassis out.

NOTE: When reinstalling the chassis, hold the wooden chassis blocks against the chassis and slide the chassis and blocks into the cabinet. The tuning condenser should also be kept closed when handling the chassis.

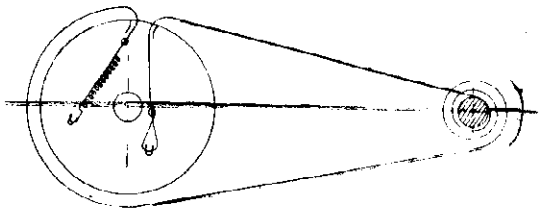

DIAL STRINGING

ALIGNMENT PROCEDURE

The following equipment is necessary to properly align this receiver.

1. AM signal generator, 455 kc to 1650 kc.
2. FM or CW signal generator covering the FM band from 88 mc. to 108 mc. and 10.7 mc. for FM IF.
3. Vacuum Tube Voltmeter (VTVM).
4. Output meter.
5. Insulated alignment screwdriver.
6. Dummy antennas—0.1 mfd. capacitor and two 150 ohm composition resistors.
7. Two 100,000 ohm ± 10% composition resistors for ratio detector alignment.

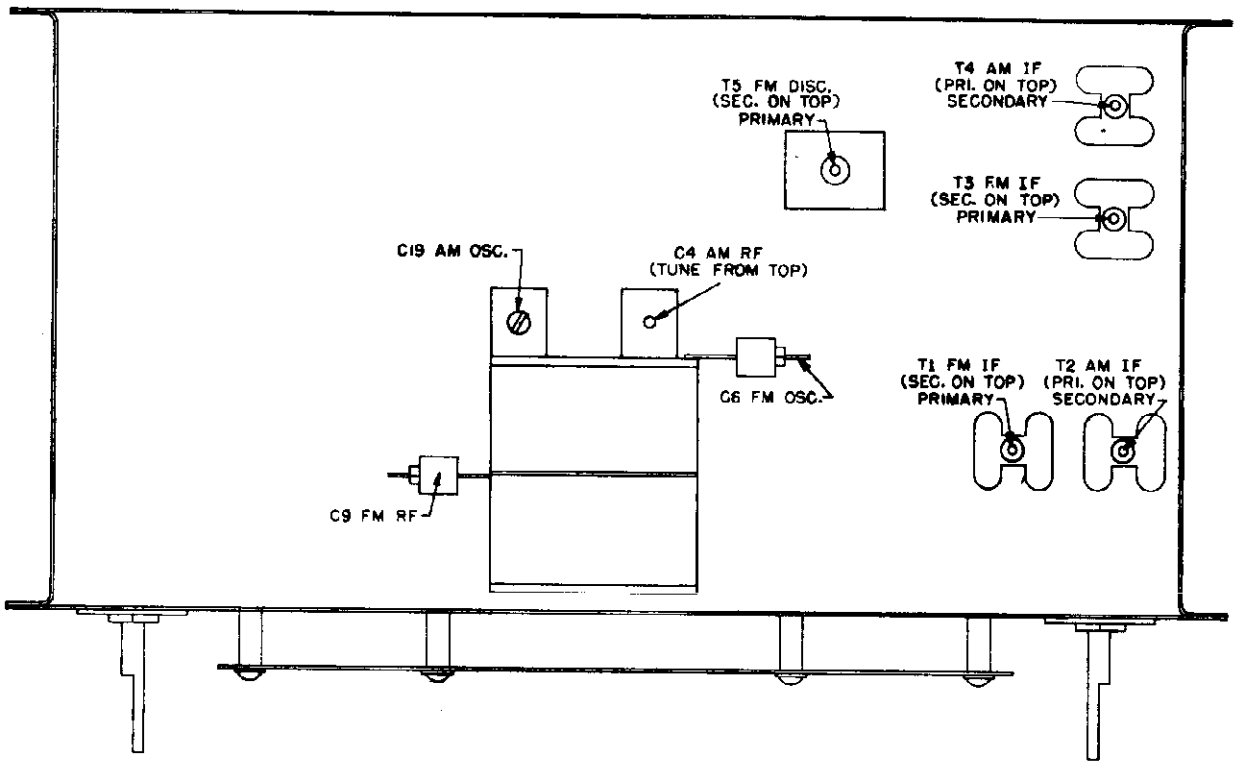

TRIMMER LOCATION—BOTTOM VIEW

Notes on Alignment

1—Before beginning alignment, the pointer must be set at the highest mark on the dial with the tuning condenser fully open.

2—The AM section should be completely aligned before beginning the FM alignment.

3—The set should be allowed to warm up 15 minutes before aligning.

4—An output meter should be connected across the speaker voice coil for AM alignment. Keep the volume control at maximum on AM and use as low a signal input as possible for AM and FM.

5—For AM and FM tracking, bend plates of the variable (RF Section) as required.

6—In FM alignment, care must be taken to set the receiver oscillator frequency 10.7 MC *above* the incoming signal frequency.

7—The dummy antenna for FM alignment is two 150 ohm composition resistors; one in series with each generator lead.

RATIO DETECTOR ALIGNMENT

(T1 and T3 should be tuned before tuning T5.)

TUNING T5 PRIMARY

Locate the ratio detector test points A, B, and C on the schematic diagram. Solder two 100,000 ohm composition resistors in series from point "A" to chassis. Connect a VTVM from point "A" to chassis and feed 10.7 MC CW into the FM antenna terminals. Adjust T5 primary (bottom slug) for maximum reading, setting the generator output to give about one volt meter reading. (An insulated aligning tool should be used for this adjustment.)

TUNING T5 SECONDARY

Connect the VTVM probe to point "C" and the VTVM common or ground lead to the junction of the two 100,000 ohm resistors. Tune T5 secondary until the meter reading reverses polarity. Set the slug at this zero point.

CHECKING BAND WIDTH

Connect the signal generator to the grid of the 2nd FM IF tube. Set the generator to 100,000 microvolts at 10.7 MC CW. Shift the generator frequency above and below 10.7 MC and record the frequencies at which the maximum positive and negative meter readings are obtained. The difference between these two readings is the bandwidth of the ratio detector and should be 250 to 300 KC.

Remove the two 100,000 ohm resistors before beginning the FM RF alignment.

ALIGNMENT CHART

STEP NO.	BAND SWITCH POSITION	SIGNAL GENERATOR	CONNECTION TO RECEIVER	DUMMY ANTENNA	DIAL SETTING	ADJUST	REMARKS
1	AM	455 KC Mod.	6BE6 Conv. Grid Pin 7	0.1 mfd	1600 KC	T2 Pri., Sec., T4 Pri., Sec.	Adjust for Max. output
2	AM	1600 KC Mod.	Ext. Antenna Clip	0.1 mfd	1600 KC	C19 BC Osc. Trimmer	Adjust for Max. output
3	AM	1400 KC Mod.	Ext. Antenna Clip	0.1 mfd	1400 KC	C4 BC RF Trimmer	Adjust for Max. output
4	AM	600 KC Mod.	Ext. Antenna Clip	0.1 mfd	600 KC	See Note 5	See Note 5
5	FM	10.7 MC CW	FM Ant. Terminals	0.1 mfd	107 MC	T1 Pri. & Sec., T3 Pri. & Sec.; T5 Pri. only	Tune for Max. reading, VTVM from point A to chassis. See Ratio Detector Alignment.
6	FM	10.7 MC CW	FM Ant. Terminals	0.1 mfd	107 MC	T5 Sec.	Tune for Zero reading, VTVM from resistor junction to point C. See Ratio Detector Alignment
7	FM	107 MC CW	FM Ant. Terminals	300 ohms See Note 7	107 MC	C6 FM Osc. Trimmer	Adjust for Max. with VTVM from point A to chassis. See Note 6.
8	FM	107 MC CW	FM Ant. Terminals	300 ohms	107 MC	C9 FM RF Trimmer	Adjust for Max. with VTVM from Point A to chassis.
9	FM	98 MC CW	FM Ant. Terminals	300 ohms	98 MC	See Note 5	Adjust for Max. with VTVM from Point A to chassis.
10	FM	88 MC CW	FM Ant. Terminals	300 ohms	88 MC	See Note 5	Adjust for Max. with VTVM from Point A to chassis.

MODELS 93-107, 93-108

THE B. F. GOODRICH COMPANY

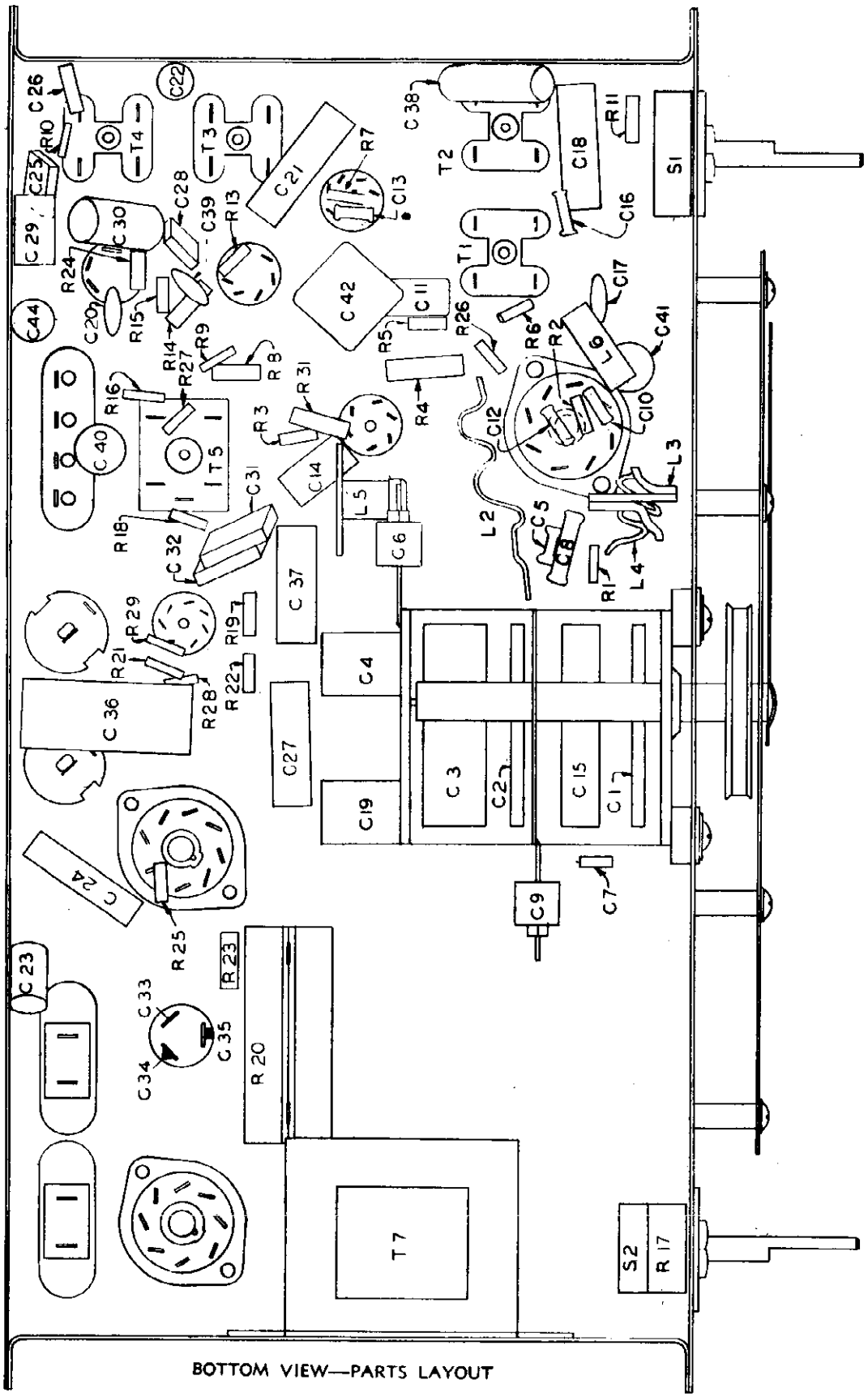

BOTTOM VIEW—PARTS LAYOUT

THE B. F. GOODRICH COMPANY

MODELS 93-107, 93-108

SERVICE PARTS LIST

Symbol	Description	Part Number
C1, C2, C3, C15	Capacitor, 4 Section Variable	4410
C4, C19	Capacitor, Trimmer (A.M. Section)	4313
C6, C9	Capacitor, Trimmer (F.M. Section)	4318
C5	Capacitor, 5 MMF. ±10% N750 Ceramic	4028
C7	Capacitor, 1.5 MMF ±10% Mica	4024
C8	Capacitor, 22 MMF. ±10% N150 Ceramic	4021
C10,C12,C13, C42	Capacitor, 1000 MMF. Ceramic Hi-K	4025
C11,C18,C21, C22, C23	Capacitor, .01 MFD. 400V Paper	4112
C14, C26	Capacitor, 100 MMF. ±20% Mica	4000
C16	Capacitor, 10 MMF. ±10% Ceramic	4027
C17,C20,C39, C40, C41	Capacitor, 5000 MMF. Ceramic Hi-K	4029
C25	Capacitor, 470 MMF. ±20% Mica	4003
C27, C24	Capacitor, .002 MFD. 600V. Paper	4118
C28, C31,C32	Capacitor, 270 MMF. ±20% Mica	4001
C29	Capacitor, .005 MFD. 600V. Paper	4102
C30, C44	Capacitor, .05 MFD. 400V. Paper	4101
C33	Capacitor, 20 MFD. 25V. Electrolytic	4200
C34, C35	Capacitor, 20 MFD. 450V. Electrolytic	4200
C36	Capacitor, 5 MFD. 50V. Electroltic	4209
C37, C43	Capacitor, .02 MFD. 400V. Paper	4106
C38	Capacitor, .05 MFD. 200V. Paper	4100
R1, R3	Resistor, 22,000 OHM ±20% Composition ½ WATT	4501
R2	Resistor, 1200 OHM ±10% Composition ½ WATT	4553
R4	Resistor, 15,000 OHM ±20% Composition 1 WATT	4539
R5, R6, R9, R26, R27	Resistor, 1500 OHM ±20% Composition ½ WATT	4534
R7, R13	Resistor, 68 OHM ±20% Composition ½ WATT	4524
R8, R14	Resistor, 33,000 OHM ±20% Composition 1 WATT	4556
R10, R19	Resistor, 47,000 OHM ±20% Composition ½ WATT	4504
R11	Resistor, 2.2 MEG. ±20% Composition ½ WATT	4502
R12	Resistor, .5 MEG. Tapped Potentiometer (Vol.)	4814
R15,R16,R22	Resistor, .22 MEG. ±20% Composition ½ WATT	4500
R17	Resistor, .5 MEG. Potentiometer w/switch (Tone)	4812
R18	Resistor, 120 OHM ±10% Composition ½ WATT	4546
R20	Resistor, 1500 OHM ±5% w.w. 6½ WATT	4701
R21	Resistor, 15,000 OHM ±20% Composition ½ WATT	4521
R23	Resistor, 400 OHM ±10% Composition 1 WATT	4587
R24	Resistor, 4.7 MEG. ±20% ½ WATT	4544
R25	Resistor, .47 MEG. ±20% ½ WATT	4506
R28, R29	Resistor, 560 OHM ±10% ½ WATT	4507
R30	Resistor, 6800 OHM ±10% ½ WATT	4557
L1	Loop Antenna (A.M.)	5279
L2	Oscillator Coil (F.M.)	5247
L3	Antenna Primary (F.M.)	5258
L4	Antenna Secondary (F.M.)	5248
L5	Oscillator Coil (A.M.)	5282
L6	Filament Choke	5266
LS1	Loudspeaker 10" (P.M.)	9054
T1	1st F.M. I.F. Transformer	5284
T2	1st A.F. I.F. Transformer	5286
T3	2nd F.M. I.F. Transformer	5285
T4	2nd A.F. I.F. Transformer	5287
T5	Discriminator Ratio Detector	5288
T6	Power Transformer	5012
T7	Output Transformer	5122
S2	On-Off Switch (Part of R17)	
S1	Band Switch	6002
	Cabinet, Blonde	7529 Blonde
	Cabinet, Mahogany	7529 Mahog.
	Dial	2217B
	Escutcheon (with crystal attached)	8084
	Knob, Blonde	3585B
	Knob, Mahogany	3585M
	Plug, Phono	6203
	Pointer, dial	518
	Socket, loctal	6105
	Socket, miniature	6118
	Socket, octal	6103
	Socket, phono	6121
	Socket, pilot lamp	6110
	Socket, AC power	6108
	Spring, dial cable	9507
	Strip, antenna terminal	424

NOTE: In some cases the following substitutions have been made:
C24 is two .001 MFD. 600V in parallel.
C27 is two .001 MFD. 600V in parallel.
C42 is 1050 MMF. ±5% Mica.
R8 and R14 are each 47,000 ohm ±20% 1 Watt.
R23 is two 820 ohm ±10% ½Watt in parallel.

MODELS 92503, 92504

THE B. F. GOODRICH COMPANY

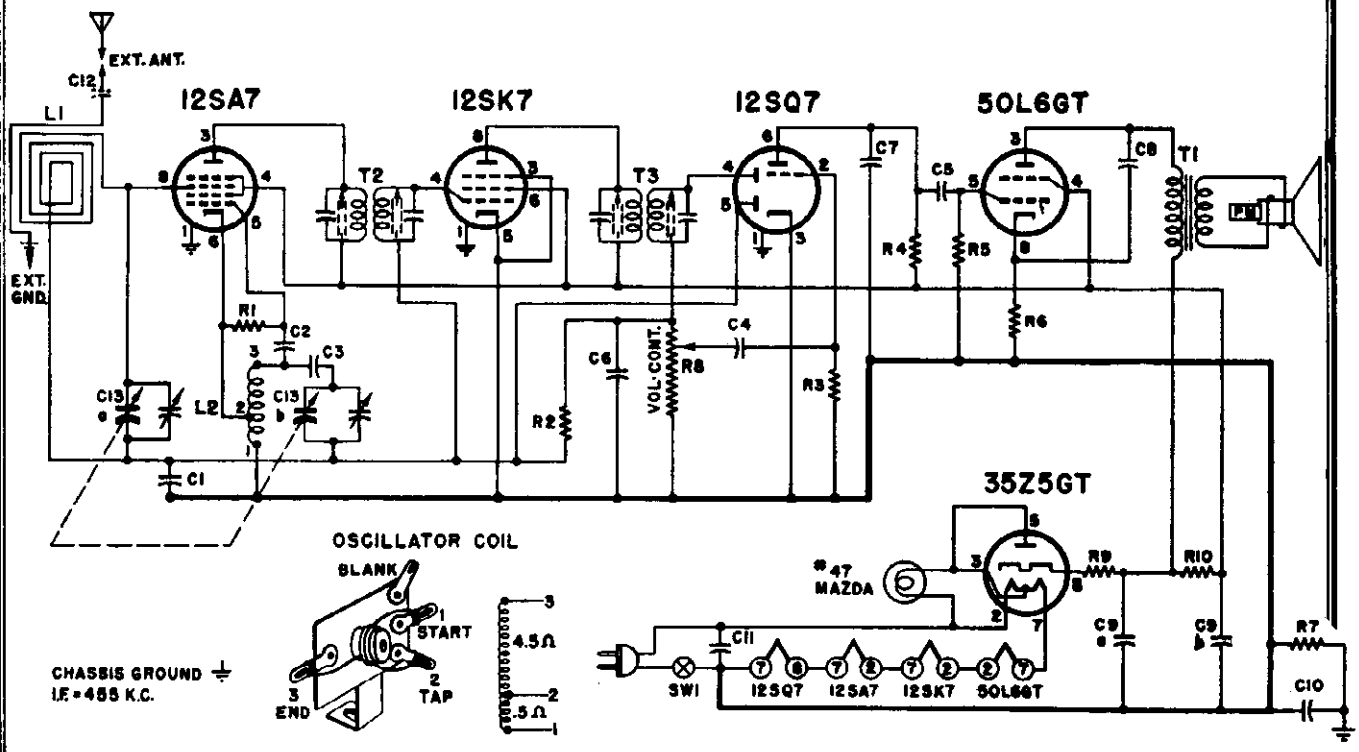

REPLACEMENT PARTS

RESISTORS

Symbol		Part No.
R1	22,000 Ohms, ½ Watt	60B 8-223
R2	1 Megohm, ½ Watt	60B 8-105
R3	47 Megohms, ½ Watt	60B 8-475
R4	220,000 Ohms, ½ Watt	60B 8-224
R5	470,000 Ohms, ½ Watt	60B 8-474
R6	150 Ohms, ½ Watt	60B 8-151
R7	150,000 Ohms, ½ Watt	60B 8-154
R8	1 Megohm Volume Control and Switch SW1	75B 1-6
R9	33 Ohms, 1 Watt	60B 28-3
R10	1,000 Ohms, 1 Watt	60B 28-2

CONDENSERS

Symbol		Part No.
C1	.1 mfd., 200 Volts, Paper	64B 1-30
C2	50 mmfd., Mica	65B 7-11
C3	.02 mfd., 400 Volts, Paper	64B 1-24
C4	.01 mfd., 400 Volts, Paper	64B 1-25
C5	.01 mfd., 400 Volts, Paper	64B 1-25
C6	250 mmfd, Mica	65B 7-22
C7	500 mmfd., Mica	65B 7-27
C8	.02 mfd., 400 Volts, Paper	64B 1-24
C9a	50 mfd., 150 Volts, Elect.	67A 10
C9b	30 mfd., 150 Volts, Elect.	
C10	.18 mfd., 200 Volts, Paper	64A 2-2
C11	.05 mfd., 400 Volts, Paper	64B 1-22
C12	.005 mfd., 600 Volts, Paper (Used in early production only)	64B 1-12
C13a	0 to 420 mmfd., R.F. Section	Gang 68A 18
C13b	0 to 108 mmfd., Osc. Section	

COILS & TRANSFORMERS

L1	Loop Antenna	69C 44
L2	Oscillator Coil	68A 43
T1	Transformer, Output	98A 4
T2	Transformer, 1st I.F.	72B 50
T3	Transformer, 2nd I.F.	72B 51

MISCELLANEOUS

Description	Part No.
Background, Dial	X22C 3-1
Bracket, Loop Retainer	15A 14
Cabinet, Ivory (Model 92503)	34D 5-1
Cabinet, Mahogany (Model 92504)	34D 5-2
Clip, Dial Glass Mounting	18A 2
Cord, Dial (62")	50A 1-3
Cover, Back and Loop Antenna	69C 44
Dial Scale, Glass	21B 8-2
Drum and Hub Assembly, Dial	A1012
Knob, Ivory (Model 92503)	33A 7-1
Knob, Mahogany (Model 92504)	33A 7-2
Pilot Light No 47	81A 1-8
Pilot Light Socket and Leads	82A 2-4
Pointer, Metal Dial	25A 4-1
Pulley, Fibre Dial	17A 1-3
Shaft, Tuning	28A 1-1
Socket, Laminated Octal Tube	87A 10-2
Speaker (5" PM) and Output Trans.	76B 4-4
Spring, Dial Cord Tension	19B 1-3
Washer, Fibre Flat	5A 1-6
Washer, Fibre Offset	5A 2-5
Washer, C	4A 4-6
Washer, Spring	4A 6-3-0

VOLTAGE DATA

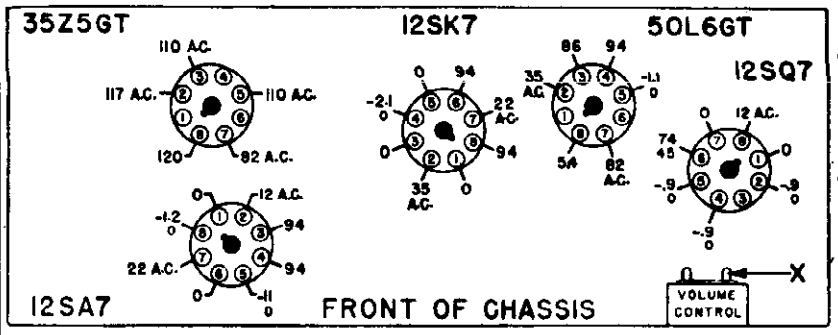

- Readings made between point indicated and Volume Control Lug (Point "X" on drawing).
- Measured on a 117 Volt A.C. line.
- Dial turned to low frequency end, no signal.
- Measured with vacuum tube voltmeter. A second voltage reading is shown made with a 1000 ohm - per-volt meter when use of this instrument would result in appreciably lower readings.

Bottom View of Chassis, Showing Voltages

ALIGNMENT PROCEDURE

- Check setting of Pointer Extremes and note correct 600 K.C. and 1400 K.C. positions on Dial Background. (See Dial Diagram.)
- Connect the signal generator ground lead through a .1 mfd. condenser to B— (point "X" on voltage chart).
- Connect Output Meter across Voice Coil of Speaker.
- Turn Receiver Volume Control full on.
- Use lowest Output setting of Signal Generator capable of producing adequate Output Meter indication and then proceed as outlined in chart below.
- Repeat adjustments to insure good results.

TOP VIEW TUBE AND TRIMMER LOCATION

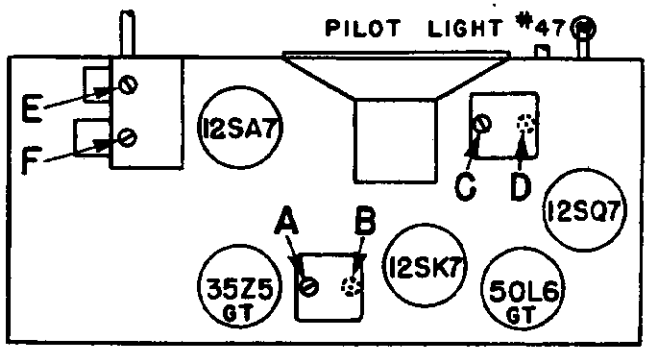

BACK OF CHASSIS

Connect Signal Generator to—	*Dummy Antenna Between Radio and Generator*	*Set Generator Frequency to—*	*Set Receiver Dial Frequency to—*	*Adjust Following Trimmers*	*Type of Adjustment*
Tuning Condenser Antenna Stator	250 mmfd. Condenser	455 KC.	High frequency end of Dial	C—D 2nd I. F. A—B 1st I. F. (See note below)	Adjust to maximum Output
Tuning Condenser Antenna Stator	250 mmfd. Condenser	1630 KC.	High frequency end of Dial	E—Oscillator	Adjust to maximum Output
Loop radiator (or place pickup lead from generator close to loop of set to obtain adequate signal).	No actual connection between set and generator.	1400 KC.	Tune in generator signal	F—Antenna	Adjust to maximum Output

NOTE: The B and D adjustments are made from the underside of the chassis.

POWER SUPPLY

This receiver is designed to operate from any AC (Alternating Current) power supply main of 110-120 volts, 50-60 cycles or DC (Direct Current) power supply main of 110-120 volts. If the receiver fails to operate on DC (Direct Current), reverse the power line plug.

On AC only the line plug should be tried both ways and left in the position that gives minimum hum.

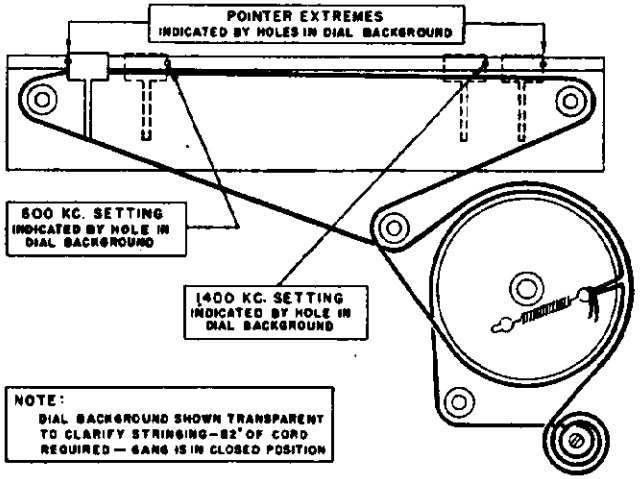

DIAL STRINGING AND POINTER SETTINGS

MODELS 92505, 92506

THE B. F. GOODRICH COMPANY

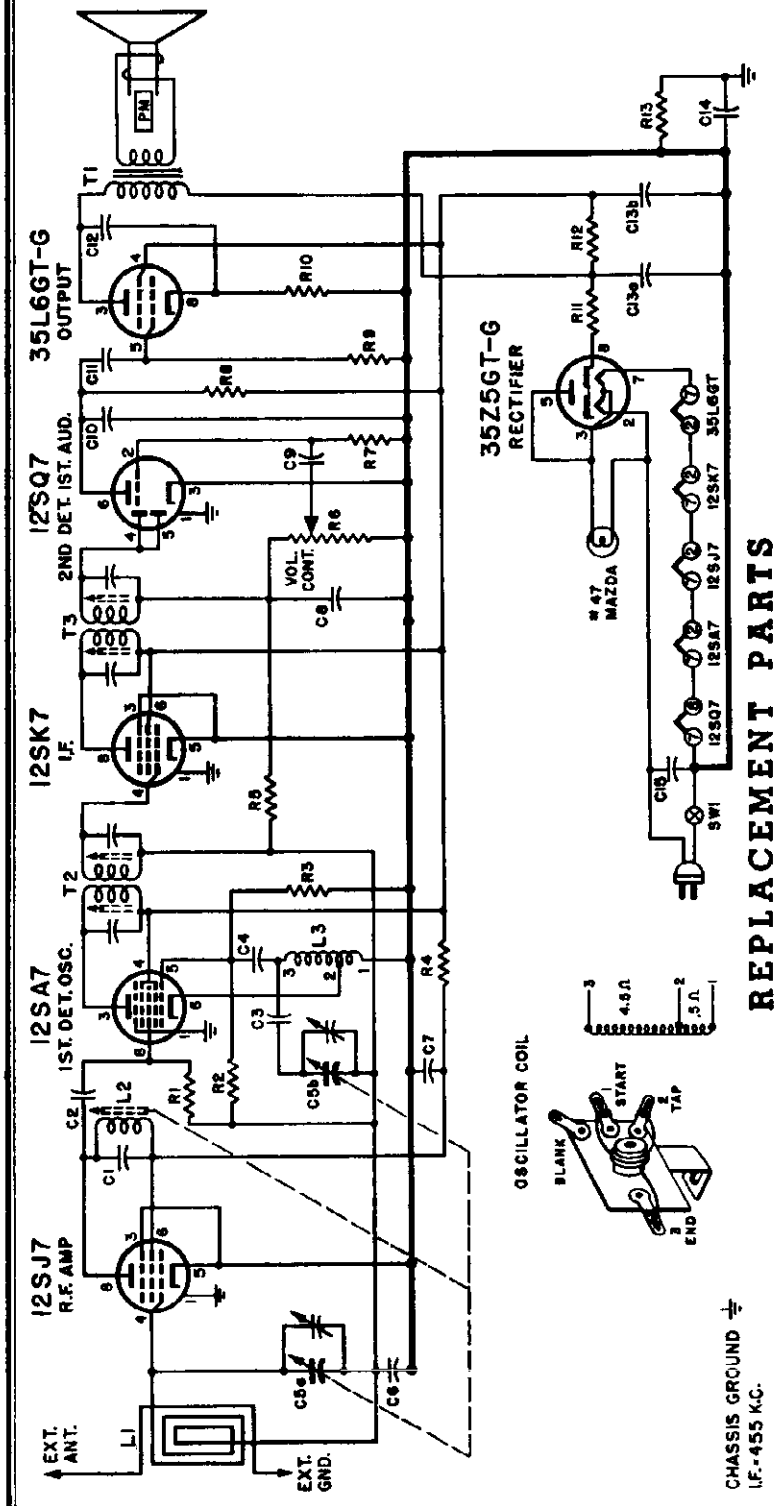

REPLACEMENT PARTS

RESISTORS

Symbol		Part No.
R1	10,000 Ohms, ½ Watt	60B 8-103
R2	10 Megohms, ½ Watt	60B 8-106
R3	22,000 Ohms, ½ Watt	60B 8-223
R4	100 Ohms, ½ Watt	60B 8-101
R5	1 Megohm, ½ Watt	60B 8-105
R6	½ Megohm, Volume Control & Switch	75B 1-6
R7	4.7 Megohms, ½ Watt	60B 8-475
R8	270,000 Ohms, ½ Watt	60B 8-274
R9	470,000 Ohms, ½ Watt	60B 8-474
R10	150 Ohms, ½ Watt	60B 8-151
R11	33 Ohms, 1 Watt	60B 28-3
R12	1,000 Ohms, 1 Watt	60B 28-2
R13	150,000 Ohms, ½ Watt	60B 8-154

CONDENSERS

Symbol		Part No.
C1	785 mmfd., ±5%, Silver Mica	65B 1-8
C2	250 mmfd., Mica	65B 7-22
C3	.02 mfd. 400 Volts, Paper	64B 1-24
C4	50 mmfd., Mica	65B 7-11
C5a	0 to 420 mmfd. } Gang	68A 18
C5b	0 to 108 mmfd. }	
C6	.1 mfd., 200 Volts, Paper	64B 1-30
C7	.05 mfd., 400 Volts, Paper	64B 1-22
C8	250 mmfd., Mica	65B 7-22
C9	.01 mfd.,400 Volts, Paper	64B 1-25
C10	500 mmfd., Mica	65B 7-27
C11	.01 mfd., 400 Volts, Paper	64B 1-25
C12	.02 mfd., 400 Volts, Paper	64B 1-24
C13a	50 mfd., 150 Volts } Elect.	67A 10
C13b	30 mfd., 150 Volts }	
C14	.18 mfd., 200 Volts, Paper	64A 2-2
C15	.05 mfd., 400 Volts, Paper	64B 1-22

COILS & TRANSFORMERS

		Part No.
L1	Loop Antenna	69C 44
L2	R.F. Coil and Mounting	A1052
L3	Oscillator Coil	69A 43
T1	Transformer, Output	98A 4
T2	Transformer, 1st I.F.	72B 50
T3	Transformer, 2nd I.F.	72B 51

MISCELLANEOUS

Description	Part No.
Background, Dial	X22C3-1
Bracket Plate, Loop Retainer	15A 14
Buttons, Snap (for R.F. Coil)	13A 1-2-2
Cabinet, Ivory (Model 92505)	34D 8-1
Cabinet, Mahogany (Model 92506)	34D 6-2
Clip, Dial Glass	18A 2
Cord, Dial	50A 1-3
Cover, Back (Incl. Loop Antenna)	68C 44
Dial Scale, Glass	21B 10-2
Drum and Cam Assembly	A1049
Knob, Mahogany (Model 92506)	33A 7-2
Knob, Ivory (Model 92505)	33A 7-1
Lever Arm Assembly (R.F.)	A1050
Pilot Light, No. 47	81A 1-8
Pilot Light Socket and Leads	82A 2-3
Pointer	25A 13-1
Pulley, Fibre; ⅛x½" OD	17A 1-3
Screw, Set; 8/32x⅛" (Dial Drum)	1A 5-58
Shaft, Tuning	28A 1-1
Slug, R.F. Iron Core (with wire)	71B 1-2
Socket, Octal Tube	87A 10-2
Speaker (5" PM) and Transformer	78B 4-4
Spring, Tension (Dial)	19B 1-3
Spring, Lever Arm (R.F.)	19A 4
Spacer, T (R.F.)	28A 2-3-21
Stud, Slug Adj. (R.F.)	27A 4
Washer, C (Tuning Shaft)	4A 4-6
Washer, Spring (Tuning Shaft)	4A 6-3-0

THE B. F. GOODRICH COMPANY

MODELS 92505, 92506

ALIGNMENT PROCEDURE

Check setting of Pointer Extremes and note correct 600 K.C. and 1400 K.C. positions on Dial Background. (See Dial Diagram.)

Connect Output Meter across Voice Coil of Speaker.

Turn Receiver Volume Control full on.

Use lowest Output setting of Signal Generator capable of producing adequate Output Meter indication and then proceed as outlined in chart below.

Repeat adjustments to insure good results.

TOP VIEW — TUBE & TRIMMER LOCATION

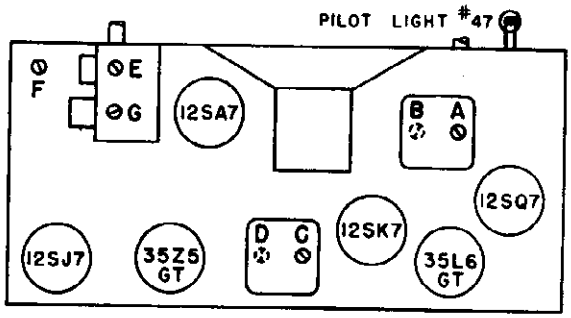

Connect Signal Generator To—	Dummy Antenna Between Radio and Generator	Set Generator Frequency To—	Set Receiver Dial Frequency To—	Adjust Following Trimmers	Type of Adjustment
12SA7 Control Grid	250 mmfd. Mica Condenser	455 KC.	High frequency end of Dial	A and B—2nd I. F. C and D—1st I. F. (See Note 1 below)	Adjust to maximum Output
External Antenna Wire on Loop	250 mmfd. Mica Condenser	1630 KC.	High frequency end of Dial	E—Osc.	Adjust to maximum Output
External Antenna Wire on Loop	250 mmfd. Mica Condenser	1400 KC.	Tune in Generator signal	F—R. F. (Iron Core)	See Note 2 Below
Loop radiator (or place lead from generator close to loop of set to obtain adequate signal).	No actual connection between set and generator.	1400 KC.	Tune in Generator signal	G—Ant.	Adjust to maximum Output

NOTE 1: The B and D adjustments are made from the underside of the chassis.

NOTE 2: Adjustment F is the threaded stud at the top end of the slug wire. Screw stud up or down in the bakelite for maximum output. Alignment is correct if the output is reduced when the position of the lever arm is changed slightly in either direction (up or down).

VOLTAGE DATA

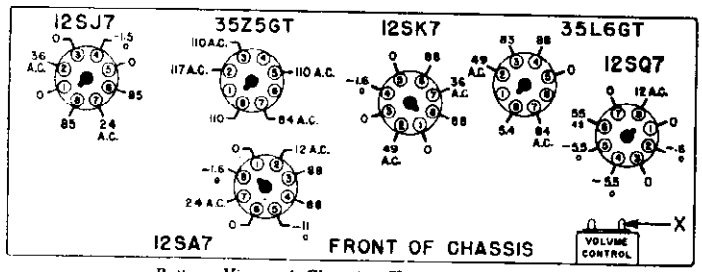

Bottom View of Chassis, Showing Voltages

- Readings made between point indicated and Volume Control Lug (Point "X" on drawing).
- Measured on a 117 Volt A.C. line.
- Dial turned to low frequency end, no signal.
- Measured with Vacuum Tube voltmeter.
- A second voltage reading is shown made with a 1000 ohm-per-volt meter when use of this instrument would result in appreciably lower readings.

DIAL DRUM POSITION

If the dial drum position is disturbed, it should be carefully re-positioned to insure correct tuning of the permeability tuned coil. With the gang fully meshed, the drum will be properly positioned if the center of the condenser shaft and the dial cable hole on the drum are in a straight line parallel to the chassis base. Note that the dial cable hole should be on the right side (looking at front) of the chassis.

R.F. SLUG POSITION

If the tuned coil slug needs replacing or re-positioning, first see that the dial drum is in its proper position. Then with the gang condenser fully meshed and the threaded stud half-way through the bakelite, note that the top of the slug is flush with the top of coil form. Then re-align.

POWER SUPPLY

This receiver is designed to operate from any AC (Alternating Current) power supply main of 110-120 volts, 50-60 cycles or DC (Direct Current) power supply main of 110-120 volts. If the receiver fails to operate on DC (Direct Current), reverse the power line plug.

On AC only the line plug should be tried both ways and left in the position that gives minimum hum.

DIAL STRINGING AND POINTER SETTINGS

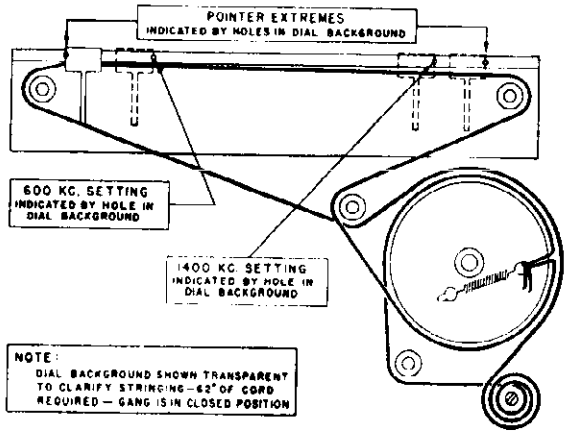

POWER SUPPLY

This receiver is designed to operate on either an A.C. or D.C. power supply. The following operation ratings should be observed:

Voltages ..... 105-125 Volts, A.C. or D.C.
Frequency ..... 50 to 60 cycles on A.C.

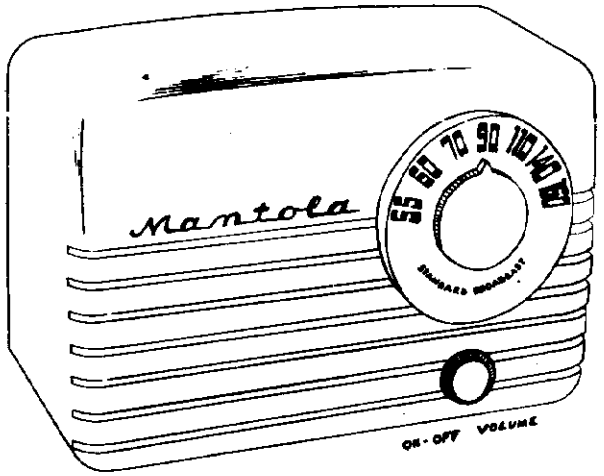

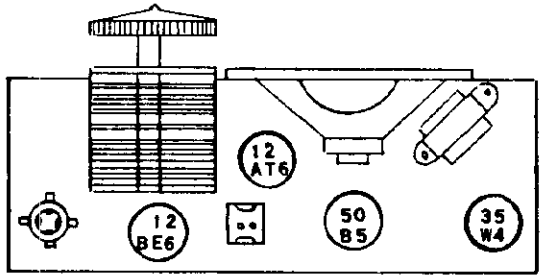

Remove back to replace tubes

ALIGNMENT PROCEDURE

- Output meter across 3.5 ohm output load.
- Volume control at maximum for all adjustments.
- Align for maximum output. Reduce input as needed to keep output near 0.4 volts.

SIGNAL GENERATOR				*SETTING TUNER*	*ADJUST TRIMMERS TO MAXIMUM OUTPUT (in order shown)*
Frequency	*Coupling Factor*	*Connection to Receiver*	*Ground Connection*		
455 kc	.1 mfd	12BE6 Grid	B—	Rotor full open (Plates out of mesh)	Input and output trimmers on IF cans
1620 kc	.1 mfd	12BE6 Grid	B—	Rotor full open (Plates out of mesh)	Oscillator trimmer T2
1400 kc	75 mmf	Hank	B—	1400 kc	Antenna trimmer T1

ELECTRICAL SPECIFICATIONS

Power Supply	105-125 Volts D.C. or 50-60 Cycles A.C. 30 Watts
Frequency Range	532.5 to 1620 kc.
Intermediate Freq.	455 kc.
Tuning	Two gang capacitor
Speaker	4 inch PM 3.5 ohm voice coil impedance
Power Output	1 watt undistorted 1.5 watt maximum
Sensitivity	800 Microvolts at 50 milli-watts Output
Selectivity	120 kc broad at 1000 times signal at 1000 kc.

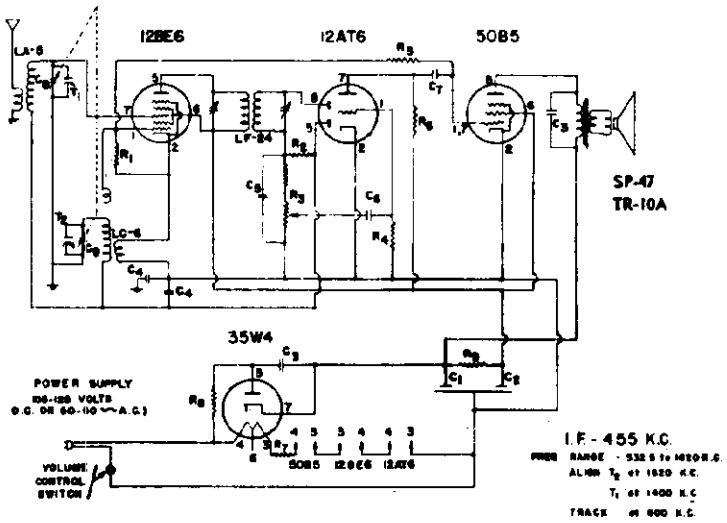

CHASSIS SERIES "AG"

REPLACEMENT PARTS LIST

Ref. No.	*Part No.*	*Description*
		CAPACITORS
C1, C2	CE-15	2 x 40 mfd 150V. Elect.
C3	CP203-1	.02 mfd 400V paper cond.
C4	CP503-4	.05 mfd 200V paper cond.
C5	CM151-1	.00015 mfd 500V paper cond.
C6	CP202-2	.002 mfd 400V paper cond.
C7	CP502-3	.005 mfd 200V paper cond.
C8, C9	CV-14	Variable Condenser (2 gang)
		RESISTORS
R1	RC183-2	18,000 ohms ½W 10%
R2	RC475-1	4.7 megohms ½W 20%
R3	VC-11	2 meg. vol. cont., 100 K Stop
R4	RC106-1	10 megohms ½W 20%
R5	RC334-1	330,000 ohms ½W 20%
R6	RC224-1	220,000 ohms ½W 20%
R7	RW390-5	39 ohms 1W 10%
R8	RC180-1	18 ohms ½W 20%
R9	RC222-5	2200 ohms 1W 10%
		COILS & TRANSFORMERS
	LA-5	Antenna Coil
	LC-6	Oscillator Coil
	*LF-24	I.F. Transformer
	TR-10A	Output Transformer
		MISCELLANEOUS
	CB-116	Cabinet (specify Ivory or Mahogany)
	KN-20-2	Knob
	KN-25-2	Pointer Knob
	SP-47	4" PM Speaker

MODELS 92516, 92517

THE B. F. GOODRICH COMPANY

POWER SUPPLY

This receiver is designed to operate on either an A.C. or D.C. power supply. The following operation ratings should be observed:

Voltages.....105 - 125 Volts, A.C. or D.C.

Frequency.....50 to 60 cycles on A.C.

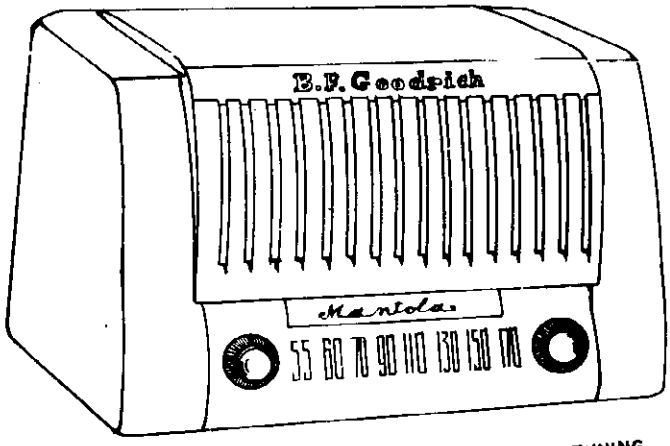

ALIGNMENT PROCEDURE

- Output meter across 3.5 ohm output load.
- Volume control at maximum for all adjustments.
- Align for maximum output. Reduce input as needed to keep output near 0.4 volts.

SIGNAL GENERATOR				*SETTING TUNER*	*ADJUST TRIMMERS TO MAXIMUM OUTPUT (in order shown)*
Frequency	*Coupling Factor*	*Connection to Receiver*	*Ground Connection*		
455 kc	.1 mfd	12BE6 Grid	B—	Rotor full open (Plates out of mesh)	Input and output trimmers on IF cans
1700 kc	.1 mfd	12BE6 Grid	B—	Rotor full open (Plates out of mesh)	Oscillator trimmer T2
1500 kc		Radiating Loop		1500 kc	Antenna trimmer T1

©John F. Rider

THE B. F. GOODRICH COMPANY

MODELS 92516, 92517

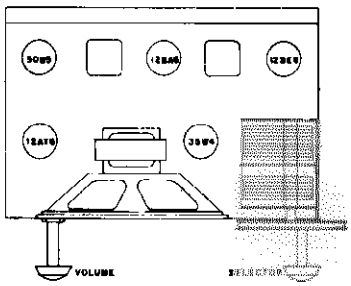

ELECTRICAL SPECIFICATIONS

Frequency Range ..... 530 to 1700 kc.

Intermediate Freq. ..... 455 kc.

Tuning ..... Two-gang capacitor

Antenna ..... Built-in loop

Speaker ..... 4 inch PM; voice coil Impedance

Power Output ..... .75 Watt Undistorted 1.2 Watt Maximum

Sensitivity ..... 300 microvolts per meter for 50 milliwatt output

Selectivity ..... 60 KC broad at 1000 times signal at 1000 KC.

REPLACEMENT PARTS LIST

Ref. No.	Part No.	Description
		CAPACITORS
C1, C2, C3	CE-11	3x20 mfd. 150V. Elect.
C4	CP-503-3	.05 mfd. 200 V. paper cond.
C5	CM-151-1	.00015 mfd. 500V. Mica cond.
C6	CP-202-4	.002 mfd. 200V. paper cond.
C7	CP-103-3	.01 mfd. 200V. paper cond.
C8	CP-203-1	.02 mfd. 400V. paper cond.
C9, C10	CV-13	Variable condenser (2-gang)
		RESISTORS
R1	RC-223-1	22,000 ohms ½W 20%
R2	RC-151-1	150 ohms ½W 20%
R3	RC-225-1	2.2 megohms ½W 20%
R4	RC-106-1	10 megohms ½W 20%
R5	RC-224-1	220,000 ohms ½W 20%
R6	RC-474-1	470,000 ohms ½W 20%
R7	RC-151-4	150 ohms 1W 20%
R8	RC-180-2	18 ohms ½W 10%
R9	RC-152-1	1,500 ohms ½W 20%
R10	VC-10	1 meg. vol. control, 100K Stop
		COILS & TRANSFORMERS
	LP-8	Loop Antenna
	LC-1	Oscillator Coil
	LF-14	I.F. Transformer
	TR-1	Output Transformer
		MISCELLANEOUS
	SP-43	4" P.M. Speaker
	PN-12	Pointer
	CR-2	Drive Cord
	SG-1	Spring for drive cord
	CB-115M	Cabinet (Mahogany)
	CB-115I	Cabinet (Ivory)
	KN-20	Knob (Specify Ivory or Mahogany)
	BK-27	Cardboard back

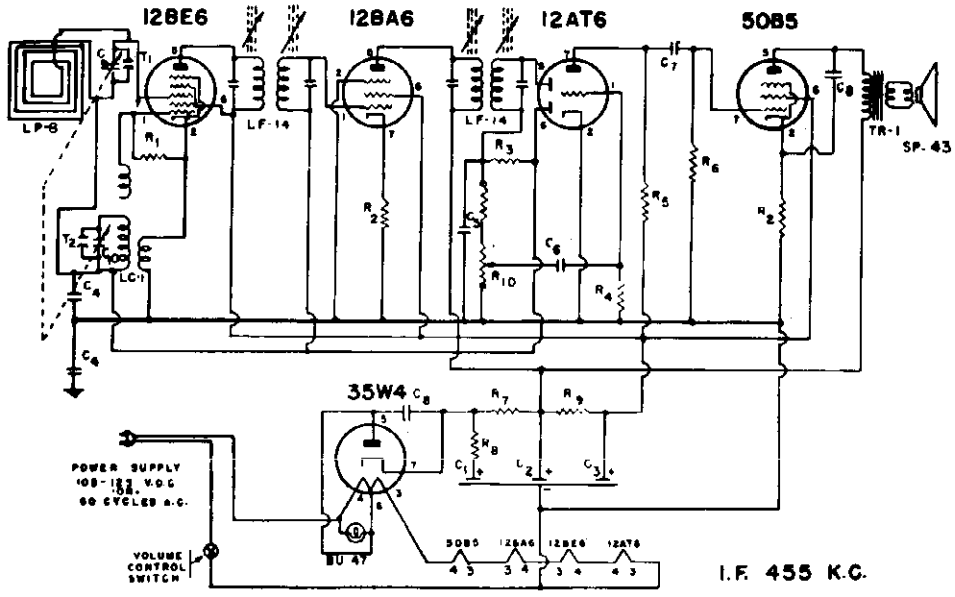

CHASSIS SERIES "AB"

MODEL 92752,
CHASSIS W

THE B. F. GOODRICH COMPANY

TUBES

Be sure each of the tubes is in place and inserted firmly in its socket.

The tube location of each tube is shown on the card attached to the back of the cabinet. Your receiver is equipped and tested at the factory with the tubes that are shipped with it.

POWER SUPPLY

This receiver is designed to operate on either an A.C. or D.C. power supply. The following operation ratings should be observed:

Voltages ..... 105 - 125 Volts, A.C. or D.C.

Frequency ..... 50 to 60 cycles on A.C.

If in doubt as to the voltage and frequency supplied to your home, telephone your local Power Company.

When operating on a D.C. source, it is necessary to insert the power plug with the proper polarity. If the set fails to function after an interval sufficient for the tubes to reach their operating temperature, reverse the power plug in the outlet.

The battery supply to be used with this receiver is as follows:

"A" supply ..... 7½ volts.
Use five type "D" flashlight cells.

"B" supply ..... 67½ volts.

Use B.F. Goodrich No. R35, Ray-O-Vac No. 4367 or equivalent.

ANTENNA SYSTEM

This receiver is equipped with a loop antenna system, which obviates the necessity of using an antenna connection for receiving most local and some distant stations.

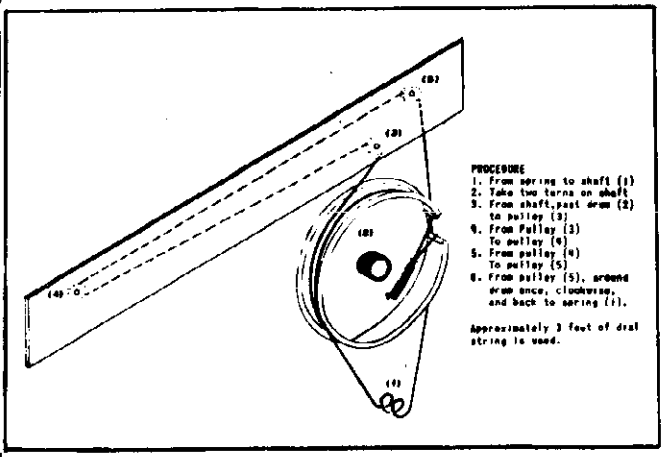

Replacement of Drive Cord

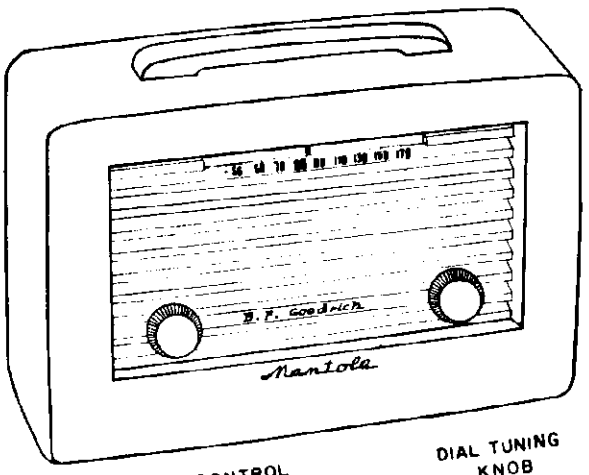

When tuning Broadcast Stations, it may be found advisable to rotate the radio about its position of rest until the most distant station regularly enjoyed is heard the clearest. In some vicinities where there is a localized noise interference prevalent, it is best to rotate the radio cabinet to a position which gives a minimum of noise.

OPERATION

TO OPERATE ON AC OR DC

Switch to electric on the slide switch located at the back of the set.

Plug the line cord into the nearest convenient wall outlet through the opening provided in the back.

TO OPERATE ON BATTERIES

To operate on batteries switch to batteries on the slide switch and store the line cord in the space provided.

VOLUME CONTROL and POWER SWITCH

The volume control and power switch are operated by a common control knob at the left of the cabinet. When the control is in extreme counter-clockwise position, the receiver power is off. From this position a slight clockwise rotation will turn the power on and by further clockwise rotation, volume may be increased until the full output of the receiver is obtained. To conserve batteries and tubes, be sure that the receiver is turned off when it is not in use.

TUNING CONTROL

The knob at the right is the tuning control. Stations are tuned manually by turning this tuning control. The dial calibration numbers are in tenths of the actual kilocycle readings. To convert these calibrations to kilocycles, as is shown in most radio log books, add a "0" to the end of each number. After the desired station is heard, adjust this knob to the point of maximum volume and most realistic reproduction. This position of exact tune is very important as it is only when the receiver is in this position that the full, rich tone is available. The volume control may now be set to give the desired volume.

MAINTENANCE

CAUTION

Always remove the power cord from its receptacle before starting to replace tubes or batteries.

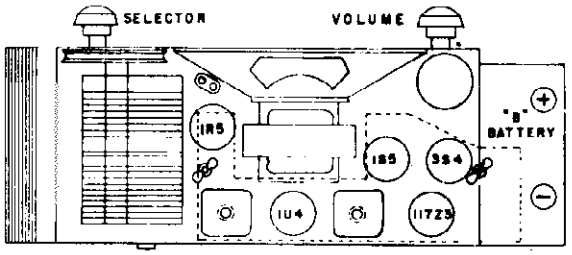

TO REPLACE TUBES, UNSCREW WING NUTS, AND REMOVE TUBE SPRING PLATE

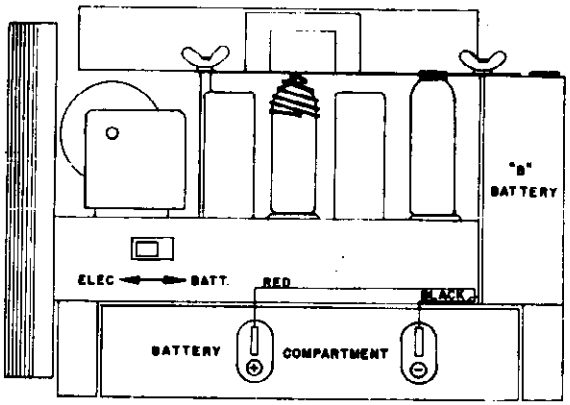

Do not allow cells which have become too weak to operate the set properly to remain in the set for any length of time.

REPLACEMENT OF TUBES

To replace tubes, remove the two wing nuts which hold the tube spring plate and lift off the plate. Replace the plate and wing nuts after removal of old tubes.

ELECTRICAL SPECIFICATIONS

Power Supply	105-125 volts DC or 50-60 cycles AC 15 watts
Batteries	A—7½ volts. 50 ma. B—67½ volts. 8 ma. average.
Frequency Range	530 to 1700 kc.
Intermediate Freq.	455 kc.
Tuning	Two-gang capacitor
Antenna	Built-in loop
Speaker	4 inch PM; voice coil Impedance 3.5 ohms.
Power Output	80 milliwatts undistorted 140 milliwatts maximum
Sensitivity	500 microvolts per meter for 50 milliwatt output
Selectivity	55 kc broad at 1000 times signal at 1000 kc.

MODEL 92752,
CHASSIS W

THE B. F. GOODRICH COMPANY

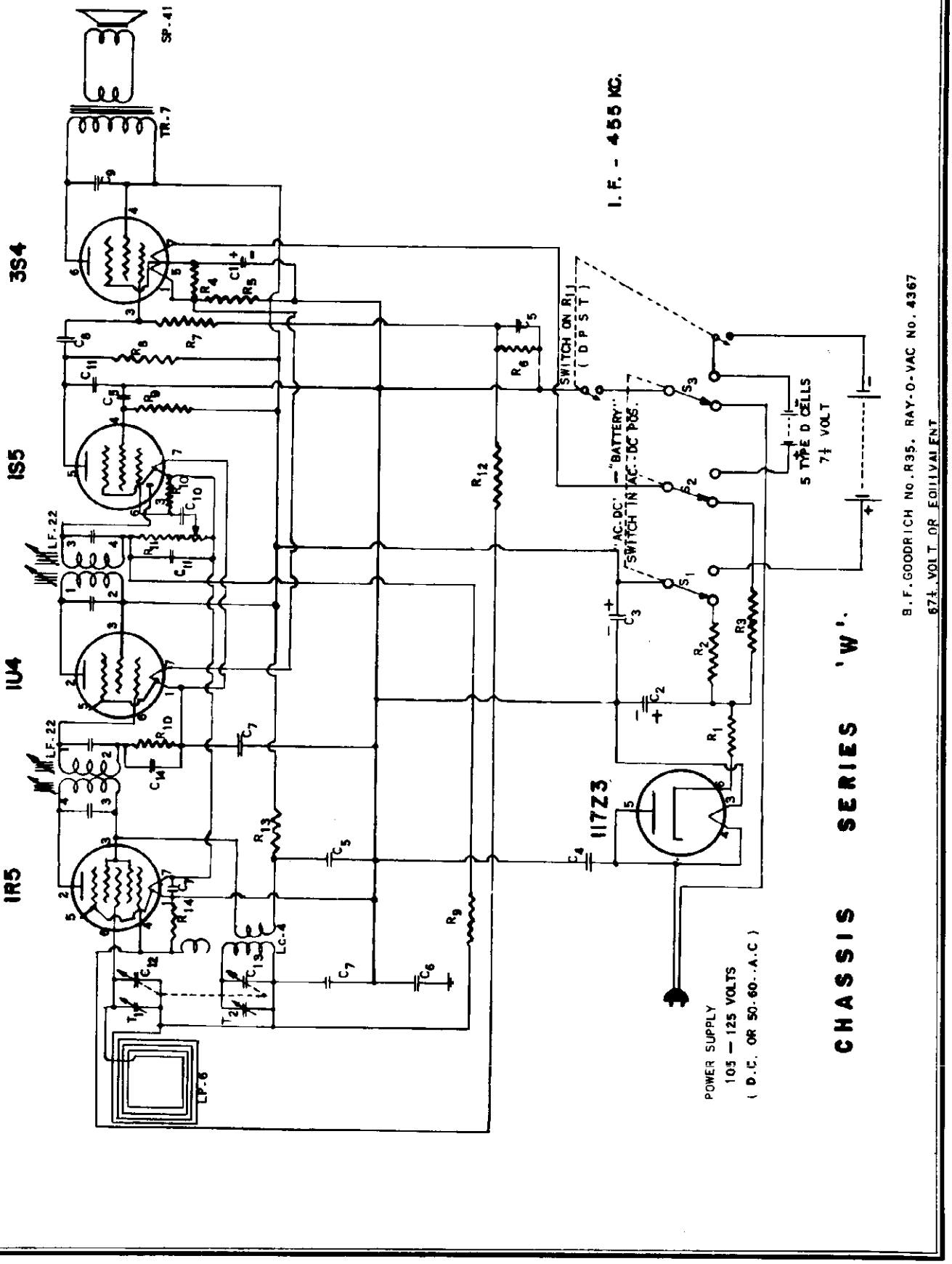

©John F. Rider

THE B. F. GOODRICH COMPANY

MODEL 92752, CHASSIS W

ALIGNMENT PROCEDURE

- Output meter across 3.5 ohm output load.
- Volume control at maximum for all adjustments.
- Align for maximum output. Reduce input as needed to keep output near 0.4 volts.

SIGNAL GENERATOR				SETTING TUNER	ADJUST TRIMMERS TO MAXIMUM OUTPUT (in order shown)
Frequency	Coupling Factor	Connection to Receiver	Ground Connection		
455 kc	.1 mfd	1R5 Grid	B—	Rotor full open (Plates out of mesh)	Input and output trimmers on IF cans
1700 kc	.1 mfd	1R5 Grid	B—	Rotor full open (Plates out of mesh)	Oscillator trimmer T2
1500 kc		Radiating Loop		1500 kc*	Antenna trimmer T1

* Five markings on the dial bracket represent respectively 530 kc., 600 kc., 1000 kc., 1500 kc., and 1700 kc., reading from left to right. These points are to be used for the alignment of the receiver.

REPLACEMENT PARTS LIST

When ordering parts, specify part number, and model number.

Ref. No.	Part No.	Description
CAPACITORS		
C1, C2, C3,	CE-12	125 mfd, 10 volt; 25-mfd, 150 volt; Electrolytic condenser
C4	CP-503-1	.05 mfd, 400 volt, paper
C5	CP-103-2	.01 mfd, 150 volt, paper
C6	CP-104-2	.1 mfd, 200 volt, paper
C7	CP-503-2	.05 mfd, 150 volt, paper
C8	CP-202-3	.002 mfd, 200 volt, paper
C9	CP-502-2	.005 mfd, 400 volt, paper
C10	CP-102-3	.001 mfd, 200 volt, paper
C11	CM-101-1	.0001 mfd, 300 volt, mica
C12, C13	CV-10	Variable condenser, 2 gang
C14	CP-103-4	.01 mfd, 100 volt, paper
RESISTORS		
R1	RC-180-1	18 ohms, ½ watt 20%
R2	RC-682-5	6800 ohms, 1 watt 10%
R3	RP-2	2650 ohms, 10 watt 5%
R4	RC-471-1	470 ohms, ½ watt 20%
R5	RC-821-2	820 ohms, ½ watt 10%
R6	RC-274-2	270,000 ohms, ½ watt 10%
R7	RC-225-1	2.2 megohms, ½ watt 20%
R8	RC-105-1	1 megohm, ½ watt 20%
R9	RC-335-1	3.3 megohms, ½ watt 20%
R10	RC-106-1	10 megohms, ½ watt 20%
R11	VC-6	1 meg. vol. control with switch
R12	RC-105-2	1 megohm, ½ watt 10%
R13	RC-153-1	15,000 ohms, ½ watt 20%
R14	RC-104-2	100,000 ohms, ½ watt 10%

Ref. No.	Part No.	Description
COILS AND TRANSFORMERS		
	LC-4	Oscillator coil
	LF-22	IF transformer
	LP- 6	Loop antenna
	TR- 7	Output transformer
MISCELLANEOUS		
S1, S2, S3	SW-10	Three Pole Single Throw Switch
	SP-41	4 inch P.M. speaker
	PN-6	Pointer
	CR-2	Drive cord
	SG-1	Spring for drive cord
	KN-20-6	Knob
	BK-20	Cabinet back (with hardware)
	CB-117	Assembled cabinet (without back and handle)
	HA-2	Handle for cabinet (with springs and pins)
	AS-1	Assembled battery box

e John F. Rider

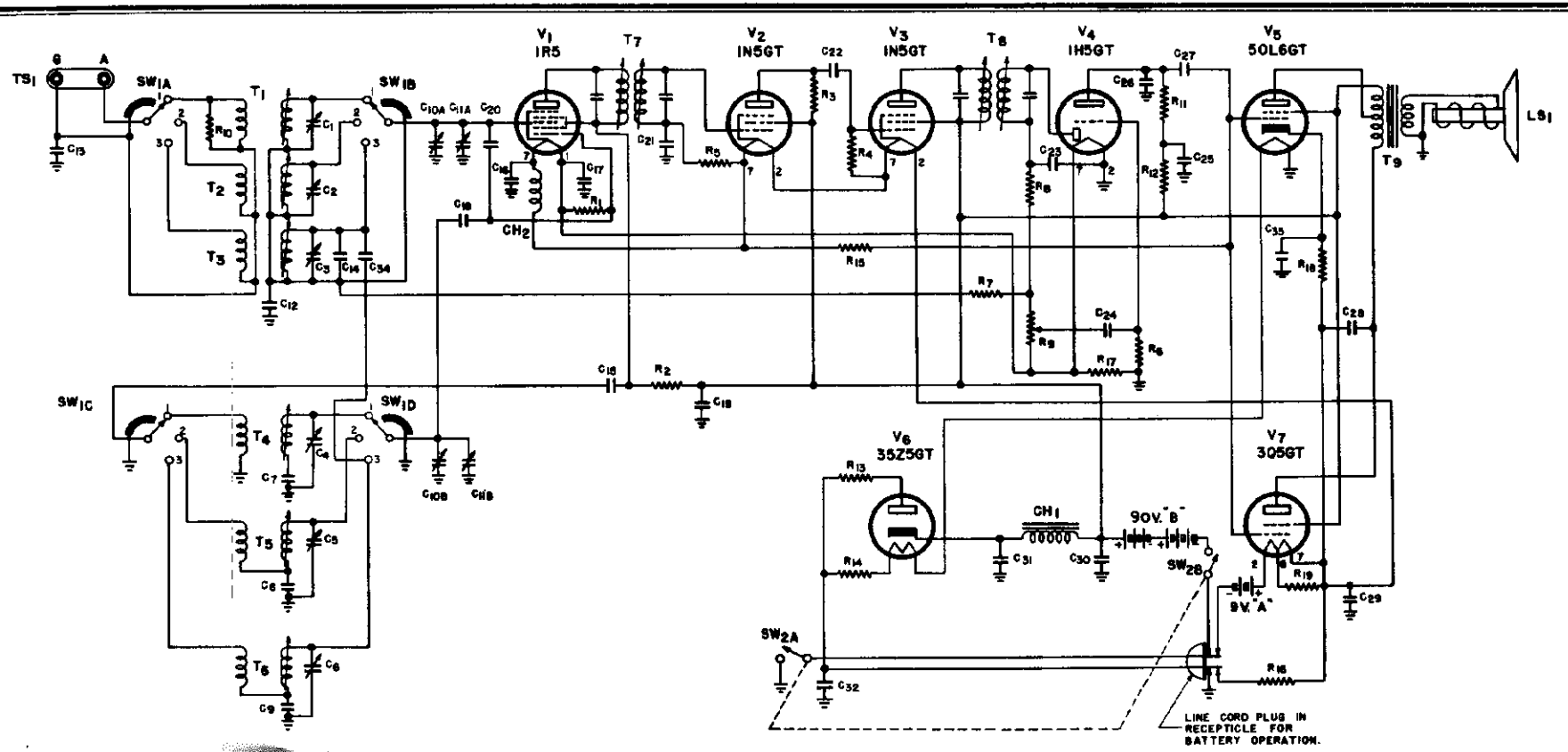

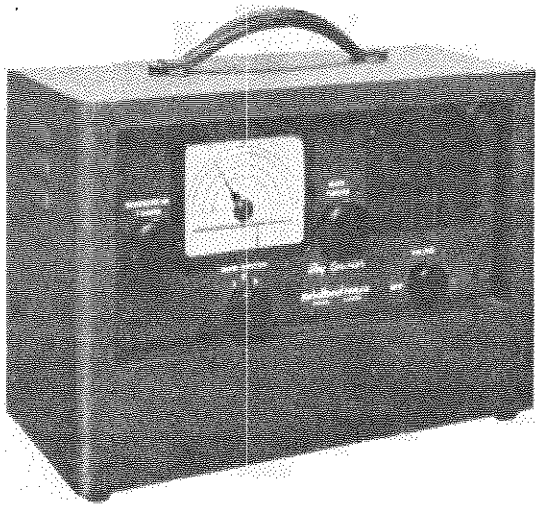

Note: When operating from a 110/125 volt direct current source, it may be necessary to turn the line plug around in the wall socket before the set will operate.

CAUTION: Remove run-down batteries from their compartment to avoid corrosion resulting from the deteriorating cells.

BATTERY REPLACEMENT

Replace "B" batteries with Burgess #5308 or equivalent.
Replace "A" batteries with four Burgess #2370 Standard Terminal Type or two Burgess G3 Plug Type or equivalent.

©John F. Rider

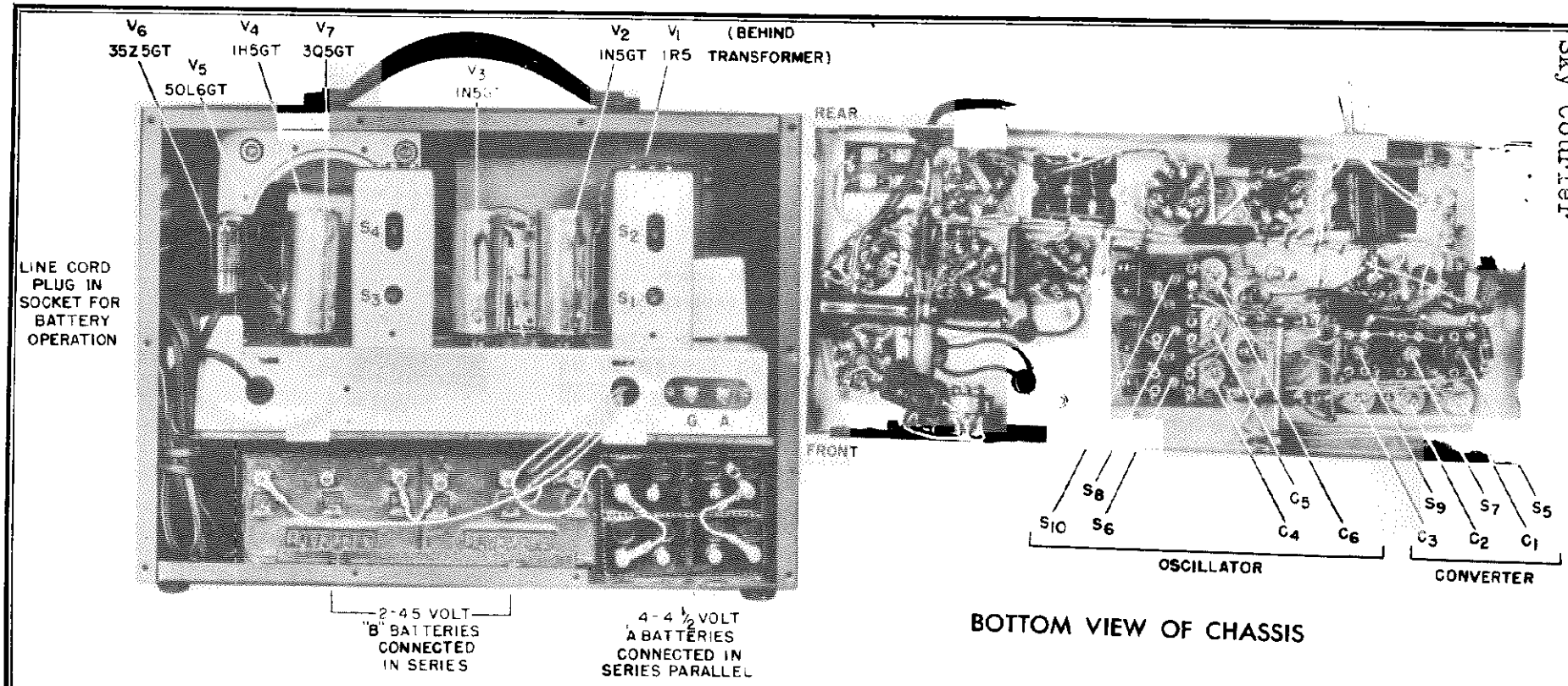

BOTTOM VIEW OF CHASSIS

REAR VIEW—COVER REMOVED

ALIGNMENT AND SERVICE

EQUIPMENT REQUIRED -

(1) Signal generator covering 455 KC. to 20 MC. and equipped to provide a 400 cycle modulated signal.

(2) Non-metallic screw driver.

(3) Output meter.

(4) 0.1 mfd. condenser.

(5) 100 mmfd. condenser.

(6) 25 ohm non-inductive resistor.

(7) 400 ohm non-inductive resistor.

THE HALLICRAFTERS CO. MODEL RE-1, Sky Courier

I-F ALIGNMENT -

(1) Connect the "hot" lead of the signal generator to the stator of the front section of the gang condenser through the 0.1 mfd. condenser. Connect the ground lead of the generator to the ground terminal on the antenna terminal strip.

CAUTION - Do not ground the chassis of the receiver directly, make all ground connections to the G terminal of the terminal strip.

(2) Connect the output meter across the speaker terminals.

(3) Turn on the receiver and set the VOLUME control at maximum volume.

(4) Set the BAND SWITCH at BAND 2. and set the MAIN TUNING dial at approx. 7 MC.

(5) Set the signal generator at 455 KC. and turn on the 400 cycle modulation.

(6) Adjust i-f transformer slugs S_1, S_2, S_3 and S_4 for maximum output. Refer to the rear view of the receiver for location of the slug adjustments.

R-F ALIGNMENT -

(1) Connect the "hot" lead of the signal generator to the antenna terminal through the dummy antenna specified in the chart. Leave the ground lead of the generator connected to the ground terminal of the antenna terminal strip.

(2) Leave the output meter connected as for i-f alignment.

(3) Set the VOLUME control for maximum volume.

(4) Set the BAND SWITCH, MAIN TUNING dial, signal generator, trimmer condenser, and slug adjustments as follows:

SET BAND SWITCH	USE DUMMY ANT.	SET RECEIVER & SIGNAL GENERATOR	SET TRIMMER FOR MAX. OUTPUT	SET SLUG FOR MAX. OUTPUT
1	100 mmfd. condenser and 25 ohm resistor	1500 KC.	C_1 and C_4	-
1		600 KC.	-	S_5 and S_6
2		7 MC.	C_2 and C_5	-
2		3 MC.	-	S_7 and S_8
3	400 ohm resistor	18 MC.	C_3 and C_6	-
3		9 MC.	-	S_9 and S_{10}

NOTE: Refer to rear and bottom views of the receiver for location of adjustment screws.

LIST OF REPLACEABLE PARTS.

REF. SYMBOL	NAME OF PART AND DESCRIPTION	FUNCTION	MFG. CODE	CONT'S. PART NO.
R_1	RESISTOR, 100,000 ohm ± 20%, ½ watt, carbon, insulated, humidity resistant. Same as R_{12}	Oscillator grid return for tube V_1	ASA	RC10AE104M
R_2	RESISTOR, 4,700 ohm ± 10%, ½ watt, carbon, insulated, humidity resistant	Decoupling for tube V_1	ASA	RC10AB472K
R_3	RESISTOR, 22,000 ohm ± 20%, ½ watt, carbon, insulated, humidity resistant	Plate load for tube V_2	ASA	RC10AB223M
R_4	RESISTOR, 470,000 ohm ± 10%, ½ watt, carbon, insulated, humidity resistant. Same as R_{11}, R_{15}	Grid return for tube V_3	ASA	RC10AB474K
R_5	RESISTOR, 2 megohm ± 20%, ½ watt, carbon, insulated, humidity resistant.	Grid return for tube V_2	ASA	RC10AB20SM
R_6	RESISTOR, 10 megohm ± 20%, ½ watt, carbon, insulated, humidity resistant.	Grid return for tube V_4	ASA	RC10AE10SM
R_7	RESISTOR, 3.3 megohm ± 20%, ½ watt, carbon, insulated, humidity resistant.	A-V-C decoupling	ASA	RC10AE33SM
R_8	RESISTOR, 47,000 ohm ± 20%, ½ watt, carbon, insulated, humidity resistant.	Diode load for tube V_4	ASA	RC10AB473M
R_9	RESISTOR, variable, 500,000 ohm ± 20%, bushing 3/8-32 x ¼" long, shaft 5/8" long x ¼" dia., includes DPST toggle action switch on rear of control	VOLUME control	CT type 185	254090
R_{10}	RESISTOR, 10,000 ohm ± 20%, ½ watt, carbon, insulated, humidity resistant	Primary loading for transformer T_1	ASA	RC10AE103M
R_{11}	RESISTOR, same as R_4	Plate load for tube V_4		
R_{12}	RESISTOR, same as R_1	Decoupling for tube V_4		
R_{13}	RESISTOR, two sections, section #1 (R_{13}) 80 ohms ± 5%, 2.5 watts, wire wound; section #2 (R_{14}) 220 ohms ±5%, 6.5 watts, wire wound; 3 solder lug terminals	Surge voltage stabilizing for tube V_6 Filament voltage dropping for tubes V_5 and V_6	U type X-1300	24A834
R_{14}				
R_{15}	RESISTOR, same as R_4	Grid return for tubes V_5 and V_7		
R_{16}	RESISTOR, 680 ohms ± 10%, ½ watt, carbon, insulated, humidity resistant	Filament voltage divider for battery operation	ASA	RC10AB681K
R_{17}	RESISTOR, 270 ohm ± 10%, ½ watt, carbon, insulated, humidity resistant	Shunt for filament of tube V_4	ASA	RC10AE271K
R_{18}	RESISTOR, 47 ohm ± 10%, ½ watt, carbon, insulated, humidity resistant	Cathode bias for tube V_5	ASA	RC21AB470K
R_{19}	RESISTOR, 330 ohm ± 10%, ½ watt, carbon, insulated, humidity resistant	Shunt for filament of tube V_7	ASA	RC10AE331K
C_1	CAPACITOR, adjustable, min. cap. 4 mmfd., max. cap. 20 mmfd., ceramic dielectric, solder lug terminals and stg.; same as C_2, C_3, C_4, C_5, C_6	Trimmer for transformer T_1	CRL type 820	44A118
C_2	CAPACITOR, same as C_1	Trimmer for transformer T_2		
C_3	CAPACITOR, same as C_1	Trimmer for transformer T_3		
C_4	CAPACITOR, same as C_1	Trimmer for transformer T_4		
C_5	CAPACITOR, same as C_1	Trimmer for transformer T_5		
C_6	CAPACITOR, same as C_1	Trimmer for transformer T_6		
C_7	CAPACITOR, fixed 390 mmfd. ± 5%, 500 V. D-C working, mica dielectric, humidity resistant	Padder transforme T_4	ASA	CM20D391J

LIST OF REPLACEABLE PARTS (Cont'd.)

REF. SYMBOL	NAME OF PART AND DESCRIPTION	FUNCTION	MFG. CODE	CONT'S. PART NO.
C_8	CAPACITOR, fixed, 1500 mmfd. ± 10%, 500 V. D-C working, mica dielectric, humidity resistant	Padder for transformer T_5	ASA	CM30E152K
C_9	CAPACITOR, fixed, 3900 mmfd., ± 10%, 500 V. D-C working, mica dielectric, humidity resistant	Padder for transformer T_6	ASA	CM35E392K
C_{10A}	CAPACITOR, 2 sections, ganged, section #1 (C_{10A}) min. cap. 39.7 mmfd., max. cap 353.4 mmfd., air dielectric, section #2 (C_{10B}) min. cap. 33.9 mmfd. max. cap. 353.3 mmfd., air dielectric; bandspread (C_{11A} and C_{11B}) consists of a single rotor plate for each section; three 6-32 NC-2x9/32" spade bolts mount assembly (2 on front frame 7/8" apart, 1 centered on rear frame 2-1/8" from front frame); a stamped sheet metal pulley 2-1/8" O.D. is fixed to the main gang and bandspread gang shafts.	Transformers T_1, T_2, T_3 main tuning Transformers T_4, T_5, T_6 main tuning Transformers T_1, T_2, T_3 bandspread tuning Transformers T_4, T_5, T_6 bandspread tuning	CM Special	48C125
C_{10B}				
C_{11A}				
C_{11B}				
C_{12}	CAPACITOR, fixed, .05 mfd. ± 10 + 40%, 500 V. D-C working, paper dielectric, molded case, Same as C_{19}	A-V-C by-pass	MIC type 346	46AM503J
C_{13}	CAPACITOR, fixed, .01 mfd. ± 10 + 40%, 600 V. D-C working, paper dielectric, molded case. Same as C_{32}	D-C voltage block between chassis and ground	MIC type 342	46AG103J
C_{14}	CAPACITOR, fixed, 20 mmfd. ± 20%, 500 V. D-C working, ceramic dielectric, 0.00075 mmfd./ mmfd./ degree Cent. temp. coeff.	Trimmer for transformer T_3 secondary	ASA	CCZ20UK200M
C_{15}	CAPACITOR, fixed, .005 mfd. ± 20% + 60%, 400 V. D-C working, paper dielectric, molded case. Same as C_{24}	Coupling between oscillator inductance and plate circuit of tube V_1	ASA	CM56E502
C_{16}	CAPACITOR, fixed, .25 mfd. ± 10 + 40%, 200 V. D-C working, paper dielectric, molded case	Filament by-pass for tube V_1	MIC type 342	46AE254J
C_{17}	CAPACITOR, fixed .1 mfd. ± 10 + 40%, 400 V. D-C working, paper dielectric, molded case. Same as C_{25}	Filament by-pass for tube V_1	MIC type 342	46AF104J
C_{18}	CAPACITOR, fixed, 47 mmfd. ± 20%, 500 V. D-C working, mica dielectric, humidity resistant	Coupling between oscillator inductance and oscillator grid circuit of tube V_1	ASA	CM20A470M
C_{19}	CAPACITOR, same as C_{12}	Plate circuit by-pass		
C_{20}	CAPACITOR, fixed, 2.5 mmfd. ± 20%, 500 V. D-C working, bakelite dielectric, molded body. Same as C_{34}	Coupling between oscillator and converter	SC Special	49A001
C_{21}	CAPACITOR, fixed, .02 mfd. ± 10 + 40%, 200 V. D-C working, paper dielectric, molded case	Grid return by-pass for tube V_2	MIC type 342	46AE203J
C_{22}	CAPACITOR, fixed, 220 mmfd. ± 20%, 500 V. D-C working, mica dielectric, humidity resistant Same as C_{26}	Coupling between tubes V_2 and V_3	ASA	CM20A221M
C_{23}	CAPACITOR, fixed, 100 mmfd. ± 20%, 500 V. D-C working, mica dielectric, humidity resistant	Diode load r-f by-pass for tube V_4	ASA	CM20A101M
C_{24}	CAPACITOR, same as C_{15}	A-F coupling between detector circuit and 1st audio amplifier section of tube V_4		
C_{25}	CAPACITOR, same as C_{17}	Plate circuit decoupling for tube V_4		

LIST OF REPLACEABLE PARTS - (Cont'd.)

REF. SYMBOL	NAME OF PART AND DESCRIPTION	FUNCTION	MFG. CODE	CONTR'S. PART NO.
C_{26}	CAPACITOR, same as C_{22}	Plate circuit r-f by-pass for tube V_4		
C_{27}	CAPACITOR, fixed, .006 mfd. -20 + 80%, 600 V. D-C working, paper dielectric, humidity resistant. Same as C_{26}	Coupling between tube V_4 and V_5	ASA	CN41B602
C_{28}	CAPACITOR, same as C_{27}	Plate circuit equalizer for tubes V_5 and V_7		
C_{29}	CAPACITOR, 3 section unit, 4 prong plug-in type dry electrolytic; section #1 (C_{30}) 40 mfd. - 10 + 50%, 150 V. D-C. working; section #2 (C_{31}) 40 mfd. - 10 + 50%, 150 V. D-C. working; section #3 (C_{29}) 100 mfd. 10 + 65%, 50 V. D-C. working, terminal #1 common to all sections	Filament circuit by-pass for battery operation Output filter capacitor for A-C/D-C operation Input filter capacitor for A-C/D-C operation	IC type P-I	45A072
C_{32}	CAPACITOR, same as C_{13}	Line filter for A-C/D-C operation		
C_{33}	Not used.			
C_{34}	CAPACITOR, same as C_{20}	Coupling between transformers T_3 and T_6 on band #3		
T_1	TRANSFORMER, R-F, 3 unit assembly; unit #1 (T_1) 550-1600 KC., universal windings primary and secondary, Hallowax #2012 impregnation, variable iron core adjustment; unit #2 (T_2) 2.8 - 7.8 MC., universal winding primary, single layer winding secondary, Hallowax #2012 impregnation, variable iron core adjustment; unit #3 (T_3) 7.0 - 19.0 MC., single layer windings primary and secondary, Hallowax #2012 impregnation, variable iron core adjustment; assembly mounted on a xx bakelite board 3" long x 1-3/4" wide x 1/16" thick with 2 mtg. holes 1" apart centered on the board; coils wound on bakelite form 1" long x ½" O.D.	Coupling between antenna and tube V_1 on band #1 Coupling between antenna and tube V_1 on band #2 Coupling between antenna and tube V_1 on band #3	GU type 30-5226-2	51C561
T_2				
T_3				
T_4	TRANSFORMER, R-F, 3 unit assembly; unit #1 (T_4) 550-1600 KC. universal windings primary and secondary, Hallowax #2012 impregnation, variable iron core adjustment unit #2 (T_5) 2.8 - 7.8 MC., single layer windings, Hallowax #2012 impregnation, variable iron core adjustment; unit #3 (T_6) 7.0 - 19.0 MC., single layer interwoven primary and secondary, Hallowax #2012 impregnation, variable iron core adjustment; assembly mounted on a XP bakelite board 3" long x 2-3/8" wide x 1-1/16" thick with 2 mtg. holes 1" apart centered on the board; coils wound on bakelite form 1" long x ½" O.D.	Oscillator inductances for band #1 Oscillator inductances for band #2 Oscillator inductances for band #3	GU type 30-5226-2	51C560
T_5				
T_6				
T_7	TRANSFORMER, I-F, 455 KC., fixed trimmer capacitors, variable iron core tuning, shielded assembly	Coupling between tubes V_1 and V_2	GU type 30-5223-2	50B152
T_8	TRANSFORMER, I-F, 455 KC., fixed trimmer capacitors, variable iron core tuning, shielded assembly	Coupling between tubes V_3 and V_4	GU type 30-5224-2	50B153
T_9	TRANSFORMER, A-F; primary to match a 8000 ohm 3Q5GT tube plate load, tapped to match a 2500 ohm 50L6GT tube plate load; secondary to match 2.3 ohm voice coil; metal case covered with corite wax except on mounting surface; two single hole mtg. feet with 1-3/4" mtg. centers.	Coupling between tube V_5 or V_7 and speaker	F Special	56A064

LIST OF REPLACEABLE PARTS - (Cont'd.)

REF. SYMBOL	NAME OF PART AND DESCRIPTION	FUNCTION	MFG. CODE	CONTR'S. PART NO.
CH_1	CHOKE, filter, 2250 turns of #35 wire wound on a ½" x ½" metal core, rated at 50 milliamperes, entire unit dipped in black corite wax except for mtg. surface; two single hole mtg. feet with 2-1/16" mtg. centers.	Plate voltage inductance for A-C/D-C line operation	F Special	56A062
CH_2	CHOKE, R-F, 37 turns of #22 SCE universal winding, air core, inductance 46 microhenries	R-F filter for filament of tube V_1	GU type 30-5233-2	53B059
SW_{1A}	SWITCH, 2 section, 3 positions, bakelite wafers, mounted by a 3/8-32 bushing ¼" long, shaft 7/8" long	Converter stage transformer primary selector	CM Special	60A182
SW_{1B}		Converter stage transformer secondary selector		
SW_{1C}		Oscillator stage transformer primary selector		
SW_{1D}		Oscillator stage transformer secondary selector		
SW_{2A}	SWITCH, DPST, located on the rear or resistor R_9	A-C/D-C line switch		
SW_{2B}		Battery power supply switch		
TS_1	TERMINAL STRIP, two terminals brass solder lugs with 6-32 x 3/8" binding head metal screws, mounted with centers 3/4" apart on a XP brown bakelite strip 2" long x 11/16" wide x 1/16" thick, 2 mtg. holes with centers 1-11/16" apart; marked "A" and "G"	Antenna and ground connections	CN type 1720	88A143
LS_1	SPEAKER; 5 inch semi moisture proof cone; 4.25 ounce field P.M.; 3.8 ohm voice coil; 6" long insulated leads soldered to speaker terminals at one end and a cinch plug (type #2724) at other end; includes a special mtg. plate 4-5/8"x5-1/4" with three 7/16" dia. mtg. holes; mtg. centers 4" x 3-11/16" x 4-1/2"	Loudspeaker	CRI type X-1241	85C084
V_1	TUBE, pentagrid converter, type 1R5	Oscillator and converter	RCA	90J1R5
V_2	TUBE, r-f amplifier pentode, type 1R5GT/G	1st I-F amplifier	RCA	90J1R5GT/G
V_3	TUBE, same as V_2	2nd I-F amplifier		
V_4	TUBE, diode high-mu triode, type 1R5GT/G	Detector and 1st audio amplifier	RCA	90J1R5GT/G
V_5	TUBE, beam power amplifier, type 50L6GT	Audio power amplifier for A-C/D-C operation	RCA	90J50L6GT
V_6	TUBE, half-wave high-vacuum rectifier, type 35Z5GT/G	Rectifier for A-C/D-C operation	RCA	90J35Z5GT/G
V_7	TUBE, beam power amplifier, type 3Q5GT/G	Audio power amplifier for battery operation	RCA	90J3Q5GT/G

MODEL S-53

THE HALLICRAFTERS CO.

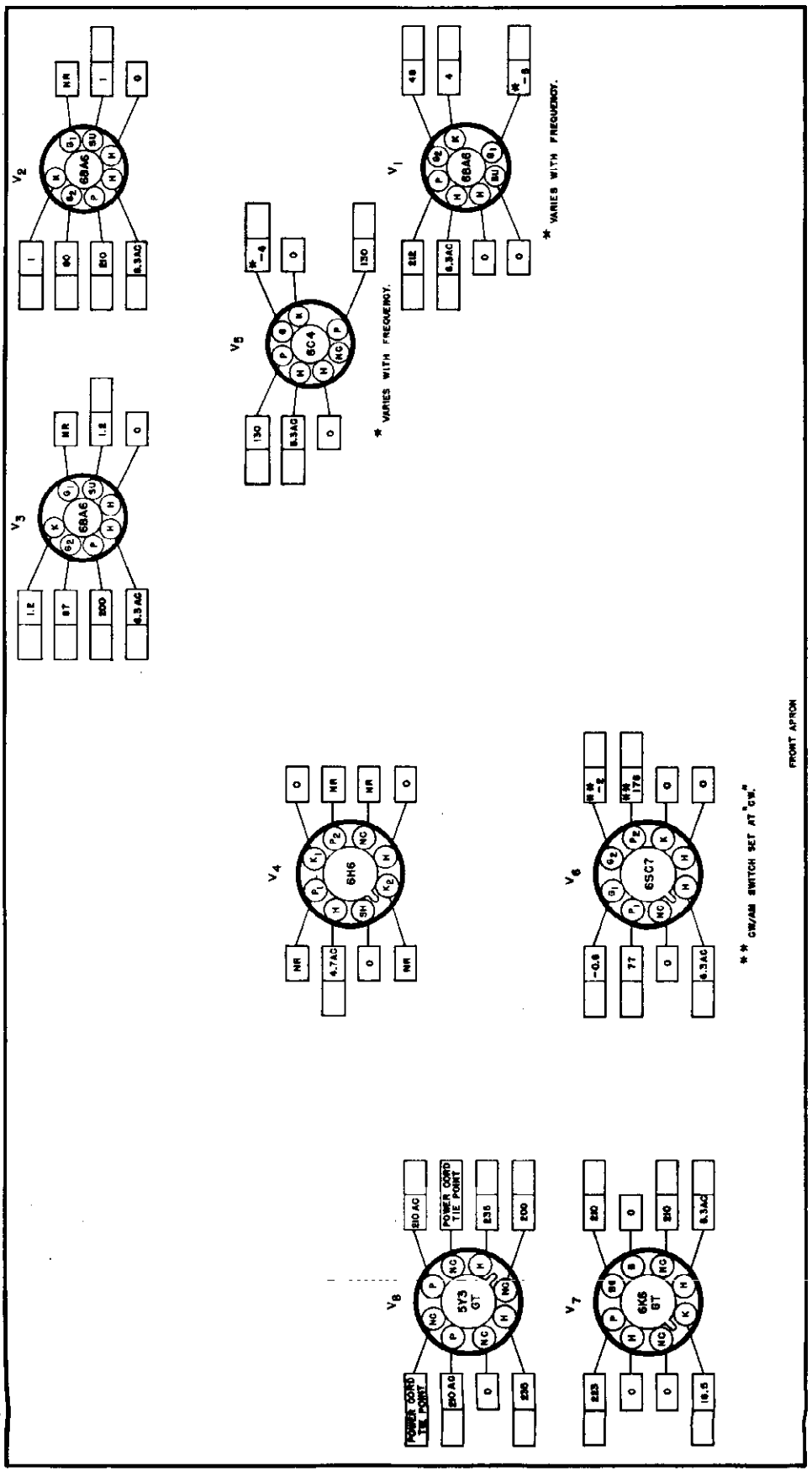

NOTES-

1. SOCKET VIEWS ARE BOTTOM VIEWS.
2. ALL VOLTAGES ARE MEASURED BETWEEN TUBE SOCKET TERMINALS AND CHASSIS WITH ZERO SIGNAL INPUT.
3. LINE VOLTAGE —— 117 V. AC (60 CYCLES).
4. ALL VOLTAGES SHOWN ARE DC. UNLESS OTHERWISE SPECIFIED.
5. DC VOLTAGES SHOWN WERE MEASURED WITH AN ELECTRONIC VOLTMETER.
6. READINGS TAKEN WITH STANDBY / RECEIVE SWITCH SET AT "RECEIVE"; CW/AM SWITCH SET AT "AM"; NOISE LIMITER SWITCH ON.
7. "NC"— NO CONNECTION. (VOLTAGE SHOWN FOR THIS TERMINAL ONLY WHEN TERMINAL IS USED AS A TIE LUG).
8. "NR"— NOT READABLE. (READING GENERALLY MEANINGLESS).
9. ☐ SPACE PROVIDED FOR SERVICE METER READINGS.

Tube socket voltage chart.

GENERAL

Tubes	Seven plus rectifier
Speaker	5-inch PM
Voice Coil Impedance	3.2 ohms
Headset Output	Low Impedance
Antenna	Provision for external antenna
Tuning	Manual

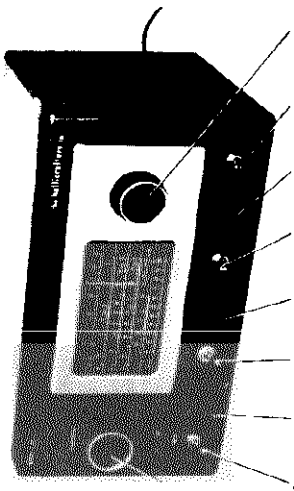

© John F. Rider

RESTRINGING DIAL CORD

To restring the general coverage dial cord. cut a 48-inch length of 30 lb. test dial cord and tie one end to the tension spring of the general coverage tuning capacitor drive pulley at position "1" on the diagram. Follow the sequence "1" through "12" and at position "12" stretch the tension spring and tie the cord securely.

Set the general coverage tuning condenser at maximum capacity and attach and set the pointer in line with the left hand index marker.

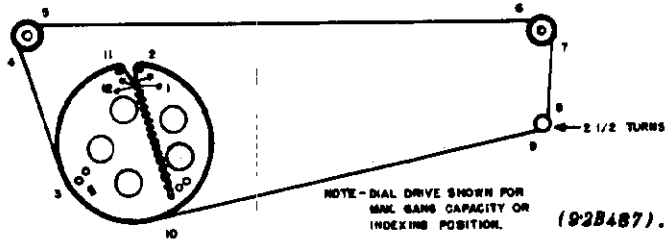

Dial cable stringing procedure, general coverage dial.

To restring the band spread dial cord, cut a 36-inch length of 30 lb. test dial cord and follow the procedure as above, starting at position "A" ending at "L".

Set the bandspread condenser at minimum capacity and attach and set the pointer at "100" on the logging scale.

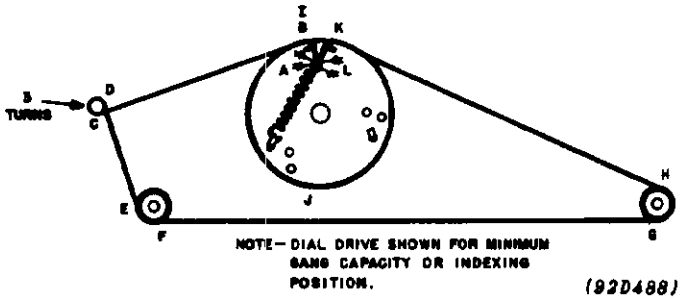

Dial cable stringing procedure, band spread dial.

REPLACING LAMPS

Refer to Fig. for the location of the two dial lamps used in the receiver. To gain access to defective lamps, reach in through cabinet cover and unclip the dial lamp sockets. The sockets may then be brought out into the open to change the defective lamp. Replace lamps with 6-8 V. Mazda #44, (Blue bead) lamps or equivalent.

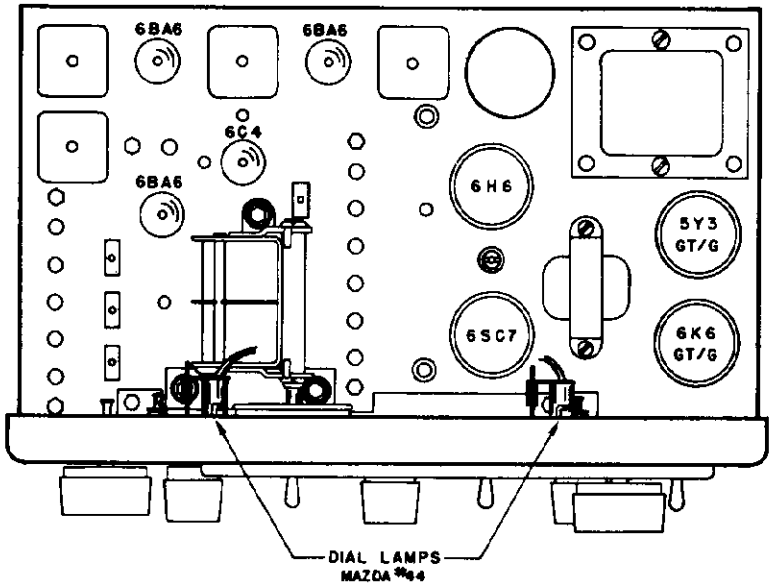

Top view, location of tubes and dial lamps.

ALIGNMENT PROCEDURE

Set the following controls before alignment.

STANBY/RECEIVE	Set at RECEIVE
CW/AM	Set at AM (see step 2)
SENSITIVITY	Set at maximum
NOISE LIMITER	Set at OFF
VOLUME	Set at maximum
TONE switch	Set at HIGH
BANDSPREAD	Set at 100
SPEAKER/PHONES switch	Set at SPEAKER

MODEL S-53 THE HALLICRAFTERS CO.

Remove the receiver chassis from the cabinet to make alignment adjustments. The chassis is held in the cabinet by three screws along both the bottom edge of the front panel and the rear of the cabinet, and two screws on either side of the front panel.

Before starting the alignment procedure, index the general coverage dial pointer on the low frequency end of the range and index the bandspread dial pointer at 100. The general coverage condenser should index at maximum capacity and the bandspread condenser should index at minimum capacity.

ALIGNMENT CHART

Step	Dummy Antenna	Signal Generator Coupling	Signal Generator Frequency	Band Selector Setting	Receiver Dial Setting	Adjust	Remarks
1	0.1 mfd. capacitor	High side to front stator section of tuning cap. Low side to chassis.	2.075 mc	A	Tuning cap. fully open	S1,S2,S3,S4,S5, S6,S7,S8	Adjust for maximum audio output at speaker voice coil. Use just enough signal generator output to obtain a 50 mw audio level.
2	See step 1.	See step 1.	2.075 mc	A	See step 1.	S9	With the CW/AM switch set at CW, adjust S-9 for zero beat.
3	300 ohm carbon resistor	High side to "A1" on antenna strip. Jumper connected between "A2" and "G"	1500 kc 600 kc	A	1500 kc 600 kc	*A,B *F	Adjust for maximum output as in step 1.
4	See step 3.	See step 3.	6 mc	B	6 mc	*D,E	Adjust for maximum output as in step 1.
5	See step 3.	See step 3.	15 mc	C	15 mc	*F,G	Adjust for maximum output as in step 1.
6	See step 3.	See step 3.	30 mc	D	30 mc	*H,I	Adjust for maximum output as in step 1.
7	See step 3.	See step 3.	52 mc	E	52 mc	*J,K	Adjust for maximum output as in step 1.

*Note - Calibration adjustments.

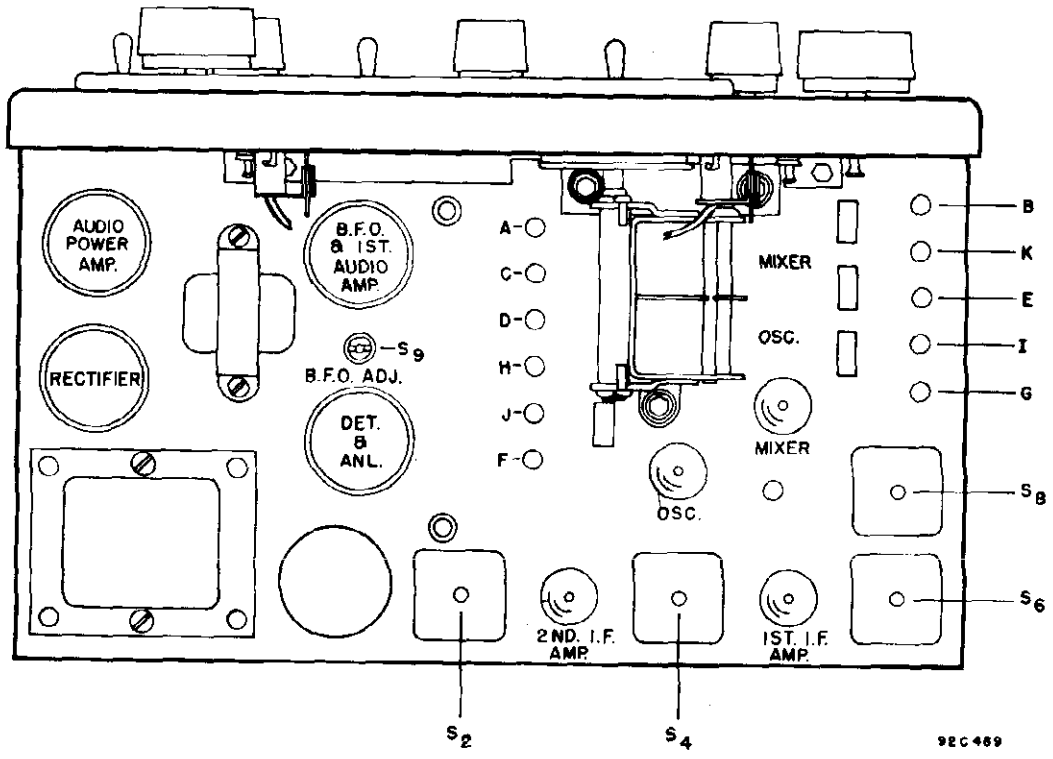

Alignment points, top view.

THE HALLICRAFTERS CO. MODEL S-53

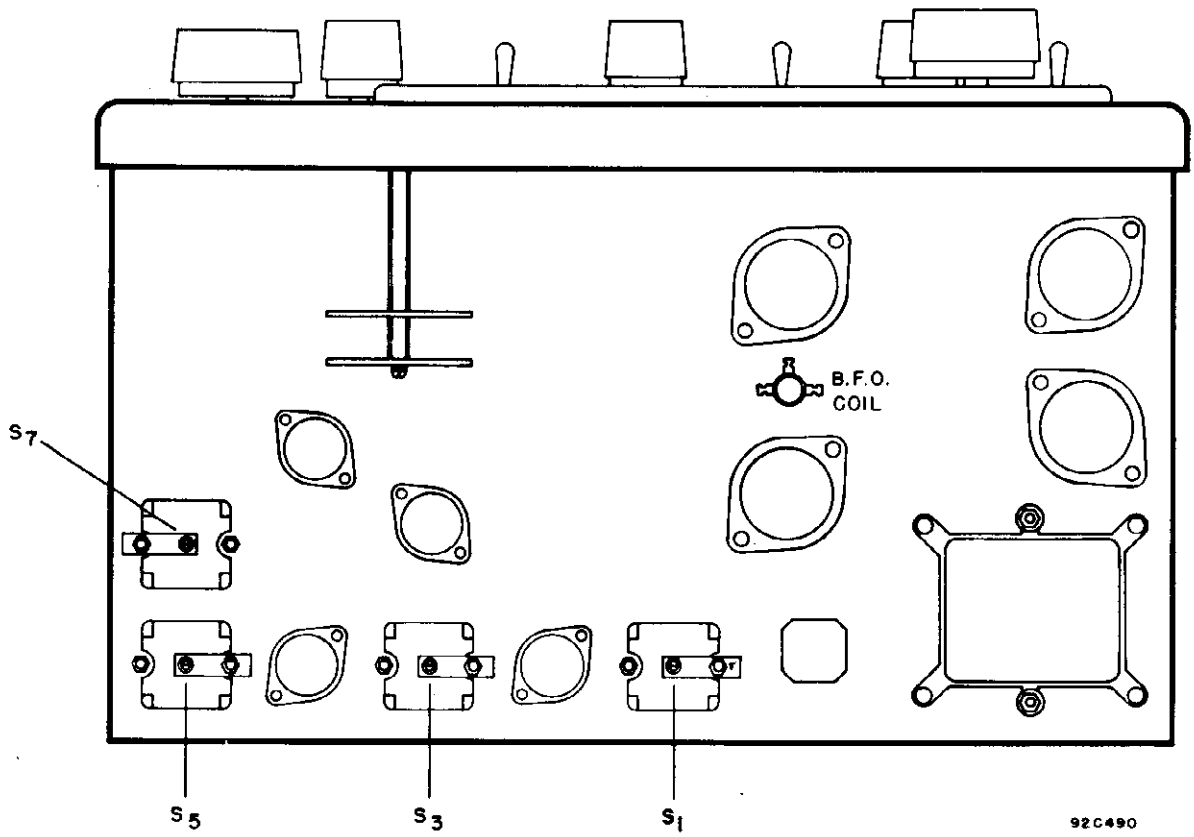

Alignment points, bottom view.

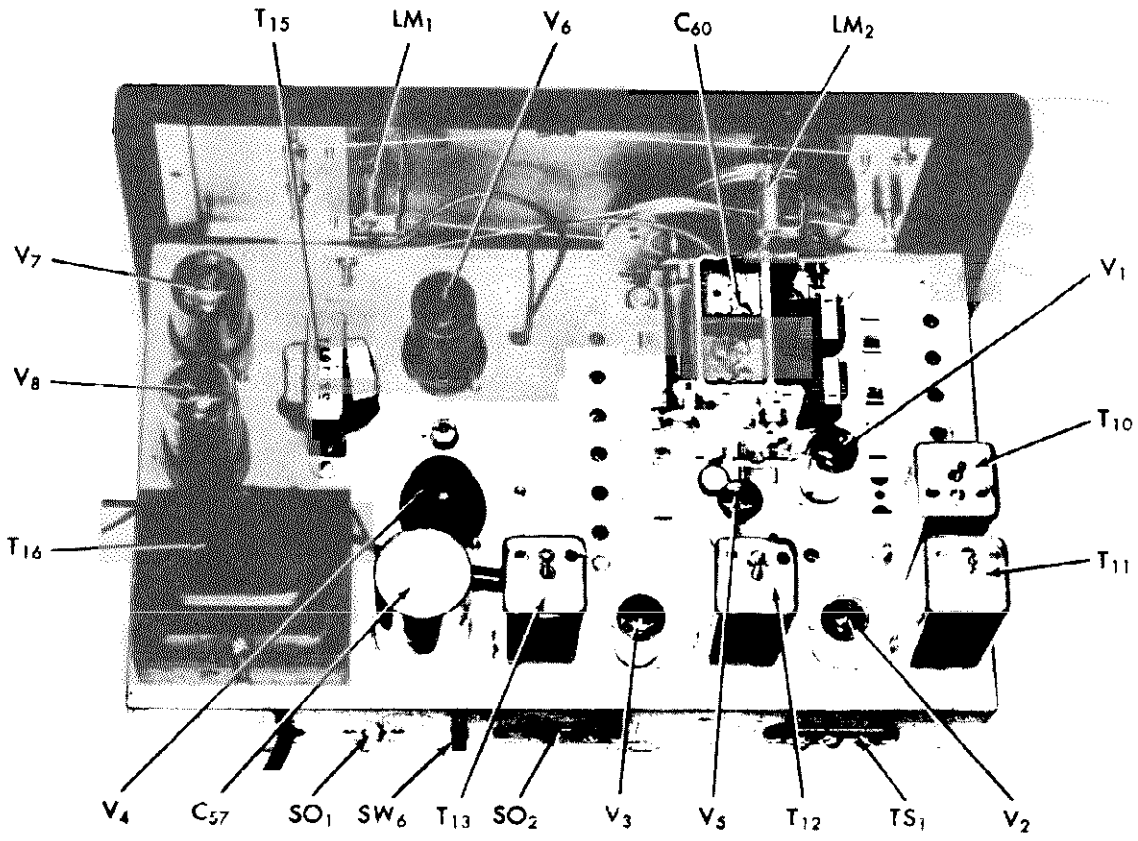

Component location, top view.

MODEL S-53 THE HALLICRAFTERS CO.

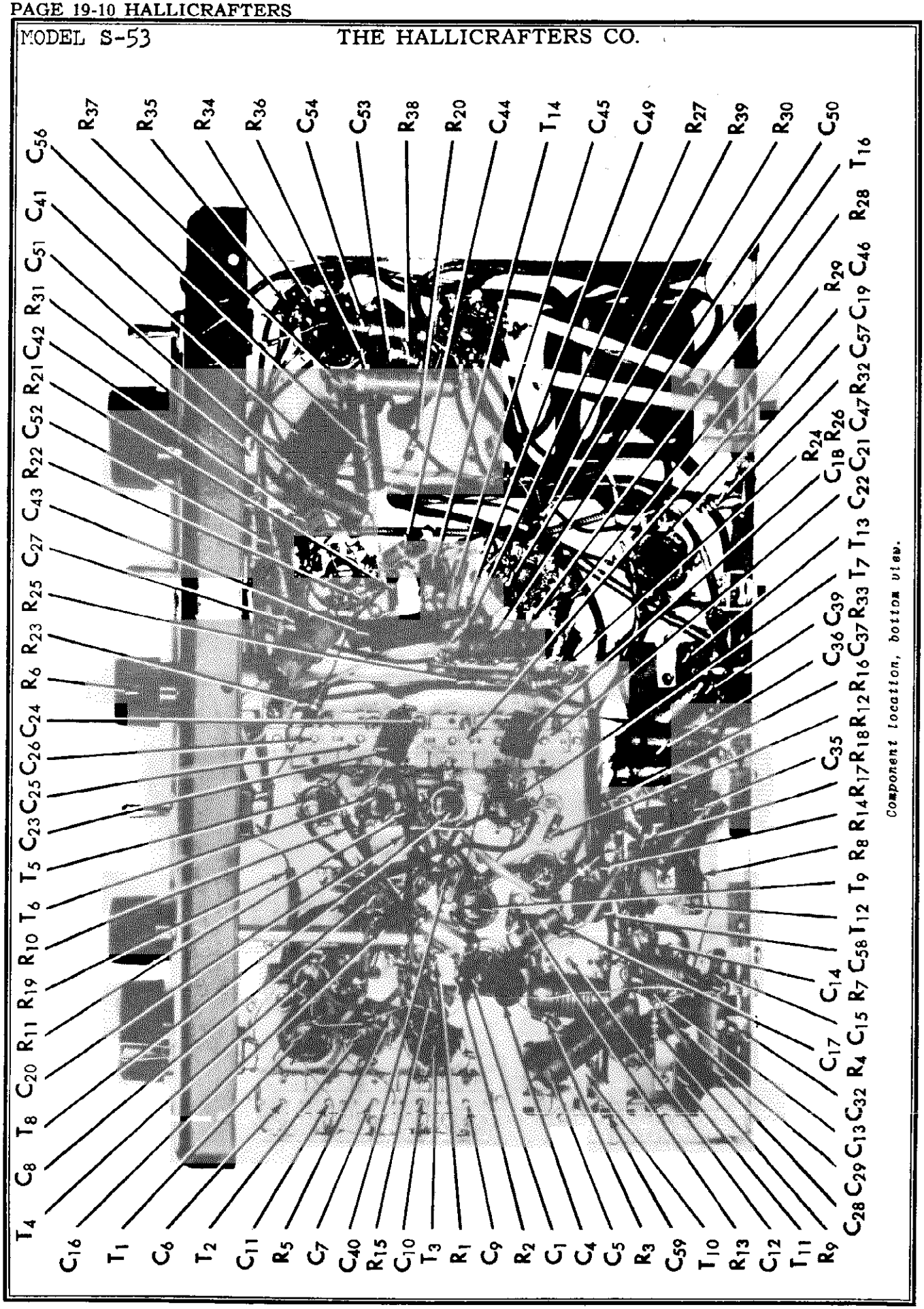

Component location, bottom view.

© John F. Rider

THE HALLICRAFTERS CO. MODEL S-53

SERVICE PARTS LIST

Ref. No.	Description	Hallicrafters Part Number
	CONDENSERS	
C-1,4,58	.005 mfd. 450 V., ceramic	47A168
C-5,39,49	.05 mfd. 400 V., tubular	46AW503J
C-6,7,9,10, 11	Trimmer assembly, 5 section antenna stage	44B355
C-8,42	220 mmf. 500 V., mica	CM20A221K
C-12	Trimmer adjustable, wave trap	44A356
C-13,14,15	4.7 mmf. 500 V., bakelite	47A160-6
C-16,59	2.2 mmf. 500 V., bakelite	47A160-4
C-17,40,44	100 mmf. 500 V., ceramic	47A086
C-18,19,22, 24,25,26	Trimmer assembly, 6 sections, oscillator stage	44B354
C-20	4700 mmf. 500 V., mica	CM35A472K
C-21	1,000 mmf. 2% 500 V., silver mica	CM20C102G
C-23	500 mmf. 2% 500 V., silver mica	CM20C501G
C-27	.1 mfd. 200 V., tubular	46AU104J
C-28,36,54	.02 mfd. 600 V., tubular	46AY203J
C-29,32,35, 37,43,50, 52,53,56	.01 mfd. 600 V., tubular	46AZ103J
C-41	.01 mfd. 400 V., molded paper	46AB103J
C-45	470 mmf. 500 V., mica	CM20A471J
C-46,47	50 mmf. 500 V., ceramic	47A091
C-51	.003 mfd. 600 V., tubular	46AZ302J
C-55	10 mmf. 500 V., mica	CC20UK100K
C-57	50-10-10 mfd. 350-100-25V., electrolytic	45B122
C-59	Tuning condenser, 2 section	48C198
	RESISTORS	
R-1,24	1.8 megohms ½ watt, carbon	RC20AE185M
R-2	2200 ohms ½ watt, carbon	RC20AE222M
R-3,15	27 ohms ½ watt, carbon	RC20AE270M
R-4,27	330,000 ohms ½ watt, carbon	RC20AE334K
R-5,35	680 ohms ½ watt, carbon	RC20AE681K
R-6	10,000 ohms, variable, SENSITIVITY control	25B603
R-7,17	100 ohms ½ watt, carbon	RC20AE101K
R-8,16,34	1000 ohms ½ watt, carbon	RC20AE102M
R-9,30,32, 36	470,000 ohms ½ watt, carbon	RC20AE474M
R-10,12	4700 ohms ½ watt, carbon	RC20AE472K
R-11	10,000 ohms ½ watt, carbon	RC20AE103K
R-13,23	22,000 ohms ½ watt, carbon	RC20AE223M
R-14	10,000 ohms 1 watt, carbon	RC30AE103K
R-18	22,000 ohms 1 watt, carbon	RC30AE223M
R-19	120 ohms ½ watt, carbon	RC20AE121M
R-20	220,000 ohms ½ watt, carbon	RC20AE224K
R-21	15 megohms ½ watt, carbon	RC20AE156K
R-22,26	47,000 ohms ½ watt, carbon	RC20AE473M
R-25	100,000 ohms ½ watt, carbon	RC20AE104K
R-28	1 megohm ½ watt, carbon	RC20AE105M
R-29	2.7 megohms ½ watt, carbon	RC20AE275M
R-31	2 megohms, variable, VOLUME control	25B602
R-33	15 ohms ½ watt, carbon	RC20AE150M
R-37	680 ohms 2 watts, carbon	RC40AE681M
R-38	1000 ohms 1 watt, carbon	RC30AE102M
R-39	6.8 ohms 1 watt, carbon	RC30AE068K
	TRANSFORMERS AND COILS	
T-1	Transformer, antenna stage, band A	51B1028
T-2	Transformer, antenna stage, band B	51B1027
T-3	Transformer, antenna stage, bands C & D	51B1026
T-4	Transformer, antenna stage, band E	51B1030
T-5	Transformer, oscillator stage, band A	51B1031
T-6	Transformer, oscillator stage, band B	51B1032
T-7	Transformer, oscillator stage, band C	51B1033
T-8	Transformer, oscillator stage, band D	51B1034
T-9	Transformer, oscillator stage, band E	51B1035
T-10,11, 12,13	Transformer, IF amp. and detector stages	50B369
T-14	Transformer, BFO	54B038
T-15	Transformer, audio output	55B107
T-16	Transformer, power	52C164
L-1	Coil, low pass filter	53A135
L-2	Coil, wave trap, antenna section	51B1036
	SWITCHES	
SW-1	Band switch assembly	60B323
SW-2	Switch, toggle, DPST, CW/AM control	60A285
SW-3,5,7	Switch, toggle, SPST, STANBY/REC., NOISE LIMITER & TONE control	60A138
SW-4	Switch, part of SENSITIVITY control, R-6	
SW-6	Switch, slide, SPDT, SPEAKER/PHONE control	60A243
SW-8	Switch, part of VOLUME control R-31	
	PLUGS AND SOCKETS	
PL-1	Line cord and plug	87A078
SO-1	Receptacle, phono motor	36A029
SO-2	Receptacle, headphone jack	88A071
	Socket, octal (tube)	6A269
	Socket, miniature (tube)	6A297
	Socket, dial light	86B063
	TUBES, RECTIFIERS AND LAMPS	
V-1,2,3	6BA6, mixer, 1st & 2nd IF amplifier	90X6BA6
V-4	6H6, detector & ANL	90X6H6
V-5	6C4, oscillator	90X6C4
V-6	6SC7, audio amplifier & BFO	90X6SC7
V-7	6K6GT, power amplifier	90X6K6GT
V-8	5Y3GT, rectifier	90X5Y3GT
LM-1,2	Lamp, 6-8 V., 250 ma., Mazda #44	39A003
	MISCELLANEOUS	
TS-1	Terminal strip, antenna	88A032
	Lock, line cord	76A299
	Clip, coil mtg.	76A325
	Shaft, tuning drive	74A248
	"C" washer (tuning drive shaft)	4A139
	Spring, dial cord	75A012
	Dial cord	38A019
	Plate, dial	63C333
	Pointer, general coverage dial	82A149
	Pointer, band spread dial	82A148
	Dial glass (calibrated)	22C204
	Gasket, dial glass	12A042
	Clip, dial glass mtg.	76A390
	Pad, dial clip	16A126
	Pad, felt (round disc)	14A166
	Pad, sponge rubber	16A047-1
	Mounting feet, rubber	16A007
	Speaker, P.M.	85C030
	Knob, BAND SELECTOR, SENSITIVITY, and VOLUME controls	15A049
	Knob, BAND SPREAD and general coverage controls	15A047

© John F. Rider

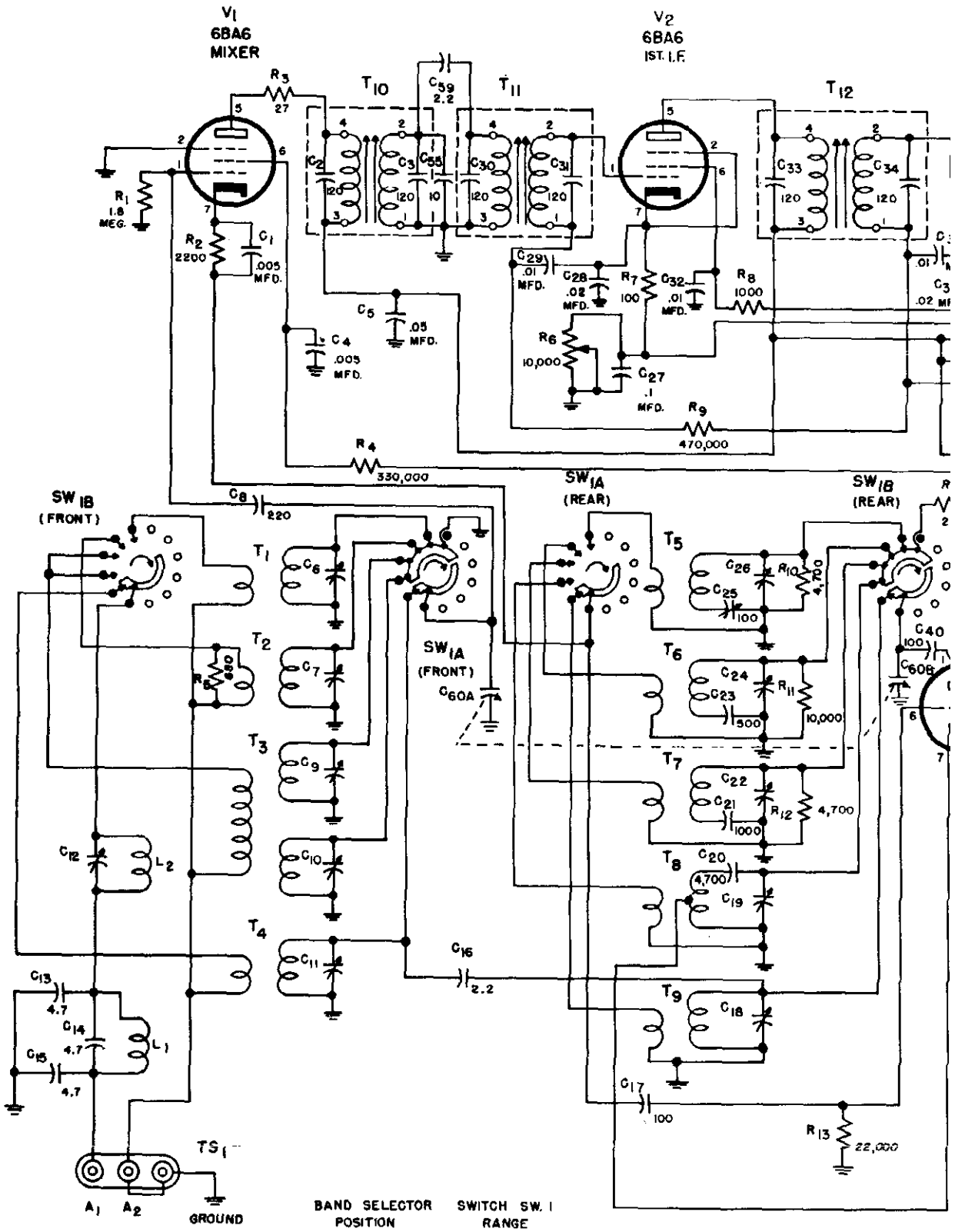

BAND SELECTOR POSITION	SWITCH SW. 1 RANGE
A	540-1650 KC.
B	2.5 - 6.6 MC.
C	6 — 11 MC.
D	13.5 - 32 MC.
E	47 — 55 MC.

NOTE:
SWITCH SHOWN IN POSITION E.

HALLICRAFTERS CO. MODEL S-53

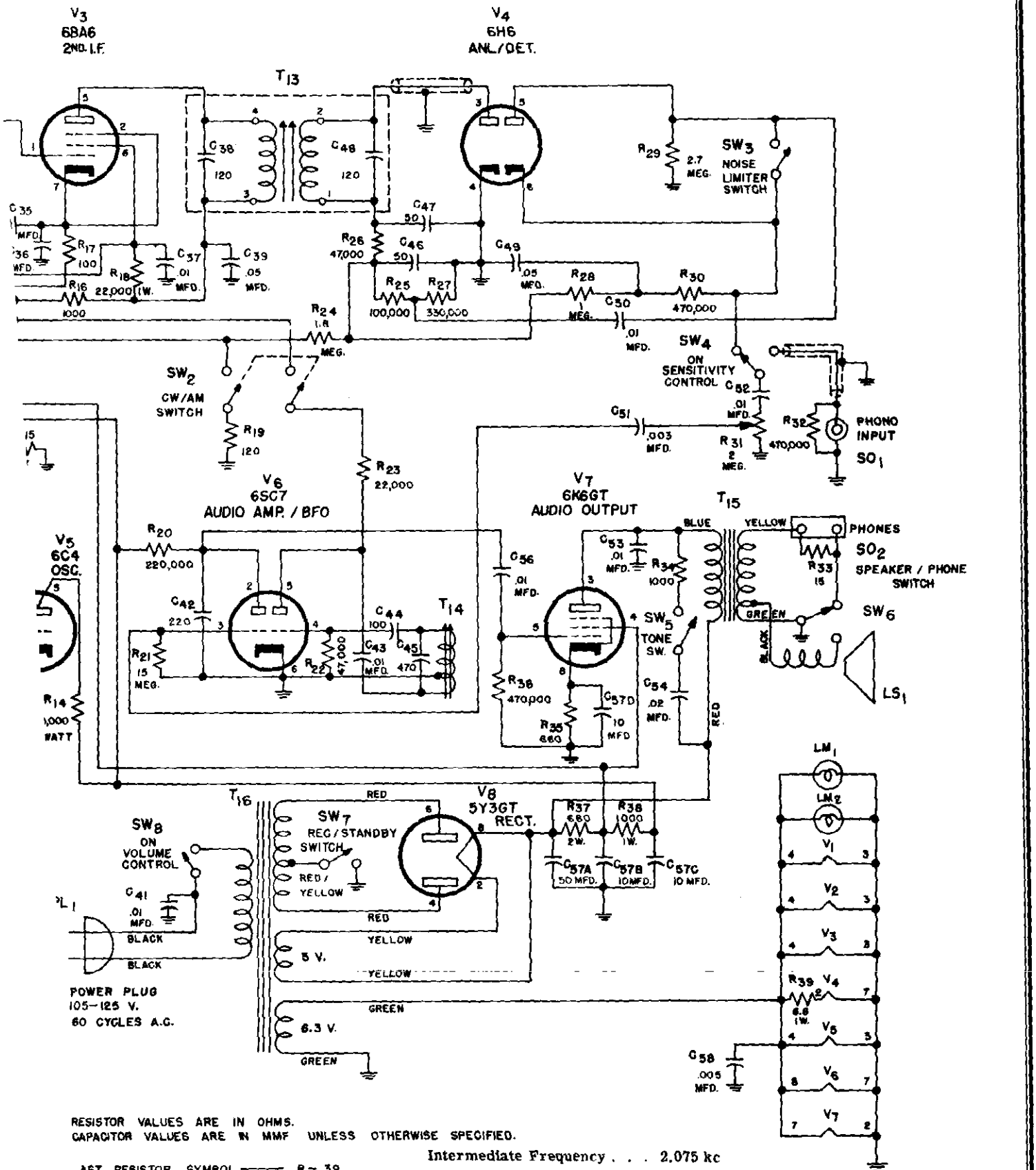

RESISTOR VALUES ARE IN OHMS.
CAPACITOR VALUES ARE IN MMF UNLESS OTHERWISE SPECIFIED.

Intermediate Frequency . . . 2.075 kc

LAST RESISTOR SYMBOL —— R-39

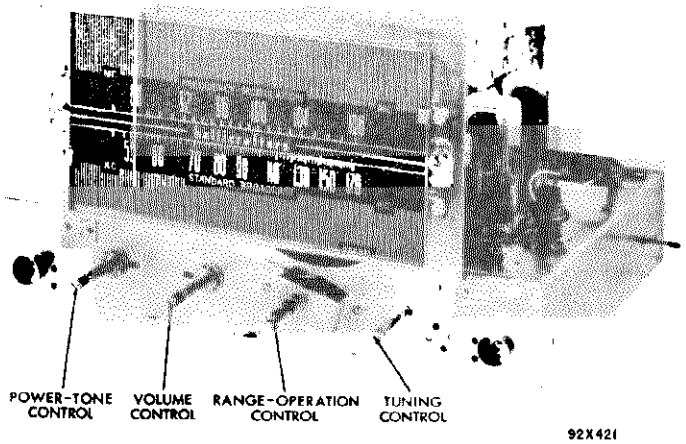

RESTRINGING DIAL CORD

Restring the dial drive with 30 lb test dial cord. Tie one end to the tension spring and follow the sequence outlined in Fig. 1. Stretch the tension spring and tie the end of the cord securely to the spring as shown.

Set the tuning condenser at maximum capacity (closed), attach the pointer to the string and line it up with the left hand index mark on the dial scale.

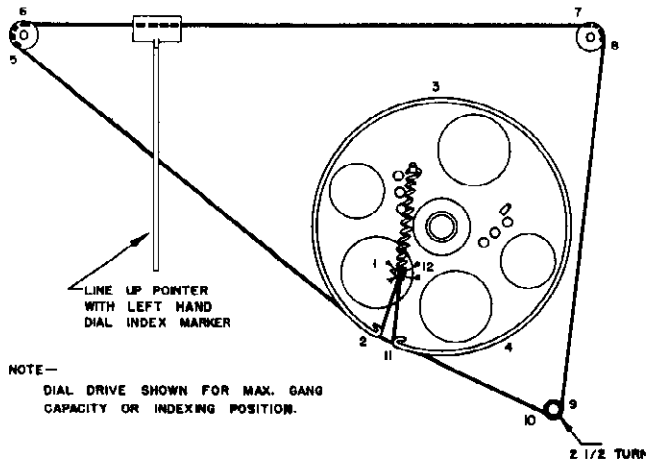

Fig. 1. Dial cable stringing procedure. (92B382.

REPLACING LAMPS

Refer to Fig. 7 for the location of two dial lamps used in the receiver. To gain access to defective lamps, reach in through the cabinet cover and unclip the dial lamp socket by compressing the side springs. The socket may then be brought out into the open to change the defective lamp. Replace all lamps with 6-8 V. Mazda #44 (Blue bead) lamps or equivalent.

ALIGNMENT PROCEDURE

The receiver is equipped with AUTOMATIC FREQUENCY CONTROL on the FM band to compensate for oscillator drift and improve the tuning function on the FM band. The correction factor is approximately 5 times; AFC takes hold 250 kc before the station frequency is reached and releases before tuning 500 kc beyond the station frequency when receiving a 1000 microvolt signal.

The standard RMA dummy specified in the alignment chart consist of a 200 mmf condenser in series with a 20 uh r-f choke which is shunted by a 400 mmf condenser in series with a 400 ohm carbon resistor.

When making the alignment adjustments set the tone control at NORMAL and the volume control at maximum volume. Use just enough signal generator output to obtain the results indicated on the chart.

© John F. Rider

THE HALLICRAFTERS CO. MODELS S-55, S-56

ALIGNMENT CHART:

Step	Dummy Antenna	Signal Generator Coupling	Signal Generator Frequency	Band Switch Pos.	Radio Dial Setting	Adjust	Remarks
1	0.01 mfd. cap.	To high cap. stator of center section.	455 kc	"BC"	1000 kc	A,B,C, D,E	Adjust for max. audio output. Keep audio output below 500 MW to avoid AVC action.
2	0.01 mfd. cap. in series with a 4700 ohm carbon resistor.	To low cap. stator of center section.	10.7 mc	"FM"	90 mc	F,G,H, I,J,K	Adjust for max. voltage as measured between pin #3 of 6H6 and ground with an electronic volt meter. Adjust signal generator output for approx. 2 volts DC at this point.
3	0.01 mfd. cap.	See step 2.	10.7 mc	"FM"	90 mc	L	Adjust for zero voltage as measured between the junction of R27 and R28 and ground with an electronic volt meter.
4	Std RMA dummy	To terminals "A" and "G" on terminal strip TS-2.	1500 kc	"BC"	1500 kc	*M,N,O	Adjust for max. output as in step 1.
5	Two 150 ohm carbon resistors	To terminals "D-D" on terminal strip TS-1.	105 mc	"FM"	105 mc	*P,Q	Adjust for max. voltage as measured across R24 with an electronic volt meter. Adjust signal generator output for approx. 1 volt DC at this point.

*Note - Calibration adjustments.

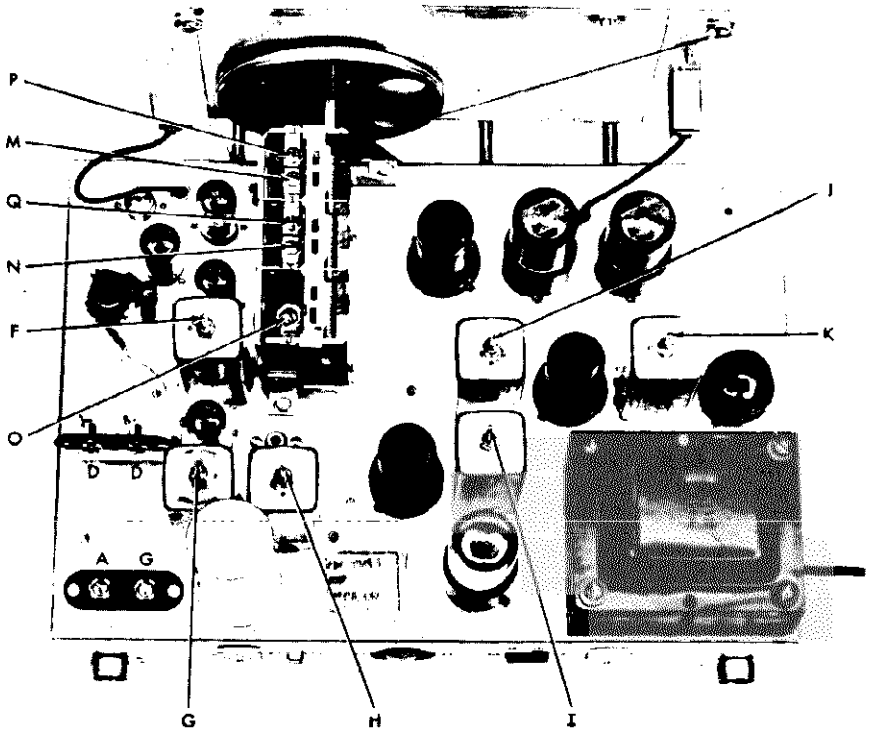

Fig. 2. Alignment adjustments, top view.

© John F. Rider

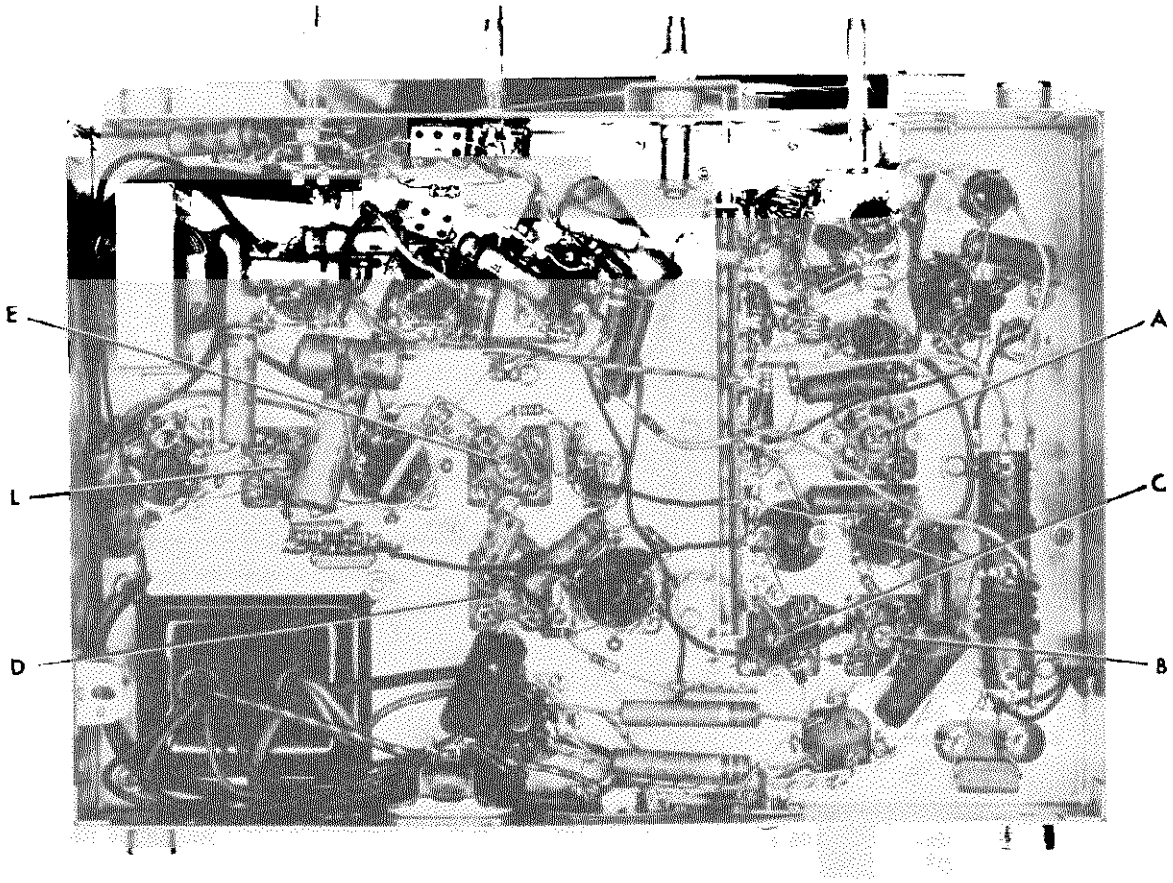

Fig. 3. Alignment adjustments, bottom view. *(92X410)*

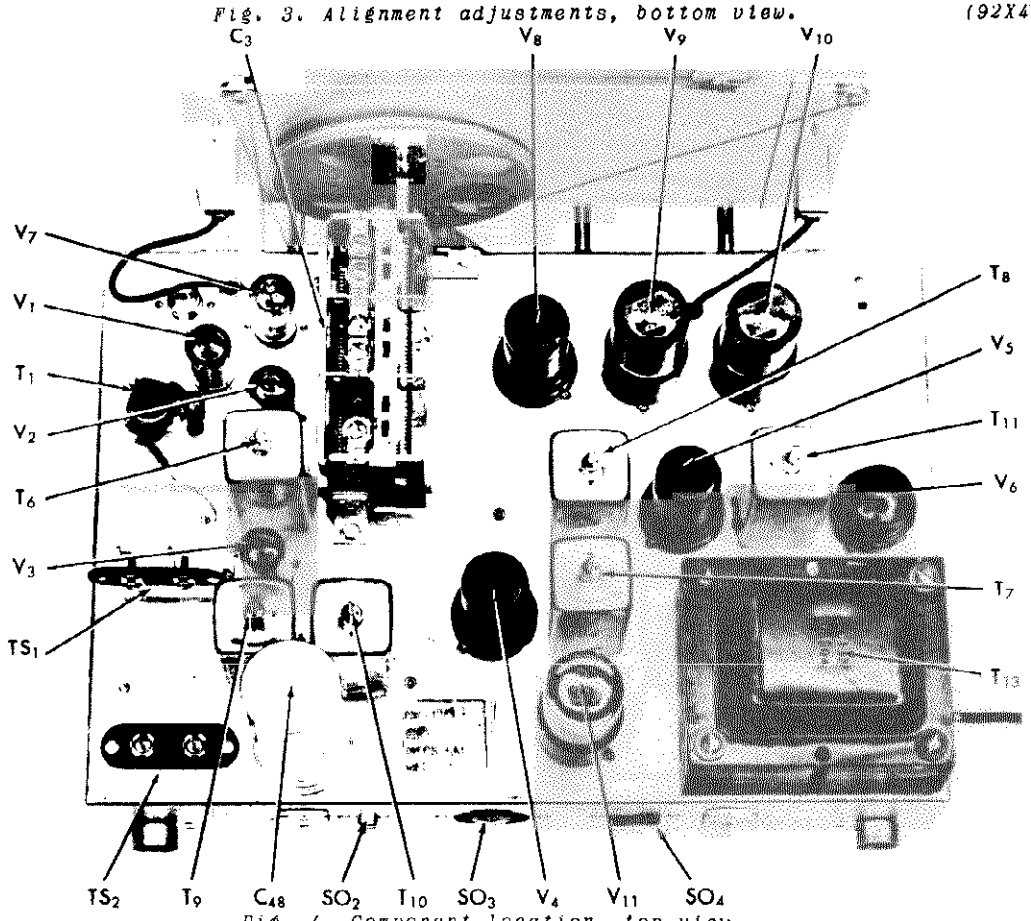

Fig. 4. Component location, top view.

© John F. Rider

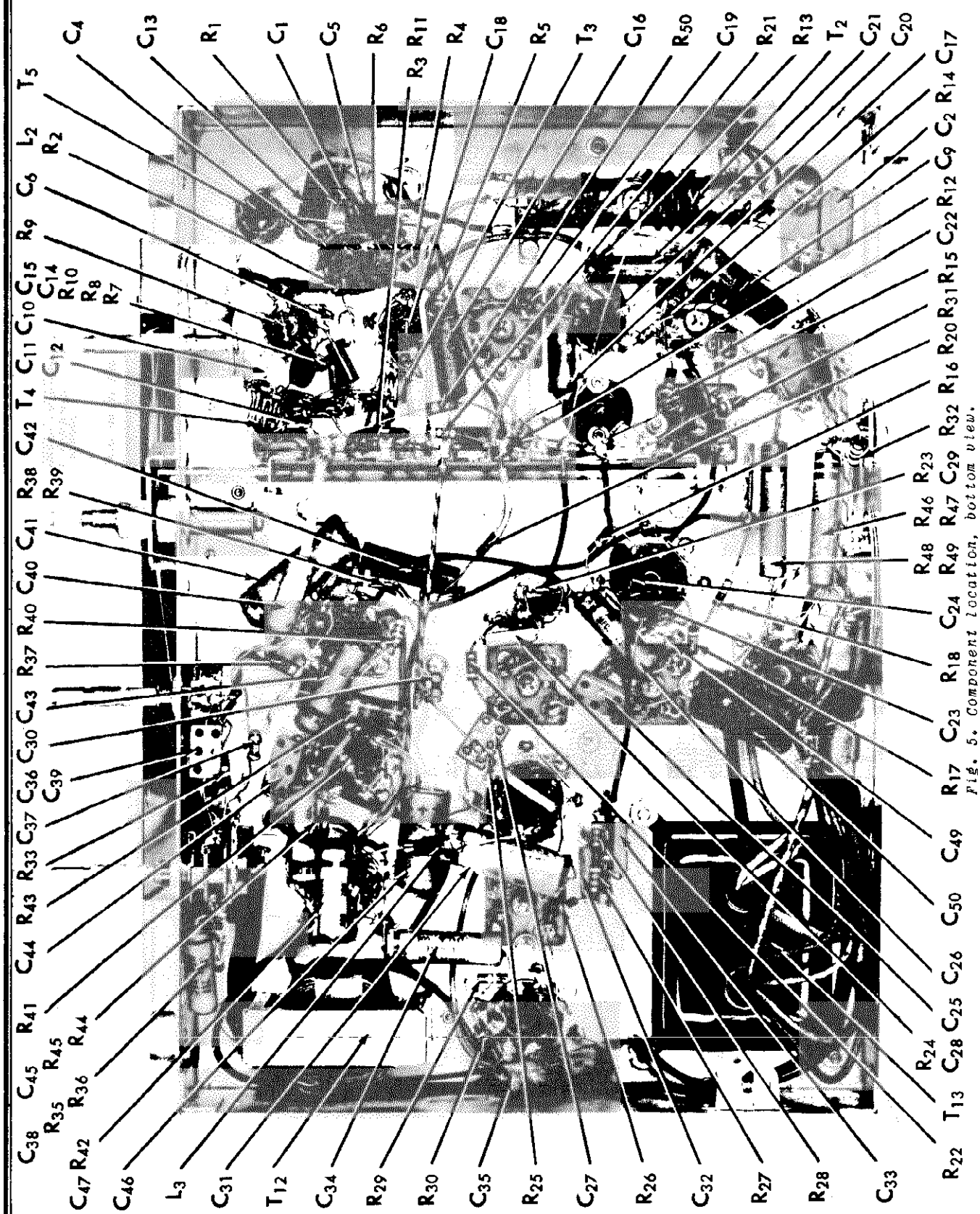

Fig. 5. Component location, bottom view.

MODELS S-55, S-56 THE HALLICRAFTERS CO.

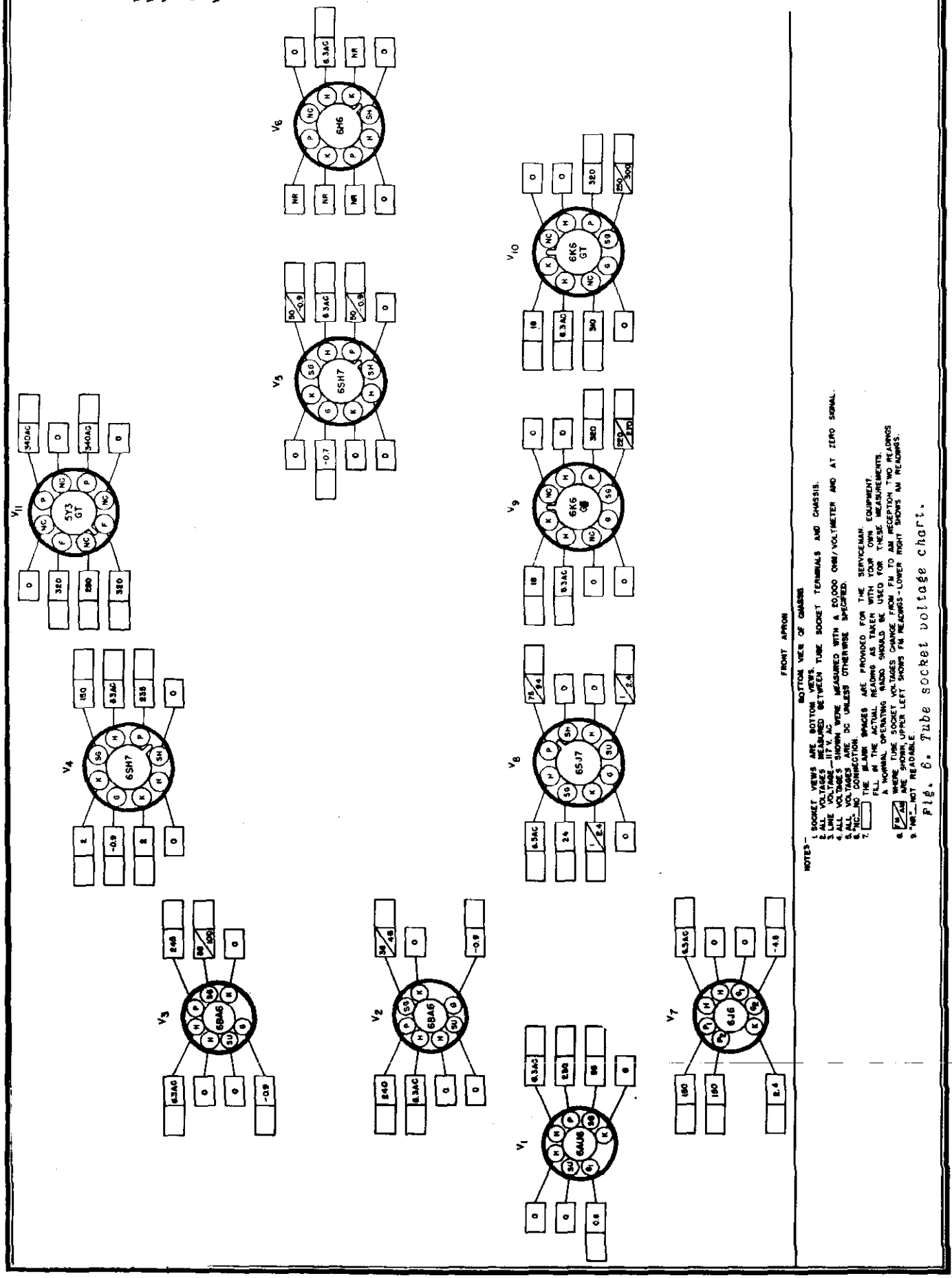

NOTES—
1. SOCKET VIEWS ARE BOTTOM VIEWS.
2. ALL VOLTAGES MEASURED BETWEEN TUBE SOCKET TERMINALS AND CHASSIS.
3. LINE VOLTAGE—117 V. AC
4. ALL VOLTAGES SHOWN WERE MEASURED WITH A 20,000 OHM/VOLT METER AND AT ZERO SIGNAL.
5. ALL VOLTAGES ARE DC UNLESS OTHERWISE SPECIFIED.
6. "NC"—NO CONNECTION.
7. [ ] THE BLANK SPACES ARE PROVIDED FOR THE SERVICEMAN EQUIPMENT. FILL IN THE ACTUAL READING AS TAKEN WITH YOUR OWN MEASUREMENTS. A NORMAL OPERATING RADIO SHOULD BE USED FOR THESE MEASUREMENTS.
8. [FM/AM] WHERE TUBE SOCKET VOLTAGES CHANGE FROM FM TO AM RECEPTION TWO READINGS ARE SHOWN, UPPER LEFT SHOWS FM READINGS-LOWER RIGHT SHOWS AM READINGS.
9. "NR"—NOT READABLE

Fig. 6. Tube socket voltage chart.

SERVICE PARTS LIST

Ref. No.	Description	Hallicrafter's Part Number
	CONDENSERS	
C-1,7,15,19	100 mmf. 500 V., ceramic	47B20101M5
C-2	100 mmf. 500 V., mica	CM20A101M
C-3	Tuning condenser, 5 sections	48C196
C-4,5,14,17, 18,20,23,24	.005 mfd. 450 V., ceramic	47A168
C-6	3.3mmf. 500 V., ceramic	CC20UK330K
C-8	3.3 mmf. 500 V., bakelite	47A160-5
C-9,34,35	.05 mfd. 200 V., tubular paper	46AU503J
C-10,12	47 mmf. 500 V., ceramic	CC20UK470M
C-11	7 mmf. 500 V., ceramic	CC20UJ070K
C-13,21,26, 36,43,45	.01 mfd. 600 V., tubular paper	46AZ103F
C-16	.02 mfd. 200 V., tubular paper	46AU203J
C-22	4.7 mmf. 500 V., bakelite	47A160-6
C-25	12 mmf. 500 V., mica	CM20A120K
C-27	47mmf. 500 V., mica	CM20A470M
C-28,29,32, 33	150 mmf. 500 V., mica	CM20A151M
C-30,37,49	1000 mmf. 500 V., ceramic	47B20102M5
C-31,41	.05 mfd. 600 V., tubular paper	46AY503J
C-38	.03 mfd. 200 V., tubular paper	46AU303J
C-39	68 mmf. 500 V., mica	CM20A680M
C-40	.003 mfd. 600 V., tubular paper	46AZ302J
C-42	.005 mfd. 600 V., tubular paper	46AZ502J
C-44	220 mmf. 500 V., mica	CM20A221M
C-46	10 mfd. 25 V., electrolytic	45A121
C-47	.002 mfd. 600 V., tubular paper	46AZ202J
C-48	60-20-20 mfd. 450 V., electrolytic	45B113
C-50	.01 mfd. 600 V., molded paper	46AG103J
C-51,52	1 mmf. 500 V., bakelite	47A160-2
C-53	.01 mfd. 600 V., tubular paper	46AY103J
	RESISTORS	
R-1,13	1 megohm ½ watt, carbon	RC20AE105M
R-2,14,17, 22,23,27,28	47,000 ohms ½ watt, carbon	RC20AE473M
R-3,5,26,31	220,000 ohms ½ watt, carbon	RC20AE224M
R-4,15	470 ohms ½ watt, carbon	RC20AE471M
R-6	4700 ohms 2 watts, carbon	RC40AE472M
R-7	10 ohms ½ watt, carbon	RC20AE100M
R-8,25	22,000 ohms ½ watt, carbon	RC20AE223M
R-9	150 ohms ½ watt, carbon	RC20AE151M
R-10	220 ohms ½ watt, carbon	RC20AE221M
R-11,33	100,000 ohms ½ watt, carbon	RC20AE104M
R-12,32,40,	470,000 ohms ½ watt, carbon	RC20AE474M
R-16	270 ohms ½ watt, carbon	
R-18,53	1000 ohms ½ watt, carbon	RC20AE102M
R-19,39	2.2 megohms ½ watt, carbon	RC20AE225M
R-20	68,000 ohms ½ watt, carbon	RC20AE683M
R-24	330,000 ohms ½ watt, carbon	RC20AE334M
R-29,30	100,000 ohms ½ watt, carbon	RC20AE104K
R-34	Volume control, 2 megohms (tapped)	25B623
R-35,36 44,50	6800 ohms ½ watt, carbon	RC20AE682M
R-37	330 ohms ½ watt, carbon	RC20AE331K
R-38	100,000 ohms 1 watt, carbon	RC30AE104K
R-43	300 ohms 2 watt, carbon	RC40AE301J
R-45	12,000 ohms ½ watt, carbon	RC20AE123K
R-46,47	1200 ohms 2 watt, carbon	RC40AE122K
R-48,49	1500 ohms 2 watt, carbon	RC40AE152K
	TRANSFORMERS AND COILS	
T-1	Transformer, FM, antenna stage	51B1021
T-2	Transformer, BC, mixer stage	51B1059
T-3	Transformer, FM, mixer stage	51B1022
T-4	Transformer, FM, osc. stage	51B1073
T-5	Transformer, BC, osc. stage	51B1020
T-6	Transformer, 1st I.F.	50B409
T-7,9	Transformer, 2nd I.F. and AM Detector & FM limiter	50B407
T-8,10	Transformer, 2nd I.F. and AM Detector & FM limiter	50B408
T-11	Transformer, FM, detector stage	50B410
T-12	Transformer, audio output	55B109
T-13	Transformer, power	52C152
L-2	Plate choke for tube V1	53B124
L-3	Filament choke for tubes V5 & 6	53B123
L-4	Filament choke for tubes V1,2,3, & 7	53A136

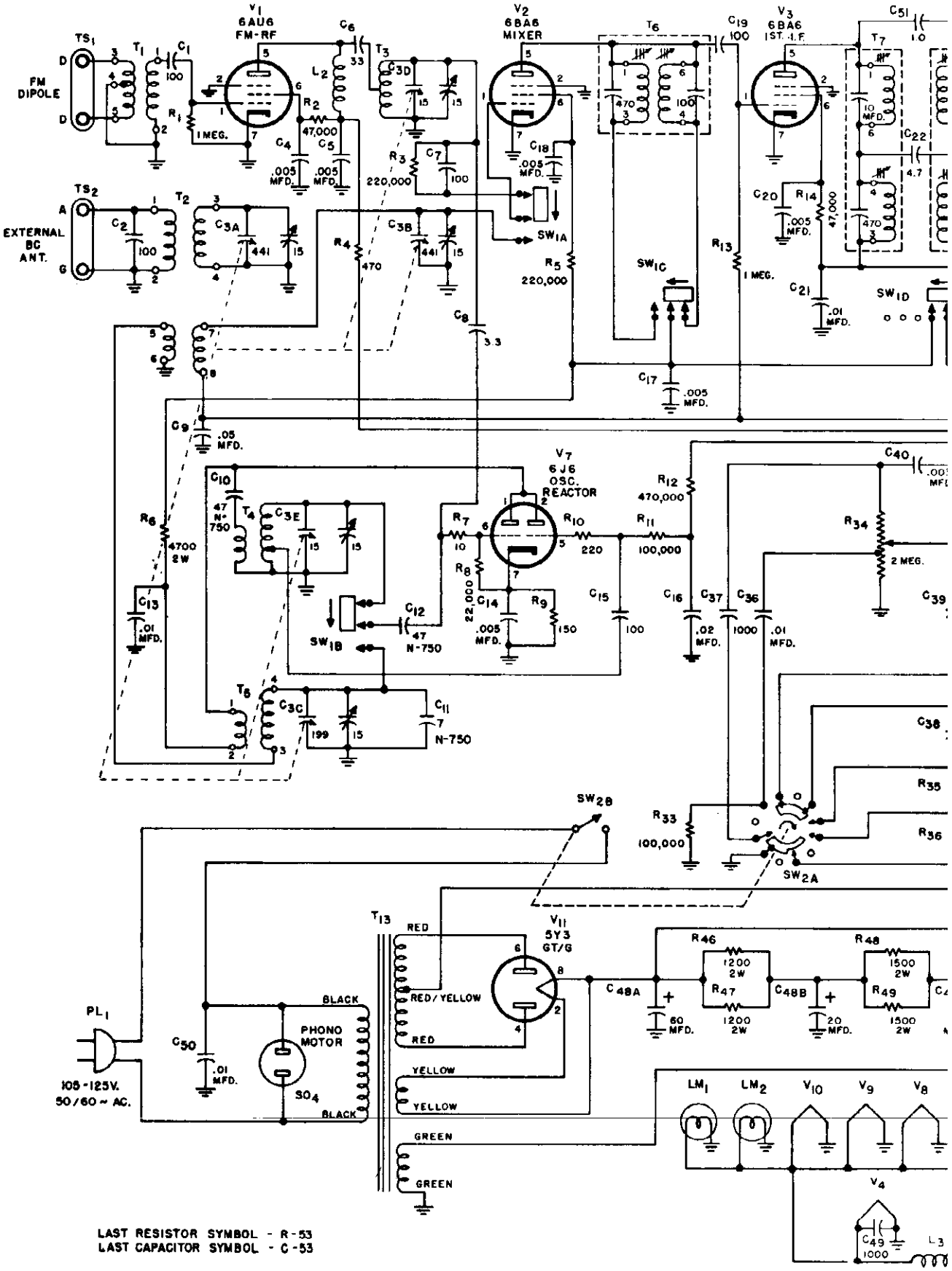
V1 6AU6 FM-RF
V2 6BA6 MIXER
V3 6BA6 IST. I.F.
V7 6J6 OSC. REACTOR
V11 5Y3 GT/G
FM DIPOLE
EXTERNAL BC ANT.
PHONO MOTOR
105-125V. 50/60 ~ AC.
LAST RESISTOR SYMBOL - R-53
LAST CAPACITOR SYMBOL - C-53

Fig. 8. Sch

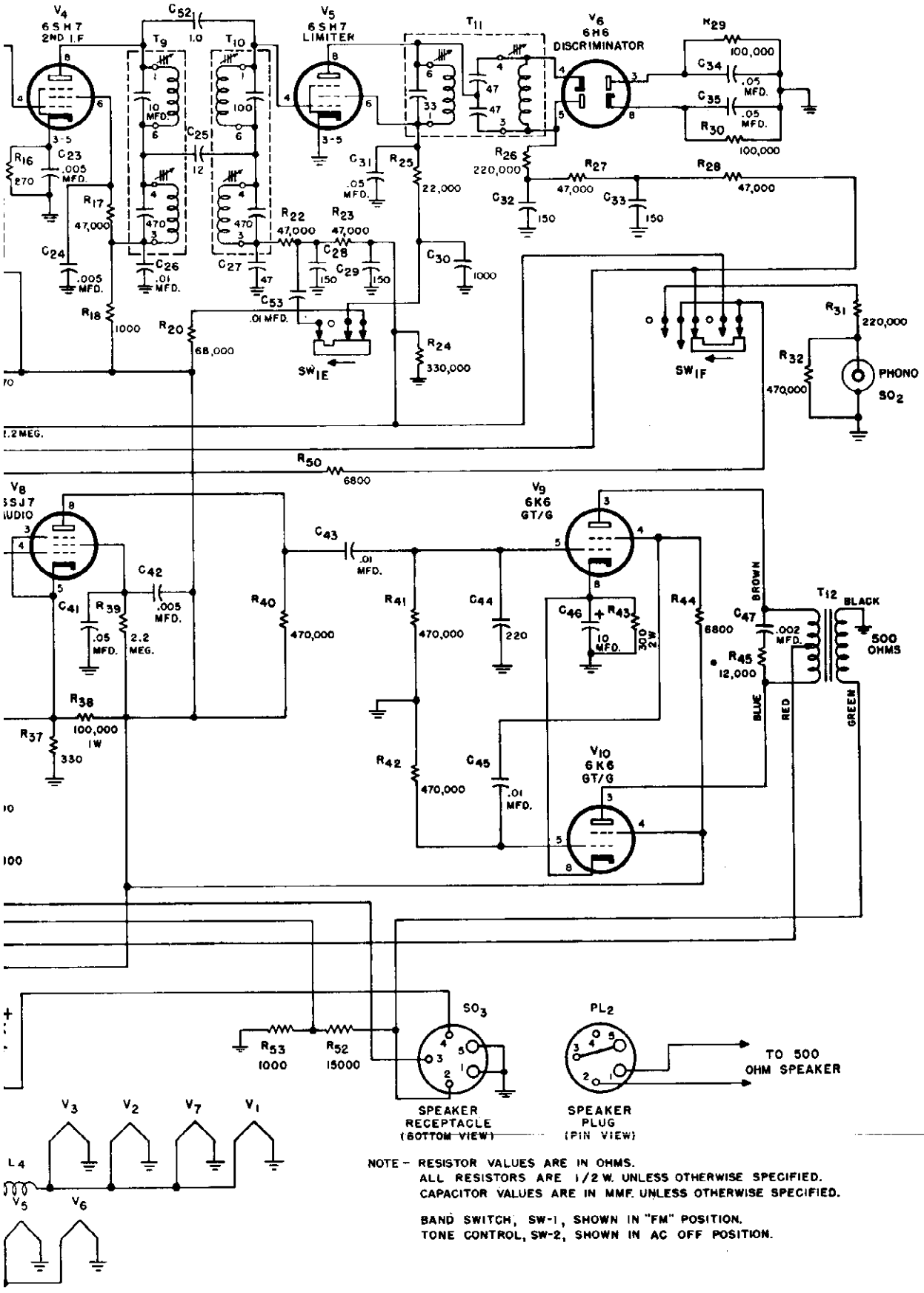

NOTE - RESISTOR VALUES ARE IN OHMS.
ALL RESISTORS ARE 1/2 W. UNLESS OTHERWISE SPECIFIED.
CAPACITOR VALUES ARE IN MMF. UNLESS OTHERWISE SPECIFIED.

BAND SWITCH, SW-1, SHOWN IN "FM" POSITION.
TONE CONTROL, SW-2, SHOWN IN AC OFF POSITION.

ic diagram.

SWITCHES

SW-1	Band switch assembly	60B318
SW-2	Switch, tone control	60B319

PLUGS AND SOCKETS

PL-1	Line cord and plug	87A078
SO-2	Receptacle, television, phono	36A029
SO-3	Receptacle, speaker	6A277
SO-4	Receptacle, phono motor	10A015
	Socket, octal (tube)	6A296
	Socket, miniature (tube)	6A297
	Socket & bracket, dial light	86A062

TUBES, RECTIFIERS AND LAMPS

V-1	6AU6 antenna	90X6AU6
V-2,3	6BA6 mixer, 1st I.F.	90X6BA6
V-4,5	6SH7 2nd I.F., limiter	90X6SH7
V-6	6H6 discriminator	90X6H6
V-7	6J6 osc. & AFC	90X6J6
V-8	6SJ7 audio amp.	90X6SJ7
V-9,10	6K6GT power amp.	90X6K6GT
V-11	5Y3GT rectifier	90X5Y3GT
LM-1,2	Lamp, 6-8 V., 250 Ma., Mazda #44	39A003

MISCELLANEOUS

Shaft, tuning	74A247
Pulley, idler	28A052-6
Switch, cam	77A261
Drive pin	74A246
Collar	77A267
Bushing	77A266
Bracket, dial plate mtg.	67A793
Dial plate	63B332
Dial background (paper)	32A446
Dial glass (calibrated)	22C201
Clip (for dial glass 22C201)	76A390
Rubber spacer, for dial clip	16A126
Pointer	82A147
Dial cord	38A019
Spring, dial cord	75A012
Dial glass (clear)	22B205
Clip (for dial glass 22B205)	76A331
Escutcheon (Model S-55)	7C067-1
Escutcheon (Model S-56)	7C067
Knob, tone and range controls (Model S-55)	15B077-4
Knob, tone and range controls (Model S-56)	15B068-3
Knob, tuning and volume controls (Model S-55)	15B068-4
Knob, tuning and volume controls (Model S-56)	15B077-3
TS-1 Terminal strip, antenna (Marked D-D)	87A379
TS-2 Terminal strip, antenna (Marked A-G)	88A327
Line cord lock	76A299
Mounting foot, rubber	16A007

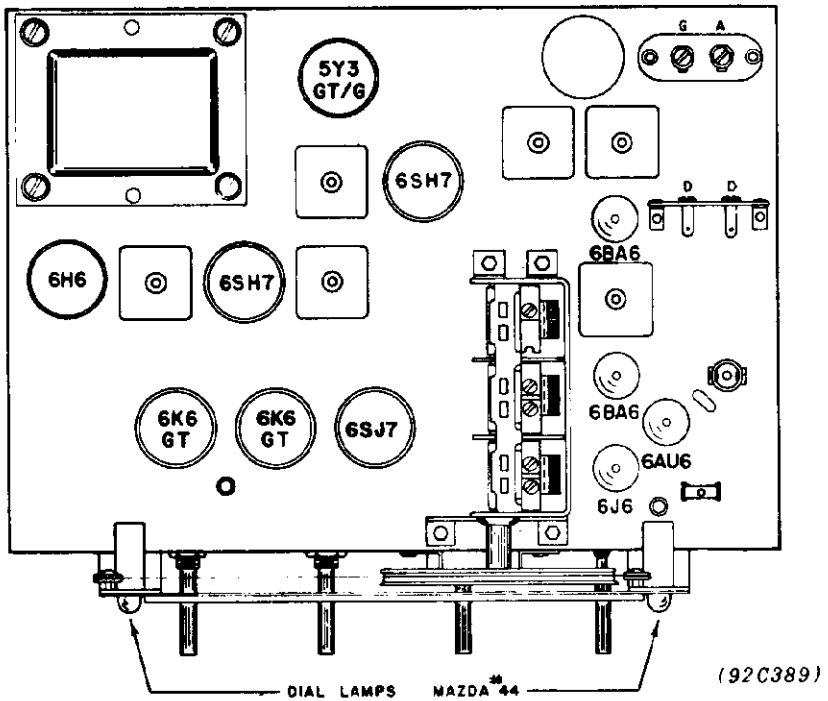

Fig. 7. Top view, location of tubes and dial lamps.

THE HALLICRAFTERS CO. MODEL S-58

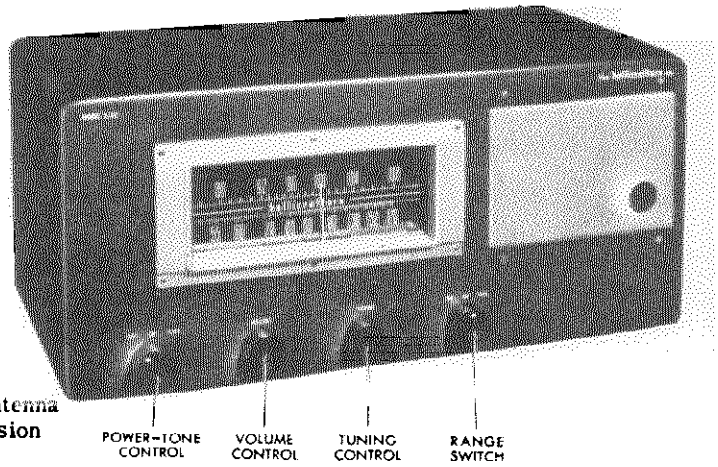

GENERAL

Tubes	Six plus rectifier
Speaker	5-inch PM
Voice Coil Impedance	3.2 ohms
Antenna	Provisions for external antenna with 300-ohm transmission line
Phono Input	High Impedance
Tuning	Manual
Frequency Range	Broadcast 540 kc - 1600 kc Frequency Modulation 88 mc - 108 mc
Intermediate Frequency	455 kc/10.7 mc
Power Supply	105-125 V., DC or 60 cycles AC
Power Consumption	28 Watts

ALIGNMENT PROCEDURE

Generator connection	See chart
Generator ground	See chart.
Output meter connection	Across voice call
Electronic voltmeter connection	See chart
Volumn control position	Maximum
Tone control position	Optional

The standard RMA dummy specified in the alignment chart consist of a 200 mmf condenser in series with a 20 uh r-f choke which is shunted by a 400 mmf condenser in series with a 400 ohm carbon resistor.

REPLACING LAMPS

Refer to Fig. 4. for the location of the dial lamps used in receiver. To gain access to the defective lamp, reach in through the cabinet cover and unclip the dial lamp socket by compressing the side springs. The socket may then be brought out into the open to change the defective lamp. Replace defective lamps with 6-8 V. Mazda #47 (Brown bead) lamps or equivalent.

RESTRINGING DIAL CORD

To restring the dial cable, the chassis must be removed from the cabinet. Pull the four control knobs from their shafts, remove the three chassis screws at the bottom of the cabinet and lift the chassis from the cabinet through the top cover. Restringing the dial drive with a 48-inch length of 20 lb. test dial cord following the stringing sequence shown in Fig. 1. With the tuning condenser set at maximum capacity (closed) attach the dial pointer to the drive string and line it up with the left hand index mark on the dial scale.

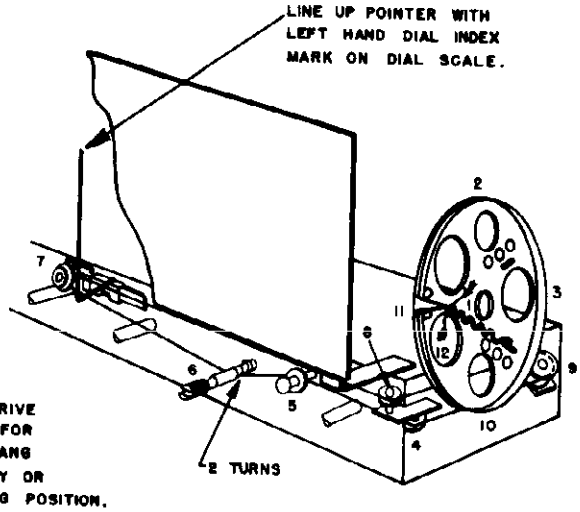

Fig. 1. Dial cable stringing procedure (92B513)

©John F. Rider

MODEL S-58

THE HALLICRAFTERS CO.

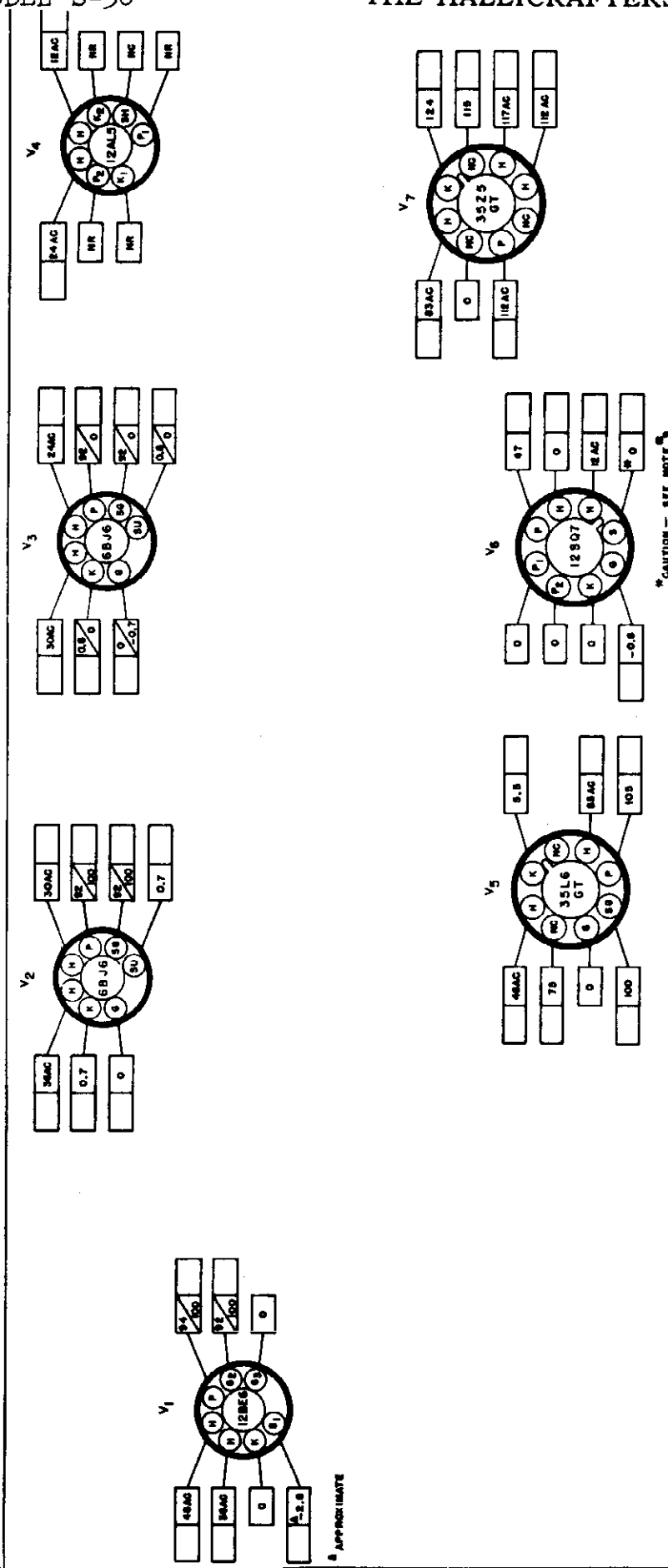

NOTES —

1. SOCKET VIEWS ARE BOTTOM VIEWS.
2. ALL VOLTAGES ARE MEASURED BETWEEN TUBE SOCKET TERMINALS AND ELECTRICAL GROUND BUSS (NOT CHASSIS WITH ZERO SIGNAL INPUT. WHERE TWO READINGS ARE SHOWN THE FIRST IS FOR PIN THE SECOND FOR PIN.
3. LINE VOLTAGE—117 V. AC. AC VOLTAGES SHOWN WILL BE DC WHEN OPERATING FROM A DC LINE.
4. ALL VOLTAGES SHOWN ARE DC UNLESS OTHERWISE SPECIFIED.
5. DC VOLTAGES SHOWN WERE MEASURED WITH AN ELECTRONIC VOLTMETER.
6. "NC"— NO CONNECTION. (VOLTAGES SHOWN FOR THIS TERMINAL ONLY WHEN TERMINAL IS USED AS A TIE LUG).
7. "NR"— NOT READABLE. (READING GENERALLY MEANINGLESS).
8. [ ] SPACE PROVIDED FOR SERVICE METER READINGS.
9. ALL READINGS TAKEN WITH LINE PLUG POLARIZED SO THAT GROUND BUSS AND CHASSIS ARE AT THE SAME POTENTIAL WITH CHASSIS GROUNDED.

Fig. 5. Tube socket voltage chart.

THE HALLICRAFTERS CO. MODEL S-58

ALIGNMENT CHART

	Dummy Antenna	Signal Generator Coupling	Signal Generator Frequency	Radio Range Switch Position	Radio Dial Setting	Adjust	Remarks
1.	.01 mfd. cap.	High side to stator plates of high cap. mixer section. Generator ground to chassis.	455 kc	AM	1000 kc	A,B,C,D	Adjust for max. audio output at voice coil. Keep audio output below 50 mw to avoid AVC action.
2.	.01 mfd. cap.	High side to stator plates of low cap. mixer section. Generator ground to chassis.	10.7 mc (No modulation)	FM	100 mc	E,F,G,H	Adjust for max. DC voltage between pin #7 of the 12 AL5 and ground buss. Connect a 500,000 ohm resistor in series with voltmeter probe. Use just enough signal generator output ot obtain approx. 2 volts at the electronic voltmeter.
3.	After completing the adjustments required by step 2. detune the signal generator on each side of 10.7 mc and note the generator dial or frequency reading for one half of the DC voltage measured by the electronic voltmeter. Use just enough signal generator output to obtain a maximum of 2 volts at the center frequency of the IF channel. Set the signal generator frequency at the midpoint of the two readings obtained above and align the FM detector transformer as follows:						
4.	Without changing the setup, adjust the primary of the FM detector transformer (I) for maximum DC voltage. Disconnect the electronic voltmeter probe and reconnect it at the junction of R-13 and 14 using the 500,000-ohm resistor as before for isolation. Adjust the secondary of the FM detector (J) for the null or zero DC voltage. This completes the IF amplifier adjustment.						
5.	Std. RMA dummy	To terminals "D-D" on rear chassis apron. Connect RMA dummy to unbypassed terminal.	1500 kc	AM	1500 kc	*K,L	Adjust for max. audio output as in step 1.
			600 kc	AM	600 kc	*M	
6.	300-ohm carbon resistor	To terminals "D-D" on rear chassis apron. Connect resistor to high side or unbypassed terminal.	108 mc	FM	108 mc	*N,O	Adjust for max. DC voltage as in step 2.

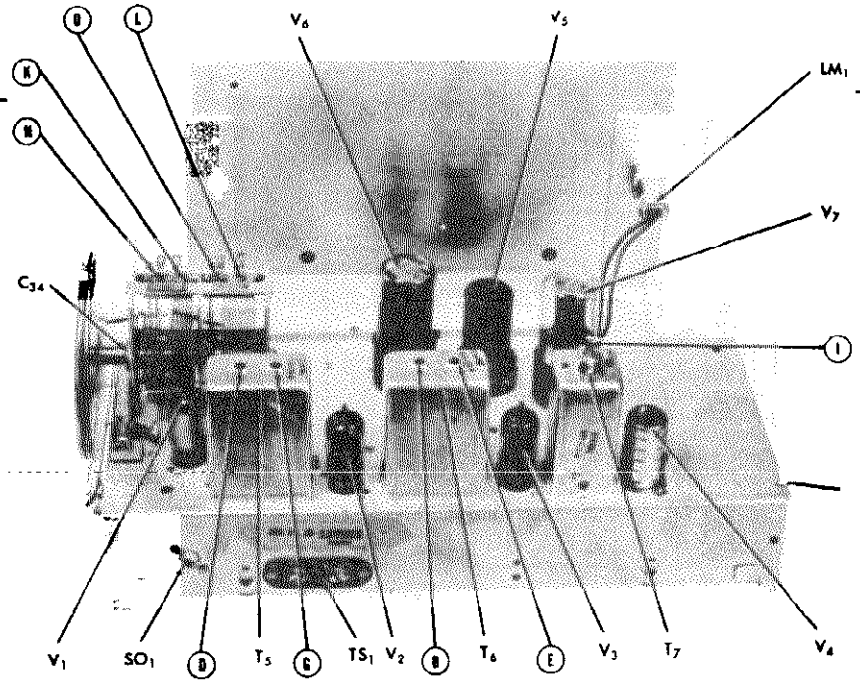

Fig. 2. Top view, alignment, adjustments and component location

MODEL S-58 THE HALLICRAFTERS CO.

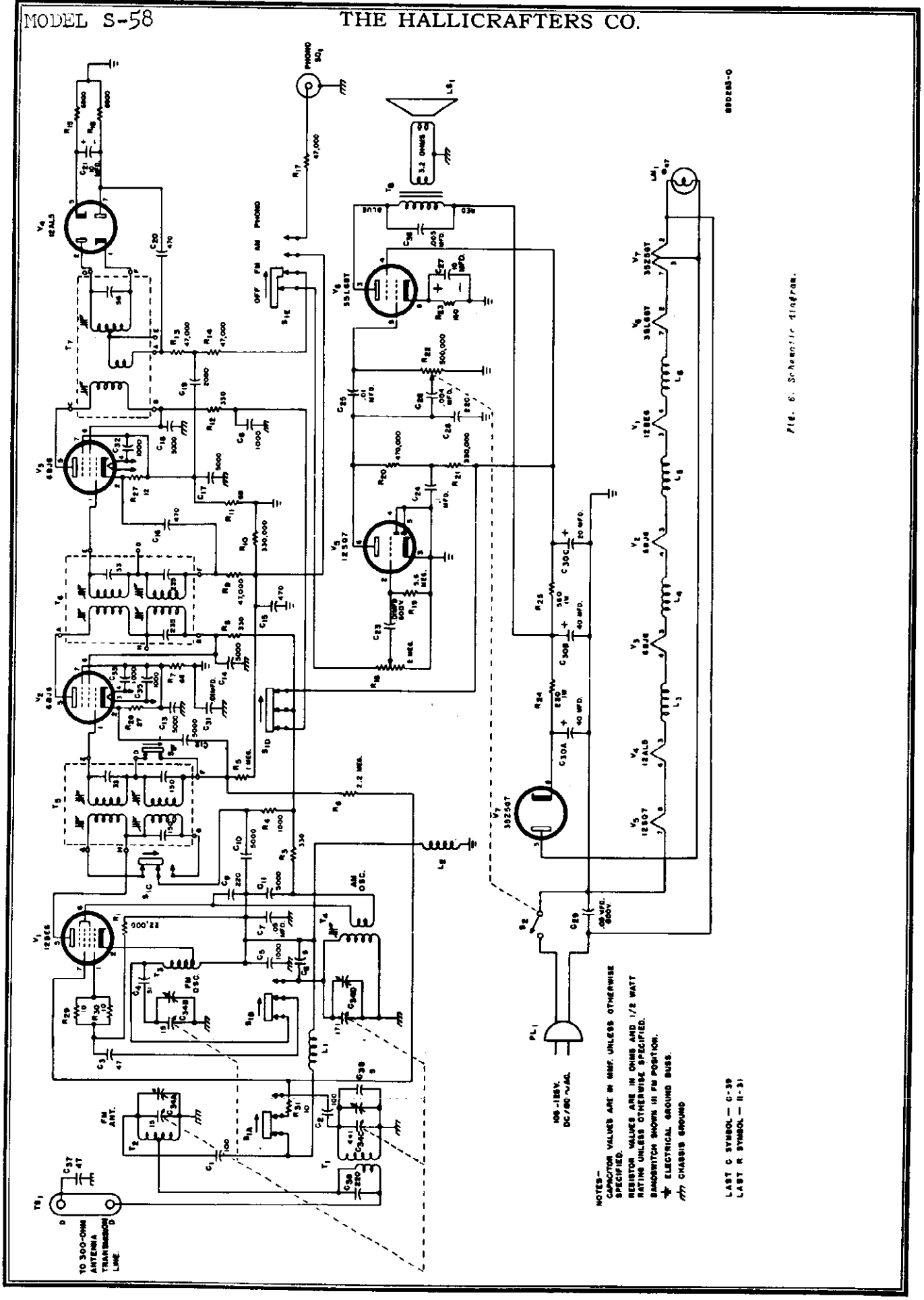

Fig. 6. Schematic diagram.

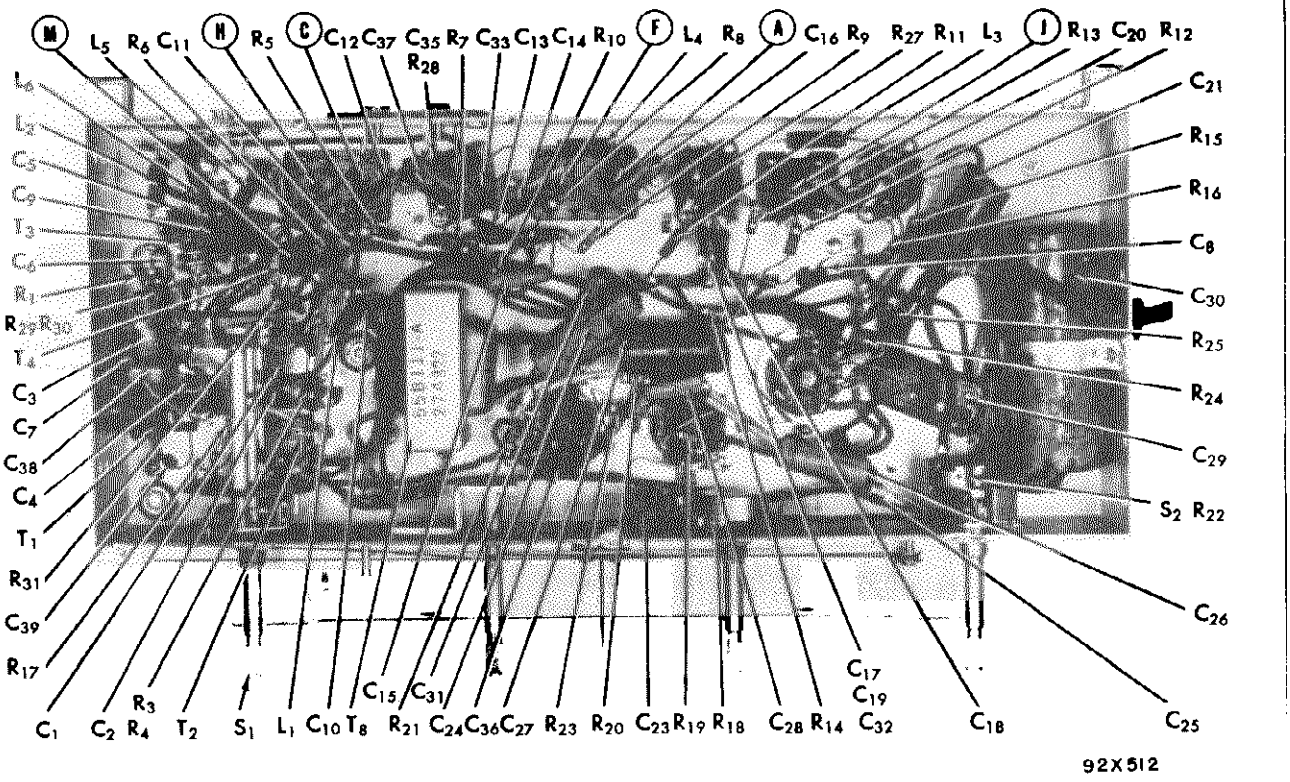

Fig. 3. Bottom view, alignment adjustments and component location

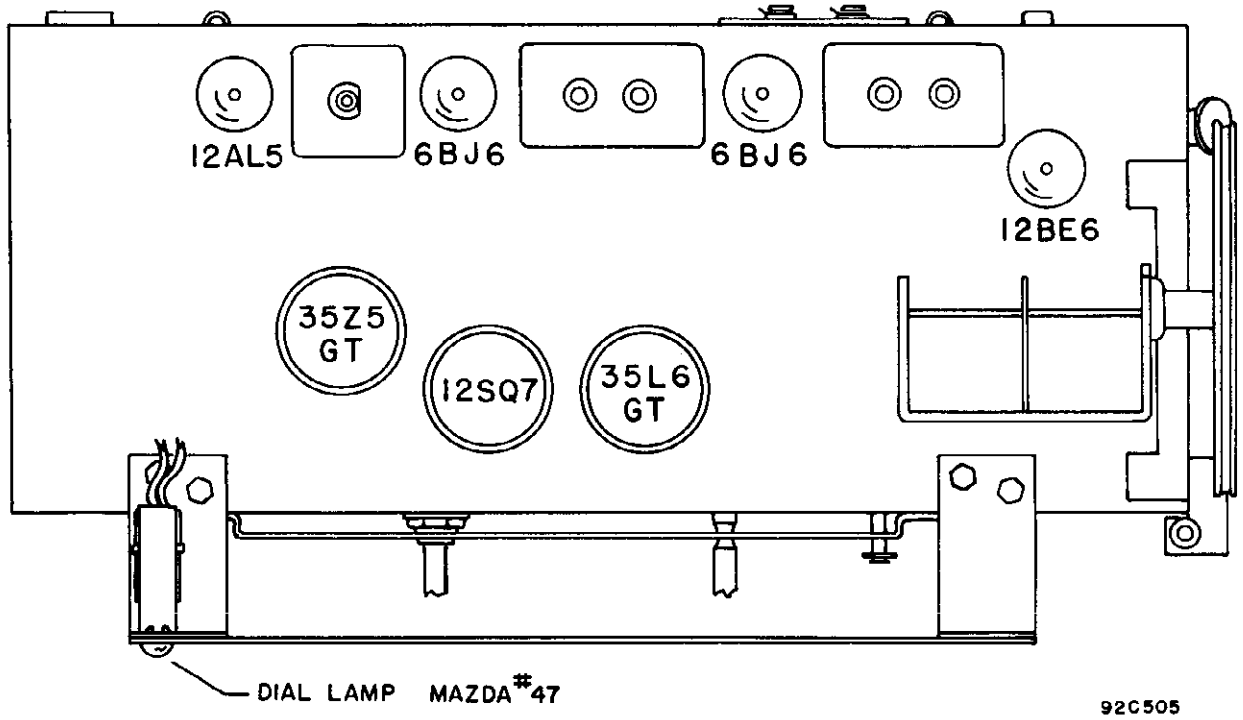

Fig. 4. Top view, location of tubes and dial lamps.

SERVICE PARTS LIST

Description	Hallicrafters Part Number	Hallicrafters Part Number	Ref. No.	Ref. No.	Description
COILS AND TRANSFORMERS (Cont.)					**CONDENSERS**
Transformer, AM osc. stage	51B1063	CC26UK101K	T-4	C-1,2	100 mmf. 500 V., ceramic
Transformer, 1st IF stage	50B399	CC21UK470K	T-5	C-3	47 mmf. 500 V., ceramic
Transformer, 2nd IF stage	50B400	CC21UK510J	T-6	C-4	51 mmf. 500 V., ceramic
Transformer, ratio detector	50B401	47B20A102N5	T-7	C-5,8,32,33	1000 mmf. 500 V., ceramic
Transformer, audio output	55B111		T-8	35	
		CC21UK050K		C-6	5 mmf. 500 V., ceramic
SWITCHES		46AY503J		C-7	.05 mfd. 600 V., tubular
		CM20A221M		C-9,28,38	220 mmf. 500 V., mica
Switch assembly, band selector	60B328	47A168	S-1	C-10,11,12,	5000 mmf. 500 V., ceramic
Power switch, part of tone control, R-22			S-2	13,14,17, 18,36	
		CM20A471M		C-15,16,20	470 mmf. 500 V., mica
PLUGS AND SOCKETS		47B20A202M5		C-19	2000 mmf. 500 V., ceramic
		45A121		C-21,27	10 mfd. 25 V., electrolytic
Line cord and plug	87B1669	46AZ103J	PL-1	C-23,25,31	.01 mfd. 600 V., tubular
Socket, miniature (tube)	6A308	46AU104J		C-24	.1 mfd. 200 V., tubular
Socket, octal (tube)	6A296	46AZ402J		C-26	.004 mfd. 600 V., tubular
Receptacle, phono.	36A029	46AR503J	SO-1	C-29	.05 mfd. 600 V., molded paper
Socket, dial light	86A036-4	45B130		C-30	40-40-20 mfd. 150 V., electrolytic
		48C203		C-34	Capacitor, main tuning
TUBES, RECTIFIERS AND LAMPS		CM20A470M		C-37	47 mmf. 500 V., mica
		47A160-6		C-39	5 mmf. 500 V., bakelite
Type 12BE6, mixer/osc.	90X12BE6		V-1		
Type 6BJ6, 1st IF amp.	90X6BJ6		V-2		**RESISTORS**
Type 6BJ6, 2nd IF amp. (FM) & detector (AM)	90X6BJ6	RC20AE223K	V-3	R-1	22,000 ohms ½ watt, carbon
Type 12AL5, detector (FM)	90X12AL5	RC20AE331M	V-4	R-3,8,12	330 ohms ½ watt, carbon
Type 12SQ7, audio amp.	90X12SQ7	RC20AE102M	V-5	R-4	1000 ohms ½ watt, carbon
Type 35L6 GT, audio power amp.	90X35L6GT	RC20AE105M	V-6	R-5	1 megohm ½ watt, carbon
Type 35Z5GT, rectifier	90X35Z5GT	RC20AE225M	V-7	R-6	2.2 megohms ½ watt, carbon
Dial lamp, 6-8 V., Mazda #47 (brown bead)	39A004	RC20AE680K	LM-1	R-7,11	68 ohms ½ watt, carbon
		RC20AE473M		R-9,13,14,17	47,000 ohms ½ watt, carbon
MISCELLANEOUS		RC20AE334M		R-10,21	330,000 ohms ½ watt, carbon
		RC20AE682K		R-15,16	6800 ohms ½ watt, carbon
Terminal strip, antenna	88A379	25B624		R-18	2 megohms, VOLUME control
Lock, line cord	76A397	RC20AE565M	TS-1	R-19	5.6 megohms ½ watt, carbon
Escutcheon	7D067-3	RC20AE474M		R-20	470,000 ohms ½ watt, carbon
Dial glass (clear)	22B205	25B758		R-22	500,000 ohms, TONE control (switch S2)
Clip, dial glass	76A331	RC20AE151K		R-23	150 ohms ½ watt, carbon
Grill, speaker	7C016-2	RC30AE221M		R-24	220 ohms 1 watt, carbon
Speaker, P.M.	85B050	RC30AE561K		R-25	560 ohms 1 watt, carbon
Dial plate	63B332	RC20AE120K		R-27	12 ohms ½ watt, carbon
Dial background (black)	32A446	RC20AE270K		R-28	27 ohms ½ watt, carbon
Dial scale (glass)	22C212	RC20AE100K		R-29,30,31	10 ohms ½ watt, carbon
Clip, dial scale	76A390				
Spacer, rubber	16A126				**COILS AND TRANSFORMERS**
Pointer, dial	82A152				
Shield, miniature tube	69A332	53B153		L-1,2,3,4,5, 6	Coil, R.F. choke
Knob, OFF-ON-TONE and FM-AM-PHO controls	15B142-1				
		51B1064		T-1	Transformer, AM antenna stage
Knob, VOLUME and TUNING controls	15B067-3	51A1061		T-2	Transformer, FM mixer stage
		51A1062		T-3	Transformer, FM osc. stage

© John F. Rider

GENERAL

Tubes	Seven plus rectifier
Output Impedance	500 ohms
Antenna	Built-in loop type antenna. Provisions for external antenna
Phono Input	High impedance
Tuning	Manual
Frequency Range	Broadcast 540 kc - 1600 kc Frequency Modulation 88 mc - 108 mc
Intermediate Frequency	455 kc/10.7 mc
Power Supply	105 - 125 V. 60 cycles AC
Power Consumption	60 watts

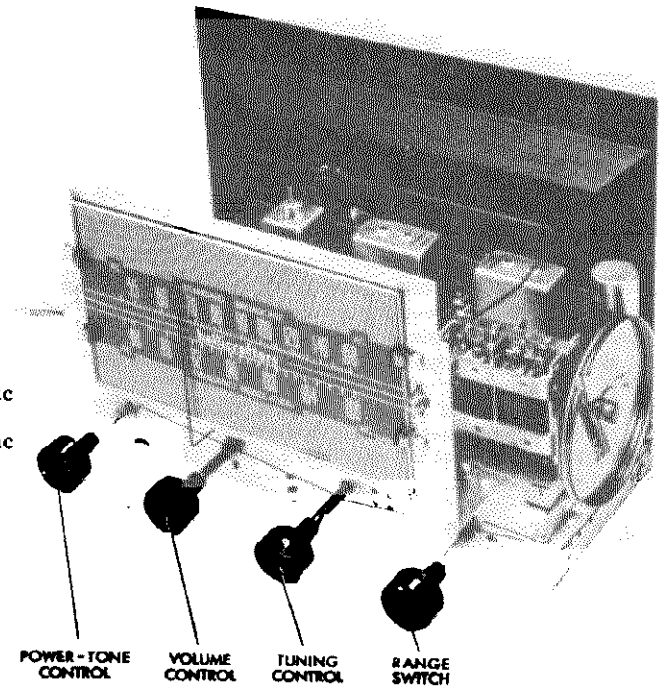

RESTRINGING DIAL CORD

Restring the dial drive with a 48-inch length of 20 lb. test dial cord. Tie one end to the tension spring and follow the stringing sequence outlined in Fig. 1. Stretch the tension spring and tie the end of the cord securely to the spring as shown.

Set the tuning condenser at maximum capacity (closed), attach the dial pointer to the drive string and line it up with the left hand index mark on the dial scale.

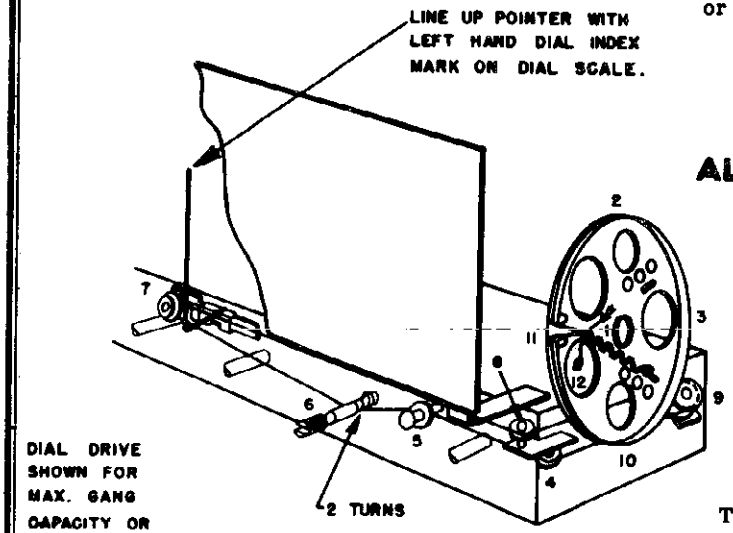

REPLACING LAMPS

Refer to Fig. 4 for the location of the two dial lamps used in the receiver. To gain access to defective lamps, unclip the dial lamp socket by compressing the side springs. Replace defective lamps with 6-8 V. Mazda #44 (Blue bead) lamps or equivalent.

ALIGNMENT

Generator connection	See chart
Generator ground	To chassis
Output meter connection	Across voice coil
Electronic voltmeter connection	See chart
Volume control position	Maximum
Tone control position	Optional

The standard RMA dummy specified in the alignment chart consists of a 200 mmf condenser in series with a 20 uh r-f choke which is shunted by a 400 mmf condenser in series with a 400 ohm carbon resistor.

MODEL S-59 THE HALLICRAFTERS CO.

ALIGNMENT CHART

	Dummy Antenna	Signal Generator Coupling	Signal Generator Frequency	Radio Range Switch Position	Radio Dial Setting	Adjust	Remarks
1.	.01 mfd. cap.	To stator plates of high cap. mixer section	455 kc	2	1000 kc	A,B,C,D	Adjust for max. audio output at voice coil. Keep audio output below 50 mw to avoid AVC action.
2.	.01 mfd. cap.	To stator plates of low cap. mixer section	10.7 mc (No modulation)	1	100 mc	E,F,G,H	Adjust for max. DC voltage between pin #7 of the 6AL5 and chassis. Connect a 500,000 ohm resistor in series with voltmeter probe. Use just enough signal generator output to obtain approx. 2 volts at the electronic voltmeter.
3.	After completing the adjustments required by step 2. detune the signal generator on each side of 10.7 mc and note the generator dial or frequency reading for one half of the DC voltage measured by the electronic voltmeter. Use just enough signal generator output to obtain a maximum of 2 volts at the center frequency of the IF channel. Set the signal generator frequency at the midpoint of the two readings obtained above and align the FM detector transformer as follows:						
4.	Without changing the setup, adjust the primary of the FM detector transformer (I) for maximum DC voltage. Disconnect the electronic voltmeter probe and reconnect it to the junction of R24 and R25 using the 500,000-ohm resistor as before for isolation. Adjust the secondary of the FM detector (J) for the null or zero DC voltage. This completes the IF amplifier adjustment.						
5.	Std. RMA dummy	To BC antenna terminal on back of loop.	1500 kc	2	1500 kc	*K,L	Adjust for max. audio output as in step 1.
			600 kc	2	600 kc	*M	
6.	300-ohm carbon resistor	To terminals "D-D" on rear chassis apron. Connect resistor to high side or ungrounded terminal	108 mc	1	108 mc	*N,O	Adjust for max. DC voltage as in step 2.

*Calibration adjustment.

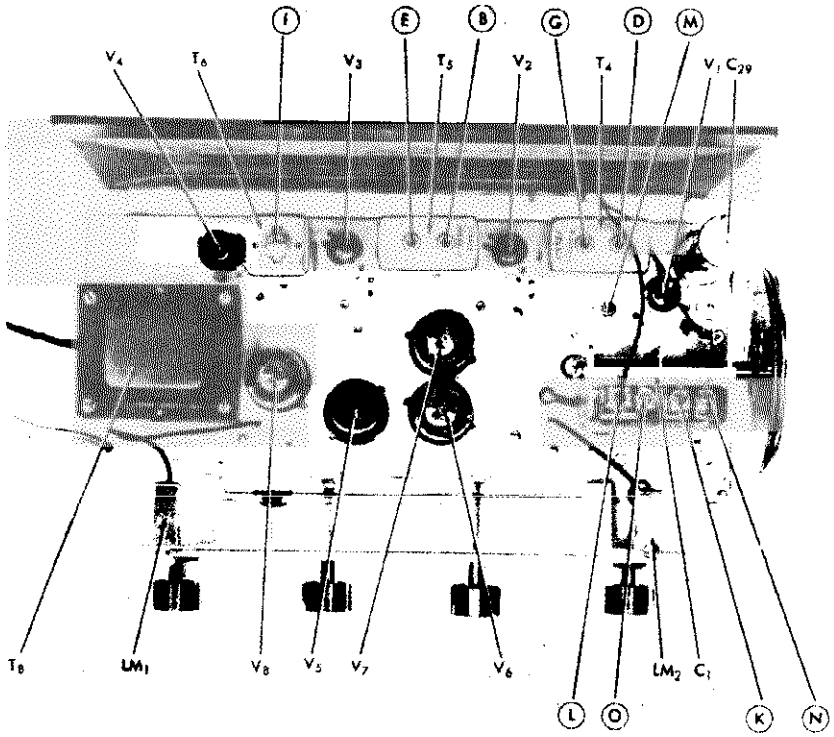

© John F. Rider

THE HALLICRAFTERS CO. MODEL S-59

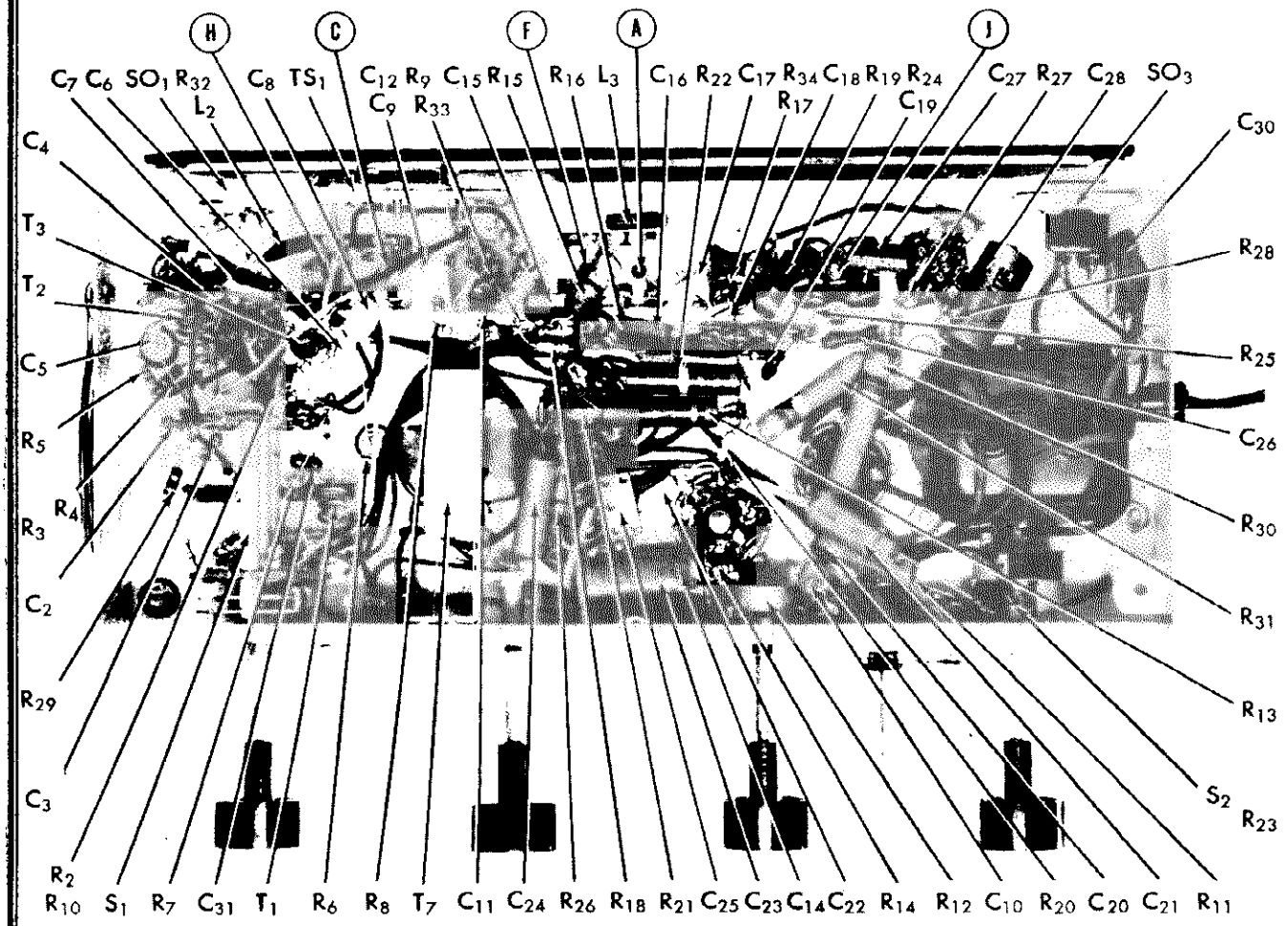

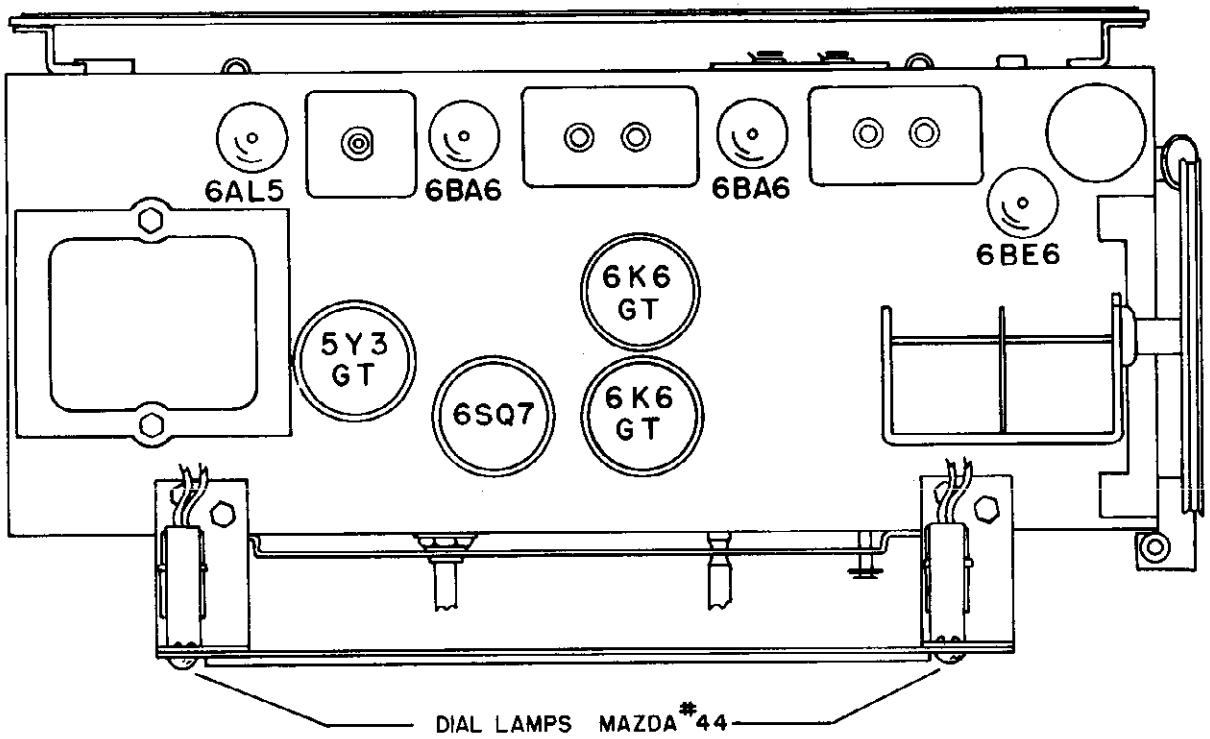

MODEL S-59

THE HALLICRAFTERS CO.

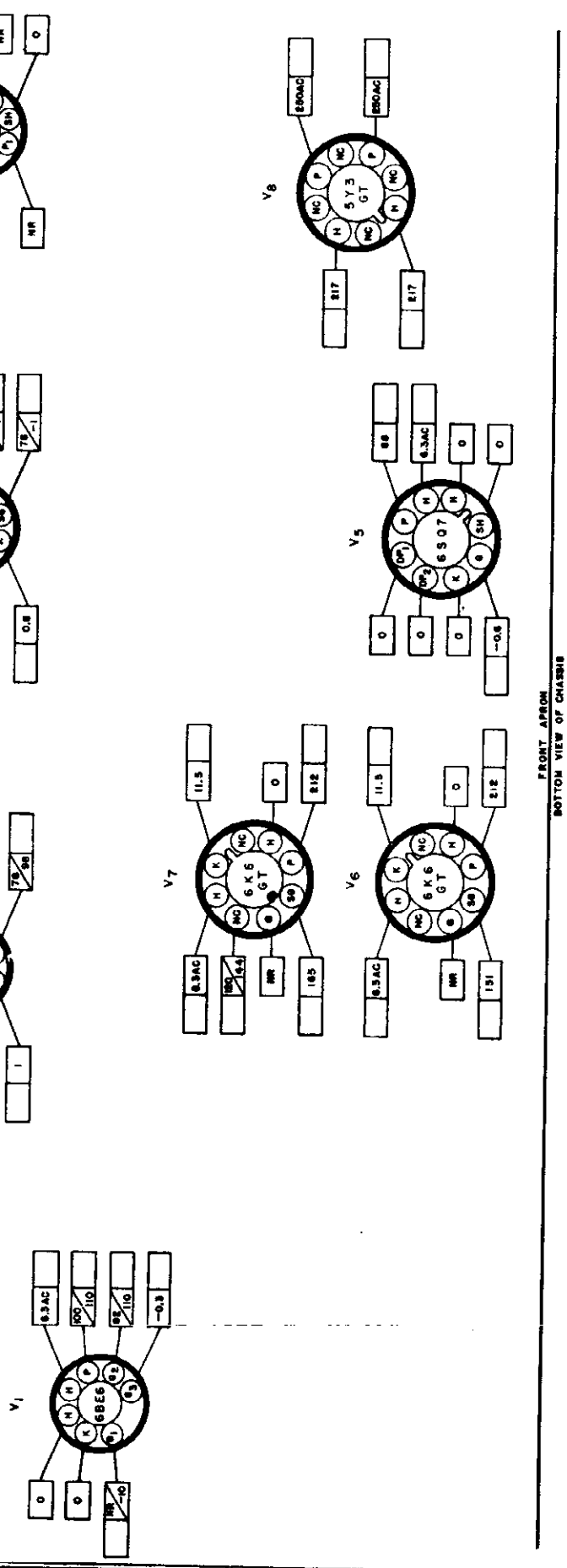

NOTES—

1. SOCKET VIEWS ARE BOTTOM VIEWS.
2. ALL VOLTAGES MEASURED BETWEEN TUBE SOCKET TERMINALS AND CHASSIS.
3. LINE VOLTAGE — 117V. AC.
4. ALL VOLTAGES SHOWN WERE MEASURED WITH AN ELECTRONIC VOLTMETER AND AT ZERO SIGNAL.
5. ALL VOLTAGES ARE DC UNLESS OTHERWISE SPECIFIED.
6. WHERE TUBE SOCKET VOLTAGES CHANGE FROM FM TO AM RECEPTION TWO READINGS ARE SHOWN, UPPER LEFT SHOWS FM READINGS — LOWER RIGHT SHOWS AM READINGS.
7. "NC"— NO CONNECTION. READING SHOWN ONLY WHEN TERMINAL IS USED AS A TIE LUG.
8. "NR"— NOT READABLE OR READING GENERALLY MEANINGLESS.
9. THE BLANK SPACES ARE PROVIDED FOR THE SERVICE METER READING. FILL IN THE ACTUAL READING AS TAKEN WITH YOUR OWN TEST EQUIPMENT USING A NORMAL OPERATING RADIO FOR THESE MEASUREMENTS.
10. TUBES V-1, 2 AND 3 ARE DISABLED DURING PHONO OPERATION.

THE HALLICRAFTERS CO.

MODEL S-59

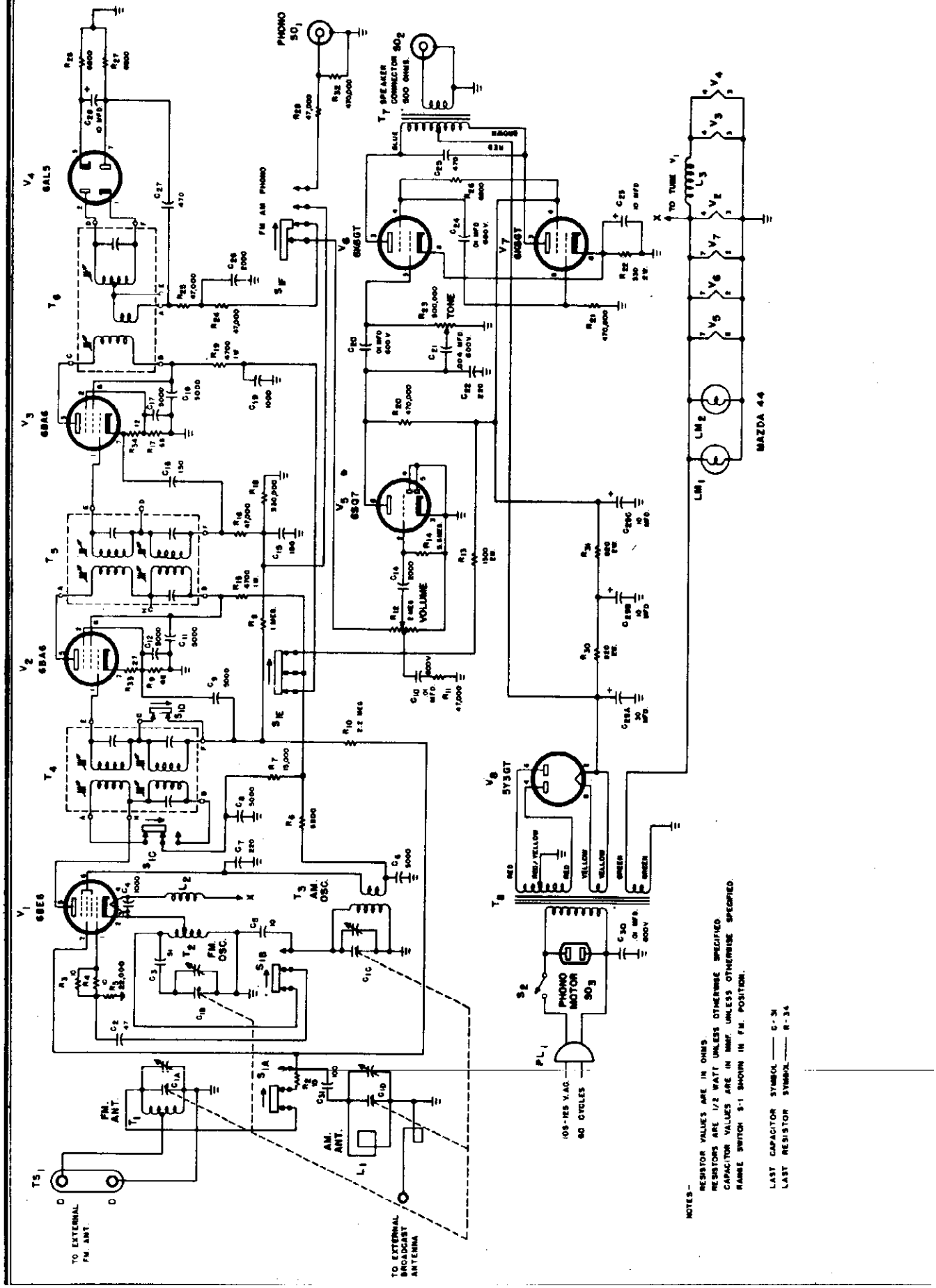

MODEL S-59 THE HALLICRAFTERS CO.

Ref. No.	Description	Hallicrafters Part Number
	CONDENSERS	
C-1	Capacitor, main tuning	48C203
C-2	47 mmf. 500 V., ceramic	CC21UK470K
C-3	51 mmf. 500 V., ceramic	CC21UK510J
C-4,19	1000 mmf. 500 V., ceramic	47B20A102N5
C-5	10 mmf. 500 V., ceramic	CC21UK100K
C-6,8,9,11, 12,17,18	.005 mfd. 500 V., ceramic	47A168
C-7,22	220 mmf. 500 V., mica	CM20A221M
C-10,20,24	.01 mfd. 600 V., tubular	46A147
C-14,26	2,000 mmf. 500 V., ceramic	47B20A202M5
C-15,16	150 mmf. 500 V., mica	CM20A151M
C-21	.004 mfd. 600 V., tubular	46AZ402J
C-23,28	10 mfd. 25 V., electrolytic	45A121
C-25,27	470 mmf. 500 V., mica	CM20A471M
C-29	30-10-10 mfd. 350 V., electrolytic	45B131
C-30	.01 mfd. 600 V., molded paper	46A147
C-31	100 mmf. 2% 500 V., ceramic	47B20A101M5
	RESISTORS	
R-2,3,4	10 ohms 1/2 watt, carbon	RC20AE100K
R-5	22,000 ohms 1/2 watt, carbon	RC20AE223K
R-6,26,27, 28	6800 ohms 1/2 watt, carbon	RC20AE682K
R-7	15,000 ohms 1/2 watt, carbon	RC20AE153M
R-8	1 megohm 1/2 watt, carbon	RC20AE105M
R-9,17	68 ohms 1/2 watt, carbon	RC20AE680K
R-10	2.2 megohms 1/2 watt, carbon	RC20AE225M
R-11,16,24, 25,29	47,000 ohms 1/2 watt, carbon	RC20AE473K
R-12	Resistor variable, volume control	25B624
R-13	1500 ohms 2 watts, carbon	RC40AE152M
R-14	5.6 megohms 1/2 watt, carbon	RC20AE565M
R-15,19	4700 ohms 1 watt, carbon	RC30AE472M
R-18	330,000 ohms 1/2 watt, carbon	RC20AE334M
R-20,21,32	470,000 ohms 1/2 watt, carbon	RC20AE474M
R-22	330 ohms 2 watts, carbon	RC40AE331K
R-23	Resistor, variable, tone control	25B758
R-30,31	820 ohms 2 watts, carbon	RC40AE821K
R-33	27 ohms 1/2 watt, carbon	RC20AE270K
R-34	12 ohms 1/2 watt, carbon	RC20AE120K
	TRANSFORMERS AND COILS	
T-1	Transformer, FM mixer stage	51A1060
T-2	Transformer, FM osc. stage	51A1062
T-3	Transformer, AM osc. stage	51B1063
T-4	Transformer, 1st I.F. stage	50B399
T-5	Transformer, 2nd I.F. stage	50B400
T-6	Transformer, ratio detector	50B401
T-7	Transformer, audio output	55B112-1
T-8	Transformer, power	52C166
L-1	Loop antenna	57C123
L-2,3	Coil, R.F. choke	53A136
	SWITCHES	
S-1	Switch assembly, band selector	60B328
S-2	Switch, power (part of tone control R-23)	
	PLUGS AND SOCKETS	
PL-1	Line cord and plug	87B1669
SO-1	Receptacle, phono	36A029
SO-2	Speaker connector	10A287
SO-3	Socket, A.C. receptacle	10A015
	Socket, octal (tube)	6A296
	Socket, miniature (tube)	6A308
	Socket, dial light	86A062-1
	TUBES, RECTIFIERS AND LAMPS	
V-1	Type 6BE6, mixer/osc.	90X6BE6
V-2	Type 6BA6, 1st I.F. amp.	90X6BA6
V-3	Type 6BA6, 2nd I.F. amp. (FM) & detector (AM)	90X6BA6
V-4	Type 6AL5, detector (FM)	90X6AL5
V-5	Type 6SQ7, audio amp.	90X6SQ7
V-6,7	Type 6K6 GT, audio power amp.	90X6K6GT
V-8	Type 5Y3GT, rectifier	90X5Y3GT
LM-1,2	Lamp, 6-8 V., Mazda #44 (Blue bead)	39A003
	MISCELLANEOUS	
TS-1	Terminal Strip, antenna	89A379
	Lock, line cord	76A397
	Shaft, tuning	74A251
	Retainer, spring	75A062
	Rail, pointer	67B820
	Pointer	82B152
	Bracket, dial plate mtg.	67A834
	Dial plate	63B332
	Dial background (Black)	32A446
	Dial scale (glass)	22C212
	Clip, dial scale	76A390
	Spacer, rubber	16A126
	Escutcheon	7DO67
	Shield, miniature (tube)	69A232
	Dial, glass (clear)	22B305
	Clip, dial glass	76A331
	Spring, dial drive	75B012
	Knob, tuning and volume controls	15B067-2
	Knob, tone and range controls	15B143

THE HALLICRAFTERS CO.

MODELS 400, 406,
409, 410, 411, 4

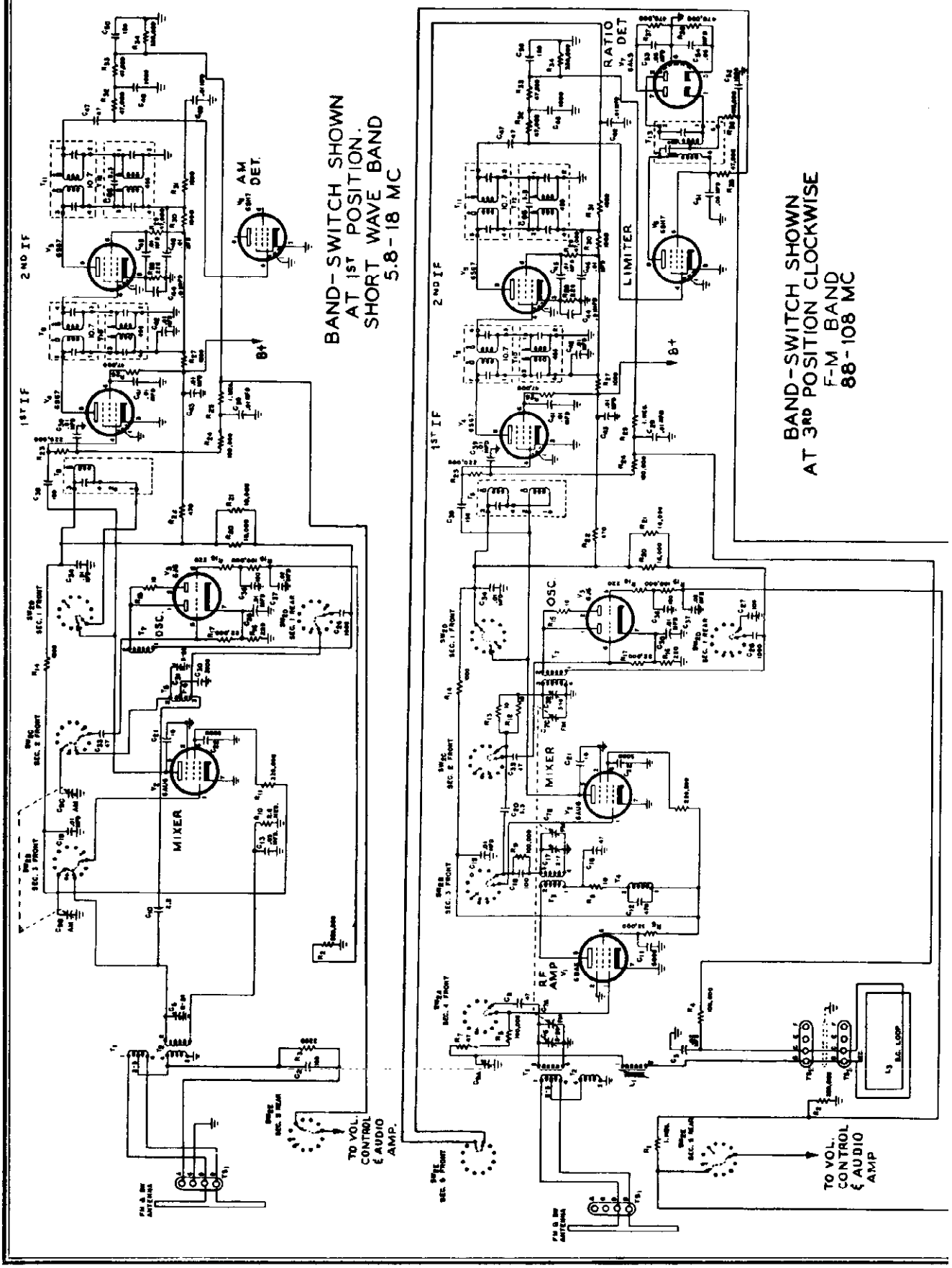

© John F. Rider

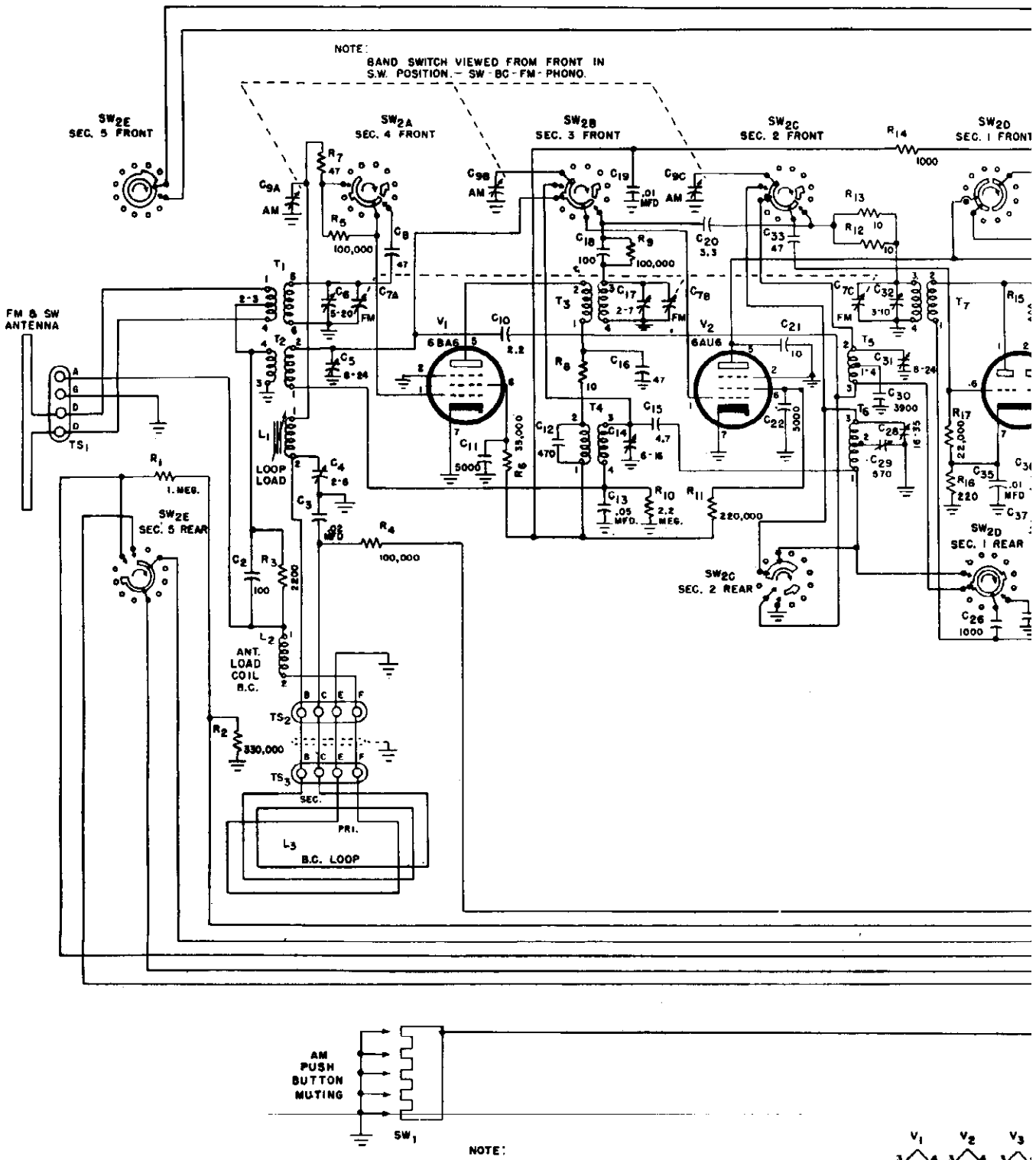
NOTE:
BAND SWITCH VIEWED FROM FRONT IN S.W. POSITION. - SW - BC - FM - PHONO.
SW2E SEC. 5 FRONT
SW2A SEC. 4 FRONT
SW2B SEC. 3 FRONT
SW2C SEC. 2 FRONT
SW2D SEC. 1 FRONT
FM & SW ANTENNA
TS1
L1 LOOP LOAD
L2 ANT. LOAD COIL B.C.
TS2
TS3
L3 B.C. LOOP
V1 6BA6
V2 6AU6
SW2E SEC. 5 REAR
SW2C SEC. 2 REAR
SW2D SEC. 1 REAR
AM PUSH BUTTON MUTING
SW1
NOTE:
ALL RESISTOR VALUES ARE IN OHMS.
ALL CAPACITOR VALUES ARE IN MMF.
UNLESS OTHERWISE INDICATED.
SWITCHES SW-3 AND SW-4 VIEWED FROM FRONT IN COUNTER CLOCKWISE POSITION.
LAST RESISTOR SYMBOL - R-59
LAST CAPACITOR SYMBOL - C-68
V1 V2 V3
C25 1000
TUNE

LICRAFTERS CO.

MODELS 400, 406,
409, 410, 411, 412

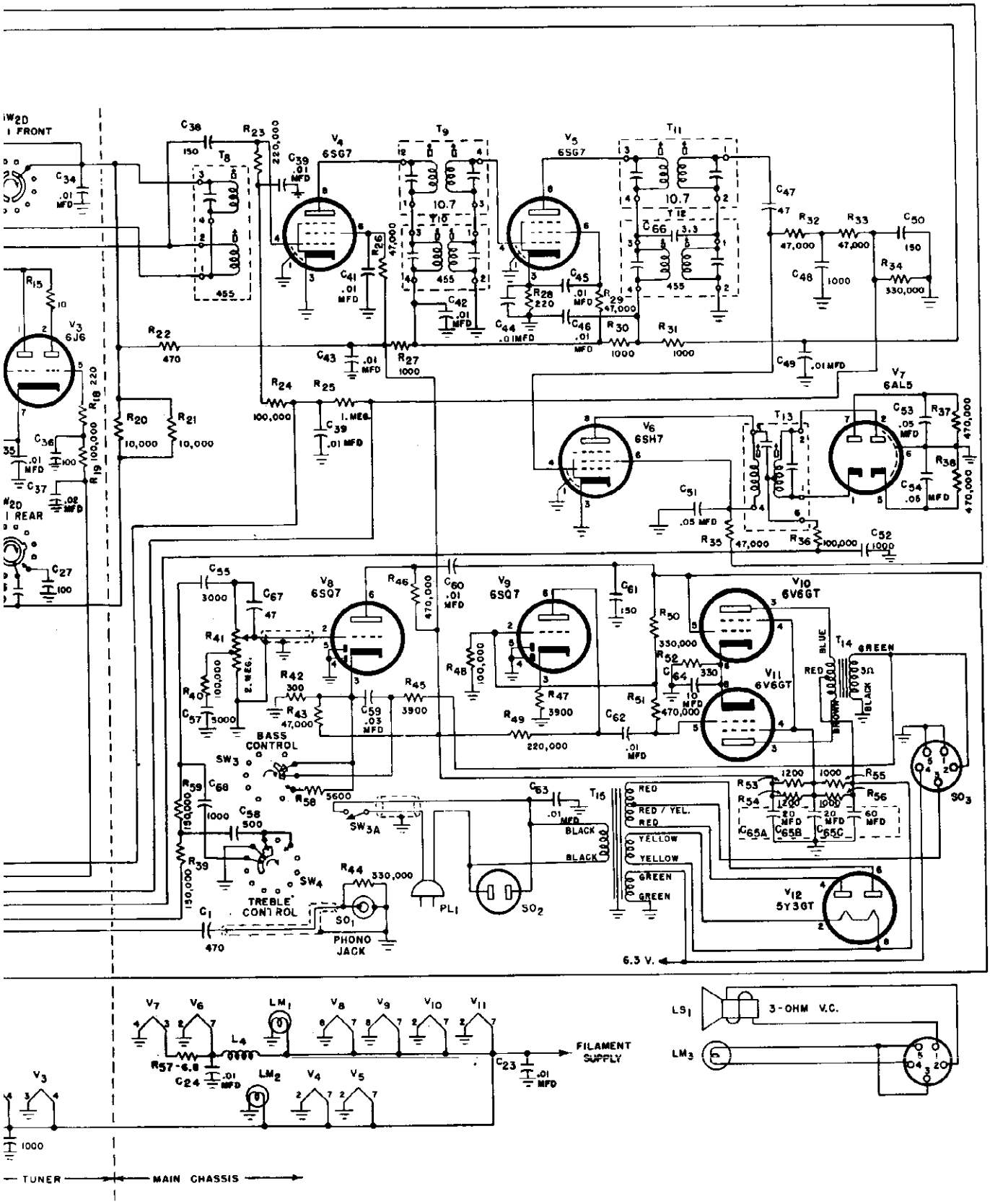

CLARI-SKEMATIX
Registered Trademark

MODELS 400, 406, 409, 410, 411, 412

THE HALLICRAFTERS CO.

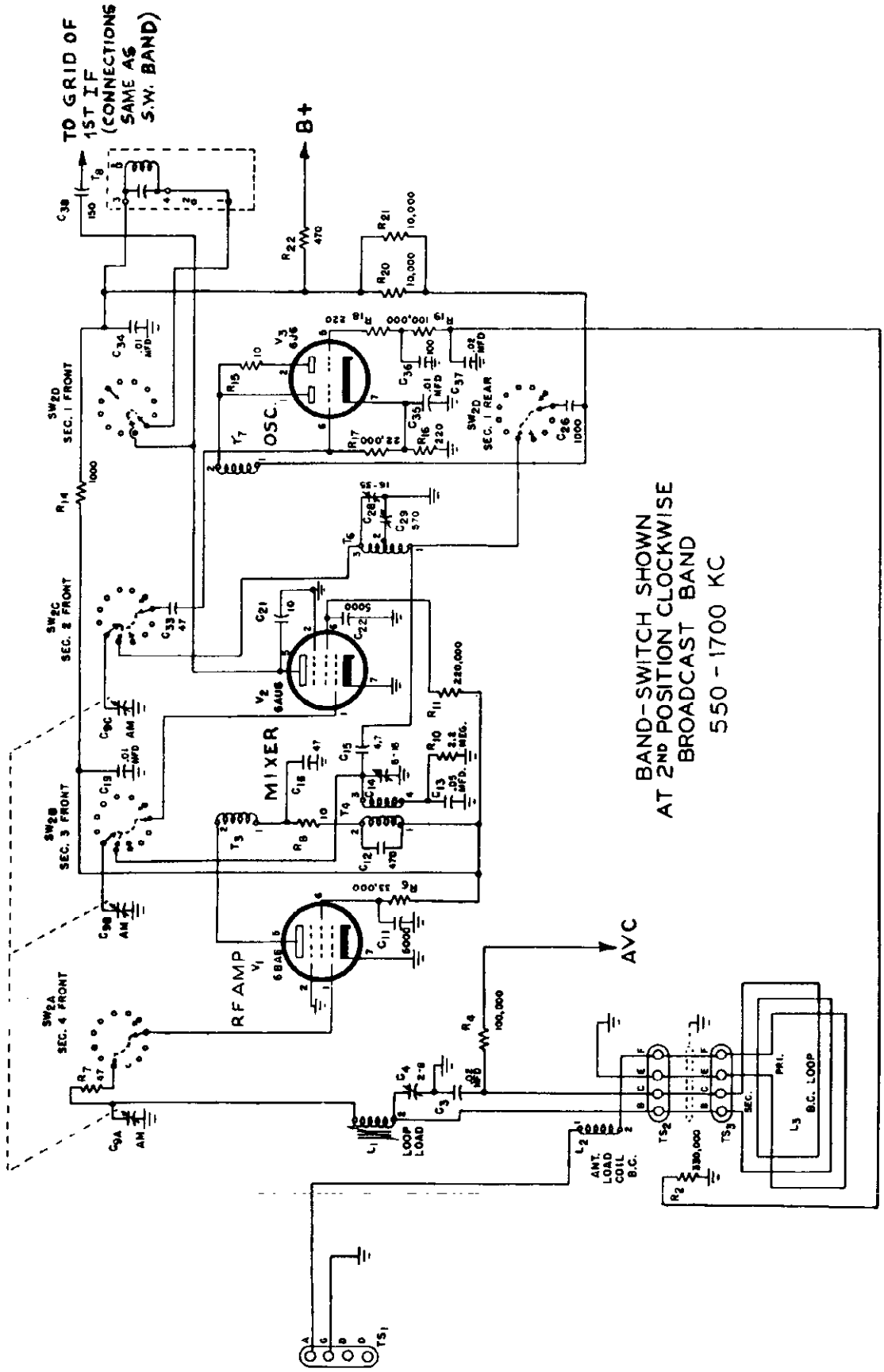

© John F. Rider

THE HALLICRAFTERS CO. MODELS 400, 406, 409, 410, 411, [illegible]

REPLACING DIAL AND PILOT LAMPS

Refer to Fig. 11 for location of the two dial lamps used in the receiver. To gain access to them, remove the dial escutcheon. The pilot lamp at the base of the cabinet is removed by slipping the socket assembly straight back a short distance releasing it from its mounting tongue. The defective lamp may now be brought out in the open for replacement. Replace all lamps with 6-8 volt Mazda #44 or equivalent.

ALIGNMENT PROCEDURE

Removal of the receiver chassis from the cabinet requires the use of other calibration means than the dial glass. Calibration strips mounted on the pointer rails are provided for alignment purposes.

To use these calibration strips, it is necessary to remove the dial plate (brown metal cover) in the following manner.

1. Remove dial pointers - Pull them straight out of their spring clips.
2. Remove the two dial lamp sockets.
3. Remove dial plate fastened to the chassis with seven sheet metal screws.

With the variable condensers fully mashed, the right hand side of the pointer carriage will be indexed to zero on the calibration strips. Refer to Fig. 4.

The receiver is equipped with AUTOMATIC FREQUENCY CONTROL on the FM band to compensate for mechanical variations in the push-button mechanism. The correction factor is approximately 5 times: AFC takes hold 100 kc before the station frequency is reached and released before tuning 450kc passed the station frequency when receiving a 0.1 volt signal.

The standard RMA dummy specified in the alignment chart consists of a 200 mmf condenser in series with a 20 uh r-f choke which is shunted by a 400 mmf condenser in series with a 400 ohm carbon resistor.

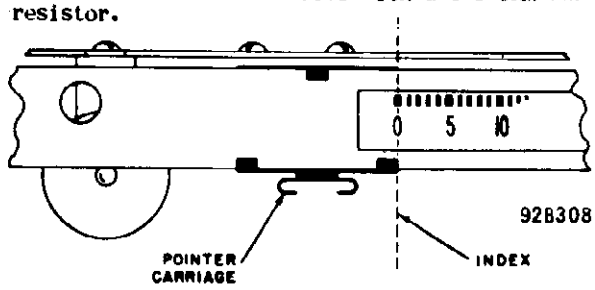

Calibration strip detail.

ALIGNMENT CHART

Step	Dummy Antenna	Signal Generator Coupling	Signal Generator Frequency	Band Switch Pos.	Radio Dial Setting	Cal. No.	Adjust	Remarks
1	0.01 mfd cap.	To stator plates of center section of AM tuning cap.	455 kc	"BC"	1000 kc	55	S1,S2,S3, S4, & S5	Adjust for max. output.
2	0.01 mfd cap.	To stator plates of center section of FM tuning cap	10.7 mc (No modulation)	"FM"	Mid-scale	55	S6,S7,S8 S9,S10, & S11	Adjust for max. AVC voltage as measured between pin #7 of 6AL5 and ground with a 20,000-ohm per volt meter.
3	0.01 mfd cap.	To stator plates of center section of FM tuning cap.	10.7 mc (No modulation)	"FM"	Mid-scale	55	S12	Adjust for zero voltage as measured between the junction of C55 and C68 ground with a 20,000-ohm per volt meter.
4	Std. RMA dummy.	To terminals "A" and "G" on ant. term. strip	1500 kc	"BC"	1500 kc	82	A*, B, & C	Adjust for max. output
			600 kc	"BC"	600 kc	15.5	D* & S13	
5	Std. RMA	To terminals "A" and "G" on ant. term. strip.	16 mc	"SW"	16 mc	84	E* & F	Adjust for max. output.
6	Two 150 ohm carbon resistors	To "D" terminals on ant. term. stup;	108 mc	"FM"	108 mc	83.5	G*, H & I	Adjust for max. limiter grid voltage as measured between the junction of R33 and R34 and ground with a 20,000-ohm per volt meter

* NOTE - Calibration adjustments.

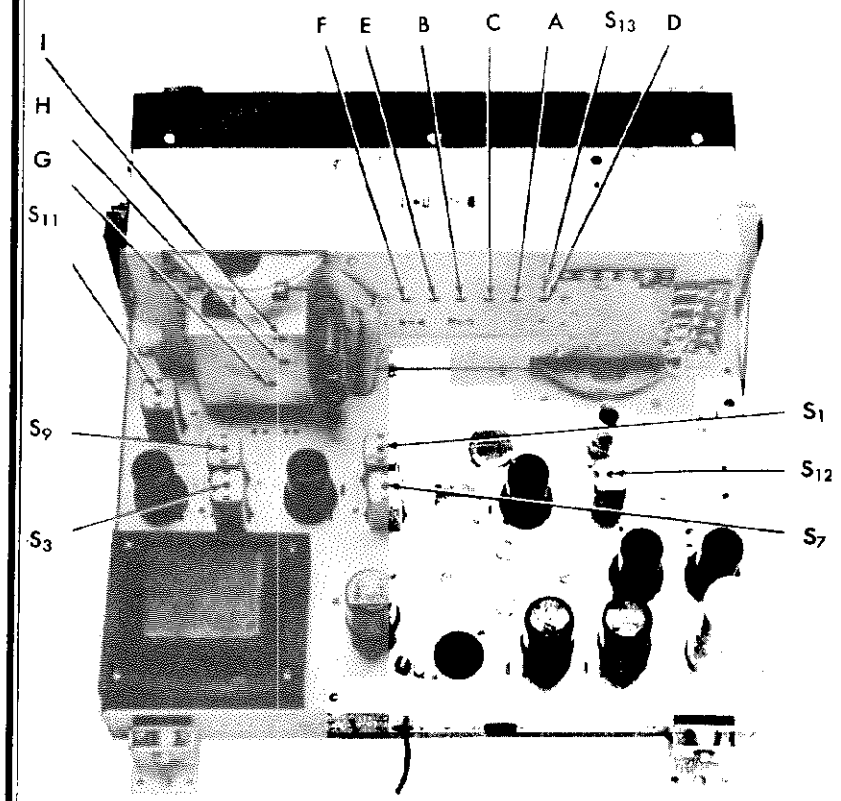

Top view showing alignment points.

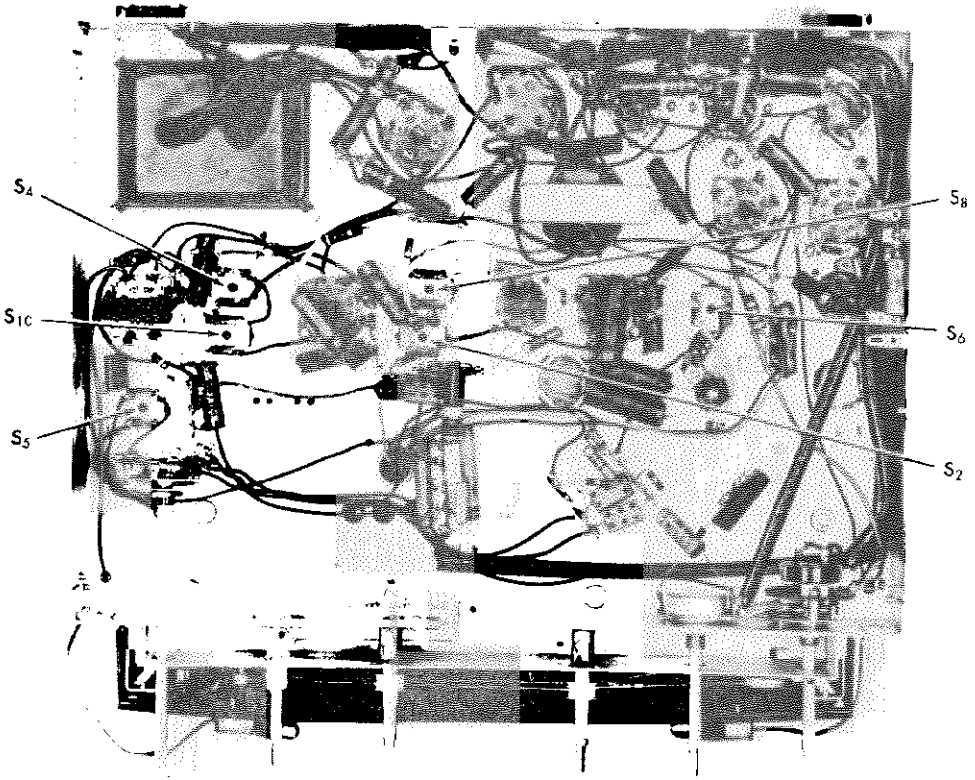

Bottom view showing alignment points.

GENERAL

Tubes.....Eleven plus rectifier

Speaker.....12-inch PM

Voice Coil Impedance...3.2 ohms

Antenna.....Built-in loop, "AM" Built-in dipole, "FM" and shortwave. Provisions for external antennas.

Tuning.....Manual and mechanical push-buttons; five P.B. for "AM", five P.B. for "FM".

Tuning Range.....Band -
BC 550 kc - 1700 kc.
SW 5.8 mc - 18 mc.
FM 88 mc - 108 mc.

Intermediate Frequency.455 kc/10.7 mc.

Power Supply.....105-125 V. 60 cycles AC.

Power Consumption.....120 Watts (140 watts with changer).

©John F. Rider

©John F Rider

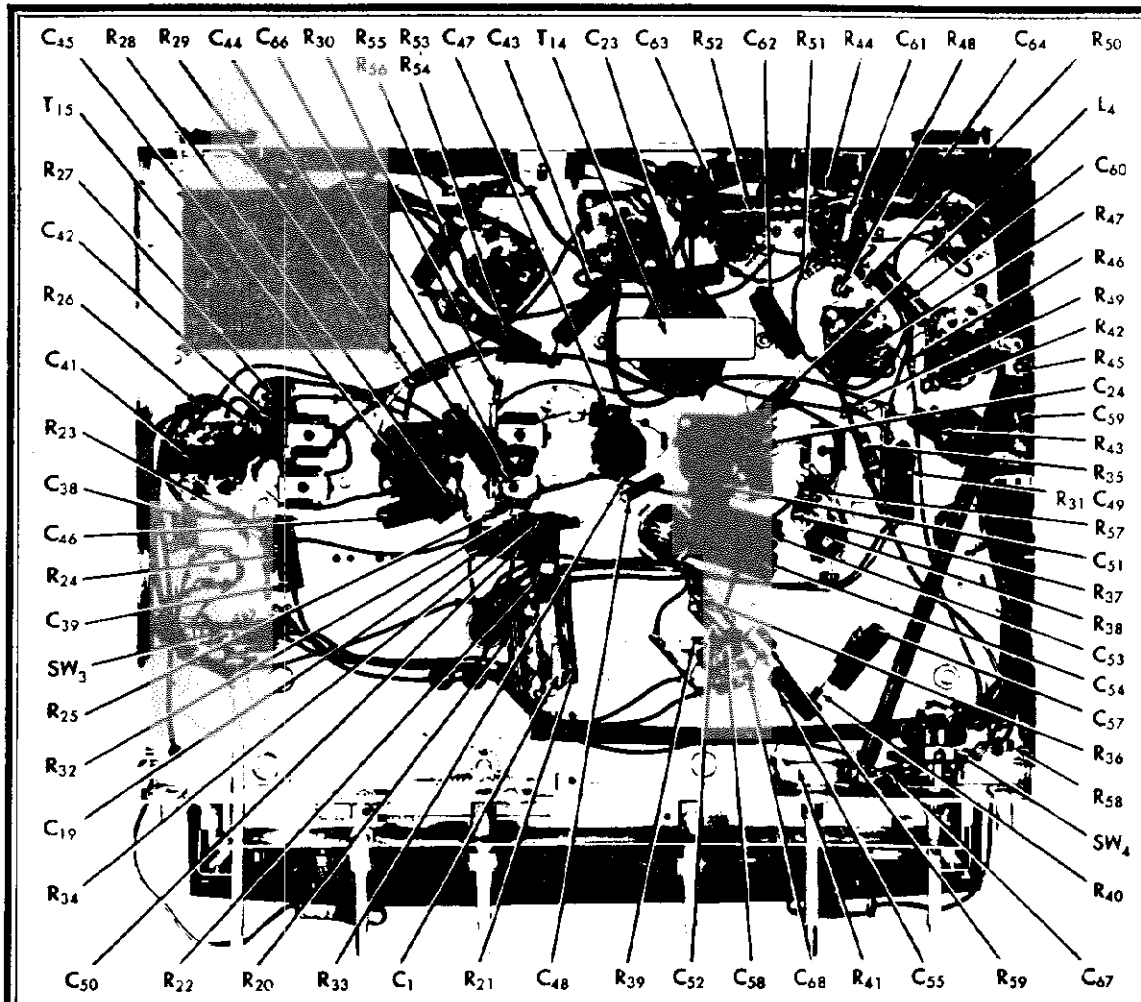

Bottom view of receiver showing component location.

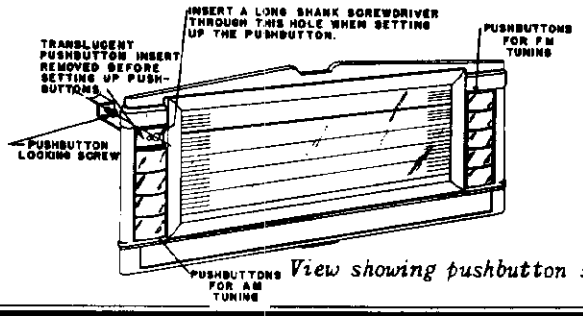

View showing pushbutton setup.

BUTTON SETTING

Insulate the muting switch contacts before setting the left hand group of AM push buttons.

1. Select any one pushbutton.
2. Pull translucent insert straight out.
3. Insert screw driver blade through large hole of pushbutton into slot of locking screw
4. Loosen locking screw about one-half turn (Not more than one full turn.)
5. With pushbutton depressed, carefully tune in desired station with the manual control and tighten the locking screw.
6. Replace the translucent insert with the proper station call letters inserted.

INSERTING CALL LETTERS

1. Slide out metal insert from translucent insert assembly. (See Fig. 2.)
2. Insert desired call letter tab.
3. Replace metal insert behind call letter tab.
4. Replace translucent insert assembly into pushbutton mechanism.

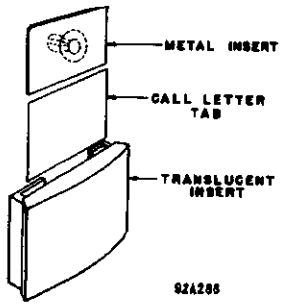

Fig. 2. View showing call letter installation.

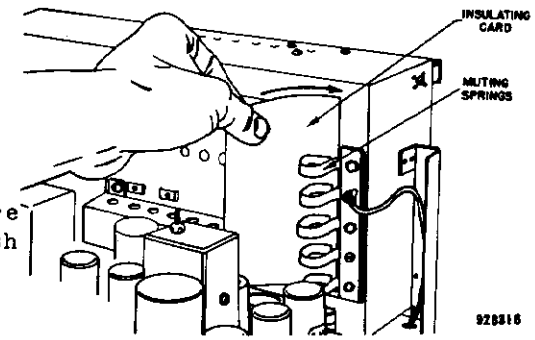

Insulating the muting switch contacts.

MODELS 400, 406, 409, 410, 411, 412

THE HALLICRAFTERS CO.

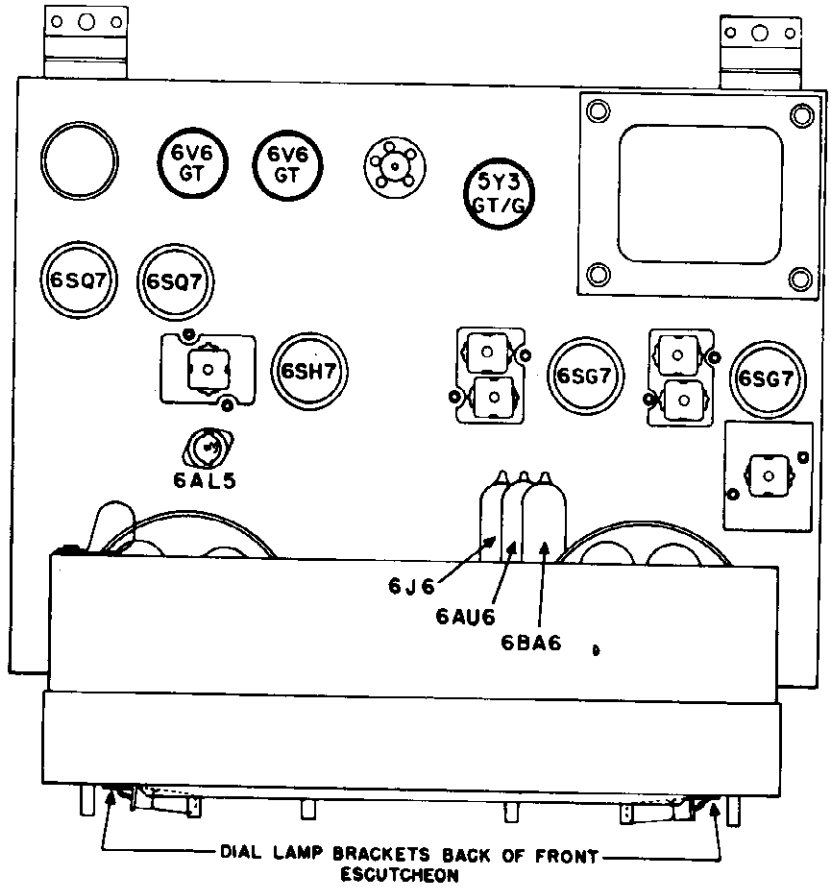

Top view showing location of tubes and dial lamps.

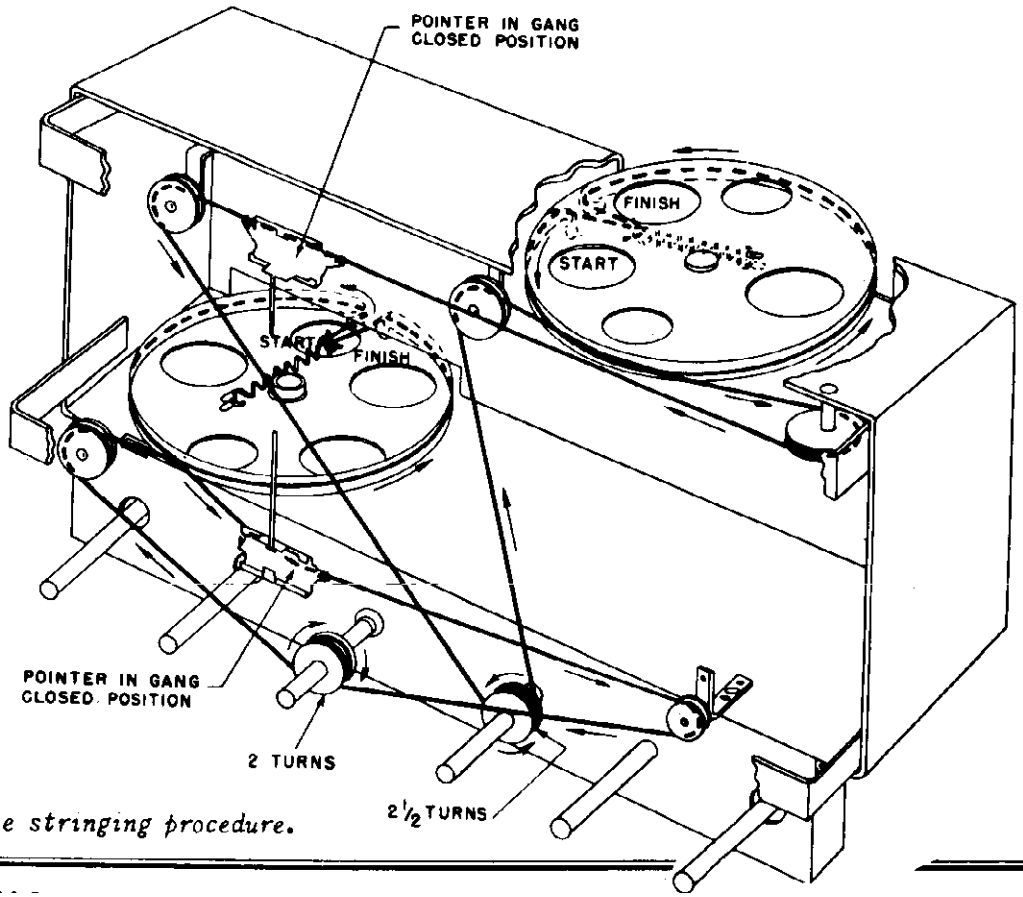

Dial cable stringing procedure.

THE HALLICRAFTERS CO.

MODELS 400, 406, 409, 410, 411, 412

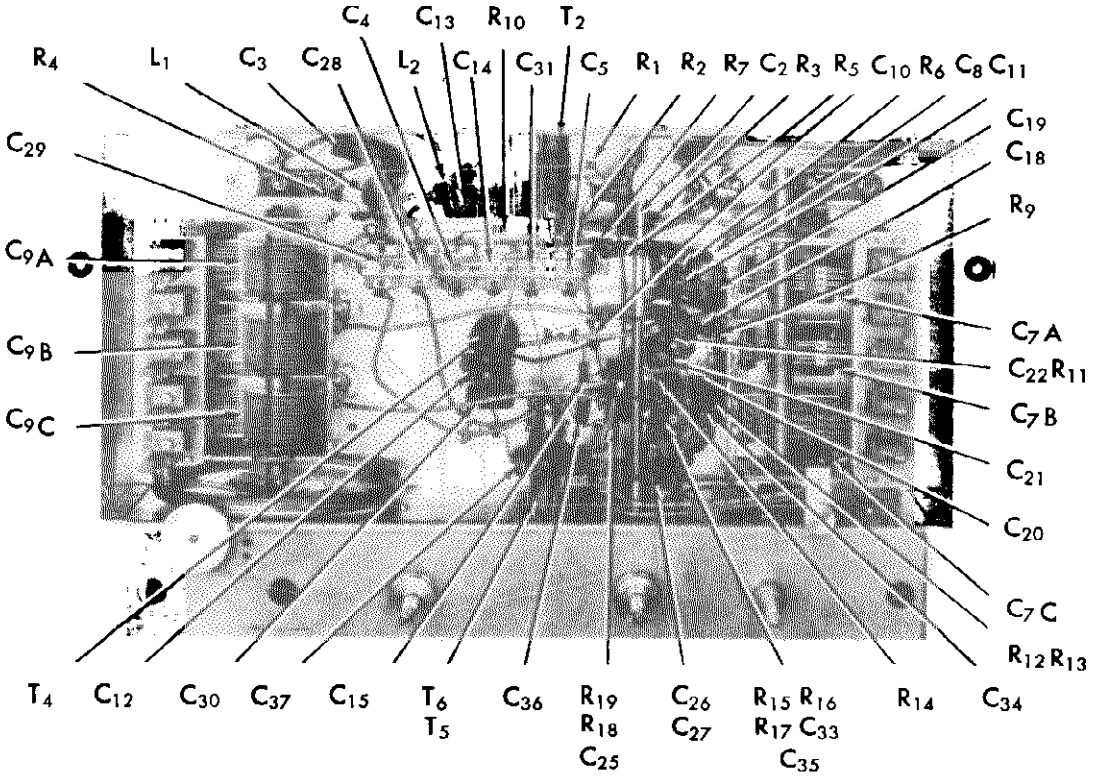

Front view of R.F. chassis showing component location.

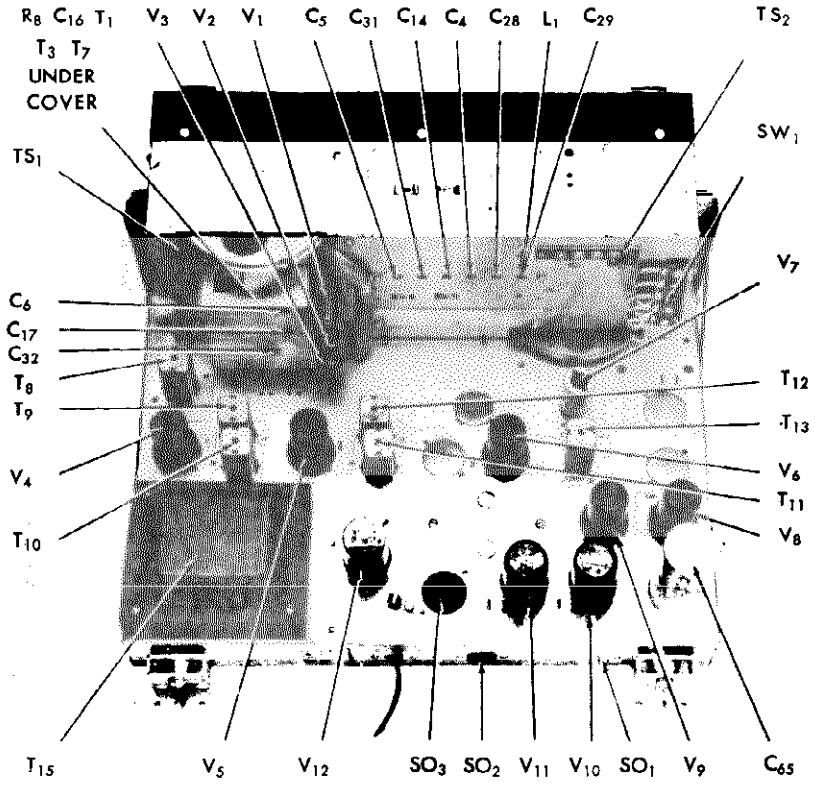

Top view showing component location.

MODELS 400, 406,
409, 410, 411, 412

THE HALLICRAFTERS CO.

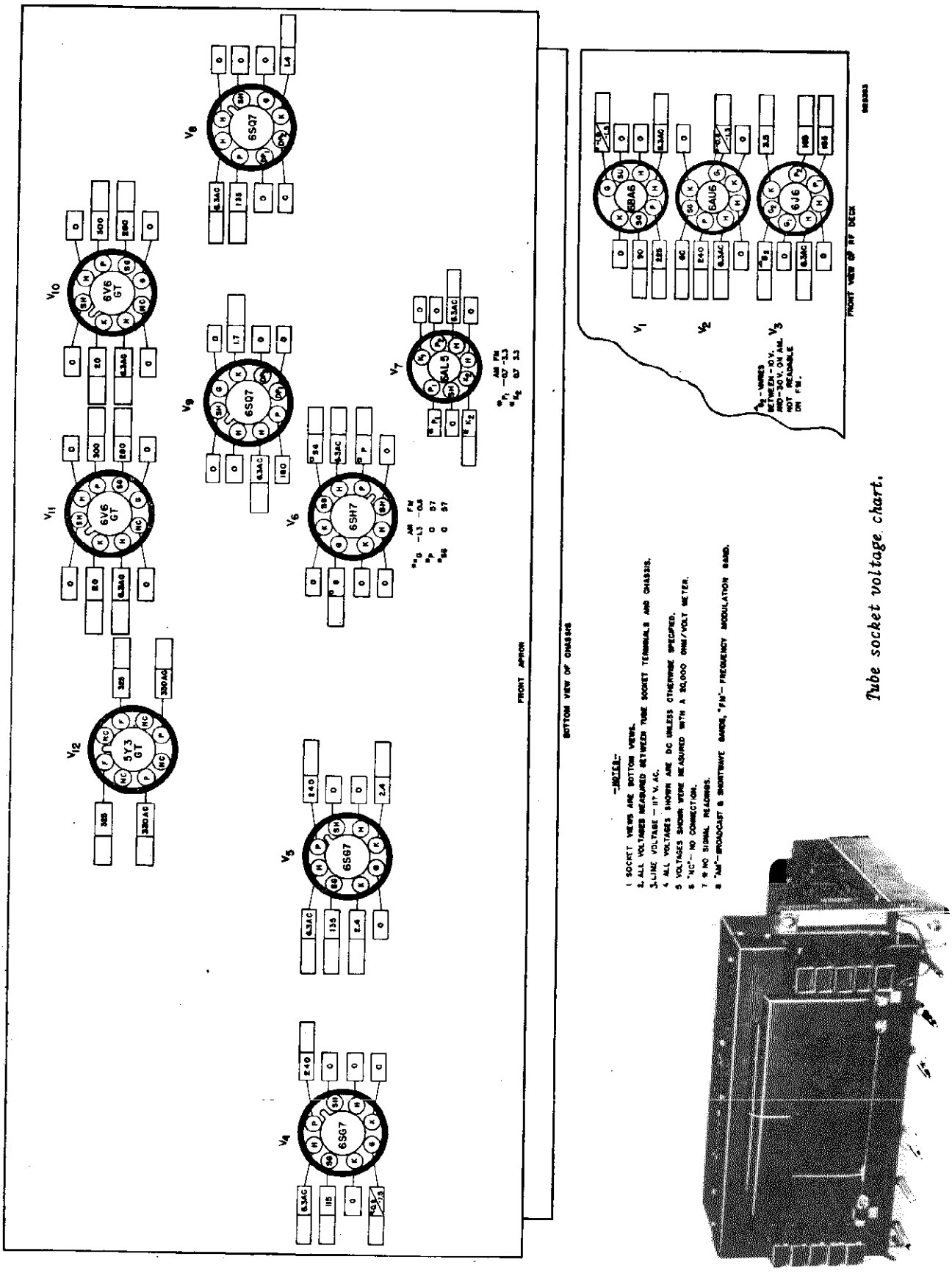

Tube socket voltage chart.

THE HALLICRAFTERS CO.

MODELS 400, 406, 409, 410, 411, 412

SERVICE PARTS LIST

Ref. No.	Description	Hallicrafters Part No.
	CONDENSERS	
C-1	470 mmf. 500 V., mica	CM20A471M
C-2,36	100 mmf. 500 V., mica	CM20A101M
C-3,37	.02 mfd. 600 V., tubular paper	46AY203F
C-4,5,14,28,29,31	Trimmer assembly	44B348
C-6	Trimmer, FM, ant. stage	44A194
C-7	Tuning condenser, FM	48C175
C-8,33	47 mmf. 500 V., ceramic	47A150
C-9	Tuning condenser, AM	49C176
C-10	2.2 mmf., ceramic	47A160-4
C-11,22	5000 mmf. 500 V., ceramic	47A168
C-12	470 mmf. 500 V., mica	CM20A471K
C-13,51,53,54	.05 mfd. 600 V., tubular paper	46AY503F
C-15	4.7 mmf., ceramic	47A160-6
C-16,47, 67	47 mmf. 500 V., mica	CM20A470M
C-17	Trimmer, FM, mixer stage	44A192
C-18,27	100 mmf. 500 V., ceramic	47A045
C-19,23,24,34,39,40,41,42,43,44,45,46,49,60,62	.01 mfd. 600 V., tubular paper	46AZ103F
C-20,66	3.3 mmf., ceramic	47A160-5
C-21	10 mmf. 500 V., ceramic	47A149
C-25,26,48,52	1000 mmf. 500 V., ceramic	47A148
C-30	3900 mmf. 500 V., mica	CM35A392J
C-32	Trimmer, FM, osc. stage	44A218
C-35	.008 mfd. 150 V., ceramic	47B32802M1
C-38,50, 61	150 mmf. 500 V., mica	CM20A151M
C-55	.003 mfd. 600 V., tubular paper	46AZ302J
C-57	.005 mfd. 600 V., tubular paper	46AZ502J
C-58	500 mmf. 350 V., ceramic	47A147
C-59	.03 mfd. 200 V., tubular paper	46AU303J
C-63	.01 mfd. 600 V., molded paper	46AG103J
C-64	10 mfd. 25 V., electrolytic	45A121
C-65	60-20 mfd. 450 V., 20 mfd. 400 V., electrolytic	45B113
C-68	1000 mmf. 500V., mica	CM20A102M
	RESISTORS	
R-1,25	1 megohm ½ watt, carbon	RC20AE105M
R-2,34,44	330,000 ohms ½ watt, carbon	RC20AE334M
R-3	2200 ohms ½ watt, carbon	RC20AE222M
R-4,5,9,19,24,36,40	100,000 ohms ½ watt, carbon	RC20AE104M
R-6	33,000 ohms 1 watt, carbon	RC30AE333M
R-7	47 ohms ½ watt, carbon	RC20AE470M
R-8,12,13,15	10 ohms ½ watt, carbon	RC20AE100M
R-10	2.2 megohms ½ watt, carbon	RC20AE225M
R-11,23,49	220,000 ohms ½ watt, carbon	RC20AE224M
R-14,27,30,31	1000 ohms ½ watt, carbon	RC20AE102M
R-16,18,28	220 ohms ½ watt, carbon	RC20AE221M
R-17	22,000 ohms ½ watt, carbon	RC20AE223M
R-20,21	10,000 ohms 2 watts, carbon	RC40AE103M
R-22	470 ohms 1 watt, carbon	RC30AE471M
R-26,29,35	47,000 ohms 1 watt, carbon	RC30AE473M
R-32,33	47,000 ohms ½ watt, carbon	RC20AE473M
R-37,38,51	470,000 ohms ½ watt, carbon	RC20AE474K
R-39,59	150,000 ohms ½ watt, carbon	RC20AE154M
R-41	Resistor, variable, 2 megohms (tapped)	258622
R-42	300 ohms ½ watt, carbon	RC20AE301J
R-43	47,000 ohms 2 watts, carbon	RC40AE473K
R-45,47	3900 ohms ½ watt, carbon	RC20AE392K
R-46	470,000 ohms ½ watt, carbon	RC20AE474M
R-48	100,000 ohms ½ watt, carbon	RC20AE104K
R-50	330,000 ohms ½ watt, carbon	RC20AE334K
R-52	330 ohms 2 watts, carbon	RC40AE331M
R-53,54	1200 ohms 2 watts, WW	24BV122E
R-55,56	1000 ohms 2 watts, WW	24BV102E
R-57	6.8 ohms 1 watt, carbon	RC30AE068K
R-58	5600 ohms ½ watt, carbon	RC20AE562K
	TRANSFORMERS AND COILS	
T-1	Transformer, FM, antenna stage	51B916
T-2	Transformer, SW, antenna stage	51B993
T-3	Transformer, FM, mixer stage	51B915
T-4	Transformer, BC, mixer stage	51B910
T-5	Transformer, SW, osc. stage	51B908
T-6	Transformer, BC, osc. stage	51B911
T-7	Transformer, FM, osc. stage	51B914
T-8	Transformer, 1st I.F.	50C298
T-9,11	Transformer, FM, interstage I.F.	50C237
T-10	Transformer, AM, interstage I.F.	50C236
T-12	Transformer, AM, detector stage I.F.	50C235
T-13	Transformer, FM, detector stage I.F.	50C263

SERVICE PARTS LIST

Ref. No.	Description	Hallicrafters Part No.
	TRANSFORMERS AND COILS (Continued)	
T-14	Transformer, audio output	55B105
T-15	Transformer, power	52C153
L-1	Coil, loop loading	51B907
L-2	Coil, antenna loading	51B994
L-3	Loop antenna (Models 400,406,409)	57C114
L-3	Loop antenna (Models 410,411,412)	57C116
L-4	Coil, R.F. choke	53B009
	SWITCHES	
SW-1	Switch, muting	18A092
SW-2	Band switch assembly	60C308
SW-3	Switch, power and bass tone cont.	60B265
SW-4	Switch, treble tone control	60B325
	PLUGS AND SOCKETS	
PL-1	Line cord and plug	87B1625
SO-1	Receptacle, phono pickup	36A034
SO-2	Receptacle, phono motor	10A015
SO-3	Socket, speaker (5 pin)	6A277
-	Socket, octal (tube)	6A190
-	Socket, octal (6V6GT tubes)	6A296
-	Socket, miniature (tube)	6A276
-	Socket & bracket, dial light, L.H.	86A046
-	Socket & bracket, dial light, R.H.	86A047
-	Socket, cabinet pilot light	86B050-2
	TUBES, RECTIFIERS AND LAMPS	
V-1	Type 6BA6, antenna	90X6BA6
V-2	Type 6AU6, mixer	90X6AU6
V-3	Type 6J6, osc.	90X6J6
V-4,5	Type 6SG7, 1st & 2nd I.F.	90X6SG7
V-6	Type 6SH7,FM limiter, AM detector	90X6SH7
V-7	Type 6AL5, FM detector	90X6AL5
V-8,9	Type 6SQ7, audio amp.	90X6SQ7
V-10,11	Type 6V6GT/G, power amp.	90X6V6GT/(
V-12	Type 5Y3GT, rectifier	90X5Y3GT
LM-1,2,3	Lamp, 6-8 V., 250 MA., G.E. #44	39A003
	MISCELLANEOUS	
	Shield, tube base (miniature tube)	69A169
	Shield, tube (miniature tube)	69A104
	Spring, tube retainer	75A076
	Shield, dial light	86A037
	Shield, pilot light	69A197
	Shield, FM coil section	69C172
	Carriage, pointer	67B645
	Pointer, FM	82A145
	Pointer, AM	82A146
	Spring, pointer	75A132
	Push-button (brown)	17B028
	Insert, push-button, lucite	17A027
	Insert, push-button, metal	17A029
	Call letters	17A025
	Spring, dial drive	75A006
	Cord, dial drive	38A017
	Plate, dial drive cover	83A300
	Escutcheon (Models 409,410)	70C39
	Escutcheon (Models 400, 406 411, 412)	70D39-2
	Dial glass, upper	22D195
	Dial glass, lower	22B207
	Clips, dial glass	76A331
	Knob, power switch & tone control (Models 400,406,411,412)	15B96-1
	Knob, power switch & tone control (Models 409,410)	15B096
	Knob, tuning & volume controls (Models 400, 406,411,412)	15B095-2
	Knob, tuning & volume controls (Models 409,410)	15B093
	Knob,& pin ass'y bandswitch (Models 400,406,411,412)	15A136
	Knob & pin ass'y, bandswitch (Models 409,410)	15A129
TS-1	Terminal strip, antenna	88A277
TS-2	Terminal strip, loop	88A278
	Transmission line, loop	87A1615-1
	FM folded doublet	57C108-1
	Jewel, pilot lamp	86A057
	Bracket, pilot lamp	67A765
LS-1	Speaker assembly	85C069
	Record changer	115C017

MODEL 414 THE HALLICRAFTERS CO.

GENERAL

Tubes	Ten plus rectifier
Speaker	12 inch PM
Voice Coil Impedance	6 ohms
Antenna	Built in loop, "BC" Built in dipole, "FM" Provisions for external antennas
Tuning	Manual
Tuning Range	Broadcast 540 kc - 1750 kc Frequency Modulation 88 mc - 108 mc
Intermediate Frequency	455 kc/21.75 mc.
Power Supply	105-125 V. 50/60 cycles AC
Power Consumption	90 Watts (110 watts with changer)

RESTRINGING DIAL CORD

Restring the dial drive with 30 lb test dial cord. Tie one end to the tension spring and follow the sequence outlined in Fig. 1. Stretch the tension spring and tie the end of the cord securely to the spring as shown.

Set the tuning condenser at maximum capacity (closed), attach the pointer to the string and line it up with the left hand index mark on the dial scale.

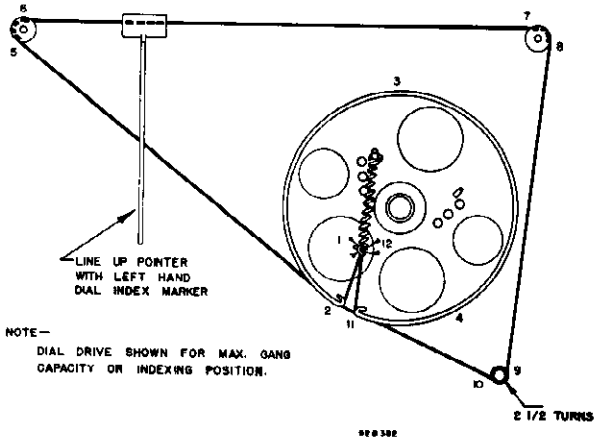

Fig. 1. Dial cable stringing procedure.

ALIGNMENT PROCEDURE

The receiver is equipped with AUTOMATIC FREQUENCY CONTROL on the FM band to compensate for oscillator drift and improve the tuning function on the FM band. The correction factor is approximately 5 times: AFC takes hold 250 kc before the station frequency is reached and releases before tuning 500 kc beyond the station frequency when receiving a 1000 microvolt signal.

The standard RMA dummy specified in the alignment chart consist of a 200 mmf condenser in series with a 20 uh r-f choke which is shunted by a 400 mmf condenser in series with a 400 ohm carbon resistor.

When making the alignment adjustments set the tone control at NORMAL and the volume control at maximum volume. Use just enough signal generator output to obtain the results indicated on the chart.

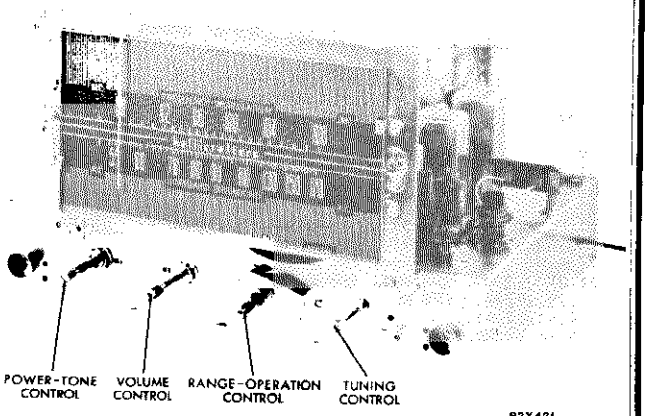

REPLACING LAMPS

Refer to Fig. 7 for the location of two dial lamps used in the receiver. To gain access to defective lamps, reach in through the rear of the cabinet and unclip the dial lamp socket by compressing the side springs. The socket may then be brought out into the open to change the defective lamp. The lamp in the record changer compartment may be reached directly through the compartment door. Replace all lamps with 6-8 V. Mazda #44 (Blue bead) lamps or equivalent.

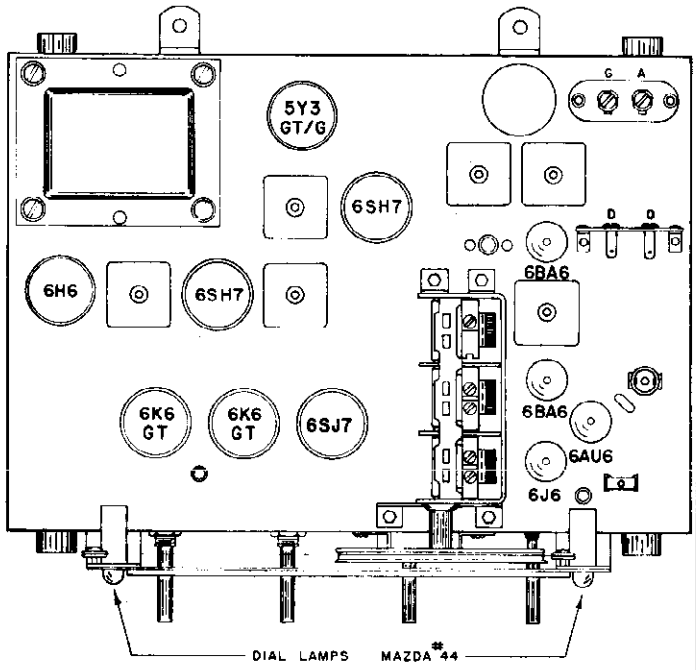

Fig. 7. Top view, location of tubes and dial lamps.

©John F. Rider

ALIGNMENT CHART

Step	Dummy Antenna	Signal Generator Coupling	Signal Generator Frequency	Band Switch Pos.	Radio Dial Setting	Adjust	Remarks
1	0.01 mfd. cap.	To high cap. stator of center section.	455 kc	"BC"	1000 kc	A,B,C, D,E	Adjust for max. output.
2	0.01 mfd. cap. in series with a 4700 ohm carbon resistor.	To low cap. stator of center section.	21.75 mc	"FM"	90 mc	F,G,H, I,J,K	Adjust for max. voltage as measured between pin #3 of 6H6 and ground with an electronic volt meter.
3	0.01 mfd. cap.	See step 2.	21.75 mc	"FM"	90 mc	L	Adjust for zero voltage as measured between the junction of R27 and R28 and ground with an electronic volt meter.
4	Std RMA dummy	To terminals "A" and "G" on terminal strip TS-2.	1500 kc	"BC"	1500 kc	*M,N,O	Adjust for max. output
5	Two 150 ohm carbon resistors	To terminals "D-D" on terminal strip TS-1.	105 mc	"FM"	105 mc	*P,Q	Adjust for max. voltage as measured across R24 with an electronic volt meter.

*Note - Calibration adjustments.

**Note - The intermediate frequency for the FM channel in this receiver is 21.75 megacycles. This is a value which has been standardized by the Radio Manufacturers Association for the television sound channel. A "TLV" position on the band switch and a suitable connector (on the chassis, near the tuning condenser) have been provided so that this receiver can be used with a relatively inexpensive video unit for high-quality television reception.

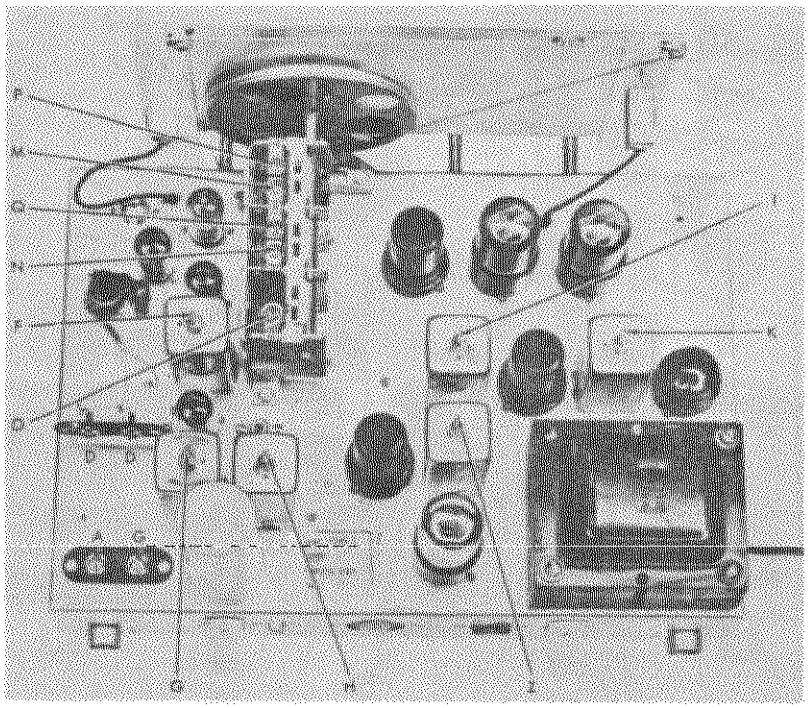

Fig. 2. Alignment adjustments, top view.

©John F. Rider

MODEL 414 THE HALLICRAFTERS CO.

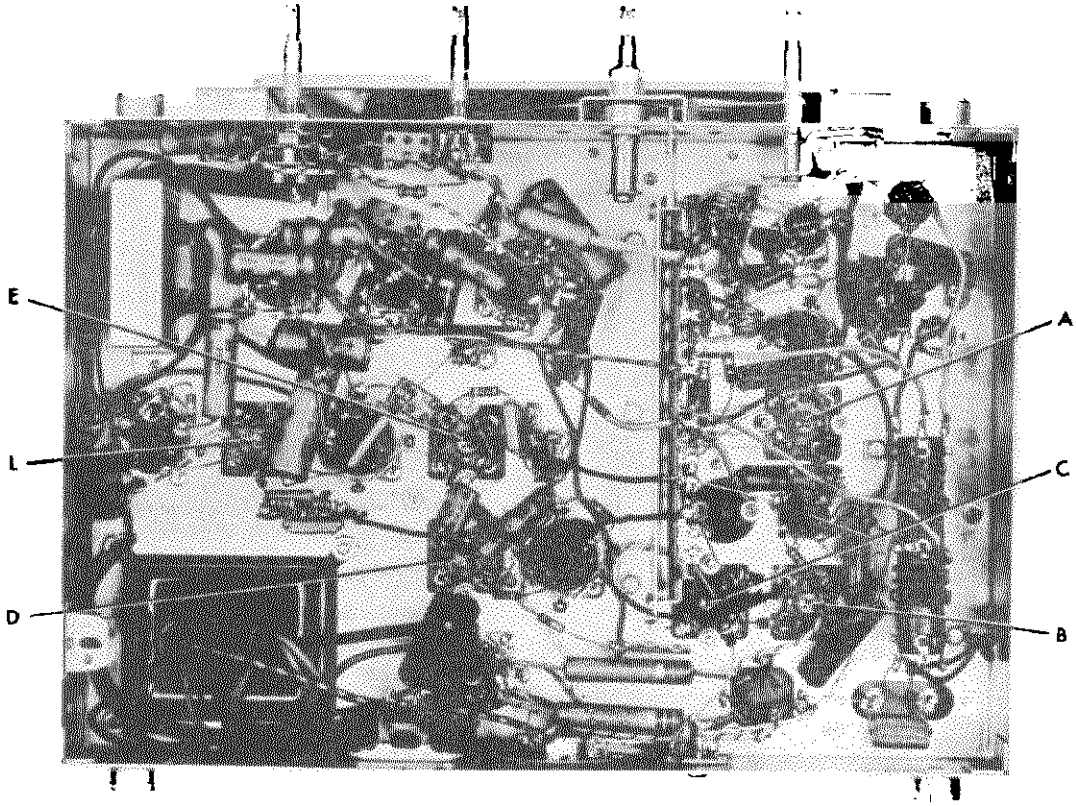

Fig. 3. Alignment adjustments, bottom view. (92X410)

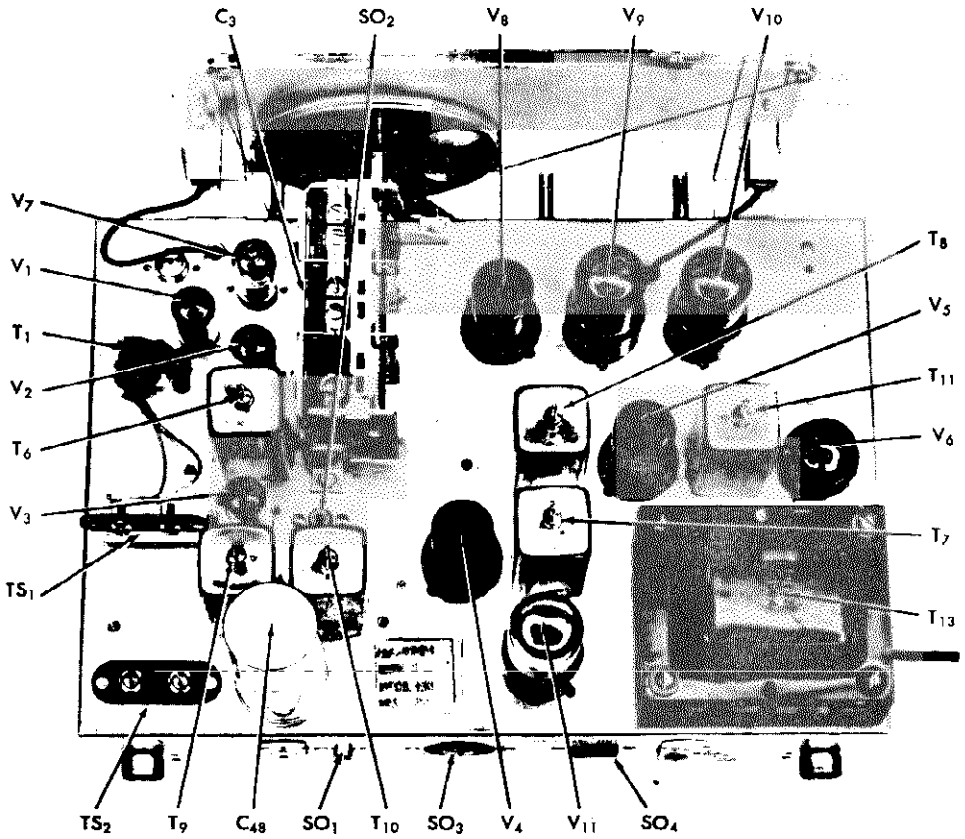

Fig. 4. Component location, top view.

©John F. Rider

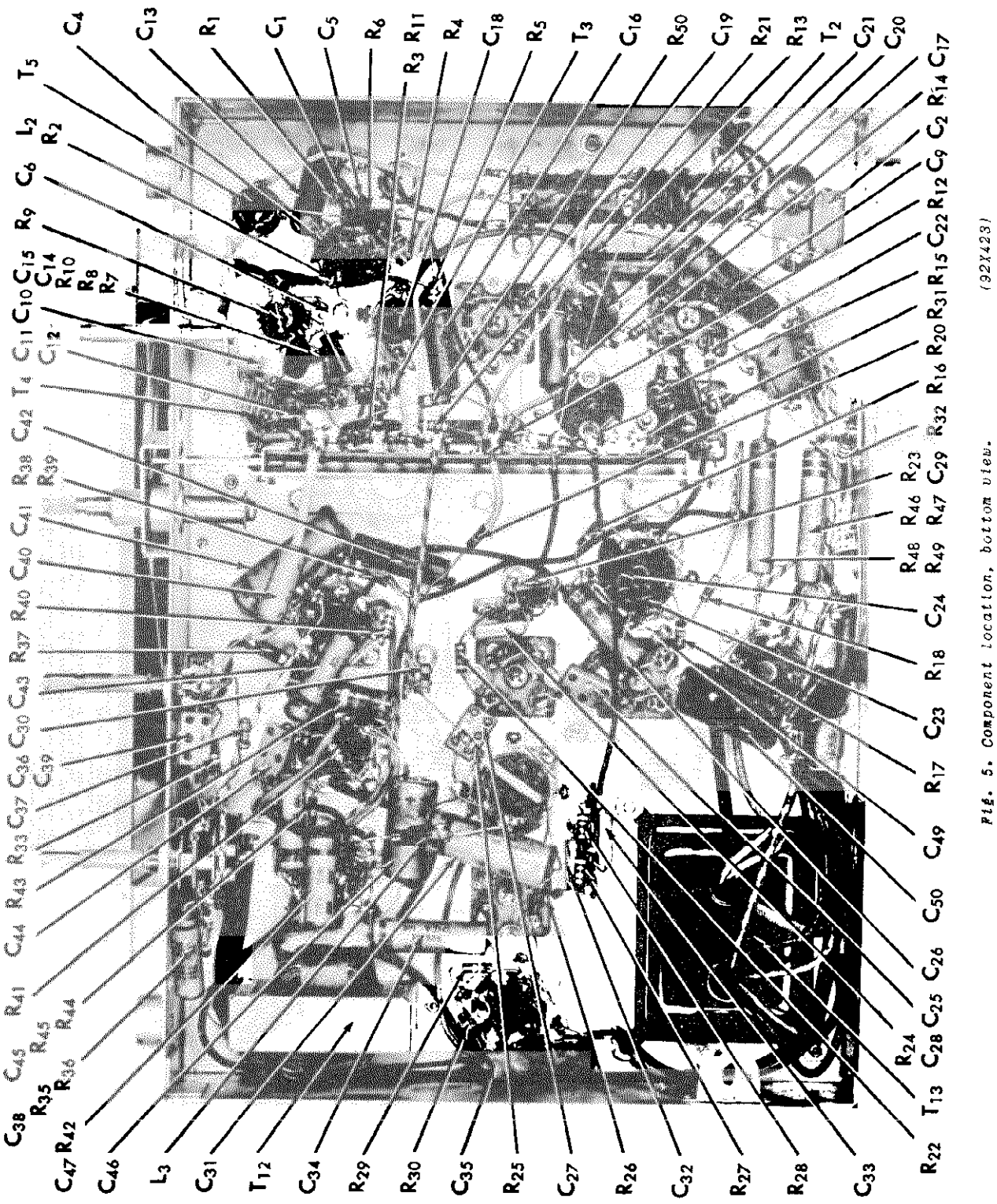

Fig. 5. Component location, bottom view.

(92X423)

MODEL 414

THE HALLICRAFTERS CO.

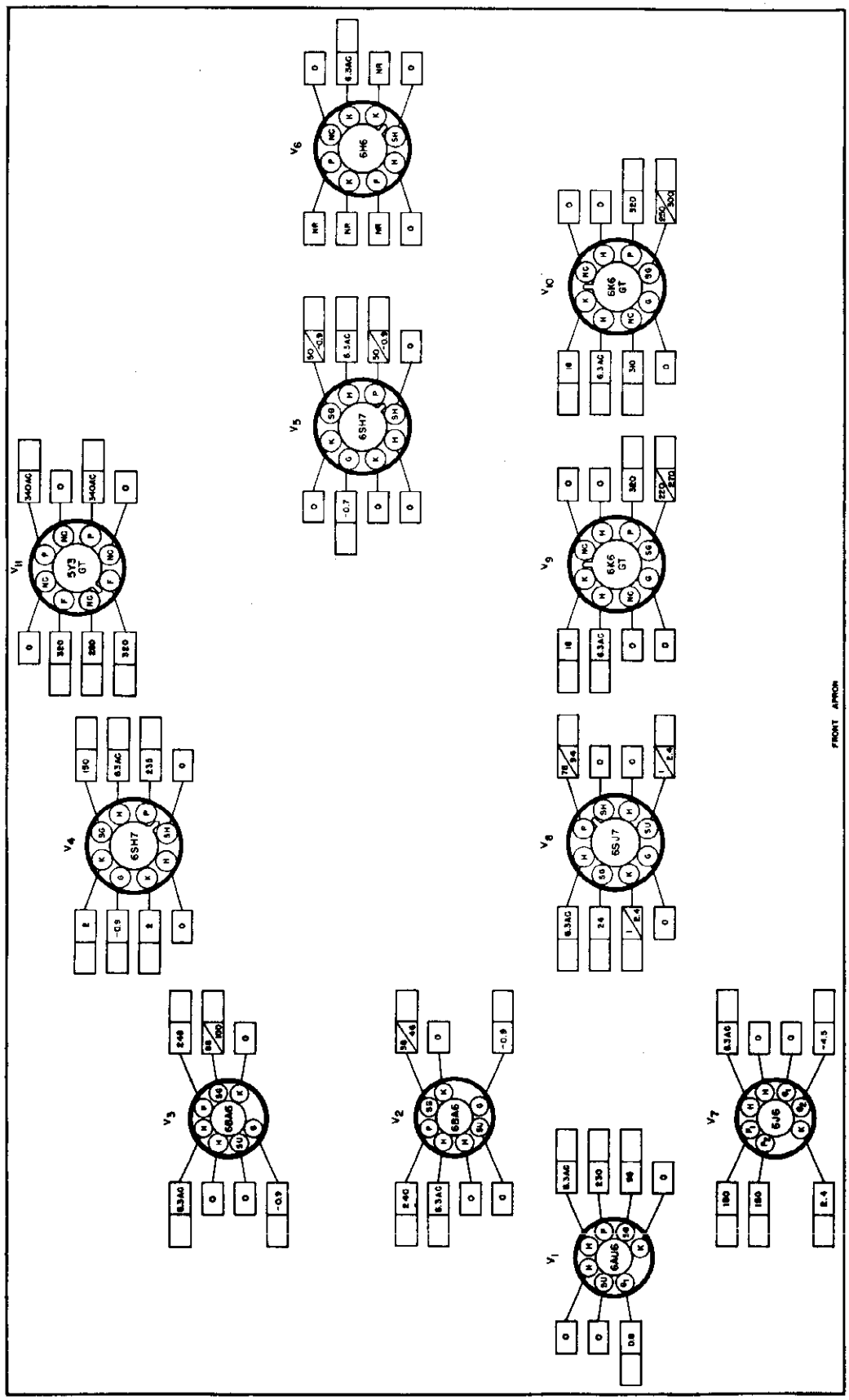

NOTES—
1. SOCKET VIEWS ARE BOTTOM VIEWS.
2. ALL VOLTAGES MEASURED BETWEEN TUBE SOCKET TERMINALS AND CHASSIS.
3. LINE VOLTAGE—117 V. AC.
4. ALL VOLTAGES SHOWN WERE MEASURED WITH A 20,000 OHM/VOLT METER AND AT ZERO SIGNAL.
5. ALL VOLTAGES ARE DC UNLESS OTHERWISE SPECIFIED.
6. NC—NO CONNECTION
7. THE BLANK SPACES ARE PROVIDED FOR THE SERVICEMAN. FILL IN THE ACTUAL READING AS TAKEN WITH YOUR OWN EQUIPMENT. A NORMAL OPERATING RADIO SHOULD BE USED FOR THESE MEASUREMENTS.
8. 75/44 WHERE TUBE SOCKET VOLTAGES CHANGE FROM FM TO AM RECEPTION TWO READINGS ARE SHOWN, UPPER LEFT SHOWS FM READINGS—LOWER RIGHT SHOWS AM READINGS.
9. NR—NOT READABLE.

Fig. 6. Tube socket voltage chart.

(922406)

SERVICE PARTS LIST

Ref. No.	Description	Hallicrafter's Part Number
	CONDENSERS	
C-1,7,15,19	100 mmf. 500 V., ceramic	47B20101M5
C-2	100 mmf. 500 V., mica	CM20A101M
C-3	Tuning condenser, 5 sections	48C196
C-4,5,14,17, 18,20,23,24	.005 mfd. 450 V., ceramic	47A168
C-6	33 mmf. 500 V., ceramic	CC20UK330K
C-8	3.3 mmf. 500 V., bakelite	47A160-5
C-9,34,35	.05 mfd. 200 V., tubular paper	46AU503J
C-10,12	47 mmf. 500 V., ceramic	CC20UK470M
C-11	7 mmf. 500 V., ceramic	CC20UJ070K
C-13,21,26, 36,43,45	.01 mfd. 600 V., tubular paper	46AZ103F
C-16,38	.02 mfd. 200 V., tubular paper	46AU203J
C-22	4.7 mmf. 500 V., bakelite	47A160-6
C-25	12 mmf. 500 V., mica	CM20A120K
C-28,29,32, 33	150 mmf. 500 V., mica	CM20A151M
C-30,37,49	1000 mmf. 500 V., ceramic	47B20102M5
C-31,41	.05 mfd. 600 V., tubular paper	46AY503J
C-39	68 mmf. 500 V., mica	CM20A680M
C-40	.003 mfd. 600 V., tubular paper	46AZ302J
C-42	.005 mfd. 600 V., tubular paper	46AZ502J
C-44	220 mmf. 500 V., mica	CM20A221M
C-46	10 mfd. 25 V., electrolytic	45A121
C-47	.002 mfd. 600 V., tubular paper	46AZ202J
C-48	60-20-20 mfd. 450 V., electrolytic	45B113
C-50	.01 mfd. 600 V., molded paper	46AG103J
	RESISTORS	
R-1,13	1 megohm ½ watt, carbon	RC20AE105M
R-2,14,17,21, 22,23,27,28	47,000 ohms ½ watt, carbon	RC20AE473M
R-3,5,26,31	220,000 ohms ½ watt, carbon	RC20AE224M
R-4,15	470 ohms ½ watt, carbon	RC20AE471M
R-6	4700 ohms 2 watts, carbon	RC40AE472M
R-7	10 ohms ½ watt, carbon	RC20AE100M
R-8,20,25	22,000 ohms ½ watt, carbon	RC20AE223M
R-9	150 ohms ½ watt, carbon	RC20AE151M
R-10	220 ohms ½ watt, carbon	RC20AE221M
R-11,33	100,000 ohms ½ watt, carbon	RC20AE104M
R-12,32,40, 41,42	470,000 ohms ½ watt, carbon	RC20AE474M
R-16	270 ohms ½ watt, carbon	RC20AE271K
R-18	1000 ohms ½ watt, carbon	RC20AE102M
R-19,39	2.2 megohms ½ watt, carbon	RC20AE225M
R-24	330,000 ohms ½ watt, carbon	RC20AE334M
R-29,30	100,000 ohms ½ watt, carbon	RC20AE104K
R-34	Volume control, 2 megohms (tapped)	25B623
R-35,36	10,000 ohms ½ watt, carbon	RC20AE103M
R-37	330 ohms ½ watt, carbon	RC20AE331K
R-38	100,000 ohms 1 watt, carbon	RC30AE104K
R-43	300 ohms 2 watt, carbon	RC40AE301J
R-44,50	6800 ohms ½ watt, carbon	RC20AE682M
R-45	12,000 ohms ½ watt, carbon	RC20AE123K
R-46,47	1200 ohms 2 watt, carbon	RC40AE122K
R-48,49	1500 ohms 2 watt, carbon	RC40AE152K
	TRANSFORMERS AND COILS	
T-1	Transformer, FM, antenna stage	51B1021
T-2	Transformer, BC, mixer stage	51B1019
T-3	Transformer, FM, mixer stage	51B1022
T-4	Transformer, FM, osc. stage	51B1023
T-5	Transformer, BC, osc. stage	51B1020
T-6	Transformer, 1st I.F.	50B367
T-7,9	Transformer, 2nd I.F. and AM Detector & FM limiter	50B370

SERVICE PARTS LIST (Cont.)

Ref. No.	Description	Hallicrafter's Part Number
	TRANSFORMERS AND COILS (Cont.)	
T-8,10	Transformer, 2nd I.F. and AM Detector & FM limiter	50B366
T-11	Transformer, FM, detector stage	50B368
T-12	Transformer, audio output	55B105-1
T-13	Transformer, power	52C152
L-1	Loop antenna	57C118
L-2	Plate choke for tube V1	53B124
L-3	Filament choke for tubes V5 & V6	53B123
	SWITCHES:	
SW-1	Band switch assembly	60B318
SW-2	Switch, tone control	60B319
	PLUGS AND SOCKETS:	
PL-1	Line cord and plug	87A078
SO-1,2	Receptacle, television, phono	36A029
SO-3	Receptacle, speaker	6A277
SO-4	Receptacle, phono motor	10A015
	Socket, octal (tube)	6A296
	Socket, miniature (tube)	6A297
	Socket & bracket, dial light	86A062
	Socket, pilot light	86B065
	TUBES RECTIFIERS AND LAMPS	
V-1	6AU6 antenna	90X6AU6
V-2,3	6BA6 mixer, 1st I.F.	90X6BA6
V-4,5	6SH7 2nd I.F., limiter	90X6SH7
V-6	6H6 discriminator	90X6H6
V-7	6J6 osc. & AFC	90X6J6
V-8	6SJ7 audio amp.	90X6SJ7
V-9,10	6K6GT power amp.	90X6K6GT
V-11	5Y3GT rectifier	90X5Y3GT/G
LM-1,2,3	Lamp, 6-8 V., 250 Ma., Mazda #44	39A003
	MISCELLANEOUS	
	Shaft, tuning	74A247
	Pulley, idler	28A052-6
	Switch, cam	77A261
	Drive pin	74A246
	Collar	77A267
	Bushing	77A266
	Bracket, dial plate mtg.	67A793
	Dial plate	63B332
	Dial background (paper)	32B433
	Dial glass (calibrated)	22C201
	Clip (for dial glass 22C201)	76A390
	Rubber spacer, for dial clip	16A126
	Pointer	82A147
	Dial cord	38A019
	Spring, dial cord	75A012
	Dial glass (clear)	22B205
	Clip (for dial glass 22B205)	76A331
	Escutcheon	7D067
	Knob, tone and range controls	15B077-3
	Knob, tuning and volume controls	15B068-3
LS-1	Speaker assembly	85C072
TS-1	Terminal strip, antenna (Marked D-D)	87A379
TS-2	Terminal strip, antenna (Marked A-G)	88A327
	Dipole assembly	57C108-1
	Line cord lock	76A299
	Grommet, chassis mtg.	16A124
	Shield, pilot light	86A037
	Record changer	115C019

© John F. Rider

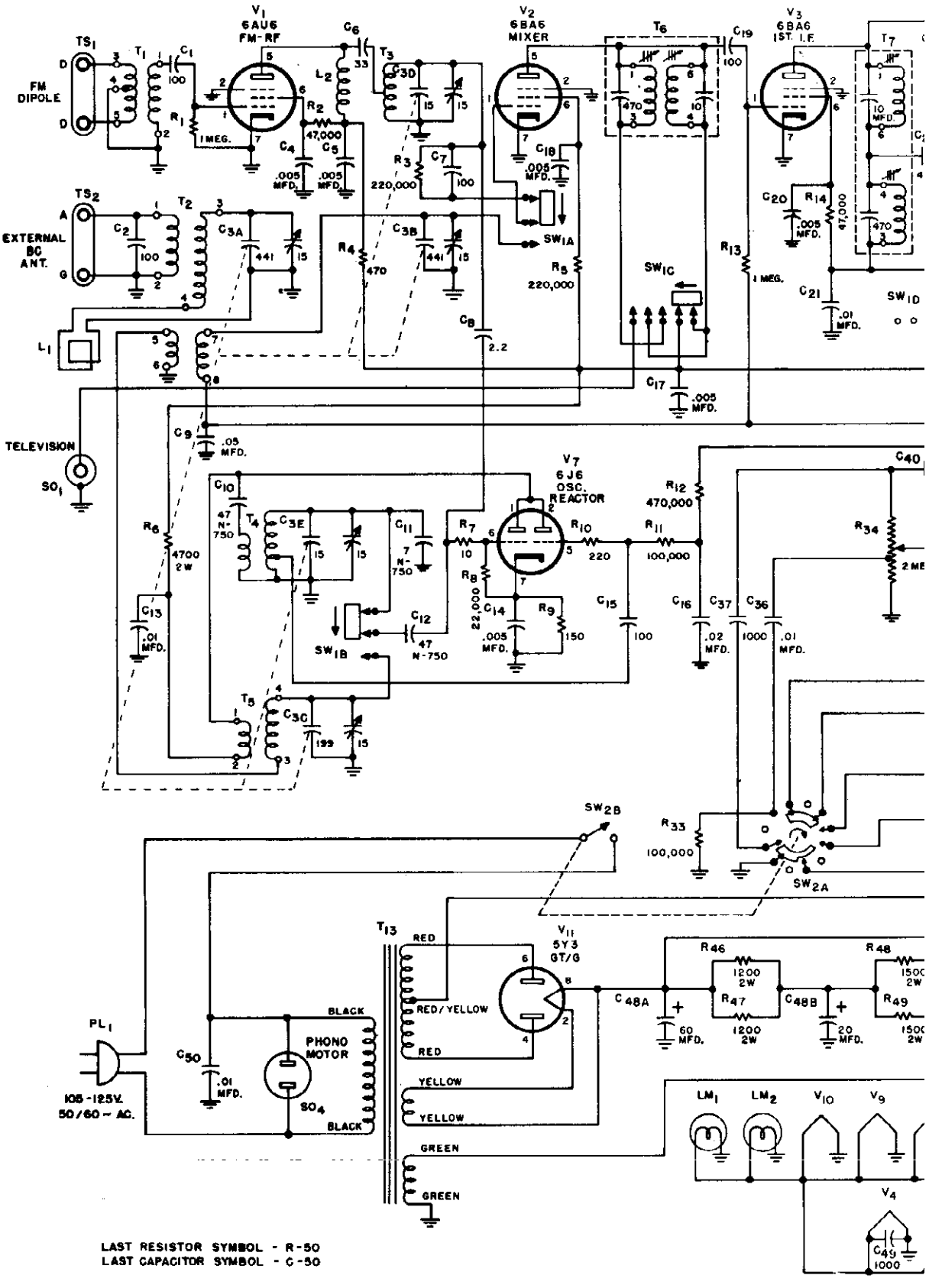

LAST RESISTOR SYMBOL - R-50
LAST CAPACITOR SYMBOL - C-50

Fig. 8. S

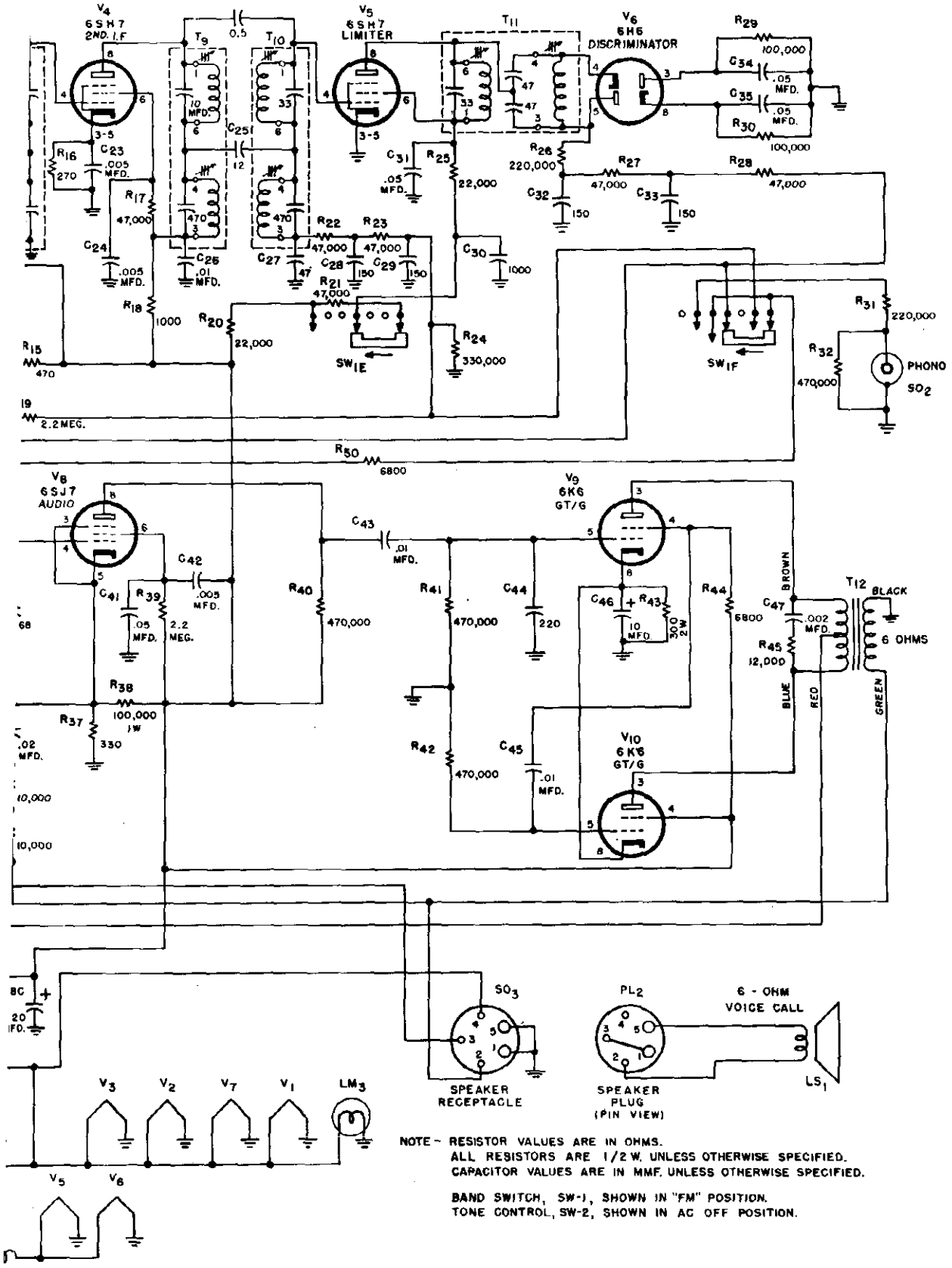

NOTE - RESISTOR VALUES ARE IN OHMS.
ALL RESISTORS ARE 1/2 W. UNLESS OTHERWISE SPECIFIED.
CAPACITOR VALUES ARE IN MMF. UNLESS OTHERWISE SPECIFIED.

BAND SWITCH, SW-1, SHOWN IN "FM" POSITION.
TONE CONTROL, SW-2, SHOWN IN AC OFF POSITION.

matic diagram.

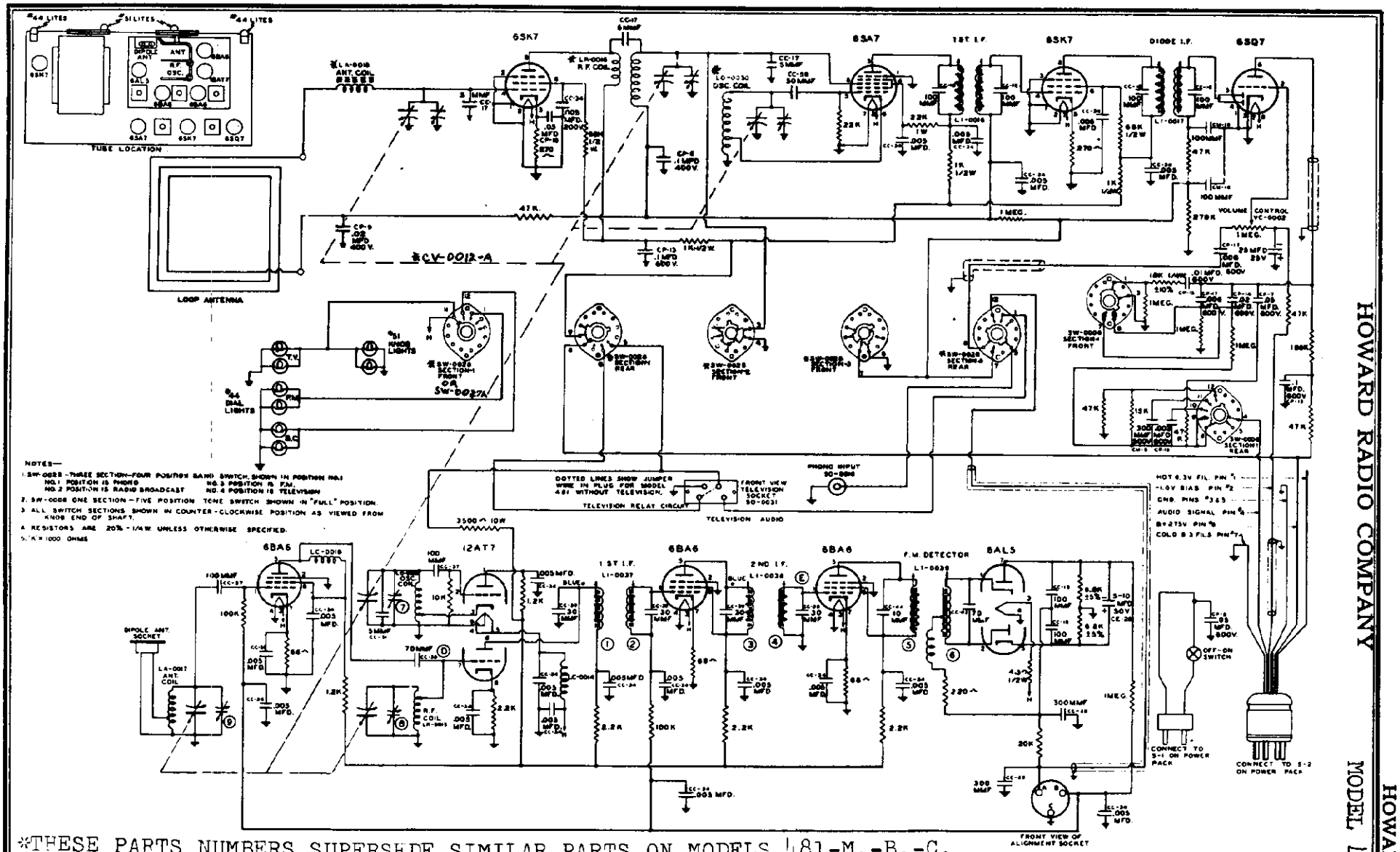

NOTES—

1. SW-0028 - THREE SECTION-FOUR POSITION BAND SWITCH, SHOWN IN POSITION NO.1
   NO.1 POSITION IS PHONO. NO.3 POSITION IS F.M.
   NO.2 POSITION IS RADIO BROADCAST. NO.4 POSITION IS TELEVISION
2. SW-0008 ONE SECTION - FIVE POSITION TONE SWITCH SHOWN IN "FULL" POSITION.
3. ALL SWITCH SECTIONS SHOWN IN COUNTER-CLOCKWISE POSITION AS VIEWED FROM KNOB END OF SHAFT.
4. RESISTORS ARE 20% - 1/4W. UNLESS OTHERWISE SPECIFIED.
5. K = 1000 OHMS

*THESE PARTS NUMBERS SUPERSEDE SIMILAR PARTS ON MODELS 481-M,-B,-C.
THE 481-A CHASSIS, IS ESSENTIALLY THE SAME AS THE 481-M, 481-B AND 481-C, THE ONLY DIFFERENCE IS THAT THE SHORT WAVE IS NOT INCLUDED IN THIS MODEL.
THE PHASING OF THE RADIO IS EXACTLY THE SAME AS THAT GIVEN IN THE SERVICE NOTES FOR MODELS 481-M,-B,-C, THE ONLY DIFFERENCE IS THAT THE BROADCAST BAND ADJUSTMENTS (R.F. DETECTOR AND OSCILLATOR) ARE NOW LOCATED ON TOP OF THE TUNING GANG.

MODEL 482

HOWARD RADIO COMPANY

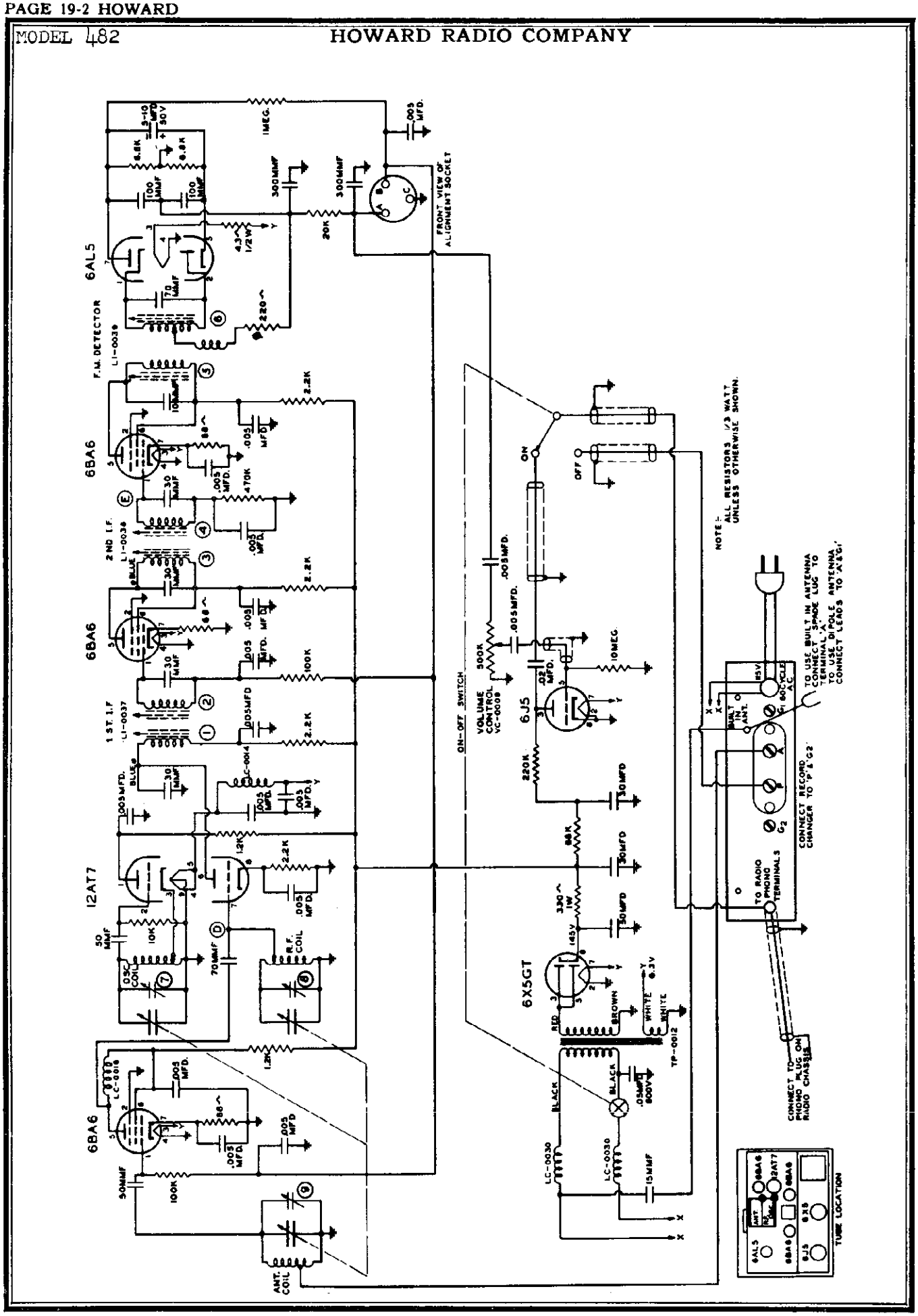

HOWARD RADIO COMPANY MODELS 482, 482A

ANTENNA REQUIREMENTS: Although the Howard Model "482" Tuner is the most sensitive built today, the successful operation of your FM Tuner depends on the signal strength of the transmitter and the efficiency of the antenna connected to the Tuner. In localities a number of miles from the sending station, it is advisable that a good antenna be used. It must be remembered that a great many things influence FM reception: elevation, high buildings or hills will intercept the waves and reduce signal strength. Each installation presents a different problem however, in most cases the built-in antenna will provide sufficient signal strength to operate the Tuner. Below are listed the different types of antennas which may be used with the "482" Tuner and a diagram to show how they are connected. The various antennas will be listed according to their efficiency.

1. DIPOLE ANTENNA:- Mounted as high as possible and away from all obstructions. Connect as shown in Fig. 1 using 300 ohm twin lead-in wire. Maximum pickup will be experienced when the arms of the antenna are flatside toward the transmitter.

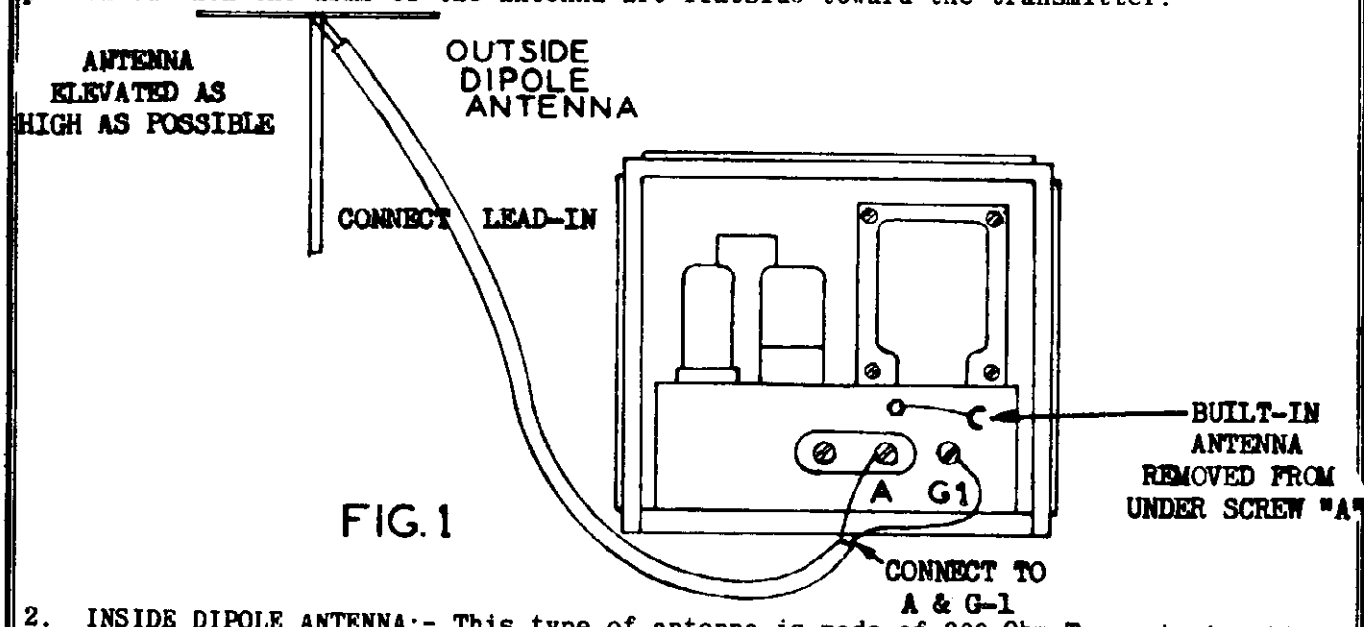

FIG. 1

2. INSIDE DIPOLE ANTENNA:- This type of antenna is made of 300 Ohm Transmission Line (See Fig. 2-A) and may be mounted on the back of the average console radio. Connections to the "482" Tuner are the same as shown in Fig. 2. The following sketch shows a typical installation.

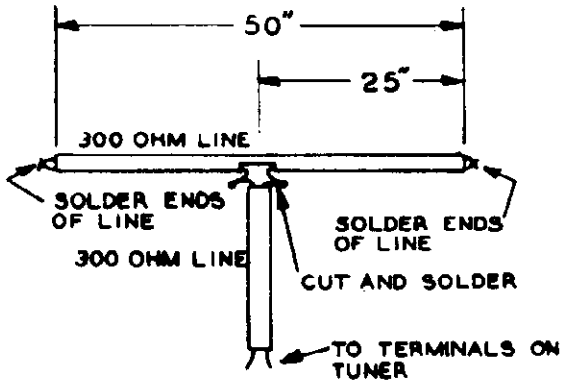

FIG. 2A

CONSTRUCTIONAL DETAILS OF DIPOLE ANTENNA MADE FROM 300 OHM TRANSMISSION LINE.

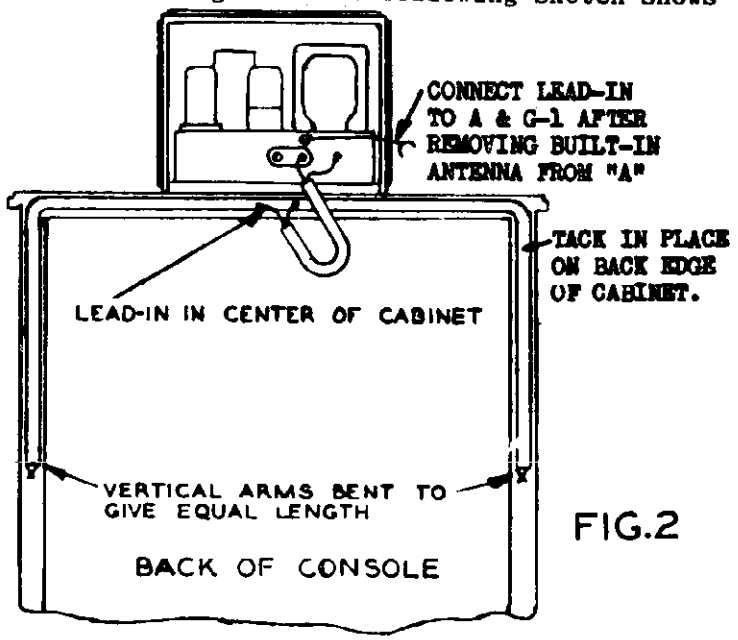

FIG. 2

This type of antenna while economical and easy to install gives excellent results. The arms may also be stretched out and placed under a rug if the cabinet is too small to attach to the back.

MODELS 482, 482A HOWARD RADIO COMPANY

3. BUILT-IN ANTENNA:- The antenna built into the "482" Tuner is quite efficient in most localities within the primary coverage area of the transmitter. For best results the line cord should be stretched out straight and away from metal objects. The Tuner is shipped with the built-in antenna attached as shown in Fig. 3.

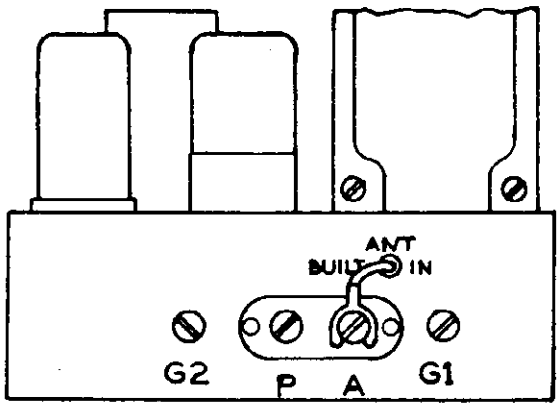

FIG. 3

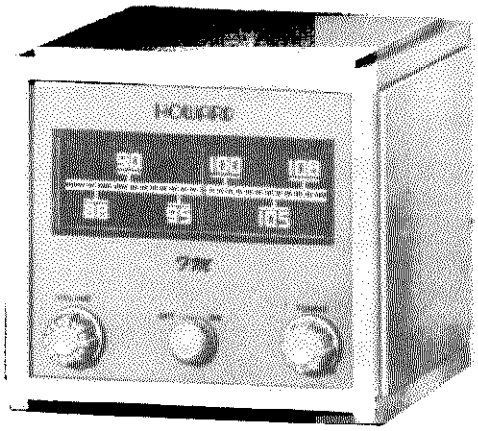

CONNECTIONS TO RADIO RECEIVER

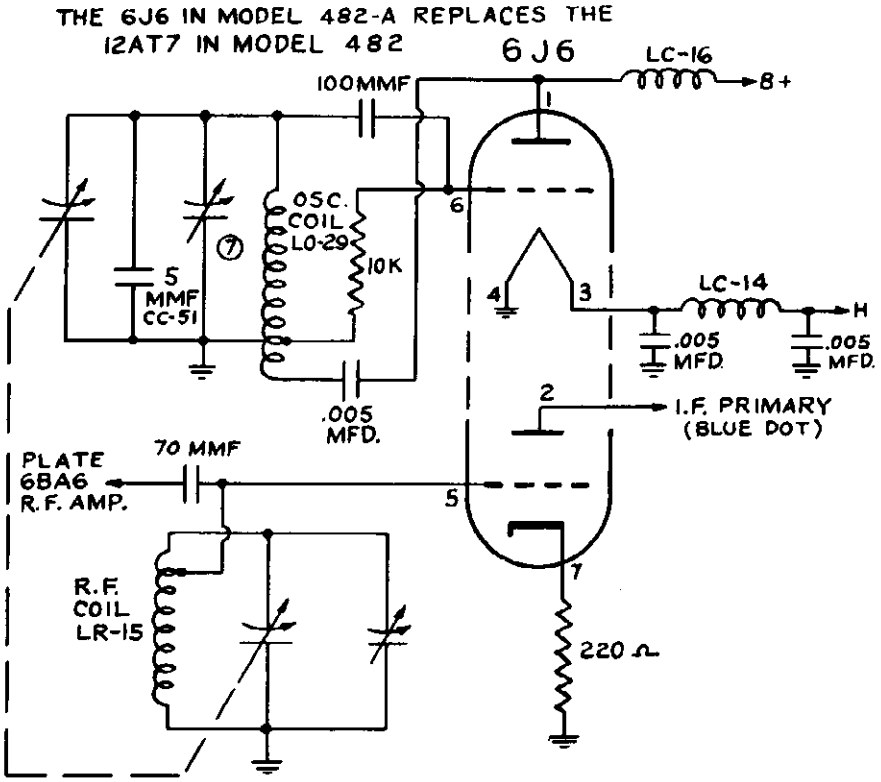

GENERAL:- Most receivers have connections in the rear of the chassis for a phonograph. The type of connection varies with different manufacturers, but it usually is in the form of a terminal strip marked PHONO and consists of two screws or a socket. In the following paragraphs each type of connection will be shown with the "482" Tuner connected in the proper manner. It will be necessary for you to determine which of the two screws or which terminal of the plug is "live". By "live" we mean which is the audio connection and which is the ground connection; no voltage capable of giving a shock will be encountered. To determine which is the "live terminal, turn the radio on with the selector switch in the PHONO position and volume up; touch the two screws or the plug connections one at a time, the one which produces a loud hum in the speaker is the "live" terminal.

1. **RADIO HAVING NO PHONO CONNECTION:-** In this case it is advisable to call a competent serviceman to make the installation as the "482" Tuner will have to be connected internally to your receiver.

©John F. Rider

2. RADIO WITH TWO SCREW TERMINALS (OR CLIPS)

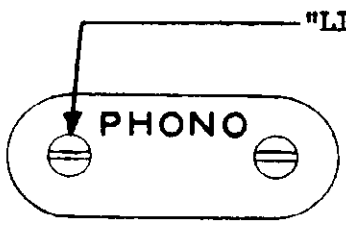

FIG. 4

3. RADIO WITH ONE SCREW TERMINAL (OR CLIPS)

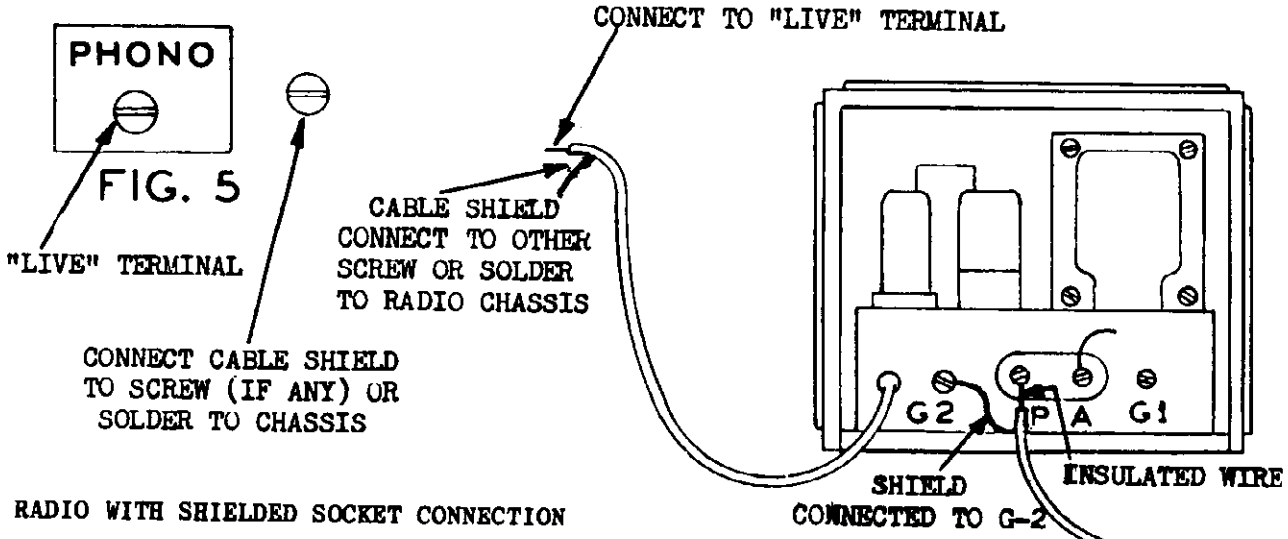

FIG. 5

4. RADIO WITH SHIELDED SOCKET CONNECTION

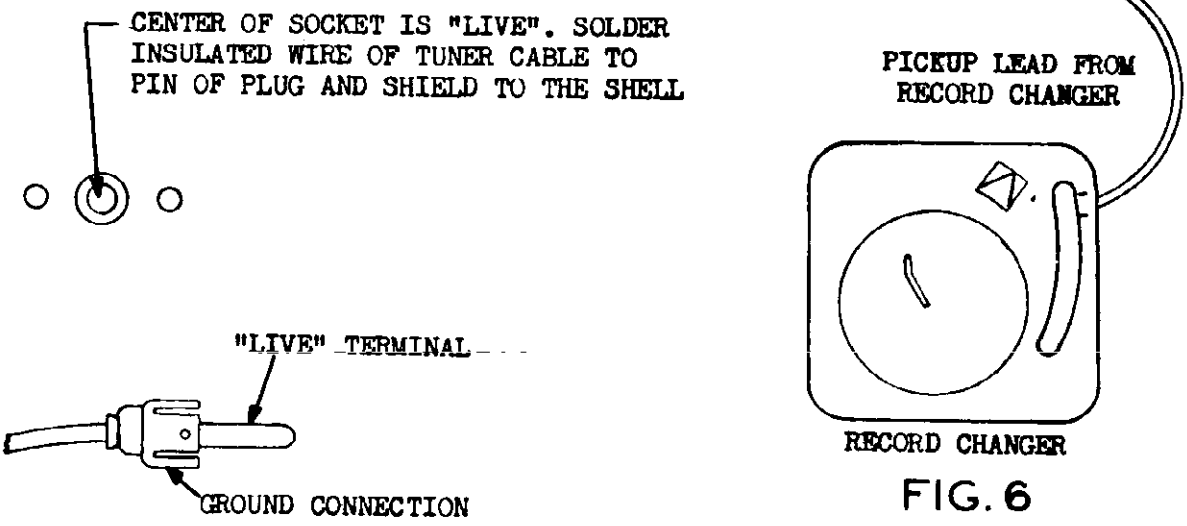

FIG. 6

UNSOLDER PLUG AND CONNECT
TO "P" & G-2 AS SHOWN.

MODELS 482, 482A HOWARD RADIO COMPANY

NOTE:

It is impossible to show all the means used to connect a record player to a radio, but by remembering to find the "live" connection going to the record player and attaching the Tuner insulated lead to this point and the cable shield to the chassis, then your Tuner will be connected properly. Then connect the lead from your record changer that went to the "live" terminal to "P" on your Tuner chassis and the other lead or shield to G-2 then your record player will play normally when the center switch on the "482" Tuner is turned to the left or OFF position.

The "482" Tuner is designed for AC operation only and should never be connected to a DC supply. It operates best with a receiver designed for AC operation as a slight hum may be noticed on high volume if the Tuner is connected to an AC-DC receiver. This may be eliminated by reversing the power cord plug in its socket on either the radio or the Tuner, or both.

TO OPERATE:

Plug power cord into 115 volt, 60 cycle, A.C. power outlet. Turn radio on, place radio in phono position, and turn radio volume control approximately half on. Turn FM Tuner to ON position, use volume control on Tuner to adjust volume level and carefully tune in FM Stations.

PARTS LIST

	CONTROLS
VC-0009	Volume Control
SW-0025	Switch (On-Off) (AM-FM)
	CONDENSERS
CV-0018	Tuning Gang and Drive Hub
CE-0007	Capacitor - Electrolytic 50x30x30 MFD 150 volts
CE-0028	Capacitor - Electrolytic 10 MFD 50 volts
CT-0005	Trimmer - Cap. 2.5-30MMF
CC-0005	Capacitor - Ceramic 30MMFD 500 V. D.C.
CC-0014	Capacitor - Ceramic 50MMFD 500 V. D.C.
CC-0050	Capacitor - Ceramic 68-72MMFD 500 V. D.C.
CC-0016	Capacitor - Ceramic 100MMFD 500 V. D.C.
CC-0020	Capacitor - Ceramic 10MMFD 500 V. D.C.
CC-0022	Capacitor - Ceramic 70MMFD 500 V. D.C.
CC-0028	Capacitor - Ceramic 300MMFD 500 V. D.C.
CC-0034	Capacitor - Ceramic 5000MMFD 500 V. D.C.
CC-0049	Capacitor - Ceramic 15MMFD 500 V. D.C.
	COILS
LA-0017	Antenna Coil
LC-0014	Choke Coil - Filament
LC-0016	F.M.-R.F. Choke Coil
LC-0030	Line Antenna Choke Coil
LI-0037	1st I.F. Transformer
LI-0038	2nd I.F. Transformer
LI-0039	Discriminator Transformer
LO-0028	Oscillator Coil
LR-0015	R.F. Coil

	DIAL AND CONTROL ACCESSORIES
DG-0021	Dial Scale
DC-0001	Dial Cord 28" long
HD-0003	Pointer - Dial.
SL-0006	Dial Light Socket Assy.
LS-0001	Lamp Type #47
SP-0010	Spring-Dial 12 oz. Load Spr. Stl.
SM-0188	Shaft-tuning 2-9/64" long
	KNOBS
KB-0022-1	Knob - Moulded 3/4" Dia. Walnut
KB-0022-2	Knob - Moulded 3/4" Dia. Onyx
KB-0023-1	Knob - Moulded 1-1/32" Dia. Walnut
KB-0023-2	Knob - Moulded 1-1/32" Dia. Onyx
	TRANSFORMER
TP-0012	Power Transformer (60 Cycle,110 V.
	TUBES
TU -	6AL5
TU -	6BA6 (3 used)
TU -	6J5
TU -	6X5GT
TU -	12AT7
	SOCKETS
SO-0007	Socket - Octal - 8 Prong
SO-0019	Socket - Miniature - 7 Pin
SO-0022	Socket - Miniature - 9 Pin
SO-0029	Socket - Miniature - 7 Pin
SO-0030	Socket - - 3 Pin
TB-0018	Antenna Terminal Strip
	LINE CORD
CA-0038	A.C. Line Cord 6 ft. W/Plastic Plug
	CABINETS
CW-0012-1	Wood Cabinet (Mahogany)
CW-0012-2	Wood Cabinet (Blonde)
DG-0020	Cabinet Dial Escutcheon

ALIGNMENT NOTES

Volume control should be turned on full before aligning radio.
Tuning gang should be in a closed condition unless otherwise stated in the following data. Pointer on last line below 88 MC.
Use an F.M. Signal Generator.

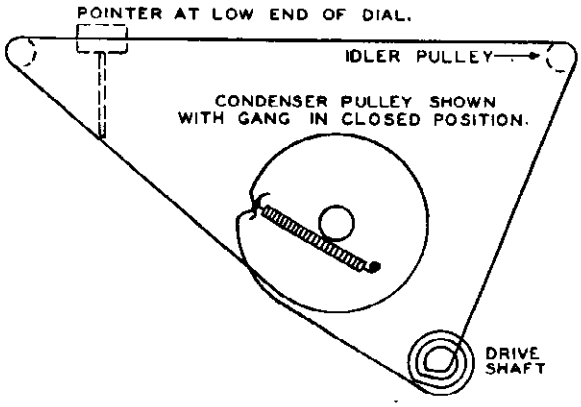

DIAGRAM SHOWING DIAL STRINGING FOR MODEL 482

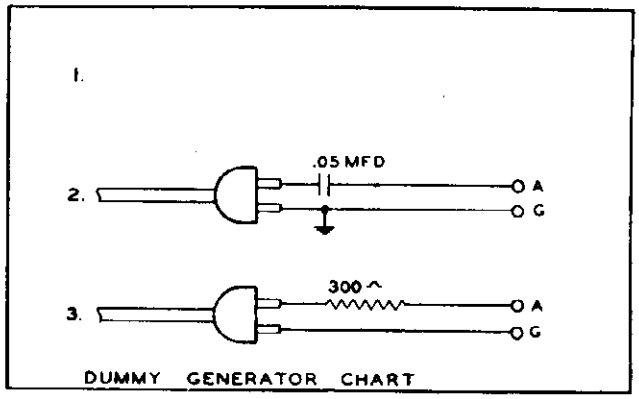

DUMMY GENERATOR CHART

ALIGNMENT CHART USING MODULATED GENERATOR

SEE DUMMY GEN. CHART	SIG. GEN. CONNECTION	GEN. FREQ.	BAND SW. POSITION	DIAL SETTING	ORDER OF SLUG AND TRIMMER ADJUSTMENTS	TRIMMER OR SLUG FUNCTION	SEE NOTES BELOW
2	Point Ⓔ on Circuit Diagram	10.7 MC.	FM	Gang Closed	⑥	F M. Det. Adj	A & B
2	Point Ⓔ on Circuit Diagram	10.7 MC.	FM	Gang Closed	⑤ Adjust to zero Voltage	F M. Det. Adj.	C
2	Point Ⓓ on Circuit Diagram	10.7 MC.	FM	Gang Closed	①②③④	F.M. - I.F.	D
3	Ant. and Grd. Back of Chassis	105 MC.	FM	105 MC.	⑦⑧⑨	Osc. and R.F.-F.M	E F & G
3	Ant. and Gnd. Back of Chassis	90 MC.	FM	90 MC.		F.M. - R.F. Ind. Adj.	H & I

A. Signal generator modulation off and turned up to about 100,000 microvolts.
B. Connect electronic volt meter (equivalent to voltohmist) at point "B" of alignment socket as shown on the wiring diagram and turn slug (6) on trimmer location chart to extreme counter-clockwise position. Turn clockwise to 1st peak and adjust to maximum.

C. Turn slug (5) to extreme counter-clockwise position. Connect electronic voltmeter to Point A of alignment socket and turn slug (5) until voltmeter is to zero voltage. Repeat adjustments given in Notes B & C until no further improvement can be made.

D. Connect voltmeter to Point B and generator at Point D. Adjust (1) (2) (3) (4), then retrim (6). Move voltmeter to Point A and recheck zero voltage (retrim if necessary). These adjustments should be made with input signal necessary to pro duce approximately .7 volts at Point B.

E. Remove built-in antenna from the connection A on back of chassis.
F. Change generator dummy as shown on dummy antenna chart, Picture 3, and modulation on, and fasten generator to A & G-1.
G. Turn the first Detector or R.F. Trimmer (8) well to the left - almost open - so you will not have a locking condition and be able to locate the signal at 105 M.C. when turning Trimmer (7).

H. Should 90 M.C. signal not fall in at 90 M.C. on the dial, adjust F.M. oscillator coil to correct calibration. It is only necessary to press together or open the spacing on one turn of the coil to do so.
I. After adjusting oscillator coil for the correct calibration at 90 M.C., check the detector and antenna coil for proper tracking with the oscillator. If they do not track it will be necessary to adjust the detector and antenna coils for perfect tracking.
J. Repeat adjustments (7) (8) (9) until no further improvement can be made.

©John F. Rider

JEWEL RADIO CORP. MODEL 300

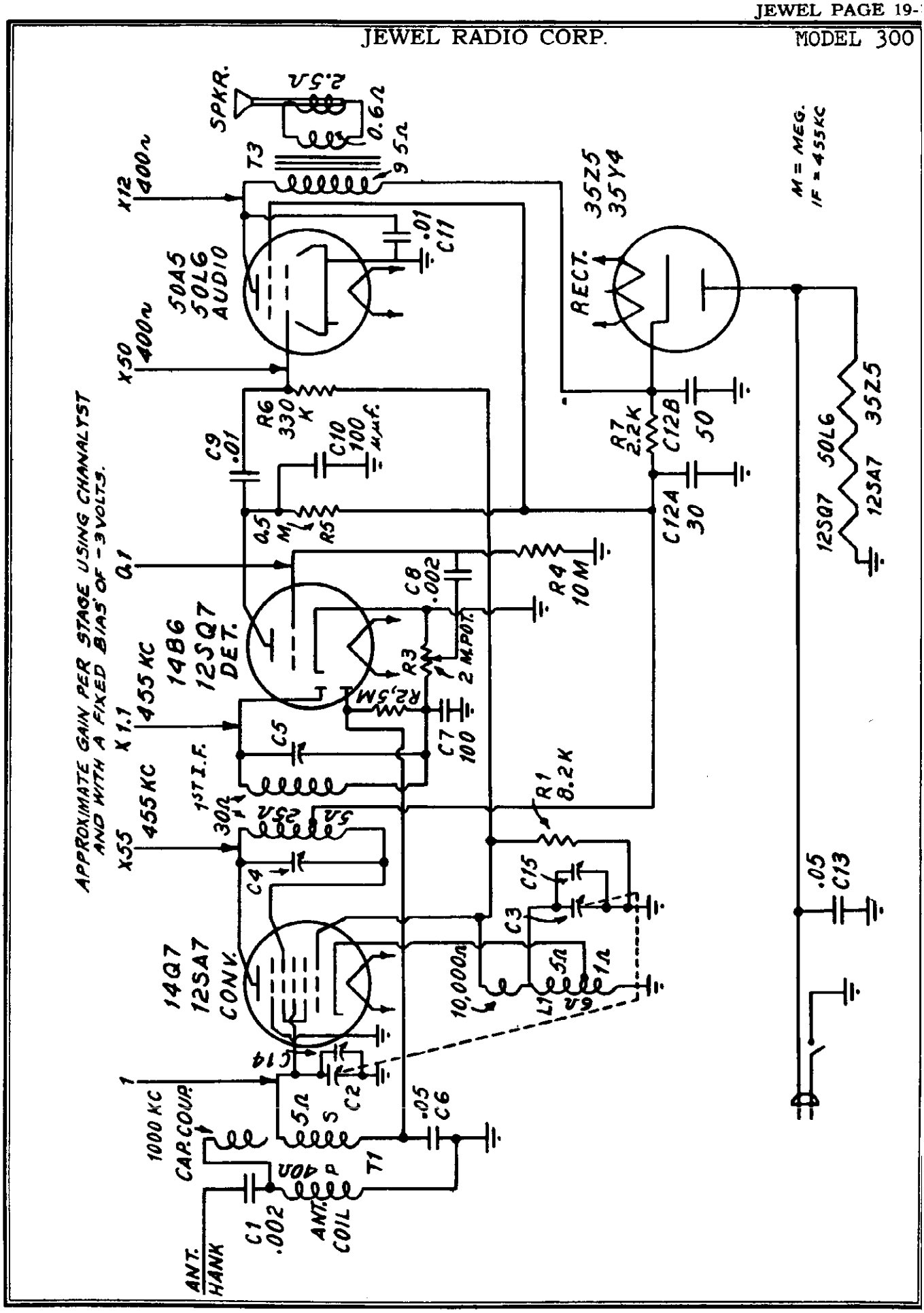

MODEL 300

JEWEL RADIO CORP.

ALIGNMENT PROCEDURE

Connect output meter across the voice coil.

Couple the signal generator to the hank antenna through a 100 μμf capacitor. Set the volume control at maximum, and fully mesh the tuning capacitor.

The output of the signal generator should be just sufficient to give a readable deflection on the output meter.

Set the signal generator to 455 kc and adjust i-f trimmers for maximum output in the following order: C5, C4. Repeat sequence if trimmers were badly maladjusted.

Set the signal generator and receiver to 1400 kc and adjust the oscillator trimmer C15 for maximum output

Set the signal generator and receiver to 1600 kc and adjust the antenna trimmer C14 for maximum output.

Set the signal generator and receiver to 1400 kc and readjust oscillator trimmer C15 for maximum output.

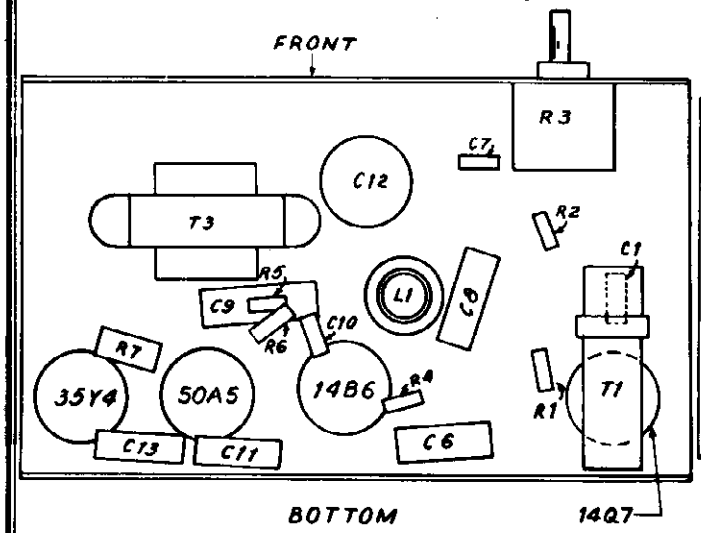

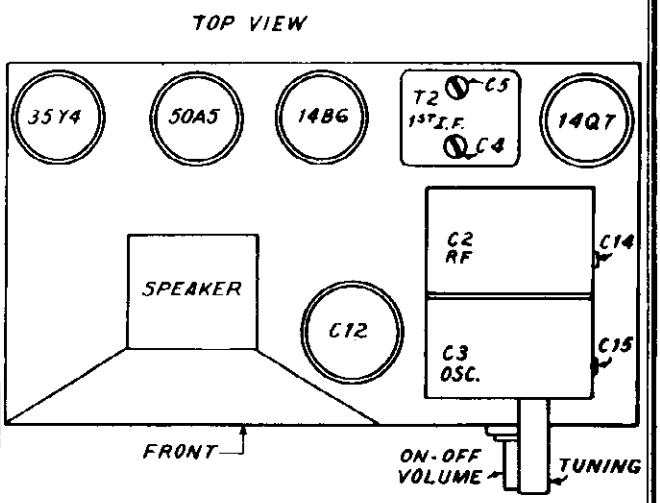

TUBE	PIN	VTVM	20,000Ω/V	1,000Ω/V	RESISTANCE
14Q7	1	AC	AC	AC	18Ω
CONV.	2	+90	+97	+90	over 10 meg
	3	+90	+97	+90	over 10 meg
	4	-6.8	-6.8	-3.8	11K
	5	0	0	0	0
	6	-.95	-.58	-.1	4.5K
	7	0	0	0	1
	8	AC	AC	AC	26Ω
14B6	1	AC	AC	AC	0
DET	2	+52	+51	+16	over 10 meg
	3	-.9	-.6	-.4	10 meg
	4	--	--	--	--
	5	-1.5	-.8	-.4	1.5 meg
	6	-.95	-.8	-.4	4.5K
	7	0	0	0	0
	8	AC	AC	AC	20Ω
50A5	1	AC	AC	AC	75Ω
AUD OUT	2	+125	+120	+120	over 10 meg
	3	+90	+98	+92	over 10 meg
	4	--	--	--	--
	5	--	--	--	--
	6	-19	-5	-2	400K
	7	0	0	0	0
	8	AC	AC	AC	25Ω
35Y4	1	-5.5	0	0	100Ω
	2	-5.5	0	0	100Ω
	3	--	--	--	--
	4	--	--	--	--
	5	--	--	--	--
	6	--	--	--	--
	7	+130	+130	+130	over 10 meg
	8	-3	0	0	over 10 meg

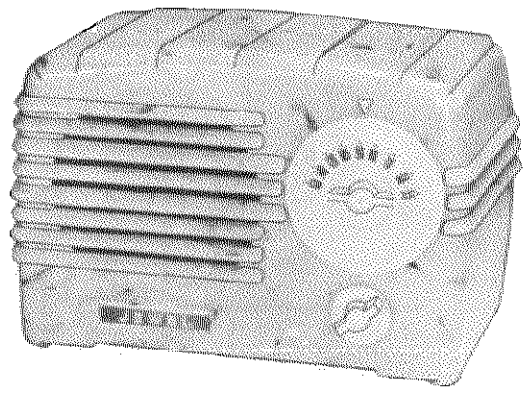

JEWEL RADIO CORP.

MODEL 304,
Pixie

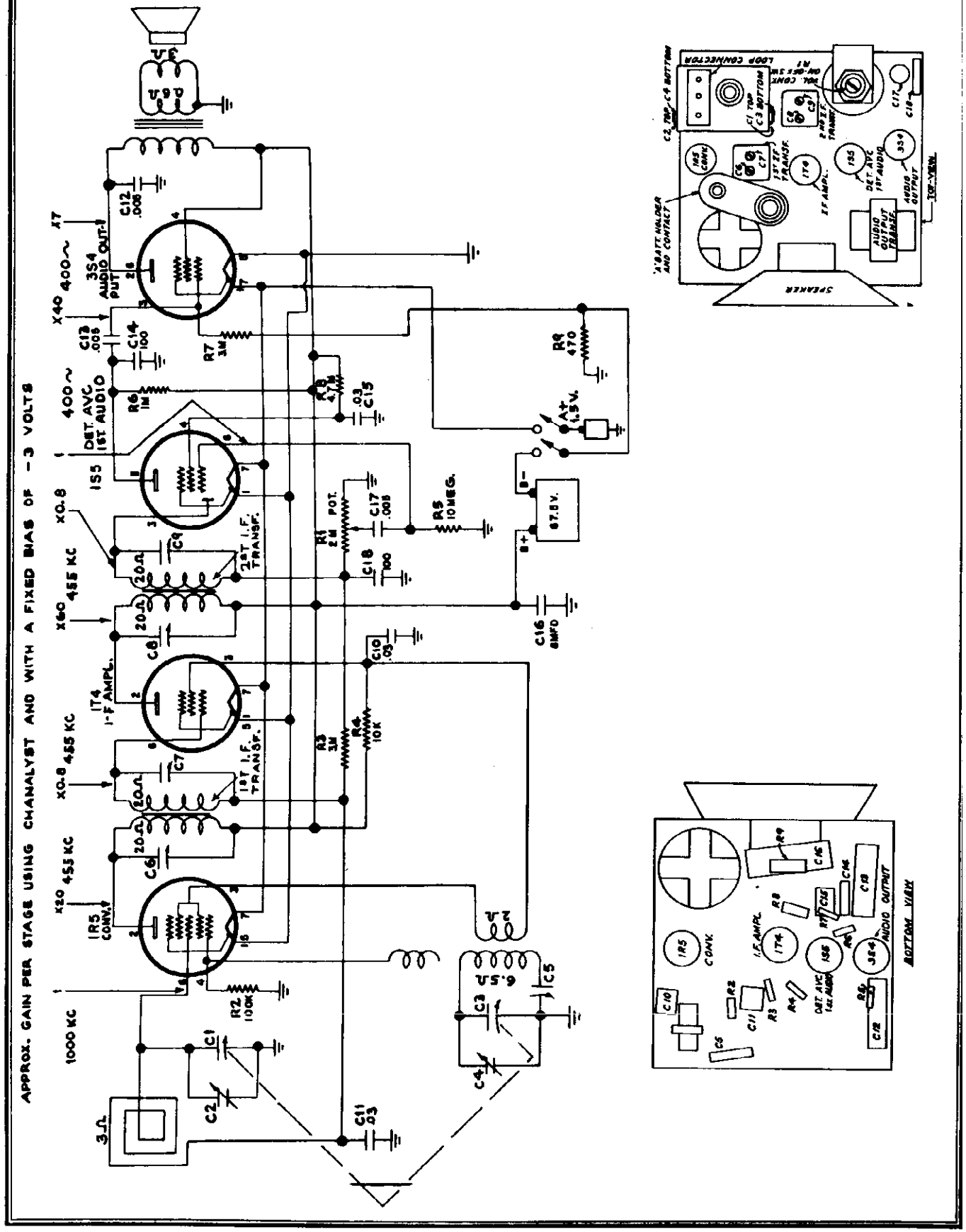

MODEL 304, Pixie

TUBE	PIN	VTVM	20,000/V	1,000/V	RESISTANCE
1R5	1	0	0	0	0
conv.	2	62	62	62	over 500K
	3	50	50	44	over 500K
600KC	4	-1.2	-0.2	0	100K
1600KC		-3	-1.4	-0.2	
	5	0	0	0	0
	6	-0.3	0	0	4 megs.
	7	1.4	1.4	1.4	0.2 ohm
1T4	1	0	0	0	0
1-F. AMPL.	2	62	62	62	over 500K
	3	50	50	44	over 500K
	4	-0.3	0	0	4.5 megs.
	5	0	0	0	0
	6	-0.3	0	0	4.5 megs.
	7	1.4	1.4	1.4	0.2 ohm
1S5	1	0	0	0	0
DET. A.V.C.	2				
1st audio	3	-0.4	-0.2	0	1.8 megs.
	4	14	12	2	over 5 megs.
	5	24	20	4	over 1 meg.
	6	-0.3	0	0	10 megs.
	7	1.4	1.4	1.4	0.2 ohm
3S4	1	1.4	1.4	1.4	0.2 megs.
audio output	2	60	60	60	over 500K
	3	-4.5	-0.5	0	3 megs.
	4	62	62	62	over 500K
	5	0	0	0	0
	6	60	60	60	over 500K
	7	1.4	1.4	1.4	0.2 ohm

ALL VOLTAGE AND RESISTANCE MEASUREMENTS MADE WITH RESPECT TO CHASSIS GROUND. AND WITH A SUPPLY VOLTAGE OF 67 1/2 DC

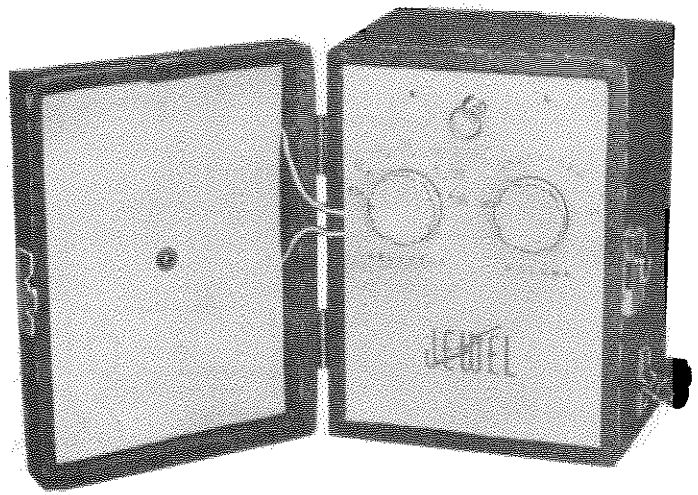

ALIGNMENT PROCEDURE

Connect output meter across voice coil.

Connect the signal generation to the standard Hazeltine Loop Model 1150 and couple it loosely to the receiver loop. Set the volume control at maximum, and fully mesh the tuning capacitor.

The output of the signal generator should be just sufficient to give a readable deflection on the output meter.

Set the signal generator to 455 kc and adjust i-f trimmers for maximum output in the following order: C9, C8, C7, C6. Repeat sequence if trimmers were badly maladjusted.

Set the signal generator and receiver to 1620 kc and adjust the oscillator trimmer C4 for maximum output.

Set the signal generator and receiver to 1500 kc and adjust the antenna trimmer C2 for maximum output.

Set the signal generator and receiver to 1620 kc and readjust oscillator trimmer C4 for maximum output.

JEWEL RADIO CORP.

MODEL 801,
Trixie

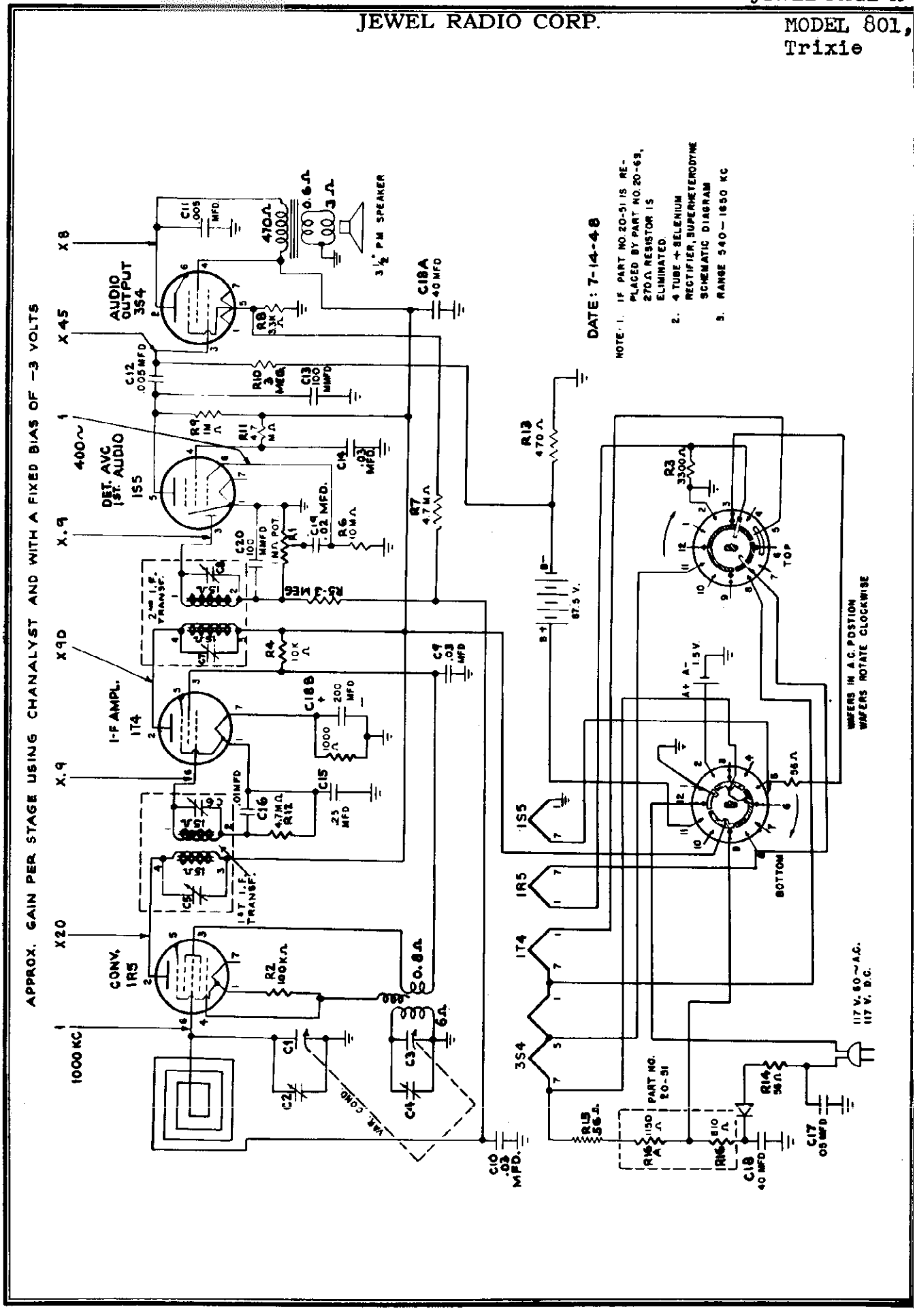

MODEL 801, Trixie

JEWEL RADIO CORP.

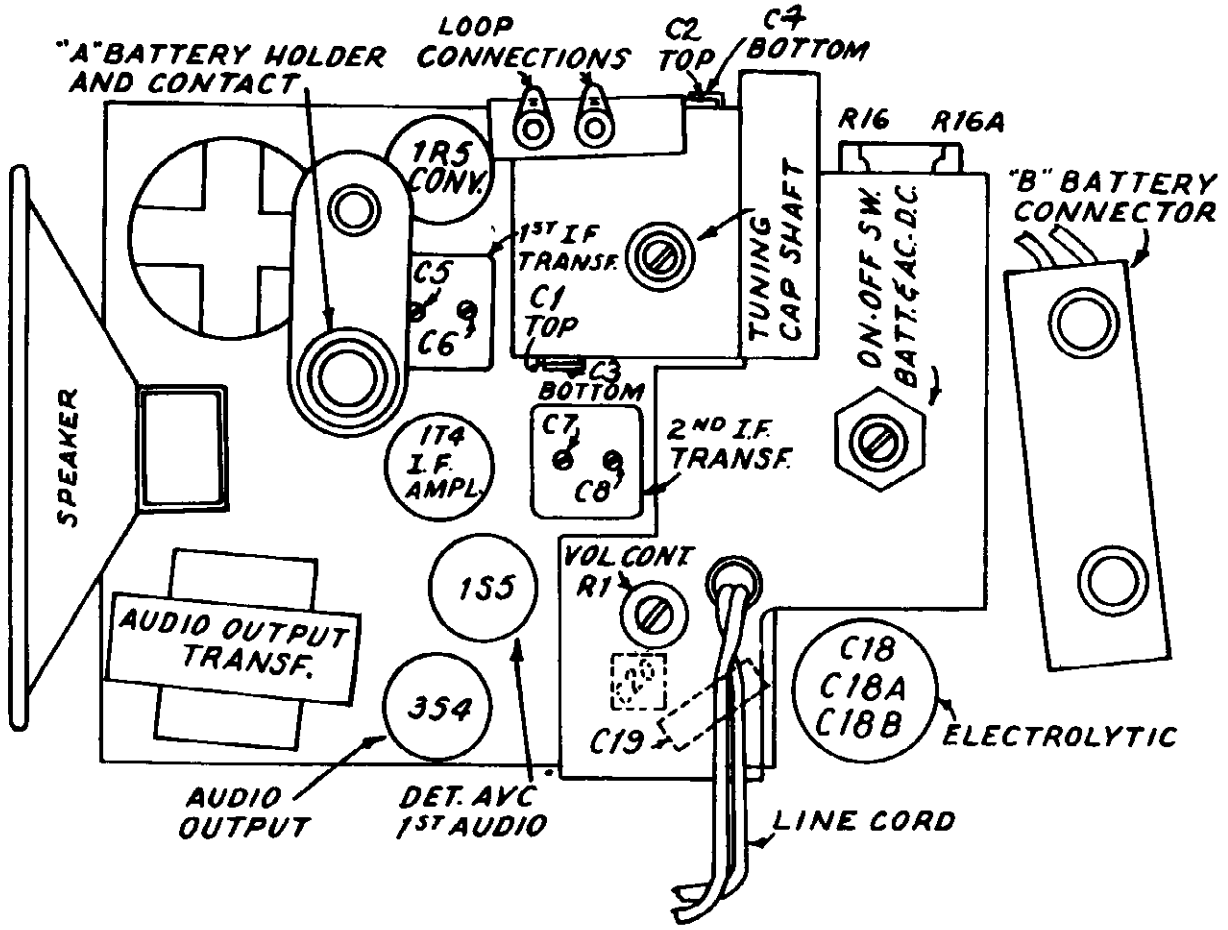

TOP VIEW

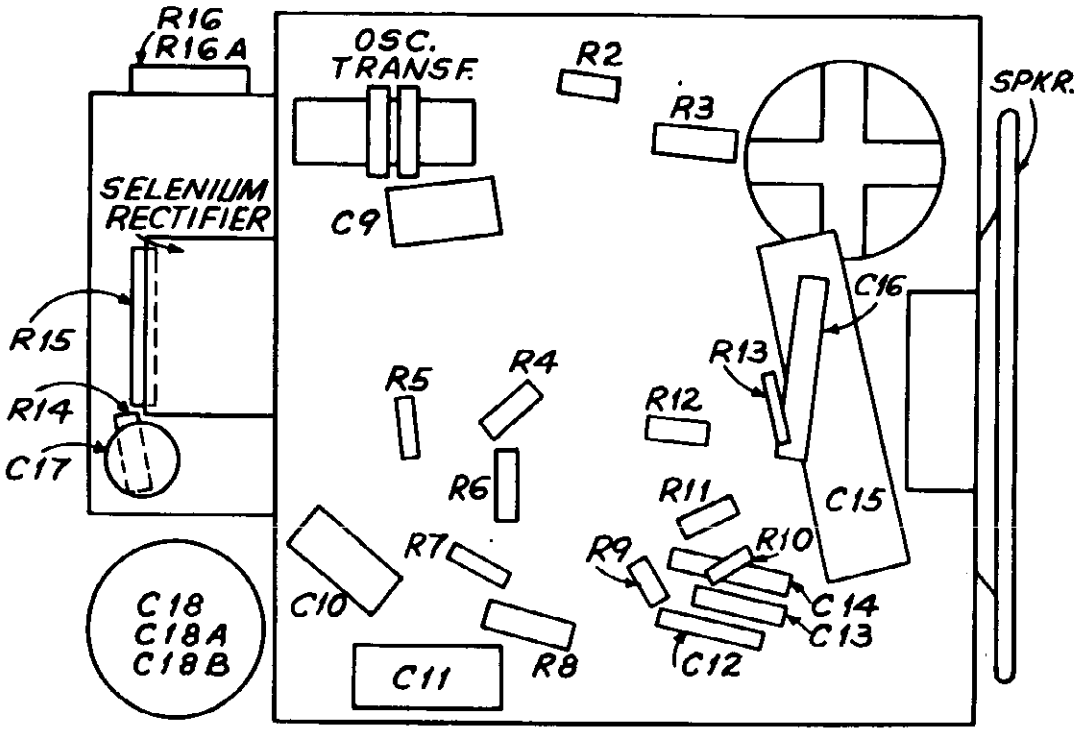

BOTTOM VIEW

TUBE	PIN	VTVM	20,000/V	1,000/V	RESISTANCE
1R5	1	4	4	4	3.4K
conv.	2	76	76	76	over 50K
	3	50	50	48	over 50K
550 KC	4	-7	-2.3	0	115K
1600 KC		-10	-2.4	0	
	5	4	4	4	3.4K
	6	3	0.2	0	2.3 megs.
	7	5.2	5.2	5.2	3.4K
1T4	1	5.2	5.2	5.2	750 ohm
1-F AMPL.	2	76	76	76	over 50K
	3	50	50	48	over 50K
	4				
	5	5.2	5.2	5.2	750 ohm
	6	3.5	-0.2	0	4.8 megs.
	7	6.4	6.4	6.4	740 ohm
1S5	1	0	0	0	0
DET. A.V.C.	2	—	—	—	—
1st audio	3	0	0	0	1 meg.
	4	17	14	2	5.4 megs.
	5	21	18	6	1 meg.
	6	0.1	0	0	10 megs.
	7	1.2	1.2	1.2	12 ohm
3S4	1	6.5	6.5	6.5	740 ohm
audio output	2	73	73	73	over 50K
	3	0.1	0	0	3 megs.
	4	76	76	76	over 50K
	5	7.8	7.8	7.8	750 ohm
	6	73	73	73	over 50K
	7	9	9	9	760 ohm

ALL VOLTAGE AND RESISTANCE MEASUREMENTS MADE WITH RESPECT TO CHASSIS GROUND. And WITH A LINE VOLTAGE OF 116 V.A.C.

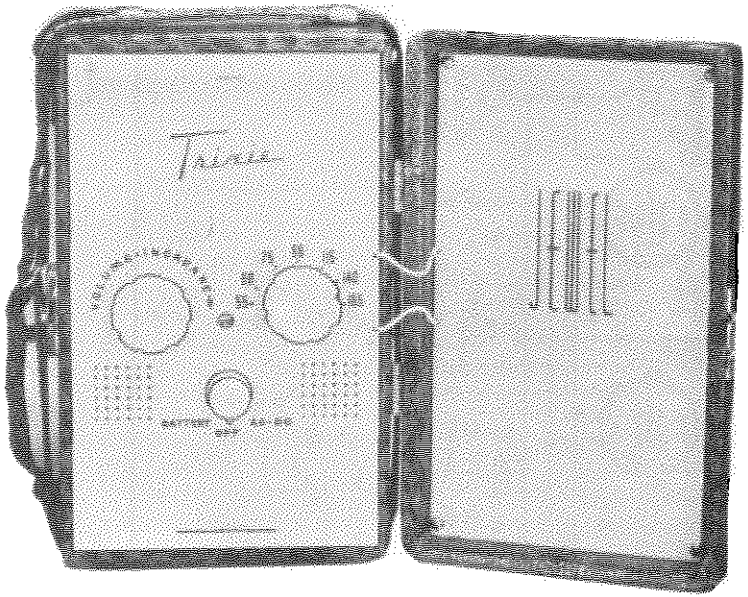

ALIGNMENT PROCEDURE

Connect output meter across voice coil.

Connect the signal generation to the standard Haseltine Loop Model 1150 and couple it loosely to the receiver loop. Set the volume control at maximum, and fully mesh the tuning capacitor.

The output of the signal generator should be just sufficient to give a readable deflection on the output meter.

Set the signal generator to 455 kc and adjust i-f trimmers for maximum output in the following order: C8, C7, C6, C5. Repeat sequence if trimmers were badly maladjusted.

Set the signal generator and receiver to 1600 kc and adjust the oscillator trimmer C4 for maximum output.

Set the signal generator and receiver to 1400 kc and adjust the antenna trimmer C2 for maximum output.

Set the signal generator and receiver to 1600 kc and readjust oscillator trimmer C4 for maximum output.

MODEL 814 JEWEL RADIO CORP.

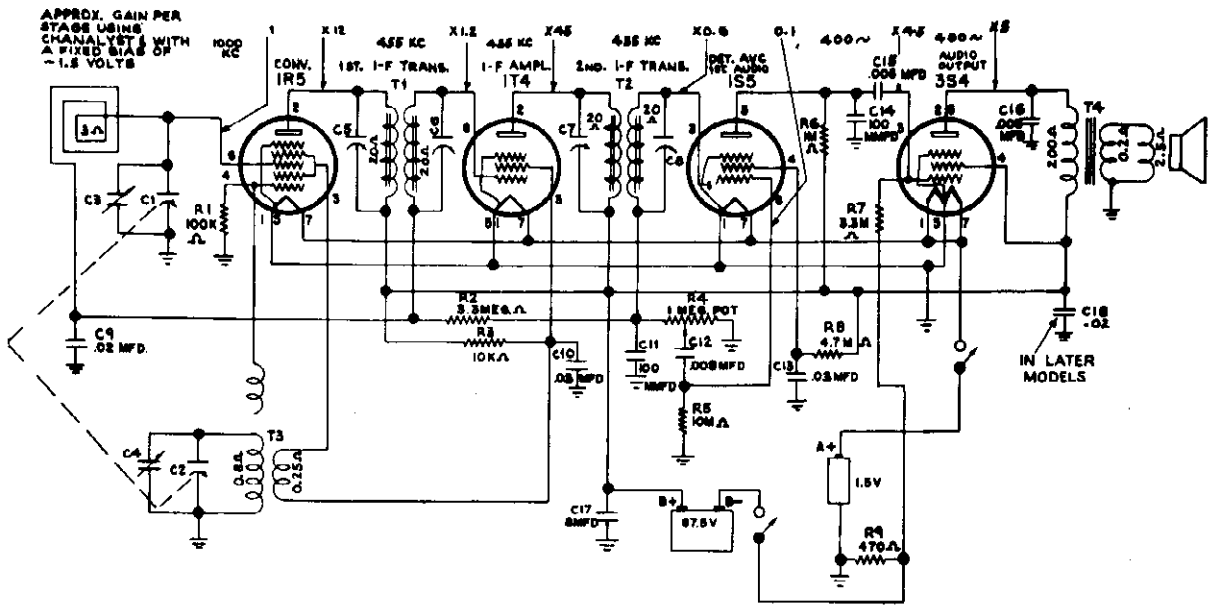

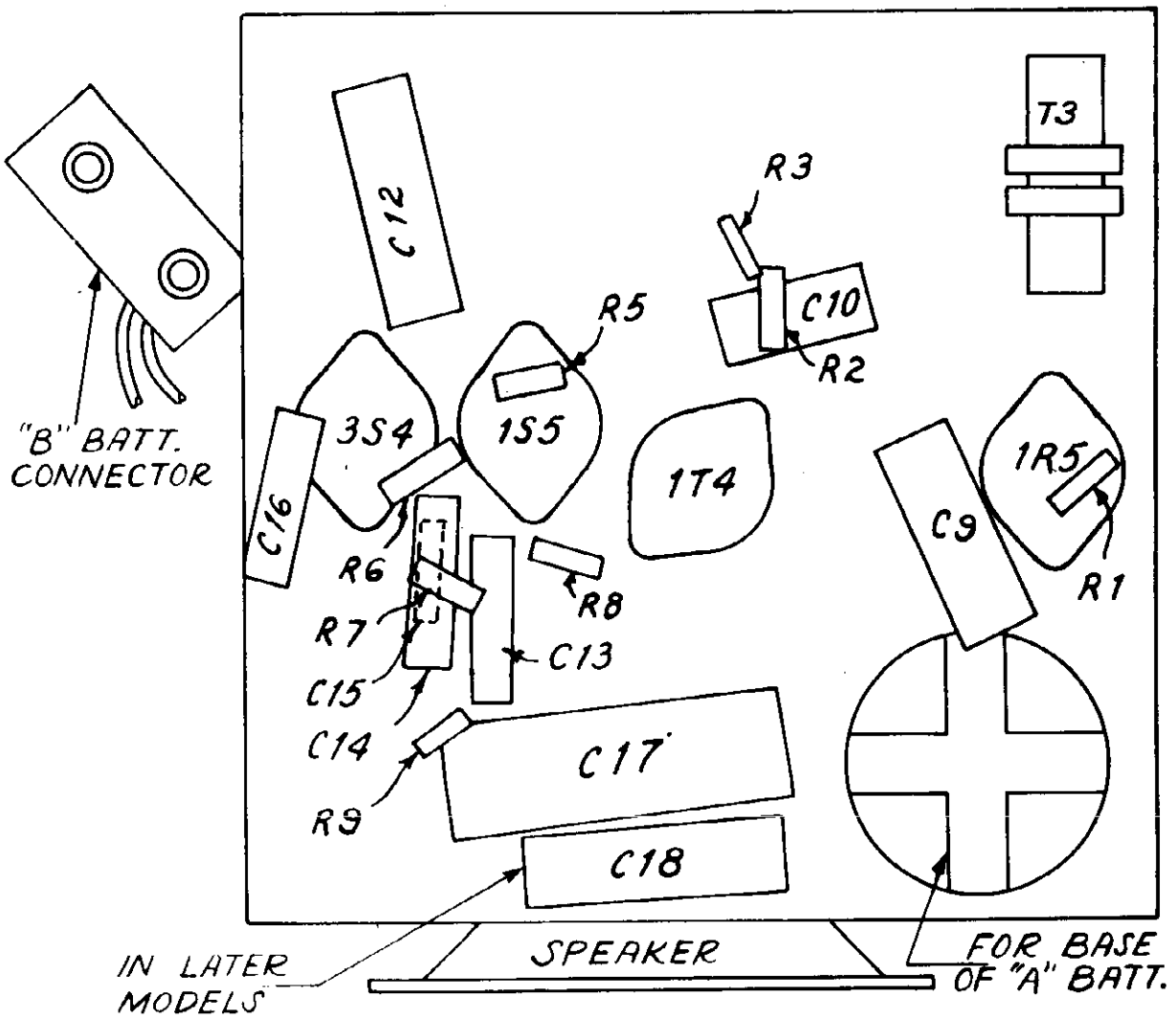

BOTTOM VIEW

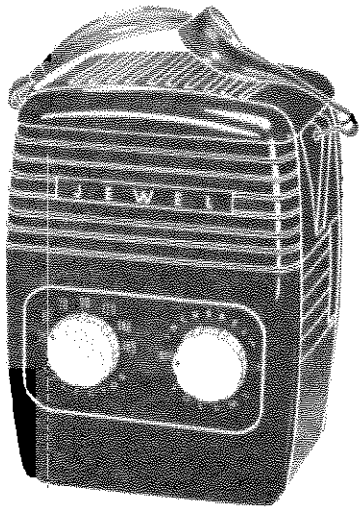

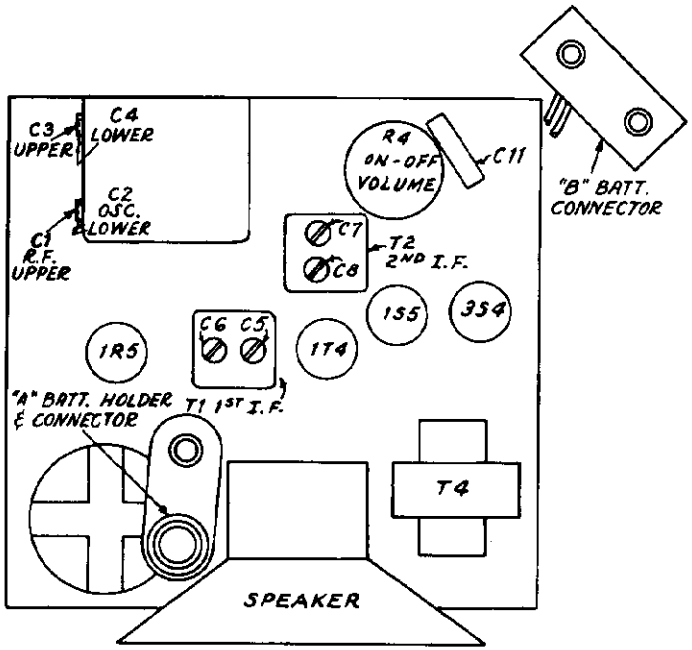

TOP VIEW

TUBE	PIN	VTVM	20,000Ω/V	1,000Ω/V	RESISTANCE
1R5	1	0	0	0	0
CONV.	2	63	63	60	10 meg.
	3	40	40	37	10 meg.
1600kc	4	-12.5	-7	-6	120 K
550 kc		-10	-6	-5	120 K
	5	0	0	0	0
	6	-0.4	0	0	4.7 meg
	7	1.5	1.4	1.3	4.5Ω
1T4	1	0	0	0	0
IF AMP	2	61	61	59	10 meg
	3	39	39	36	10 meg
	4	-0.5	-0.1	0	4.7 meg
	5	0	0	0	0
	6	-0.5	-0.1	0	4.7 meg
	7	1.3	1.3	1.3	4.7 meg
1S5	1	0	0	0	0
DET	2	NC	--	--	---
1st AUD	3	-0.5	-0.3	0	1 meg
	4	16.5	13	2	over 10 meg
	5	19	15	4	over 10 meg
	6	-0.15	0	0	10 meg
	7	1.3	1.2	1.2	4.7Ω
3S4	1	1.3	1.2	1.2	4.6Ω
AUD OUT	2	58	58	56	over 10 meg.
	3	-4.3	-3	0	3.3 meg
	4	60	60	58	10 meg
	5	0	0	0	0
	6	58	58	56	over 10 meg
	7	1.3	1.2	1.2	4.6Ω

ALIGNMENT PROCEDURE

Connect output meter to voice coil.

Connect the signal generator to the standard Hazeltine Loop Model 1150 and couple it loosely to the receiver loop. Set the volume control at maximum, and fully mesh the tuning capacitor.

The output of the signal generator should be just sufficient to give a readable deflection on the output meter.

Set the signal generator to 455 kc and adjust i-f trimmers for maximum output in the following order: C8, C17, C6, C5. Repeat sequence if trimmers were badly maladjusted.

Set the signal generator and receiver to 1400 kc and adjust the oscillator trimmer C4 for maximum output.

Set the signal generator and receiver to 1620 kc and adjust the antenna trimmer C3 for maximum output.

Set the signal generator and receiver to 1400 kc and readjust oscillator trimmer C4 for maximum output.

©Tube Data

THE KAPPLER CO. MODEL 102T

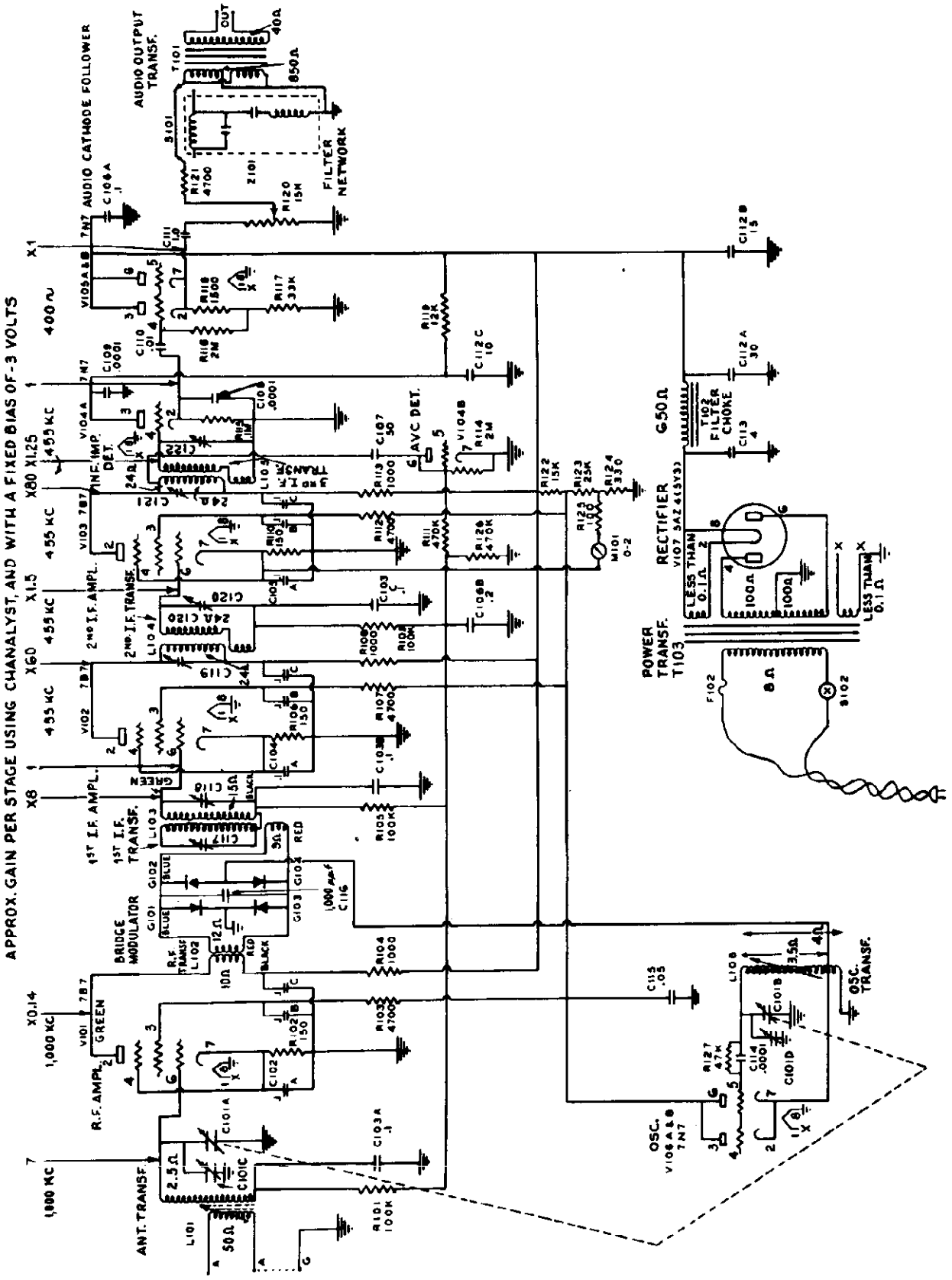

MODEL 102T

THE KAPPLER CO.

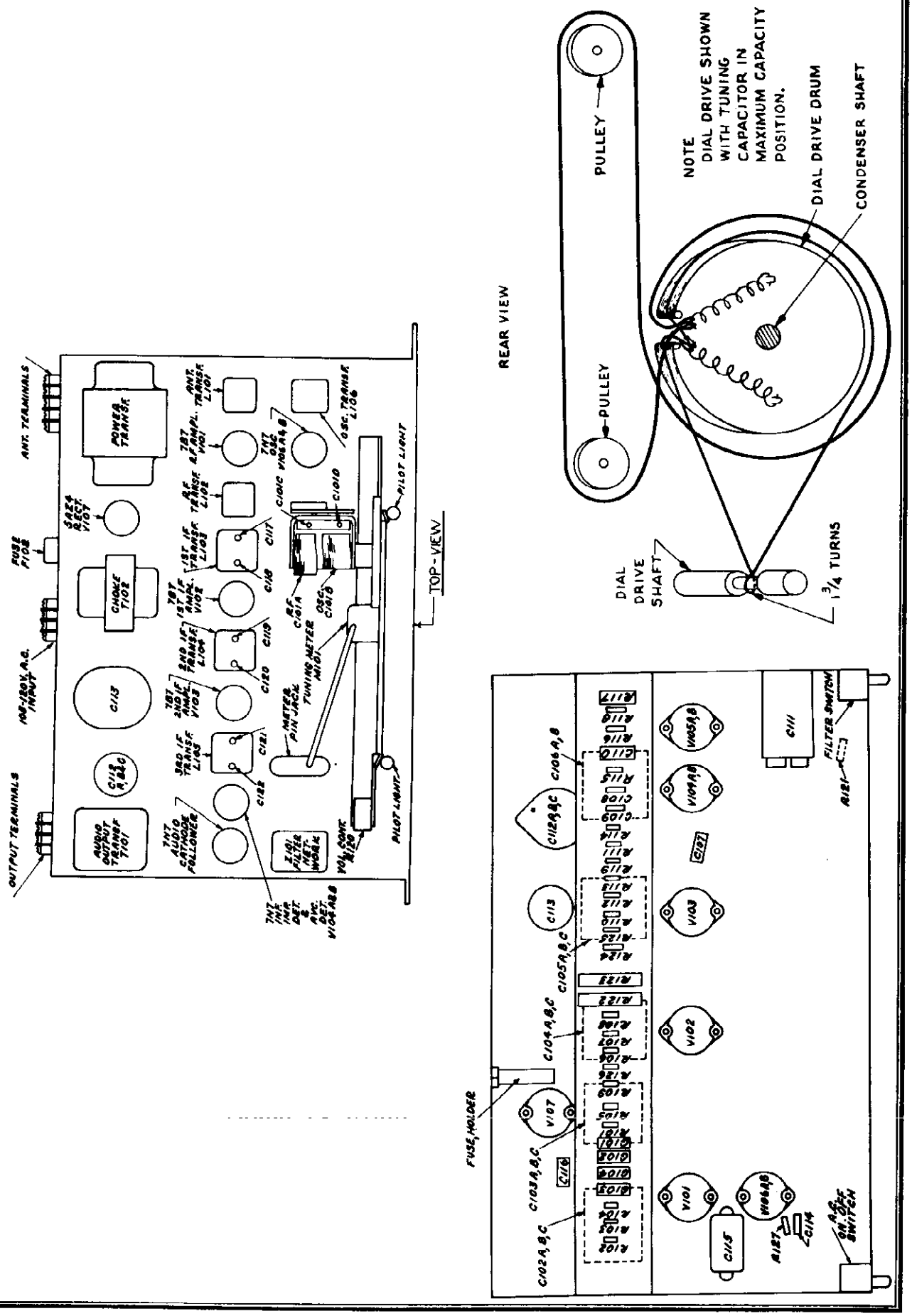

©John F. Rider

TUBE	PIN	VTVM	1,000/V	RESISTANCE
7B7	1	6.3 A.C.	6.3 A.C.	less than 0.1 ohm
R.F. ampl.	2	280	280	40K
	3	80	75	30K
	4	1	1	150 ohm
	5	GND.	GND.	GND.
	6	-2.5	-0.3	600K
	7	1	1	150 ohm
	8	GND.	GND.	GND.
7B7	1	6.3 A.C.	6.3 A.C.	less than 0.1 ohm
OSC.	2	0	0	0.5 ohm
	3	80	75	25K
	4	-10	-2	47K
	5	-10	-2	47K
	6	80	75	25K
	7	0	0	0.5 ohm
	8	GND.	GND.	GND.
conv.bridge modulator				
G101	cathode	0.3	0.3	60 ohm Rx10 scale
	plate	0	0	0.5 ohm Rx1 scale
G102	cathode	GND.	GND.	GND.
	plate	0.3	0.3	60 ohm Rx10 scale
G103	cathode	0.3	0.3	60 ohm Rx10 scale
	plate	0	0	0.5 ohm Rx1 scale
G104	cathode	0	0	GND.
	plate	0.3	0.3	60 ohm Rx10 scale
7B7	1	6.3 A.C.	6.3 A.C.	less than 0.1 ohm
1st IF ampl.	2	280	280	40K
	3	80	75	30K
	4	1	1	150 ohm
	5	GND.	GND.	GND.
	6	-2	-0.4	600K
	7	1	1	150 ohm
	8	GND.	GND.	GND.
7B7	1	6.3 A.C.	6.3 A.C.	less than 0.1 ohm
2nd IF ampl.	2	280	280	40K
	3	80	75	30K
	4	1	1	150 ohm
	5	GND.	GND.	GND.
	6	-1.5	0	600K
	7	1	1	150 ohm
	8	GND.	GND.	GND.
7N7	1	6.3 A.C.	6.3 A.C.	less than 0.1 ohm
infinite	2	18	18	100K
impedance	3	280	280	50K
detector.	4	0	0	24 ohm
AVC	5	-4	-0.5	900K
detector	6	-4	-0.5	900K
	7	GND.	GND.	GND.
	8	GND.	GND.	GND.
7N7	1	6.3 A.C.	6.3 A.C.	less than 0.1 ohm
audio cathode	2	120	120	34K
follower	3	290	290	40K
	4	45	0	2 megs.
	5	45	0	2 megs.
	6	290	290	40K
	7	120	120	34K
	8	GND.	GND.	GND.
5A24	1	110 V.A.C. tie point	110 V.A.C. tie point	infinite
rectifier	2	5 V.A.C. 300	5 V.A.C. 300	40K
	3	290 tie point	290 tie point	40K
	4	350 A.C.	350 A.C.	100 ohm
	5			
	6	350 A.C.	350 A.C.	100 ohm
	7	GND.	GND.	GND.
	8	5 V.A.C. 300	5 V.A.C. 300	40K

ALL VOLTAGE AND RESISTANCE MEASUREMENTS MADE WITH RESPECT TO CHASSIS GROUND.
AND WITH A LINE VOLTAGE OF 116 V.A.C.

Alignment Procedure - I.F. Alignment

It is recommended that Visual Alignment be used for the I.F.

The bandpass width of the 456-KC I.F.'s is 20 KC, so a 40-KC swept signal with a center frequency of 456-KC is used to align the I.F.'s.

Connect the Oscilloscope to pin 2 of V104A (7N7) and connect the signal generator to pin 6 of V103 (7B7). Keep the output of the signal generator as low as possible.

If the output impedance of the signal generator is high, it will be necessary to detune the secondary of L104 with C120.

Align L105 with C122 and C121, for a flat top to the I-F response curve, while trying to obtain maximum output.

Move the signal generator to pin 6 of V102 (7B7) and align L104 with C120 and C119 using the same procedure as used for L105.

Move the signal generator to pin 6 of V101 (7B7) and align L103 with C118 and C117 using the same procedure as used in aligning L105 and L104.

The I.F. response curve should be similar to the curve shown below.



Oscillator Alignment

The tuning meter on the front panel of the tuner may be used as an indicator when aligning the R-F and Oscillator section.

Connect the signal generator to the antenna terminal through a 0.01 MF capacitor.

Set the signal generator and tuner to 1300 KC. Output of the signal generator should be such that a reading of approximately 6 on the tuning meter is obtained.

Adjust C101D for maximum output.

Set the signal generator and tuner to 700KC and adjust L106 for maximum output. This procedure should be repeated for accurate calibration.

R-F Alignment

Set the signal generator and tuner to 1300 KC and adjust C101C for maximum output.

Set the signal generator and receiver to 700 KC and adjust L101 for maximum output.

When the tuner is tuned across the signal a succession of 2 peaks should appear on the tuning meter. Both peaks should have equal amplitude, and the dip in the middle should be equal to approximately 1 division on the meter scale. The maximum reading on the tuning meter should be at least 5 when adjusting C101C and L101 for this indication.

This adjustment may have to be repeated before the R-F alignment is satisfactory.

If there are strong stations at approximately 700 KC and 1300 KC, these may be used instead of the signal generator.

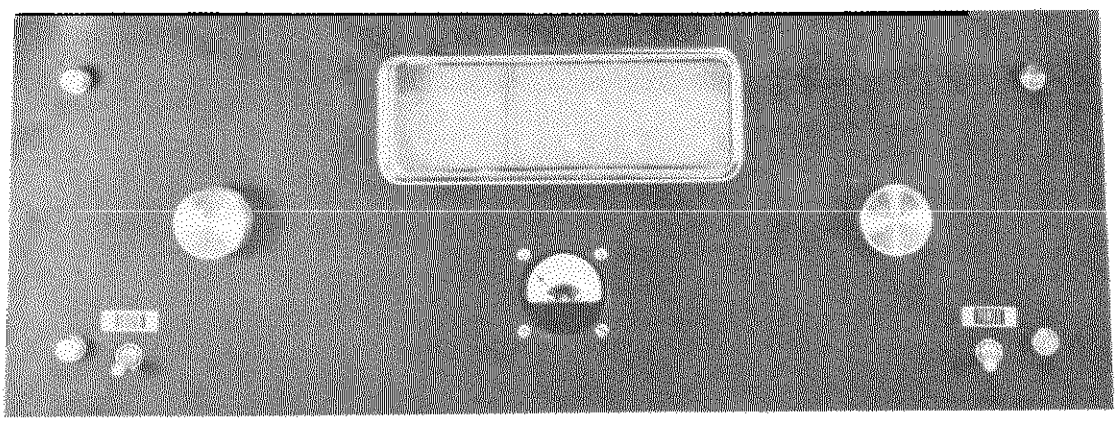

LEAR, INC.

MODELS 861-PC, 1281-PC

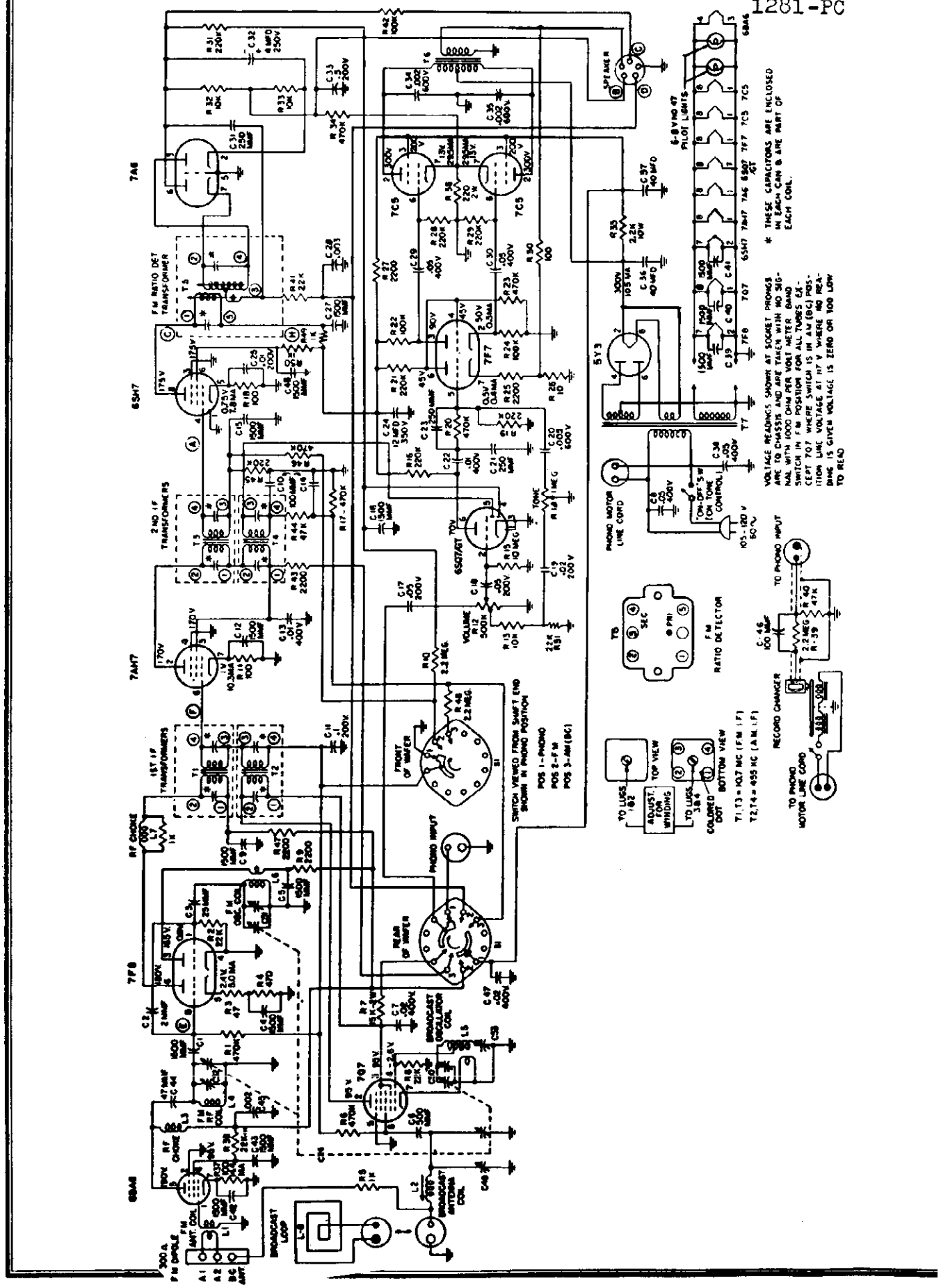

CLARI-SKEMATIX
Registered Trademark

MODEL 1281

LEAR, INC.

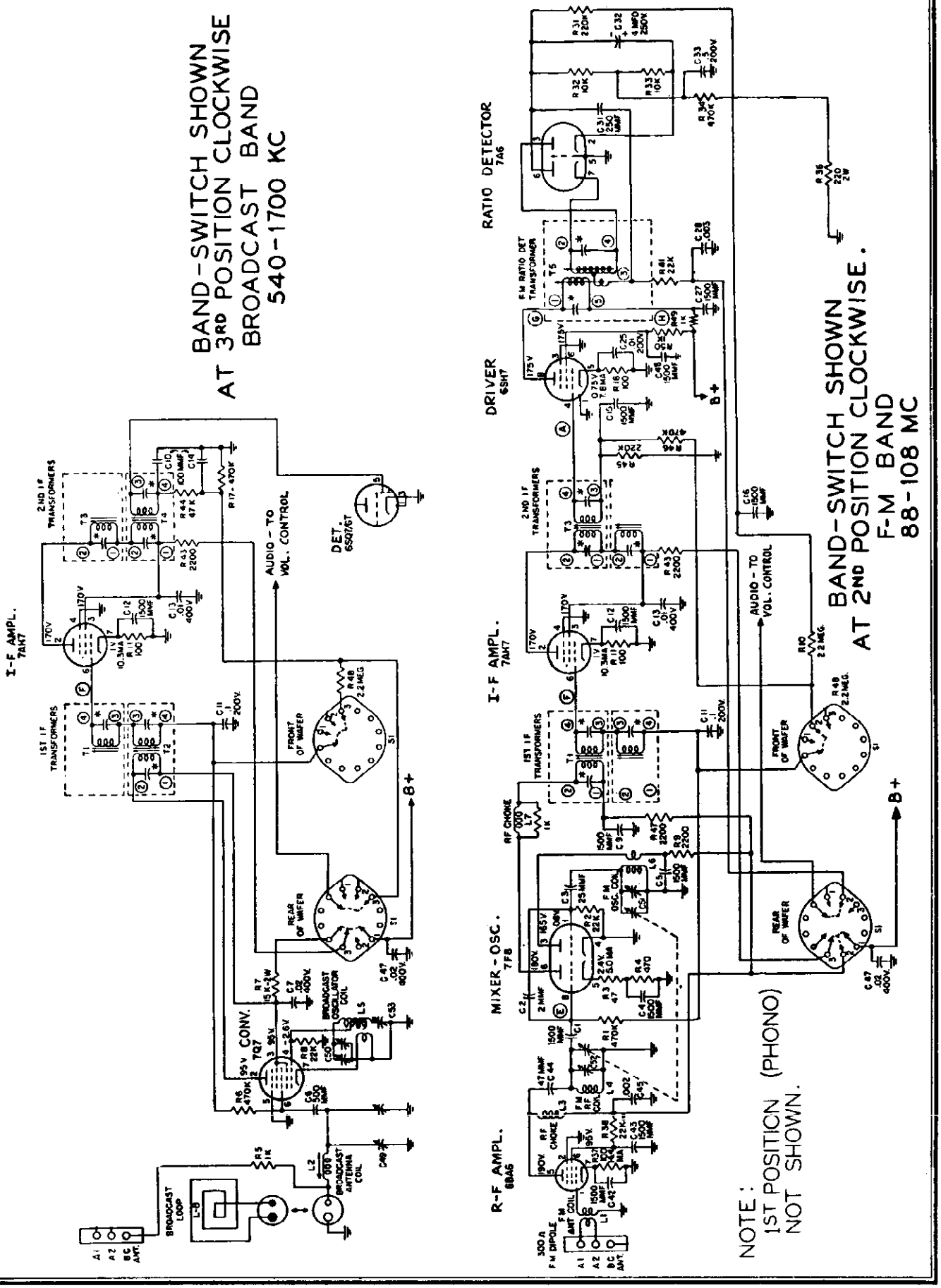

© John F. Rider

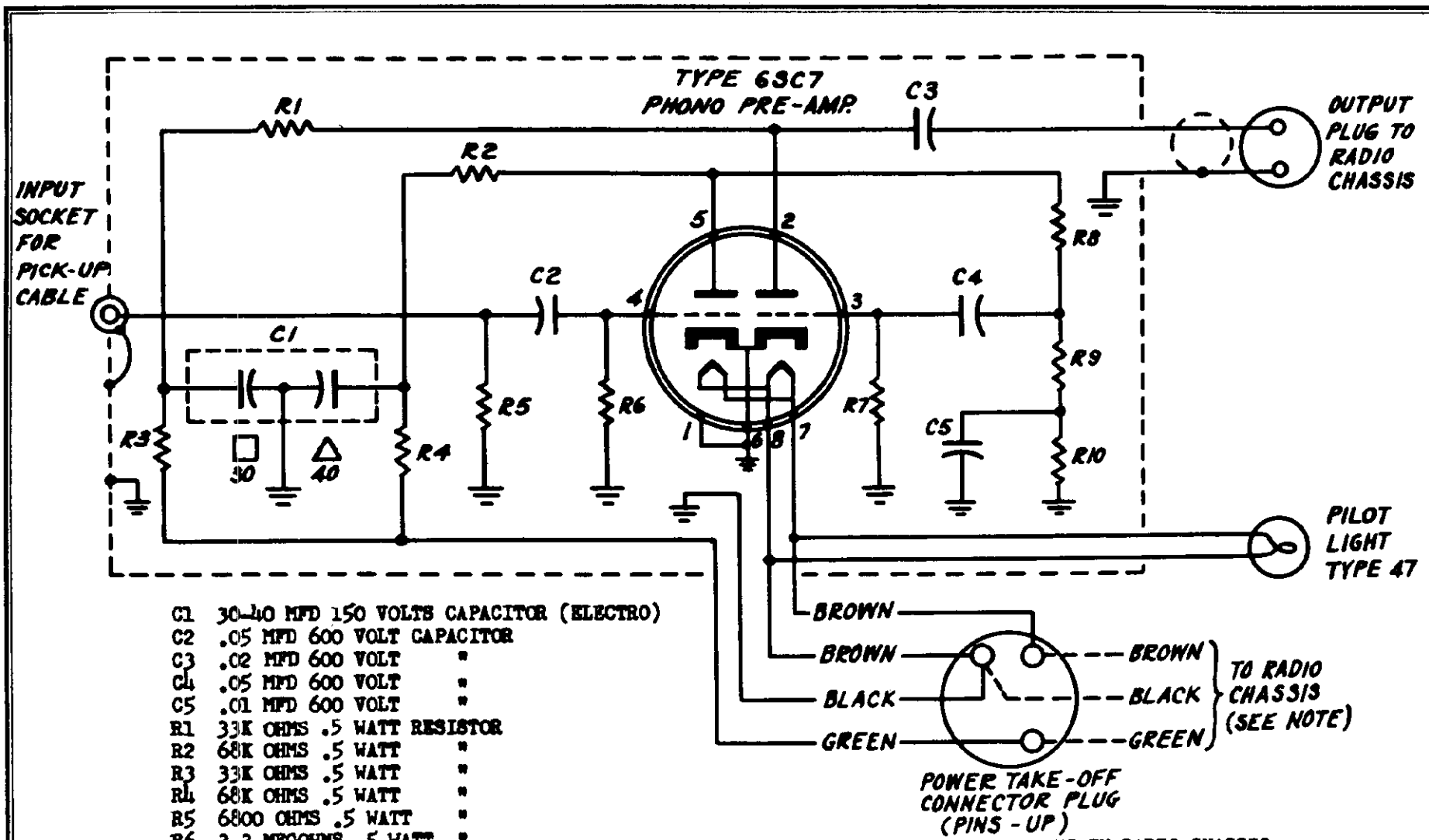

C1 30-40 MFD 150 VOLTS CAPACITOR (ELECTRO)
C2 .05 MFD 600 VOLT CAPACITOR
C3 .02 MFD 600 VOLT "
C4 .05 MFD 600 VOLT "
C5 .01 MFD 600 VOLT "
R1 33K OHMS .5 WATT RESISTOR
R2 68K OHMS .5 WATT "
R3 33K OHMS .5 WATT "
R4 68K OHMS .5 WATT "
R5 6800 OHMS .5 WATT "
R6 3.3 MEGOHMS .5 WATT "
R7 3.3 MEGOHMS .5 WATT "
R8 200K OHMS .5 WATT "
R9 27K OHMS .5 WATT "
R10 180K OHMS .5 WATT "

NOTE: POWER TAKE-OFF CONNECTIONS IN RADIO CHASSIS ARE AS FOLLOWS:

BROWN WIRE-TERMINAL NO. 8 OF TYPE 7C5 TUBE
BLACK WIRE - RADIO CHASSIS GROUND
GREEN WIRE - UNGROUNDED TERMINAL OF FILTER CAPACITOR C37 (SEE RADIO CHASSIS SCHEMATIC DIAGRAM)

MODELS 861-PC, 1281-PC

LEAR, INC.

ALIGNMENT PROCEDURE FOR A.M.:

Equipment Required:

a) Broadcast Band Signal Generator.
b) Output Meter.

1. Set band switch to AM. Advance volume control to full volume setting.

2. Connect output meter across voice coil.

3. Connect the Signal Generator across the broadcast band antenna section of the variable condenser. The "high" side of the Generator should connect to the stator section and the "ground" side to the frame or chassis. Adjust the Signal Generator to 455 kc and with the receiver switched on, adjust the first and second I.F. transformers for peak output as shown on the output meter. The signal injected into the receiver should be as small in magnitude as possible, consistent with a useful deflection on the output meter.

4. Connect the "high" side of the Generator to the antenna terminal with a 200 mmf condenser inserted in series. Connect the "ground" side of the Generator to the chassis. Tune receiver to 60 on the dial, adjust Signal Generator to 600 kc. Adjust the BC padder and the BC antenna coil for maximum deflection on the output meter. Use a weak signal.

5. Tune receiver to 160 on the dial. Adjust Signal Generator to 1600 kc. Adjust BC oscillator and BC antenna trimmers for maximum output.

6. Repeat operations 4 and 5.

ALIGNMENT PROCEDURE FOR F.M.:

Note: Points A. B. C. D. E. F. G. and H are noted on circuit diagram.

Points B, C, and D have been brought out to the unused contacts of the speaker socket at the rear of the chassis.

Equipment Required:

a) High frequency Signal Generator with 88-108 Mc tuning range.
b) Signal Generator capable of delivering .1 V at 10.7 mc.
c) Audio output meter.
d) D.C. vacuum tube voltmeter with zero center scale.

a. Ratio Detector Alignment:

1. Connect V.T.V.M. across points "B" and "C" (A.V.C. Voltage).

2. Feed 10.7 mc unmodulated R.F. signal into 6SH7 grid (point A) through .01 μfd. condenser. This signal should be .1 volt.

3. Adjust primary of Ratio Detector (T-5) for maximum voltage indication on V.T.V.M.

4. Connect zero centered V.T.V.M. across points "B" and "D".

5. Adjust secondary of Ratio Detector (T-5) for zero indication.

6. Tune 10.7 mc Signal Generator higher in frequency (about 200 kc) until maximum voltage reading is obtained on V.T.V.M.; note this voltage, then tune signal generator lower in frequency until maximum voltage of the opposite polarity is obtained. Note this voltage, then if necessary re-adjust primary of the Det. (T-5) until the detector voltages are about equal on either the high or low side of 10.7 mc.

b. 10.7 I.F. Alignment:

1. Shunt a 1,000-ohm carbon resistor across the primary of the detector (T-5) (Points G and H).

2. Connect output meter across speaker voice coil.

3. Volume and tone controls at maximum clockwise position.

4. Connect 10.7 mc (modulated 30% signal generator through .01 μfd. condenser across point "F" and ground.

5. Adjust secondary, then primary of (T-3) for maximum audio output. (Reduce input signal to maintain output at .5-watt level.)

6. Connect 10.7 mc 30% modulated signal generator across point "E" and ground.

7. Adjust secondary, then primary of (T-1) for maximum audio output. (Reduce input signal to maintain output at .5-watt level.)

8. Remove 1000-ohm shunting resistor from across primary of (T-5).

c. Oscillator and R.F. Alignment:

1. Connect V.T.V.M. across "B" and "C" (A.V.C. voltage).

2. Connect 108 mc signal generator to FM antenna terminals. If generator impedance is low, put one 150-ohm carbon resistor in series with each of the generator leads. Tune receiver dial to 108 mc.

3. Adjust FM oscillator trimmer (C-51) for maximum V.T.V.M. reading.

4. Adjust FM R.F. trimmer (C-52) for maximum V.T.V.M. reading. During alignment reduce input signal to maintain A.V.C. voltage at 2 V.

5. Repeat steps 3 and 4.

6. Feed a 90 mc signal into antenna terminals (as in C-2), tune receiver dial to signal.

7. Adjust spacing of FM R.F. coil (L-4) for maximum V.T.V.M. reading at 90 mc. During alignment reduce input signal to maintain A.V.C. voltage at 2 V.

8. Repeat steps 2 and 4 if necessary.

LEAR, INC.

MODELS 861-PC, 1281-PC

Tube Complement:

1 Type 6BA6—FM RF Amplifier.
1 Type 7F8—FM Mixer, oscillator.
1 Type 7AH7—1st IF Amplifier.
1 Type 6SH7—FM Detector Driver.
1 Type 7A6—FM Detector.
1 Type 6SQ7/GT—AM Det., A.V.C. and 1st Audio Ampplifier.
1 Type 7F7—2nd Audio, Phase Inverter.
2 Type 7C5—Push-pull Power Amplifiers.
1 Type 5Y3—Rectifier.
1 Type 7Q7—AM Mixer Oscillator.

A.M. — 540 Kc. to 1700 Kc.
F. M. — 88 Mc. to 108 Mc.

Power:

This receiver operates on 105-125 volts, 60 cycle, AC. Do not plug this radio receiver into a direct current socket. Power consumption is 80 watts.

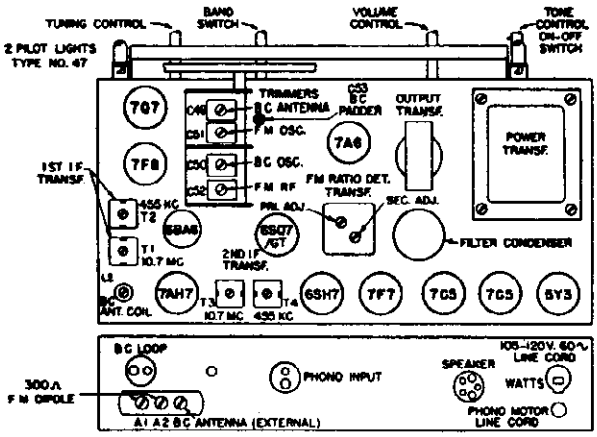

Figure 1. Tube and Trimmer Locations.

PARTS LIST:

C 1—1,500 mmfd., ± 300 mmfd.
C 2—2 mmfd., 20%
C 3—25 mmfd., 10%
C 4—1,500 mmfd., ±300 mmfd.
C 5—1,500 mmfd., ±300 mmfd.
C 6—500 mmfd., 20%
C 7—.02 mfd., 400 V.
C 8—.05 mfd., 400 V.
C 9—1,500 mmfd., ±300 mmfd.
C10—100 mmfd., 20%
C11—.1 mfd., 200 V.
C12—1,500 mmfd., ±300 mmfd.
C13—.01 mfd., 400 V.
C14—100 mmfd., 20%
C15—1,500 mmfd., ±300 mmfd.
C16—1,500 mmfd., ±300 mmfd.
C17—.05 mfd., 200 V.
C18—.05 mfd., 200 V.
C19—.02 mfd., 200 V.
C20—.005 mfd., 600 V.
C21—250 mmfd., 20%
C22—.01 mfd., 400 V.
C23—250 mmfd., 20%
C24—12 mfd., 350 V.
C25—.01 mfd., 200 V.
C26—Var. cond. (AM-FM) *C-6.012
C27—1,500 mmfd., ±300 mmfd.
C28—.003 mfd., 20%
C29—.05 mfd., 400 V.
C30—.05 mfd., 400 V.
C31—250 mmfd., 20%
C32—4 mfd., 250 V.
C33—.5 mfd., 200 V.
C34—.002 mfd., 600 V.
C35—.002 mfd., 600 V.
C36 & C37—40 mfd. x 40 mfd., electrolytic, 400 V.
C38—.05 mfd., 400 V.
C39—1,500 mmfd., ±300 mmfd.
C40—1,500 mmfd., ±300 mmfd.
C41—1,500 mmfd., ±300 mmfd.
C42—1,500 mmfd., ±300 mmfd.
C43—1,500 mmfd., ±300 mmfd.
C44—47 mmfd., 10%
C45—.002 mfd., 400 V.
C46—100 mmfd., 20%
C47—.02 mfd., 400 V.
C48—1,500 mmfd., ±300 mmfd.
C49—Trimmer, compression, 3-35 mmfd.
C50—Trimmer, compression, 3-35 mmfd.
C51—Trimmer, ceramic, 1.5-7 mmfd.
C52—Trimmer, compression, 1.6-18 mmfd.
C53—Padder condenser, 275-1,000 mmfd.
R 1—470KΩ, ¼W., 20%
R 2—22KΩ, ¼W., 20%
R 3—47Ω, ¼W., 20%
R 4—470Ω, ¼W., 20%
R 5—1KΩ, ¼W., 20%
R 6—470KΩ, ¼W., 20%
R 7—15KΩ, 2W., 20%
R 8—22KΩ, ¼W., 20%
R 9—2,200Ω, ¼W., 20%
R10—2.2 Meg.Ω, ¼W., 20%
R11—100Ω, ¼W., 20%
R12—.5 Meg.Ω Volume Control (Audio Taper) tapped at 50KΩ *RA-9.069
R13—10KΩ, ¼W., 20%
R14—1 Meg.Ω Tone Control, with power switch *RA-9.070
R15—10 Meg.Ω, ¼W., 20%
R16—220KΩ, ¼W., 20%
R17—470KΩ, ¼W., 20%
R18—100Ω, ¼W., 20%
R19—220KΩ, ¼W., 20%
R20—470KΩ, ¼W., 20%
R21—220KΩ, ¼W., 20%
R22—100KΩ, ¼W., 20%
R23—470KΩ, ¼W., 20%
R24—100KΩ, ¼W., 20%
R25—2,200Ω, ¼W., 20%
R26—10Ω, ¼W., 20%
R27—2,200Ω, ¼W., 20%
R28—220KΩ, ¼W., 20%
R29—220KΩ, ¼W., 20%
R30—100Ω, ¼W., 20%
R31—220KΩ, ¼W., 20%
R32—10KΩ, ¼W., 20%
R33—10KΩ, ¼W., 20%
R34—470KΩ, ¼W., 20%
R35—2,200Ω, 10W., wirewound, 10%
R36—220Ω, 2W., 20%
R37—100Ω, ¼W., 20%
R38—22KΩ, 1W., 20%
R39—2.2 Meg.Ω, ¼W., 20%
R40—47KΩ, ¼W., 20%
R41—22KΩ, ¼W., 20%
R42—100KΩ, ¼W., 20%
R43—2,200Ω, ¼W., 20%
R44—47KΩ, ¼W., 20%
R45—220KΩ, ¼W., 20%
R46—470KΩ, ¼W., 20%
R47—2,200Ω, ¼W., 20%
R48—2.2 Meg.Ω, ¼W., 20%
R49—1KΩ, ¼W., 20%
R50—1KΩ, ¼W., 20%
T 1—FM I.F. Trans., 10.7 Mc. *ZB-2.276
T 2—AM I.F. Trans., 455 Kc. *ZB-2.275
T 3—FM I.F. Trans., 10.7 Mc. *ZB-2.276
T 4—AM I.F. Trans., 455 Kc. *ZB-2.275
T 5—FM Ratio Detector Transformer, 10.7 Mc. *ZC-2.278
T 6—Output Trans. *ZB-15.019
T 7—Power Trans. *TA-18.053
S 1—Band Switch *SA-12.060
L 1—FM Antenna Coil *LA-2.241
L 2—Antenna Coil, Broadcast *LA-2.273
L 3—R.F. Plate Choke *LA-2.279
L 4—R.F. Coil, FM *LA-2.243
L 5—Oscillator Coil, Broadcast *LA-2.221
L 6—Oscillator Coil, FM *LA-2.222
L 7—R.F. Choke, Conv. Plate *LA-2.242
L 8—Loop, Broadcast *LC-5.018
Antenna, FM, Folded Dipole (300Ω) *LA-5.010
Pilot Lamp, No. 47, 6-8 V.

Part No. NG-500 Rev. 1 1-12-47

* Mfg. Part No.

©John F Rider

DIAL CORD REPLACEMENT

A single cable transmits motion from the dial tuning knob to rotate the condenser gang and to move the dial pointer. A 30-inch length of string is required to restring this assembly. After the broken cable is removed, turn pulley "A" (see Figure 1) until the condenser gang plates are completely meshed. In this condition, the small hole in the rim of pulley "A" should be within the limits of 15 to 90 degrees to the left of being vertical as shown in Figure 1. If this hole is at a different position from the condition specified, loosen the two screws in the coupling to the condenser gang and turn pulley "A" while holding the condenser plates meshed. Tighten the two set screws after the adjustment has been made.

Lace one end of the new length of cable through the hole in pulley "A" and temporarily fasten it to the hook to which the spring is normally fastened. Make a complete turn around pulley "A" in a counter-clockwise direction, lace it around pulley "B," then across the rear of the dial scale and over the top of the front groove in pulley "C." Proceed down around the tuning shaft for 2½ turns in a clockwise direction and wrapping the cable over pulley "D" from front to back. Continue up over the rear groove of pulley "C" in a clockwise direction for one turn and extend the cable to the left so that the loose end is to the rear of the section of cable that it crosses. The loose end of the cable should now be wound over the top of pulley "A" so that it is nearest the dial frame and into the hole in the pulley groove. Remove the other end of the cable from the hook and while holding both ends taut, insert one end of the spring on the hook in pulley "A." Lace the two free ends of the cable through the opposite end of the spring and pull the cable until the spring is stretched to within ½-inch of the rim on the pulley. Tie a double knot so that the knot is around one coil of the spring, while maintaining tension on the cable.

Turn the tuning control shaft until the condenser gang is completely meshed and slide the dial pointer on its track until it is in line with the last calibration mark at the low frequency end of the dial. Press the crimping lugs on the dial pointer together over the cable. After checking to see that the condenser gang is still completely meshed and the dial pointer is in the position specified previously, apply a few drops of cement to the cable where it is crimped by the pointer. This completes the operation.

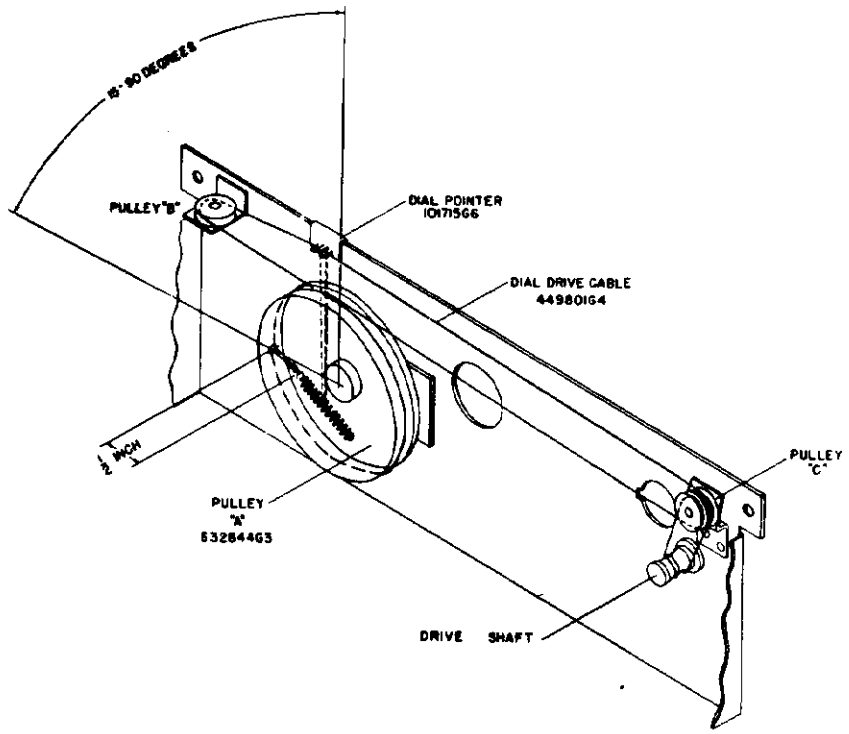

6AG5
R-F

6S87Y
CONVERTER

6SG7
1ST I-F

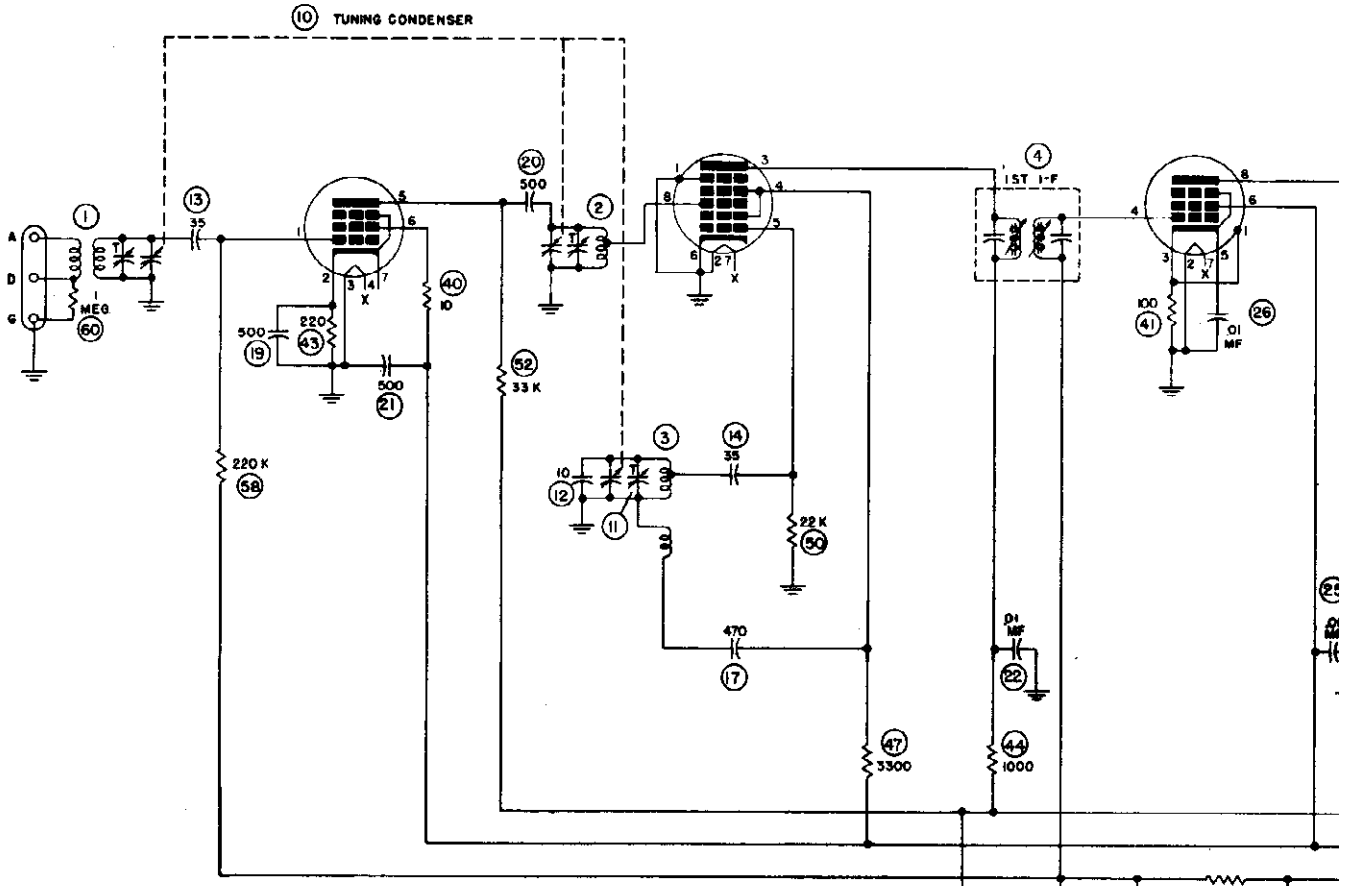

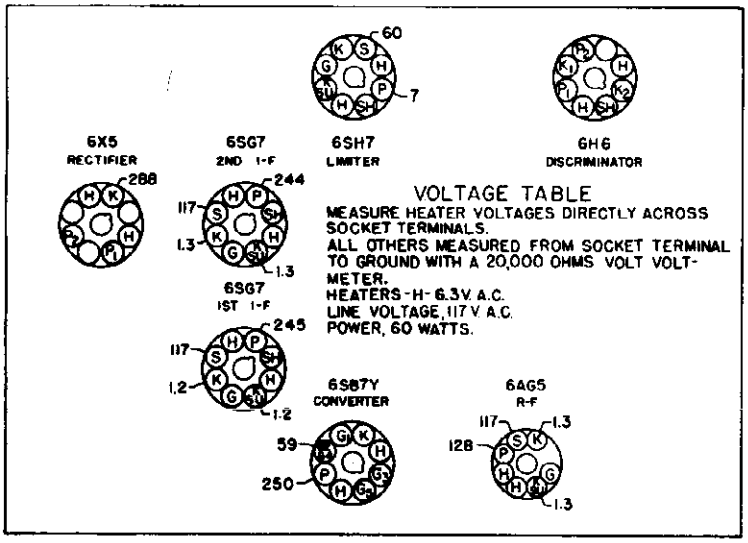

I-F 10.7 MC.
ALL ELECTRICAL VALUES SHOWN MICROMICROFARADS OR OHMS UNLESS OTHERWISE SPECIFIED.

AGNAVOX CO.

MODEL CR-206

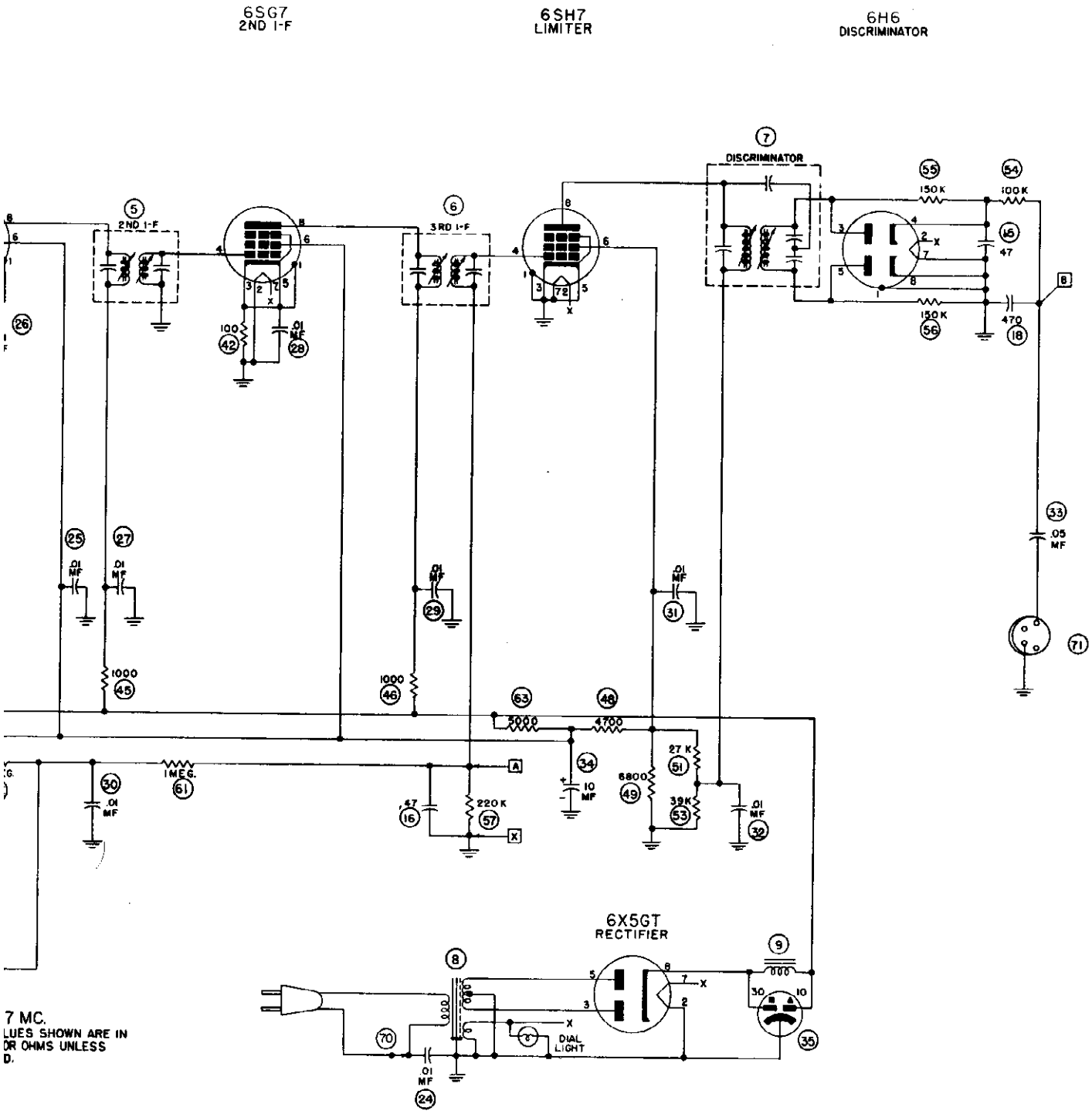

ALIGNMENT PROCEDURE

The alignment of this F-M tuner is made in three major steps namely, I-F alignment, Discriminator alignment and R-F alignment. An F-M generator is not required in aligning this F-M tuner. Any *accurately calibrated* signal generator covering a range in the vicinity of 10.7 megacycles may be used in aligning the I-F and the Discriminator stages. For R-F alignment, the generator must cover the tuning range of the tuner or approximately 87 to 110 megacycles. If such a signal generator is not available, this alignment may be made by using an F-M radio station as a frequency standard.

I-F ALIGNMENT

1. Connect the "high" side of the signal generator to Grid 3 (pin #8) of the 6SB7Y converter tube and the "low" side of the generator to the radio chassis.

2. If a vacuum tube voltmeter is available, connect it across the 220,000 ohm resistor in the grid circuit of the 6SH7 limiter tube at points designated "A" and "X" on the schematic diagram (Figure 2) to measure the limiter grid bias voltage. Set the signal generator to exactly 10.7 megacycles and adjust the third, the second and the first i-f transformer trimmers in that order for maximum reading on the meter. A reading of 2 to 8 volts should be considered normal.

3. If a vacuum tube voltmeter is not available, connect a 0-50 or 0-200 microammeter in series with the "ground" end of the 220,000 ohm resistor in the grid circuit of the 6SH7 limiter tube at point "X" on the schematic diagram. Set the signal generator to exactly 10.7 megacycles and adjust the third, the second and the first i-f transformer trimmers in that order for maximum meter readings. A normal reading will be in the range of 10 to 35 microamperes. At the completion of these adjustments, remove the microammeter and ground the 220,000 ohm resistor to the point where it was originally connected.

DISCRIMINATOR ALIGNMENT

The accurate alignment of the discriminator transformer cannot be overemphasized. Incorrect alignment will result in badly distorted reception. The following steps should be followed in the order given:

1. A DC vacuum tube voltmeter is connected to the output circuit by connecting it from ground to point "B" on the schematic diagram. This measures the detector output voltage. Adjust the signal generator frequency to exactly 10.775 megacycles and adjust both trimmers on the discriminator transformer for maximum reading. If the indicated voltage is less than 3 volts readjust the output of the generator until the meter indicates 3 volts or more. Now adjust the signal generator frequency to 10.7 megacycles and turn the trimmer screw on the top of the discriminator until the voltage is zero. *This is an extremely important adjustment.* Reset the generator frequency to 10.775 and record the meter reading.

2. Reverse the meter connections and set the signal generator frequency to 10.625 megacycles. The meter reading now obtained must be within 10% of the reading recorded in the previous operation—if it is not, the discriminator alignment was not done accurately and must be repeated.

3. The discriminator may also be aligned using a 0-50 or 0-200 microammeter if a vacuum tube voltmeter is not available. In this case, the detector output current is measured. Connect the microammeter to the same points specified in paragraph 1 and proceed in the manner outlined in paragraphs 1 and 2 of this section. In the operation described in paragraph 1, the meter reading should be at least 20 microamperes when the trimmers are peaked at 10.775 megacycles; if not, the generator should be adjusted until that value is obtained.

R-F ALIGNMENT

1. Check that the dial pointer is in line with the last mark at the low frequency end of the dial calibration when the condenser gang is fully meshed. If it is not, slide the pointer on its string to the correct position, and crimp the lugs (on the rear of the pointer) tightly around the string and apply a drop of cement to hold the pointer in adjustment.

2. Connect the vacuum tube voltmeter to points "A" and "X" on the schematic diagram or connect a 0-50 or 0-200 microammeter in series with the "ground" end of the 220,000 ohm resistor in the grid circuit of the 6SH7 limiter tube at point "X" on the schematic diagram.

3. An extremely accurate signal generator is a necessity in making the following adjustments and it should be connected to the antenna post through a 300 ohm resistor. If such a generator is not available, connect an F-M antenna to the antenna terminal (A) and use an F-M transmitter for a frequency standard. It is preferable that this station be located in the high frequency end of the band—102 to 108 megacycles.

4. Set the signal generator (if one is used) and the F-M tuner to exactly 108 megacycles—if an F-M station is used as a frequency standard accurately set the tuner to the frequency of the F-M station and adjust the oscillator trimmer for a maximum reading on the meter. Then adjust the antenna trimmer and the r-f trimmer for a maximum meter indication. If too much signal is fed to the tuner, it might appear at several settings of the tuning dial and confuse the adjustment. When the adjustments are completed, the second harmonic of the oscillator frequency will be 10.7 megacycles lower than the signal frequency.

©John F. Rider

THE MAGNAVOX CO. MODEL CR-206

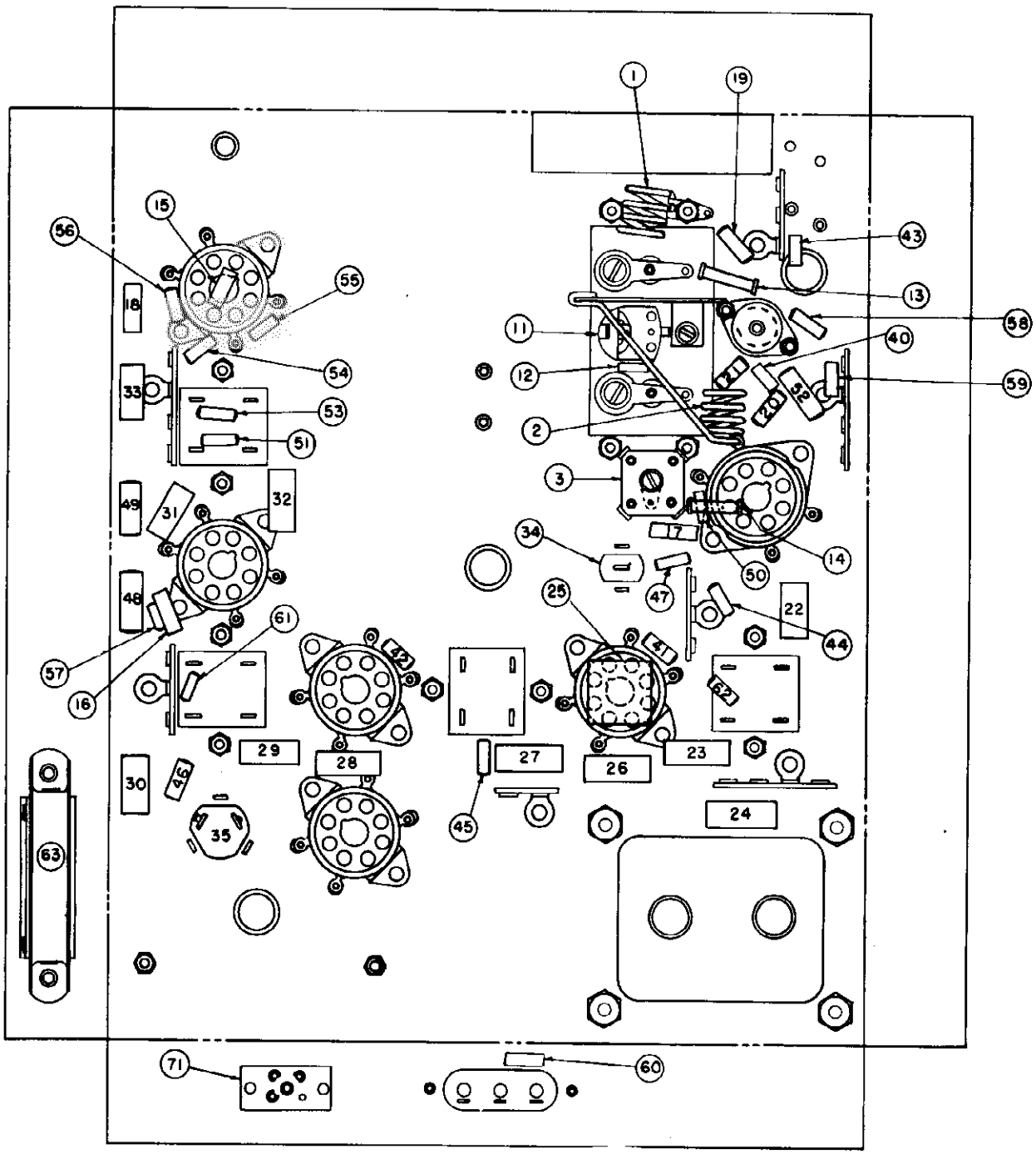

Special Service Information

The following information is provided for the service man who has a vacuum tube voltmeter or a similar measuring instrument available.

STAGE GAINS*

Antenna Post to R-F Grid through 300-ohm resistor at:
98 mc. 1.1

R-F to Converter Grid at:
98 mc. 13.8

R-F on Converter Grid to 1st I-F Grid at:
98 mc. 5.0

I-F on 1st I-F Grid to 2nd I-F Grid at:
10.7 mc. 35

2nd I-F Grid to Limiter Grid at:
10.7 mc. 33

OSCILLATOR GRID VOLTAGE

The DC voltage developed across Oscillator Grid resistor (37) at:
98 mc. **7.0**

*Variations of ± 20% are permissible. All readings made with sufficient signal to provide 15 millivolts output at 400 cycles with 22.5 kc. modulation.

MODEL CR-206 THE MAGNAVOX CO.

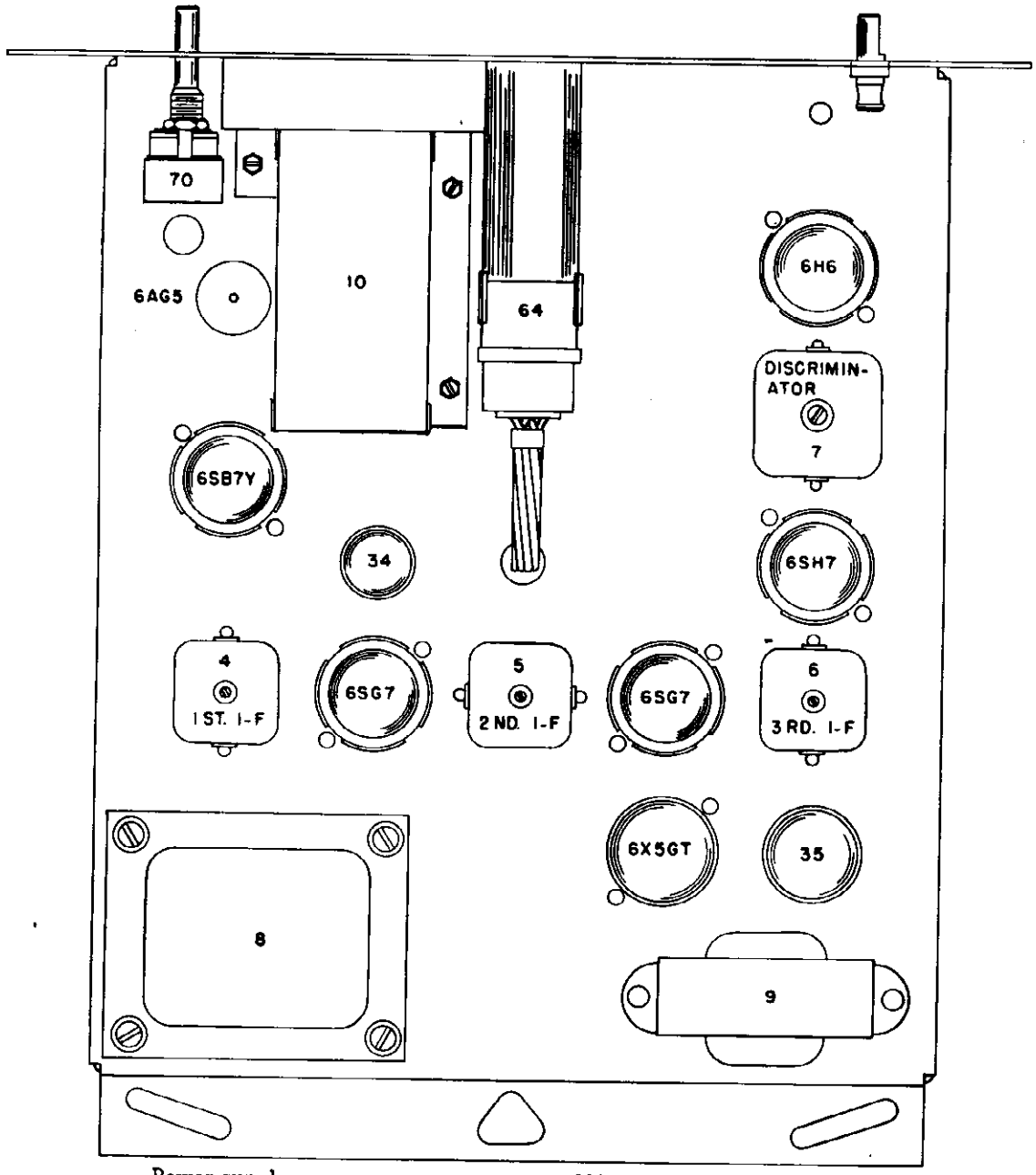

Power supply	117 volts 50/60 cycles AC
Power consumption	46 watts
Intermediate frequency	10.7 mc.
Tuning frequency range:	87.1–108.9 mc.
Tubes:	
R-F Amplifier	6AG5
Converter	6SB7Y
First I-F Amplifier	6SG7
Second I-F Amplifier	6SG7
Limiter	6SH7
Detector	6H6
Rectifier	6X5GT/G
Tuning Indicator	6U5
Dial Lamp	Mazda No. 51

©John F. Rider

THE MAGNAVOX CO. MODEL CR-206

REFERENCE NO.	DESCRIPTION	MAGNAVOX PART NO.
1	Coil assembly, antenna	360311G2
2	Coil assembly, r-f	360312G2
3	Coil assembly, oscillator	360263G2
4	Transformer, 1st i-f	360304G1
5	Transformer, 2nd i-f	360304G1
6	Transformer, 3rd i-f	360304G1
7	Transformer, discriminator	360305G1
8	Transformer, power	300030G1
9	Choke, filter	350032G1
10	Capacitor, variable, three-gang tuning	260059G1
11	Capacitor, trimmer	260067G1
12	Capacitor, ceramic, 10 mmf	250088G8
13	Capacitor, ceramic, 35 mmf	250088G26
14	Capacitor, ceramic, 35 mmf	250088G26
15	Capacitor, mica, 47 mmf	250159G96
16	Capacitor, mica, 47 mmf	250159G96
17	Capacitor, mica, 470 mmf	250159G102
18	Capacitor, mica, 470 mmf, ± 10%	250159G90
19	Capacitor, ceramic, 500 mmf	250088G31
20	Capacitor, ceramic, 500 mmf	250088G31
21	Capacitor, ceramic, 500 mmf	250088G31
22	Capacitor, paper, .01 mfd, 600 V	250129G2
23	Capacitor, paper, .01 mfd, 600 V	250129G2
24	Capacitor, paper, .01 mfd, 600 V	250129G2
25	Capacitor, paper, .01 mfd, 600 V	250129G2
26	Capacitor, paper, .01 mfd, 600 V	250129G2
27	Capacitor, paper, .01 mfd, 600 V	250129G2
28	Capacitor, paper, .01 mfd, 600 V	250129G2
29	Capacitor, paper, .01 mfd, 600 V	250129G2
30	Capacitor, paper, .01 mfd, 600 V	250129G2
31	Capacitor, paper, .01 mfd, 600 V	250129G2
32	Capacitor, paper, .01 mfd, 600 V	250129G2
33	Capacitor, paper, .05 mfd, 600 V	250129G5
34	Capacitor, electrolytic, 10 mfd, 450 V	270026G3
35	Capacitor, electrolytic, 30-10 mfd, 475 V	270023G2
40	Resistor, composition, 10 ohms, ½ W	230084G1
41	Resistor, composition, 100 ohms, ½ W	230084G7
42	Resistor, composition, 100 ohms, ½ W	230084G7
43	Resistor, composition, 220 ohms, ½ W	230084G9
44	Resistor, composition, 1000 ohms, ½ W	230084G13
45	Resistor, composition, 1000 ohms, ½ W	230084G13
46	Resistor, composition, 1000 ohms, ½ W	230084G13
47	Resistor, composition, 3300 ohms, ½ W	230084G16
48	Resistor, composition, 4700 ohms, ± 5% 2 W	230061G175
49	Resistor, composition, 6800 ohms, ± 5% 2 W	230061G179
50	Resistor, composition, 22,000 ohms, ½ W	230084G21
51	Resistor, composition, 27,000 ohms, ± 10% ½ W	230084G79
52	Resistor, composition, 33,000 ohms, ± 10% 1 W	230085G80
53	Resistor, composition, 39,000 ohms, ± 10% ½ W	230084G81
54	Resistor, composition, 100,000 ohms, ± 10% ½ W	230084G86
55	Resistor, composition, 150,000 ohms, ± 10% ½ W	230084G88
56	Resistor, composition, 150,000 ohms, ± 10% ½ W	230084G88
57	Resistor, composition, 220,000 ohms, ½ W	230084G27
58	Resistor, composition, 220,000 ohms, ½ W	230084G27
59	Resistor, composition, 470,000 ohms, ½ W	230084G29
60	Resistor, composition, 1 megohm, ½ W	230084G31
61	Resistor, composition, 1 megohm, ½ W	230084G31
62	Resistor, composition, 1.5 megohm, ½ W	230084G32
63	Resistor, wire wound, 5000 ohms, 5 W	240035G4
64	Resistor, composition, 470,000 ohms, ½ W. (in tuning eye socket)	230084G29
70	Switch, rotary power	160174G1
71	Socket, output	180060G1

MODELS CR-209A,
CR-209B, CR-209C,
CR-209D, CR-209E

THE MAGNAVOX CO.

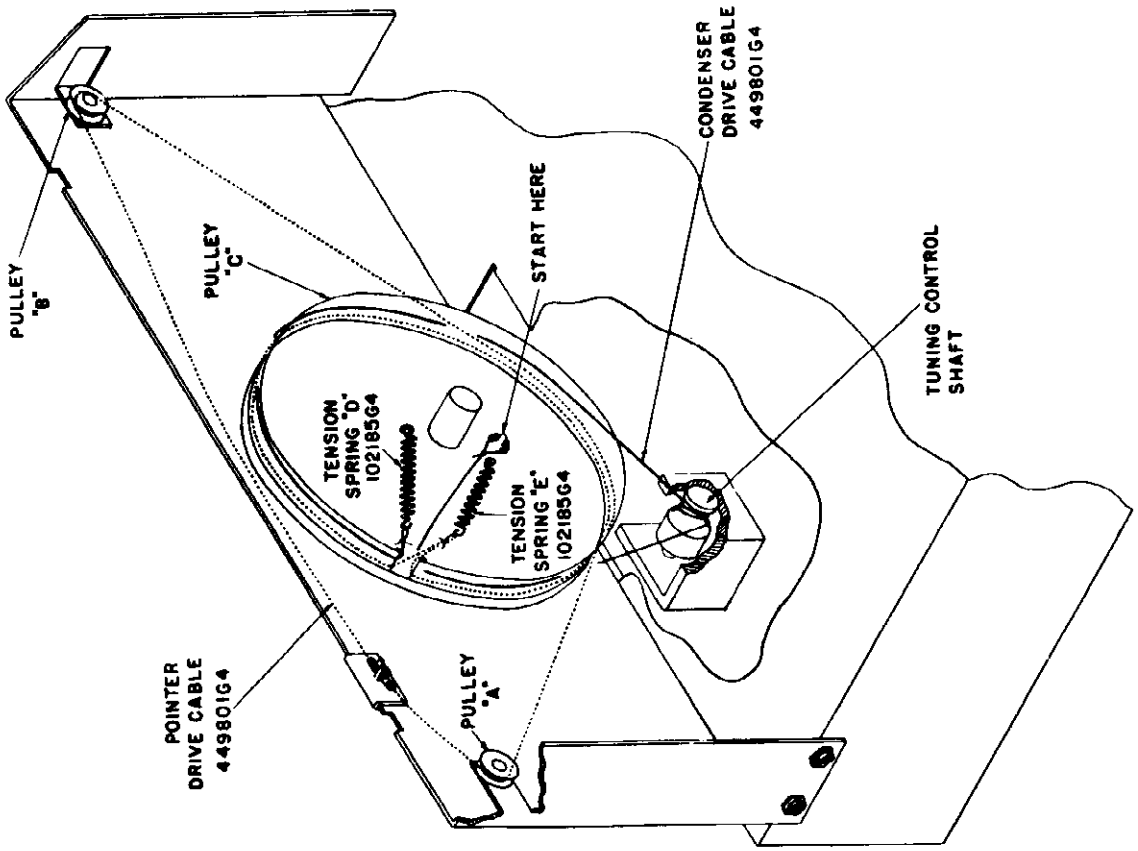

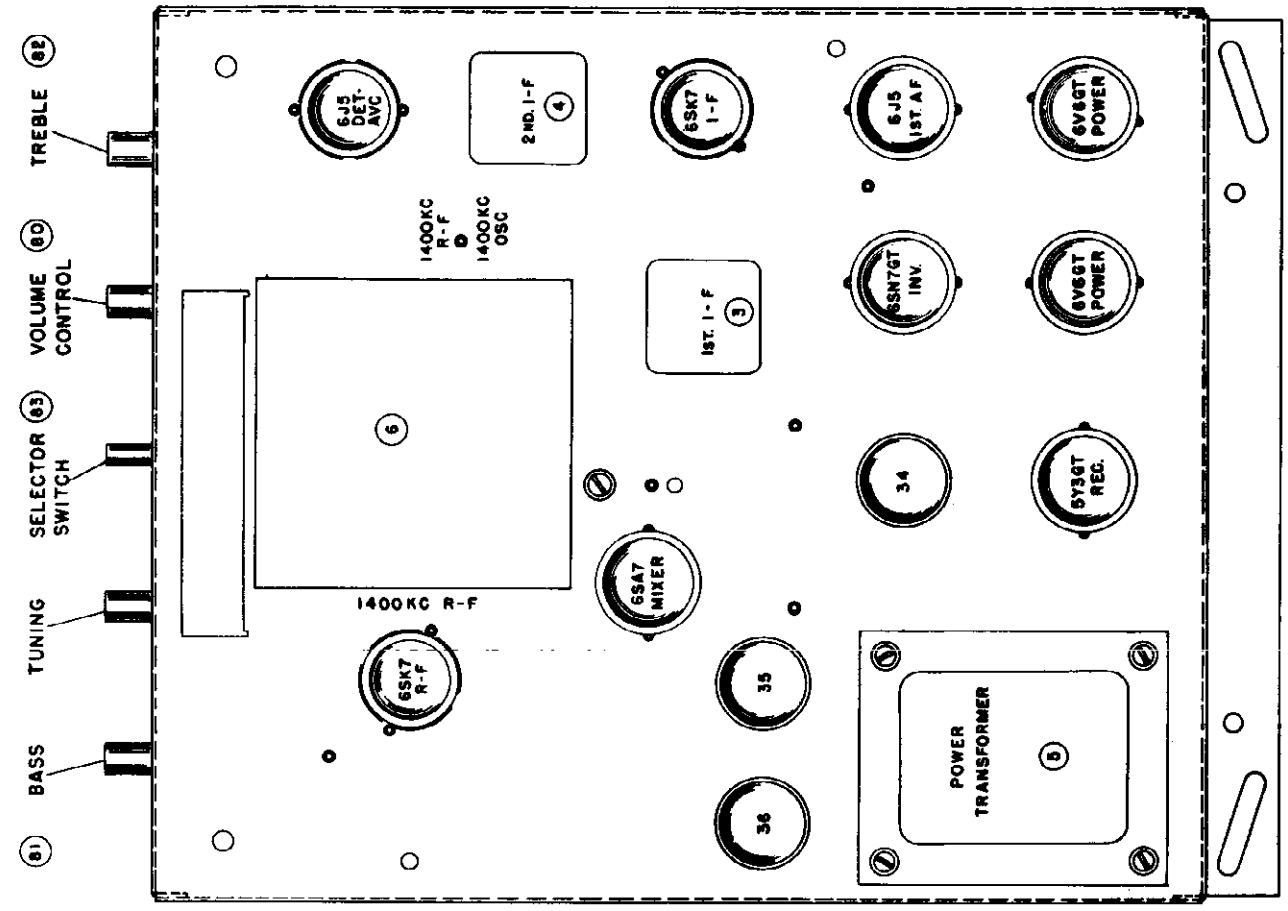

THE MAGNAVOX CO.

MODELS CR-209A, CR-209B, CR-209C, CR-209D, CR-209E

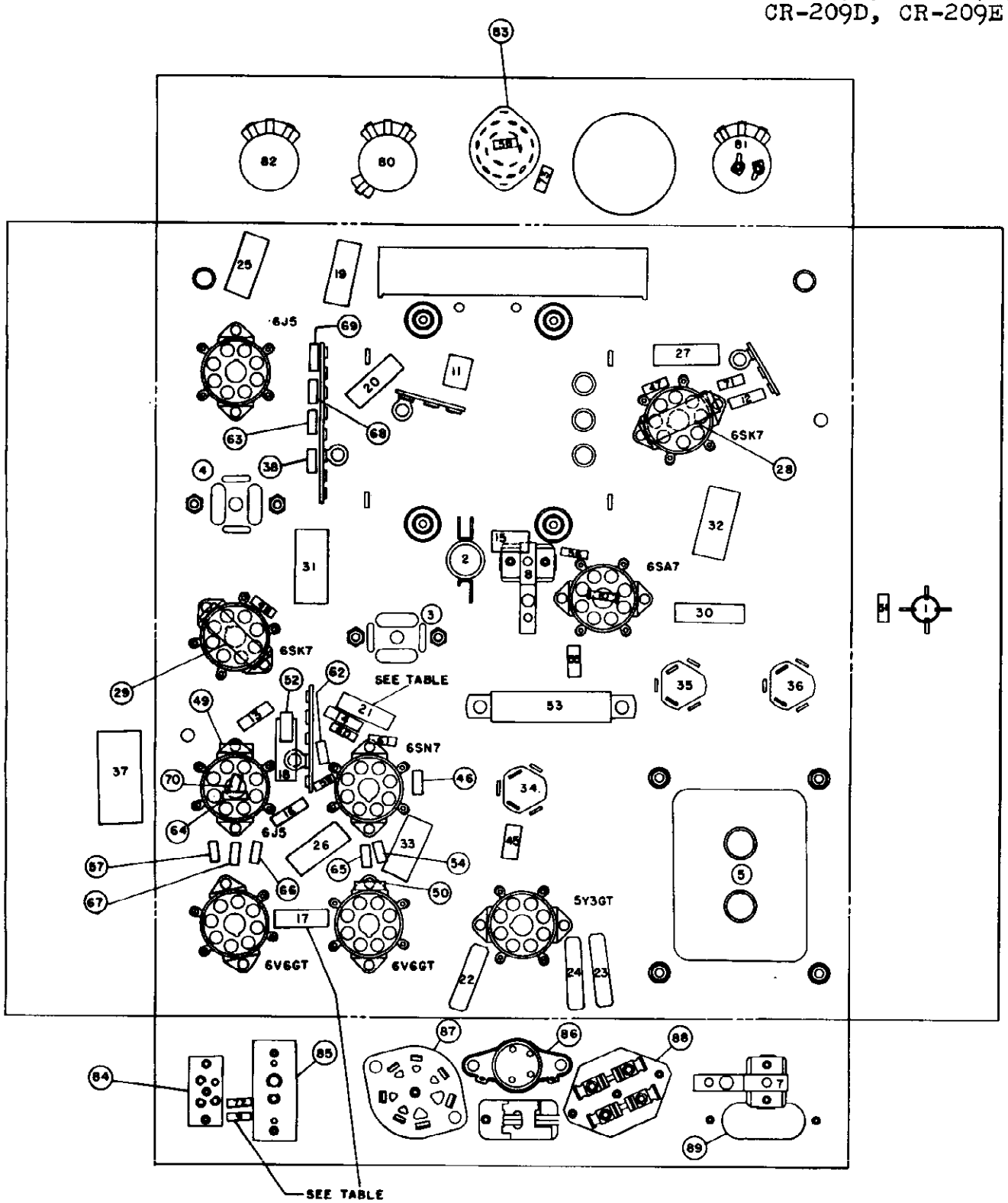

ITEM NO.	ELECTRICAL VALUES		
	CR209A	CR209B	CR209C
9	8 MMF	33 MMF	33 MMF
17	.002 MFD	.0015 MFD	.0015 MFD
21	.01 MFD	.01 MFD	.002 MFD

MODELS CR-209A, CR-209B, CR-209C, CR-209D, CR-209E

THE MAGNAVOX CO.

ALIGNMENT PROCEDURE

The alignment of this receiver requires the use of an accurately calibrated r-f signal generator and an output meter. All trimmer condenser locations are shown on the chassis layout diagram, Figure 3. The radio volume control should be turned to maximum and the signal generator output kept as low as possible during alignment to prevent the AVC from operating and giving false readings.

I-F ALIGNMENT

1. Connect the output of the signal generator to the control grid (pin No. 8) of the 6SA7 tube through a .00025 mfd. capacitor. The ground on the signal generator should be connected to the radio chassis ground.
2. Turn the condenser gang until it is completely meshed, (low-frequency end of dial calibration) and set the input selector switch to RAD.
3. Adjust the signal generator to EXACTLY 455 kc. and peak the second i-f transformer and the first i-f transformer trimmers in that order.

BROADCAST BAND ALIGNMENT

1. Remove the signal generator lead from the 6SA7 grid and connect it to the control grid (pin 4) on 6SK7 RF tube.
2. Check the tuning dial pointer adjustment. When the plates of the tuning condenser are completely meshed, the dial pointer must be in line with the last calibration mark at the low frequency end of the dial. If it is not, slide the pointer on its string to the correct position. Be sure to crimp the lugs (on the rear of the pointer) tightly around the string to hold the pointer in adjustment.
3. Set the signal generator and the radio receiver to 1400 kc., adjust the 1400 kc. oscillator trimmer and the 1400 kc. r-f trimmer for maximum output.
4. Adjust the signal generator and the radio receiver to 600 kc. While rocking the gang condenser a few degrees to the right and to the left, adjust the 600 kc. oscillator padder for maximum indication on the output meter. If considerable adjustment was necessary, recheck the 1400 kc. trimmer setting.
5. Form three turns of wire into a loop, connect this loop to the signal generator and loosely couple it to the cabinet antenna.
6. With the signal generator and dial at 1400 kc., adjust the loop antenna trimmer for maximum output.

SPECIAL SERVICE INFORMATION

The following information is provided for the service man who has a vacuum tube voltmeter or a similar measuring instrument available.

STAGE GAINS*

R-F Grid to Converter Grid at:
600 kc. 4.7
R-F on Converter to I-F Grid at:
600 kc. 62.5
I-F on Converter Grid to I-F Grid at:
455 kc. (gang closed) 80.0
I-F Grid to Detector Plate at:
455 kc. 72

OSCILLATOR OUTPUT VOLTAGE

The DC voltage developed across the Oscillator Grid Resistor at:
600 kc. ..... 8.8 V.
or 0.4 ma. through 22,000 ohm Oscillator Grid Resistor (56).

AUDIO GAIN

Voltage required across the Volume Control to produce .05 watt speaker output** at 400 cycles is .011 volt with Input Selector Switch in RAD setting.

*Variations of ± 20% are permissible. All readings made with sufficient input signal to provide .05 watt speaker output.
**.05 watt speaker output at 400 cycles is equivalent to a reading of 0.4 volts as measured by a high resistance AC voltmeter across the voice coil of speaker.

Tubes:

R-F Amplifier	6SK7
Converter	6SA7
I-F Amplifier	6SK7
Detector and AVC	6J5
First Audio	6J5
Inverter	6SN7GT
Power output (push-pull stage)	(2) 6V6GT
Rectifier	5Y3GT
Dial lamps	Mazda No. 44

Speakers:

Field coil resistance	1000 ohms
Voice coil impedance (400 cycles)	3.0 ohms
Output transformer	8,000/3 ohms

DIAL CORD REPLACEMENT

Two separate drive cables are used in the CR-209 dial assembly. One cable is used to transmit the motion from the tuning knob to the large pulley that is coupled to the condenser gang; the other cable actuates the dial pointer whenever the large pulley on the condenser gang is rotated. Separate instructions for replacing either of these cables is given in the following paragraphs.

CONDENSER DRIVE CABLE REPLACEMENT

Remove dial assembly after taking out two screws on each side of chassis. Slide a short length (approximately ½ inch) of sleeving over one end of a length of dial cable, form a small loop and tie a knot in the manner shown on Figure 1. Tie spring to opposite end of cable making length including spring 20¾ inches. Hook loop over the metal hook in pulley "C" and lace the cable through the pulley slot and around the pulley in a counterclockwise direction when viewed from the rear of the chassis keeping the cable to the rear of the pulley groove. Lace the cable around the smaller diameter portion of the tuning control shaft wrapping 2½ turns *from front to back* then around the opposite side of pulley "C" into the pulley through the slot. Hook the end of tension spring "D" in the hole provided in pulley "C"; completing this operation.

DIAL POINTER DRIVE CABLE REPLACEMENT

Remove dial assembly after taking out two screws on each side of chassis. Slip a one-half inch length of sleeving into a 42-inch length of dial cable. Tie the two ends to the loop end of the cable spring "E" securely so that the cable doubled measures 20¾ inches end to end including spring.

Place spring hook in bottom hole and draw cable through slot of pulley "C". Loop one end of cable around pulley "C" in a clockwise direction in front of condenser drive cable (viewing chassis from front) then loop the remaining end around pulley in a counterclockwise direction. Secure both ends of cable to chassis at edge of pulley slot with scotch tape, keeping piece of sleeving on remaining loop of cable.

Replace dial assembly and loop cable over pulley "A". While holding cable taut remove scotch tape and loop cable over pulley "B".

Turn the tuning control shaft until the condenser gang is completely meshed and slide the dial pointer on its track until it is in line with the last calibration mark at the low frequency end of the dial. The short piece of sleeving installed prior to the stringing operation should be slid to the rear of the dial pointer and the crimping lug on the pointer pressed over the sleeving. After checking to make certain that the condenser gang is completely meshed and the dial pointer is in the position specified previously, apply a few drops of cement to each end of the sleeving to which the dial pointer is fastened. This completes the operation.

PARTS LIST

REFERENCE NO.	DESCRIPTION	MAGNAVOX PART NO.
1	Coil assembly, r-f	360280G1
2	Coil assembly, oscillator	360281G1
3	Transformer, first i-f	363700G2
4	Transformer, second i-f	363700G3
5	Transformer, power	300036G1
6	Capacitor, variable, three-gang tuning	260097G1
7	Capacitor, trimmer	250046G1
8	Capacitor, trimmer	250046G1
9	Capacitor, ceramic dielectric, 8 mmf. (CR 209A Only)	250164G1
	Capacitor, ceramic dielectric, 33 mmf. (CR 209B, C Only)	250164G4
10	Capacitor, ceramic, 32 mmf. ±5%	250088G42
11	Capacitor, mica, 150 mmf. ±10%	250159G84
12	Capacitor, mica, 220 mmf.	250159G100
13	Capacitor, mica, 220 mmf.	250159G100
14	Capacitor, mica, 330 mmf. ±10%	250159G88
15	Capacitor, silver mica, 518 mmf. ±1%	250085G35
16	Capacitor, mica, 1800 mmf. ±10%	250160G67
17	Capacitor, paper, .002 mfd. 600 V. (CR 209A Only)	250152G44
	Capacitor, paper, .0015 mfd. 600 V. ±10% (CR 209B, C Only)	250169G1
18	Capacitor, paper, .005 mfd. 600 V.	250152G41
19	Capacitor, paper, .015 mfd. 200 V. ±10%	250152G70
20	Capacitor, paper, .01 mfd. 200 V.	250152G18
21	Capacitor, paper, .01 mfd. 400 V. (CR 290A,B, Only)	250152G27
	Capacitor, paper, .002 mfd. 600 V. ±10% (CR 209C Only)	250169G2

©John F. Rider

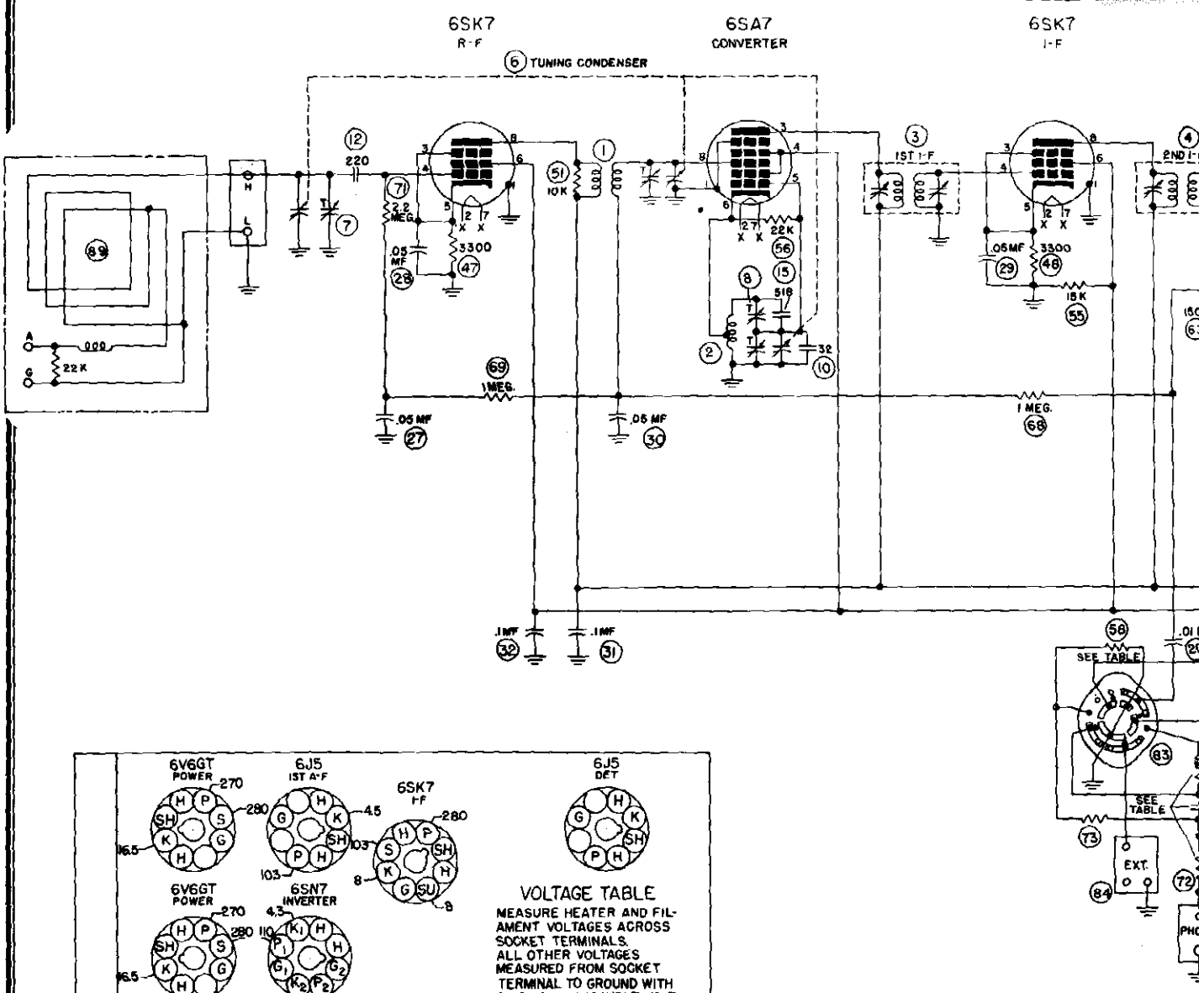

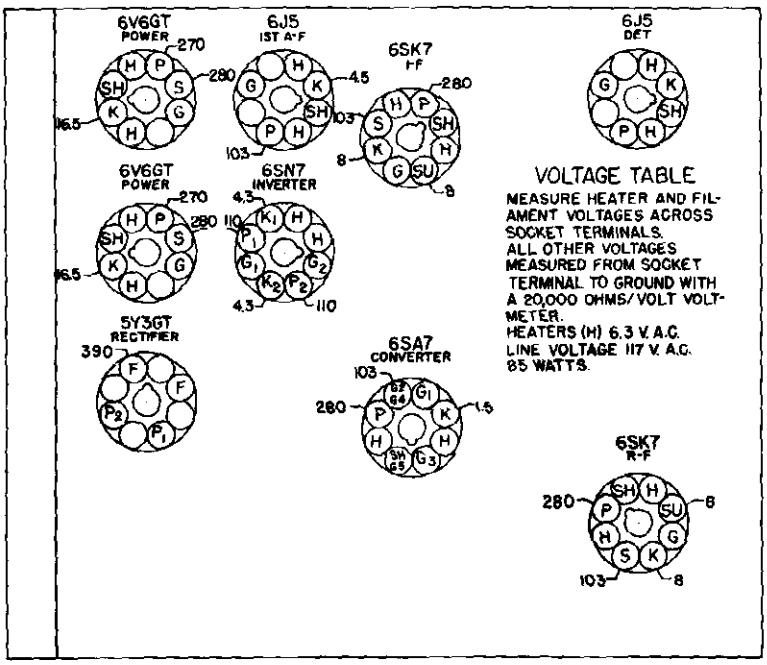

VOLTAGE TABLE

MEASURE HEATER AND FILAMENT VOLTAGES ACROSS SOCKET TERMINALS.
ALL OTHER VOLTAGES MEASURED FROM SOCKET TERMINAL TO GROUND WITH A 20,000 OHMS/VOLT VOLTMETER.
HEATERS (H) 6.3 V. A.C.
LINE VOLTAGE 117 V. A.C.
85 WATTS.

I-F 455 KC.

NOTES

ALL ELECTRICAL VALUES SHOWN ARE IN MICROMICROFARADS OR OHMS UNLESS OTHERWISE SPECIFIED.

SELECTOR SWITCH SHOWN IN COUNTER-CLOCKWISE POSITION WHEN VIEWED FROM THE FRONT PANEL.

)X CO.

MODELS CR-209A, CR-209B, CR-209C, CR-209D, CR-209E

6J5 DET. | 6J5 1ST A-F | 6SN7 INVERTER | 6V6GT POWER

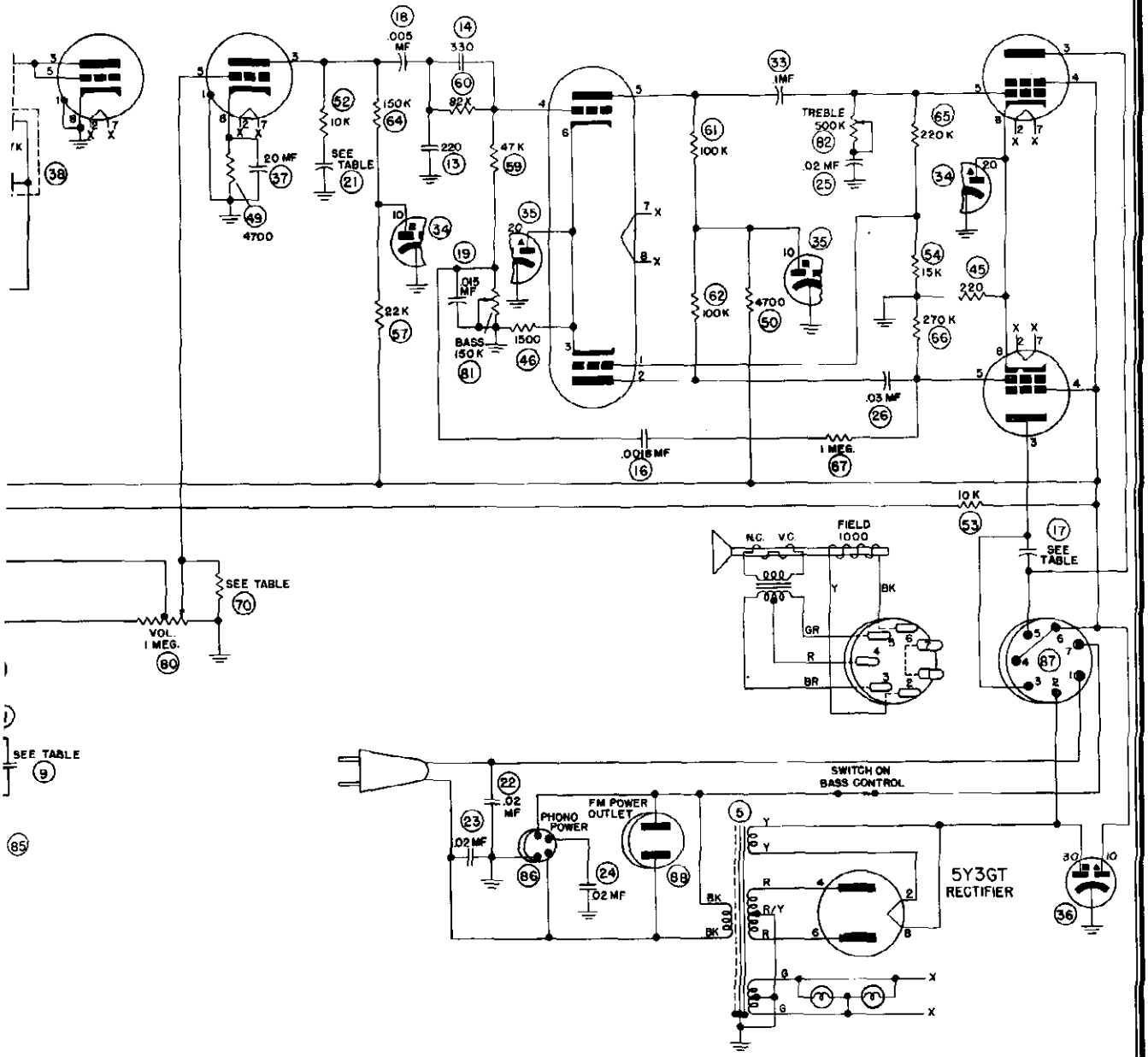

ITEM NO.	CR209A	CR209B	CR209C	CR209D	CR209E
	ELECTRICAL VALUES				
9	8	33	33	100	100
17	.002 MF	.0015 MF	0015 MF	.0015 MF	.0015MF
21	01 MF	01 MF	.002 MF	01 MF	.002MF
11	150	150	150	470	470
58	33K	33K	33K	OMIT	OMIT
70	1.5 MEG.	1.5MEG.	1.5MEG.	OMIT	OMIT
72	3.9MEG.	3.9MEG.	3.9MEG.	820K	820K
73	4.7 MEG.	4.7 MEG.	4.7 MEG.	1MEG.	1MEG.
74	OMIT	OMIT	OMIT	330K	470K

SPECIFICATIONS

Power supply	117 volts 50/60 cycles AC
Power consumption	85 watts
Power output	10 watts
Intermediate frequency	455 kc.
Tuning frequency range	534–1620 kc.

MODELS CR-209A, CR-209B, CR-209C, CR-209D, CR-209E

THE MAGNAVOX CO.

REFERENCE NO.	DESCRIPTION	MAGNAVOX PART NO.
22	Capacitor, molded paper, .02 mfd. 600 V.	250129G3
23	Capacitor, molded paper, .02 mfd. 600 V.	250129G3
24	Capacitor, molded paper, .02 mfd. 600 V.	250129G3
25	Capacitor, paper, .02 mfd. 200 V.	250152G17
26	Capacitor, paper, .03 mfd. 400 V.	250152G25
27	Capacitor, paper, .05 mfd. 200 V.	250152G15
28	Capacitor, paper, .05 mfd. 200 V.	250152G15
29	Capacitor, paper, .05 mfd. 200 V.	250152G15
30	Capacitor, paper, .05 mfd. 200 V.	250152G15
31	Capacitor, paper, .1 mfd. 400 V.	250152G22
32	Capacitor, paper, .1 mfd. 400 V.	250152G22
33	Capacitor, paper, .1 mfd. 400 V.	250152G22
34	Capacitor, electrolytic, 10 mfd. 450 V., 20 mfd. 25 V.	270023G6
35	Capacitor, electrolytic, 10 mfd. 450 V., 20 mfd. 25 V.	270023G6
36	Capacitor, electrolytic, 10-30 mfd. 475 V.	270023G2
37	Capacitor, electrolytic, 20 mfd. 25 V.	270027G2
38	Capacitor-resistor filter	250170G1
45	Resistor, composition, 220 ohm, 2 W. ±10%	230064G54
46	Resistor, composition, 1500 ohm, ½ W.	230084G14
47	Resistor, composition, 3300 ohm, ½ W.	230084G16
48	Resistor, composition, 3300 ohm, ½ W.	230084G16
49	Resistor, composition, 4700 ohm, ½ W.	230084G17
50	Resistor, composition, 4700 ohm, ½ W.	230084G17
51	Resistor, composition, 10K ohm, ½ W.	230084G19
52	Resistor, composition, 10K ohm, 1 W.	230085G19
53	Resistor, composition, 10K ohm, 3 W.	240035G2
54	Resistor, composition, 15K ohms, ½ W. ±5%	230084G187
55	Resistor, composition, 15K ohm, 2 W.	230086G20
56	Resistor, composition, 22K ohm, ½ W.	230084G21
57	Resistor, composition, 22K ohm, ½ W.	230084G21
58	Resistor, composition, 33K ohm, ½ W.	230084G22
59	Resistor, composition, 47K ohm, ½ W.	230084G23
60	Resistor, composition, 82K ohm, ½ W. ±10%	230084G85
61	Resistor, composition, 100K ohm, ½ W.	230084G25
62	Resistor, composition, 100K ohm, ½ W.	230084G25
63	Resistor, composition, 150K ohm, ½ W.	230084G26
64	Resistor, composition, 150K ohm, ½ W.	230084G26
65	Resistor, composition, 220K ohm, ½ W. ±5%	230084G215
66	Resistor, composition, 270K ohm, ½ W. ±10%	230084G91
67	Resistor, composition, 1 megohm, ½ W. ±10%	230084G98
68	Resistor, composition, 1 megohm, ½ W.	230084G31
69	Resistor, composition, 1 megohm, ½ W.	230084G31
70	Resistor, composition, 1.5 megohm, ½ W.	230084G32
71	Resistor, composition, 2.2 megohm, ½ W.	230084G33
72	Resistor, composition, 3.9 megohm, ½ W. ±10%	230084G105
73	Resistor, composition, 4.7 megohm, ½ W. ±10%	230084G106
80	Control, volume	220074G1
81	Control, bass	220073G5
82	Control, treble	220072G8
83	Switch, selector	160175G1
84	Socket, fm input	180060G1
85	Socket, phonograph input	189741G1
86	Socket, phonograph motor	180501G5
87	Socket, speaker	180504G16
88	Socket, AC	180428G1
89	Antenna loop assembly	360336G1
	Dial glass	150292G2

THE MAGNAVOX CO.

MODELS CR-209A, CR-209B, CR-209C, CR-209D, CR-209E

SUPPLEMENT TO PARTS LIST

REFERENCE NO.		MAGNAVOX PART NO.
	CR 209A	
9	Capacitor, Ceramic Dielectric, 8 mmf.	250164G1
11	Capacitor, Mica, 150 mmf, ± 10%	250159G84
17	Capacitor, Paper, .002 mfd., 600 V.	250152G44
21	Capacitor, Paper, .01 mfd., 400 V.	250152G27
58	Resistor, Composition, 33K ohms, ½ W.	230084G22
70	Resistor, Composition, 1.5 megohm, ½ W.	230084G32
72	Resistor, Composition, 3.9 megohm, ½ W., ±10%	230084G105
73	Resistor, Composition, 4.7 megohm, ½ W., ±10%	230084G106
74	Omitted	
	CR 209B	
9	Capacitor, Ceramic, Dielectric, 33 mmf.	250164G4
17	Capacitor, Paper, .0015 mfd., 600 V., ±10 %	250169G1
	CR 209C	
9	Capacitor, Ceramic Dielectric, 33 mmf.	250164G4
21	Capacitor, Paper, .002 mfd., 600 V., ±10%	250169G2
	CR 209D	
9	Capacitor, Mica, 100 mmf., ±10%	250159G82
11	Capacitor, Mica, 470 mmf., ±10%	250159G90
17	Capacitor, Paper, .0015 mfd., 600 V., ±10%	250169G1
58	Omitted	
70	Omitted	
72	Resistor, Composition, 820K ohms, ½ W., ±10%	230084G97
73	Resistor, Composition, 1 megohm, ½ W., ±10%	230084G98
74	Resistor, Composition, 30K ohms, ½ W., ±10%	230084G92
	CR 209E	
9	Capacitor, Mica, 100 mmf., ±10%	250159G82
11	Capacitor, Mica, 470 mmf., ±10%	250159G90
17	Capacitor, Paper, .0015 mfd., 600 V., ±10%	250169G1
21	Capacitor, Paper, .002 mfd., 600 V., ±10%	250169G2
58	Omitted	
70	Omitted	
72	Resistor, Composition, 820K ohms, ½ W., ±10%	230084G97
73	Resistor, Composition, 1 megohm, ½ W., ±10%	230084G98
74	Resistor, Composition, 470K ohms, ½ W., ±10%	230084G94

MODELS CR-210A, CR-210B, CR-210C

THE MAGNAVOX CO.

ALIGNMENT PROCEDURE

The alignment of this receiver requires the use of an accurately calibrated r-f signal generator and an output meter. All trimmer condenser locations are shown on the chassis layout diagram, Figure 3. The radio volume control should be turned to maximum and the signal generator output kept as low as possible during alignment to prevent the AVC from operating and giving false readings.

All alignment adjustments except antenna trimmer adjustment can be made with the loop antenna leads disconnected. When checking overall operation with the signal generator, the generator can be connected across the loop antenna terminals on the rear of the chassis. It is not necessary to remove the loop antenna from the cabinet for alignment of this receiver.

I-F ALIGNMENT

1. Connect the output of the signal generator to the control grid (pin No. 8) of the 6SA7 tube through a .00025 mfd. capacitor. The ground on the signal generator should be connected to the radio chassis ground.
2. Turn the condenser gang until it is completely meshed, (low-frequency end of dial calibration) and set the input selector switch to RAD.
3. Adjust the signal generator to EXACTLY 455 kc. and peak the second i-f transformer and the first i-f transformer trimmers in that order.

BROADCAST BAND ALIGNMENT

1. Remove the signal generator lead from the 6SA7 grid and connect it across H and L on terminal strip on the rear of the chassis. The high side of the signal generator should be connected to H and the signal generator ground to L.
2. Check the tuning dial pointer adjustment. When the plates of the tuning condenser are completely meshed, the dial pointer must be in line with the last calibration mark at the low frequency end of the dial. If it is not, slide the pointer on its string to the correct position. Be sure to crimp the lugs (on the rear of the pointer) tightly around the string to hold the pointer in adjustment.
3. Set the signal generator and the radio receiver to 1400 kc., adjust the 1400 kc. oscillator trimmer and the 1400 kc. r-f trimmer for maximum output.
4. Set the signal generator and radio receiver to 600 kc. Adjust the oscillator and r-f coil slugs for maximum output. If considerable adjustment was necessary re-check the 1400 kc. trimmer settings.
5. Replace chassis in cabinet and connect loop antenna leads to proper terminals on the rear of the chassis.
6. Form three turns of wire into a loop, connect this loop to the signal generator and loosely couple it to the receiver loop antenna.
7. With the signal generator and dial at 1400 kc., adjust the loop antenna trimmer for maximum output.

SPECIAL SERVICE INFORMATION

The following information is provided for the service man who has a vacuum tube voltmeter or a similar measuring instrument available.

STAGE GAINS*

R-F Grid to Converter Grid at:
600 kc. 10

R-F on Converter to I-F Grid at:
600 kc. 53

I-F on Converter Grid to I-F Grid at:
455 kc. (gang closed) 61

I-F Grid to Detector Plate at:
455 kc. 46

OSCILLATOR OUTPUT VOLTAGE

The DC voltage developed across the Oscillator Grid Resistor at:
600 kc. ..... 8.3 V.
or 0.38 ma. through 22,000 ohm Oscillator Grid Resistor (46).

AUDIO GAIN

Voltage required across the Volume Control to produce 0.5 watt speaker output** at 400 cycles is .062 volt with Input Selector Switch in RAD setting.

*Variations of ± 20% are permissible. All readings made with sufficient input signal to provide 0.5 watt speaker output.

**0.5 watt speaker output at 400 cycles is equivalent to a reading of 1.22 volts as measured by a high resistance AC voltmeter across the voice coil of speaker.

SPECIFICATIONS

Power supply	117 volts 50/60 cycles AC
Power consumption	70 watts
Power output	6 watts
Intermediate frequency	455 kc.
Tuning frequency range	540–1620 kc.
Speaker:	
Field coil resistance	1500 ohms
Voice coil impedance (400 cycles)	3.0 ohms
Output transformer	6,500/3 ohms

THE MAGNAVOX CO.

MODELS CR-210A, CR-210B, CR-210C

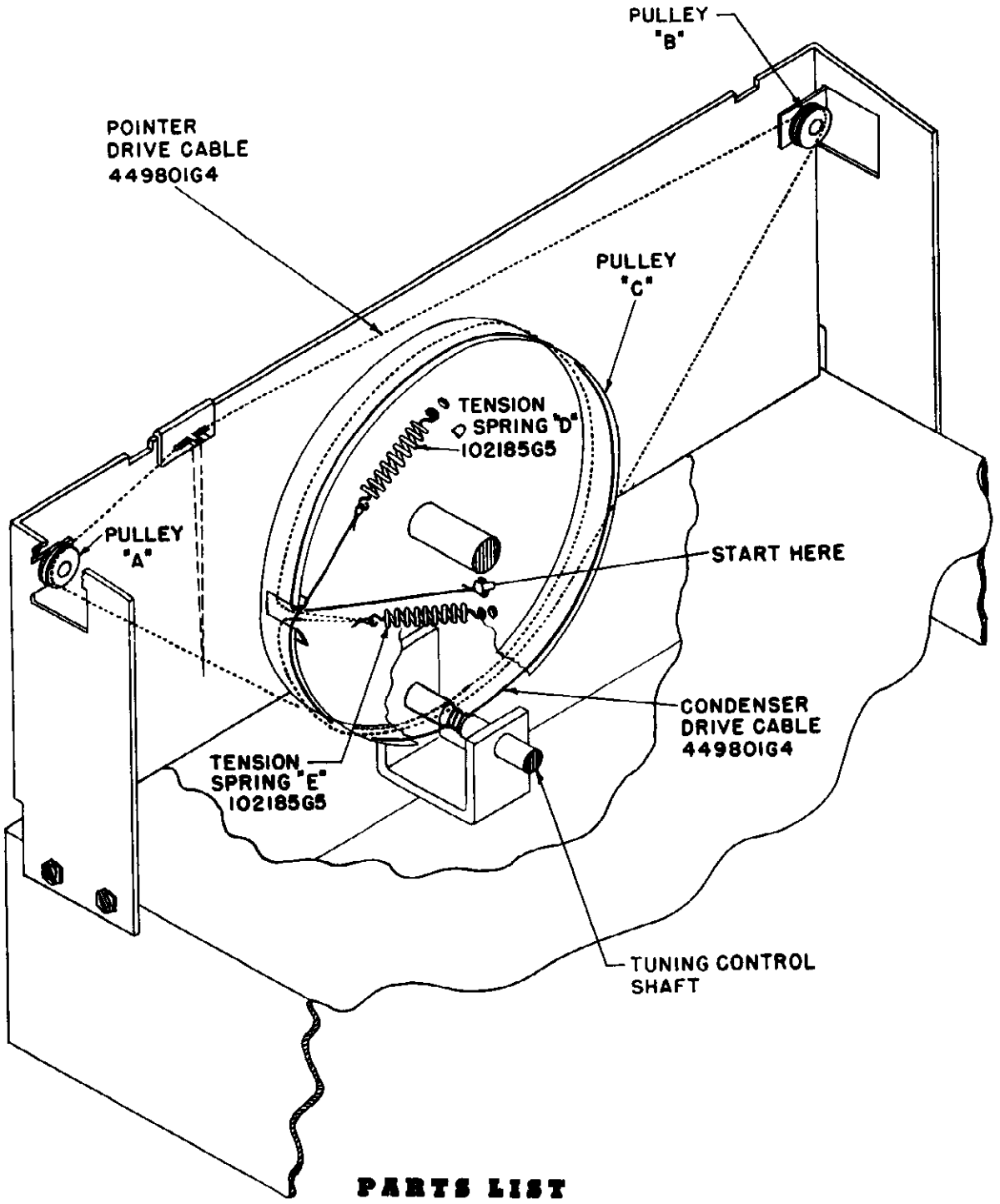

PARTS LIST

REFERENCE NO.	DESCRIPTION	MAGNAVOX PART NO.
1	Coil, r-f	360329G1
2	Coil, oscillator	360335G1
3	Transformer, first i-f	363700G4
4	Transformer, second i-f	363700G5
5	Transformer, power	300044G1
6	Capacitor, variable, three-gang tuning	260099G1
7	Capacitor, trimmer	250046G2
8	Capacitor, ceramic, 50 mmf. ±10%	250088G39
9	Capacitor, mica, 180 mmf. ±10%	250159G85
10	Capacitor, mica, 220 mmf.	250159G100

MODELS CR-210A, CR-210B, CR-210C — THE MAGNAVOX CO.

REFERENCE NO.	DESCRIPTION	MAGNAVOX PART NO.
11	Capacitor, mica, 680 mmf. (CR 210A Only)	250159G136
	Capacitor, mica, 470 mmf. (CR 210B Only)	250159G102
12	Capacitor, mica, 680 mmf.	250159G136
13	Capacitor, mica, 820 mmf. ±10%	250159G132
14	Capacitor, paper, .0015 mfd. ±10%, 600 V.	250169G1
15	Capacitor, paper, .003 mfd. 600 V.	250152G43
16	Capacitor, paper, .005 mfd. 600 V.	250152G41
17	Capacitor, paper, .008 mfd. 400 V.	250152G28
18	Capacitor, paper, .01 mfd. 200 V.	250152G18
19	Capacitor, paper, .02 mfd. 600 V.	250129G3
20	Capacitor, paper, .02 mfd. 600 V.	250129G3
21	Capacitor, paper, .02 mfd. 600 V.	250129G3
22	Capacitor, paper, .05 mfd. 200 V.	250152G15
23	Capacitor, paper, .05 mfd. 200 V.	250152G15
24	Capacitor, paper, .05 mfd. 200 V.	250152G15
25	Capacitor, paper, .1 mfd. 400 V.	250152G19
26	Capacitor, paper, .1 mfd. 400 V.	250152G19
27	Capacitor, paper, .1 mfd. 400 V.	250152G19
28	Capacitor, electrolytic, 30 mfd. 475 V., 20 mfd. 475 V., 20 mfd. 25 V.	270021G6
29	Capacitor-resistor filter	250170G1
38	Resistor, composition, 100 ohm, ½ W.	230084G7
39	Resistor, composition, 470 ohm, ½ W.	230084G11
40	Resistor, composition, 390 ohm, 1 W.	230085G57
41	Resistor, composition, 2200 ohm, ½ W.	230084G15
42	Resistor, composition, 4700 ohm, ½ W.	230084G17
43	Resistor, composition, 10,000 ohm, 1 W.	230085G19
44	Resistor, composition, 12,500 ohm, 10 W. ±5%	240021G14
45	Resistor, composition, 15,000 ohm, 2 W. ±10%	230086G76
46	Resistor, composition, 22,000 ohm, ½ W.	230084G21
47	Resistor, composition, 47,000 ohm, ½ W. (CR 210A Only)	230084G23
	Resistor, composition, 470,000 ohm, ½ W. (CR 210B Only)	230084G29
48	Resistor, composition, 150,000 ohm, ½ W.	230084G26
49	Resistor, composition, 220,000 ohm, ½ W.	230084G27
50	Resistor, composition, 470,000 ohm, ½ W.	230084G29
51	Resistor, composition, 680,000 ohm, ½ W.	230084G30
52	Resistor, composition, 820,000 ohm, ½ W. ±10%	230084G97
53	Resistor, composition, 1 megohm, ½ W. ±10%	230084G98
54	Resistor, composition, 1 megohm, ½ W.	230084G31
55	Resistor, composition, 1 megohm, ½ W.	230084G31
56	Resistor, composition, 6.8 megohm, ½ W.	230084G36
57	Resistor, composition, 10 megohm, ½ W. (CR 210A Only)	230084G37
	Resistor, composition, 3.9 megohm, ±10%, ½ W. (CR 210B Only)	230084G105
65	Control, volume, 1 megohm	220072G15
66	Control, bass, with AC switch, 1 megohm	220073G12
67	Control, treble, 2 megohm	220072G16
68	Switch, selector	160191G1
69	Socket, phono motor	180501G5
70	Socket, speaker	180504G16
71	Socket, FM	180060G1
72	Socket, phono input	189741G1
73	Antenna loop assembly	*
	Dial glass	150317G1

*The part number of the loop antenna assembly changes with different cabinets. It is therefore important that you specify the STYLE NUMBER of the instrument when ordering a replacement loop antenna assembly.

MODELS CR-210A,
CR-210B, CR-210C

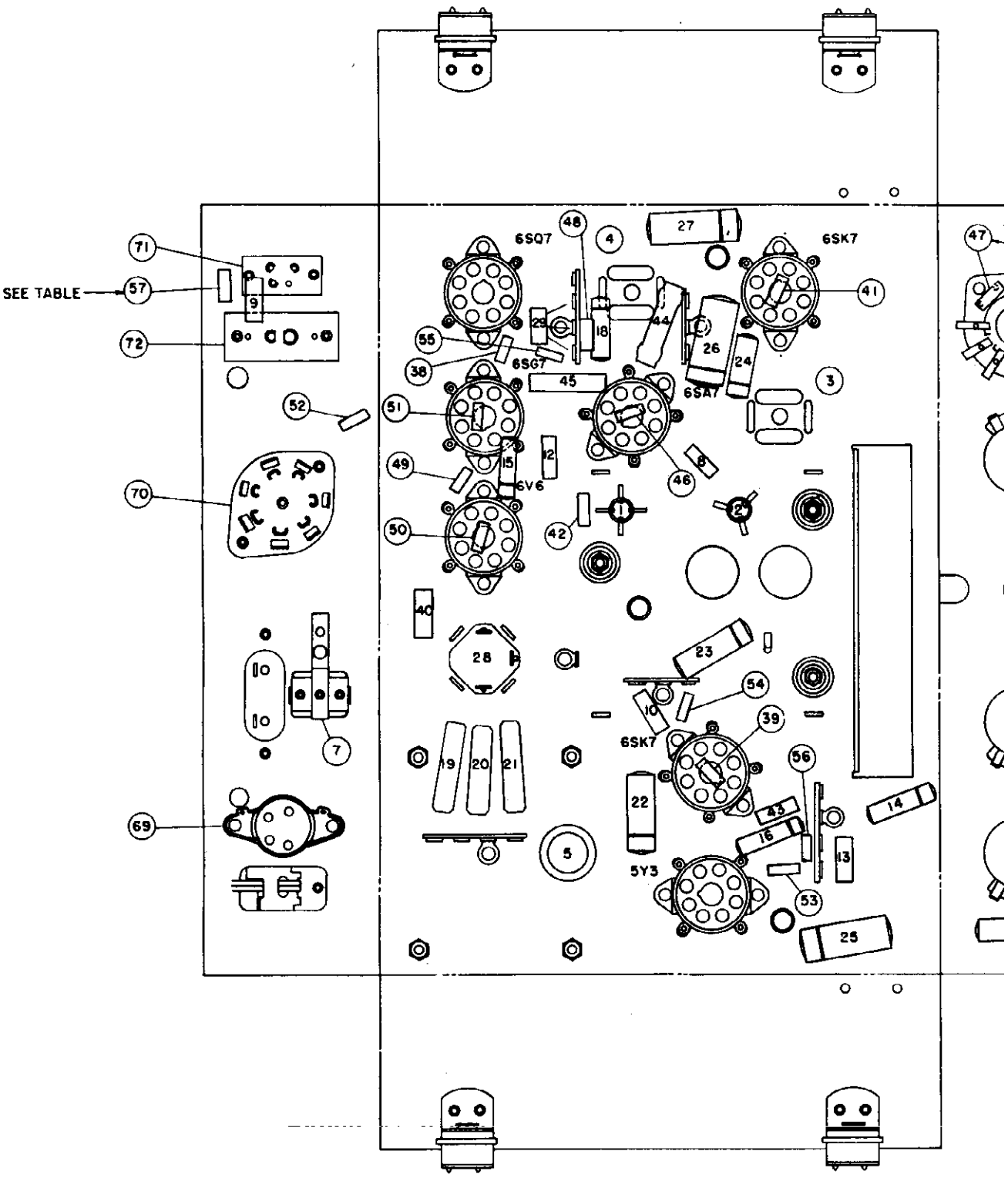

©John F. Rider

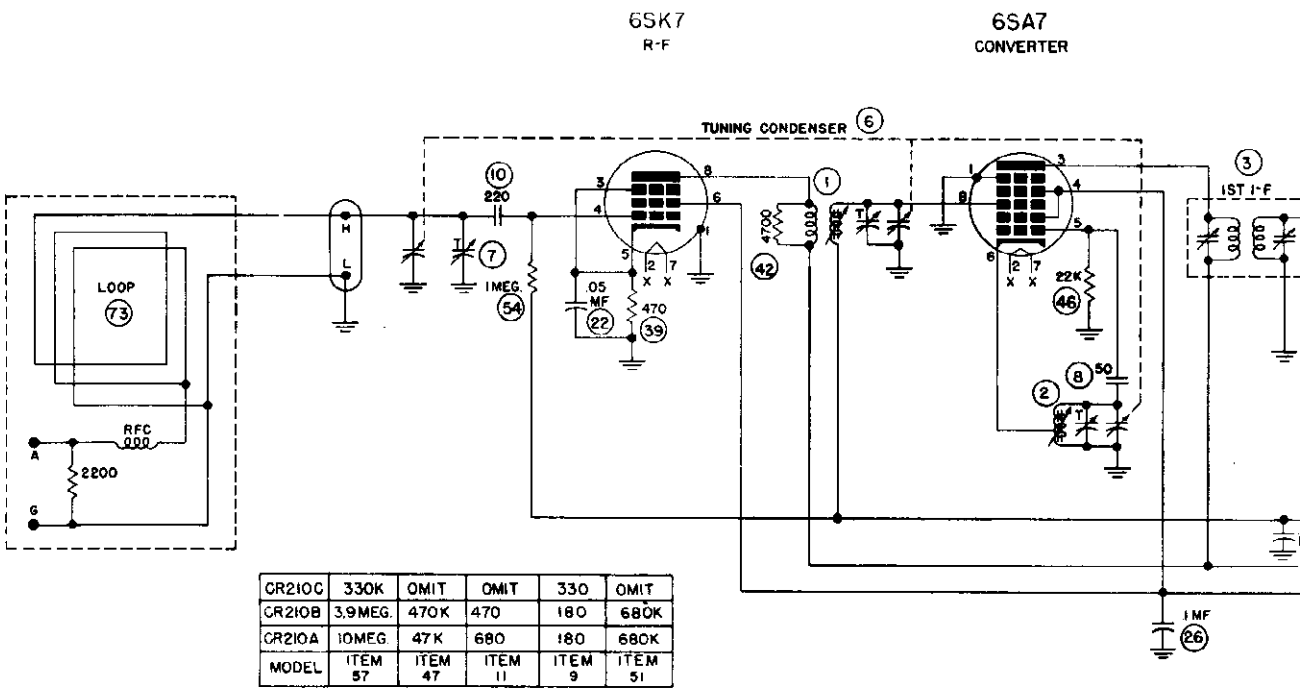

CR210C	330K	OMIT	OMIT	330	OMIT
CR210B	3.9MEG.	470K	470	180	680K
CR210A	10MEG	47K	680	180	680K
MODEL	ITEM 57	ITEM 47	ITEM 11	ITEM 9	ITEM 51

DIAL CORD REPLACEMENT

Two separate drive cables are used in the CR-210 dial assembly. One cable is used to transmit the motion from the tuning knob to the large pulley that is coupled to the condenser gang; the other cable actuates the dial pointer whenever the large pulley on the condenser gang is rotated. Separate instructions for replacing either of these cables is given in the following paragraphs.

CONDENSER DRIVE CABLE REPLACEMENT

Remove dial assembly after taking out two screws on each side of chassis. Slide a short length (approximately 1/2 inch) of sleeving over one end of a length of dial cable, form a small loop and tie a knot in the manner shown on Figure 1. Tie spring to opposite end of cable making length including spring 20 3/4 inches. Hook loop over the metal hook in pulley "C" and lace the cable through the pulley slot and around the pulley in a counterclockwise direction when viewed from the rear of the chassis keeping the cable to the rear of the pulley groove. Lace the cable around the smaller diameter portion of the tuning control shaft wrapping 2 1/2 turns *from front to back* then around the opposite side of pulley "C" into the pulley through the slot. Hook the end of tension spring "D" in the hole provided in pulley "C"; completing this operation.

DIAL POINTER DRIVE CABLE REPLACEMENT

Remove dial assembly after taking out two screws on each side of chassis. Slip a one-half inch length of sleeving into a 42-inch length of dial c the two ends to the loop end of the cable sp securely so that the cable doubled measu inches end to end including spring.

Place spring hook in bottom hole and dra through slot of pulley "C". Loop one end around pulley "C" in a clockwise directio of condenser drive cable (viewing chas front) then loop the remaining end around a counterclockwise direction. Secure both cable to chassis at edge of pulley slot wit tape, keeping piece of sleeving on remain of cable.

Replace dial assembly and loop cable ov "A". While holding cable taut remove sc and loop cable over pulley "B".

Turn the tuning control shaft until the c gang is completely meshed and slide the dia on its track until it is in line with the last c mark at the low frequency end of the dial. piece of sleeving installed prior to the operation should be slid to the rear of the di and the crimping lug on the pointer pressed sleeving. After checking to make certain condenser gang is completely meshed and pointer is in the position specified previous a few drops of cement to each end of the to which the dial pointer is fastened. This c the operation.

E MAGNAVOX CO.

MODELS CR-210A, CR-210B, CR-210C

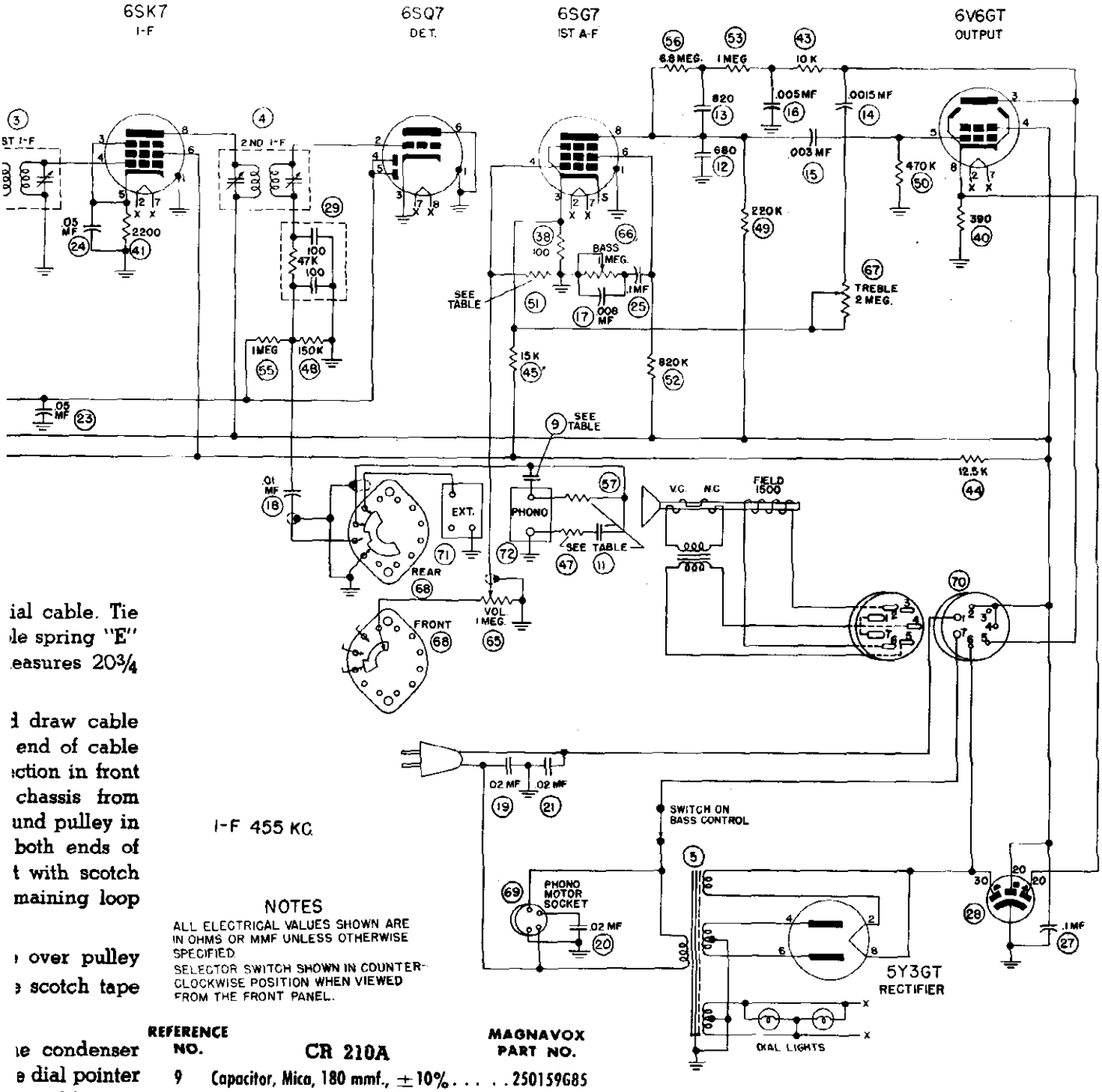

I-F 455 KC

NOTES

ALL ELECTRICAL VALUES SHOWN ARE IN OHMS OR MMF UNLESS OTHERWISE SPECIFIED

SELECTOR SWITCH SHOWN IN COUNTER-CLOCKWISE POSITION WHEN VIEWED FROM THE FRONT PANEL.

ial cable. Tie
le spring "E"
easures 20¾

d draw cable
end of cable
ction in front
chassis from
und pulley in
both ends of
t with scotch
maining loop

over pulley
scotch tape

ie condenser
e dial pointer
st calibration
al. The short
he stringing
e dial pointer
ssed over the
tain that the
and the dial
iously, apply
the sleeving
is completes

REFERENCE NO.	CR 210A	MAGNAVOX PART NO.
9	Capacitor, Mica, 180 mmf., ±10%	250159G85
11	Capacitor, Mica, 680 mmf.	250159G136
47	Resistor, Composition, 47K ohms, ½ W.	230084G23
51	Resistor, Composition, 680K ohms, ½ W.	230084G30
57	Resistor, Composition, 10 megohm, ½ W.	230084G37

CR 210B

11	Capacitor, Mica, 470 mmf.	250159G102
47	Resistor, Composition, 470K ohms, ½ W.	230084G29
57	Resistor, Composition, 39 megohm, ±10%, ½ W.	230084G105

CR 210C

9	Capacitor, Mica, 330 mmf., ±10%	250159G88
11	Omitted	
38	Resistor, Composition, 100 ohms, ½ W., ±5%	230084G135
47	Omitted	
51	Omitted	
57	Resistor, Composition, 330K ohms, ½ W., ±10%	230084G92

SEE TABLE

68

68 SELECTOR SWITCH

65 VOLUME CONTROL

TUNING

67 TREBLE CONTROL

66 BASS CONTROL

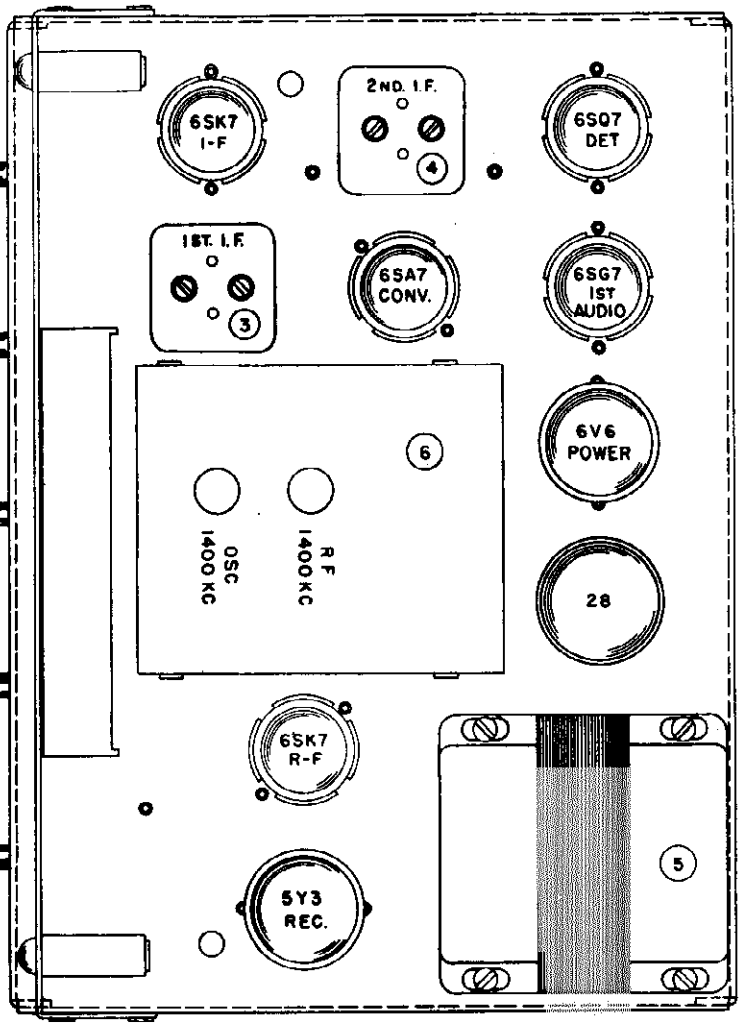

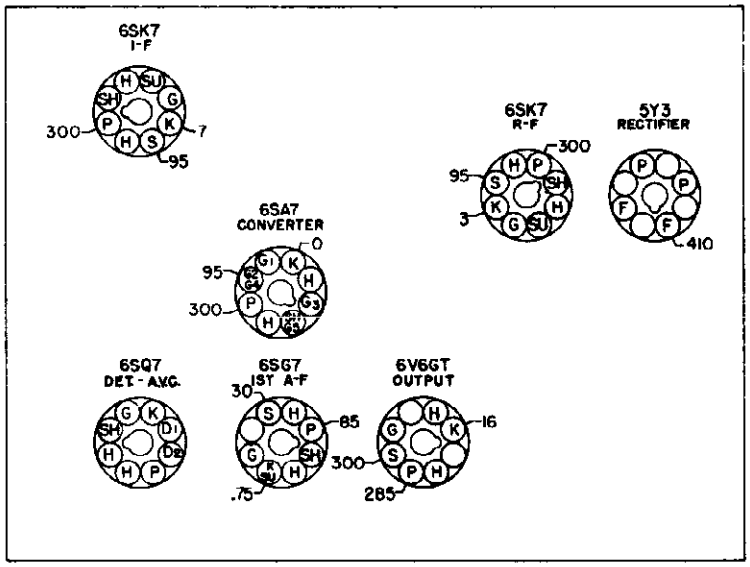

VOLTAGE TABLE

FILAMENT AND HEATER VOLTAGES MEASURED ACROSS SOCKET TERMINALS.

ALL OTHERS MEASURED FROM SOCKET TERMINAL TO GROUND WITH A 20,000 OHMS/VOLT VOLTMETER.

HEATERS (H) 6.3 V. A.C.

FILAMENTS (F) 5 V. A.C.

LINE VOLTAGE 117 V. A.C.

POWER CONSUMPTION 70 WATTS

©John T Riley

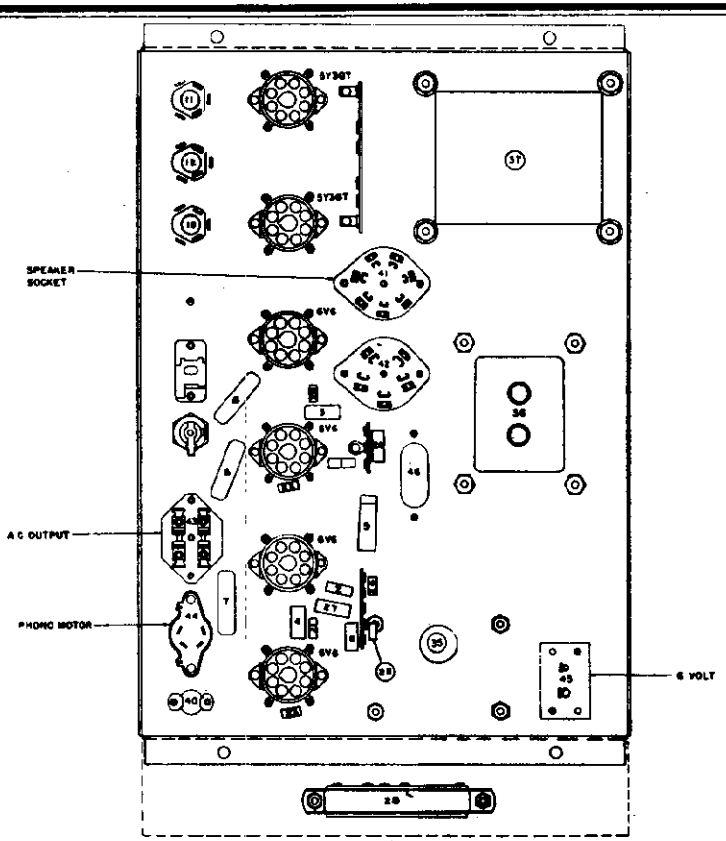

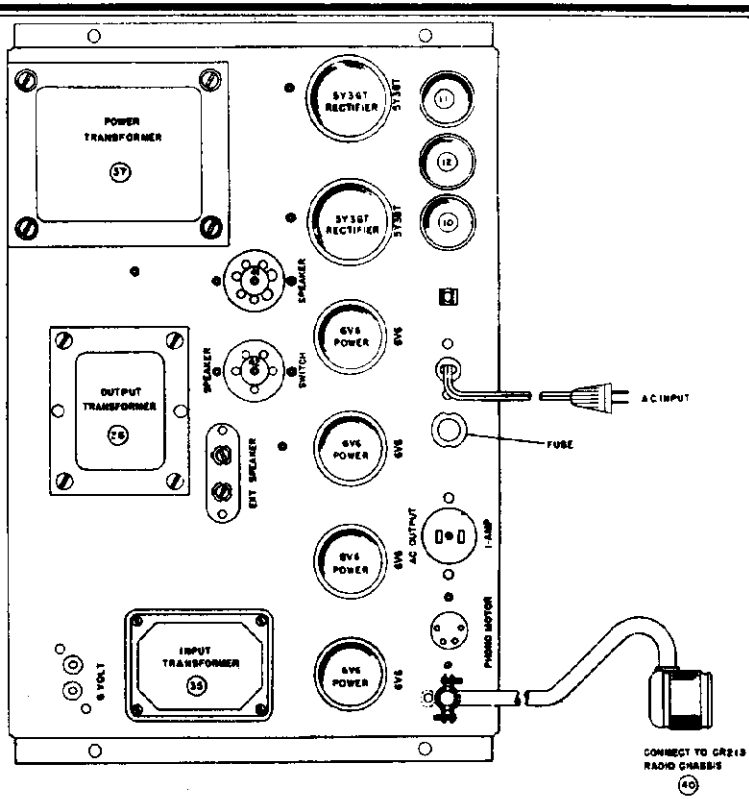

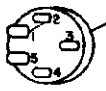

THIS SHORTING PLUG MUST BE INSERTED IN SOCKET ABOVE FOR NORMAL OPERATION. WHEN SPEAKER SELECTOR SWITCH IS USED, REMOVE SHORTING PLUG AND REPLACE IT WITH PLUG SUPPLIED AS PART OF SWITCH ASSEMBLY.

SPEAKER SWITCH ASSEMBLY (OPTIONAL)

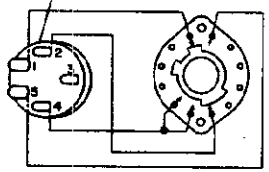

THREE POSITION SPEAKER SELECTOR SWITCH SHOWN IN EXTREME COUNTERCLOCKWISE POSITION (NO. 1).

POSITION
1. CABINET SPEAKERS - 15 OHMS
2. CABINET AND EXTERNAL SPEAKERS
3. EXTERNAL SPEAKERS - 3 OHMS.

VOLTAGE TABLE

BOTTOM VIEW OF CHASSIS

MEASURE FILAMENT AND HEATER VOLTAGES DIRECTLY ACROSS SOCKET TERMINALS. ALL OTHER VOLTAGES MEASURED FROM SOCKET TERMINAL TO GROUND WITH A 20000 OHMS/VOLT VOLTMETER. BAND SWITCH ON CR202 CHASSIS IN SHORT WAVE POSITION.
HEATERS (H) 6.3 V. A.C.
TOTAL POWER CONSUMPTION (CR202 & AMP116) 200 WATTS.
LINE VOLTAGE 117 V. A.C.

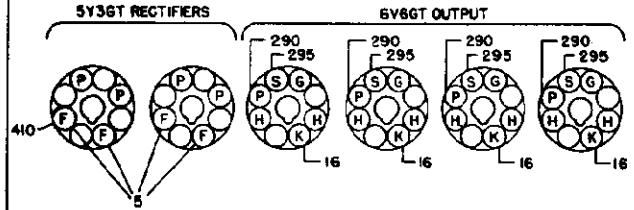

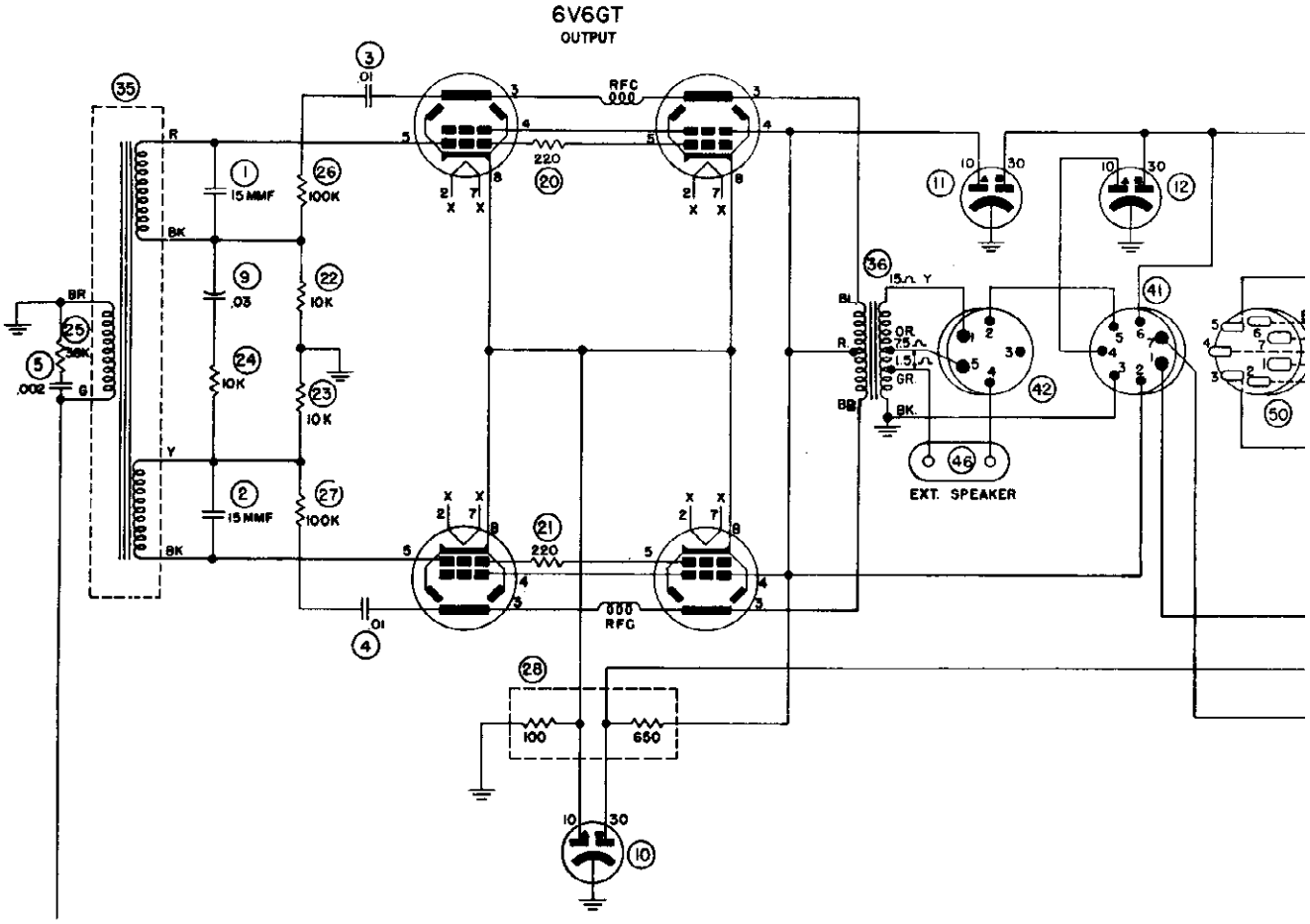

REFERENCE NO	DESCRIPTION	MAGNAVOX PART NO.
1	Capacitor, molded mica, 15 mmf, 500 V	250159G93
2	Capacitor, molded mica, 15 mmf, 500 V	250159G93
3	Capacitor, paper, .01 mfd, 600 V	250129G2
4	Capacitor, paper, .01 mfd, 600 V	250129G2
5	Capacitor, paper, .002 mfd, ± 10%, 600 V	250169G2
6	Capacitor, paper, .02 mfd, 600 V	250129G3
7	Capacitor, paper, .02 mfd, 600 V	250129G3
8	Capacitor, paper, .02 mfd, 600 V	250129G3
9	Capacitor, tubular, .03 mfd, 400 V	250152G25
10	Capacitor, electrolytic, 30-10 mfd, 475 V	270023G2
11	Capacitor, electrolytic, 30-10 mfd, 475 V	270023G2
12	Capacitor, electrolytic, 30-10 mfd, 475 V	270023G2
20	Resistor, composition, 220 ohm, ½ W	230084G9
21	Resistor, composition, 220 ohm, ½ W	230084G9
22	Resistor, composition, 10,000 ohm, ½ W	230084G19
23	Resistor, composition, 10,000 ohm, ½ W	230084G19
24	Resistor, composition, 10,000 ohm, ± 10%, ½ W	230084G74
25	Resistor, composition, 39,000 ohm, ± 10%, ½ W	230084G81
26	Resistor, composition, 100,000 ohm, 1 W	230085G25
27	Resistor, composition, 100,000 ohm, 1 W	230085G25
28	Resistor, wire wound, 100-650 ohm, 7 W	240040G1
35	Transformer, input	320021G2
36		
37		
40		
41		
42		
43		
44		
45		
46		
50		
51		
52		
53		
54		

Power supp
Power cons
Power outp
Output imp

Tubes:
Power o
Rectifiers

GNAVOX CO.

MODEL AMP-116

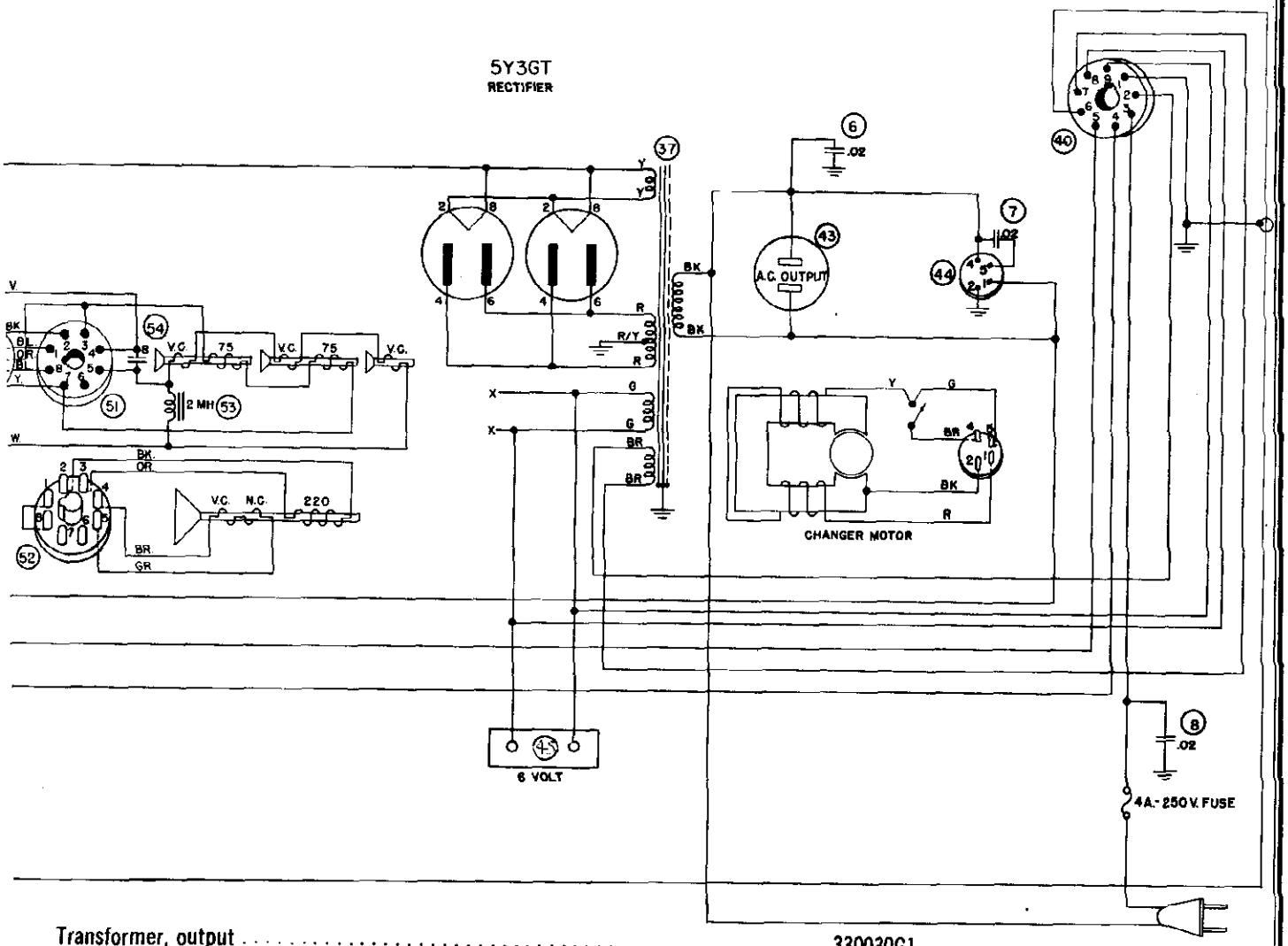

Transformer, output	330030G1
Transformer, power	300037G1
Cable & Plug assembly	460634G1
Socket, speaker connection	180504G16
Socket, speaker switch	180504G6
Socket, AC power connection	180428G1
Socket, phonograph motor connection	180501G5
Socket, 6 volt outlet	189788G2
Terminal Board-external speaker connection	209601G2
Plug, speaker	180503G4
Socket, tweeter	180403G2
Plug, bass speaker	180503G5
Choke Assembly	350042G2
Capacitor, paper, 8 mfd, 100 V	250167G1

SPECIFICATIONS

V	117 volts 50/60 cycles AC
mption	*200 watts
	45 watts
dance	15/7.5/1.5 ohms
ut (push-pull parallel stage)	(4) 6L6G
	(2) 5U4G

Speakers:	No. 583113 (Bass)	No. 580005 (Tweeter)	(2) No. 583112 (Tweeter)
Field coil resistance	225 ohms	PM	75 ohms
Voice coil resistance	12 ohms	3.2 ohms	†3.2 ohms

*Power consumption is for amplifier and CR-213 radio chassis.
†Voice coil resistance of one speaker.

©John F Rider

ALIGNMENT

OPERATION	CONNECT OSCILLATOR TO	DUMMY ANTENNA	INPUT SIGNAL FREQUENCY	BAND	SET DIAL AT	TRIMMERS	PURPOSE
1	Conv. Grid	.01mfd	455 KC	BC	600 KC	T2,T3 Bottom	Align I.F.'s
2	ONE TURN LOOP MADE WITH GENERATOR LEADS		455 KC	BC	600KKC	C81	I.F. trap adjustment for minimum I.F. signal
3			1500 KC	BC	1500 KC	C58	Set BC osc. to scale at 1500 KC
4			1500 KC	BC	1500 KC	C63,C72	Align BC RF. and Loop
5			600 KC	BC	600 KC	C57	Rock Gang to track BC padder
6	Al-Gnd.	400ohn	15 MC	SW	15 MC	C59	Scale osc. at 15 MC
7	Al-Gnd.	400ohn	15 MC	SW	15 MC	C62,C69	Align SW RF and Ant.
8	6SG7 2nd I.F. Grid	.01mfd.	10.7 MC	FM	88 MC	T4 top	Align for max. voltage at test jack pin 3 Rock gen. over 10.7 MC to check for symmetrical I.F. response.
9	6SG7 1st. I.F. Grid	.01mfd.	10.7 MC	FM	88 MC	T3 top	Align for max. voltage at test jack pin 3 Rock gen. over 10.7 MC to check for symmetrical I.F. response.
10	Converter	.01mfd.	10.7 MC	FM	88 MC	T2 top	Align for max. voltage at text jack pin 3 Rock gen. over 10.7 MC to check for symmetrical I.F. response. Re-check peaking of T4, and T3.
11	Converter grid 6BE6	.01mfd.	10.7 MC	FM	88 MC	T5 primary	Align for max. voltage across ½ discriminator Load (un-used Lug bottom of T5 to ground)
12	Converter grid 6B6E	.01mfd.	10.7 MC	FM	88 MC	T5 secondary	Align for zero voltage across full discriminator load (Test jack pin 1 to ground)
13	FM ant.term.	direct	108 MC	FM	108 MC	C10	Scale OSC at 108 MC (max. voltage Test jack pin 3.
14	FM ant.term.	direct	108 MC	FM	108 MC	C8,C3	Align FM RF and Ant. (max. voltage Test jack pin 3.
15	FM ant.term.	direct	88 MC	FM	88 MC	L4	Scale osc. at 88 MC.
16	FM ant.term.	direct	88 MC	FM	88 MC	L3,T1	Align RF and Ant. at 88 MC repeat steps 13, 14, 15, 16 as necessary.

NOTE: 1. A much more satisfactory IF and discriminator alignment may be obtained by using a 10.7 MC Signal generator frequency modulated at an audio frequency and swept approximately 600 KC (±300 KC). An oscilloscope should be connected to Test jack pin 3 and all IF screws adjusted for a symmetrical pattern of highest amptitude. See Fig. 1. For discriminator alignment, connect scope to Test jack pin 1 and adjust T5 for highest symmetrical pattern. See Fig. 2.

NOTE: 2. In all FM alignment calling for a voltage measurement at Test jack pin 3 (limiter grid resistor) keep signal generator output to such a value as will result in approximately 2 volts measured with a vacuum Tube voltmeter such as the Voltohmyst, Vomax or equiv.

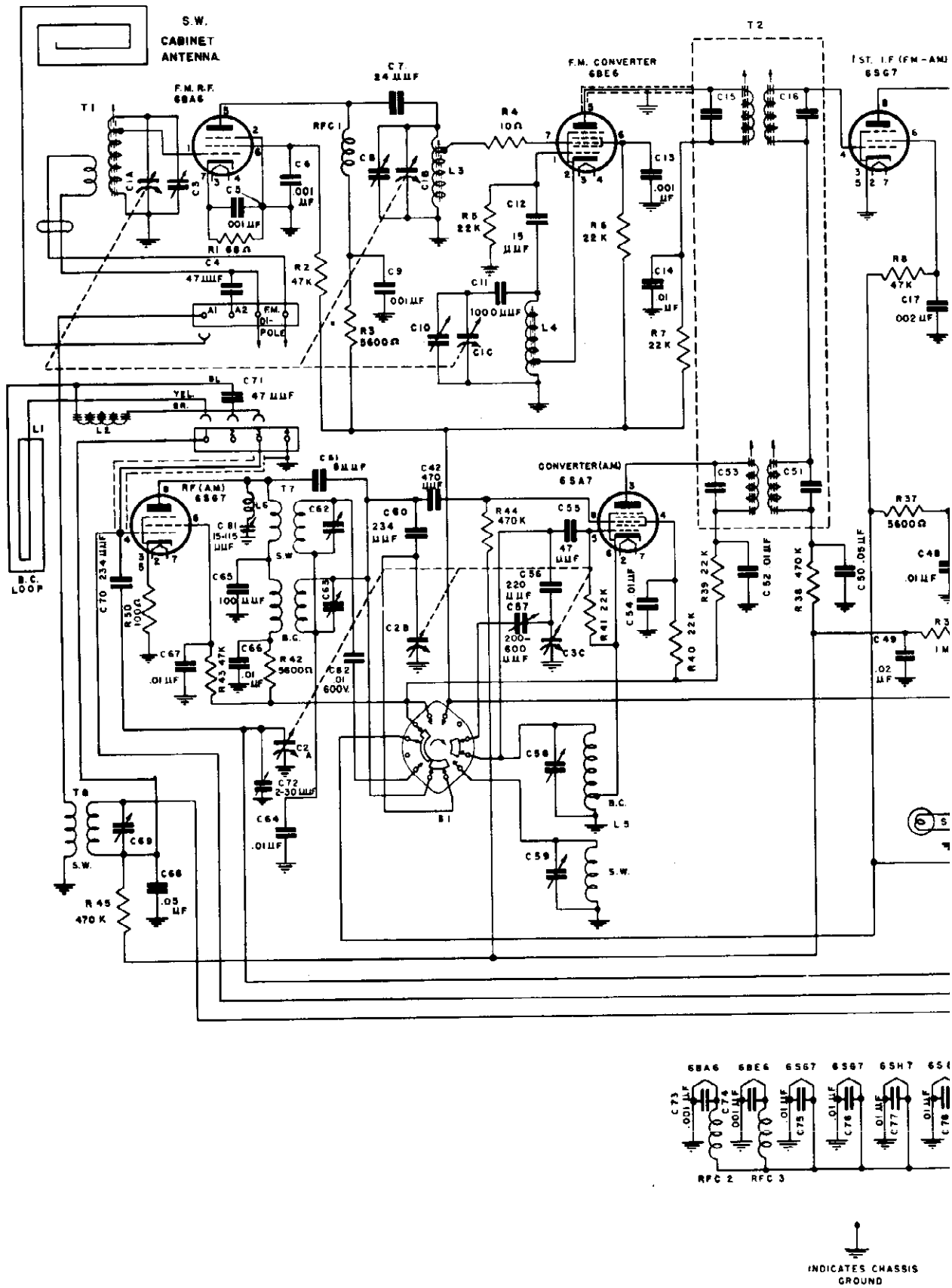
S.W.
CABINET
ANTENNA
F.M. R.F.
6BA6
F.M. CONVERTER
6BE6
1ST. I.F (FM-AM)
6SG7
RF (AM)
6SG7
CONVERTER (AM)
6SA7
B.C.
LOOP
F.M.
DI-
POLE
S.W.
B.C.
INDICATES CHASSIS
GROUND

RADIO & TELEV. CORP.

MODELS 10B27E,
10FM782

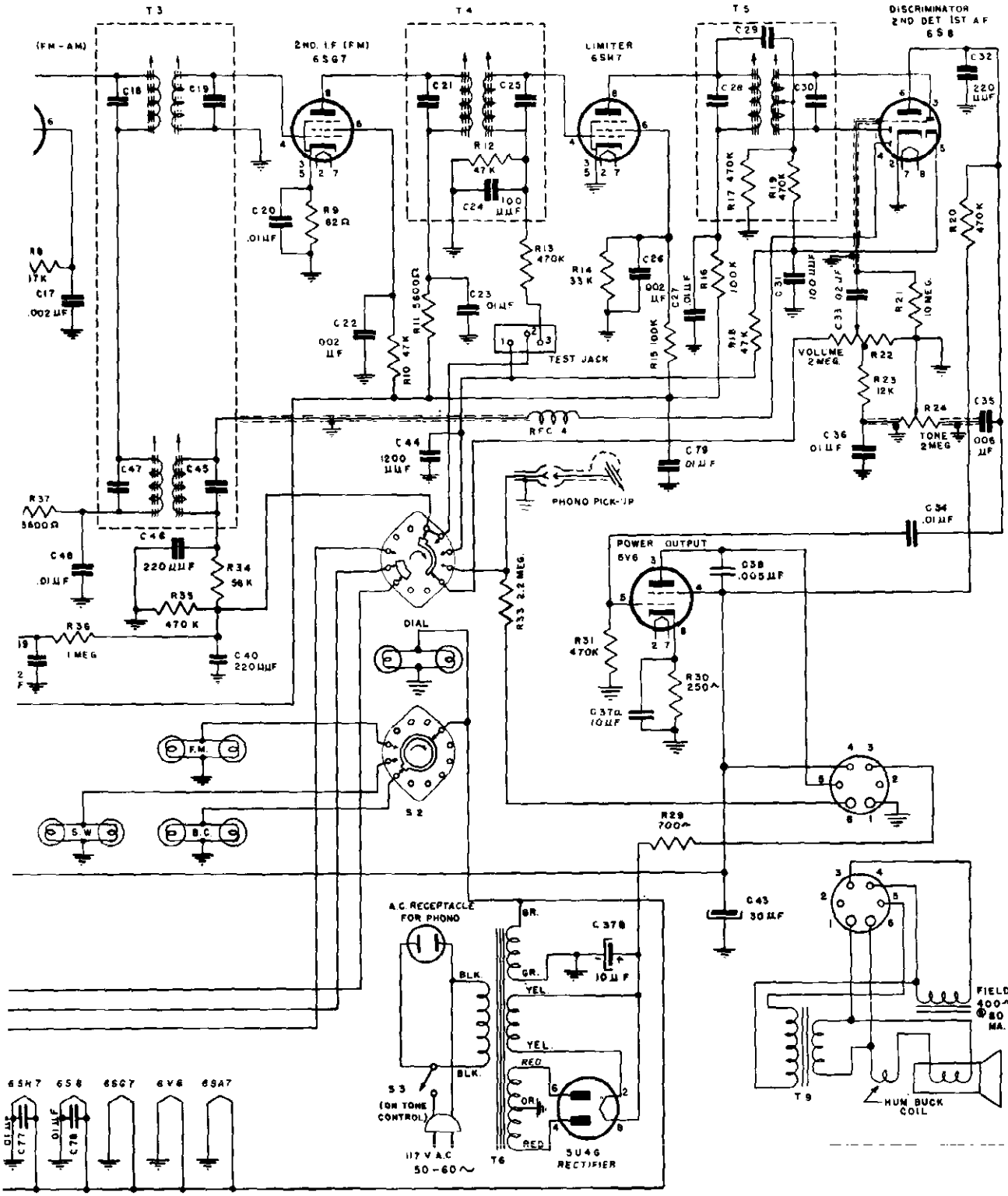

CHASSIS
10

MODELS 10B27E, 10FM782

MAJESTIC RADIO & TELEV. CORP.

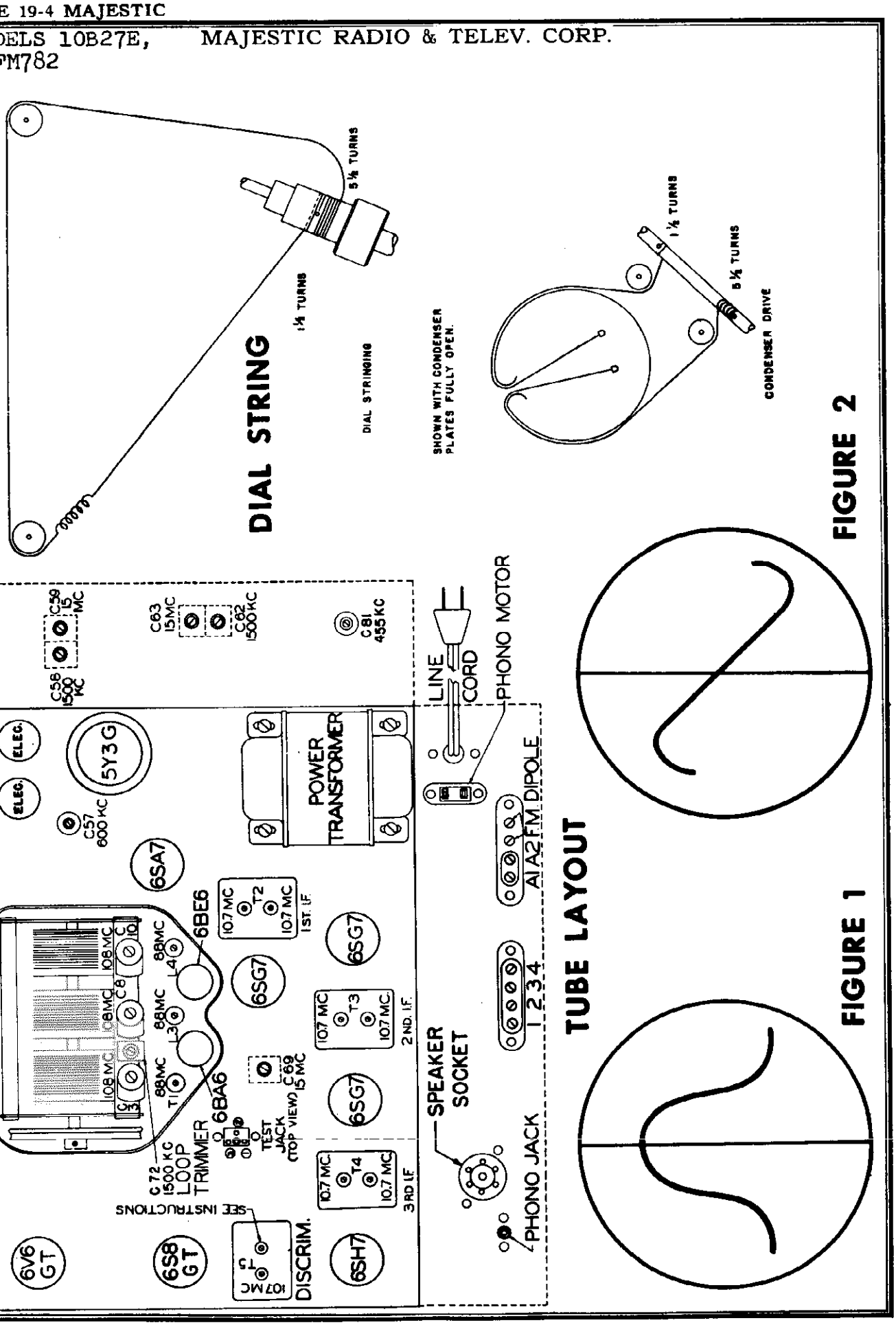

©John F. Rider

MAJESTIC RADIO & TELEV. CORP. MODELS 10B27E, 10FM782

VOLTAGE CHART

Measurements made at 117 volts line; volume control at minimum; zero signal input. Measurements made to chassis ground with vacuum tube voltmeter.

TUBE	ELEMENT	PIN NO.	VOLTAGE
6BA6 R.F. AMP.(F.M.)	plate	5	175
	screen grid	6	83
	cathode	7	.95
	control grid	1	0
6BE6 CONVERTER (F.M.)	plate	5	180
	screen grid	6	97
	cathode	2	0
	control grid	7	0
	osc. injector grid	1	* 3.2 to 3.5
6SG7 R.F. AMP.(A.M.)	plate	8	240
	screen grid	6	195
	cathode	5 & 3	.7
	control grid	4	-.7
6SA7 CONVERTER (A.M.)	plate	3	215
	screen grid	4	90
	cathode	6	0
	control grid	8	-1.0
	osc. injector grid	5	* -13 to +3.6
6SG7 1st I.F. AMP.	plate	8	215
	screen grid	6	130
	cathode	5 & 3	0
	control grid	4	-1.3
6SG7 2nd I.F. AMP.	plate	8	190
	screen grid	6	105
	cathode	5 & 3	1.2
	control grid	4	0
6SH7 LIMITER	plate	8	27
	screen grid	6	40
	cathode	5 & 3	0
	control grid	4	0
6S8 DISC.*-AM DET. 1st I.F. AMP.	plate	6	84
	cathode	2	0
	control grid	top cap	-0.8
5Y3/5U4	plate	4	350-A.C.
	plate	6	350-A.C.
	filament	8/2	325-350 D.C.
6V6 POWER OUTPUT	plate	3	230
	screen grid	4	270
	cathode	8	18
	control grid	5	0

* The Following chart is reference oscillator grid; Oscillator voltage varies with frequency.

Band sw.	Tube	Frequency	Voltage
A.M.	6SA7	600 KC	-11
		1000 KC	-12.5
		1500 KC	-13
S.W.	6SA7	10 MC	4.2
		15 MC	3.6
F.M.	6BE6	88 MC	3.2
		103 MC	3.4
		108 MC	3.5

PARTS LIST

ITEM NO.	PART NO.	DESCRIPTION
C1a,b,c. C2a,b,C3c.	7-17	Ganged Tuning Condenser A.M. & F.M.
C3,C8,C10.	8-38	Trimmer 3-13 mmf (Gang trimmers).
C4,C55,C71	6-159	47 mmf., 500 V ceramic 20% Condenser.
C5,C6,C9,C13,C73,C74.	6-230	.001 mfd 400 V ceramic 10% Condenser.
C7	6-143	24 mmf 500 V ceramic 10% Condenser.
C11	021-15	1000 mmf 500 V mica 5% Condenser.
C12	6-199	15 mmf 500 V ceramic 5% Condenser
C14,C20,C23,C27,C34, C36,C48,C52,C54,C64, C66,C67,C79,C82.	017-5	.01 mfd 600 V paper Condenser
C15,C16,C51,C53.	.....	Part of T2, 1st I.F. transformer.
C17,C22,C26	6-231	.002 mfd 400 V ceramic 10% Condenser
C18,C19,C45,C47.	.....	Part of T3, 2nd I.F. transformer.
C21,C24,C25	.....	Part of T4, 3rd I.F. transformer.
C28,C29,C30	.....	Part of T5, Discriminator transformer
C31	020-39	100 mmf 500 V mica 20% Condenser.
C32,C40,C46	020-53	220 mmf 500 V mica 20% Condenser.
C33,C49	016-6	.02 mfd 400 V paper Condenser
C35	5-69	.006 mfd 600 V paper Condenser.
C37a,b	19-34	10-10 mfd 450 V electrolytic Condenser.
C38	017-4	.005 mfd 600 V paper Condenser.

MODELS 10B27E, 10FM782 — MAJESTIC RADIO & TELEV. CORP.

PARTS LIST--Continued

ITEM NO.	PART NO.	DESCRIPTION
C42	020-67	470 mmf 500 V mica 20% Condenser.
C43	19-36	30 mfd 450 V electrolytic Condenser
C44	021-20	1300 mmf 500 V mica Condenser
C50, C68	016-8	.05 mfd 500 V paper Condenser
C56	6-207	220 mmf 500 V ceramic condenser
C57	8-65	200-600 mmf padder condenser.
C58, C59	.....	Part of L5 coil assembly.
C60, C70	6-206	234 mmf 500 V mica condenser.
C61, C62, C63, C65	.....	Part of T7 coil assembly.
C69	.....	Part of T8 coil assembly.
C71	.....	Part of L1 coil assembly (47 mmf.).
C72	8-35	2½-30 mmf ceramic trimmer
C75, C76, C77, C78	021-74	.01 mfd 500 V mica 20% condenser.
C81	8-63	15-115 mmf trimmer (wave trap).
L1	20-27	Broadcast loop assembly (less cover #20-28)
L2	.....	Loading coil (part of 20-27 loop)
L3	3-184	F.M. B.F. coil.
L4	3-189	F.M. oscillator coil.
L5	3-171	A.M. oscillator coil.
L6	S-1468	Wave trap coil.
R1	02-37	68 ohms ½ watt 10% resistor
R2	03-157	47,000 ohms 1 watt 20% resistor
R3, R11, R37, R42	03-118	5600 ohms 1 watt 10% resistor
R4	01-2	10 ohms ½ watt 10% resistor
R5, R41	9-222	22,000 ohms ½ watt 20% resistor (01-143).
R6, R40	04-143	22,000 ohms 2 watt 20% resistor
R7, R39	02-143	22,000 ohms ½ watt 20% resistor
R8, R10, R43	02-156	47,000 ohms ½ watt 10% resistor
R9	02-41	82 ohms ½ watt 10% resistor
R12	.....	Part of T4 assembly (47,000 ohms ½ w 10%)
R13, R20, R31, R35, R38, R44, R45	02-199	470,000 ohms ½ watt 20% resistor.
R14	02-149	33,000 ohms ½ watt 10% resistor
R15, R16	02-170	100,000 ohms ½ watt 10% resistor.
R17, R19	.....	Part of T5 assembly (470,000 ohms ½ w 10%).
R18	02-157	47,000 ohms ½ watt 20% resistor
R21	02-255	10 megohm ½ watt 20% resistor
R22	13-25	Volume control, 2 megohm with tap
R23	02-132	12,000 ohm ½ watt 10% resistor.
R24	14-7	Tone control 2 megohm, with switch.
R36	02-213	1 megohm ½ watt 20% resistor.
R29	** 9-342	700 ohms 10 watts 10% resistor.
R30	9-290	250 ohm 5 watt 10% wire wound resistor.
R33	02-226	2.2 megohm ½ watt 10% resistor.
R34	01-160	56,000 ohm ½ watt 10% resistor.
R50	02-44	100 ohm ½ watt 10% resistor
RFC-1	3-187	6BA6 plate choke.
RFC-2, RFC-3	3-188	Filament choke.
RFC-4	3-104	Diode plate choke
S1	11-58	Band switch (R.F.).
S2	11-59	Band switch (pilot lites & audio)
S3	.....	Part of Tone control assembly, A.C. switch.
T1	3-183	F.M. antenna transformer.
T2	3-173	1st I.F. transformer.
T3	3-174	2nd I.F. transformer.
T4	3-175	3rd I.F. transformer.
T5	3-176	Discriminator transformer
T6	2-9	Power transformer
T7	3-186	B.C.-S.W. R.F. transformer.
T8	3-185	S.W. antenna transformer.
T9	52-58	Output transformer (part of speaker ass'y).
	15-81	Tube socket (octal)
	15-87	Phono pick-up socket.
	15-135	Phone A.C. receptacle socket.
	26-2	Dial lite (#47 brown bead).
	26-7	Dial lite (#44 blue bead)
	16-34	Tube shield, for 6BA6 & 6BE6 tubes.
	S-1570	Dial pointer & carriage assembly.
	135-30-2	Dial pointer, lower carriage only
	129-56	Dial cord tension spring.
	S-1329	Dial cord, 62 inches long (#134-7).
	S-1328	Dial cord (for condenser gang).
	117-63	Dial scale F.M.
	117-90	Dial scale B.C.
	117-91	Dial scale S.W.
	**22-58	Speaker, 12" complete with output transformer
	115-45-2	Cabinet, combination console.
	122-44	Dial escutcheon grill
	122-20	Escutcheon glass (large).
	21-32	Record changer, Oak
	117-50	Dial masking plate.
	128-85	Knob, (band switch)
	129-46	Spring, insert for above knob
	128-37	Knob, (tone-tuning-volume).
	S-1330 or S-1863	R.F. shelf & tuning condenser ass'y

** Speakers marked with a BLUE X have a change of wiring; ref; speaker plug and chassis socket, pin #2 interchanged with pin #5. Change refers to LATE RUN SETS ONLY.

** R29 (700 ohm) Resistor is omitted in chassis using speaker #22-58. Sets using 10" speakers — schematic circuit remains the same.

(TUBES 5Y3GT & 5U4G ARE INTERCHANGEABLE)

©John F. Rider

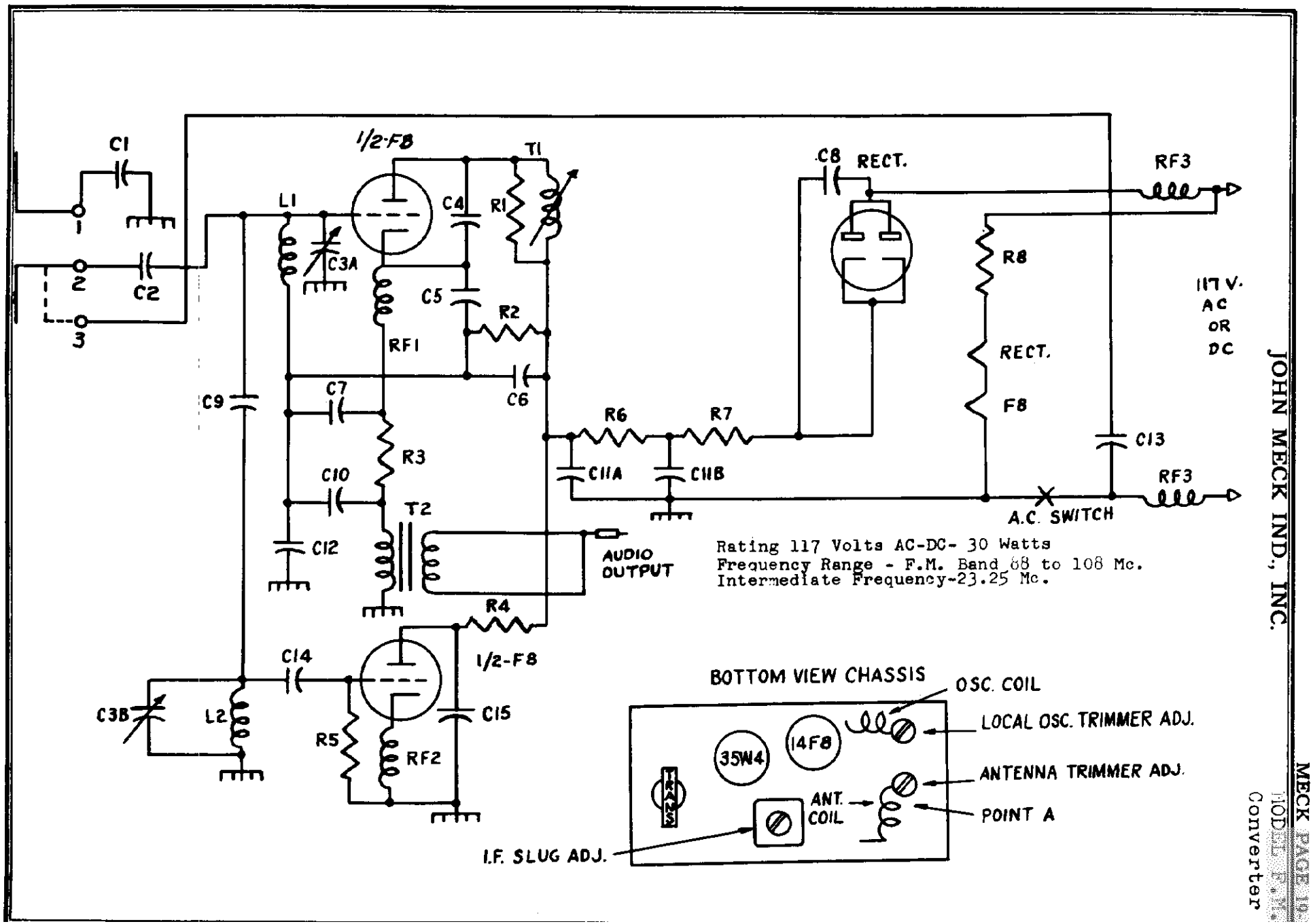

Rating 117 Volts AC-DC- 30 Watts
Frequency Range - F.M. Band 88 to 108 Mc.
Intermediate Frequency-23.25 Mc.

JOHN MECK IND., INC.

MECK PAGE 10
MODEL [illegible]
Converter

INSTRUCTIONS

Alignment Notes

GENERAL DESCRIPTION:

In addition to functioning as a converter-oscillator in a superheterodyne circuit, one section comprising of pins 1 - 3 - 4 of the #14F8 double triode, as used in the MECK F.M. Converter, is functioning as super-regenerative detector and I.F. amplifier. Since the super-regenerative amplification is at the intermediate frequency, relatively little energy is radiated from the antenna. Pins 5 - 6 - 8 is the triode section of the #14F8 that is used as a local oscillator for normal superheterodyne action. Detection of the frequency modulation is accomplished by the signal being normally resident on the side of the selectivity curve. This is the reason it is necessary to slightly mistune the received signal for best F.M. reception.

CIRCUIT SYMBOL	PART NUMBER	DESCRIPTION
C1, C12, C13, C15	CC-15501	Condenser, Ceramic, 500 Mmf.
C2, C9	CC-1520	Condenser, Ceramic 2 Mmf.
C3A, C3B	CV-10014	F.M. Variable
C4, C5	CC-15300	Condenser, Ceramic, 30 Mmf.
C6	CP-12502	Condenser, Paper .005 Mf.
C7	CP-12522	Condenser, Paper, .0025 Mf.
C8	CP-12103	Condenser, Paper, .01 Mf.
C10	CL-10011	Condenser Elect. 8 Mfd.
C11A, C11B	CL-10007	Condenser, Elect., 30/50 Mfd.
C14	CC-15200	Condenser, Ceramic, 20 Mmf.
R1	RC-26802	Resistor, Carbon 68,000 ohm 1/3 Watt
R2	RC-21503	Resistor, Carbon, 150,000 ohm, 1/3 Watt
R3	RC-21501	Resistor, Carbon, 1,500 ohm 1/3 Watt
R4	RC-21000	Resistor, Carbon, 100 ohm 1/3 Watt
R5	RC-22202	Resistor, Carbon, 22,000 ohm 1/3 Watt
R6	RC-22001	Resistor, Carbon 2,000 ohm 1/3 Watt
R7	RC-21001	Resistor. Carbon, 1,000 ohm 1/3 Watt
R8	WP-10003	Line Cord Resistor
L1	TRF-10009	F.M. Antenna Coil
L2	TRC-10010	F.M. Osc. Coil
RF1	TSP-10016	Choke (Inside I.F. Can) & (T1)
RF2	LG-10002	12 Uh. Choke
RF3	LG-10001	Line Cord Inductor
T2	TO-10009	Audio Transformer

The super-regenerative circuit is inherently self-regulating; that is, it acts as if it had good automatic volume control. This super-regenerative circuit has the added feature of an automatic regeneration control, applied to the quench-oscillator Capacitor C-7 and the Resistor R-3, in the cathode controls the quench wave shape, selectivity, and is the quench pulse width control. While the Resistor R-2 and the Capacitor C-6 in the plate circuit regulate the average grid current repetition rate and so controls the regeneration automatically.

The Converter contains a built-in antenna system which is internally connected to Terminal #3. To use the built-in antenna, connect together Terminals #2 and #3, with a short length of wire. In locations unfavorable to F.M. Reception, improved results will be obtained by using an inside or outside dipole antenna. This antenna must be carefully installed and connected to Terminals #1 and #2.

ALIGNMENT CHART

Use A.M. or F.M. Signal Generator

Alignment made with output meter across voice coil of speaker to which the converter is connected.

CIRCUIT ALIGNED	DIAL POINTER	SIGNAL GENERATOR 30% Modulation Freq. Connection	TRIMMER OR SLUG ADJUSTMENT	PROCEDURE
I.F.	108 Mc.	23.25 Mc. through .01 Capacitor to Point A or Pin #1 or F8 Tube	Bottom slug I.F. Can	Adjust for maximum output.
R.F.	105 Mc.	105 Mc. through 300 ohms to Terminal #1 and Terminal #2	Local Osc. Trimmer	Adjust for maximum output.
R.F.	105 Mc.	105 Mc. through 300 ohms to Terminal #1 and Terminal #2	Antenna Trimmer	Adjust for maximum output while rocking variable condenser

ALIGNMENT OF F.M. STATION:

If you do not have the equipment to make the necessary alignment adjustments, the R.F. section may be easily aligned on a local station. With the proper antenna attached, tune in an F.M. station, preferrably between 97 and 108 Mc. Note any difference in calibration and correct accordingly with the local oscillator trimmer. Then adjust the antenna trimmer for maximum output while rocking the variable condenser.

JOHN MECK IND., INC.

MODELS 5A7, 5B5, CB500, CG500

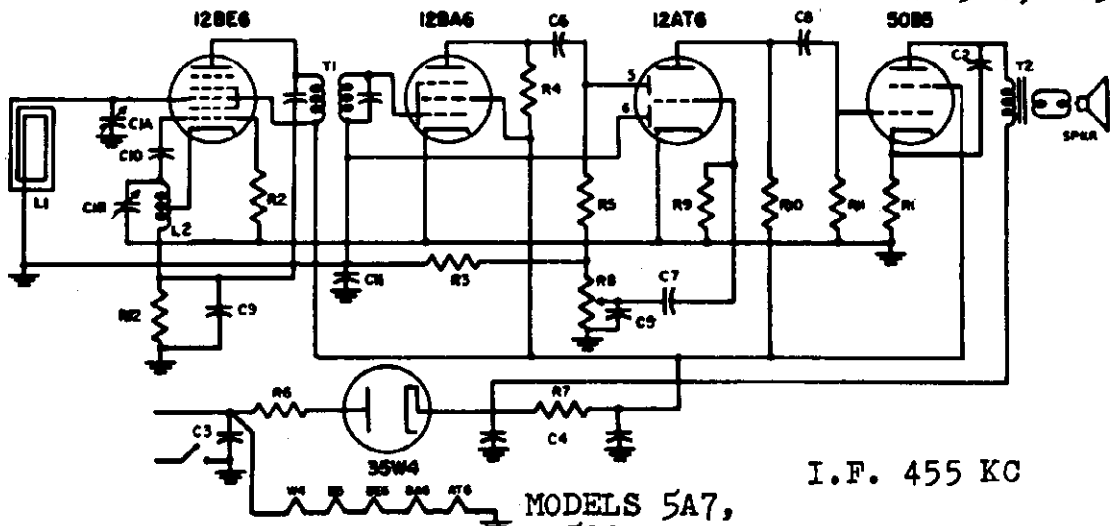

I.F. 455 KC

MODELS 5A7, CG500

Part No.	Circuit Symbol	Description	Part No.	Circuit Symbol	Description
CV-10008	C1	Variable condenser for Model 5A7	RCP-10220	R6	Resistor carbon 22 ohm ½ watt
CPP-14208	C2	Condenser paper tub .02 mfd-400V	RCP-41001	R7	Resistor carbon 1000 ohm 1 watt
CPP-14508	C3	Condenser paper tub .05 mfd-400V	VCP-10105	R8	Volume control 1 megohm and switch
CLP-10007	C4	Condenser electrolytic 50-30 mfd-150V	VCP-12105	R8	Volume control for Model 5A7- 1 megohm
CMP-15251	C5, C6	Condenser mica 250 mmf-500V	RCP-31005	R9	Resistor carbon 10 megohm ½ watt
CPP-12103	C7, C8	Condenser paper tub .01 mfd-200V	RCP-32203	R10	Resistor carbon 220,000 ohm ½ watt
CPP-11103	C9	Condenser paper tub .01 mfd-150V	RCP-34703	R11	Resistor carbon 470,000 ohm ½ watt
CMP-15500	C10	Condenser mica 50 mmf-500V	ALP-10013	L1	Loop antenna
CPP-12203	C11	Condenser paper .02 mfd-200V	TRCP-10000-D	L2	Oscillator coil
RCP-31500	R1, R12	Resistor carbon 150 ohm ½ watt	TSP-10002	T1	I.F. Transformer
RCP-31002	R2	Resistor carbon 10,000 ohm ½ watt	TOP-10000	T2	Output transformer
RCP-32204	R3	Resistor carbon 2.2 megohm ½ watt	SRP-10005	SPKR	Speaker P.M. 3" round for Model 5A7
RCP-36801	R4	Resistor carbon 6800 ohm ½ watt			
RCP-31003	R5	Resistor carbon 100,000 ohm ½ watt			

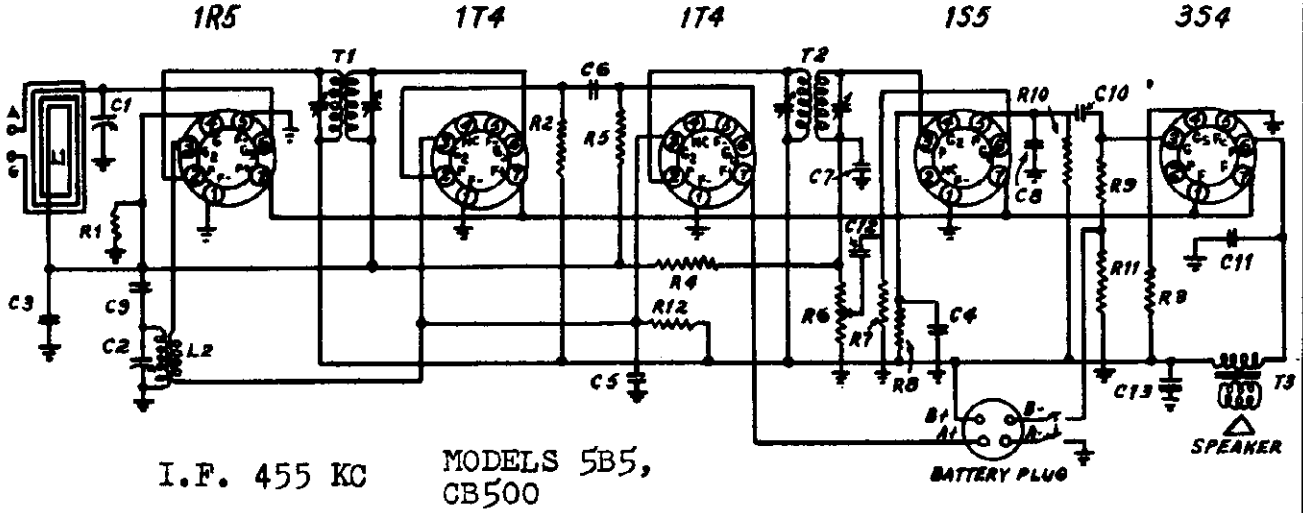

I.F. 455 KC

MODELS 5B5, CB500

Circuit Symbol	Part Number	Description	Circuit Symbol	Part Number	Description
C1,C2	CV-10002-E	Condenser-Variable with pulley	R8, R9	RC-35004	Resistor-Carbon, 3 Meg ohms ½ watt
C3,C4,C5	CP-14503	Condenser-Paper, 0.05 mfd. 400 volt	R10	RC-31004	Resistor-Carbon, 1 Meg ohm ½ watt
C6,C7	CM-15251	Condenser-Mica. 250 mmfd. 500 volt	R11	RC-34000	Resistor-Carbon, 400 ohms ½ watt
C8,C9	CM-15000	Condenser-Mica. 50 mmfd. 500 volt	R12	RC-31002	Resistor-Carbon, 10,000 ohms ½ watt
C10,C11,C12	CP-14103	Condenser-Paper, 0.01 mfd. 400 volt	L1	AL-10004	Antenna-Loop
C13	CL-10006	Condenser-Electr. 12 to 20 mfd. 150 volt	L2	TRC-10004	Coil-Oscillator
R1	RC-31003	Resistor-Carbon, 100,000 ohms ½ watt	T1	TS-10000	Transformer-1st I.F.
R2, R3	RC-32004	Resistor-Carbon, 0,000 ohms ½ watt	T2	TS-10001	Transformer-2nd I.F.
R4, R5	RC-32004	Resistor-Carbon, 2 Meg ohms ½ watt	T3	TO-10002	Transformer-Output
R6	VC-20105	Control-Volume, 1 Meg ohm with d.p.s.t. switch	SPKR	SR-10002	Speaker-P.M. 5" round less output transformer
R7	RC-31005	Resistor-Carbon, 10 Meg ohms ½ watt			

MODELS 5C5,
5D7-W18, CA-500

JOHN MECK IND., INC.

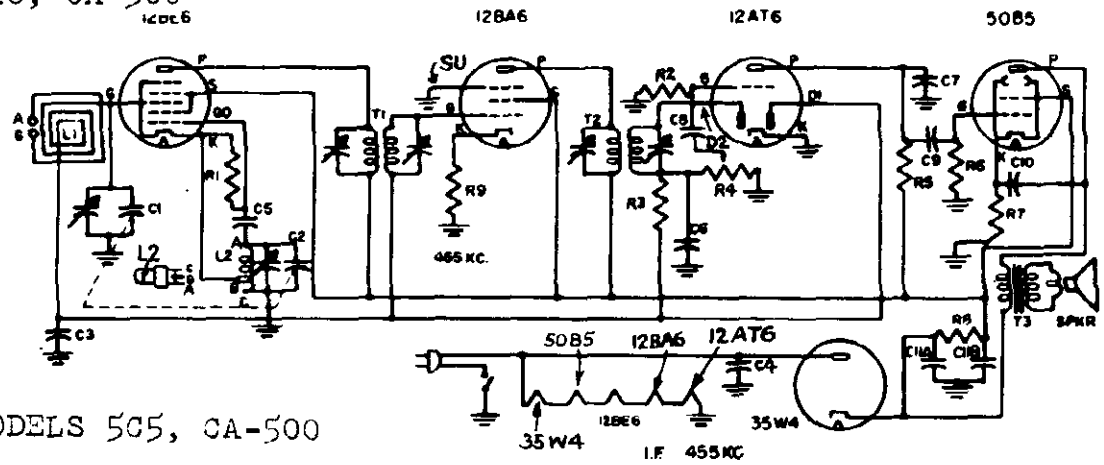

MODELS 5C5, CA-500

PART NO.	CIRC. SYM.	DESCRIPTION
CV-10002-E	C1,C2	Condenser - Variable Tuning with Drum
CP-14503	C3,C4	Condenser - .05 Mfd. 400 Volt
CM-15500	C5	Condenser - .00005 Mfd. Mica
CM-15251	C6,C7	Condenser - .00025 Mfd. Mica
CP-14103	C8,C9	Condenser - .01 Mfd. 400 Volt
CP-14503	C10	Condenser - .05 Mfd. 400 Volt
CL-10001	C11A,C11B	Condenser - 20/20 Mfd. 150 Volt Elect.
RC-32002	R1	Resistor-Carbon 20,000 ohms ½ watt
RC-31005	R2	Resistor-Carbon 10 Meg. ½ watt
RC-32004	R3	Resistor-Carbon 2 Meg. ½ watt
VC-10105	R4	Volume Control - 1 Meg. (with switch)

PART NO.	CIRC. SYM.	DESCRIPTION
RC-32503	R5	Resistor-Carbon 250,000 Ohms ½ watt
RC-35003	R6	Resistor-Carbon 500,000 Ohms ½ watt
RC-31500	R7	Resistor-Carbon 150 Ohms ½ watt
RC-32000	R8	Resistor-Carbon 200 Ohms ½ watt
RC-31500	R9	Resistor-Carbon 150 Ohms ½ watt
AL-10004	L1	Loop Antenna
TRC-10000-D	L2	Coil Oscillator
TS-10000	T1	Transformer 1st. I.F.
TS-10001	T2	Transformer 2nd. I.F.
TO-10000	T3	Transformer-Output for speaker
SR-10000	SPKR	Speaker, 4" P.M.

MODEL 5D7-W18

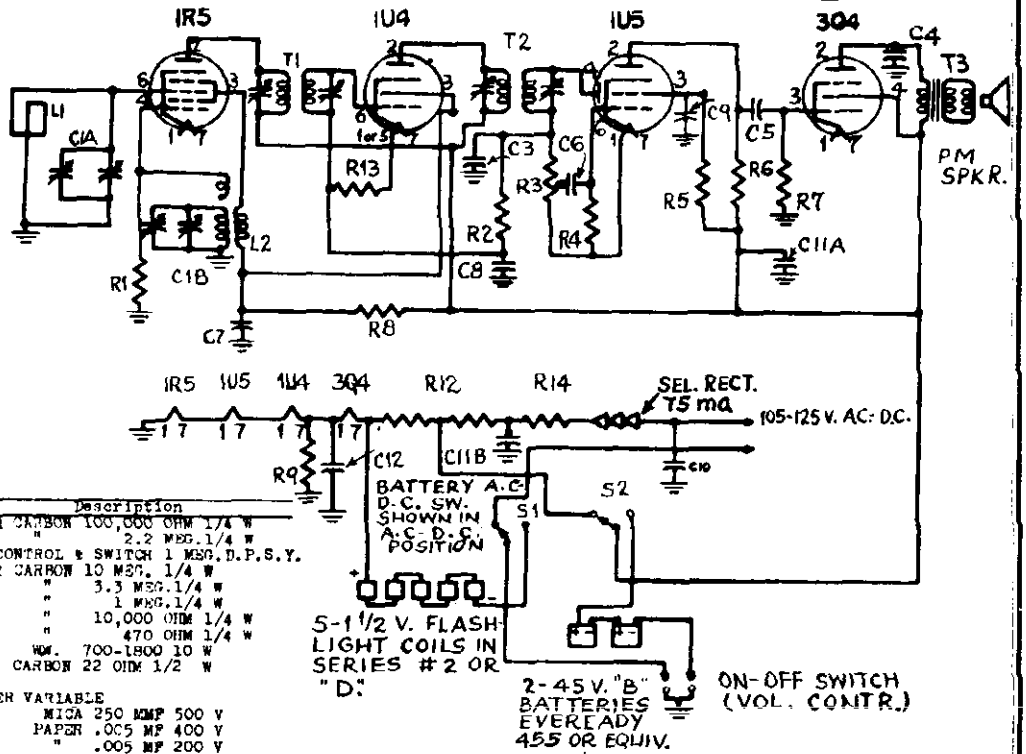

Circuit Sym	Part No.	Description
R1	RC-11005	RESISTOR CARBON 100,000 OHM 1/4 W
R2,7,13	RC-32204	" " 2.2 MEG.1/4 W
R3	VC-21105	VOLUME CONTROL & SWITCH 1 MEG.D.P.S.Y.
R4	RC-11005	RESISTOR CARBON 10 MEG. 1/4 W
R5	RC-13304	" " 3.3 MEG.1/4 W
R6	RC-11004	" " 1 MEG.1/4 W
R8	RC-11002	" " 10,000 OHM 1/4 W
R9	RC-14700	" " 470 OHM 1/4 W
R12	RX-10004	" WW. 700-1800 10 W
R14	RC-30220	" CARBON 22 OHM 1/2 W
C1	CV-10008	CONDENSER VARIABLE
C3	CM-15251	" MICA 250 MMF 500 V
C4	CP-14502	" PAPER .005 MF 400 V
C5	CP-12502	" " .005 MF 200 V
C7,9	CP-12103	" " .01 MF 200 V
C8	CP-12203	" " .02 MF 200 V
C10	CP-14503	" " .05 MF 400 V
C11	CL-10010	" ELECT. A-90 B-20 150 V
C12	CL-10009	" " 100 MF 25 V
L1	AL-10015	LOOP ANTENNA
L2	TRC-10015	OSCILLATOR COIL
S1,2	VS-10005	SWITCH AC-DC BATTERY
T1	TS-10018A	I.F. TRANSFORMER INPUT
T2	TS-10019A	I.F. TRANSFORMER OUTPUT
T3	TO-10007	OUTPUT TRANSFORMER
SPKR.	SR-10000	SPEAKER 4" PM - ROUND
C6	CP-12202	CONDENSER PAPER .002 MF 200 V

105 to 125 VOLTS A.C. (50 to 60 CYCLES) OR D.C.

Power Consumption 15 Watts

I.F. 455 KC

JOHN MECK IND., INC.

MODELS DA-601, DB-602

MODELS DA-601, DB-602
MODEL 6B8

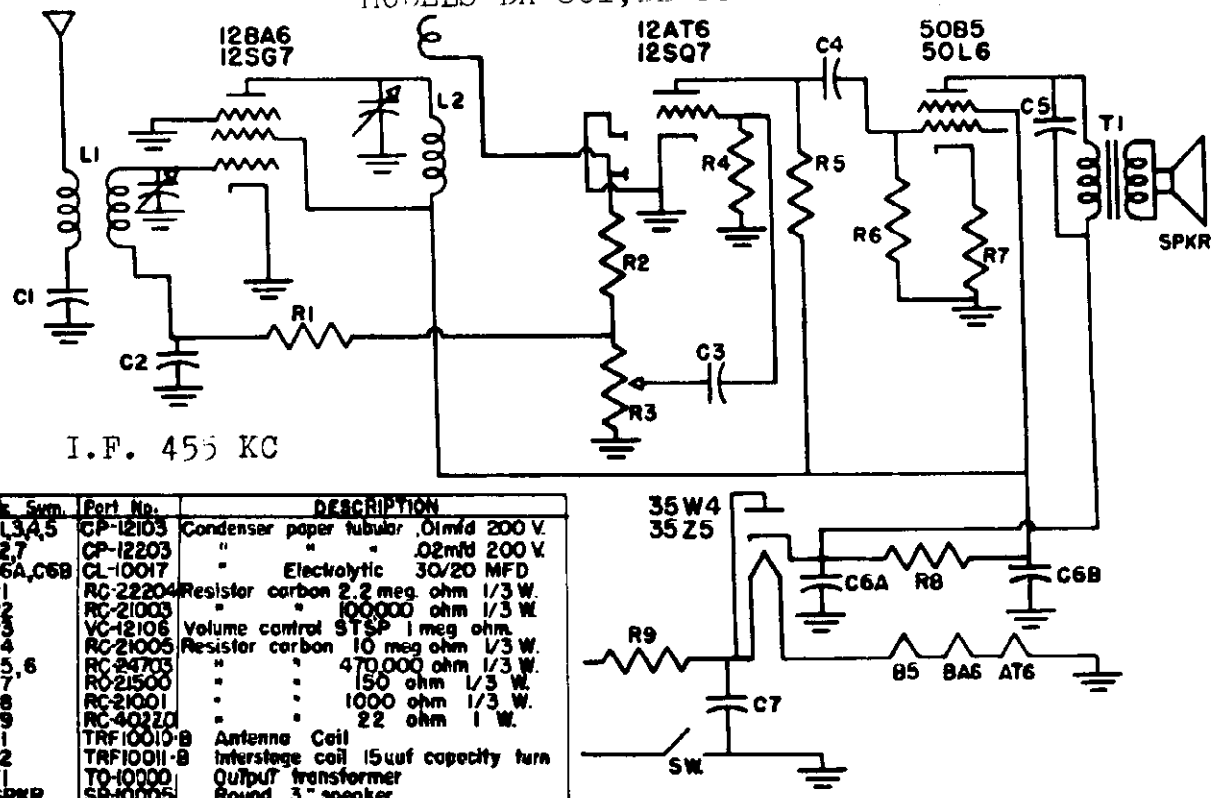

Ckt. Sym.	Part No.	DESCRIPTION
C1,3,4,5	CP-12103	Condenser paper tubular .01mfd 200 V.
C2,7	CP-12203	" " " .02mfd 200 V.
C6A,C6B	CL-10017	" Electrolytic 30/20 MFD
R1	RC-22204	Resistor carbon 2.2 meg. ohm 1/3 W.
R2	RC-21003	" " 100,000 ohm 1/3 W.
R3	VC-12106	Volume control STSP 1 meg ohm.
R4	RC-21005	Resistor carbon 10 meg ohm 1/3 W.
R5,6	RC-24703	" " 470,000 ohm 1/3 W.
R7	RC-21500	" " 150 ohm 1/3 W.
R8	RC-21001	" " 1000 ohm 1/3 W.
R9	RC-40220	" " 22 ohm 1 W.
L1	TRF10010-B	Antenna Coil
L2	TRF10011-B	Interstage coil 15uuf capacity turn
T1	TO-10000	Output transformer
SPKR.	SR-10005	Round 3" speaker

MODEL 6B8

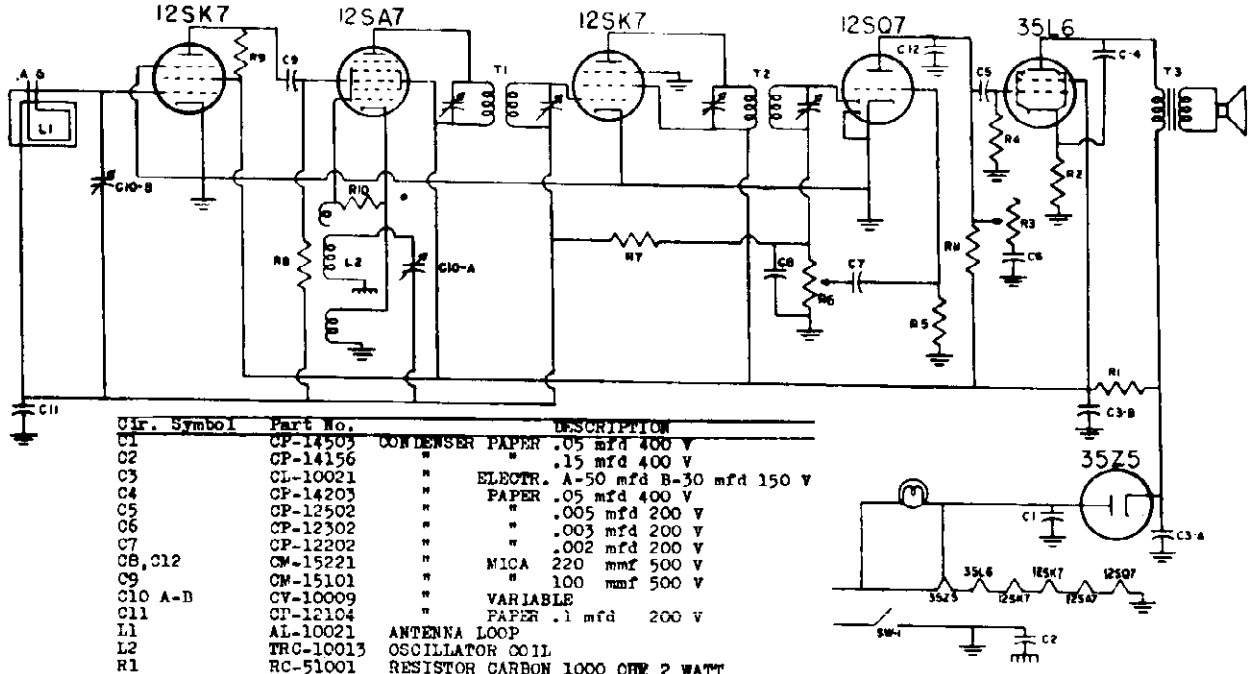

Cir. Symbol	Part No.	DESCRIPTION
C1	CP-14503	CONDENSER PAPER .05 mfd 400 V
C2	CP-14156	" " .15 mfd 400 V
C3	CL-10021	" ELECTR. A-50 mfd B-30 mfd 150 V
C4	CP-14203	" PAPER .05 mfd 400 V
C5	CP-12502	" " .005 mfd 200 V
C6	CP-12302	" " .003 mfd 200 V
C7	CP-12202	" " .002 mfd 200 V
C8,C12	CM-15221	" MICA 220 mmf 500 V
C9	CM-15101	" " 100 mmf 500 V
C10 A-B	CV-10009	" VARIABLE
C11	CP-12104	" PAPER .1 mfd 200 V
L1	AL-10021	ANTENNA LOOP
L2	TRG-10013	OSCILLATOR COIL
R1	RC-51001	RESISTOR CARBON 1000 OHM 2 WATT
R2	RC-31500	" " 150 OHM 1/2 WATT
R3	VC-13105	1 MEG TONE CONTROL
R4	RC-15003	RESISTOR CARBON 500,000 OHM 1/4 WATT
R5	RC-11005	" " 10 MEG OHM 1/4 WATT
R6	VC-11105	1 MEG VOLUME CONTROL WITH SWITCH
R7	RC-12204	RESISTOR CARBON 2.2 MEG OHM 1/4 WATT
R8	RC-11003	" " 100,000 OHM 1/4 WATT
R9	RC-14701	" " 4700 OHM 1/4 WATT
R10	RC-12202	" " 22,000 OHM 1/4 WATT
R11	RC-12203	" " 220,000 OHM 1/4 WATT
T1	TSP-10020	INPUT I.F. TRANSFORMER
T2	TSP-10021	OUTPUT I.F. TRANSFORMER
T3	TO-10011	OUTPUT TRANSFORMER

I.F. 455 KC

MEISSNER MFG. DIV.
MAGUIRE INDUSTRIES, INC.

MODEL 9-10910

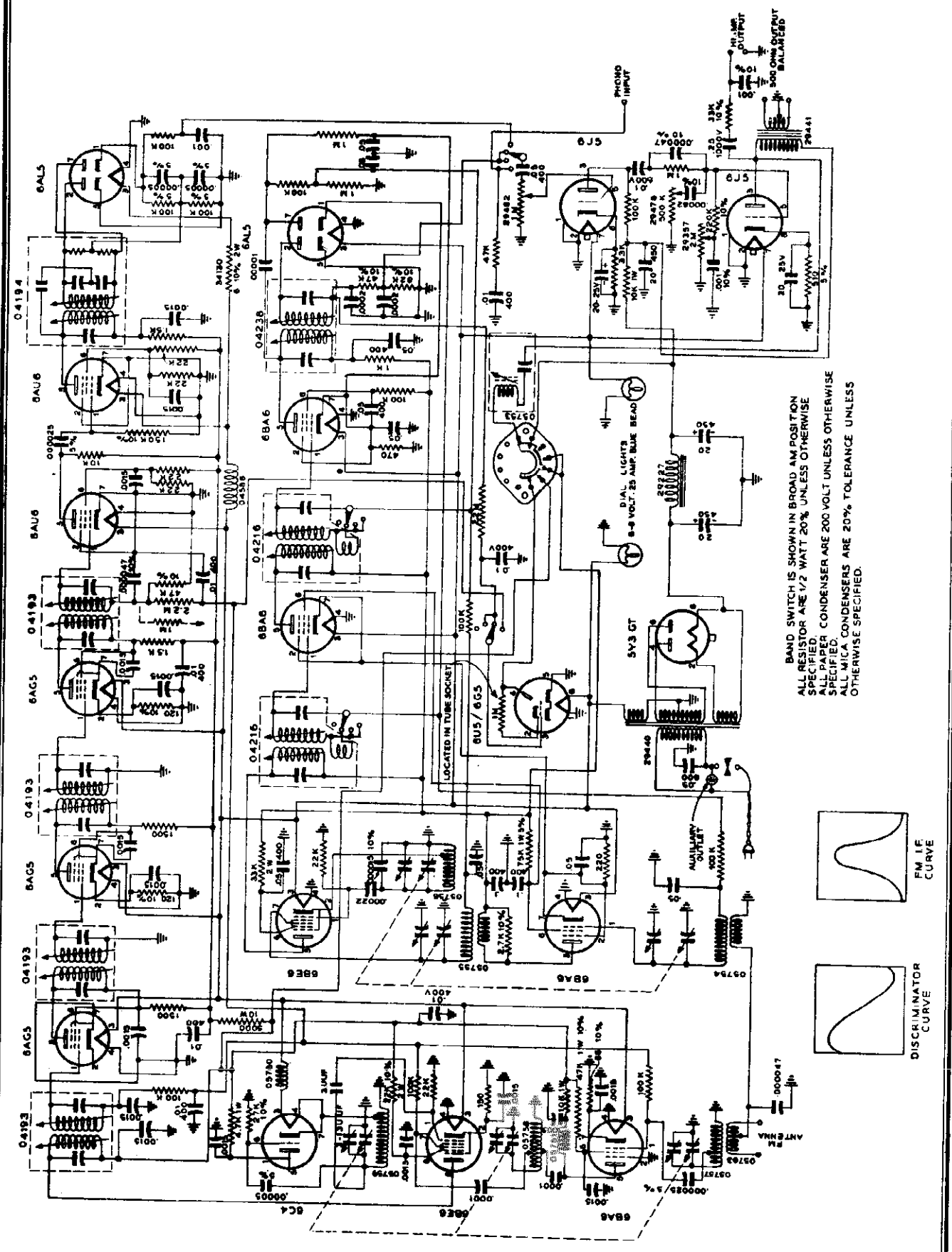

MODEL 9-10910

MEISSNER MFG. DIV.
MAGUIRE INDUSTRIES, INC.

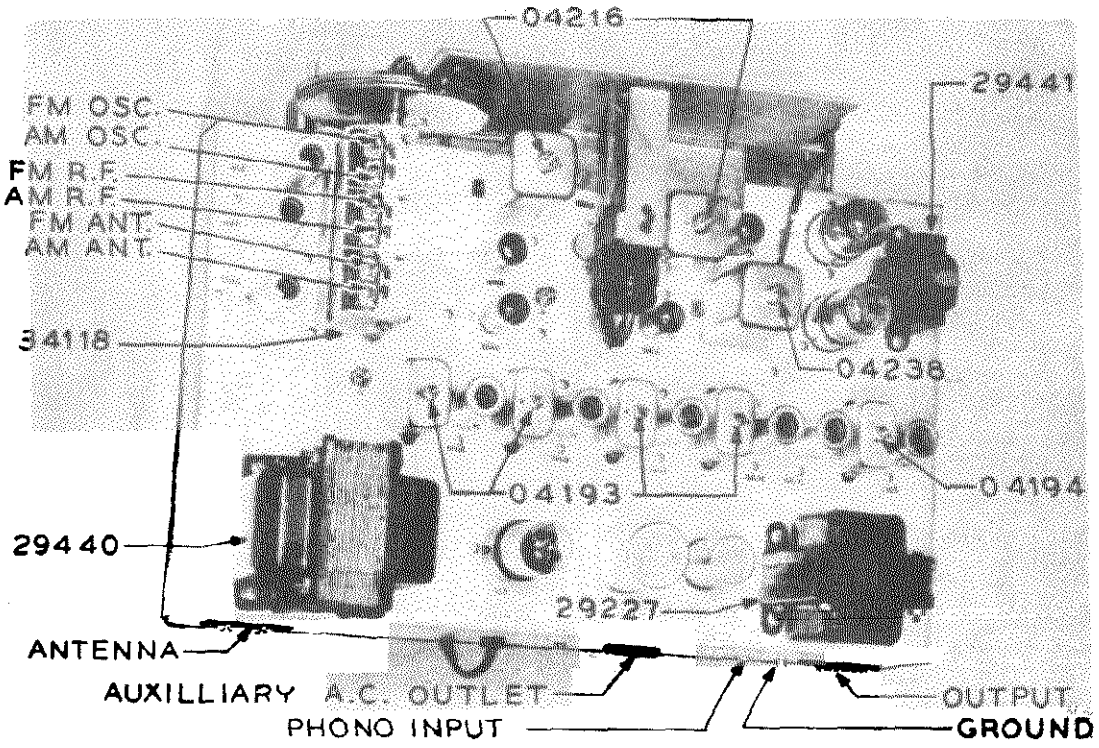

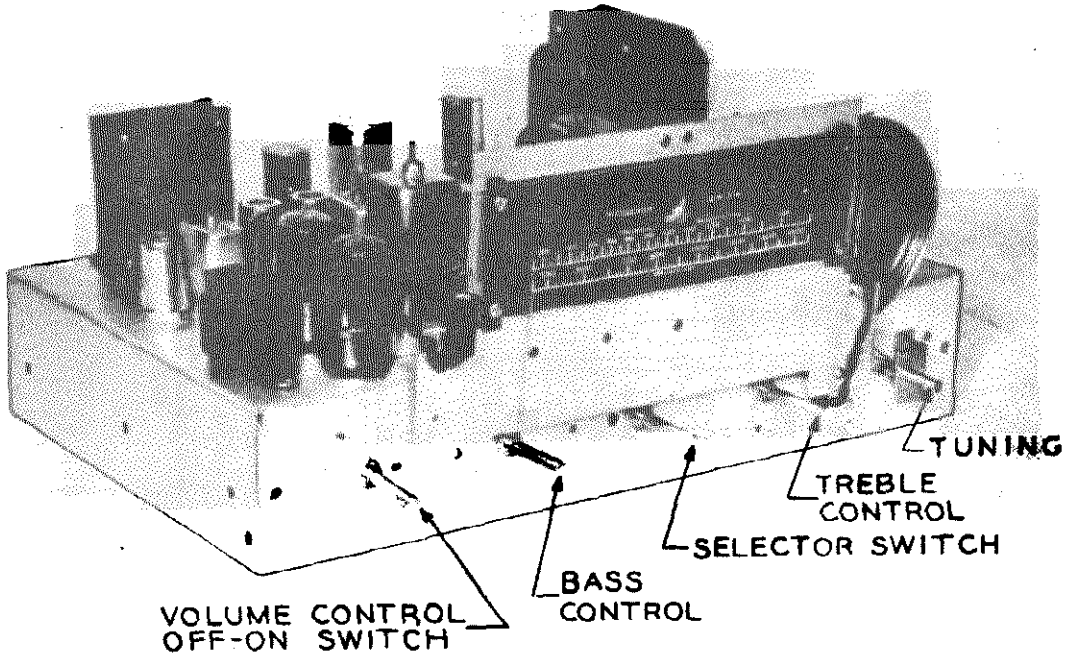

Power Supply 105-125 volts, 50-60 cycles.
CAUTION, DO NOT ATTEMPT TO OPERATE ON OTHER SUPPLY.
Power Consumption 75 watts.
Type of Circuit - Superheterodyne.
Intermediate Frequencies AM 455 kc.
FM 10.7 mc.
Output impedance - 500 ohm balanced and high impedance unbalanced.
Antenna impedance
Broadcast - Standard
F M - - - - 300 ohms.

Alignment AM

The AM alignment may be carried out with an AM signal generator and an output meter. Connect a 500 ohm resistor across the 500 ohm output terminals of the Tuner. The output meter may be connected from the high impedance output terminal to chassis.

For IF alignment introduce a 455 kc. 30% modulated signal into the signal grid of the 6BE6 (Pin #7) through a .1 ufd. coupling condenser. The output of the signal generator should at all times be kept as low as will give a satisfactory reading on the output meter. With the selector switch in the sharp position, adjust the top and bottom adjustments of IF transformers 04216, 04216, and 04238 for maximum output. Now move the selector switch to the broad position and check the symmetry of the IF response curve by swinging the signal generator frequency. The response in the broad position should be double peaked, the dip between the peaks falling at 455 kc. The peaks should be equally spaced on either side of 455 kc. and should be of approximately the same amplitude. The gain in the broad position will be less than the gain in the sharp position. If the above conditions do not exist, then a careful recheck of alignment in the sharp position should be carried out.

For RF alignment introduce a 30% modulated signal through a 200 uuf. dummy antenna to one of the FM antenna terminals. First check dial pointer position by turning the gang condenser to full mesh and setting the pointer to the last reference mark at the low end of the dial scale. With signal generator and Tuner set to 1400 kc., adjust the oscillator trimmer for maximum output, then adjust RF and antenna trimmers for maximum output.

Alignment FM

For FM alignment a frequency modulated generator (60 to 400 cycle modulation, 400 kc. sweep) and an oscilloscope are required. Connect the modulation source on the signal generator into the horizontal amplifier of the oscilloscope. It may be necessary to connect a phase shifting network in this line between the signal generator modulating source and the oscilloscope horizontal amplifier in order to get the correct pattern on the oscilloscope. Connect the Tuner output to the vertical amplifier input of the oscilloscope.

Introduce a 10.7 mc. (400 kc. sweep) signal into the grid of the first 6AU6 limiter tube (Pin #1) through a .01 ufd. condenser. Make the ground connection of the generator to the center post of the 6AU6 socket with as short a lead as

possible. Remove the last 6AG5 IF amplifier tube to avoid the possibility of stray signals coming through the IF system and confusing the discriminator alignment procedure. Adjust the signal generator sweep and signal amplitude, and the oscilloscope for a pattern like the discriminator pattern shown in Fig. 3. Adjust the top adjustment on the 04194 discriminator coil for maximum vertical amplitude on the oscilloscope pattern and adjust the bottom adjustment on this coil for best symmetry of the pattern about the center. Repeat these two adjustments until no further improvement can be made. This completes the adjustment of the discriminator coil. Replace IF tube.

For alignment of the IF amplifier the same oscilloscope set-up is retained except the input to the vertical amplifier. Feed the input to the vertical amplifier with audio taken from the first limiter grid return. This point is identified as point X on the circuit diagram of Fig. 3. Connection should be made to this point through a 1 megohm isolating resistor as shown by dotted line in Fig. 3.

Introduce a 10.7 mc. (400 kc. sweep) signal into the signal grid of the 6BE6 (Pin #7) through a .01 ufd. condenser. Make the ground connection of the signal generator to the center post of the 6BE6 socket with as short a lead as possible. Adjust signal generator and oscilloscope to obtain a pattern like the IF pattern shown in Fig. 3. Adjust top and bottom adjustments on the four 04193 IF coils for maximum amplitude and symmetry of the pattern, keeping the signal level from the generator as low as possible throughout the adjustment. If the pattern tends to become double peaked or badly unsymmetrical during adjustment the trouble is probably due to incorrect placement of some of the connecting leads in the test set-up. Corrections should be made to eliminate the trouble and the adjustments repeated.

For the high frequency adjustments the same oscilloscope set-up may be retained. In connecting the signal generator to the antenna terminals the signal generator is not connected to chassis as in the previous connections. Connect two 150 ohm resistors to the two antenna terminals on the tuner. Connect the other ends of these two resistors to the two generator output terminals. If the setting of the dial pointer has been previously checked during AM alignment it is not necessary to recheck it at this point. Set the signal generator and the Tuner to 106 mc. and adjust the oscillator trimmer (identified in Fig. 1) to bring the pattern to center on the oscilloscope. In case this is possible with two different positions of the oscillator trimmer, use the position of least capacity. Adjust the RF and Antenna trimmers (identified in Fig. 1) for the greatest amplitude of the pattern keeping the generator output as low as possible during the process of adjustment.

Voltage Readings

DC taken with 20,000 ohm per volt meter.
AC taken with 1,000 ohm per volt meter.
No signal - AM sharp position except * taken in FM position.
Line voltage 117.

Tube	Pin 1	Pin 2	Pin 3	Pin 4	Pin 5	Pin 6	Pin 7	Pin 8
*6BA6	Slight negative DC	0	6.3 AC	0	170 DC	87 DC	0.8 DC	———
*6BE6	Slight negative DC	1.4 DC	6.3 AC	0	240 DC	87 DC	Slight negative DC	———
*6C4	170 DC	0	6.3 AC	0	170 DC	Slight negative DC	0	———
*6AG5	Slight negative DC	0	6.3 AC	0	83 DC	85 DC	0	———
*6AG5	0	0.7 DC	6.3 AC	0	83 DC	85 DC	0.7 DC	———
*6AG5	0	0.7 DC	6.3 AC	0	83 DC	85 DC	0.7 DC	———
*6AU6	Slight negative DC	0	6.3 AC	0	84 DC	44 DC	0	———
*6AU6	Slight negative DC	0	6.3 AC	0	93 DC	42 DC	0	———
*6AL5	**-1.3 DC	**-0.7 DC	4.5 AC	0	0	0	**-7.5 DC	———
6BA6	0	2.2 DC	6.3 AC	0	280 DC	82 DC	2.2 DC	———
6BE6	-5 DC	0	6.3 AC	0	280 DC	73 DC	0	———
6BA6	0	2.2 DC	6.3 AC	0	280 DC	82 DC	2.2 DC	———
6BA6	0	2.8 DC	6.3 AC	0	278 DC	95 DC	2.8 DC	———
6AL5	2.8 DC	Slight negative DC	6.3 AC	0	0	0	0	———
6J5	0	0	95 DC	0	0	0	6.3 AC	4.0 DC
6J5	0	0	186 DC	280 DC	0	0	6.3 AC	4.6 DC
6U5/6G5	Green 0	———	Yellow 0	Red 280 DC	Brown 0	Blue 6.3 AC	———	———
5Y3	0	284 DC	0	260 AC	0	260 AC	280 DC	284 DC

NOTE: Normal tolerance on components makes possible a variation of ± 20% in all DC voltage readings.

** Subject to wide variation.

Sensitivity - less than 10 microvolts.
Audio fidelity
Flat within ± 2 db. from 30 to 15000 cycles.
Band width at 1000 kc.
Sharp 7 kc.
Broad 14 kc.
Output
High impedance 11 volts maximum for 2-1/2% distortion.
500 ohm 2 volts maximum for 2-1/2% distortion.
Distortion
2-1/2% at full rated output
Less at lower levels
Tone control action
Bass boost at 40 cycles - 12 db.
Treble suppression at 8000 cycles - 12 db.
Hum
Maximum - 0.5 micro watts.

MODEL 9-1091C

MEISSNER MFG. DIV.
MAGUIRE INDUSTRIES, INC.

DC Resistance Readings

Band Switch in BC sharp position.
Measured from specified tube pin to chassis.
Tuner turned off.
*Resistance readings in the B+ circuits may vary widely depending on the condition of the filter condensers and the polarity of the ohmmeter.
**With bass control set clockwise.

Tube	Pin 1	Pin 2	Pin 3	Pin 4	Pin 5	Pin 6	Pin 7	Pin 8
	Values below given in ohms							
6BA6	2.35M	0	0	0	37K	74K	68	-----
6BE6	22K	150	0	0	27K	49K	2.35M	-----
6C4	32K	Inf.	Less than 1	0	32K	15K	0	-----
6AG5	2.35M	0	0	0	23K	23K	0	-----
6AG5	Less than 1	120	0	0	23K	23K	120	-----
6AG5	Less than 1	120	0	0	23K	23K	120	-----
6AU6	47K	0	0	0	32K	15K	0	-----
6AU6	150K	0	Less than 1	0	23K	15K	0	-----
6AL5	200K	150K	2.5	0	0	Inf.	150K	-----
6BA6	2.2M	220	0	0	*500K	*500K	220	-----
6BE6	22K	Less than 1	0	0	*500K	*500K	1.1M	-----
6BA6	2.1M	220	0	0	*500K	*500K	220	-----
6BA6	1M	470	0	0	*500K	*500K	470	-----
6AL5	470	130K	0	0	0	Inf.	1.1M	-----
6J5	0	0	*500K	Inf.	0 to 200	Inf.	0	3.3K
6J5	0	0	*500K	*500K	**220K	0	0	510
6U5/6G5	Green 0	-----	Yellow 2.3M	Red *500K	Brown 0	Blue 0	-----	-----
5Y3	Inf.	*500K	Inf.	95	Inf.	95	*500K	*500K

Power Amplifier

If this Meissner tuner is to be used with a power amplifier, a power amplifier should be chosen which will give full power output when driven with the maximum output of the Tuner (see "Nominal Performance" ratings). It is not essential that the power amplifier have exactly the right gain, but if best results are to be obtained the gain of the power amplifier should not greatly exceed the requirement. If, for instance, the power amplifier has an input jack for a phonograph pickup, then the Tuner might be fed into this jack through a voltage divider made from a 30,000 ohm potentiometer. This potentiometer should be adjusted to a level where full rated output (11 volts) from the Tuner will just produce full power output from the power amplifier. It is not recommended that the Tuner be fed into the Microphone input jack of a power amplifier.

MODEL 2961

MEISS
MAGUIRE

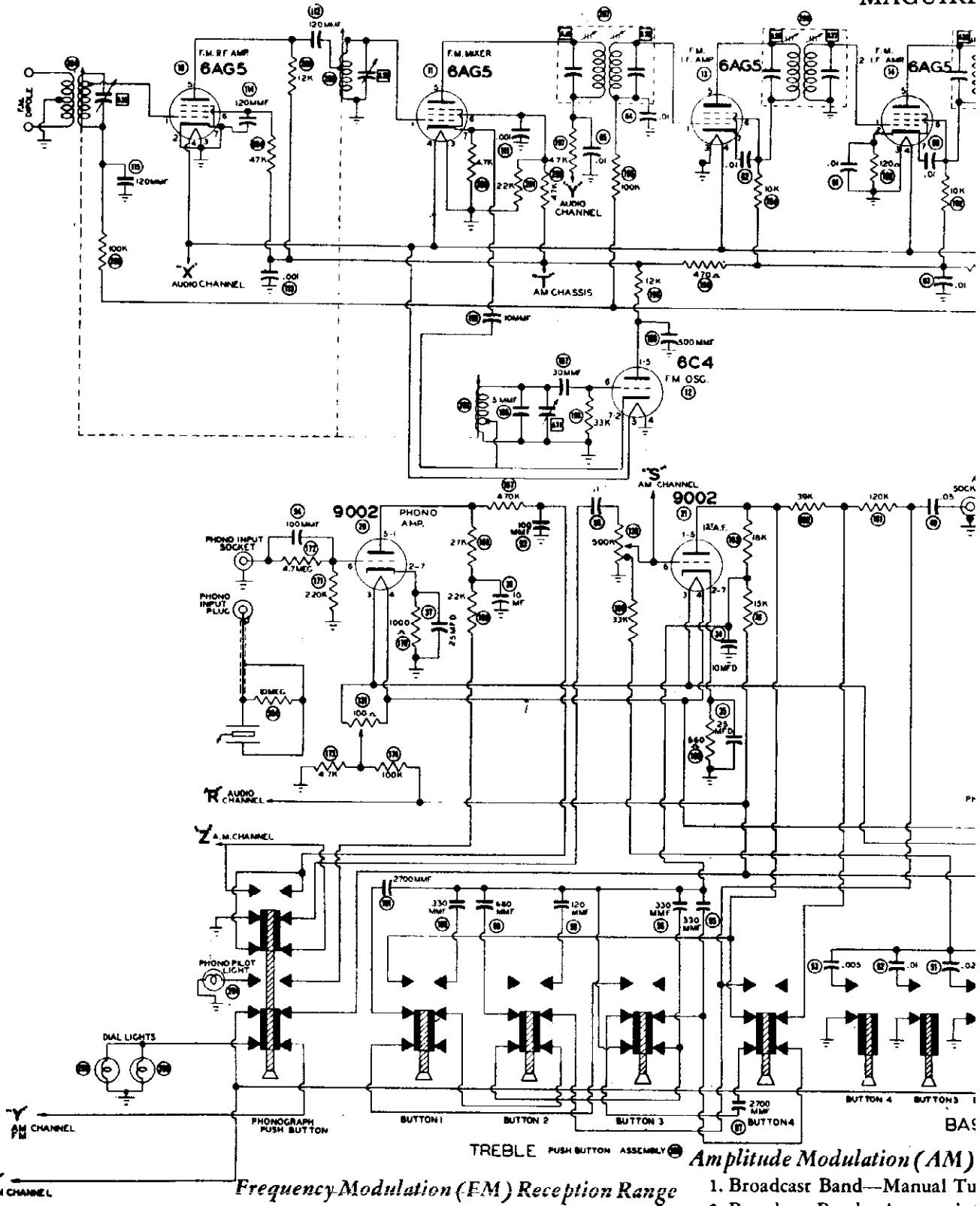

Frequency Modulation (FM) Reception Range

88-108 MC

Intermediate Frequency (IF) Amplifier Characteristics

AM Channel-Peaking Frequency 455 KC
Bandwidth (Normal) 19 KC
Bandwidth (Sharp) 7.3 KC
FM Channel-Peaking Frequency 10.7 MC
Bandwidth 150 KC

Amplitude Modulation (AM)

1. Broadcast Band—Manual Tu
2. Broadcast Band—Automatic
six desired stations. Each pu
conveniently adjustable to a
535-1620 KC range from th
Front Cabinet View and Pus
procedure). Individual calibr
vided for identification of but
3. Shortwave Band No. 1 9.2 M
4. Shortwave Band No. 2 14.4

©John F. Rider

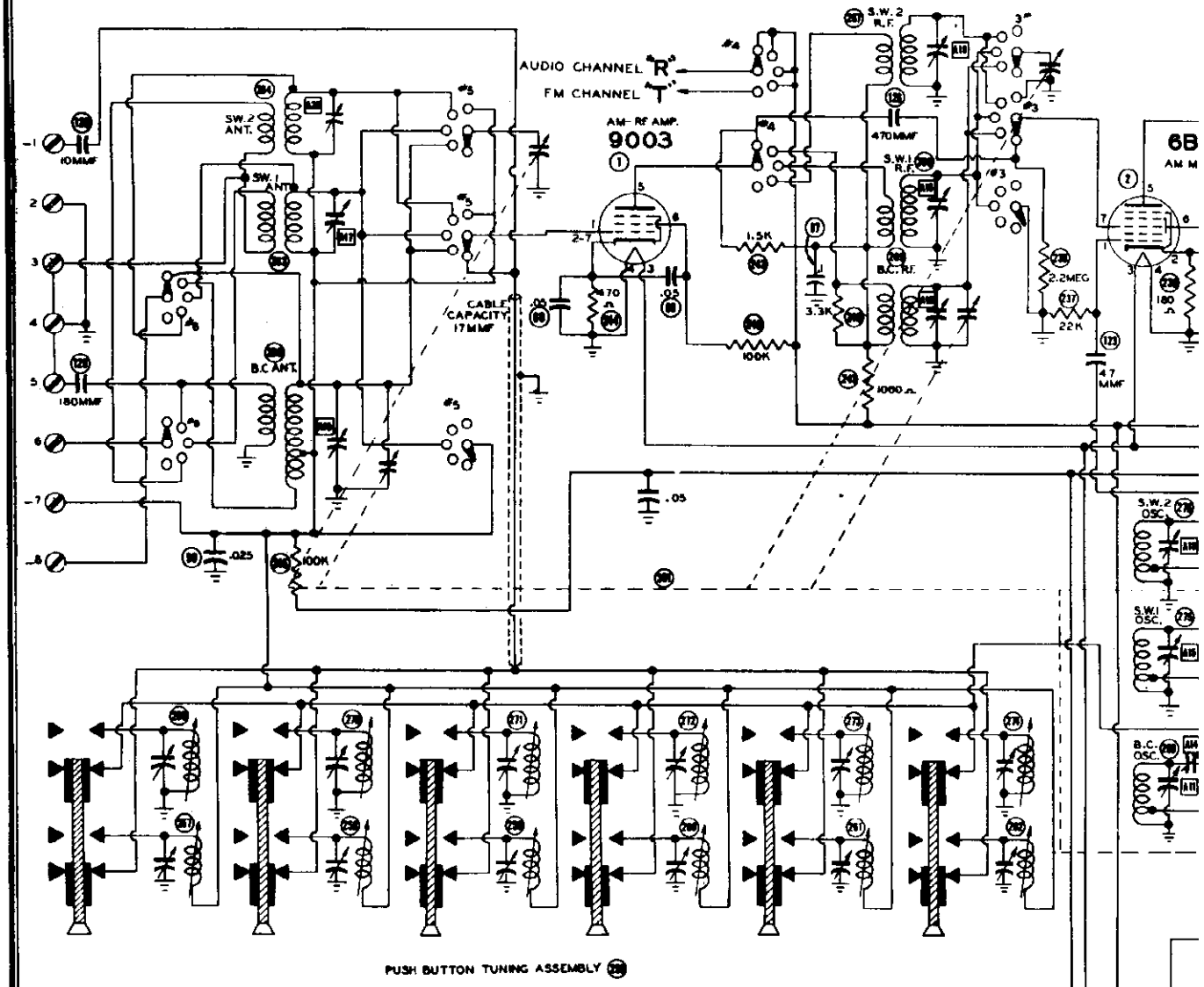

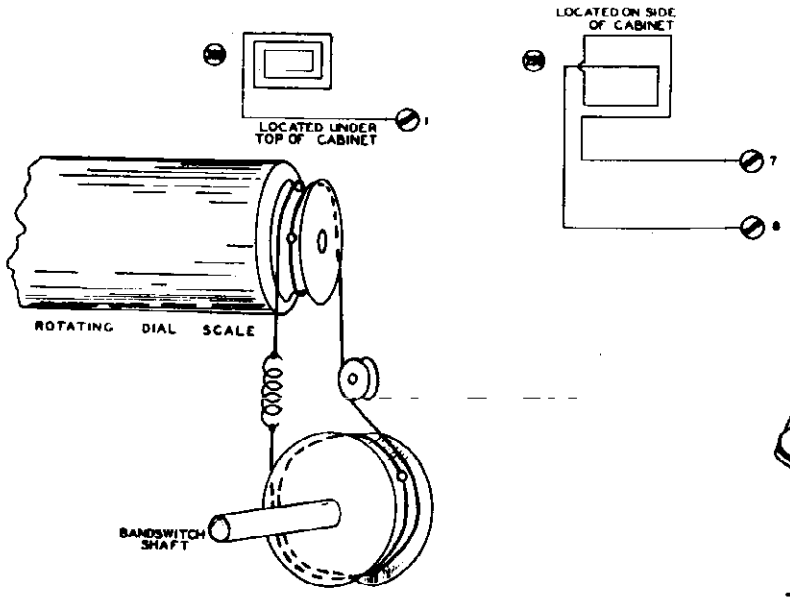

BANDSWITCH AND DIAL SCALE DRIVE

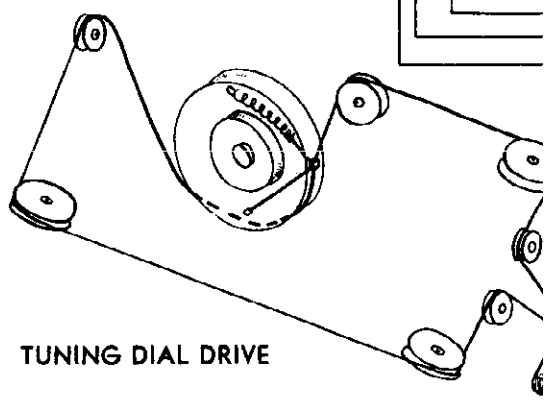

TUNING DIAL DRIVE

SNER MFG. DIV.
E INDUSTRIES, INC.

MODEL 2961

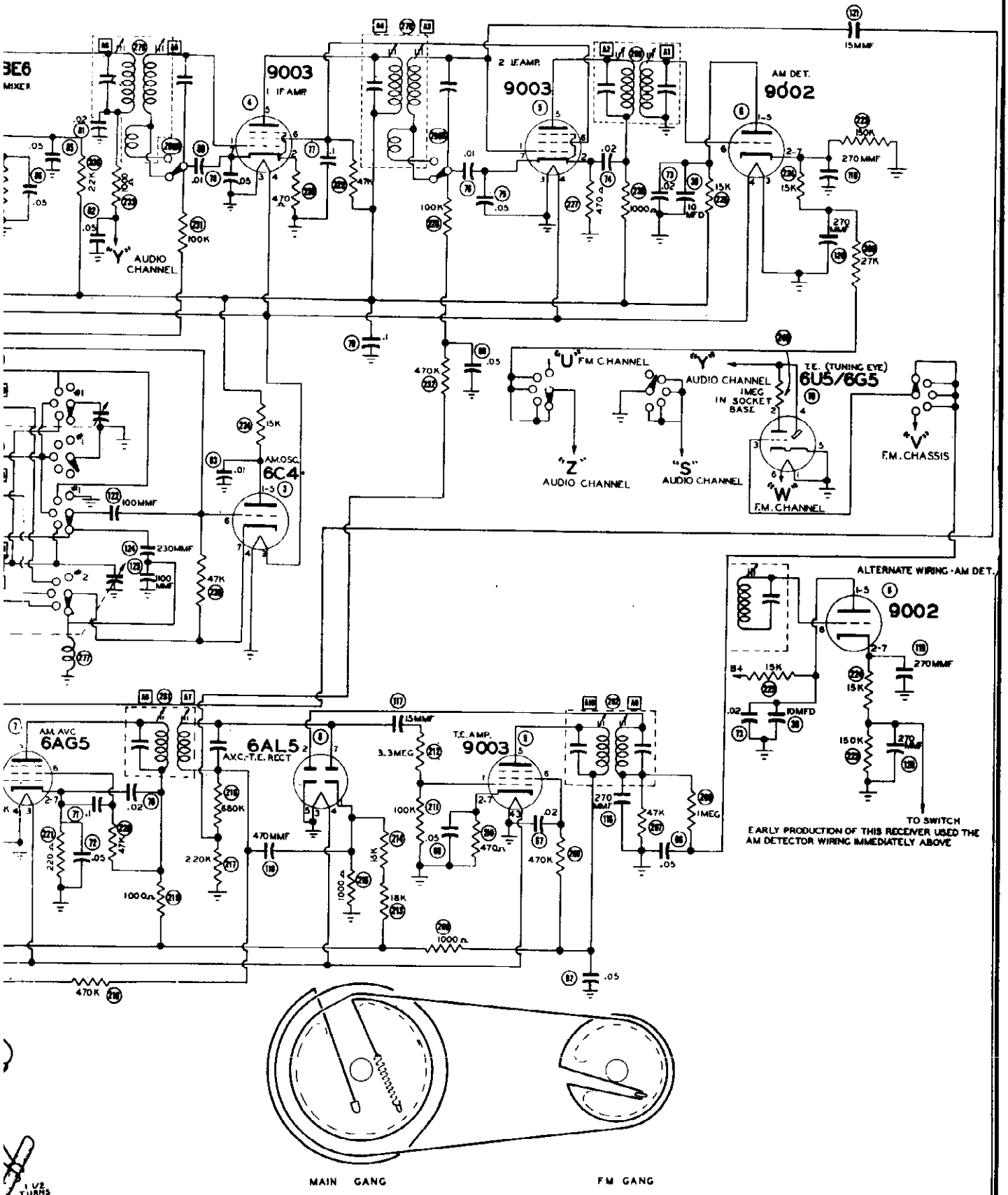

FM TUNER GANG DRIVE

R MFG. DIV.
DUSTRIES, INC.

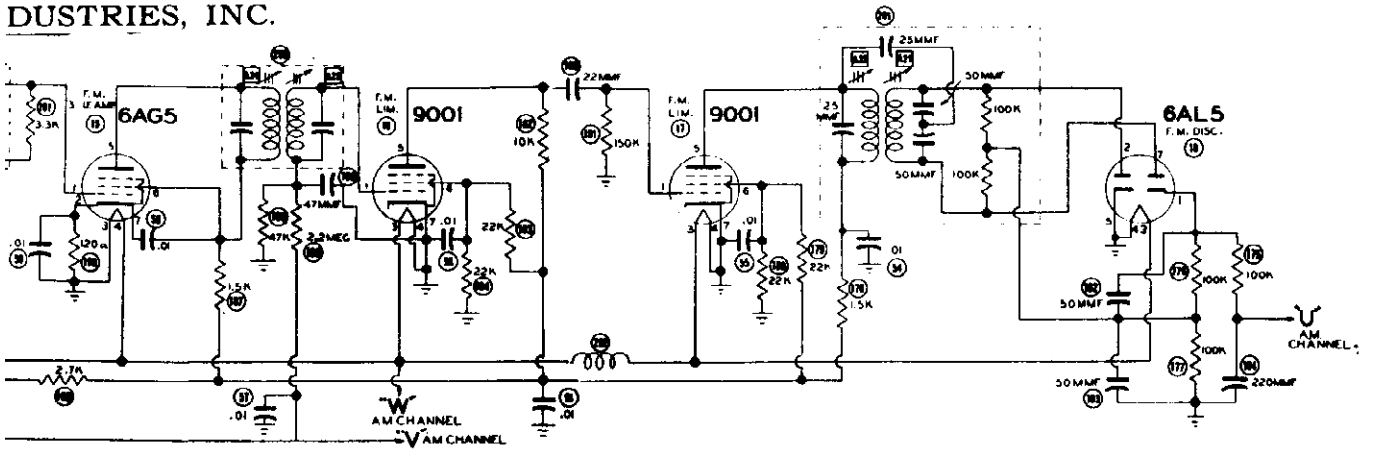

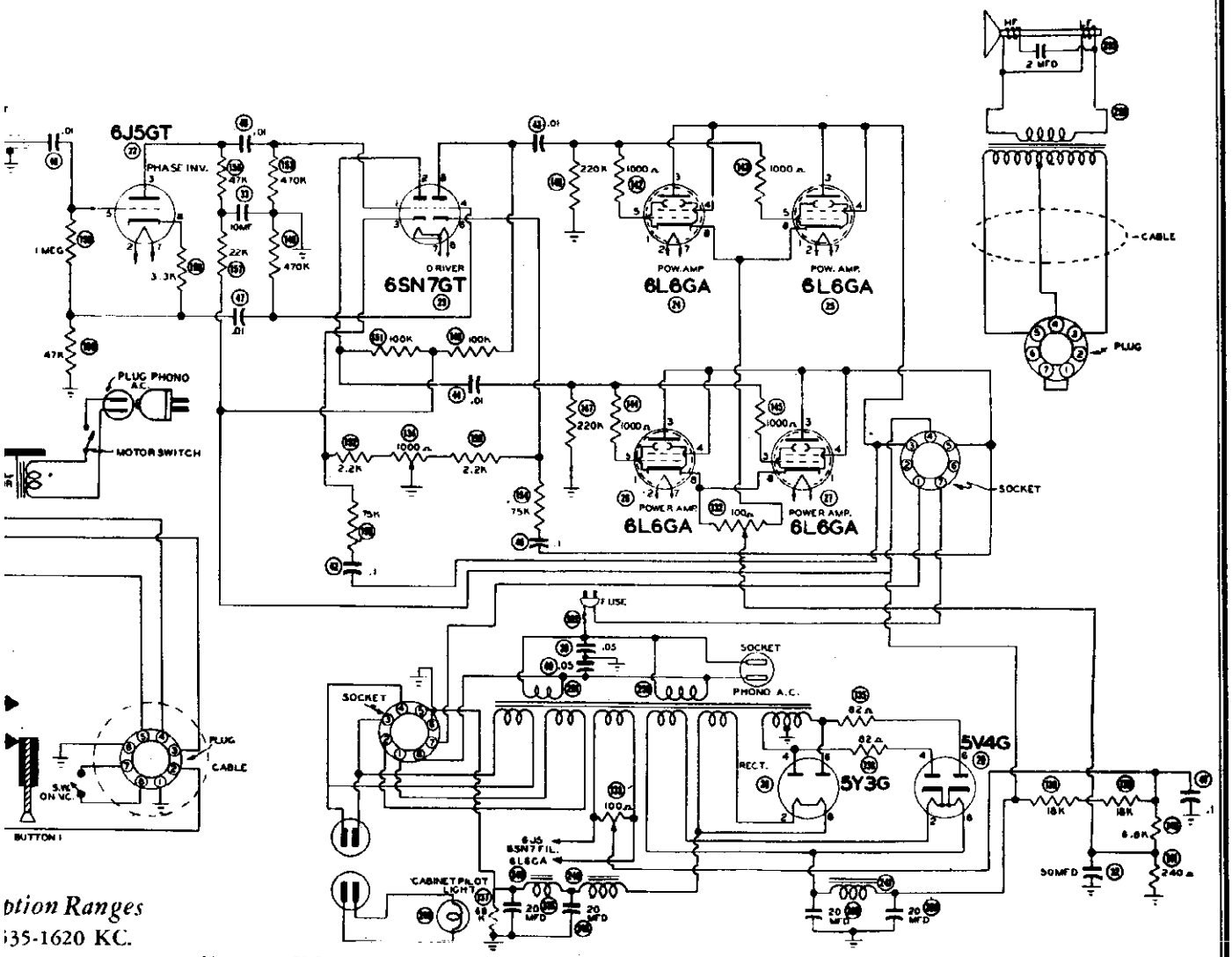

ption Ranges
535-1620 KC.
g. Selection of
tton setting is
int within the
nt panel (see
on Alignment
scales are pro-
tings.
2 MC
4 MC

Audio Amplifier Frequency Range
60-20,000 cycles ± .75 db.

Power Output Rating
Distortion below 4%.....20 watts

Loudspeaker—Jensen HNP-50 (Special)
Voice Coil Impedance.....16 ohms
Permanent Magnet, Horn type coaxial, 15" diameter

Power Supply
Primary Power Source, 105-125 Volts AC @ 50-60 cycles
Current Consumption, Approximately 200 Watts

MEISSNER MFG. DIV.
MAGUIRE INDUSTRIES, INC.

MODEL 2961

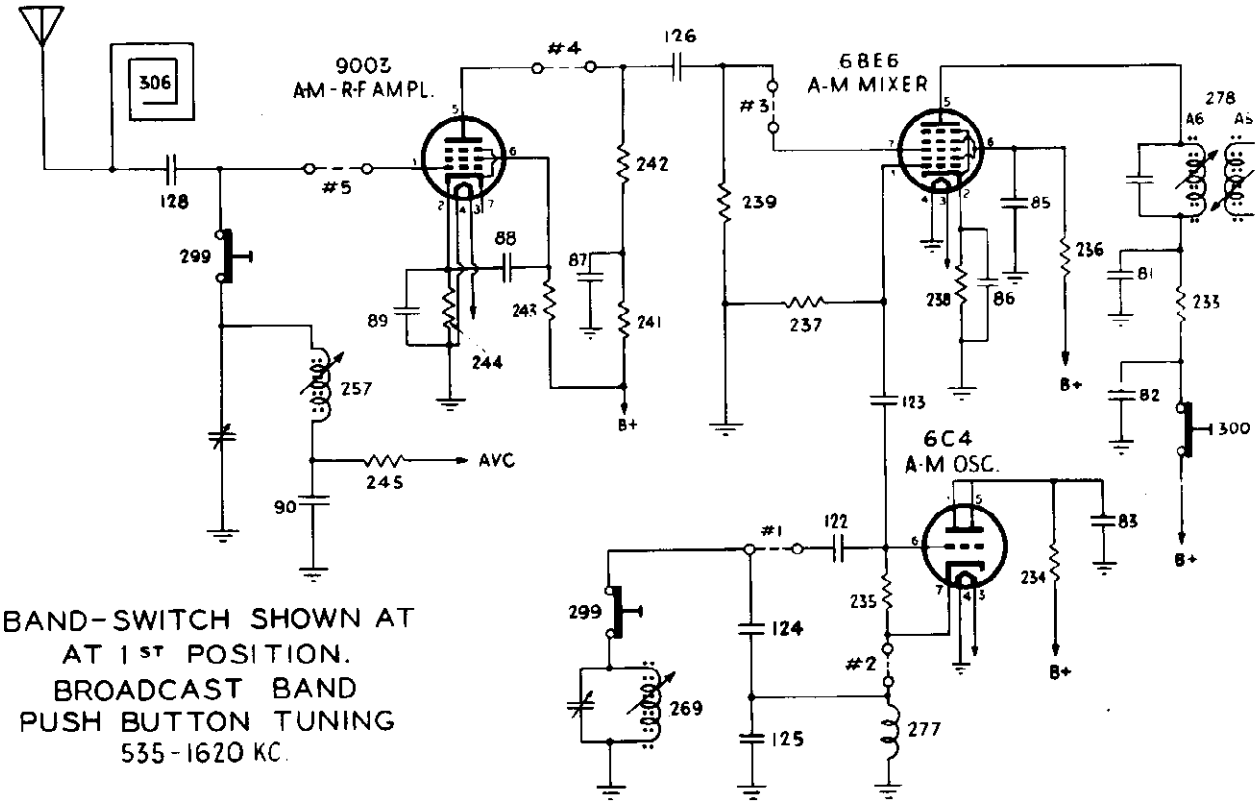

BAND-SWITCH SHOWN AT
AT 1ST POSITION.
BROADCAST BAND
PUSH BUTTON TUNING
535-1620 KC.

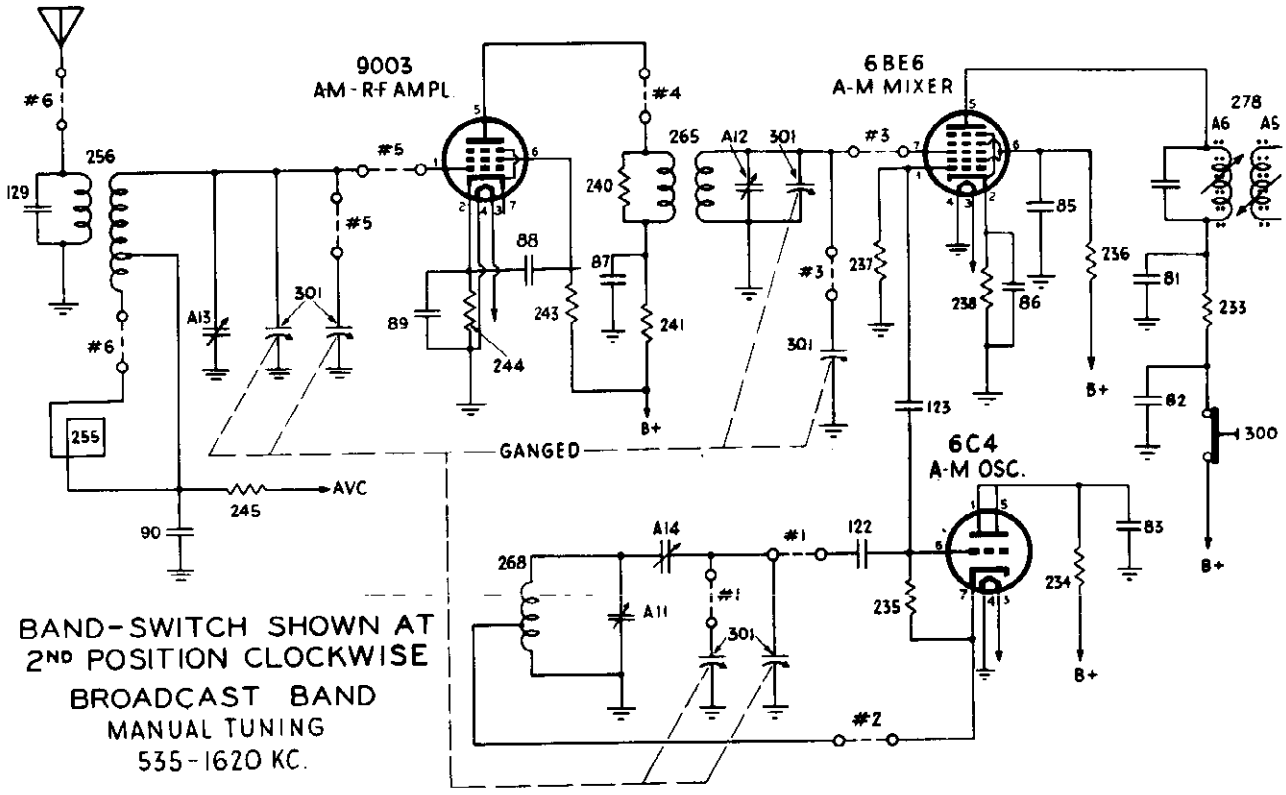

BAND-SWITCH SHOWN AT
2ND POSITION CLOCKWISE
BROADCAST BAND
MANUAL TUNING
535-1620 KC.

CLARI-SKEMATIX
Registered Trademark

MODEL 2961

MEISSNER MFG. DIV.
MAGUIRE INDUSTRIES, INC.

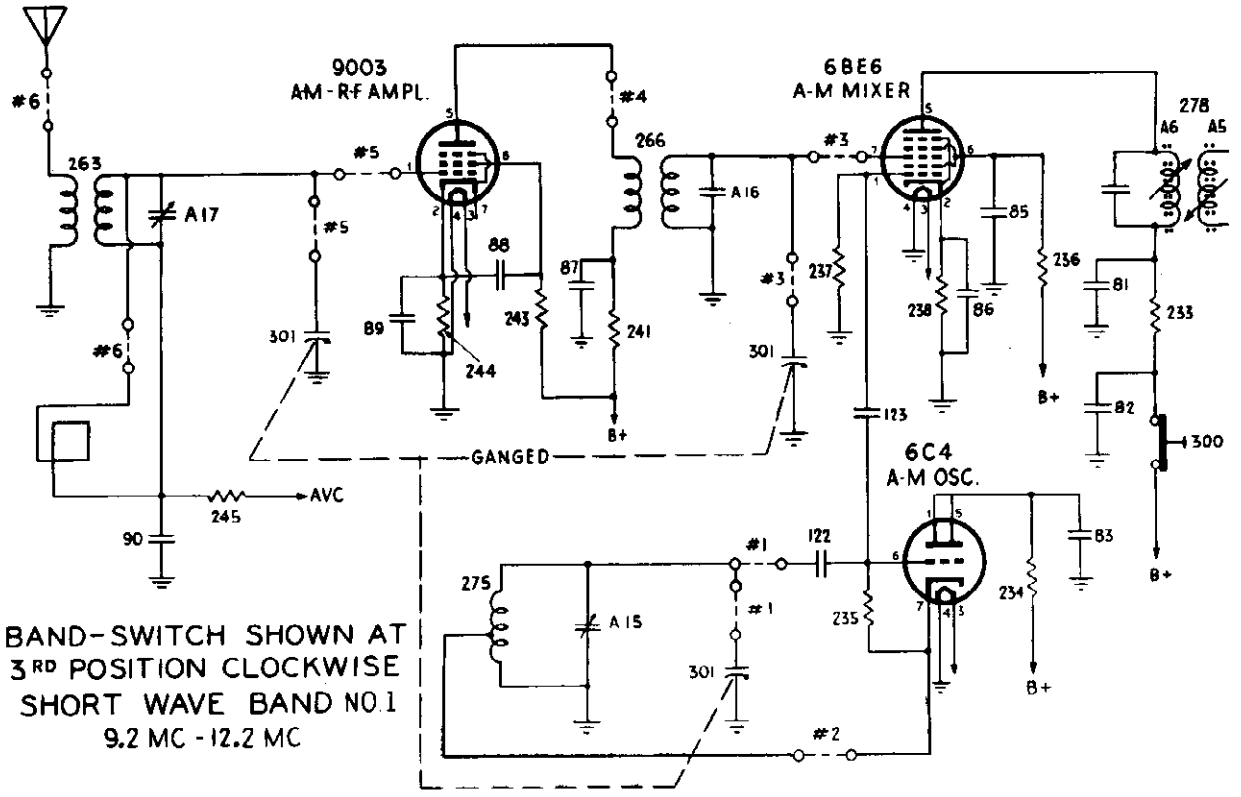

BAND-SWITCH SHOWN AT
3RD POSITION CLOCKWISE
SHORT WAVE BAND NO.1
9.2 MC - 12.2 MC

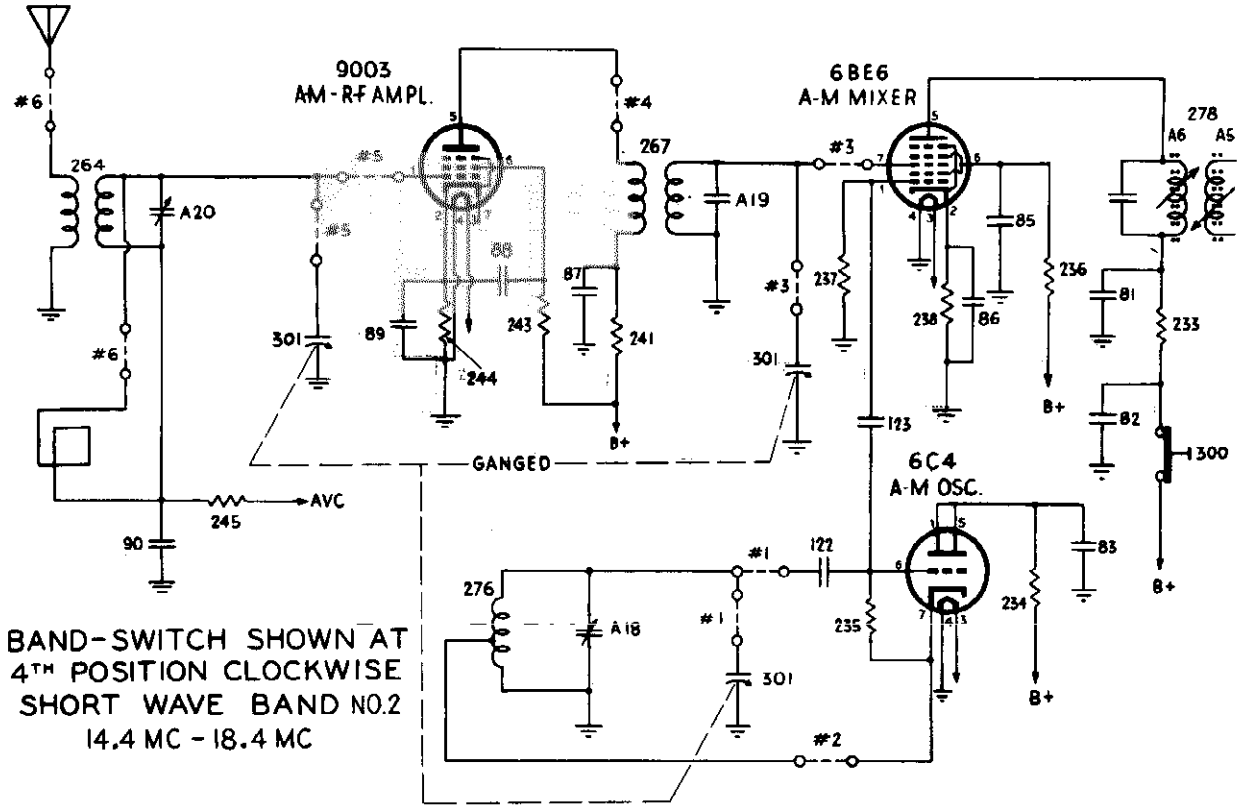

BAND-SWITCH SHOWN AT
4TH POSITION CLOCKWISE
SHORT WAVE BAND NO.2
14.4 MC - 18.4 MC

MEISSNER MFG. DIV.
MAGUIRE INDUSTRIES, INC.

MODEL 2961

ALIGNMENT INSTRUCTIONS—READ CAREFULLY BEFORE ATTEMPTING ALIGNMENT

To set pointer, turn tuning capacitor fully closed and set pointer at the last reference mark at the left end of the broadcast band dial. Keep output of signal generator no higher than is necessary to obtain output indication. When aligning FM RF section use dummy antenna and coupling transformer constructed as shown in sketch. Use insulated alignment screwdriver for adjusting.

DUMMY ANTENNA	SIGNAL GENERATOR COUPLING	SIGNAL GENERATOR FREQUENCY	BAND SWITCH POS.	RADIO DIAL SETTING	OUTPUT METER	ADJUST	REMARKS
.1 MFD.	High side to Pin #1 (grid) of 2nd IF tube. (5). Low side to Pin 3 of same tube.	455KC (Freq. Mod. 20KC sweep)	BC	High freq. end. of dial.	Pin #7 (cathode) of Detector (6) & chassis.	A1,A2.	Adjust for maximum amplitude, symmetry and coincidence of pattern on scope.
.1 MFD.	High side to Pin #1 (grid) of 1st IF Tube (4). Low side to Pin 3 of same tube.	"	"	"	"	A3,A4.	Adjust for maximum amplitude, symmetry and coincidence of pattern on scope. Turn selectivity switch to broad. Pattern should still be symmetrical about 455KC. Return selectivity switch to normal.
.1 MFD.	High side to Pin #7 (grid) of mixer tube (2). Low side to ground lug near socket of same tube.	"	"	"	"	A5,A6.	"
.1 MFD.	High side to Pin #1 (grid) of AVC Amp. (7). Low side to ground lug near socket of same tube.	"	"	"	Low side of secondary of AVC IF (281) and chassis.	A7,A8.	"
.1 MFD.	"	"	"	"	Low side of secondary of Tuning Eye IF (282) & chassis.	A9,A10	"
200MMF.	High side to terminal #6 on ant. terminal strip. Low side to chassis.	1500KC	BC	1500KC	Output meter across voice coil.	A11	Adjust for maximum output
200MMF.	"	"	"	"	"	A12,A13	"
200MMF.	"	600KC	"	Tune for maximum output.	"	A14	Rock variable and adjust for maximum output. Repeat last three steps until no further improvement can be made.
400ohms	"	12.0MC	SW 1	12.0MC	"	A15	Adjust for maximum output
400ohms	"	"	"	"	"	A16,A17	Rock variable and adjust for maximum output.
400ohms	"	18.0MC	SW 2	18.0MC	"	A18	Adjust for maximum output
400ohms	"	"	"	"	"	A19,A20	Rock variable and adjust for maximum output.
.005 mica.	High side to Pin #1 (grid) of 1st limiter (16). Low side to ground lug near socket of same tube.	10.7MC (Freq. modulated 200KC deviation)	FM	High freq. end of dial.	To Pin #6 (grid) of audio amp (21) and chassis.	A21	Adjust so that peaks of curves are symmetrical about the vertical axis and cross over at the horizontal axis.
"	"	"	"	"	"	A22	Adjust for maximum amplitude of peaks.
"	High side to Pin #1 (grid) of 3rd IF (15). Low side to ground lug near same tube.	"	"	"	To low side of secondary of 1st limiter transformer and chassis.	A23,A24	Remove 9001 second limiter (17) from socket. Adjust for maximum amplitude, symmetry and coincidence of pattern on scope.
"	High side to Pin #1 (grid) of 2nd IF (14). Low side to ground lug near same tube.	"	"	"	"	A25,A26	"
"	High side to Pin #1 of 1st IF (13). Low side to ground lug near same tube.	"	"	"	"	A27,A28	"
"	Remove FM mixer tube (11). Temporarily connect insulated lead to Pin #1 and replace tube in socket. Connect high side of signal generator to this lead. Low side to chassis.	"	"	"	"	A29,A30	Remove 9001 second limiter (17) from socket. Adjust for maximum amplitude, symmetry and coincidence of pattern on scope. Care should be taken not to disturb the mixer plate lead after IF alignment is completed as it will detune the 1st IF primary.
300Ω (See pre-alignment instructions)	To FM dipole terminals.	107.9MC	FM	300	To low side of secondary of 1st limiter transformer and chassis.	A31	Replace osc. tube. Adjust for maximum amplitude, symmetry and coincidence of pattern on scope.
"	"	"	"	"	"	A32,A33	Adjust for maximum amplitude. Replace 2nd limiter tube.
200MMF.	High side to terminal #6 on ant. terminal strip. Low side to chassis.	1400KC	Push-button (Depress first push-button from left.	Set left knob to 1400KC.	Across voice coil	B1	Adjust for maximum output
200MMF.	"	"	"	"	"	B2	"

Follow same proceedure for aligning remaining pushbutton channels. Adjust B3,B5,B7,B9 and B11 to tune in generator signal and B4,B6,B8,B10 and B12 for maximum output. Make sure the button is depressed that corresponds to the channel being aligned.

DETAILS OF DUMMY ANTENNA AND B1 COUPLING TRANSF. TO GIVE BALANCED OUTPUT

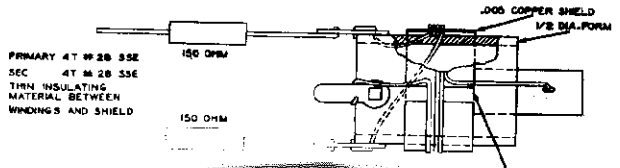



MODEL 2961

MEISSNER MFG. DIV.
MAGUIRE INDUSTRIES, INC.

RESISTANCE READINGS

Item	Tube	Pin 1	Pin 2	Pin 3	Pin 4	Pin 5	Pin 6	Pin 7	Pin 8
1	9003	1.4 MEG.	475 Ω	.2 Ω	0 Ω	17 KΩ	105 KΩ	475 Ω	
2	6BE6	17 KΩ	170 Ω	.2 Ω	0 Ω	17 KΩ	39 KΩ	5 Ω	
3	6C4	29 KΩ	17 KΩ	.2 Ω	0 Ω	29 KΩ	47 KΩ	.7 Ω	
4	9003	1.4 MEG.	475 Ω	0 Ω	.2 Ω	17 KΩ	65 KΩ	475 Ω	
5	9003	760 KΩ	500 KΩ	0 Ω	.2 Ω	17 KΩ	65 KΩ	500 Ω	
6	9002	29 KΩ	167 KΩ	0 Ω	.2 Ω	29 KΩ	6 Ω	167 KΩ	
7	6AG5	470 KΩ	190 Ω	.2 Ω	0 Ω	17 KΩ	61 KΩ	190 Ω	
8	6AL5	1000 Ω	43 KΩ	0 Ω	.2 Ω	0 Ω	3 MEG.	860 KΩ	
9	9003	94 KΩ	500 Ω	.2 Ω	0 Ω	17 KΩ	490 KΩ	500 Ω	
10	6AG5	1.9 MEG.	0 Ω	0 Ω	.2 Ω	23 KΩ	57 KΩ	0 Ω	
11	6AG5	0 Ω	4 KΩ	0 Ω	.2 Ω	57 KΩ	17 KΩ	4 KΩ	
12	6C4	25 KΩ	INF.	.2 Ω	0 Ω	25 KΩ	32 KΩ	0 Ω	
13	6AG5	1.9 MEG.	0 Ω	.2 Ω	0 Ω	20 KΩ	2.5 KΩ	0 Ω	
14	6AG5	.7 Ω	115 Ω	.2 Ω	0 Ω	20 KΩ	20 KΩ	115 Ω	
15	6AG5	.7 Ω	115 Ω	.2 Ω	0 Ω	13 KΩ	13 KΩ	115 Ω	
16	9001	42 KΩ	0 Ω	.2 Ω	0 Ω	22 KΩ	15 KΩ	0 Ω	
17	9001	146 KΩ	0 Ω	.2 Ω	0 Ω	13 KΩ	13 KΩ	0 Ω	
18	6AL5	190 KΩ	145 KΩ	.2 Ω	0 Ω	0 Ω	INF.	145 KΩ	
19	6U5/6G5	0 Ω	1 MEG.	950 KΩ	18 KΩ	0 Ω	1 Ω		
20	9002	62 KΩ	1000 Ω	4.2 KΩ	4.2 KΩ	62 KΩ	205 KΩ	1000 Ω	
21	9002	46 KΩ	600 Ω	4.2 KΩ	4.2 KΩ	46 KΩ	500 KΩ	600 Ω	
22	6J5GT	0 Ω	6.5 KΩ	112 KΩ	65 KΩ	1.2 MEG.	48 KΩ	6.5 KΩ	50 KΩ
23	6SN7GT	430 KΩ	140 KΩ	2.6 KΩ	470 KΩ	138 KΩ	2.5 KΩ	6.5 KΩ	6.5 KΩ
24	6L6GA	0 Ω	6.5 KΩ	39 KΩ	39 KΩ	215 KΩ	215 KΩ	6.5 KΩ	280 Ω
25	6L6GA	0 Ω	6.5 KΩ	39 KΩ	39 KΩ	215 KΩ	215 KΩ	6.5 KΩ	280 Ω
26	6L6GA	0 Ω	6.5 KΩ	39 KΩ	39 KΩ	215 KΩ	215 KΩ	6.5 KΩ	280 Ω
27	6L6GA	0 Ω	6.5 KΩ	39 KΩ	39 KΩ	215 KΩ	215 KΩ	6.5 KΩ	280 Ω
28	5Y3G	INF.	17 KΩ	INF.	72 Ω	INF.	64 Ω	INF.	17 KΩ
29	5V4G	INF.	39 KΩ	INF.	145 Ω	INF.	138 Ω	INF.	39 KΩ

VOLTAGE READINGS

Item	Tube	Pin 1	Pin 2	Pin 3	Pin 4	Pin 5	Pin 6	Pin 7	Pin 8
1	9003	0V.	3.2V DC	6.3V AC	0V.	256V DC	83V DC	3.2V DC	
2	6BE6	-2V DC	2V DC	6.3V AC	0V.	265V DC	108V DC	0V.	
3	6C4	157V DC	270V DC	6.3V AC	0V.	157V DC	0V.	0V.	
4	9003	0V.	3.5V DC	0V.	6.3V AC	270V DC	95V DC	3.5V DC	
5	9003	0V.	3.1V DC	0V.	6.3V AC	262V DC	97.5V DC	3.1V DC	
6	9002	270V DC	1.5V DC	0V.	6.3V AC	265V DC	0V.	1.5V DC	
7	6AG5	0V.	1.9V DC	6.3V AC	0V.	262V DC	148V DC	1.9V DC	
8	6AL5	8.3V DC	-3V DC	0V.	6.3V AC	0V.	0V.	0V.	
9	9003	0V.	1.3V DC	6.3V AC	0V.	265V DC	31V DC	1.3V DC	
10	6AG5	-3V DC	0V.	0V.	6.3V AC	143V DC	132V DC	0V.	
11	6AG5	0V.	2.2V DC	0V.	6.3V AC	250V DC	68V DC	2.4V DC	
12	6C4	150V DC	0V.	6.3V AC	0V.	150V DC	4 V DC	0V.	
13	6AG5	-25V DC	0V.	6.3V AC	0V.	123V DC	123V DC	0V.	
14	6AG5	0V.	1.3V DC	6.3V AC	0V.	146V DC	146V DC	1.3V DC	
15	6AG5	0V.	1.1V DC	6.3V AC	0V.	118V DC	118V DC	1.1V DC	
16	9001	-25V DC	0V.	6.3V AC	0V.	122V DC	57V DC	0V.	
17	9001	-4V DC	0V.	6.3V AC	0V.	145V DC	57V DC	0V.	
18	6AL5	-1V DC	-1V DC	6.3V AC	0V.	0V.	0V.	-10V DC	
19	6U5/6G5	0V.	22V DC	-2V DC	265V DC	0V.	6.3V AC		
20	9002	124V DC	3.4V DC	12V DC	12V DC	124V DC	0V.	3.4V DC	
21	9002	123V DC	2.5V DC	12V DC	12V DC	123V DC	0V.	2.5V DC	
22	6J5GT	0V.	96V DC	250V DC	340V DC	4V DC	98V DC	96V DC	105V DC
23	5Y3	0V.	165V DC	6.5V DC	0V.	155V DC	5.8V DC	95V DC	96V DC
24	6L6GA	0V.	96V DC	395V DC	395V DC	0V.	0V.	97V DC	40.5V DC
25	6L6GA	0V.	96V DC	395V DC	395V DC	0V.	0V.	97V DC	40.5V DC
26	6L6GA	0V.	96V DC	395V DC	395V DC	0V.	0V.	97V DC	40.5V DC
27	6L6GA	0V.	96V DC	395V DC	395V DC	0V.	0V.	97V DC	40.5V DC
28	5Y3GT	0V.	292V DC	0V.	365V AC	0V.	370V AC	0V.	290V DC
29	5V4G	0V.	410V DC	0V.	350V AC	0V.	350V AC	0V.	410V DC

1—DC Voltage measurements are at 20,000 ohms per volt; AC Voltages measured at 1,000 ohms per volt.
2—Socket connections are shown as bottom views.
3—Measured values are from socket pin to common negative.
4—Line Voltage maintained at 117 volts for voltage readings.
5—Nominal tolerance on component values makes possible a variation of ± 10% in voltage and resistance readings.
6—Volume control at maximum, no signal applied for voltage measurements.

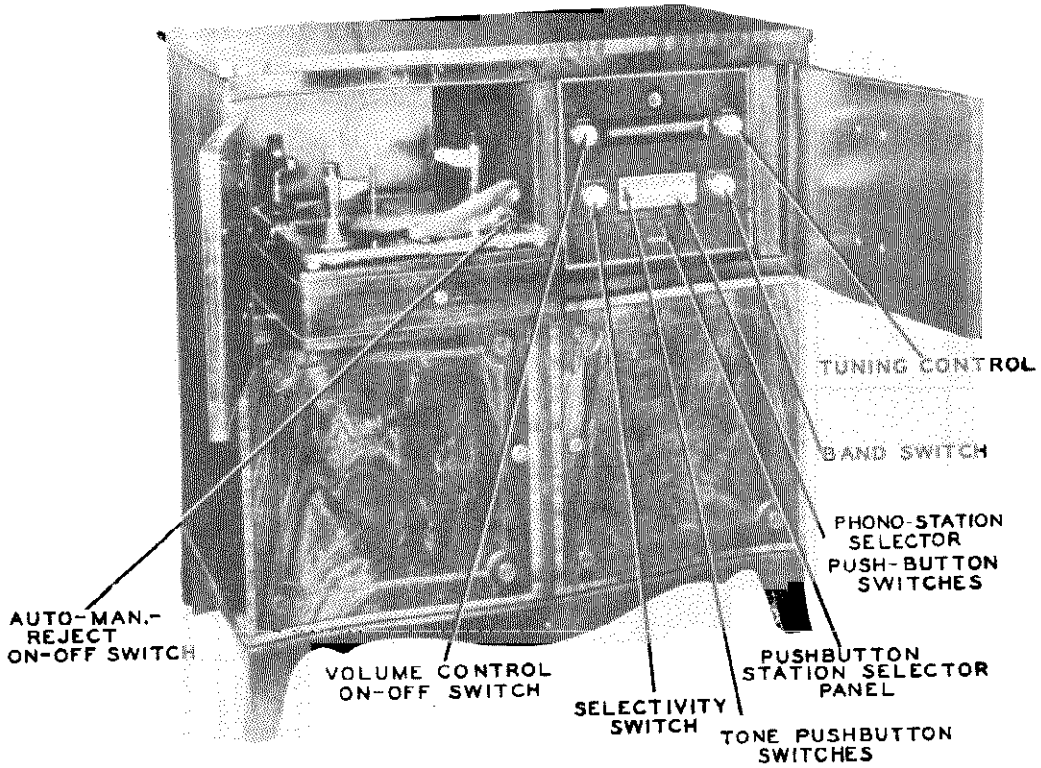

FRONT CABINET VIEW

©John F. Rider

MEISSNER MFG. DIV.
MAGUIRE INDUSTRIES, INC.

MODEL 2961

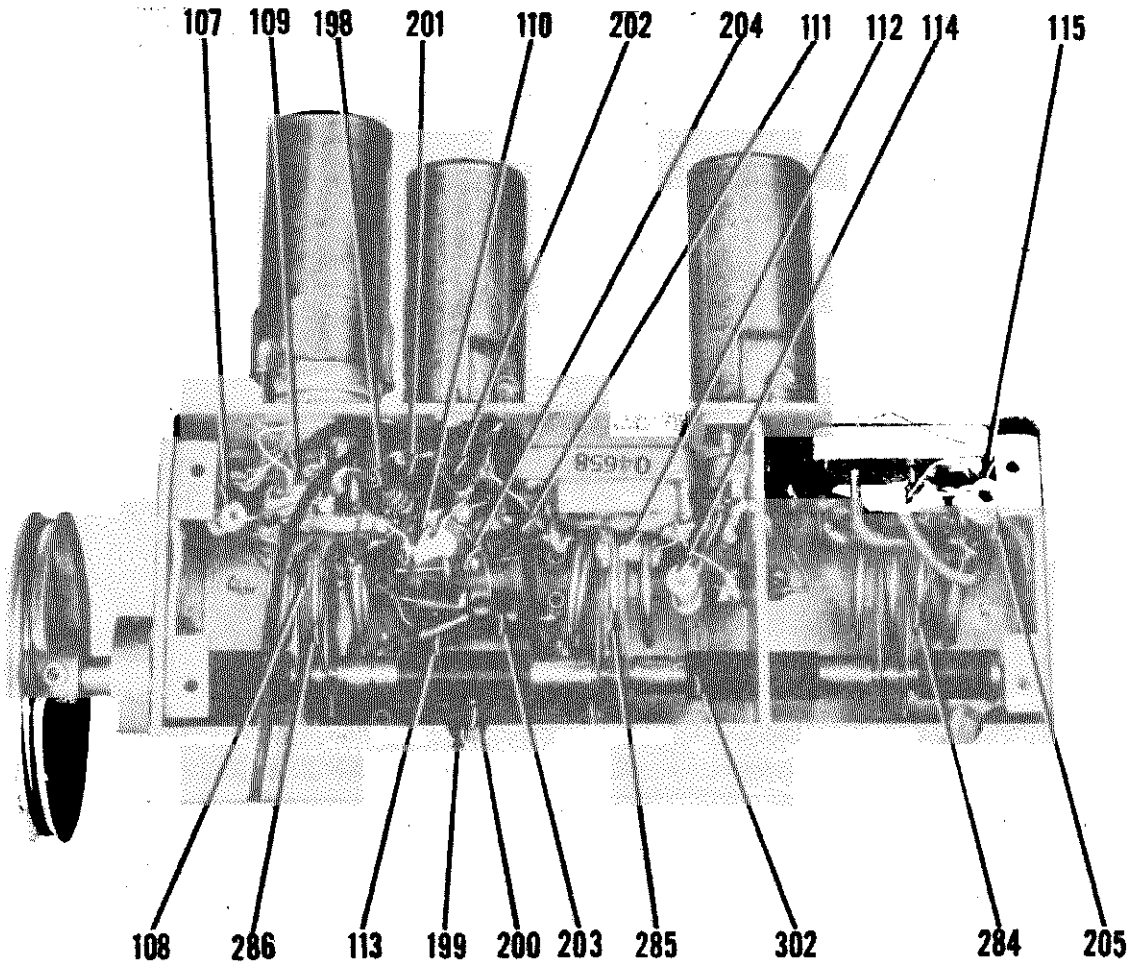

FM TUNER SUB-CHASSIS

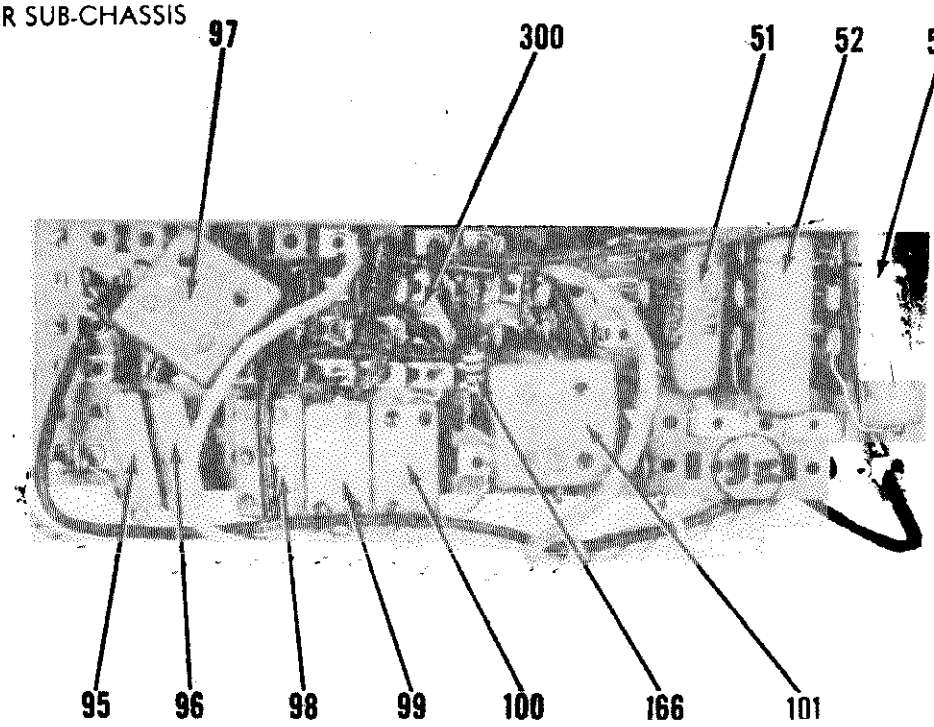

TONE CONTROL SWITCH ASSEMBLY

MODEL 2961

MEISSNER MFG. DIV.
MAGUIRE INDUSTRIES, INC.

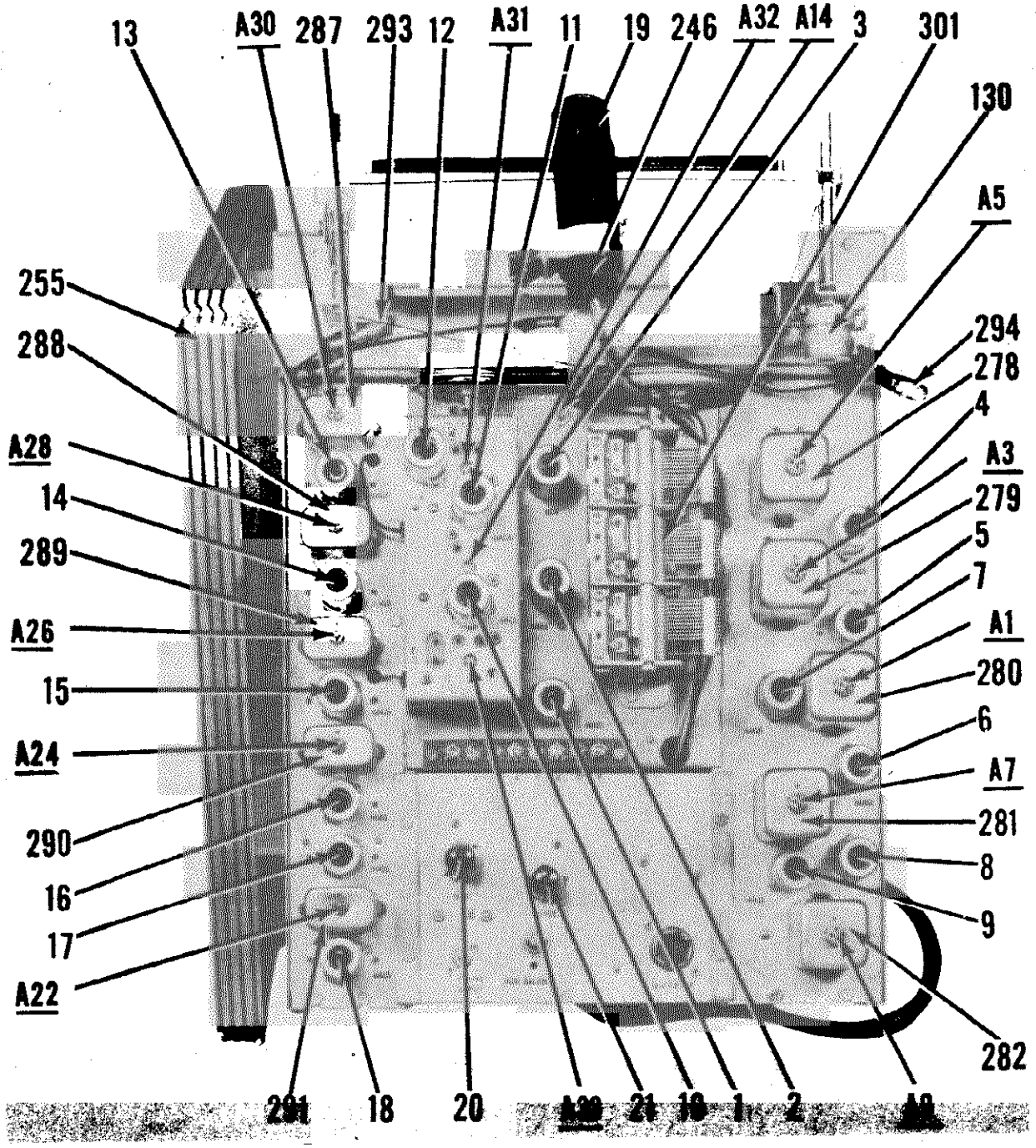

TUNER CHASSIS—TOP VIEW

MEISSNER MFG. DIV.
MAGUIRE INDUSTRIES, INC.

MODEL 2961

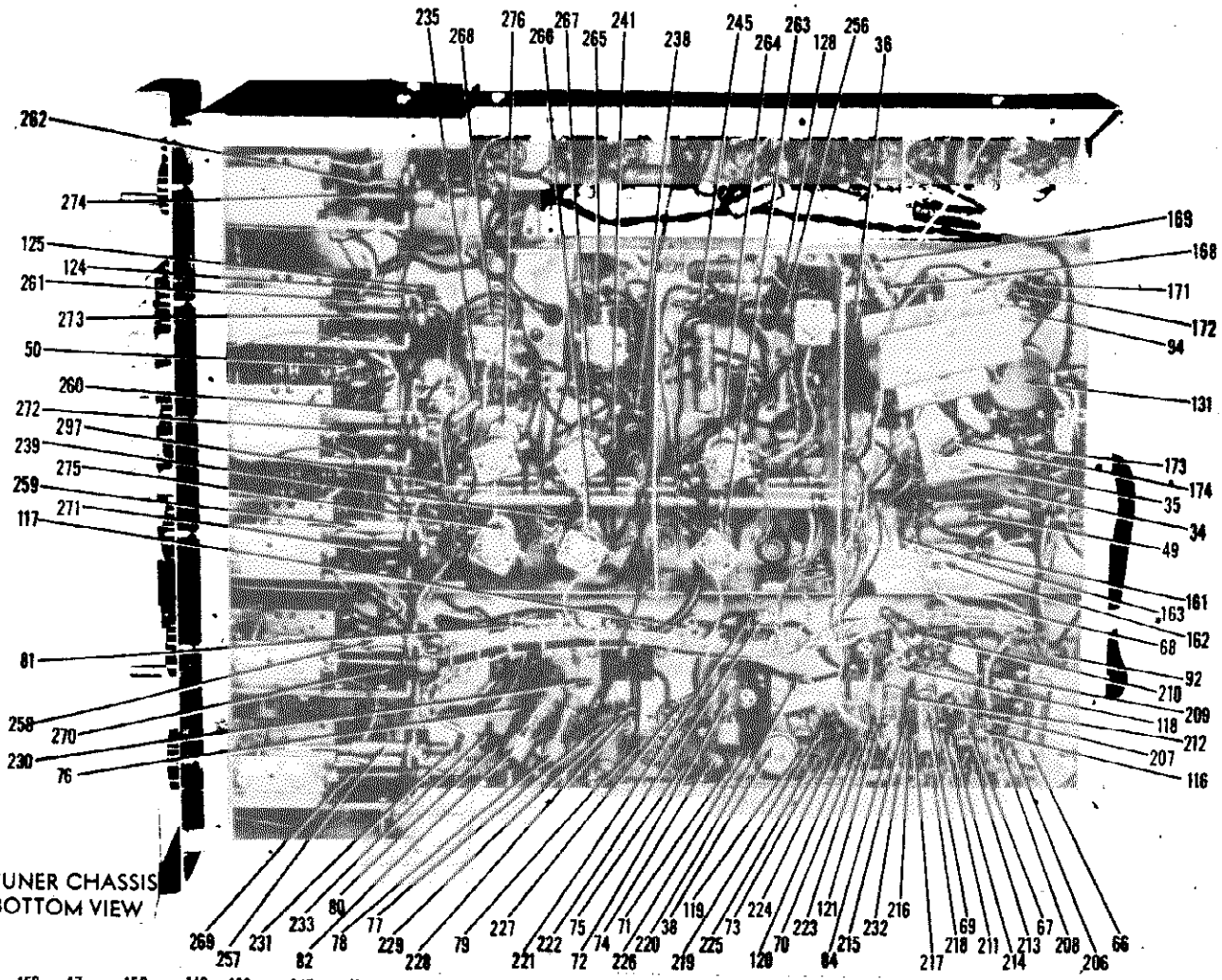

TUNER CHASSIS
BOTTOM VIEW

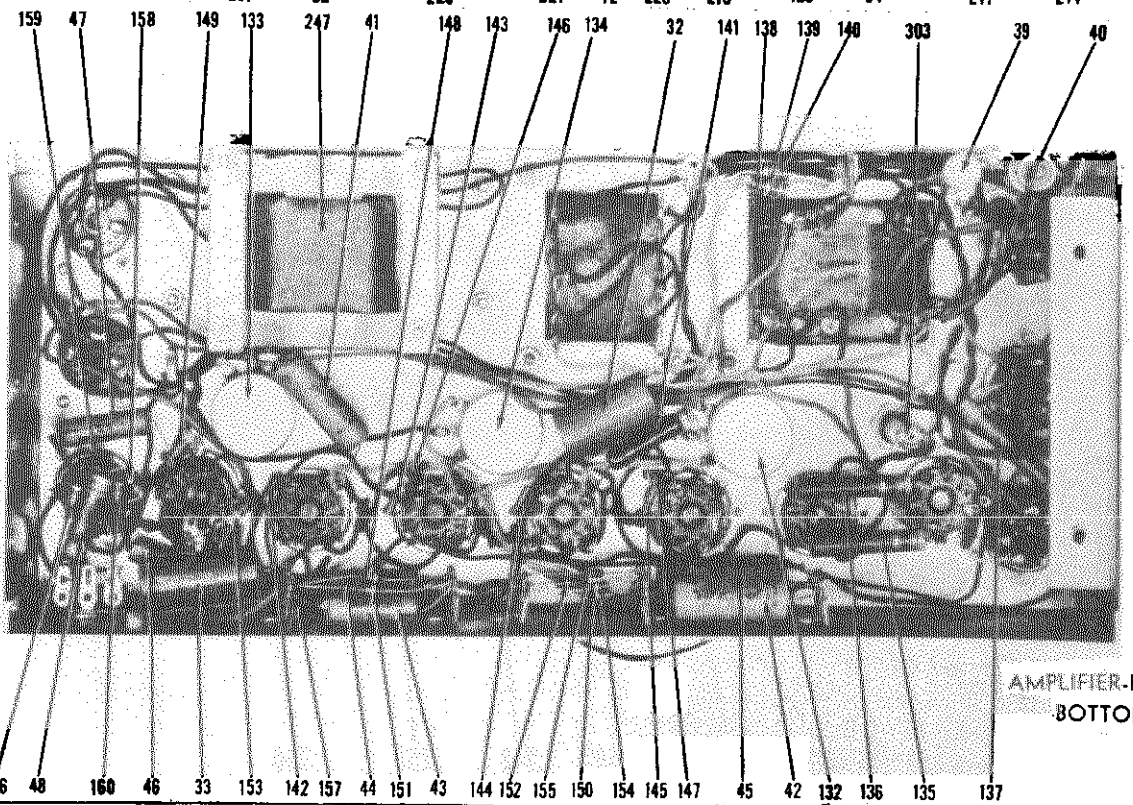

AMPLIFIER-POWER SUPPLY
BOTTOM VIEW

MODEL 2961

MEISSNER MFG. DIV.
MAGUIRE INDUSTRIES, INC.

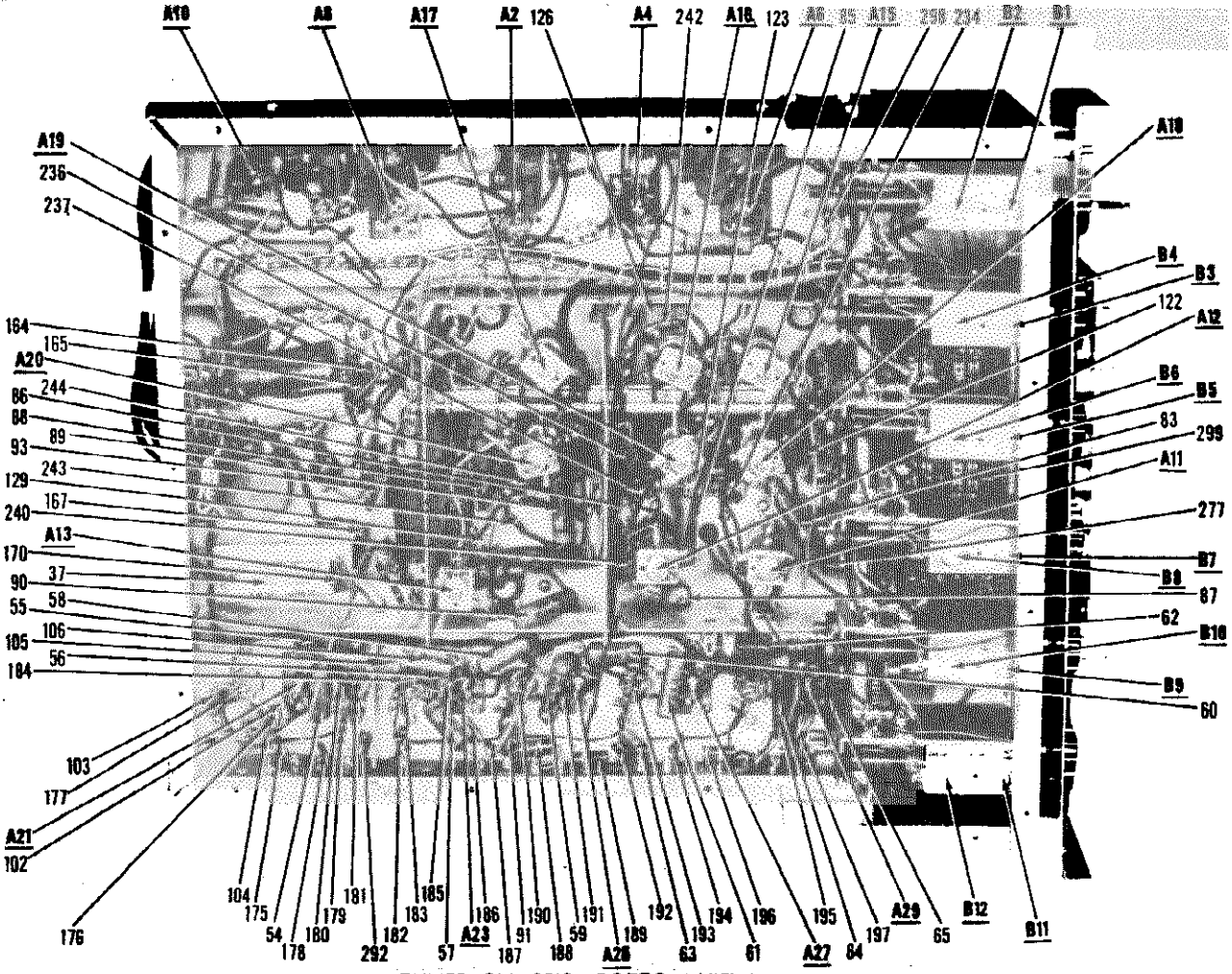

TUNER CHASSIS—BOTTOM VIEW

AMPLIFIER-POWER SUPPLY—TOP VIEW

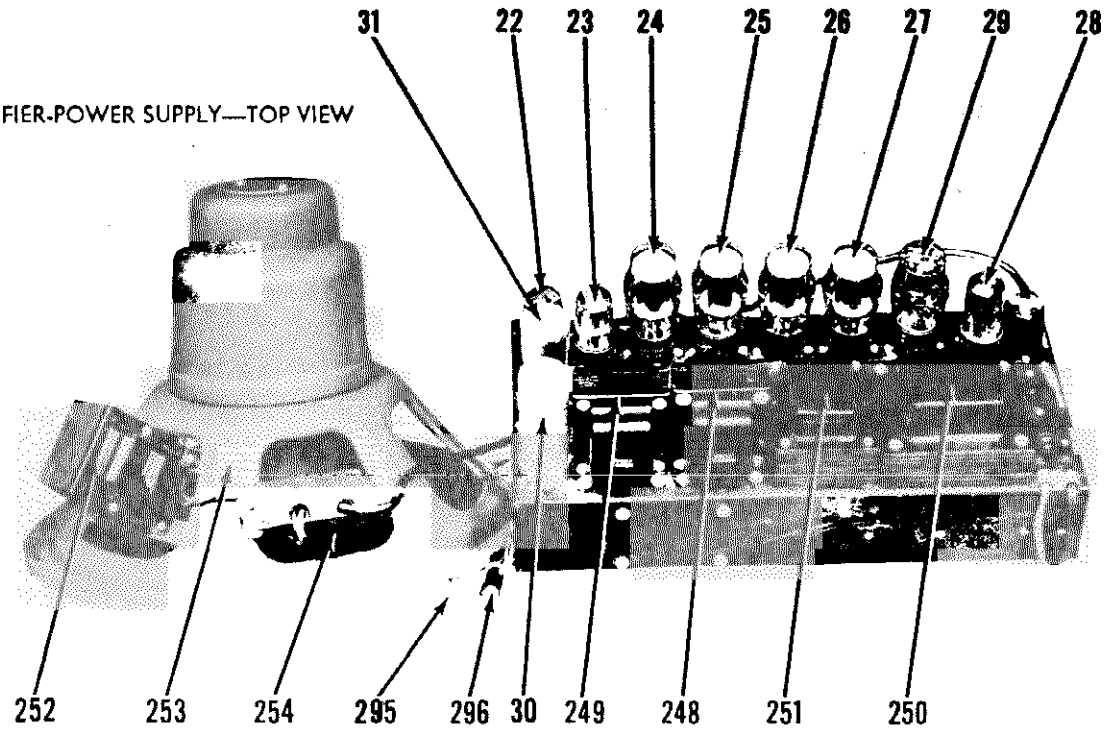

©John F. Rider

Item No.	Part No.	Description
1	9003	AM RF Amplifier
2	6BE6	AM Mixer
3	6C4	AM Osc.
4	9003	AM 1st IF Amplifier
5	9003	AM 2nd IF Amplifier
6	9002	AM Detector
7	6AG5	AM AVC Amplifier
8	6AL5	AM Tuning eye—AVC Rectifier
9	9003	AM Tuning eye Amplifier
10	6AG5	FM RF Amplifier
11	6AG5	FM Mixer
12	6C4	FM Osc.
13	6AG5	FM 1st IF Amplifier
14	6AG5	FM 2nd IF Amplifier
15	6AG5	FM 3rd IF Amplifier
16	9001	FM 1st Limiter
17	9001	FM 2nd Limiter
18	6AL5	Discriminator
19	6U5/6G5	Tuning Eye
20	9002	Phono Amplifier
21	9002	1st Audio Amplifier
22	6J5GT	Phase Inverter
23	6SN7GT	Driver
24	6L6GA	Power Output
25	6L6GA	Power Output
26	6L6GA	Power Output
27	6L6GA	Power Output
28	5Y3G	Rectifier
29	5V4G	Rectifier
30	27171	20-20 Mfd. @ 450 v. Filter Capacitor
31	27171	20-20 Mfd. @ 450 v. Filter Capacitor
32	28106	50 Mfd. @ 50 v. Cathode Bypass
33	28109	10 Mfd. @ 450 v. Phase Inverter Decoupling
34	28109	10 Mfd. @ 450 v. 1st Audio Plate Decoupling
35	28105	25 Mfd. @ 25 v. 1st Audio Cathode Bypass
36	28109	10 Mfd. @ 450 v. Phono Amp. Plate Decoupling
37	28105	25 Mfd. @ 25 v. Phono Amp. Cathode Bypass
38	28109	10 Mfd. @ 450 v. AM Detector Plate Bypass
39	28172	.05 Mfd. @ 600 v. Line Bypass
40	28172	.05 Mfd. @ 600 v. Line Bypass
41	28113	.1 Mfd. @ 400 v. Filament Bypass
42	28112	.1 Mfd. @ 600 v. Tone Compensation
43	28101	.01 Mfd. @ 600 v. Audio Coupling
44	28101	.01 Mfd. @ 600 v. Audio Coupling
45	28112	.1 Mfd. @ 600 v. Tone Compensation
46	28101	.01 Mfd. @ 600 v. Audio Coupling
47	28101	.01 Mfd. @ 600 v. Audio Coupling
48	28119	.01 Mfd. @ 400 v. Audio Coupling
49	28103	.05 Mfd. @ 400 v. Audio Coupling
50	28112	.01 Mfd. @ 600 v. Audio Coupling
51	28130	.02 Mfd. @ 200 v. Tone Compensation
52	28129	.01 Mfd. @ 200 v. Tone Compensation
53	28102	.1 Mfd. @ 600 v. Tone Compensation
54	28119	.01 Mfd. @ 400 v. 2nd Limiter Plate Decoupling
55	28119	.01 Mfd. @ 400 v. 2nd Limiter Screen Bypass
56	28119	.01 Mfd. @ 400 v. 1st Limiter Screen Bypass
57	28119	.01 Mfd. @ 400 v. AVC Filter
58	28119	.01 Mfd. @ 400 v. 3rd FM IF Screen Bypass
59	28119	.01 Mfd. @ 400 v. 3rd FM IF Cathode Bypass
60	28119	.01 Mfd. @ 400 v. 2nd FM IF Screen Bypass
61	28119	.01 Mfd. @ 400 v. 2nd FM IF Cathode Bypass
62	28119	.01 Mfd. @ 400 v. 1st FM IF Screen Bypass
63	28119	.01 Mfd. @ 400 v. RF Bypass Power Supply
64	28119	.01 Mfd. @ 400 v. AVC Filter
65	28119	.01 Mfd. @ 400 v. Mixer Plate Decoupling
66	28103	.05 Mfd. @ 400 v. Tuning Eye Grid Filter
67	28117	.02 Mfd. @ 400 v. T.E. Amp. Screen Bypass
68	28103	.05 Mfd. @ 400 v. T.E. Amp. Cathode Bypass
69	28103	.05 Mfd. @ 400 v. AVC Filter
70	28117	.02 Mfd. @ 400 v. AVC Amp. Plate Decoupling
71	28113	.1 Mfd. @ 400 v. AVC Amp. Screen Bypass
72	28103	.05 Mfd. @ 400 v. AVC Amp. Cathode Bypass
73	28117	.02 Mfd. @ 400 v. Detector Plate Bypass
74	28117	.02 Mfd. @ 400 v. 2nd AM IF Plate Decoupling
75	28103	.05 Mfd. @ 400 v. 2nd AM IF Cathode Bypass
76	28109	.01 Mfd. @ 400 v. 2nd AM IF Grid Filter
77	28113	.1 Mfd. @ 400 v. Screen Bypass
78	28103	.05 Mfd. @ 400 v. 1st AM IF Cathode Bypass
79	28113	.1 Mfd. @ 400 v. RF Bypass Power Supply
80	28119	.01 Mfd. @ 400 v. 1st AM IF Grid Filter
81	28117	.02 Mfd. @ 400 v. AM Mixer Plate Decoupling
82	28103	.05 Mfd. @ 400 v RF Bypass Power Supply
83	28119	.01 Mfd. @ 400 v. AM Osc. Plate Bypass
84	28103	.05 Mfd. @ 400 v. AVC Filter
85	28103	.05 Mfd. @ 400 v. AM Mixer Screen Bypass
86	28103	.05 Mfd. @ 400 v. AM Mixer Cathode Bypass
87	28113	.1 Mfd. @ 400 v. AM RF Plate Decoupling
88	28103	.05 Mfd. @ 400 v. AM RF Screen Bypass
89	28103	.05 Mfd. @ 400 v. AM RF Cathode Bypass
90	28132	.025 Mfd. @ 400 v. AVC Filter
91	28119	.01 Mfd. @ 400 v. RF Bypass Power Supply
92	28103	.05 Mfd. @ 400 v. T.E. Amp. Plate Decoupling
93	CM20A101K	100 MMF. @ 500 v. Tone Compensation
94	CM20A101K	100 MMF. @ 500 v. Phono Coupling
95	CM20A331K	330 MMF. @. 500 v. Tone Compensation
96	CM20A331K	330 MMF. @ 500 v. Tone Compensation
97	CM30A272K	2700 MMF. @ 500 v. Tone Compensation
98	CM20A121K	120 MMF. @ 500 v. Tone Compensation
99	CM25A681K	680 MMF. @ 500 v. Tone Compensation
100	CM20A331K	330 MMF. @ 500 v. Tone Compensation
101	CM30A272K	2700 MMF. @ 500 v. Tone Compensation
102	27166	50 MMF. @ 300 v. (Ceramic) Discriminator Filter
103	27166	50 MMF. @ 300 v. (Ceramic) Discriminator Filter
104	CM20A221M	220 M.M.F. @ 500 v. De-emphasis
105	CM20A220M	22 MMF. @ 500 v. Limiter Coupling
106	CM20B470K	47 MMF. @ 500 v. 1st Limiter Grid Filter
107	28127	30 MMF. @ 300 v. (Ceramic) FM Osc. Grid
108	28160	5 MMF. @ 300 v. (Ceramic) Fixed Trimmer
109	28124	120 MMF. @ 300 v. (Ceramic) FM RF Screen Bypass
110	28140	10 MMF. @ 300 v. (Ceramic) Osc. Coupling
111	28125	1000 MMF. @ 500 v. (Ceramic) FM Mixer Screen Bypass
112	28126	120 MMF. @ 300 v. (Ceramic) RF Coupling
113	28125	1000 MMF. @ 500 v. (Ceramic) FM RF Plate Decoupling
114	28120	500 MMF. @ 300 v. (Ceramic) FM Osc. Plate Bypass
115	28126	120 MMF. @ 300 v. (Ceramic) FM RF Grid Filter
116	CM20A271K	270 MMF. @ 500 v. (Ceramic) T.E. Diode Filter
117	CM20A150M	15 MMF. @ 500 v. (Ceramic) T.E. Amp. Coupling
118	CM20A471M	470 MMF. @ 500 v. (Ceramic) AVC Diode Filter
119	CM20A271K	270 MMF. @ 500 v. (Ceramic) IF Filter
120	CM20A271K	270 MMF. @ 500 v. (Ceramic) IF Filter
121	CM20A150M	15MMF. @ 500 v. (Ceramic) AM—AVC Coupling
122	CM20A101M	100 MMF. @ 500 v. (Ceramic) Osc. Grid Capacitor
123	CM20A470M	47 MMF. @ 500 v. (Ceramic) Osc. Coupling
124	CM20A231J	230 MMF. @ 500 v. (Ceramic) Fixed Trimmer
125	CM20A112M	1100 MMF. @ 300 v. (Ceramic) Osc. Cathode Bypass
126	CM20A471M	470 MMF. @ 500 v. (Ceramic) RF Coupling

©John F Rider

Item No.	Part No.	Description
128	CM20A100M	10 MMF. @ 500 v. (Ceramic) Ant. Coupling
129	CM20A181K	180 MMF. @ 500 v. (Ceramic) Ant. Coupling
130	29232	500 K ohm 1 w. (Ceramic) Volume Control and Switch
131	29260	100 ohm 2 w. (Ceramic) Hum Balance Control
132	29260	100 ohm 2 w. (Ceramic) Bias Balance Control
133	29260	100 ohm 2 w. (Ceramic) Hum Balance Control
134	29259	1000 ohm 2 w. (Ceramic) Feed-back Balance Control
135	28123	82 ohm 2 w. (Ceramic) Rectifier Ballast
136	28123	82 ohm 2 w. (Ceramic) Rectifier Ballast
137	RC40AE683M	68K ohm 2 w. (Ceramic) Bleeder
138	RC30AE183K	18K ohm 1 w. (Ceramic) Bleeder
139	RC30AE183K	18K ohm 1 w. (Ceramic) Bleeder
140	RC30AE682K	6800 ohm 1 w. (Ceramic) Bleeder
141	27195	240 ohm 5 w. (Ceramic) Output Cathode
142	RC20AE102M	1000 ohm ½ w. (Ceramic) Parasitic Suppressor
143	RC20AE102M	1000 ohm ½ w. (Ceramic) Parasitic Suppressor
144	RC20AE102M	1000 ohm ½ w. (Ceramic) Parasitic Suppressor
145	RC20AE102M	1000 ohm ½ w. (Ceramic) Parasitic Suppressor
146	RC20AE224J	220K ohm ½ w. (Ceramic) Output Grid
147	RC20AE224J	220K ohm ½ w. (Ceramic) Output Grid
148	RC20AE104J	100K ohm ½ w. (Ceramic) 1st Driver Plate Load
149	RC20AE474M	470K ohm ½ w. (Ceramic) 1st Driver Grid
150	RC20AE222K	2200 ohm ½ w. (Ceramic) 1st Driver Cathode
151	RC20AE104J	100 K ohm ½ w. (Ceramic) 2nd Driver Plate Load
152	RC20AE222K	2200 ohm ½ w. (Ceramic) 2nd Driver Cathode
153	RC20AE474M	470K ohm ½ w. (Ceramic) 2nd Driver Grid
154	RC20AE753J	75K ohm ½ w. (Ceramic) Feed-back
155	RC20AE753J	75K ohm ½ w. (Ceramic) Feed-back
156	RC20AE473J	47K ohm ½ w. (Ceramic) Phase Inverter Plate Load
157	RC20AE223M	22K ohm ½ w. (Ceramic) Phase Inverter Plate Decoupling
158	RC20AE332K	3300 ohm ½ w. Phase Inverter Cathode
159	RC20AE105M	1 Meg. ½ w. Phase Inverter Grid
160	RC20AE473J	47K ohm ½ w. Phase Inverter Cathode
161	RC20AE124K	120K ohm ½ w. Tone Compensation
162	RC20AE393K	39K ohm ½ w. Tone Compensation
163	RC20AE183K	18K ohm ½ w. Audio Amp. Plate Load
164	RC20AE153M	15K ohm ½ w. Audio Amp. Plate Decoupling
165	RC20AE561K	560 ohm ½ w. Audio Amp. Cathode
166	RC20AE333K	33K ohm ½ w. Tone Compensation
167	RC20AE474K	470K ohm ½ w. Tone Compensation
168	28137	27K ohm ½ w. Phono Amp. Plate Load
169	RC20AE223M	22K ohm ½ w. Phono Amp. Plate Decoupling
170	RC20AE102M	1000 ohm ½ w. Phono Amp. Cathode
171	RC20AE224K	220K ohm ½ w. Phono Amp. Grid
172	RC20AE475K	4.7 Meg. ½ w. Tone Compensation
173	RC20AE472M	4700 ohm ½ w. Bleeder
174	RC30AE104M	100K ohm 1 w. Bleeder
175	RC20AE104M	100K ohm ½ w. De-emphasis Network
176	RC20AE104J	100K ohm ½ w. Discriminator Diode Load
177	RC20AE104J	100K ohm ½ w. Discriminator Diode Load
178	RC20AE152M	1500 ohm ½ w. 2nd Limiter Plate Decoupling
179	RC20AE223M	22K ohm ½ w. 2nd Limiter Screen Dropping
180	RC20AE223M	22K ohm ½ w. 2nd Limiter Screen Bleeder
181	RC20AE154K	150K ohm ½ w. 2nd Limiter Grid
182	RC20AE103M	10K ohm ½ w. 1st Limiter Plate Load
183	RC20AE223M	22K ohm ½ w. 1st Limiter Screen Dropping
184	RC20AE223M	22K ohm ½ w. 1st Limiter Screen Bleeder
185	RC20AE473M	47K ohm ½ w. 1st Limiter Grid Filter
186	RC20AE225M	2.2 Meg. ½ w. A V C Network
187	RC20AE152M	1500 ohm ½ w. 3rd FM IF Plate Decoupling
188	RC40AE272K	2700 ohm 2 w. Voltage Dropping
189	RC40AE222K	2200 ohm 2 w. Voltage Dropping
190	RC20AE121K	120 ohm ½ w. 3rd FM IF Cathode
191	RC20AE332M	3300 ohm ½ w. 3rd FM IF Grid
192	RC20AE103M	10K ohm 1 w. 2nd FM IF Plate Decoupling
193	RC20AE121K	120 ohm ½ w. 2nd FM IF Cathode
194	RC20AE103M	10K ohm 1 w. 1st FM IF Plate Decoupling
195	RC20AE104M	100K ohm ½ w. AVC Network
196	RC40AE471K	470 ohm 2 w. Decoupling
197	RC20AE473K	47K ohm ½ w. FM Mixer Plate Decoupling
198	RC20AE333K	33K ohm ½ w. FM Oscillator Grid
199	RC40AE123K	12K ohm 2 w. FM Oscillator Plate Load
200	RC20AE473K	47K ohm ½ w. FM Mixer Screen Dropping
201	RC20AE223M	22K ohm ½ w. FM Mixer Screen Bleeder
202	RC20AE472M	4700 ohm ½ w. FM Mixer Cathode
203	RC40AE473K	12K ohm 2 w. FM RF Plate Load
204	RC20AE473K	47K ohm ½ w. FM RF Screen Dropping
205	RC20AE104M	100K ohm ½ w. AVC Network
206	RC20AE105M	1 Meg. ½ w. Tuning Eye Grid Filter
207	RC20AE473K	47K ohm ½ w. Tuning Eye Diode Load
208	RC20AE102M	1000 ohm ½ w. Tuning Eye Amp. Plate Decoupling
209	RC20AE474M	470K ohm ½ w. Tuning Eye Amp. Screen Dropping
210	RC20AE471M	470 ohm ½ w. Tuning Eye Amp. Cathode
211	RC20AE104M	100K ohm ½ w. Tuning Eye Amp. Grid
212	RC20AE335M	3.3 Meg. ½ w. Tuning Eye Amp. Grid
213	RC20AE183K	18 K ohm 2 w. Delayed AVC Bleeder Network
214	RC20AE153K	15K ohm 2 w. Delayed AVC Bleeder Network
215	RC20AE102M	1000 ohm ½ w. Delayed AVC Bleeder Network
216	RC20AE684K	680K ohm ½ w. IF Filter
217	RC20AE224M	220K ohm ½ w. AVC Diode Load
218	RC20AE474M	470K ohm ½ w. AVC Network
219	RC20AE102M	1000 ohm ½ w. AVC Amp. Plate Decoupling
220	RC20AE473J	47K ohm ½ w. AVC Amp. Screen Dropping
221	RC20AE221M	220 ohm ½ w. AVC Amp. Cathode
222	RC20AE474M	470K ohm ½ w. AVC Amp. Grid
223	RC20AE154M	150K ohm ½ w. AM Detector Cathode
224	RC40AE153M	15K ohm ½ w. IF Filter
225	RC40AE153M	15K ohm ½ w. AM Detector Plate Load
226	RC20AE102M	1000 ohm ½ w. 2nd AM IF Plate Decoupling
227	RC20AE471M	470 ohm ½ w. 2nd AM IF Cathode
228	RC20AE104M	100K ohm ½ w. AVC Network
229	RC30AE473K	47K ohm 1 w. AM IF Screen Dropping
230	RC20AE471M	470 ohm ½ w. 1st AM IF Cathode
231	RC20AE104M	100K ohm ½ w. AVC Network
232	RC20AE474M	470K ohm ½ w. AVC Network
233	RC20AE102M	1000 ohm ½ w. AM Mixer Plate Decoupling
234	PC30AE153M	15K ohm 1 w. AM Osc. Plate Load
235	RC20AE473M	47K ohm ½ w. AM Osc. Grid
236	RC40AE223K	22K ohm 2 w. AM Mixer Screen Dropping
237	RC20AE223K	22K ohm ½ w. AM Mixer Injector Grid
238	RC20AE181K	180 ohm ½ w. AM Mixer Cathode
239	RC20AE225M	2.2 Meg. ½ w. AM Mixer Signal Grid
240	RC20AE332K	3300 ohm ½ w. BC RF Coil Shunt
241	RC20AE102M	1000 ohm ½ w. AM RF Plate Decoupling
242	RC20AE152M	1500 ohm ½ w. AM RF Plate Load (Push Button)
243	RC20AE104M	100K ohm ½ w. AM RF Screen Dropping
244	RC20AE471M	470 ohm ½ w. AM RF Cathode
245	RC20AE104M	100K ohm ½ w. AVC Network
246	RC20AE105M	1 Meg. ½ w. Tuning Eye Plate Load
247	29224	4.5 Henries 75 ohm D.C. Resis. Filter Choke
248	29227	9 Henries 170 ohm D.C. Resis. Filter Choke
249	29227	9 Henries 170 ohm D.C. Resis. Filter Choke
250	29225	(Power Xfmr.) 117 VAC @ 1.16 A-760 VCT @ .210A-4.9 VAC @ 1.8A-4.9 VAC @ 2.0A
251	29226	(Filament Xfmr.) 117 VAC @ .64A-6.6 VAC @ .3A-6.4 VAC @ 4.3A-6.4 AC @4.5A
252	29290	(Output Xfmr.) Pri. -3500 ohm CT., Secondary -22 ohm (DC Resist. Pri. -110 ohm CT., Secondary 9 ohm)
253	29220-2	Speaker 15" P.M. 16 ohm Voice Coil Impedance
254	None	Speaker Cone — Cone Diam. 14¼"— Voice Coil Diam. 2½"

MEISSNER MFG. DIV.
MAGUIRE INDUSTRIES, INC.

MODEL 2961

Item No.	Part No.	Description
255	04751	Loop Antenna
256	04607	B.C. Antenna Coil
257	04672	Push-Button Antenna Coil
258	04672	Push-Button Antenna Coil
259	04672	Push-Button Antenna Coil
260	04672	Push-Button Antenna Coil
261	04672	Push-Button Antenna Coil
262	04672	Push-Button Antenna Coil
263	04610	S.W. Ant. Coil Band 1
264	04613	S.W. Ant. Coil Band 2
265	04608	B. C. RF Coil
266	04611	S.W. RF Coil Band 1
267	04614	S.W. RF Coil Band 2
268	04609	B. C. Osc. Coil
269	04673	Push-Button Osc. Coil
270	04673	Push-Button Osc. Coil
271	04673	Push-Button Osc. Coil
272	04673	Push-Button Osc. Coil
273	04673	Push-Button Osc. Coil
274	04673	Push-Button Osc. Coil
275	04612	S.W. Osc. Coil Band 1
276	04615	S.W. Osc. Coil Band 2
277	04650	Osc. Cathode Coil
278	04216	AM Input IF
279	04216	AM Interstage IF
280	04238	AM Output IF
281	04238	AVC IF
282	04421	Tuning Eye IF
283	04878	FM Antenna
284	04590	FM Antenna Coil
285	04590	FM RF Coil
286	04590	FM Osc. Coil
287	04193	FM Input IF
288	04193	FM Interstage IF
289	04193	FM Output IF
290	04193	Limiter Transformer
291	04194	Discriminator Transformer
292	04588	Filament RF Choke
293	29262	Dial Light Type 44
294	29262	Dial Light Type 44
295	29262	Dial Light Type 44
296	29262	Dial Light Type 44
297	04179	Band Switch
298	28299	Selectivity Switch
299	28294	Station Selector Push Button Assembly
300	28295	Tone-Phono Push Button Swith

Item No.	Part No.	Description
301	27168	Tuning Capacitor
302	04638	FM Tuner Shaft and Vanes
303	29276	Fuse
304	RC20AE105M	1 Meg. ½ Watt Tone Compensation
305	RC20AE273K	27 K ohm AM Det. Series Audio ½ Watt
306		SW Antenna Hank
	24294	Fuse Holder
	04724	Input Cable Assembly (Consists of plug 29292A, shell 29292B, and 72" of single conductor shielded cable 228-50)
	04728	8-Conductor Cable Assembly (Consists of plug 29202A and 42" of 8-Conductor Cable 22857)
A13	17057	Trimmer Capacitor
A14	17066	Padder Capacitor (6 plate)
	29255	Tuning Eye Socket and Cable
A32	17062	Trimmer Capacitor (FM RF)
A33	17062	Trimmer Capacitor (FM Ant.)
A31	17060	Trimmer Capacitor (FM Osc.)
	04598	FM Drive Pulley Assembly
	04674	Pulley and Bracket Assembly (Band Selector Drive Cord)
	29274	Dial Light Socket
	29221	Dial Light Socket
	12491	24-inch Cable and Shield (shield outside)
	04515	Complete assembly—single permeability tuner
	22850	12-inch shielded lead-insulated cover. This lead connects between the push-button switch and the band selector switch. It is a part of the tuned circuit and exact replacement must be employed.
	04332	Cover Plate
	19665	Pulley, dial drive, small hole
	04592	Pulley, dial drive, large hole
	04507	Dial Scale
	04556	Dial Backing
	19795	Dial Light Shield
	04329-B	Push-Button Knobs (Ivory)
	04559-B	Push-Button escutcheon (Ivory)
	04353-A	Pointer Knobs, Push-Button Setup
	29278	Push-Button Call Letters (set)

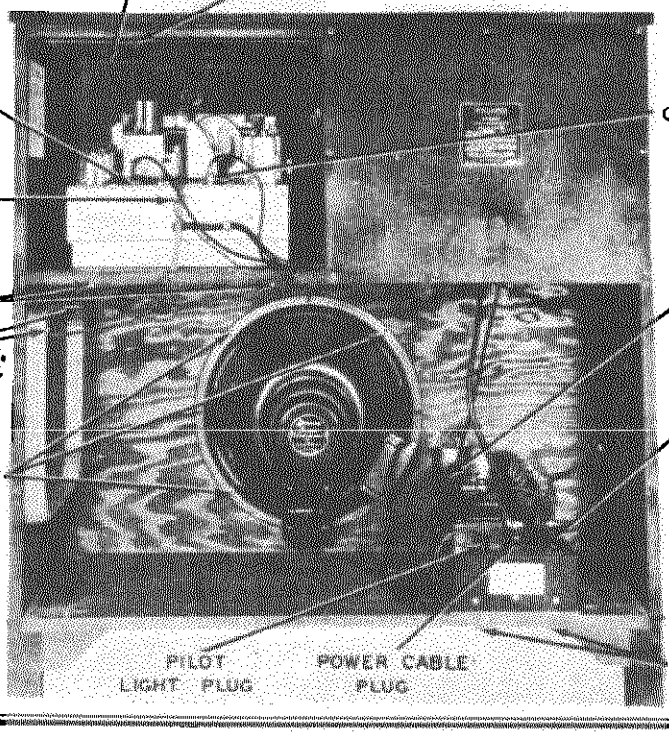

REAR CABINET VIEW

MIDWEST RADIO CORP. MODELS RB-12, SC-12, 922, CHASSIS LC-12

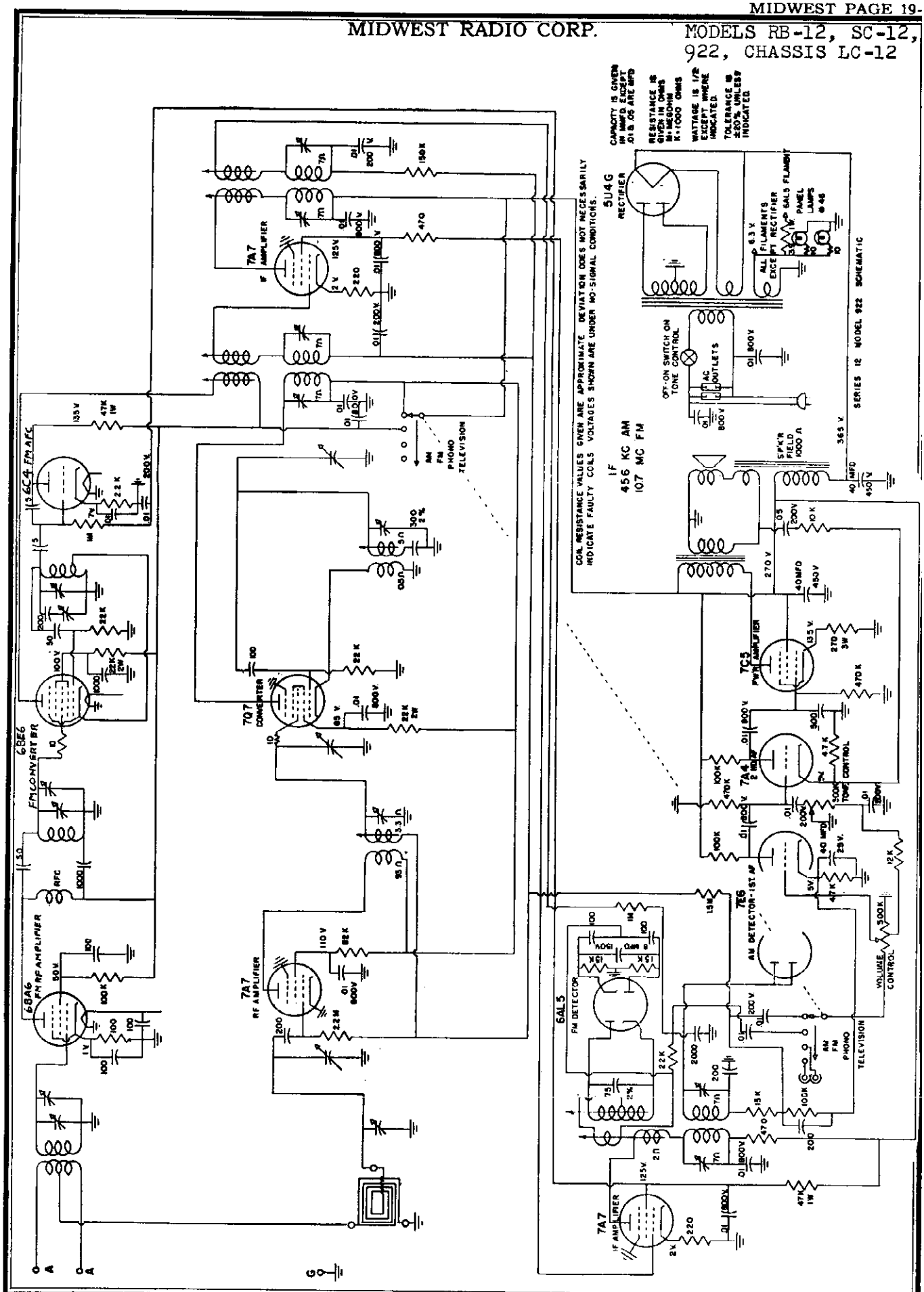

ALIGNMENT — Refer to the alignment chart for step by step procedure. It is preferable to align the FM IF stages with an AM or CW Signal. It should be noted that all adjustment are made for peak avc reading except the secondary of the third transformer. At this point, if you use an AM signal, it may be tuned for minimum audio signal; or the discriminator voltage may be used, reading it with a VTVM, and the secondary may be adjusted to the zero voltage. There may be some discrepancy between these methods, and if it is not excessive, is of no importance.

The FM RF alignment should be made using an FM signal and either avc or audio for peaking. In doing this alignment, or when feeding the IF signal into the FM mixer grid, care must be taken not to move the wiring. If the wiring is displaced so as to affect the inductance of the RF circuits it is difficult to re-establish the RF-Oscillator tracking.

The AM, RF and IF alignment should be done with a VTVM across the avc. The recommended signal value is one which will generate 10 volts of avc. When aligning the "AM" band the loop must be plugged in and you need not adjust the RF padder core. The RF padder is very broad and can be aligned only if the converter grid lead is connected to an RF type VTVM as indicator; this will usually involve a signal level greater than is normally available.

ALIGNMENT CHART

Coupling	Signal	Band Switch	Dial	Adjustment
To 7Q7 converter grid through .05 mfd. capacitor.	456 KC AM	AM	1000 KC	Peak 1st, 2nd and 3rd IF trimmers on top of IF cans.
To "A" on antenna ground terminal strip through 200 mfd. and 400 ohms in series.	1600 KC AM	AM	1600 KC	Peak RF, converter and oscillator trimmers marked "B".
	550 KC AM	AM	550 KC	Peak converter and oscillator padder cores marked "B". Loop must be plugged in. Do not adjust RF.
To 6BE6 mixer grid direct.	10.7 MC AM or CW *	FM	100 MC	Peak core adjustments for avc (around 3 volts) at 1st, 2nd and primary of 3rd IF. Adjust secondary of 3rd IF for audio null from 30% amplitude modulated 10.7 MC IF signal.
To "A" and "A" on doublet terminal strip through a pair 150 ohm resistors.	105 MC FM	FM	105 MC	Peak RF mixer and oscillator trimmers for avc or audio.

*Read text for use of CW for FM-IF alignment.

DIAL STRINGING — Use a light weight flexible dial cord when replacing worn or broken cord such as Beven-Wilcox FSN-25-12.

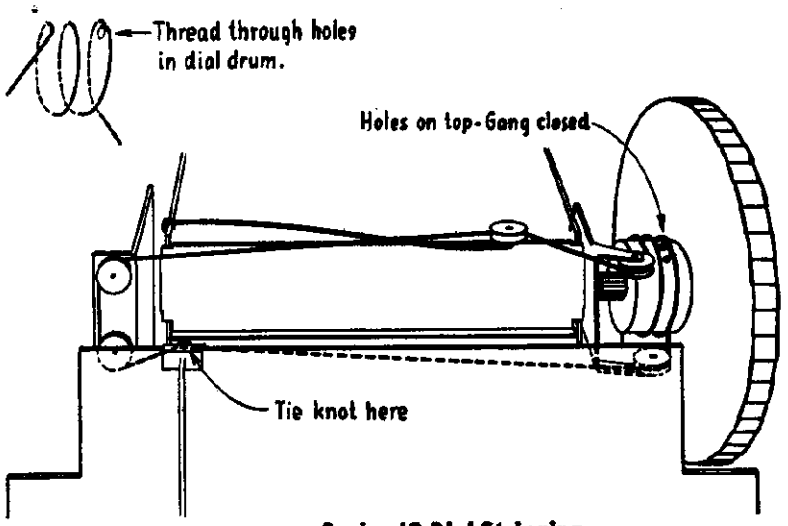

Series 12 Dial Stringing

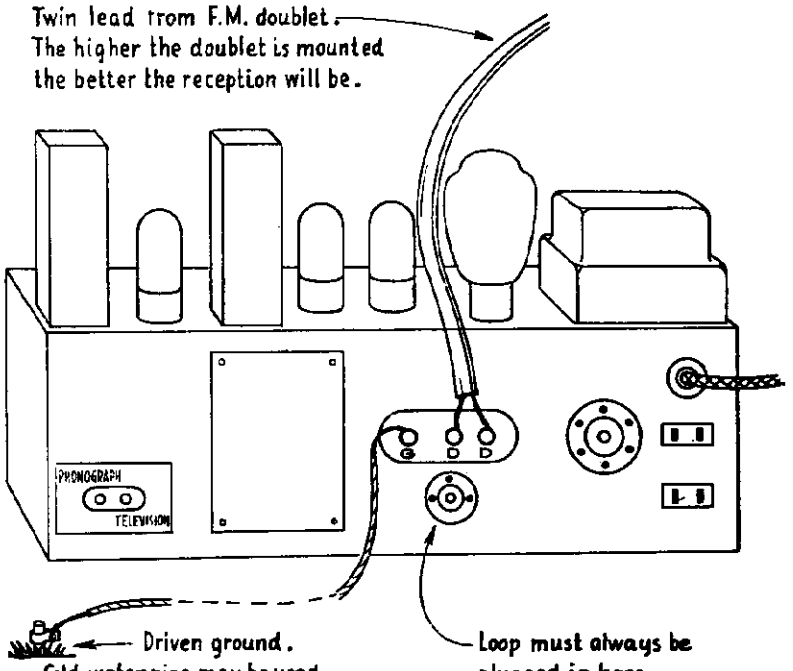

Antenna Connections

Note: Order resistors and condensers by value, tolerance and wattage or voltage.

Note: When ordering include serial number of chassis, since Midwest records of changes in parts specifications are kept by that number.

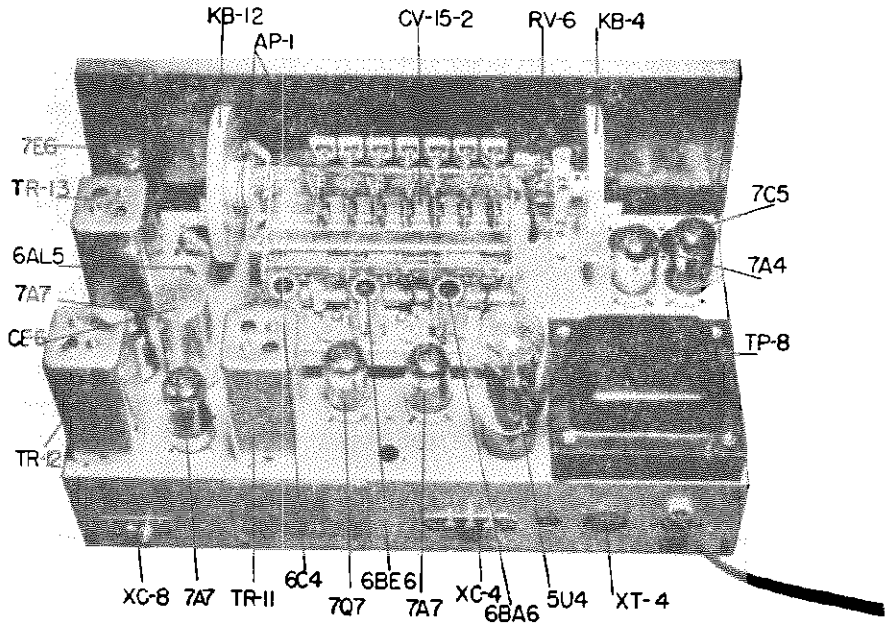

Top View of Series 12 Chassis

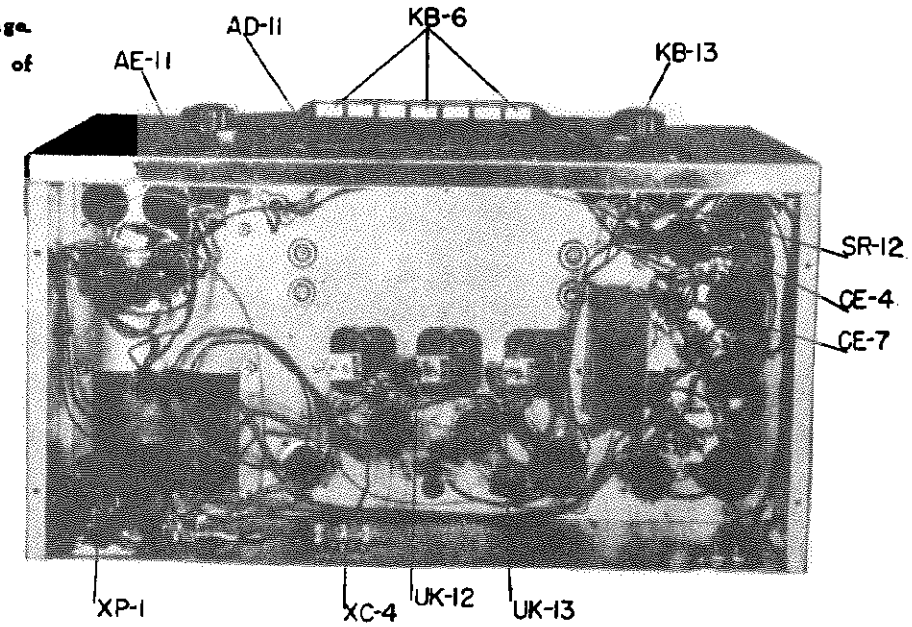

Bottom View of Series 12 Chassis

PARTS LIST

Part	Description
AD-11	Glass Dial
AE-11	Escutcheon
AP-1	Wood Pulley
AP-21	Pointer
AS-1	Wood Pulley Stud
CE-6	Filter Condenser 40-40
CE-4	Cathode Bypass 40 mfd. 25v
CE-7	Electrolytic 8 mfd. 150v
*CV-15-2	Tuning Gang
EG-5	Speaker Grommet
ES-12	Miniature Tube Shield
HE-7	Speaker Mtg. Eyelet
IL-1	Panel Lamp 6-8v
KB-4	Volume Knob
KB-12	Tuning Knob
KB-13	Tone & Band Knob
KB-6	Push Buttons, Set of 7
OG-1	Miter Gear, Pair
PC-3	Loop Plug
PC-5	Phono & Television Plug
RV-5	Tone Control
RV-6	Volume Control
SP-5	Speaker
SR-12	Band Switch
TP-8	Power Transformer
*TR-11	1st IF Transformer
*TR-12	2nd IF Transformer
*TR-13	3rd IF Transformer
*UK-12	Mixer Coil Assembly
*UK-13	Oscillator Coil Assembly

To set the push buttons this exact procedure should be followed. A small screw driver will be needed.

1. Turn on the receiver and allow at least three minutes to warm up.
2. Remove the push button by pulling straight out. A hooked instrument will assist in removing the end buttons.
3. Loosen the LOCK SCREW at least one half turn.
4. Using the screw driver with the blade in the screw slot, push the mechanism in firmly. Hold in during step 5. The mechanism may bind at first. Use sufficient force to break loose so that the push button and tuning control are independent.
5. Tune the pointer past the desired station then back to the desired station and make the tuning adjustment as carefully as you know how.
6. Tighten the LOCK SCREW.
7. Check the setting of this push button by tuning away from the station manually, then pushing in firmly. Pushing the button must return the pointer to the position it had when the LOCK SCREW was tightened. If the station is not now tuned in perfectly repeat the steps 2 to 6 carefully.
8. Adjust each of the seven buttons, or as many as you wish to set, exactly as outlined above.

Any button can be set for any pointer position, however, you may find it more desirable to select the button nearest the pointer position so that each successive adjustment moves the pointer in the same direction. That is, the "M" button will be set for a station at the left of the dial, the "W" button will set for a station near the center, etc.

MODELS RB-16, SC-16, 916, CHASSIS LB-16

MIDWEST RADIO CORP.

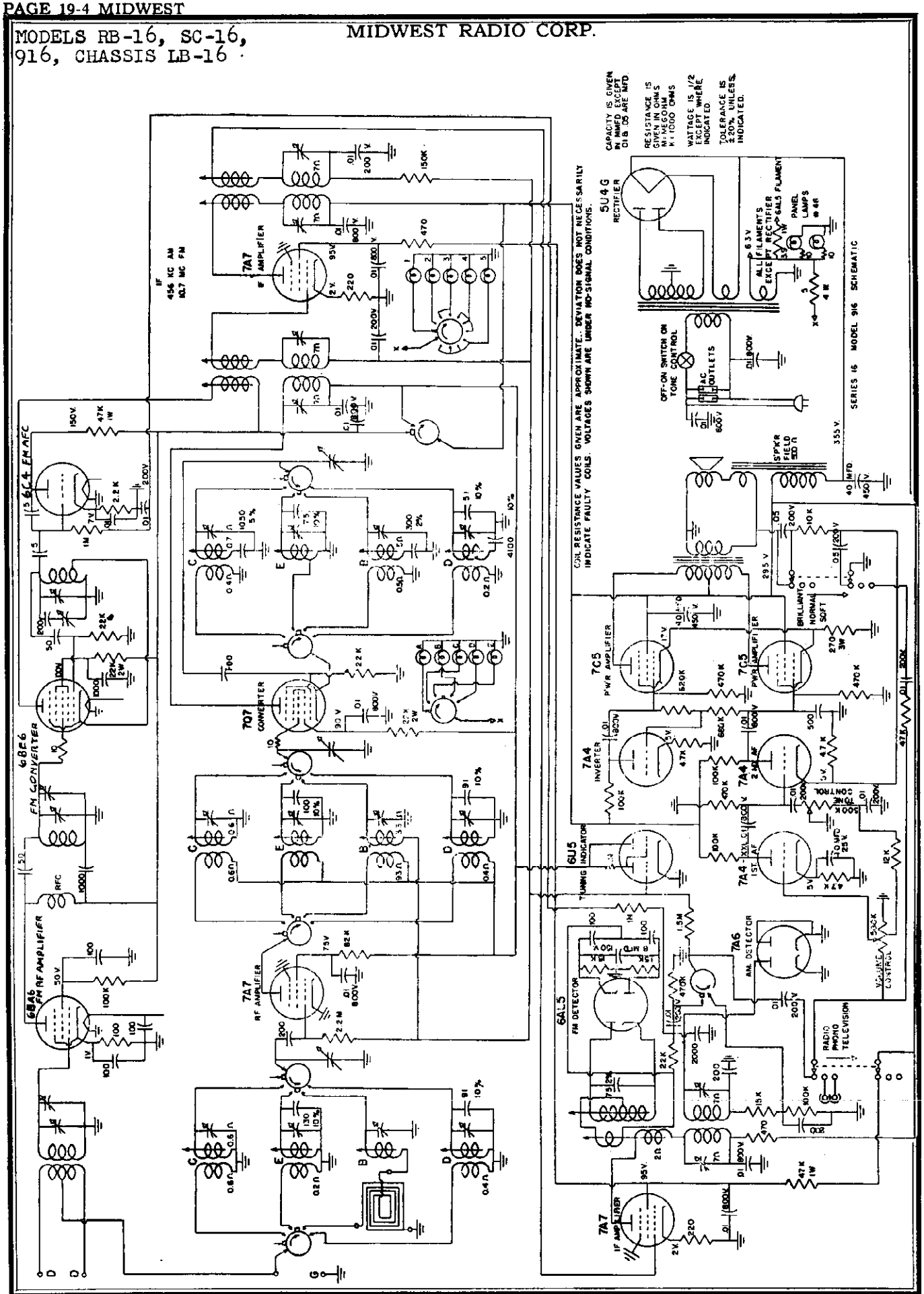

ALIGNMENT — Refer to the alignment chart for step by step procedure. It is preferable to align the FM IF stages with an AM or CW Signal. It should be noted that all adjustment are made for peak avc reading except the secondary of the third transformer. At this point, if you use an AM signal, it may be tuned for minimum audio signal; or the discriminator voltage may be used, reading it with a VTVM, and the secondary may be adjusted to the zero voltage. There may be some discrepancy between these methods, and if it is not excessive, is of no importance.

The FM RF alignment should be made using an FM signal and either avc or audio for peaking. In doing this alignment, or when feeding the IF signal into the FM mixer grid, care must be taken not to move the wiring. If the wiring is displaced so as to affect the inductance of the RF circuits it is difficult to re-establish the RF-Oscillator tracking.

The AM, RF and IF alignment should be done with a VTVM across the avc. The recommended signal value is one which will generate 10 volts of avc. When aligning the "B" band the loop must be plugged in and you need not adjust the RF padder core. The RF padder is very broad and can be aligned only if the converter grid lead is connected to an RF type VTVM as indicator; this will usually involve a signal level greater than is normally available.

ALIGNMENT CHART

Coupling	Signal	Band Switch	Dial	Adjustment
To 7Q7 converter grid through .05 mfd. capacitor.	456 KC AM	B	1000 KC	Peak 1st, 2nd and 3rd IF trimmers on top of IF cans.
To "D" on antenna ground terminal strip through 200 mfd. and 400 ohms in series.	1600 KC AM	B	1600 KC	Peak RF, converter and oscillator trimmers marked "B".
	550 KC AM	B	550 KC	Peak converter and oscillator padder cores marked "B". Loop must be plugged in. Do not adjust RF.
	4.7 MC AM	C	4.7 MC	Peak "C" trimmers.
	1.6 MC AM	C	1.6 MC	Peak "C" cores.
	10 MC AM	D	10 MC	Peak "D" trimmer
	5 MC AM	D	5 MC	Peak "D" cores.
	22 MC AM	E	22 MC	Peak "E" trimmer.
	11.5 MC AM	E	11.5 MC	Peak "E" cores.
To 6BE6 mixer grid direct.	10.7 MC AM or CW *	A	100 MC	Peak core adjustments for avc (around 3 volts) at 1st, 2nd and primary of 3rd IF. Adjust secondary of 3rd IF for audio null from 30% amplitude modulated 10.7 MC IF signal.
To "D" and "D" on doublet terminal strip above "A-G" strip through a pair 150 ohm resistors.	105 MC FM	A	105 MC	Peak RF mixer and oscillator trimmers for avc or audio.

Read text for use of CW for FM-IF alignment.

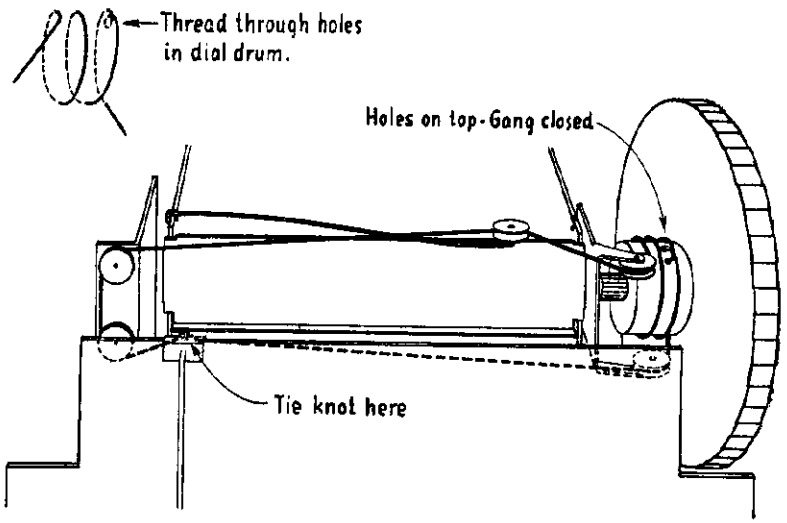

Dial Stringing

DIAL STRINGING — Use a light weight flexible dial cord when replacing worn or broken cord such as Beven-Wilcox FSN-25-12.

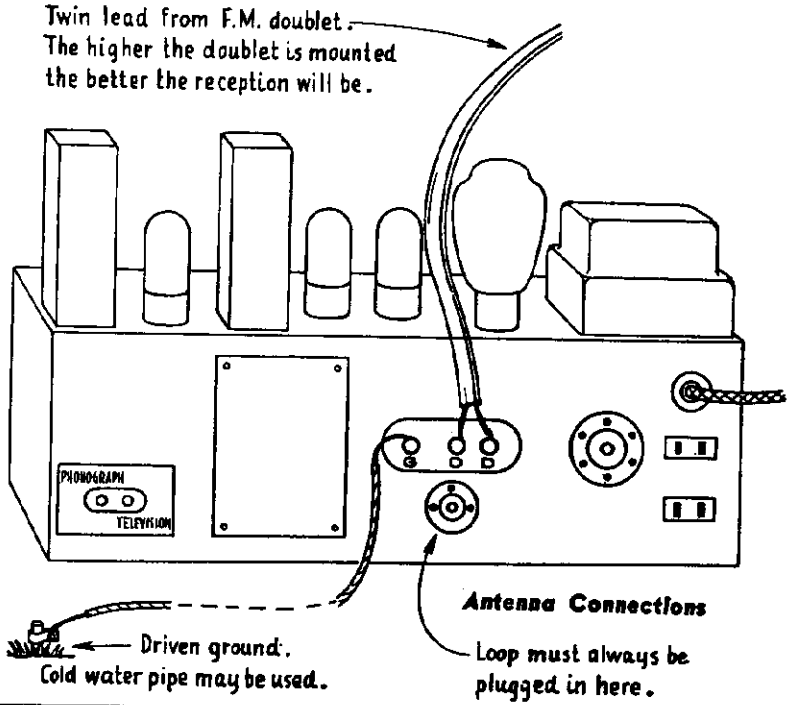

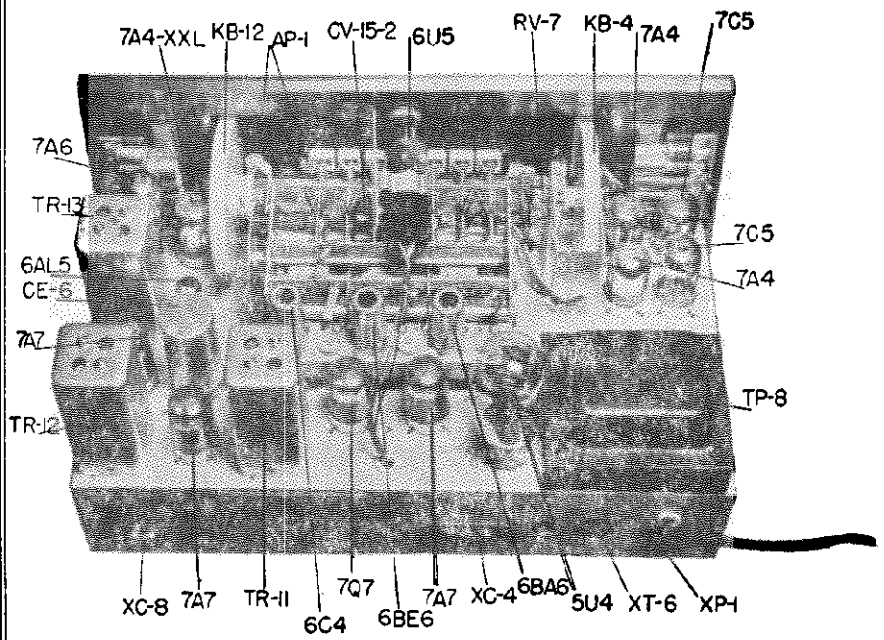

Top View of Series 16 Chassis

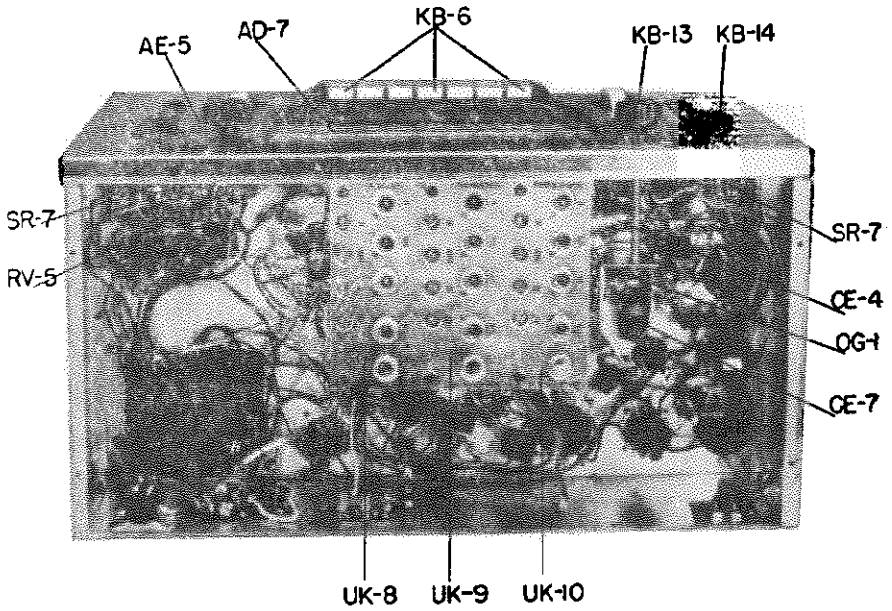

Bottom View of Series 16 Chassis

Part	Description
AD-6	Short Wave Dial
AD-7	Glass Dial
AD-9	Tone Disc Assembly
AD-10	Selector Disc Assembly
AE-5	Escutcheon
AP-1	Wood Pulley
AP-21	Pointer
AS-1	Wood Pulley Stud
CE-6	Filter Condenser 40-40
CE-4	Cathode Bypass 40 mfd. 25v
CE-7	Electrolytic 8 mfd. 150v
*CV-15-2	Tuning Gang
EG-5	Speaker Grommet
ES-12	Miniature Tube Shield
HE-7	Speaker Mtg. Eyelet
IL-1	Panel Lamp 6-8v
KB-4	Volume Knob
KB-12	Tuning Knob
KB-13	Tone & Band Knob
KB-14	Tone & Selector Knob, Small
KB-6	Push Buttons, Set of 7
OG-1	Miter Gear, Pair
PC-3	Loop Plug
PC-5	Phono & Television Plug
RV-5	Tone Control
RV-7	Volume Control
SP-2	Speaker
TP-8	Power Transformer
*TR-11	1st IF Transformer
*TR-12	2nd IF Transformer
*TR-13	3rd IF Transformer
*UK-8	R.F. Coil plate
*UK-9	Mixer coil plate
*UK-10	Oscillator coil plate

REPLACEMENT PARTS — Certain parts are available on an exchange basis; these are shown on the parts list with an "*."

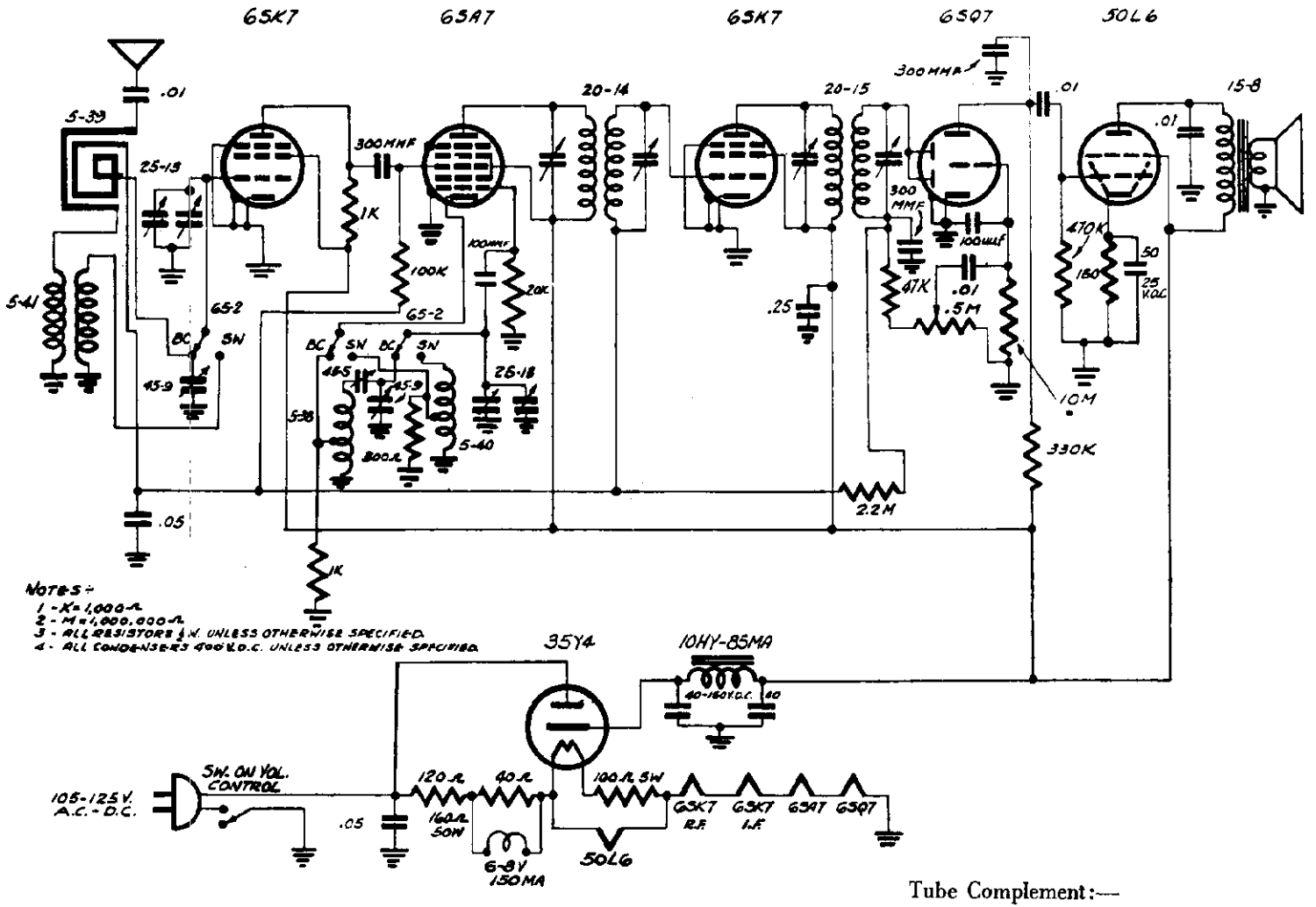

Tuning Range—Standard Broadcast 540 — 1640 KCS.
International Shortwave 5.4 — 19 MCS.

Power Supply:—105-125 volts direct current or 50 - 60 cycle alternating current.

Tube Complement:—

1—6SK7 RF Amplifier
1—6SA7 Converter
1—6SK7 IF Amplifier
1 — 6SQ7 2nd Detector, AVC, 1st Audio
1—50L6 Power Amplifier
1—35Y4 Rectifier

ANTENNA

This receiver contains a built-in loop Antenna of excellent design and will give good results even in localities where broadcast signals are weak. It may be necessary, however, to turn the set toward the direction of the desired signal to provide maximum loop pick-up. For best reception of distant stations an external Antenna should be used. A screw connector is provided on the cabinet back for easy connection to an outdoor Antenna. An external Antenna is required for shortwave reception. Where space prohibits an outdoor installation, 10 feet of insulated wire stretched out on the floor will usually give adequate results.

INITIAL ADJUSTMENT

Plug line cord connector into 115 volt current supply outlet. Turn Power Switch (see drawing below) clockwise until a click is heard. Wait one minute for tubes to heat and advance control until a response is heard. If the set does not operate or if a loud hum is heard, remove plug, rotate ½ turn and replace in socket.

CONTROLS

The position and function of the three controls are shown in diagram below:

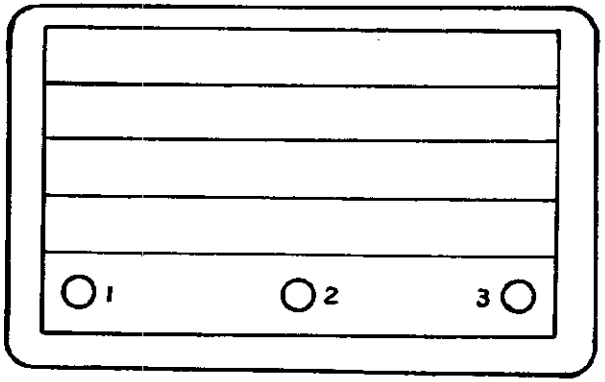

No. 1—Power Switch and Volume Control

No. 2—Tuning Control

No. 3—Band Switch, counter clockwise for broadcast — clockwise for Shortwave.

ALIGNMENT NOTES

The screws for adjusting the IF and RF Amplifiers, together with the frequencies at which adjustment is to be made, are shown in diagrams below.

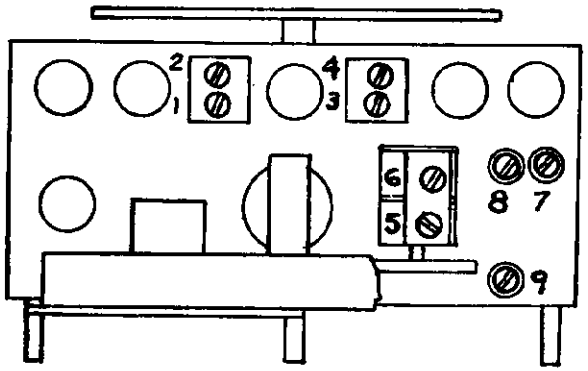

Generator Connection	*Dummy Antenna*	*Band SW Position*	*Freq.*	*Adjust. Trimmers*
Stator rear section gang open	.1 mfd Condenser	B. C.	455 KC	1, 2, 3, 4
Antenna Post	400 ohm Resistor	S. W.	18 MC	5, 6
Antenna Post	200 MMF Condenser	B. C.	1400 KC	7, 8
Antenna Post	200 MMF Condenser	B. C.	600 KC	9 (rock gang)
Antenna Post	200 MMF Condenser	B. C.	1400 KC	7, 8

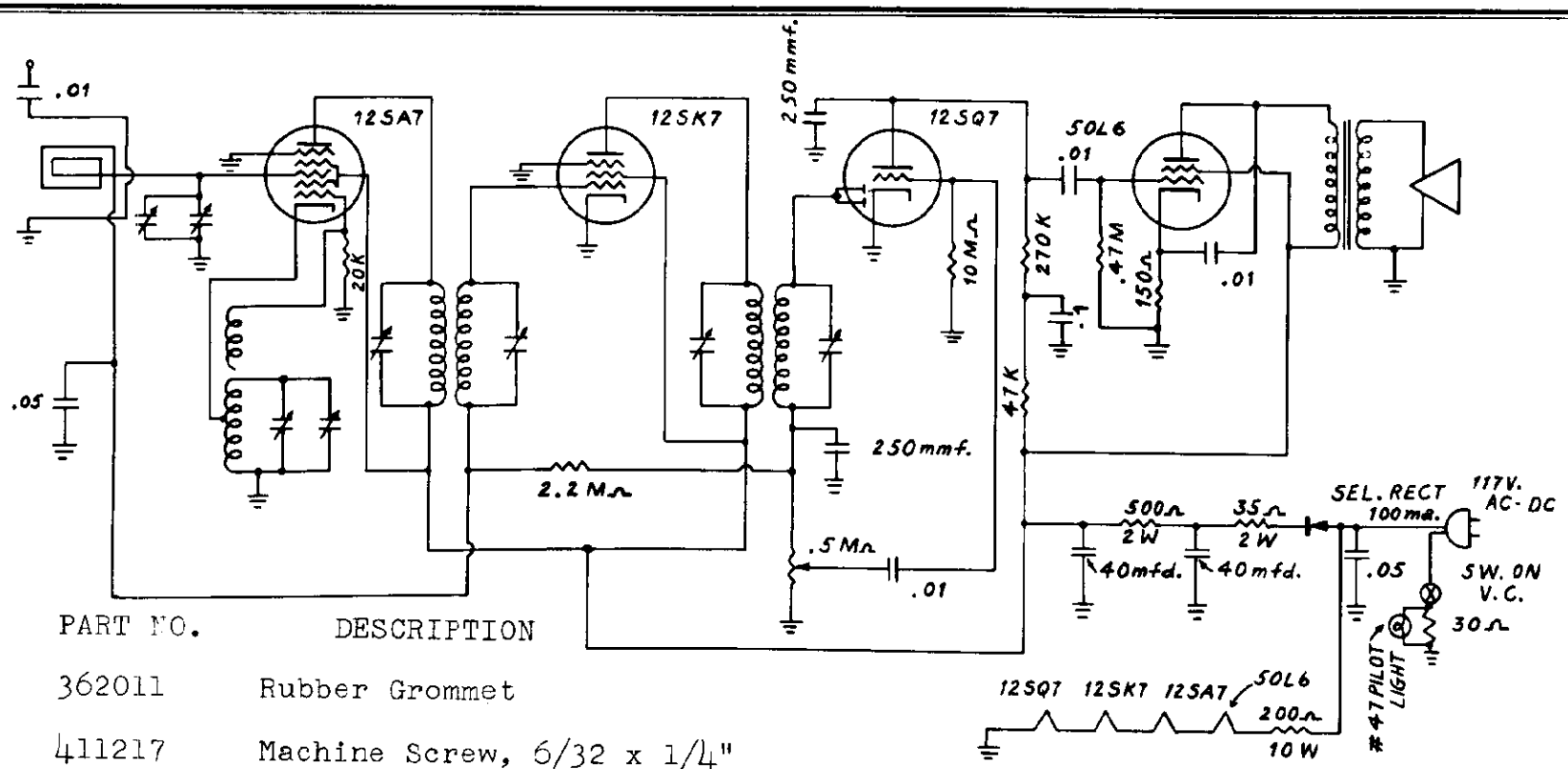

PART NO.	DESCRIPTION
362011	Rubber Grommet
411217	Machine Screw, 6/32 x 1/4" Binding Head
411237	Machine Screw, 6/32 x 1 1/4" Binding Head
431042	Self-tapping Screw, #6 x 1/2" Phillips Round Head
431150	Self-tapping Screw, #6 x 1/4" Phillips Round Head
431614	Self-tapping Screw, #6 x 1/4" Hex Head
461007	Hex Nut, 3/8" x 32 x 1/2"
461009	Hex Nut, 6/32 x 1/4"
491002	#6 I.T. Lockwasher, Shakeproof
491048	3/8" I.T. Lockwasher, Shakeproof

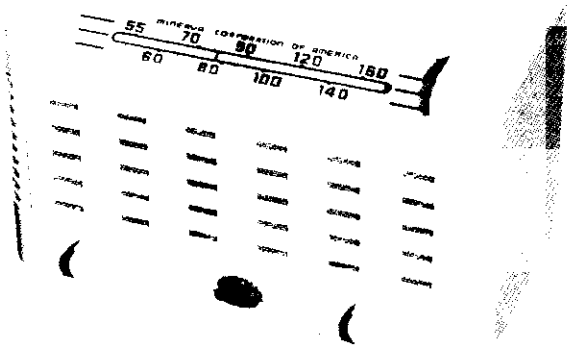

MODELS 410, 411 MINERVA CORP. OF AMERICA

PART NO.	DESCRIPTION
185005	5" PM Speaker w/Transformer
190004	Condenser, .05 Mfd 400V
190005	Condenser, .1 Mfd 200V
190010	Condenser, .01 Mfd 400V
212035	Condenser, Mica, 250 mmf
230008	Condenser, Electrolytic, 2 x 40 Mfd 150V
235003	Condenser, Variable, w/pulley
247001	Antenna Loop
248008	Oscillator Coil
262106	Resistor 10 megohm 1/4 Watt
262203	Resistor 20K ohm 1/4 Watt
262225	Resistor 2.2 megohm 1/4 Watt
262334	Resistor 330K ohm 1/4 Watt
262473	Resistor 47K ohm 1/4 Watt
262474	Resistor 470K ohm 1/4 Watt
282151	Resistor 150 ohm 1 Watt
292350	Resistor 35 ohm 2 Watt
292501	Resistor 500 ohm 2 Watt
300015	Potentiometer w/switch 1 9/16"
303031	Resistor 200 ohm 10 Watt
305002	IF Transformer, input
305003	IF Transformer, output
312003	Tube, type 12SA7
312005	Tube, type 12SK7
312009	Tube, type 12SQ7
312118	Tube, type 50L6
317004	Octal Socket
328002	#6 I.T. Soldering Lug
328008	Terminal Strip, Single Tie
328028	Terminal Strip, 6-Tie, 3rd from left gnd.
337107	3/16" Spaghetti.
333007	AC Line Cord
336001	Dial Cord
344002	Idler Pulley
346007	Dial Pointer
348001	Dial Cord Spring
350018	Loop Mounting Bracket
350019	Condenser Mounting Bracket
350030	Speaker Mounting Bracket
350038	Dial Face Holder
350039	Dial Face Holder Bracket
350040	Dial Light Bracket
350096	Chassis
357010	Dial Drive Shaft Assembly, 1 9/16"
511011	#6 Flat Washer, 5/8" OD x 1/32"
531033	Standard Rivet, 9/64"
551009	Shoulder Rivet, 29/64"
600008	Spacer Sleeve, 7/32"
730001	Selenium Rectifier, 100 ma.
292350	Resistor, 35 ohm, 2 W
316011	Pilot Lamp, #47
319001	Pilot Lamp Assembly

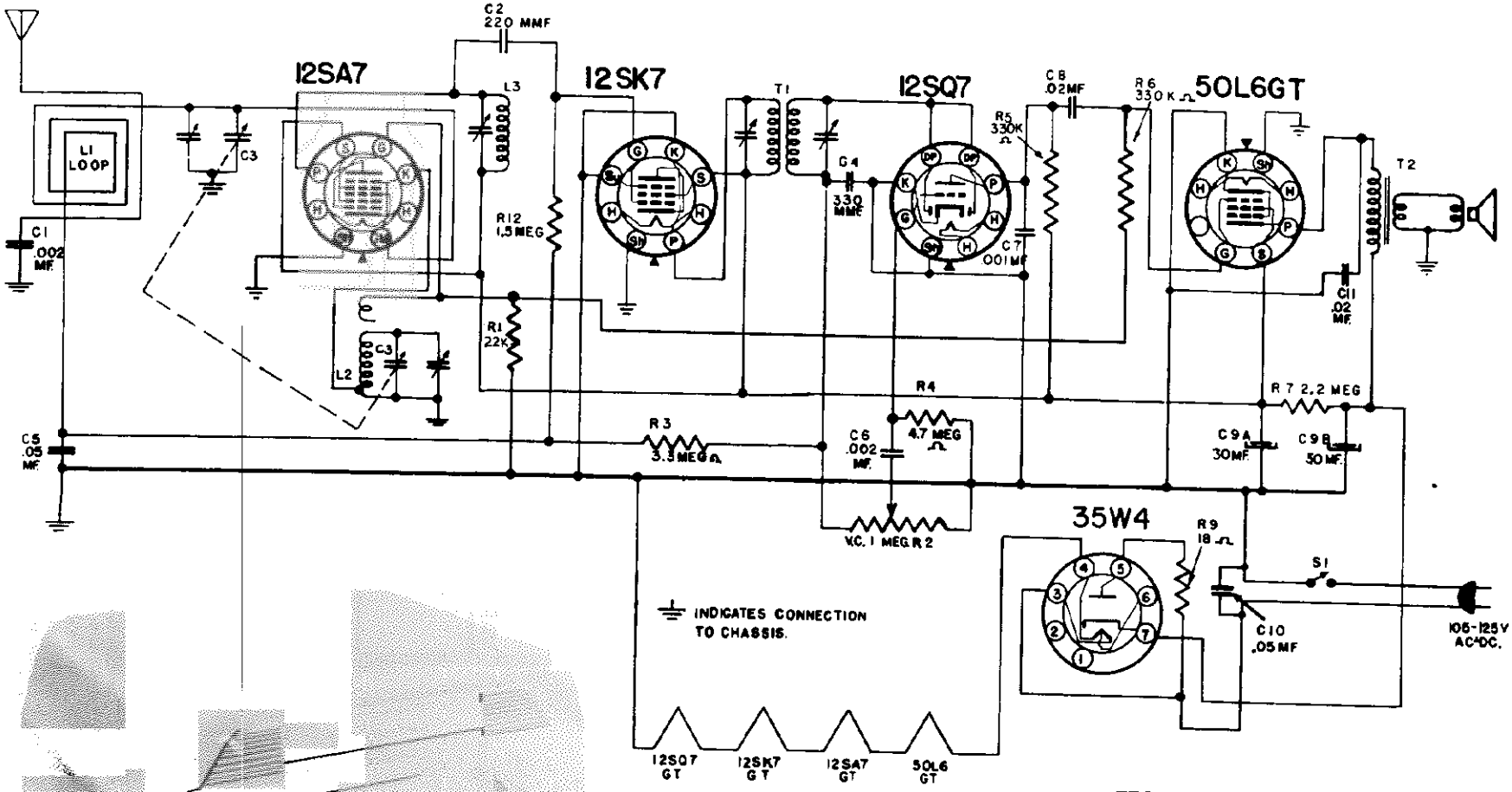

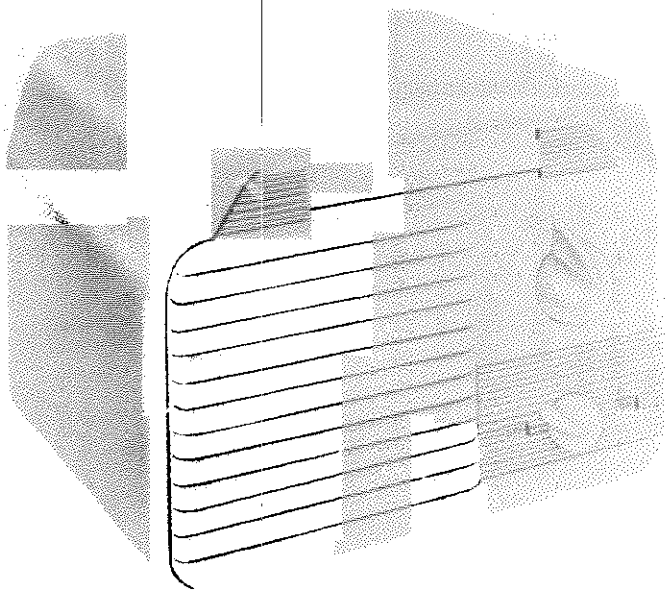

TECHNICAL DATA

Tuning range	520 to 1590 kc
Intermediate frequency	455 kc
Power consumption	30 watts
Selectivity	1. A.C.A.—3 to 1. 2. A.C.A.—12.5 to 1
Sensitivity (for 0.5 watt output)	600 microvolts average
Power output (in voice coil):	
Undistorted	0.8 watts
Maximum	2.5 watts

MODEL M-500

MONITOR EQUIPMENT CORP.

ALIGNMENT PROCEDURE

(Refer to Chassis View)

- Output meter across 3.2-ohm output load.
- Volume control at maximum.
- Align for maximum output. Reduce input as needed to keep output near 0.4 volts.
- Connect ground post of signal generator to chassis.

SIGNAL GENERATOR			TUNER SETTING	ADJUST FOR MAXIMUM OUTPUT (in order shown)
Frequency	*Dummy Antenna*	*Connection to Radio*		
455 kc	0.1 mf	Stator of antenna section of gang	Any	Trimmers on I.F. can
1590 kc	50 mmfd	Primary of antenna coil	Rotor full open (plates out of mesh)	Oscillator trimmer
1590 kc	50 mmfd	Primary of antenna coil	Rotor full open (plates out of mesh)	Antenna trimmer

REPLACEMENT PARTS LIST

Capacitors

Ref. No.	*Part No.*	*Description*
C1, C6		Paper, .002 mfd 400 volts
C8-C11		Paper, .02 mfd 400 volts
C5		Paper, .05 mfd 200 volts
C7		Paper, .001 mfd 500 volts
C4		Ceramic 330 mmfd 500 volts
C3	1675	Variable Air—2 gang
C9	2073	Electrolytic, 50-30 mfd 150 volts
C10		Paper, .05 mfd 400 volts

Resistors

R2	2483	Control, volume with switch, 2 meg-ohms
R1	22K	19,000 ohms, ¼ watt
R3		3.3 meg ohms, ¼ watt
R4, R10		4.7 meg ohms, ¼ watt
R5		220,000 ohms, ¼ watt
R6		330,000 ohms, ¼ watt
R7		2200 ohms, 2 watts
R9		18 ohms, ½ watt
R11		100,000 ohms, ¼ watt

Miscellaneous

	Cord, line 6 ft.
39160	Knob, tuning
39161	Knob, volume
5877	Speaker
54314	Tuning knob washer
18110	Sockets, wafer octal

Coils and Transformers

Ref. No.	*Part No.*	*Description*
L2	28210	Oscillator coil
L3	3535	I.F. transformer
L5	1770	I.F. transformer
L4	1300	Output transformer
L1	62192	Loop

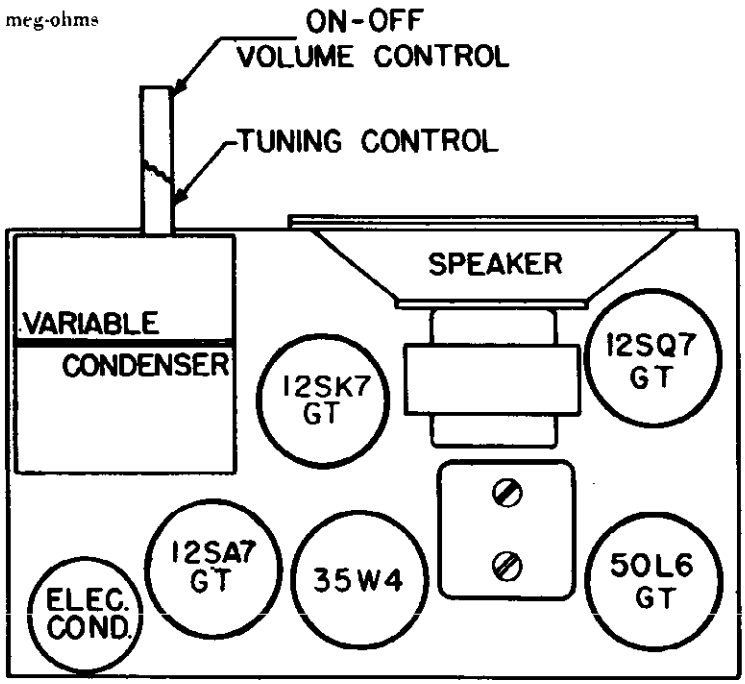

• The values of the resistors and mica capacitors listed above are based on RMA standards. Due to conditions beyond our control some receivers have been shipped with components of pre-standardized values. This receiver will operate equally well with components of either group. An illustration of the differences in both resistors and capacitors follows:

Pre-standardized value—50,000 ohms, 1/3 watt, 10%
RMA value—47,000 ohms, 1/2 watt, 10%
Pre-standardized value—200 mmf, 500 volts, 20%
RMA value—220 mmf, 500 volts, 20%

MONTGOMERY WARD

MODELS 84BR-1517A, 84BR-1518A

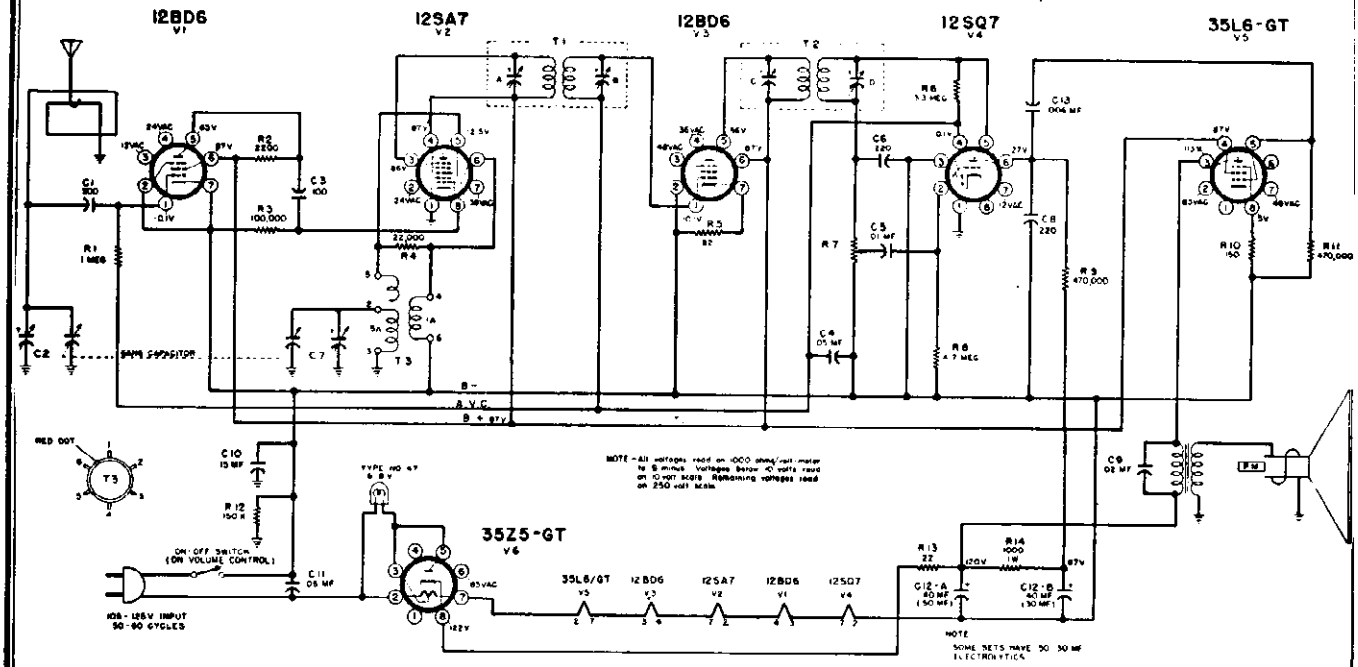

NOTE: On some sets slug tuned I.-F.'s are used instead of trimmer tuned I.-F.'s. 108-140Q and 108-145H are trimmer tuned. B-13A-12023-1 and B-13B-12022-1 are slug tuned. The slug tuned I.-F.'s are tuned from the top and bottom (secondary on top, primary on bottom).

When trimmer tuned I.F.'s are used, R5 is 270 ohms.

GENERAL DESCRIPTION

This receiver is a single-band, AC-DC set which uses 5 tubes plus a rectifier. The antenna input and oscillator circuits are tuned by a two-gang capacitor. A loop antenna is built into the cabinet; provision is made also for the connection of an external antenna. AVC voltage is applied to the grids of the R.F.-Amplifier, and IF-amplifier tubes.

ELECTRICAL SPECIFICATIONS

Power Supply	105 to 125 volts, DC or 50-60 cycle AC, 35 watts.
Frequency Range	530 to 1650 kc.
Intermediate Freq.	455 kc.
Selectivity	At 1000 kc, 55 kc at 1000 x signal.
Sensitivity	40 microvolts average for .05 watt output.
Power Output	0.8 watts undistorted, 1 watt maximum.
Loud Speaker	5" P.M., v.c. impedance 3.2 ohms.
Tube Complement	12BD6, R. F. stage. 12SA7, converter. 12BD6, I. F. amplifier. 12SQ7, detector, AVC, audio amplifier. 35L6GT, output amplifier. 35Z5GT, rectifier.

REPLACING DIAL POINTER DRIVE CORD—

1. Rotate tuning knob to extreme clockwise position. This closes the tuning condenser. Knob should remain in this postion until installation of cord is completed.
2. Tie cord to loop in spring in drum. Pass around drum in direction shown.
3. Pass over idler pulley number 1, then around idler pulley number 2 as shown.
4. Pass cord over idler pulley number 3, then down around drum as shown. Tie to loop in spring in such a manner that the spring is partly stretched.
5. Place pointer on top edge of dial plate. Guide cord through the three fingers on the back of the pointer.
6. Make sure the tuning knob is in the extreme clockwise position. Slide the dial pointer along the edge of the dial plate until the left edge of the pointer coincides with the right hand notch on the gold background plate, when viewed from the front.
7. Push the cord firmly into the three fingers and clamp them tightly together.

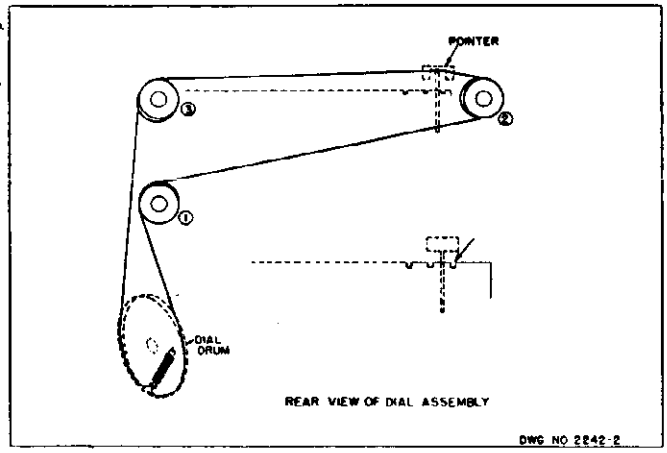

MODELS 84BR-1517A,
84BR-1518A

MONTGOMERY WARD

SETTING THE PUSHBUTTONS—The pushbuttons may be used, after proper adjustment, for the automatic tuning of any six stations which you select. They can be set up in any order.

1. Turn on the radio. Allow it to warm up for at least one minute.

2. Push out the call letters of the six stations from the call-letter sheets supplied with this manual.

3. Insert one call-letter tab in the rectangular opening in each of the pushbuttons, in any sequence. Press an acetate tab (supplied in small envelope) into each of the pushbuttons.

4. With the screwdriver supplied, check to see that the locking screw in the center of the tuning knob (see illustration) is loose. If it is not, turn it several turns to the left (counterclockwise).

5. Press the first pushbutton down *all the way*. With one hand hold the button down *firmly* and with the other carefully tune in the desired station. Release the pushbutton.

6. Follow this procedure for each of the five other buttons, adjusting each one for a different station.

7. Rotate the tuning knob on the side of the cabinet as far to the right as it will go. Tighten the locking screw in the center of the knob. IT IS IMPORTANT THAT THIS SCREW BE TIGHTENED VERY FIRMLY.

8. The pushbuttons are now properly set for automatic tuning. Any of the six stations may now be tuned in simply by pressing the proper button down as far as it will go. If it is desired to reset any of the buttons for a new station, loosen the locking screw in the center of the tuning knob, set the pushbutton as described above, and re-tighten the locking screw.

ALIGNMENT PROCEDURE AND RECEIVER STAGE SENSITIVITIES

The signal source must be an accurately calibrated signal generator capable of supplying R. F. signals modulated 30% with a 400-cycle audio signal. A 400-cycle source is necessary for the audio measurement.

The table below lists the sensitivity at various points. All measurements are based on an output of 50-milliwatts. This may be measured by disconnecting the speaker voice coil and substituting a 3.2-ohm, 5-watt resistor across the secondary winding of the output transformer. A reading of .4 volts AC across this resistor will be equivalent to a 50-milliwatt output with the speaker connected. Variations of plus or minus 25% are usually permissable. Volume control at maximum for all adjustments.

SIGNAL GENERATOR				TUNER SETTING	ADJUST FOR MAXIMUM OUTPUT	INPUT FOR 50-MILLIWATT OUTPUT
Frequency	Coupling Capacitor	Connection to Radio	Ground Connection			
455 kc.	.1 mf.	Pin No. 8 of 12SA7	12SQ7 Pin 3	Rotor full open	Trimmers on output and input I.F. cans	100 microvolts
1650 kc.	.1 mf.	Pin No. 8 of 12SA7	12SQ7 Pin 3	Rotor full open	Oscillator trimmer C7 (on bottom)	———
1400 kc.	none	See note A	none	Set dial at 1400	Antenna trimmer C2 (on bottom)	———
1400 kc.	.1 mf.	External antenna clip	12SQ7 Pin 3	1400 kc.	———	13 microvolts
400 cycles	.1 mf.	12SQ7, Pin 2	12SQ7 Pin 3	———	———	.05 volts

Note A: Lay output lead of generator in back of loop antenna. Turn up generator output. Loop antenna will pick up energy.

©John F. Rider

MONTGOMERY WARD

MODELS 84BR-1517A, 84BR-1518A

REPLACEMENT PARTS LIST

Use Only Genuine Factory Replacement Parts

Ref. No.	Part No.	Description
		CONDENSERS
C12A, C12B	A-8C-15030 or A-8C-15262	Filter cond., 40 mfd. x 40 mfd. x 150 volts Filter cond. 50 mfd. x 30 mfd. x 150 volts
C4	C-8D-10770	.05 x 200 volts, tubular
C9	C-8D-10774	.02 x 400 volts tubular
C5	C-8D-11738	.01 x 200 volts, tubular
C11	C-8D-10813	.05 x 400 volts, tubular
C10	C-8D-10953	.15 x 400 volts, tubular
C13	C-8D-10785	.006 x 600 volts, tubular
C6, C8	C-8G-11733	220 mmf., ceramic
C1	C-8G-11822	500 mmf., ceramic
C3	C-8G-11734	100 mmf., ceramic
		RESISTORS
R14	C-9B2-62	1000 ohms, 1 watt, 10%
R9, R11	C-9B1-94	470K ohms, ½ watt, 20%
R8	C-9B1-35	4.7 megohms, ½ watt, 20%
R6	C-9B1-34	3.3 megohms, ½ watt, 20%
R4	C-9B1-78	2.2K ohms, ½ watt, 20%
R13	C-9B1-42	22 ohms, ½ watt, 10%
R3	C-9B1-25	100K ohms, ½ watt, 20%
R2	C-9B1-66	2200 ohms, ½ watt, 10%
R12	C-9B1-26	150K ohms, ½ watt, 20%
R1	C-9B1-31	1 megohm, ½ watt, 20%
R10	C-9B1-52	150 ohms, ½ watt, 10%
R5	C-9B1-49 or C-9B1-55	82 ohms, ½ watt, 10% 270 ohms, ½ watt, 10%
		COILS
	C-13E-16257	Loop antenna assembly, complete on back
T3	B-13D-15277	Oscillator coil
T1	108140Q or B-13A-12023-1	Input I.F. coil in can, 455 Kc.
T2	108145H or B-13B-12022-1	Output I.F. coil in can, 455 Kc.
(See note on page 3)		
		SOCKETS
	A-15C-16110	7-prong, tube socket
	121171	8-prong socket, laminated
	121216 or B-15B-10076	Socket base, bakelite
	A-47A-15451	Pilot light socket assembly

Ref. No.	Part No.	Description
		SPEAKER
	114197	5-inch P.M. speaker
	B-12C-15278	Output transformer for speaker
		DIAL AND TUNER PARTS
	115448	End plate (right hand bracket)
	115448C	End plate (left hand bracket)
	115146	Cams
	115143	Key washer (12 used on cam shaft)
	115143C	Key washer (one used)
	117528	Brass spacer (one used on cam-shaft
	117602	Brass spacer (four used on cam-shaft)
	131181	Spring washer for locking collar
	117604	Locking collar
	117600	Lever shaft
	115361	Lever with roller
	120283	Return spring for levers
	A-2G-15449	Pointer
	A-55A-10989	Dial cord, 24 inches used
	C-2C-15428	Dial plate assembly
	A-200-15463	Drum pulley
	A-3H-10299	Idler pulley
	120285	Drum spring
	B-2M-10383	Cinch button
	C-6D-15422	Dial scale
	B-2M-15200	Cinch button for dial scale
	A-2C-15450	Background plate
		MISCELLANEOUS
	10798	Line cord and plug
R7	101218 or A-10A-10626	Volume control and switch, 1 meg.
C1-A, C1-B	B-8A-10211	2-gang variable condenser
	107249	Pilot light bulb, type T-47
	134123	Rubber bumper (bottom of cabinet)
	13141	Cinch buttons, to cover trimmer holes in cabinet
	B-5B-14298-8	Pushbutton (6 used), Ivory
	A-23L-11900	Station call letters, set
	A-6C-14299	Acetate tabs for call letters
	5C-14286-9	Cabinet, bakelite, ivory color
	B-5B-15085-8	Knob, volume, ivory color
	A-5B-10994-9	Knob, tuning, ivory color
	A-3F-10995	Locking screw for tuning knob
	120388	Locking spring for tuning knob
	A-2H-10996	Reset key
	5C-14286-36	Cabinet, walnut
	A-2H-10715	Tube shield

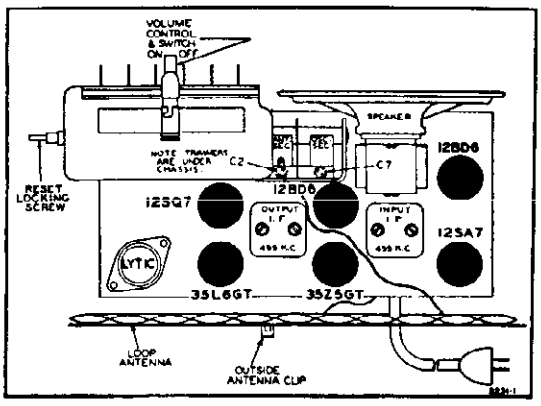

CHASSIS VIEW, SHOWING TUBE LOCATIONS
(See note on I.-F.'s.)

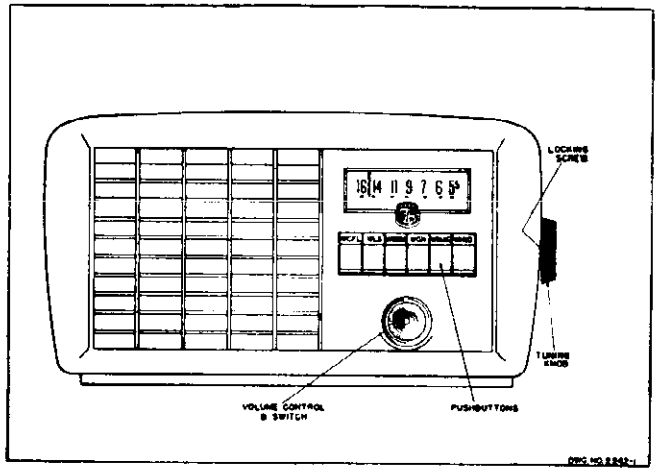

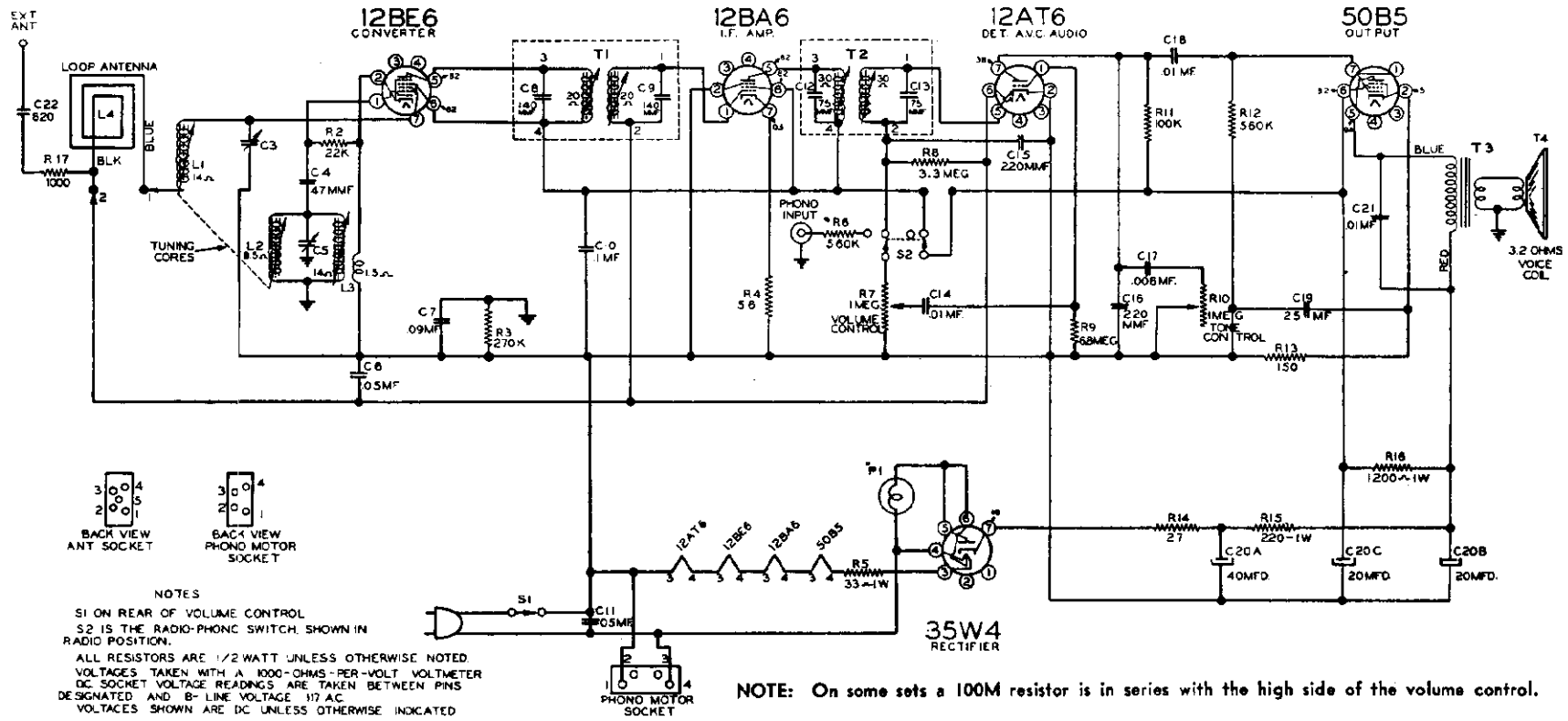

NOTE: On some sets a 100M resistor is in series with the high side of the volume control.

GENERAL DESCRIPTION

This radio-phonograph is a permeability-tuned, AC set using 4 miniature tubes plus a rectifier. A loop antenna is built into the back of the cabinet. A clip is provided for connection of an external antenna. Simple AVC voltage is applied to the converter and IF-amplifier tubes. The filament string is across the AC line.

ELECTRICAL SPECIFICATIONS

Power Supply.....105 to 125 volts; 60 cycles AC, 60 watts.
Frequency Range.....535 to 1620 kc.
Intermediate Freq....455 kc.
Selectivity.....At 1000 kc. 50 kc. at 1000 x signal.
Sensitivity.....10 microvolts average for .05 watts output.
Power Output.....0.75 watts undistorted, 1.0 watts maximum.
Loud Speaker.....4" x 6" oval, P.M., v.c. impedance 3.2 ohms.
Tube Complement.....12BE6, converter
12BA6, I.F. amplifier.
12AT6, detector, AVC, audio amplifier
50B5, output amplifier
35W4, rectifier
Pilot lite, 6-8 volts, T-47.

MONTGOMERY WARD MODEL 84BR-2003C

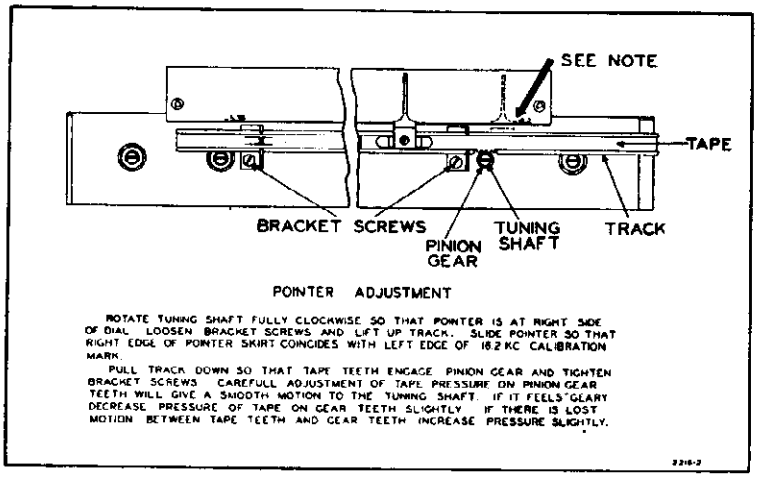

POINTER ADJUSTMENT

ROTATE TUNING SHAFT FULLY CLOCKWISE SO THAT POINTER IS AT RIGHT SIDE OF DIAL. LOOSEN BRACKET SCREWS AND LIFT UP TRACK. SLIDE POINTER SO THAT RIGHT EDGE OF POINTER SKIRT COINCIDES WITH LEFT EDGE OF 16.2 KC CALIBRATION MARK.

PULL TRACK DOWN SO THAT TAPE TEETH ENGAGE PINION GEAR AND TIGHTEN BRACKET SCREWS. CAREFULL ADJUSTMENT OF TAPE PRESSURE ON PINION GEAR TEETH WILL GIVE A SMOOTH MOTION TO THE TUNING SHAFT. IF IT FEELS GEARY DECREASE PRESSURE OF TAPE ON GEAR TEETH SLIGHTLY. IF THERE IS LOST MOTION BETWEEN TAPE TEETH AND GEAR TEETH INCREASE PRESSURE SLIGHTLY.

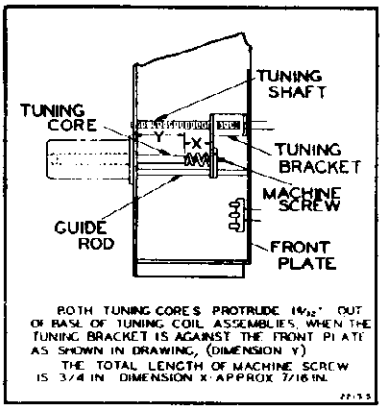

BOTH TUNING CORES PROTRUDE 1 9/32" OUT OF BASE OF TUNING COIL ASSEMBLIES, WHEN THE TUNING BRACKET IS AGAINST THE FRONT PLATE AS SHOWN IN DRAWING, (DIMENSION Y)

THE TOTAL LENGTH OF MACHINE SCREW IS 3/4 IN. DIMENSION X APPROX 7/16 IN.

NOTE: On some sets, pairs of punch marks on the inside of the tape guide are used as calibration markers. They are in the same relative position as the frequencies shown above. The end of the tape is then used as the indicator line.

CAUTION: The I.F. transformer construction is such that two resonance peaks occur for each winding, one peak when the slug is above its coil and another peak when the slug is below its coil. Be sure the upper cores are above the top coils and the lower cores are below the bottom coils (see coil drawing).

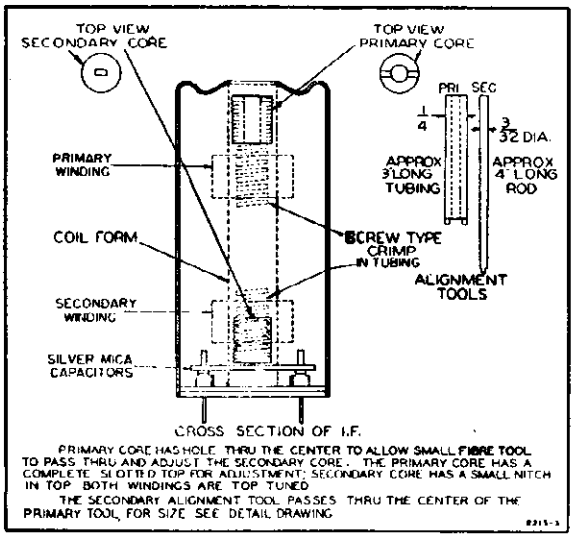

PRIMARY CORE HAS HOLE THRU THE CENTER TO ALLOW SMALL FIBRE TOOL TO PASS THRU AND ADJUST THE SECONDARY CORE. THE PRIMARY CORE HAS A COMPLETE SLOTTED TOP FOR ADJUSTMENT; SECONDARY CORE HAS A SMALL NITCH IN TOP. BOTH WINDINGS ARE TOP TUNED

THE SECONDARY ALIGNMENT TOOL PASSES THRU THE CENTER OF THE PRIMARY TOOL, FOR SIZE SEE DETAIL DRAWING

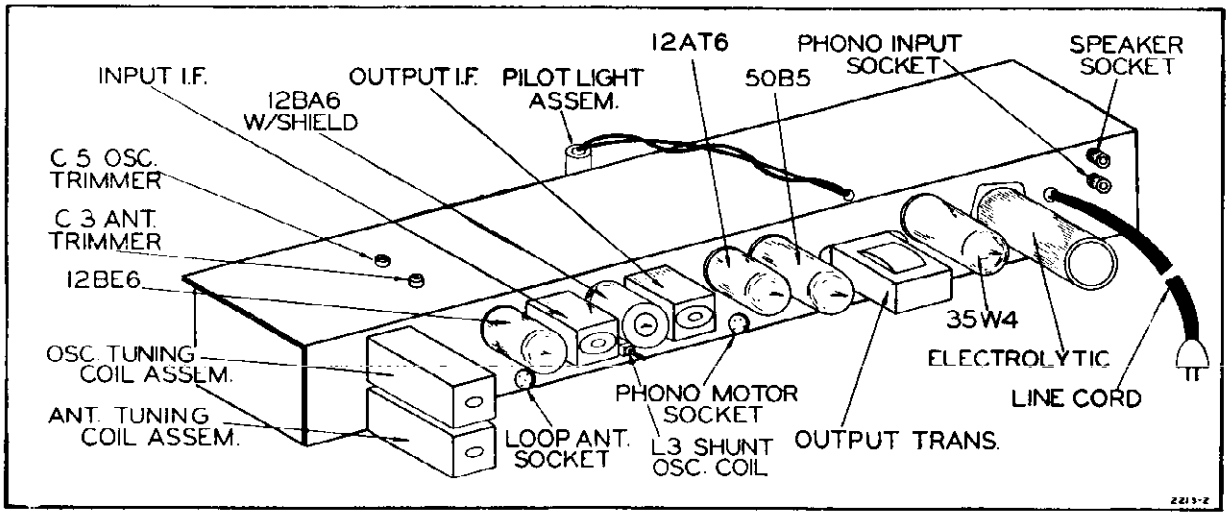

NOTE: On some sets, the loop antenna socket is eliminated and leads are brought out thru the hole.

©John F. Rider

MODEL 84BR-2003C MONTGOMERY WARD

ALIGNMENT PROCEDURE AND RECEIVER STAGE SENSITIVITIES

The signal source must be an accurately calibrated signal generator capable of supplying R. F. signals modulated 30% with a 400-cycle audio signal. A 400-cycle source is necessary for the audio measurement.

The table below lists the sensitivity at various points. All measurements are based on an output of 50-milliwatts. This may be measured by disconnecting the speaker voice coil and substituting a 3.2-ohm, 5-watt resistor across the secondary winding of the output transformer. A reading of .4 volts AC across this resistor will be equivalent to a 50-milliwatt output with the speaker connected. Variations of plus or minus 25% are usually permissable. Volume control at maximum for all adjustments. Tone control at maximum treble.

SIGNAL GENERATOR				TUNER SETTING	ADJUST FOR MAXIMUM OUTPUT	INPUT FOR 50-MILLIWATT OUTPUT
Frequency	Coupling Capacitor	Connection to Radio	Ground Connection			
455 kc.	.1 mf	12BE6, Pin 7	12AT6, Pin 2	Iron cores all the way out	Trimmers on output and input I.F. cans	28 microvolts
1620 kc.	.1 mf	12BE6, Pin 7	12AT6, Pin 2	Iron cores all the way out	Oscillator trimmer C5	———
535 kc.	200 mmf	External antenna clip	12AT6, Pin 2	Iron cores all the way in	Shunt osc. coil L3	11 microvolts
1620 kc.	200 mmf	External antenna clip	12AT6, Pin 2	1620 kc.	Antenna trimmer C3*	8 microvolts
1400 kc.	200 mmf	External antenna clip	12AT6, Pin 2	1400 kc.	Adjust position of ant. core (see coil illustration view)	8 microvolts
400 cycles	.1 mf	12AT6, Pin 1	12AT6, Pin 2	———	———	.03 volts

*After the antenna coil has been tracked at 1400 kc, it is necessary to check the antenna trimmer C3 again at 1620 kc. If no appreciable change in trimmer adjustment is necessary, the coil is in track. If the trimmer requires considerable change, the position of the antenna core at 1400 kc must be readjusted. These two adjustments should be made several times, until no trimmer adjustment is required at 1620 kc.

Ref. No.	Part No.	Description	Qty. Used In Set
		CONDENSERS	
C20A, B, C	A-8C-10077 or A-8C-10937	40 mf; 20 mf; 20 mf; 150 volts Electrolytic filter condenser	1 1
C3, 5	A-2M-12618	Trimmer plate	2
C3, 5	A-6M-12616	Insulator for trimmer—mica	2
C3	A-2M-14054	Trimmer plate	1
C3	A-6M-14203	Insulator for trimmer (laminated)	1
C10	C-8D-10771	.1 mf x 200 volts, 20%	1
C14, 18, 21	C-8D-10761	.01 mf x 400 volts, 20%	3
C11	C-8D-10813	.05 mf x 400 volts 20%	1
C6	C-8D-10770	.05 mf x 200 volts, 20%	1
C7	C-8D-11251	.09 mf x 400 volts, 10%	1
C17	C-8D-12243	.006 mf x 600 volts, 10%	1
C19	A-8C-11678	Electrolytic condenser, 25 mf x 25 volts	1
C15, C16	C-8F3-10	220 mmf x 500 volts, 20%, mica	2
C22	C-8F3-124	820 mmf x 300 volts, 10%, mica	1
C4	C-8G-12198	47 mmf, 10%, ceramic	1
		RESISTORS	
R7, S1	A-10A-12654	Volume (1 megohm) control and switch	1
R10	A-11B-12659	Tone control, 1 megohm	1
R3	C-9B1-91	270K ohms, 1/2 watt, 10%	1
R4	C-9B1-47	56 ohms, 1/2 watt, 10%	1
R14	C-9B1-43	27 ohms, 1/2 watt, 10%	1
R5	C-9B2-44	33 ohms, 1 watt, 10%	1
R11	C-9B1-86	100K ohms, 1/2 watt, 10%	1
R13	C-9B1-52	150 ohms, 1/2 watt, 10%	1
R15	C-9B2-54	220 ohms, 1 watt, 10%	1
R16	C-9B2-63	1200 ohms, 1 watt, 10%	1
R2	C-9B1-78	22K ohms, 1/2 watt, 10%	1
R17	C-9B1-62	1000 ohms, 1/2 watt, 10%	1
R6, R12	C-9B1-95	560K ohms, 1/2 watt, 10%	2
R8	C-9B1-34	3.3 megohms, 1/2 watt, 20%	1
R9	C-9B1-36	6.8 megohms, 1/2 watt, 20%	1
		COILS AND TRANSFORMERS	
T1, C8, 9	B-13A-13071	Input I.F. coil	1
T2, C12, 13	B-13B-13072	Output I.F. coil	1
L4	C-13E-15103	Loop antenna assembly	1
L3	B-13D-12371	Osc. shunt coil assembly	1
L2	A-23D-12667	Osc. tuning coil	1
L1	A-13E-12668	Antenna tuning coil	1
T3	B-12C-12356	Output transformer for speaker	1
		SPEAKER	
T4	B-18A-12839-1	4" x 6", P.M. speaker, less output transformer	1
		PHONO PARTS	
	D-21H-13293	Record changer	1
	P30	Crystal cartridge, with phono needle	1
		Phono needle, see manual 62P-5050	
		DIAL AND TUNING PARTS	
	C-6D-15153	Dial scale	1
	B-5B-13390-58	Knob	4
	A-2G-13281	Pointer	1
	32F4-10830	Screw, 4-40 x 1/8", to fasten pointer	1
	B-2J-13282	Rack tape, with teeth	1
	A-200-13288	Tuning shaft assembly	1
	A-6B-13277 or B-6B-14151	Diffuser Diffuser	1 1
	B-2M-7758	Snap-pin rivets to fasten diffuser	2
	A-47A-13360	Pilot lite and bracket assembly	1
P1	A-46A-10793	Pilot lite bulb, 6-8 volt, type T-47	1
		MISCELLANEOUS	
	A-15C-10717	Miniature 7 prong tube socket	5
	B-15B-10076	Mounting plate for lytic	1
	A-19B-12644	Phono motor socket	1
	A-19B-12645	Loop antenna socket	1
	A-19B-11044	Pick-up socket	1
	A-23A-10344	Line cord lock	1
	A-19B-12170	Speaker socket	1
S2	A-20A-12653	Radio-phono switch	1

MONTGOMERY WARD

MODEL 84BR-2005A

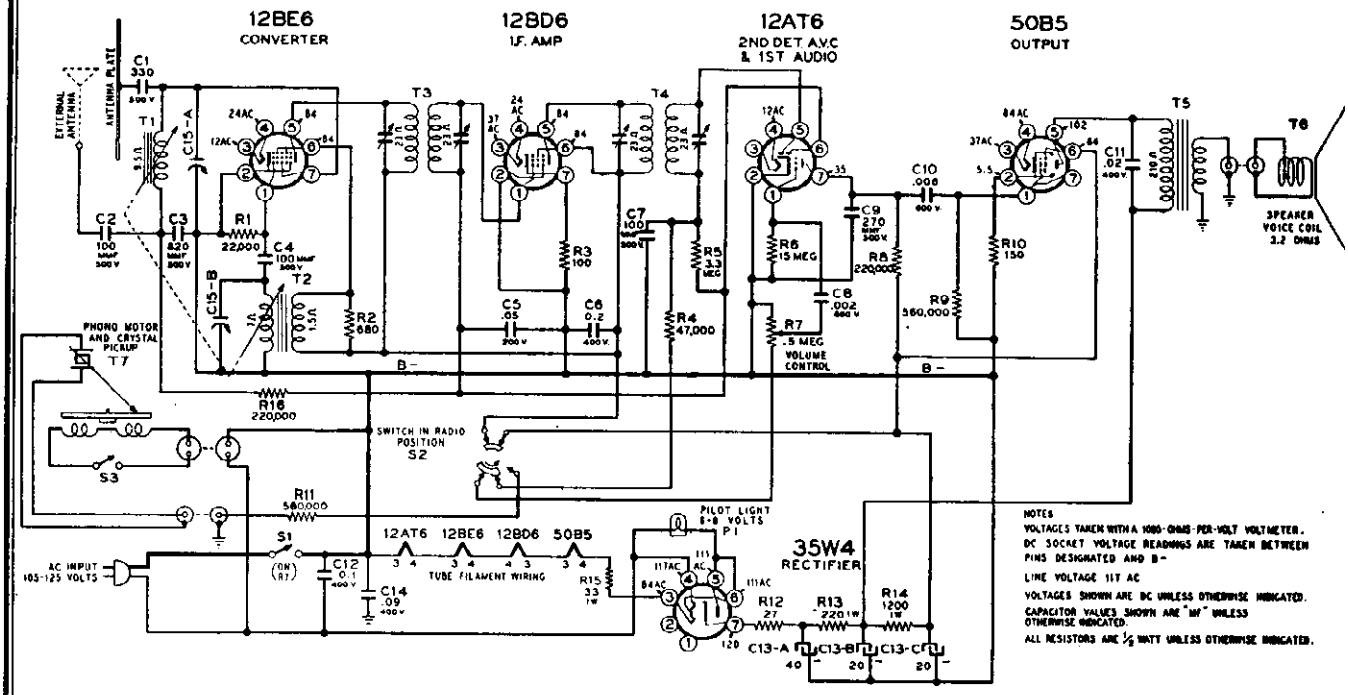

ELECTRICAL SPECIFICATIONS

Power Supply	105-125 volts, 60 cycles AC, 55 watts.
Frequency Range	535-1720 kc.
Intermediate Freq.	455 kc.
Antenna	Built-in plate; provisions also for external antenna connection.
Tuning	Permeability.
Speaker	4 x 6-inch, P.M., voice coil impedance 3.2 ohms.
Power Output	0.75 watt undistorted. 1.1 watts maximum.
Sensitivity	34 microvolts average for 50-milliwatts output.
Selectivity	55 kc. broad at 1000 times signal at 1000 kc.

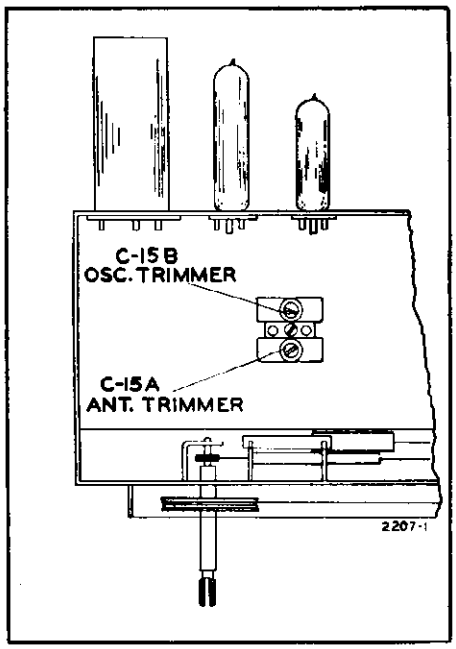

TRIMMER VIEW

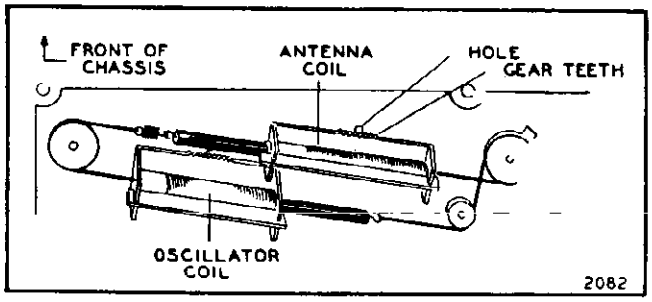

VIEW OF COIL ASSEMBLY

The antenna coil assembly is movable left to right. When making the adjustment as required in the alignment procedure, move the coil assembly very slowly, either by hand or by pivoting one edge of a screwdriver blade in the hole and engaging the blade in the gear teeth of the coil form.

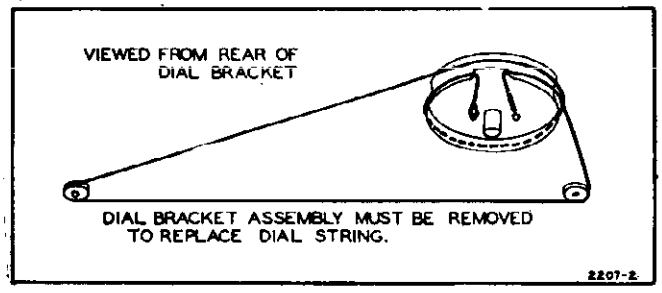

DIAL STRINGING VIEW

MODEL 84BR-2005A MONTGOMERY WARD

ALIGNMENT PROCEDURE

(Refer to Chassis and Coil Views)

- Output meter across 3.2-ohm resistive output load.
- Align for maximum output. Reduce input as needed to keep output near 0.4 volts which is equal to 50 milliwatts.
- Volume control at maximum for all adjustments.
- Connect ground post of signal generator to B— of radio.

SIGNAL GENERATOR			TUNER SETTING	ADJUST FOR MAXIMUM OUTPUT (in order shown)	INPUT FOR 50-MILLIWATT OUTPUT
Frequency	Dummy Antenna	Connection to Radio			
455 kc.	.1 mf.	Grid (pin 7) of 12BE6	Iron cores all the way out	Trimmers on output and input I.F. cans	90 microvolts
1720 kc.	.1 mf.	Grid (pin 7) of 12BE6	Iron cores all the way out	Oscillator trimmer C-15B	———
1720 kc.	200 mmf	Antenna lead	Iron cores all the way out	Antenna trimmer C-15A	34 microvolts
1400 kc.	200 mmf	Antenna lead	Turn dial to 1400 kc.	Adjust position of antenna coil (see coil view)*	———

*This adjustment and the previous adjustment are interlocking; therefore repeat the two adjustments alternately for best results.

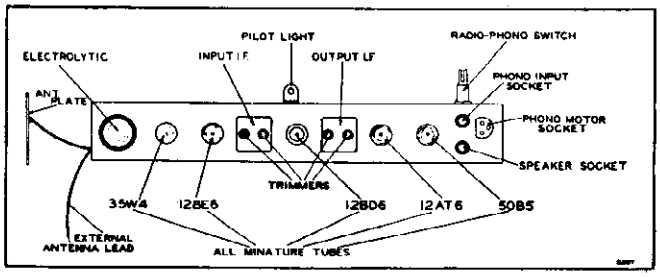

Chassis View

Ref. No.	Part No.	Description	Qty. Used
		CAPACITORS	
C13-A, C13-B, C13-C	A-8C-10077	Electrolytic, 40 x 20 x 20, 150 volts	1
C15-A, C15-B	A-8E-10723	Trimmer condenser, dual antenna and oscillator	1
C14	C-8D-11251	.09 mf x 400 v., 10%, tubular	1
C6	C-8D-10942	.2 mf x 400 volts, 10%, tubular	1
C5	C-8D-10770	.05 mf x 200 v., 20%, tubular	1
C10	C-8D-10785	.006 mf x 600 v., 20%, tubular	1
C8	C-8D-10789	.002 mf x 600 v., 20%, tubular	1
C11	C-8D-10774	.02 mf x 400 v., 20%, tubular	1
C12	C-8D-10760	.1 mf x 400 v., 10%, tubular	1
C1	C-8F3-119	330 mmf x 500 v., 10%, mica	1
C3	C-8F3-247	820 mmf x 500 v., 5%, mica	1
C9	C-8F3-118	270 mmf x 500 v., 10%, mica	1
C2, C4 C7	C-8F3-113	100 mmf x 500 v., 10%, mica	3
		RESISTORS	
R7 S1	A-10A-10720	Volume control (500M ohms) and switch	1
R15	C-9B2-44	33 ohms, 1 watt, 10%	1
R8, R16	C-9B1-90	220K ohms, ½ watt, 10%	2
R13	C-9B2-54	220 ohms, 1 watt, 10%	1
R14	C-9B2-63	1200 ohms, 1 watt, 10%	1
R12	C-9B1-43	27 ohms, ½ watt, 10%	1
R4	C-9B1-82	47K ohms, ½ watt, 10%	1
R3	C-9B1-50	100 ohms, ½ watt, 10%	1
R5	C-9B1-34	3.3 megohms, ½ watt, 20%	1
R9 R11	C-9B1-95	560K ohms, ½ watt, 10%	2
R10	C-9B1-52	150 ohms, ½ watt, 10%	1
R6	C-9B1-302	15 megohms, ½ watt, 10%	1
R2	C-9B1-60	680 ohms, ½ watt, 10%	1
R1	C-9B1-78	22K ohms, ½ watt, 10%	1
		COILS AND TRANSFORMERS	
T1 T2	C-21I-10171	Tuner unit, permeability tuned, Ant., and Oscillator coils	1
T3	B-13A-10728	Input I.F. transformer	1
T4	B-13B-10729	Output I.F. transformer	1
T5	B-12C-10074-1	Output speaker transformer	1

Ref. No.	Part No.	Description	Qty. Used
		DIAL AND TUNING PARTS	
	B-6D-15198	Dial scale	1
	B-6A-15199	Dial crystal	1
	C-5B-12718-2-37	Knob, "Volume"	1
	C-5B-12718-3-37	Knob, "Tuning"	1
	B-200-10980-2	Dial and bracket assembly	1
	A-55A-10093	Pilot lite and bracket	1
P1	A-46A-10793	Pilot light bulb, 6-8 volt type	1
	A-2G-10162	Pointer	1
		MISCELLANEOUS	
T6	B-18A-11089	4 x 6" oval P.M. speaker	1
	A-15C-13174	Tube socket	5
	A-2H-10718	Shield base	2
	A-2H-10974	Tube shield	2
	B-15B-10076	Mounting base for electrolytic	1
S2	A-20A-10722	Radio-phono switch	1
	A-19B-10727	Phono-motor socket	1
	A-55A-7386-1	Phono input socket	1
	A-19B-11044	Speaker socket	1
	A-23A-10344	Line cord lock	1
	B-14M-11085	A.C. line cord and plug	1
	B-2E-11038	Antenna plate	1
	A-5B-11239-1	Knob for radio-phono switch	1
	A-3A-15134	Extension shaft for radio-phono switch	1
	A-2M-11074	Spring clamp for shaft	1
	A-2C-10972	Indicator plate	1
		PHONO PARTS	
	C-20I-11406-8	Phono motor and turntable assembly. 115 volts, 60-cycles	1
	A-20F-15201	Pushbutton on-off switch. for phono motor	1
	C-48C-10889-46	Pick-up arm with crystal cartridge CR-1	1
		Crystal cartridge, CR-1 only	1

©John F. Rider

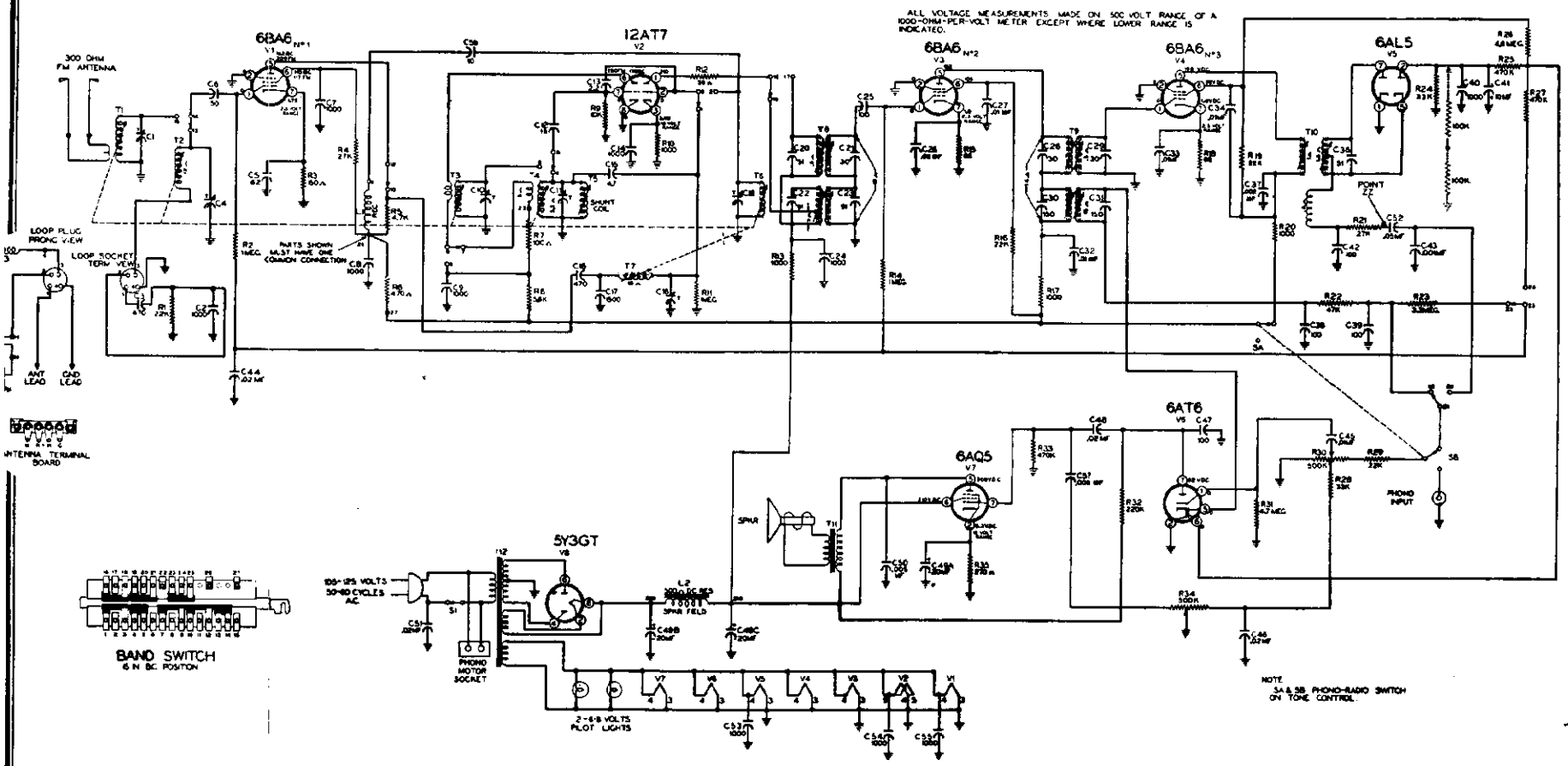

NOTES: **The two 100K ohm resistors in series from Pin No. 2 to ground are connected as shown only when aligning the FM I.F. Refer to FM I.F. alignment procedure**

RECORD CHANGERS: For 84BR-2715C, Webster Model 148, RCD.CH. 18-1, V-M Model 800, RCD.CH. 17-1; For 84BR-2722A, Gen. Inst. Model 204, RCD.CH. 15-1, Russell Model C-10M, RCD.CH. 18-1

MODELS 84BR-2715C, 84BR-2722A

MONTGOMERY WARD

GENERAL DESCRIPTION

This is a 2-band, seven tube (plus rectifier) superheterodyne receiver for the reception of both AM and FM stations. It features the most advanced type of FM ratio detector, permeability tuning of both bands, combination double-frequency I.F. coils and miniature tubes. Built-in antennas are provided for broadcast and FM reception; provision is also made for connection of an external broadcast antenna as well as an FM antenna with a 300 ohm lead-in. Both antennas may be connected to the radio at the same time.

The phonograph is equipped with an automatic changer which plays up to ten 12-inch records or twelve 10-inch records at one loading.

ELECTRICAL SPECIFICATIONS

Power Supply	105 to 125 volts, AC, 60-cycles; Chassis only 75 watts. With phono operation 100 watts.
Frequency Ranges	Broadcast Band—535 to 1620 kc. FM Band— 88 to 108 mc.
Intermediate Freq.	AM-455 kc.; FM-10.7 mc.
Selectivity	AM-42 kc. broad at 1000 times signal, measured at 1000 kc. I.F. FM-200 kc. broad at 2 times down. I.F. FM-400 kc. broad at 10 times down.
AM Sensitivity	(For .5 watt output with external antenna)—5 microvolts average.
FM Sensitivity	(For .5 watt output)—25 microvolts average.
Power Output	2 watts, 10% distortion. 4 watts maximum.
Loud Speaker	12" electrodynamic. Voice coil impedance 3.2 ohms, 400 cycles.
Tube and Lamp Complement	6BA6, FM—AM R.F. stage. 12AT7, FM—AM oscillator and mixer. 6BA6, FM—AM 1st I.F. 6BA6, FM—2nd I.F. 6AL5, FM ratio detector. 6AT6, AM detector. A.F. AMP. and A.V.C. 6AQ5, Audio output. 5Y3, rectifier. T-44 dial lamp (2 used).
Automatic Changer	See Manuals 5058A, 5057B, 5069, 5050A, 5032A.

ALIGNMENT PROCEDURE

Broadcast Band Section I.F. and R.F.

The alignment procedure below includes the sensitivities at the inputs of various stages. All signal input values are based on an output of ½ watt. This may be measured by disconnecting the speaker voice coil and substituting a 3.2-ohm resistor across the secondary winding of the output transformer. A reading of 1.3 volts AC across this resistor will be approximately equivalent to a ½-watt output with the speaker connected. The volume control must be set at maximum. The tone control must be set for maximum treble.

The signal source must be an accurately calibrated signal generator capable of supplying the frequencies designated, modulated 30% with a 400-cycle audio signal. A 400 cycle audio signal is required for the audio measurement. Variations in sensitivities of plus or minus 25% are usually permissible.

AM - I. F. ALIGNMENT

Band Switch in AM Position. Tune Set to 1400 Kc. Dummy Antenna .1 Mfd.

SIGNAL GENERATOR FREQUENCY	CONNECTION TO RADIO	ADJUSTMENTS TO BE MADE	ADJUST FOR
455 Kc. Use 2400 microvolts	Pin No. 1 of 6BA6 No. 2 and ground	Primary and Secondary of T9 AM windings. See top and bottom views	Maximum output Should be ½ watt
455 Kc. Use 70 microvolts	Pin No. 2 of 12AT7 and ground	Primary and Secondary of T8 AM windings. See top and bottom views	Maximum output Should be ½ watt
400 cycles. Use 60 millivolts	Hot end of volume control and ground	None	Maximum output Should be ½ watt

BROADCAST BAND - R. F. ALIGNMENT

Check pointer so that it coincides with the marker to the extreme right when iron cores are all the way out. For adjustment, see dial mechanism illustration.

SIGNAL GENERATOR FREQUENCY	CONNECTION TO RADIO	DUMMY ANTENNA	ADJUST
1620 Kc.	AM Antenna and Ground	200 mmf.	C11 Osc. trimmer for maximum
535 Kc.	AM Antenna and Ground	200 mmf.	T5 for maximum ½ watt
1620 Kc. Use 5 microvolts	AM Antenna and Ground	200 mmf.	C4 and C18 for max. ½ watt. See note

NOTE: Recheck first two adjustments after this adjustment because of inter-locking effects.

MONTGOMERY WARD

MODELS 84BR-2715C, 84BR-2722A

Procedure for disassembly and assembly of dial mechanism.

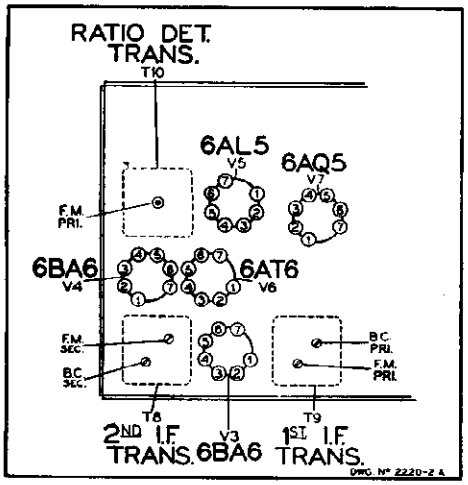

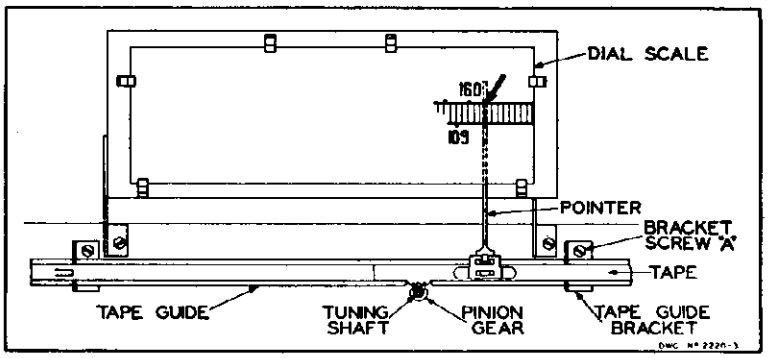

TO ALIGN POINTER— Loosen bracket screw "A". Then tape guide bracket can be moved up to allow proper meshing of tape teeth with pinion gear. Readjust bracket to eliminate backlash.

ALIGNMENT PROCEDURE

FM Band Section. I.F. and R.F.

A non-metallic alignment tool must be used.

IMPORTANT

No alignment of the FM section of this radio should be attempted unless you are positive that the circuits are in need of adjustment and you have the necessary equipment.

All components used in this radio are extremely stable and the tuned circuits should require no adjustment over long periods of time.

NOTE

The following alignment is based on the use of the new Simpson vacuum tube volt-meter which has a "floating ground". In other words, the meter, when used as a vacuum tube volt-meter, can have both the positive and negative sides connected to points above ground and still give true readings.

A standard AM signal generator is required.

FM - I. F. ALIGNMENT

Band Switch in FM Position. Dummy Antenna .1 Mfd.

SIGNAL GENERATOR FREQUENCY	CONNECTION TO RADIO	VACUUM TUBE VOLT METER CONNECTION TO RADIO	ADJUSTMENTS TO BE MADE	ADJUST FOR
10.7 Mc. Use about .1 volt	Pin No. 1 of 6BA6 no. 3 and ground	Pin No. 2 of 6AL5 and ground	Primary of T10	Resonance should be about 3 volts
10.7 Mc. Use about .1 volt	Pin No. 1 of 6BA6 no. 3 and ground	See note "A"	Secondary of T10	Zero. Use zero center scale See note "B"
10.7 Mc. Use about 3300 microvolts	Pin No. 1 of 6BA6 no. 2 and ground	Pin No. 2 of 6AL5 and ground	Primary and Secondary of T9 10.7 m.c. windings See top and bottom views	Resonance should be about 3 volts
10.7 Mc. Use about 200 microvolts	Pin No. 2 of 12AT7 and ground	Pin No. 2 of 6AL5 and ground	Primary and Secondary of 10.7 m.c. windings of T8 See top and bottom views	Resonance should be about 3 volts

NOTE ON FM - I.F. ALIGNMENT

NOTE "A" Connect two resistors, 100K OHMS each, from Pin No. 2 of 6AL5 to ground. These resistors must be matched within 5%. Connect as shown in dotted lines on schematic diagram. Connect vacuum tube volt-meter between the mid-point of the resistors and points zz.

NOTE "B" If T10 has been tampered with, it is possible that no crossover point will be found at first. Careful adjustment of both primary and secondary is necessary.

GENERAL: Input signals should be adjusted to give approximately 3 volts. The ratio detector is operating at a reasonable level at this point and will give the truest indication of correct alignment with the procedure specified.

MODELS 84BR-2715C, 84BR-2722A

MONTGOMERY WARD

FM - R. F. ALIGNMENT

Check pointer so that it coincides with the marker to the extreme right when iron cores are all the way out. For adjustment, see dial mechanism illustration.

SIGNAL GENERATOR FREQUENCY	CONNECTION TO RADIO	DUMMY ANTENNA	ADJUST	VACUUM TUBE VOLT METER CONNECTION TO RADIO	ADJUST TO
100 Mc. Use about 25 microvolts	FM Antenna Terminals See note	300 ohms	C10 Osc. C19 R.F. C1 Ant.	Pin No. 2 of 6AL5 and Ground	Resonance about 3 volts

NOTE: If a signal generator with the above fundamental frequency is not available, it is sometimes possible to use harmonics. Use extreme care in picking harmonics. An alternate procedure is to use a local station carrier of known frequency to align the FM Band and to use the vacuum tube volt-meter as above for resonance indication. A weak carrier, however will not produce 3 volts. NOTE: Connect 300 ohms in series with hot side of generator and connect to one screw. Connect cold side of generator to other screw.

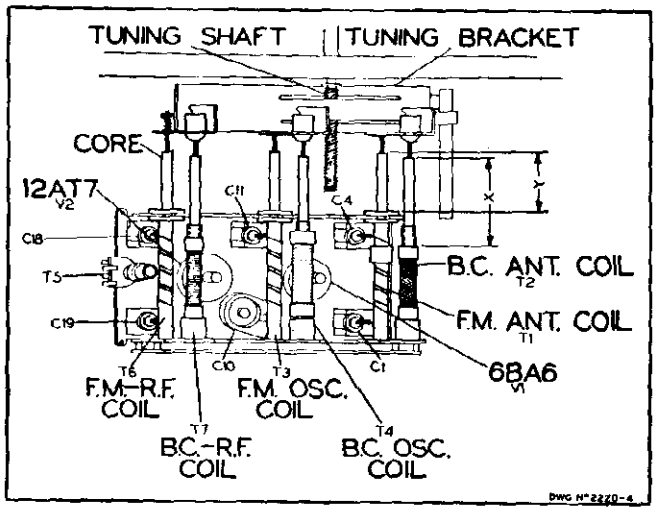

TUNER ADJUSTMENT

With tuner all the way out, dimension "X" should be 1½ inches. "Y" should be 1-1/16 inches. "X" is from the end of the slug to the edge of the coil winding. Check these dimensions before R.F. alignment is attempted of either the AM or FM band. No slug adjustment should be necessary since the slugs are properly set at the factory.

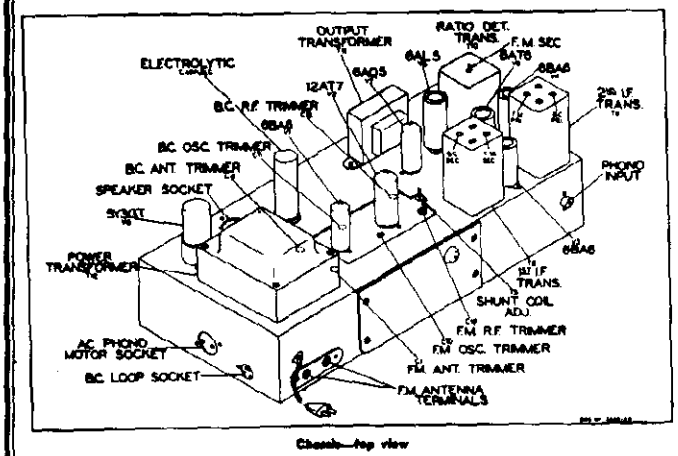

Chassis—top view

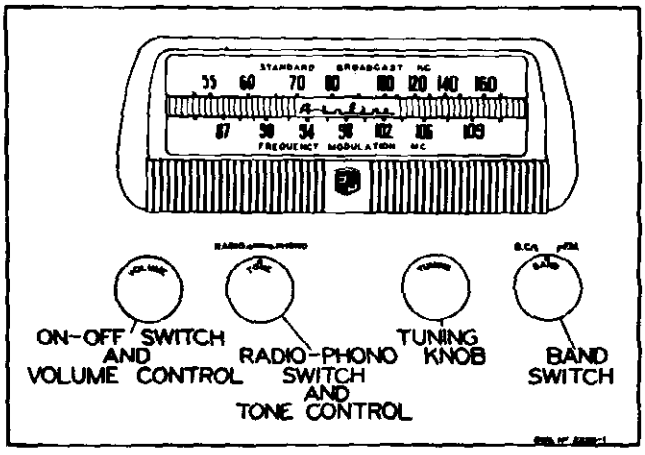

REPLACEMENT PARTS ONLY USED IN MODEL 2722A

Part No.	Description	Qty. Used
B-18B-14140	Electrodynamic speaker, 10-inch, less output transformer	1
C-30A-15335	Dial scale	1
B-5B-13978-56	Knob "Tone and Volume"	2
B-5B-13737-56	Knob, "Tuning and Bandswitch"	2
B-5C-15078-56	Escutcheon side pieces	2
A-25A-13818	Chassis rubber grommet	4

Part No.	Description	Qty. Used
	RECORD CHANGER	
B-201-15417	G. I. 204 Changer, with automatic stop	1
	OR	
B-201-14063-1	Russell C-10M Changer with automatic stop	1

MONTGOMERY WARD

MODELS 84BR-2715C, 84BR-2722A

REPLACEMENT PARTS LIST

Use Only Genuine Factory Replacement Parts

Ref. No.	Part No.	Description	Qty. Used In Set
		TUNER CHASSIS PARTS	
		CONDENSERS	
C10	A-8E-13575	Trimmer condenser	1
C1, 4, 11, 19, 18	A-2M-12618	Trimmer cond. plate	5
C3, 16	C-8G-11732	470 mmf, ±20%	2
C2	C-8G-13695	1000 mmf, ±20%	1
C8, 7, 9, 14, 54, 55	C-8G-13201	1000 mmf, +20%—10%	6
C5	C-8G-13018	62 mmf, ±10%	1
C17	C-8G-11731	1500 mmf, ±20%	1
C12	C-8G-13017	15 mmf, ±10%	1
C6	C-8G-11484	50 mmf, ±10%	1
C56	C-8G-11789	10 mmf, ±10%	1
C15	A-8G-12495-6	4.7 mmf, ±20%	1
C13	A-8G-12495-4	2.2 mmf, ±20%	1
C44	C-8D-11304	.02 mfd, 200 volts, ±20%	1
		RESISTORS	
R4	C-9B2-79	27K ohms, 1 watt, 10%	1
R1	C-9B1-21	22K ohms, ½ watt, 20%	1
R3	C-9B1-52	150 ohms, ½ watt, 10%	1
R5	C-9B1-17	4700 ohms, ½ watt, 20%	1
R6	C-9B1-11	470 ohms, ½ watt, 20%	1
R9	C-9B1-19	10K ohms, ½ watt, 20%	1
R2, 11	C-9B1-31	1 megohm, ½ watt, 20%	2
R10	C-9B1-62	1000 ohms, ½ watt, 10%	1
R23	C-9B1-34	3.3 megohms, ½ watt, 20%	1
R7	C-9B1-50	100 ohms, ½ watt, 10%	1
R12	C-9B1-45	39 ohms, ½ watt, 10%	1
		COILS	
T3	B-13D-13027	FM oscillator coil assembly	1
—	B-51B-13056	Core for FM oscillator coil	1
T1	B-13E-13028	FM antenna coil assembly	1
—	B-51A-13058	Core for FM antenna coil	1
T6	B-13C-13029	FM R.F. coil assembly	1
—	B-51A-13057	Core for FM R.F. coil	1
T4	B-13D-13030	AM oscillator coil assembly	1
—	B-51A-12722	Core for B.C. oscillator coil	1
—	B-51A-12723	Core for B.C. ant. and R.F. coil	1
T2	B-13E-13031	AM antenna coil assembly	1
T7	B-13C-13032	AM R.F. coil assembly	1
L1	A-16A-13033	Choke coil assembly	1
T5	B-13D-12974	AM osc. shunt coil assembly	1
		MISCELLANEOUS	
	B-208-13553 or B-201-12967	Band change slide switch	1
	A-15B-12997	7 prong, miniature tube socket	1
	A-15B-13430	9 prong, miniature tube socket	1
	C-2D-14437	Drive bracket assembly	1
	A-25A-13019	Core grommets, for AM Band	3
	A-3M-13020	Insert for core grommet	3
	A-49A-12394	Spiral spring for FM cores	3
	A-2J-11041	Pointer tension spring, "M" shaped	1
	B-2D-12316	Tape guide	1
	B-2J-12922	Rack tape, with teeth and pointer bracket	1
	B-2G-13613	Pointer	1
	A-200-15016	Drive, pinion and lead screw assembly	1
		MAIN CHASSIS PARTS	
		CONDENSERS	
C49B, 49C, 49A	A-8C-13555	Electrolytic, 20—20 x 350 volts; 20 x 25 volts	1
C50	C-8D-10935	.005 mf x 600 volts	1
C27, 32, 33, 34, 37, 45	C-8D-10761	.01 mf x 400 volts, 20%	6
C57	C-8D-10785	.006 mf x 600 volts, 20%	1
C41	A-8C-13132	Electrolytic, 10 mf x 50 volts	1
C43	C-8D-10787	.001 x 600 volts, 20%	1
C52, C26	C-8D-10770	.05 x 200 volts, 20%	2
C51, 46	C-8D-10774	.02 x 400 volts, 20%	2
C48	C-8J-11321	.02 x 600 volts, 20%	1
C25, 47	C-8G-13131	100 mmf, ceramic, 10%	2
C24, 40, 53	C-8G-13016	1000 mmf, ceramic, 20%	3
C42	C-8F3-225	100 mmf, mica, 5%	1
C38, 39	A-8F-13127	.0001 mf, dual mica, 20%	1
C22, 23	C-8G-12160	91 mmf, ceramic, 5%	2
C20	C-8G-13026	51 mmf, ceramic, 5%	1
C30, 31	C-8G-13025	150 mmf, ceramic, 5%	2
C21, 28, 29	C-8G-12159	30 mmf, ceramic, 5%	3
C36	C-8G-11891	51 mmf, ceramic	1
		RESISTORS	
R30, S1	A-10A-13114	Volume control (500K ohms) and switch	1
R34, SA, SB	A-11A-13115	Tone control (500K ohms) and radio-phono switch	1
R32	C-9B1-27	220K ohms, ½ watt, 20%	1
R15, 18	C-9B1-48	68 ohms, ½ watt, 10%	2
R14	C-9B1-31	1 megohm, ½ watt, 20%	1
R19, 16	C-9B2-78	22K ohms, 1 watt, 10%	2
R24, 28	C-9B1-80	33K ohms, ½ watt, 10%	2
R21	C-9B1-79	27K ohms, ½ watt, 10%	1
R8	C-9B2-71	5600 ohms, 1 watt, 10%	1
R22	C-9B1-23	47K ohms, ½ watt, 20%	1
R29	C-9B1-21	22K ohms, ½ watt, 20%	1
R31	C-9B1-35	4.7 megohms, ½ watt, 20%	1
R25, 27, 33	C-9B1-29	470K ohms, ½ watt, 20%	3
R35	C-9B1-55	270 ohms ½ watt, 10%	1
R26	C-9B1-36	6.8 megohms, ½ watt, 20%	1
R13, 20, 17	C-9B1-13	1000 ohms, ½ watt, 20%	2
		COILS	
T8	B-13A-15473	Input I.F. transformer, combination, 455 kc. and 10.7 mc.	1
T9	B-13B-15474	Second I.F. transformer, combination, 455 kc. and 10.7 mc.	1
T10	B-13M-15475	Ratio det. coil assembly 10.7 mc.	1
L3	A-16A-13243	Loop loading coil	1
L4	A-14MA-11066-1	Loop antenna ribbon	1
		TRANSFORMERS	
T12	B-12A-13120	Power transformer, primary, 50-60 cycles. 105-125 volts A.C.	1
T11	B-12C-13556	Output transformer, for speaker	1
		SPEAKER	
L2	B-18B-13585-1	Electrodynamic speaker, 12-inch, less output transformer	1
		MISCELLANEOUS	
	B-30A-13611	Dial scale	1
	B-5B-13744	Knob, mahog. or wal. "Volume"	1
	B-5B-13745	Knob, mahog. or wal. "Tone"	1
	B-5B-13746	Knob, mahog. or wal. "Tuning"	1
	B-5B-13747	Knob, mahog. or wal. "Band switch"	1
	B-2G-13612	Escutcheon, mahog. or walnut	1
	B-14M-11479	Line cord and plug	1
	A-3A-12933-1	Band switch shaft	1
	A-55C-12935	Ball bearing	1
	B-47A-11094-4	Pilot lite and bracket assembly	1
	A-46A-11739	Pilot lite, 6-8 volts, T-44	2
	A-15C-13174	Miniature socket, 7 prong	5
	A-15B-10440	Octal socket, 8 prong	1
	A-19B-12644	Loop antenna socket	1
	B-7B-13050	FM terminal strip	1
	A-15B-11538	Speaker socket	1
	A-19B-12468	Phono motor socket	1
	A-19B-12170	Phono input socket	1
		RECORD CHANGER	
	B-201-15176	148 Changer with P-30 cartridge OR	1
	B-201-16042	146 changer with P-30 cartridge OR	1
	D-21H-13293	V-M changer with P-30 cartridge	1
	P-30	Crystal cartridge with needle	1

MODEL 84BR-2715D

MONTGOMERY WARD

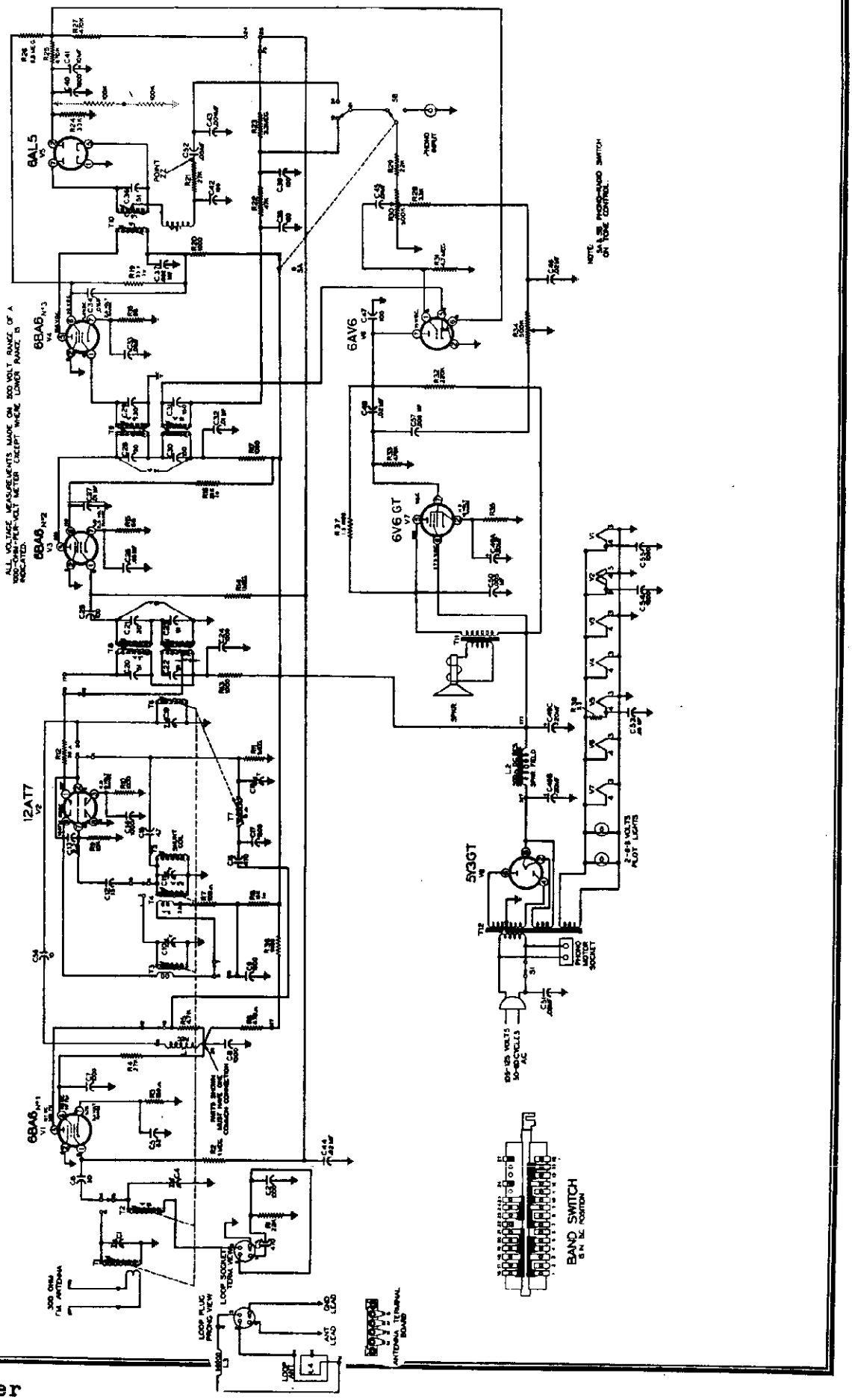

©John F. Rider

MONTGOMERY WARD

MODEL 84BR-2715D

GENERAL DESCRIPTION

This is a 2-band, seven tube (plus rectifier) superheterodyne receiver for the reception of both AM and FM stations. It features the most advanced type of FM ratio detector, permeability tuning of both bands, combination double-frequency I.F. coils and miniature tubes. Built-in antennas are provided for broadcast and FM reception; provision is also made for connection of an external broadcast antenna as well as an FM antenna with a 300 ohm lead-in. Both antennas may be connected to the radio at the same time.

The phonograph is equipped with an automatic changer which plays up to ten 12-inch records or twelve 10-inch records at one loading, and also accommodates the new long-play microgroove records.

ELECTRICAL SPECIFICATIONS

Power Supply	105 to 125 volts, AC, 60-cycles; Chassis only 75 watts. With phono operation 100 watts.
Frequency Ranges	Broadcast Band—535 to 1620 kc. FM Band— 88 to 108 mc.
Intermediate Freq.	AM-455 kc.; FM-10.7 mc.
Selectivity	AM-42 kc. broad at 1000 times signal, measured at 1000 kc.
	I.F. FM-200 kc. broad at 2 times down.
	I.F. FM-400 kc. broad at 10 times down.
AM Sensitivity	(For .5 watt output with external antenna)—5 microvolts average.
FM Sensitivity	(For .5 watt output)—25 microvolts average.
Power Output	3.2 watts, 10% distortion. 5.5 watts maximum.
Loud Speaker	12" electrodynamic. Voice coil impedance 3.2 ohms, 400 cycles.
Tube and Lamp Complement	6BA6, FM—AM R.F. stage.
	12AT7, FM—AM oscillator and mixer.
	6BA6, FM—AM 1st I.F.
	6BA6, FM—2nd I.F.
	6AL5, FM ratio detector.
	6AV6, AM detector. A.F. AMP. and A.V.C.
	6V6GT/G, Audio output.
	5Y3, rectifier.
	T-44 dial lamp (2 used).
Automatic Changer	See Manual 5069A.

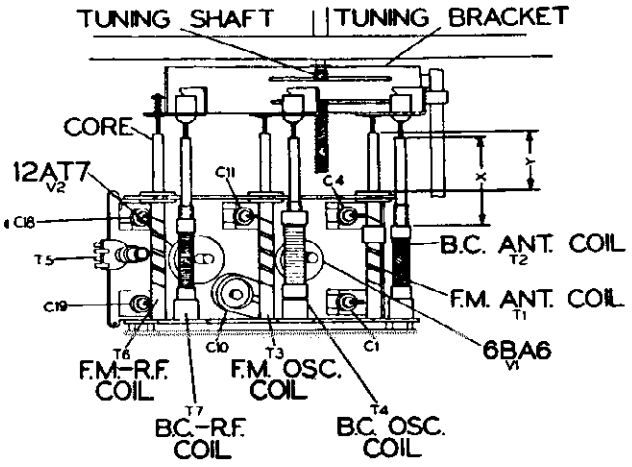

TUNER ADJUSTMENT

With tuner all the way out, dimension "X" should be 1½ inches. "Y" should be 1-1/16 inches. "X" is from the end of the slug to the edge of the coil winding. Check these dimensions before R.F. alignment is attempted of either the AM or FM band. No slug adjustment should be necessary since the slugs are properly set at the factory.

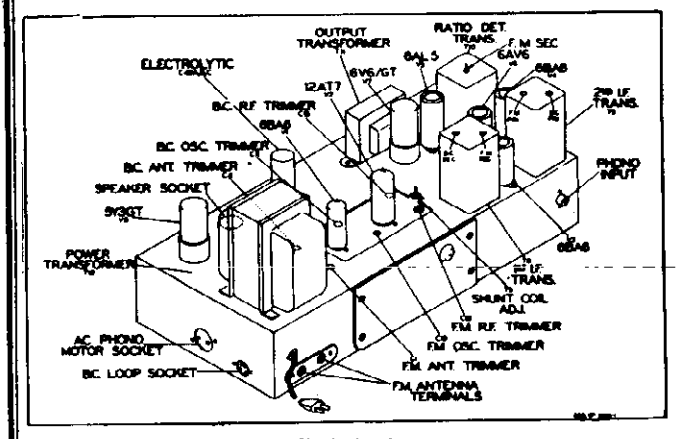

Chassis—top view

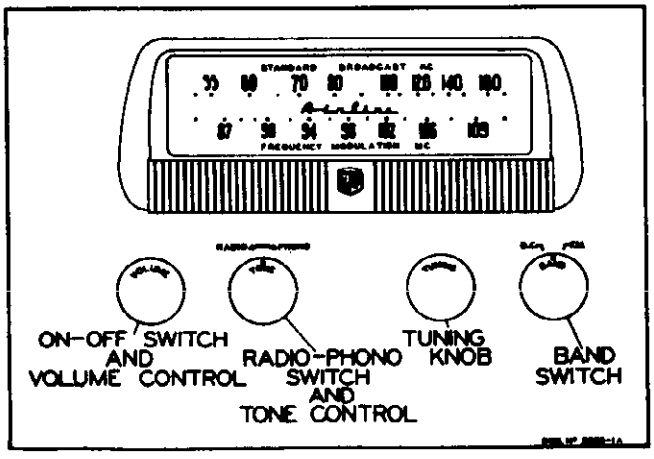

©John F. Rider

MODEL 84BR-2715D MONTGOMERY WARD

ALIGNMENT PROCEDURE

Broadcast Band Section I.F. and R.F.

The alignment procedure below includes the sensitivities at the inputs of various stages. All signal input values are based on an output of ½ watt. This may be measured by disconnecting the speaker voice coil and substituting a 3.2-ohm resistor across the secondary winding of the output transformer. A reading of 1.3 volts AC across this resistor will be approximately equivalent to a ½-watt output with the speaker connected. The volume control must be set at maximum. The tone control must be set for maximum treble.

The signal source must be an accurately calibrated signal generator capable of supplying the frequencies designated, modulated 30% with a 400-cycle audio signal. A 400 cycle audio signal is required for the audio measurement. Variations in sensitivities of plus or minus 25% are usually permissible.

AM - I. F. ALIGNMENT

Band Switch in AM Position. Tune Set to 1400 Kc. Dummy Antenna .1 Mfd.

SIGNAL GENERATOR FREQUENCY	CONNECTION TO RADIO	ADJUSTMENTS TO BE MADE	ADJUST FOR
455 Kc. Use 2400 microvolts	Pin No. 1 of 6BA6 No. 2 and ground	Primary and Secondary of T9 AM windings. See top and bottom views	Maximum output Should be ½ watt
455 Kc. Use 70 microvolts	Pin No. 2 of 12AT7 and ground	Primary and Secondary of T8 AM windings. See top and bottom views	Maximum output Should be ½ watt
400 cycles. Use 60 millivolts	Hot end of volume control and ground	None	Maximum output Should be ½ watt

BROADCAST BAND - R. F. ALIGNMENT

Check pointer so that it coincides with the marker to the extreme right when iron cores are all the way out. For adjustment, see dial mechanism illustration.

SIGNAL GENERATOR FREQUENCY	CONNECTION TO RADIO	DUMMY ANTENNA	ADJUST
1620 Kc.	AM Antenna and Ground	200 mmf.	C11 Osc. trimmer for maximum
535 Kc.	AM Antenna and Ground	200 mmf.	T5 for maximum ½ watt
1620 Kc. Use 5 microvolts	AM Antenna and Ground	200 mmf.	C4 and C18 for max. ½ watt. See note

NOTE: Recheck first two adjustments after this adjustment because of inter-locking effects.

Procedure for disassembly and assembly of dial mechanism.

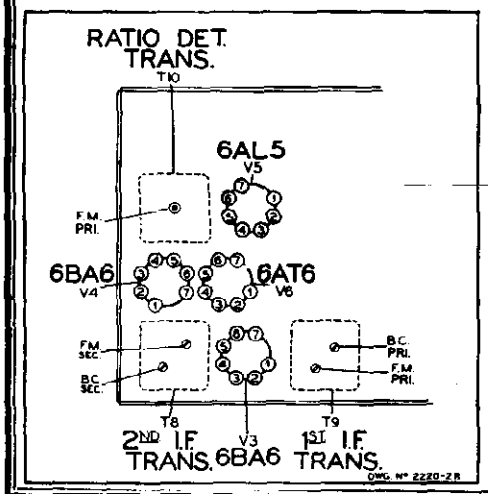

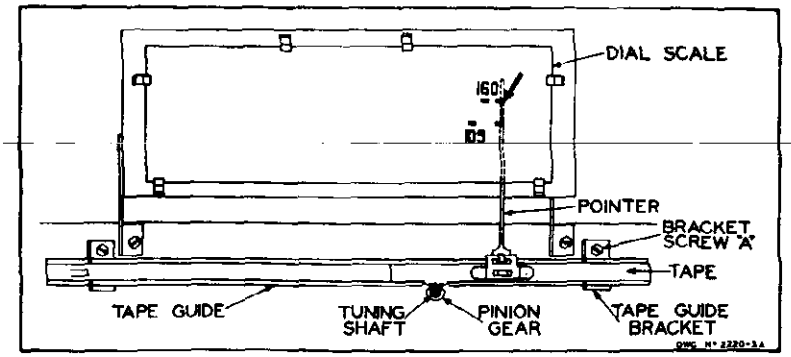

TO ALIGN POINTER— Loosen bracket screw "A". Then tape guide bracket can be moved up to allow proper meshing of tape teeth with pinion gear. Readjust bracket to eliminate backlash.

MONTGOMERY WARD MODEL 84BR-2715D

ALIGNMENT PROCEDURE

FM Band Section. I.F. and R.F.

A non-metallic alignment tool must be used.

IMPORTANT

No alignment of the FM section of this radio should be attempted unless you are positive that the circuits are in need of adjustment and you have the necessary equipment.

All components used in this radio are extremely stable and the tuned circuits should require no adjustment over long periods of time.

NOTE

The following alignment is based on the use of the new Simpson vacuum tube volt-meter which has a "floating ground". In other words, the meter, when used as a vacuum tube volt-meter, can have both the positive and negative sides connected to points above ground and still give true readings.

A standard AM signal generator is required.

FM - I. F. ALIGNMENT

Band Switch in FM Position. Dummy Antenna .1 Mfd.

SIGNAL GENERATOR FREQUENCY	CONNECTION TO RADIO	VACUUM TUBE VOLT METER CONNECTION TO RADIO	ADJUSTMENTS TO BE MADE	ADJUST FOR
10.7 Mc. Use about .1 volt	Pin No. 1 of 6BA6 no. 3 and ground	Pin No. 2 of 6AL5 and ground	Primary of T10	Resonance should be about 3 volts
10.7 Mc. Use about .1 volt	Pin No. 1 of 6BA6 no. 3 and ground	See note "A"	Secondary of T10	Zero. Use zero center scale See note "B"
10.7 Mc. Use about 3300 microvolts	Pin No. 1 of 6BA6 no. 2 and ground	Pin No. 2 of 6AL5 and ground	Primary and Secondary of T9 10.7 m.c. windings See top and bottom views	Resonance should be about 3 volts
10.7 Mc. Use about 200 microvolts	Pin No. 2 of 12AT7 and ground	Pin No. 2 of 6AL5 and ground	Primary and Secondary of 10.7 m.c. windings of T8 See top and bottom views	Resonance should be about 3 volts

NOTE ON FM - I.F. ALIGNMENT

NOTE "A" Connect two resistors, 100K OHMS each, from Pin No. 2 of 6AL5 to ground. These resistors must be matched within 5%. Connect as shown in dotted lines on schematic diagram. Connect vacuum tube volt-meter between the mid-point of the resistors and points zz.

NOTE "B" If T10 has been tampered with, it is possible that no crossover point will be found at first. Careful adjustment of both primary and secondary is necessary.

GENERAL: Input signals should be adjusted to give approximately 3 volts. The ratio detector is operating at a reasonable level at this point and will give the truest indication of correct alignment with the procedure specified.

FM - R. F. ALIGNMENT

Check pointer so that it coincides with the marker to the extreme right when iron cores are all the way out. For adjustment, see dial mechanism illustration.

SIGNAL GENERATOR FREQUENCY	CONNECTION TO RADIO	DUMMY ANTENNA	ADJUST	VACUUM TUBE VOLT METER CONNECTION TO RADIO	ADJUST TO
100 Mc. Use about 25 microvolts	FM Antenna Terminals See note	300 ohms	C10 Osc. C19 R.F. C1 Ant.	Pin No. 2 of 6AL5 and Ground	Resonance about 3 volts

NOTE: If a signal generator with the above fundamental frequency is not available, it is sometimes possible to use harmonics. Use extreme care in picking harmonics. An alternate procedure is to use a local station carrier of known frequency to align the FM Band and to use the vacuum tube volt-meter as above for resonance indication. A weak carrier, however will not produce 3 volts. NOTE: Connect 300 ohms in series with hot side of generator and connect to one screw. Connect cold side of generator to other screw.

MODEL 84BR-2715D MONTGOMERY WARD

REPLACEMENT PARTS LIST

Use Only Genuine Factory Replacement Parts

Ref. No.	Part No.	Description	Qty. Used In Set
		TUNER CHASSIS PARTS	
		CONDENSERS	
C10	A-8E-13575	Trimmer condenser	1
C1, 4, 11, 19, 18	A-2M-12618	Trimmer cond. plate	5
C3, 16	C-8G-11732	470 mmf, ±20%	2
C2	C-8G-13695	1000 mmf, ±20%	1
C8, 7, 9, 14, 54, 55	C-8G-13201	1000 mmf, +20%—10%	6
C5	C-8G-13018	62 mmf, ±10%	1
C17	C-8G-11731	1500 mmf, ±20%	1
C12	C-8G-13017	15 mmf, ±10%	1
C6	C-8G-11484	50 mmf, ±10%	1
C56	C-8G-11789	10 mmf, ±10%	1
C15	A-8G-12495-6	4.7 mmf, ±20%	1
C13	A-8G-12495-4	2.2 mmf, ±20%	1
C44	C-8D-11304	.02 mfd, 200 volts, ±20%	1
		RESISTORS	
R4	C-9B2-79	27K ohms, 1 watt, 10%	1
R1	C-9B1-21	22K ohms, ½ watt, 20%	1
R3	C-9B1-52	150 ohms, ½ watt, 10%	1
R5	C-9B1-17	4700 ohms, ½ watt, 20%	1
R6	C-9B1-11	470 ohms, ½ watt, 20%	1
R9	C-9B1-19	10K ohms, ½ watt, 20%	1
R2, 11	C-9B1-31	1 megohm, ½ watt, 20%	2
R10	C-9B1-62	1000 ohms, ½ watt, 10%	1
R23	C-9B1-34	3.3 megohms, ½ watt, 20%	1
R7	C-9B1-50	100 ohms, ½ watt, 10%	1
R12	C-9B1-45	39 ohms, ½ watt, 10%	1
R36	C-9B2-71	5600 ohms, 1 watt, 10%	1
		COILS	
T3	B-13D-13027	FM oscillator coil assembly	1
—	B-51B-13056	Core for FM oscillator coil	1
T1	B-13E-13028	FM antenna coil assembly	1
—	B-51A-13058	Core for FM antenna coil	1
T6	B-13C-13029	FM R.F. coil assembly	1
—	B-51A-13057	Core for FM R.F. coil	1
T4	B-13D-13030	AM oscillator coil assembly	1
—	B-51A-12722	Core for B.C. oscillator coil	1
—	B-51A-12723	Core for B.C. ant. and R.F. coil	1
T2	B-13E-13031	AM antenna coil assembly	1
T7	B-13C-13032	AM R.F. coil assembly	1
L1	A-16A-13033	Choke coil assembly	1
T5	B-13D-12974	AM osc. shunt coil assembly	1
		MISCELLANEOUS	
	B-208-13553 or B-201-12967	Band change slide switch	1
	A-15B-12997	7 prong, miniature tube socket	1
	A-15B-13430	9 prong, miniature tube socket	1
	C-2D-14437	Drive bracket assembly	1
	A-25A-13019	Core grommets, for AM Band	3
	A-3M-13020	Insert for core grommet	3
	A-49A-12394	Spiral spring for FM cores	3
	A-2J-11041	Pointer tension spring, "M" shaped	1
	B-2D-12316	Tape guide	1
	B-2J-12922	Rack tape, with teeth and pointer bracket	1
	B-2G-13613	Pointer	1
	A-200-15016	Drive, pinion and lead screw assembly	1
		MAIN CHASSIS PARTS	
		CONDENSERS	
C49B, 49C, 49A	A-8C-15387	Electrolytic, 20—20 x 450 volts; 20 x 25 volts	1
C50	C-8D-10935	.005 mf x 600 volts	1
C27, 32, 33, 34, 45	C-8D-10761	.01 mf x 400 volts, 20%	6
C57	C-8D-10785	.006 mf x 600 volts, 20%	1
C41	A-8C-13132	Electrolytic, 10 mf x 50 volts	1
C43	C-8D-10787	.001 x 600 volts, 20%	1
C53,C26,C52	C-8D-10770	.05 x 200 volts, 20%	2
C48, 46	C-8D-10774	.02 x 400 volts, 20%	2
C51	C-8J-11321	.02 x 600 volts, 20%	1
C25, 47	C-8G-13131	100 mmf, ceramic, 10%	2
C24, 40	C-8G-13016	1000 mmf, ceramic, 20%	3
C42	C-8F3-225	100 mmf, mica, 5%	1
C38, 39	A-8F-13127	.0001 mf, dual mica, 20%	1
C22, 23	C-8G-12160	91 mmf, ceramic, 5%	2
C20	C-8G-13026	51 mmf, ceramic, 5%	1
C30, 31	C-8G-13025	150 mmf, ceramic, 5%	2
C21, 28, 29	C-8G-12159	30 mmf, ceramic, 5%	3
C36	C-8G-11891	51 mmf, ceramic	1
C37	C-8D-15638	.002 x 600 volts, 10%	1
		RESISTORS	
R30, S1	A-10A-13114	Volume control (500K ohms) and switch	1
R34, SA, SB	A-11A-13115	Tone control (500K ohms) and radio-phono switch	1
R32	C-9B1-27	220K ohms, ½ watt, 20%	1
R15, 18	C-9B1-48	68 ohms, ½ watt, 10%	2
R14	C-9B1-31	1 megohm, ½ watt, 20%	1
R19, 16	C-9B2-80	33K ohms 1 watt, 10 %	2
R24, 28	C-9B1-80	33K ohms, ½ watt, 10%	2
R21	C-9B1-79	27K ohms, ½ watt, 10%	1
R8	C-9B2-76	15K ohms, 1 watt, 10%	1
R22	C-9B1-23	47K ohms, ½ watt, 20%	1
R29	C-9B1-21	22K ohms, ½ watt, 20%	1
R31	C-9B1-35	4.7 megohms, ½ watt, 20%	1
R25, 27, 33	C-9B1-29	470K ohms, ½ watt, 20%	3
R35	C-9B2-144	240 ohms, 1 watt, 5%	1
R26	C-9B1-36	6.8 megohms, ½ watt, 20%	1
R13, 20, 17	C-9B1-13	1000 ohms, ½ watt, 20%	2
R37	C-9B1-100	1.5 megohm, ½ watt, 10%	1
R38	C-9B1-1069	3.3 ohms, ½ watt, 5%	1
		COILS	
T8	B-13A-15473	Input I.F. transformer, combination, 455 kc. and 10.7 mc.	1
T9	B-13B-15474	Second I.F. transformer, combination, 455 kc. and 10.7 mc.	1
T10	B-13M-15475	Ratio det. coil assembly 10.7 mc.	1
L3	A-16A-13243	Loop loading coil	1
L4	A-14MA-11066-1	Loop antenna ribbon	1
		TRANSFORMERS	
T12	B-12A-15385	Power transformer, primary, 50-60 cycles. 105-125 volts A.C.	1
T11	B-12C-13556	Output transformer, for speaker	1
		SPEAKER	
L2	B-18B-13585-2	Electrodynamic speaker, 12-inch, less output transformer	1
		MISCELLANEOUS	
	B-30A-13611	Dial scale	1
	B-5B-13744	Knob, mahog. or wal. "Volume"	1
	B-5B-13745	Knob, mahog. or wal. "Tone"	1
	B-5B-13746	Knob, mahog. or wal. "Tuning"	1
	B-5B-13747	Knob, mahog. or wal. "Band switch"	1
	B-2G-13612	Escutcheon, mahog. or walnut	1
	B-14M-11479	Line cord and plug	1
	A-3A-12933-1	Band switch shaft	1
	A-55C-12935	Ball bearing	1
	B-47A-11094-4	Pilot lite and bracket assembly	1
	A-46A-11739	Pilot lite, 6-8 volts, T-44	2
	A-15C-13174	Miniature socket, 7 prong	5
	A-15B-10440	Octal socket, 8 prong	1
	A-19B-12644	Loop antenna socket	1
	B-7B-13050	FM terminal strip	1
	A-15B-11538	Speaker socket	1
	A-19B-12468	Phono motor socket	1
	A-19B-12170	Phono input socket	1
		RECORD CHANGER	
	B-201-16042	146 changer with P-30 cartridge	1
	P-30	Crystal cartridge with needle	1

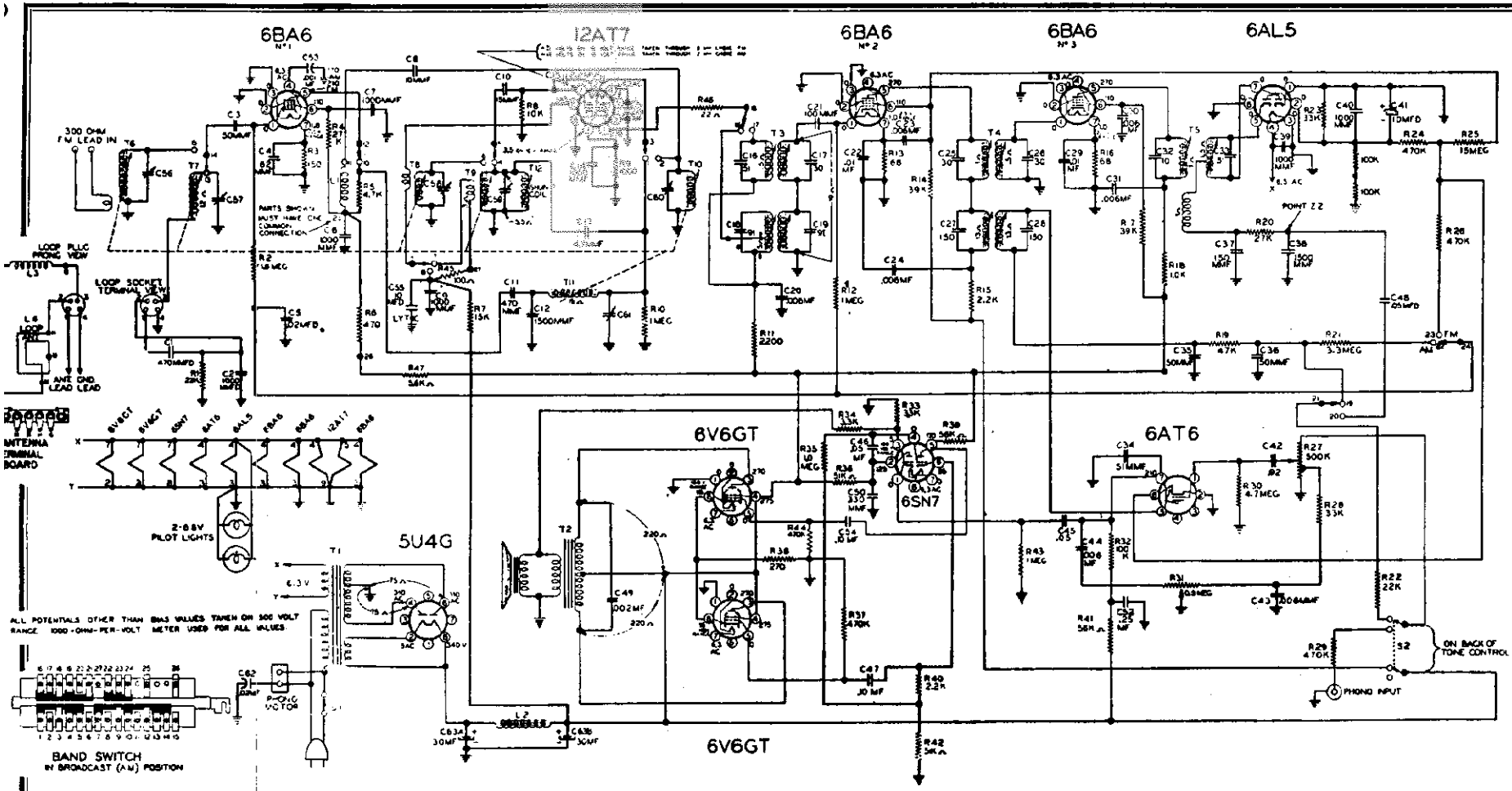

NOTES: On some sets R11 and R15 are 1000 ohms.

The two 100K ohm resistors in series from PIN NO. 2 to ground are connected as shown only when aligning the FM I.F. Refer to FM I.F. alignment procedure.

On some sets C22 is .05 mfd.

On some sets R46 — 22 ohm resistor is replaced with a 39 ohm resistor, Part no. C-9B1-45.

When T5 is top and bottom tuned, C30 is .01 — 400 volts, and returned to bottom end of C32. C31 becomes .002 — 600 volts; C37 becomes 100 mmfd.; R17 is connected to the top of R18 instead of the bottom. A 1000 mmf. condenser is connected between the B+ supply line of the ratio detector assembly and ground.

RECORD CHANGER: V-M Model 800, RCD.CH. 17-1

MODEL 84BR-2719A MONTGOMERY WARD

SPECIAL ALIGNMENT INFORMATION

Do not attempt any I.F. alignment until you have referred to the views below. This radio is built with 3 combinations of I. F. coils. Refer to part numbers on the coils. See notes under the circuit diagram.

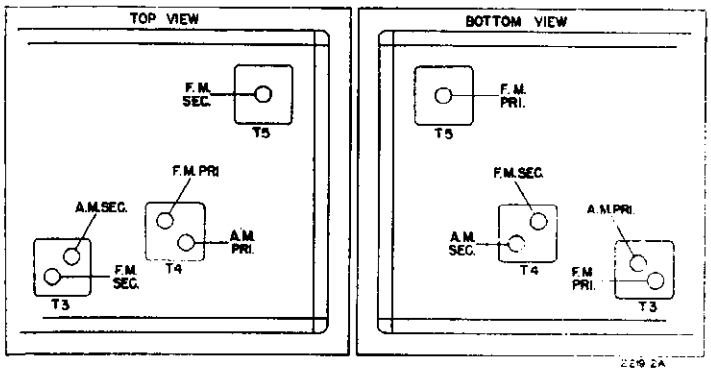

This combination uses the following part numbers:

T3 ..... B-13A-15473
T4 ..... B-13B-15474
T5 ..... B-13M-15475 (top and bottom tuned).

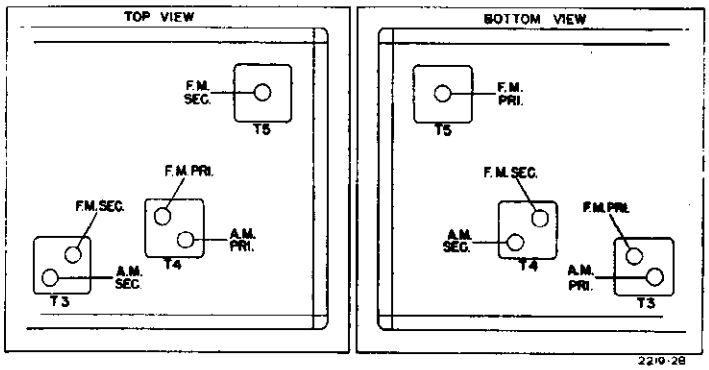

This combination uses the following part numbers:

T3 ..... C-13A-13009-1
T4 ..... C-13B-13014-1
T5 ..... B-13M-15475 (top and bottom tuned).

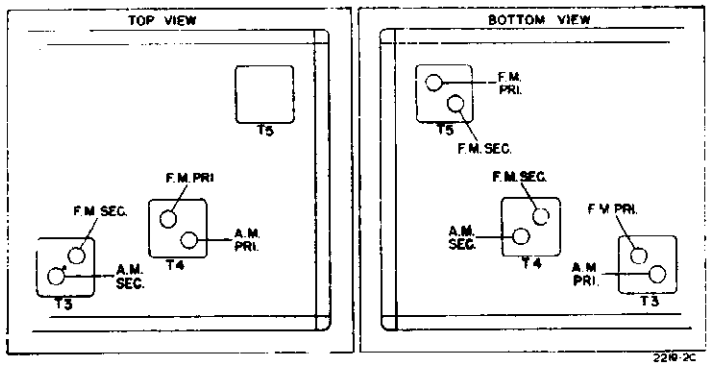

This combination uses the following part numbers:

T3 ..... C-13A-13009-1
T4 ..... C-13B-13014-1
T5 ..... C-203-11745-1 (bottom tuned). Use this view when T5 has no trimmer on top.

GENERAL DESCRIPTION

This is a 2-band, nine tube (plus rectifier) superheterodyne receiver for the reception of both AM and FM stations. It features the most advanced type of FM ratio detector, permeability tuning of both bands, combination double-frequency I.F. coils and miniature tubes. Built-in antennas are provided for broadcast and FM reception; provision is also made for connection of an external broadcast antenna as well as an FM antenna with a 300 ohm lead-in. Both antennas may be connected to the radio at the same time.

The phonograph is equipped with an automatic changer which plays up to ten 12-inch records or twelve 10-inch records at one loading.

ELECTRICAL SPECIFICATIONS

Power Supply	105 to 125 volts, AC, 60-cycles; Chassis only 122 watts. With phono operation 150 watts.
Frequency Ranges	Broadcast Band—535 to 1620 kc. FM Band—88 to 108 mc.
Intermediate Freq.	AM-455 kc.; FM-10.7 mc.
Selectivity	AM-48 kc. broad at 1000 times signal, measured at 1000 kc. I.F. FM-180 kc. broad at 2 times down. I.F. FM-320 kc. broad at 10 times down.
AM Sensitivity	(For .5 watt output with external antenna)—3 microvolts average
FM Sensitivity	(For .5 watt output—10 microvolts average.
Power Output	8 watts, 10% distortion. 10 watts maximum.
Loud Speaker	12" electrodynamic. Voice coil impedance 3.2 ohms, 400 cycles.

©John F. Rider

ALIGNMENT PROCEDURE

Broadcast Band Section I.F. and R.F.

The alignment procedure below includes the sensitivities at the inputs of various stages. All signal input values are based on an output of ½ watt. This may be measured by disconnecting the speaker voice coil and substituting a 3.2-ohm resistor across the secondary winding of the output transformer. A reading of 1.3 volts AC across this resistor will be approximately equivalent to a ½-watt output with the speaker connected. The volume control must be set at maximum. The tone control must be set for maximum treble.

The signal source must be an accurately calibrated signal generator capable of supplying the frequencies designated, modulated 30% with a 400-cycle audio signal. A 400 cycle audio signal is required for the audio measurement. Variations in sensitivities of plus or minus 25% are usually permissible.

AM - I. F. ALIGNMENT

Band Switch in AM Position. Tune Set to 1400 Kc. Dummy Antenna .1 Mfd.

SIGNAL GENERATOR FREQUENCY	CONNECTION TO RADIO	ADJUSTMENTS TO BE MADE	ADJUST FOR
455 Kc. Use 1000 microvolts	Pin No. 1 of 6BA6 No. 2 and ground	Primary and Secondary of T4 AM windings. See top and bottom views	Maximum output Should be ½ watt
455 Kc. Use 30 microvolts	Pin No. 2 of 12AT7 and ground	Primary and Secondary of T3 AM windings. See top and bottom views	Maximum output Should be ½ watt
400 cycles. Use 28 millivolts	Hot end of volume control and ground	None	Maximum output Should be ½ watt

BROADCAST BAND - R. F. ALIGNMENT

Check pointer so that the right hand edge of the pointer skirt coincides with the right hand edge of marker to the extreme right when iron cores are all the way out. For adjustment, see dial mechanism illustration.

SIGNAL GENERATOR FREQUENCY	CONNECTION TO RADIO	DUMMY ANTENNA	ADJUST
1620 Kc.	AM Antenna and Ground	200 mmf.	C59 Osc. trimmer for maximum
535 Kc.	AM Antenna and Ground	200 mmf.	T12 for maximum ½ watt
1620 Kc. Use 3 microvolts	AM Antenna and Ground	200 mmf.	C57 and C61 for max. ½ watt. See note

NOTE: Recheck first two adjustments after this adjustment because of inter-locking effects.

Procedure for disassembly and assembly of dial mechanism

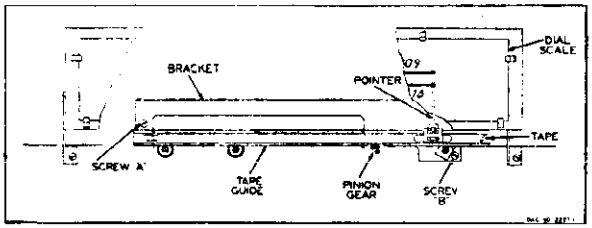

TO ALIGN POINTER—Loosen bracket screw "A". Then tape guide bracket can be moved up to allow proper meshing of tape teeth with pinion gear. Readjust bracket to eliminate backlash.

MODEL 84BR-2719A MONTGOMERY WARD

ALIGNMENT PROCEDURE

FM Band Section. I.F. and R.F.

A non-metallic alignment tool must be used.

IMPORTANT

No alignment of the FM section of this radio should be attempted unless you are positive that the circuits are in need of adjustment and you have the necessary equipment.

All components used in this radio are extremely stable and the tuned circuits should require no adjustment over long periods of time.

NOTE

The following alignment is based on the use of the new Simpson vacuum tube volt-meter which has a "floating ground". In other words, the meter, when used as a vacuum tube volt-meter, can have both the positive and negative sides connected to points above ground and still give true readings.

A standard AM signal generator is required.

FM - I. F. ALIGNMENT

Band Switch in FM Position. Dummy Antenna .1 Mfd.

SIGNAL GENERATOR FREQUENCY	CONNECTION TO RADIO	VACUUM TUBE VOLT METER CONNECTION TO RADIO	ADJUSTMENTS TO BE MADE	ADJUST FOR
10.7 Mc. Use about .1 volt	Pin No. 1 of 6BA6 no. 3 and ground	Pin no. 2 of 6AL5 and ground	Primary of T5	Resonance should be about 3 volts
10.7 Mc. Use about .1 volt	Pin No. 1 of 6BA6 no. 3 and ground	See note "A"	Secondary of T5	Zero. Use zero center scale. See note "B"
10.7 Mc. Use about 3300 microvolts	Pin No. 1 of 6BA6 no. 2 and ground	Pin no. 2 of 6AL5 and ground	Primary and Secondary of T4 10.7 m.c. windings See top and bottom views	Resonance should be about 3 volts
10.7 Mc. Use about 200 microvolts	Pin no. 2 of 12AT7 and ground	Pin no. 2 of 6AL5 and ground	Primary and Secondary of 10.7 m.c. windings of T3 See top and bottom views	Resonance should be about 3 volts

NOTES ON FM—I.F. ALIGNMENT

NOTE "A" Connect two resistors, 100K OHMS each, from Pin No. 2 of 6AL5 to ground. These resistors must be matched within 5%. Connect as shown in dotted lines on schematic diagram. Connect vacuum tube voltmeter between the mid-point of the resistors and point zz.

NOTE "B" If T5 has been tampered with, it is possible that no crossover point will be found at first. Careful adjustment of both primary and secondary is necessary.

GENERAL: Input signals should be adjusted to give approximately 3 volts. The ratio detector is operating at a reasonable level at this point and will give the truest indication of correct alignment with the procedure specified.

FM - R. F. ALIGNMENT

Check pointer so that the right hand edge of the pointer skirt coincides with the right hand edge of marker to the extreme right when iron cores are all the way out. For adjustment, see dial mechanism illustration.

SIGNAL GENERATOR FREQUENCY	CONNECTION TO RADIO	DUMMY ANTENNA	ADJUST	VACUUM TUBE VOLT METER CONNECTION TO RADIO	ADJUST TO
100 Mc. Use about 10 microvolts	FM Antenna Terminals See note	300 ohms	C58 Osc. C60 R.F. C56 Ant.	Pin no. 2 of 6AL5 and Ground	Resonance about 3 volts

NOTE: If a signal generator with the above fundamental frequency is not available, it is sometimes possible to use harmonics. Use extreme care in picking harmonics. An alternate procedure is to use a local station carrier of known frequency to align the FM Band and to use the vacuum tube volt-meter as above for resonance indication. A weak carrier, however will not produce 3 volts.

NOTE: Connect 300 ohms in series with hot side of generator and connect to one screw. Connect cold side of generator to other screw

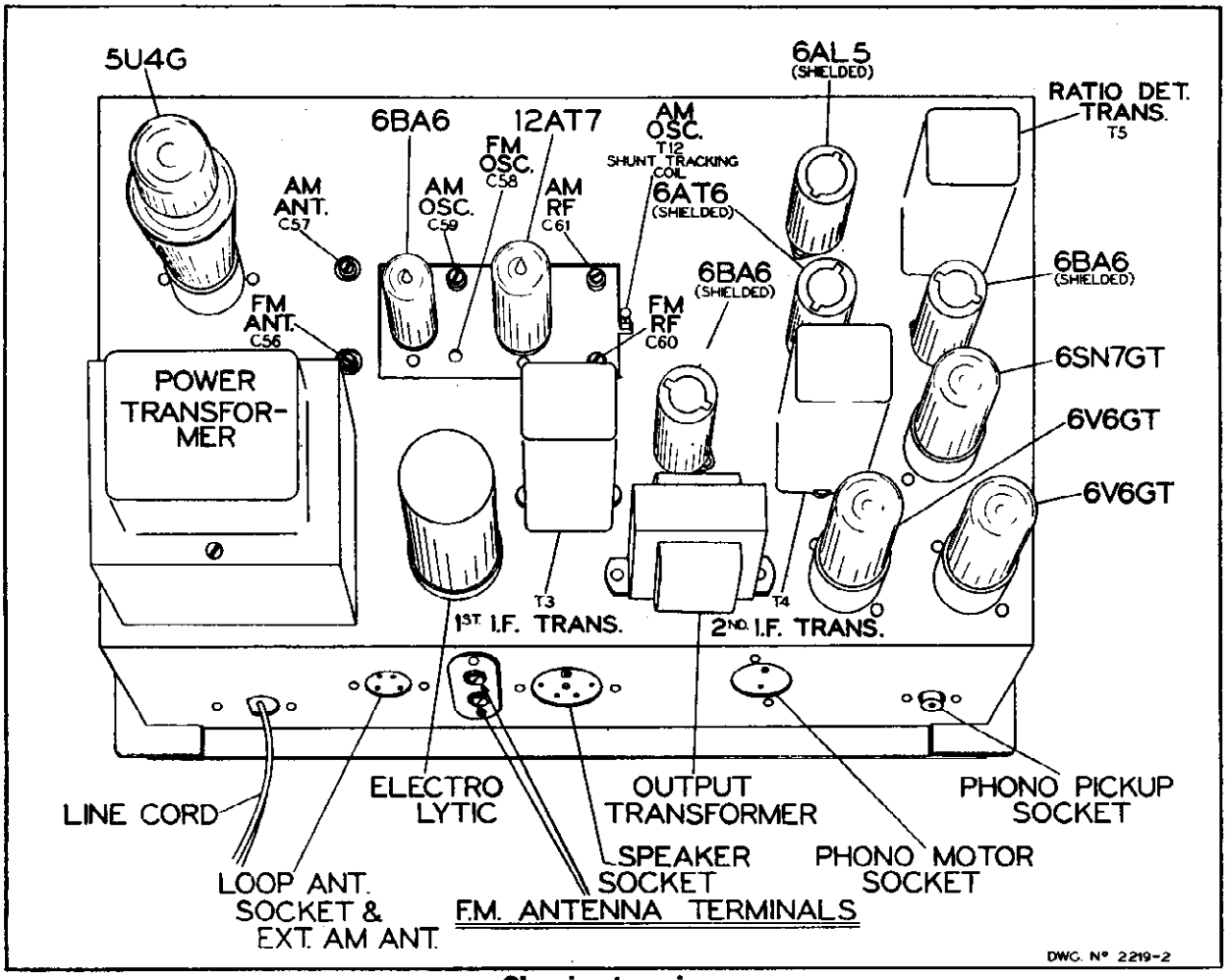

Chassis—top view

Tube and Lamp Complement.....
- 6BA6, FM—AM R.F. stage.
- 12AT7, FM—AM oscillator and mixer.
- 6BA6, FM—AM 1st I.F.
- 6BA6, FM— 2nd I.F.
- 6AL5, FM— ratio detector.
- 6AT6, AM detector. A. F. AMP. and A.V.C.
- 6SN7, Push-pull. Driver and phase-inverter.
- 5U4G, rectifier.
- 6V6, output.
- 6V6, output.
- T-44 dial lamp (2 used).

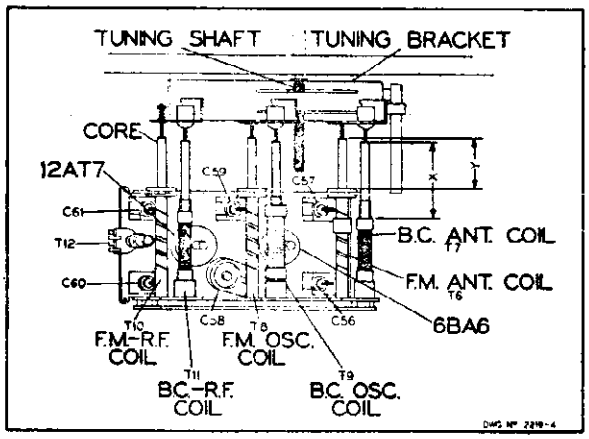

TUNER ADJUSTMENT

With tuner all the way out, dimension "X" should be 1½ inches. "Y" should be 1-1/16 inches. "X" is from the end of the slug to the edge of the coil winding. Check these dimensions before R.F. alignment is attempted of either the AM or FM band. No slug adjustment should be necessary since the slugs are properly set at the factory.

MODEL 84BR-2719A MONTGOMERY WARD

REPLACEMENT PARTS LIST

Ref. No.	Part No.	Description	Qty. Used In Set
		TUNER PARTS	
		CONDENSERS	
C58	A-8E-13575	Trimmer condenser	1
C56, 57, 59, 60, 61	A-2M-12618	Trimmer cond. plate	5
C1, C11	C-8G-11732	470 mmf, ±20%	2
C2	C-8G-13695	1000 mmf, ± 20%	1
C6, 7, 9, 14 51, 53	C-8G-13201	1000 mmf, +20%—10%	6
C4	C-8G-13018	62 mmf, ± 10%	1
C12	C-8G-11731	1500 mmf, ±20%	1
C10	C-8G-13017	15 mmf, +10%	1
C3	C-8G-11484	50 mmf, ±10%	1
C8	C-8G-11789	10 mmf, ±10%	1
C13	A-8G-12495-6	4.7 mmf, ±20%	1
C15	A-8G-12495-4	2.2 mmf, ± 20%	1
C5	C-8D-11304	.02 mfd, 200 volts, ±20%	1
		RESISTORS	
R4	C-9B2-79	27K ohms, 1 watt, 10%	1
R1	C-9B1-21	22K ohms, 1/2 watt, 20%	1
R3	C-9B1-52	150 ohms, 1/2 watt, 10%	1
R5	C-9B1-17	4700 ohms, 1/2 watt, 20%	1
R6	C-9B1-11	470 ohms, 1/2 watt, 20%	1
R8	C-9B1-19	10K ohms, 1/2 watt, 20%	1
R2, R10	C-9B1-31	1 megohm, 1/2 watt, 20%	2
R9	C-9B1-62	1000 ohms, 1/2 watt, 10%	1
R21	C-9B1-34	3.3 megohms, 1/2 watt, 20%	1
R45	C-9B1-50	100 ohms, 1/2 watt, 10%	1
R46	C-9B1-42	22 ohms, 1/2 watt, 10%	1
		COILS	
T8	B-13D-13027	FM oscillator coil assembly	1
T6	B-13E-13028	FM antenna coil assembly	1
T10	B-13C-13029	FM R.F. coil assembly	1
T9	B-13D-13030	AM oscillator coil assembly	1
T7	B-13E-13031	AM antenna coil assembly	1
T11	B-13C-13032	AM R.F. coil assembly	1
L1	A-16A-13033	Choke coil assembly	1
T12	B-13D-12974	AM osc. shunt coil assembly	1
		MISCELLANEOUS	
	B-208-13553 or	Band change slide switch	1
	B-201-12967	Band change slide switch	1
	A-15B-12997	7 prong, miniature tube socket	1
	A-15B-13430	9 prong, miniature tube socket	1
	C-2D-14437	Yoke and bracket	1
	* A-200-15060	Pinion gear and lead screw assembly	1
	A-49A-13447	Tension spring for lead screw	1
	A-25A-13019	Core grommets, for AM Band	3
	A-3M-13020	Insert for core grommet	3
	A-49A-12394	Spiral spring for FM cores	3
	C-2D-12990	Tape Guide	1
	B-2J-13006	Rack, with teeth, with A-2D-12910 bracket	1
	B-2G-15009	Pointer	1
		MAIN CHASSIS PARTS	
		CONDENSERS	
63A, 63B	B-8C-11629	Electrolytic condenser, dual, 30-30 x 450 volts	1
C21	C-8G-11734	100 mmf, 20%, ceramic	1
C37	C-8F3-229	150 mmf, mica	1
C38	C-8G-13059	1500 mmf, ceramic	1
C34	C-8G-13060	51 mmf, ceramic	1
C20, 23, 24, 30, 31, 43, 44	C-8D-10785	.006 mf x 600 volts, paper	7
C22, C29	C-8D-10761	.01 mf x 400 volts, paper	2
C45, 46	C-8D-10813	.05 mf x 400 volts, paper	2
C55	A-8C-12154	Electrolytic condenser 10 mf x 450 volts	1
C49	C-8D-10789	.002 mf x 600 volts, paper	1
C39, 40	C-8G-13201	1000 mmf, ceramic	2
C41	A-8C-13132	Electrolytic condenser 10 mf x 50 volts	1
C62	C-8J-11321	.02 mf x 600 volts	1
C48	C-8D-10770	.05 mf x 200 volts	1
C50	C-8G-11741	330 mmf, ceramic	1
C42	C-8D-11304	.02 mf x 200 volts	1
C52	C-8D-13439	.25 mf x 400 volts	1
C47, 54	C-8D-10760	.1 mf x 400 volts	2
C35, 36	A-8F-13047	50 mmf, dual mica	1
C32	C-8G-11789	10 mmf, ceramic, 10%	1
C33	C-8G-11891	51 mmf, ceramic, 5%	1
C27, 28	C-8G-13025	150 mmf, ceramic	2
C17, 25, 26	C-8G-12159	30 mmf, ceramic	3
C18, 19	C-8G-12160	91 mmf, ceramic	2
C16	C-8G-13026	51 mmf, ceramic	1
		RESISTORS	
R27	A-10A-13001	Volume control (500K) and switch	1
R31	A-11A-12988	Tone control (500K) and radio-phono switch	1
R32	C-9B1-86	100K ohms, 1/2 watt, 10%	1
R29, 44	C-9B1-94	470K ohms, 1/2 watt, 10%	2
R39, 41	C-9B1-83	56K ohms, 1/2 watt, 10%	2
R33, 34	C-9B1-68	3300 ohms, 1/2 watt, 10%	2
R30	C-9B1-35	4.7 megohms, 1/2 watt, 20%	1
R23, 28	C-9B1-80	33K ohms, 1/2 watt, 10%	2
R20	C-9B1-79	27K ohms, 1/2 watt, 10%	1
R22	C-9B1-78	22K ohms, 1/2 watt, 20%	1
R13, 16	C-9B1-48	68 ohms, 1/2 watt, 10%	2
R14, 17	C-9B2-81	39K ohms, 1 watt, 10%	2
R24, 26, 37	C-9B1-29	470K ohms, 1/2 watt, 20%	3
R25	C-9B1-302	15 megohms, 1/2 watt, 10%	1
R19	C-9B1-23	47K ohms, 1/2 watt, 20%	1
R7	C-9B4-76	15K ohms, 2 watts, 10%	1
R12, 35, 43	C-9B1-31	1 megohm, 1/2 watt, 20%	3
R40	C-9B1-66	2200 ohms, 1/2 watt, 10%	1
R36, 42	C-9B1-200	51K ohms, 1/2 watt, 5%	2
R38	C-9B4-55	270 ohms, 2 watts, 10%	1
R47	C-9B1-71	5600 ohms, 1/2 watt, 10%	1
R18	C-9B1-13	1000 ohms, 1/2 watt, 20%	1
R15, 11	C-9B2-15	2200 ohms, 1 watt, 20%	2
		COILS	
	See notes on page 2 when ordering I.F. coils.		
T3	C-13A-13009-1 or	Input I.F. transformer, combination	
	* B-13A-15473	455 kc. and 10.7 mc.	1
T4	C-13B-13014-1 or	Output I.F. transformer, combination	
	* B-13B-15474	455 kc. and 10.7 mc.	1
T5	C-203-11745-1 or	Ratio det. coil assembly	
	* B-13M-15475	10.7 mc.	1
L3	A-16A-13243	Loop loading coil	1
L4	B-14MA-11065	Loop antenna,	1
		TRANSFORMERS	
T2	B-12C-13042	Output transformer for speaker	1
	B-12A-13038	Power transformer, primary, 50-60 cycles, 105-125 volts, AC	1
		SPEAKER	
	B-18B-13043-1	Electrodynamic speaker, 12" less output transformer	1
		MISCELLANEOUS	
	B-30A-15010	Dial scale	1
	B-5B-14153-37	Knob, small, with dot, walnut	2
	B-5B-14153-41	Knob, small, with dot, mahogany	2
	B-5B-13308-37	Knob, large, without dot, walnut	2
	B-5B-13308-41	Knob, large, without dot, mahog.	2
	A-2G-14482	Escutcheon	1
	B-14M-11479	A.C. line cord	1
	A-3A-13003	Switch shaft	1
	A-2D-12983	Detent bracket (U shaped on front of set)	1
	A-43D-12934	"U" speed clip	1
	A-55C-12935	Ball bearing	1
	A-2D-13004	Switch activator bracket	1
	B-47A-11094-5	Pilot lite assembly	1
	A-46A-11739	Pilot lite, 6-8 volts, T-44	2
	A-25G-13448	Rubber chassis mounting cushion	4
	32K10-14306	10 - 32 x 1" Chassis mtg. bolts	4
	A-15C-10717	7 prong, miniature tube socket	4
	A-15B-10440	8 prong, octal socket	4
	A-19B-12644	Antenna socket	1
	A-7B-13050	FM dipole, 2-screw strip	1
	A-15B-11538	Speaker socket	1
	A-19B-12468	Phono motor socket	1
	A-19B-12170	Phono input socket	1
		RECORD CHANGER	
	* B-201-13304-1	Record changer (V-M 800) with P-30 cartridge	1
	P-30	Crystal cartridge with needle	1

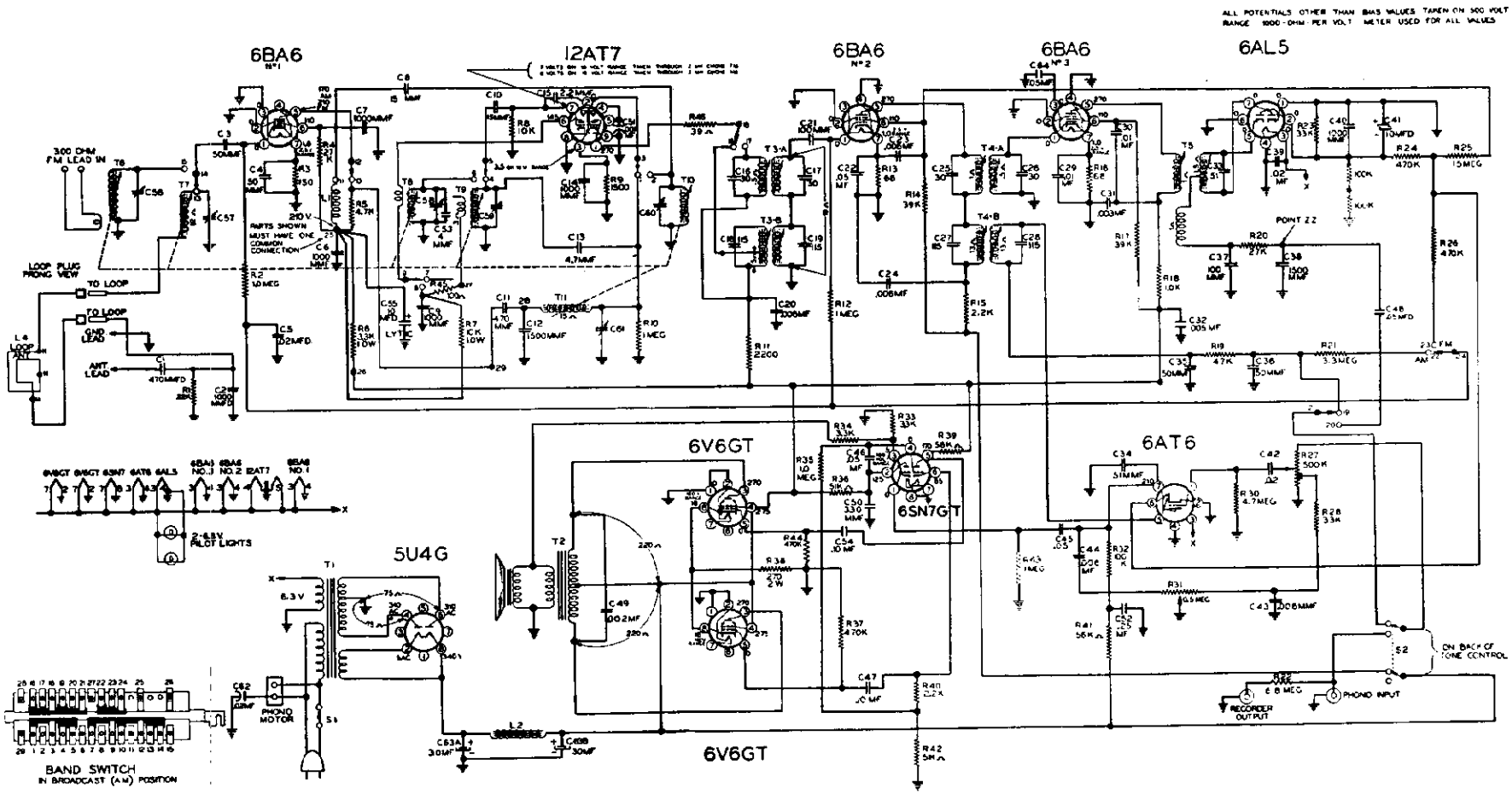

NOTE: Two 100K ohm resistors in series from Pin No. 2 of the 6AL5 to ground are connected as shown only when aligning the FM I. F. Refer to FM I. F. alignment procedure.

NOTE: B.C. Oscillator Coil T9 and number 7 terminal of slide switch should be connected together.

NOTE: Resistor R22 removed; with shielded wire from recorder output jack to radio side of radio-phono switch S2 added.

RECORD CHANGER, Webster Model 50, RCD.CH. 15-

MODEL 84BR-2719B MONTGOMERY WARD

GENERAL DESCRIPTION

This is a 2-band, nine tube (plus rectifier) superheterodyne receiver for the reception of both AM and FM stations. It features the most advanced type of FM ratio detector, permeability tuning of both bands, combination double-frequency I.F. coils and miniature tubes. Built-in antennas are provided for broadcast and FM reception; provision is also made for connection of an external broadcast antenna as well as an FM antenna with a 300 ohm lead-in. Both antennas may be connected to the radio at the same time.

The phonograph is equipped with an automatic changer which plays up to ten 12-inch records or twelve 10-inch records at one loading.

ELECTRICAL SPECIFICATIONS

Power Supply	105 to 125 volts, AC, 60-cycles; Chassis only 122 watts. With phono operation 150 watts.
Frequency Ranges	Broadcast Band—535 to 1620 kc. FM Band—88 to 108 mc.
Intermediate Freq.	AM-455 kc.; FM-10.7 mc.
Selectivity	AM-48 kc. broad at 1000 times signal, measured at 1000 kc.
	I.F. FM-180 kc. broad at 2 times down.
	I.F. FM-320 kc. broad at 10 times down.
AM Sensitivity	(For .5 watt output with external antenna)—3 microvolts average
FM Sensitivity	(For .5 watt output—10 microvolts average.
Power Output	8 watts, 10% distortion. 10 watts maximum.
Loud Speaker	12" electrodynamic. Voice coil impedance 3.2 ohms, 400 cycles.
Tube and Lamp Complement	6BA6, FM—AM R.F. stage.
	12AT7, FM—AM oscillator and mixer.
	6BA6, FM—AM 1st I.F.
	6BA6, FM— 2nd I.F.
	6AL5, FM— ratio detector.
	6AT6, AM detector. A. F. AMP. and A.V.C.
	6SN7, Push-pull. Driver and phase-inverter.
	5U4G, rectifier.
	6V6, output.
	6V6, output.
	T-44 dial lamp (2 used).
Automatic Changer	See Manual [redacted] 5035 A

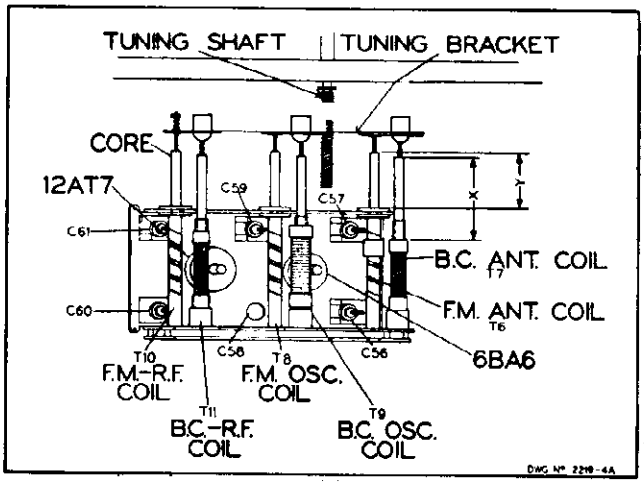

TUNER ADJUSTMENT

With tuner all the way out, dimension "X" should be 1½ inches. "Y" should be 1-1/16 inches. "X" is from the end of the slug to the edge of the coil winding. Check these dimensions before R.F. alignment is attempted of either the AM or FM band. No slug adjustment should be necessary since the slugs are properly set at the factory.

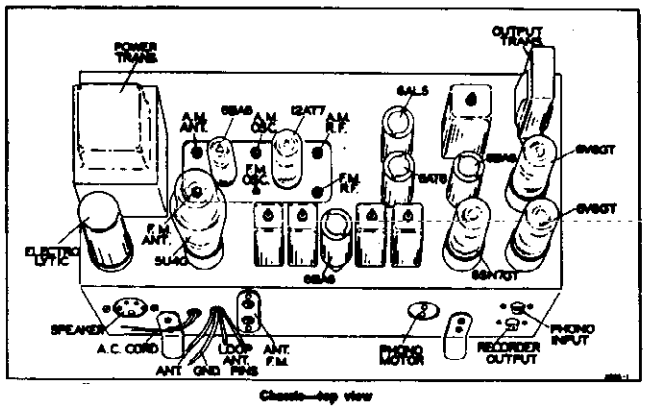

Chassis—top view

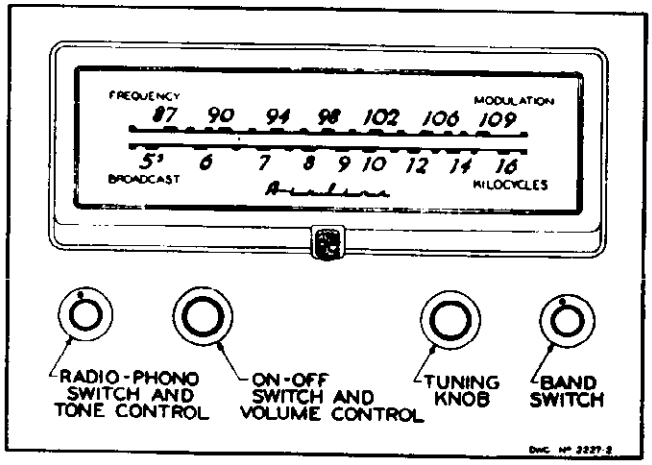

©John F. Rider

MONTGOMERY WARD MODEL 84BR-2719B

ALIGNMENT PROCEDURE

Broadcast Band Section I.F. and R.F.

The alignment procedure below includes the sensitivities at the inputs of various stages. All signal input values are based on an output of ½ watt. This may be measured by disconnecting the speaker voice coil and substituting a 3.2-ohm resistor across the secondary winding of the output transformer. A reading of 1.3 volts AC across this resistor will be approximately equivalent to a ½-watt output with the speaker connected. The volume control must be set at maximum. The tone control must be set for maximum treble.

The signal source must be an accurately calibrated signal generator capable of supplying the frequencies designated, modulated 30% with a 400-cycle audio signal. A 400 cycle audio signal is required for the audio measurement. Variations in sensitivities of plus or minus 25% are usually permissible.

AM - I. F. ALIGNMENT

Band Switch in AM Position. Tune Set to 1400 Kc. Dummy Antenna .1 Mfd.

SIGNAL GENERATOR FREQUENCY	CONNECTION TO RADIO	ADJUSTMENTS TO BE MADE	ADJUST FOR
455 Kc. Use 1000 microvolts	Pin No. 1 of 6BA6 No. 2 and ground	Primary and Secondary of T4 AM windings. See IF views	Maximum output Should be ½ watt
455 Kc. Use 30 microvolts	Pin No. 2 of 12AT7 and ground	Primary and Secondary of T3 AM windings. See IF views	Maximum output Should be ½ watt
400 cycles. Use 28 millivolts	Hot end of volume control and ground	None	Maximum output Should be ½ watt

BROADCAST BAND - R. F. ALIGNMENT

Check pointer so that the right hand edge of the pointer skirt coincides with the right hand edge of marker to the extreme right when iron cores are all the way out. For adjustment, see dial mechanism illustration.

SIGNAL GENERATOR FREQUENCY	CONNECTION TO RADIO	DUMMY ANTENNA	ADJUST
1620 Kc. Use 3 microvolts	AM Antenna and Ground	200 mmf.	C59, C57, C61 For maximum, ½ watt

Procedure for disassembly and assembly of dial mechanism

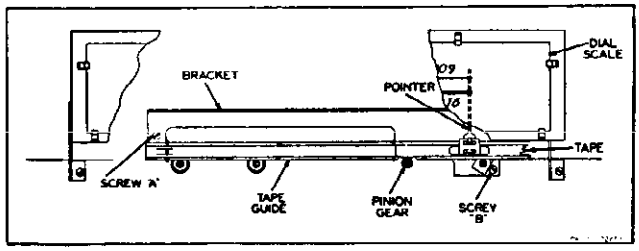

TO ALIGN POINTER—Loosen bracket screw "A". Then tape guide bracket can be moved up to allow proper meshing of tape teeth with pinion gear. Readjust bracket to eliminate backlash.

© John F. Rider

MODEL 84BR-2719B

MONTGOMERY WARD

ALIGNMENT PROCEDURE

FM Band Section. I.F. and R.F.

A non-metallic alignment tool must be used.

IMPORTANT

No alignment of the FM section of this radio should be attempted unless you are positive that the circuits are in need of adjustment and you have the necessary equipment.

All components used in this radio are extremely stable and the tuned circuits should require no adjustment over long periods of time.

NOTE

The following alignment is based on the use of the new Simpson vacuum tube volt-meter which has a "floating ground". In other words, the meter, when used as a vacuum tube volt-meter, can have both the positive and negative sides connected to points above ground and still give true readings.

A standard AM signal generator is required.

FM - I. F. ALIGNMENT

Band Switch in FM Position. Dummy Antenna .1 Mfd.

SIGNAL GENERATOR FREQUENCY	CONNECTION TO RADIO	VACUUM TUBE VOLT METER CONNECTION TO RADIO	ADJUSTMENTS TO BE MADE	ADJUST FOR
10.7 Mc. Use about .1 volt	Pin No. 1 of 6BA6 no. 3 and ground	Pin no. 2 of 6AL5 and ground	Primary of T5	Resonance should be about 3 volts
10.7 Mc. Use about .1 volt	Pin No. 1 of 6BA6 no. 3 and ground	See note "A"	Secondary of T5	Zero. Use zero center scale. See note "B"
10.7 Mc. Use about 3300 microvolts	Pin No. 1 of 6BA6 no. 2 and ground	Pin no. 2 of 6AL5 and ground	Primary and Secondary of T4A 10.7 m.c. windings See IF views	Resonance should be about 3 volts
10.7 Mc. Use about 200 microvolts	Pin no. 2 of 12AT7 and ground	Pin no. 2 of 6AL5 and ground	Primary and Secondary of 10.7 m.c. windings of T3A See IF views	Resonance should be about 3 volts

NOTES ON FM—I.F. ALIGNMENT

NOTE "A" Connect two resistors, 100K OHMS each, from Pin No. 2 of 6AL5 to ground. These resistors must be matched within 5%. Connect as shown in dotted lines on schematic diagram. Connect vacuum tube voltmeter between the mid-point of the resistors and point zz.

NOTE "B" If T5 has been tampered with, it is possible that no crossover point will be found at first. Careful adjustment of both primary and secondary is necessary.

GENERAL: Input signals should be adjusted to give approximately 3 volts. The ratio detector is operating at a reasonable level at this point and will give the truest indication of correct alignment with the procedure specified.

FM - R. F. ALIGNMENT

Check pointer so that the right hand edge of the pointer skirt coincides with the right hand edge of marker to the extreme right when iron cores are all the way out. For adjustment, see dial mechanism illustration.

SIGNAL GENERATOR FREQUENCY	CONNECTION TO RADIO	DUMMY ANTENNA	ADJUST	VACUUM TUBE VOLT METER CONNECTION TO RADIO	ADJUST TO
100 Mc. Use about 10 microvolts	FM Antenna Terminals See note	300 ohms	C58 Osc. C60 R.F. C56 Ant.	Pin no. 2 of 6AL5 and Ground	Resonance about 3 volts

NOTE: If a signal generator with the above fundamental frequency is not available, it is sometimes possible to use harmonics. Use extreme care in picking harmonics. An alternate procedure is to use a local station carrier of known frequency to align the FM Band and to use the vacuum tube volt-meter as above for resonance indication. A weak carrier, however will not produce 3 volts.

NOTE: Connect 300 ohms in series with hot side of generator and connect to one screw. Connect cold side of generator to other screw

© John F. Rider

© John F. Rider

REPLACEMENT PARTS LIST

Use Only Genuine Factory Replacement Parts

Ref. No.	Part No.	Description	Qty. Used In Set
C38	C-8G-13059	1500 mmf, ceramic	1
C34	C-8G-13060	51 mmf, ceramic	1
C40	C-8G-13201	1000 mmf, ceramic	1
C50	C-8G-11741	330 mmf, ceramic	1
C37	C-8F3-225	100 mmf, mica	1
C39, C42	C-8D-11304	.02 x 200 volts, paper	2
C35, C36	A-8F-13047	Mica condenser, 50 mmf, dual	1
C55	A-8C-12154	Electrolytic, 10 mfd, 450 volts	1
		RESISTORS	
R27, S1	A-10A-13114	Volume control and switch, 500K ohms	1
R31, S2	A-11A-15645	Tone control and phono-radio switch	1
R22	C-9B1-36	6.8 megohms, 1/2 watt	1
R32	C-9B1-86	100K ohms, 1/2 watt	1
R44, R37	C-9B1-94	470K ohms, 1/2 watt	2
R41, R39	C-9B1-83	56K ohms, 1/2 watt	2
R33, R34	C-9B1-68	3300 ohms, 1/2 watt	2
R30	C-9B1-35	4.7 megohms, 1/2 watt	1
R23, R28	C-9B1-80	33K ohms, 1/2 watt	2
R20	C-9B1-79	27K ohms, 1/2 watt	1
R13, R16	C-9B1-48	68 ohms, 1/2 watt	2
R14, R17	C-9B2-81	39K ohms, 1 watt	2
R24, R26	C-9B1-29	470K ohms, 1/2 watt	2
R25	C-9B1-302	15 megohms, 1/2 watt	1
R19	C-9B1-23	47K ohms, 1/2 watt	1
R12,R43,R35	C-9B1-31	1 megohm, 1/2 watt	3
R40	C-9B1-66	2200 ohms, 1/2 watt	1
R36, R42	C-9B1-200	51K ohms, 1/2 watt	2
R38	C-9B4-55	270 ohms, 2 watts	1
R18	C-9B1-13	1000 ohms, 1/2 watt	1
R11, R15	C-9B2-15	2200 ohms, 1 watt	2
		COILS	
T3B	B-13A-15680	Input I.F. transformer, 455 kc.	1
T4B	B-13B-15681	Output I.F. transformer, 455 kc.	1
T3A	B-13A-15682	Input I.F. transformer, 10.7 megohms	1
T4A	B-13B-15683	Second I.F. transformer, 10.7 megohms	1
T5	B-13M-15684	Ratio detector, 10.7 megohms	1
	C-13E-15687	Loop antenna assembly	1
		TRANSFORMERS	
T1	B-12A-13038-1	Power transformer, 105-125 volts, 50-60 cycles, primary	1
T2	B-12C-13042-1	Output transformer, for speaker	1
		SPEAKER	
	B-18B-13043-1	Electrodynamic speaker, 12" less output transformer	1
		MISCELLANEOUS	
	B-30A-15996	Dial scale	1
	B-5B-14153-37	Knob, small, with dot, walnut	2
	B-5B-14153-41	Knob, small, with dot, mahogany	2
	B-5B-13308-37	Knob, large, without dot, walnut	2
	B-5B-13308-41	Knob, large, without dot, mahog.	2
	A-2G-14482	Escutcheon	1
	B-14M-11479	A.C. line cord	1
	A-3A-15630	Switch shaft	1
	A-2D-12313	Detent bracket	1
	A-43D-12934	"U" speed clip	1
	A-55C-12935	Ball bearing	1
	B-47A-11094-5	Pilot lite assembly	1
	A-46A-11739	Pilot lite, 6-8 volts, T-44	2
	A-25G-13448	Rubber chassis mounting cushion	4
	32K10-14306	10 - 32 x 1" Chassis mtg. bolts	4
	A-15C-10717	7 prong, miniature tube socket	4
	A-15B-10440	8 prong, octal socket	4
	A-19B-12644	Antenna socket	1
	A-7B-13050	FM dipole, 2-screw strip	1
	A-15B-11538	Speaker socket	1
	A-19B-12468	Phono motor socket	1
	A-19B-12170	Phono input socket	1
	A-19B-11044	Recorder socket	1
		RECORD CHANGER	
	B-201-13109	50 Record changer with cartridge	1
		QT Cartridge	1
		TUNER PARTS	
		CONDENSERS	
C58	A-8H-15444	Trimmer, FM oscillator	1
C56, 57, 59, 61	A-2M-12618	Trimmer plate, large	4
C60	A-2M-14368	Trimmer plate, small	1
	A-5M-12615	Locator, for trimmer plates	5
C59, C61	B-6M-12616-S-2	Silvered mica film	2
C56, 57, 60	A-6M-12616	Clear mica film	3
	A-3C-12617	Spacer, for trimmer plates	5
C1, C11	C-8G-11732	470 mmf, ceramic	2
C2	C-8G-13695	1000 mmf, ceramic	1
C6, 7, 9, 14	C-8G-13201	1000 mmf, ceramic	5
S1			
C12	C-8G-11731	1500 mmf, ceramic	1
C10, C8	C-8G-13017	15 mmf, ceramic	2
C3, C4	C-8G-11484	50 mmf, ceramic	2
C13	A-8G-12495-6	4.7 mmf, ceramic	1
C15	A-8G-12495-4	2.2 mmf, ceramic	1
C53	C-8G-15859	4 mmf, ceramic	1
C5	C-8D-11304	.02 x 200 volts, paper	1
		RESISTORS	
R4	C-9B2-79	27K ohms, 1 watt	1
R1	C-9B1-21	22K ohms, 1/2 watt	1
R3	C-9B1-52	150 ohms, 1/2 watt	1
R5	C-9B1-17	4700 ohms, 1/2 watt	1
R8	C-9B1-19	10K ohms, 1/2 watt	1
R2, R10	C-9B1-31	1 megohm, 1/2 watt	2
R21	C-9B1-34	3.3 megohms, 1/2 watt	1
R45	C-9B1-50	100 ohms, 1/2 watt	1
R46	C-9B1-45	39 ohms, 1/2 watt	1
R9	C-9B1-64	1500 ohms, 1/2 watt	1
R6	C-9B2-6	3300 ohms, 1 watt	1
R7	C-9B2-74	10K ohms, 1 watt	1
		COILS	
T8	B-13D-13027-1	FM oscillator coil	1
—	B-51A-13056	Core for FM oscillator coil	1
T6	B-13E-13028	FM antenna coil	1
—	B-51A-13058	Core for FM antenna coil	1
T10	B-13C-13029	FM R.F. coil	1
—	B-51A-13057	Core for FM R.F. coil	1
T9	A-13D-15704	B.C. oscillator coil	1
—	B-51A-12722	Core for B.C. oscillator coil	1
T7	B-13E-13031	B.C. antenna coil	1
T11	B-13C-13032	B.C. R.F. coil	1
—	B-51A-12723	Core for B.C. ant. and R.F. coil	2
		MISCELLANEOUS	
	B-20B-15628	Slide switch	1
	A-15B-12997	7-prong miniature tube socket	1
	A-15B-13430	9-prong miniature, tube socket	1
	B-3A-15415	Lead screw	1
	A-3J-12309	Pinion gear	1
	A-49A-13228	Tension spring	1
	A-49A-12394	Spiral spring for slugs	3
	B-2J-13006	Rack tape with teeth and pointer bracket	1
	B-2D-15416	Guide for rack tape	1
	B-2G-16040	Pointer	1
	C-2D-15062	Yoke and bracket	
	A-25A-13019	Core grommet, for AM	3
	A-3M-13020	Insert for core grommet	3
		MAIN CHASSIS PARTS	
		CONDENSERS	
C63A, C63B	B-8C-11629	Electrolytic filter condenser, 30—30 x 450 volts	1
C52	C-8D-13439	.25 mfd x 400 volts	1
C54, C47	C-8D-10760	.1 mfd x 400 volts	2
C31	C-8D-11013	.003 x 600 volts	1
C44, 43, 24, 23, 20	C-8D-10785	.006 x 600 volts	5
C29, C30	C-8D-10761	.01 x 400 volts	2
C45, 46	C-8D-10813	.05 x 400 volts	2
C49	C-8D-10789	.002 x 600 volts	1
C48, C22	C-8D-10770	.05 x 200 volts	2
C64	C-8D-15860	.05 x 200 volts	1
C41	A-8C-13132	Electrolytic, 10 mfd x 50 volts	1
C62	C-8J-11321	.02 x 600 volts, molded case	1
C35	A-2G-13962	.005 x 500 volts, ceramic	1
C21	C-8G-11734	100 mmf, ceramic	1

MODEL 84BR-2726A

MONTGOMERY WARD

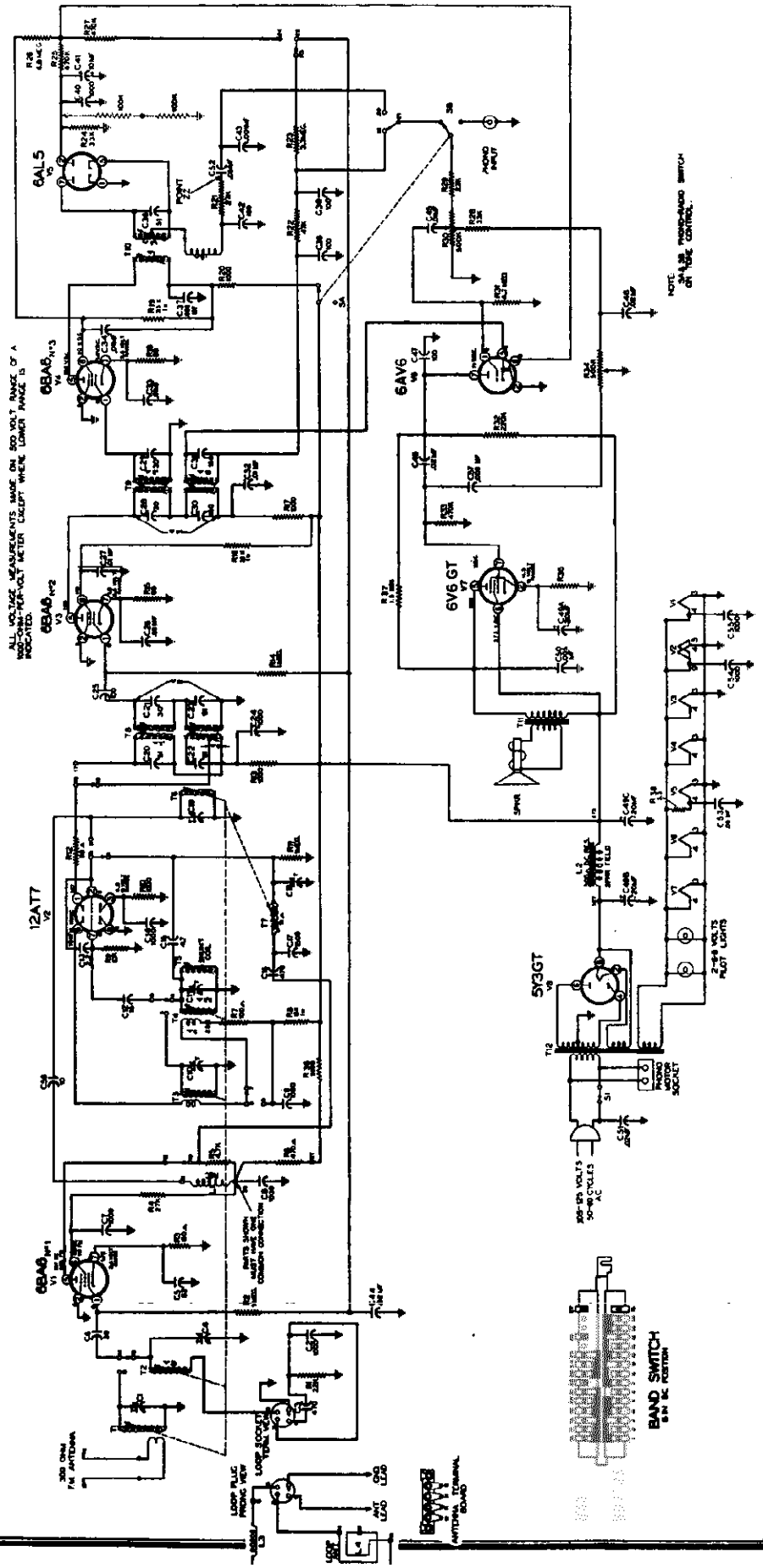

MONTGOMERY WARD MODEL 84BR-2726A

GENERAL DESCRIPTION

This is a 2-band, seven tube (plus rectifier) superheterodyne receiver for the reception of both AM and FM stations. It features the most advanced type of FM ratio detector, permeability tuning of both bands, combination double-frequency I.F. coils and miniature tubes. Built-in antennas are provided for broadcast and FM reception; provision is also made for connection of an external broadcast antenna as well as an FM antenna with a 300 ohm lead-in. Both antennas may be connected to the radio at the same time.

The phonograph is equipped with an automatic changer which plays up to ten 12-inch records or twelve 10-inch records at one loading, and also accommodates the new long-play microgroove records.

ELECTRICAL SPECIFICATIONS

Power Supply	105 to 125 volts, AC, 60-cycles; Chassis only 75 watts. With phono operation 100 watts.
Frequency Ranges	Broadcast Band—535 to 1620 kc. FM Band— 88 to 108 mc.
Intermediate Freq.	AM-455 kc.; FM-10.7 mc.
Selectivity	AM-42 kc. broad at 1000 times signal, measured at 1000 kc. I.F. FM-200 kc. broad at 2 times down. I.F. FM-400 kc. broad at 10 times down.
AM Sensitivity	(For .5 watt output with external antenna)—5 microvolts average.
FM Sensitivity	(For .5 watt output)—25 microvolts average.
Power Output	3.2 watts, 10% distortion. 5.5 watts maximum.
Loud Speaker	12" electrodynamic. Voice coil impedance 3.2 ohms, 400 cycles.
Tube and Lamp Complement	6BA6, FM—AM R.F. stage. 12AT7, FM—AM oscillator and mixer. 6BA6, FM—AM 1st I.F. 6BA6, FM—2nd I.F. 6AL5, FM ratio detector. 6AV6, AM detector. A.F. AMP. and A.V.C. 6V6GT/G, Audio output. 5Y3, rectifier. T-44 dial lamp (2 used).
Automatic Changer	See Manual 5068A.

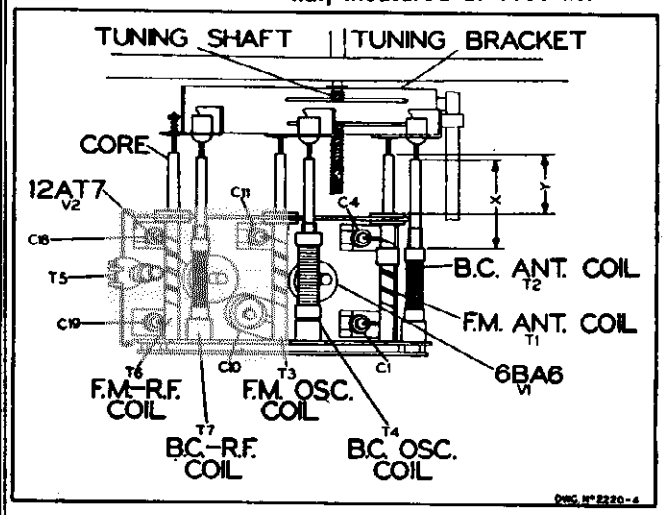

TUNER ADJUSTMENT

With tuner all the way out, dimension "X" should be 1½ inches. "Y" should be 1-1/16 inches. "X" is from the end of the slug to the edge of the coil winding. Check these dimensions before R.F. alignment is attempted of either the AM or FM band. No slug adjustment should be necessary since the slugs are properly set at the factory.

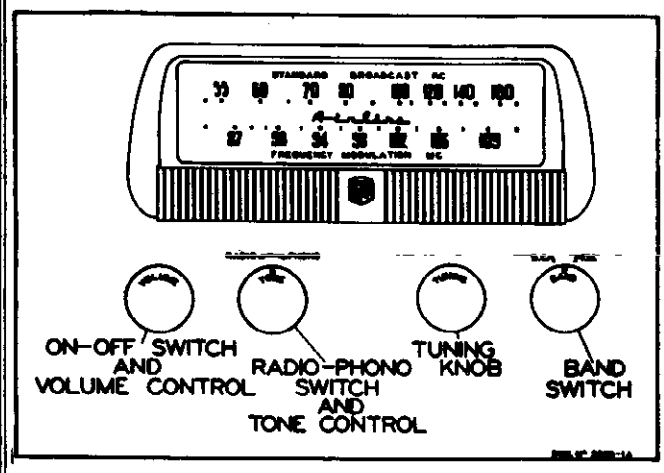

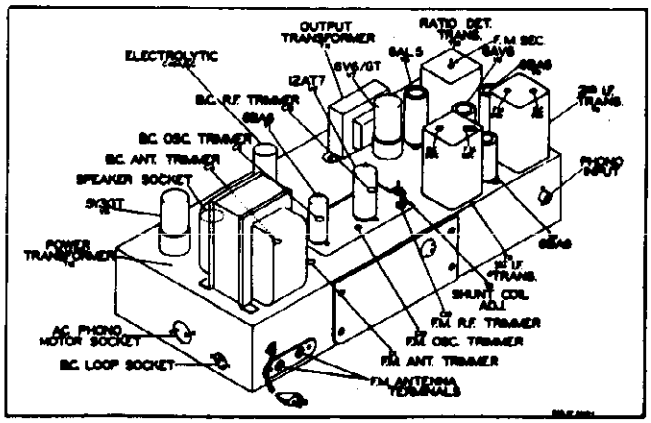

Chassis—top view

MODEL 84BR-2726A

MONTGOMERY WARD

ALIGNMENT PROCEDURE

Broadcast Band Section I.F. and R.F.

The alignment procedure below includes the sensitivities at the inputs of various stages. All signal input values are based on an output of ½ watt. This may be measured by disconnecting the speaker voice coil and substituting a 3.2-ohm resistor across the secondary winding of the output transformer. A reading of 1.3 volts AC across this resistor will be approximately equivalent to a ½-watt output with the speaker connected. The volume control must be set at maximum. The tone control must be set for maximum treble.

The signal source must be an accurately calibrated signal generator capable of supplying the frequencies designated, modulated 30% with a 400-cycle audio signal. A 400 cycle audio signal is required for the audio measurement. Variations in sensitivities of plus or minus 25% are usually permissible.

AM - I. F. ALIGNMENT

Band Switch in AM Position. Tune Set to 1400 Kc. Dummy Antenna .1 Mfd.

SIGNAL GENERATOR FREQUENCY	CONNECTION TO RADIO	ADJUSTMENTS TO BE MADE	ADJUST FOR
455 Kc. Use 2400 microvolts	Pin No. 1 of 6BA6 No. 2 and ground	Primary and Secondary of T9 AM windings. See top and bottom views	Maximum output Should be ½ watt
455 Kc. Use 70 microvolts	Pin No. 2 of 12AT7 and ground	Primary and Secondary of T8 AM windings. See top and bottom views	Maximum output Should be ½ watt
400 cycles. Use 60 millivolts	Hot end of volume control and ground	None	Maximum output Should be ½ watt

BROADCAST BAND - R. F. ALIGNMENT

Check pointer so that it coincides with the marker to the extreme right when iron cores are all the way out. For adjustment, see dial mechanism illustration.

SIGNAL GENERATOR FREQUENCY	CONNECTION TO RADIO	DUMMY ANTENNA	ADJUST
1620 Kc.	AM Antenna and Ground	200 mmf.	C11 Osc. trimmer for maximum
535 Kc.	AM Antenna and Ground	200 mmf.	T5 for maximum ½ watt
1620 Kc. Use 5 microvolts	AM Antenna and Ground	200 mmf.	C4 and C18 for max. ½ watt. See note

NOTE: Recheck first two adjustments after this adjustment because of inter-locking effects.

Procedure for disassembly and assembly of dial mechanism.

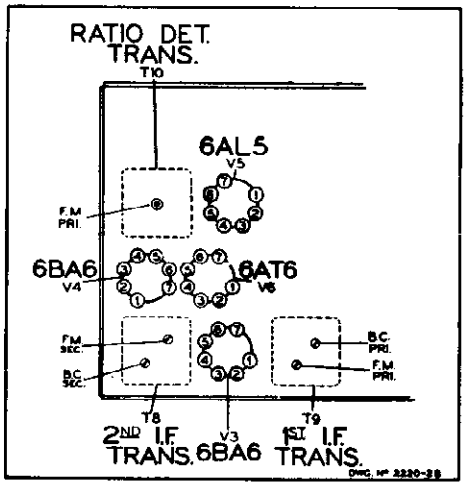

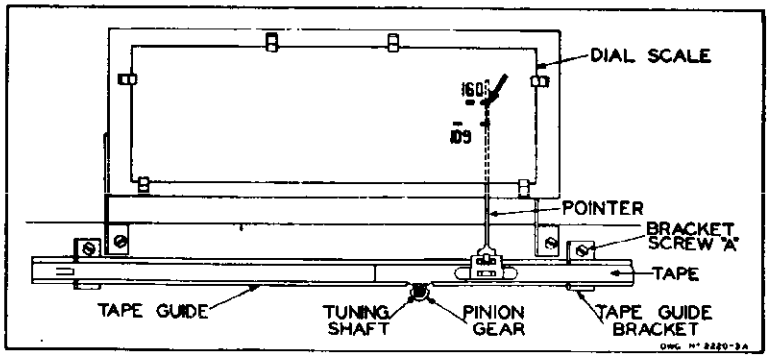

TO ALIGN POINTER— Loosen bracket screw "A". Then tape guide bracket can be moved up to allow proper meshing of tape teeth with pinion gear. Readjust bracket to eliminate backlash.

© John F. Rider

MONTGOMERY WARD MODEL 84BR-2726A

ALIGNMENT PROCEDURE

FM Band Section. I.F. and R.F.

A non-metallic alignment tool must be used.

IMPORTANT

No alignment of the FM section of this radio should be attempted unless you are positive that the circuits are in need of adjustment and you have the necessary equipment.

All components used in this radio are extremely stable and the tuned circuits should require no adjustment over long periods of time.

NOTE

The following alignment is based on the use of the new Simpson vacuum tube volt-meter which has a "floating ground". In other words, the meter, when used as a vacuum tube volt-meter, can have both the positive and negative sides connected to points above ground and still give true readings.

A standard AM signal generator is required.

FM - I. F. ALIGNMENT

Band Switch in FM Position. Dummy Antenna .1 Mfd.

SIGNAL GENERATOR FREQUENCY	CONNECTION TO RADIO	VACUUM TUBE VOLT METER CONNECTION TO RADIO	ADJUSTMENTS TO BE MADE	ADJUST FOR
10.7 Mc. Use about .1 volt	Pin No. 1 of 6BA6 no. 3 and ground	Pin No. 2 of 6AL5 and ground	Primary of T10	Resonance should be about 3 volts
10.7 Mc. Use about .1 volt	Pin No. 1 of 6BA6 no. 3 and ground	See note "A"	Secondary of T10	Zero. Use zero center scale See note "B"
10.7 Mc. Use about 3300 microvolts	Pin No. 1 of 6BA6 no. 2 and ground	Pin No. 2 of 6AL5 and ground	Primary and Secondary of T9 10.7 m.c. windings See top and bottom views	Resonance should be about 3 volts
10.7 Mc. Use about 200 microvolts	Pin No. 2 of 12AT7 and ground	Pin No. 2 of 6AL5 and ground	Primary and Secondary of 10.7 m.c. windings of T8 See top and bottom views	Resonance should be about 3 volts

NOTE ON FM - I.F. ALIGNMENT

NOTE "A" Connect two resistors, 100K OHMS each, from Pin No. 2 of 6AL5 to ground. These resistors must be matched within 5%. Connect as shown in dotted lines on schematic diagram. Connect vacuum tube volt-meter between the mid-point of the resistors and points zz.

NOTE "B" If T10 has been tampered with, it is possible that no crossover point will be found at first. Careful adjustment of both primary and secondary is necessary.

GENERAL: Input signals should be adjusted to give approximately 3 volts. The ratio detector is operating at a reasonable level at this point and will give the truest indication of correct alignment with the procedure specified.

FM - R. F. ALIGNMENT

Check pointer so that it coincides with the marker to the extreme right when iron cores are all the way out. For adjustment, see dial mechanism illustration.

SIGNAL GENERATOR FREQUENCY	CONNECTION TO RADIO	DUMMY ANTENNA	ADJUST	VACUUM TUBE VOLT METER CONNECTION TO RADIO	ADJUST TO
100 Mc. Use about 25 microvolts	FM Antenna Terminals See note	300 ohms	C10 Osc. C19 R.F. C1 Ant.	Pin No. 2 of 6AL5 and Ground	Resonance about 3 volts

NOTE: If a signal generator with the above fundamental frequency is not available, it is sometimes possible to use harmonics. Use extreme care in picking harmonics. An alternate procedure is to use a local station carrier of known frequency to align the FM Band and to use the vacuum tube volt-meter as above for resonance indication. A weak carrier, however will not produce 3 volts. NOTE: Connect 300 ohms in series with hot side of generator and connect to one screw. Connect cold side of generator to other screw.

Scanned by John F. Rider

MODEL 84BR-2726A

MONTGOMERY WARD

REPLACEMENT PARTS LIST

Ref. No.	Part No.	Description	Qty. Used In Set
		TUNER CHASSIS PARTS	
		CONDENSERS	
C10	A-8E-13575	Trimmer condenser	1
C1, 4, 11, 19, 18	A-2M-12618	Trimmer cond. plate	5
C3, 16	C-8G-11732	470 mmf, ±20%	2
C2	C-8G-13695	1000 mmf, ±20%	1
C8, 7, 9, 14, 54, 55	C-8G-13201	1000 mmf, +20%—10%	6
C5	C-8G-13018	62 mmf, ±10%	1
C17	C-8G-11731	1500 mmf, ±20%	1
C12	C-8G-13017	15 mmf, ±10%	1
C6	C-8G-11484	50 mmf, ±10%	1
C56	C-8G-11789	10 mmf, ±10%	1
C15	A-8G-12495-6	4.7 mmf, ±20%	1
C13	A-8G-12495-4	2.2 mmf, ±20%	1
C44	C-8D-11304	.02 mfd, 200 volts, ±20%	1
		RESISTORS	
R4	C-9B2-79	27K ohms, 1 watt, 10%	1
R1	C-9B1-21	22K ohms, 1/2 watt, 20%	1
R3	C-9B1-52	150 ohms, 1/2 watt, 10%	1
R5	C-9B1-17	4700 ohms, 1/2 watt, 20%	1
R6	C-9B1-11	470 ohms, 1/2 watt, 20%	1
R9	C-9B1-19	10K ohms, 1/2 watt, 20%	1
R2, 11	C-9B1-31	1 megohm, 1/2 watt, 20%	2
R10	C-9B1-62	1000 ohms, 1/2 watt, 10%	1
R23	C-9B1-34	3.3 megohms, 1/2 watt, 20%	1
R7	C-9B1-50	100 ohms, 1/2 watt, 10%	1
R12	C-9B1-45	39 ohms, 1/2 watt, 10%	1
R36	C-9B2-71	5600 ohms, 1 watt, 10%	1
		COILS	
T3	B-13D-13027	FM oscillator coil assembly	1
—	B-51B-13056	Core for FM oscillator coil	1
T1	B-13E-13028	FM antenna coil assembly	1
—	B-51A-13058	Core for FM antenna coil	1
T6	B-13C-13029	FM R.F. coil assembly	1
—	B-51A-13057	Core for FM R.F. coil	1
T4	B-13D-13030	AM oscillator coil assembly	1
—	B-51A-12722	Core for B.C. oscillator coil	1
—	B-51A-12723	Core for B.C. ant. and R.F. coil	1
T2	B-13E-13031	AM antenna coil assembly	1
T7	B-13C-13032	AM R.F. coil assembly	1
L1	A-16A-13033	Choke coil assembly	1
T5	B-13D-12974	AM osc. shunt coil assembly	1
		MISCELLANEOUS	
	B-208-13553 or B-201-12967	Band change slide switch	1
	A-15B-12997	7 prong, miniature tube socket	1
	A-15B-13430	9 prong, miniature tube socket	1
	C-2D-14437	Drive bracket assembly	1
	A-25A-13019	Core grommets, for AM Band	3
	A-3M-13020	Insert for core grommet	3
	A-49A-12394	Spiral spring for FM cores	3
	A-2J-11041	Pointer tension spring, "M" shaped	1
	B-2D-12316	Tape guide	1
	B-2J-12922	Rack tape, with teeth and pointer bracket	1
	B-2G-13613	Pointer	1
	A-200-15016	Drive, pinion and lead screw assembly	1
		MAIN CHASSIS PARTS	
		CONDENSERS	
C49B, 49C, 49A	A-8C-15387	Electrolytic, 20—20 x 450 volts; 20 x 25 volts	1
C50	C-8D-10935	.005 mf x 600 volts	1
C27, 32, 33, 34, 45	C-8D-10761	.01 mf x 400 volts, 20%	6
C57	C-8D-10785	.006 mf x 600 volts, 20%	1
C41	A-8C-13132	Electrolytic, 10 mf x 50 volts	1
C43	C-8D-10787	.001 x 600 volts, 20%	1
C53,C26,C52	C-8D-10770	.05 x 200 volts, 20%	2
C48, 46	C-8D-10774	.02 x 400 volts, 20%	2
C51	C-8J-11321	.02 x 600 volts, 20%	1
C25, 47	C-8G-13131	100 mmf, ceramic, 10%	2
C24, 40	C-8G-13016	1000 mmf, ceramic, 20%	3
C42	C-8F3-225	100 mmf, mica, 5%	1
C38, 39	A-8F-13127	.0001 mf, dual mica, 20%	1
C22, 23	C-8G-12160	91 mmf, ceramic, 5%	2
C20	C-8G-13026	51 mmf, ceramic, 5%	1
C30, 31	C-8G-13025	150 mmf, ceramic, 5%	2
C21, 28, 29	C-8G-12159	30 mmf, ceramic, 5%	3
C36	C-8G-11891	51 mmf, ceramic	1
C37	C-8D-15638	.002 x 600 volts, 10%	1
		RESISTORS	
R30, S1	A-10A-13114	Volume control (500K ohms) and switch	1
R34, SA, SB	A-11A-13115	Tone control (500K ohms) and radio-phono switch	1
R32	C-9B1-27	220K ohms, 1/2 watt, 20%	1
R15, 18	C-9B1-48	68 ohms, 1/2 watt, 10%	2
R14	C-9B1-31	1 megohm, 1/2 watt, 20%	1
R19, 16	C-9B2-80	33K ohms 1 watt, 10 %	2
R24, 28	C-9B1-80	33K ohms, 1/2 watt, 10%	2
R21	C-9B1-79	27K ohms, 1/2 watt, 10%	1
R8	C-9B2-76	15K ohms, 1 watt, 10%	1
R22	C-9B1-23	47K ohms, 1/2 watt, 20%	1
R29	C-9B1-21	22K ohms, 1/2 watt, 20%	1
R31	C-9B1-35	4.7 megohms, 1/2 watt, 20%	1
R25, 27, 33	C-9B1-29	470K ohms, 1/2 watt, 20%	3
R35	C-9B2-144	240 ohms, 1 watt, 5%	1
R26	C-9B1-36	6.8 megohms, 1/2 watt, 20%	1
R13, 20, 17	C-9B1-13	1000 ohms, 1/2 watt, 20%	2
R37	C-9B1-100	1.5 megohm, 1/2 watt, 10%	1
R38	C-9B1-1069	3.3 ohms, 1/2 watt, 5%	1
		COILS	
T8	B-13A-15473	Input I.F. transformer, combination, 455 kc. and 10.7 mc.	1
T9	B-13B-15474	Second I.F. transformer, combination, 455 kc. and 10.7 mc.	1
T10	B-13M-15475	Ratio det. coil assembly 10.7 mc.	1
L3	A-16A-13243	Loop loading coil	1
L4	A-14MA-11068-1	Loop antenna ribbon	1
		TRANSFORMERS	
T12	B-12A-15385	Power transformer, primary, 50-60 cycles. 105-125 volts A.C.	1
T11	B-12C-13556	Output transformer, for speaker	1
		SPEAKER	
L2	B-18B-13585-2	Electrodynamic speaker, 12-inch, less output transformer	1
		MISCELLANEOUS	
	B-30A-13611	Dial scale	1
	B-5B-13744	Knob, mahog. or wal. "Volume"	1
	B-5B-13745	Knob, mahog. or wal. "Tone"	1
	B-5B-13746	Knob, mahog. or wal. "Tuning"	1
	B-5B-13747	Knob, mahog. or wal. "Band switch"	1
	B-2G-13612	Escutcheon, mahog. or walnut	1
	B-14M-11479	Line cord and plug	1
	A-3A-12933-1	Band switch shaft	1
	A-55C-12935	Ball bearing	1
	B-47A-11094-4	Pilot lite and bracket assembly	1
	A-46A-11739	Pilot lite, 6-8 volts, T-44	2
	A-15C-13174	Miniature socket, 7 prong	5
	A-15B-10440	Octal socket, 8 prong	1
	A-19B-12644	Loop antenna socket	1
	B-7B-13050	FM terminal strip	1
	A-15B-11538	Speaker socket	1
	A-19B-12468	Phono motor socket	1
	A-19B-12170	Phono input socket	1
		RECORD CHANGER	
	B-201-16345	246 Changer with cartridge	1
		Webster V42-2 cartridge	1
		NE-214 Tandem point needle	1

MONTGOMERY WARD

MODELS 84HA-1527A,
84HA-1528A

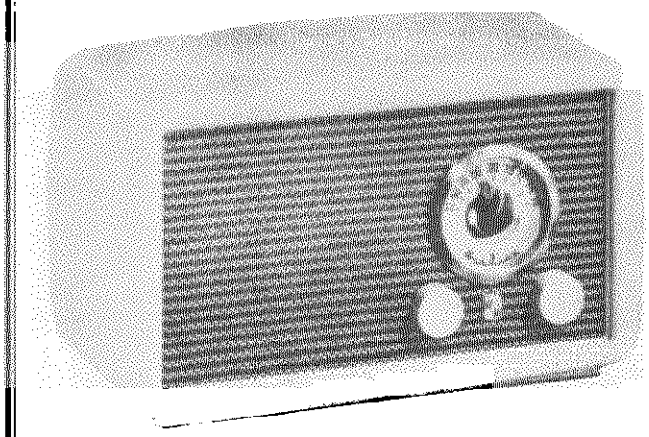

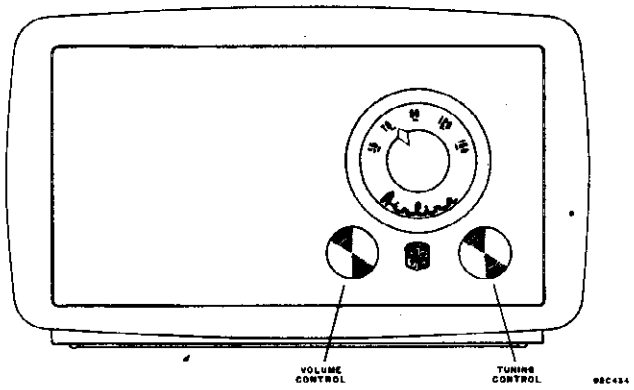

This radio is a condenser tuned receiver using a cut plate tracking mixer section and employs four tubes in a conventional superheterodyne circuit. The loop provides for signal pickup as well as the inductive component in the tuned circuit of the mixer stage. No provision is made for the use of an external antenna.

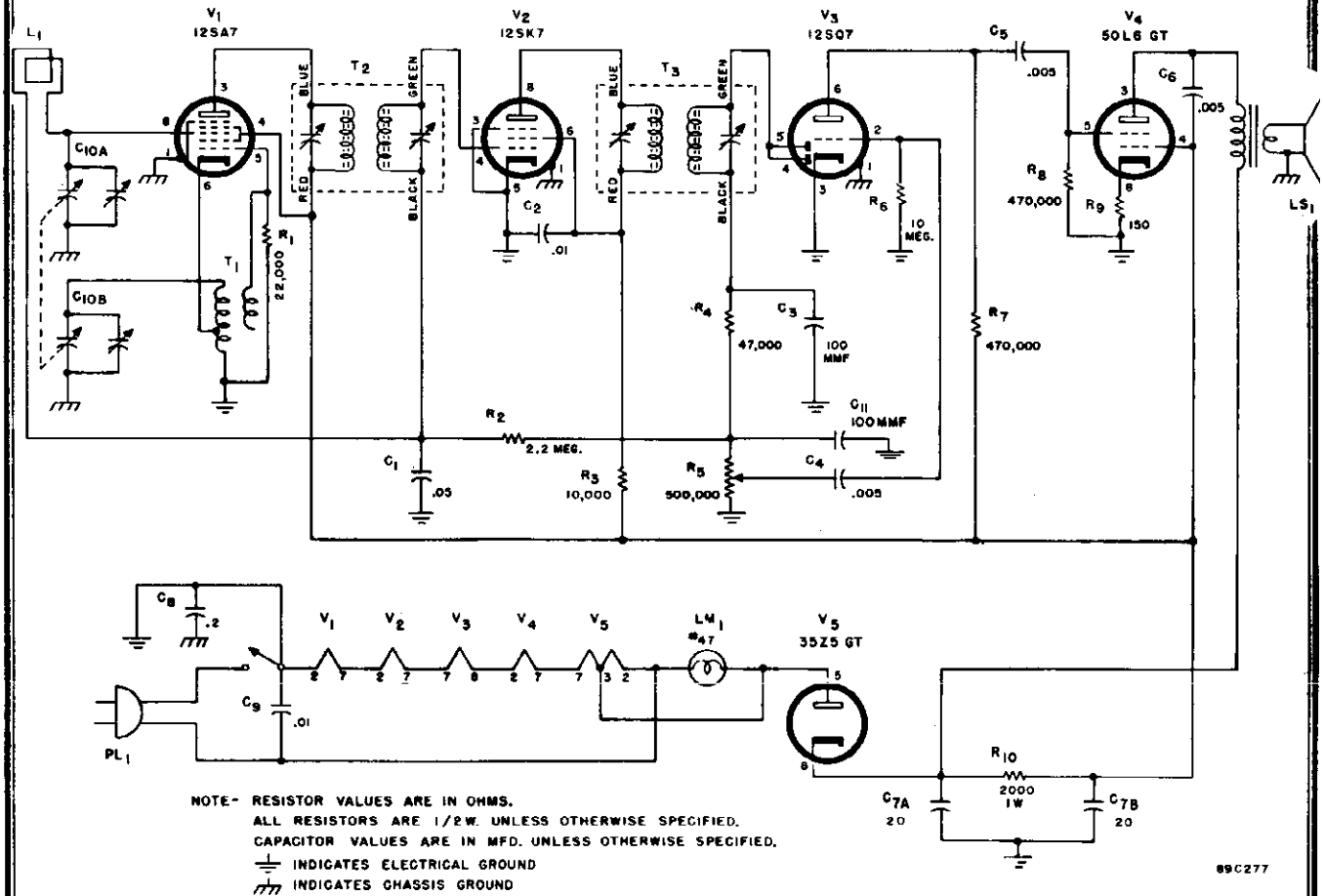

NOTE- RESISTOR VALUES ARE IN OHMS.
ALL RESISTORS ARE 1/2W. UNLESS OTHERWISE SPECIFIED.
CAPACITOR VALUES ARE IN MFD. UNLESS OTHERWISE SPECIFIED.
⏚ INDICATES ELECTRICAL GROUND
⏚ INDICATES CHASSIS GROUND

89C277

LAST RESISTOR SYMBOL — R-10
LAST CAPACITOR SYMBOL — C-10

MODELS 84HA-1527A,
84HA-1528A

MONTGOMERY WARD

ELECTRICAL SPECIFICATIONS

Power Supply	105-125 volts DC or 60 cycle AC, 25 watts
Frequency Range	Broadcast 540-1620 KC
Intermediate Frequency	455 KC
Antenna	Built in loop
Power Output	0.6 watt
Speaker	5 inch P.M.
Voice Coil Impedance	3 ohms
Tube and Dial Lamp Complement.	12SA7 Mixer 12SK7 I.F. Amplifier 12SQ7 Detector & Audio 50L6GT Power Amplifier 35Z5GT Rectifier Mazda No. 47 Dial Lamp

For placement of these tubes, see the diagram showing layout.

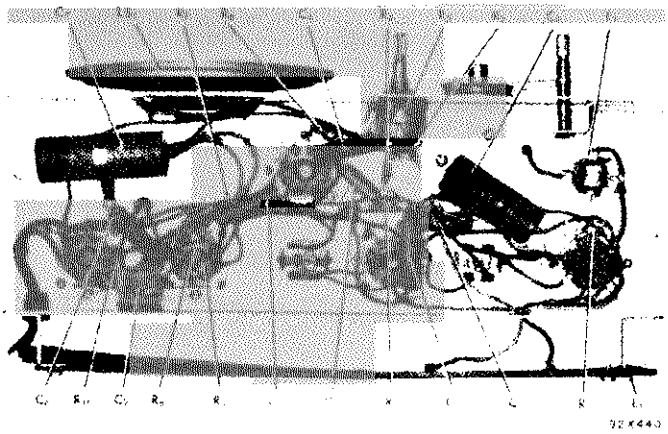

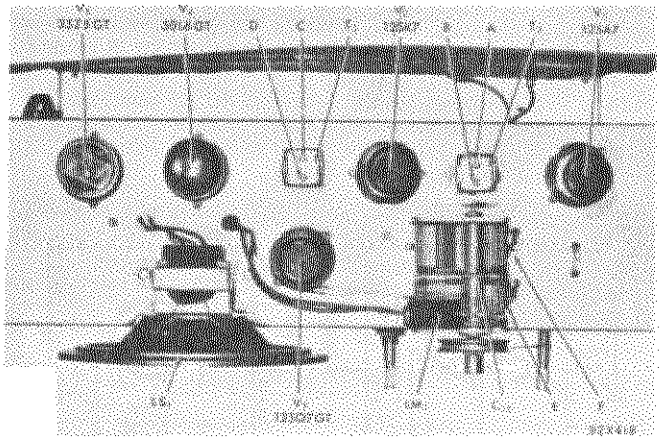

DIAL CORD STRINGING INSTRUCTIONS

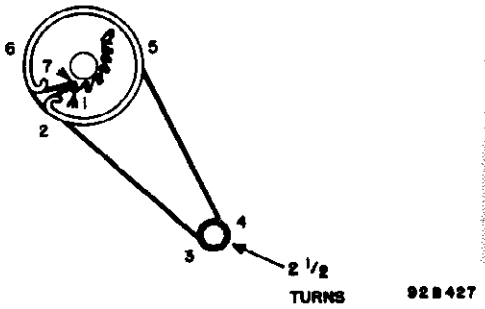

To restring the dial cable, pull the two control knobs and dial pointer from their shafts remove the chassis bolts and pull the chassis from the cabinet. Restring the dial drive with a 12-inch length of 30 lb. test dial cord following the stringing sequence shown in the accompanying illustration. Reinstall the receiver chassis and replace the knobs. Set the tuning condenser at maximum capacity and clip on the dial pointer so that its pointer falls on the left hand limit of the dial scale.

ALIGNMENT PROCEDURE

Output meter connection	Across voice coil
Generator ground	To chasis
Volume control position	Maximum

ALIGNMENT CHART

Dummy Antenna	Signal Generator Coupling	Signal Generator Frequency	Radio Tuned To	Adjust	Remarks
0.01 mfd. cap.	Connect to pin #5 of of 12SA7 through dummy ant.	455 kc	1000 kc	A,B,C,D	Adjust for max. output. IF sensitivity for 50 milliwatt output is approx. 150 microvolts.
None	Do not couple directly to loop, pickup generator signal by radiation only	1500 kc	1500 kc	E*F	Adjust for max. output.

*Note - Calibration adjustment.

© John F. Rider

TUBE SOCKET VOLTAGE CHART

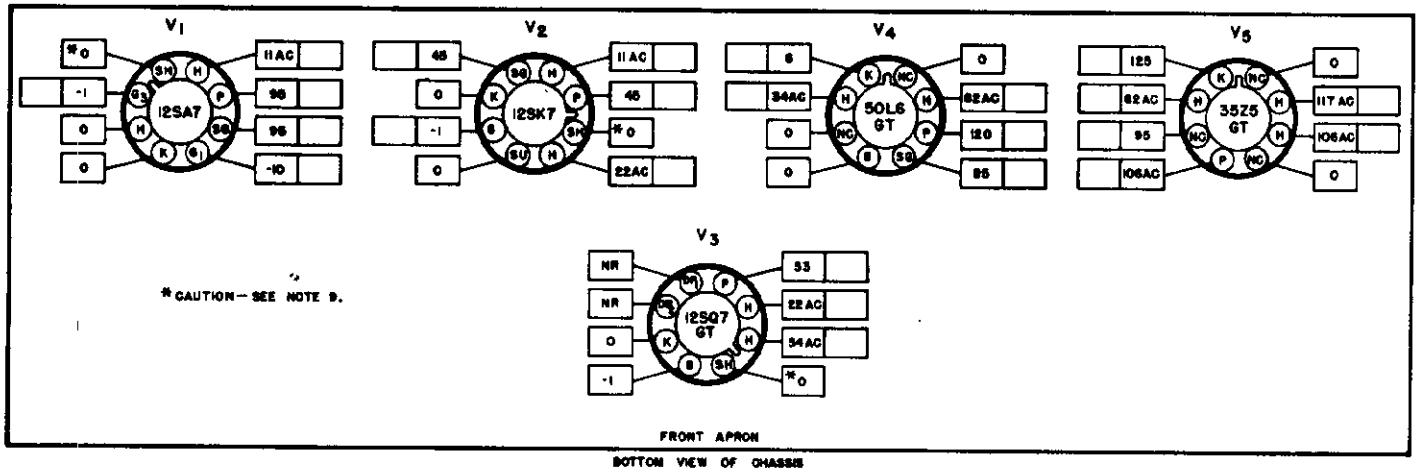

NOTES-

1. SOCKET VIEWS ARE BOTTOM VIEWS.
2. ALL VOLTAGES ARE MEASURED BETWEEN TUBE SOCKET TERMINALS AND ELECTRICAL GROUND (NOT CHASSIS) WITH ZERO SIGNAL INPUT.
3. LINE VOLTAGE ___ 117 V. AC.
4. ALL VOLTAGES SHOWN ARE DC UNLESS OTHERWISE SPECIFIED. AC VOLTAGES SHOWN BECOME DC WHEN OPERATING FROM A DC LINE.
5. DC VOLTAGES SHOWN WERE MEASURED WITH AN ELECTRONIC VOLTMETER.
6. "NC" ___ NO CONNECTION. (VOLTAGE SHOWN FOR THIS TERMINAL ONLY WHEN TERMINAL IS USED AS A TIE LUG).
7. "NR" ___ NOT READABLE. (READING GENERALLY MEANINGLESS).
8. [ ] SPACE PROVIDED FOR SERVICE METER READINGS.
9. ALL READINGS TAKEN WITH LINE PLUG POLARIZED SO THAT GROUND BUSS AND CHASSIS ARE AT THE SAME POTENTIAL WITH THE CHASSIS GROUNDED.

9E0426

REPLACEMENT PARTS LIST

Ref. No.	Part No.	Description
		CONDENSERS
C-1	46AY503J	.05 mfd. 600 V., tubular
C-2	46AZ103J	.01 mfd. 600 V., tubular
C-3, C-11	CM20A101M	100 mmf. 500 V., mica
C-4,5,6	46AZ502J	.005 mfd. 600 V., tubular
C-7	45B127	20-20 mfd. 150., electrolytic
C-8	46AX204H	.2 mfd. 600., tubular
C-9	46AG103J	.01 mfd. 600., tubular
C-10	48B201	Tuning condenser
		RESISTORS
R-1	RC20AE223M	22,000 ohms ½ watt, carbon
R-2	RC20AE225M	2.2 megohms ½ watt, carbon
R-3	RC20AE103M	10,000 ohms ½ watt, carbon
R-4	RC20AE473M	47,000 ohms ½ watt, carbon
R-5	25B641	Volume control
R-6	RC20AE106M	10 megohms ½ watt, carbon
R-7,8	RC20AE474M	470,000 ohms ½ watt, carbon
R-9	RC20AE151M	150 ohms ½ watt, carbon
R-10	RC30AE202M	2000 ohms 1 watt, carbon
		COILS AND TRANSFORMERS
L-1	57C119	Loop antenna
T-1	51B1058	Oscillator coil
T-2,3	50B374	Transformer IF & Det.
		MISCELLANEOUS
LS-1	85C073	Speaker
	86B066	Pilot light socket & bracket
	6A296	Socket, octal
	87B1669	Line cord
	76A397	Line cord lock
	7C073	Escutcheon
	82B150	Pointer
	22B209	Dial scale
	15B068	Knob, ivory
	15B068-3	Knob, brown
	66E450	Cabinet, ivory finish
	66E450-1	Cabinet, brown finish

MODEL 84HA-1810A

MONTGOMERY WARD

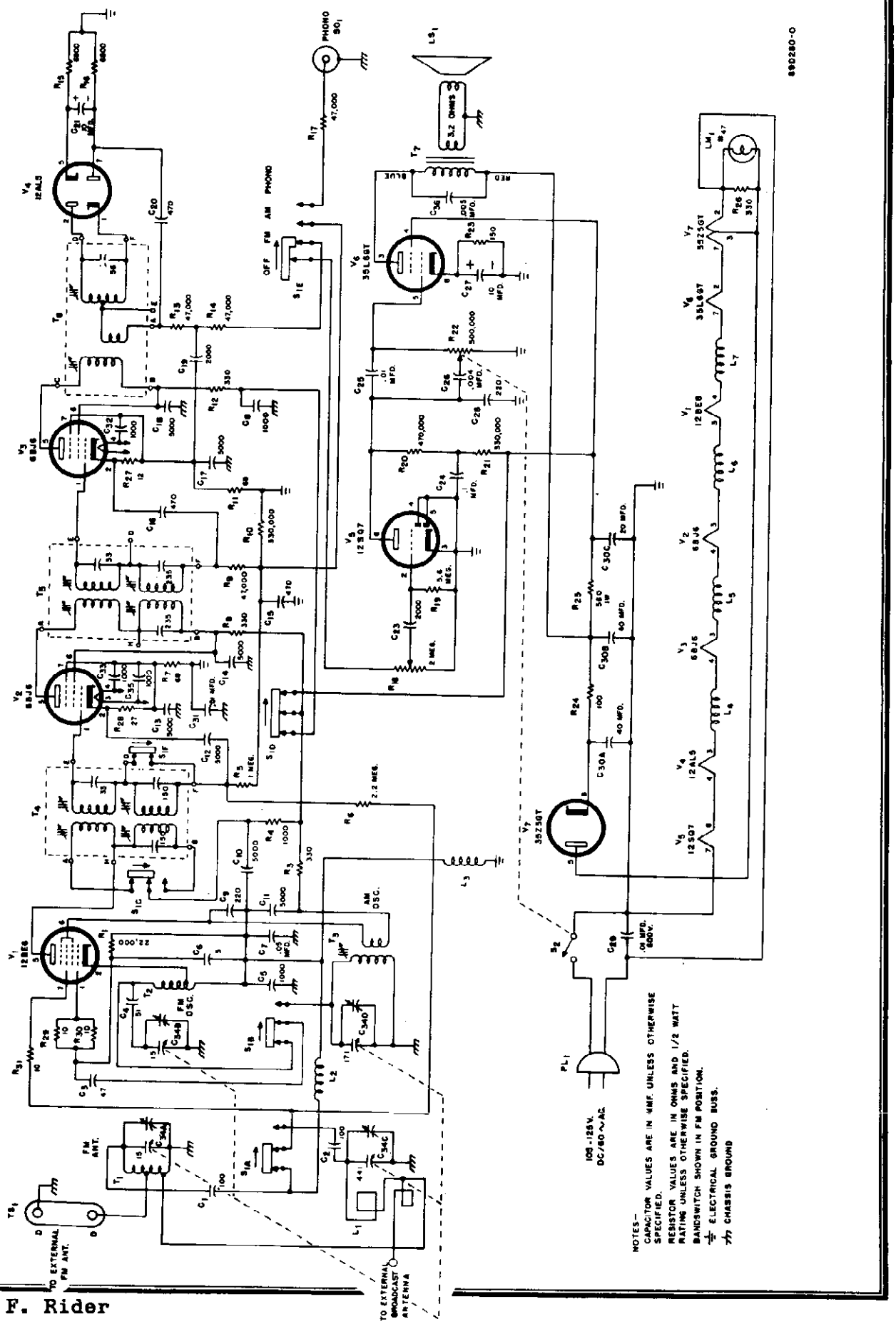

© John F. Rider

MONTGOMERY WARD

MODEL 84HA-1810A

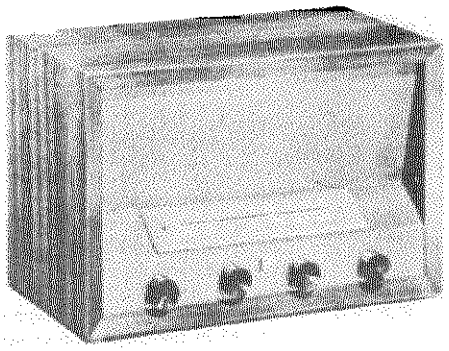

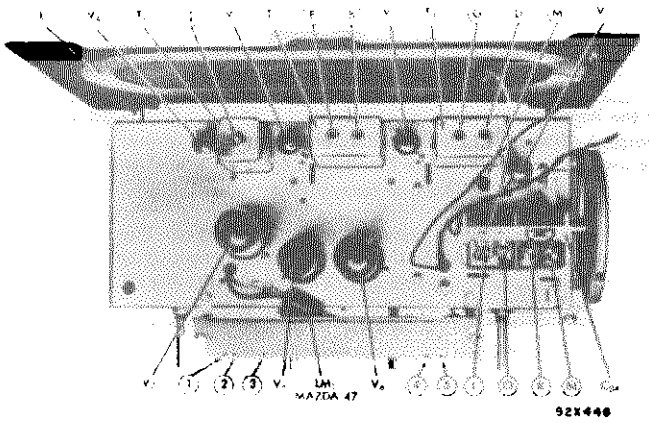

This radio is a condenser tuned receiver using a cut plate tracking mixer section in the BC band and uncut plates in a conventional two section gang for FM reception. The built-in loop provides pickup for both the BC and FM bands. The BC section of the loop acts as the mixer stage coil while the FM section of the loop is coupled to the FM mixer stage coil. A single terminal (Back cover) is provided for an external BC antenna and a pair of terminals (D-D) are provided for a 300-ohm FM antenna transmission line for an external FM antenna. For FM reception the IF amplifier consists of two conventional amplifier stages feeding a ratio detector circuit. On the BC band the second IF amplifier stage becomes a conventional diode detector circuit using the control grid on the second IF amplifier tube as a diode plate. Since the receiver operates from AC and DC current, a separate ground buss is used and isolated from the chassis.

ELECTRICAL SPECIFICATIONS

Power Supply	105-125 volts DC or 60 cycle AC, 28 watts
Frequency Range	Broadcast 540-1600 KC Frequency Modulation 88-108 MC
Intermediate Frequency	455 KC/10.7 MC
Antenna	Built in loop. Provisions for external BC and FM antennas.
Power Output	1.5 watts max.
Speaker	4 X 6-inch PM.
Voice Coil Impedance	3.2 ohms
Tube and Dial Lamp Complement	12BE6 Mixer/Osc. 6BJ6, 1st I.F. Amp. 6BJ6, 2nd I.F. Amp. (FM) & Detector (BC) 12AL5 Ratio Detector (FM) 12SQ7 Audio Amp. 35L6GT Power Amp. 35Z5GT Rectifier Mazda No. 47 Dial Lamp

For placement of these tubes, see the diagram showing tube layout.

DIAL CORD STRINGING INSTRUCTIONS

To restring the dial cable, pull the four control knobs from their shafts, remove the chassis bolts and pull the chassis from the cabinet. Restring the dial drive with a 48-inch length of 30-lb. test dial cord following the stringing sequence shown in the accompanying illustration. With the gang condenser at maximum capacity (closed) attach the dial pointer to the drive string and line it up with the left hand #1 index marker on the diffuser plate.

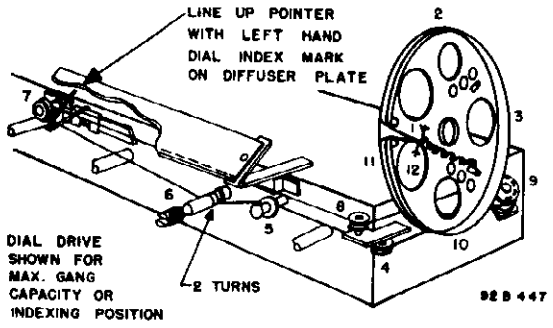

ALIGNMENT PROCEDURE

Generator connection	See chart
Generator ground	To chassis
Output meter connection	Across voice coil
Electronic voltmeter connection	See chart
Volume control position	Maximum
Tone control position	Optional

NOTE - Index marks are provided on the diffuser plate to supplement the dial scale when the chassis is removed from the cabinet for alignment. Check the pointer position with the gang fully closed to make sure it lines up with the first marker before starting the alignment procedure outlined below.

The standard RMA dummy specified in the alignment chart consists of a 200 mmf condenser in series with a 20 uh r-f choke which is shunted by a 400 mmf condenser in series with a 400 ohm carbon resistor.

The loop antenna must be connected during alignment.

©John F. Rider

MODEL 84HA-1810A

MONTGOMERY WARD

ALIGNMENT CHART

Step	Dummy Antenna	Signal Generator Coupling	Signal Generator Frequency	Radio Range Switch Position	Diffuser Plate Index Mark	Adjust	Remarks
1.	.01 mfd.	To stator plates of high cap. mixer section	455 kc	2	None (Midscale)	A,B,C,D	Adjust for max. audio output at voice coil. Keep audio output below 50 mw to avoid AVC action.
2.	.01 mfd. cap.	To stator plates of low cap. mixer section	10.7 mc (No modulation)	1	None (Midscale)	E,F,G,H	Adjust for max. DC voltage between pin #7 of the 6AL5 and ground buss. Connect a 500,000 ohm resistor in series with voltmeter probe. Use just enough signal generator output to obtain approx. 2 volts at the electronic voltmeter.
3.	After completing the adjustments required by step 2. detune the signal generator on each side of 10.7 mc and note the generator dial or frequency reading for one half of the DC voltage measured by the electronic voltmeter. Use just enough signal generator output to obtain a maximum of 2 volts at the center frequency of the IF channel. Set the signal generator frequency at the midpoint of the two readings obtained above and align the FM detector transformer as follows:						
4.	Without changing the setup, adjust the primary of the FM detector transformer (I) for maximum DC voltage. Disconnect the electronic voltmeter probe and reconnect it at the junction of **R13 and R14** using the 500,000-ohm resistor as before for isolation. Adjust the secondary of the FM detector (J) for the null or zero DC voltage. This completes the IF amplifier adjustment.						
5.	Std. RMA dummy	To BC antenna terminal on cabinet back	1500 kc	2	#4	*K,L	Adjust for max. audio output as in step 1.
			600 kc	2	#3	*M	
6.	300-ohm carbon resistor	To terminals "D-D" on rear chassis apron. Connect resistor to high side or ungrounded terminal	108 mc	1	#5	*N,O	Adjust for max. DC voltage as in step 2.

*Calibration adjustment.

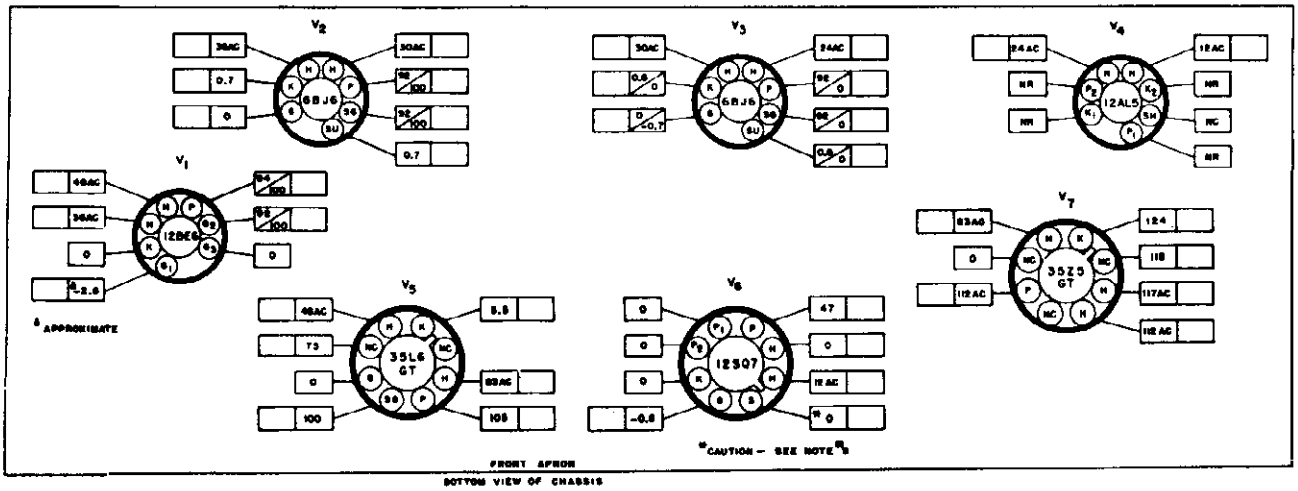

NOTES –

1. SOCKET VIEWS ARE BOTTOM VIEWS.
2. ALL VOLTAGES ARE MEASURED BETWEEN TUBE SOCKET TERMINALS AND ELECTRICAL GROUND BUSS (NOT CHASSIS) WITH ZERO SIGNAL INPUT. WHERE TWO READINGS ARE SHOWN THE FIRST IS FOR FM THE SECOND FOR BC.
3. LINE VOLTAGE – 117V. AC. AC VOLTAGES SHOWN WILL BE DC WHEN OPERATING FROM A DC LINE.
4. ALL VOLTAGES SHOWN ARE DC UNLESS OTHERWISE SPECIFIED.
5. DC VOLTAGES SHOWN WERE MEASURED WITH AN ELECTRONIC VOLTMETER.
6. "NC" – NO CONNECTION. (VOLTAGES SHOWN FOR THIS TERMINAL ONLY WHEN TERMINAL IS USED AS A TIE LUG).
7. "NR" – NOT READABLE. (READING GENERALLY MEANINGLESS).
8. [ ] SPACE PROVIDED FOR SERVICE METER READINGS.
9. ALL READINGS TAKEN WITH LINE PLUG POLARIZED SO THAT GROUND BUSS AND CHASSIS ARE AT THE SAME POTENTIAL WITH CHASSIS GROUNDED.

MONTGOMERY WARD

MODEL 84HA-1810A

REPLACEMENT PARTS LIST

Ref. No.	Part No.	Description
		RESISTORS (Cont.)
R-23	RC20AE151K	150 ohms ½ watt, carbon
R-24	RC20AE101M	100 ohms ½ watt, carbon
R-25	RC30AE561K	560 ohms 1 watt, carbon
R-27	RC20AE120K	12 ohms ½ watt, carbon
R-28	RC20AE270K	27 ohms ½ watt, carbon
R-39,30,31	RC20AE100K	10 ohms ½ watt, carbon
		TRANSFORMERS AND COILS
T-1	51A1061	Transformer, FM mixer stage
T-2	51A1062	Transformer, FM osc. stage
T-3	51B1063	Transformer, AM osc. stage
T-4	50B399	Transformer, 1st IF
T-5	50B400	Transformer, 2nd IF
T-6	50B401	Transformer, FM detector
T-7	55B111	Transformer, audio output
L-1	57C121	Loop antenna (cabinet back)
L-2,3,4,5, 6,7	53A136	Coil, RF choke
		PLUGS AND SOCKETS
PL-1	87B1669	Line cord and plug
	6A308	Socket, miniature (tube)
	6A296	Socket, octal
SO-1	36A029	Phono jack
	86B069	Socket, pilot light
		MISCELLANEOUS
S-1	60B328	Band switch assembly
	88A379	Terminal strip, antenna (D-D)
	76A397	Lock, line cord
	82A151	Pointer, dial
	22B210	Dial scale
	67A822	Bracket, dial light diffuser
	8B806	Diffuser, dial light
	38A019	Dial cord
	75A012	Spring, dial drive
	15B068-3	Knob
LS-1	85B076	Speaker

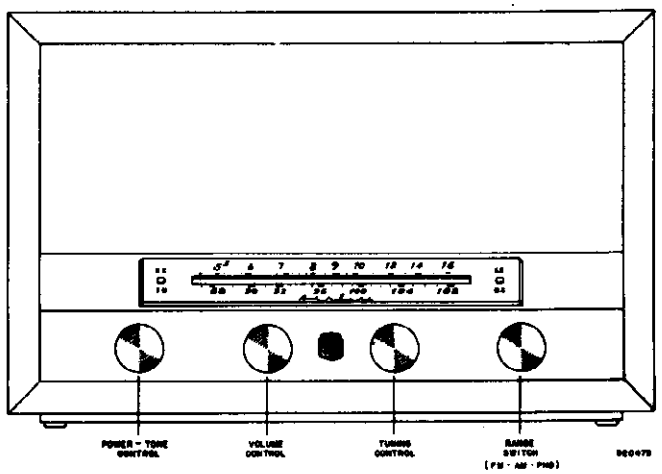

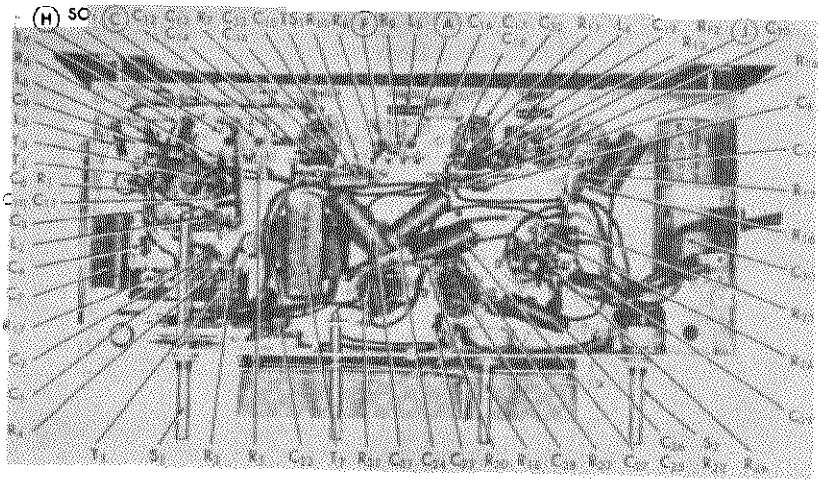

92X445

RESISTORS:

R-1	RC20AE223K	22,000 ohms ½ watt, carbon
R-3,8,12, 26	RC20AE331M	330 ohms ½ watt, carbon
R-4	RC20AE102M	1000 ohms ½ watt, carbon
R-5	RC20AE105M	1 megohm ½ watt, carbon
R-6	RC20AE225M	2.2 megohm ½ watt, carbon
R-7,11	RC20AE680K	68 ohms ½ watt, carbon
R-9,13, 14,17	RC20AE473M	47,000 ohms ½ watt, carbon
R-10,21	RC20AE334M	330,000 ohms ½ watt, carbon
R-15,16	RC20AE682K	6800 ohms ½ watt, carbon
R-18	25B624	2 megohm volume control
R-19	RC20AE565M	5.6 megohms ½ watt, carbon
R-20	RC20AE474M	470,000 ohms ½ watt, carbon
R-22	25B758	500,000 ohms, tone control (switch S2)

Ref. No.	Part No.	Description
		CONDENSERS
C-1,2	CC26UK101K	100 mmf. 500 V., ceramic
C-3	CC21UK470K	47 mmf. 500 V., ceramic
C-4	CC21UK510J	51 mmf. 500 V., ceramic
C-5	47A177	1000 mmf. 500 V., ceramic
C-6	CC21UK050K	5 mmf. 500 V., ceramic
C-7	46AY503J	.05 mfd. 600 V., tubular paper
C-8,32,33, 35	47B20A102N5	1000 mmf. 500 V., ceramic
C-9,28	CM20A221M	220 mmf. 500 V., mica
C-10,11,12, 13,14,17, 18,36	47A168	.005 mfd. 500 V., ceramic
C-15,16,20	CM20A471M	470 mmf. 500 V., mica
C-19,23	47B20A202M5	2000 mmf. 500 V., ceramic
C-21,27	45A121	10 mfd. 25 V., electrolytic
C-24	46AU104J	.1 mfd. 200 V., tubular paper
C-25,31	46AZ103J	.01 mfd. 600 V., tubular paper
C-26	46AZ402J	.004 mfd. 600 V., tubular paper
C-29	46AG103J	.01 mfd. 600 V., molded paper
C-30	45B130	40-40-20 mfd. 150 V., electrolytic
C-34	48C203	Capacitor, main tuning

MODEL 84HA-1810C

MONTGOMERY WARD

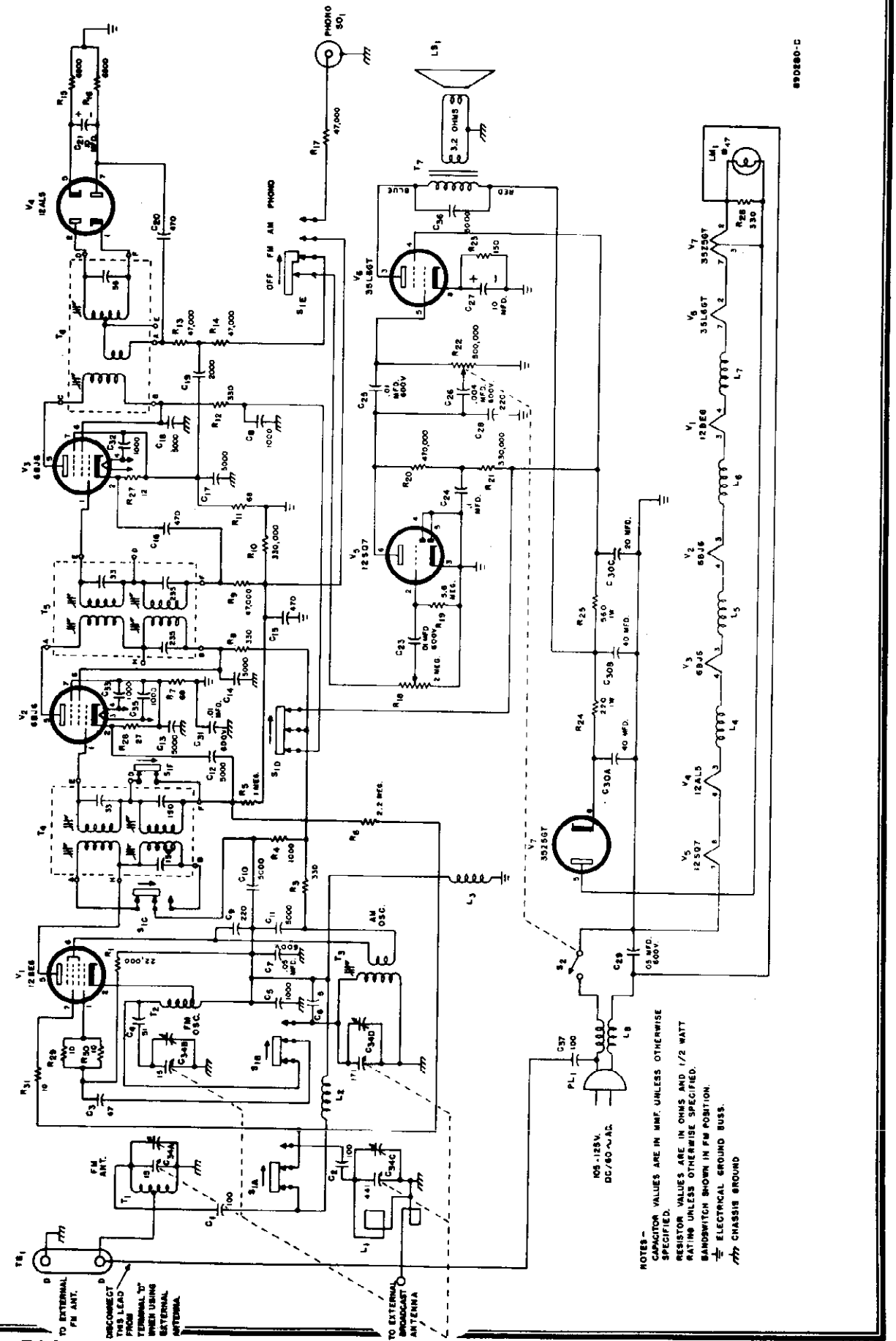

© John F. Rider

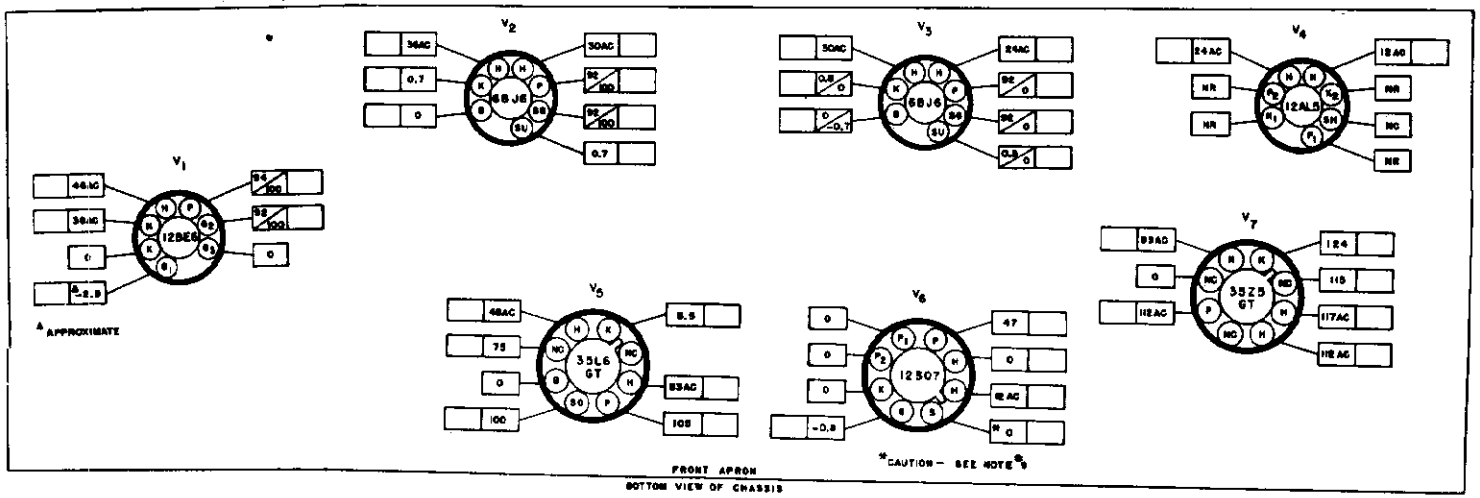

NOTES–

1. SOCKET VIEWS ARE BOTTOM VIEWS
2. ALL VOLTAGES ARE MEASURED BETWEEN TUBE SOCKET TERMINALS AND ELECTRICAL GROUND BUSS (NOT CHASSIS) WITH ZERO SIGNAL INPUT. WHERE TWO READINGS ARE SHOWN THE FIRST IS FOR FM THE SECOND FOR BC.
3. LINE VOLTAGE – 117V. AC. AC VOLTAGES SHOWN WILL BE DC WHEN OPERATING FROM A DC LINE.
4. ALL VOLTAGES SHOWN ARE DC UNLESS OTHERWISE SPECIFIED.
5. DC VOLTAGES SHOWN WERE MEASURED WITH AN ELECTRONIC VOLTMETER.
6. "NC"– NO CONNECTION. (VOLTAGES SHOWN FOR THIS TERMINAL ONLY WHEN TERMINAL IS USED AS A TIE LUG).
7. "NR"– NOT READABLE. (READING GENERALLY WEARING LESS).
8. [ ] SPACE PROVIDED FOR SERVICE METER READINGS.
9. ALL READINGS TAKEN WITH LINE PLUG POLARIZED SO THAT GROUND BUSS AND CHASSIS ARE AT THE SAME POTENTIAL WITH CHASSIS GROUNDED.

92D448

ELECTRICAL SPECIFICATIONS

Power Supply	105-125 volts DC or 60 cycle AC, 28 watts
Frequency Range	Broadcast 540-1600 KC Frequency Modulation 88-108 MC
Intermediate Frequency	455 KC/10.7 MC
Antenna	Built in loop. Provisions for external BC and FM antennas.
Power Output	1.5 watts max.
Speaker	4 X 6-inch PM.
Voice Coil Impedance	3.2 ohms
Tube and Dial Lamp Complement	12BE6 Mixer/Osc. 6BJ6, 1st I.F. Amp. 6BJ6, 2nd I.F. Amp. (FM) & Detector (BC) 12AL5 Ratio Detector (FM) 12SQ7 Audio Amp. 35L6GT Power Amp. 35Z5GT Rectifier Mazda No. 47 Dial Lamp

For placement of these tubes, see the diagram showing tube

DIAL CORD STRINGING INSTRUCTIONS

To restring the dial cable, pull the four control knobs from their shafts, remove the chassis bolts and pull the chassis from the cabinet. Restring the dial drive with a 48-inch length of 20-lb. test dial cord following the stringing sequence shown in the accompanying illustration. With the gang condenser at maximum capacity (closed) attach the dial pointer to the drive string and line it up with the left hand #1 index marker on the diffuser plate.

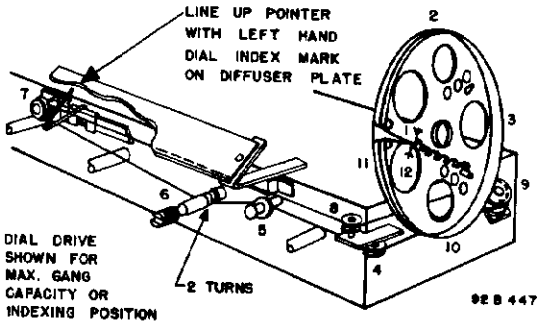

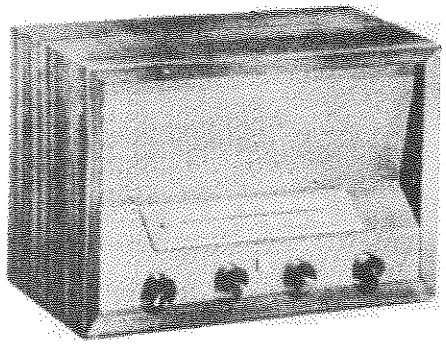

This radio is a condenser tuned receiver using a cut plate tracking mixer section in the BC band and uncut plates in a conventional two section gang for FM reception. The built-in loop provides pickup for both the BC and FM bands. The BC section of the loop acts as the mixer stage coil while the FM section of the loop is coupled to the FM mixer stage coil. A single terminal (Back cover) is provided for an external BC antenna and a pair of terminals (D-D) are provided for a 300-ohm FM antenna transmission line for an external FM antenna. For FM reception the IF amplifier consists of two conventional amplifier stages feeding a ratio detector circuit. On the BC band the second IF amplifier stage becomes a conventional diode detector circuit using the control grid on the second IF amplifier tube as a diode plate. Since the receiver operates from AC and DC current, a separate ground buss is used and isolated from the chassis.

MODEL 84HA-1810C

MONTGOMERY WARD

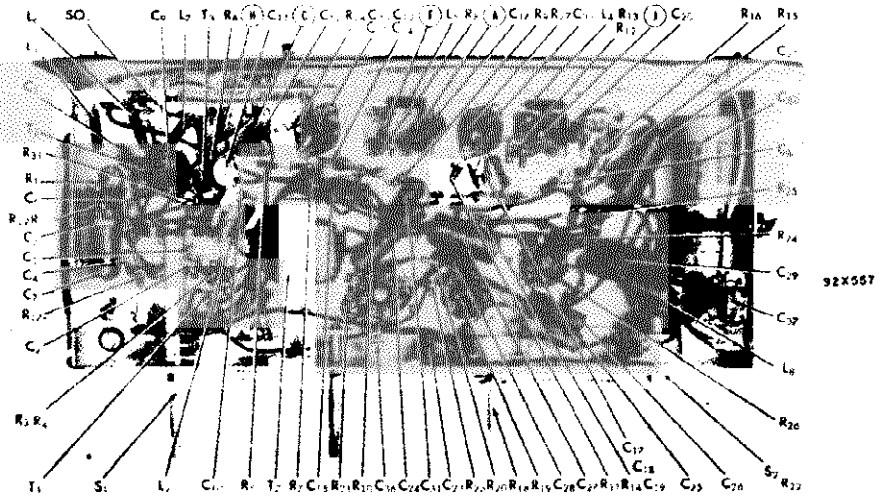

NOTE - Index marks are provided on the diffuser plate to supplement the dial scale when the chassis is removed from the cabinet for alignment. Check the pointer position with the gang fully closed to make sure it lines up with the first marker before starting the alignment procedure outlined below.

The standard RMA dummy specified in the alignment chart consists of a 200 mmf condenser in series with a 20 uh r-f choke which is shunted by a 400 mmf condenser in series with a 400 ohm carbon resistor.

The loop antenna must be connected during alignment.

ALIGNMENT PROCEDURE

Generator connection. . . . . See chart

Generator ground . . . . . To chassis

Output meter connection . . . . . Across voice coil

Electronic voltmeter connection . . . . . See chart

Volume control position . . . . . Maximum

Tone control position . . . . . Optional

ALIGNMENT CHART

Step	Dummy Antenna	Signal Generator Coupling	Signal Generator Frequency	Radio Range Switch Position	Diffuser Plate Index Mark	Adjust	Remarks
1.	.01 mfd. cap.	To stator plates of high cap. mixer section	455 kc	2	None (Midscale)	A,B,C,D	Adjust for max. audio output at voice coil. Keep audio output below 50 mw to avoid AVC action.
2.	.01 mfd. cap.	To stator plates of low cap. mixer section	10.7 mc (No modulation)	1	None (Midscale)	E,F,G,H	Adjust for max. DC voltage between pin #7 of the 12AL5 and ground buss. Connect a 500,000 ohm resistor in series with voltmeter probe. Use just enough signal generator output to obtain approx. 2 volts at the electronic voltmeter.
3.	After completing the adjustments required by step 2. detune the signal generator on each side of 10.7 mc and note the generator dial or frequency reading for one half of the DC voltage measured by the electronic voltmeter. Use just enough signal generator output to obtain a maximum of 2 volts at the center frequency of the IF channel. Set the signal generator frequency at the midpoint of the two readings obtained above and align the FM detector transformer as follows:						
4.	Without changing the setup, adjust the primary of the FM detector transformer (I) for maximum DC voltage. Disconnect the electronic voltmeter probe and reconnect it at the junction of R13 and R14 using the 500,000-ohm resistor as before for isolation. Adjust the secondary of the FM detector (J) for the null or zero DC voltage. This completes the IF amplifier adjustment.						
5.	Std. RMA dummy	To BC antenna terminal on cabinet back	1500 kc	2	#4	*K,L	Adjust for max. audio output as in step 1.
			600 kc	2	#3	*M	
6.	300-ohm carbon resistor	To terminals "D-D" on rear chassis apron. Connect resistor to high side or ungrounded terminal	108 mc	1	#5	*N,O	Adjust for max. DC voltage as in step 2.

*Calibration adjustment.

© John F. Rider

MONTGOMERY WARD

MODEL 84HA-1810C

REPLACEMENT PARTS LIST

CONDENSERS

Ref. No.	Part No.	Description
C-1,2	CC26UK101K	100 mmf. 500 V., ceramic
C-3	CC21UK470K	47 mmf. 500 V., ceramic
C-4	CC21UK510J	51 mmf. 500 V.. ceramic
C-5,8,32, 33,35	47B20A102N5	1000 mmf. 500 V., ceramic
C-6	CC21UK050K	5 mmf. 500 V., ceramic
C-7	46AY503J	.05 mfd. 600 V., tubular paper
C-9,28	CM20A221M	220 mmf. 500 V., mica
C-10,11, 12,13,14, 17,18,36	47A168	.005 mfd. 500 V., ceramic
C-15,16,20	CM20A471M	470 mmf. 500 V., mica
C-19,	47B20A202M5	2000 mmf. 500 V., ceramic
C-21,27	45A121	10 mfd. 25 V., electrolytic
C-23,25,31	46AZ103J	.01 mfd. 600V., tubular paper
C-24	46AU104J	.1 mfd. 200 V., tubular paper.
C-26	46AZ402J	.004 mfd. 600 V., tubular paper
C-29	46AR503J	.05 mfd. 600 V., molded paper
C-30	45B130	40-40-20 mfd. 150 V., electrolytic
C-34	48C203	Capacitor, main tuning
C-37	CM20A101M	100 mmf 500V., mica

RESISTORS

Ref. No.	Part No.	Description
R-1	RC20AE223K	22,000 ohms ½ watt, carbon
R-3,8,12, 26	RC20AE331M	330 ohms ½ watt, carbon
R-4	RC20AE102M	1000 ohms ½ watt, carbon
R-5	RC20AE105M	1 megohm ½ watt, carbon
R-6	RC20AE225M	2.2 megohm ½ watt, carbon
R-7,11	RC20AE680K	68 ohms ½ watt, carbon
R-9,13, 14,17	RC20AE473M	47,000 ohms ½ watt, carbon
R-10,21	RC20AE334M	330,000 ohms ½ watt, carbon
R-15,16	RC20AE682K	6800 ohms ½ watt, carbon
R-18	25B624	2 megohm volume control
R-19	RC20AE565M	5.6 megohms ½ watt, carbon
R-20	RC20AE474M	470,000 ohms ½ watt, carbon
R-22	25B758	500,000 ohms, tone control (switch S2)
R-23	RC20AE151K	150 ohms ½ watt, carbon
R-24	RC30AE221M	220 ohms 1 watt, carbon
R-25	RC30AE561K	560 ohms 1 watt, carbon
R-27	RC20AE120K	12 ohms ½ watt, carbon
R-28	RC20AE270K	27 ohms ½ watt, carbon
R-39,30,31	RC20AE100K	10 ohms ½ watt, carbon

RESISTORS (Cont.)

TRANSFORMERS AND COILS

Ref. No.	Part No.	Description
T-1	51A1061	Transformer, FM mixer stage
T-2	51A1062	Transformer. FM osc. stage
T-3	51B1063	Transformer. AM osc. stage
T-4	50B399	Transformer. 1st IF
T-5	50B400	Transformer. 2nd IF
T-6	50B401	Transformer. FM detector
T-7	55B111	Transformer, audio output
L-1	57C121	Loop antenna (cabinet back)
L-2,3,4, 5,6,7	53A153	Coil, RF choke
L-8	53A137	Coil, power line

PLUGS AND SOCKETS

Ref. No.	Part No.	Description
PL-1	87B1669	Line cord and plug
	6A308	Socket, miniature (tube)
	6A296	Socket, octal
SO-1	36A029	Phono jack
	86B069	Socket, pilot light

MISCELLANEOUS

Ref. No.	Part No.	Description
S-1	60B328	Band switch assembly
TS-1	88A379	Terminal strip, antenna (D-D)
	76A397	Lock, line cord
	82A151	Pointer, dial
	22B210	Dial scale
	67A822	Bracket, dial light diffuser.
	8B806	Diffuser, dial light
	38A001	Dial cord
	75A012	Spring, dial drive
	15B067-5	Knob, VOLUME & TUNING controls
	15B142-5	Knob, TONE & RANGE controls.
LS-1	85B076	Speaker

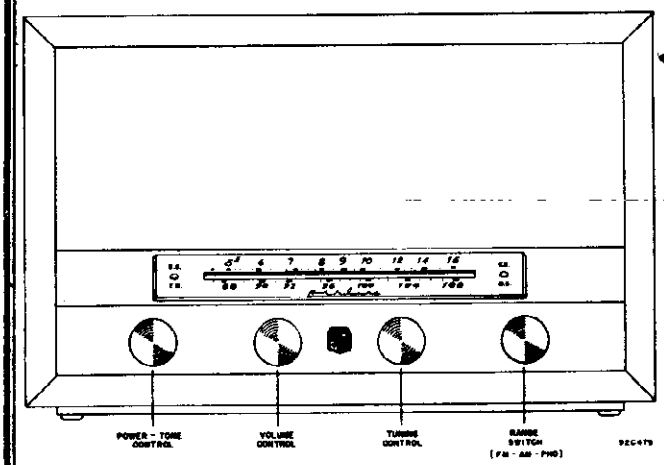

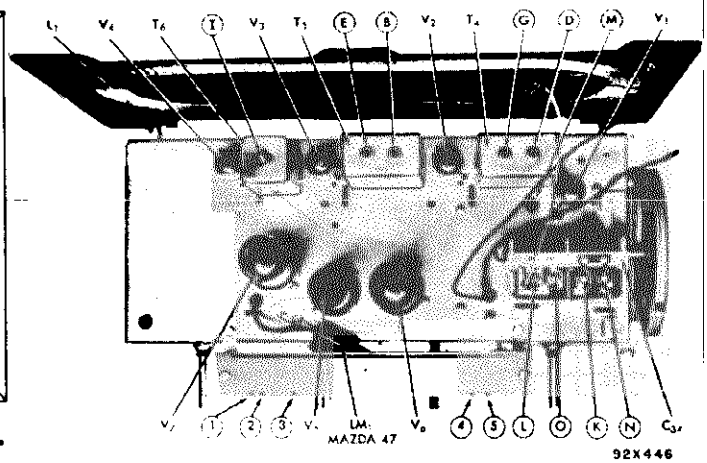

© John F. Rider

MODEL 84KR-2716A

MONTGOMERY WARD

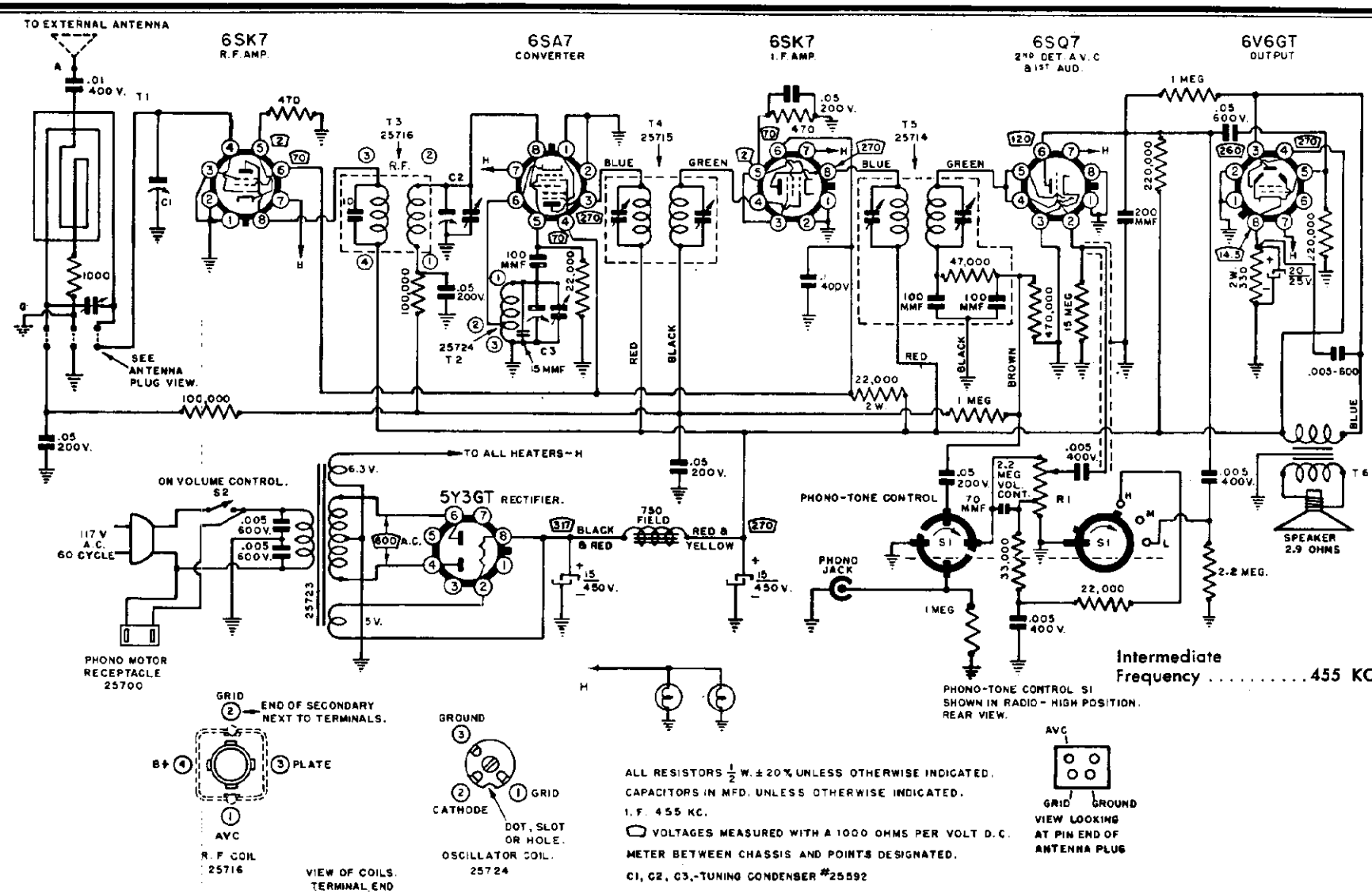

Intermediate Frequency . . . . . 455 KC.

ALL RESISTORS $\frac{1}{2}$ W. ± 20% UNLESS OTHERWISE INDICATED.
CAPACITORS IN MFD. UNLESS OTHERWISE INDICATED.
I.F. 455 KC.
VOLTAGES MEASURED WITH A 1000 OHMS PER VOLT D.C. METER BETWEEN CHASSIS AND POINTS DESIGNATED.
C1, C2, C3,-TUNING CONDENSER #25592

ELECTRICAL SPECIFICATIONS

Power Supply . . . . . 105-125 volts AC, 60 cycles, 55 watts. (80 watts phono operating).

Frequency Range . . . . 540 - 1620 KC.

Selectivity . . . . . 40 KC broad at 1000 times signal, 1000 KC.

Sensitivity . . . . . (for .5 watt output) with external antenna 5 microvolts average.

Power Output . . . . . 6 watts maximum, 3.2 watts 10% distortion.

Loud Speaker . . . . . 6x9" EM dynamic, 750 ohms.

Voice Coil Impedance . 3.2 ohms at 400 cycles.

ALIGNMENT PROCEDURE

VOLUME CONTROL — MAXIMUM FOR ALL ADJUSTMENTS.

Tone control — In "HIGH" position.

Connect radio chassis to ground connection of Signal Generator.

Allow the chassis and signal generator to "heat up" for several minutes.

The following equipment is required for aligning:

A signal generator which will provide an accurately calibrated signal at the test frequencies as listed.

Output indicating meter; non-metallic screw driver.

Dummy antennas — .1 mfd., 200 mmfd.

Place loop antenna in its normal relation to the chassis.

Signal Generator		Connection To Radio	Condenser Setting	Adjust Trimmers To Maximum
Frequency Setting	Dummy Antenna			
455 kc	.1 Mfd.	6SA7, Pin 8	Turn rotor plates to full open	1st IF Transformer. 2nd IF Transformer.
1620 kc	200 Mmfd.	Antenna Lead	Turn rotor plates to full open	Osc. trimmer on tuning condenser.
1400 kc	200 Mmfd.	Antenna Lead	Tune rotor to maximum output.	RF Section trimmer on tuning condenser. Antenna trimmer on loop antenna.

The dial pointer may be adjusted to the scale calibration by slipping the pointer on the dial cord.

RECEIVER STAGE SENSITIVITIES

The following table lists the sensitivity at the input of each stage. The receiver should be tuned to 1000 KC for all readings. All measurements are based on an output of .5 watts. This may be measured by disconnecting the speaker voice coil and substituting a 3.2 ohm, 5 watt resister across the secondary winding of the output transformer. A reading of 1.26 volts across this resistor will be equivalent to a .5 watt output with the speaker connected. The volume control must be set to maximum. The signal source must be an accurately calibrated signal generator capable of supply both 1000 KC and 455 KC signals modulated 30% with a 400 cycle audio signal. Variations of Plus or Minus 25% are usually permissible.

SIGNAL GENERATOR				INPUT FOR .5 WATT OUTPUT
Frequency	Coupling Capacitor	Connection to Reciever	Ground Connection	
1000 kc	200 mmf or RMA Dummy Antenna	External Antenna Lead	Chassis	5 microvolts
1000 kc	.05 mfd.	6SA7 Mixer, Pin 8	Same as above	175 microvolts
455 kc.	.05 mfd.	6SA7 Mixer, Pin 8	Same as above	160 microvolts
455 kc.	.05 mfd.	6SK7 1-F, Pin 4	Same as above	1600 microvolts
400 cycles	.05 mfd.	6SQ7 1st A-F, Pin 2	Same as above	.12 volts
400 cycles	.05 mfd.	6V6GT Output, Pin 5	Same as above	4.32 volts

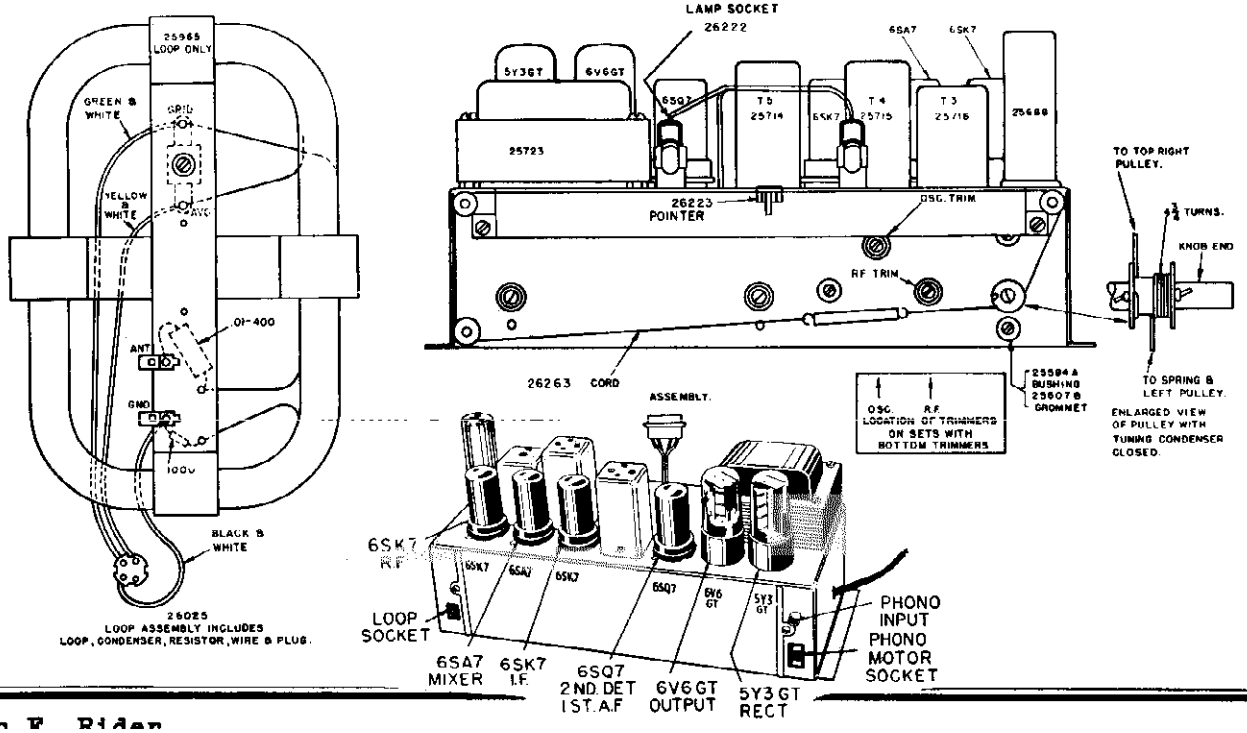

©John F. Rider

MODEL 84KR-2716A

MONTGOMERY WARD

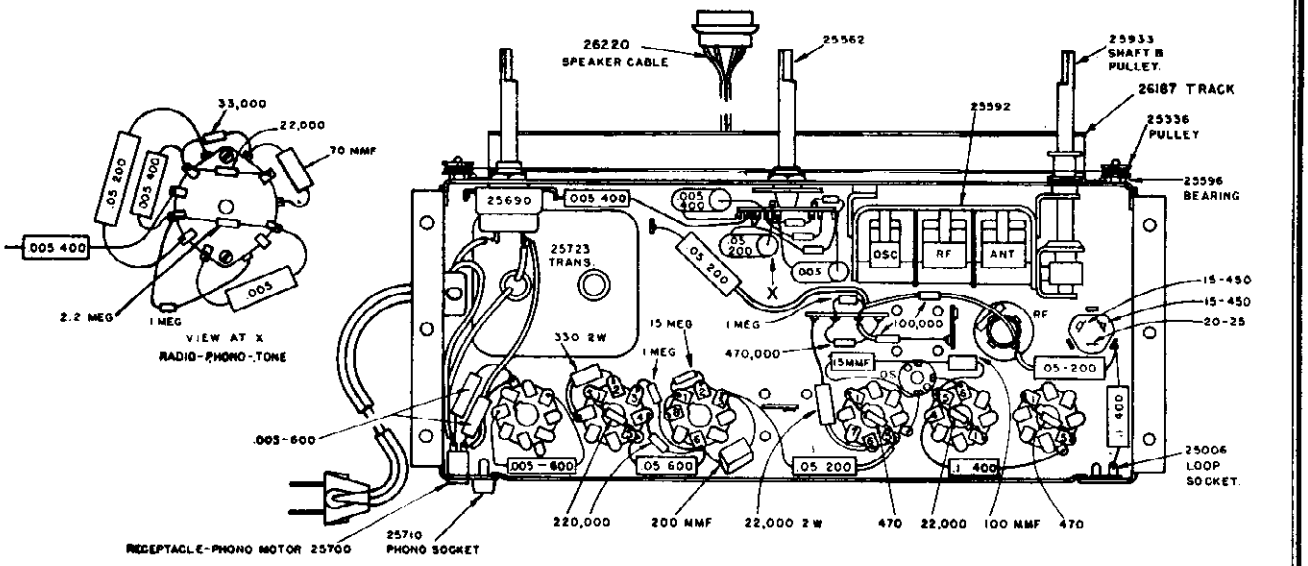

Ref. No.	Part No.	Description	Qty. Used In Set
		CAPACITORS	
	26221	.000015 Ceramic	1
C 1-2-3	25592	Gang Tuning Capacitor Trimmers	1
	25688	Electrolytic 15-15 Mfd. 450V., 20 Mfd. 25V	1
	8878	.05 Mfd.—600V, Tubular	1
	8661	.05 Mfd.—200V. Tubular	5
	17646	.005 Mfd.—400V. Tubular	3
	17647	.1 Mfd.—400V. Tubular	1
	8583	.01 Mfd. — 400V Tubular	1
	14370	.0002 Mfd. Mica	1
	8872	.0001 Mfd. Mica	1
	25689	.005 Mfd. 600V. Moulded	2
	25964	70 Mmfd. Mica	1
	14061	.005 MMFD—600V Tubular	1
		RESISTORS	
	25414	1000 Ohm ½W. Carbon	1
	25742	330 Ohm 2W. Carbon	1
	25085	470 Ohm ½W. Carbon	2
	25721	22,000 Ohm, 2W. Carbon	1
	25038	22,000 Ohm ½W. Carbon	2
	25144	33,000 Ohm ½W. Carbon	1
	25042	470,000 Ohm ½W. Carbon	1
	8885	100,000 Ohm ½W. Carbon	2
	25041	220,000 Ohm ½W. Carbon	2
	8766	1,000,000 Ohm ½W. Carbon	3
	25134	2.2 Megohm ½W. Carbon	1
	14365	15 Megohm ½W. Carbon	1
R 1	25690	Volume Control With Switch S2	1
		TRANSFORMERS AND COILS	
T 1	25965	Loop Antenna	1
T 2	25724	Coil — Oscillator	1
T 3	25597	Coil — RF	1
T 4	25715	Transformer — IF Input	1
T 5	25714	Transformer — IF Output	1
T 6	26226	Transformer — Output Speaker	1
	25723	Transformer — Power — 60 cycle	1

Ref. No.	Part No.	Description	Qty. Used In Set
		DIAL AND DRIVE ASSEMBLY	
	25596	Bearing for Wood Pulleys	3
	25572	Bracket - Tuning Condenser — Front	1
	25573	Bracket - Tuning Condenser — Rear	1
	26263	Cord-Dial	1
	26213	Dial Scale — Plastic	1
	26223	Dial Pointer	1
	26209	Knob — Tone	1
	26208	Knob - Volume — Tuning	2
	25336	Pulley —.Wood — Small	3
	25933	Pulley — Manual Drive With Shaft	1
	25607	Rubber — Grommets	3
	26026	Screw — Set for Worm Gear (Tuning Condenser)	2
	26222	Socket — Dial Lamp	2
	25963	Spring — Dial Cord	1
	26187	Track	1
	261918	Dial - Escutcheon	1
		MISCELLANEOUS	
	26264	6x9" EM SPEAKER — With Transformer and Plug	1
	25620	Socket — Octal	6
	25700	Receptacle — Phono Motor	1
	25006	Socket - For Loop Antenna	1
	25710	Socket - Phono Pick-up	1
S 1	25562	Switch — Tone	1
	25068	Cord — AC and Plug	1
	25693	Plug — For Loop	1
		RECORD CHANGER PARTS	
	26034	Motor, 60 cycle, 117 volts	1
	26035	Shure P-30 Crystal Pickup Cartridge and Needle	1
	26036	Replacement Needle Only	1
	26116	Storage Shaft Assembly	1

©John F. Ridder

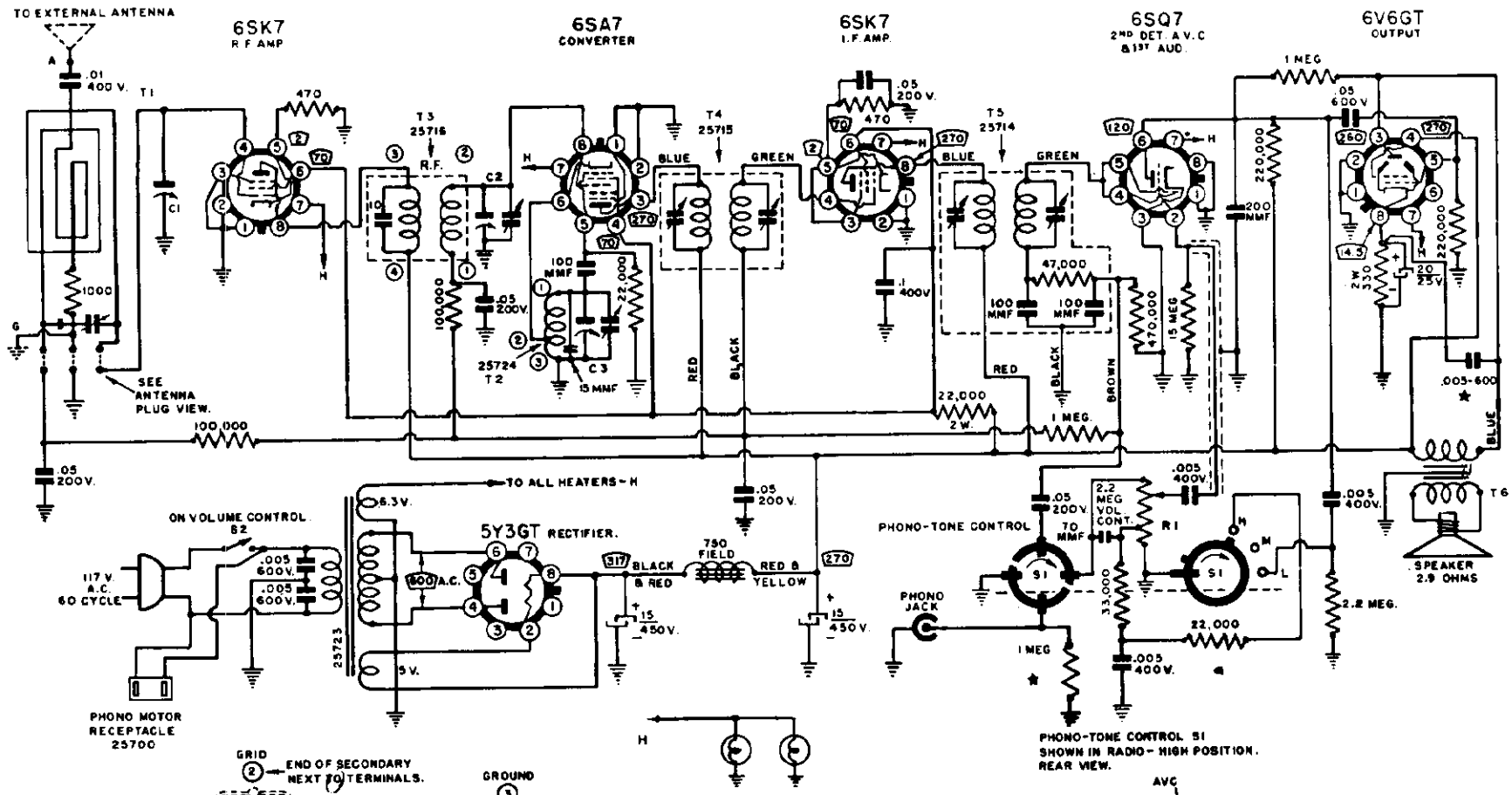

Power Supply	105-125 volts AC, 60 cycles, 55 watts. (80 watts phono operating).
Frequency Range	540 - 1620 KC.
Intermediate Frequency	455 KC.
Selectivity	40 KC broad at 1000 times signal, 1000 KC.
Sensitivity	(for .5 watt output) with external antenna 5 microvolts average.
Power Output	6 watts maximum, 3.2 watts 10% distortion.
Loud Speaker	6x9" EM dynamic, 750 ohms.
Voice Coil Impedance	3.2 ohms at 400 cycles.

MODEL 84KR-2723A MONTGOMERY WARD

ALIGNMENT PROCEDURE

VOLUME CONTROL — MAXIMUM FOR ALL ADJUSTMENTS.

Tone control — In "HIGH" position.

Connect radio chassis to ground connection of Signal Generator.

Allow the chassis and signal generator to "heat up" for several minutes.

The following equipment is required for aligning:

A signal generator which will provide an accurately calibrated signal at the test frequencies as listed.

Output indicating meter; non-metallic screw driver.

Dummy antennas — .1 mfd., 200 mmfd.

Place loop antenna in its normal relation to the chassis.

Signal Generator		Connection To Radio	Condenser Setting	Adjust Trimmers To Maximum
Frequency Setting	Dummy Antenna			
455 kc	.1 Mfd.	6SA7, Pin 8	Turn rotor plates to full open	1st IF Transformer. 2nd IF Transformer.
1620 kc	200 Mmfd.	Antenna Lead	Turn rotor plates to full open	Osc. trimmer on tuning condenser.
1400 kc	200 Mmfd.	Antenna Lead	Tune rotor to maximum output.	RF Section trimmer on tuning condenser. Antenna trimmer on loop antenna.

The dial pointer may be adjusted to the scale calibration by slipping the pointer on the dial cord.

RECEIVER STAGE SENSITIVITIES

The following table lists the sensitivity at the input of each stage. The receiver should be tuned to 1000 KC for all readings. All measurements are based on an output of .5 watts. This may be measured by disconnecting the speaker voice coil and substituting a 3.2 ohm, 5 watt resister across the secondary winding of the output transformer. A reading of 1.26 volts across this resistor will be equivalent to a .5 watt output with the speaker connected. The volume control must be set to maximum. The signal source must be an accurately calibrated signal generator capable of supply both 1000 KC and 455 KC signals modulated 30% with a 400 cycle audio signal. Variations of Plus or Minus 25% are usually permissible.

SIGNAL GENERATOR				INPUT FOR .5 WATT OUTPUT
Frequency	Coupling Capacitor	Connection to Reciever	Ground Connection	
1000 kc	200 mmf or RMA Dummy Antenna	External Antenna Lead	Chassis	5 microvolts
1000 kc	.05 mfd.	6SA7 Mixer, Pin 8	Same as above	175 microvolts
455 kc.	.05 mfd.	6SA7 Mixer, Pin 8	Same as above	160 microvolts
455 kc.	.05 mfd.	6SK7 1-F, Pin 4	Same as above	1600 microvolts
400 cycles	.05 mfd.	6SQ7 1st A-F, Pin 2	Same as above	.12 volts
400 cycles	.05 mfd.	6V6GT Output, Pin 5	Same as above	4.32 volts

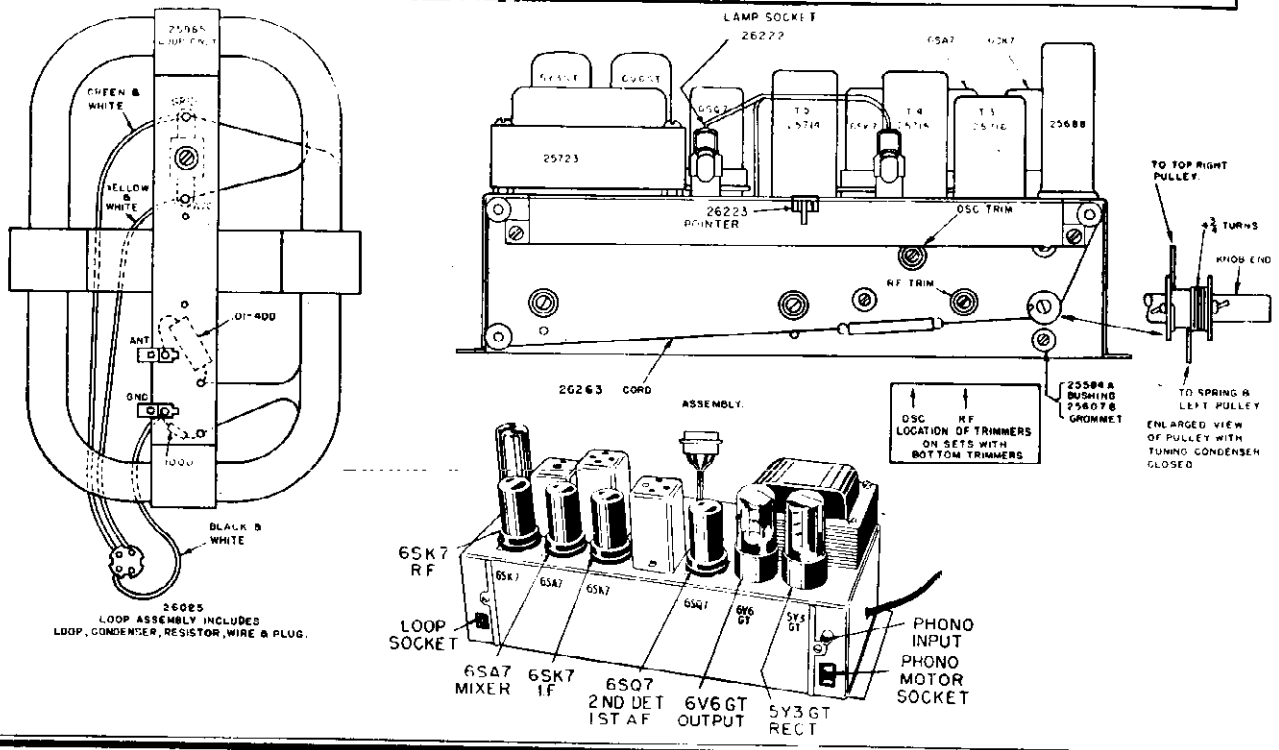

©John F. Rider

MONTGOMERY WARD MODEL 84KR-2723A

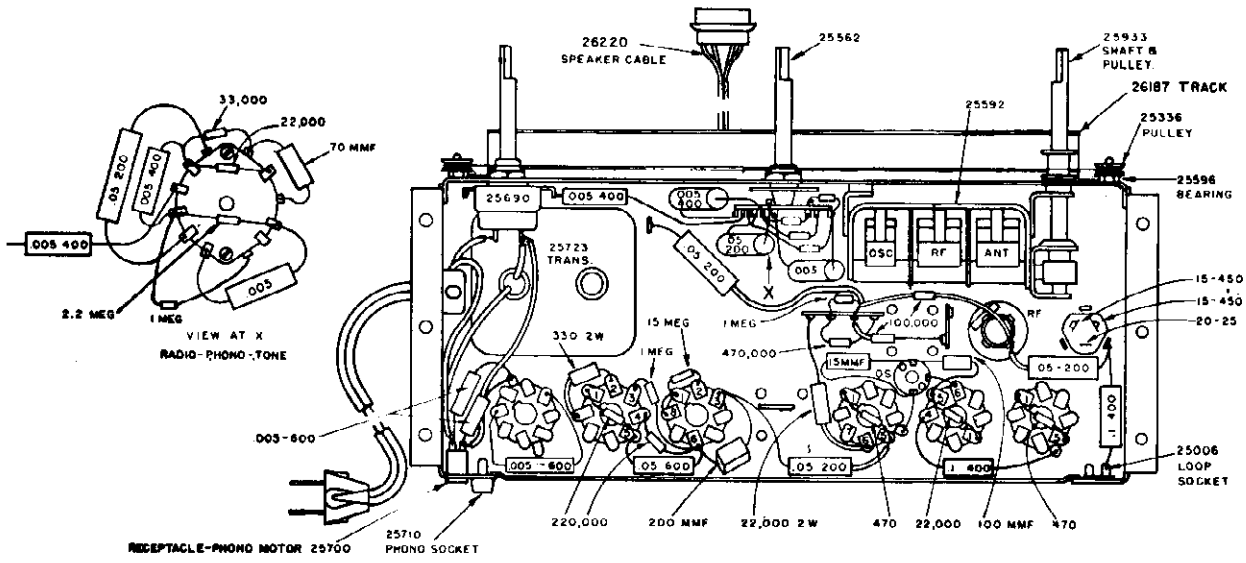

Ref. No.	Part No.	Description	Qty. Used In Set
		CAPACITORS	
	26221	.000015 Ceramic	1
C 1-2-3	25592	Gang Tuning Capacitor Trimmers	1
	25688	Electrolytic 15-15 Mfd. 450V., 20 Mfd. 25V	1
	8878	.05 Mfd.—600V, Tubular	1
	8661	.05 Mfd.—200V. Tubular	5
	17646	.005 Mfd.—400V. Tubular	3
	17647	.1 Mfd.—400V. Tubular	1
	8583	.01 Mfd. — 400V Tubular	1
	14370	.0002 Mfd. Mica	1
	8872	.0001 Mfd. Mica	1
	25689	.005 Mfd. 600V. Moulded	2
	25964	70 Mmfd. Mica	1
	14061	.005 MMFD—600V Tubular	1
		RESISTORS	
	25414	1000 Ohm ½W. Carbon	1
	25742	330 Ohm 2W. Carbon	1
	25085	470 Ohm ½W. Carbon	2
	25721	22,000 Ohm, 2W. Carbon	1
	25038	22,000 Ohm ½W. Carbon	2
	25144	33,000 Ohm ½W. Carbon	1
	25042	470,000 Ohm ½W. Carbon	1
	8885	100,000 Ohm ½W. Carbon	2
	25041	220,000 Ohm ½W. Carbon	2
	8766	1,000,000 Ohm ½W. Carbon	3
	25134	2.2 Megohm ½W. Carbon	1
	14365	15 Megohm ½W. Carbon	1
R 1	25690	Volume Control With Switch S2	1
		TRANSFORMERS AND COILS	
T 1	25965	Loop Antenna	1
T 2	25724	Coil — Oscillator	1
T 3	25597	Coil — RF	1
T 4	25715	Transformer — IF Input	1
T 5	25714	Transformer — IF Output	1
T 6	26226	Transformer — Output Speaker	1
	25723	Transformer — Power — 60 cycle	1

Ref. No.	Part No.	Description	Qty. Used In Set
		DIAL AND DRIVE ASSEMBLY	
	25596	Bearing for Wood Pulleys	3
	25572	Bracket - Tuning Condenser — Front	1
	25573	Bracket - Tuning Condenser — Rear	1
	26263	Cord-Dial	1
	26214	Dial Scale — Plastic	1
	26223	Dial Pointer	1
	26209	Knob — Tone	1
	26208	Knob - Volume — Tuning	2
	25336	Pulley — Wood — Small	3
	25933	Pulley — Manual Drive With Shaft	1
	25607	Rubber — Grommets	3
	26026	Screw — Set for Worm Gear (Tuning Condenser)	2
	26222	Socket — Dial Lamp	2
	25963	Spring — Dial Cord	1
	26187	Track	1
	26192	Dial - Escutcheon	1
		MISCELLANEOUS	
	26264	6x9" EM SPEAKER — With Transformer and Plug	1
	25620	Socket — Octal	6
	25700	Receptacle — Phono Motor	1
	25006	Socket - For Loop Antenna	1
	25008	Socket - Phono Pick-up	1
S 1	25562	Switch — Tone	1
	25068	Cord — AC and Plug	1
	25693	Plug — For Loop	1
		RECORD CHANGER PARTS	
	26034	Motor, 60 cycle, 117 volts	1
	26035	Shure P-30 Crystal Pickup Cartridge and Needle	1
	26036	Replacement Needle Only	1
	26116	Storage Shaft Assembly.	1

MODELS 84WG-1804D, 84WG-1806A

MONTGOMERY WARD

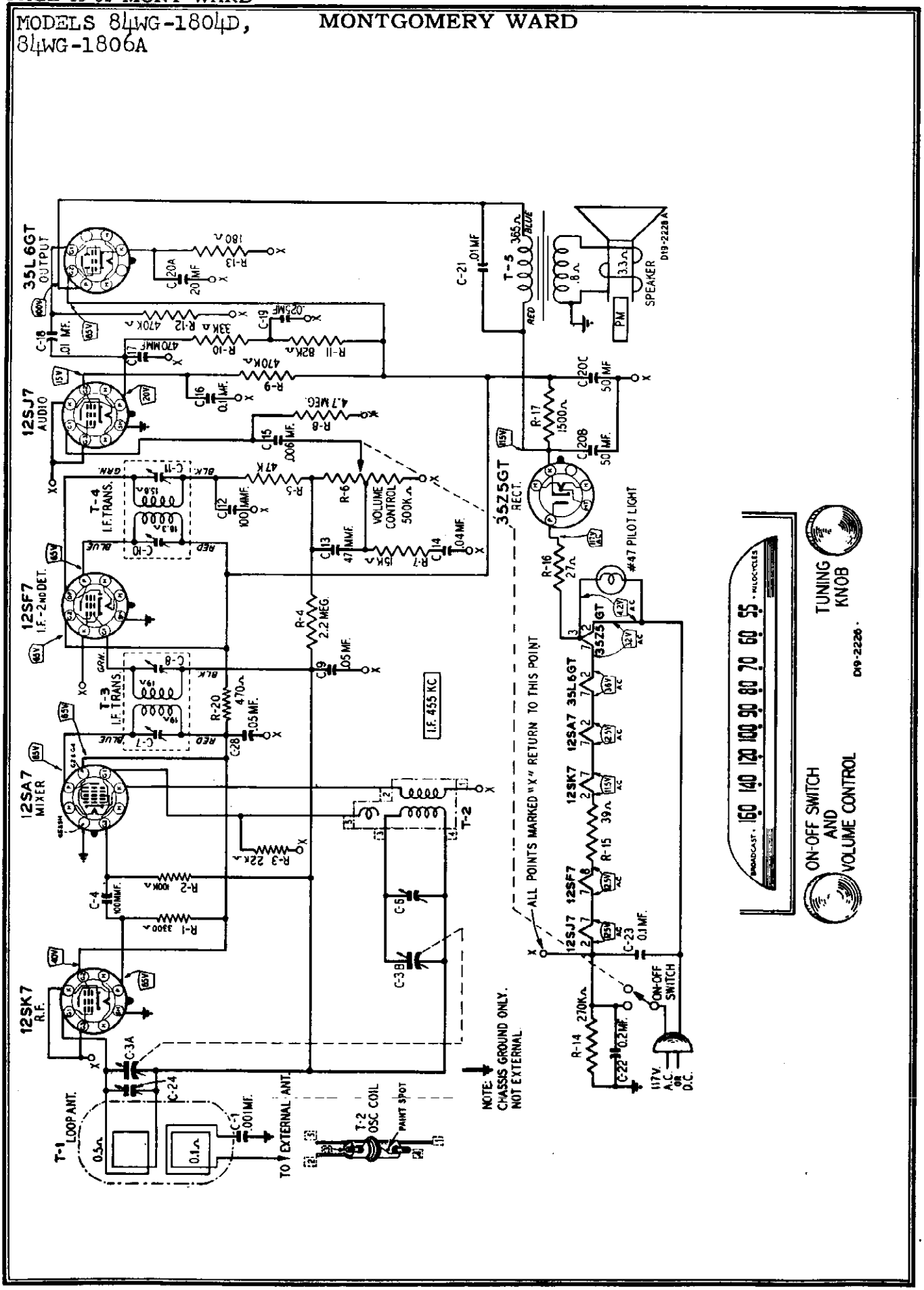

©John F. Rider

MONTGOMERY WARD

MODELS 84WG-1804D, 84WG-1806A

DIAL CALIBRATION

In order to align the receiver, the dial pointer must be positioned on the dial string correctly with reference to the dial. Index lines are provided on the dial light diffuser for this purpose.

Before aligning the receiver (or when replacing the dial light diffuser) check the position of the diffuser strip, making certain that the two end index lines are aligned with the inner edges of the diffuser mounting bracket opening. The bracket should be crimped at one point to prevent movement of the diffuser strip. To position the dial pointer, turn the gang condenser to the fully closed position. The dial pointer should be directly over the dial pointer index line. (See illustration)

The 1400 KC index line is for use when aligning the receiver.

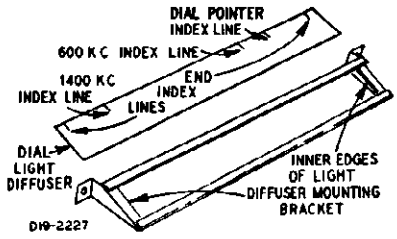

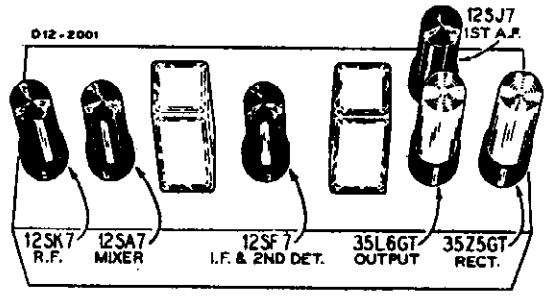

DRIVE CORD REPLACEMENT

Turn the gang condenser to the fully closed position. Use a new 10X44 drive cord assembly and fasten one end to the tension spring. Hook the other end of the tension spring over the tab on the drive pulley. Pass the cord through the slot on the drive pulley rim, under stud A and wind two turns clockwise (from front of chassis) around the tuning shaft. Turns must progress away from chassis. Pass cord over pulley B and stud C under stud D. Pass cord under drive pulley and wind 4 turns counterclockwise around drive pulley Stretch tension spring and fasten free end of cord to spring.

Attach the dial pointer to the cord and position as instructed in paragraph DIAL CALIBRATION.

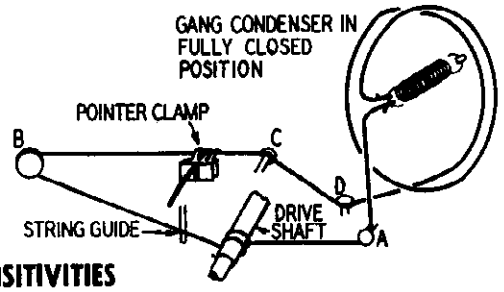

RECEIVER STAGE SENSITIVITIES

The table below lists the sensitivity at the input of each stage. The receiver should be tuned to 1000 KC for all readings. All measurements are based on an output of 50 milliwatts. This may be measured by disconnecting the speaker voice coil and substituting a 3.2 ohm 5 watt resistor across the secondary winding of the output transformer. A reading of .4 volt AC across this resistor will be equivalent to a 50 milliwatt output. The volume control must be set to maximum.

The signal source must be an accurately calibrated signal generator capable of supplying both 1000 KC and 455 KC signals modulated 30% with a 400 cycle audio signal. Variations in sensitivity of Plus or Minus 25% are usually permissible.

SIGNAL GENERATOR				INPUT FOR 50 MILLIWATT OUTPUT
Frequency	Coupling Capacitor	Connection to Receiver	Ground Connection	
1000 kc	200 mmf or RMA Dummy Antenna	Loop Antenna—External antenna clip	Chassis	19.5 microvolts
1000 kc	.05 mf.	12SA7 Mixer—Pin 8	Point "X" (12SK7 Pin 3)	150 microvolts
455 kc	.05 mf	12SA7 Mixer—Pin 8	Same as above	100 microvolts
455 kc	.05 mf	12SF7 I-F—Pin 2	Same as above	3500 microvolts
400 cycles	.05 mf	12SJ7 1st A-F—Pin 4	Same as above	.042 volt
400 cycles	.05 mf	35L6GT Output—Pin 5	Same as above	1 volt

MODELS 84WG-1804D, 84WG-1806A

MONTGOMERY WARD

ALIGNMENT PROCEDURE

Check dial pointer position, see Dial Calibration paragraph.

Volume Control—Maximum All Adjustments.

Allow Chassis and Signal Generator to "Heat Up" for several Minutes.

The equipment in column at right is required for aligning:

Signal Generator which will provide an accurately calibrated signal at the test frequencies as listed.

Output Indicating Meter; Non-Metallic Screwdriver.

Dummy Antennas—.1 mf., 50 mmf.

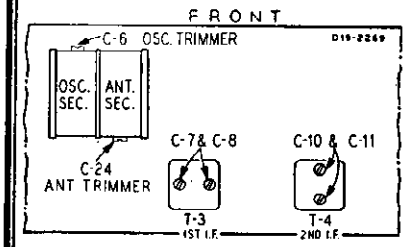

NOTE A:—Index line is on dial light diffuser strip. See DIAL CALIBRATION paragraph.

SIGNAL GENERATOR			Coupling Capacitor	DIAL SETTING	ADJUST TRIMMERS TO MAXIMUM OUTPUT IN ORDER SHOWN (See Trimmer Illustration)
Frequency Setting	Connection to Receiver	Ground Connection			
455 kc	Control Grid 12SF7—I-F (Prong No. 2)	Point "X" 12SK7—R-F (Prong No. 3)	.1 mf	Turn Rotor to full open	2nd I-F (C10) & (C11)
455 kc	Control Grid 12SA7—1st Det. (Prong No. 8)	Same as above	.1 mf	Turn Rotor to full open	1st I-F (C7) & (C8)
1620 kc	Control Grid 12SA7—1st Det. (Prong No. 8)	Same as above	.1 mf	Turn Rotor to fully open position	Oscillator (C6)
1400 kc	External Antenna Clip on Loop	Chassis	50 mmf	Turn Rotor to 1400 kc Index Line. See Note A	Antenna (C24)

ELECTRICAL SPECIFICATIONS

Power Supply.....105-125 volts AC, 25-60 cycles, 35 watts or 105-125 volts DC

Frequency Range.....540-1600 KC

Intermediate Frequency.455 KC

Selectivity.....At 1000 KC, 50 KC wide at 1000 times signal

Sensitivity.....(for .05 watt output with external antenna) 15 microvolts average

Power Output.....1.3 watts maximum
.75 watt 10% distortion

Loud Speaker.....4"x 6" PM dynamic

Voice Coil Impedance...3.2 ohms at 400 cycles

Tube and Dial Light Complement

1 12SK7 R-F Amplifier
1 12SA7 Mixer
1 12SF7 I-F and 2nd Detector
1 12SJ7 1st A-F
1 35L6GT Power Output
1 35Z5GT Rectifier
1 47 Dial Lamp

TUBE SOCKET VOLTAGES

Socket voltages are shown on the schematic diagram at the tube socket terminals. All voltages except those for the heater and dial lamp are between the socket terminal and "X" point.

The readings were taken with a 1000 ohm-per-volt meter and all plate and screen voltages read on a 500 volt scale. Conditions of measurement are:

Line voltage.....117 volts AC
Volume control.....maximum
Signal input.....none

A variation of ±10% is usually permissible.

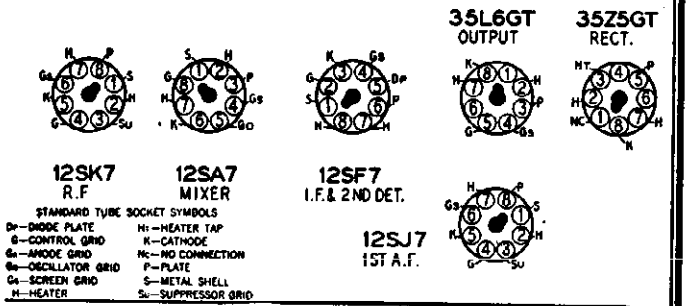

© John F. Rider

MONTGOMERY WARD

MODELS 84WG-1804D,
84WG-1806A

REPLACEMENT PARTS LIST

CAPACITORS

Ref. No.	Part No.	Description	Qty. Used in Set
C-1	D67102	.001 mf 400 V Tubular	1
C-3A, C-3B	14A194	Gang condenser and pulley assembly	1
C-4, C-12	47X476	100 mmf Molded	2
C-6		Part of C-3	
C-7, C-8		Part of T-3, 1st I-F Transformer	
C-9	B66503	.05 mf 200 V Tubular	1
C-10, C-11		Part of T-4, 2nd I-F Transformer	
C-13	47X463	47 mmf Molded	1
C-14	B67403	.04 mf 200 V Tubular	1
C-15	B67602	.006 mf 200 V Tubular	1
C-16	B66104	.1 mf 200 V Tubular	1
C-17	47X467	470 mmf Molded	1
C-18, C-21	B66103	.01 mf 200 V Tubular	2
C-19	B67253	.025 mf 200 V Tubular	1
C-20A	45X344	20 mf 25 V Dry electrolytic	1
C-20B		50 mf 150 V condenser	
C-20C		50 mf 150 V	
C-22	B67204	0.2 mf 200 V Tubular	1
C-23	D67104	.1 mf 400 V Tubular	1
C-24		Part of C-3	
C-28	B67503	.05 mf 200 V Tubular	1

RESISTORS

Ref. No.	Part No.	Ohms	Watts		Qty. Used in Set
R-1	B84332	3300	0.5	Carbon	1
R-2	B85104	100,000	0.5	Carbon	1
R-3	B85223	22,000	0.5	Carbon	1
R-4	B85225	2.2 meg.	0.5	Carbon	1
R-5	B85473	47,000	0.5	Carbon	1
R-6	36X347	500,000		Volume control and switch	1
R-7	B84153	15,000	0.5	Carbon	1
R-8	B85475	4.7 meg.	0.5	Carbon	1
R-9	B84474	470,000	0.5	Carbon	1
R-10	B84333	33,000	0.5	Carbon	1
R-11	B84823	82,000	0.5	Carbon	1
R-12	B85474	470,000	0.5	Carbon	1
R-13	B83181	180	0.5	Carbon	1
R-14	B84274	270,000	0.5	Carbon	1
R-15	D84390	39	2.0	Carbon	1
R-16	B84270	27	0.5	Carbon	1
R-17	C84152	1500	1.0	Carbon	1
R-20	B85471	470	0.5	Carbon	1

TRANSFORMERS AND COILS

Ref. No.	Part No.	Description	Qty. Used in Set
T-1	9A1944	"B" Range loop antenna	1
T-2	9A1911	Oscillator coil assembly	1
T-3	9A1775	1st I-F Transformer and can assembly	1
T-4	9A1776	2nd I-F Transformer and can assembly	1
T-5	51X116	Output transformer	1

DIAL AND DRIVE ASSEMBLY

Ref. No.	Part No.	Description	Qty. Used in Set
6X21		Rubber grommet } Gang cond.	3
20X329		Cond. cushion stud } mtg.	3
58X667		Dial	1
25X1461		Dial bracket	1
26A446		Pointer bracket assembly	1
15X217		Pointer	1
25X1398		Pilot light bracket	1
7A192		Pilot light socket assembly	1
7A103		Pilot light No. 47	1
10X44		Drive cord assembly	1
28X95		Drive cord tension spring	1
26X464		Drive shaft	1
19X192		"C" washer (for drive shaft)	2
41X81		Dial light diffuser	1
4X884		Escutcheon (for Walnut Cabinet)	1
4X1025		Escutcheon (for Mahogany Cabinet)	1
25X1460		Escutcheon mounting bracket	2

MISCELLANEOUS

Ref. No.	Part No.	Description	Qty. Used in Set
	12A431	4" x 6" speaker with mtg. bracket	1
	3A303	Tube socket—octal (8 prong) molded	5
	3A421	Tube socket with shield	1
	10A297	Knob (walnut) on-off switch, volume control and tuning	2
	10A712	Knob (Mahogany)	2
	28X292	Snap button (mtg. loop to cabinet)	2
		6 x ¼" slotted hex head P-K type "Z" screw mounting loop to chassis)	2
	13X328	Line cord and plug assembly	1

MODEL 84WG-2504D

MONTGOMERY WARD

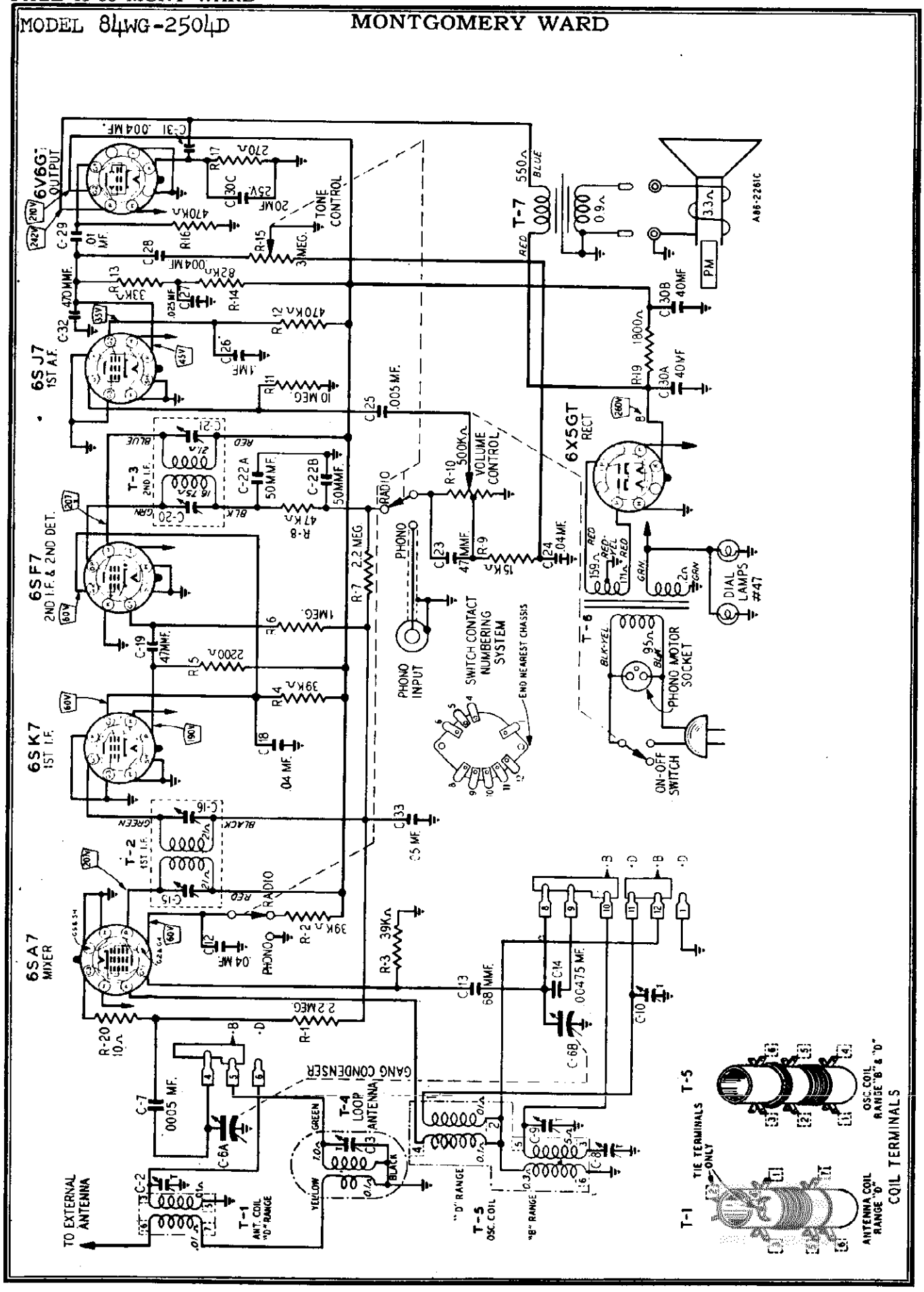

MONTGOMERY WARD MODEL 84WG-2504D

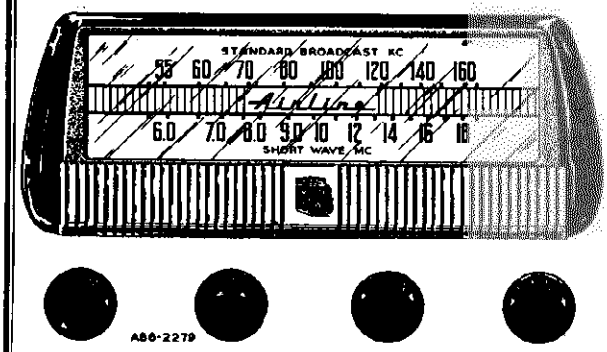

ELECTRICAL SPECIFICATIONS

Power Supply.....105-125 volts AC, 50-60 cycles, 45 watts.

Frequency Range.....B range—540-1600 KC
D range—5.75 to 18.3 MC

Intermediate Frequency..455 KC

Selectivity.....40 KC broad at 1000 times signal, 1000 KC

Sensitivity.....(for .5 watt output) with external antenna
B range—9 microvolts average
D range—20 microvolts average

Power Output.....4 watts maximum
2.3 watts, 10% distortion

Loud Speaker.....10" PM dynamic

Voice Coil Impedance....3.2 ohms at 400 cycles

Tube and Dial Light Complement

1 6SA7 Mixer
1 6SK7 1st I-F Amplifier
1 6SF7 2nd I-F Amplifier & 2nd Det.
1 6SJ7 1st A-F Amplifier
1 6V6GT Power Output
1 6X5GT Rectifier
2 No. 47 Dial Lamps

GENERAL DESCRIPTION

This model is a five tube (plus rectifier tube) AC console receiver. Controls are provided for tuning, volume, tone, and band selection. The dial scale is calibrated in two bands, the broadcast band in channel numbers to cover frequencies between 540-1600 KC and the short wave band directly in megacycles from 5.75 to 18.3 MC. Other features include a built-in Air Wave Aerial, automatic volume control, beam power audio output stage and a PM dynamic speaker. A switch is provided on the tone control for selection of either radio or phono operation.

RECEIVER STAGE SENSITIVITIES

The table below lists the sensitivity at the input of each stage. The receiver should be tuned to 1000 KC for all readings. All measurements are based on an output of .5 watt. This may be measured by disconnecting the speaker voice coil and substituting a 3.2 ohm, 5 watt resistor across the secondary winding of the output transformer. A reading of 1.26 volts across this resistor will be equivalent to a .5 watt output with the speaker connected. The volume control must be set to maximum. The signal source must be an accurately calibrated signal generator capable of supplying both 1000 KC and 455 KC signals modulated 30% with a 400 cycle audio signal. Variations of Plus or Minus 25% are usually permissible.

SIGNAL GENERATOR				INPUT FOR .5 WATT OUTPUT
Frequency	**Coupling Capacitor**	**Connection to Receiver**	**Ground Connection**	
1000 kc	200 mmf or RMA Dummy Antenna	External antenna lead	Chassis	9 microvolts
1000 kc	.05 mf	6SA7 Mixer, Pin 8	Same as above	42 microvolts
455 kc	.05 mf	6SA7 Mixer, Pin 8	Same as above	40 microvolts
455 kc	.05 mf	6SK7 1st I-F, Pin 4	Same as above	1075 microvolts
455 kc	.05 mf	6SF7 2nd I-F, Pin 2	Same as above	3900 microvolts
400 cycles	.05 mf	6SJ7 1st A-F, Pin 4	Same as above	.08 volt
400 cycles	.05 mf	6V6GT Output, Pin 5	Same as above	3.75 volts

MODEL 84WG-2504D MONTGOMERY WARD

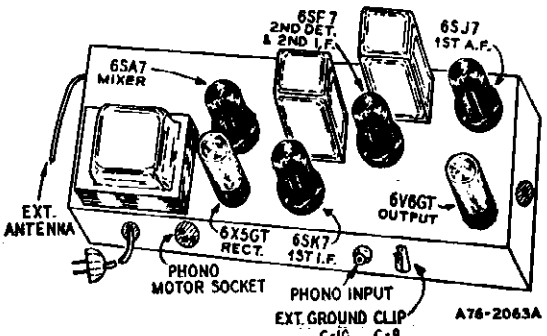

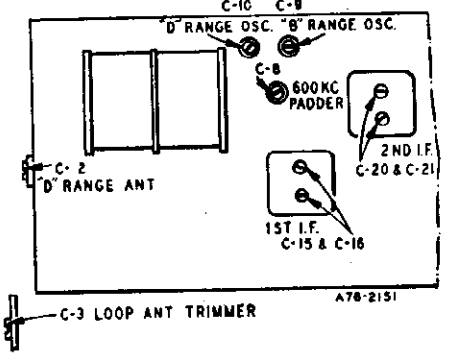

DRIVE CORD REPLACEMENT

Turn the gang condenser to the fully open position. Use a new 10X65 drive cord assembly or a piece of cord 48 inches long and tie one end to the tension spring. Hook the other end of the tension spring to the tab on the drive pulley. Pass the cord through the slot in the drive pulley rim around idler stud A and wind three and one-half turns clockwise around the tuning shaft (turns must progress away from chassis). Then pass cord over idler pulleys B and C. Wrap cord counterclockwise around drive pulley, stretch tension spring and fasten free end of cord to spring.

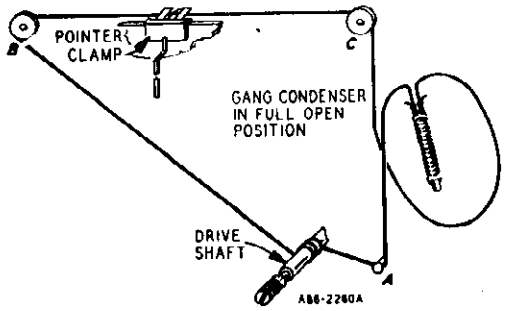

ALIGNMENT PROCEDURE

Volume Control—Maximum All Adjustments.

Connect Radio Chassis to Ground Post of Signal Generator with a Short Heavy Lead.

Allow Chassis and Signal Generator to "Heat Up" for several minutes.

The following equipment is required for aligning:
An All Wave Signal Generator which will provide an accurately calibrated signal at the test frequencies as listed.
Output Indicating Meter; Non-Metallic Screwdriver.
Dummy Antennas—.1 mf., 50 mmf., and 400 ohms:

	SIGNAL GENERATOR		Dummy Antenna	Band Switch Setting	CONDENSER SETTING	ADJUST TRIMMERS TO MAXIMUM
	Frequency Setting	Connection at Radio				
I-F	455 kc	6SA7, Pin 8	.1 mf	B Range	Turn Rotor to Full Open	2nd I-F (C-20) & (C-21) 1st I-F (C-15) & (C-16)
RANGE B	1620 kc	Antenna Lead	50 mmf	B Range	Turn Rotor to Full Open	Oscillator Range B (C9)
	1400 kc	Antenna Lead	50 mmf	B Range	Tune Rotor to Max. Output. Set Indicator to 1400 KC. See Note A	Antenna Range B (C3)
	600 kc	Antenna Lead	50 mmf	B Range	Tune Rotor to Max. Output	600 kc (C8) Rock Rotor—See Note B
Repeat above oscillator adjustments at 1620 and 600 KC until readjusting the oscillator Range B Trimmer (C9) causes no further improvement in output.						
RANGE D	18.3 mc	Antenna Lead	400 Ohm	D Range	Turn Rotor to Full Open	Oscillator Range D (C10)
	16 mc	Antenna Lead	400 Ohm	D Range	Tune Rotor to Max. Output	Antenna Range D (C2) Rock Rotor—See Note B
LOOP RANGE B	Reassemble chassis in cabinet. 1400 kc	Antenna Lead	50 mmf	B Range	Tune Rotor to Max. Output	Antenna Range B (C3)

After each range is completed, repeat the procedure as a final check.

NOTE A—If the pointer is not at 1400 KC on the dial, re-set pointer at the 1400 KC mark on the dial scale.

NOTE B—Turn the rotor back and forth and adjust the trimmer until the peak of greatest intensity is obtained.

©John F. Rider

MONTGOMERY WARD

MODEL 84WG-2504D

Ref. No.	Part No.	Description	Qty. Used in Set
		CAPACITORS	
C-2	17A164	5-50 mmf Trimmer	1
C-3	17A235	2-24 mmf Trimmer	1
C-6A, C-6B	14A196	Gang Condenser with Drive Pulley	1
C-7	B66501	.0005 mf 200 V Tubular	1
C-8	17A155	350-430 mmf Trimmer	1
C-9, C-10	17A109	2.5-35 mmf Dual Trimmer	1
C-12, C-18	D66403	.04 mf 400 V Tubular	2
C-13	47X466	68 mmf Moulded	1
C-14	46X289	.00475 mf Tubular	1
C-15, C-16		Part of T-2 (1st I-F Coil Assy.)	
C-19, C-23	47X463	47 mmf Moulded	2
C-20, C-21		Part of T-3 (2nd I-F Coil Assy.)	
C-22A, C-22B	47X112	50-50 mmf Dual Mica	1
C-24	D64403	.04 mf 400 V Tubular	1
C-25	D66502	.005 mf 400 V Tubular	1
C-26	D67104	.10 mf 400 V Tubular	1
C-27	D64253	.025 mf 400 V Tubular	1
C-28	D66402	.004 mf 400 V Tubular	1
C-29	D66103	.01 mf 400 V Tubular	1
C-30A	45X346	40 mf 450 V 3 Section Electrolytic	1
C-30B		40 mf 450 V	
C-30C		20 mf 25 V	
C-31	H66402	.004 mf 800 V Tubular	1
C-32	47X467	470 mmf Moulded	1
C-33	B66503	.05 mf 200 V Tubular	1

Ref. No.	Part No.	OHMS	WATTS		Qty. Used in Set
		RESISTORS			
R-1, R-7	B85225	2.2 meg.	0.5	Carbon	2
R-2, R-4	C84393	39 K	1.0	Carbon	2
R-3	B84393	39 K	0.5	Carbon	1
R-5	B84222	2200	0.5	Carbon	1
R-6	B85105	1 meg.	0.5	Carbon	1
R-8	B85473	47 K	0.5	Carbon	1
R-9	B84153	15 K	0.5	Carbon	1
R-10	36X358	500 K		Volume Control & Line Switch	1
R-11	B85106	10 meg.	0.5	Carbon	1
R-12, R-16	B85474	470 K	0.5	Carbon	2
R-13	B84333	33 K	0.5	Carbon	1
R-14	B84823	82 K	0.5	Carbon	1
R-15	40X276	3.0 meg.		Tone Control & Radio Phono Switch	1
R-17	C84271	270	1.0	Carbon	1
R-19	D84182	1800	2.0	Carbon	1
R-20	B85100	10	0.5	Carbon	1

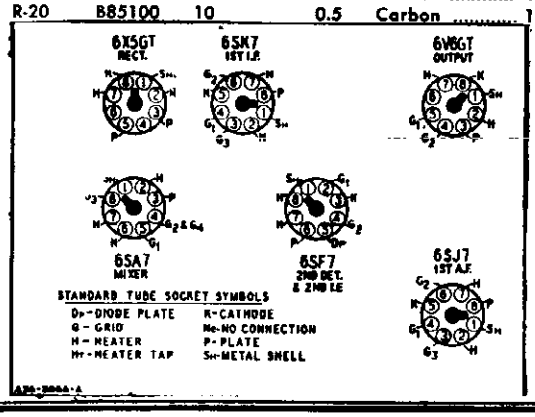

Ref. No.	Part No.	Description	Qty. Used in Set
		TRANSFORMERS AND COILS	
T-1	9A1917	"D" Range Antenna Coil Assembly	1
T-2	9A1814	1st I-F Coil Assembly	1
T-3	9A1815	2nd I-F Coil Assembly	1
T-4	26A474	"B" Range Loop Antenna Assembly	1
T-5	9A1918	"B" & "D" Range Oscillator Coil Assembly	1
T-6	53X282	117 Volt, 60 Cycle, Standard Power Transformer	1
T-7	51X134	Output Transformer	1
		DIAL AND DRIVE ASSEMBLY	
	S-58X13	Dial Bracket Assembly (including Dial Bracket, Idler Pulley, Rivets, and Dial Glass)	1
	6X21	Rubber Grommet } Mtg. Gang	3
	20X329	Cond. Cushion Stud } Cond.	3
	26X485	Drive Shaft	1
	19X192	"C" Washer (For Drive Shaft)	2
	15X241	Pointer	1
	28X113	Drive Cord Tension Spring	1
	10X65	Drive Cord Assembly	1
	7A199	Pilot Light Socket Assembly	1
	7A103	No. 47 Pilot Light Bulb	2
	58X696	Dial Glass	1
	4X999	Escutcheon	1
		MISCELLANEOUS	
	12A476	10" P.M. Speaker	1
	3A303	Tube Socket—Octal (8 prong) moulded	6
	3A304	Phono Motor Socket	1
	3A305	Phono Socket—Single Pin Tip	1
	2A372	Band Change Switch	1
	13X328	Line Cord and Plug Assembly	1
	10A651	Knob (Tuning)	1
	10A652	Knob (Off-On Volume)	1
	10A653	Knob (SW-BC)	1
	10A650	Knob (Tone—R.P.)	1

TUBE SOCKET VOLTAGES

Socket voltages are shown on the schematic diagram at the tube socket terminals. All voltages are between the socket terminal and chassis ground.

The readings were taken with a 1000 ohm per volt meter and all plate and screen voltages read on a 500 volt scale. Conditions of measurement are:

Line voltage ..... **117 volts AC**
Volume control ..... **maximum**
Signal input ..... **none**

A variation of ±10% is usually permissible.

©John F. Rider

MODELS 84WG-2714A, -B, -C, -D, -E

MONTGOMERY WARD

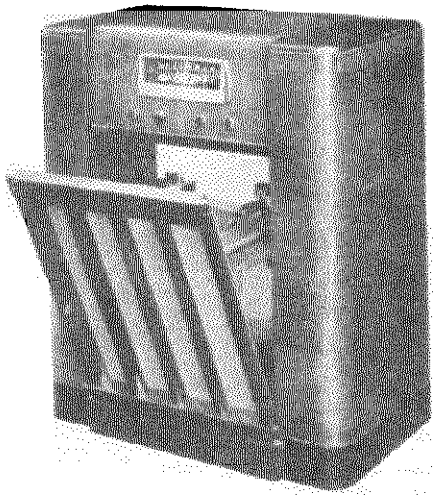

84WG-2714A,B

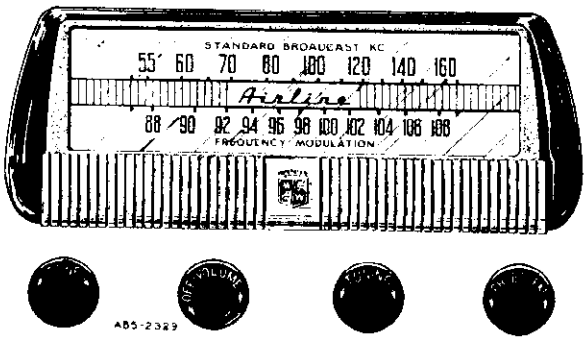

Tube and Dial Lamp Complement

84WG-2714A,B

1 6BE6 FM-AM Converter
1 6BA6 1st I-F Amplifier
1 6BA6 2nd I-F Amplifier
1 6AL5 FM Discriminator
1 6AT6 Audio Amplifier, AM 2nd Detector and AVC
1 6V6GT Audio Output
1 5Y3GT Rectifier
2 No. 47 Dial Lamps

ELECTRICAL SPECIFICATIONS

Power Supply	105-125 volts AC 60 cycles, 60 watts, 80 watts with record changer
Frequency Ranges	Broadcast 540-1600 KC Frequency Modulation 88-108 MC
Intermediate Frequency	AM—455KC FM—10.7 MC
Selectivity	AM—50 KC broad at 1000 times signal, measured at 1000 KC I.F. FM—200 KC broad at 2 times down I.F. FM—800 KC broad at 200 times down
AM Sensitivity	(For .5 watt output with external antenna) 20 microvolts average
FM Sensitivity	(For .5 watt output) 200 microvolts average
Power Output	4.5 watts maximum 2.5 watts 10% distortion
Loud Speaker	10" PM Dynamic
Voice Coil Impedance	3.2 ohms 400 cycles

DRIVE CORD REPLACEMENT

DIAL POINTER CORD

Use a new 10X66 drive cord assembly or a new length of cord 46 inches long for the installation. Install the cord as shown in the illustration, winding three turns clockwise around the drive shaft with the turns progressing away from the chassis. After completing the installation rotate the drive shaft a few turns to take up the slack in the cord.

Tube and Dial Lamp Complement

1 6BE6 FM-AM Converter
1 6BA6 1st I-F Amplifier
1 6BA6 2nd I-F Amplifier
1 6AL5 FM Discriminator
1 6AV6 Audio Amplifier, AM 2nd Detector and AVC
1 6V6GT Audio Output
1 5Y3GT Rectifier
2 No. 47 Dial Lamps

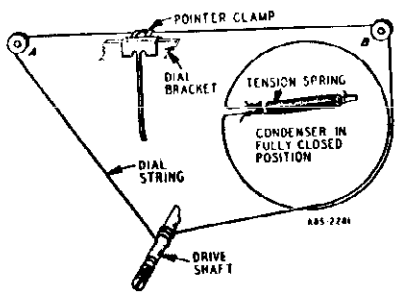

©John F. Rider

RECEIVER STAGE SENSITIVITIES

AM AND AUDIO STAGES

The table below lists the sensitivity at the input of each stage. The receiver should be tuned to 1000 KC for all readings. All measurements are based on an output of .5 watt. This may be measured by disconnecting the speaker voice coil and substituting a 3.2 ohm, 5 watt resistor across the secondary winding of the output transformer. A reading of 1.26 volts across this resistor will be equivalent to a .5 watt output.

The volume control must be set to maximum.

The signal source must be an accurately calibrated signal generator capable of supplying both 1000 KC and 455 KC signals modulated 30% with a 400 cycle audio signal. Variations in sensitivity of Plus or Minus 25% are usually permissible.

84WG-2714A,B **SIGNAL GENERATOR**

FREQUENCY	COUPLING CAPACITOR	CONNECTION TO RECEIVER	GROUND CONNECTION	INPUT FOR .5 WATT OUTPUT
1000 KC	200 mmf or RMA Dummy Antenna	External Antenna Lead	Chassis	25 Microvolts
1000 KC	.05 mf	6BE6 Converter Pin 7	Chassis	60 Microvolts
455 KC	.05 mf	6BE6 Converter Pin 7	Chassis	58 Microvolts
455 KC	.05 mf	6BA6 1st I-F Pin 1	Chassis	2400 Microvolts
400 cycles	.05 mf	6AT6 1st A-F Pin 1	Chassis	.07 Volt
400 cycles	.05 mf	6V6GT Output Pin 5	Chassis	3.2 Volts

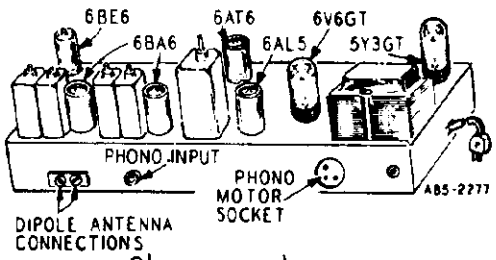

84WG-2714A,B

84WG-2714C,D,E **SIGNAL GENERATOR**

FREQUENCY	COUPLING CAPACITOR	CONNECTION TO RECEIVER	GROUND CONNECTION	INPUT FOR .5 WATT OUTPUT
1000 KC	200 mmf or RMA Dummy Antenna	External Antenna Lead	Chassis	25 Microvolts
1000 KC	.05 mf	6BE6 Converter Pin 7	Chassis	60 Microvolts
455 KC	.05 mf	6BE6 Converter Pin 7	Chassis	58 Microvolts
455 KC	.05 mf	6BA6 1st I-F Pin 1	Chassis	2400 Microvolts
400 cycles	.05 mf	6AV6 1st A-F Pin 1	Chassis	.07 Volt
400 cycles	.05 mf	6V6GT Output Pin 5	Chassis	3.2 Volts

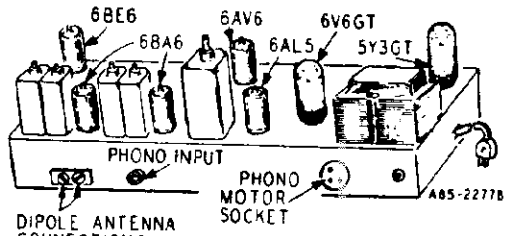

84WG-2714C,D,E

FM STAGES

The tables below lists the sensitivity for the FM stages of the receiver. The receiver must be tuned to 98 MC for all readings. Measurements are based on a .5 watt output the same as for the AM and Audio stage measurements.

The signal source must be an accurately calibrated signal generator capable of supplying a 98 MC signal modulated by a 400 cycle audio signal. For these measurements the generator must be adjusted for a 22.5 KC deviation. This will correspond to 30% AM modulation.

84WG-2714A,B,C,D,E **SIGNAL GENERATOR**

FREQUENCY	COUPLING TO RECEIVER	CONNECTION TO RECEIVER	GROUND CONNECTION	INPUT FOR .5 WATT OUTPUT
98 MC	300 ohms	External Antenna Lead	Chassis	200 Microvolts
10.7 MC	.01 mf	6BA6 1st I-F Pin 1	Chassis	1,000 Microvolts
10.7 MC	.01 mf	6BA6 2nd I-F Pin 1	Chassis	40,000 Microvolts

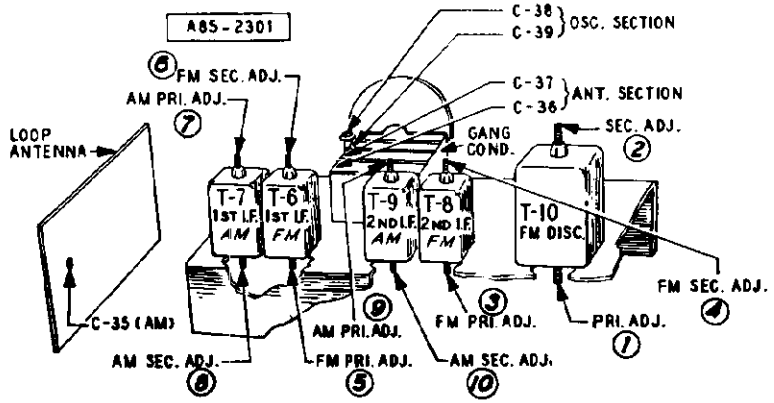

84WG-2714A,B,C

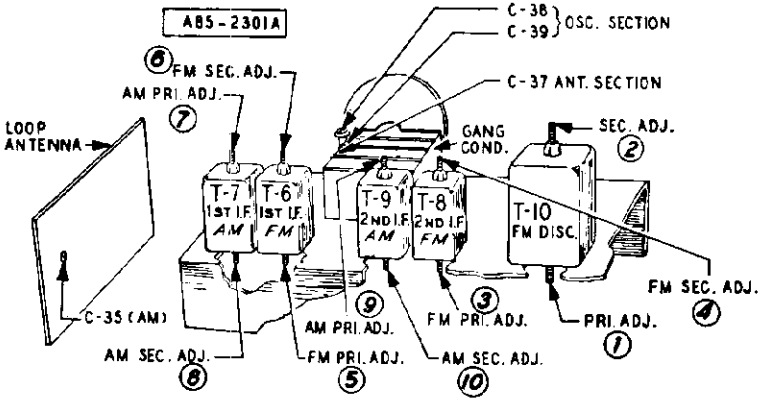

84WG-2714D,E

TUBE SOCKET VOLTAGES

Socket voltages are shown on the schematic diagram at the tube socket terminals. All voltages are between the socket terminal and chassis ground. Plate, screen and cathode voltages were taken with a 1000 ohm-per-volt meter with a 300 volt scale used for plate and screen voltages. Audio grid voltages were read with a vacuum tube volt-meter. Conditions of measurement are:

Line voltage.....117 Volts AC
Signal Input.....None

A variation of ±10% is usually permissible.

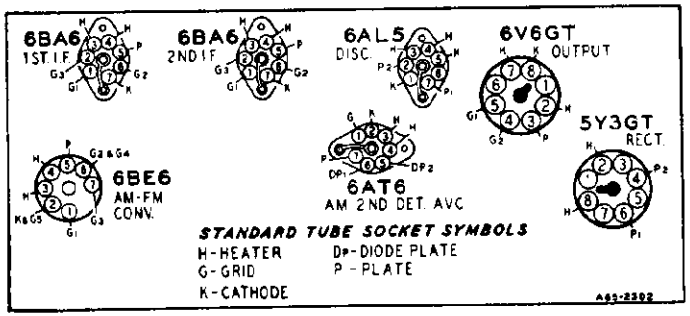

84WG-2714A,B

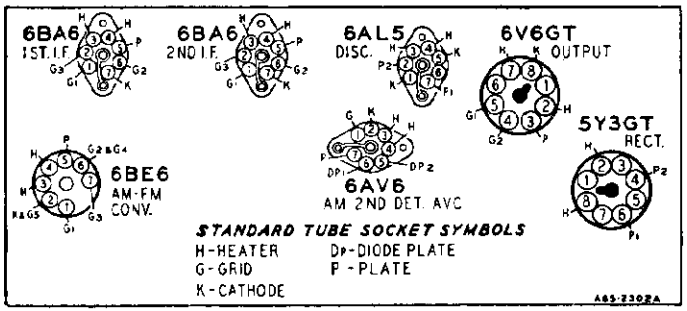

84WG-2714C,D,E

MONTGOMERY WARD

MODELS 84WG-2714A, -B, -C, -D, -E

ALIGNMENT PROCEDURES

AM STAGES

The following is required for aligning:
An All Wave Signal Generator Which Will Provide an Accurately Calibrated Signal at the Test Frequencies as Listed.
Output Indicating Meter, Non-Metallic Screwdriver, Dummy Antennas — .1 mf, and 50mmf.

Volume Control Maximum all Adjustments.
Connect Radio Chassis to Ground Post of Signal Generator with a Short Heavy Lead.
Allow Chassis and Signal Generator to "Heat Up" for Several Minutes.

SIGNAL GENERATOR						
FREQUENCY SETTING	CONNECT GENERATOR OUTPUT TO	THROUGH DUMMY ANTENNA	CONNECT GROUND TO	GANG CONDENSER SETTING	ADJUST	ADJUST FOR
455 KC	Control Grid 1st 6BA6 Pin No. 1	.1 mf	Chassis Base	Rotor Fully Open	2nd I.F. Pri. and Sec. (9) and (10)	Maximum Output
455 KC	Control Grid 6BE6 Pin No. 7 1st Det.	.1 mf	Chassis Base	Rotor Fully Open	1st I.F. Pri. and Sec. (7) and (8)	Maximum Output
1620 KC	Control Grid 6BE6 Pin No. 7	.1 mf	Chassis Base	Rotor Fully Open	Oscillator C-39	Maximum Output
1400 KC	External Antenna Lead	50 mmf	Chassis Base	Turn Rotor to Max. Output. Set Pointer to 1400 KC See Note A	Antenna C-35	Maximum Output

NOTE A—If the pointer is not at 1400 KC on the dial, reset pointer to the 1400 KC mark on the dial scale.

FM STAGES

The following is required for aligning:
An accurately calibrated signal generator providing unmodulated signals at the test frequencies listed below.
Non-metallic screwdriver.
Dummy Antennas and I-F Loading Resistor — .01 mf, 300 ohms and 100K ohms

Zero center scale DC vacuum tube voltmeter having a range of approximately 3 volts.
(If a zero center scale meter is not available, a standard scale vacuum tube voltmeter may be used by reversing the meter connections for negative readings).
Allow chassis and signal generator to "Heat Up" for several minutes.

	SIGNAL GENERATOR		THROUGH DUMMY ANTENNA	BAND SWITCH SETTING	GANG CONDENSER SETTING	ADJUST	ADJUST FOR
	FREQUENCY SETTING	CONNECT GENERATOR OUTPUT TO					
Discriminator	10.7 MC	6BA6 2nd I-F Pin 1 and Chassis	.01 mf	FM	Rotor Fully Open	Disc. Pri. (1) Note A	Maximum Deflection
	10.7 MC	6BA6 2nd I-F Pin 1 and Chassis	.01 mf	FM	Rotor Fully Open	Disc. Sec. (2) Note B	
	10.7 MC	6BA6 2nd I-F Pin 1 and Chassis	.01 mf	FM	Rotor Fully Open	Disc. Pri. (1) Note A	Maximum Deflection
	10.7 MC	6BA6 2nd I-F Pin 1 and Chassis	.01 mf	FM	Rotor Fully Open	Disc. Sec. (2) Note B	
I-F	10.7 MC	6BA6 1st I-F Pin 1 and Chassis	.01 mf	FM	Rotor Fully Open	2nd I-F Pri. (3) 2nd I-F Sec. (4) Note C	Maximum Deflection
	10.7 MC	Unsolder lead from Pin 7 to band switch. Insert 100K ohm resistor between Pin 7 and Ground and feed signal into Pin 7 of 6BE6	.01 mf	FM	Rotor Fully Open	1st I-F Pri. (5) Note C	Maximum Deflection
	10.7 MC	Same as above	.01 mf	FM	Rotor Fully Open	1st I-F Sec. (6) Note C	Maximum Deflection
RECHECK I-F ADJUSTMENTS IN ORDER GIVEN							
Ant. and Osc.	108.5 Note D	Disconnect dipole and connect generator to dipole terminals with a 300 ohm resistor in series	300 ohms	FM	Rotor Fully Open	Osc. C-38	Maximum Deflection
	104.5	Same as above	300 ohms	FM	Tune rotor for max. AVC voltage	Ant. C-37	Maximum Deflection
RECHECK ANTENNA & OSC. ADJUSTMENTS IN ORDER GIVEN							

FM ALIGNMENT NOTES

NOTE A—The zero center scale DC vacuum tube voltmeter is to be connected between chassis ground and the A.V.C. line at the 27 K. ohm resistor (R-11) and its junction with terminal strip. A signal of .1 volt must be fed into the receiver for this adjustment.
Note output voltage on the zero center DC vacuum tube voltmeter.

NOTE B—Disconnect zero center DC vacuum tube voltmeter from A.V.C. and connect it at the audio takeoff point at the 1 megohm resistor (R-14) and its junction with the terminal strip. Adjust for zero voltage indication.

NOTE C—Connect zero center DC vacuum tube voltmeter as in Note A. Adjust input to give same output on the zero center DC vacuum tube voltmeter as in Note A.

NOTE D—Remove the 100 K. ohm load resistor and solder the lead from pin 7 of 6BE6 tube to the band switch before attempting to check the antenna and oscillator adjustments.

MODELS 84WG-2714A,
84WG-2714B

MONTGOMERY WARD

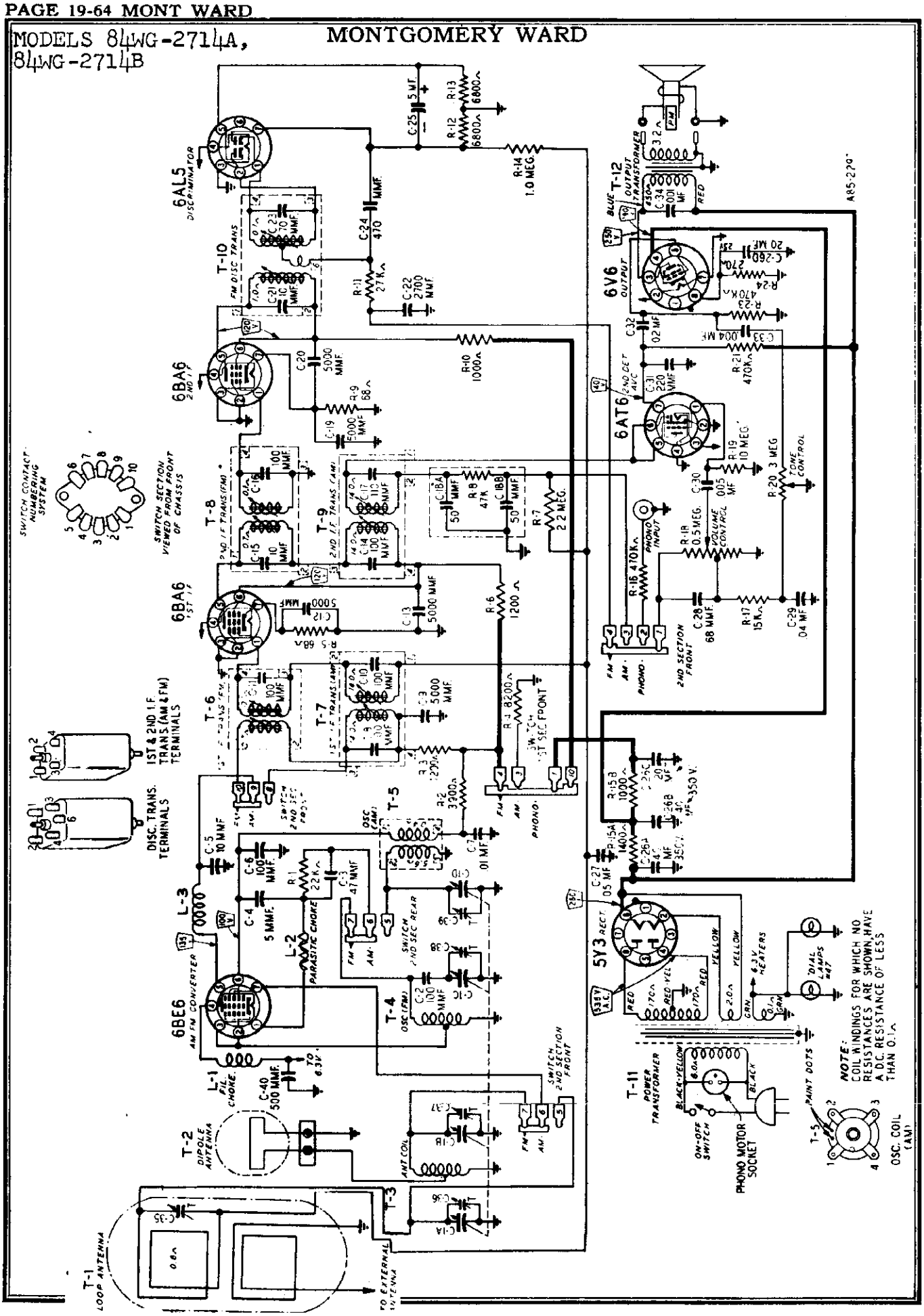

MONTGOMERY WARD

MODEL 84WG-2714A

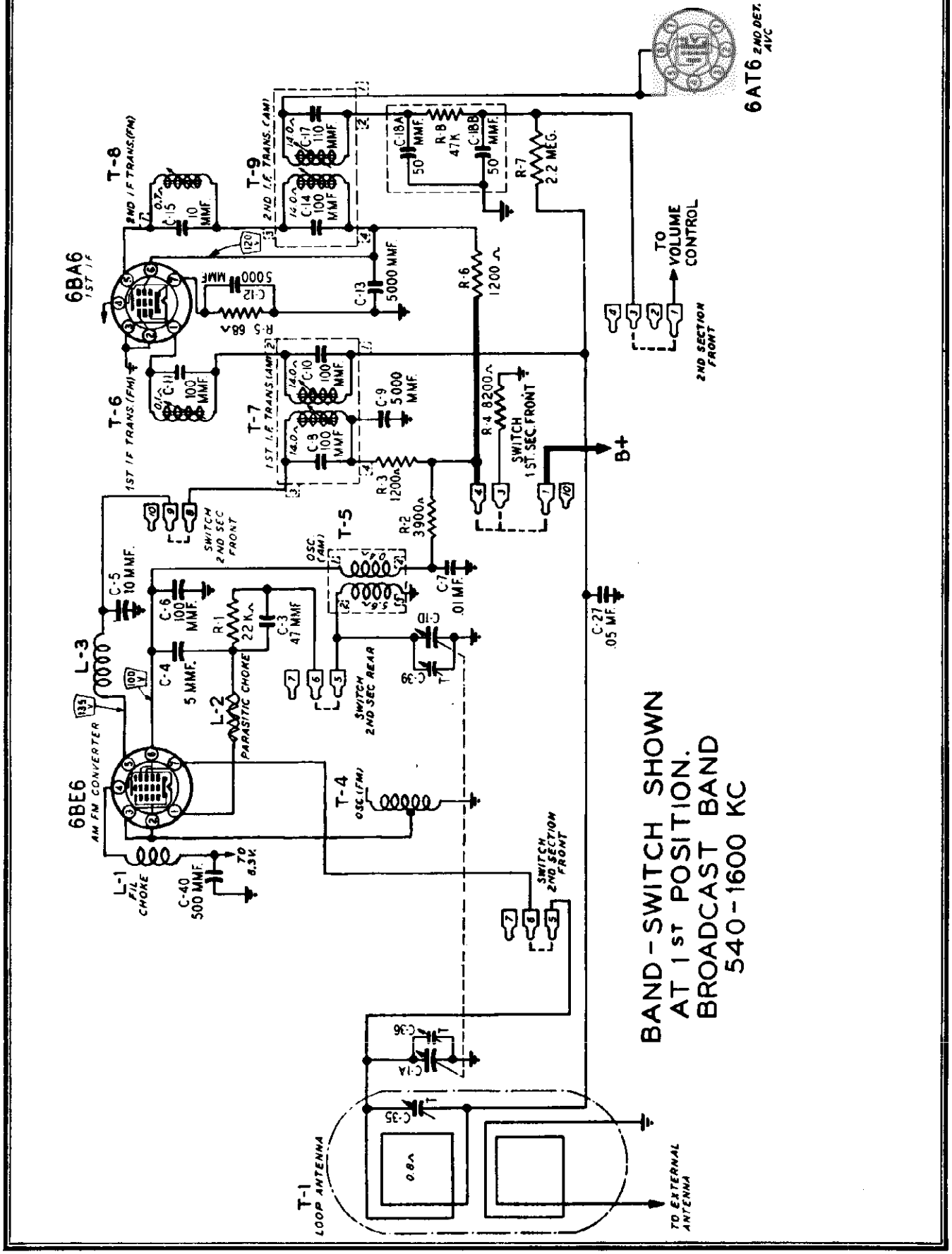

CLARI-SKEMATIX
Registered Trademark

MODEL 84WG-2714A

MONTGOMERY WARD

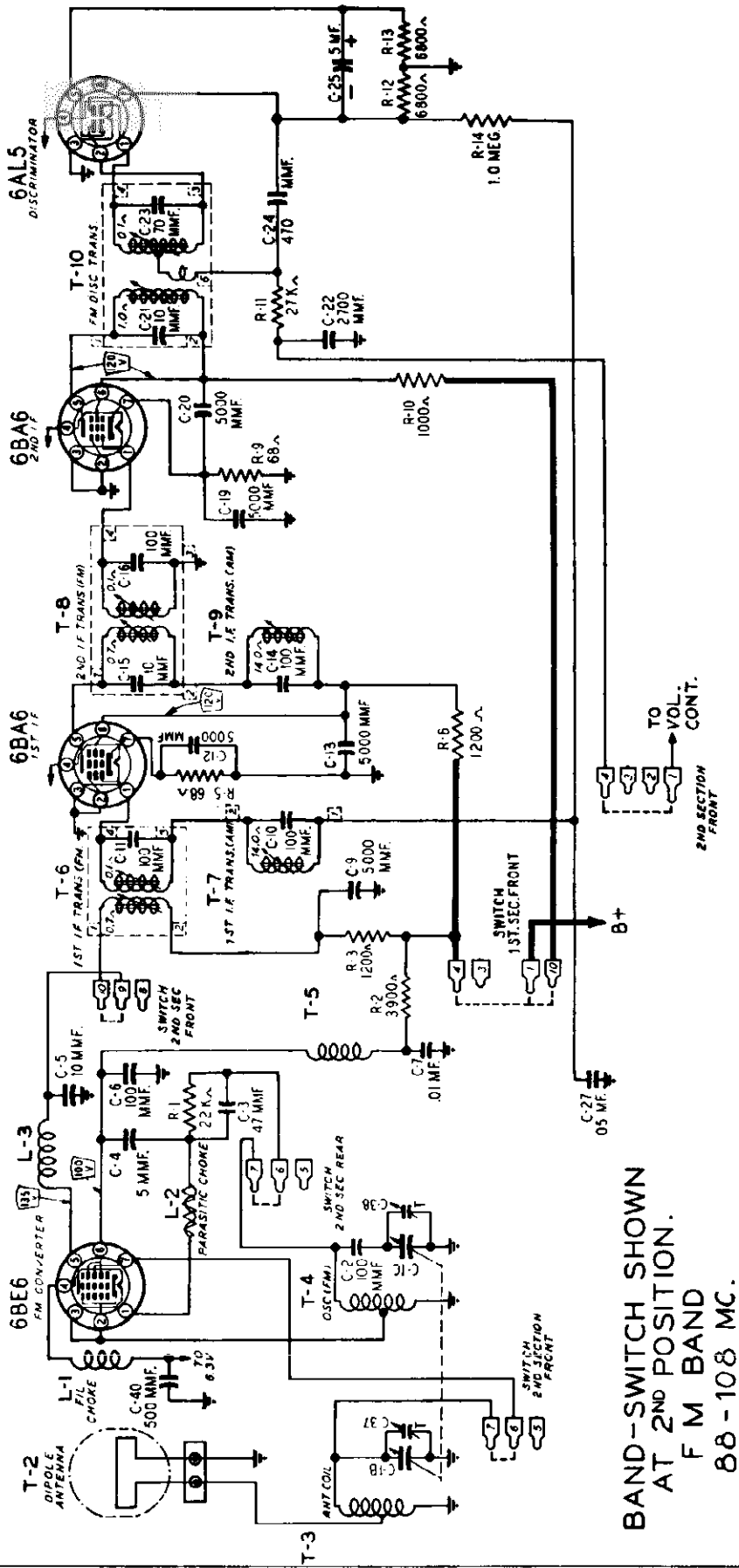

© John F. Rider

(1) The part number and description of C-6 has been changed. The new description follows:

C-6	47X463	47 MMF	Molded	1 used

(2) Miniature tube shields (shown in the tube layout drawing and listed in the replacement parts list) are not used.

(3) The circuit connection of the 5 MMF capacitor C-4 has been changed. The new circuit connection is shown in the partial schematic below:

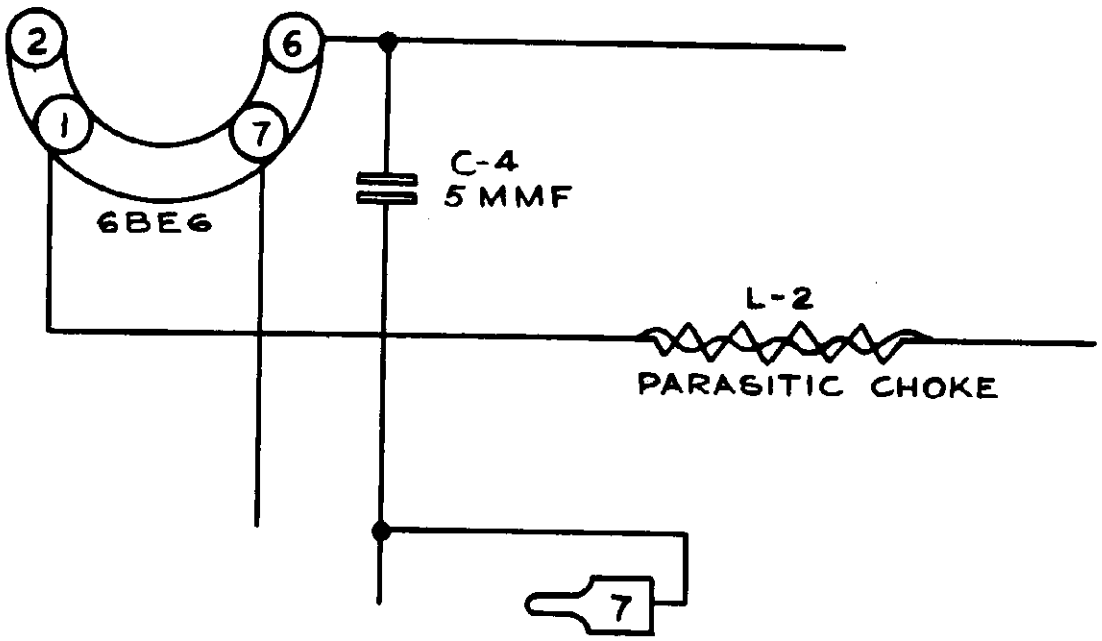

MODEL 84WG-2714C

MONTGOMERY WARD

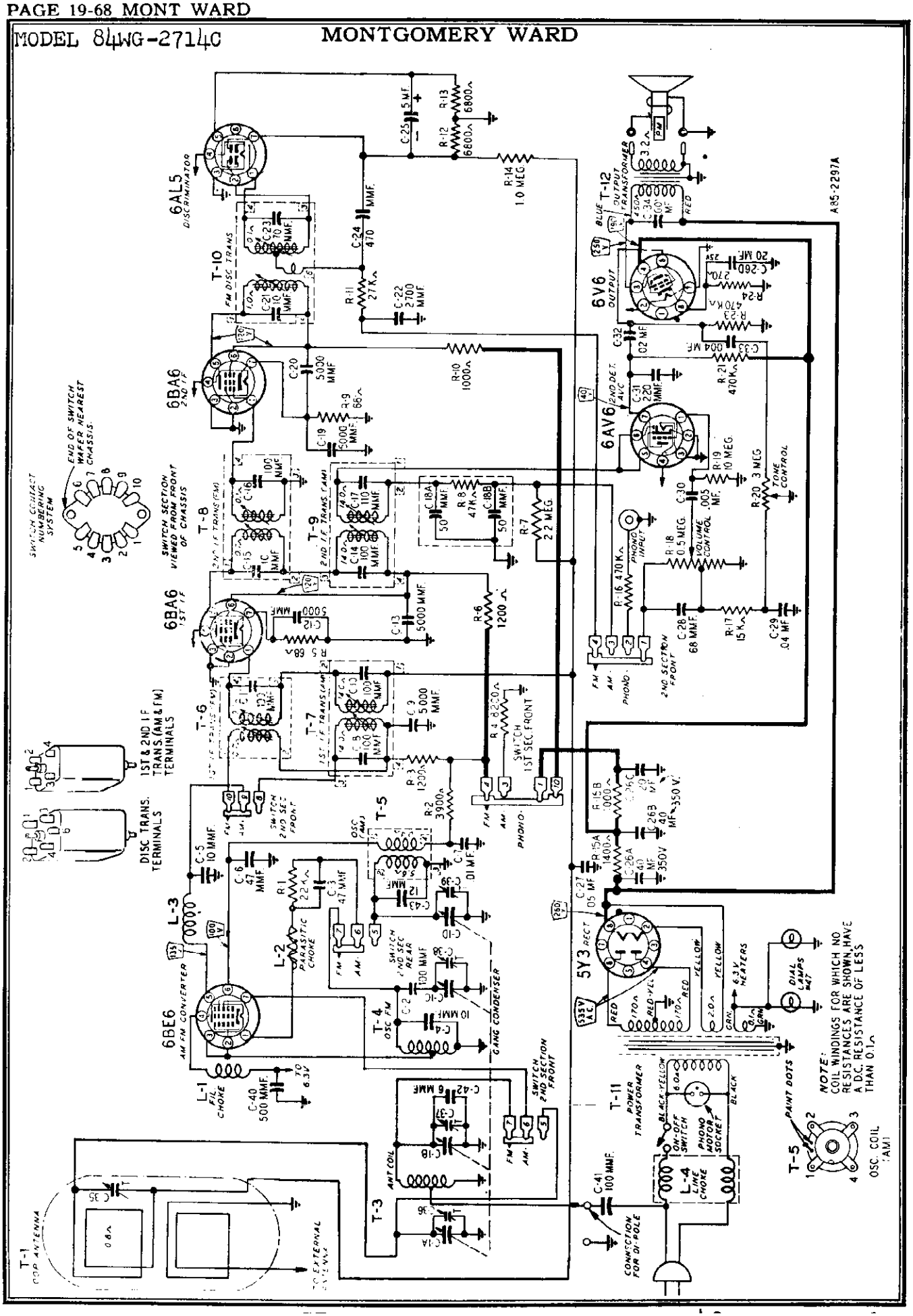

MONTGOMERY WARD

MODELS 84WG-2714D,
84WG-2714E

RECORD CHANGER: Webster Model 148 RCD CH 19-1

MODEL 84WG-2714D MONTGOMERY WARD

Information applicable to Model "E" receivers is the same as Model "D" and this Supplement.

1. The part number and description of condenser C-6 has been changed and should read as follows:

   C-6 47X476 100 mmf Molded Mica 1

2. A 3.6 ohm resistor has been added in series with the hot side of the heater of the 6AL5 discrininator.

   The part number and description is as follows:

   R-25 43X233 3.6 ohm 0.5 W Wirewound 1

3. Schematic diagram change.

   The wires on lugs 1 and 4 of "SWITCH 1st SEC. FRONT" have been interchanged. This change is shown on the partial schematic below.

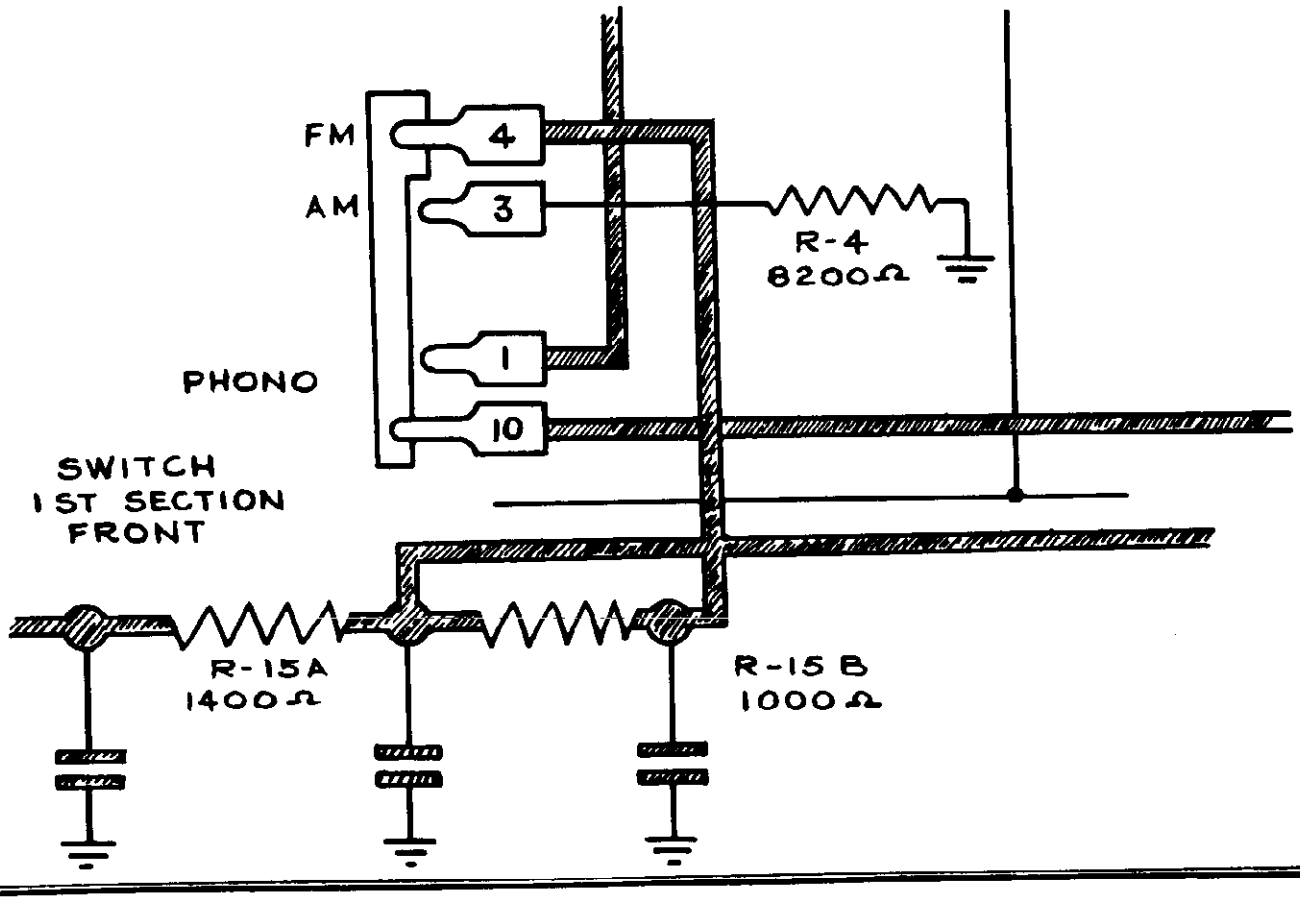

©John F. Rider

MONTGOMERY WARD

MODELS 84WG-2714A, -B, -C, -D, -E

Ref. No.	Part No.	Description	Qty. Used in Set
CAPACITORS			
C-2	47X511	100 mmf Ceramic	1
C-3	47X517	47 mmf Ceramic	1
C-5	47X512	10 mmf Ceramic	1
C-7	D66103	.01 mf 400 V Tubular	1
C-8, C-10		Part of T-7 (1st I.F. Trans.—AM)	
C-11		Part of T-6 (1st I.F. Trans.—FM)	
C-9, C-12, C-13, C-19, C-20	47X507	5000 mmf Silvered Ceramic	5
C-14, C-17		Part of T-9 (2nd I.F. Trans.—AM)	
C-15, C-16		Part of T-8 (2nd I.F. Trans.—FM)	
C-18A, C-18B		50-50 mmf (Part of 76X1 Resistor-Capacitor Combination)	
C-21, C-23		Part of T-10 (Discriminator Trans.)	
C-22	47X492	2700 mmf Molded Mica	1
C-24	47X510	470 mmf Silvered Mica	1
C-25	45X361	5 mf 100 V Dry Electrolytic	1
C-26A	45X359	40 mf 350 V Dry Electrolytic	1
C-26B		40 mf 350 V	
C-26C		20 mf 350 V	
C-26D		20 mf 25 V	
C-27	B66503	.05 mf 200 V Tubular	1
C-28	47X471	68 mmf Molded Mica	1
C-29	B66403	.04 mf 200 V Tubular	1
C-30	D66502	.005 mf 400 V Tubular	1
C-31	47X468	220 mmf Ceramic	1
C-32	D66203	.02 mf 400 V Tubular	1
C-33	B66402	.004 mf 200 V. Tubular	1
C-34	H66102	.001 mf 800 V Tubular	1
C-35	17A235	2-24 mmf Trimmer	1
C-40	47X508	500 mmf Ceramic	1
RESISTORS			
		Ohms / Watts	
R-1	B84223	22 K 0.5 Carbon	1
R-2	B83392	3900 0.5 Carbon	1
R-3, R-6	B84122	1200 0.5 Carbon	2
R-4	D84822	8200 2.0 Carbon	1
R-5, R-9	B83680	68 0.5 Carbon	2
R-7	B85225	2.2 meg. 0.5 Carbon	1
R-8		47 K (Part of 76X1 Resistor-Capacitor Combination)	
R-10	B84102	1000 0.5 Carbon	1
R-11	B84273	27 K 0.5 Carbon	1
R-14	B85105	1 meg. 0.5 Carbon	1
R-15A	43X224	1400 6.0 Wire Wound	1
R-15B		1000 4.0	
R-16, R-21, R-23	B85474	470 K 0.5 Carbon	3
R-17	B84153	15 K 0.5 Carbon	1
R-18	36X372	.5 meg. Volume control and switch	1
R-19	B85106	10 meg. 0.5 Carbon	1
R-20	40X285	3 meg. Tone Control	1
R-24	B84271	270 0.5 Carbon	1
TRANSFORMERS AND COILS			
L-1, L-3	9A1882	Filament Choke	2
L-2	9A1940	Parasitic Choke	1
T-3	9A1956	Antenna Coil Assembly	1
T-4	9A1938	Oscillator Coil (FM)	1
T-5	9A1929	Oscillator Coil Assembly (AM)	1
T-6	9A1932	1st I.F. Transformer (FM)	1
T-7	9A1934	1st I.F. Transformer (AM)	1
T-9	9A1935	2nd I.F. Transformer (AM)	1
T-11	53X290	Power Transformer	1
T-12	51X134	Output Transformer	1
MISCELLANEOUS			
	76X1	Resistor-Capacitor Combination	1
	12A480	10" P.M. Speaker	1
	3A303	Tube Socket—Octal (8 prong) Molded	2
	3A427	Tube Socket—Miniature (for AM-FM Converter Tube)	1
	3A304	Phono Motor Socket	1
	3A305	Phono Socket—Single Pin Tip	1
	2A375	Band Change Switch	1
	13X546	Line Cord and Plug Assembly	1
	10A651	Knob (Tuning) 1" Diameter	1
	10A652	Knob (Volume Control and Switch) 1" Diameter	1
	10A654	Knob (Tone) 1" Diameter	1
	10A655	Knob (Phono BC FM) 1" Diameter	1
	4X999	Escutcheon	1
	19X192	"C" Washer (Mtg. drive shaft)	2
	6X21	Rubber Grommet (Mtg. gang cond.)	3
	20X260	Condenser Cushion Stud (Mtg. gang condenser)	3
	58X702	Dial background	1

©John F. Rider

MODELS 84WG-2714A, -B, -C, -D, -E

MONTGOMERY WARD

Ref. No.	Part No.	Description	Qty. Used in Set
		DIAL AND DRIVE ASSEMBLY	
	58X699	Dial Glass	1
	24X446	Idler Pulley	2
	15X241	Pointer	1
	25X1569	Dial Bracket	1
	7A103	No. 47 Pilot Light Bulb	2
	7A202	Pilot Light Socket Assembly	1
	26X486	Drive Shaft	1
	41X26	Reflector, Dial Light	2
	28X113	Drive Cord Tension Spring	1
		84WG-2714A	
C-6	47X518	100 mmf Ceramic	1
		84WG-2714A,B	
C-1A, C-1B, C-1C, C-1D	14A198	Gang Condenser & Pulley	1
C-4	47X513	5 mmf Ceramic	1
C-36, C-37		Part of C-1 Gang Condenser	
C-38	17A247	3-12 mmf Trimmer	1
T-2	9A1900	Di-Pole Antenna	1
	3A312	Tube Socket—Miniature	4
	10A644	Knob (Tuning) 1⅛" Diameter	1
	10A645	Knob (Volume Control and Switch) 1⅛" Diameter	1
	10A647	Knob (Tone) 1⅛" Diameter	1
	10A648	Knob (Phono—BC—FM) 1⅛" Diam.	1
	32X221	Tube Shield (miniature)	4
	10X69	Drive Cord Assembly	1
		TYPE V-28A139 RECORD CHANGER PARTS	
	V-961-B	Motor Assembly, 60 cycles, 115-120 V.	1
	Shure P30-1	Crystal Cartridge and Semi-Permanent Needle Assembly	1
		Semi-Permanent Needle (Specify part number and letters stamped on crystal)	1
		84WG-2714A,B,C	
R-12, R-13	884682	6800 0.5 Carbon	2
T-1	26A478	"B" Range Loop Antenna Assembly	1
T-8	9A1933	2nd I.F. Transformer (FM)	1
T-10	9A1936	Discriminator Coil Assembly	1

Ref. No.	Part No.	Description	Qty. Used in Set
		84WG-2714B,C,D	
C-6	47X463	47 mmf Ceramic	1
		84WG-2714C	
C-36, C-37, C-39		Part of C-1 Gang Condenser	
		84WG-2714C,D,E	
C-1A, C-1B, C-1C, C-1D	14A204	Gang Condenser & Pulley	1
C-4	47X523	10 mmf Ceramic	1
C-38	26A489	1-8 mmf Trimmer	1
C-41	47X476	100 mmf Molded	1
C-42	47X521	6 mmf Ceramic	1
C-43	47X522	12 mmf Ceramic	1
L-4	9A1930	Line Choke	1
	3A426	Tube Socket—Miniature	4
	10X66	Drive Cord Assembly	1
		TYPE W-28A148 RECORD CHANGER PARTS	
W-15X090-1		Motor Assembly, 60 cycles, 115-120 V	1
W-17X412-11		50 Cycle Drive Sleeve Assembly	1
Shure P30-1		Crystal Cartridge and semi-Permanent Needle Assembly	1
		Semi-Permanent Needle (Specify part numbers and letters stamped on crystal)	1
		84WG-2714D,E	
C-37, C-39		Part of C-1 Gang Condenser	
R-12, R-13	884153	15 K 0.5 Carbon	
L-5	9A1967	Parasitic Choke	1
T-1	9A1972	"B" Range Loop Antenna Assembly	1
T-8	9A1933	2nd I.F. Transformer (FM)	1
T-10	9A1936	Discriminator Coil Assembly	1

©John F. Rider

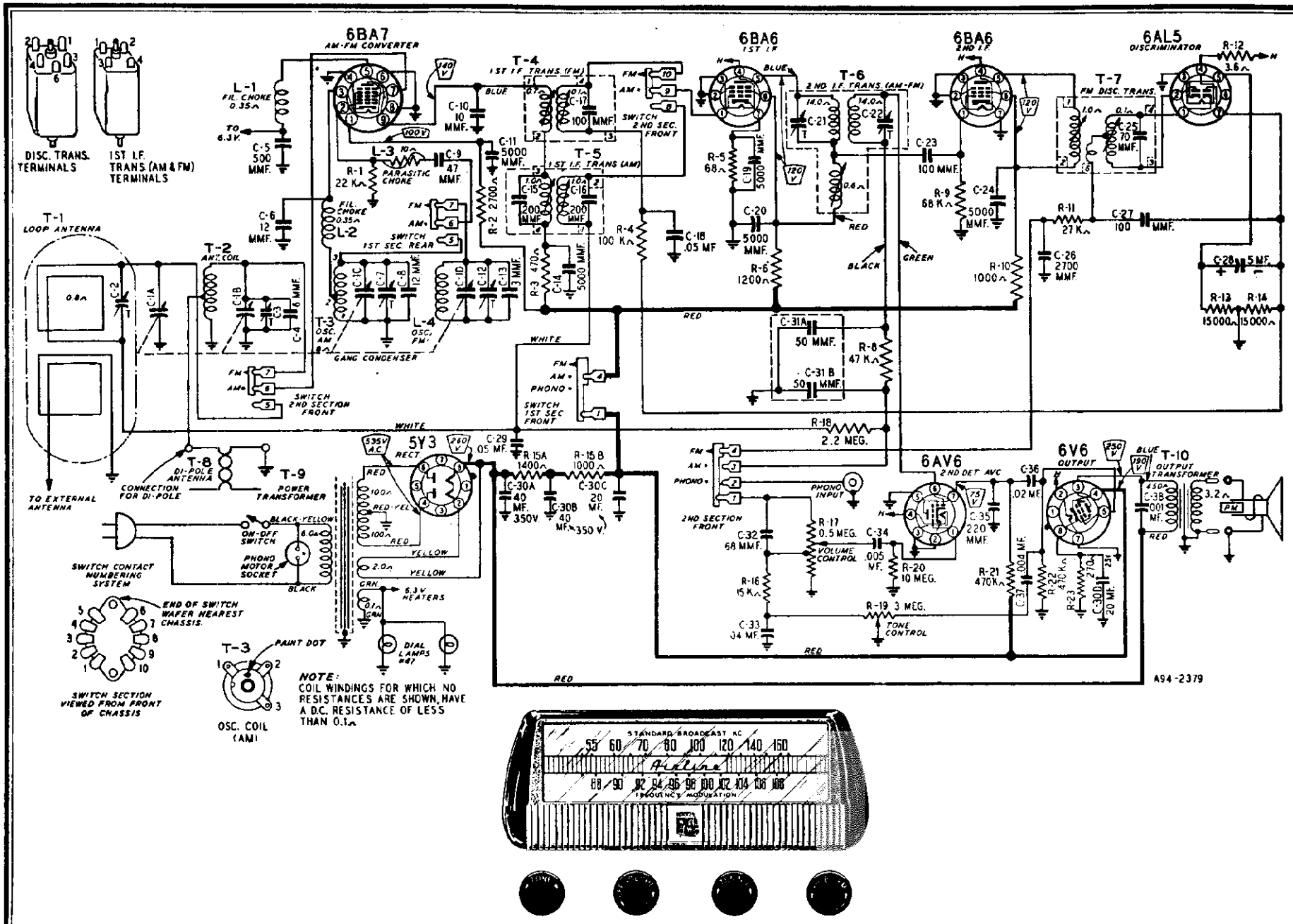
6BA7
AM-FM CONVERTER
6BA6
1ST I.F.
6BA6
2ND I.F.
6AL5
DISCRIMINATOR
6AV6
2ND DET AVC
6V6
OUTPUT
5Y3
RECT
T-1
LOOP ANTENNA
T-2
ANT. COIL
T-3
OSC. AM
GANG CONDENSER
L-4
OSC. FM
T-4
1ST I.F. TRANS. (FM)
T-5
1ST I.F. TRANS. (AM)
T-6
2ND I.F. TRANS. (AM-FM)
T-7
FM DISC. TRANS.
T-8
DI-POLE ANTENNA
T-9
POWER TRANSFORMER
T-10
OUTPUT TRANSFORMER
L-1
FIL. CHOKE 0.35Ω
L-2
FIL. CHOKE 0.35Ω
L-3
PARASITIC CHOKE
SWITCH 1ST SEC. REAR
SWITCH 2ND SEC. FRONT
SWITCH 2ND SECTION FRONT
SWITCH 1ST SEC FRONT
DISC. TRANS. TERMINALS
1ST I.F. TRANS. (AM & FM) TERMINALS
TO EXTERNAL ANTENNA
CONNECTION FOR DI-POLE
ON-OFF SWITCH
PHONO MOTOR SOCKET
SWITCH CONTACT NUMBERING SYSTEM
END OF SWITCH WAFER NEAREST CHASSIS
SWITCH SECTION VIEWED FROM FRONT OF CHASSIS
PAINT DOT
OSC. COIL (AM)
PHONO INPUT
VOLUME CONTROL
TONE CONTROL
6.3 V. HEATERS
DIAL LAMPS #47
R-1 22 K
R-2 2700
R-3 470
R-4 100 K
R-5 68
R-6 1200
R-8 47 K
R-9 68 K
R-10 1000
R-11 27 K
R-12 3.6
R-13 15000
R-14 15000
R-15A 1400
R-15B 1000
R-16 15 K
R-17 0.5 MEG.
R-18 2.2 MEG.
R-19 3 MEG.
R-20 10 MEG.
R-21 470K
R-22 470K
R-23 270
C-5 500 MMF.
C-6 12 MMF.
C-9 47 MMF.
C-10 10 MMF.
C-11 5000 MMF.
C-16 200 MMF.
C-17 100 MMF.
C-18 .05 MF
C-19 5000 MMF.
C-20 5000 MMF.
C-23 100 MMF.
C-24 5000 MMF.
C-25 10 MMF.
C-26 2700 MMF.
C-27 100 MMF.
C-28 5 MF.
C-29 .05 MF.
C-30A 40 MF. 350V.
C-30B 40 MF. 350 V.
C-30C 20 MF.
C-31A 50 MMF.
C-31B 50 MMF.
C-32 68 MMF.
C-33 .04 MF.
C-34 .005 MF.
C-35 220 MMF.
C-36 .02 MF.
C-37 .004 MF.
C-38A 20 MF.
C-38B .001 MF.
C-38D 20 MF.
RED
BLUE
GREEN
BLACK
WHITE
YELLOW
GRN
BLACK-YELLOW
RED-YEL
NOTE:
COIL WINDINGS FOR WHICH NO RESISTANCES ARE SHOWN, HAVE A D.C. RESISTANCE OF LESS THAN 0.1Ω
A94-2379

STANDARD BROADCAST KC
55 60 70 80 100 120 140 160
Airline
88 90 92 94 96 98 100 102 104 106 108
FREQUENCY MODULATION

MODEL 8WG-2714F

MONTGOMERY WARD

ALIGNMENT PROCEDURES
AM STAGES

The following is required for aligning:
An All Wave Signal Generator Which Will Provide an Accurately Calibrated Signal at the Test Frequencies as Listed.
Output Indicating Meter, Non-Metallic Screwdriver, Dummy Antennas — .1 mf, and 50mmf.
Volume Control Maximum all Adjustments.
Connect Radio Chassis to Ground Post of Signal Generator with a Short Heavy Lead.
Allow Chassis and Signal Generator to "Heat Up" for Several Minutes.

SIGNAL GENERATOR						
FREQUENCY SETTING	CONNECT GENERATOR OUTPUT TO	THROUGH DUMMY ANTENNA	CONNECT GROUND TO	GANG CONDENSER SETTING	ADJUST	ADJUST FOR
455 KC	Control Grid 1st 6BA6 Pin No. 1	.1 mf	Chassis Base	Rotor Fully Open	2nd I.F. C-21 and C-22	Maximum Output
455 KC	Control Grid 6BA7 Pin No. 7 1st Det.	.1 mf	Chassis Base	Rotor Fully Open	1st I.F. Pri. and Sec. (7) and (8)	Maximum Output
1620 KC	Control Grid 6BA7 Pin No. 7	.1 mf	Chassis Base	Rotor Fully Open	Oscillator C-7	Maximum Output
1400 KC	External Antenna Lead	50 mmf	Chassis Base	Turn Rotor to Max. Output. Set Pointer to 1400 KC See Note A	Antenna C-2	Maximum Output

NOTE A—If the pointer is not at 1400 KC on the dial, reset pointer to the 1400 KC mark on the dial scale.

FM STAGES

The following is required for aligning:
An accurately calibrated signal generator providing unmodulated signals at the test frequencies listed below.
Non-metallic screwdriver.
Dummy Antennas and I-F Loading Resistor—2500 mmf 300 ohms and 100K ohms
Zero center scale DC vacuum tube voltmeter having a range of approximately 3 volts.
(If a zero center scale meter is not available, a standard scale vacuum tube voltmeter may be used by reversing the meter connections for negative readings).
Allow chassis and signal generator to "Heat Up" for several minutes.

	SIGNAL GENERATOR						
	FREQUENCY SETTING	CONNECT GENERATOR OUTPUT TO	THROUGH DUMMY ANTENNA	BAND SWITCH SETTING	GANG CONDENSER SETTING	ADJUST	ADJUST FOR
Discriminator	10.7 MC	6BA6 2nd I-F Pin 1 and Chassis	2500 mmf	FM	Rotor Fully Open	Disc. Pri. (1) Note A	Maximum Deflection
	10.7 MC	6BA6 2nd I-F Pin 1 and Chassis	2500 mmf	FM	Rotor Fully Open	Disc. Sec. (2) Note B	
	10.7 MC	6BA6 2nd I-F Pin 1 and Chassis	2500 mmf	FM	Rotor Fully Open	Disc. Pri. (1) Note A	Maximum Deflection
	10.7 MC	6BA6 2nd I-F Pin 1 and Chassis	2500 mmf	FM	Rotor Fully Open	Disc. Sec. (2) Note B	
I-F	10.7 MC Note E	6BA6 1st I-F Pin 1 and Chassis	2500 mmf	FM	Rotor Fully Open	2nd I-F (3) Note C	Maximum Deflection
	10.7 MC	Unsolder lead from Pin 7 to band switch. Insert 100K ohm resistor between Pin 7 and Ground and feed signal into Pin 7 of 6BA7.	2500 mmf	FM	Rotor Fully Open	1st I-F Pri. (5) Note C	Maximum Deflection
	10.7 MC	Same as above	2500 mmf	FM	Rotor Fully Open	1st I-F Sec. (6) Note C	Maximum Deflection
RECHECK I-F ADJUSTMENTS IN ORDER GIVEN							
Ant. and Osc.	108.5 Note D	Disconnect built-in dipole antenna and connect generator to dipole terminals with resistor in series	300 ohms	FM	Rotor Fully Open	Osc. C-12	Maximum Deflection
	104.5	Same as above	300 ohms	FM	Tune rotor for max. AVC voltage	Ant. C-3	Maximum Deflection
RECHECK ANTENNA & OSC. ADJUSTMENTS IN ORDER GIVEN							

FM ALIGNMENT NOTES

NOTE A—The zero center scale DC vacuum tube voltmeter is to be connected between chassis ground and the AVC line. A signal of .1 volt must be fed into the receiver for this adjustment.
Note output voltage on the zero center DC vacuum tube voltmeter

NOTE B—Disconnect zero center DC vacuum tube voltmeter from AVC and connect it at the audio takeoff point at the 27 K ohm resistor (R-11) and its junction with the terminal strip. Adjust for zero voltage indication.

NOTE C—Connect zero center DC vacuum tube voltmeter as in Note A. Adjust input to give same output on the zero center DC vacuum tube voltmeter as in Note A.

NOTE D—Remove the 100 K. ohm load resistor and solder the lead from pin 7 of 6BA7 tube to the band switch before attempting to check the antenna and oscillator adjustments.

NOTE E—2nd I F trimmers (AM) must be aligned before attempting to adjust 2nd I-F (FM) tuning slug.

RECEIVER STAGE SENSITIVITIES

AM AND AUDIO STAGES

The table below lists the sensitivity at the input of each stage. The receiver should be tuned to 1000 KC for all readings. All measurements are based on an output of .5 watt. This may be measured by disconnecting the speaker voice coil and substituting a 3.2 ohm, 5 watt resistor across the secondary winding of the output transformer. A reading of 1.26 volts across this resistor will be equivalent to a .5 watt output.

The volume control must be set to maximum.

The signal source must be an accurately calibrated signal generator capable of supplying both 1000 KC and 455 KC signals modulated 30% with a 400 cycle audio signal. Variations in sensitivity of Plus or Minus 25% are usually permissible.

SIGNAL GENERATOR				INPUT FOR .5 WATT OUTPUT
FREQUENCY	COUPLING CAPACITOR	CONNECTION TO RECEIVER	GROUND CONNECTION	
1000 KC	200 mmf or RMA Dummy Antenna	External Antenna Lead	Chassis	10 Microvolts
1000 KC	.01 mf	6BA7 Converter Pin 7	Chassis	40 Microvolts
455 KC	.01 mf	6BA7 Converter Pin 7	Chassis	35 Microvolts
455 KC	.01 mf	6BA6 1st I-F Pin 1	Chassis	2000 Microvolts
400 cycles	.01 mf	6AV6 1st A-F Pin 1	Chassis	.07 Volt
400 cycles	.01 mf	6V6GT Output Pin 5	Chassis	3.2 Volts

FM STAGES

The table below lists the sensitivity for the FM stages of the receiver. The receiver must be tuned to 98 MC for all readings. Measurements are based on a .5 watt output the same as for the AM and Audio stage measurements.

The signal source must be an accurately calibrated signal generator capable of supplying a 98 MC signal modulated by a 400 cycle audio signal. For these measurements the generator must be adjusted for a 22.5 KC deviation. This will correspond to 30% AM modulation.

SIGNAL GENERATOR				INPUT FOR .5 WATT OUTPUT
FREQUENCY	COUPLING TO RECEIVER	CONNECTION TO RECEIVER	GROUND CONNECTION	
98 MC	300 ohms	External Antenna Terminal	Chassis	100 Microvolts
10.7 MC	.01 mf	6BA6 1st I-F Pin 1	Chassis	600 Microvolts
10.7 MC	2500 mmf	6BA6 2nd I-F Pin 1	Chassis	23,000 Microvolts

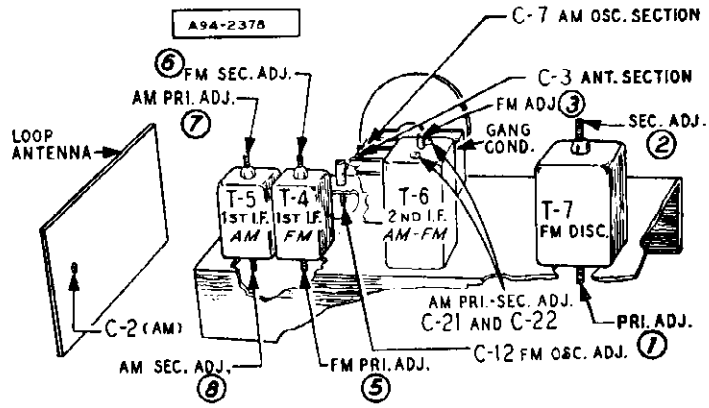

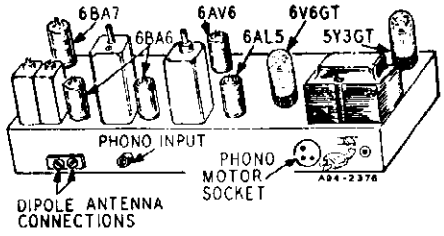

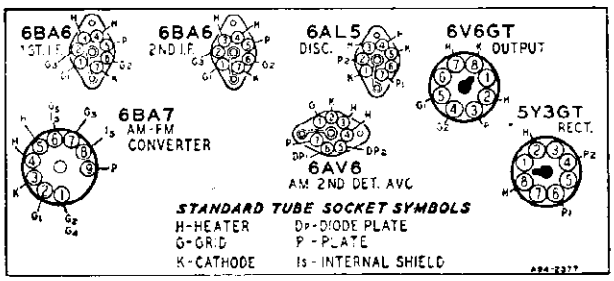

TUBE SOCKET VOLTAGES

Socket voltages are shown on the schematic diagram at the tube socket terminals. All voltages are between the socket terminal and chassis ground. Plate, screen and cathode voltages were taken with a 1000 ohm-per-volt meter with a 300 volt scale used for plate and screen voltages. Audio grid voltages were read with a vacuum tube volt-meter. Conditions of measurement are:

Line voltage.....117 Volts AC
Signal Input.....None

A variation of ±10% is usually permissible.

MODEL 84WG-2714F

MONTGOMERY WARD

CAPACITORS

Ref. No.	Part No.	Description	Qty. Used in Set
C-1A, C-1B, C-1C, C-1D	14A204	Gang Condenser Assembly	1
C-2	17A235	2-24 mmf Trimmer	1
C-3, C-7		Part of Gang Condenser	
C-4	47X521	6 mmf Ceramic	1
C-5	47X508	500 mmf Ceramic	1
C-6, C-8	47X522	12 mmf Ceramic	2
C-9	47X517	47 mmf Ceramic	1
C-10	47X512	10 mmf Ceramic	1
C-11, C-14, C-19, C-20, C-24	47X507	5000 mmf Silvered Ceramic	5
C-12	17A255	1-8 mmf Trimmer	1
C-13	47X547	3 mmf Ceramic	1
C-15, C-16		Part of T-5 (1st I.F. Trans.—AM)	
C-17		Part of T-4 (1st I.F. Trans.—FM)	
C-18, C-29	B66503	.05 mf 200 V Tubular	2
C-21, C-22		Part of T-6 (2nd I.F. Trans.—AM-FM)	
C-23	47X497	100 mmf Ceramic	1
C-25		Part of T-7 (Discriminator Trans.)	
C-26	47X492	2700 mmf Molded Mica	1
C-27	47X526	100 mmf Molded Mica	1
C-28	45X361	5 mf 100 V Dry Electrolytic	1
C-30A	45X359	40 mf 350 V	
C-30B		40 mf 350 V	
C-30C		20 mf 350 V	
C-30D		20 mf 25 V Dry Electrolytic	1
C-31A, C-31B	47X112	50-50 mmf Dual Mica	1
C-32	47X471	68 mmf Molded Mica	1
C-33	B66403	.04 mf 200 V Tubular	1
C-34	D66502	.005 mf 400 V Tubular	1
C-35	47X468	220 mmf Ceramic	1
C-36	D66203	.02 mf 400 V Tubular	1
C-37	B66402	.004 mf 200 V Tubular	1
C-38	H66102	.001 mf 800 V Tubular	1

RESISTORS

Ref. No.	Part No.	Ohms	Watts		Qty. Used in Set
R-1	B84223	22 K	0.5	Carbon	1
R-2	B83272	2700	0.5	Carbon	1
R-3	B84471	470	0.5	Carbon	1
R-4	B85104	100 K	0.5	Carbon	1
R-5	B83680	68	0.5	Carbon	1
R-6	B84122	1200	0.5	Carbon	1
R-8	B85473	47 K	0.5	Carbon	1
R-9	B85683	68 K	0.5	Carbon	1
R-10	B84102	1000	0.5	Carbon	1
R-11	B84273	27 K	0.5	Carbon	1
R-12	43X233	3.6	0.5	Wire Wound	1
R-13, R-14	B84153	15 K	0.5	Carbon	2
R-15A	43X224	1400	6.0	Wire Wound	1
R-15B		1000	4.0		
R-16	B84153	15 K	0.5	Carbon	1
R-17	36X372	.5 meg.		Volume Control	1
R-18	B85225	2.2 meg.	0.5	Carbon	1
R-19	40X285	3 meg.		Tone Control	1
R-20	B85106	10 meg.	0.5	Carbon	1
R-21, R-22	B85474	470 K	0.5	Carbon	2
R-23	B84271	270	0.5	Carbon	1

TRANSFORMERS AND COILS

Ref. No.	Part No.	Description	Qty. Used in Set
L-1, L-2	9A1882	Filament Choke Assembly	2
L-3	9A1940	Parasitic Choke Assembly	1
L-4	9A2021	Oscillator Coil Assembly (FM)	1
T-1	9A1972	"B" Range Loop Antenna Assem.	1
T-2	9A1956	Antenna Coil Assembly	1
T-3	9A1997	Oscillator Coil Assembly (AM)	1
T-4	9A1932	1st I.F. Trans. (FM)	1
T-5	9A1998	1st I.F. Trans. (AM)	1
T-6	9A1999	2nd I.F. Trans. (AM-FM)	1
T-7	9A1970	Discriminator Coil Assembly	1
T-8	9A2004	Dipole Antenna	1
T-9	53X290	Power Transformer	1
T-10	51X134	Output Transformer	1

©John F. Rider

MONTGOMERY WARD

MODEL 84WG-2714F

ELECTRICAL SPECIFICATIONS

Power Supply	105-125 volts AC 60 cycles, 60 watts. 80 watts with record changer
Frequency Ranges	Broadcast 540-1600 KC Frequency Modulation 88-108 MC
Intermediate Frequency	AM—455KC FM—10.7 MC
Selectivity	AM—45 KC broad at 1000 times signal, measured at 1000 KC I.F. FM—200 KC broad at 2 times down I.F. FM—950 KC broad at 200 times down
AM Sensitivity	(For .5 watt output with external antenna) 10 microvolts average
FM Sensitivity	(For .5 watt output) 100 microvolts average
Power Output	4.5 watts maximum 2.5 watts 10% distortion
Loud Speaker	10" PM Dynamic
Voice Coil Impedance	3.2 ohms 400 cycles
Record Changer	See Manual No. 5050A
Tube and Dial Lamp Complement	1 6BA7 FM-AM Converter 1 6BA6 1st I-F Amplifier 1 6BA6 2nd I-F Amplifier 1 6AL5 FM Discriminator 1 6AV6 Audio Amplifier, AM 2nd Detector and AVC 1 6V6GT Audio Output 1 5Y3GT Rectifier 2 No. 47 Dial Lamps

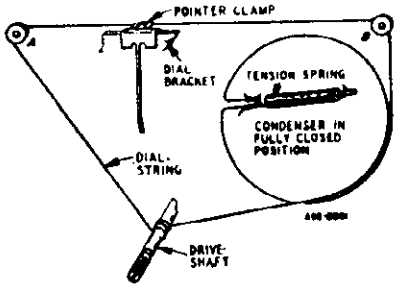

DRIVE CORD REPLACEMENT

DIAL POINTER CORD

Use a new 10X66 drive cord assembly or a new length of cord 46 inches long for the installation. Install the cord as shown in the illustration, winding three turns clockwise around the drive shaft with the turns progressing away from the chassis. After completing the installation rotate the drive shaft a few turns to take up the slack in the cord.

Ref. No.	Part No.	Description	Qty. Used in Set
		MISCELLANEOUS	
	12A480	10" P.M. Speaker	1
	3A303	Tube Socket—Octal (8 prong) Molded	2
	3A426	Tube Socket—Miniature	4
	3A443	Tube Socket—Miniature (for AM-M Converter Tube)	1
	3A304	Phono Motor Socket	1
	3A305	Phono Socket—Single Pin Tip	1
	2A384	Band Change Switch	1
	13X546	Line Cord and Plug Assembly	1
	10A651	Knob (Tuning)	1
	10A652	Knob (Volume Control & Switch)	1
	10A654	Knob (Tone)	1
	10A655	Knob (Phono—BC—FM)	1
	4X999	Escutcheon	1

Ref. No.	Part No.	Description	Qty. Used in Set
		DIAL AND DRIVE ASSEMBLY	
	58X715	Dial Glass	1
	24X446	Idler Pulley	2
	15X241	Pointer	1
	25X1569	Dial Bracket	1
	7A103	No. 47 Pilot Light Bulb	2
	7A202	Pilot Light Socket Assembly	1
	26X486	Drive Shaft	1
	41X26	Reflector, Dial Light	2
	28X113	Drive Cord Tension Spring	1
	10X66	Drive Cord Assembly	1
	19X192	"C" Washer (Mtg. drive shaft)	2
	6X21	Rubber Grommet (Mtg. gang cond.)	3
	20X260	Condenser Cushion Stud (Mtg. gang condenser)	3

TYPE V-28A139 RECORD CHANGER PARTS

V-961-B	Motor Assembly, 60 cycles, 115-120 V	1
Shure P30-1	Crystal Cartridge and Semi-Permanent Needle Assembly	1
	Semi-Permanent Needle	1
	(Specify part number and letters stamped on crystal)	

MODEL 84WG-2714G MONTGOMERY WARD

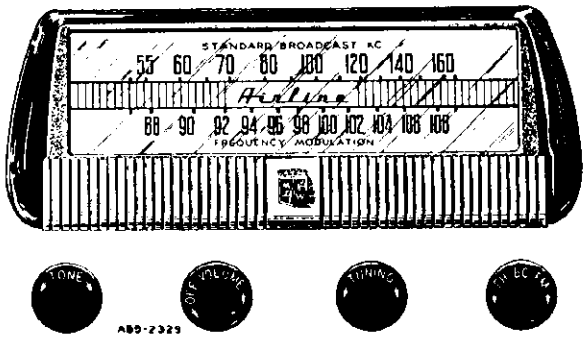

GENERAL DESCRIPTION

This is a two band, six tube (plus rectifier tube) receiver with automatic record changer for the reception of both AM and FM stations. The I-F stages use the latest type high gain miniature type tubes and built-in Air Wave Aerials are provided for the FM and Broadcast bands. Features include, compensator circuits to prevent oscillator drift, automatic volume control, beam power output stage, PM dynamic loud speaker and an electrostatic shield in the power transformer to reduce power line noise.

The receiver and record changer are housed in a console combination cabinet with controls provided for tuning, volume, tone and band or phono selection.

ELECTRICAL SPECIFICATIONS

Power Supply	105-125 volts AC 60 cycles, 60 watts. 80 watts with record changer
Frequency Ranges	Broadcast 540-1600 KC Frequency Modulation 88-108 MC
Intermediate Frequency	AM—455KC FM—10.7 MC
Selectivity	AM—45 KC broad at 1000 times signal, measured at 1000 KC I.F. FM—200 KC broad at 2 times down I.F. FM—950 KC broad at 200 times down
AM Sensitivity	(For .5 watt output with external antenna) 10 microvolts average
FM Sensitivity	(For .5 watt output) 100 microvolts average
Power Output	4.5 watts maximum 2.5 watts 10% distortion
Loud Speaker	10" PM Dynamic
Voice Coil Impedance	3.2 ohms 400 cycles
Record Changer	See Manual No. 5050A
Tube and Dial Lamp Complement	1 6BA7 FM-AM Converter 1 6BA6 1st I-F Amplifier 1 6BA6 2nd I-F Amplifier 1 6AL5 FM Discriminator 1 6AV6 Audio Amplifier, AM 2nd Detector and AVC 1 6V6GT Audio Output 1 5Y3GT Rectifier 2 No. 47 Dial Lamps

DRIVE CORD REPLACEMENT

DIAL POINTER CORD

Use a new 10X66 drive cord assembly or a new length of cord 46 inches long for the installation. Install the cord as shown in the illustration, winding three turns clockwise around the drive shaft with the turns progressing away from the chassis. After completing the installation rotate the drive shaft a few turns to take up the slack in the cord.

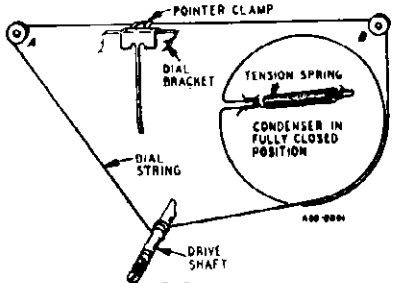

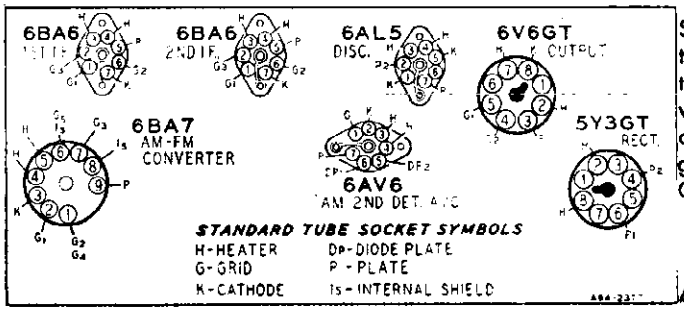

TUBE SOCKET VOLTAGES

Socket voltages are shown on the schematic diagram at the tube socket terminals. All voltages are between the socket terminal and chassis ground. Plate, screen and cathode voltages were taken with a 1000 ohm-per-volt meter with a 300 volt scale used for plate and screen voltages. Audio grid voltages were read with a vacuum tube volt-meter. Conditions of measurement are:

Line voltage.....117 Volts AC
Signal Input.....None

A variation of ±10% is usually permissible.

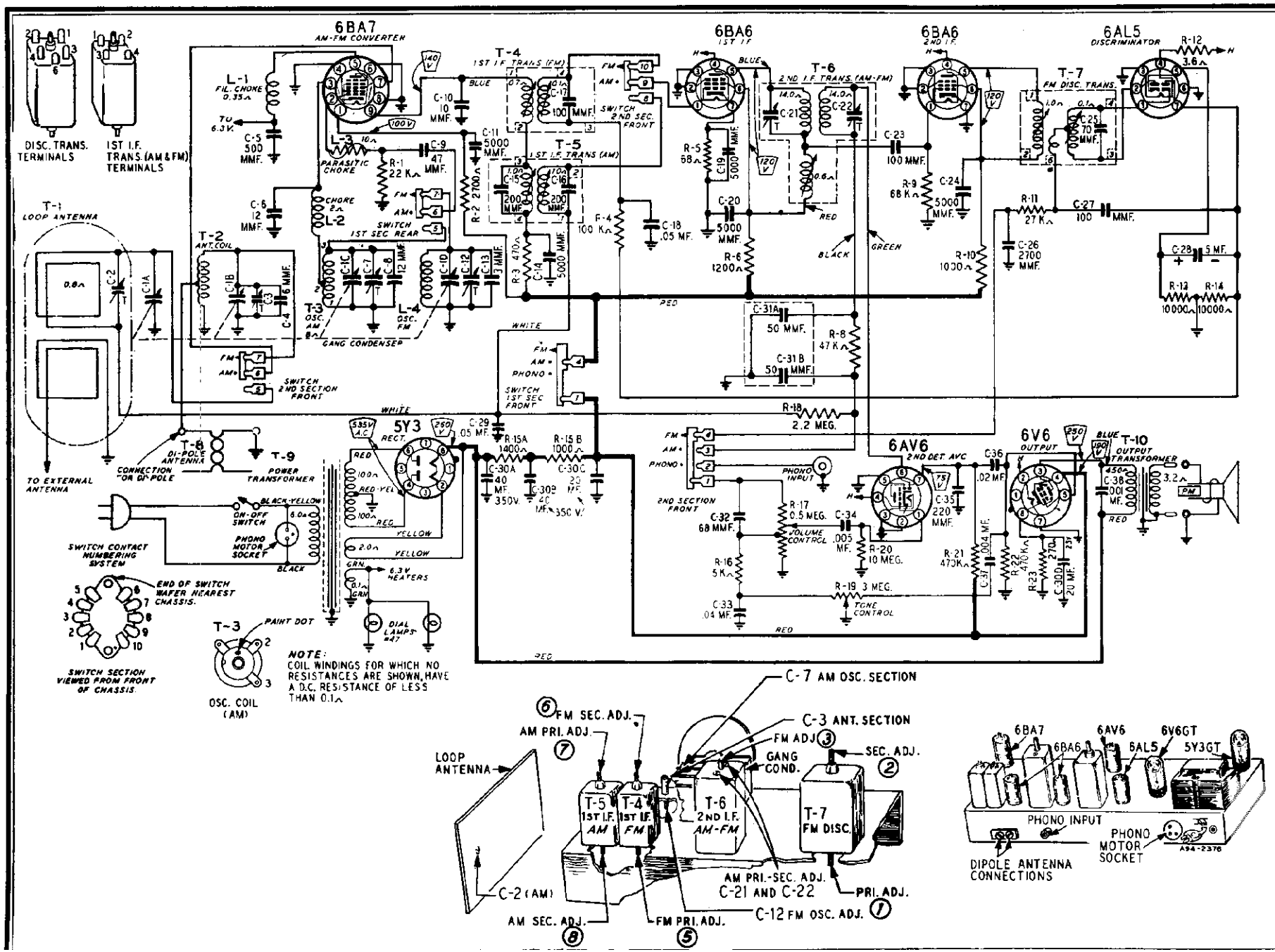
6BA7
AM-FM CONVERTER
6BA6
1ST I.F.
6BA6
2ND I.F.
6AL5
DISCRIMINATOR
DISC. TRANS. TERMINALS
1ST I.F. TRANS. (AM & FM) TERMINALS
T-1 LOOP ANTENNA
T-2 ANT. COIL
T-3 OSC. AM
T-4 1ST I.F. TRANS. (FM)
T-5 1ST I.F. TRANS. (AM)
T-6 2ND I.F. TRANS. (AM-FM)
T-7 FM DISC. TRANS.
T-8 DI-POLE ANTENNA
T-9 POWER TRANSFORMER
T-10 OUTPUT TRANSFORMER
L-1 FIL. CHOKE 0.35Ω
L-2 CHOKE 2Ω
L-3 PARASITIC CHOKE 10Ω
L-4 OSC. FM
GANG CONDENSER
SWITCH 1ST SEC REAR
SWITCH 2ND SECTION FRONT
SWITCH 1ST SEC FRONT
5Y3 RECT.
6AV6 2ND DET. AVC
6V6 OUTPUT
TO EXTERNAL ANTENNA
CONNECTION FOR DI-POLE
ON-OFF SWITCH
PHONO MOTOR SOCKET
SWITCH CONTACT NUMBERING SYSTEM
SWITCH SECTION VIEWED FROM FRONT OF CHASSIS
END OF SWITCH WAFER NEAREST CHASSIS
PAINT DOT
OSC. COIL (AM)
6.3V HEATERS
DIAL LAMPS #47
PHONO INPUT
VOLUME CONTROL
TONE CONTROL
2ND SECTION FRONT
NOTE: COIL WINDINGS FOR WHICH NO RESISTANCES ARE SHOWN, HAVE A D.C. RESISTANCE OF LESS THAN 0.1Ω
C-7 AM OSC. SECTION
C-3 ANT. SECTION
FM SEC. ADJ. 6
AM PRI. ADJ. 7
FM ADJ 3
SEC. ADJ. 2
GANG COND.
LOOP ANTENNA
C-2 (AM)
AM SEC. ADJ. 8
FM PRI. ADJ. 5
C-12 FM OSC. ADJ. 1
AM PRI.-SEC. ADJ. C-21 AND C-22
PRI. ADJ.
T-5 1ST I.F. AM
T-4 1ST I.F. FM
T-6 2ND I.F. AM-FM
T-7 FM DISC.
6BA7
6BA6
6AV6
6AL5
6V6GT
5Y3GT
PHONO INPUT
PHONO MOTOR SOCKET
DIPOLE ANTENNA CONNECTIONS
A94-2376

MODEL 84WG-2714G MONTGOMERY WARD

A choke has been added to the circuit to eliminate parasitic oscillation on the FM Band.

PARTS LIST ADDITION

Ref. No.	Part No.	Description	Qty. Used
L-5	9A1967	Parasitic Choke	1

The circuit connection of L-5 is shown in the partial schematic below:

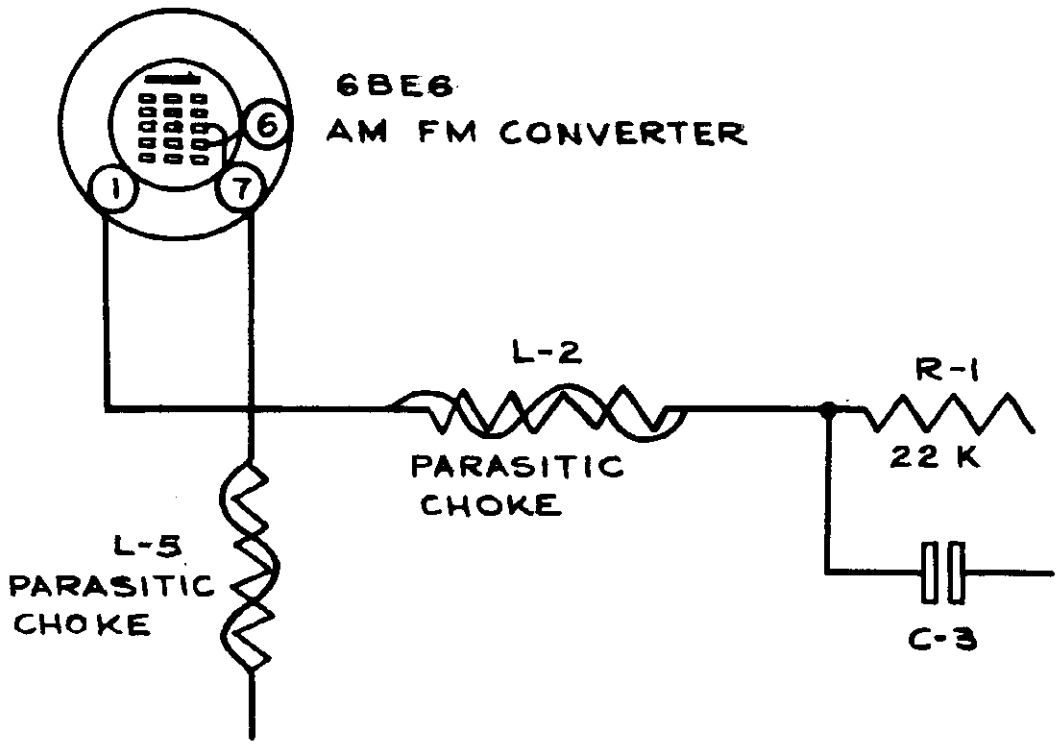

©John F. Rider

MONTGOMERY WARD MODEL 84WG-2714G

ALIGNMENT PROCEDURES

AM STAGES

SIGNAL GENERATOR						
FREQUENCY SETTING	CONNECT GENERATOR OUTPUT TO	THROUGH DUMMY ANTENNA	CONNECT GROUND TO	GANG CONDENSER SETTING	ADJUST	ADJUST FOR
455 KC	Control Grid 1st 6BA6 Pin No. 1	.1 mf	Chassis Base	Rotor Fully Open	2nd I.F. C-21 and C-22	Maximum Output
455 KC	Control Grid 6BA7 Pin No. 7 1st Det.	.1 mf	Chassis Base	Rotor Fully Open	1st I.F. Pri. and Sec. (7) and (8)	Maximum Output
1620 KC	Control Grid 6BA7 Pin No. 7	.1 mf	Chassis Base	Rotor Fully Open	Oscillator C-7	Maximum Output
1400 KC	External Antenna Lead	50 mmf	Chassis Base	Turn Rotor to Max. Output. Set Pointer to 1400 KC See Note A	Antenna C-2	Maximum Output

NOTE A—If the pointer is not at 1400 KC on the dial, reset pointer to the 1400 KC mark on the dial scale.

FM STAGES

The following is required for aligning:

An accurately calibrated signal generator providing unmodulated signals at the test frequencies listed below.

Non-metallic screwdriver.

Dummy Antennas and I-F Loading Resistor—2500 mmf, 300 ohms and a 3300 ohm .5 watt resistor with short leads.

Zero center scale DC vacuum tube voltmeter having a range of approximately 3 volts.

(If a zero center scale meter is not available, a standard scale vacuum tube voltmeter may be used by reversing the meter connections for negative readings).

Allow chassis and signal generator to "Heat Up" for several minutes.

	SIGNAL GENERATOR						
	FREQUENCY SETTING	CONNECT GENERATOR OUTPUT TO	THROUGH DUMMY ANTENNA	BAND SWITCH SETTING	GANG CONDENSER SETTING	ADJUST	ADJUST FOR
Discriminator	10.7 MC	6BA6 2nd I-F Pin 1 and Chassis	2500 mmf	FM	Rotor Fully Open	Disc. Pri. (1) Note A	Maximum Deflection
	10.7 MC	6BA6 2nd I-F Pin 1 and Chassis	2500 mmf	FM	Rotor Fully Open	Disc. Sec. (2) Note B	
	10.7 MC	6BA6 2nd I-F Pin 1 and Chassis	2500 mmf	FM	Rotor Fully Open	Disc. Pri. (1) Note A	Maximum Deflection
	10.7 MC	6BA6 2nd I-F Pin 1 and Chassis	2500 mmf	FM	Rotor Fully Open	Disc. Sec. (2) Note B	
I-F	10.7 MC Note E	6BA6 1st I-F Pin 1 and Chassis	2500 mmf	FM	Rotor Fully Open	2nd I-F (3) Note C	Maximum Deflection
Discriminator	10.7 MC	6BA6 2nd I-F Pin 1 and Chassis	2500 mmf	FM	Rotor Fully Open	Disc. Pri. (1) Note A	Maximum Deflection
I-F	10.7 MC	Antenna and Chassis	2500 mmf	FM	Rotor Fully Open	1st. I-F Pri. and Sec. (5) and (6) Note C	Maximum Deflection
	10.7 MC	Antenna and Chassis Solder a 3300 ohm resistor across terminals 3 and 4 of 1st. I-F trans.	2500 mmf	FM	Rotor Fully Open	1st. I-F Pri. (5) Note C	Maximum Deflection
	10.7 MC	Antenna and Chassis Note D	2500 mmf	FM	Rotor Fully Open	1st. I-F Sec. (6) Note C	Maximum Deflection
RECHECK I-F ADJUSTMENTS IN ORDER GIVEN							
Oscillator	108.4 Note F	Disconnect built-in dipole antenna and connect generator to dipole terminals with resistor in series	300 ohms	FM	Rotor Fully Open	Osc. C-12	Maximum Deflection
Antenna	104.5	Same as above	300 ohms	FM	Tune rotor for max. AVC voltage	Ant. C-3	Maximum Deflection

RECHECK ANTENNA & OSC. ADJUSTMENTS IN ORDER GIVEN

FM ALIGNMENT NOTES

NOTE A—The zero center scale DC vacuum tube voltmeter is to be connected between chassis ground and the AVC line. A signal of .1 volt must be fed into the receiver for this adjustment.
Note output voltage on the zero center DC vacuum tube voltmeter

NOTE B—Disconnect zero center DC vacuum tube voltmeter from AVC and connect it at the audio takeoff point at the 27 K ohm resistor (R-11) and its junction with the terminal strip. Adjust for zero voltage indication.

NOTE C—Connect zero center DC vacuum tube voltmeter as in Note A. Adjust input to give same output on the zero center DC vacuum tube voltmeter as in Note A.

NOTE D—Unsolder 3300 ohm resistor from terminals 3 and 4 of 1st I-F transformer and resolder across terminals 1 and 2.

NOTE E—2nd I-F trimmers (AM) must be aligned before attempting to adjust 2nd I-F (FM) tuning slug.

NOTE F—Remove the 3300 ohm load resistor before attempting to check the antenna and oscillator adjustments.

MODEL 84WG-2714G MONTGOMERY WARD

RECEIVER STAGE SENSITIVITIES

AM AND AUDIO STAGES

The table below lists the sensitivity at the input of each stage. The receiver should be tuned to 1000 KC for all readings. All measurements are based on an output of .5 watt. This may be measured by disconnecting the speaker voice coil and substituting a 3.2 ohm, 5 watt resistor across the secondary winding of the output transformer. A reading of 1.26 volts across this resistor will be equivalent to a .5 watt output. The volume control must be set to maximum.

The signal source must be an accurately calibrated signal generator capable of supplying both 1000 KC and 455 KC signals modulated 30% with a 400 cycle audio signal. Variations in sensitivity of Plus or Minus 25% are usually permissible.

SIGNAL GENERATOR				
FREQUENCY	COUPLING CAPACITOR	CONNECTION TO RECEIVER	GROUND CONNECTION	INPUT FOR .5 WATT OUTPUT
1000 KC	200 mmf or RMA Dummy Antenna	External Antenna Lead	Chassis	10 Microvolts
1000 KC	.01 mf	6BA7 Converter Pin 7	Chassis	40 Microvolts
455 KC	.01 mf	6BA7 Converter Pin 7	Chassis	35 Microvolts
455 KC	.01 mf	6BA6 1st I-F Pin 1	Chassis	2000 Microvolts
400 cycles	.01 mf	6AV6 1st A-F Pin 1	Chassis	.07 Volt
400 cycles	.01 mf	6V6GT Output Pin 5	Chassis	3.2 Volts

FM STAGES

The table below lists the sensitivity for the FM stages of the receiver. The receiver must be tuned to 98 MC for all readings. Measurements are based on a .5 watt output the same as for the AM and Audio stage measurements.

The signal source must be an accurately calibrated signal generator capable of supplying a 98 MC signal modulated by a 400 cycle audio signal. For these measurements the generator must be adjusted for a 22.5 KC deviation. This will correspond to 30% AM modulation.

SIGNAL GENERATOR				
FREQUENCY	COUPLING TO RECEIVER	CONNECTION TO RECEIVER	GROUND CONNECTION	INPUT FOR .5 WATT OUTPUT
98 MC	300 ohms	External Antenna Terminal	Chassis	100 Microvolts
10.7 MC	.01 mf	6BA6 1st I-F Pin 1	Chassis	600 Microvolts
10.7 MC	2500 mmf	6BA6 2nd I-F Pin 1	Chassis	23,000 Microvolts

DIAL AND DRIVE ASSEMBLY

Ref. No.	Part No.	Description	Qty. Used in Set
	58X715	Dial Glass	1
	24X446	Idler Pulley	2
	15X241	Pointer	1
	25X1569	Dial Bracket	1
	7A103	No. 47 Pilot Light Bulb	2
	7A202	Pilot Light Socket Assembly	1
	26X486	Drive Shaft	1
	41X26	Reflector, Dial Light	2
	28X113	Drive Cord Tension Spring	1
	10X66	Drive Cord Assembly	1
	19X192	"C" Washer (Mtg. drive shaft)	2
	6X21	Rubber Grommet (Mtg. gang cond.)	3
	20X260	Condenser Cushion Stud (Mtg. gang condenser)	3

TYPE V-28A139 RECORD CHANGER PARTS

V-961-B	Motor Assembly, 60 cycles, 115-120 V	1
Shure P30-1	Crystal Cartridge and Semi-Permanent Needle Assembly	1
	Semi-Permanent Needle	1
	(Specify part number and letters stamped on crystal)	

MISCELLANEOUS

Ref. No.	Part No.	Description	Qty. Used in Set
	12A480	10" P.M. Speaker	1
	3A303	Tube Socket—Octal (8 prong) Molded	2
	3A426	Tube Socket—Miniature	4
	3A443	Tube Socket—Miniature (for AM-FM Converter Tube)	1
	3A304	Phono Motor Socket	1
	3A305	Phono Socket—Single Pin Tip	1
	2A384	Band Change Switch	1
	13X546	Line Cord and Plug Assembly	1
	10A651	Knob (Tuning)	1
	10A652	Knob (Volume Control & Switch)	1
	10A654	Knob (Tone)	1
	10A655	Knob (Phono—BC—FM)	1
	4X999	Escutcheon	1

© John F. Rider

MONTGOMERY WARD

MODEL 84WG-2711C

RESISTORS

Ref. No.	Part No.	Ohms	Watts	Description	Qty. Used in Set
R-1	B84223	22 K	0.5	Carbon	1
R-2	B83272	2700	0.5	Carbon	1
R-3	B84471	470	0.5	Carbon	1
R-4	B85104	100 K	0.5	Carbon	1
R-5	B83680	68	0.5	Carbon	1
R-6	B84122	1200	0.5	Carbon	1
R-8	B85473	47 K	0.5	Carbon	1
R-9	B85683	68 K	0.5	Carbon	1
R-10	B84102	1000	0.5	Carbon	1
R-11	B84273	27 K	0.5	Carbon	1
R-12	43X233	3.6	0.5	Wire Wound	1
R-13, R-14	B84103	10 K	0.5	Carbon	2
R-15A	43X224	1400	6.0	Wire Wound	1
R-15B		1000	4.0		
R-16	B84153	15 K	0.5	Carbon	1
R-17	36X372	.5 meg.		Volume Control	1
R-18	B85225	2.2 meg.	0.5	Carbon	1
R-19	40X285	3 meg.		Tone Control	1
R-20	B85106	10 meg.	0.5	Carbon	1
R-21, R-22	B85474	470 K	0.5	Carbon	2
R-23	B84271	270	0.5	Carbon	1

TRANSFORMERS AND COILS

Ref. No.	Part No.	Description	Qty. Used in Set
L-1	9A1882	Filament Choke Assembly	1
L-2	35A1	Insulated Choke	1
L-3	9A1940	Parasitic Choke Assembly	1
L-4	9A2021	Oscillator Coil Assembly (FM)	1
T-1	9A1972	"B" Range Loop Antenna Assem.	1
T-2	9A1956	Antenna Coil Assembly	1
T-3	9A1997	Oscillator Coil Assembly (AM)	1
T-4	9A1932	1st I.F. Trans. (FM)	1
T-5	9A1998	1st I.F. Trans. (AM)	1
T-6	9A1999	2nd I.F. Trans. (AM-FM)	1
T-7	9A1970	Discriminator Coil Assembly	1
T-8	9A2004	Dipole Antenna	1
T-9	53X290	Power Transformer	1
T-10	51X134	Output Transformer	1

CAPACITORS

Ref. No.	Part No.			Description	Qty. Used in Set
C-1A, C-1B, C-1C, C-1D	14A204			Gang Condenser Assembly	1
C-2	17A235	2-24 mmf		Trimmer	1
C-3, C-7		Part of Gang Condenser			
C-4	47X521	6 mmf		Ceramic	1
C-5	47X508	500 mmf		Ceramic	1
C-6, C-8	47X522	12 mmf		Ceramic	2
C-9	47X517	47 mmf		Ceramic	1
C-10	47X512	10 mmf		Ceramic	1
C-11, C-14, C-19, C-20, C-24	47X507	5000 mmf		Silvered Ceramic	5
C-12	17A255	1-8 mmf		Trimmer	1
C-13	47X547	3 mmf		Ceramic	1
C-15, C-16		Part of T-5 (1st I.F. Trans.—AM)			
C-17		Part of T-4 (1st I.F. Trans.—FM)			
C-18, C-29	B66503	.05 mf	200 V	Tubular	2
C-21, C-22		Part of T-6 (2nd I.F. Trans.—AM-FM)			
C-23	47X497	100 mmf		Ceramic	1
C-25		Part of T-7 (Discriminator Trans.)			
C-26	47X492	2700 mmf		Molded Mica	1
C-27	47X526	100 mmf		Molded Mica	1
C-28	45X361	5 mf	100 V	Dry Electrolytic	1
C-30A	45X359	40 mf	350 V	Dry Electrolytic	1
C-30B		40 mf	350 V		
C-30C		20 mf	350 V		
C-30D		20 mf	25 V		
C-31A, C-31B	47X112	50-50 mmf		Dual Mica	1
C-32	47X471	68 mmf		Molded Mica	1
C-33	B66403	.04 mf	200 V	Tubular	1
C-34	D66502	.005 mf	400 V	Tubular	1
C-35	47X468	220 mmf		Ceramic	1
C-36	D66203	.02 mf	400 V	Tubular	1
C-37	B66402	.004 mf	200 V	Tubular	1
C-38	H66102	.001 mf	800 V	Tubular	1

MODEL 84WG-2015A

MONTGOMERY WARD

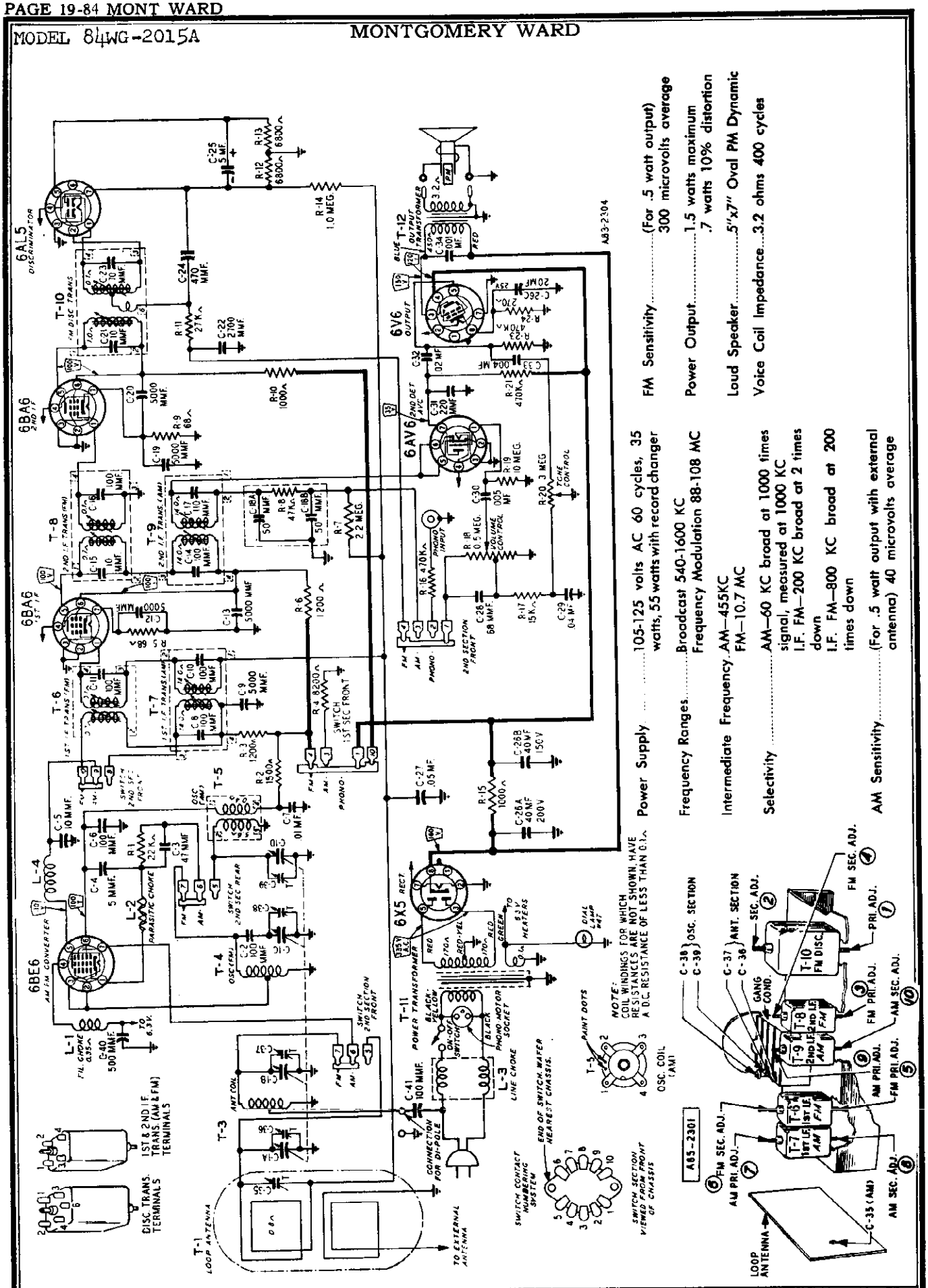
6AL5 DISCRIMINATOR
6BA6 2ND I.F.
6AV6 2ND DET AVC
6V6 OUTPUT
6BA6 1ST I.F.
6BE6 AM FM CONVERTER
6X5 RECT
T-10 FM DISC. TRANS.
T-8 2ND I.F. TRANS. (FM)
T-9 2ND I.F. TRANS. (AM)
T-6 1ST I.F. TRANS. (FM)
T-7 1ST I.F. TRANS. (AM)
T-4 OSC. (FM)
T-5 OSC. (AM)
T-3 ANT. COIL
T-1 LOOP ANTENNA
T-11 POWER TRANSFORMER
T-12 OUTPUT TRANSFORMER
L-1 FIL. CHOKE
L-2 PARASITIC CHOKE
L-3 LINE CHOKE
L-4
R-1 22K
R-2 1500Ω
R-3 1200Ω
R-4 8200Ω
R-5 68Ω
R-6 1200Ω
R-7 2.2 MEG.
R-8 47KΩ
R-9 68Ω
R-10 1000Ω
R-11 27K
R-12 6800Ω
R-13 6800Ω
R-14 1.0 MEG.
R-15 1000Ω
R-16 470K
R-17 15K
R-18 0.5 MEG. VOLUME CONTROL
R-19 10 MEG.
R-20 3 MEG. TONE CONTROL
R-21 470K
R-22 270Ω
R-23 470K
C-1 .01 MF.
C-2 100 MMF.
C-3 47 MMF.
C-4 5 MMF.
C-5 10 MMF.
C-6 100 MMF.
C-7 .01 MF.
C-8 100 MMF.
C-9 5000 MMF.
C-10 100 MMF.
C-11 100 MMF.
C-12 100 MMF.
C-13 5000 MMF.
C-14 100 MMF.
C-15 10 MMF.
C-16 100 MMF.
C-17 110 MMF.
C-18A 50 MMF.
C-18B 50 MMF.
C-19 5000 MMF.
C-20 5000 MMF.
C-21 10 MMF.
C-22 2700 MMF.
C-23 70 MMF.
C-24 470 MMF.
C-25 5 MF.
C-26A 20 MF 25V
C-26B 20 MF
C-27 .05 MF
C-28A 40 MF 200V
C-28B 40 MF 150V
C-29 .04 MF
C-30 .005 MF
C-31 220 MMF.
C-32 .02 MF
C-33 .004 MF
C-34 .001 MF.
C-35 .1 MF
C-36 .1 MF
C-37 .1 MF
C-38 .1 MF
C-39 .1 MF
C-40 500 MMF.
C-41 100 MMF.
C-42 .1 MF
C-43 .1 MF
C-44 .1 MF
C-45 .1 MF
C-46 .1 MF
C-47 .1 MF
C-48 .1 MF
C-49 .1 MF
C-50 .1 MF
C-51 .1 MF
C-52 .1 MF
C-53 .1 MF
C-54 .1 MF

MONTGOMERY WARD

MODEL 84WG-2015A

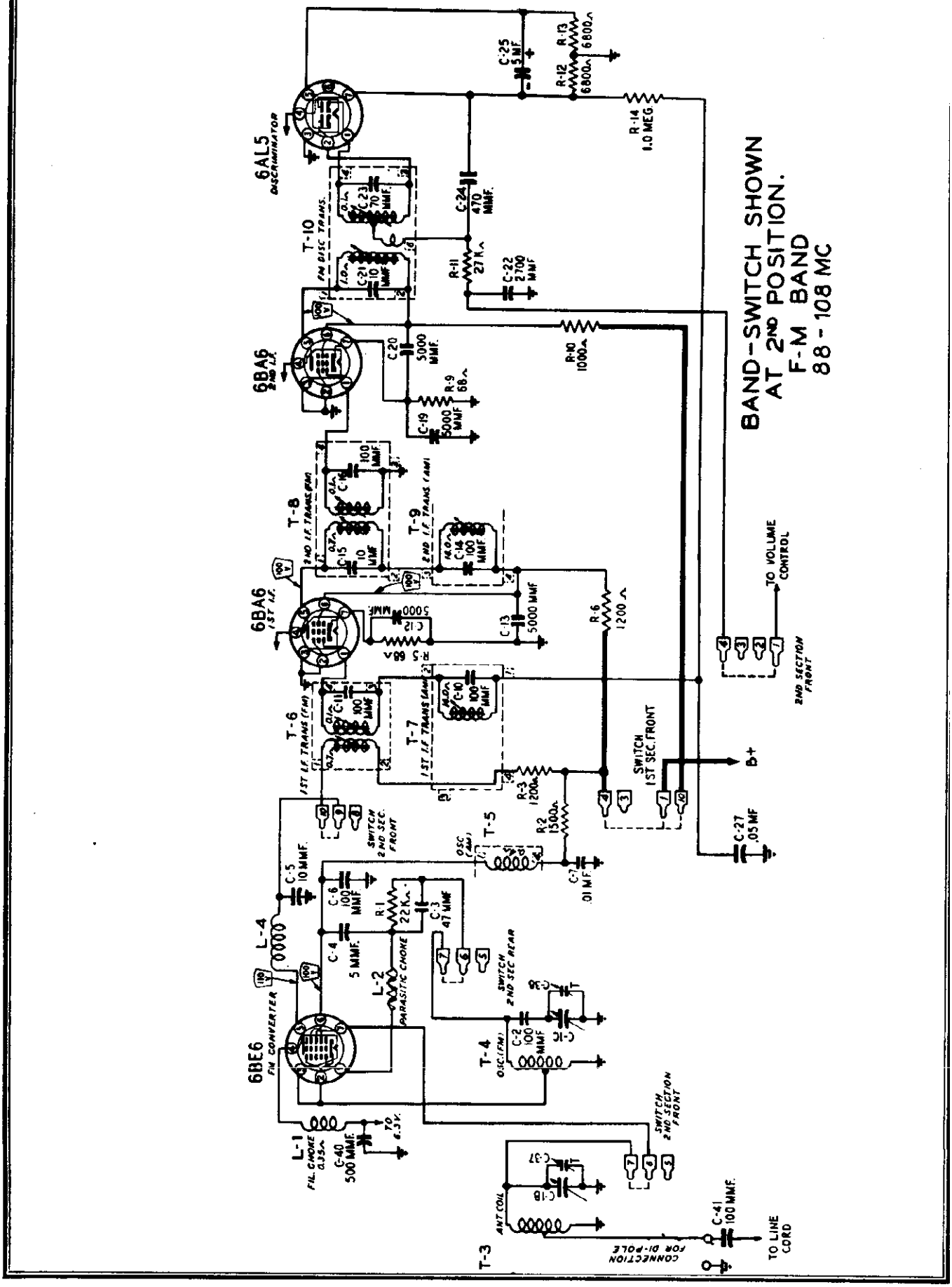

CLARI-SKEMATIX
Registered Trademark

MODEL 84WG-2015A

MONTGOMERY WARD

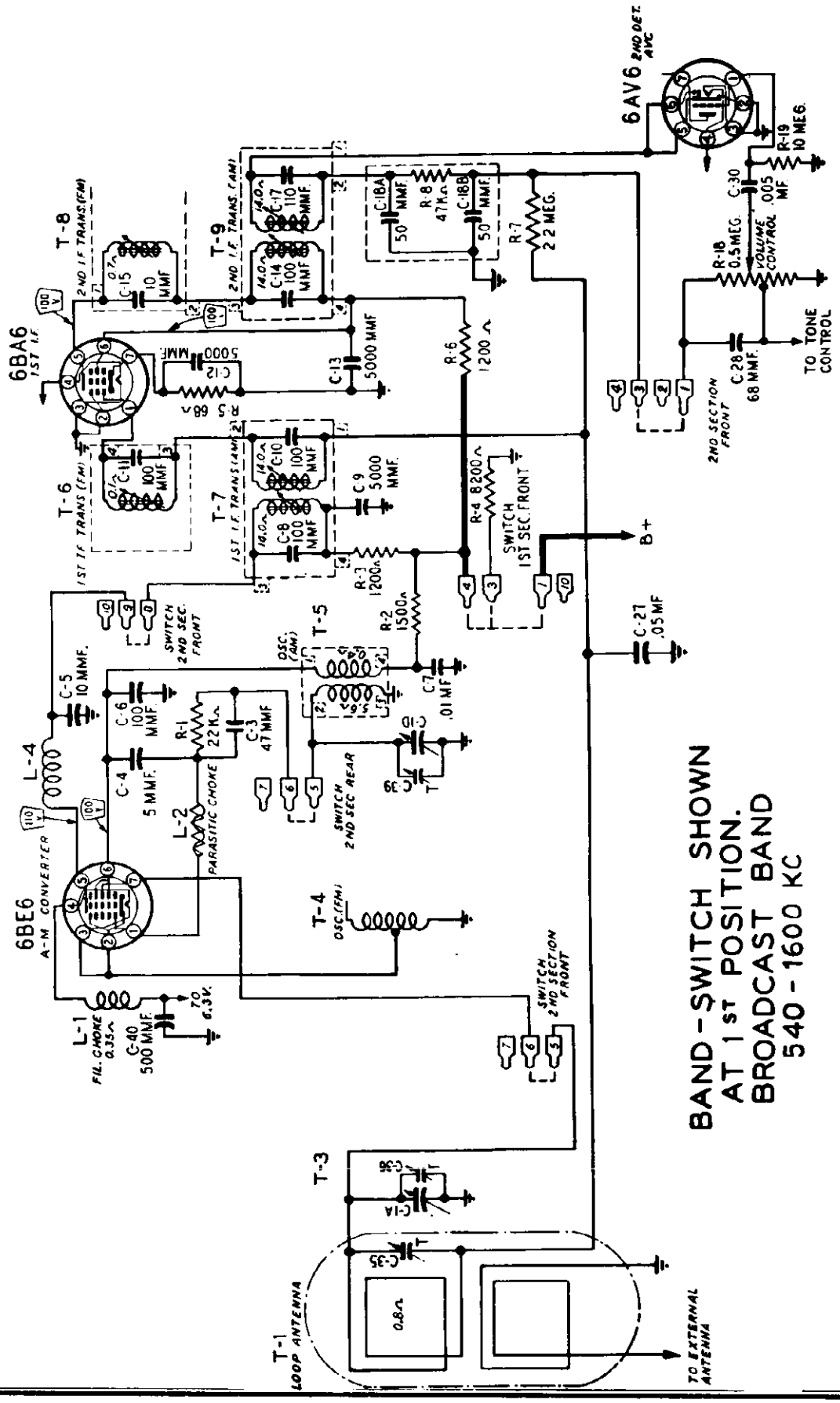

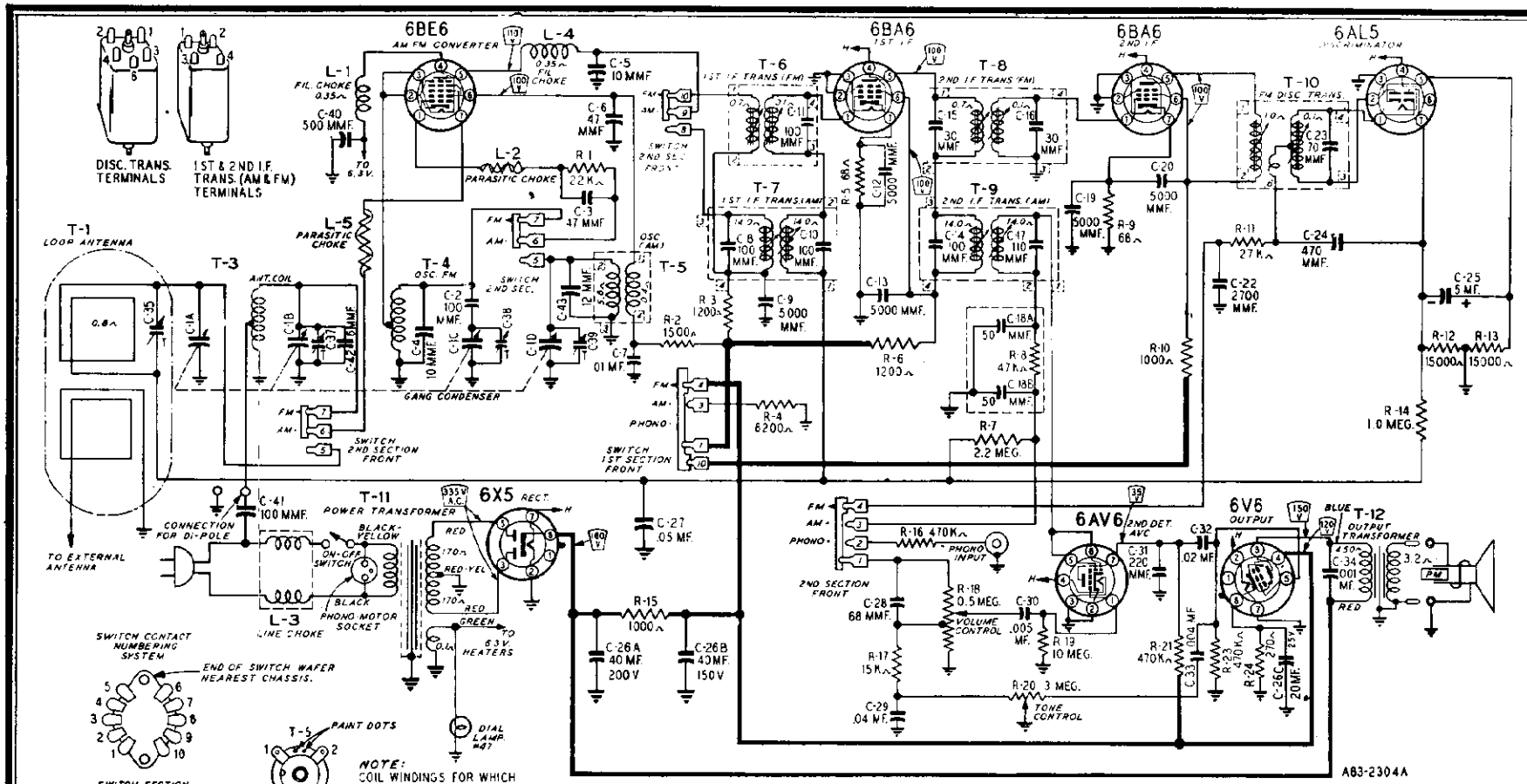

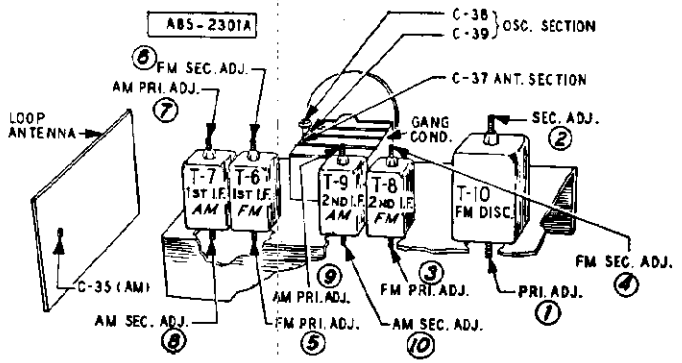

Power Supply	105-125 volts AC 60 cycles, 35 watts, 55 watts with record changer
Frequency Ranges	Broadcast 540-1600 KC Frequency Modulation 88-108 MC
Intermediate Frequency	AM—455KC FM—10.7 MC
Selectivity	AM—60 KC broad at 1000 times signal, measured at 1000 KC I.F. FM—200 KC broad at 2 times down I.F. FM—800 KC broad at 200 times down
AM Sensitivity	(For .5 watt output with external antenna) 40 microvolts average
FM Sensitivity	(For .5 watt output) 200 microvolts average
Power Output	1.5 watts maximum .7 watts 10% distortion
Loud Speaker	5"x7" Oval PM Dynamic
Voice Coil Impedance	3.2 ohms 400 cycles

MODELS 84WG-2015A, 84WG-2015B

MONTGOMERY WARD

ALIGNMENT PROCEDURES

AM STAGES

The following is required for aligning:
An All Wave Signal Generator Which Will Provide an Accurately Calibrated Signal at the Test Frequencies as Listed.
Output Indicating Meter, Non-Metallic Screwdriver, Dummy Antennas — .1 mf, and 50mmf.

Volume Control Maximum all Adjustments.
Connect Radio Chassis to Ground Post of Signal Generator with a Short Heavy Lead.
Allow Chassis and Signal Generator to "Heat Up" for Several Minutes.

SIGNAL GENERATOR						
FREQUENCY SETTING	CONNECT GENERATOR OUTPUT TO	THROUGH DUMMY ANTENNA	CONNECT GROUND TO	GANG CONDENSER SETTING	ADJUST	ADJUST FOR
455 KC	Control Grid 1st 6BA6 Pin No. 1	.1 mf	Chassis Base	Rotor Fully Open	2nd I.F. Pri. and Sec. (9) and (10)	Maximum Output
455 KC	Control Grid 6BE6 Pin No. 7 1st Det.	.1 mf	Chassis Base	Rotor Fully Open	1st I.F. Pri. and Sec. (7) and (8)	Maximum Output
1620 KC	Control Grid 6BE6 Pin No. 7	.1 mf	Chassis Base	Rotor Fully Open	Oscillator C-39	Maximum Output
1400 KC	External Antenna Lead	50 mmf	Chassis Base	Turn Rotor to Max. Output. Set Pointer to 1400 KC See Note A	Antenna C-35	Maximum Output

NOTE A—If the pointer is not at 1400 KC on the dial, reset pointer to the 1400 KC mark on the dial scale.

FM STAGES

The following is required for aligning:
An accurately calibrated signal generator providing unmodulated signals at the test frequencies listed below.
Non-metallic screwdriver.
Dummy Antennas and I-F Loading Resistor — .01 mf, 300 ohms and 100K ohms

Zero center scale DC vacuum tube voltmeter having a range of approximately 3 volts.
(If a zero center scale meter is not available, a standard scale vacuum tube voltmeter may be used by reversing the meter connections for negative readings).
Allow chassis and signal generator to "Heat Up" for several minutes.

SIGNAL GENERATOR			THROUGH DUMMY ANTENNA	BAND SWITCH SETTING	GANG CONDENSER SETTING	ADJUST	ADJUST FOR
	FREQUENCY SETTING	CONNECT GENERATOR OUTPUT TO					
Discriminator	10.7 MC	6BA6 2nd I-F Pin 1 and Chassis	.01 mf	FM	Rotor Fully Open	Disc. Pri. (1) Note A	Maximum Deflection
	10.7 MC	6BA6 2nd I-F Pin 1 and Chassis	.01 mf	FM	Rotor Fully Open	Disc. Sec. (2) Note B	
	10.7 MC	6BA6 2nd I-F Pin 1 and Chassis	.01 mf	FM	Rotor Fully Open	Disc. Pri. (1) Note A	Maximum Deflection
	10.7 MC	6BA6 2nd I-F Pin 1 and Chassis	.01 mf	FM	Rotor Fully Open	Disc. Sec. (2) Note B	
I-F	10.7 MC	6BA6 1st I-F Pin 1 and Chassis	.01 mf	FM	Rotor Fully Open	2nd I-F Pri. (3) 2nd I-F Sec. (4) Note C	Maximum Deflection
	10.7 MC	Unsolder lead from Pin 7 to band switch. Insert 100K ohm resistor between Pin 7 and Ground and feed signal into Pin 7 of 6BE6	.01 mf	FM	Rotor Fully Open	1st I-F Pri. (5) Note C	Maximum Deflection
	10.7 MC	Same as above	.01 mf	FM	Rotor Fully Open	1st I-F Sec. (6) Note C	Maximum Deflection
RECHECK I-F ADJUSTMENTS IN ORDER GIVEN							
Ant. and Osc.	108.5 Note D	Disconnect built-in line antenna and connect generator to dipole terminals with resistor in series	300 ohms	FM	Rotor Fully Open	Osc. C-38	Maximum Deflection
	104.5	Same as above	300 ohms	FM	Tune rotor for max. AVC voltage	Ant. C-37	Maximum Deflection
RECHECK ANTENNA & OSC. ADJUSTMENTS IN ORDER GIVEN							

FM ALIGNMENT NOTES

NOTE A—The zero center scale DC vacuum tube voltmeter is to be connected between chassis ground and AVC line. A signal of .1 volt must be fed into the receiver for this adjustment. Note output voltage on the zero center DC vacuum tube voltmeter.

NOTE B—Disconnect zero center DC vacuum tube voltmeter from AVC and connect it at the audio takeoff point at the 27 K ohm resistor (R-11) and its junction with the terminal strip. Adjust for zero voltage indication.

NOTE C—Connect zero center DC vacuum tube voltmeter as in Note A. Adjust input to give same output on the zero center DC vacuum tube voltmeter as in Note A.

NOTE D—Remove the 100 K. ohm load resistor and solder the lead from pin 7 of 6BE6 tube to the band switch before attempting to check the antenna and oscillator adjustments.

©John F. Rider

MONTGOMERY WARD

MODELS 84WG-2015A, 84WG-2015B

RECEIVER STAGE SENSITIVITIES

AM AND AUDIO STAGES

The table below lists the sensitivity at the input of each stage. The receiver should be tuned to 1000 KC for all readings. All measurements are based on an output of .5 watt. This may be measured by disconnecting the speaker voice coil and substituting a 3.2 ohm, 5 watt resistor across the secondary winding of the output transformer. A reading of 1.26 volts across this resistor will be equivalent to a .5 watt output.

The volume control must be set to maximum.

The signal source must be an accurately calibrated signal generator capable of supplying both 1000 KC and 455 KC signals modulated 30% with a 400 cycle audio signal. Variations in sensitivity of Plus or Minus 25% are usually permissible.

SIGNAL GENERATOR				
FREQUENCY	COUPLING CAPACITOR	CONNECTION TO RECEIVER	GROUND CONNECTION	INPUT FOR .5 WATT OUTPUT
1000 KC	200 mmf or RMA Dummy Antenna	External Antenna Lead	Chassis	25 Microvolts
1000 KC	.05 mf	6BE6 Converter Pin 7	Chassis	60 Microvolts
455 KC	.05 mf	6BE6 Converter Pin 7	Chassis	58 Microvolts
455 KC	.05 mf	6BA6 1st I-F Pin 1	Chassis	2400 Microvolts
400 cycles	.05 mf	6AV6 1st A-F Pin 1	Chassis	.07 Volt
400 cycles	.05 mf	6V6GT Output Pin 5	Chassis	3.2 Volts

FM STAGES

The table below lists the sensitivity for the FM stages of the receiver. The receiver must be tuned to 98 MC for all readings. Measurements are based on a .5 watt output the same as for the AM and Audio stage measurements.

The signal source must be an accurately calibrated signal generator capable of supplying a 98 MC signal modulated by a 400 cycle audio signal. For these measurements the generator must be adjusted for a 22.5 KC deviation. This will correspond to 30% AM modulation.

SIGNAL GENERATOR				
FREQUENCY	COUPLING TO RECEIVER	CONNECTION TO RECEIVER	GROUND CONNECTION	INPUT FOR .5 WATT OUTPUT
98 MC	300 ohms	External Antenna Lead	Chassis	200 Microvolts
10.7 MC	.01 mf	6BA6 1st I-F Pin 1	Chassis	1,000 Microvolts
10.7 MC	.01 mf	6BA6 2nd I-F Pin 1	Chassis	40,000 Microvolts

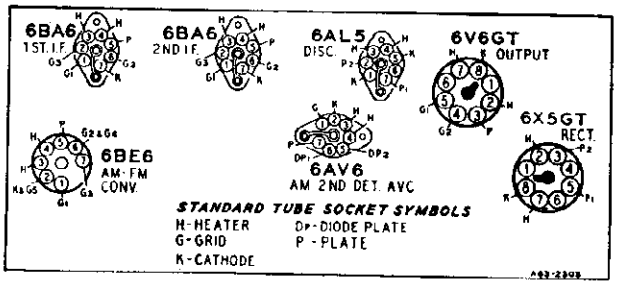

TUBE SOCKET VOLTAGES

Socket voltages are shown on the schematic diagram at the tube socket terminals. All voltages are between the socket terminal and chassis ground. Plate, screen and cathode voltages were taken with a 1000 ohm-per-volt meter with a 300 volt scale used for plate and screen voltages. Audio grid voltages were read with a vacuum tube volt-meter. Conditions of measurement are:

Line voltage.....117 Volts AC
Signal Input.....None

A variation of ±10% is usually permissible.

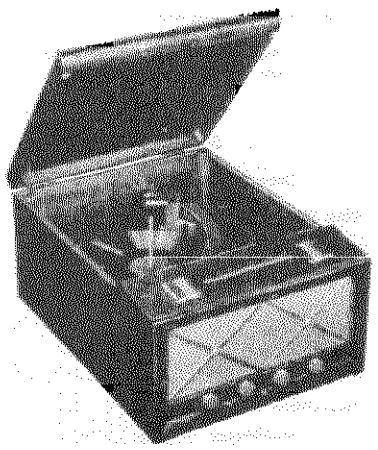

DRIVE CORD REPLACEMENT

DIAL POINTER CORD

Use a new 10X70 drive cord assembly or a new length of cord 51 inches long for the installation. Install the cord as shown in the illustration, winding three turns clockwise around the drive shaft with the turns progressing away from the chassis. After completing the installation rotate the drive shaft a few turns to take up the slack in the cord.

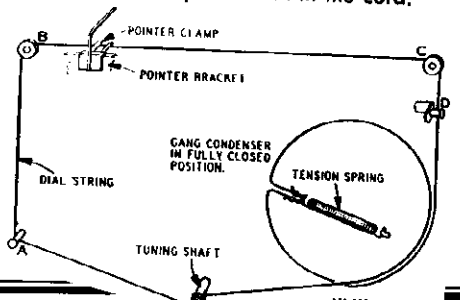

MODEL 84WG-2015A

MONTGOMERY WARD

Ref. No.	Part. No.	Description	Qty. Used in Set
		CAPACITORS	
C-1A, C-1B, C-1C, C-1D	14A202	Gang Condenser & Pulley	1
C-2	47X511	100 mmf Ceramic	1
C-3	47X517	47 mmf Ceramic	1
C-4	47X513	5 mmf Ceramic	1
C-5	47X512	10 mmf Ceramic	1
C-6	47X518	100 mmf Ceramic	1
C-7	D66103	.01 mf 400 V Tubular	1
C-8, C-10		Part of T-7 (1st I.F. Trans.—AM)	
C-11		Part of T-6 (1st I.F. Trans.—FM)	
C-9, C-12, C-13, C-19, C-20	47X507	5000 mmf Silvered Ceramic	5
C-14, C-17		Part of T-9 (2nd I.F. Trans.—AM)	
C-15, C-16		Part of T-8 (2nd I.F. Trans.—FM)	
C-18A, C-18B		50-50 mmf (Part of 76X1 Resistor-Capacitor Combination)	
C-21, C-23		Part of T-10 (Discriminator Trans.)	
C-22	47X492	2700 mmf Molded Mica	1
C-24	47X510	470 mmf Silvered Mica	1
C-25	45X361	5 mf 100 V Dry Electrolytic	1
C-26A C-26B C-26C	45X360	40 mf 200 V 40 mf 150 V 20 mf 25 V Dry Electrolytic	1
C-27	B66503	.05 mf 200 V Tubular	1
C-28	47X471	68 mmf Molded Mica	1
C-29	B66403	.04 mf 200 V Tubular	1
C-30	D66502	.005 mf 400 V Tubular	1
C-31	47X468	220 mmf Ceramic	1
C-32	D66203	.02 mf 400 V Tubular	1
C-33	B66402	.004 mf 200 V Tubular	1
C-34	H66102	.001 mf 800 V Tubular	1
C-35	17A123	1.5-12 mmf Trimmer	1
C-36, C-37, C-39		Part of C-1 Gang Condenser	
C-38	17A247	3-12 mmf Trimmer	1
C-40	47X508	500 mmf Ceramic	1
C-41	47X476	100 mmf Molded	1
		RESISTORS	
		OHMS WATTS	
R-1	B84223	22 K 0.5 Carbon	1
R-2	B84152	1500 0.5 Carbon	1
R-3, R-6	B84122	1200 0.5 Carbon	2
R-4	D84822	8200 2.0 Carbon	1
R-5, R-9	B83680	68 0.5 Carbon	2
R-7	B85225	2.2 meg. 0.5 Carbon	1
R-8		47 K (Part of 76X1 Resistor-Capacitor Combination)	
R-10	B84102	1000 0.5 Carbon	1
R-11	B84273	27 K 0.5 Carbon	1
R-12, R-13	B84682	6800 0.5 Carbon	2
R-14	B85105	1 meg. 0.5 Carbon	1
R-15	D84102	1000 2.0 Carbon	1
R-16, R-21, R-23	B85474	470 K 0.5 Carbon	3
R-17	B84153	15 K 0.5 Carbon	1
R-18	36X347	.5 meg. Volume control and switch	1
R-19	B85106	10 meg. 0.5 Carbon	1
R-20	40X254	3 meg. Tone Control	1
R-24	B84271	270 0.5 Carbon	1
		TRANSFORMERS AND COILS	
L-1, L-4	9A1882	Filament Choke	2
L-2	9A1940	Parasitic Choke	1
L-3	9A1930	Line Choke	1
T-1	9A1954	B" Range Loop Anetnna Assembly	1
T-3	9A1956	Antenna Coil Assembly	1
T-4	9A1938	Oscillator Coil (FM)	1
T-5	9A1929	Oscillator Coil Assembly (AM)	1
T-6	9A1932	1st I.F. Transformer (FM)	1
T-7	9A1934	1st I.F. Transformer (AM)	1
T-8	9A1933	2nd I.F. Transformer (FM)	1
T-9	9A1935	2nd I.F. Transformer (AM)	1
T-10	9A1936	Discriminator Coil Assembly	1
T-11	53X291	Power Transformer	1
T-12	51X136	Output Transformer	1
		MISCELLANEOUS	
	76X1	Resistor-Capacitor Combination	1
	12A484	5" x 7" Oval P.M. Speaker	1
	3A303	Tube Socket—Octal (8 prong) Molded	2
	3A312	Tube Socket—Miniature	4
	3A427	Tube Socket—Miniature (for AM-FM Converter Tube)	1
	3A304	Phono Motor Socket	1
	3A305	Phono Socket—Single Pin Tip	1
	2A374	Band Change Switch	1
	13X546	Line Cord and Plug Assembly	1
	10A659	Knob (Tuning)	1
	10A660	Knob (Volume Control and Switch)	1
	10A658	Knob (Tone)	1
	10A661	Knob (Phono—BC—FM)	1
	4X1001	Escutcheon	2
	14X429	Grille Ventilator	1
	28X290	Snap Buttons (Mtg. Grille)	4

MONTGOMERY WARD

MODELS 84WG-2015A, 84WG-2015B

Ref. No.	Part No.	Description	Qty. Used in Set
		DIAL AND DRIVE ASSEMBLY	
	58X703	Dial Glass	1
	24X446	Idler Pulley	2
	15X244	Pointer	1
	25X1587	Pointer & Diffuser Mtg. Bracket	1
	7A103	No. 47 Pilot Light Bulb	1
	7A221	Pilot Light Socket Assembly	1
	26X506	Drive Shaft	1
	28X113	Drive Cord Tension Spring	1
	10X70	Drive Cord Assembly	1
	19X192	"C" Washer (Mtg. drive shaft)	2
	6X21	Rubber Grommet (Mtg. gang cond.)	3
	20X260	Condenser Cushion Stud (Mtg. gang condenser)	3
		TYPE W-28A145 RECORD CHANGER PARTS	
W-15X090-1		Motor Assembly, 60 cycles, 115-120 V.	1
W-17X412-11		50 Cycle Drive Sleeve Assembly	1
Shure P30 1		Crystal Cartridge and Semi-Permanent Needle Assembly	1
		Semi-Permanent Needle	1
		(Specify part number and letters stamped on crystal)	

MODEL 84WG-2015B

CAPACITORS

Ref. No.	Part No.				Qty. Used in Set
C-1A, C-1B, C-1C, C-1D	14A204	Gang Condenser & Pulley			1
C-2	47X511	100 mmf		Ceramic	1
C-3	47X517	47 mmf		Ceramic	1
C-4	47X523	10 mmf		Ceramic	1
C-5	47X512	10 mmf		Ceramic	1
C-6	47X463	47 mmf		Ceramic	1
C-7	D66103	.01 mf	400 V	Tubular	1
C-8, C-10		Part of T-7 (1st I.F. Trans.—AM)			
C-11		Part of T-6 (1st I.F. Trans.—FM)			
C-9, C-12, C-13, C-19, C-20	47X507	5000 mmf		Silvered Ceramic	5
C-14, C-17		Part of T-9 (2nd I.F. Trans.—AM)			
C-15, C-16		Part of T-8 (2nd I.F. Trans.—FM)			
C-18A, C-18B		50-50 mmf (Part of 76X1 Resistor-Capacitor Combination)			
C-23		Part of T-10 (Discriminator Trans.)			
C-22	47X492	2700 mmf		Molded Mica	1
C-24	47X510	470 mmf		Silvered Mica	1
C-25	45X361	5 mf	100 V	Dry Electrolytic	1
C-26A	45X360	40 mf	200 V	Dry Electrolytic	1
C-26B		40 mf	150 V		
C-26C		20 mf	25 V		
C-27	B66503	.05 mf	200 V	Tubular	1
C-28	47X471	68 mmf		Molded Mica	1
C-29	B66403	.04 mf	200 V	Tubular	1
C-30	D66502	.005 mf	400 V	Tubular	1
C-31	47X468	220 mmf		Ceramic	1
C-32	D66203	.02 mf	400 V	Tubular	1
C-33	B66402	.004 mf	200 V	Tubular	1
C-34	H66102	.001 mf	800 V	Tubular	1
C-35	17A123	1.5-12 mmf		Trimmer	1
C-37, C-39		Part of C-1 Gang Condenser			
C-38	26A489	1-8 mmf		Trimmer Assy.	1
C-40	47X508	500 mmf		Ceramic	1
C-41	47X476	100 mmf		Molded	1
C-42	47X521	6 mmf		Ceramic	1
C-43	47X522	12 mmf		Ceramic	1

RESISTORS

Ref. No.	Part No.	OHMS	WATTS		Qty. Used in Set
R-1	B84223	22 K	0.5	Carbon	1
R-2	B84152	1500	0.5	Carbon	1
R-3, R-6	B84122	1200	0.5	Carbon	2
R-4	D84822	8200	2.0	Carbon	1
R-5, R-9	B83680	68	0.5	Carbon	2
R-7	B85225	2.2 meg.	0.5	Carbon	1
R-8		47 K		(Part of 76X1 Resistor-Capacitor Combination)	
R-10	B84102	1000	0.5	Carbon	1
R-11	B84273	27 K	0.5	Carbon	1
R-12, R-13, R-17	B84153	15 K	0.5	Carbon	3
R-14	B85105	1 meg.	0.5	Carbon	1
R-15	D84102	1000	2.0	Carbon	1
R-16, R-21, R-23	B85474	470 K	0.5	Carbon	3
R-18	30X247	.5 meg.		Volume control and switch	1
R-19	B85106	10 meg.	0.5	Carbon	1
R-20	40X287	3 meg.		Tone Control	1
R-24	B84271	270	0.5	Carbon	1

TRANSFORMERS AND COILS

Ref. No.	Part No.		Qty. Used in Set
L-1, L-4	9A1882	Filament Choke	2
L-2	9A1940	Parasitic Choke	1
L-3	9A1930	Line Choke	1
L-5	9A1967	Parasitic Choke	1
T-1	9A1971	"B" Range Loop Antenna Assembly	1
T-3	9A1956	Antenna Coil Assembly	1
T-4	9A1938	Oscillator Coil (FM)	1
T-5	9A1929	Oscillator Coil Assembly (AM)	1
T-6	9A1932	1st I.F. Transformer (FM)	1
T-7	9A1934	1st I.F. Transformer (AM)	1
T-8	9A1969	2nd I.F. Transformer (FM)	1

MODELS 84WG-2015A, 84WG-2015B

MONTGOMERY WARD

Ref. No.	Part. No.	Description	Qty. Used in Set
T-9	9A1935	2nd I.F. Transformer (AM)	1
T-10	9A1970	Discriminator Coil Assembly	1
T-11	53X291	Power Transformer	1
T-12	51X136	Output Transformer	1
		MISCELLANEOUS	
	76X1	Resistor-Capacitor Combination	1
	12A484	5" x 7" Oval P.M. Speaker	1
	3A303	Tube Socket—Octal (8 prong) Molded	2
	3A426	Tube Socket—Miniature	4
	3A427	Tube Socket—Miniature (for AM-FM Converter Tube)	1
	3A304	Phono Motor Socket	1
	3A305	Phono Socket—Single Pin Tip	1
	2A374	Band Change Switch	1
	13X546	Line Cord and Plug Assembly	1
	10A659	Knob (Tuning)	1
	10A660	Knob (Volume Control and Switch)	1
	10A658	Knob (Tone)	1
	10A661	Knob (Phono—BC—FM)	1
	4X1001	Escutcheon	2
	14X438	Grille Ventilator	1
	28X290	Snap Buttons (Mtg. Grille)	4

Ref. No.	Part. No.	Description	Qty. Used in Set
		DIAL AND DRIVE ASSEMBLY	
	58X703	Dial Glass	1
	24X446	Idler Pulley	2
	15X244	Pointer	1
	25X1587	Pointer & Diffuser Mtg. Bracket	1
	7A103	No. 47 Pilot Light Bulb	1
	7A221	Pilot Light Socket Assembly	1
	26X506	Drive Shaft	1
	28X113	Drive Cord Tension Spring	1
	10X70	Drive Cord Assembly	1
	19X192	"C" Washer (Mtg. drive shaft)	2
	6X21	Rubber Grommet (Mtg. gang cond.)	3
	20X260	Condenser Cushion Stud (Mtg. gang condenser)	3
		TYPE W-28A145 RECORD CHANGER PARTS	
W-15X090-1		Motor Assembly, 60 cycles, 115-120 V.	1
W-17X412-11		50 Cycle Drive Sleeve Assembly	1
Shure P30-1		Crystal Cartridge and Semi-Permanent Needle Assembly	1
		Semi-Permanent Needle (Specify part number and letters stamped on crystal)	1

MODELS 84WG-2015A, B

50 CYCLE OPERATION

If it is desired to use the record changer on a 50 cycle power supply, it will be necessary to replace the drive sleeve assembly on the record changer motor shaft with a 50 cycle drive sleeve assembly. This assembly is listed in the parts list.

To change the sleeve turn the record selector shelf to the 12" position and lift the turntable off of the record changer. Loosen the set screw holding the drive sleeve on the motor shaft and remove the old sleeve. Install the new 50 cycle drive sleeve and replace the turntable.

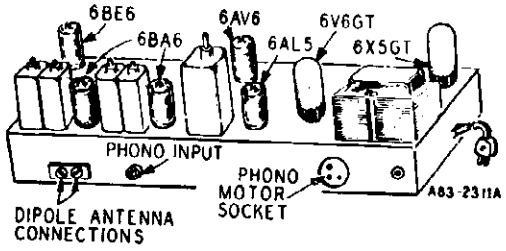

Tube and Dial Lamp Complement

1 6BE6 FM-AM Converter
1 6BA6 1st I-F Amplifier
1 6BA6 2nd I-F Amplifier
1 6AL5 FM Discriminator
1 6AV6 Audio Amplifier, AM 2nd Detector and AVC
1 6V6GT Audio Output
1 6X5GT Rectifier
1 No. 47 Dial Lamp

MONTGOMERY WARD

MODEL 84WG-2015A
MODELS 84WG-2718A,
84WG-2720A

MODEL 84WG-2015A

(1) The part number and description of C-6 has been changed. The new description follows:

C-6	47X463	47 MMF	Molded	1 used

(2) The circuit connection of the 5 MMF Capacitor C-4 has been changed. The new circuit connection is shown in the partial schematic below:

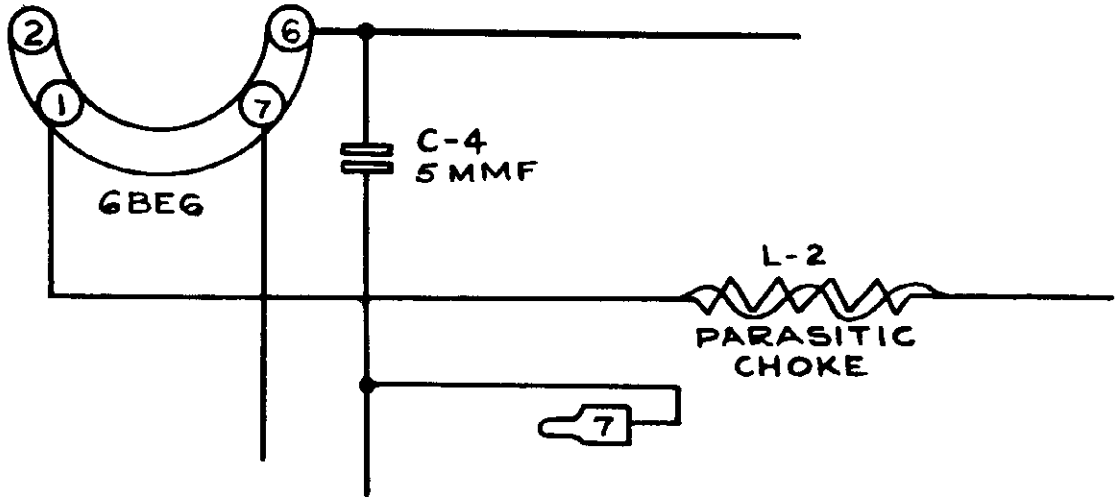

MODELS 84WG-2718A,
84WG-2720A

PARTS LIST ADDITION

The description of the new part follows:

Ref. No.	Part No.	Description	Qty. Used
R-48	B84222	2200 ohms 0.5 watt	1

The circuit connection of resistor R-48 is shown in the partial schematic below. This also applies to Model's 84 WG-2718B, 2724A.

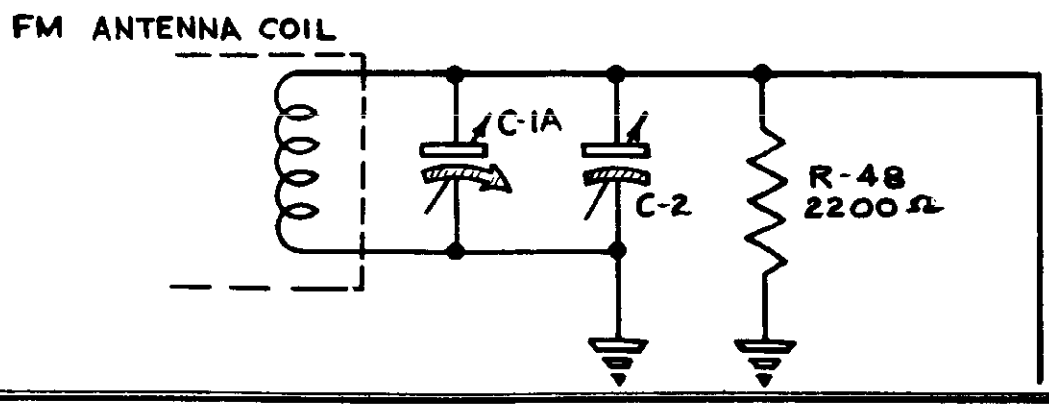

MODELS 84WG-2718A, -B,
84WG-2720A, 84WG-2724A

MONTGOMERY WARD

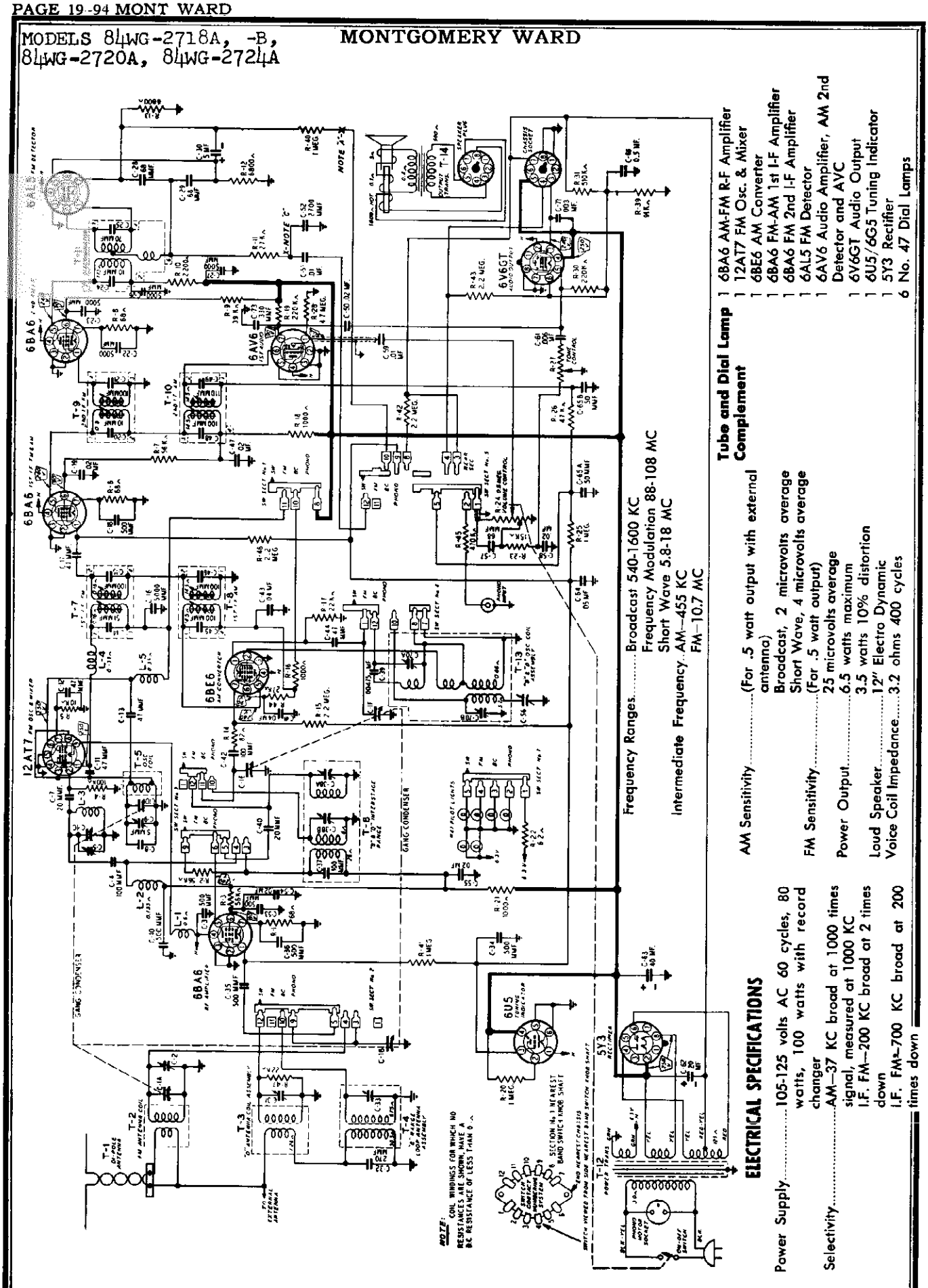

Tube and Dial Lamp Complement

1	6BA6 AM-FM R-F Amplifier
1	12AT7 FM Osc. & Mixer
1	6BE6 AM Converter
1	6BA6 FM-AM 1st I-F Amplifier
1	6BA6 FM 2nd I-F Amplifier
1	6AL5 FM Detector
1	6AV6 Audio Amplifier, AM 2nd Detector and AVC
1	6V6GT Audio Output
1	6U5/6G5 Tuning Indicator
1	5Y3 Rectifier
6	No. 47 Dial Lamps

Frequency Ranges.....Broadcast 540-1600 KC
Frequency Modulation 88-108 MC
Short Wave 5.8-18 MC

Intermediate Frequency..AM—455 KC
FM—10.7 MC

ELECTRICAL SPECIFICATIONS

Power Supply.....105-125 volts AC 60 cycles, 80 watts, 100 watts with record changer

Selectivity.....AM—37 KC broad at 1000 times signal, measured at 1000 KC
I.F. FM—200 KC broad at 2 times down
I.F. FM—700 KC broad at 200 times down

AM Sensitivity.....(For .5 watt output with external antenna)
Broadcast, 2 microvolts average
Short Wave, 4 microvolts average

FM Sensitivity.....(For .5 watt output)
25 microvolts average

Power Output.....6.5 watts maximum
3.5 watts 10% distortion

Loud Speaker.....12" Electro Dynamic

Voice Coil Impedance.....3.2 ohms 400 cycles

©John F. Rider

MONTGOMERY WARD

MODELS 84WG-2718A,
84WG-2720A

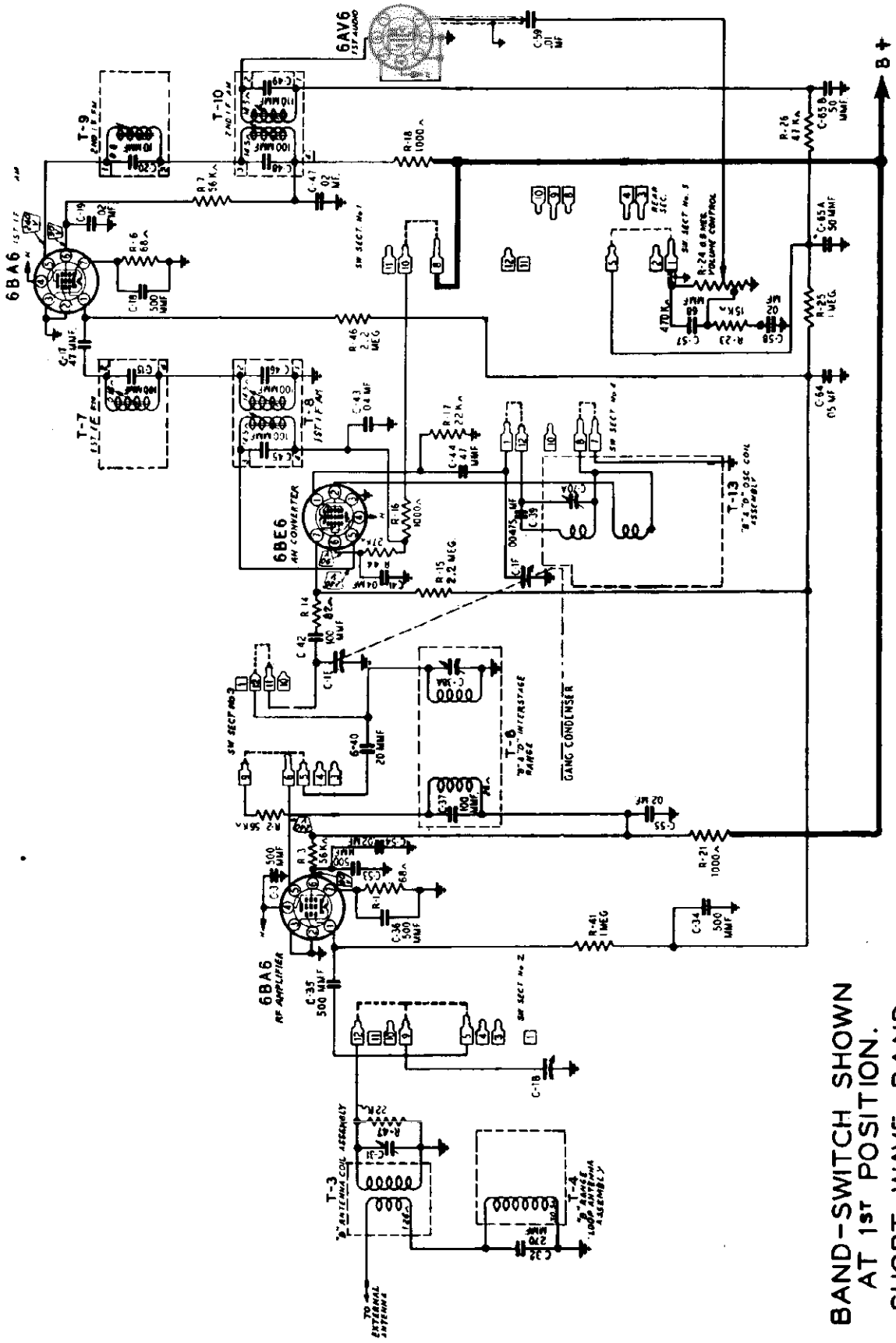

BAND-SWITCH SHOWN
AT 1ST POSITION.
SHORT WAVE BAND
5.8-18 MC

CLARI-SKEMATIX
Registered Trademark

MODELS 84WG-2718A,
84WG-2720A

MONTGOMERY WARD

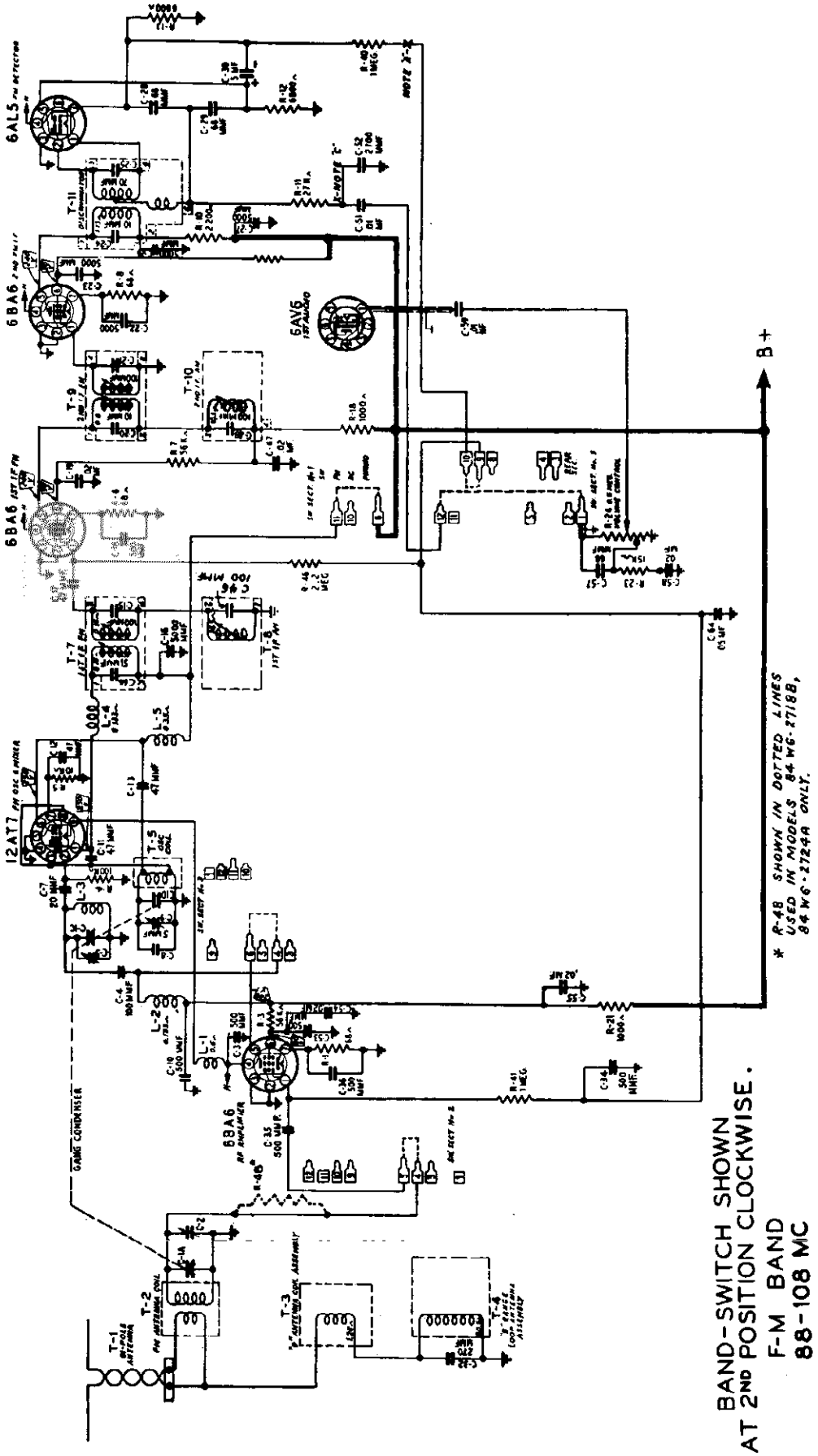

MONTGOMERY WARD

MODELS 84WG-2718A, 84WG-2720A

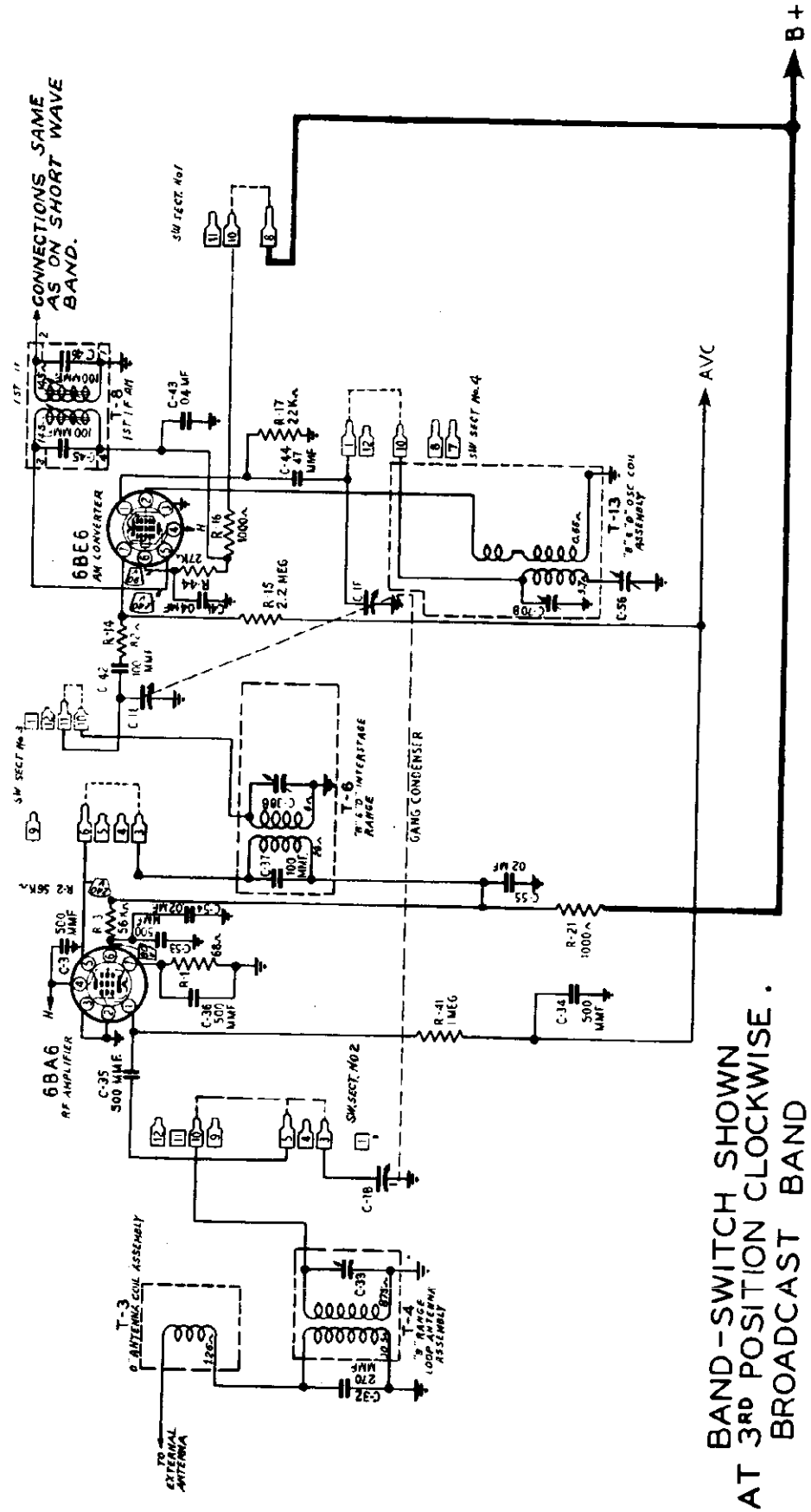

BAND-SWITCH SHOWN AT 3RD POSITION CLOCKWISE.
BROADCAST BAND
540-1600 KC

MODELS 84WG-2718A, -B, 84WG-2720A, 84WG-2721A

MONTGOMERY WARD

RECEIVER STAGE SENSITIVITIES
AM AND AUDIO STAGES

The table below lists the sensitivity at the input of each stage. The receiver should be tuned to 1000 KC for all readings. All measurements are based on an output of .5 watt. This may be measured by disconnecting the speaker voice coil and substituting an 8 ohm, 10 watt resistor across the secondary winding of the output transformer. A reading of 2 volts across this resistor will be equivalent to a .5 watt output.

The volume control must be set to maximum.

The signal source must be an accurately calibrated signal generator capable of supplying both 1000 KC and 455 KC signals modulated 30% with a 400 cycle audio signal. Variations in sensitivity of Plus or Minus 25% are usually permissible.

SIGNAL GENERATOR				INPUT FOR .5 WATT OUTPUT
FREQUENCY	COUPLING CAPACITOR	CONNECTION TO RECEIVER	GROUND CONNECTION	
1000 KC	200 mmf or RMA Dummy Antenna	External Antenna Lead	Chassis	2 Microvolts
1000 KC	.05 mf	6BA6 Interstage Pin 1	Chassis	8 Microvolts
1000 KC	.05 mf	6BE6 Converter Pin 7	Chassis	65 Microvolts
455 KC	.05 mf	6BE6 Converter Pin 7	Chassis	55 Microvolts
455 KC	.05 mf	6BA6 1st I-F Pin 1	Chassis	2500 Microvolts
400 cycles	.05 mf	6AV6 1st A-F Pin 1	Chassis	.05 Volt
400 cycles	.05 mf	6V6GT Output Pin 5	Chassis	2.8 Volts

FM STAGES

The table below lists the sensitivity for the FM stages of the receiver. The receiver must be tuned to 98 MC for all readings. Measurements are based on a .5 watt output the same as for the AM and Audio stage measurements.

The signal source must be an accurately calibrated signal generator capable of supplying a 98 MC signal modulated by a 400 cycle audio signal. For these measurements the generator must be adjusted for a 22.5 KC deviation. This will correspond to 30% AM modulation.

SIGNAL GENERATOR				INPUT FOR .5 WATT OUTPUT
FREQUENCY	COUPLING TO RECEIVER	CONNECTION TO RECEIVER	GROUND CONNECTION	
98 Mc	300 ohms	External Antenna Terminal	External Ant. Terminal	25 Microvolts
10.7 MC	.01 mf	6BA6 1st I-F Pin 1	Chassis	2200 Microvolts
10.7 MC	.01 mf	6BA6 2nd I-F Pin 1	Chassis	50,000 Microvolts

ALIGNMENT PROCEDURE
AM BROADCAST AND SHORT WAVE BAND

The following is required for aligning:

An All Wave Signal Generator Which Will Provide an Accurately Calibrated Signal at the Test Frequencies as Listed.

Output Indicating Meter, Non-Metallic Screwdriver, Dummy Antennas — .1 mf, 200 mmf and 400 ohms.

Volume Control—Maximum all Adjustments.

Connect Radio Chassis to Ground Post of Signal Generator with a Short Heavy Lead.

Allow Chassis and Signal Generator to "Heat Up" for Several Minutes.

	SIGNAL GENERATOR		THROUGH DUMMY ANTENNA	BAND SWITCH SETTING	GANG CONDENSER SETTING	ADJUST	ADJUST FOR
	FREQUENCY SETTING	CONNECT GENERATOR OUTPUT TO					
I-F	455 kc	6BE6 Pin 7 and Chassis	.1 mf	Broadcast	Rotor Fully Open	1st I-F Pri. & Sec. (3) & (4) 2nd I.-F. Pri. & Sec. (1) & (2)	Maximum Output
Broadcast	1620 kc	External ant. lead	200 mmf	Broadcast	Rotor Fully Open	Broadcast Oscillator C-70B	
	1400 kc	External ant. lead	200 mmf	Broadcast	Turn Rotor to Max. Output Set pointer to 1400 kc See Note A	Broadcast Interstage C-38B	
	1400 kc	External ant. lead	200 mmf	Broadcast		Loop Antenna C-33	
	600 kc	External ant. lead	200 mmf	Broadcast	Turn Rotor to Max. Output and Rock See Note B	600 kc padder C-56	
Repeat above oscillator adjustments at 1620 and 600 KC until readjusting the oscillator Range B Trimmer C-70B causes no further improvement in output.							
Short Wave	18.3 MC	External ant. lead	400 ohm	Short Wave	Rotor Fully Open	SW Oscillator C-70A	Maximum Output
	17 MC	External ant. lead	400 ohm	Short Wave	Turn Rotor to Max. Output	SW Interstage C-38A "D" Antenna C-31	
Reassemble chassis in cabinet							
Broadcast	1400 kc	External ant. lead	200 mmf	Broadcast	Turn Rotor to Max. Output	Loop Antenna C-33	

After each range is completed, repeat the procedure as a final check.

Note A—If the pointer is not at 1400 KC on the dial, reset pointer at the 1400 KC mark on the dial scale.

Note B—Turn the rotor back and forth and adjust the trimmer until the peak of greatest intensity is obtained.

MONTGOMERY WARD

MODELS 84WG-2718A, -B,
84WG-2720A, 84WG-2724A

ALIGNMENT PROCEDURE
FM STAGES

The following equipment is required for aligning:

An accurately calibrated signal generator providing unmodulated signals at the test frequencies listed below.

Non-metallic screwdriver.

Dummy Antennas and I-F Loading Resistor—.01 mf, 300 ohms and 5000 ohms.

Zero center scale DC vacuum tube voltmeter having a range of approximately 3 volts.

(If a zero center scale meter is not available, a standard scale vacuum tube voltmeter may be used by reversing the meter connections for negative readings.

Allow chassis and signal generator to warm up for several minutes.

	SIGNAL GENERATOR		THROUGH DUMMY ANTENNA	BAND SWITCH SETTING	GANG CONDENSER SETTING	ADJUST	ADJUST FOR
	FREQUENCY SETTING	CONNECT GENERATOR OUTPUT TO					
Discriminator	10.7 MC Note B	6BA6 2nd I-F Pin 1 and Chassis	.01 mf	FM	Rotor Fully Open	Disc. Prl. (5) Note A	Maximum Deflection
	10.7 MC Note B	6BA6 2nd I-F Pin 1 and Chassis	.01 mf	FM	Rotor Fully Open	Disc. Sec. (6) Note C	Zero Center
	10.7 MC Note B	6BA6 2nd I-F Pin 1 and Chassis	.01 mf	FM	Rotor Fully Open	Disc. Pri. (5) Note A	Maximum Deflection
	10.7 MC Note B	6BA6 2nd I-F Pin 1 and Chassis	.01 mf	FM	Rotor Fully Open	Disc. Sec. (6) Note C	Zero Center
I-F	10.7 MC Note F	6BA6 1st I-F, Pin 1 and Chassis	.01 mf	FM	Rotor Fully Open	2nd I-F Pri. Note A and D (7) 2nd I-F Sec. Note A and E (8)	Maximum Deflection
	10.7 MC Note F	FM-RF Gang Condenser terminal on top of chassis	.01 mf	FM	Rotor Fully Open	1st I-F Pri. (9) 1st I-F Sec. (10) Note A	Maximum Deflection
Recheck I-F Adjustments in order given							
R-F & Osc.	108.4	Disconnect dipole and connect generator to dipole terminals with resistor in series	300 ohms	FM	Rotor Fully Open	Oscillator C-9 Note G	Maximum Deflection
	104.5	Disconnect dipole and connect generator to dipole terminals with resistor in series	300 ohms	FM	Tune Rotor for Max. AVC voltage	RF. C-5	Maximum Deflection
	104.5	Disconnect dipole and connect generator to dipole terminals with resistor in series	300 ohms	FM	Tune Rotor for Max. AVC voltage	Ant. C-2	Maximum Deflection
Recheck R-F and Osc. Adjustments in order given							

NOTE A—Test Equipment connections are as given in the table. The zero center scale DC vacuum tube voltmeter is to be connected between chassis ground and the AVC line at the 1 megohm resistor R-40 and the band switch terminal for all adjustments except the discriminator secondary adjustment, for which see Note C.

NOTE B—A signal of .1 volt must be fed into the receiver for this adjustment.

NOTE C—Disconnect zero center DC vacuum tube voltmeter from AVC and reconnect to junction of R-11, C-51 and C-52. Adjust for zero voltage indication.

NOTE D—Before adjusting Prl. core connect 5000 ohm load resistor across the 2nd I.F. secondary terminals.

NOTE E—Disconnect 5000 ohm load resistor from secondary terminals and reconnect across the 2nd I.F. primary terminals.

NOTE F—Input can be reduced to 10,000 microvolts.

NOTE G—Oscillator frequency below signal frequency.

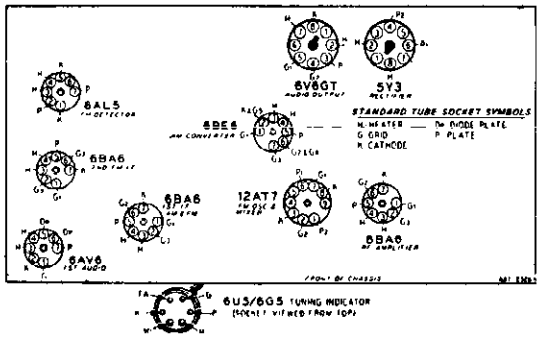

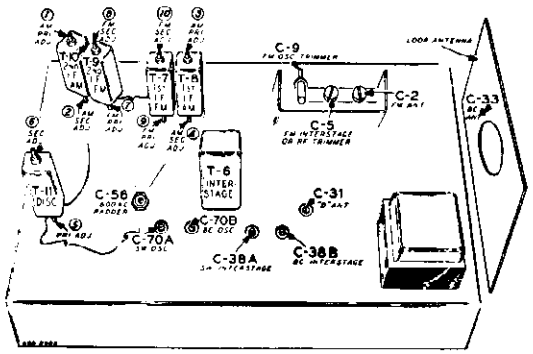

TUBE SOCKET VOLTAGES

Socket voltages are shown on the schematic diagram at the tube socket terminals. All voltages are between the socket terminal and chassis ground. Plate, screen and cathode voltages were taken with a 1000 ohm-per-volt meter with a 300 volt scale used for plate and screen voltages. Audio grid voltages were read with a vacuum tube volt-meter. Conditions of measurement are:

Line voltage.....117 Volts AC

Signal Input.....None

A variation of ±10% is usally permissible.

MODELS 84WG-2718A, -B,
84WG-2720A, 84WG-2724A

MONTGOMERY WARD

DRIVE CORD REPLACEMENT

DIAL POINTER CORD

Use a new 10X66 drive cord assembly or a new length of cord 50 inches long for the installation. Install the cord as shown in the illustration, winding three turns counterclockwise around the drive shaft spool with the turns progressing towards the front end of the drive shaft. After completing the installation rotate the drive shaft a few turns to take up the slack in the cord.

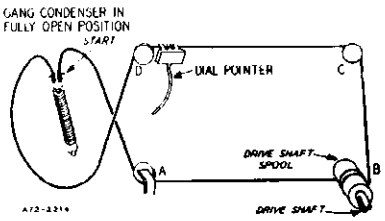

DIAL ROTATION CORD

Use a new 10X60 drive cord assembly or a new length of cord 21 inches long for the installation. Both the dial pulley and the band switch pulley must be turned to the short wave band position as shown in the illustration. Install the new cord exactly as shown then change the position of the band switch several times and note the movement of the dial.

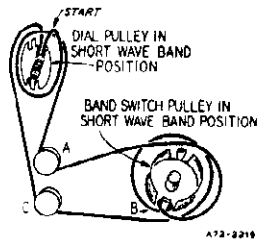

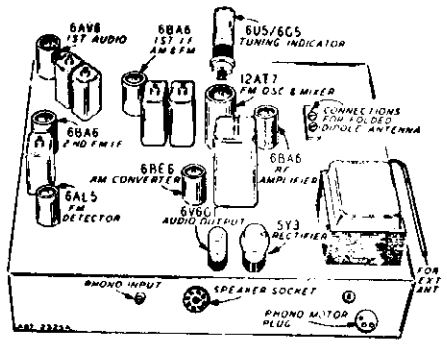

This is a three band, eight tube (plus tuning eye and rectifier tube) receiver with automatic record changer, for the reception of both AM and FM stations. The R-F and I-F stages use the latest type high gain miniature type tubes and built-in Air Wave Aerials are provided for the FM and Broadcast bands. Features include the new Roto-Selector dial with only one band visible at a time, compensator circuits to prevent oscillator drift, automatic volume control, beam power output stage, electro dynamic loud speaker and an electrostatic shield in the power transformer to reduce power line noise.

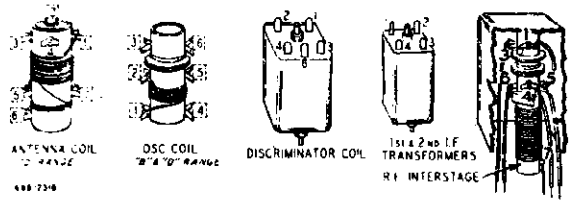

50 CYCLE AC OPERATION

If it is desired to operate this radio on a 50 cycle 105-125 volt AC power source no changes are necessary to the radio chassis.

If it is desired to use the record changer on a 50 cycle power supply, it will be necessary to replace the drive sleeve assembly on the record changer motor shaft with a 50 cycle drive sleeve assembly. This assembly is listed in the parts list.

To change the sleeve turn the recorder selector shelf to the 12" position and lift the turntable off of the record changer. Loosen the set screw holding the drive sleeve on the motor shaft and remove the old sleeve. Install the new 50 cycle drive sleeve and replace the turntable.

Ref. No.	Part No.	Description			Qty. Used in Set
		CAPACITORS			
C-1	26A483	Tuner and Gang Assembly			1
C-2, C-5	17A247	3.0-12 mmf		Trimmer	2
C-3, C-10, C-18, C-34, C-35, C-36, C-53	47X496	500 mmf		Ceramic	7
C-4, C-42	47X497	100 mmf		Ceramic	2
C-7	47X516	20mmf		Ceramic	1
C-8	47X500	5 mmf		Ceramic	1
C-9	17A255	1-8 mmf		Trimmer	1
C-11	47X499	47 mmf		Ceramic	1
C-12, C-13, C-44	47X498	47 mmf		Ceramic	3
C-14, C-15	Part of T-7 1st I-F (FM)				
C-16, C-22, C-23, C-26, C-27	47X507	5000 mmf		Ceramic	5
C-17	47X495	47 mmf		Ceramic	1
C-19, C-47, C-50, C-54, C-55	D66203	.02 mf	400 V	Tubular	5
C-20, C-21, C-24, C-25, C-28	Part of T-9 2nd I-F (FM)				
C-29, C-57	47X501	68 mmf		Ceramic	3
C-30	45X361	5 mf	100 V	Dry Electrolytic	1
C-31	17A253	5-50 mmf		Trimmer	1
C-32	47X445	270 mmf		Molded	1
C-37	47X57	100 mmf		Molded	1
C-39	46X289	.00475 mf	180 V	Tubular	1
C-38A, C-38B	17A252	1.3-12 mmf		Dual Trimmer	1
C-40	47X516	20 mmf		Ceramic	1
C-41, C-43	D66403	.04 mf	400 V	Tubular	2
C-45, C-46	Part of T-8 1st I-F (AM)				
C-48, C-49	Part of T-10 2nd I-F (AM)				
C-51, C-59	B66103	.01 mf	200 V	Tubular	2
	MODELS 84WG-2718A, 84WG-2720A				
C-52	47X492	2700 mmf		Molded	1
	MODELS 84WG-2718B, 84WG-2724A				
C-52	47X528	1500 mmf		Molded	1
C-56	17A241	300-475 mmf		Trimmer	1
C-58	B66203	.02 mf	200 V	Tubular	1

MONTGOMERY WARD

MODELS 84WG-2718A, -B, 84WG-2720A, 84WG-2724A

Ref. No.	Part No.	Description			Qty. Used in Set
C-61	D66602	.006 mf	400 V	Tubular	1
C-62	45X351	20 mf	450 V	Dry Electrolytic	1
C-63	45X302	40 mf	450 V	Dry Electrolytic	1
C-64	B66503	.05 mf	200 V	Tubular	1
C 65A / C-65B	47X112	50-50 mmf		Dual Mica	1
C-69	A66504	.5 mf	100 V	Tubular	1
C-70A / C-70B	17A246	3.2-35 mmf		Dual Trimmer	1
C-71	D66302	.003 mf	400 V	Tubular	1
C-73	47X470	330 mmf		Molded	1

RESISTORS

Ref. No.	Part No.	Ohms	Watts		Qty. Used in Set
R-1 / R-6 / R-8	B83680	68	0.5	Carbon	3
R-2	C85223	22K	1.0	Carbon	1
R-3	B85563	56K	0.5	Carbon	1
R-4	B84104	100K	0.5	Carbon	1
R-5	B84103	10K	0.5	Carbon	1
R-7	C84563	56K	1.0	Carbon	1
R-9	C84393	39K	1.0	Carbon	1
R-10	B85222	2200	0.5	Carbon	1
R-11	B84273	27K	0.5	Carbon	1
R-12 / R-13	B83682	6800	0.5	Carbon	2
R-14	B84820	82	0.5	Carbon	1
R-15 / R-42 / R-46	B85225	2.2 meg.	0.5	Carbon	3
R-16 / R-18 / R-21	B85102	1000	0.5	Carbon	3
R-17 / R-47	B84223	22K	0.5	Carbon	2
R-19 / R-30	B85224	220K	0.5	Carbon	2
R-20	Part of 13X549 Cable and Socket Assembly				
R-22	43X217	6.2		Wire Wound	1
R-23	B85153	15K	0.5	Carbon	1
R-24	36X363	.5 meg.		Volume Control	1
R-25 / R-40 / R-41	B85105	1 meg.	0.5	Carbon	3
R-26	B85473	47 K	0.5	Carbon	1
R-27	40X286	3 meg.		Tone Control	1
R-28	B85475	4.7 meg.	0.5	Carbon	1
R-31	B83514	510K	0.5	Carbon	1
R-39	B83913	91K	0.5	Carbon	1
R-43	B84225	2.2 meg.	0.5	Carbon	1
R-44	C84273	27K	1.0	Carbon	1
R-45	B85474	470K	0.5	Carbon	1

TRANSFORMERS AND COILS

Ref. No.	Part No.	Description	Qty. Used in Set
L-1	9A1881	Filament Choke Assembly	1
L-2 / L-4	9A1880	FM R-F Plate Choke	2
L-3	9A1946	FM R-F Coil	1
L-5	9A1882	FM Oscillator Plate Choke	1

MODELS 84WG-2718A, 84WG-2720A

T-1	9A1960	Di-Pole Antenna Assembly	1
T-2	9A1945	FM Antenna Coil	1

MODELS 84WG-2718B, 84WG-2724A

T-1	9A1968	Di-Pole Antenna Assembly	1
T-2	9A1966	FM Antenna Coil	1
T-3	9A1957	"D" Antenna Coil Assembly	1
T-4	26A436	Loop Antenna Assembly	1
T-5	9A1948	Oscillator Coil (FM)	1
T-6	9A1947	Interstage "B" & "D" Range Coil Assembly	1
T-7	9A1950	1st I-F Transformer (FM)	1
T-8	9A1934	1st I-F Transformer (AM)	1
T-9	9A1933	2nd I-F Transformer (FM)	1
T-10	9A1935	2nd I-F Transformer (AM)	1
T-11	9A1936	Discriminator Coil	1
T-12	53X286	Power Transformer	1
T-13	9A1918	"B" & "D" Oscillator Coil Assembly	1
T-14		Output Transformer	1

Ref. No.	Part No.	Description		Qty. Used in Set
		MISCELLANEOUS		
	12A482	12" E.D. Speaker complete with output transformer		1
	3A303	Tube socket—octal (8 prong) molded		3
	3A425	Tube socket (miniature)		5
	32X346	Tube shield (miniature)		6
	32X388	Tube Shield (For 12AT7)		1
	3A436	Tube socket (For 12AT7)		1
	3A427	Tube socket (R-F Amp)		1
	3A304	Phono Motor Socket		1
	3A305	Phono Socket—Single pin		1
	2A377	Band Switch		1
	13X328	Line Cord and Plug Assembly		1
	26A486	Escutcheon and Crystal Assy. (Walnut)		1
	26A487	Escutcheon and Crystal Assy. (Blond)		1
	10A509	Tuner Buttons (Walnut)		6
	10A674	Tuner Buttons (Blond)		6
	28X320	Springs (Tuner Button)		6
	4X870	Escutcheon Eye (Walnut)		1
	4X1015	Escutcheon Eye (Blond)		1
	10A662	Knob, Band	Walnut	1
	10A667	Knob, Tuning	Walnut	1
	10A668	Knob, On-Off, Volume	Walnut	1
	10A669	Knob, Tone	Walnut	1
	10A670	Knob, Tuning	Blond	1
	10A671	Knob, Tone	Blond	1
	10A672	Knob, Band	Blond	1
	10A673	Knob, On-Off, Volume	Blond	1
	25X498	Tuning Eye Clamp		1
	25X1396	Tuning Eye Bracket		1
	13X549	Cable and Socket Assembly—Tuning Indicator		1
	6X21	Rubber Grommets	Mtg. Gang Cond.	4
	20X329	Condenser Cushion Stud	Mtg. Gang Cond.	4
		DIAL AND DRIVE ASSEMBLY		
	26A435	Dial Bracket Assembly		1
	26A484	Dial and Drum Assembly Complete with Dial Background, Collar, Dial Drum and Dial Scale		1
	15X221	Pointer		1
	26X500	Dial Drum Shaft		1
	26A440	Pulley and Collar Assembly (For dial drum shaft)		1
	26A437	Band Switch Pulley Assembly		1
	26X468	Band Switch Shaft		
	26A441	Crown Gear Assembly (For Mtg. to Band Switch)		2
	26A434	Idler Bracket Assembly		1
	25X1389	Drive Shaft Bracket		1
	26X467	Drive Shaft		1
	24X551	Drive Shaft Spool		1
	10X60	Drive Cord Assembly (Band Change)		1
	28X524	Tension Spring (Band Change)		1
	10X66	Drive Cord and Clip Assembly (Dial Drive)		1
	28X530	Tension Spring (Dial Drive)		1
	41X72	Light Shield (Band Indicator)		4
	41X35	Light Shield (Dial)		2
	7A103	No. 47 Pilot Light		6
	7A187	Pilot Light Socket Assembly (Dual)		1
	7A209	Indicator Light Socket Assembly		4

MODELS 84WG-2718A, 2720A

TYPE W-28A147 RECORD CHANGER PARTS

W-15X090-1	Motor Assembly, 60 cycles, 115-120 V.	1
W-17X412-11	50 Cycle Drive Sleeve Assembly	1
Shure P30-1	Crystal Cartridge and semi-Permanent Needle Assembly	1
	Semi-Permanent Needle (Specify part number and letters stamped on crystal)	1

MODELS 84WG-2718B, 2724B

TYPE V-28A150 RECORD CHANGER PARTS

V-1525-A or V-1923	Motor Assembly, 60 cycles, 115-120 V.	1
	Motor Assembly, 50 Cycles, 115-120 V.	1
Shure P30-1	Crystal Cartridge and Semi-Permanent Needle Assembly	1
	Semi-Permanent Needle (Specify part number and letters stamped on crystal)	1

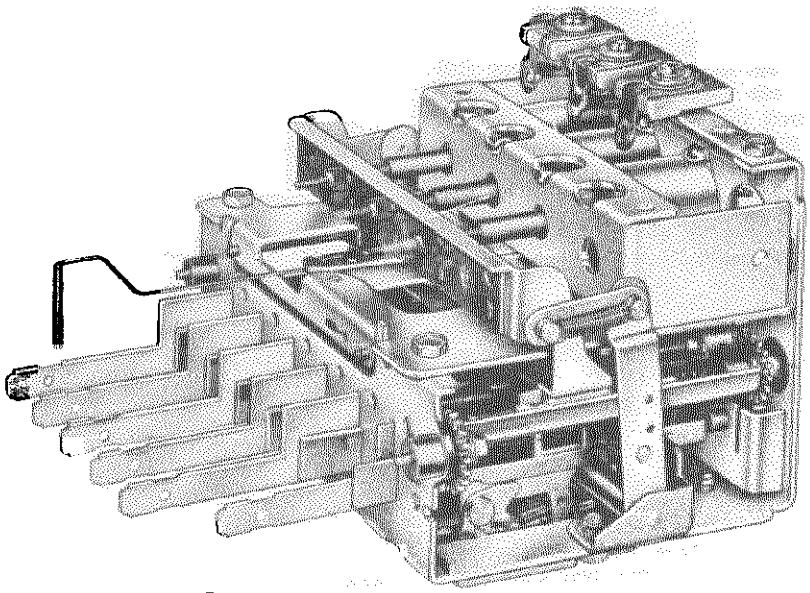

GENERAL INFORMATION

DESCRIPTION

Automatic Tuner AT-58 is used in Motorola specific auto receivers using Chassis 8A, and also in Model CR8. Tuner AT-58 is adapted to fit any receiver using Chassis 8A or Model CR8 by simply using the correct pointer and push buttons.

This is a 3-gang permeability type tuner, mechanically operated by movement of its push buttons. Five pre-set and one manual tuning positions are provided. The frequency range is 535 to 1600 Kc. The pre-set positions can be set in any sequence to any frequency within this range.

SERVICE TOOLS

The simplicity of the tuner allows easy servicing with:

1. 1/4" open end and 1/4" box end wrench.
2. A stiff steel hook 1/16" diameter made of 1/8" rod, ground down and shaped like a #5 to #10 size crochet hook, to hook and unhook the springs.
3. Slab head wrench for coil adjustment: #2/56 head.

TO REMOVE TOP DECK

Unscrew two #8 sheet metal screws (45) on the back of the tuner and two #8 sheet metal screws (45) on the top front of the tuner. (Do not unscrew screws (45) at trimmer bracket). Before removing top deck, unhook springs (53) and links (25). Grasp top deck and lift up and tip back. This leaves both decks open for servicing. See Figures 1 and 2.

SERVICING LOWER DECK

Looking at the top of the lower deck (with front to you), on the right we have the manual drive lead screw assembly (42). The other 5 assemblies (43) are the station set-up screw assemblies.

Note that all assemblies can be easily lifted out after springs (50) are unhooked.

Note also that unless a push button arm (1) is pushed in, all assemblies lay flat. When a push button arm (1) is pushed in, the assembly is tilted about 30°.

Visual inspection will show correct location of all springs in the assemblies and those which hold down the assemblies.

Note action of gear train as manual knob is turned and push button arm is pushed in so gears mesh. Automatic tuning buttons can be checked for any binding by trying each button at their present setting.

DRIVE ARM ADJUSTMENT

It is very important that the carriage drive assembly (12) be correctly adjusted in its bearings so as not to bind or be too loose and allow it to twist and force the tuner out of alignment.

On the left side of the lower deck, you will find a set screw (47) and lock nut (30) for assembly adjustment. Note that the assembly is floated in the base bracket (7) between two ball bearings (4), one on each end. Adjust by loosening lock nut (30) and then turn set screw (47) so that all bearing play is eliminated but yet carriage drive assembly (12) moves freely. Tighten lock nut (30) after adjustment. Before hooking spring (54), tip the tuner several times to make sure carriage drive assembly (12) is free enough to swing up or down by its own weight.

POINTER REPLACEMENT

The pointer is easily removed by downward and outward pressure to unhook it from the pointer arm (2). Pointer is replaced by reversing procedure. Be sure that the correct pointer is used; pointers vary in length, depending on which receiver tuner is to be used in. See Specific Radio Service Manual (i.e., FD8, QE2, etc.) for part number of pointer.

ANT., RF OR OSC. CORE REPLACEMENT

The tuner cores (18) are easily unscrewed from clip (14) and pulled out when carriage assembly (13) is extended. Note that the cores are coded with a paint dot on the screw portion; always use replacement cores bearing the same color coding. When ordering replacement cores, always specify color coding together with part number.

TO SET THE PUSH BUTTONS

1. Turn receiver "on" and allow it to warm up for a few minutes.

2. Push the first automatic tuning button in as far as it will go and HOLD IT THAT WAY.

3. With the tuning knob, tune in the station you desire to set up. Tune carefully until you are exactly on the station; tuning to either side of it will result in poor tone quality. The pointer will indicate station being set up. Release button and knob after tuning in station.

4. Follow above steps 2 and 3 for the remaining four buttons.

SERVICE INFORMATION

The entire top deck of this tuner may be removed, while tuner is mounted in receiver chassis, allowing complete accessibility to all mechanical parts.

TO REPLACE PARTS ON LOWER DECK

Remove top deck of tuner (follow previous instructions). This exposes the 5-station set up screw assemblies (43) and manual lead screw assembly (42). These may be removed by unhooking springs (50) and lifting them out.

If push button arms or slider arms are to be replaced, it will be necessary to remove spring (54); then take out screws (46) from bottom of tuner to allow bracket (7) to move back and permit push button arm assemblies (1) or slider arms (3) to be removed after springs (53) have been removed.

Patience is required to assemble push button arm assemblies (1) and slider arms (3) back into bracket (7). Reassemble tuner by working in reverse order.

Test all parts of lower deck for free operation before assembling to upper deck.

TO REPLACE TOP DECK

Make sure that carriage drive assembly (12) is tipped back (spring (54) unhooked) and carriage assembly (13) carrying the tuning cores is out. Slip in the top deck, making sure the spring washer (70) on the manual drive assembly (42) is between the drive assembly gear and the back of the base before putting in screws and locking the two decks together.

SERVICE HINTS

1. STATION DRIFT (Push Buttons). Check the flat friction spring (56) for breaks or permanent set.

2. TUNER STICKING. Check collars on manual drive assembly (42). If they are cocked or stuck, replace with new assembly.

3. HARD TUNING FOR PRE-SETTING. Check lubricant on the gear train. It should be Stayput #512 or equal.

4. TWISTING CARRIAGE PLATE. Due to poor setting of carriage drive assembly (12). See "Drive Arm Adjustment".

5. ROUGH DRIVE - Check die cast gears (19,20 & 21). Check for lubrication (Stayput #512). Check manual drive bushings.

6. LATCH BAR JAMMING OUT. Check the latch bar spring (51) on the back. If it is bent out of shape, turn it 180° and reshape. If it is weak-replace.

7. STICKING POINTERS. Check the pointer bearing (6) and make sure the linkage of the assembly is free.

8. POINTER NOT RE-POSITIONING OR SLOPPY ACTION. Be sure to check the torsion spring (58) (on the under side of the top deck) for breakage or slipping from the notches on the base and the pointer link plate (34).

©John F. Rider

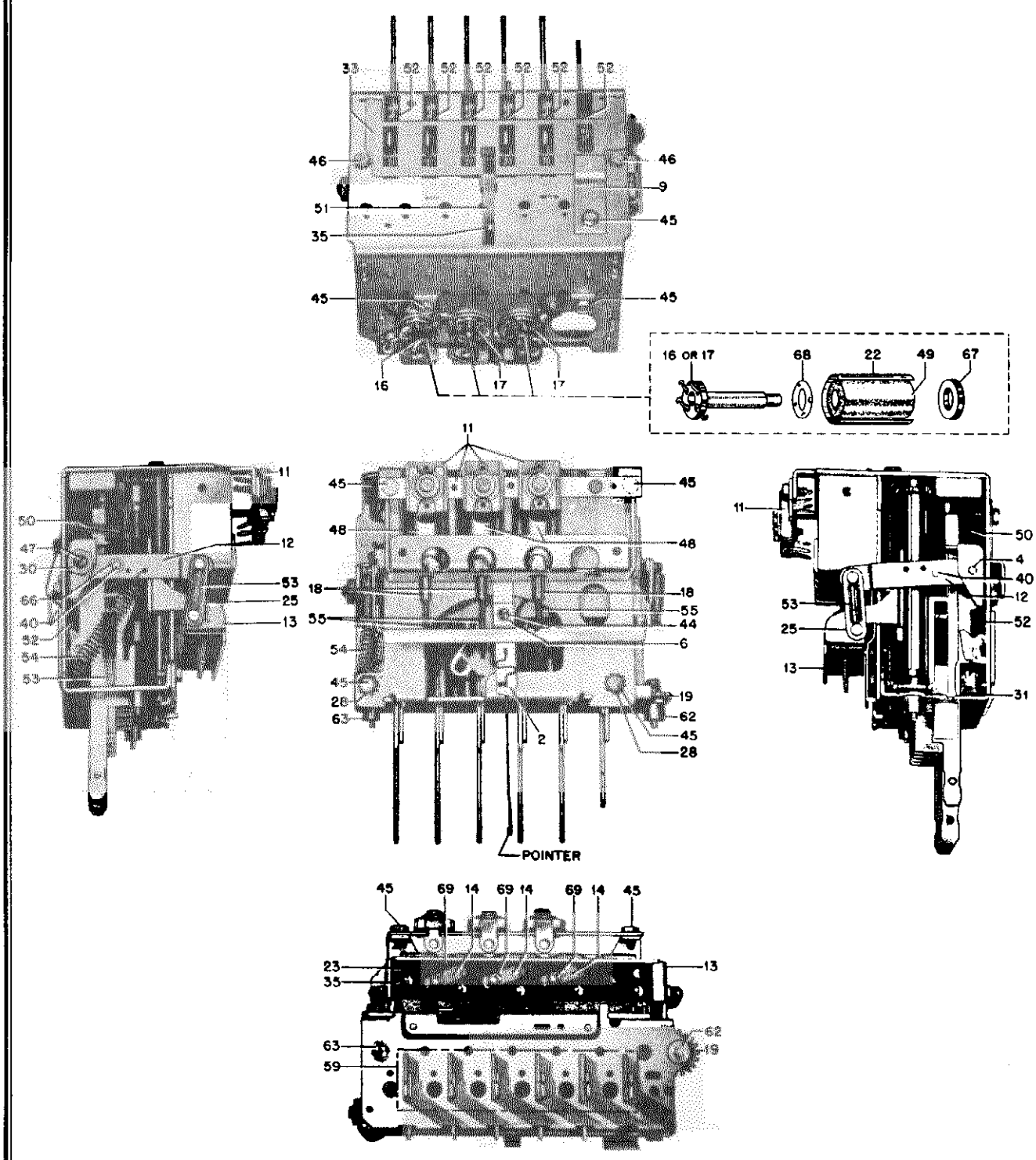

FIGURE 1. AUTOMATIC TUNER AT-58 PARTS LOCATIONS

MODEL AT-58 MOTOROLA INC.

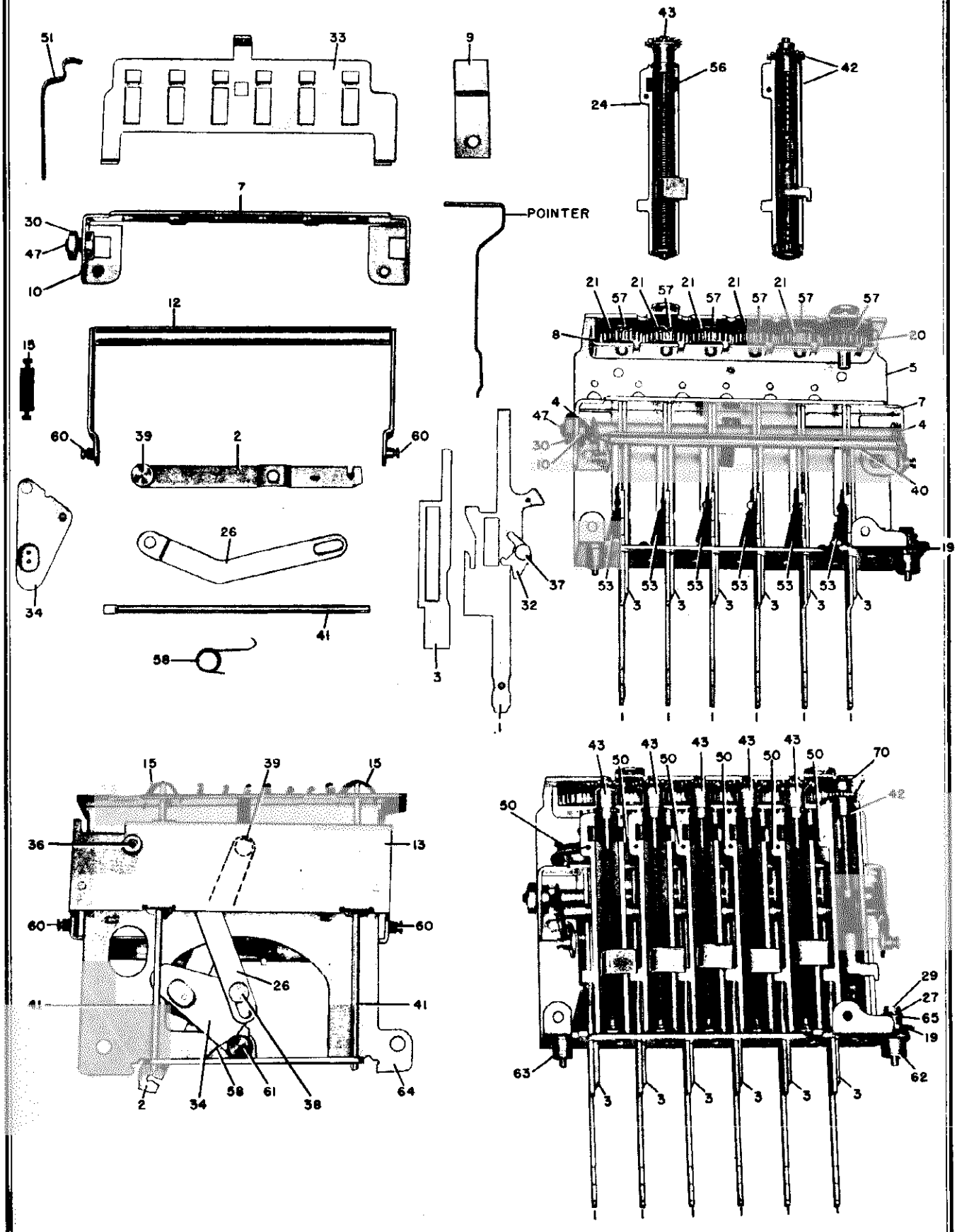

FIGURE 2. AUTOMATIC TUNER AT-58 PARTS LOCATION

©John F. Rider

REPLACEMENT PARTS LIST

REF. NO.		PART NO.	DESCRIPTION
1		1X472775	Arm Assembly: push button arm with trip pawl
2		45A472698	Arm, pointer
3		45A472692	Arm, slider
4		43A4326	Ball, steel: .125 diameter (tuner drive carriage bearings)
5		1X472773	Base, Gears & Stud Assembly: consists of tuner base, station set-up gear train and locating studs only
6		43A472889	Bearing, pointer
7		1X472776	Bracket & Bushing Assembly
8		7A472723	Bracket, gear retaining
9		7A482508	Bracket, latch plate retaining
10		43A472664	Bushing, drive arm adjustment
11		20A480600	Capacitors & Bracket Assembly: 3 mica trimmers on bracket
12		1X472777	Carriage Drive Assembly
13		1X472788	Carriage, Insulator & Studs Assembly
14		42A70184	Clip, core adjustment: phosphor bronze
15		42A472671	Clip, guide rod retaining
16	*	24B71879	Coil, oscillator
17	*	24B71881	Coil, RF & Antenna
18	*	46K472679	Core, Iron & Screw (tuning cores)
19		44B472721	Gear, idler
20		44A472662	Gear, manual
21		44A472676	Gear, station set-up
22		14A70876	Insulator, coil sleeve
23		14A472680	Insulator, core: bakelite (on carriage plate)
24		45B472696	Lever, stop actuating (on station set-up lead screw)
25		45A472689	Link, drive
26		45A472708	Link, pointer drive
27		4S7663	Lockwasher: #4 internal; cad pl (idler gear mtg)
28		4S7657	Lockwasher: #8 external; cad pl (top deck mtg)
29		2S8376	Nut: 4-40 x 3/16 hex; nkl pl (idler gear mtg)
30		2S7009	Nut: 10-32 x 3/8 hex; cad pl (setscrew lock)
31		35A472695	Pad, felt (push button arm cushion)
32		46A472718	Pawl, trip
33		64B472716	Plate, latch
34		64A472706	Plate, pointer link
35		5S8479	Rivet: .088 x 1/8; steel; nkl pl (latch spring & core ins. mtg)
36		5A472705	Rivet, eccentric shoulder
37		5A472670	Rivet, shoulder (pawl mtg)
38		5A472648	Rivet, shoulder
39		5A472649	Rivet, shoulder
40		47A472678	Rod, drive
41		47A472682	Rod, guide
42		1A472720	Screw Assembly, manual lead: complete with gears, stop & stop actuating lever
43		1A472722	Screw Assembly, station set-up: complete with gear & carriage stop; stop actuating lever not included
44		3S1921	Screw: 2-56 x 1/8 slotted binderhead machine screw; cad pl (pointer bearing mtg)
45		3S7454	Screw: #8 x 1/4 PKZ plain hex head sheet metal screw; cad pl
46		3S7205	Screw: 8-32 x 1/4 slotted hex head locking type machine screw; cad pl (push arm brkt. mtg)
47		3S3852	Setscrew: 10-32 x 3/8 allen head cup point machine screw (tuner drive carriage mtg)
48		26A70878	Shield, coil
49		43A70881	Sleeve, coil: powdered iron
50		41A472675	Spring, coil
51		41A472780	Spring, latch bar
52		41A472694	Spring, coil
53		41A485614	Spring, coil
54		41A472781	Spring, coil
55		41A77595	Spring, coil slug
56		41A472681	Spring, flat friction (on station set-up lead screw)
57		41A472685	Spring, set-up gear
58		41A472659	Spring, torsion
59		35A485615	Strip, anti-rattle: felt (cemented to front of tuner base to prevent push button arms from rattling. NOTE: If this strip is used on tuner not previously equipped with one, replace push button arm springs with stronger springs, Part No. 41A485614)
60		46A472686	Stud
61		46A472657	Stud, link
62		46A472669	Stud, gear mounting
63		46A472672	Stud, locating
64		1X472782	Top Deck Assembly: complete top deck of tuner including coils
65		4S7551	Washer: 9/32 x .120 x .025 thick; brass (idler gear mtg)
66		4K73809	Washer, "C" (drive rod retainer)
67		4A70873	Washer, coil spacer
68		4A74571	Washer, paper
69		4A70956	Washer, slug insulator: bakelite
70		4A473875	Washer, spring (on manual lead screw)

* Specify color of paint dot coding on old part when ordering.

MODELS OE8, PC3, PC8, SR6, 8FDT, 8GMT, etc.
CHASSIS 8A

MOTOROLA INC.

MODELS BK8, BK8X, CT8, FD8, KR8, NH8, OE2

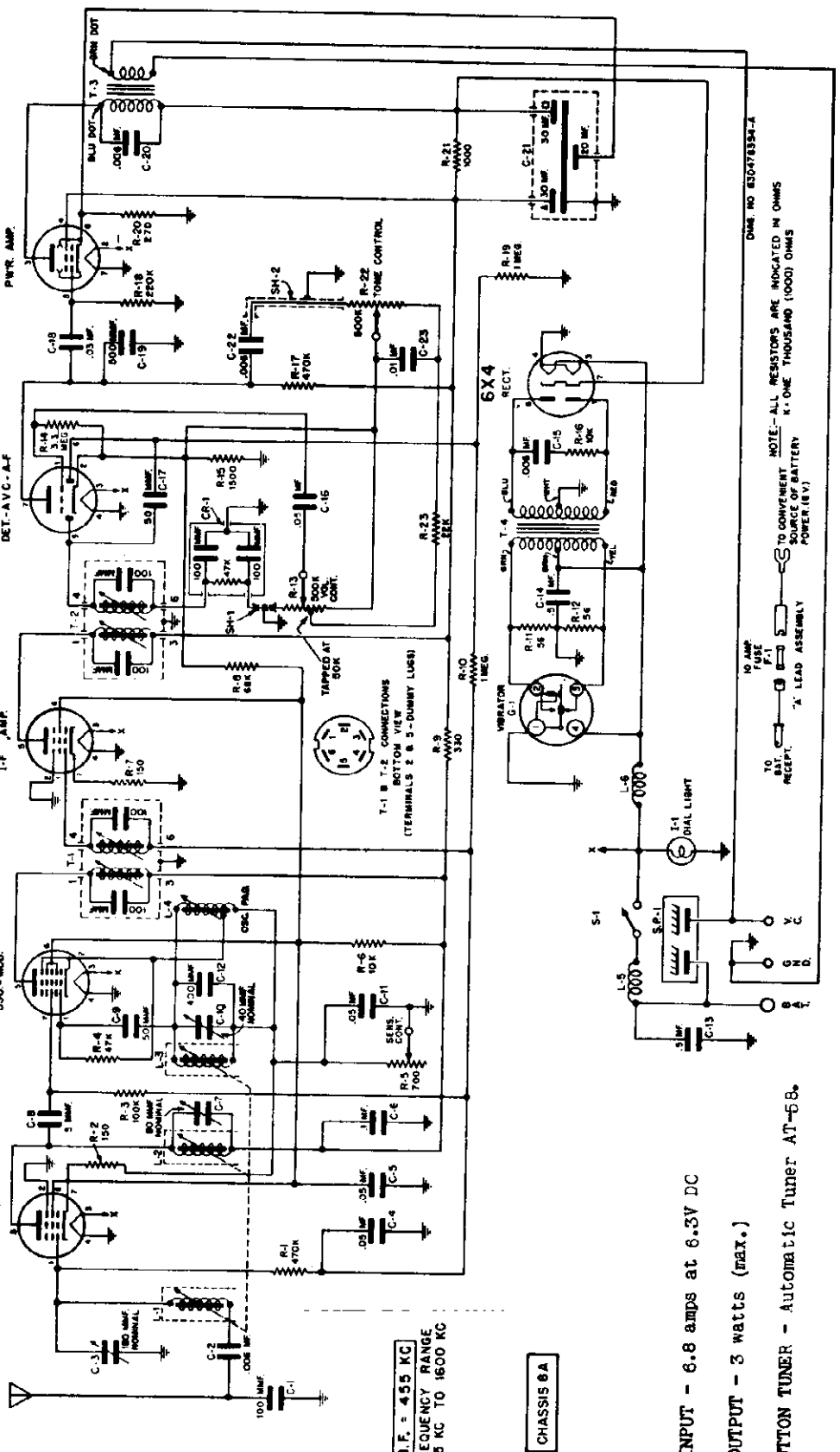

POWER INPUT - 6.8 amps at 6.3V DC

POWER OUTPUT - 3 watts (max.)

PUSH BUTTON TUNER - Automatic Tuner AT-68.

TO SET THE PUSH BUTTONS

1. Turn radio ON and allow it to warm up for a few minutes.
2. Push the number "1" button in as far as it will go and HOLD IT THAT WAY.
3. With the tuning knob, tune in the station you desire to set up. Tune carefully until you are exactly on the station; tuning to either side of it will result in poor quality. Release button and knob after tuning-in station.
4. Follow above steps 2 and 3 for the remaining four buttons.

©John F. Rider

ALIGNMENT

EQUIPMENT REQUIRED

1. A special tool for adjusting the tuner cores. Use Alignment Tool, Motorola Part No. 66A76278.

2. A small screwdriver for IF & RF alignment.

3. An accurately calibrated AM modulated signal generator.

4. A low range output meter.

5. A special dummy antenna for RF alignment. Construct dummy antenna as shown in Figure 1. The 21" coaxial lead needed in its construction is the same type as used for lead-in on Motorola car antennas.

PROCEDURE

1. Expose alignment adjustment screws as follows:

Remove the top and bottom covers; replace three front plate screws to hold front plate in position after making sure that the plastic idler gear engages gear on tuner and power switch operating stud engages power switch throw plate. On some models it will also be necessary to remove the escutcheon and escutcheon spacer.

2. Connect a PM speaker (3.2 ohm VC) to VC and GND terminals and connect the output meter across voice coil.

3. Connect a 6 volt storage battery to GND (or chassis) and BAT terminals of receiver; turn receiver on and allow it to warm up for a few minutes. Set receiver volume control at maximum. Push "M" button (far enough so it will lock in) to place tuner in manual position.

4. Sensitivity Control. This control must be set to provide 2 ± 1/2 volts bias on the RF tubes before alignment is started. Measure this voltage between sensitivity control terminal and chassis.

5. For greatest accuracy, keep output of receiver at approximately 1 watt (1 watt = 1.79 volts on output meter) throughout alignment by reducing generator output (not receiver volume control) as stages are brought into alignment.

6. IF & RF ALIGNMENT - See Alignment Chart

IMPORTANT: Do not push in on the alignment tool when adjusting the tuner cores. The slightest inward pressure on the alignment tool may move the tuner carriage and result in inaccurate alignment.

7. SETTING THE SENSITIVITY CONTROL - After alignment is completed, set signal generator to 600 Kc and adjust its output to 1.3 microvolts. Adjust the sensitivity control to provide 1 watt output (1 watt = 1.79 volts on output meter).

8. ANTENNA TRIMMER ADJUSTMENT - Once alignment has been satisfactorily performed, no further adjustment of any alignment screws should be made except to align the antenna trimmer (7) to car antenna after receiver is installed in car. This adjustment should be made with antenna fully extended and receiver set to approximately 1400 Kc. Peak the trimmer for maximum volume of a weak station or background noise between stations.

9. POINTER ADJUSTMENT - The pointer can be moved slightly for calibration correction by turning the eccentric adjustment rivet. This rivet has a 1/4" hex head and is exposed only when tuner is tuned to high frequency end. See Figure 1 for its location.

STEP	TUNER SET TO	DUMMY ANTENNA	SIGNAL GENERATOR CONNECTED TO	SIGNAL GENERATOR FREQUENCY	ADJUST TRIMMER OR CORE	REMARKS
1.	High frequency end (cores out)	.1 mf	Hi side - 6BE6 grid (pin #7) Lo side - chassis	455 Kc	1,2,3&4	Peak for maximum in order indicated. Check by repeating procedure.
2.	High frequency end. Cores should project 1-1/8" from cans. (Screw out if necessary).	Special -See Fig. 1.	Ant. receptacle through special dummy.	1605 Kc	5,6 & 7	Peak for max. in order indicated.
3.	Set spacing between carriage plate and coil shield plate to 1-3/8".	"	"	1425 Kc	8, 9 & 10	Peak for max. in order indicated.
4.	Set spacing between carriage plate and coil shield plate to 17/32"	"	"	Turn generator power off.	11	Peak oscillator padder for maximum noise. See *
5.	Approx. 1400 Kc	-	-	-	7	With set installed in car, peak antenna trimmer for maximum noise or volume of a weak station. Car antenna should be fully extended.

* If padder core (11) must be moved more than 1/2 turn from its original position, repeat steps 2, 3 & 4 until it is necessary to move the padder core less than 1/2 turn in this step.

CHASSIS 8A,
All Models

MOTOROLA INC.

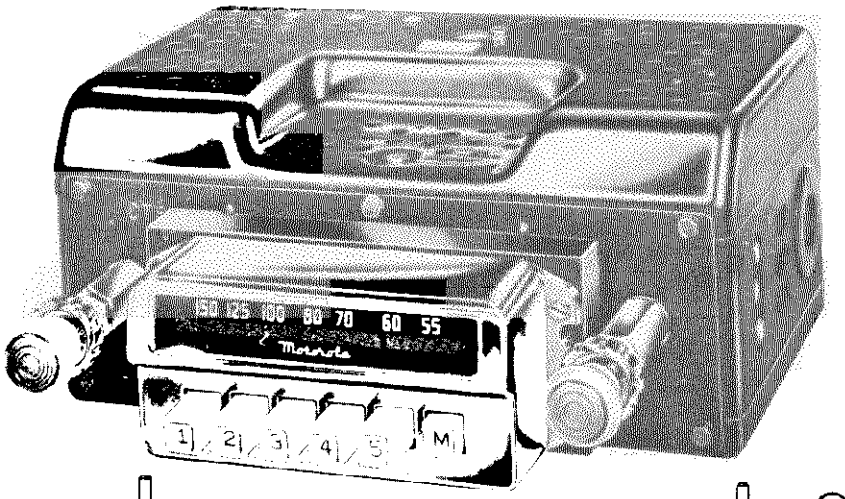

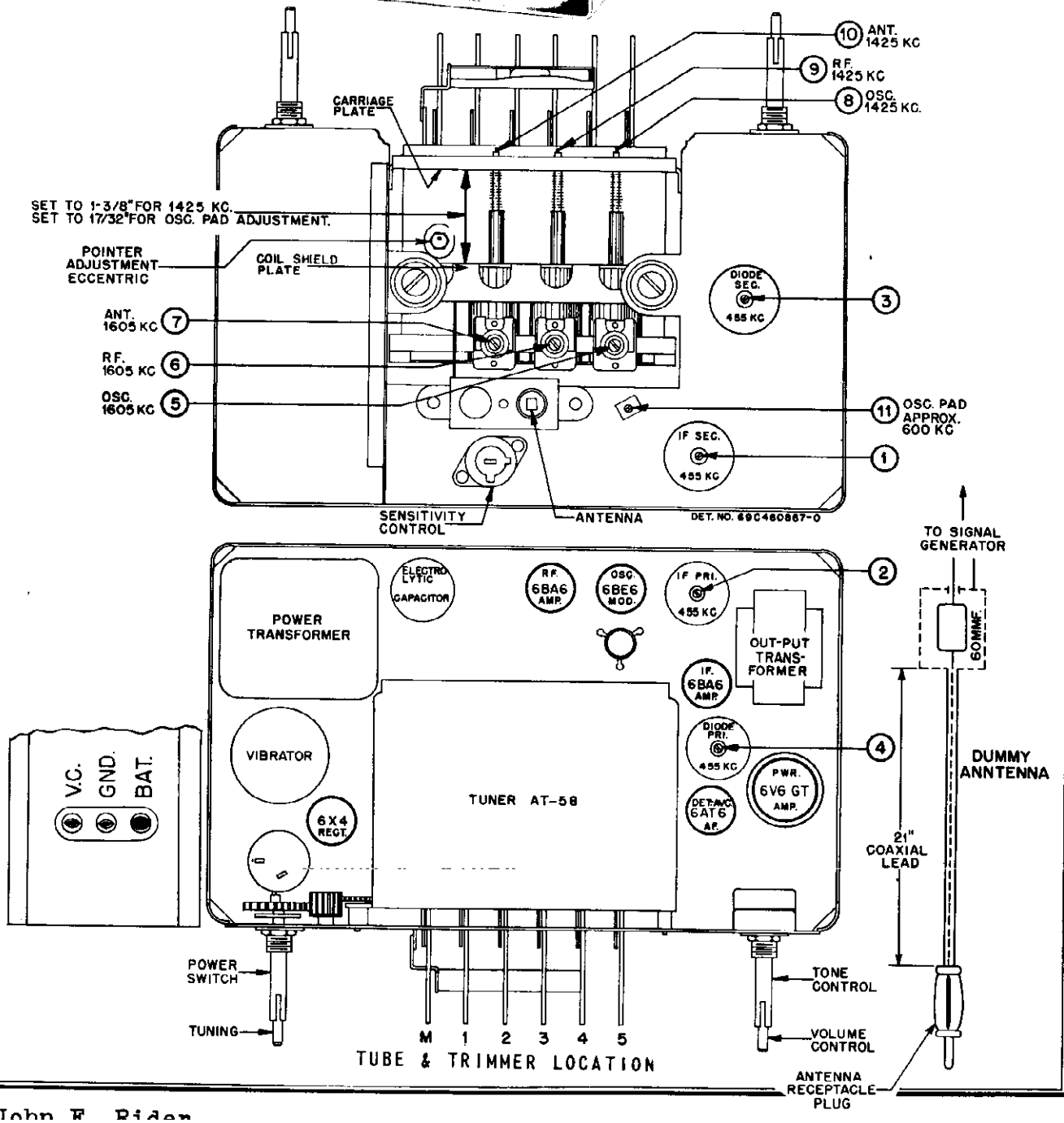

©John F. Rider

MOTOROLA INC.

CHASSIS 8A,
All Models

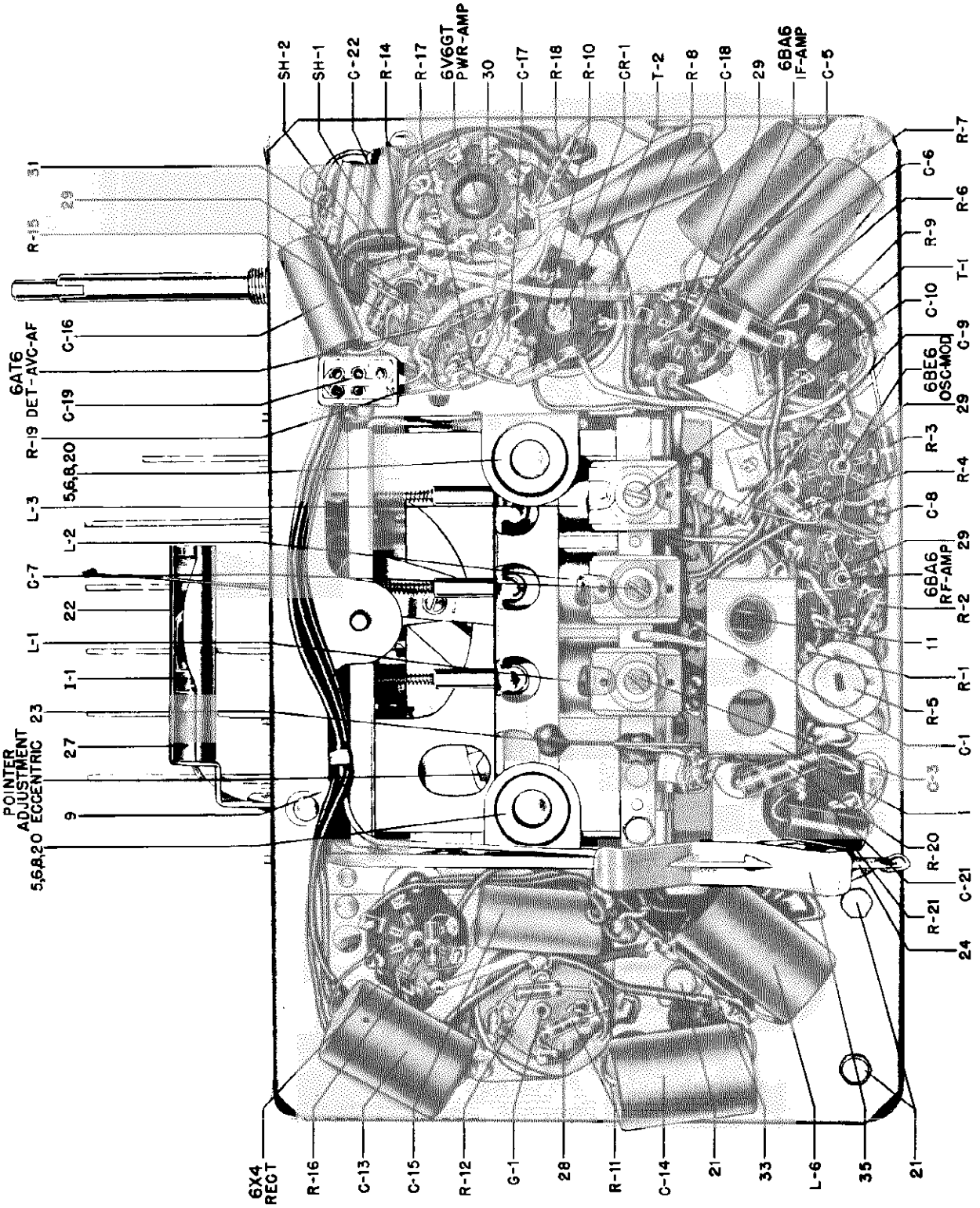

CHASSIS 8A PARTS LOCATION - BOTTOM VIEW

©John F. Rider

CHASSIS 8A,
All Models

MOTOROLA INC.

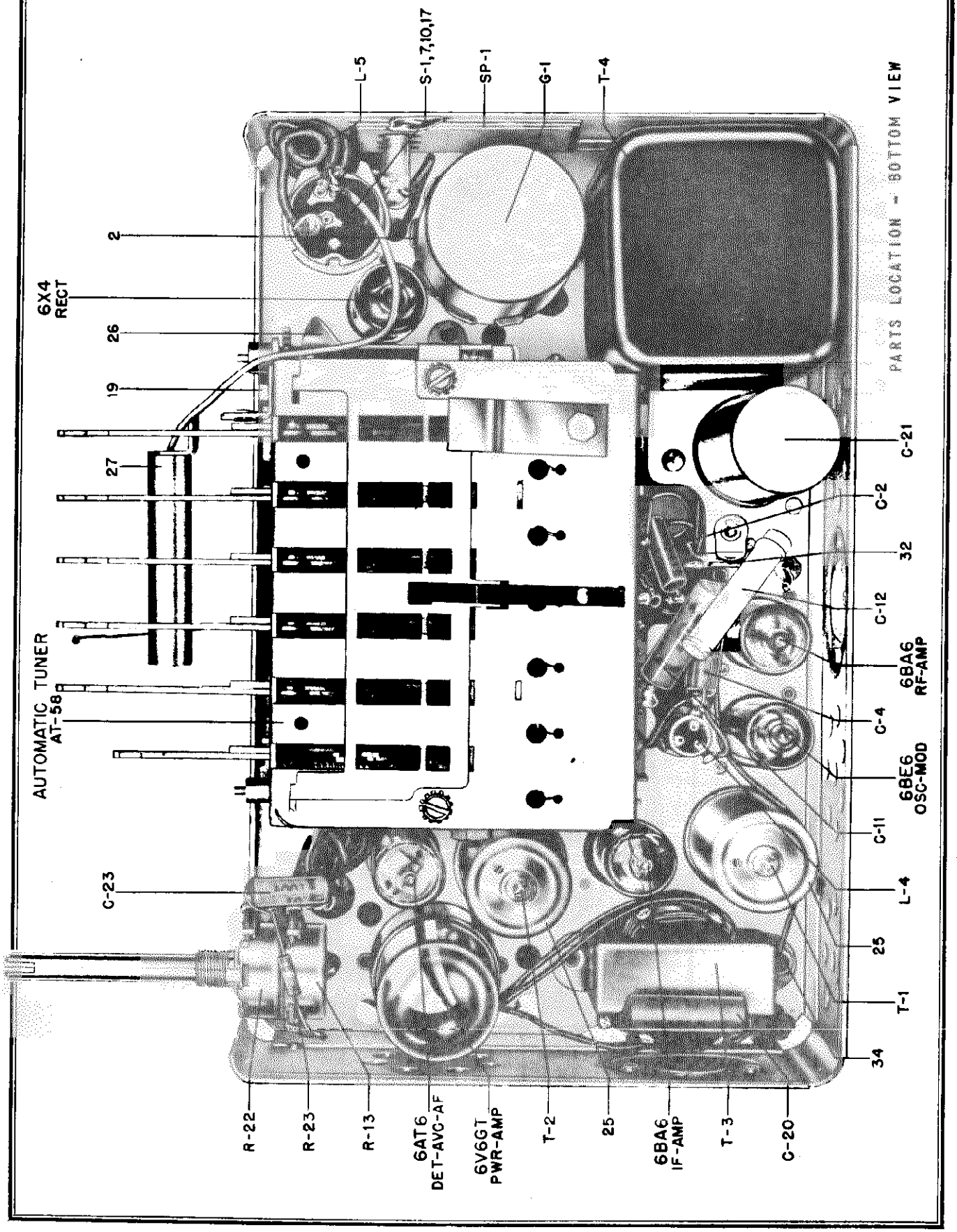

©John F. Rider

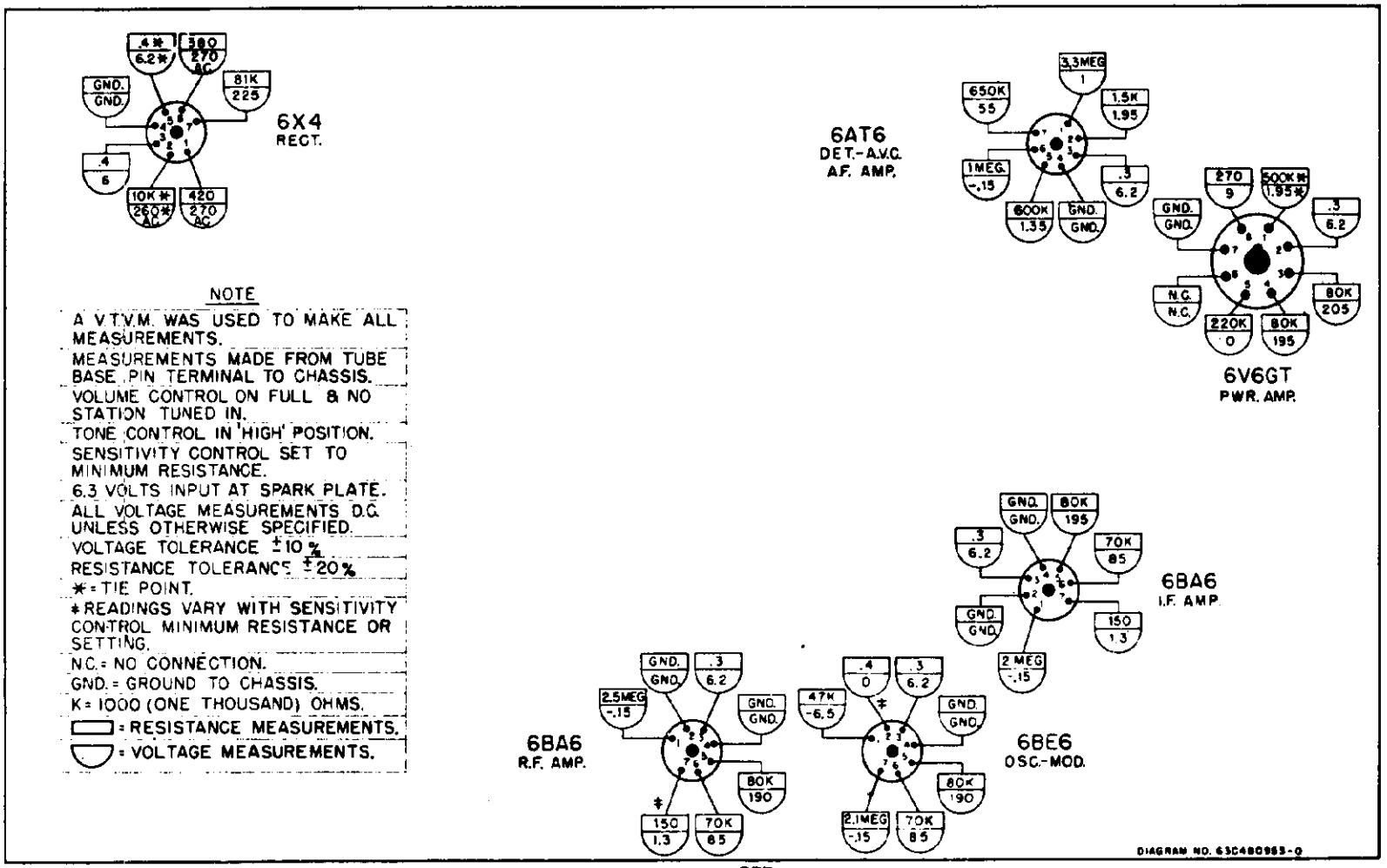

CHASSIS 8A ELECTRICAL PARTS

CAPACITORS

REF. NO.	PART NO.	DESCRIPTION
C-1	21B77562	Ceramic: 100 mmf 500V .....
C-2	8A4529	Paper: .006 mf 100V .....
C-3	20A480600	Trimmer, variable mica: 50 to 180 mmf; on same bracket as C-7 and C-10 .....
C-4	8A13514	Paper: .05 mf 100V .....
C-5	8A14791	Paper: .05 mf 400V .....
C-6	8K13166	Paper: .1 mf 400V .....
C-7	20A480600	Trimmer, variable mica: 50 to 180 mmf; on same bracket as C-3 & C-10 .....
C-8	21K70720	Molded: 5 mmf 500V .....
C-9	21K74661	Ceramic: 50 mmf 300V .....
C-10	20A480600	Trimmer, variable mica: 30 to 60 mmf; on same bracket as C-3 & C-7 .....
C-11	8A13514	Paper: .05 mf 100V .....
C-12	21A71872	Ceramic: 400 mmf 5% 500V .....
C-13	8A17028	Paper: .5 mf 100V .....

CHASSIS 8A, All models MOTOROLA INC.

REF. NO.	PART NO.	DESCRIPTION
C-14	8A17028	Paper: .5 mf 100V
C-15	8A12840	Paper: .006 mf 1600V
C-16	8A13514	Paper: .05 mf 100V
C-17	21K74661	Ceramic: 50 mmf 300V
C-18	8A71911	Paper: .03 mf 400V
C-19	21R6639	Mica: 500 mmf 500V
C-20	8A71910	Paper: .006 mf 400V
C-21	23A473015	Electrolytic: 30-30-20 mf/350-300-25V...
C-22	8A71910	Paper: .006 mf 400V
C-23	8A472754	Paper: .01 mf 100V
CAPACITOR-RESISTOR		
CR-1	21A472571	Capacitor-Resistor: 100 mmf-47,000 ohms 100 mmf
FUSE		
F-1	65A10266	Fuse: 10 amp; type 3AG
VIBRATOR		
G-1	48B3333	Vibrator: non-sync; 4 pin
DIAL LIGHT		
I-1	65X10867	Bulb: 6.3V; .25A; bayonet base; clear...
COILS		
L-1,2	24B71881	RF & Antenna coil (specify color of paint dot on old coil when ordering)
L-3	24B71879	Oscillator coil (specify color of paint dot on old coil when ordering)
L-4	24B72027	Oscillator padder coil: complete with iron tuning core
L-5	24K78026	Choke
L-6	24A472535	Choke, hash
RESISTORS		
NOTE:	All resistors are 1/2W 20% carbon insulated type unless otherwise specified.	
R-1	6R6082	470,000
R-2	6R3992	150
R-3	6R6075	100,000
R-4	6R6056	47,000
R-5	18K77552	Sensitivity control: 700 ohms
R-6	6R476060	10,000 2W
R-7	6R3992	150
R-8	6R6001	68,000
R-9	6R6010	330
R-10	6R6004	1 meg
R-11	6R5614	56 10%
R-12	6R5614	56 10%
R-13	18A472863	Volume Control 500,000 ohms; tapped at 50,000 ohms (dual-also includes tone control R-22)
R-14	6R2118	3.3 Meg
R-15	6R6161	1500
R-16	6R6054	10,000
R-17	6R6032	470,000
R-18	6R6015	220,000
R-19	6R6004	1 meg
R-20	6R6336	270 10% 1W
R-21	6R476004	1,000 2W
R-22	18A472863	Tone Control: 500,000 ohms (dual - also includes volume control R-13)
R-23	6R6028	22,000
SWITCH		
S-1	1A472891	Power Switch: complete with mounting stud
SHIELDS		
SH-1	30K472998	Cable, volume control: single-conductor; white; shielded
SH-2	30K472997	Cable, volume control: single-conductor; blue; shielded
SPARK PLATE		
SP-1	1A472606	Spark Plate Assembly
TRANSFORMERS		
T-1,2	24B76553	Diode or IF, 455 Kc: complete with padding capacitors & tuning cores, but less shield
T-3	25B70171	Output transformer
T-4	25B472533	Power transformer
TUNER		
	1X472770	AT-58 Automatic Tuner (see separate Service Manual-Motorola Part No. 64P480955 for complete breakdown)

CHASSIS 8A MECHANICAL PARTS

1	7A472580	Bracket, antenna receptacle mtg
2	42A4215	Clip, vibrator grounding
3	15K472593	Cover, bottom
4	15C472592	Cover, top
5	4A51289	Cupwasher (tuner mtg)
6	37A12949	Grommet, rubber (tuner mtg)
7	4S7657	Lockwasher: #8 external; cad. pl. (power sw. mtg)
8	4S7671	Lockwasher: #8 split; cad. pl. (tuner mtg)
9	29R5239	Lug, soldering
10	64A472735	Plate, throw (power switch actuating plate)
11	1X70641	Receptacle, antenna
12	5S7771	Rivet: .088 x 3/16 steel; nickel plated ((tube socket mtg)
13	7S7706	Rivet: .122 x 1/8 steel; nickel plated (term. strip mtg)
14	5S7707	Rivet: .122 x 5/32 steel; nickel plated (tube socket mtg)
15	5S7701	Rivet: .122 x 3/16 steel; nickel plated (vib. socket & output trans. mtg)
16	5S7751	Rivet: .122 x 1/4 steel; antique copper finish (spark plate mtg)
17	3S7150	Screw: #8 x 3/16 slotted binderhead machine screw, cad. pl. (pwr. switch mtg)
18	3S7456	Screw: #8 x 1/4 PKA slotted acorn head sheet metal screw; antique copper finish (housing screws)
19	3S7454	Screw: #8 x 1/4 PKZ plain hex head sheet metal screw; cad. pl (pilot light socket mounting)
20	3S7154	Screw: 8-32 x 1/4 slotted binderhead machine screw; cad. pl. (tuner mtg)
21	3S3397	Screw: #8 x 5/16 PKZ plain hex head sheet metal screw; cad pl. (pwr trans mtg)
22	1X473150	Shield Assembly, light
23	26A473201	Shield, hash
24	26A472560	Shield, hash
25	1A71049	Shield & Sleeve Assembly (for T-1 & T-2)
26	26A472602	Shield, tuner
27	9A472805	Socket, pilot light: includes brackets..
28	9A70308	Socket, tube: 4 pin; with grounding lug (vibrator socket)
29	9A472534	Socket, tube: miniature; 7 prong
30	9A6788	Socket, tube: octal
31	31K27504	Strip, terminal: 1 insulated lug, #1 mtg
32	31K86126	Strip, terminal: 2 insulated lugs, #2 mtg
33	31A472574	Strip, terminal: 4 insulated lugs, #4 mtg
34	4S7555	Washer: 1/4-.128-.033; steel; cad. pl. (output trans. mtg)
35	39A26068	Wiper, grounding

©John F. Rider

RECEIVER AND SPEAKER INSTALLATION

Install the antenna following instructions supplied with antenna. (Use Motorola Antenna M-276, M-277, M-280, M-255 or M-306).

Refer to Figure 1 for installation detail.

1. Expose the radio openings in the instrument panel.
2. Screw the four speaker mounting screws into the holes provided in the back of the grille. The screws are thread-forming type and may start hard; use a 1/4" Spin-tite wrench for easier installation. Install the speaker on the screws as shown.
3. Assemble the receiver mounting bracket to instrument panel brace. Do not tighten as yet.
4. Plug antenna lead-in into antenna receptacle located on the top of the set.
5. Remove knobs and mounting nuts from receiver and lift receiver into position behind instrument panel.
6. Holding receiver in position, place mounting nuts on control shaft bushings and tighten securely.
7. Assemble receiver mounting bracket to receiver rear mounting stud. Use the hole which most closely lines up with the receiver rear mounting stud. Adjust position of the mounting bracket so the receiver is supported without any undue strain being placed on the control shafts bushings, then tighten all mounting nuts.
8. If the receiver is installed in a Plymouth car,

POWER INPUT - 9 Amps at 6.3V

POWER OUTPUT - 6 watts (max.)

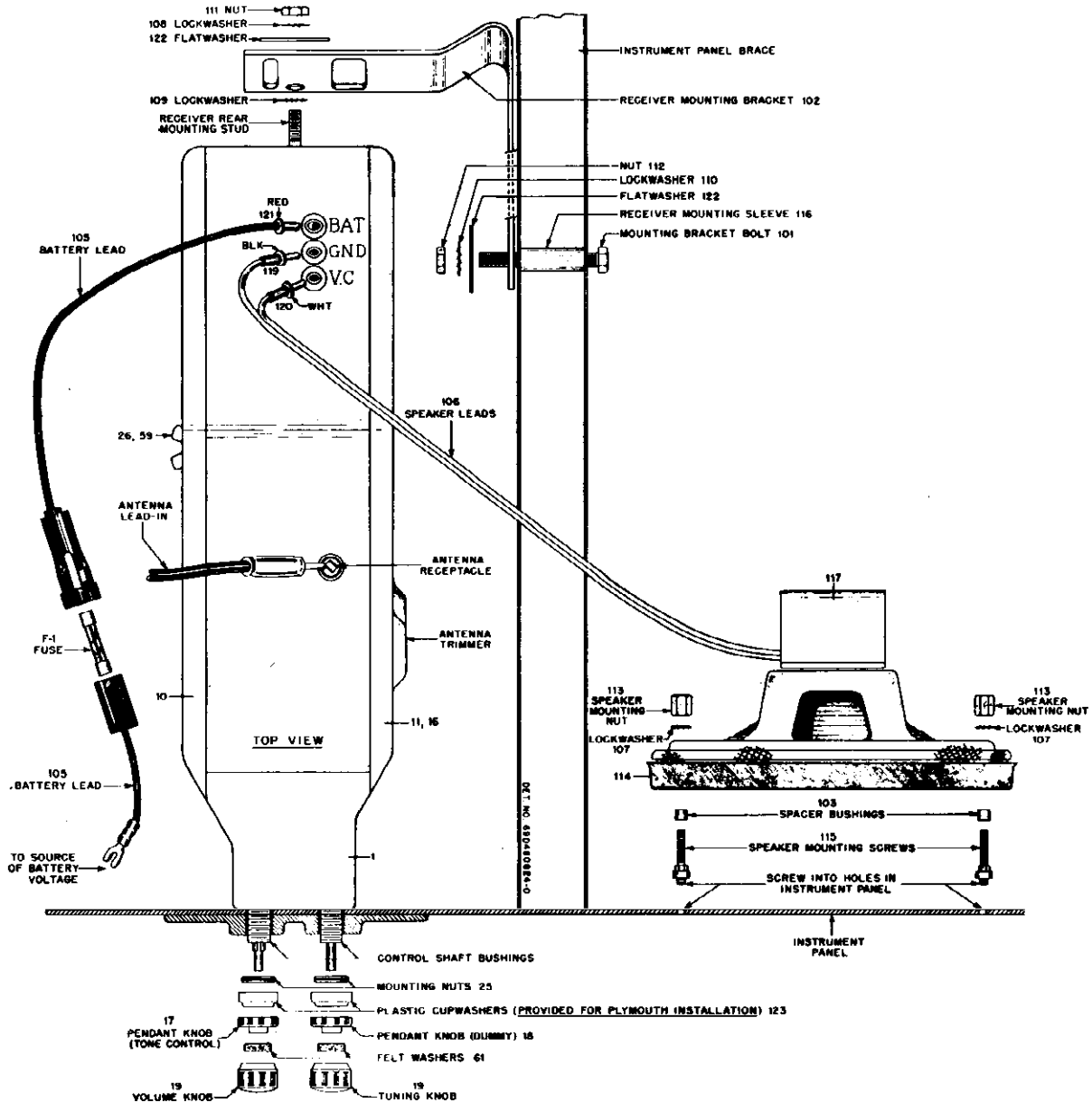

FIGURE 1. RECEIVER & SPEAKER INSTALLATION

use the plastic cup washers to cover the exposed portions of the shaft bushings.
9. Place the tone control and dummy pendant knobs on the shafts.
10. Place a felt washer over each pendant knob.
11. Place knobs on volume and tuning shafts and tighten setscrews securely.
12. Connect speaker leads as shown.
13. Connect the battery lead plug terminal to receiver receptacle marked "BAT" and the lug terminal to a convenient source of battery voltage.
14. Turn radio on. (See OPERATING INSTRUCTIONS). With the dial set to 1400 Kc, the volume control on full, and the antenna fully extended, adjust the antenna trimmer for maximum volume of a weak station or background noise.

TO SET THE PUSH BUTTONS

1. Turn radio on by pushing the top button "in". Allow radio to warm up for a few minutes.
2. Push the number "1" button in as far as it will go and HOLD IT THAT WAY.
3. With the tuning knob, tune in the station you desire to set up. The pointer will indicate the frequency of the station. Tune carefully until you are exactly on the station; tuning to either side of it will result in poor tone quality. Release button and knob after tuning in station.
4. Follow above steps 2 and 3 for the remaining four buttons.

WARNING

Many late model cars develop exceedingly high voltage due to improper adjustment of voltage regulator; this shortens life of radio tubes, vibrator and all other car electrical equipment. If the voltage exceeds 7.4 volts with no load on a fully charged battery when motor is running at a speed which corresponds to 35 miles per hour, the voltage regulator is defective. Have your auto mechanic replace the voltage regulator.

ELIMINATE INTERFERENCE AS FOLLOWS:

1. Install generator capacitor (Part No. 8A4491) as shown in Figure 2. **WARNING:** Do not connect capacitor to field terminal.

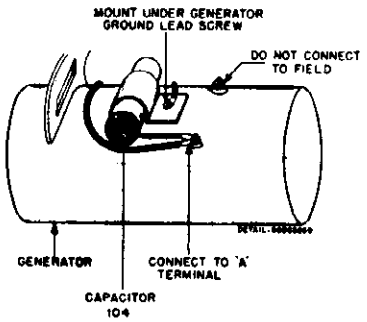

FIGURE 2.

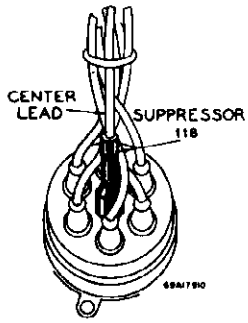

FIGURE 3.

2. Install distributor suppressor as shown in Figure 3.
3. When checking the car for motor noise, clamp the hood down tight. If necessary, install Hood Bond at the shoulder so that the hood makes a good ground to the cowl of the car on the side the antenna is mounted.

OPERATING INSTRUCTIONS

POWER SWITCH. The top button turns the radio ON and OFF. Radio is ON when button is in. Alternate pushes on this button will turn radio on and off.

VOLUME CONTROL. The left-hand knob operates the volume control.

MANUAL TUNING. Push the "M" button in far enough so that it will lock in, then tune stations with the right-hand knob. The dial scale is read in kilocycles by adding one zero to the figures. Always tune carefully until you are exactly on the station; tuning to either side of it will result in poor tone quality.

PUSH BUTTON TUNING. After push buttons have been set up, it is only necessary to push in the button (1, 2, 3, 4 or 5) that has been set to the desired station. Push the button far enough so that it will lock in. The dial pointer will indicate the frequency of the station being received.

TONE CONTROL. Tone can be varied by turning pendant tone knob which is located on the same shaft but behind the volume knob.

ALIGNMENT

EQUIPMENT REQUIRED

1. A special tool for adjusting the tuner cores. Use Alignment Tool, Motorola Part No. 66A76278.
2. A small screwdriver for IF & RF alignment.
3. An accurately calibrated AM modulated signal generator.
4. A low range output meter.
5. A special dummy antenna for RF alignment. Construct dummy antenna as shown in Figure 4. The 21" coaxial lead needed in its construction is the same type as used for lead-in on Motorola car antennas.

PROCEDURE

1. Remove the right and left housing covers. Also remove the chrome plated escutcheon from the front of the set. All adjustments are now exposed.
2. Connect a PM speaker (3.2 ohm VC) to VC and GND. terminals and connect the output meter across the voice coil.
3. Connect a 6 volt storage battery to chassis and BAT. terminals of receiver; turn receiver on and allow it to warm up for a few minutes. Push "M" button to place tuner in manual position. Set re-

ceiver volume control at maximum and tone control to treble (high) position.

4. Sensitivity Control. This control must be set to provide 2 ± 1/2 volts bias on the RF tubes before alignment is started. Measure this voltage between sensitivity control terminal and chassis.

5. For greatest accuracy, keep output of receiver at approximately 1 watt (1 watt = 1.79 volts on output meter) throughout alignment by reducing generator output (not receiver volume control) as stages are brought into alignment.

6. IF ALIGNMENT

A. Connect high side of signal generator through .1 mf capacitor to 6BE6 grid (pin #7) and the low side to chassis. Set generator to 455 Kc and peak adjustments (1, 2, 3 & 4), in this order, for maximum output.

7. RF ALIGNMENT

A. Connect signal generator to antenna receptacle through special dummy antenna (60 mmf capacitor in series with 21" coax lead).

B. With the tuning knob, tune to the extreme high frequency position and screw coil cores out so that at least 1-1/8" of all three cores shall be outside of the coil shield can. Set signal generator to 1605 Kc and peak trimmers (5, 6 & 7), in this order.

C. Turn the tuning knob until carriage plate is spaced exactly 1-3/8" from coil shield plate. Set signal generator to 1425 Kc and adjust coil cores (8, 9 & 10), in this order, for maximum output.

D. Turn the tuning knob until the carriage plate is spaced approx. 17/32" from coil shield plate. Leave signal generator connected but turn signal generator power off. Peak oscillator padder core (11) for maximum noise. If the padder core must be moved more than 1/2 turn from its original position, the carriage plate should be moved to extreme high frequency position, the coil cores (8, 9 & 10) should be screwed out so that 1-1/8" of each core is exposed and steps 7A, B, C & D repeated until it is necessary to move the padder

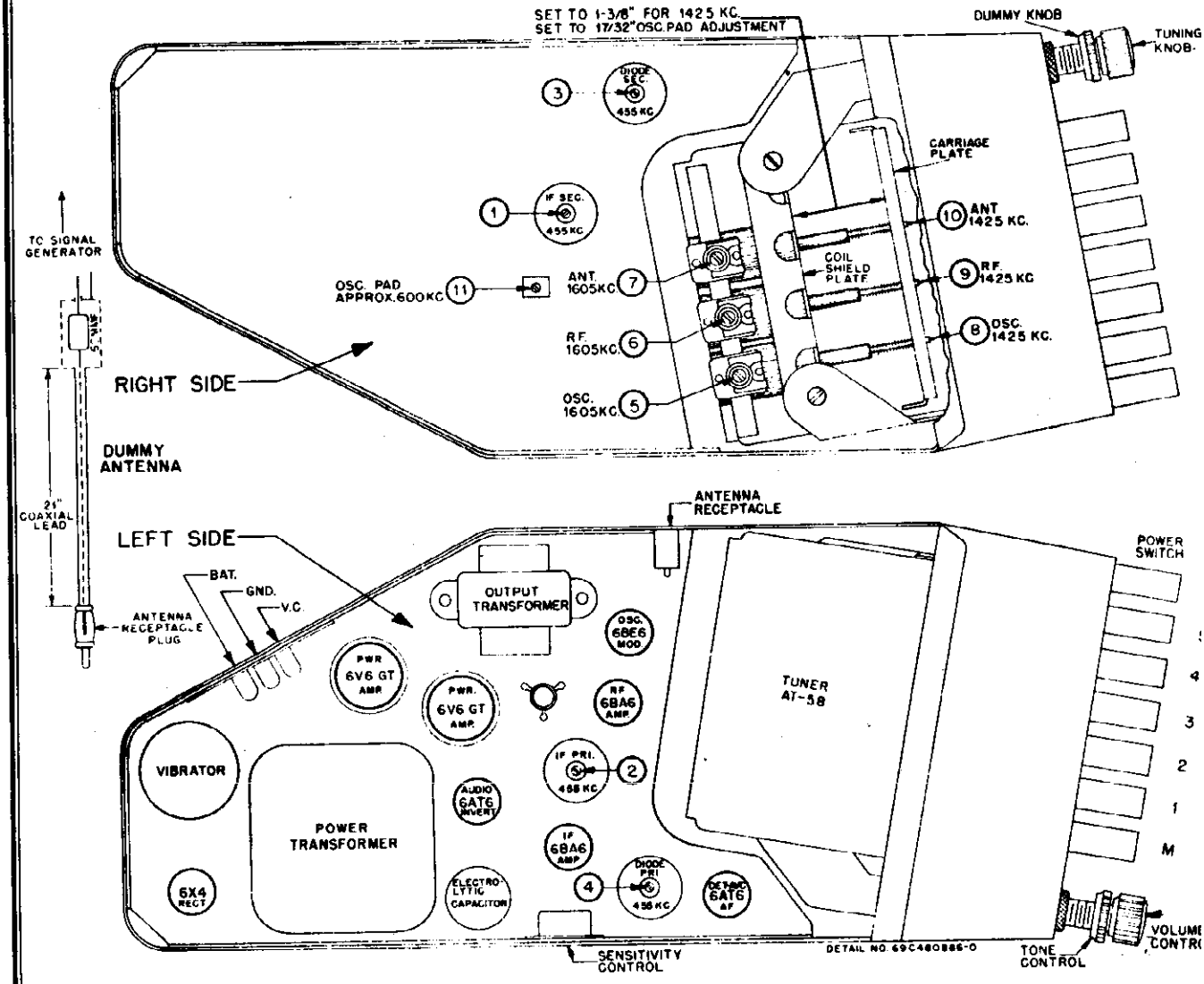

FIGURE 4. TUBE & TRIMMER LOCATIONS

core less than 1/2 turn in this step.

IMPORTANT: Do not push in on the alignment tool when adjusting the tuner cores. The slightest inward pressure on the alignment tool may move the tuner carriage and result in inaccurate alignment.

8. SETTING THE SENSITIVITY CONTROL. After alignment is completed, set signal generator to 600 Kc and adjust its output to 1.3 microvolts. Adjust the sensitivity control to provide 1 watt output (1 watt = 1.79 volts on output meter).

9. ANTENNA TRIMMER ADJUSTMENT. Once steps 7A, B, C, D & 8 have been satisfactorily performed, no further adjustment of any alignment screws should be made except to align the antenna trimmer (7) to car antenna after receiver is installed in car. This adjustment should be made with antenna fully extended and receiver set to approximately 1400 Kc. Peak the trimmer for maximum volume of a weak station or background noise between stations.

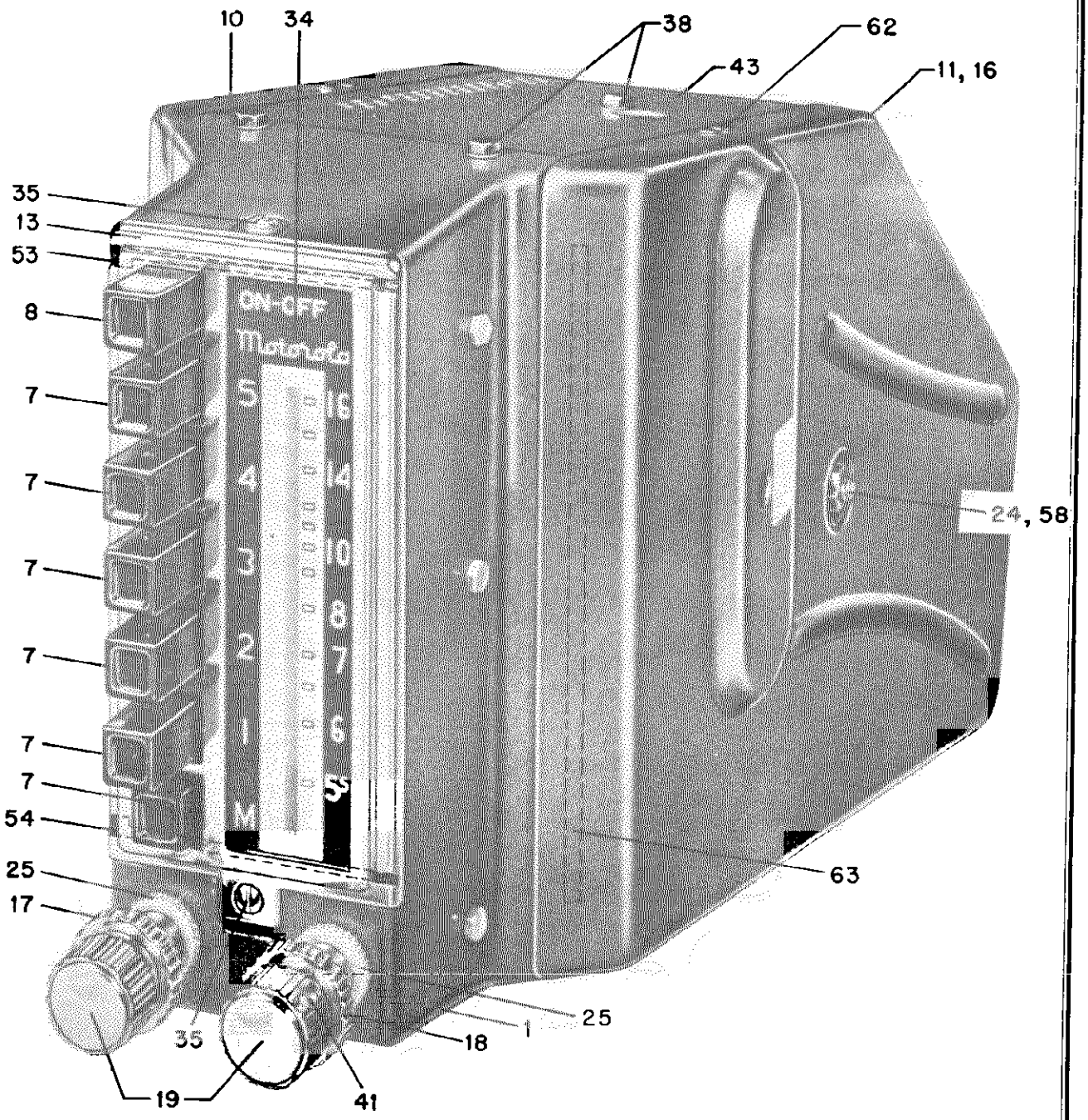

FIGURE 5. PARTS LOCATION - FRONT OF RECEIVER

©John F. Bibb

MOTOROLA INC. MODEL CR8

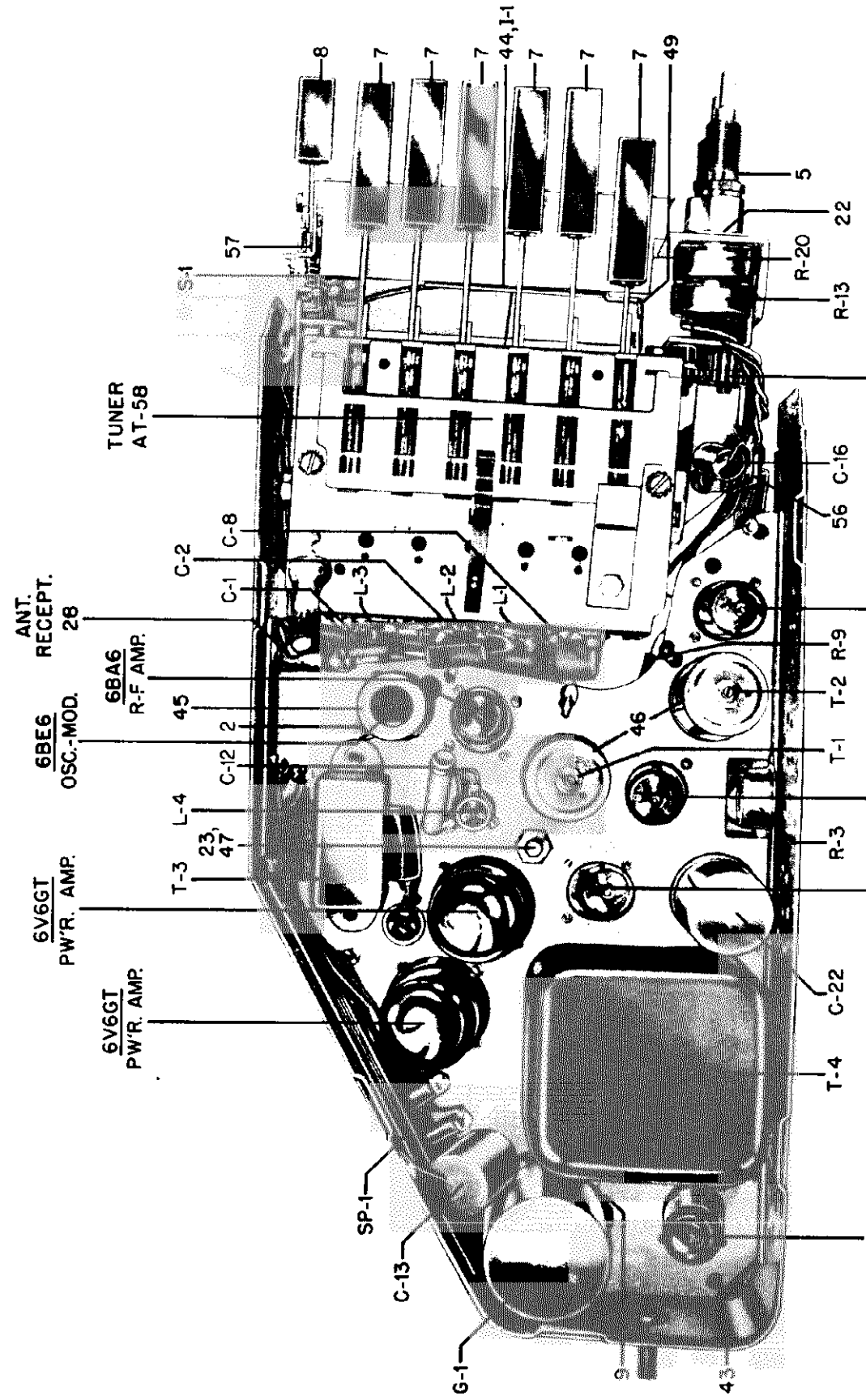

FIGURE 6. PARTS LOCATION - LEFT SIDE OF RECEIVER

MODEL CR8 MOTOROLA INC.

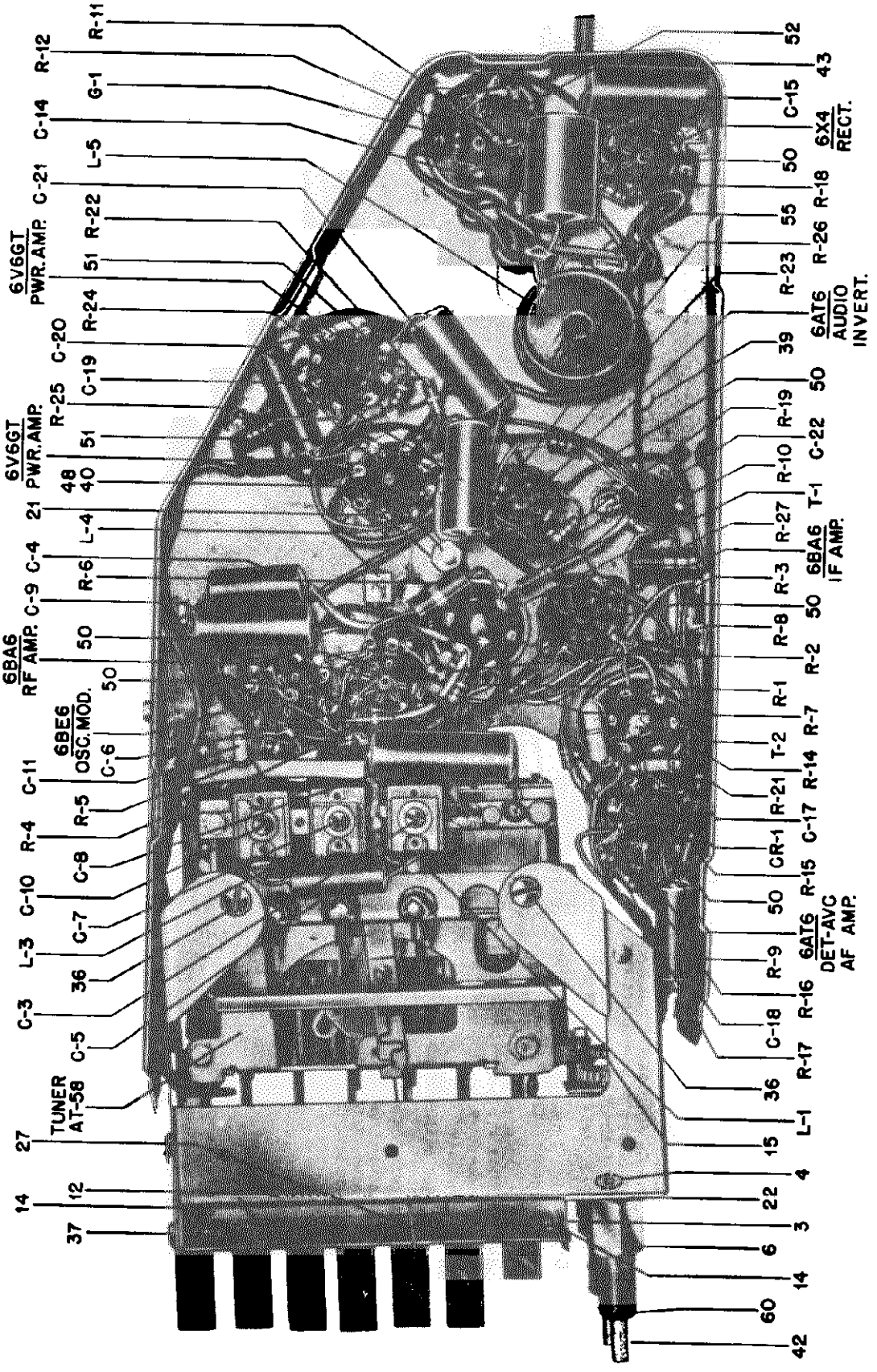

FIGURE 7. PARTS LOCATION - RIGHT SIDE OF RECEIVER

©John F. Rider

© John F. Rider

ELECTRICAL PARTS

CAPACITORS

C-1	21B77562	Ceramic: 100 mmf .....
C-2	8C4529	Paper: .006 mf 100V .....
C-3	20A480600	Trimmer, variable mica: 50 to 180 mmf; on same bracket as C-7 and C-10 .....
C-4	8A13514	Paper: .05 mf 100V .....
C-5	8A13514	Paper: .05 mf 100V .....
C-6	21K70720	Molded: 5 mmf .....
C-7	20A480600	Trimmer, variable mica: 50 to 180 mmf; on same bracket as C-3 and C-10 .....
C-8	8K13166	Paper: .1 mf 400V .....
C-9	8A14791	Paper: .05 mf 400V .....
C-10	20A480600	Trimmer, variable mica: 30 to 60 mmf; on same bracket as C-3 and C-7 .....
C-11	21R6513	Mica: 50 mmf 300V .....
or	21K74661	Ceramic: 50 mmf 300V .....
C-12	21A71872	Ceramic: 400 mmf .....
C-13	8A17028	Paper: .5 mf 100V .....
C-14	8A17028	Paper: .5 mf 100V .....
C-15	8K15166	Paper: .007 mf 1600V .....
C-16	8A13514	Paper: .05 mf 100V .....
C-17	21R6513	Mica: 50 mmf 300V .....
or	21K74661	Ceramic: 50 mmf 300V .....
C-18	8A71910	Paper: .006 mf 400V .....
C-19	8K71911	Paper: .03 mf 400V .....
C-20	8K13165	Paper: .003 mf 1000V .....
C-21	8K71911	Paper: .03 mf 400V .....
C-22	23A472570	Electrolytic: 20-30 mf/ 400-350V .....

CAPACITOR-RESISTOR

CR-1	21A472571	Capacitor-Resistor: 100 mmf - 47,000 ohms; 100 mmf .....

FUSE

F-1	65K4165	Fuse: 15 amp; type 3AG .....

VIBRATOR

G-1	48B3333	Vibrator: non-sync; 4 pin .....

PILOT LIGHT

I-1	65X10867	Bulb: 6.3V, .25A; bayonet base; clear ...

COILS

L-1,2	24B71881	RF and Antenna Coil (specify color of paint dot on old coil when ordering) ..
L-3	24B71879	Oscillator Coil (specify color of paint dot on old coil when ordering) .....
L-4	24B70227	Oscillator padder coil: complete with iron tuning core .....
L-5	24A473954	Choke, hash .....

RESISTORS

Note: All resistors are 1/2 watt, 20% carbon, insulated type unless otherwise specified.

R-1	6R6032	470,000 .....
R-2	6R3992	150 .....
R-3	18K77552	Sensitivity control: 700 ohms .....
R-4	6R6075	100,000 .....
R-5	6R6056	47,000 .....
R-6	6R476060	10,000 2W .....
R-7	6R3992	150 .....
R-8	6R6004	1 meg .....
R-9	6R6001	68,000 .....
R-10	6R6010	330 .....
R-11	6R5614	56 10% .....
R-12	6R5614	56 10% .....
R-13	18A472999	Volume Control: 500,000 ohms (dual -also includes tone control R-20) .....
R-14	6R6004	1 meg .....
R-15	6R6004	1 meg .....
R-16	6R2118	3.3 meg .....
R-17	6R6161	1500 .....
R-18	6R6054	10,000 .....
R-19	6R6069	2200 10% .....
R-20	18A472999	Tone control: 500,000 ohms (dual -also includes volume control R-13) .....
R-21	6R6015	220,000 .....
R-22	6R6015	220,000 .....
R-23	6R6015	220,000 .....
R-24	6R6015	220,000 .....
R-25	6R6389	220 10% 1W .....
R-26	6R6320	10,000 10% .....
R-27	6R476130	2200 2W .....

SWITCH

S-1	40B472204	Power switch: SPST; switch only .....

SPARK PLATE ASSEMBLY

SP-1	1X480604	Spark Plate Assembly: complete .....

TRANSFORMERS

T-1,2	24B76553	Diode or IF, 455 Kc: complete with padding capacitors and tuning cores, but less shield
T-3	25B472558	Output Transformer .....
T-4	25C472586	Power transformer .....

TUNER

	1X472770	AT-58 Automatic Tuner (See separate Service Manual -Motorola Part No. 54P480955 for complete breakdown)

MECHANICAL PARTS

1	13D472973	Base, escutcheon
2	26A473002	Base, tube shield mounting
3	7B473037	Bracket, dial background mtg
4	43A472869	Bushing, mounting (tuning shaft bushing mtg)
5	43K472992	Bushing, receiver mtg: with groove (volume shaft bushing)
6	43B472978	Bushing, receiver mounting: without groove (tuning shaft bushing)
7	1X473153	Button, push: includes clip (station selector)
8	1X473154	Button, push: includes clip (on-off button)
9	42A4215	Clip, vibrator grounding
10	1X473005	Cover Assembly, left-hand
11	1X473007	Cover Assembly, right-hand
12	1X473941	Dial Background and Strip Assembly
13	13C472961	Escutcheon, front plate: polished chrome finish; less dial scale
14	5S7805	Eyelet: .140 x .141 (dial backgrnd mtg).
15	44B472979	Gear, compound idler
16	14B480671	Insulator, guard (used on right-hand cover)
17	36B473120	Knob, pendant (tone control)
18	36K482504	Knob, pendant (dummy)
19	1X473155	Knob, control: includes setscrew
20	4S7651	Lockwasher: #8 internal; cad.pl. (tuner mounting)
21	4S7658	Lockwasher: #10 internal; cadmium plated (on cover mounting screw)
22	4S7655	Lockwasher: 3/8 internal; cadmium plated (vol. & tuning shaft bushing mtg)
23	2S7030	Nut: #10-24 x 3/8 hex; brass (cover screw mounting)
24	2S8351	Nut: #10-24 x 3/8 hex; copper oxide finish (cover mounting)
25	2K473140	Nut, mounting: round; knurled (receiver mounting)
26	2A17569	Nut, wing: 10-24 x 1-3/8; copper oxide finish (cover mounting)
27	1X473152	Pointer & Sleeve Assembly
28	1X70646	Receptacle, antenna
29	5S7771	Rivet: .088 x 3/16 steel; nickel plated (tube socket mtg)
30	5S7707	Rivet: .122 x 5/32 steel; nickel plated (tube socket mtg)
31	5S7708	Rivet: .122 x 1/8 steel; nickel plated (sensitivity control mtg, switch assembly mtg and terminal strip mtg)
32	5S7701	Rivet: .122 x 3/16; nickel plated (vibrator grounding clip and output trans. mtg)
33	5S7728	Rivet: .122 x 5/16 steel; nickel plated (spark plate mtg)
34	34B473122	Scale, dial: glass
35	3S8022	Screw: 4-40 x 1/4 slotted binder head machine screw; cadmium plated (escutcheon mtg)
36	3S7150	Screw: #8-32 x 3/16 slotted binder head machine screw; (tuner mtg)
37	3S7454	Screw: #8 x 1/4 PKZ slotted hex head sheet metal screw; cad. pl. (pilot light bracket, dial background mtg, etc.,)
38	3S7456	Screw: #8 x 1/4 PKA slotted acorn head sheet metal screw; antique copper finish (housing screws)
39	3S3397	Screw: #8 x 5/16 PKZ plain hex head sheet metal screw; cad. pl. (pwr. trans mtg).
40	3A17388	Screw, cover mtg: 10-24 thread, 4-3/8" long; has formed nut near one end
41	3S7104	Setscrew: 8-32 x 3/16 slotted headless machine screw; cad. pl.
42	1A472975	Shaft Assembly, tuning: consists of tuning shaft and gear
43	15D472967	Shell, housing
44	1X473150	Shield, pilot light
45	26A90301	Shield, tube
46	1A71049	Shield and Sleeve Assembly (for T-1 & T-2)
47	43K17389	Sleeve, cover spacer (long)
48	43K17390	Sleeve, cover spacer (short)
49	9A472905	Socket, pilot light and bracket
50	9A472534	Socket, tube: miniature; 7 prong
51	9A6788	Socket, tube: octal
52	9A70208	Socket, tube: 4 pin (for vibrator)
53	42K473148	Strap, dial scale mtg (top)
54	42K473149	Strap, dial scale mtg (bottom)
55	31A472573	Strip, terminal: 2 insulated lugs, #2 mtg
56	31A473004	Strip, terminal: 3 insulated lugs, end mtg
57	1X473142	Switch Assembly: complete; includes push arm, bracket and switch
58	4S7611	Washer: 1/2-7/32-.048; copper oxide finish (cover mtg)
59	4S7613	Washer: 3/4-.203-.027; copper oxide finish (cover mtg)
60	4A21577	Washer, "C" (tuning shaft and idler gear retainer)
61	4K481587	Washer, felt (used behind control knobs)
62	39A17383	Wiper, contact (cover grndng wiper)
63	39A17391	Wiper, housing: brass strip; 5/32 wide x 5/8 long

© John F. Rider

MOUNTING PARTS & ACCESSORIES

101	3A18008	Bolt, hex head: 5/16-18 x 2-1/4 long (bracket mtg) .....
102	7B24365	Bracket, receiver mounting .....
103	43K26242	Bushing, spacer: brass (speaker mtg) ...
104	8A4491	Capacitor, generator .....
105	9K473160	Lead Assembly, fuse: complete with 15 amp fuse
106	1X76859	Lead Assembly, speaker: 2 conductor: 36" long; pin terminals on one end .....
107	4S7660	Lockwasher: #8 external; phosphor bronze (speaker mtg) .....
108	4S7670	Lockwasher: 1/4 internal; cadmium plated (receiver mtg) .....
109	4S7678	Lockwasher: 1/4 external; cadmium plated (receiver mtg) .....
110	4S7674	Lockwasher: 5/16 internal; cadmium plated (receiver mtg) .....
111	2S7022	Nut: 1/4-20 x 7/16 hex; cadmium plated (receiver mtg) .....
112	2S2863	Nut: 5/16-18 x 9/16 hex; cadmium plated (receiver mtg) .....
113	2K74308	Nut, speaker mtg: 8-32 thread x 3/8 thk.
114	64B17583	Screen, speaker: includes gasket .....
115	1X17921	Screw, speaker mounting: includes bushing.
116	43K17921	Sleeve, receiver mounting .....
117	50B472253 or 50B473698 or 50B481519	Speaker: 7" PM; 3.2 ohm VC; less spkr lead Exchange
118	8X17117	Suppressor, distributor .....
119	29A76280	Terminal, pin: black (speaker lead) ....
120	29K76282	Terminal, pin: white (speaker lead) ....
121	29K76284	Terminal, pin: red (fuse lead) .....
122	4S7849	Washer: 1-5/16 x 11/32 x .067 thick; cadmium plated (receiver mounting) .....
123	4K472205	Washer, cup: plastic (for Plymouth installation only; used to conceal mtg bushing)
124	39A4205	Wiper, hood (hood grounding bond) .....

NOTES:

A VTVM WAS USED TO MAKE ALL MEASUREMENTS. MEASUREMENTS MADE FROM TUBE BASE PIN TERMINAL TO CHASSIS.
VOLUME CONTROL ON FULL.
TONE CONTROL IN 'HIGH' POSITION.
SENSITIVITY CONTROL SET TO MINIMUM RESISTANCE.
6.3 VOLTS INPUT AT SPARK PLATE.
ALL VOLTAGE MEASUREMENTS DC UNLESS OTHERWISE SPECIFIED.
VOLTAGE TOLERANCE ±10%.
RESISTANCE TOLERANCE ±20%.
* = TIE POINT.
N.C. = NO CONNECTION.
GND = GROUND TO CHASSIS.
K = 1000 (ONE THOUSAND) OHMS.
▭ = RESISTANCE MEASUREMENTS.
◡ = VOLTAGE MEASUREMENTS.
*=THESE READINGS WILL VARY WIDELY WITH SENSITIVITY CONTROL SETTING. READINGS NOTED ARE FOR AVERAGE SET.

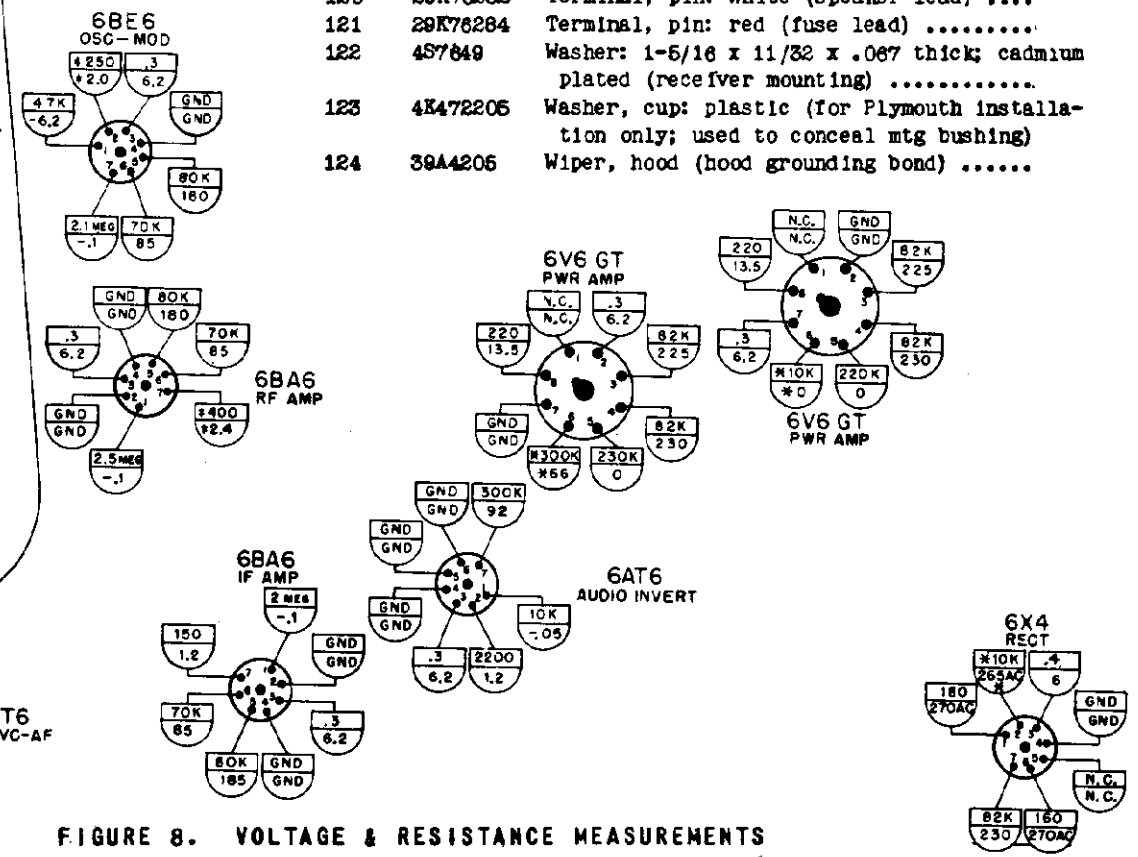

FIGURE 8. VOLTAGE & RESISTANCE MEASUREMENTS

MODEL CR8 MOTOROLA INC.

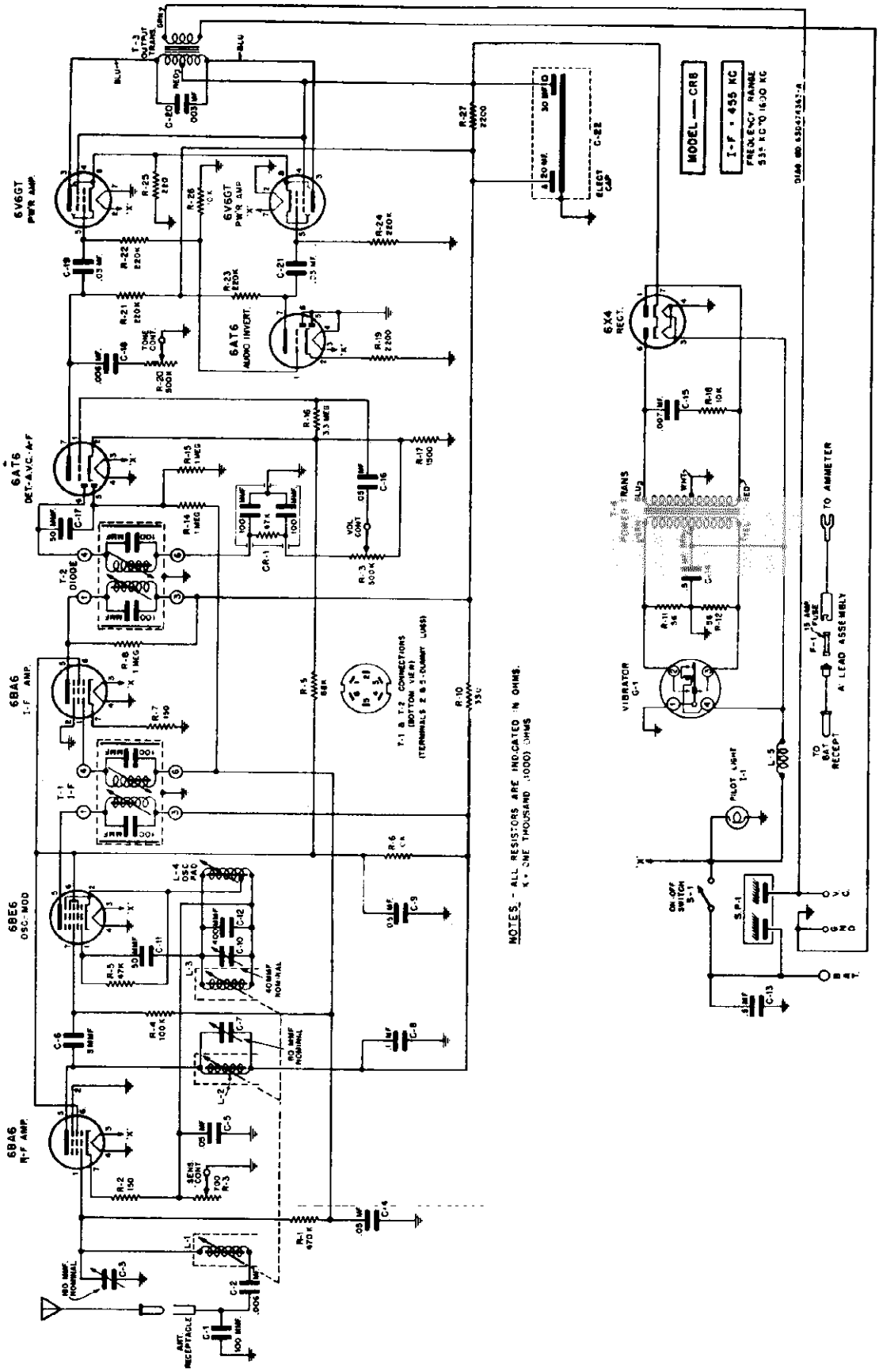

FIGURE 9. SCHEMATIC DIAGRAM

©John F. Rider

MOTOROLA INC. MODEL ST-56

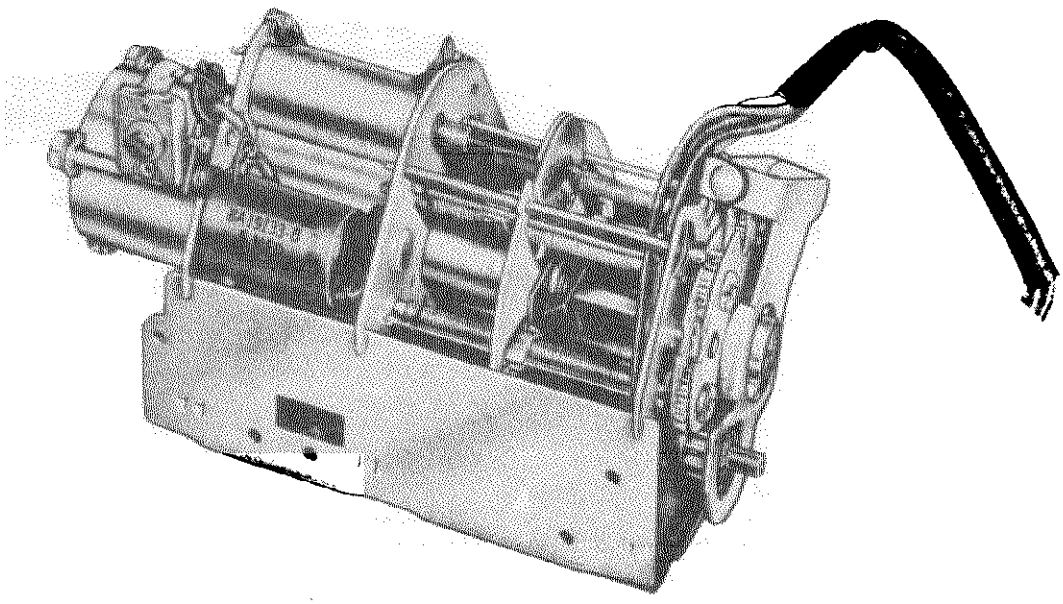

GENERAL

Solenoid Tuners ST-56 (ST-56 - CR6, ST-56 - FD6 etc.,) are used in 1946 and 1947 Motorola automatic tuning specific auto receivers.

Fundamentally, all ST-56 tuners are the same except for the manual tuning shaft, dial cord pulleys and pushbutton switch lead lengths. These variations are brought about by mechanical differences between the specific receivers in which this tuner is used. The receiver model number is included in the tuner model number to identify which specific receiver the tuner will fit, i.e., ST-56-CR7, ST-56-BK6 etc.

This is a 3 gang permeability type tuner operated by a solenoid. Five pre-set and one manual tuning positions are provided. The frequency range is 535 to 1600 kc. The pre-set positions can be set to any frequency within this range.

The tuner is designed to operate satisfactorily with 4-1/2 to 7.3 volts input. Before attempting any service work on a tuner that operates too slowly or one that doesn't operate at all, check the battery voltage directly at the receiver spark plate. Normally, this voltage is 6.3 volts. At the moment any pushbutton is pressed, the voltage at the spark plate should not drop to less than 4-1/2 volts. If the voltage is less than 4-1/2, it is an indication of poor wiring between the car battery and receiver or a defective car battery.

This tuner depends on "dash-pot" action between the plunger and the solenoid for proper operation. When the fit between the plunger and solenoid is too tight, the air can't get out fast enough. The result is a slow or sluggish operating tuner. All late production tuners have an adjustable air release in the solenoid end plate. Early production tuners that do not have this adjustable air release and operate sluggishly, due to dash-pot action, should have the solenoid end plate replaced with an end plate having the adjustable air release. Order part number 1X76556.

The tuner solenoid coil must be in a horizontal or near horizontal position or the tuner will not operate properly. If it is operated with the coil in a vertical position, the solenoid and carriage return spring may not be strong enough to operate tuner.

MODEL ST-56 MOTOROLA INC.

THEORY OF OPERATION

NOTE: Throughout this paragraph, it is suggested that constant reference be made to Figure 1.

When any push-button is pressed, current flows through the solenoid coil, causing the plunger to pull into the soil. Near the end of the plunger travel, through a ratchet mechanism inside the plunger, the selector switch shaft is rotated 60°, moving the selector switch and stop plate to their new position.

An instant later, the solenoid switch is opened breaking solenoid current and the carriage return spring then pulls the plunger out, closing the solenoid switch again. If the selector switch is now resting at the position selected by the push-button (cut away section of selector switch resting in front of contact selected by push-button), the solenoid plunger will continue to be pulled out until the stop plate is resting on the selected lead screw stop. In the event the selector switch is not resting in the position selected by the push button when the solenoid plunger is on its return trip, the moment the plunger moves out far enough to actuate the solenoid switch, current will again flow through solenoid causing the plunger to be pulled in again. The plungers inward motion again rotates the stop plate and selector switch through another 60°. This last operation is repeated automatically until the selector swtich comes to rest at the position selected by the push-button, at which time the solenoid circuit is opened and the plunger moves out until the stop plate is resting on the selected lead screw stop. The stops are adjusted to the desired positions during the station setting up procedure, through the set-up gear train assembly.

Refer to Figure 2 for mechanics behind station setting-up mechanism detail.

When the button on which a station is to be set up is first pressed, the tuner operates and the stop plate comes to rest against the selected lead screw stop. The pressure of the stop plate against the lead screw stop moves the lead screw forward until its shoulder rests against the tuner and plate. The square end of the lead screw does not engage in the square hole of the set-up gear until the set-up button is pushed in or the station set-up knob is turned (whichever is applicable). A latch on one end of the detent lever engages the gear lever, holding the set-up gear train in contact with the selected lead screw. Now the selected lead screw stop can be moved on its lead screw by turning the manual tuning shaft. None of the other lead screws turn because the stop plate is not resting against them. After the button is set up, pressing any other button will unlatch the gear lever and disengage the lead screw from the set-up gear. See Figure 2.

Since the coil tuning iron cores are attached to the carriage plate and move in unison with the plunger, the point at which they are brought to a stop (by means of the lead screw stop) determines the frequency to which the coils are tuned.

Dash-pot action between the plunger and the solenoid determines the tuner operating speed. The rate at which air is allowed to enter or escape through the adjustable air release determines the speed of the plunger. See Figure 1.

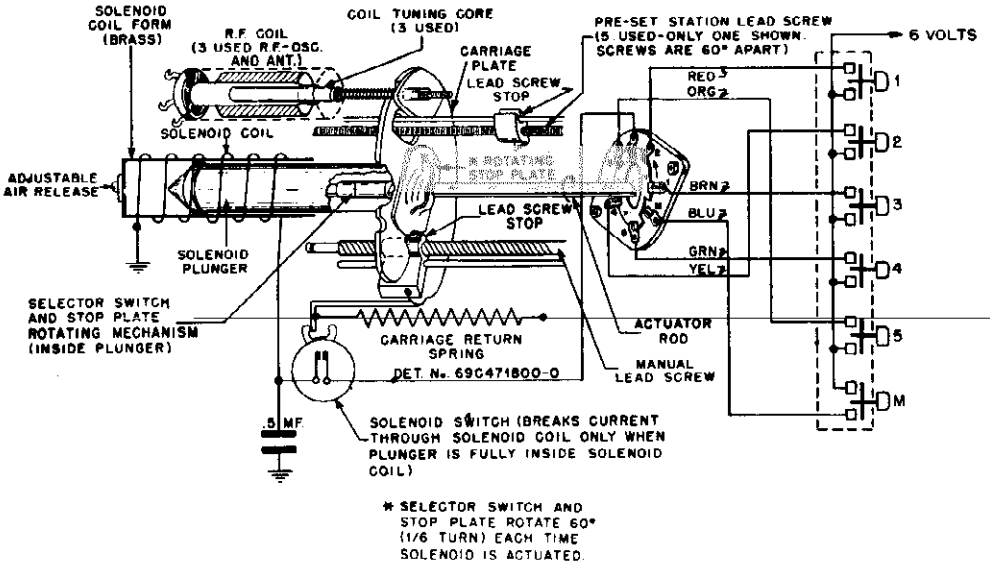

FIGURE 1. TUNER FUNCTIONAL DETAIL

MOTOROLA INC. MODEL ST-56

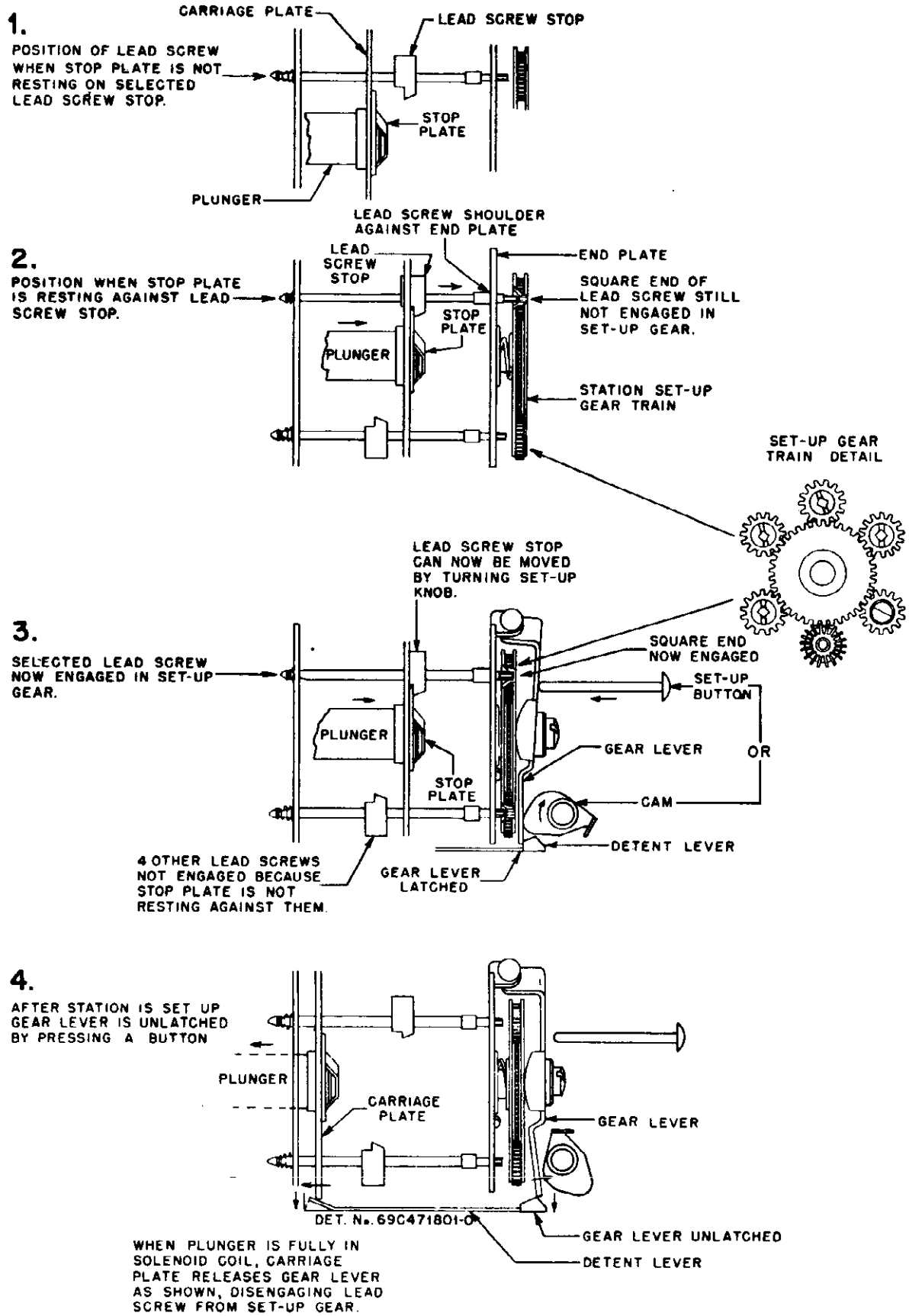

FIGURE 2 STATION SET-UP MECHANISM

TO REMOVE TUNER FROM CHASSIS

Should it become necessary to remove the solenoid tuner from the receiver chassis, proceed as follows:

1. Remove the covers from the set, completely exposing the chassis.
2. Mark all leads connecting tuner to receiver.
3. Disconnect all leads connecting tuner to receiver. Do not unsolder leads from the tuner selector switch; unsolder them at the push-switch. The .5 mf paper capacitor need not be removed.
4. The tuner is held to the chassis by self-tapping screws driven into the sides of the tuner. Do not remove any other screws.

ADJUSTMENTS

AIR RELEASE ADJUSTMENT

The speed at which the tuner operates is governed by dash-pot action of the solenoid plunger within the closed solenoid coil form. The rate at which air is allowed to enter or escape determines the speed of the plunger.

An adjustable air release is provided on all late production tuners. See Fig. 3. To adjust, loosen the screw and move the eccentric washer which covers the air release hole to expose or cover more of the air release hole as required. Early production tuners did not have a solenoid end plate with an adjustable air release. If such a tuner is slow or sluggish because of too much "dash-pot" action, replace the solenoid end plate with the adjustable air release type. Order part number 1X76556.

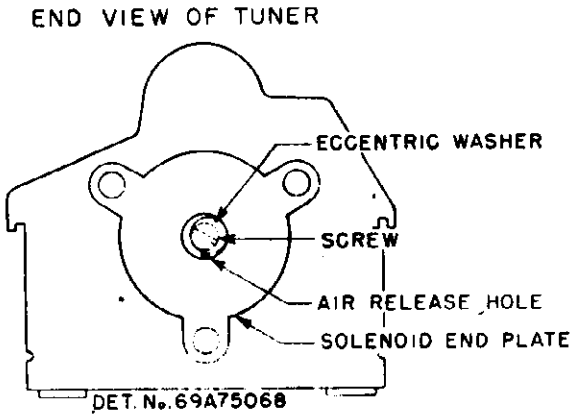

FIGURE 3. AIR RELEASE ADJUSTMENT

1. If tuner operates too slowly, open the air release hole. Open it only far enough to secure reliable operation. Too little "dash-pot" action (air release open too much) may cause the plunger to hammer and sometimes even to make the tuner operate continuously due to the selector switch rotor being turned so rapidly as to overshoot its contacts.
2. If the tuner operates too rapidly increase dash-pot action by closing the air release hole slightly. Close it only enough to eliminate hammering.

PLUNGER RATCHET ADJUSTMENT

The plunger ratchet mechanism in Figure 4. This mechanism rotates the actuator rod which, in turn, rotates the carriage stop plate and the selector switch 60° for each inward motion of the plunger.

If this adjustment is incorrect, tuner may operate continuously once current is applied.

Correct ratchet adjustment is indicated when 1/64 to 1/32" clearance is observed between selector switch contacts and the selector switch rotor as shown in Figure 5. Slowly work the plunger by hand and observe clearance at each contact position. If the average clearance is not 1/64 to 1/32", correction can be made by loosening ratchet adjustment setscrew and turning actuator rod by hand until correct clearance is observed.

Before ratchet adjustment setscrew is finally tightened, push fixed ratchet 1/32" back into plunger. This increases spring tension against rotating ratchet, thus insuring more positive operation.

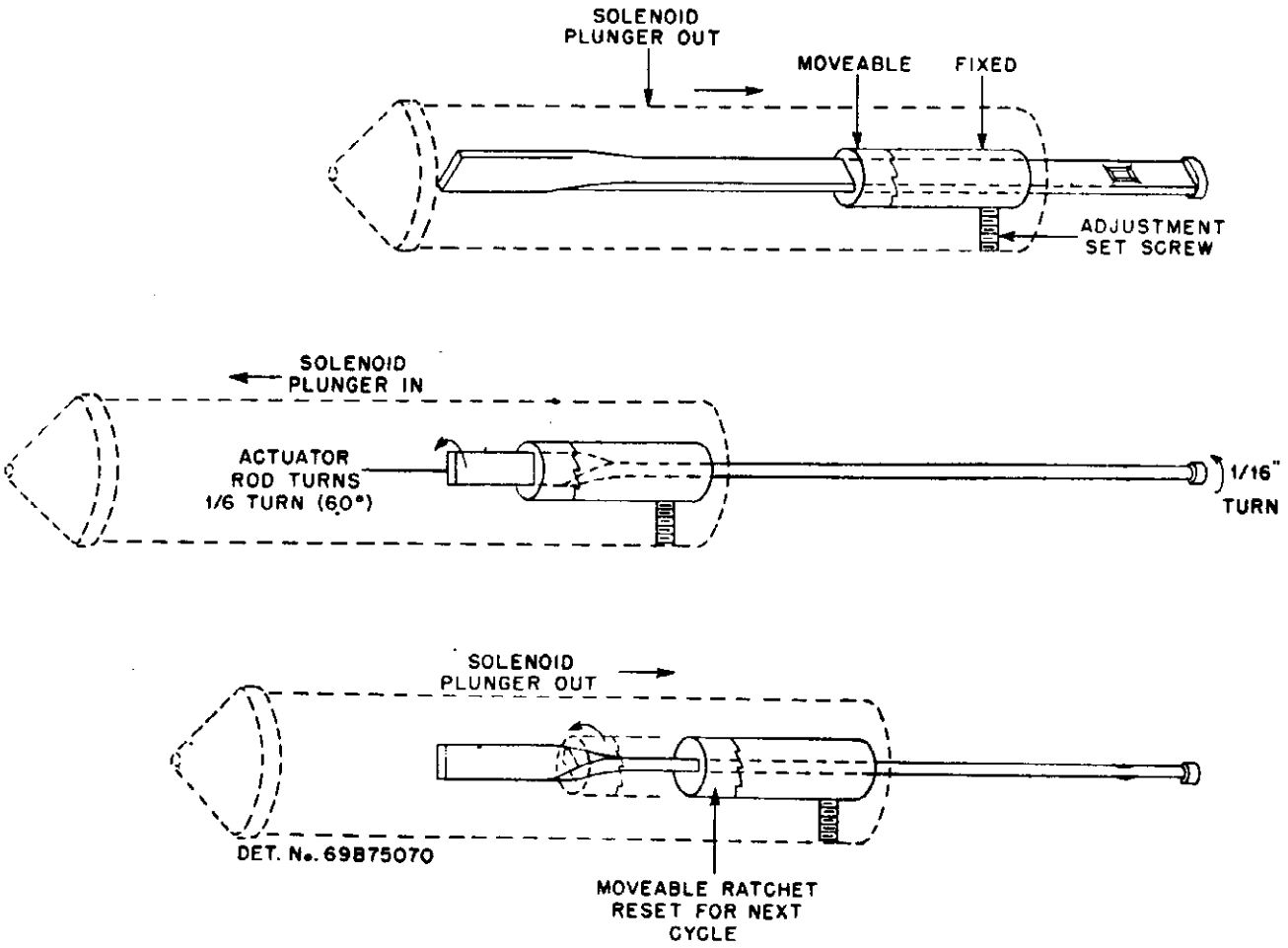

FIGURE 4. PLUNGER RATCHET MECHANISM

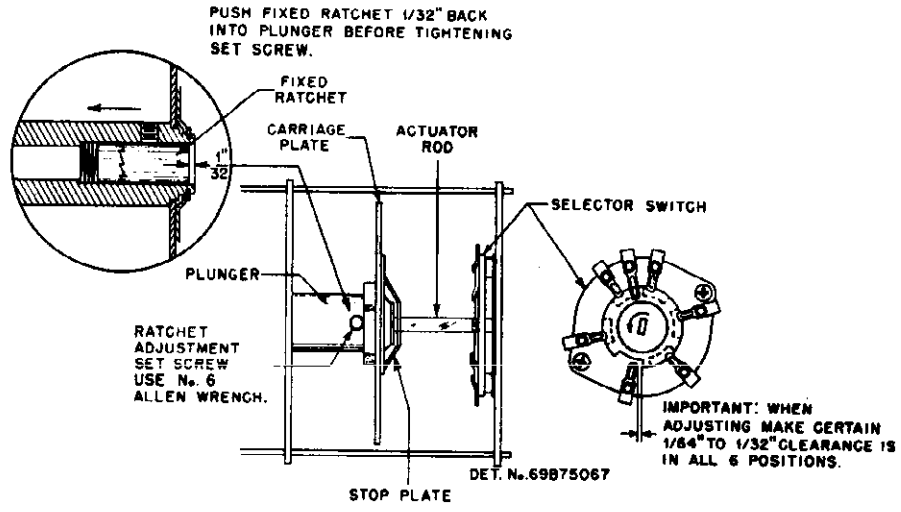

FIGURE 5. PLUNGER RATCHET ADJUSTMENT

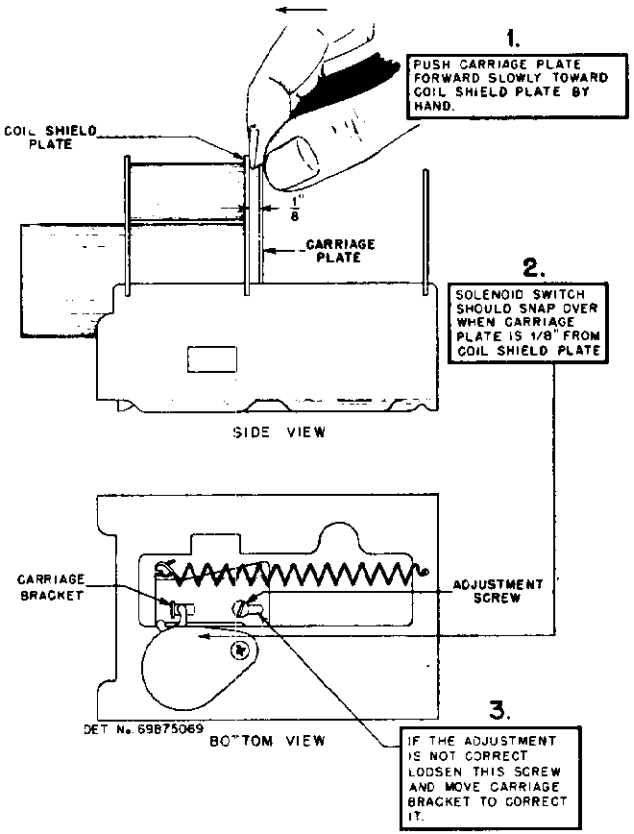

FIGURE 6. SOLENOID SWITCH ADJUSTMENT

SOLENOID SWITCH TRIP ADJUSTMENT

The solenoid switch tripping mechanism should be adjusted as shown in Figure 6.

If the solenoid switch is tripped too early, the ratchet mechanism may fail to operate; if it trips too late, the plunger may hammer violently or should the solenoid switch fail to trip, the plunger would be held within the solenoid.

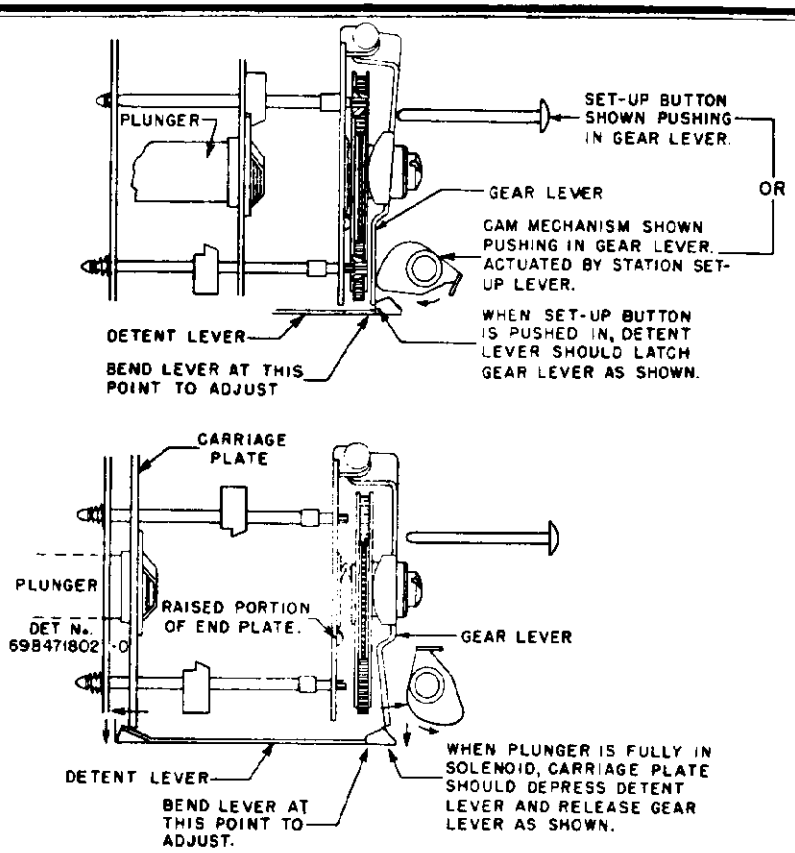

FIGURE 7. GEAR LEVER LATCH ADJUSTMENT

ADJUSTMENT OF GEAR LEVER LATCH

The gear lever latch holds the station set-up gear train in position while setting up stations. Failure of the latch to engage properly when the set-up button is pushed in or the station set-up knob is turned (whichever is applicable) would result in the inability to set up pre-set stations. Failure of the latch to disengage after station is set up would result in faulty automatic tuning because the lead screws might not seat themselves properly against the tuner end plate. Figure 7 above shows the latch detail and adjustment.

SERVICE NOTES

FAILURE OF SOME LEAD SCREW TO ENGAGE IN SET-UP GEARS

If some of the lead screws fail to engage in the set-up gears during station setting up procedure, check the gear lever to see if it is bent. When the set-up button is pushed in and the gear lever latches on the detent lever, the set-up gear train should be parallel with the tuner end plate and the bottom of the gear train should be resting on the raised portions of the tuner end plate.

LUBRICATION

Should lubrication ever be required, it is recommended that a very fine grease, commercially called Lubriplate, or its equivalent, be used.

Remove all old and sticky lubricant with a solvent such as carbon tetrachloride and then, very sparingly, lubricate only the following points:

1. Carriage guide rods.
2. Actuator rod.
3. Manual lead screw.

IMPORTANT

Do not lubricate or permit lubricant to get on Selector Switch contacts. The friction drag is required for proper operation of tuner.

LEAD DRESSING

Make sure that the selector switch and solenoid coil leads are dressed so that carriage plate does not rub against them. Leads rubbing against the carriage plate may cause the tuner to stick, especially at the high frequency end.

REPLACEMENT OF SOLENOID COIL OR SOLENOID PLUNGER

Should replacement of the solenoid coil or solenoid plunger be required, it will be necessary to replace the entire tuner. A close fit between solenoid plunger and solenoid coil form is required; a proper match can only be secured at the factory. When service of this kind is required, return the tuner to the factory for exchange.

ALIGNMENT

In the event that some part of the R.F. circuit has been changed or the adjustments shifted by mishandling, it is suggested that the receiver be realigned. Follow the alignment instructions found in the receiver service manual.

The tuner must be in good working order and assembled onto the chassis before attempting alignment of its tuned circuits.

TO REPLACE ANT. R.F., OR OSC. COILS

IMPORTANT: When ordering replacement coils, order by part number and also specify the color coding (paint dots) on old coil. THE REPLACEMENT COIL SHOULD CARRY THE SAME COLOR CODING AS THE ORIGINAL OR THE TUNER WILL NOT TRACK PROPERLY.

1. If coil is not readily accessible remove the tuner from the chassis as outlined under "TO REMOVE TUNER FROM CHASSIS."
2. Unsolder the two lugs holding the coil to the tuner plate.
3. Carefully remove the old coil. Save the thin paper washer that is found at the base of the coil.
4. Slip the paper washer over the replacement coil and slip coil into shield can.
5. Orient coil so its lugs are in same position as before and resolder to tuner plate.
6. Reassemble tuner and install in receiver.
7. Realign ANT., R.F. and OSC. stages per instructions found in the receiver service manual.

TO REPLACE ANT. R.F. OR OSC COIL TUNING CORES

IMPORTANT: When ordering coil tuning cores, order by part number and also specify the color coding (paint spot) on the old core. ALL 3 TUNING CORES MUST CARRY THE SAME COLOR CODING OR THE TUNER WILL NOT TRACK PROPERLY.

1. The core which tunes the top coil is readily accessible and presents no replacement problem. To reach the two bottom coil tuning cores, remove the tuner from the chassis base as outlined under "TO REMOVE TUNER FROM CHASSIS."
2. Remove the carriage return spring.
3. Move the carriage plate back as far as it can go. The tuning cores can now be screwed "out" or "in" by grasping the portion that sticks out the back of the coil.

When installing a new core, make sure that the insulating washer and adjustment clip are replaced properly. The insulating washer goes on the core side; the core adjustment clip has an ear on it and this ear must fit into a hole in the bakelite insulator on the carriage plate. Refer to Figure 8.

4. Replace the carriage return spring.
5. Install tuner in receiver.
6. Realign ANT., R.F. and OSC. stages following the instructions found in the receiver service manual.

PLUNGER RATCHET REMOVAL

The plunger ratchets are not removable from early production tuners. Late production tuners have removable plunger ratchets. To remove ratchets, proceed as follows: (Refer to Figure 8 for parts identification).

1. Remove gear plate mounting screw (49).
2. Pull out actuator rod (37). Don't lose washers (74), (68) & (67).
3. Remove stop plate bracket (89) by sliding it out of the retaining slots.
4. Loosen setscrew (45).
5. The large fixed ratchet (90), small floating ratchet (91) and ratchet spring (92) can now be removed.
6. Reassemble in reverse order.

TUNER HANGS UP

The beginning of this trouble is usually a condition where the tuner "runs wild" (fails to stop at a station). Eventually, the stop plate gets "hung up" by getting on the wrong side of the station stops (51). The cause of the trouble is that the selector switch (65) does not turn the correct amount with each dash of the plunger.

Since the actuator rod (37) determines the rotation of the selector switch, it is usually at fault. Check the twist in the actuator rod. It should be 82 degrees. Also check the fit between the "head" end of the actuator rod (37) and the rotary section of the selector switch (65). We have found that some sloppiness sometimes occurred at this point. If the fit is loose, replace the actuator rod (37). This can be easily done by removing gear plate mounting screw (49).

REF. NO.	PART NO.	DESCRIPTION
1	1X71358	Base & Spring Assembly
2	7A70928	Bracket, carriage
5	38A70954	Button, mute switch; fibre
6	20A70214	Capacitor, variable: mica; 30-60 mmf; with mounting bracket
7	20A70601	Capacitor, variable: mica; 50-180 mmf. with mounting bracket
8	8A19133	Capacitor, fixed: paper; .5 mf. 100 vdc
9	42A70980	Clip, lead screw
10	42A70184	Clip, core adjustment
11	34B71881	Coil, antenna or R.F. (specify color of paint dots on old coil when ordering)
12	34B71879	Coil, oscillator (specify color of paint dots on old coil when ordering)
13	59B70889	Coil, solenoid (RETURN entire tuner to factory for exchange when this part requires replacement)
14	46A70880	Core, powdered iron: with molded-in adj. screw (specify color of paint dot on old core when ordering)
15	32A70972	Gasket, solenoid
16	14A70876	Insulator, coil sleeve: armite
17	14A74198	Insulator, magnet winding: armite
18	14A70979	Insulator, slug: bakelite
19	14A70973	Insulator, switch: armite
20	45B70926	Lever, detent
21	45B70930	Lever, gear
22	4S7651	Lockwasher, steel: #8 internal; Cad. Pl.
23	2A76558	Nut, knurled (takes spring pressure off of iron core)
24	2S7003	Nut, Steel: 8-32 x 5/16 Hex; Cad. Pl.
25	1X73012	Plate, Bushing and Stud Assembly; stop end plate with actuator rod bushing and gear locating stud
26	1X73007	Plate & Coil Shields Assembly: consists of tuner plate, solenoid shield, 3 coil shields and 3 solenoid mtg. bolts
27	1X76556	Plate, end: solenoid end plate assembly; with gasket and adjustable air release
28	1X71359	Plate & Gears Assembly (station set-up gear train)
29	1X73008	Plate & Plunger Assembly: consists of carriage plate with 3 bakelite core screw insulators and solenoid plunger rod with ratchets & stop plate (RETURN entire tuner to factory for exchange when this part requires replacement)
30	1X71357	Plate & Trimmers Assembly: consists of coil end plate, 3 trimmers and terminal strip

MOTOROLA INC. MODEL ST-56

REF. NO.	PART NO.	DESCRIPTION
31	64A11647	Plate, switch mounting
32	9A13298	Receptacle, plug: 9 prong
33	5S8497	Rivet, steel: .088 x 1/8; Nkl. Pl.
34	5S7770	Rivet, steel: .088 x 5/32; Nkl. Pl (slug insulator mtg.)
35	5S7706	Rivet, steel: .122 x 1/8; Nkl. Pl. (lockup spring mtg.)
36	5S7707	Rivet, steel: .122 x 5/32 Nkl. Pl. (trimmer mtg.)
37	47A70976	Rod, actuator
38	47A472003	Rod, carriage guide
39	47A73787	Rod, manual stop guide
40	47A70921	Rod, stop guide
41	3S8175	Screw, steel: #4 x 3/16 PKZ Sl. HH. Cad. Pl. (Holds lead screw stop brkt. to manual lead stop)
42	3S2950	Screw, steel: 4-40 x 1/4 Sl. Lk. BHMS; Cad. Pl. (carriage brkt. mtg.)
43	3S2681	Screw, steel: #4 x 3/8 Ph Fil. Hd; Cad. Pl. (selector switch mtg.)
44	3S7327	Screw, steel: 5-40 x 3/8 Sl HH MS; Cad. Pl. (mute sw. mtg.)
45	3S7148	Setscrew; steel: 6-32 x 1/8 Allen Hd; Nkl. Pl. (ratchet setscrew in plunger)
46	3S7200	Screw, steel: 6-32 x 3/16 Sl. Fil. Hd. MS; Cad. Pl. (air release adj. screw)
47	3S2684	Screw, steel: #6 x 1/4 Ph. Flt. Hd; Cad. Pl. (solenoid switch mtg.)
48	3S7205	Screw (lockscrew): 8-32 x 1/4 Sl. HH; Cad. Pl. (base mtg.)
49	3A74390	Screw, special (gear plate mtg.)
51	1X73015	Screw & Stop Assembly; lead screw with carriage stop
52	47A70934	Shaft, lever
53	26A70878	Shield, Coil (Ant. R.F. & OSC. Coil Shield)
54	43A70881	Sleeve, Coil; powdered iron
55	43A70953	Spacer, selector switch; fibre
56	2S7988	Speednut, steel: for .093 dia. rod
57	41A70941	Spring, carriage
58	41A70958	Spring, coil iron core
59	41A70968	Spring, gear plate
60	41A70949	Spring, lead screw
61	41A70971	Spring, lockup
62	46A70983	Stop, manual lead
63	31A70948	Strip, Terminal Lug
64	40A70931	Switch, mute
65	40B70952	Switch, selector
66	1B70944	Switch, solenoid: with mtg. plate
67	4A70961	Washer, actuator rod: rectangular hole
68	4A70962	Washer, bearing (actuator rod)
69	4A75683	Washer, brass: special
70	4A73378	Washer, bumper
71	4A70015	Washer, "C" (lever shaft retainer)
72	47A70873	Washer, coil spacer: fibre
73	4A76542	Washer, eccentric (air release hole adjustable cover)
74	4A70974	Washer, insulator (actuator rod)
75	4A70956	Washer, iron core insulator: bakelite
76	4A74571	Washer, paper
77	4A73621	Washer, spring (manual lead screw)
78	4A70932	Washer, "C" spring (manual lead screw retainer)
79	1X75187	Pulley & Bracket Assembly
80	1X74114	Pulley & Bracket Assembly
81	1X74113	Pulley & Bracket Assembly
82	3S7454	Screw, steel: #8 x 1/4 PKZ
83	1A73374	Manual Tuning Shaft Assem. (CR6,7)
84	1X74262	Manual Tuning Shaft Assem. (FD6, NH6, CT6, OE6, PC6)
85	1X75408	Manual Tuning Shaft Assem. (PD6 & SR7)
86	41A73685	Spring, lead screw
87	43A77118	Sleeve, lead screw
88	41A472134	Spring, carriage balance
89	7A77585	Bracket, stop plate (stainless steel)
90	43A70905	Ratchet, fixed (large)
91	43A70904	Ratchet, floating (small)
92	41A70955	Spring, ratchet
	1X471070	STOCK SOLENOID TUNER. Use with adaptor kits listed below.
	1X471071	Kit #1 - Adapts Stock Tuner to fit Models 605 & 705
	1X471072	Kit #2 - Adapts Stock Tuner to fit Model BK6.
	1X471073	Kit #3 - Adapts Stock Tuner to fit Models FD6, FD7, NH6, CT6, OE6, CT7, and PC6.
	1X471074	Kit #4 - Adapts Stock Tuner to fit Models PD6 & SR7.
	1X471075	Kit #5 - Adapts Stock Tuner to fit Model CR6 & CR7.

MODEL ST-56 MOTOROLA INC.

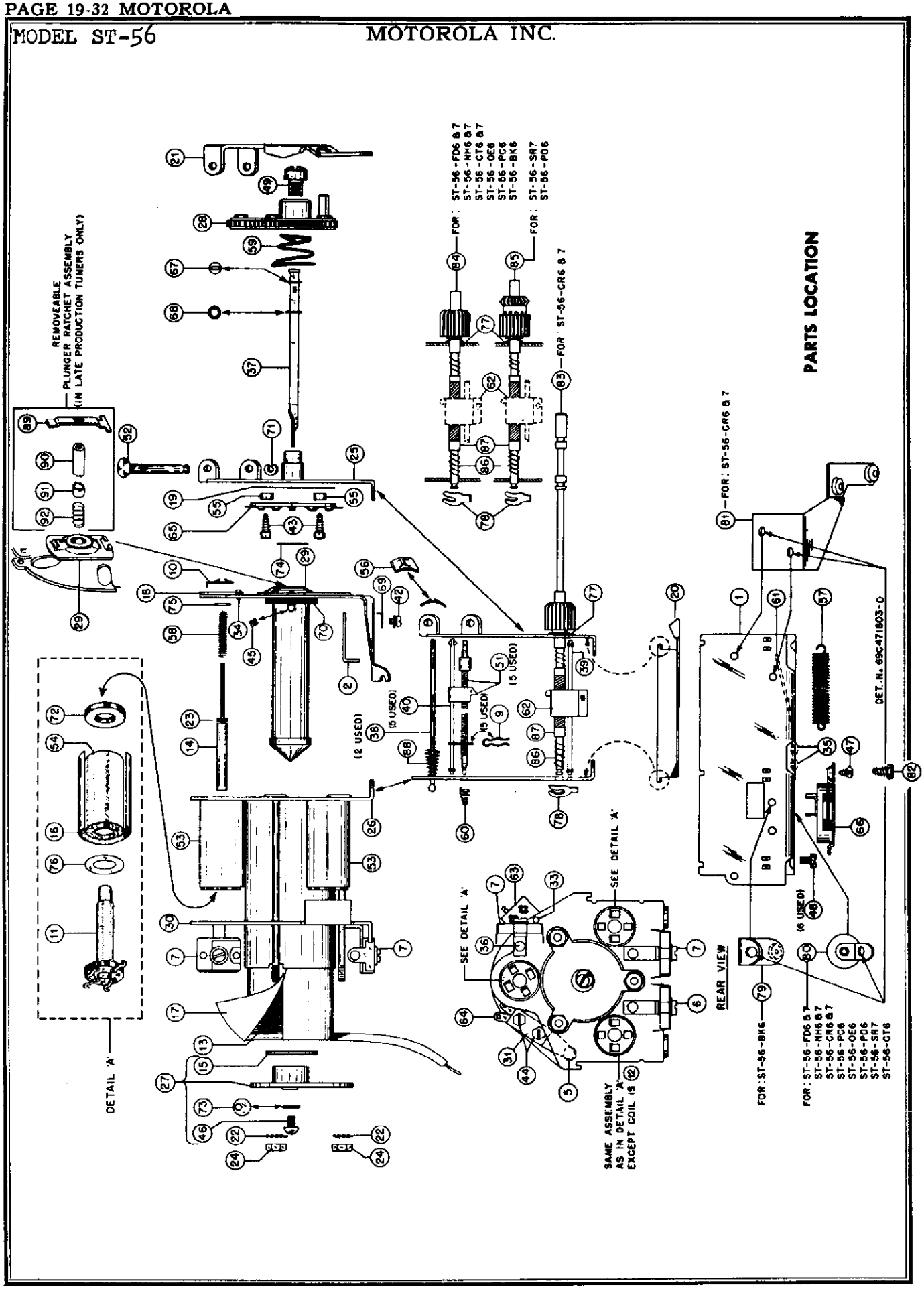

©John F. Rider

ALIGNMENT

Maximum performance can only be obtained if extreme care is exercised during alignment. Follow the procedure carefully.

A low range output meter should be connected across the speaker voice coil. Set receiver volume control to maximum. For greatest accuracy, keep output of receiver at approximately .05 watt thruout alignment by reducing generator output (not receiver volume control) as stages are brought into alignment. (.05 watt = .40 volt on output meter).

If receiver is operated from AC line during alignment, it is suggested that an isolating transformer be used between receiver and power line. If no isolation transformer is used and hum is encountered during alignment, connect the ground side of the signal generator through a .1 mf capacitor to B- instead of the receiver chassis.

Refer to Figure 1 for location of all adjustments.

STEP	DIAL SET TO	DUMMY	SIGNAL GENERATOR CONNECTED TO	SIGNAL GENERATOR SET TO	ADJUST TRIMMER	REMARKS
IF ALIGNMENT						
1.	Gang fully opened	.1 mf	Conv. grid*	455 Kc	1,2,3 & 4	Adjust for maximum.
RF ALIGNMENT						
2.	Gang fully opened	-	Radiation loop***	1620 Kc	5	Adjust for maximum. This sets osc. to dial scale**
3.	1400 Kc	-	Radiation loop***	1400 Kc	6	Tune signal for max. with receiver tuning knob, then peak trimmer 6.

* A convenient point is the stator of the antenna section of the tuning capacitor.

** With gang fully closed, pointer should be parallel with chassis; reset if necessary

*** Connect output of signal generator to a 5" diameter, 3 turn loop and bring loop close enough to receiver loop to obtain output of .05 watt (.40V) on output meter. Vary distance between loops to maintain this output during alignment. Minimum distance between loops should never be less than 12".

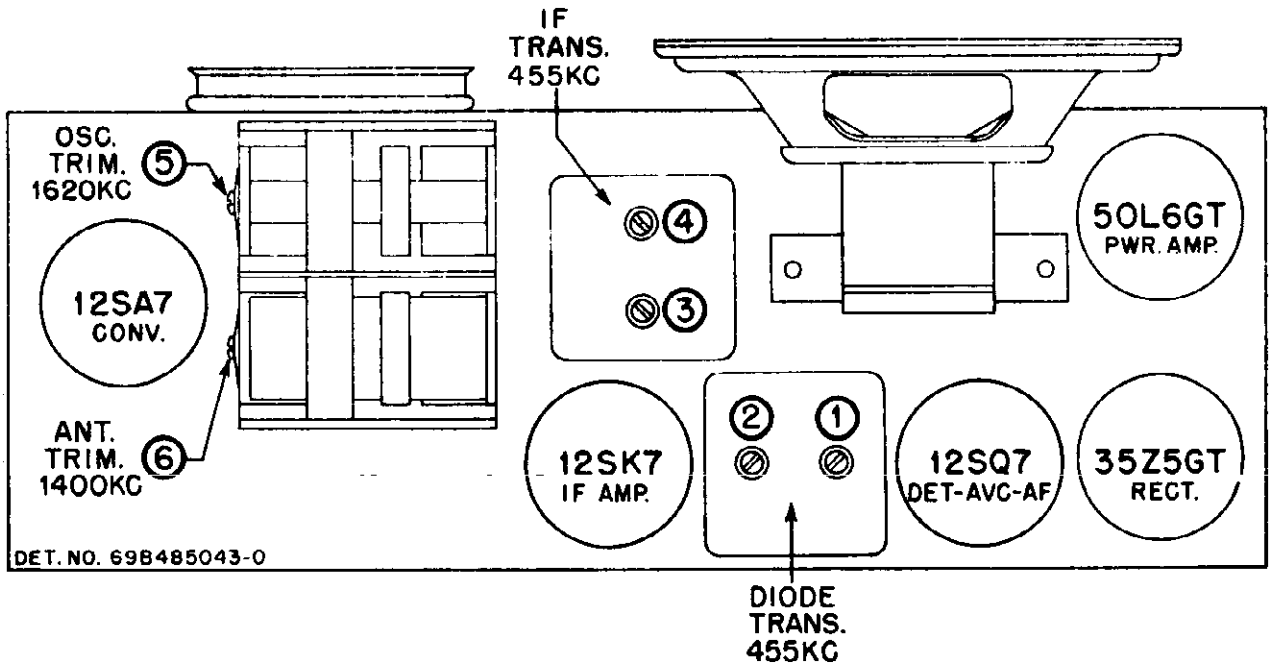

FIGURE 1. CHASSIS HS-158 TUBE & TRIMMER LOCATIONS

MODELS 58A11, 58A12,
CHASSIS HS-158

MOTOROLA INC.

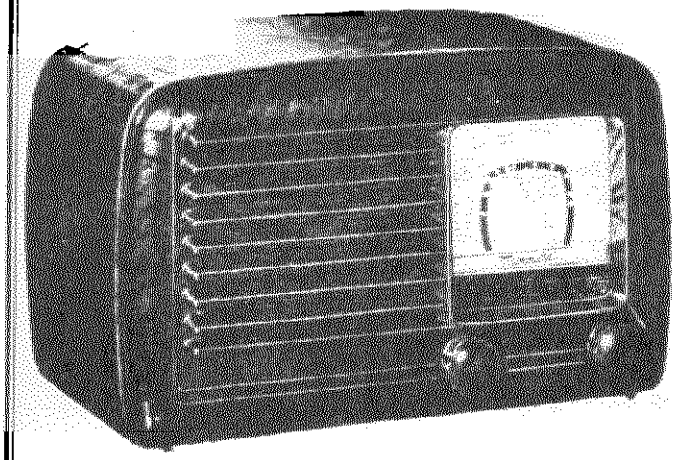

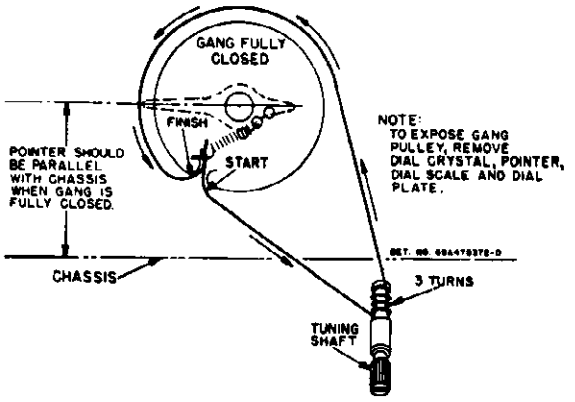

FIGURE 2. CHASSIS HS-158 STRING DRIVE DETAIL

CAUTION: Never connect antenna or chassis to water pipe, radiator or other ground.

POWER SUPPLY - 105-125V AC or DC, 35 watts

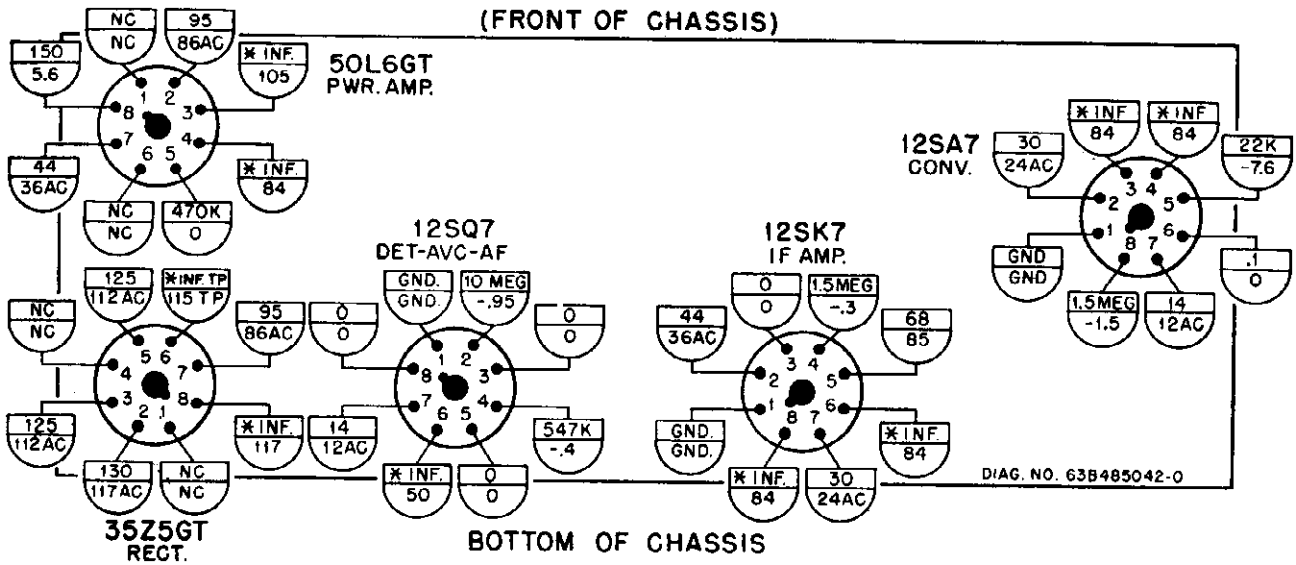

NOTES:
117 V. AC INPUT TO SET DURING MEASUREMENTS.
A VTVM WAS USED FOR ALL MEASUREMENTS.
MEASUREMENTS MADE FROM TUBE BASE PIN TERMINAL TO B-(⏚)
VOLUME CONTROL SET TO MINIMUM AND NO STATION TUNED IN.
VOLTAGE TOLERANCE ±10%; RESISTANCE TOLERANCE ± 20%.
ALL VOLTAGE MEASUREMENTS DC UNLESS OTHERWISE SPECIFIED.

▭ = RESISTANCE MEASUREMENTS.
◡ = VOLTAGE MEASUREMENTS.
* = MAY VARY DEPENDING ON CONDITION OF ELECTROLYTIC CAPACITOR.
GND. = GROUND TO CHASSIS.
TP = LUG USED AS TIE POINT.
NC = NO CONNECTION.

FIGURE 3. CHASSIS HS-158 VOLTAGE & RESISTANCE DIAGRAM

©John F. Rider

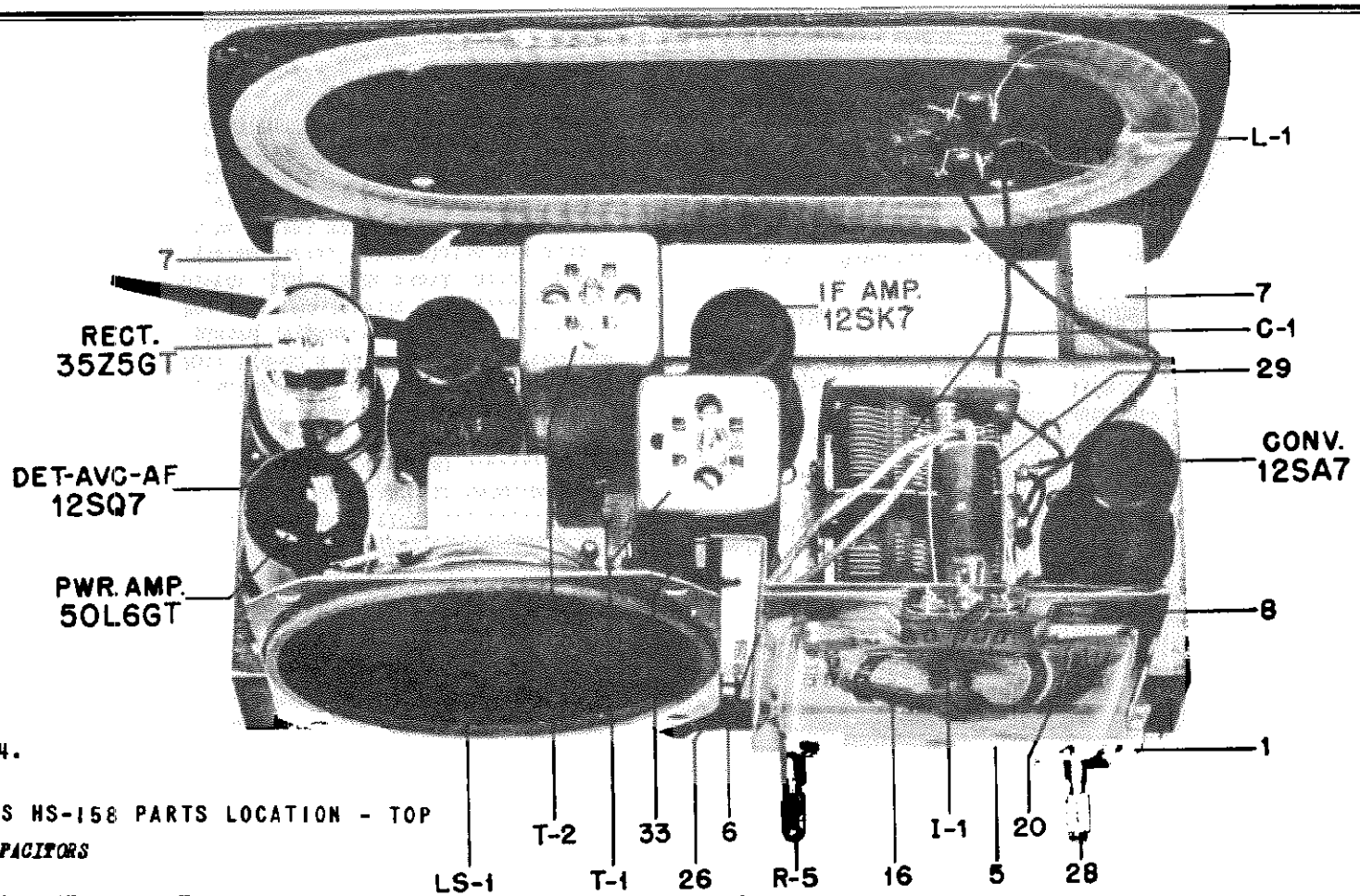

FIGURE 4.

CHASSIS HS-158 PARTS LOCATION - TOP

CAPACITORS

C-1	1X485137	Variable: 2 gang; with pulley	.....
C-2	8S9816	Paper: .05 mf 400V	.....
C-3	8S9816	Paper: .05 mf 400V	.....
C-4	8A72686	Paper: .15 mf 200V	.....
C-5A,B, C&D	21B482847	Multiple Ceramic: 220 mmf (C-5A); .002 mmf (C-5B); 220 mmf (C-5C); .005 mmf (C-5D)	
C-6	8S9802	Paper: .02 mf 400V	.....
C-7	23K485146	Electrolytic: 50-30 mf 150V	.....

COILS

L-1	24C485151	Loop Antenna: complete	.....
L-2	24A484251	Oscillator coil	.....

PILOT LIGHT

I-1	65X11854	Bulb: 6.3V, .15 amp; tubular, clear, #47	

SPEAKER

LS-1	50C485152	Speaker: 4" PM; 3.2 ohm voice coil	.....

RESISTORS

Note: All resistors are 20% insulated carbon type, unless otherwise specified.

R-1	6R6028	22,000 1/2W	.....
R-2	6R6015	220,000 1/2W	.....
R-3	6R6007	68 1/2W	.....
R-4	6R6004	1 meg 1/2W	.....
R-5	18A14629 or 18A72888	Volume control: .5 meg; with SPST switch	
R-6	6R6056	47,000 1/2W	.....
R-7	6R2109	10 meg 1/2W	.....

R-8	6R6032	470,000 1/2W
R-9	6R6032	470,000 1/2W
R-10	6R6373	150 10% 1/2W
R-11	6R5683	27 10% 1/2W
R-12	6R3953	1,000 1W

TRANSFORMERS

T-1	24B485171	IF,455 Kc: complete; includes shield
T-2	24B485172	Diode, 455 Kc: complete; includes shield
T-3	25K485148	Output Transformer

CHASSIS PARTS - MECHANICAL

1	7A14610	Bracket, tuning shaft
2	42A75825	Clip, electrolytic mounting
3	11B8944	Cord, dial: 18 lb; black
4	30A470651	Cord, line & plug: 2 conductor; 6 ft long
5	61E25515	Crystal, dial: clear plastic
6	1X25530	Dial Plate & Bracket Assembly
7	57A77084	Dowel, wood (back mtg)
8	5S7805	Eyelet, snap-in (dial scale and crystal mounting)
9	5A19658	Eyelet, spacer: .296 x .212; copper plated (gang mtg)
10	37A12691	Grommet, rubber (gang cushion)
11	32A24815	Lock, line cord: fibre
12	4S7650	Lockwasher: #6 internal; cadmium plated (IF & diode trans mtg)
13	29R5248	Lug, soldering: 6L; hot tinned
14	2S7005	Nut: 6-32 x 1/4 hex; cadmium plated (IF & diode trans mtg)
15	2S7051	Nut: 3/8-32 x 9/16 hex Palnut; cadmium plated (volume control mtg)
16	52B20520	Pointer: red plastic
17	5S7707	Rivet: .122 x 5/32 steel; nickel plated (term. strip, electrolytic mtg clip, tube socket mtg and output trans mtg)
18	5S7701	Rivet: .122 x 3/16 steel; nickel plated (tuning shaft bracket mtg)
19	5S7708	Rivet: .122 x 9/32 steel; nickel plated (line cord lock mtg)
20	34B485147	Scale, dial
21	3S7508	Screw: #6 x 1/4 PKZ plain hex head sheet metal screw; cadmium plated (diode trans mtg)
22	3S2294	Screw: 6-32 x 1/2 plain hex head locking type machine screw; cadmium plated (gang mounting)
23	3S7339	Screw: 6-32 x 5/8 plain hex head machine screw; cadmium plated (osc coil mtg)
24	3S7248	Screw: 6-32 x 1/8 plain hex head machine screw; cadmium plated (dial plate mtg)
25	3S7205	Screw: 6-32 x 1/4 slotted hex head locking type machine screw; cadmium plated (speaker mtg)
26	3S7454	Screw: #8 x 1/4 PKZ plain hex head sheet metal screw; cadmium plated (dial plate mtg)
27	3S3383	Screw: #8 x 2" PKZ plain hex head sheet metal screw; cadmium plated (loop mtg)
28	47A14635	Shaft, tuning
29	60A25505	Socket, dial light, clip & leads
30	9A76209	Socket, tube: octal; plain type
31	9A485922	Socket, tube: octal; shielded type (for IF Amp)
32	41A14244	Spring, tension coil (drive cord spring)
33	37K20865	Strip, channel: rubber
34	31A15555	Strip, terminal: 2 insulated lugs, #3 mtg
35	4A70015	Washer, "C" (tuning shaft retainer)
36	4S1719	Washer: 3/8 x .140 x .030 thick, steel; cad pl (line cord lock mtg)
37	4S7597	Washer: 7/16 x .171 x .032 thick; cadmium plated (gang mtg)
38	4S7614	Washer: 11/16 x 11/64 x .036 thick; steel; cad pl (loop mtg)

CABINET PARTS

101	68D25502	Cabinet, table model: walnut plastic (58A11)
102	68K25540	Cabinet, table model: ivory plastic (58A12)
103	36A470443	Knob, control: walnut plastic (58A11)
104	36K485144	Knob, control: ivory plastic (58A12)
105	38A25507	Plug, split (holds cabinet back to cabinet)
106	3S476106	Screw: #8 x 1 PKA plain hex head sheet metal screw; cad pl (chassis mtg)
107	32K481494	Washer, paper: 3/8 x .171 x .020 thick; (chassis mtg)

©John F. Rider

MOTOROLA INC.

MODELS 58A11, 58A12,
CHASSIS HS-158

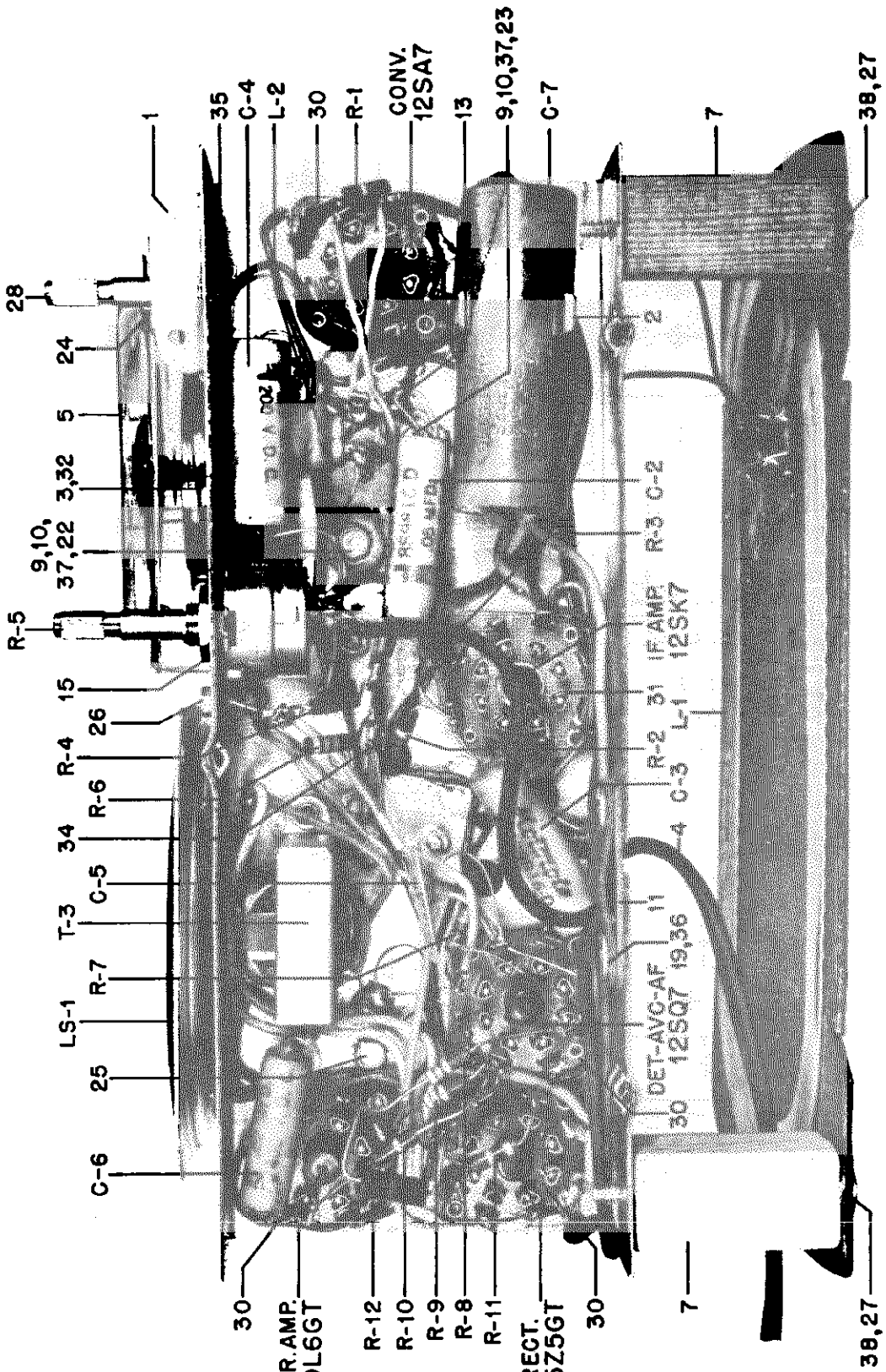

FIGURE 5. CHASSIS HS-158 PARTS LOCATION - BOTTOM

MODELS 58A11, 58A12,
CHASSIS HS-158

MOTOROLA INC.

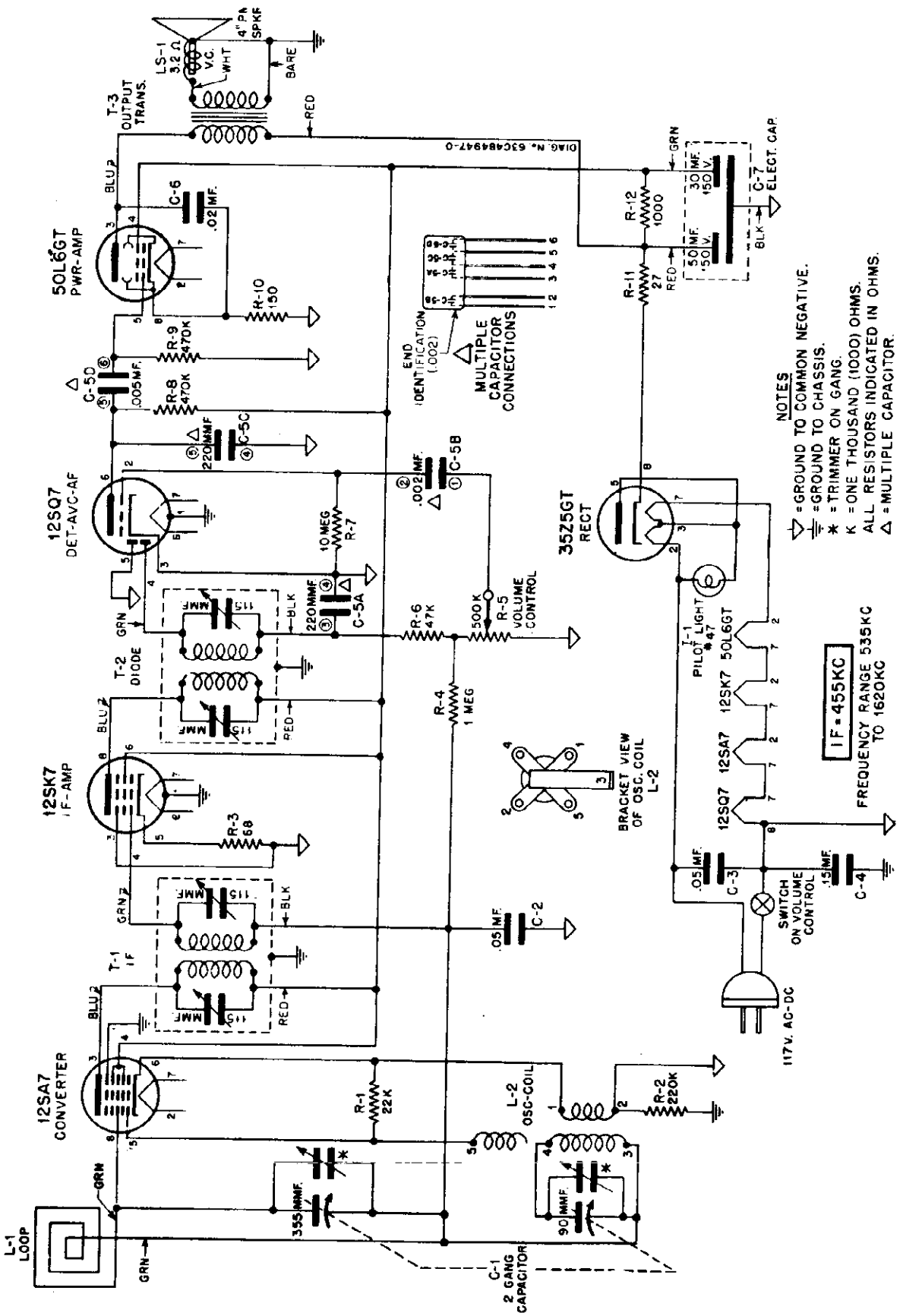

FIGURE 6. CHASSIS HS-158 SCHEMATIC DIAGRAM

©John F. Rider

MOTOROLA INC.

MODELS 58R11, 58R12, 58R13, 58R14, 58R15, 58R16, CHASSIS HS-11

SERVICE NOTE

The chassis of this receiver is connected directly to the power line. When operating chassis outside of its cabinet (from an AC power line) use *an isolating transformer between power line and receiver* to reduce possibility of electrical shock.

ALIGNMENT

Maximum performance can only be obtained if extreme care is exercised during alignment. Follow the procedure carefully.

A low range output meter should be connected to the speaker voice coil terminal and receiver chassis. Set receiver volume control to maximum. For greatest accuracy, keep output of receiver at approximately .05 watt (.05 watt = .40 volt on output meter) throughout alignment by reducing generator output (not receiver volume control) as stages are brought into alignment.

ALIGNMENT PROCEDURE

Refer to Figure 1 for location of all alignment trimmers and cores.

STEP	DIAL SET TO	DUMMY	SIG. GEN. CONNECTED TO	SIG. GEN. SET AT	ADJUST TRIMMER OR CORE	REMARKS
IF ALIGNMENT						
1.	Gang fully opened	.1 mf	Converter Grid & chassis*	455 Kc	1,2,3 & 4	Adjust for maximum.
RF ALIGNMENT						
2.	Gang fully opened	.1 mf	Converter Grid & Chassis*	1620 Kc	5	This sets oscillator to dial scale.
3.	1400 Kc	None	Radiation loop**	1400 Kc	6	Tune signal in on receiver, then adjust loop trimmer (6) for maximum.

* A convenient point for this connection is the stator lug of the loop section of the tuning capacitor.

** Connect output of signal generator to a 5" diameter, 3 turn loop and bring loop close enough to receiver loop to obtain output of 50 milliwatts (.40) on output meter. Vary distance between loops to maintain this output during alignment. Minimum distance between loops should never be less than 12".

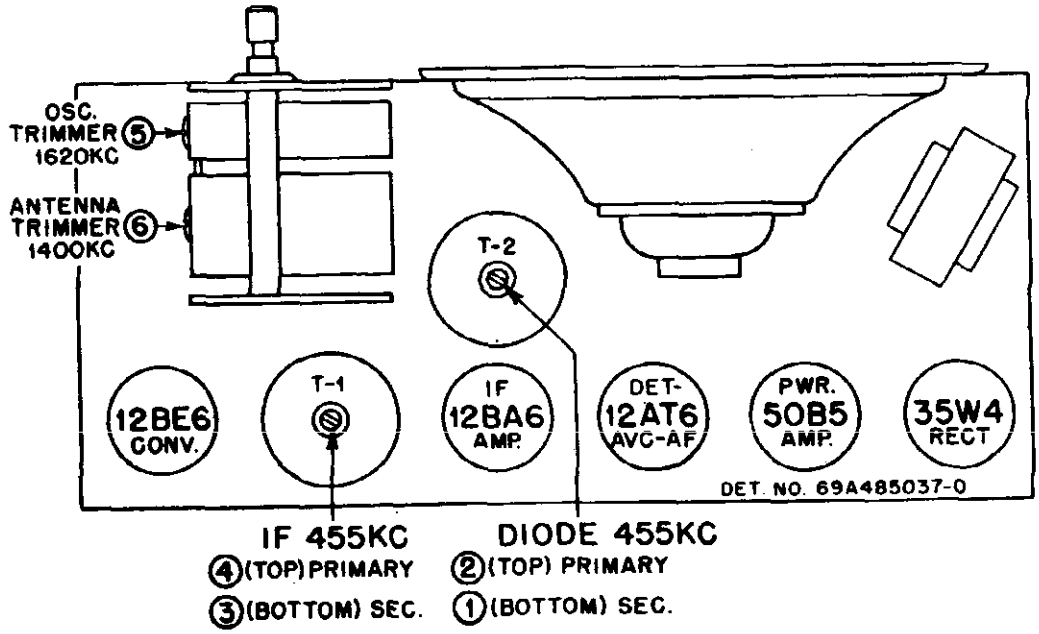

FIGURE 1. CHASSIS HS-116 TUBE & TRIMMER LOCATIONS

© John F. Rider

MODELS 58R11, 58R12, 58R13, 58R14, 58R15, 58R16, CHASSIS HS-116

MOTOROLA INC.

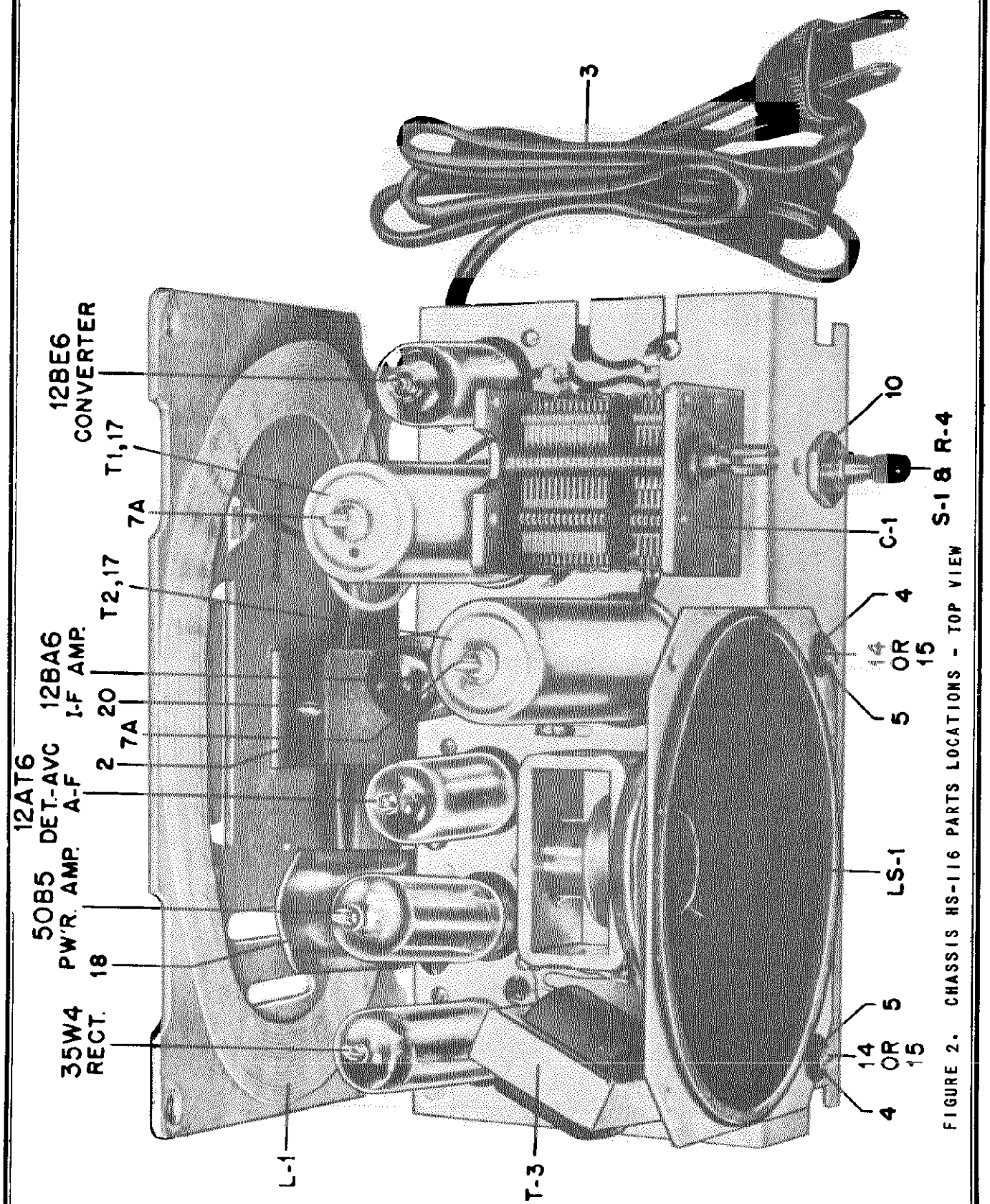

FIGURE 2. CHASSIS HS-116 PARTS LOCATIONS - TOP VIEW

© John F. Rider

MOTOROLA INC.

MODELS 58R11, 58R12, 58R13, 58R14, 58R15, 58R16, CHASSIS HS-116

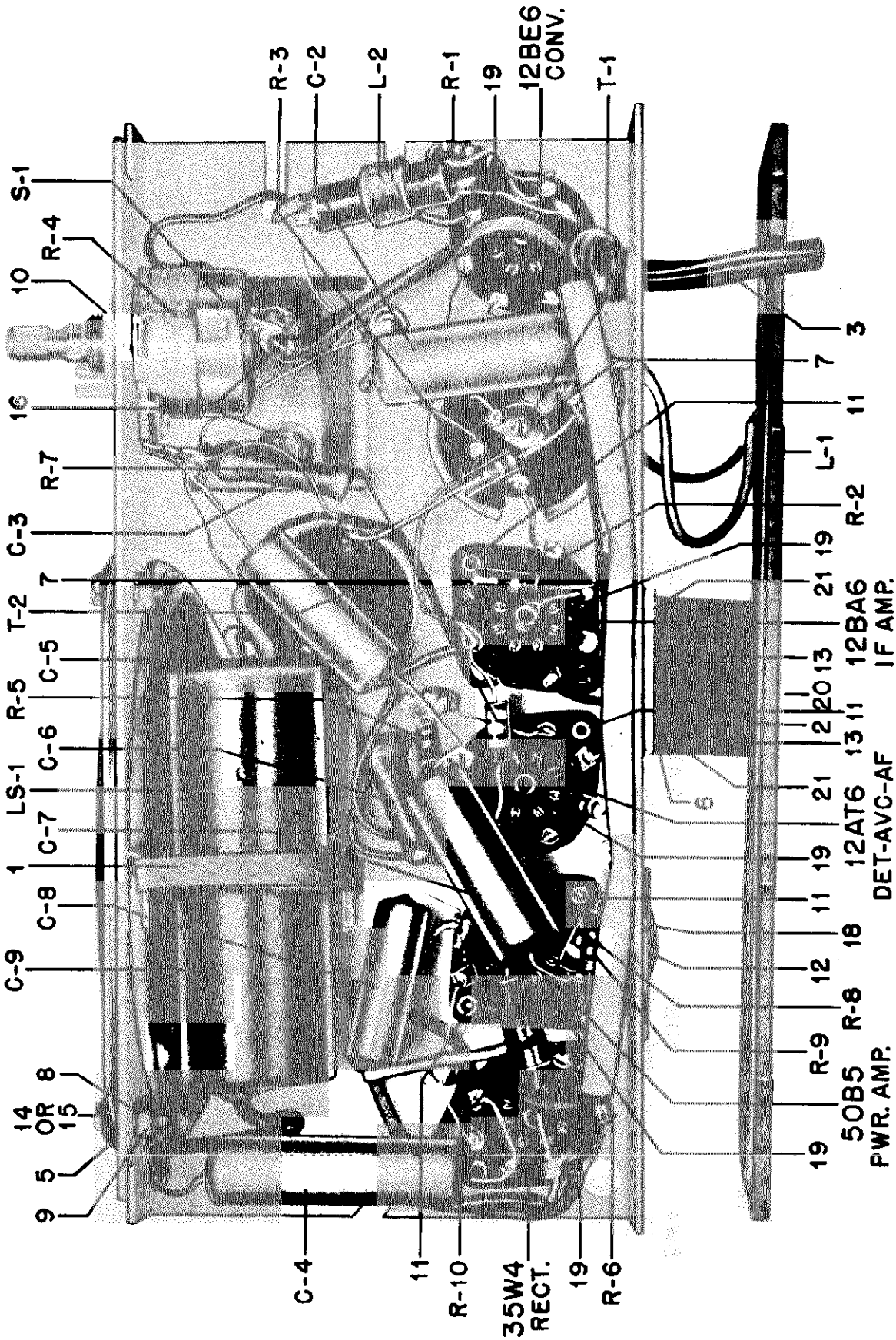

FIGURE 3. CHASSIS HS-116 PARTS LOCATIONS - BOTTOM VIEW

©John F. Rider

©John F. Rider

= RESISTANCE READINGS.

= VOLTAGE READINGS.

GND. = GROUND CONNECTIONS TO CHASSIS.

NC = NO CONNECTION.

* = MAY VARY DEPENDING ON CONDITION OF ELECTROLYTIC CAPACITOR.

‡ = TIE POINT.

K = ONE THOUSAND (1000) OHMS.

NOTE: A VTVM WAS USED TO TAKE VOLTAGE MEASUREMENTS. VOLUME CONTROL SET AT MINIMUM & NO SIGNAL TUNED IN.
MEASUREMENTS TAKEN FROM TUBE SOCKET TERMINALS TO CHASSIS.
ALL VOLTAGE MEASUREMENTS TAKEN WITH 117 V. AC INPUT TO SET.
ALL VOLTAGE MEASUREMENTS DC UNLESS OTHERWISE SPECIFIED.
VOLTAGE MEASUREMENTS ± 10%.
RESISTANCE MEASUREMENTS ± 20%.

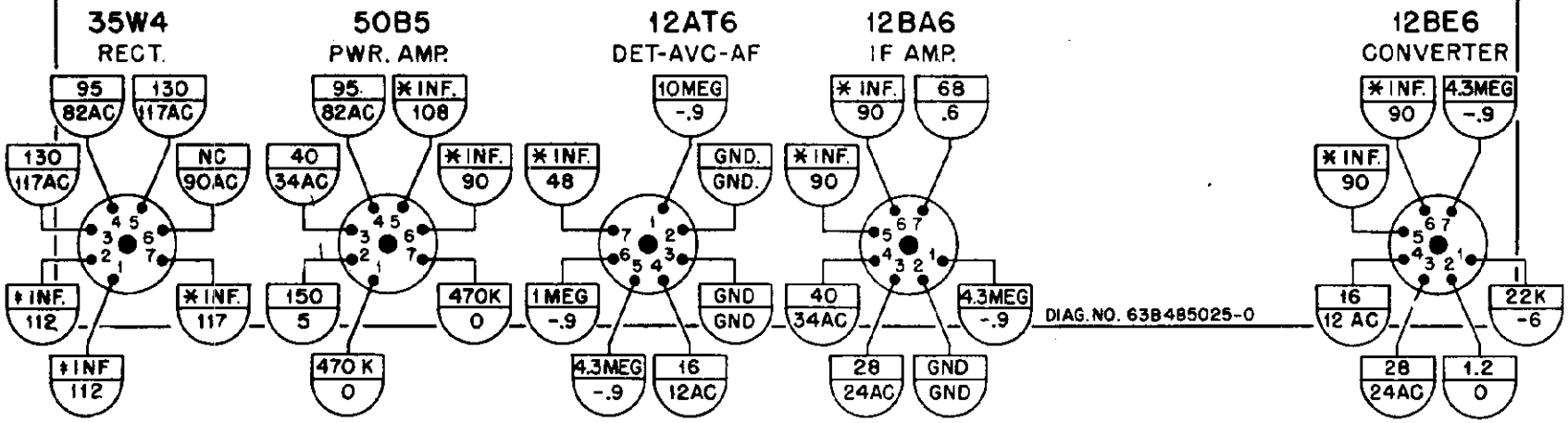

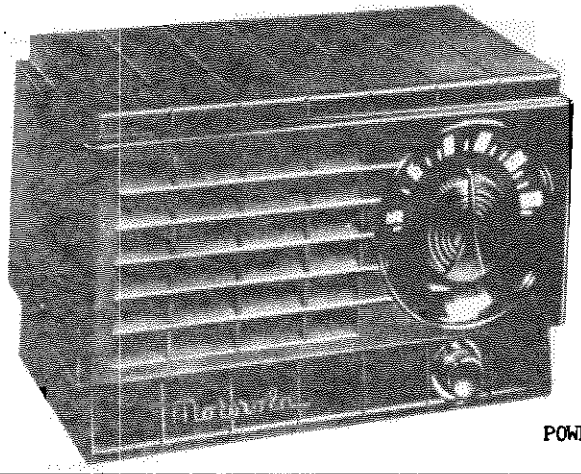

FIGURE 4. CHASSIS HS-116 VOLTAGE & RESISTANCE DIAGRAM

POWER SUPPLY - Operates from 105-125 volts AC or DC, 50 to 60 cycles, 35 watts

MOTOROLA INC. MODELS 58R11, 58R12, 58R13, 58R14, 58R15, 58R16, CHASSIS HS-116

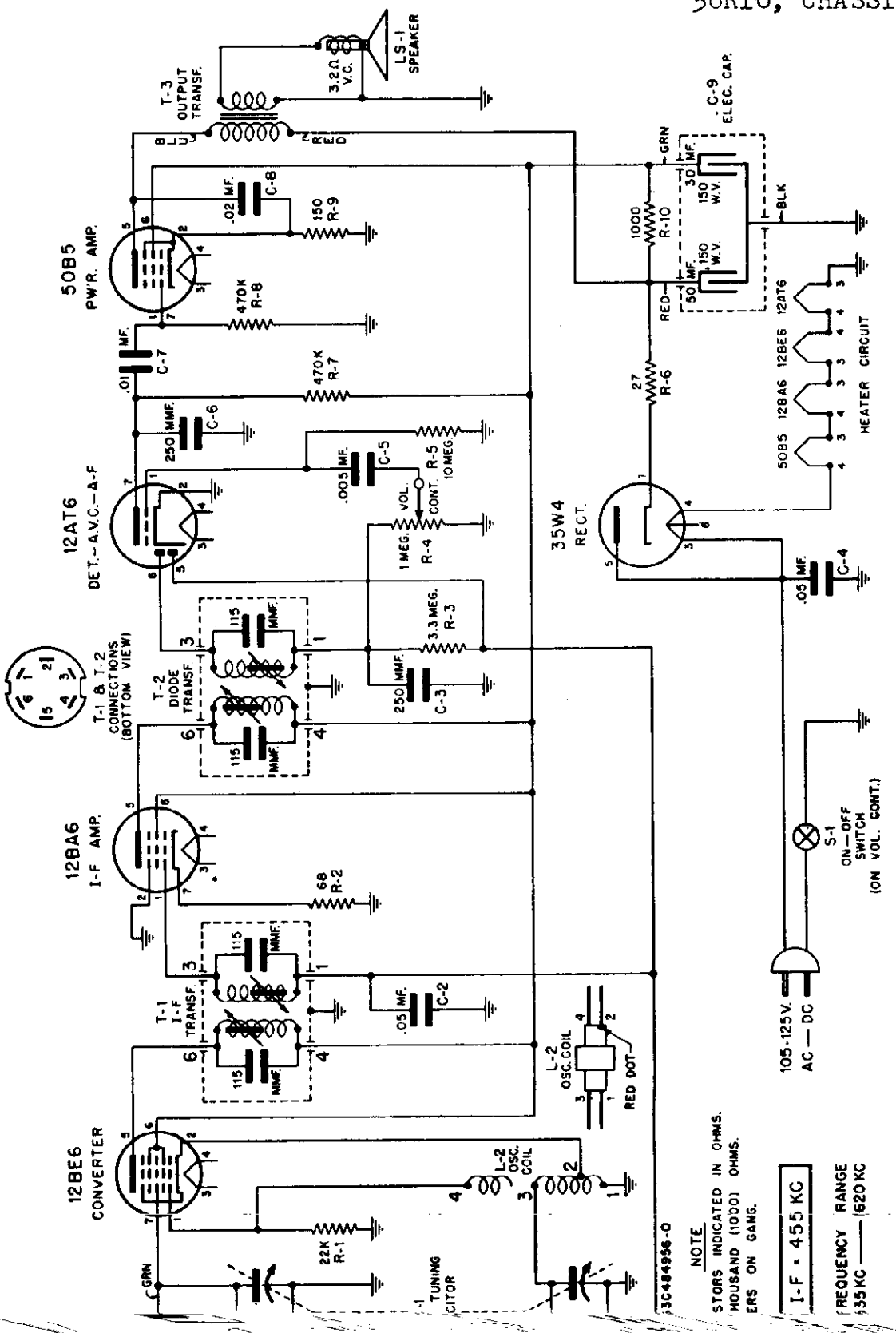

FIGURE 5, CHASSIS HS-116 SCHEMATIC DIAGRAM

CHASSIS PARTS - ELECTRICAL

CAPACITORS

C-1	19B478128	Variable: 2 gang .....
C-2	8S9821	Paper: .05 mf 200V .....
C-3	21K77375	Ceramic: 250 mmf .....
C-4	8S9816	Paper: .05 mf 400V .....
C-5	8S9813	Paper: .005 mf 600V .....
C-6	21K77375	Ceramic: 250 mmf .....
C-7	8S9809	Paper: .01 mf 400V .....
C-8	8S9802	Paper: .02 mf 400V .....
C-9	23B478135	Electrolytic: 50-30 mf 150V .....

COILS

L-1	24B478139	Loop Antenna: includes panel ....
L-2	24A478129	BC Oscillator .....

SPEAKER

LS-1	50C478138	Speaker: 4" PM; 3.2 ohm VC .....

TRANSFORMERS

T-1,2	24B478123	IF & Diode, 455 Kc: complete with tuning cores but less shield .....
T-3	25B478121	Output Transformer .....

RESISTORS

Note: All resistors are insulated carbon type, 20%, 1/2W, unless otherwise specified.

R-1	6R6028	22,000 .....
R-2	6R6007	68 .....
R-3	6R2118	3.3 meg .....
R-4	18A478122	Volume control: 1 meg; with SPST switch
R-5	6R2109	10 meg .....
R-6	6R5683	27 10% .....
R-7	6R6032	470,000 .....
R-8	6R6032	470,000 .....
R-9	6R3992	150 .....
R-10	6R3953	1,000 1 watt .....

CHASSIS PARTS - MECHANICAL

1	37A27142	Band, rubber (capacitor mtg) .....
2	7A478118	Bracket, loop mtg .....
3	30K478137	Cord, line, and plug: 6 ft long .....
4	5S7946	Eyelet, speaker mtg .....
5	5A484268	Grommet, speaker mtg: rubber .....
6	14A478119	Insulator, loop mtg .....
7	1X71048	Iron Core & Clip Assembly (IF & Diode trans. bottom core) .....
7A	1X71047	Iron Core & Palnut Assembly (IF & diode trans. top core) .....
8	4S7686	Lockwasher: #5 ext (speaker mtg - use with 3S7324 mounting screw only) .....
9	2S7010	Nut; #6 - 40 x 1/4 hex; steel; cad plated (speaker mtg -use with 3S7327 mtg screw only) .....
10	2S7051	Nut: 3/8-32 x 9/16 hex; steel; cad plated; Palnut (vol. cont. mtg).....
11	5S7771	Rivet: .088 x 3/16; steel; nickel plated (tube socket mtg) .....
12	5S7707	Rivet: .122 x 5/32; steel; nickel plated (electrostatic shield mtg and output transformer mtg) .....
13	5S7703	Rivet: .122 x 7/32; steel; nickel plated (antenna bracket mtg) .....
14	3S3367	Screw: #5 x 3/8 PKA plain hex head sheet metal screw; black parkerized (speaker mtg-late production sets only) .....
	or	
15	3S7329	Screw: 5-40 x 3/8 plain hex head machine screw; cad pl (speaker mtg-used in early production sets) .....
16	3S7247	Screw: 6-32 x 3/16; slotted hex head machine screw; steel cad plated; lockscrew (gang mtg) .....
17	24B70107	Shield, coil: for IF and diode transformers .....
18	26A478117	Shield, electrostatic .....
19	9A472534	Socket, tube: miniature .....
20	46A478145	Stud, tri-mount (antenna mtg) .....
21	14A11493	Washer, fibre: insulating (antenna bracket mtg) .....

CABINET PARTS

101	16D478088	Cabinet, plastic: brown (58R11) ....
102	16K484338	Cabinet, plastic: white (58R12) ....
103	16K484340	Cabinet, plastic: red (58R13) .....
104	16K485161	Cabinet, plastic: gray (58R14) .....
105	16K485162	Cabinet, plastic: green (58R15) ....
106	16K485163	Cabinet, plastic: yellow (58R16) ...
107	36B478147	Knob, tuning (58R11) .....
108	36A478148	Knob, volume control (58R11) .....
109	36K484377	Knob, tuning: ivory (58R12 & 58R13)
110	36K484375	Knob, volume control: ivory (58R12 & 58R13) .....
111	36K485157	Knob, tuning: gold (58R14, 58R15 & 58R16)
112	36K485156	Knob, volume control; gold (58R14, 58R15 & 58R16) .....
113	38A25507	Plug, split: copper oxide finish (mounts loop panel to cabinet) .....
114	3S476083	Screw: 6-32 x 5/16 slotted hex head; steel, cad plated; lockscrew (chassis mounting) .....
115	11M476113	Tape, aluminum foil: 3-1/2" wide x 7" long (heat shield) .....

MOTOROLA INC. MODELS 58X11, 58X12, CHASSIS HS-125

ALIGNMENT

Maximum performance can only be obtained if extreme care is exercised during alignment. Follow the procedure carefully.

A low range output meter should be connected across the speaker voice coil. Set receiver volume control to maximum. For greatest accuracy, keep output of receiver at approximately .05 watt thruout alignment by reducing generator output (not receiver volume control) as stages are brought into alignment. (.05 watt = .40 volt on output meter).

If receiver is operated from AC line during alignment, it is suggested that an isolating transformer be used between receiver and power line.

If no isolation transformer is used and hum is encountered during alignment, connect the ground side of the signal generator through a .1 mf capacitor to B- instead of the receiver chassis.

NOTE: Two types of IF & diode transformers are used in this chassis. One type has cores with slotted brass adjustment screws; the other type has threaded cores that move inside a threaded coil form. To adjust the latter type, use a small fibre screwdriver and do not use undue pressure as damage to the core or coil form may result.

Refer to Figure 1 for location of all adjustments.

STEP	DIAL SET TO	DUMMY	SIGNAL GENERATOR CONNECTED TO	SIGNAL GENERATOR SET TO	ADJUST TRIMMER OR CORE	REMARKS
IF ALIGNMENT						
1.	Gang fully opened	.1 mf	Converter grid*	455 Kc	1;2,3 & 4	Adjust for maximum.
RF ALIGNMENT						
2.	1600 Kc**	-	Radiation loop***	1600 Kc	5	Adjust for maximum. This sets osc. to dial scale.
3.	1400 Kc	-	Radiation loop***	1400 Kc	6	Tune signal for maximum with receiver tuning knob, then peak trimmer 6.

* A convenient point is the stator of the antenna section of the tuning capacitor.

** First close gang fully and set pointer to calibration mark at left hand side of dial background; then set pointer to 1600 Kc. by turning knob till pointer lines up with right-hand calibration mark.

*** Connect output of signal generator to a 5" diameter, 3 turn loop and bring loop close enough to receiver loop to obtain output of .05 watt (.40V on output meter). Vary distance between loops to maintain this output during alignment. Minimum distance between loops should never be less than 12".

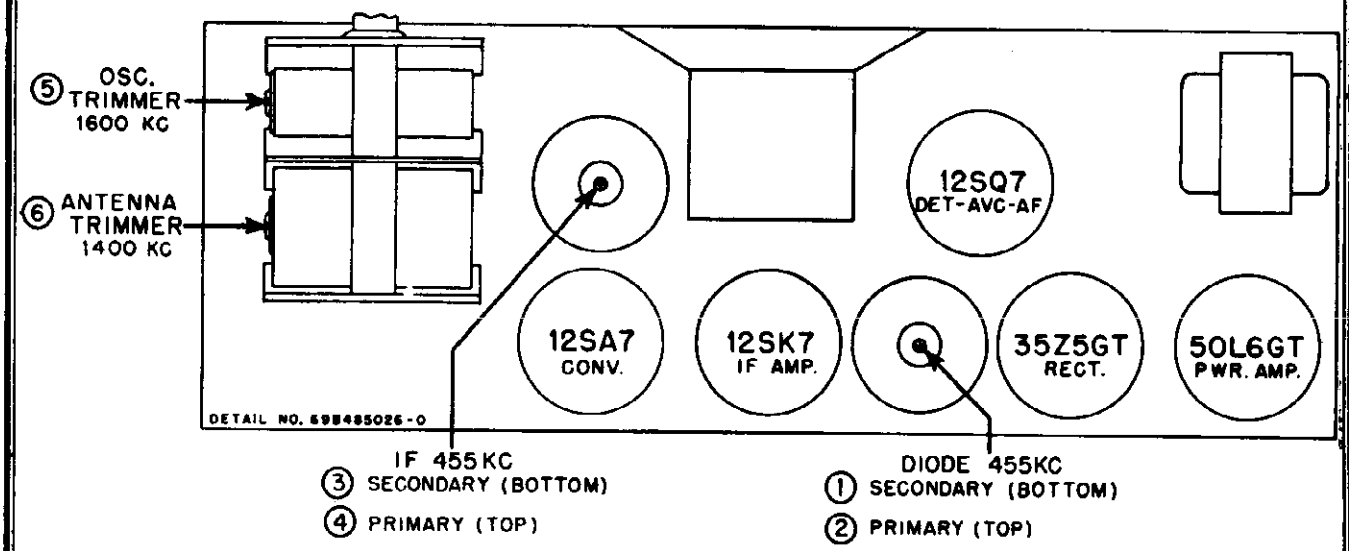

FIGURE 1. CHASSIS HS-125 TUBE & TRIMMER LOCATIONS

MODELS 58X11, 58X12, CHASSIS HS-125

MOTOROLA INC.

SERVICE NOTE

Two types of IF & Diode transformers are being used in this model. One type has iron cores that are tuned by means of slotted brass screws. These transformars must be used with shields having an internal iron core sleeve.

The other type of transformers have threaded cores moving inside of a threaded coil form. These transformers must be used with plain shields.

Replacement transformer should always be of the same type as the original.

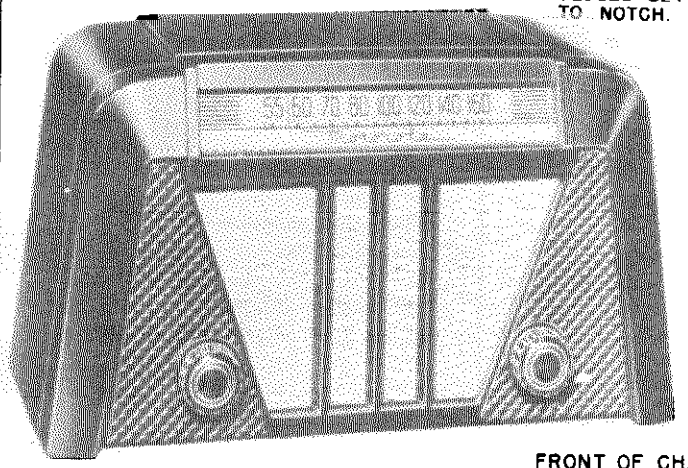

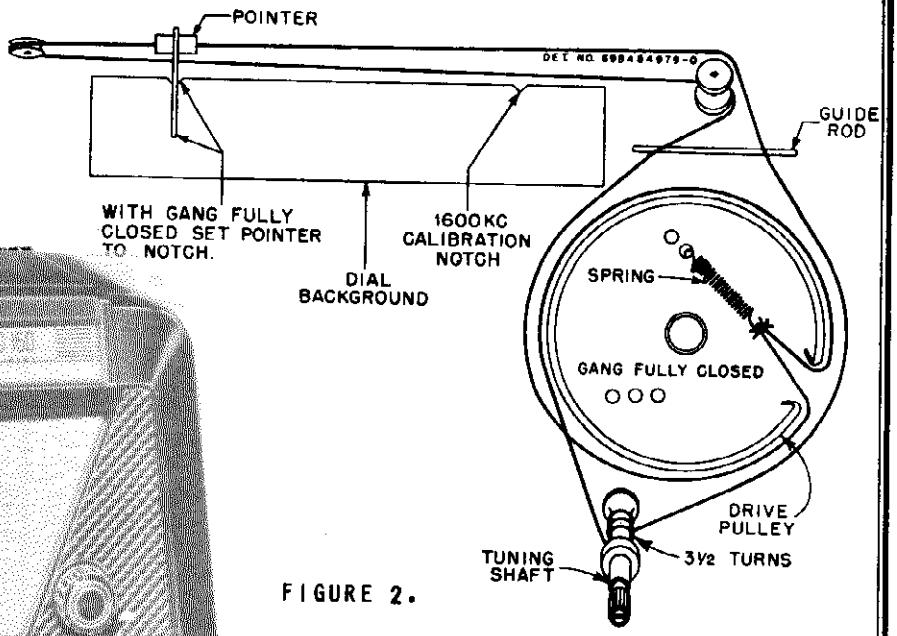

FIGURE 2.

CHASSIS HS-125 STRING DRIVE DETAIL

FRONT OF CHASSIS

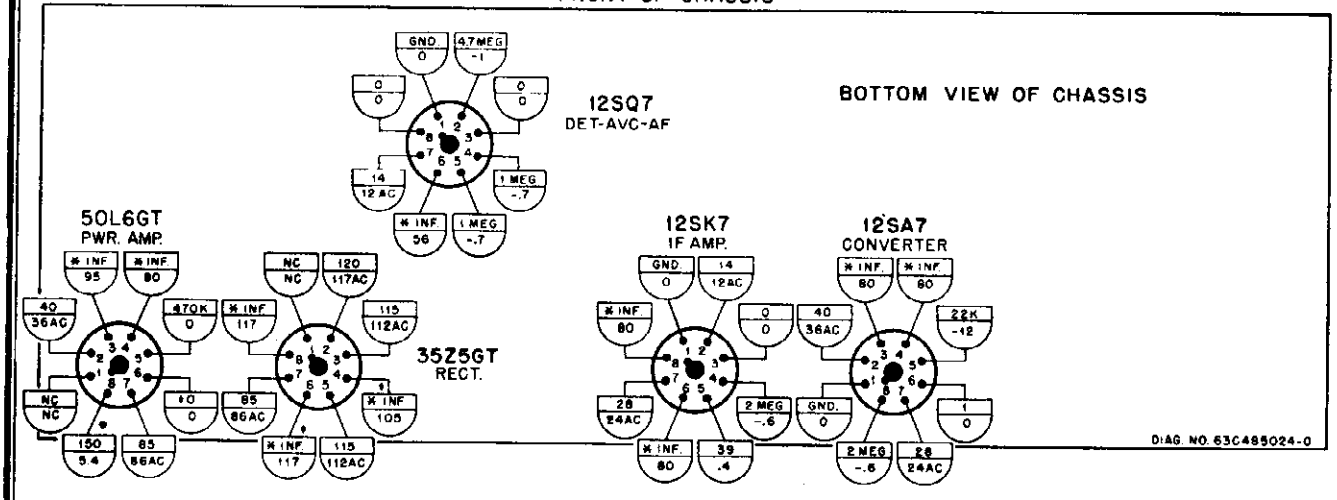

▭ = RESISTANCE MEASUREMENTS.
▭ = VOLTAGE MEASUREMENTS.
♦ = TIE POINT.
* = MEASUREMENT MAY VARY DEPENDING ON CONDITION OF ELECTROLYTIC CAPACITOR.
GND = GROUND TO CHASSIS.
NC = NO CONNECTION.
K = 1000 (ONE THOUSAND) OHMS.

VOLTAGE TOLERANCE ±10%.
RESISTANCE TOLERANCE ±20%.
VOLUME CONTROL AT MINIMUM AND NO STATION TUNED IN.
117 V. AC INPUT TO SET DURING MEASUREMENTS.
ALL VOLTAGE MEASUREMENTS DC UNLESS OTHERWISE SPECIFIED.
MEASUREMENTS TAKEN WITH A VTVM.
MEASUREMENTS MADE FROM TUBE BASE PIN TERMINALS TO B-(⏚)

FIGURE 3. CHASSIS HS-125 VOLTAGE & RESISTANCE DIAGRAM

© John F. Rider

MOTOROLA INC. MODELS 58X11, 58X12,
CHASSIS HS-125

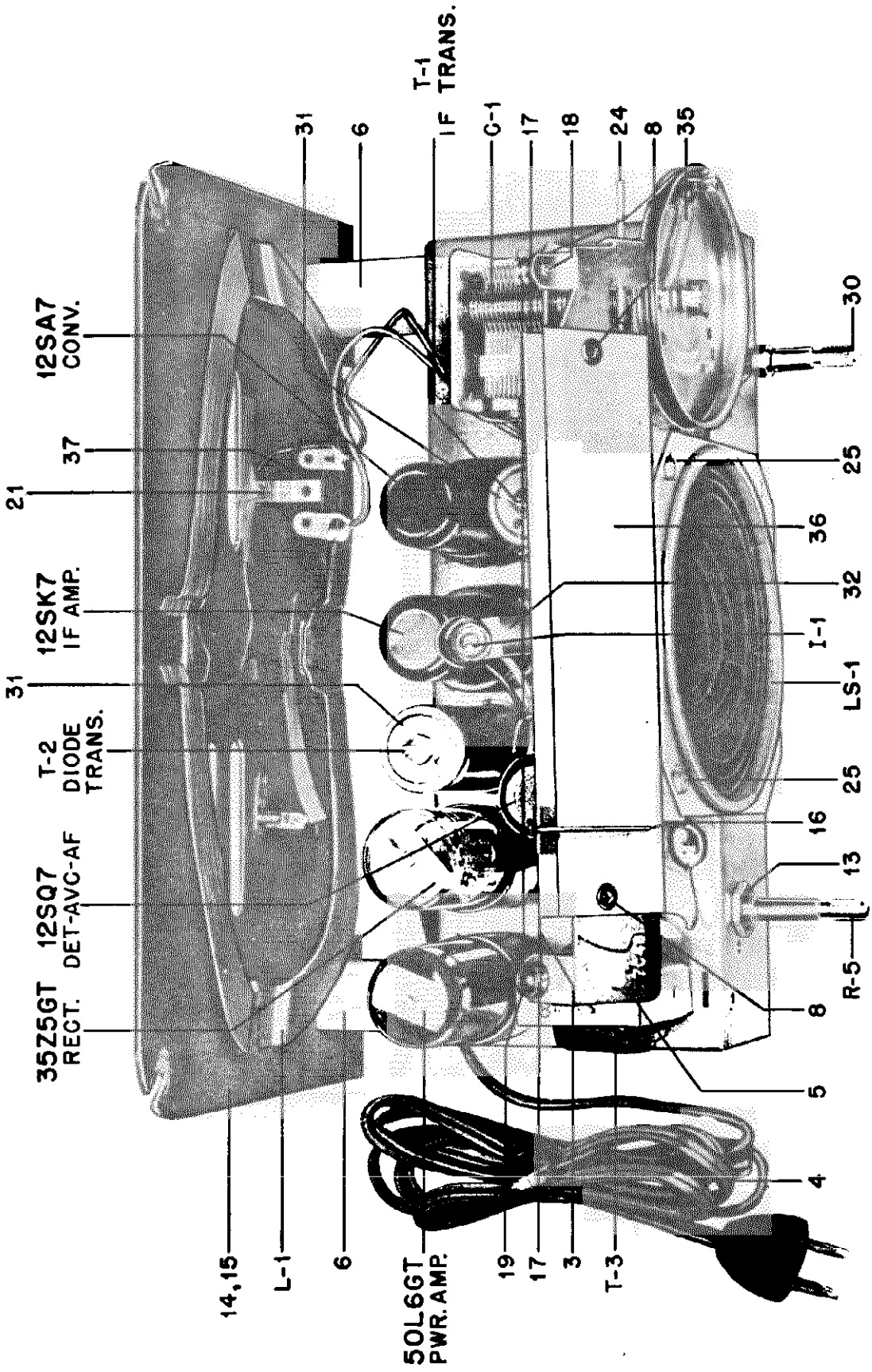

FIGURE 4. CHASSIS HS-125 PARTS LOCATION - TOP VIEW

MODELS 58X11, 58X12,
CHASSIS HS-125

MOTOROLA INC.

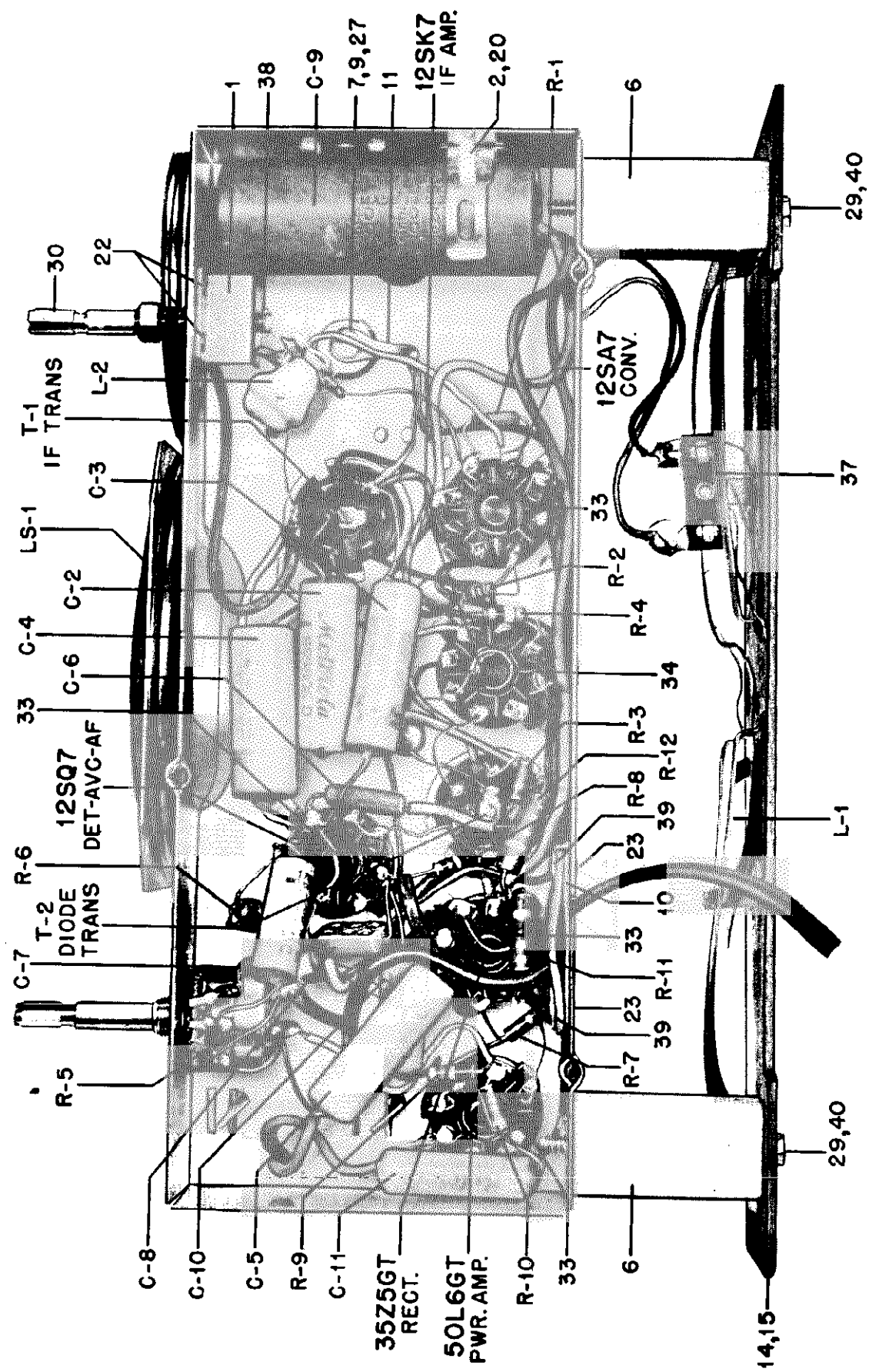

FIGURE 5. CHASSIS HS-125 PARTS LOCATION - BOTTOM VIEW

MOTOROLA INC. MODELS 58X11, 58X12,
CHASSIS HS-125

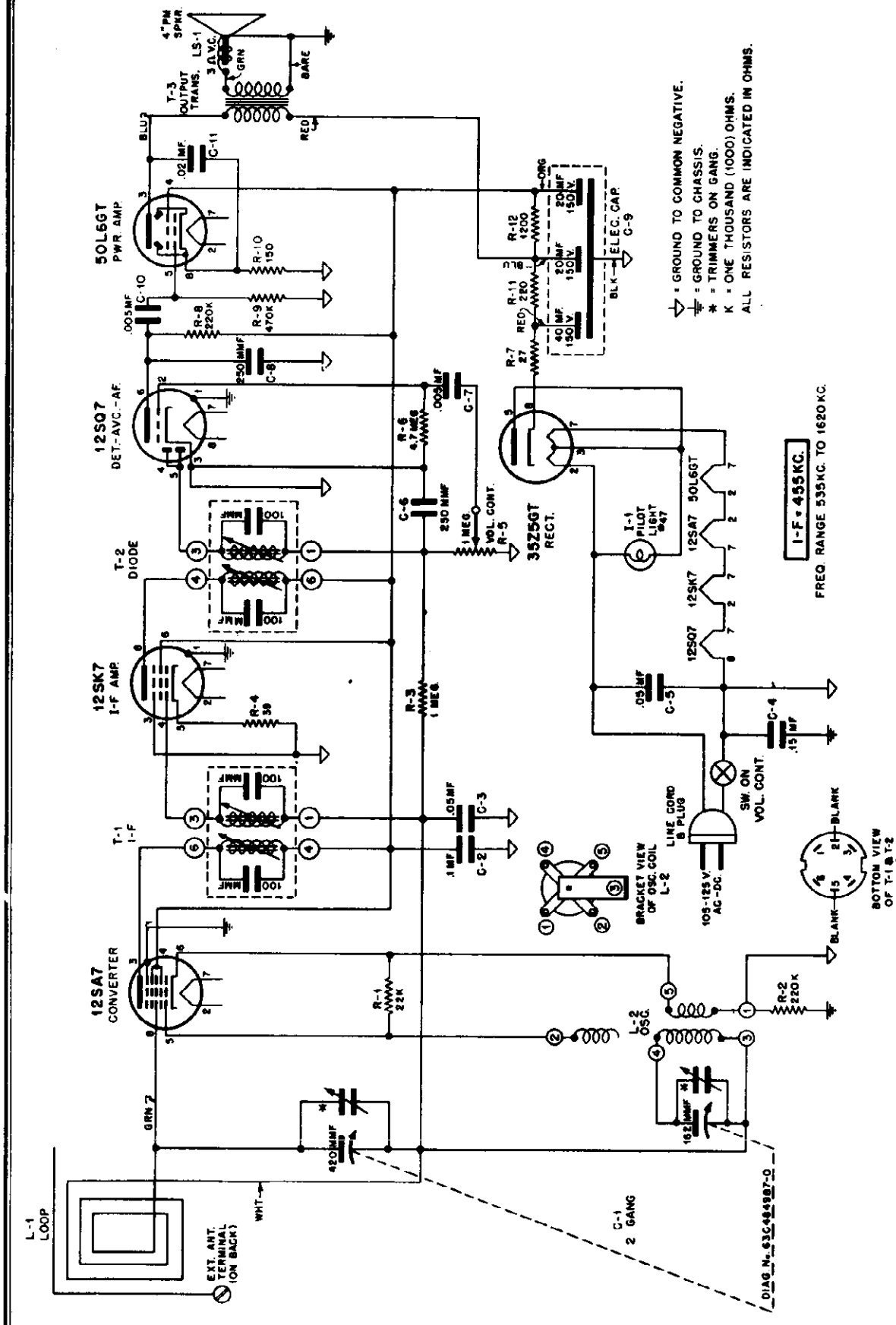

FIGURE 6. CHASSIS HS-125 SCHEMATIC DIAGRAM

MODELS 58X11, 58X12, MOTOROLA INC.
CHASSIS HS-125

CHASSIS PARTS - ELECTRICAL

CAPACITORS

C-1	1X77204	Variable: 2 gang; cut oscillator plates; includes pulley
C-2	8S9806	Paper: .1 mf 200V
C-3	8S9816	Paper: .05 mf 400V
C-4	8A72686	Paper: .15 mf 200V
C-5	8S9816	Paper: .05 mf 400V
C-6	21R6640	Mica: 250 mmf 500V
C-7	8S9813	Paper: .005 mf 600V
C-8	21R6648	Mica: 250 mmf 500V
C-9	23B75808	Electrolytic: 40-20-20 mf 150V
C-10	8S9813	Paper: .005 mf 600V
C-11	8S9802	Paper: .02 mf 400V

DIAL LIGHT

I-1	65X11854	Bulb, pilot: 6.3V, .15A; tubular, bayonet base; #47

COILS

L-1	24K77096	Loop Winding only - less cabinet back
L-2	24A74616	Oscillator

RESISTORS

NOTE: All resistors are insulated carbon type, 20% unless otherwise specified.

R-1	6R6028	22,000 1/2W
R-2	6R6015	220,000 1/2W
R-3	6R6004	1 meg 1/2W
R-4	6R2085	39 10% 1/2W
R-5	18A70032	Volume Control: 1 meg; includes switch
R-6	6R2122	4.7 meg 1/2W
R-7	6R5685	27 10% 1/2W
R-8	6R6015	220,000 1/2W
R-9	6R6032	470,000 1/2W
R-10	6R6373	150 10% 1/2W
R-11	6R6152	220 1W N.I.
R-12	6R3972	1200 10% 1W N.I.

SPEAKER

LS-1	50K482754	Speaker: 4" PM; 3.2 ohms VC

TRANSFORMERS

T-1	24B70531	IF, 455 Kc: complete with iron cores and padding capacitors, but less shield (use with shield & sleeve 1A71049)
or	24B482863	IF, 455 Kc: complete with iron cores and padding capacitors, but less shield (use with shield 26K485936)
T-2	24B70533	Diode, 455 Kc: complete with iron cores and padding capacitors, but less shield (use with shield & sleeve 1A71049)
or	24B482865	Diode, 455 Kc: complete with iron cores and padding capacitors, but less shield (use with shield 26K485936)
T-3	25B76117	Output Transformer

CHASSIS PARTS - MECHANICAL

1	7A77337	Bracket, tuning shaft
2	42K75826	Clip, electrolytic mtg
3	11M8944	Cord, dial: 18 lb black
4	30A470651	Cord, line: 6 ft lg; with plug
5	1X481466	Dial Background Bracket & Pulley Assembly: background bracket with 3 cord pulleys and cord guide rod
6	57A77084	Dowel, wood (cabinet back mtg)
7	5A19658	Eyelet, spacer: 19/64 x .212 ID x 1/2 (gang mtg)
8	5S7805	Eyelet, snap-in (dial background strip mounting)
9	5A70404	Grommet, rubber (gang cushion)
10	32A24815	Lock, line cord: fibre
11	29R5235	Lug, soldering: #6
12	29R5348	Lug, soldering: #8
13	2S7051	Nut: 3/8-32 x 9/16 hex, cad pl (volume control mtg)
14	1X485924	Panel Assembly, cabinet back: less loop; includes terminal strip and antenna connector
15	24K481389	Panel and Loop Assembly: complete cabinet back panel; includes loop winding
16	52A481378	Pointer, dial
17	49A23960	Pulley, cord: 1/4" groove
18	5K74560	Rivet, shoulder: .312 shoulder; nkl pl (cord pulley mtg)
19	5A12814	Rivet, shoulder: .156 shoulder; nkl pl (cord pulley mtg)
20	5S7706	Rivet: .122 x 1/8; steel; nkl pl (electrolytic mtg clip mtg)
21	5S7707	Rivet: .122 x 5/32; steel; nkl pl (terminal strip mtg)
22	5S7701	Rivet: .122 x 3/16; steel; nkl pl (tuning shaft bracket mtg)
23	5S7708	Rivet: .122 x 9/32; steel; nkl pl (line cord lock mtg)
24	47A484382	Rod, cord guide
25	3S2695	Screw: #6 x 3/16 PKZ slotted hex head sheet metal screw; cad pl (dial background bracket mtg)
26	3S2294	Screw: 6-32 x 1/2 plain hex head locking type machine screw; cad pl (gang mtg)
27	3S1925	Screw: 6-32 x 5/8 slotted hex head machine screw; cad pl (oscillator coil mtg)
28	3S7205	Screw: 8-32 x 1/4; slotted hex head locking type machine screw; cad pl (spkr mounting)
29	3S3383	Screw: #8 x 2" PKZ slotted hex head sheet metal screw; cad pl (cabinet back mtg)
30	1X484556	Shaft, tuning
31	1A71049	Shield and Iron Core Sleeve Assembly (for T-1 and T-2; used only with 24B70531 IF & 24B70533 Diode Trans)
or	2K485936	Shield, coil (for T-1 and T-2 -used only with 24B482863 IF & 24B482865 Diode trans)
32	9A482746	Socket, pilot light: with bracket and leads
33	9A6790	Socket, tube: octal; plain type
or	9A6788	Socket, tube (replacement) molded octal plain type (to be used in place of 9A6790 when mounting lugs on chassis break off)
34	9A6792	Socket, tube: octal; with center shield (for IF amp)
or	9A70165	Socket (replacement) octal; with center shield (to be used in place of 9A6792 when mounting lugs on chassis break off)
35	41A14244	Spring, tension coil(drive cord)
36	35A481384	Strip, dial background: tan plastic
37	31K86126	Strip, terminal: 2 insulated lugs, #2 mtg (on loop antenna panel)
38	4A70015	Washer, "C" (tuning shaft retainer)
39	4S1719	Washer: 3/8 x .140 x .030 thick; steel; cad pl (line cord lock mtg)
40	4S7563	Washer: 5/8 x .203 x .033 thick; steel; cad pl (cabinet back mtg)

CABINET PARTS

101	35K481466	Baffle & Grille Cloth Assembly
102	37K70069	Band, rubber (on dial scale)
103	16E480031	Cabinet: plastic; walnut (58X11)
104	16K481445	Cabinet: plastic; white (58X12)
105	36B77212	Knob, control: walnut plastic (58X11)
106	36K77214	Knob, control: ivory plastic (58X12)
107	38A25507	Plug, split: 5/8 long; for 1/8 hole (mounts cabinet back to cabinet)
108	34B481438	Scale, dial
109	3S3365	Screw: #8 x 1" PKA slotted hex head sheet metal screw; parkerized finish (chassis mounting)
110	2S7089	Speednut: for .187 round (baffle & grille cloth assembly mtg)
111	2A481437	Speednut (dial scale mtg)
112	4K19943	Washer, paper: 11/16 x 17/64 x 1/32 thick (under knobs)
113	4S7633	Washer, steel: 9/16 x 11/64 x .033 thick; cad pl (chassis mtg)

MOTOROLA INC.

MODEL 67F14,
CHASSIS HS-122

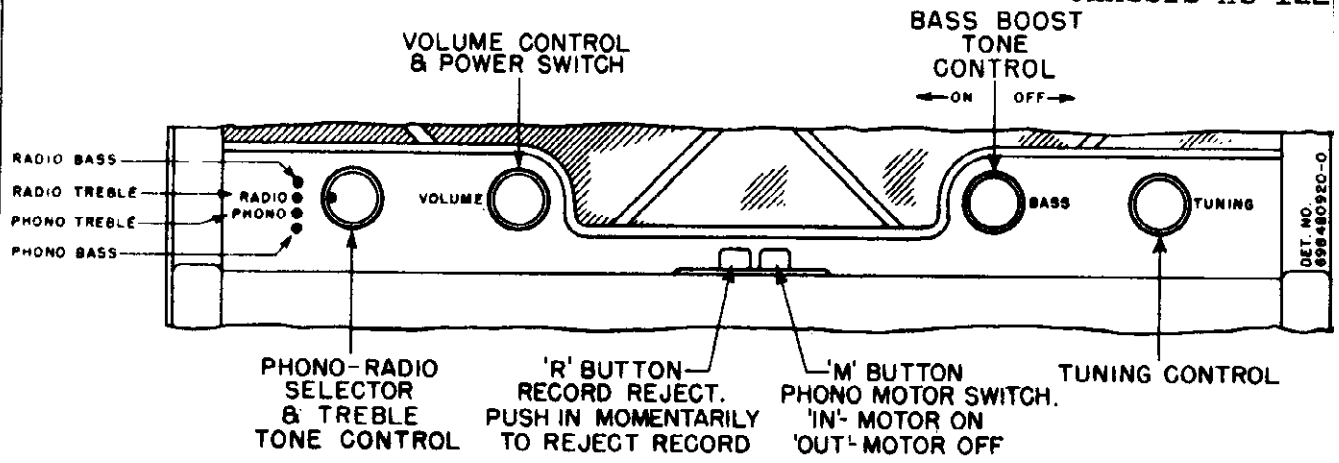

FIGURE 1. FRONT PANEL CONTROLS

TUNING RANGE - 535 to 1620 Kc

ALIGNMENT

IF FREQUENCY - 455 Kc

Maximum performance can only be obtained if extreme care is exercised during alignment. Follow the procedure carefully.

A low range output meter should be connected across the speaker voice coil. Set receiver volume control to maximum. For greatest accuracy, keep output of receiver at approximately .05 watt thruout alignment by reducing generator output (not receiver volume control) as stages are brought into alignment. (.05 watt = .40 volt on output meter).

If receiver is operated from AC line during alignment, it is suggested that an isolating transformer be used between receiver and power line. If no isolation transformer is used and hum is encountered during alignment, connect the ground side of the signal generator through a .1 mf capacitor to B- instead of the receiver chassis.

Refer to Figure 2 for location of all adjustments.

STEP	DIAL SET TO	DUMMY	SIGNAL GENERATOR CONNECTED TO	SIGNAL GENERATOR SET TO	ADJUST TRIMMER OR CORE	REMARKS
IF ALIGNMENT						
1.	Gang fully opened	.1 mf	RF Amp. grid*	455 Kc	1,2,3 & 4	Adjust for maximum output.
WAVE TRAP ADJUSTMENT						
2.	Gang fully opened	.1 mf	RF Amp. grid	455 Kc	5	Adjust for minimum response.
RF ALIGNMENT						
3.**	Gang fully opened	.1 mf	RF Amp. grid*	1620 Kc	6	Adjust for maximum output; this sets osc. to dial scale
4.	1400 Kc	—	Radiation loop***	1400 Kc	7	Tune signal for max. with receiver tuning knob, then peak trimmer 7.

* A convenient point for this connection is the stator of the RF section of the tuning capacitor.

** First close gang fully and set pointer to calibration mark as shown in Figure 3, then proceed with Step 3.

*** Connect output of signal generator to a 5" diameter, 3 turn loop and bring close enough to receiver loop to obtain output of 50 milliwatts (.40V) on output meter. Vary distance between loops to maintain this output during alignment. Minimum distance between loops should never be less than 12".

MODEL 67F14,
CHASSIS HS-122

MOTOROLA INC.

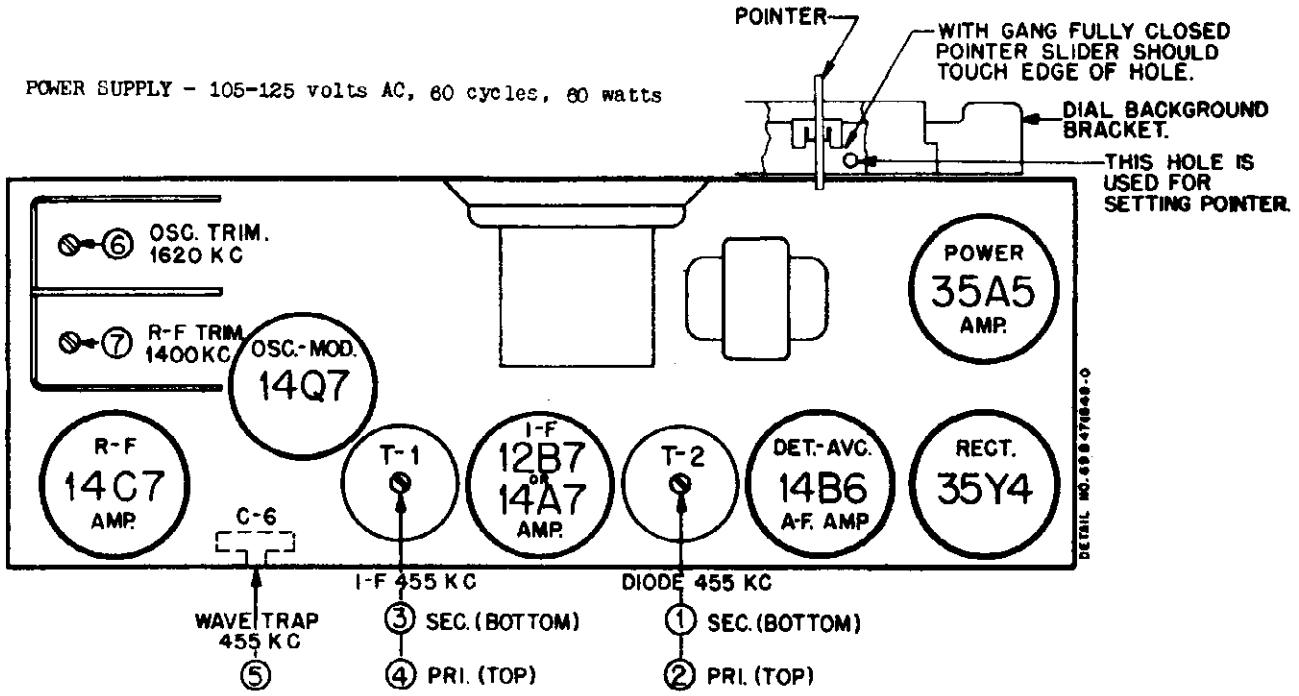

FIGURE 2. CHASSIS HS-122 TUBE & TRIMMER LOCATIONS

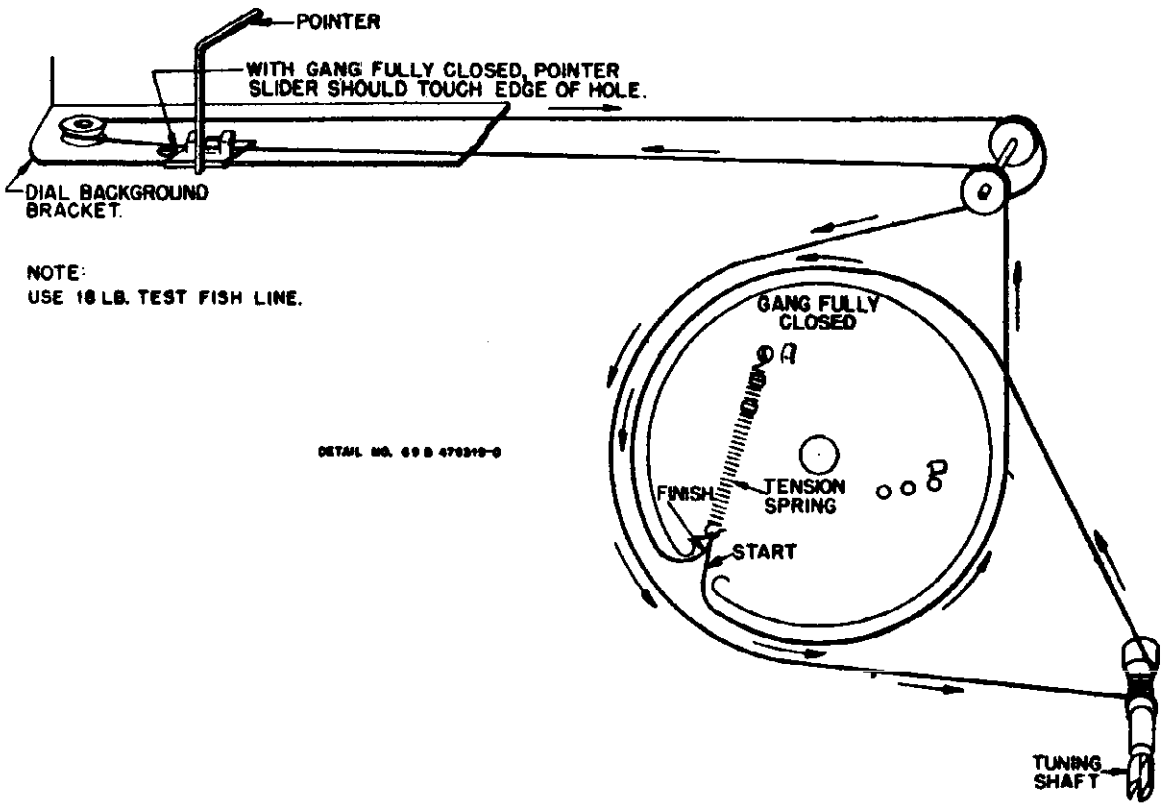

FIGURE 3. CHASSIS HS-122 STRING DRIVE DETAIL

©John F. Rider

MOTOROLA INC.

MODEL 67F14,
CHASSIS HS-122

BOTTOM VIEW OF CHASSIS

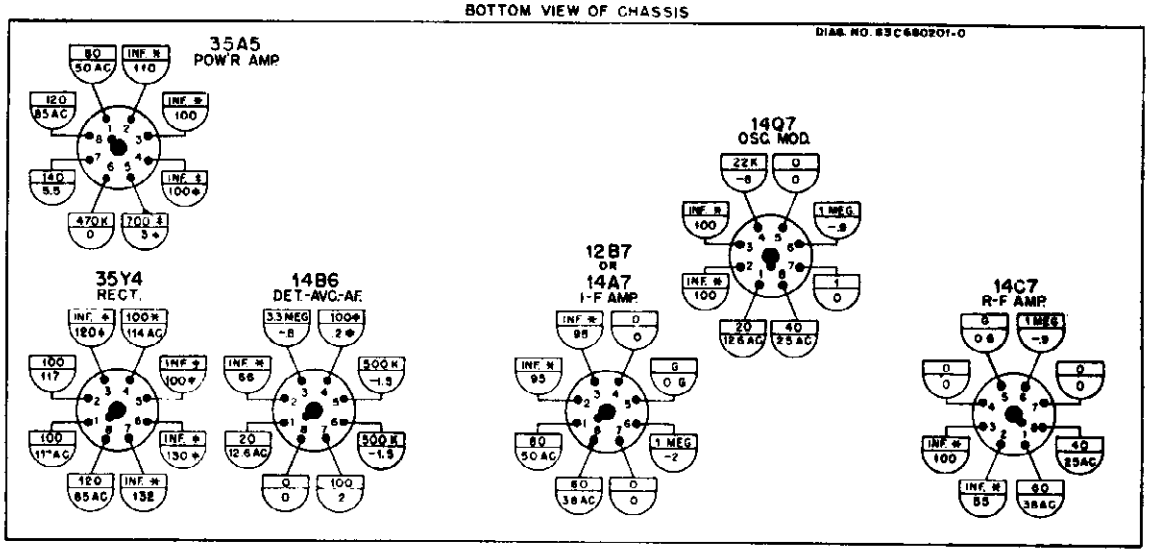

▭ = RESISTANCE READINGS.

⌓ = VOLTAGE READINGS.

G = GROUND TO CHASSIS.

* = MAY VARY, DEPENDING ON CONDITION OF ELECTROLYTIC CAPACITORS.
✤ = TIE POINT.
K = ONE THOUSAND (1000) OHMS

NOTE: A VTVM WAS USED TO MAKE VOLTAGE MEASUREMENTS.
VOLUME CONTROL SET AT MINIMUM AND NO SIGNAL TUNED IN.
MEASUREMENTS TAKEN FROM TUBE SOCKET TERMINALS INDICATED TO B-(▽).
ALL VOLTAGE MEASUREMENTS TAKEN WITH 117 V. AC INPUT TO SET.
ALL VOLTAGE MEASUREMENTS DC UNLESS OTHERWISE SPECIFIED.
ALL MEASUREMENTS ±10%.
PHONO-RADIO-TONE SWITCH IN RADIO-BASS POSITION.
BASS BOOST CONTROL IN 'ON' POSITION.

FIGURE 4. CHASSIS HS-122 VOLTAGE & RESISTANCE DIAGRAM

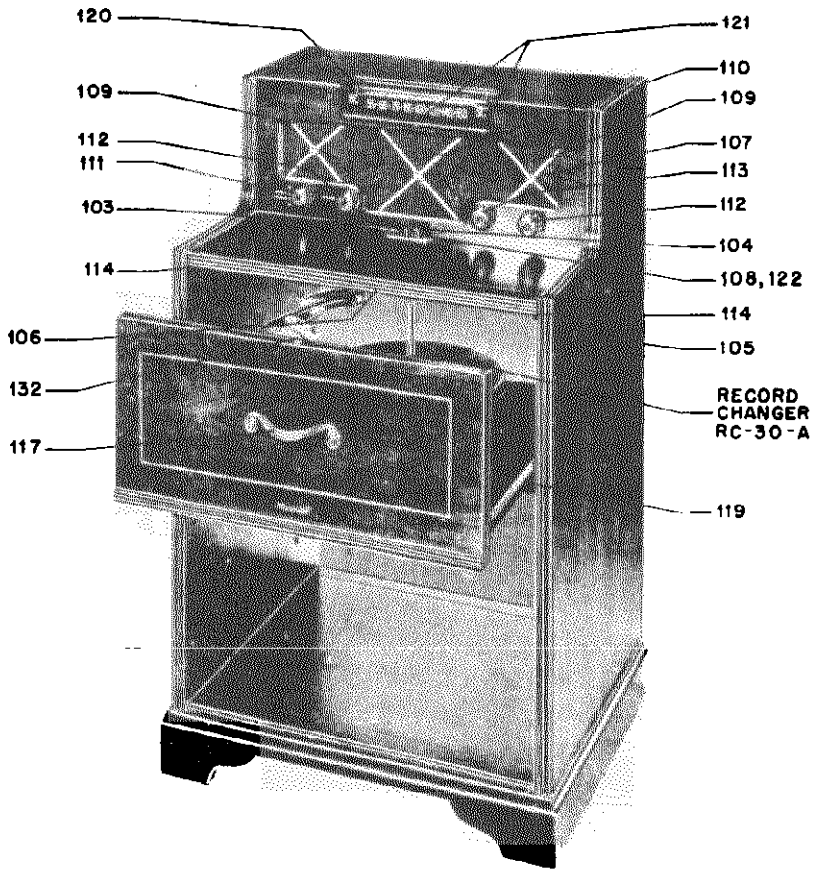

FIGURE 5. MODEL 67F14 CABINET PARTS LOCATIONS

MODEL 67F14,
CHASSIS HS-122

MOTOROLA INC.

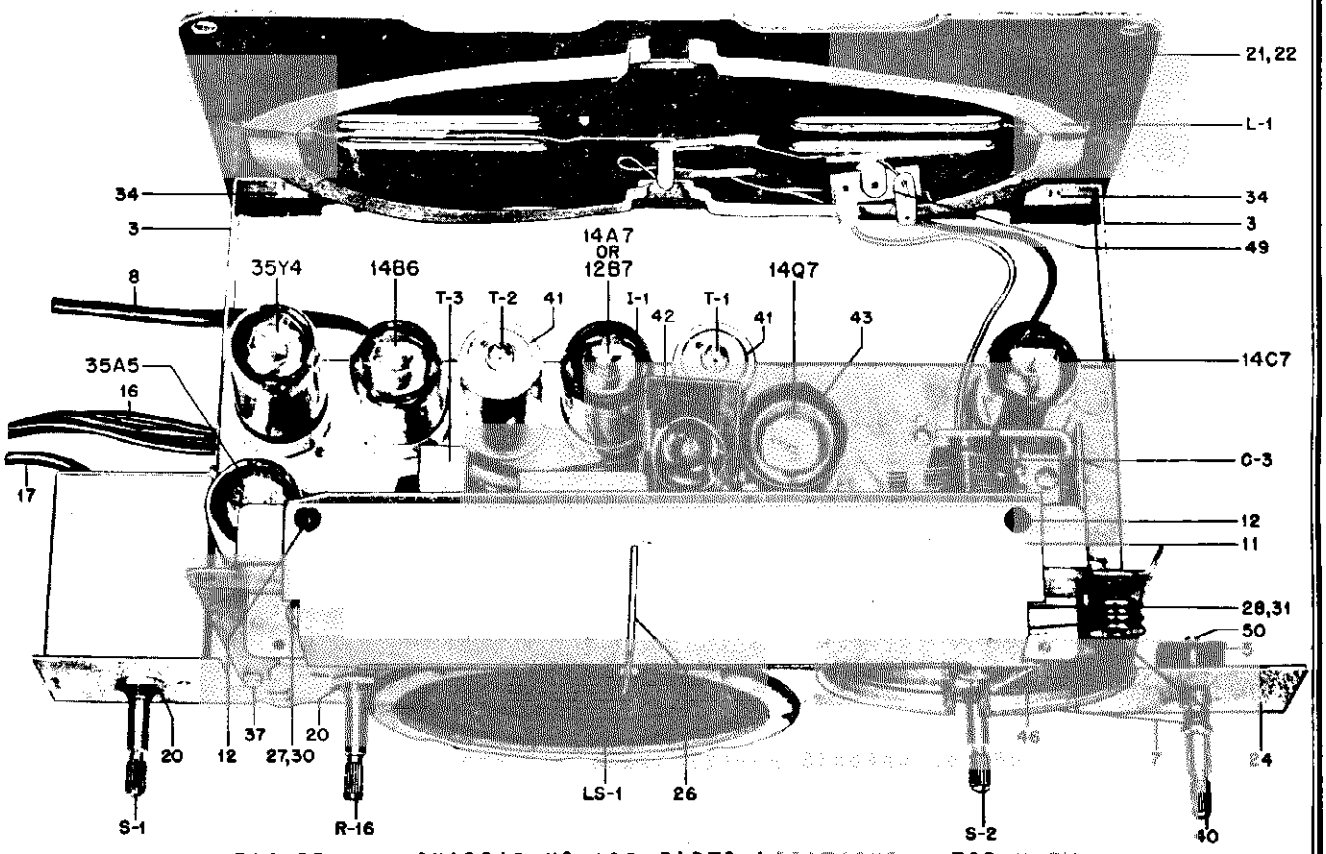

FIGURE 6. CHASSIS HS-122 PARTS LOCATIONS - TOP VIEW

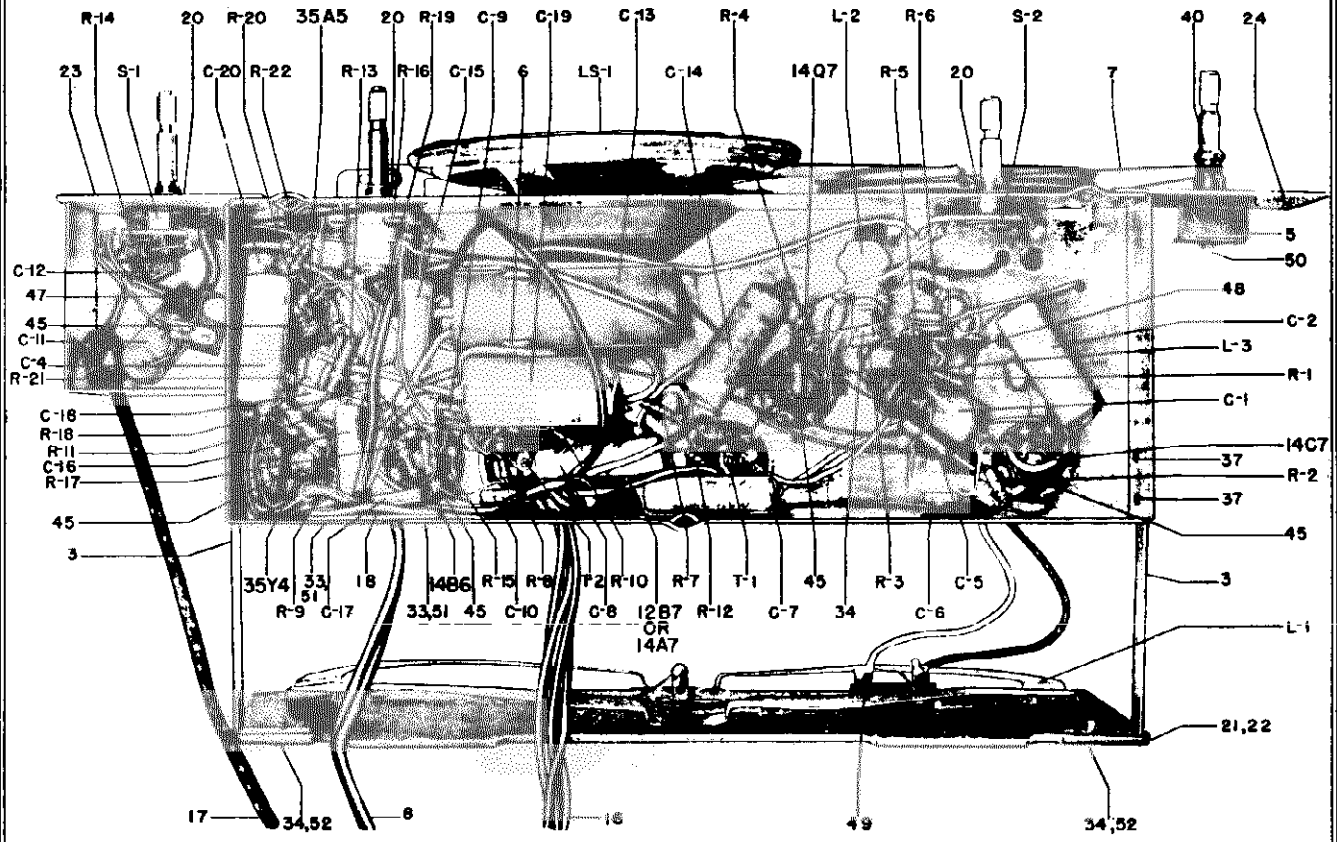

FIGURE 7. CHASSIS HS-122 PARTS LOCATIONS - BOTTOM VIEW

©John F. Rider

MOTOROLA INC.

MODEL 67F14,
CHASSIS HS-122

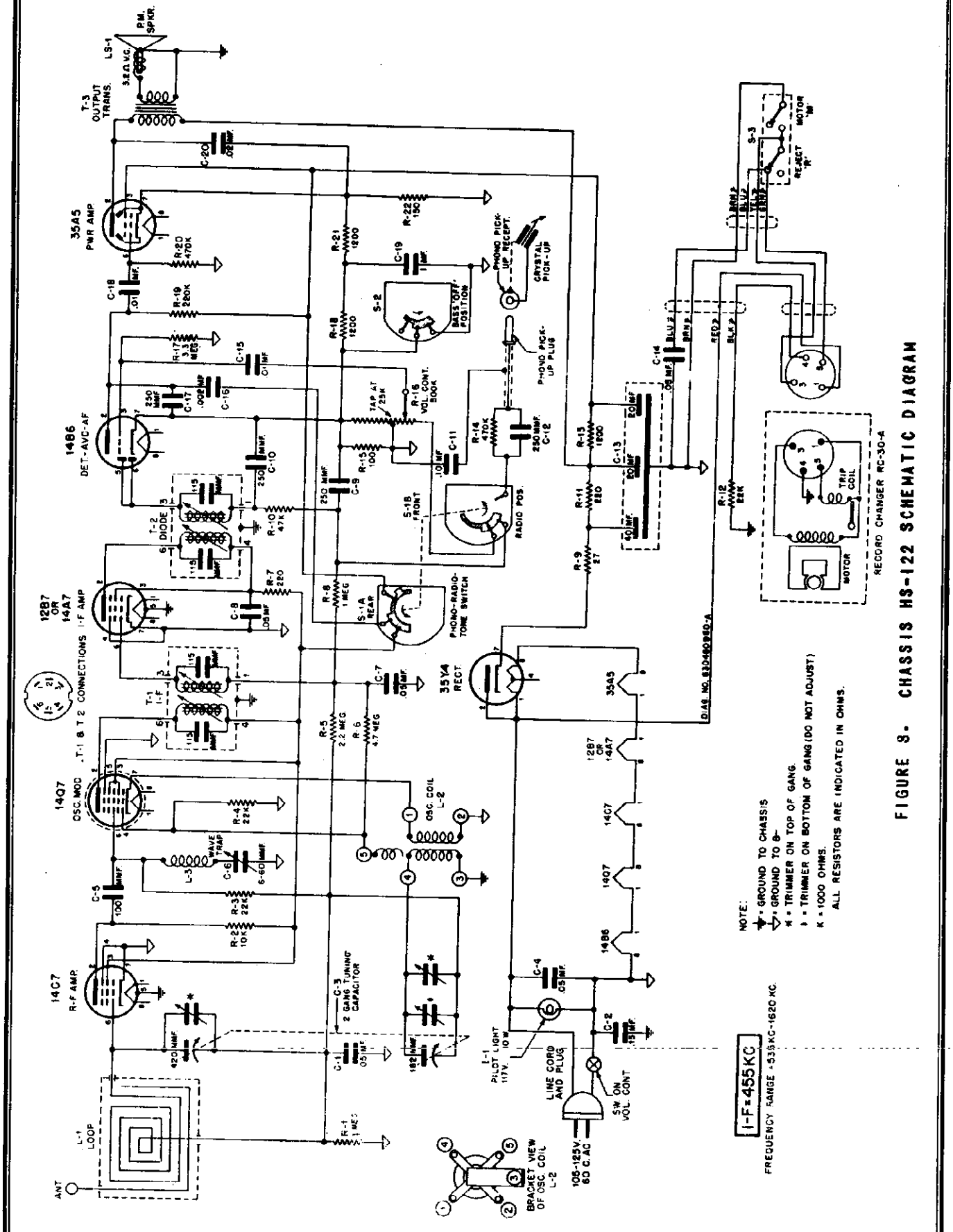

FIGURE 8. CHASSIS HS-122 SCHEMATIC DIAGRAM

RECORD CHANGER: Motorola Model RC-30-A RCD CH 10 2

MODEL 67F14,
CHASSIS HS-122

MOTOROLA INC.

REPLACEMENT PARTS LIST

REF. NO.	PART NO.	DESCRIPTION
CHASSIS PARTS - ELECTRICAL		
CAPACITORS		
C-1	8S9816	Paper: .05 mf 400V
C-2	8A72686	Paper: .15 mf 200V
C-3	1X77339	Variable: 2 gang; with pulley
C-4	8S9816	Paper: .05 mf 400V
C-5	21R6641	Mica: 100 mmf 500V
C-6	20A26941	Variable, mica: 6-60 mmf; includes bracket
C-7	8S9816	Paper: .05 mf 400V
C-8	8S9816	Paper: .05 mf 400V
C-9	21R6648	Mica: 250 mmf 500V
C-10	21R6648	Mica: 250 mmf 500V
C-11	8S9807	Paper: .1 mf 400V
C-12	21R6648	Mica: 250 mmf 500V
C-13	23B75808	Electrolytic: 40-20-20 mf 150V
C-14	8S9816	Paper: .05 mf 400V
C-15	8S9809	Paper: .01 mf 400V
C-16	8S9824	Paper: .002 mf 400V
C-17	21R6648	Mica: 250 mmf 500V
C-18	8S9809	Paper: .01 mf 400V
C-19	8S9839	Paper: 1 mf 100V
C-20	8S9802	Paper: .02 mf 400V
RESISTORS		
Note:		All resistors are insulated carbon type, unless otherwise specified.
R-1	6R6004	1 meg 20% 1/2W
R-2	6R6054	10,000 20% 1/2W
R-3	6R6028	22,000 20% 1/2W
R-4	6R6028	22,000 20% 1/2W
R-5	8R3927	2.2 meg 20% 1/2W
R-6	6R2122	4.7 meg 20% 1/2W
R-7	6R3933	220 20% 1/2W
R-8	6R6004	1 meg 20% 1/2W
R-9	6R5683	27 10% 1/2W
R-10	6R6056	47,000 20% 1/2W
R-11	6R6389	220 10% 1W
R-12	6R6028	22,000 20% 1/2W
R-13	6R5770	1200 10% 1W
R-14	6R6032	470,000 20% 1/2W
R-15	6R6326	100 10% 1/2W
R-16	18A76191	Volume Control: 500,000 ohms; tapped at 25,000 ohms; with SPST switch
R-17	6R2118	3.3 meg 20% 1/2W
R-18	6R6393	1200 10% 1/2W
R-19	6R6015	220,000 20% 1/2W
R-20	6R6032	470,000 20% 1/2W
R-21	6R6393	1200 10% 1/2W
R-22	6R6373	150 10% 1/2W
COILS		
L-1	24K77323	Antenna Loop: winding only
L-2	24A76192	BC Oscillator coil
L-3	24A77336	Wavetrap
SPEAKER		
LS-1	50C470684	Speaker: 5" PM; 3.2 ohm VC
SWITCHES		
S-1A,B	40K470676	Phono-Radio & Tone
S-2	40A30444	Bass: SPST
S-3	40K471447	Pushswitch, dual (phono motor ON-OFF & REJECT)
TRANSFORMERS		
T-1	24B470038	IF, 455 Kc; includes tuning cores & padding capacitors but less shield
T-2	24B75487	Diode, 455 Kc; includes tuning cores & padding capacitors but less shield
T-3	25B76117	Output Transformer
PILOT LIGHT		
I-1	65A470930	Lamp, incandescent; 117V-10W, clear
CHASSIS PARTS - MECHANICAL		
1	1X478177	Background Bracket, Support & Pullies Assem.
2	7B18748	Bracket, gang mtg
3	7A482882	Bracket, loop support
4	7K470917	Bracket, pilot light mounting
5	7A77337	Bracket, tuning shaft
6	42K75826	Clip, electrolytic mtg
7	11M8944	Cord, dial: 18 lb black
8	3A470651	Cord, line & plug: 6 ft long
9	15A471444	Cover, pushswitch
10	15B470677	Cover, switch (on chassis)
11	35B77311	Dial Background: tan plastic; with reinforcing strip
12	5S7805	Eyelet, snap-in (dial background mtg)
13	5A19658	Eyelet, spacer (gang bracket mtg)
14	37A12691	Grommet, rubber (gang bracket mtg)
15	14A471446	Insulator, pushswitch cover: armite
16	1X484205	Lead Assembly, phono: with 4 pin receptacle & dual push switch
17	1X471449	Lead Assembly, phono pickup: single shielded conductor with one pin plug 43" long
18	32A24815	Lock, line cord: fibre
19	29P5227	Lug, soldering: 6L
20	237051	Nut: 3/8-32 x 9/16 hex; Palnut; cad pl (volume control, phono-radio-tone sw. & bass sw. mtg)
21	1X484247	Panel Assembly, cabinet back: less loop winding
22	24C77322	Panel Assembly, cabinet back: complete including loop
23	64A470686	Plate, switch mounting

MOTOROLA INC.

MODEL 67F14,
CHASSIS HS-122

REF. NO.	PART NO.	DESCRIPTION
24	64A470681	Plate, tuning shaft mounting .....
25	28K71775	Plug: 1 pin (phono pickup lead) .....
26	52A77307	Pointer & Slider Assembly .....
27	49A12646	Pulley, cord: 1/4 groove .....
28	49A21552	Pulley, cord: 1/2 groove .....
29	9K470402	Receptacle: 4 prong(phono receptacle) ..
30	5A71246	Rivet, shoulder: .187 long (cord pulley mtg) .....
31	5A15045	Rivet, shoulder: .437 long (cord pulley mounting) .....
32	5S7707	Rivet: .122 x 5/32 ; steel; nkl pl (replacement socket mtg, etc) .....
33	5S7708	Rivet: .122 x 9/32 steel; nkl pl (line cord lock mtg) .....
34	3S7506	Screw: #6 x 1/4 PKZ plain hex head sheet metal screw (osc coil mtg and back mtg)
35	3S7152	Screw: 6-32 x 1/4 slotted hex head machine screw; steel; cad pl (gang mtg).....
36	3S7350	Screw: 6-32 x 1/4 slotted hex head locking type machine screw; steel; cad pl (gang mtg) .....
37	3S7454	Screw: #8 x 1/4 PKZ plain hex head sheet metal screw; cad pl (switch cover mounting, loop bracket mtg and background bracket assembly mtg) .....
38	3S7507	Screw: #8 x 5/8 PKZ plain hex head sheet metal screw; cad pl (gang mtg) .....
39	3S7205	Screw: 6-32 x 1/4 slotted hex head locking type machine screw; steel; cad pl (spkr mounting) .....
40	1K77894	Shaft & Pulley Assembly (tuning shaft) .
41	1A71049	Shield & Sleeve Assembly (for T-1 & T-2)
42	26A478109	Shield, light & static .....
43	26A72635	Shield, tube .....
44	9A470407	Socket, dial light & bracket .....
45	9A76185	Socket, tube: loctal .....
	or 9A72549	Socket, tube (replacement) use in place of 9A76185 when mounting lugs on chassis are broken .....
46	41A14244	Spring, tension coil (drive cord tension)
47	31K85348	Strip, terminal: 1 insulated lug, #2 mtg
48	31K76184	Strip, terminal: 2 insulated lugs, #1 gnd
49	31K86126	Strip, terminal: 2 insulated lugs, #2 mtg (on rear panel) .....
50	4A70015	Washer, "C" tuning shaft retainer, ...
51	4S1719	Washer: 3/8 x .140 x .030 thick; steel; cad pl (line cord lock mtg) .....
52	4S7563	Washer: 5/8 x .203 x .033 thick; steel; cad pl (back panel mtg) .....
CABINET PARTS		
101	7A471456	Bracket, switch mounting (phono motor & reject sw mtg) .....
102	38K470830	Button, plug: for 1/4" hole; green (for concealing shipping screw holes in record changer base) .....
103	38B471506	Button, push: "M" .....
104	38K471507	Button, push: "R" .....
105	16K484213	Cabinet, consolette model: wood; mahogany
106	55A72307	Catch, bullet .....
107	13K478036	Cloth, grille .....
108	3A471458	Escutcheon, push button .....
109	13A478037	Grille, cabinet: painted; 3-5/8" .....
110	13K478039	Grille, cabinet: painted; 4-7/8" .....
111	36K478403	Knob, control: mahogany plastic; branded; 7/16" shank (tone-phono-radio) .....
112	36K478402	Knob, control: mahogany plastic; plain; 7/16" shank (volume & tuning) .....
113	36K484200	Knob, control: mahogany plastic; plain; 9/16" shank (BASS) .....
114	35K470657	Pad, felt: 1/2 diameter x 1-16 thick (drawer stop) .....
115	64K478063	Panel, cabinet rear: wood; mahogany finish .....
116	38A25507	Plug, split: 5/8 long; for 1/8 hole; copper oxide finish (holds loop panel to cabinet) .....
117	55K481403	Pull, drawer: statuary bronze .....
118	55K74786	Rail, support: right-hand (phono drawer rail)
119	55K74787	Rail, support: left-hand (phono drawer rail)
120	1X484215	Scale, dial & escutcheon .....
121	3S7401	Screw: #2 x 3/8 Phillips oval head wood screw; antique copper finish (dial scale mounting) .....
122	3S1343	Screw: #4 x 3/8 Phillips oval head wood screw; brass finish (pushbutton escutcheon mounting) .....
123	3S7156	Screw: 6-32 x 3/16 slotted binderhead machine screw; cad pl (phono motor-reject switch mtg) .....
124	3S1314	Screw: #6 x 3/4 round head wood screw (drawer rail mtg) .....
125	3S7526	Screw: #8 x 1-1/8 PKA slotted hex head sheet metal screw; cad pl (chassis mtg)
126	3S7396	Screw: 10-32 x 2" slotted hex head machine screw; copper plated (record changer mounting) .....
127	36K481398	Screw: washer head: statuary bronze finish (pull mtg) .....
128	41A21807	Spring, cushion: bottom (record changer cushion) .....
129	41A26190	Spring, cushion: top (record changer cushion) .....
130	41A478162	Spring, push button insert .....
131	22S7905	Staple, insulated .....
132	55K72308	Strike, bullet: (includes 1/2" nail).....
133	4S8214	Washer: 7/8 x .203 x .067 thick; cad pl (chassis mtg) .....
134	4S7611	Washer: 1/2 x 7/32 x .048 thick; antique copper finish (record changer mtg) ....

© John F. Rider

MODEL 68T11,
CHASSIS HS-144

MOTOROLA INC.

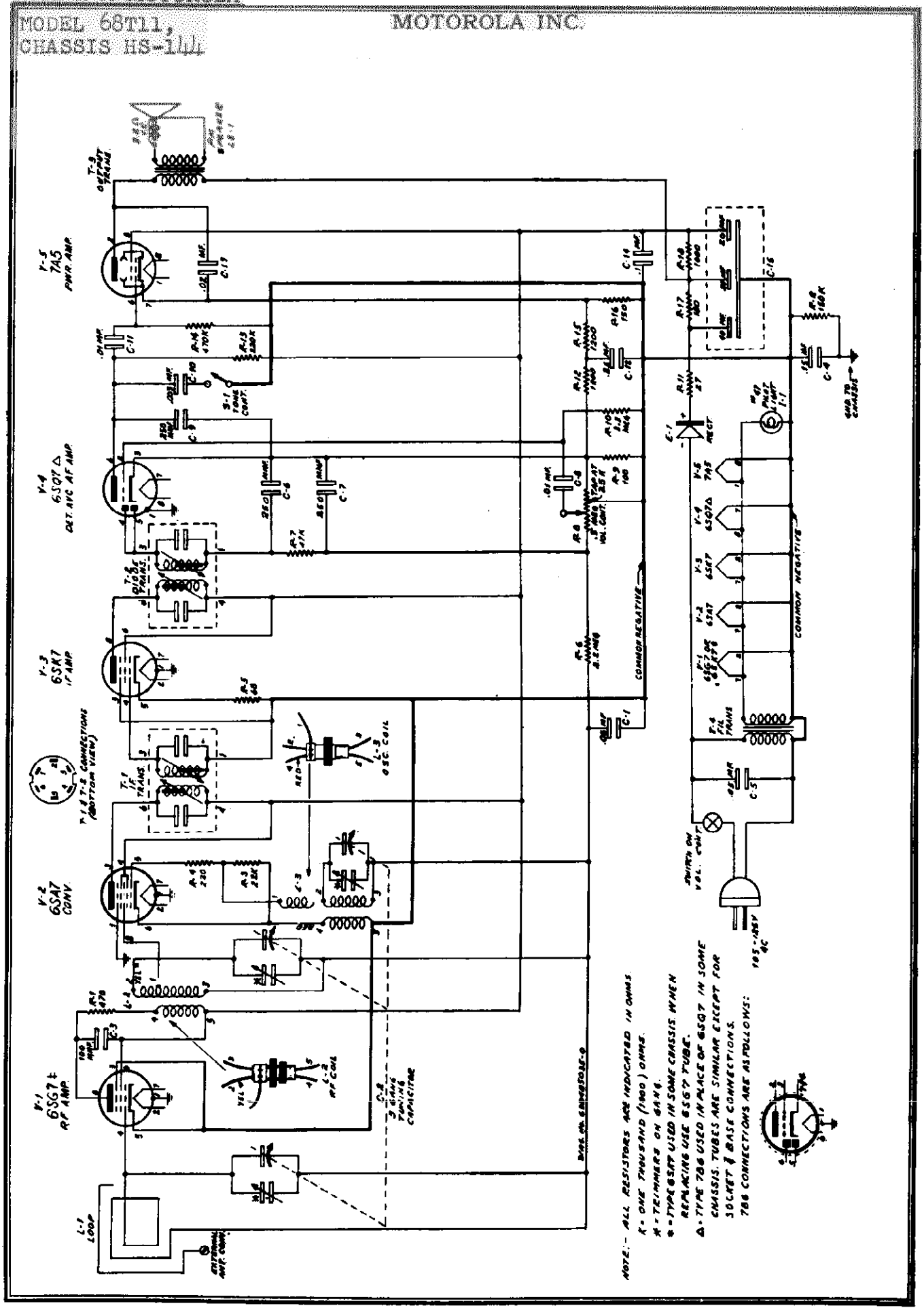

MOTOROLA INC.

MODEL 68T11,
CHASSIS HS-144

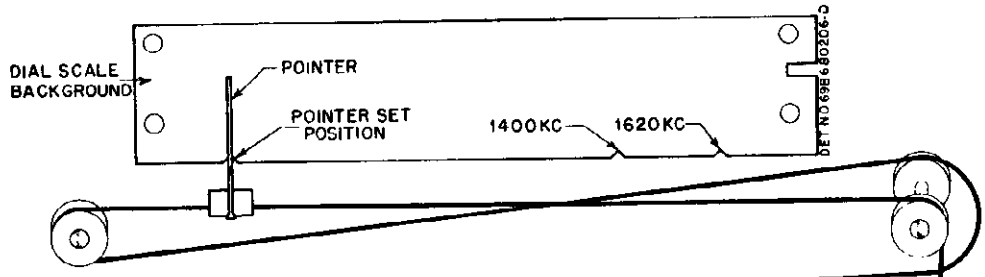

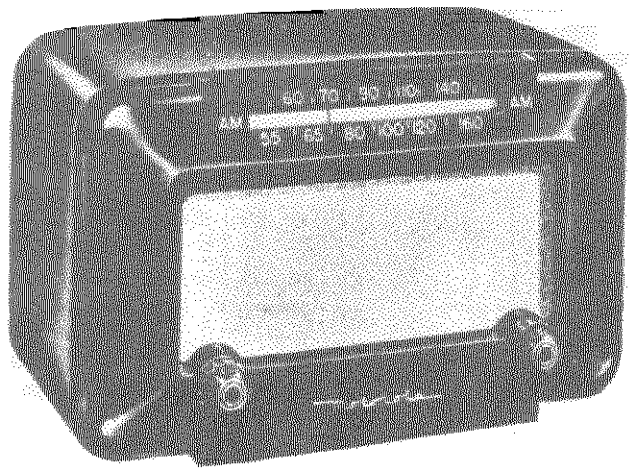

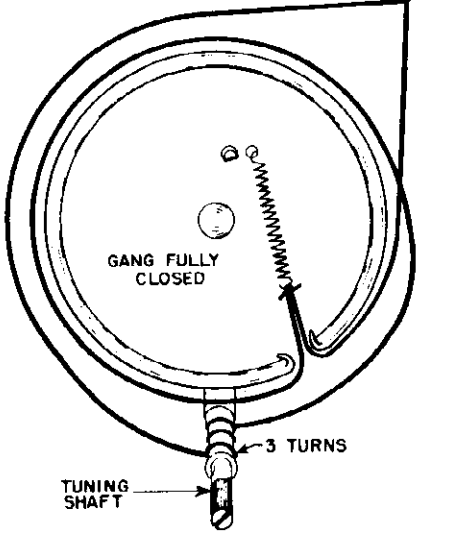

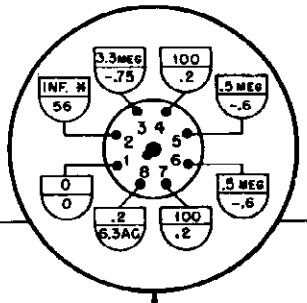

= RESISTANCE MEASUREMENTS

= VOLTAGE MEASUREMENTS.

‡ = TIE POINT.

* = RESISTANCE WILL VARY DEPENDING ON CONDITION OF ELECTROLYTIC CAPACITOR.

K = 1000 (ONE THOUSAND) OHMS.

VOLTAGE MEASUREMENTS ± 10%.
RESISTANCE MEASUREMENTS ± 20%.

BOTTOM VIEW OF CHASSIS

117V. AC INPUT TO SET DURING MEASUREMENTS.

MEASUREMENTS MADE FROM TUBE SOCKET PIN TERMINALS TO COMMON NEGATIVE.

ALL VOLTAGE MEASUREMENTS DC UNLESS OTHERWISE SPECIFIED.

VOLUME CONTROL SET TO MINIMUM. AND NO STATION TUNED IN.

7B6
OR
6SQ7

V-2
6SA7
CONV.

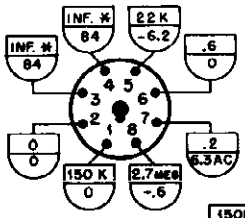

V-5
7A5
PWR. AMP.

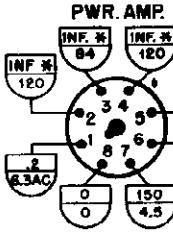

V-4
DET-AVC-AF AMP.

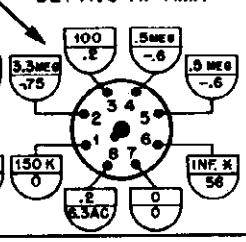

V-3
6SK7
IF AMP.

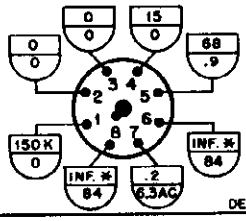

V-1
6SG7
OR
6SK7
RF AMP.

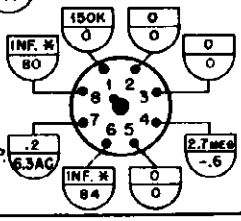

DET. NO. 638680205-O

MODEL 68T11,
CHASSIS HS-144

MOTOROLA INC.

ALIGNMENT

Maximum performance can only be obtained if extreme care is exercised during alignment. Follow the procedure carefully.

A suitable output meter should be connected across the speaker voice coil. Set receiver volume control at maximum. For greatest accuracy, keep output of receiver at approximately .05 watt (.05 watt = .40 volt on output meter) throughout alignment by reducing signal generator output (not receiver volume control) as stages are brought into alignment. Use a fibre screwdriver for aligning the IF & diode transformers.

It is suggested that an isolating transformer be used between receiver and power line. If no isolation transformer is available and hum is encountered during alignment, connect the ground side of the signal generator through a .1 mf capacitor to receiver B- instead of the chassis.

Refer to Figure 2 for location of all alignment trimmers and cores.

STEP	DIAL SET TO	DUMMY	SIGNAL GENERATOR CONNECTED TO	SIGNAL GENERATOR SET TO	ADJUST TRIMMER OR CORE	REMARKS
IF ALIGNMENT						
1.	Gang fully opened	.1 mf	6SA7 (conv.) grid*	455 Kc	1,2,3 & 4	Adjust for maximum.
RF ALIGNMENT						
2.	Gang fully opened	-	Radiation loop**	1620 Kc	5	Adjust for maximum output. This sets osc. to dial scale.
3.	1400 Kc	-	Radiation loop**	1400 Kc	6 & 7	Tune signal for maximum with receiver tuning knob, then peak trimmers 6 & 7.

* A convenient point is center stator of the tuning capacitor.

** Connect output of signal generator to a 5" diameter, 3 turn loop and bring loop close enough to receiver loop to obtain output of .05 watts (.40 volt) on output meter. Vary distance between loops to maintain this output during alignment. Distance between loops should never be less than 12".

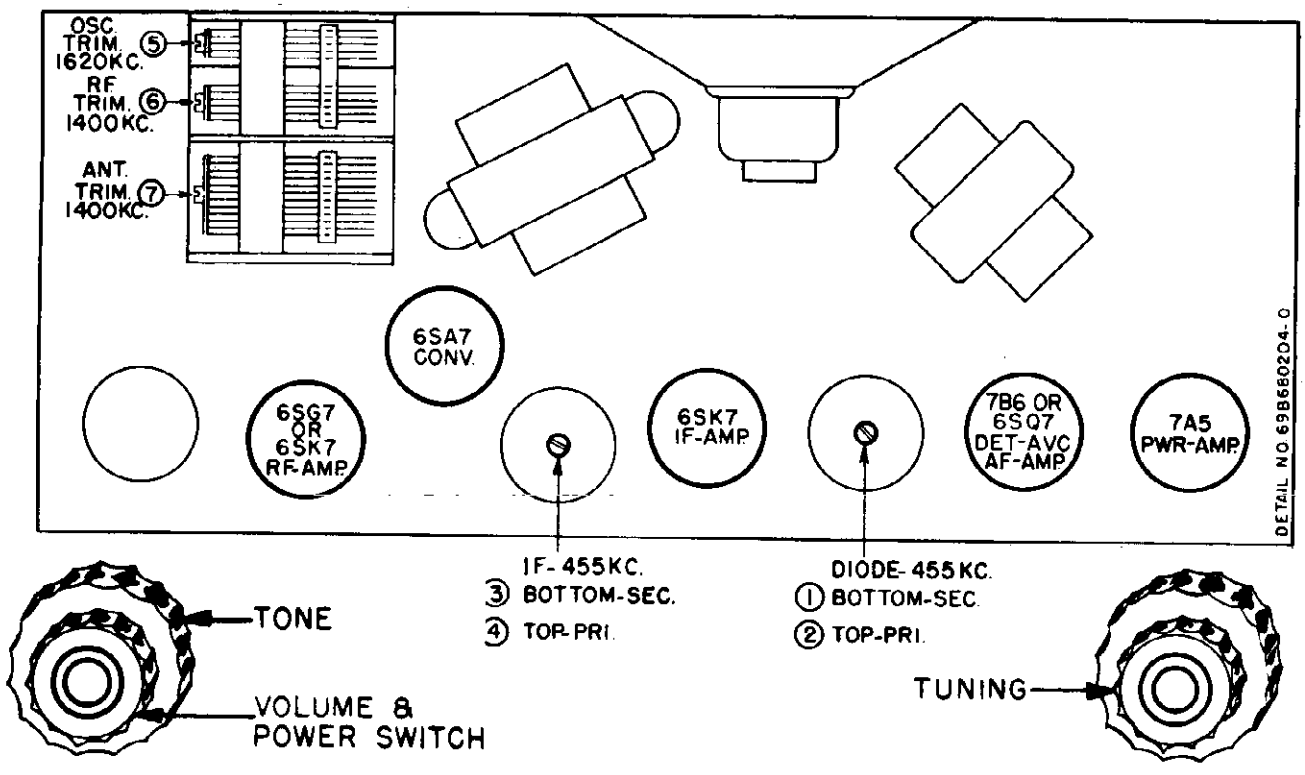

MOTOROLA INC.

MODEL 68T11,
CHASSIS HS-144

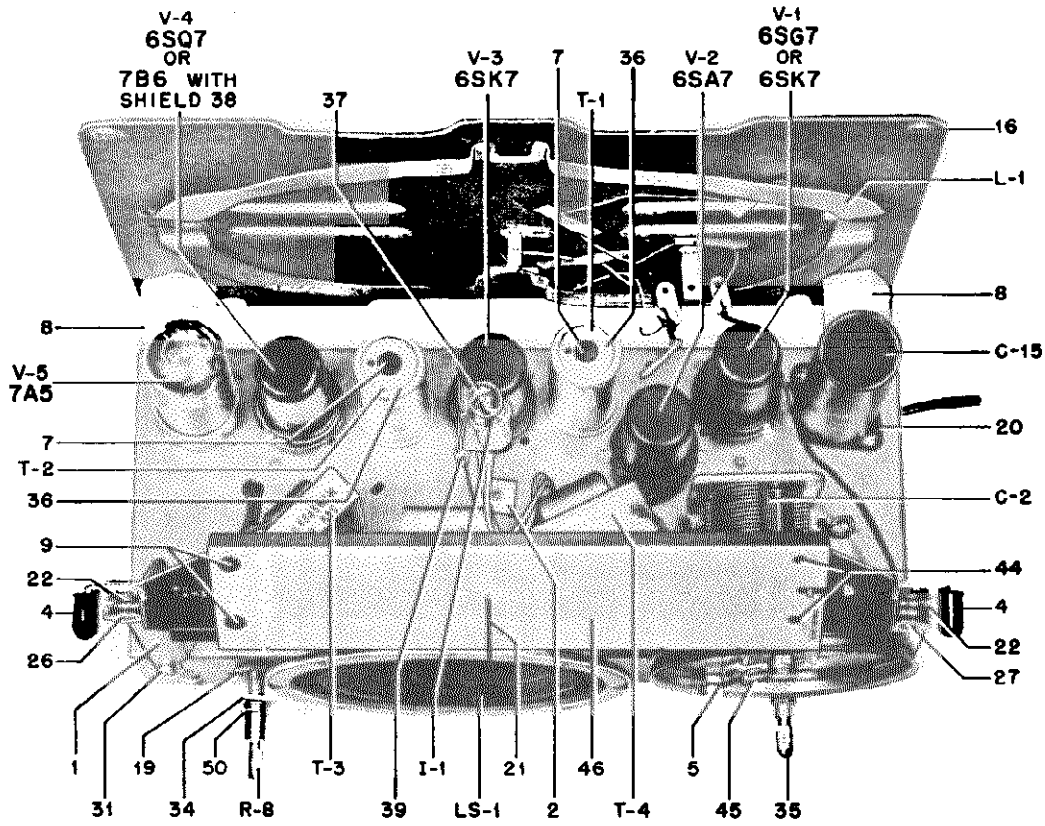

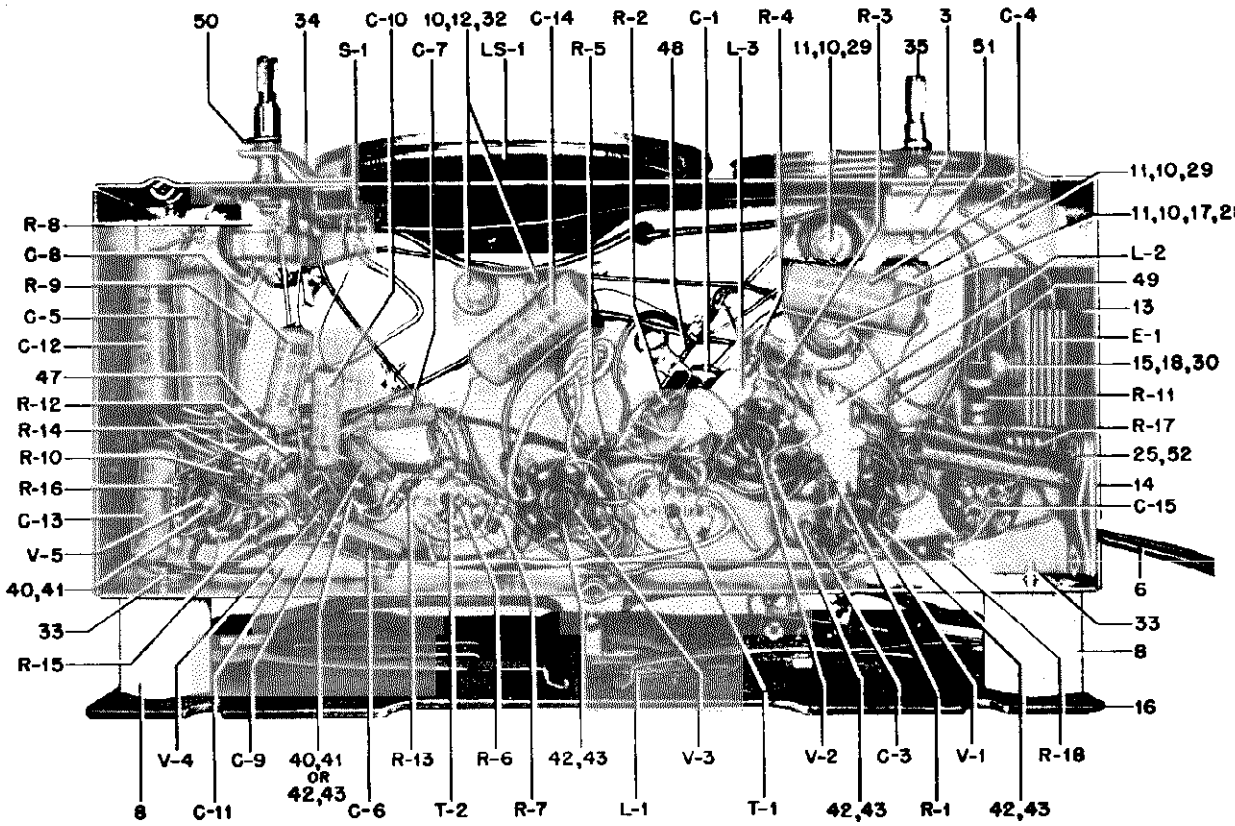

REF. NO.	PART NO.	DESCRIPTION
CHASSIS PARTS - ELECTRICAL		
CAPACITORS		
C-1	8A71213	Paper: .05 mf 100V .....
C-2	1X485124	Variable, 3 gang: includes trimmers and drive pulley .....
C-3	21R6631	Mica: 100 mmf 300V .....
C-4	8A75566	Paper: .15 mf 400V .....
C-5	8S9816	Paper: .05 mf 400V .....
C-6	21R6648	Mica: 250 mmf 500V .....
C-7	21R6648	Mica: 250 mmf 500V .....
C-8	8S9809	Paper: .01 mf 400V .....
C-9	21R6648	Mica: 250 mmf 500V .....
C-10	8S9835	Paper: .003 mf 600V .....
C-11	8S9809	Paper: .01 mf 400V .....
C-12	8S9810	Paper: .25 mf 100V .....
C-13	8S9802	Paper: .02 mf 400V .....
C-14	8S9807	Paper: .1 mf 400V .....
C-15	23B470429	Electrolytic: 40 mf/200V, 20-20 mf/150V
RECTIFIER		
E-1	48B90140	Rectifier, selenium type: half-wave ....
DIAL LIGHT		
I-1	65X11854	Bulb: 6.3V .15A; tubular bayonet base; clear; #47 .....
COILS		
L-1	24K77323	Loop Antenna: winding only .....
L-2	24B484512	RF Coil .....
L-3	24B484511	BC Oscillator Coil .....
SPEAKER		
LS-1	50B485935	Speaker: 5" PM; 3.2 ohm VC ..... Exchange
RESISTORS		
Note:	All resistors are insulated, carbon type, unless other specified.	
R-1	6R3949	470 20% 1/2W .....doz
R-2	6R6182	150,000 20% 1/2W .....doz
R-3	6R6028	22,000 20% 1/2W .....doz
R-4	6R3933	220 20% 1/2W .....doz
R-5	6R6007	68 20% 1/2W .....doz
R-6	6R3927	2.2 Meg 20% 1/2W .....doz
R-7	6R6056	47,000 20% 1/2W .....doz
R-8	18K482778	Volume Control: .5 meg; tapped at 25,000 ohms; includes SPST switch .....
R-9	6R6326	100 10% 1/2W .....
R-10	6R2118	3.3 meg 20% 1/2W .....doz
R-11	6R3994	27 10% 2W .....
R-12	6R6393	1200 10% 1/2W .....doz
R-13	6R6015	220,000 20% 1/2W .....doz
R-14	6R6032	470,000 20% 1/2W .....doz
R-15	6R6396	1200 10% 1/2W .....doz
R-16	6R6373	150 10% 1/2W .....doz
R-17	6R3968	180 10% 2W .....
R-18	6R476004	1000 20% 2W .....
SWITCHES		
S-1	40K21758	Slider Switch: SPDT (tone control) .....
TRANSFORMERS		
T-1	24B482863	IF, 455 Kc: complete with tuning cores and padding capacitors, but less shield ..
T-2	24B482865	Diode, 455 Kc: complete with tuning cores and padding capacitors, but less shield.
T-3	25K484589	Output Transformer .....
T-4	25B484582	Filament Transformer .....
CHASSIS PARTS - MECHANICAL		
1	1X481358	Background Bracket, Support and Pulley Assembly: less dial background strip, pointer & rubber bumpers .....
2	7A77303	Bracket, pilot light mtg .....doz
3	7A77337	Bracket, tuning shaft .....
4	35A481328	Bumper, rubber (background support brkt)doz
5	11M8944	Cord, dial: 18 lb black .....yd
6	30A470651	Cord, line and plug: 6 ft long .....
7	46A470885	Core, iron: threaded (for T-1 & T-2 pri. & sec. tuning) .....
8	57K470568	Dowel, back mounting: wood .....
9	5S7805	Eyelet, snap-in (dial background mtg) .doz
10	5A70098	Eyelet, spacer (gang & spkr mtg) .....doz
11	37K15125	Grommet, rubber (gang mtg) .....doz
12	5A70404	Grommet, rubber (spkr mtg) .....doz
13	14A470428	Insulator, rectifier .....doz

REF. NO.	PART NO.	DESCRIPTION
14	32A24815	Lock, line cord .....doz
15	4S7650	Lockwasher: #8 internal (rect. mtg) ....per/c
16	24K484591	Loop & Panel Assembly .....
17	29R5227	Lug, soldering: #6L .....per/c
18	2S7002	Nut: 6-32 x 5/16; hex; steel; cad pl (rectifier mtg) .....per/c
19	2S7051	Nut: 3/8-32 x 9/16; steel; cad pl (vol. control mtg) .....doz
20	9A12705	Plate, electrolytic mtg .....doz
21	52A480258	Pointer, dial .....
22	49A21552	Pulley, cord: 1/2" groove .....doz
23	5S7707	Rivet: .122 x 5/32; steel; nkl pl (tube socket, slider switch, pilot light bracket, terminal strip & filament transformer mounting) .....per/c
24	5S7701	Rivet: .122 x 3/16; steel; nkl pl (tuning shaft bracket & electrolytic plate mtg)per/c
25	5S7708	Rivet: .122 x 9/32; steel; nkl pl (line cord lock mtg) .....per/c
26	5A71246	Rivet, shoulder: .187" lg (cord pulley mounting) .....doz
27	5A481770	Rivet, shoulder: .484" lg (cord pulley mounting) .....doz
28	3S2999	Screw: 6-32 x 5/8 plain hex head machine screw; steel; cad pl (gang mtg) .....doz
29	3S7339	Screw: 6-32 x 5/8 plain hex head locking type machine screw; steel; cad pl (gang mounting) .....per/c
30	3S2927	Screw: 6-32 x 7/8; plain hex head machine screw; steel, cad pl (rectifier mtg) ..doz
31	3S7454	Screw: #8 x 1/4 PKZ plain hex head sheet metal screw; cad pl (background bracket support assembly mtg) .....per/c
32	4S488011	Screw: 8-32 x 5/8; plain hex head locking type machine screw; steel; cad pl (speaker mtg) .....doz
33	3S7530	Screw: #8 x 1-1/2; PKZ plain hex head sheet metal screw; cad pl (back mtg) .....doz
34	1X482789	Shaft and Arm Assembly (tone control) ..
35	1K485122	Shaft and Pulley Assembly, tuning .....
36	26K485936	Shield, coil (for T-1 and T-2) .....
37	26A470013	Shield, light and static .....
38	26A72635	Shield, tube (for 7B6) .....
39	9A77306	Socket, dial light: includes bracket ...
40	9A76185	Socket, tube: loctal .....
41	9A72549	Socket, tube (replacement -use in place of 9A76185 when mounting lugs on chassis break off) .....
42	9A6790	Socket, tube: octal .....
43	9A6788	Socket, tube (replacement -use in place of 9A6790 when mounting lugs on chassis break off) .....
44	41A481325	Spring, dial background mtg .....
45	41A14244	Spring, tension coil .(drive cord) .....doz
46	35K481328	Strip, dial background: tan plastic ....
47	31K71393	Strip. terminal: 2 insulated lugs, #8 mtg
48	31K22190	Strip, terminal: 4 insulated lugs, #8 ground .....doz
49	31K471589	Strip, terminal: 5 insulated lugs, #4 gnd
50	4A73639	Washer "C" (tone control shaft retainer)doz
51	4A70015	Washer "C" (tuning shaft retainer) .....per/c
52	4S1719	Washer: 3/8 x .140 x .030 thick; steel; cad pl (line cord lock mtg) .....per/c
53	4S7613	Washer: 3/4 x 13/64 x .027 thick; antique copper finish (back mtg) .....doz

CABINET PARTS

101	16K481452	Baffle and grille cloth .....
102	16K485119	Cabinet, table model: molded .....
103	14C481435	Cover, chassis bottom: metal .....
104	36K482767	Knob, control: tone .....
105	36K482765	Knob, control: volume .....
106	36K485133	Knob, control: tuning .....
107	38A25507	Plug, split (back mtg) .....doz
108	2S7089	Speednut, (baffle and grille cloth mtg).doz
109	3S7534	Screw: #8 x 1-3/8 PKA plain hex head sheet metal screw; cad pl (chassis mtg) .....doz
110	4S7582	Washer: 1/2 x .195 x .033 thick; steel; cad pl (chassis mtg) .....per/c

MODELS 77FM21, 77FM22, 77FM22M, 77FM22WM, 77FM23, CHASSIS HS-89, HS-97

MOTOROLA INC.

MODEL 77FM21

MODEL 77FM22, 22M & 22WM

MODEL 77FM23

MOTOROLA INC.

MODELS 77FM21, 77FM2
77FM22M, 77FM22WM,
77FM23, CHASSIS HS-8
HS-97

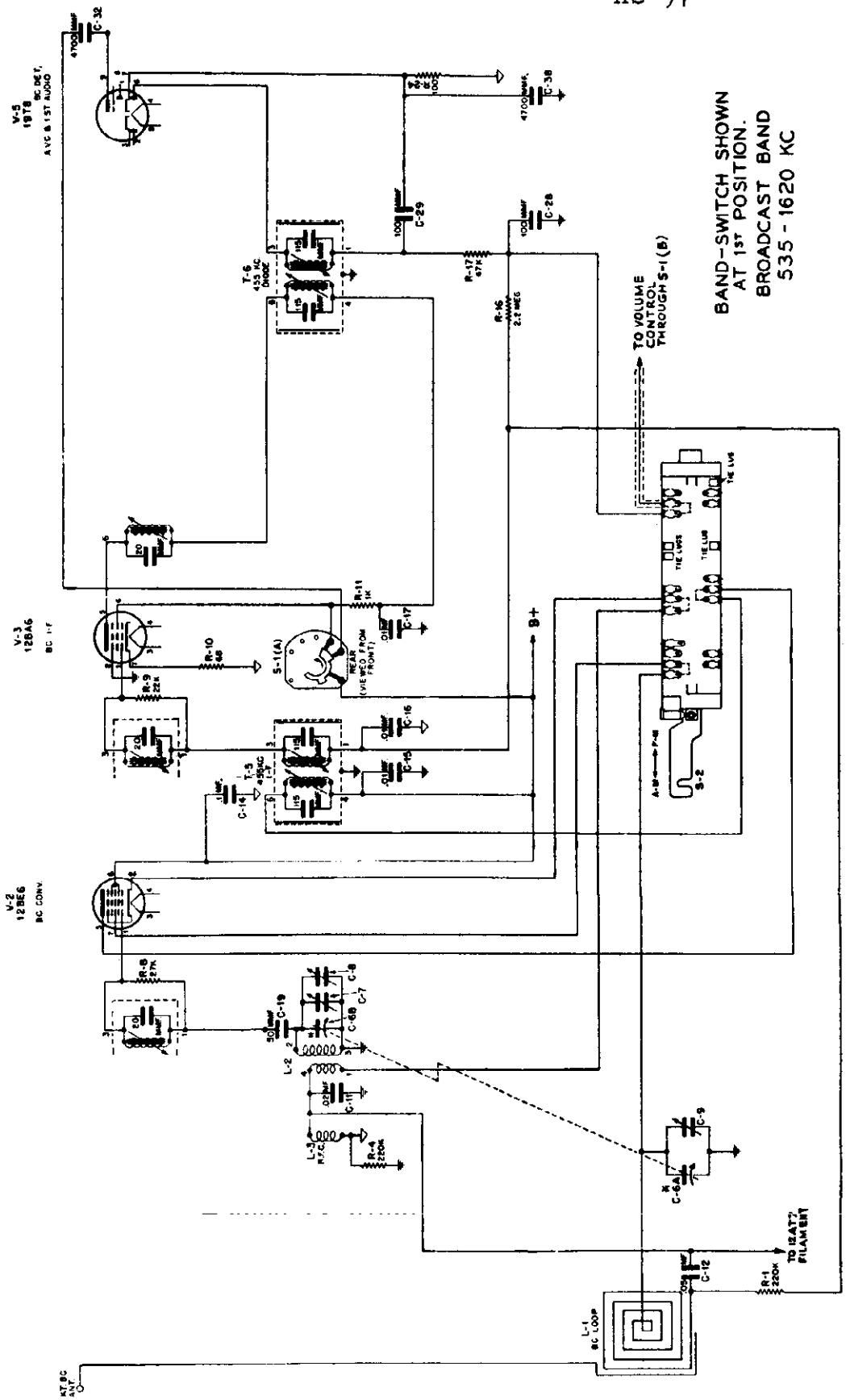

© John F. Rider

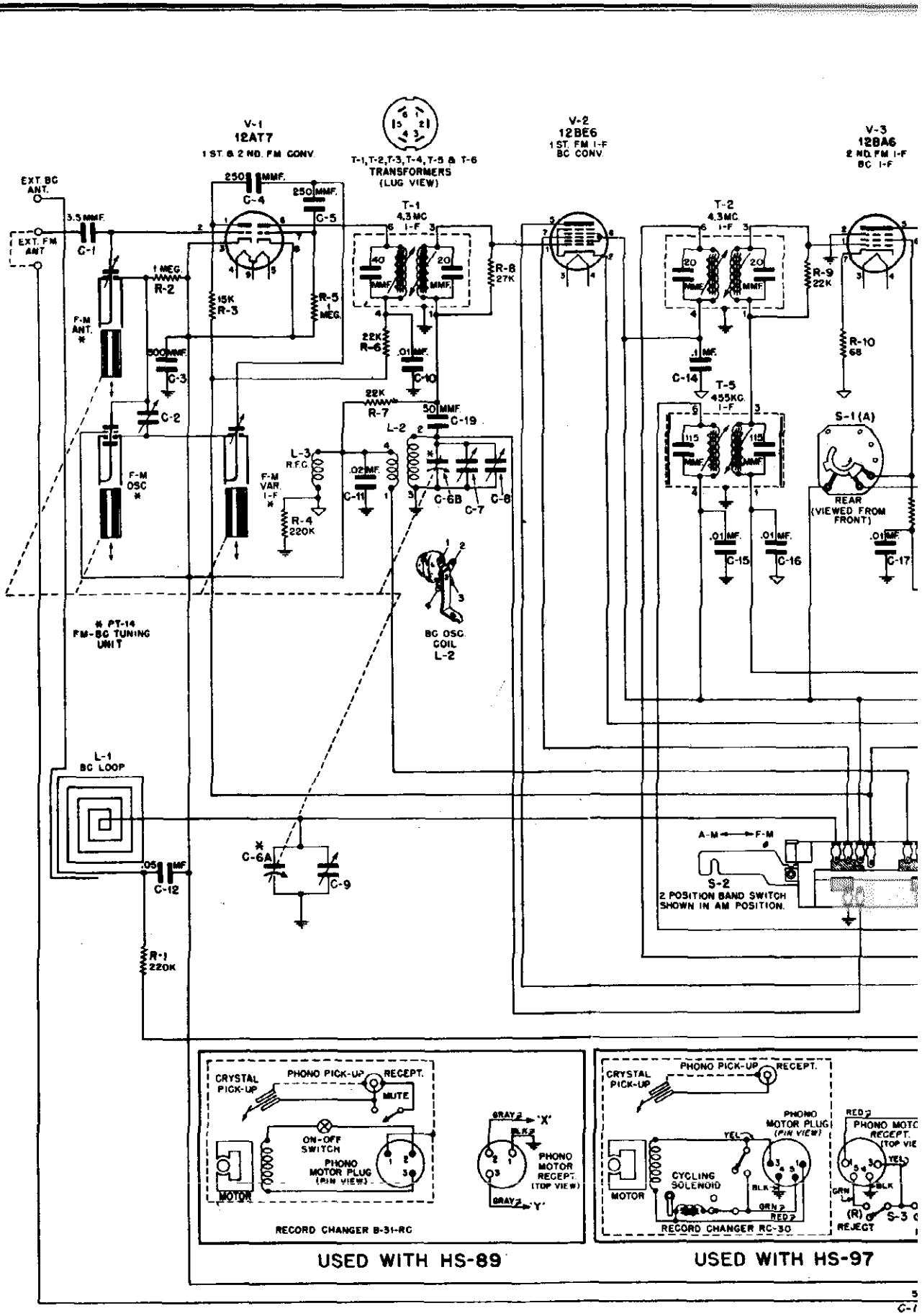
V-1
12AT7
1 ST & 2 ND FM CONV.
T-1,T-2,T-3,T-4,T-5 & T-6
TRANSFORMERS
(LUG VIEW)
V-2
12BE6
1 ST FM I-F
BC CONV.
V-3
12BA6
2 ND FM I-F
BC I-F
EXT. BC ANT.
EXT. FM ANT
3.5 MMF.
C-1
250 MMF.
C-4
250 MMF.
C-5
T-1
4.3 MC
I-F
1 MEG.
R-2
15K
R-3
R-5
1 MEG.
R-8
27K
T-2
4.3 MC.
I-F
R-9
22K
R-10
68
F-M ANT. *
500 MMF.
C-3
22K
R-6
.01 MF.
C-10
.1 MF.
C-14
T-5
455 KC.
I-F
S-1 (A)
REAR
(VIEWED FROM FRONT)
C-2
22K
R-7
50 MMF.
C-19
L-2
L-3
R.F.C.
F-M OSC *
F-M VAR. I-F *
.02 MF.
C-11
R-4
220K
C-6B
C-7
C-8
.01 MF.
C-15
.01 MF.
C-16
.01 MF.
C-17
* PT-14
FM-BC TUNING
UNIT
BC OSC.
COIL
L-2
L-1
BC LOOP
C-6A
C-9
.05 MF.
C-12
R-1
220K
A-M
F-M
S-2
2 POSITION BAND SWITCH
SHOWN IN AM POSITION.
CRYSTAL PICK-UP
PHONO PICK-UP
RECEPT.
MUTE
ON-OFF SWITCH
PHONO MOTOR PLUG
(PIN VIEW)
MOTOR
GRAY
'X'
BLK
PHONO MOTOR RECEPT.
(TOP VIEW)
GRAY
'Y'
RECORD CHANGER B-31-RC
USED WITH HS-89
CRYSTAL PICK-UP
PHONO PICK-UP
RECEPT.
PHONO MOTOR PLUG
(PIN VIEW)
YEL
CYCLING SOLENOID
MOTOR
BLK
GRN
RED
RECORD CHANGER RC-30
USED WITH HS-97
PHONO MOTO
RECEPT.
(TOP VIE
YEL
BLK
GRN
(R)
REJECT
S-3

MOTOROLA INC.

MODELS 77FM21, 77FM22, 77FM22M, 77FM22WM, 77FM23, CHASSIS HS-89, HS-97

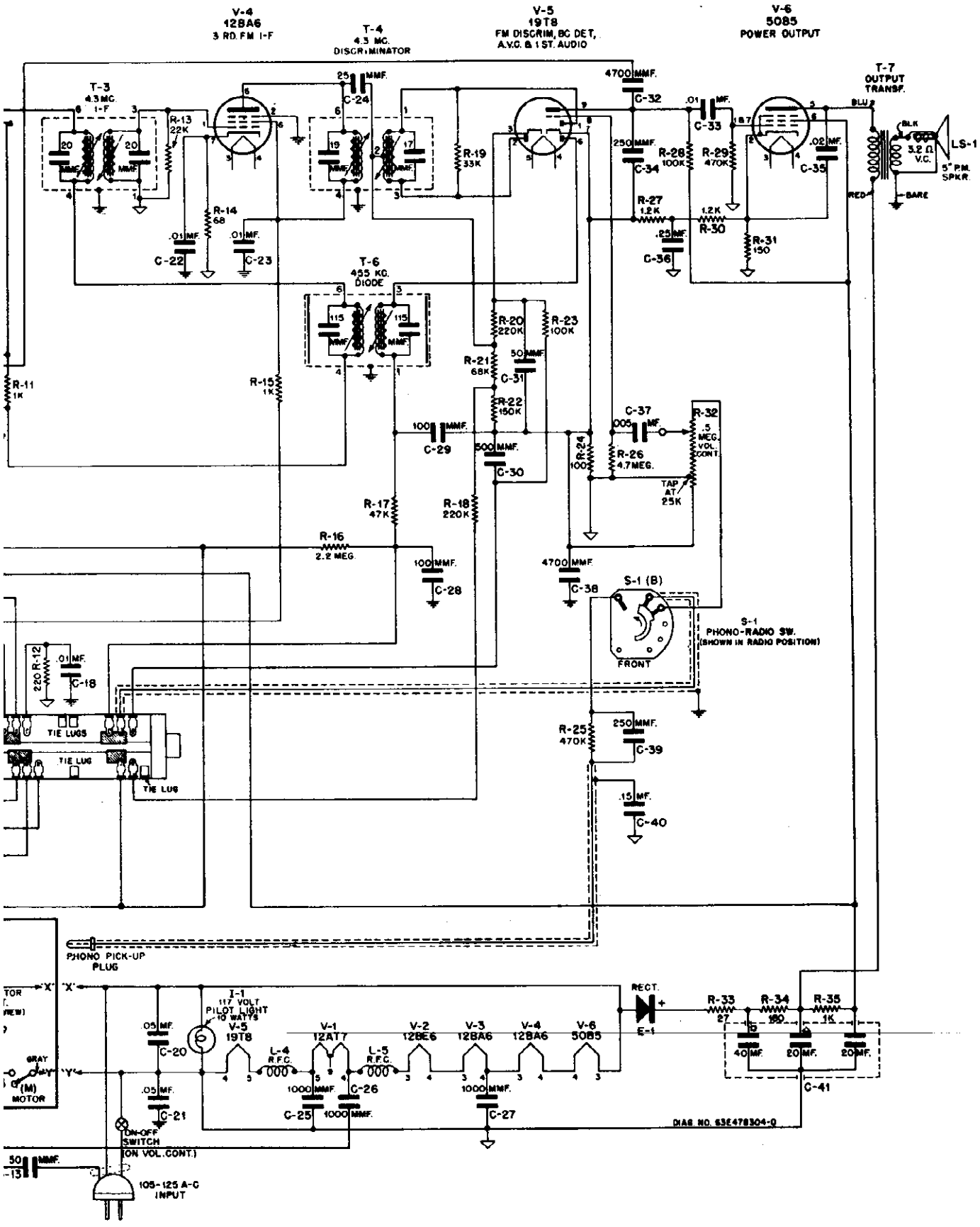

MODELS 77FM21, 77FM22, -22M, -22WM, 77FM23, CHASSIS HS-89, HS-97

MOTOROLA INC.

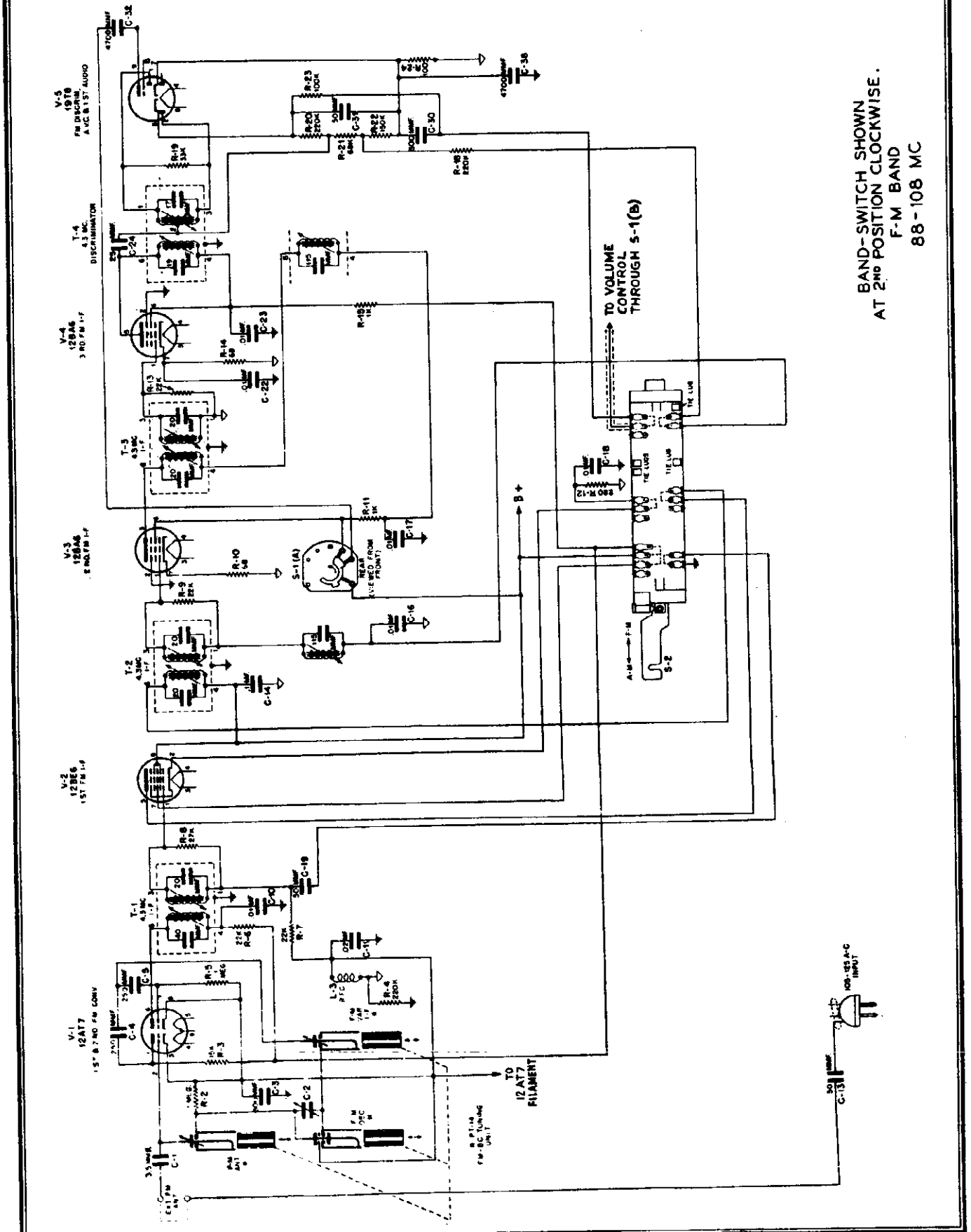

MOTOROLA INC.

MODELS 77FM21, 77FM22, -22M, -22WM, 77FM23, CHASSIS HS-89, HS-97

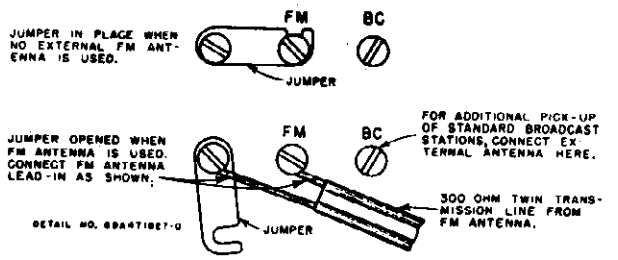

EXTERNAL ANTENNA TERMINALS

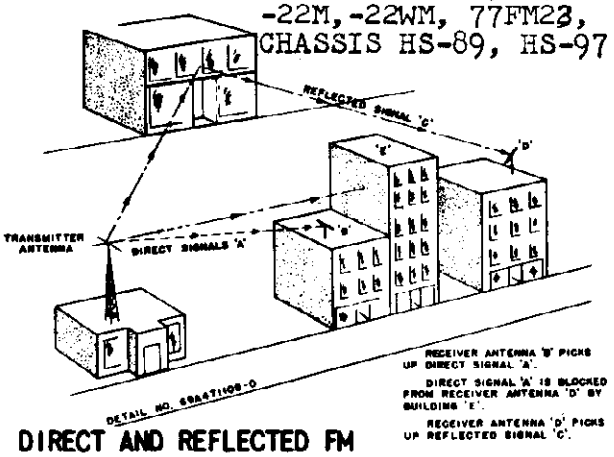

DIRECT AND REFLECTED FM RECEPTION PATHS

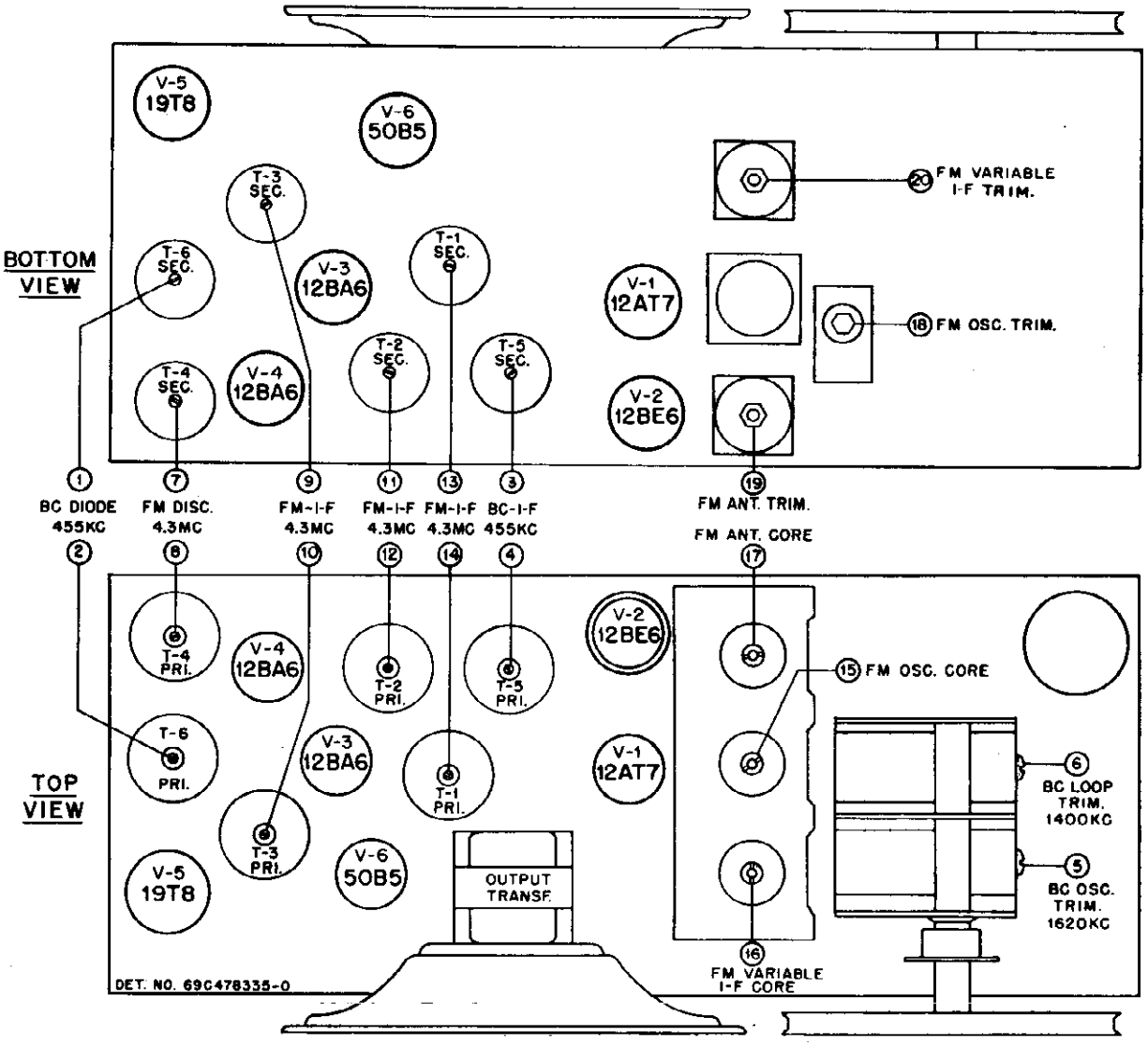

TUBE & TRIMMER LOCATION

METHOD OF SETTING TUNER TO 98MC.

TURN TUNING SHAFT UNTIL DISTANCE BETWEEN BAKELITE PIECES IS 1-9/32" AS SHOWN IN ILLUSTRATION.

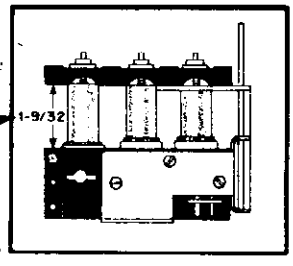

MODELS 77FM21, 77FM22, 77FM22M, 77FM22WM, 77FM23, CHASSIS HS-89, HS-97

MOTOROLA INC.

ALIGNMENT

Maximum performance can only be obtained if extreme care is exercised during alignment.

It is suggested that an isolation transformer be used between receiver and power line. If no isolation transformer is used and hum is encountered during alignment, connect the ground side of the signal generator output to B- instead of the receiver chassis.

If set oscillates when aligning the broadcast band, connect receiver B- to receiver chassis. CAUTION: Don't forget to disconnect B- from receiver chassis after alignment!

An AM (amplitude modulated) signal generator covering the frequencies shown in alignment chart, is used to align the broadcast and FM bands. A low range output meter, connected across the speaker voice coil, is used as an output indicator.

The broadcast alignment is conventional; full instructions are given in the following alignment chart.

The FM band alignment can be satisfactorily performed by following the instructions in the chart. When properly aligned, the discriminator does not respond to amplitude modulation and since an AM type signal generator is used for aligning the FM circuits, it is necessary to detune the discriminator secondary and leave it that way until all of the FM circuits have been aligned. After completing the alignment of the FM circuits, proceed to align the discriminator secondary by applying a 4.3 Mc AM signal to the control grid (pin #7) of the 2nd FM converter tube and adjusting the discriminator secondary core for minimum audio output. No adjustment of the FM circuits should be attempted with AM after the discriminator secondary has been properly aligned.

Use a 30% AM (amplitude modulated) signal throughout entire alignment procedure.

Use an insulated wrench when adjusting the FM tuner trimmers. Order Motorola FM Alignment wrench, part number 66A471864.

A special wrench for adjusting the slotted nuts on the tuner cores will be required also. You can easily fabricate one from a Motorola auto set Volume Control Shaft and Coupling Assembly (Part Number 1B70847, $.30 list) by simply spreading out the forked ends and filing to fit. Solder the assembly together to make it rigid.

ALIGNMENT PROCEDURE WHEN USING AM MODULATED SIGNAL GENERATOR AND STANDARD OUTPUT METER FOR COMPLETE RECEIVER ALIGNMENT

STEP	DIAL SET TO	BAND SW. SET TO	DUMMY	SIGNAL GENERATOR CONNECTED TO	SIGNAL GENERATOR SET AT	ADJUST TRIMMER OR CORE	REMARKS
455 Kc IF CHANNEL ALIGNMENT							
1.	1620 Kc	BC	.1 mf	12BE6, (V-2) BC Conv. Grid (Pin #1)	455 Kc	1,2,3 & 4	Adjust for maximum output.
BROADCAST BAND ALIGNMENT							
2.	1620 Kc (gang fully opened)	BC	.1 mf	12BE6 (V-2) BC Conv. Grid (Pin #1)	1620 Kc	5	This sets oscillator to dial. (Calibrate pointer by fully closing gang and noting position of pointer slider. Pointer slider should be in line with right hand hole in dial background bracket as shown in Figure 12.)
3.	1400 Kc	BC	None	Radiation loop*	1400 Kc	6	Tune in signal with receiver tuning knob, then peak trimmer 6.
4.3 Mc IF CHANNEL ALIGNMENT							
4.	-	-	-	-	-	7	Detune discriminator secondary by screwing core out as far as it will go.
5.	(extreme high frequency end)	FM	.001 mf	12AT7 (V-1) 2nd FM Converter Grid (#7 pin)	4.3 Mc.	8,9,10, 11, 12, 13 & 14	Adjust for maximum output.
FM BAND ALIGNMENT							
6.	-	-	-	-	-	15	Check the position of the FM Osc. tuning core 15. Set spacing between the core and bakelite piece to which it is mounted, to two turns from tight by turning tuning core slotted nut.

MOTOROLA INC.

MODELS 77FM21, 77FM22, -22M, -22WM, 77FM23, CHASSIS HS-89, HS-97

(Alignment continued)

STEP	DIAL SET TO	BAND SW. SET TO	DUMMY	SIGNAL GENERATOR CONNECTED TO	SIGNAL GENERATOR SET AT	ADJUST TRIMMER OR CORE	REMARKS
7.	98 Mc	FM	None	FM Ant. terminal	98 Mc	18	Tuner is set to 98 Mc by moving cores out with tuning shaft until spacing between bakelite pieces is 1-9/32". See Figure 9. Peak 18 for maximum output.
8.	90 Mc	FM	None	FM Ant. terminal	90 Mc	19 & 20	Tune in signal with receiver tuning knob, then adjust 19 & 20 for maximum output.
9.	105 Mc	FM	None	FM Ant. terminal	105 Mc	16 & 17	Tune in signal with receiver tuning knob, then adjust 16 & 17 for maximum output.
10.	-	-	-	-	-	-	Repeat Steps 8 & 9 several times until further adjustment does not increase the output. Make the final trimmer adjustment at 105 Mc. (i.e., trimmers 19 & 20 at 105 Mc).
11.	105 Mc	FM	None	Radiate signal (or use station after performing Step 12)	105 Mc	19	Adjust for maximum output with built-in antenna connected.
ALIGN DISCRIMINATOR SECONDARY							
12.	-	FM	.001 mf	12AT7 (V-1) 2nd FM Converter Grid (Pin #7)	4.3 Mc	7	Adjust discriminator secondary for minimum response. The correct adjustment is sharply defined minimum response point between the two peaks.

* Connect output of signal generator to a 6" diameter, 3 turn loop and radiate signal into receiver loop. Minimum distance between loops should never be less than 12".

ALIGNMENT PROCEDURE WHEN USING FM SIGNAL GENERATOR AND OSCILLOSCOPE

STEP **OPERATION**

455 Kc IF Channel Alignment

1. Same as Step 1 in Chart I (Use AM signal generator)

Broadcast Band Alignment

2. Same as steps 2 & 3 in Chart I (Use AM signal generator)

4.3 Mc IF Channel Alignment Use FM Signal Generator & Oscilloscope

3. (A) Discriminator

1. Connect the input terminals of the oscilloscope vertical amplifier to the high side of the receiver volume control and B-.

2. Connect the FM generator synchronizing voltage output terminals to a phase shifting network, consisting of a variable 1/2 megohm resistor in series with a .002 mf capacitor. The input to the oscilloscope horizontal amplifier is connected across the .002 mf capacitor. See Figure 10. (This phase shifting network may not work with every oscilloscope. Different values of R & C may be required.)

3. Apply an FM 4.3 Mc signal (125 Kc deviation) through a .001 mf capacitor to the control grid (pin #1) of tube V-4 in the third FM IF Amplifier stage.

4. Adjust discriminator primary (8) for maximum amplitude. The phase shifting network resistor is adjusted to give only one trace.

5. Adjust discriminator secondary (7) until a symmetrical pattern is obtained, with peaks occurring at about 100 Kc above and below 4.3 Mc and is substantially linear between peaks. The trace should pass through the intersection of the vertical and horizontal axis. The phase shifting network should be adjusted to give only a single pattern at all times. See Figure 11. It will be necessary to go over discriminator primary (8) and secondary (7) adjustments several times before a pattern of maximum amplitude and correct symmetry is obtained.

(B) 4.3 Mc IF Amplifiers

1. Apply an FM 4.3 Mc signal (100 Kc deviation) to the control grid (pin #1) of tube V-3 in the 2nd FM IF amplifier stage, through a .001 mmf capacitor and adjust both primary and secondary cores (9 & 10) to get a symmetrical pattern as before, with peaks occurring at a slightly lower deviation.

2. Apply an FM 4.3 Mc signal (100 Kc deviation) to the control grid (pin #1) of tube V-2 and adjust both primary and secondary cores (11 & 12) until a symmetrical pattern substantially linear between peaks, is obtained.

3. Apply an FM 4.3 Mc signal (100 Kc deviation) to the FM antenna terminal and adjust both primary and secondary cores (13 & 14) until a symmetrical pattern substantially linear between peaks, is obtained.

FM Band Alignment - Use FM Signal Generator & Output Meter

4. Check the position of the FM oscillator tuning core (15). Set the spacing between the core and the bakelite piece to two turns from tight by turning tuning core slotted nut.

5. Connect generator output directly to the receiver FM antenna terminal.

6. Set receiver tuner to 98 Mc by moving cores out with tuning shaft until spacing between bakelite pieces is 1-9/32". See Figure 9. Also set FM signal generator to 98 Mc (22-1/2 Kc deviation). Adjust FM oscillator trimmer (18) for maximum output.

7. Set FM signal generator to 90 Mc (22-1/2 Kc deviation). Tune in signal with receiver tuning knob and then adjust FM variable IF & FM antenna trimmers (19 & 20) for maximum output.

8. Set FM signal generator to 105 Mc (22-1/2 Kc deviation). Tune in signal with receiver tuning knob and then adjust variable IF and antenna cores (16 & 17) for maximum indication on output meter.

Repeat steps 7 & 8 several times until further adjustment does not increase the output. Make the final trimmer adjustment at 105 Mc. (i.e., trimmers 19 & 20 at 105 Mc.)

9. Close FM antenna link on loop panel. Radiate an FM 105 Mc (22-1/2 Kc deviation) signal into FM antenna (line cord). Tune in signal with receiver tuning knob and then repeak FM antenna trimmer (19).

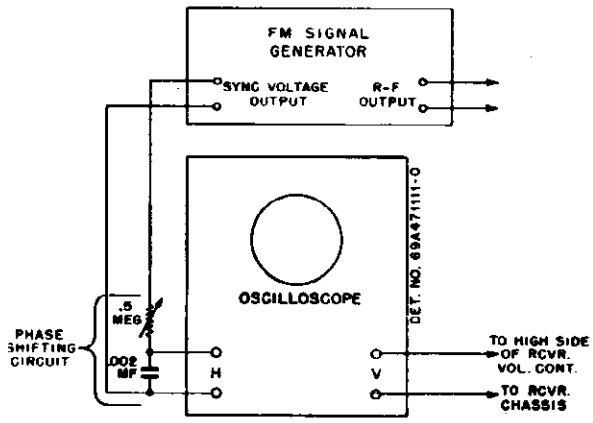

SIGNAL GENERATOR & OSCILLOSCOPE HOOK-UP

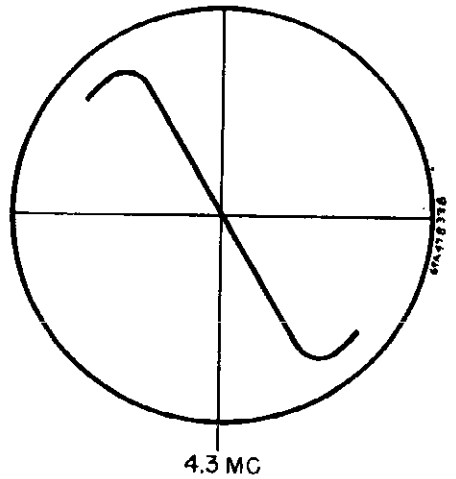

OSCILLOSCOPE PATTERN

(FRONT OF CHASSIS)

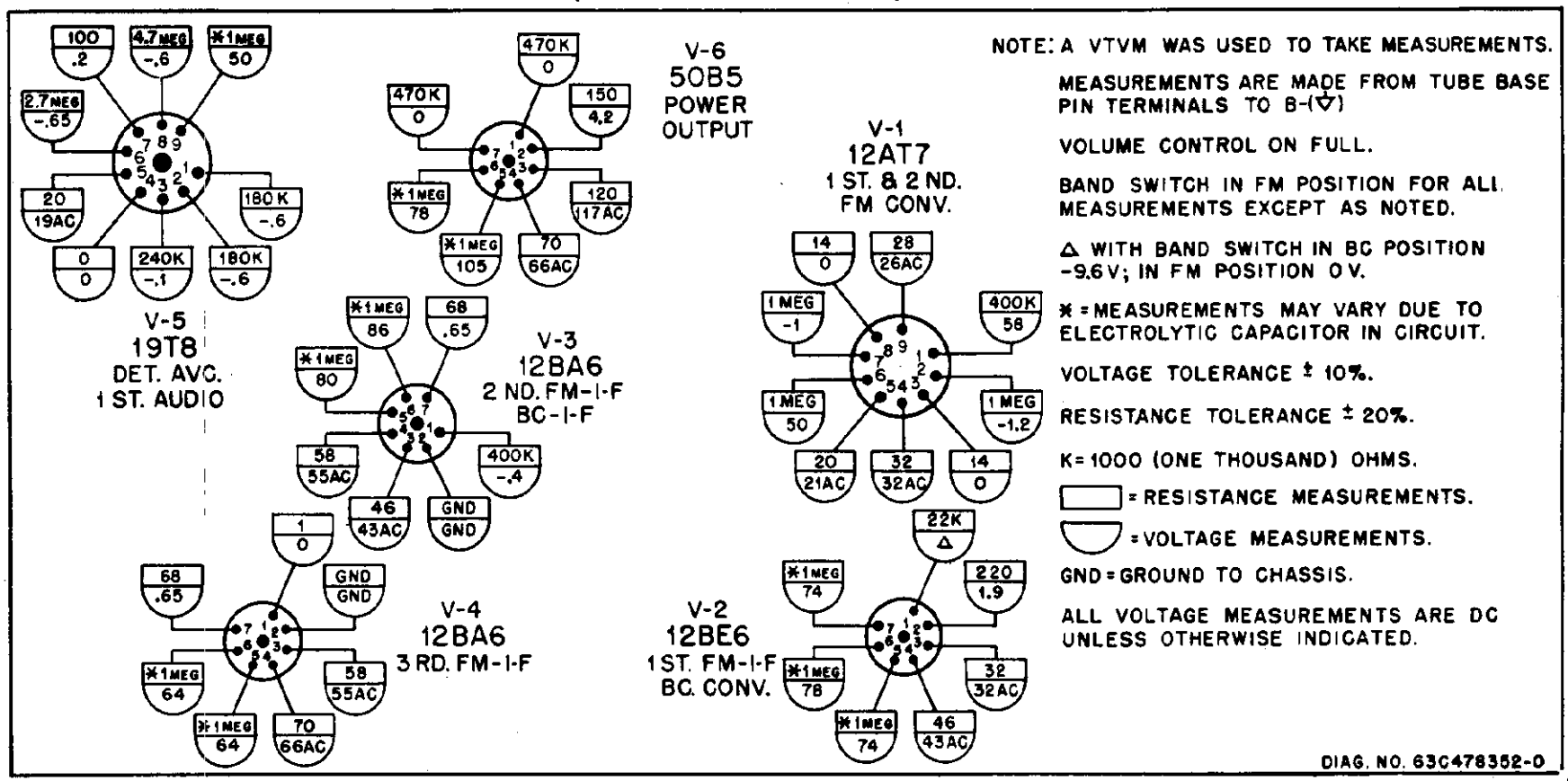

BOTTOM VIEW OF CHASSIS

VOLTAGE & RESISTANCE DIAGRAM

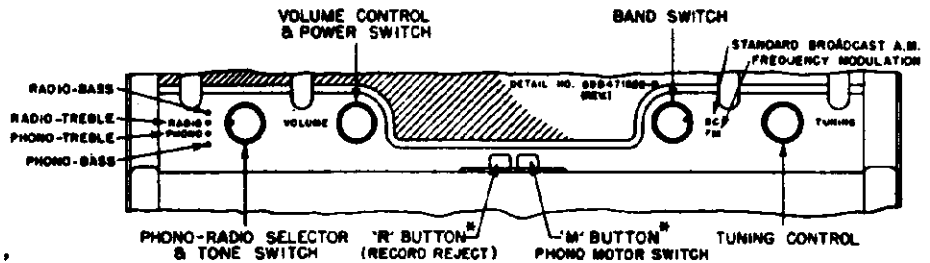

CONTROLS

POWER SUPPLY - 117 Volts AC, 60 cycles, 85 watts

MODELS 77FM21, 77FM22, -22M, -22WM, 77FM23

MOTOROLA INC.

CHASSIS HS-89, HS-97

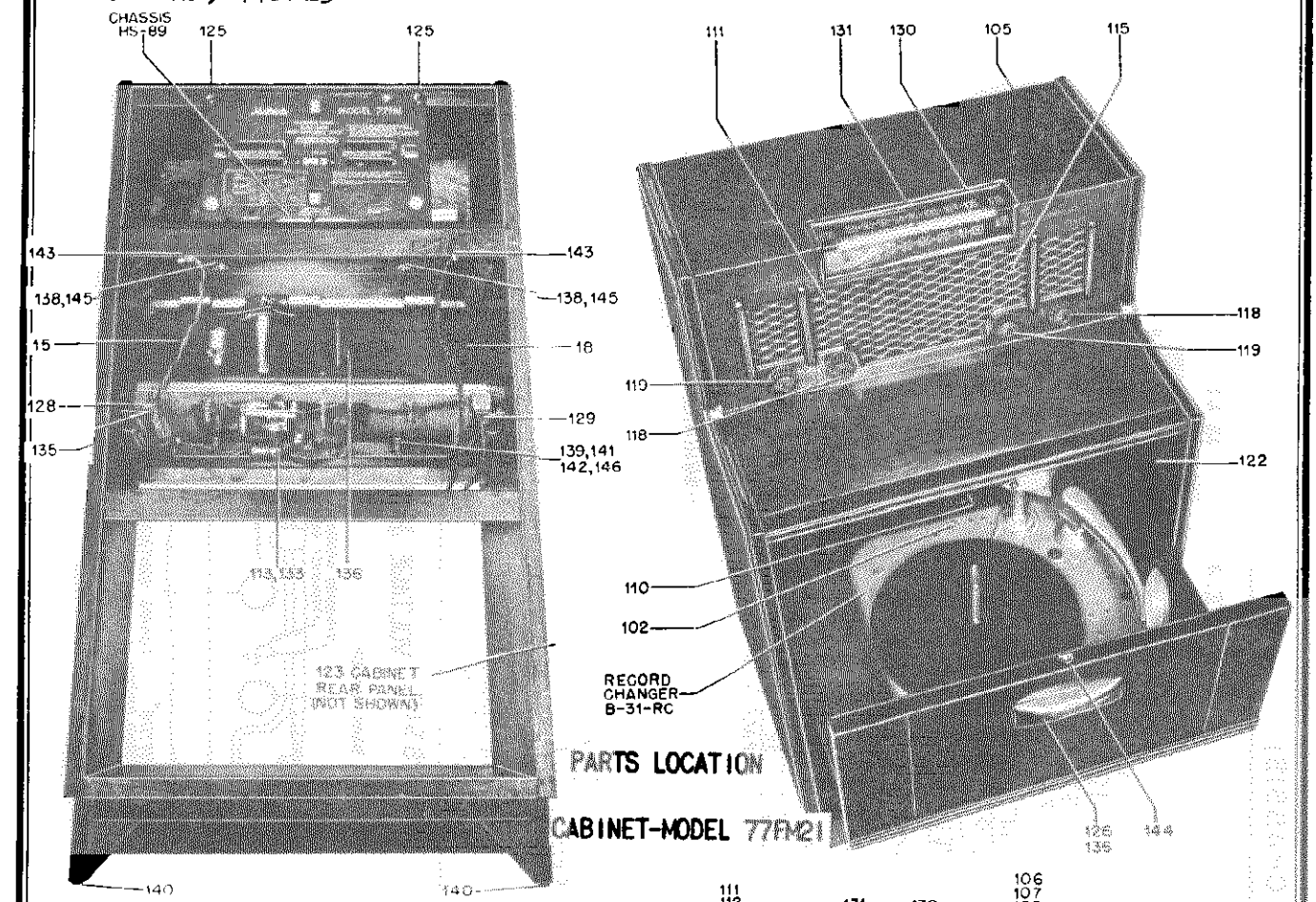

PARTS LOCATION
CABINET-MODEL 77FM21

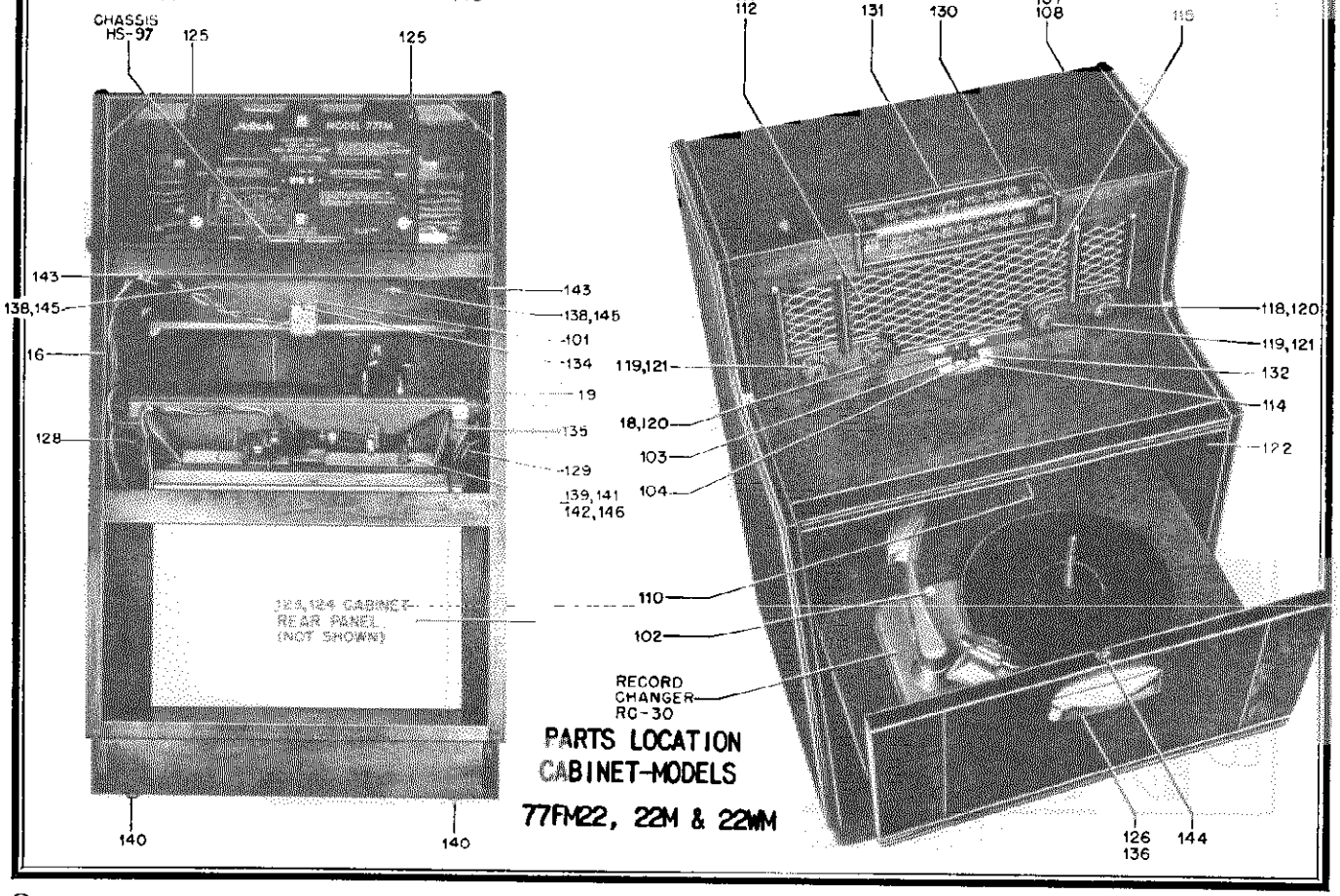

PARTS LOCATION
CABINET-MODELS
77FM22, 22M & 22WM

©John F. Rider

MOTOROLA INC.

MODELS 77FM21, 77FM22, 77FM22M, 77FM22WH, 77FM23, CHASSIS HS-89, HS-97

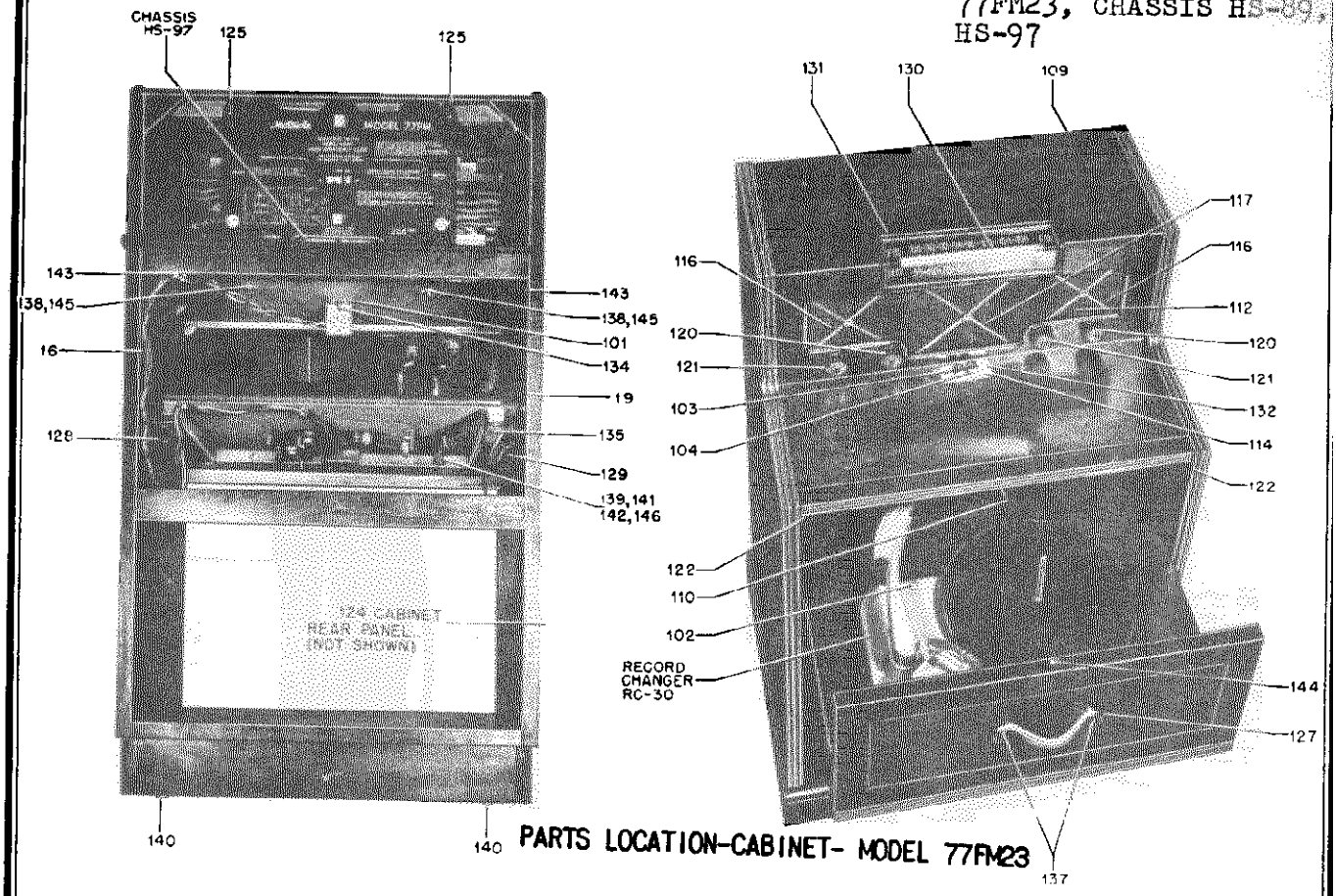

PARTS LOCATION-CABINET- MODEL 77FM23

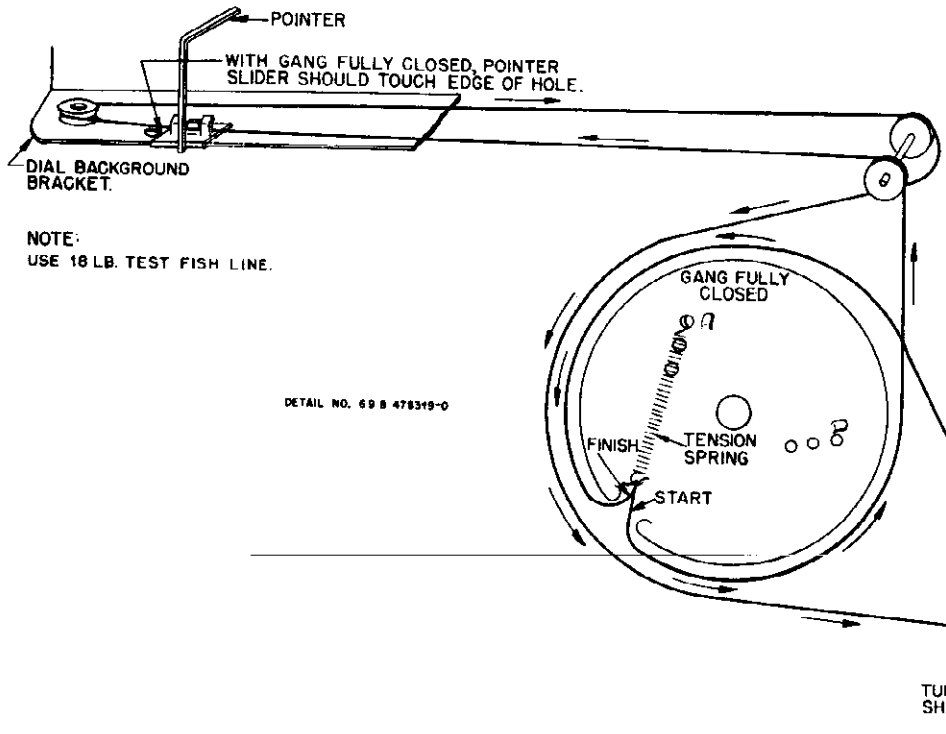

DETAIL NO. 69 B 478319-O

STRING DRIVE

MODELS 77FM21, 77FM22, -22M, -22WM, 77FM23, CHASSIS HS-89, HS-97

MOTOROLA INC.

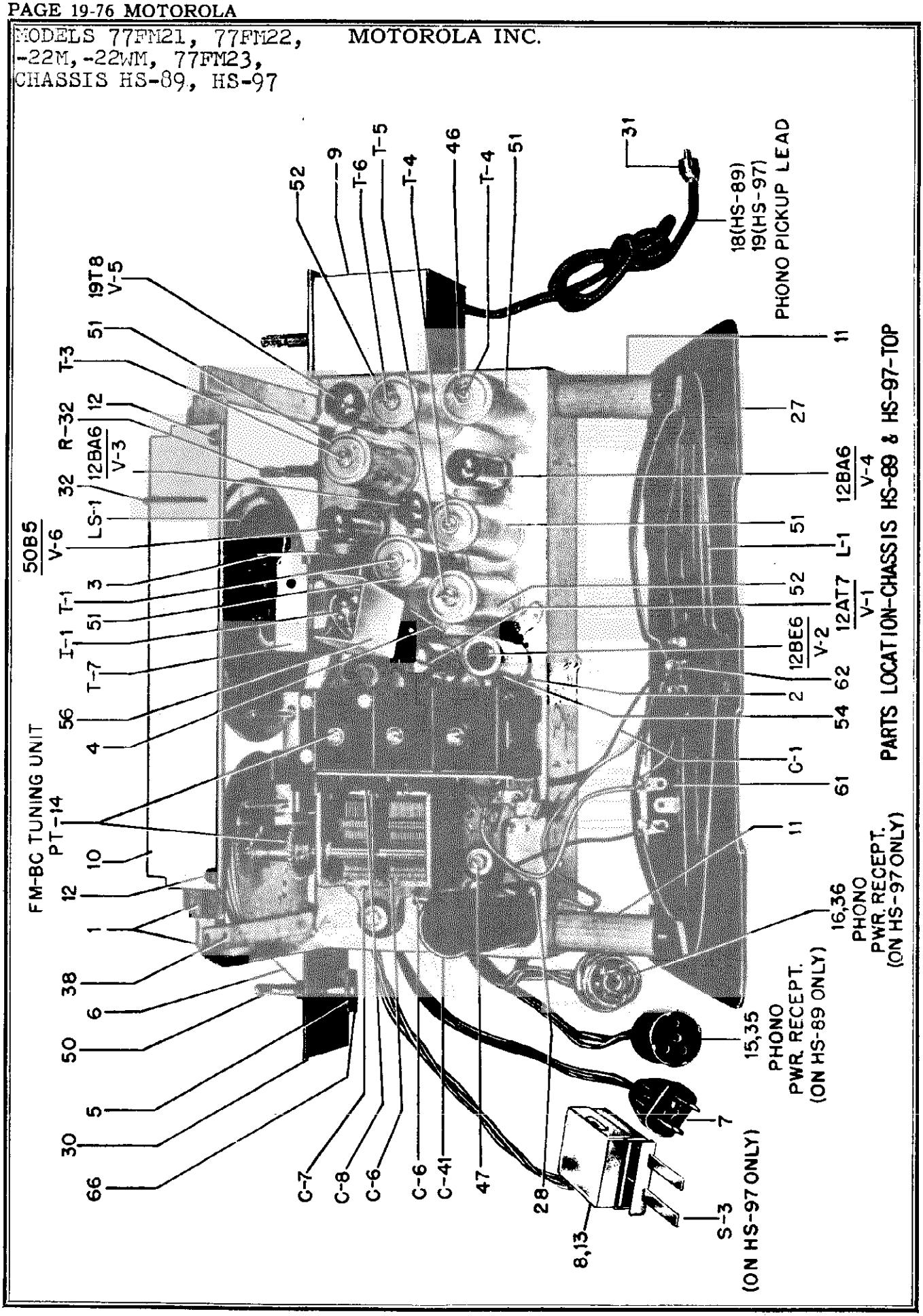

MOTOROLA INC.

MODELS 77FM21, 77FM22, -22M, -22WM, 77FM23, CHASSIS HS-89, HS-97

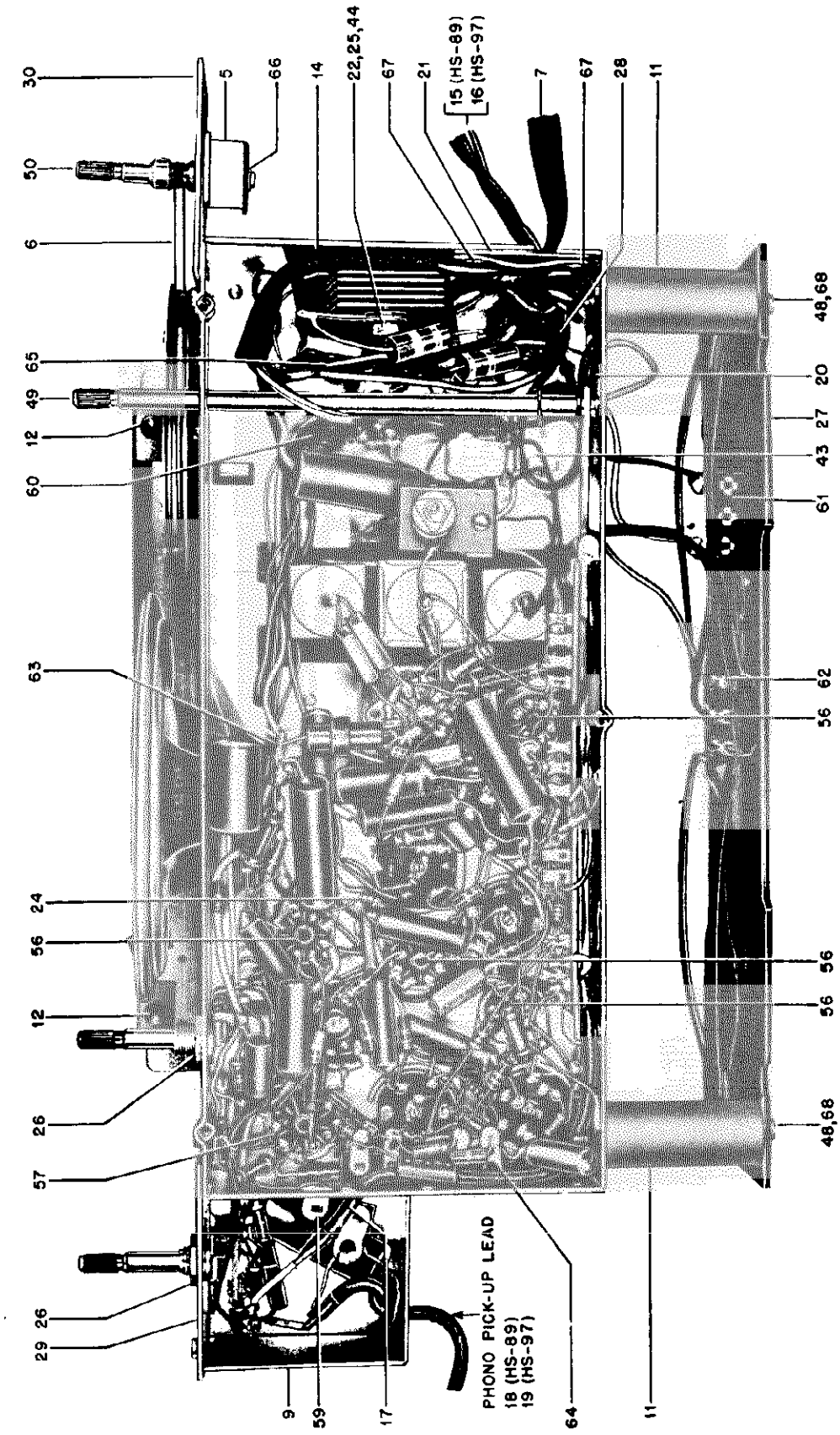

PARTS LOCATION-CHASSIS HS-89 & HS-97-BOTTOM
(MISCELLANEOUS PARTS)

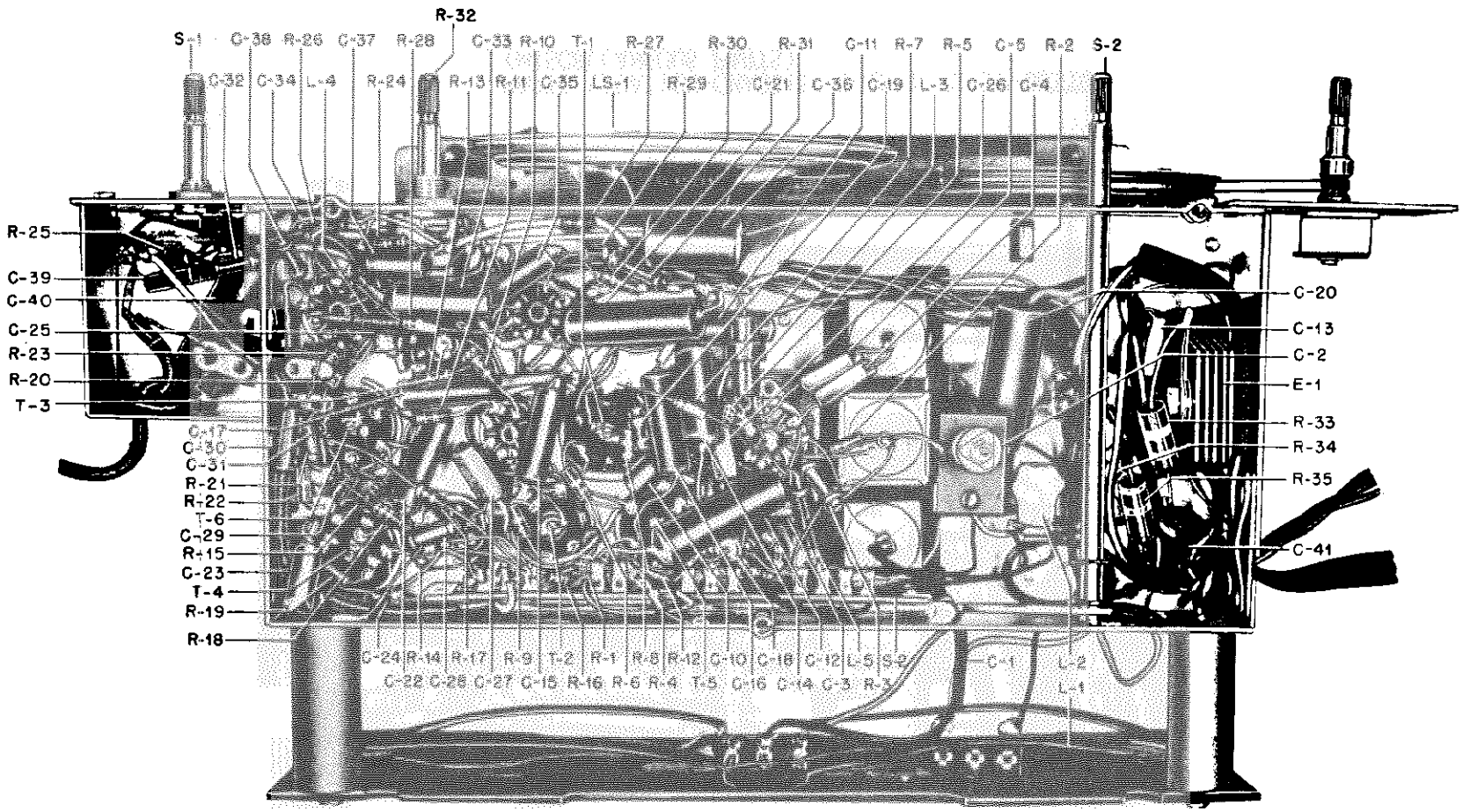

PARTS LOCATION-CHASSIS HS-89 & HS-97-BOTTOM (CAPACITORS, RESISTORS, COILS, TRANSFORMERS, SWITCHES)

Model	Chassis	Record Changer	Cabinet
77FM21	HS-89	B31RC	Consolette - walnut
77FM22	HS-97	RC-30	Consolette - walnut
77FM22M	HS-97	RC-30	Consolette - mahogany
77FM22WM	HS-97	RC-30	Consolette - walnut, mahogany finished
77FM23	HS-97	RC-30	Consolette - mahogany finish

The standard broadcast dial scale is read in kilocycles by adding one "0" to figures. The FM band dial scale is read in megacycles (88 to 108). **NOTE:** When tuning, tune carefully until you are exactly ON the station. Tuning to either side of it will result in poor tone quality and excessive noise. Tuning of FM stations should be done very carefully, as 3 peaks are present; the center peak is the correct one; distortion and low volume are characteristic of the other two peaks.

MOTOROLA INC.

MODELS 77FM21, 77FM22, 77FM22M, 77FM22WM, 77FM23, CHASSIS HS-89, HS-97

CHASSIS PARTS - HS-89 & HS-97

REF. NO.	PART NO.	DESCRIPTION
CAPACITORS		
C-1	21K470578	Special: fixed: 3.5 mmf
C-2	19A470426	Trimmer: variable air; 2.5 mmf to 30 mmf
C-3	21R2730	Silver mica: 500 mmf 500V
C-4	21R2729	Silver mica: 250 mmf 500V
C-5	21R2729	Silver mica: 250 mmf 500V
C-6	19K75415	Variable: 2 gang; cut oscillator plates; with trimmers C-7, C-8 & C-9
C-7	-	Trimmer: part of gang capacitor C-6
C-8	-	Trimmer: part of gang capacitor C-6
C-9	-	Trimmer: part of gang capacitor C-6
C-10	8S9825	Paper: .01 mf 200 V
C-11	8S9802	Paper: .02 mf 400 V
C-12	8K471635	Paper: .05 mf 400 V
C-13	21R6642	Mica: 50 mmf 500 V
C-14	8K471636	Paper: .1 mf 200 V
C-15	8S9825	Paper: .01 mf 200V
C-16	8S9801	Paper: .01 mf 100V
C-17	8S9825	Paper: .01 mf 200V
C-18	8S9801	Paper: .01 mf 100V
C-19	21K77373	Ceramic: 50 mmf 500V
C-20	8S9816	Paper: .05 mf 400V
C-21	8A471623	Paper: .05 mf 200V
C-22	8S9801	Paper: .01 mf 100V
C-23	8S9825	Paper: .01 mf 200V
C-24	21K28816	Ceramic: 25 mmf 500V
C-25	21R6638	Mica: 1000 mmf 500V
C-26	21R6638	Mica: 1000 mmf 500V
C-27	21R6638	Mica: 1000 mmf 500V
C-28	21B77286	Ceramic: 100 mmf 500V
C-29	21B77286	Ceramic: 100 mmf 500V
C-30	21R6639	Mica: 500 mmf 500V
C-31	21K77373	Ceramic: 50 mmf 500V
C-32	21B470567	Ceramic: 4700 mmf 500V
C-33	8S9809	Paper: .01 mf 400V
C-34	21K77375	Ceramic: 250 mmf 500V
C-35	8A471019	Paper: .02 mf 400V
C-36	8A470504	Paper: .25 mf 50V
C-37	8A24966	Paper: .005 mf 100V
C-38	21B470567	Ceramic: 4700 mmf 500V
C-39	21R2729	Silver mica: 250 mmf 500V
C-40	8A72686	Paper: .15 mf 200V
C-41	23B470429	Electrolytic: 40 mf-200V, 20-20 mf 150V. Includes insulating tube
RECTIFIER		
E-1	48B90140	Selenium type: half-wave
DIAL LIGHT		
I-1	65A470930	Lamp, incandescent: 117V, 10 watt; clear
COILS		
L-1	24K470674	Loop Antenna: winding only
L-2	24A470556	BC Oscillator
L-3	24A470505	RF Choke
L-4	24A74989	Filament choke
L-5	24A74989	Filament choke
SPEAKER		
LS-1	50C470684	5" PM; 3.2 ohm voice coil

REF. NO.	PART NO.	DESCRIPTION
RESISTORS		
Note: All resistors are insulated, carbon type, 1/2 watt, 20% unless otherwise specified.		
R-1	6R6015	220,000
R-2	6R6004	1 meg
R-3	6R3996	15,000; not insulated
R-4	6R6015	220,000
R-5	6R6046	1 meg 10%
R-6	6R6028	22,000
R-7	6R6028	22,000
R-8	6R6434	27,000 10%
R-9	6R6028	22,000
R-10	6R2039	68 10%
R-11	6R6301	1000
R-12	6R3933	220
R-13	6R6028	22,000
R-14	6R2039	68 10%
R-15	6R6301	1000
R-16	6R3927	2.2 meg
R-17	6R6056	47,000
R-18	6R6015	220,000
R-19	6R6410	33,000 10%
R-20	6R6015	220,000
R-21	6R6001	68,000
R-22	6R6182	150,000
R-23	6R6075	100,000
R-24	6R6018	100
R-25	6R6032	470,000
R-26	6R2122	4.7 meg
R-27	6R6393	1200 10%
R-28	6R6075	100,000
R-29	6R6032	470,000
R-30	6R6393	1200 10%
R-31	6R6293	150; not insulated
R-32	18A76191	Volume Control: .5 megohm; tapped at 25,000 ohms, with SPST switch
R-33	6R3994	27 10% 2 watt
R-34	6R3968	180 10% 2 watt
R-35	6R476004	1000 2 watt
SWITCHES		
S-1	40K470676	Phono-radio & tone switch
S-2	40B470432	Bandswitch
S-3	40K471447	Pushswitch: dual; with switch cover and insulator (phono ON-OFF & phono reject HS-97)
TRANSFORMERS		
T-1	24B471668	1st IF, 4.3 Mc: complete with iron cores and padding capacitors, but less shield
T-2	24B471670	2nd IF, 4.3 Mc: complete with iron cores and padding capacitors, but less shield.
T-3	24B471672	3rd IF, 4.3 Mc: complete with iron cores and padding capacitors, but less shield
T-4	24B471674	Discriminator, 4.3 Mc: complete with iron cores and padding capacitors, but less shield
T-5	24B75487	IF, 455 Kc: complete with iron cores and padding capacitors, but less shield....
T-6	24B471666	Diode: 455 Kc; complete with iron cores and padding capacitors, but less shield
T-7	25K471947	Output

©John F. Rider

MODELS 77FM21, 77FM22, -22M, -22WM, 77FM23, CHASSIS HS-89, HS-97

MOTOROLA INC.

REF. NO.	PART NO.	DESCRIPTION
1	1X77345	Background Support & Pullies Assembly ..
2	26A24869	Base, tube shield .....
3	7K471005	Bracket, output transformer mounting ...
4	7K470917	Bracket, pilot light mounting .....
5	7A77337	Bracket, tuning shaft .....
6	11M8944	Cord, dial: 18 lb. black .....
7	30K31258	Cord, line & plug: 3 conductor .....
8	15A471444	Cover, pushswitch .....
9	15B470677	Cover, switch (on chassis) .....
10	35B77311	Dial Background: tan plastic; with reinforcing strip .....
11	57K77085	Dowel, back panel mounting: wood; 1-7/8" long .....
12	5S7806	Eyelet, snap-in (dial background mtg) ..
13	14A471446	Insulator, pushswitch cover: armite ....
14	14A470428	Insulator, rectifier: armite paper .....
15	1X470698	Lead Assembly, phono-motor: with 3 pin receptacle; 3 leads (for Chassis HS-89)
16	1X471448	Lead Assembly, phono: with 4 pin receptacle & dual push switch (for HS-97 Chassis)
17	1X470696	Lead Assembly, shielded: 8" long (audio lead) .....
18	1X470697	Lead Assembly, phono pick-up: single shielded conductor with one pin plug; 35" long (HS-89) .....
19	1X471449	Lead Assembly, phono pick-up: single shielded conductor with one pin plug; 43" long (HS-97) .....
20	1X470545	Lever & Rivet Assembly (on band switch shaft) .....
21	32K31259	Lock, line cord: fibre .....
22	4S7650	Lockwasher: #6 internal (rectifier mtg).
23	4S7657	Lockwasher: #8 external (speaker mtg) ..
24	29R5227	Lug, soldering: #6L .....
25	2S7002	Nut: 6-32 x 5/16 hex; cadmium plated (rectifier mtg) .....
26	2S7051	Nut: 3/8-32 x 9/16 hex; Palnut; cadmium plated (volume control & phono-radio sw. mtg).....
27	1X470669	Panel Assembly, cabinet back: less loop winding but includes 3 screw terminal strip and 2 lug terminal strip .....
28	9A12705	Plate, electrolytic mounting: bakelite..
29	64A470680	Plate, switch mounting .....
30	64A470681	Plate, tuning shaft mounting .....
31	28K71775	Plug: 1 pin (phono pickup lead) .....
32	52A77307	Pointer & Slider Assembly .....
33	49A12646	Pulley, cord: 1/4 groove .....
34	49A21552	Pulley, cord: 1/2 groove .....
35	9A30680	Receptacle: 3 prong; with shell (chassis HS-89 phono motor receptacle) .....
36	9K470402	Receptacle: 4 prong (Chassis HS-97 phono receptacle) .....
37	5A71246	Rivet, shoulder: (.187 long) (cord pulley mtg) .....
38	5A15045	Rivet, shoulder: .437 long (cord pulley mounting) .....
39	5S8497	Rivet: .068 x 1/8; steel; nickel plated (tube socket mtg) .....
40	5S7707	Rivet: .122 x 5/32; steel; nickel plated) .....
41	5S7701	Rivet: .122 x 3/16 steel; nickel plated (electrolytic mtg) .....
42	5S7708	Rivet: .122 x 9/32 steel; nickel plated (line cord lock mtg) .....
43	3S7506	Screw: #6 x 1/4 PKZ plain hex head sheet metal screw (BC osc coil mtg) .....
44	3S2927	Screw: 6-32 x 7/8 slotted hex head machine screw; cadmium plated (rectifier mtg) .....
45	3S7163	Screw: 6-32 x 1/4 slotted hex head machine screw; cadmium plated (speaker & output transformer brkt mtg) .....
46	3S7454	Screw: #8 x 1/4 PKZ plain hex head sheet metal screw; cadmium plated (switch cover mounting) .....
47	3S7481	Screw: #8 x 3/4 PKZ slotted hex head sheet metal screw; cadmium plated (tuner mtg) .....
48	3S3384	Screw: #8 x 2-1/4 PKZ slotted hex head sheet metal screw; cadmium plated (back panel mtg) .....
49	47A470682	Shaft, band switch .....
50	1A77694	Shaft & Pulley Assembly (tuning shaft) .
51	26B70107	Shield, coil (shield for T-1, T-2, T-3 & T-4) .....
52	1A71049	Shield & Sleeve Assembly (shield for T-5 & T-6) .....
53	26A478087	Shield, light (used behind dial light) .
54	26A24970	Shield, tube .....
55	9A470407	Socket, dial light & bracket .....
56	9A470506	Socket, tube: miniature 7 prong; black bakelite .....
57	9K470425	Socket, tube; noval 9 prong; black bakelite .....
58	41A14244	Spring, tension coil (drive cord tension) .....
59	31K85348	Strip, terminal; 1 insulated lug, #2 mtg
60	31K83993	Strip, terminal; 2 insulated lugs, #1 mtg
61	31K86126	Strip, terminal; 2 insulated lugs, #2 mtg (on rear panel) .....
62	31A470403	Strip, terminal; 3 screw with jumper (Ext Ant terminals) .....
63	31A471913	Strip, terminal; 4 insulated lugs, #2 gnd
64	31K75232	Strip, terminal; 4 insulated lugs, #3 mtg
65	31K22174	Strip, terminal; 4 insulated lugs, #4 mtg
66	4A70015	Washer, "C" (band sw shaft & tuning shaft retainer) .....
67	4S1719	Washer: 3/8 x .140 x .030 thick; steel; cadmium plated (line cord lock mtg) ...
68	4S7563	Washer: 5/8 x .203 x .033 thick; steel; cadmium plated (back panel mtg) .....

CABINET PARTS - MODELS 77FM21, 22, 22M, 22WM & 23

101	7A471456	Bracket, switch mounting (phono motor & reject sw. mtg) .....
102	38K470830	Button, plug: for 1/4" hole; green (for concealing shipping screw holes in record changer base) .....
103	38B471506	Button, push: M .....
104	38K471507	Button, push: R .....
105	16E470802	Cabinet, consolette model: wood; walnut (77FM21) .....
106	16F471531	Cabinet, consolette model: wood; walnut (77FM22) .....
107	16K478056	Cabinet, consolette model: wood; mahogany (77FM22M) .....

©John F. Rider

REF. NO.	PART NO.	DESCRIPTION
108	16K478055	Cabinet, consolette model: wood; walnut-mahogany finished (77FM22WM) .....
109	16E478043	Cabinet, consolette model: wood; mahogany (77FM23) .....
110	55A72307	Catch, bullet .....
111	13K470803	Cloth, grille (77FM21 & 22) .....
112	13K478036	Cloth, grille (77FM22M & WM & 77FM23) ..
113	42A75825	Clip, mounting (phono power connector mtg) 77FM21 .....
114	3A471458	Escutcheon, push button: brushed brass finish .....
115	13C470840	Grille, cabinet: metal; brass plated (77FM21, 22, 22M & 22WM) .....
116	13A478037	Grille, cabinet: painted; 3-5/8" (77FM23 only) .....
117	13K478039	Grille, cabinet: painted; 4-7/8" (77FM23 only) .....
118	36K470646	Knob, control: walnut plastic; plain (77FM21 & 22) .....
119	36K471695	Knob, control: walnut plastic; branded (77FM21 & 22) .....
120	36K478064	Knob, control: mahogany plastic; plain (77FM22M, 22WM & 23) .....
121	36K478065	Knob, control: mahogany plastic; branded (77FM22M, 22WM & 23) .....
122	35K470657	Pad, felt: 1/2 diameter x 1/16 thick (drawer stop) .....
123	64B470647	Panel, cabinet rear: wood; walnut finish (77FM21 & 22) .....
124	64K478063	Panel, cabinet rear: wood; mahogany finish (77FM22M, 22WM & 23) .....
125	38A25507	Plug, split: 5/8 long; for 1/8 hole; copper oxide finish (holds loop panel to cabinet) .....
126	55B470646	Pull, drawer: Old English finish (77FM21 & 22, 22M & 22WM) .....
127	55B471551	Pull, drawer: antique copper finish (77FM23 only) .....
128	55K74786	Rail, support: right hand (phono drawer rail) .....
129	55K74787	Rail, support: left hand (phono drawer rail) .....
130	34K470663	Scale, dial & escutcheon .....
131	3S7401	Screw: #2 x 3/8 Phillips oval head wood screw; antique copper finish (dial scale mtg) .....
132	3S1343	Screw: #4 x 3/8 Phillips oval head wood screw; brass finish (pushbutton escutcheon mounting) .....
133	3S3367	Screw: #5 x 3/8 PKA slotted hex head sheet metal screw; black parkerized finish (77FM21 pwr conn. mtg) .....
134	3S7156	Screw: 6-32 x 3/16 slotted binderhead machine screw; cadmium plated (phono motor-reject switch mtg) .....
135	3S1314	Screw: #6 x 3/4 round head wood screw (drawer rail mtg) .....
136	3K471952	Screw: 8-32 x 15/16 washer head machine screw; antique copper finish (drawer pull mtg 77FM21, 22, 22M & 22WM) .....
137	3A471791	Screw: tri-slot head; statuary bronze finish (77FM23 drawer pull mtg) .....
138	3S7526	Screw: #8 x 1-1/8 PKA slotted hex head sheet metal screw; cadmium plated (chassis mtg) .....
139	3S7396	Screw: 10-32 x 2" slotted hex head machine screw; copper plated (record changer mtg) .....
140	55X11497	Silencer, dome .....
141	41A21807	Spring, cushion: bottom (record changer cushion) .....
142	41A26190	Spring, cushion: top (record changer cushion) .....
143	22S7905	Staple, insulated .....
144	55K72308	Strike, bullet (includes 1/2" nail) ....
145	4S8214	Washer: 7/8 x .203 x .067 thick; cadmium plated (chassis mtg) .....
146	4S7611	Washer: 1/2 x 7/32 x .048 thick; antique copper finish (record changer mtg) ....

MODELS 78F11, 78F11-M, 78F12-M

MOTOROLA INC.

GENERAL INFORMATION

TYPE - BC radio-phonograph combination with loop antenna. A selenium rectifier is used in the power supply. Chassis HS-150 & HS-155 are identical except for dial arrangements.

TUNING RANGE - 535 to 1620 Kc

IF FREQUENCY - 455 Kc

TUBE COMPLEMENT - 6SK7 - RF Amplifier
6SA7 - Converter
6SK7 - IF Amplifier
12SQ7 - Detector, AVC & 1st AF Amp
2- 50L6 - Power Amplifiers
Rectifier - Selenium type

POWER SUPPLY - 105-125 volts AC, 60 cycles, 75 watts

RECORD CHANGER - Model RC-34. Refer to Motorola Model RC-34 Service Manual, Part No. 54P484953, for record changer service information and operating instructions.

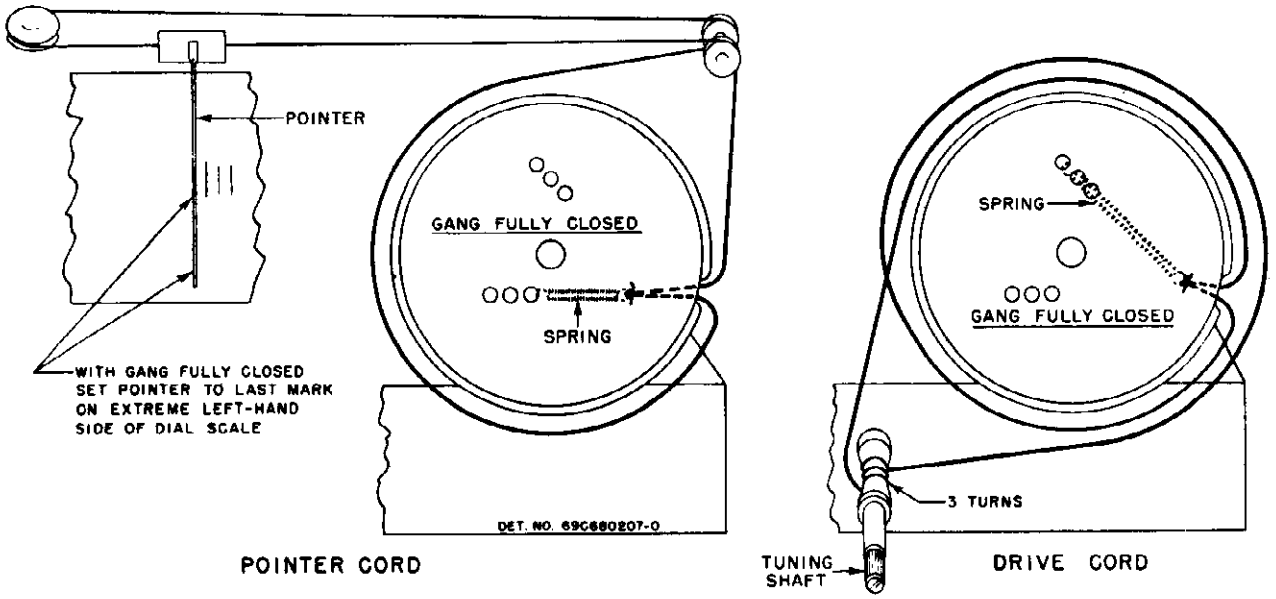

BOTTOM VIEW OF CHASSIS

CHASSIS HS-150 & HS-155 STRING DRIVE

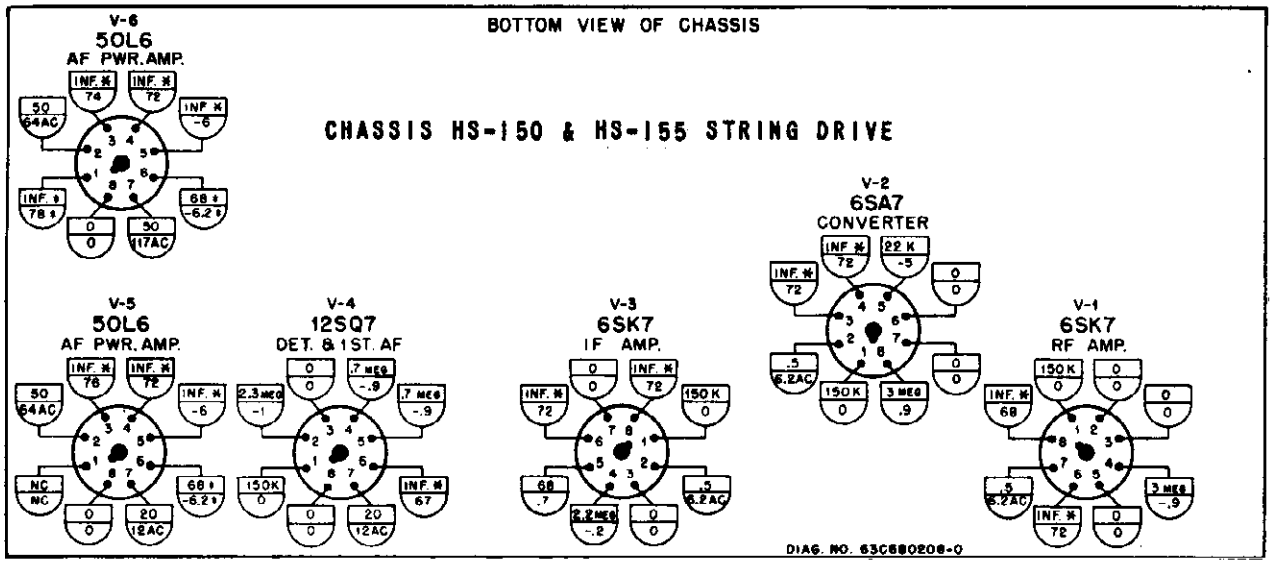

▭ = RESISTANCE MEASUREMENTS.

◡ = VOLTAGE MEASUREMENTS.

* = MEASUREMENTS MAY VARY DEPENDING ON CONDITION OF ELECTROLYTIC IN CIRCUIT.

K = 1000 (ONE THOUSAND) OHMS.

‡ = LUG USED AS TIE POINT.

NC = NO CONNECTION.

NOTES:
A VTVM WAS USED FOR ALL MEASUREMENTS.

ALL MEASUREMENTS, EXCEPT FILAMENTS, MADE FROM TUBE BASE PIN TERMINAL TO COMMON NEGATIVE. (SEE SCHEMATIC DIAGRAM)

FILAMENT MEASUREMENTS MADE FROM TUBE BASE TERMINAL TO MINUS SIDE OF LINE INPUT.

ALL VOLTAGES DC UNLESS OTHERWISE SPECIFIED.

INPUT TO SET 117 V. AC.

VOLTAGE TOLERANCE ±10%; RESISTANCE TOLERANCE ±20%.

VOLUME CONTROL AT MINIMUM AND NO STATION TUNED IN.

MOTOROLA INC.

MODELS 78F11, 78F11-M, 78F12-M

CABINET FRONT & REAR VIEWS

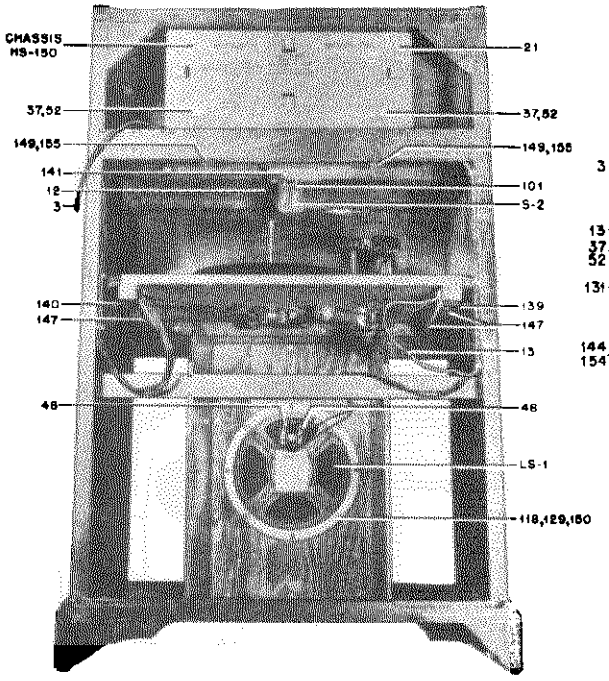

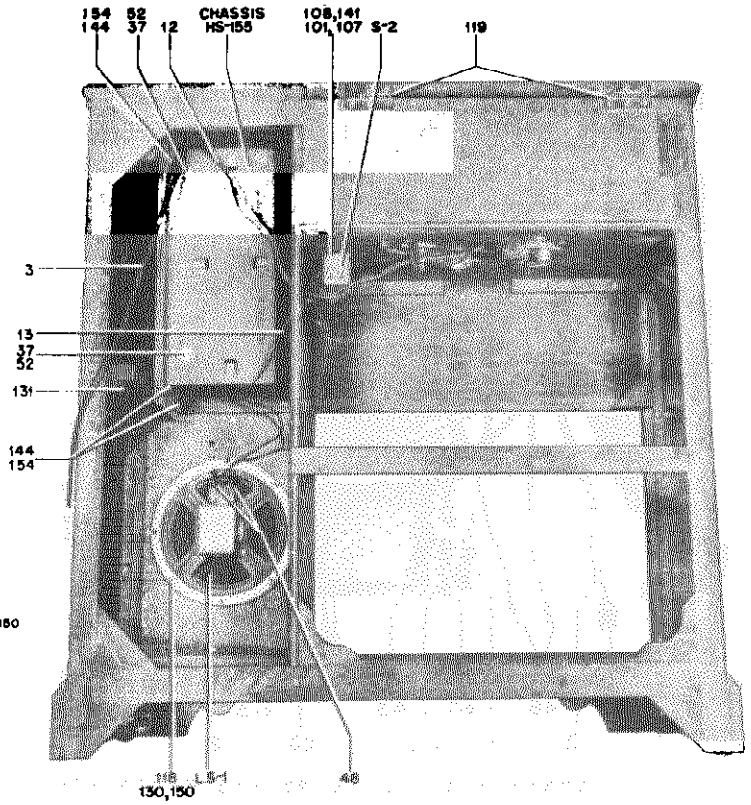

PARTS LOCATIONS

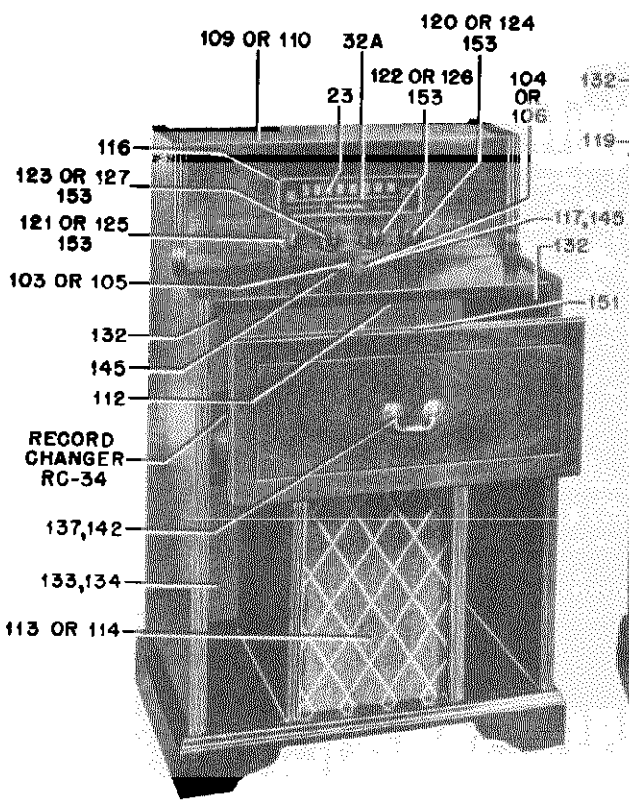

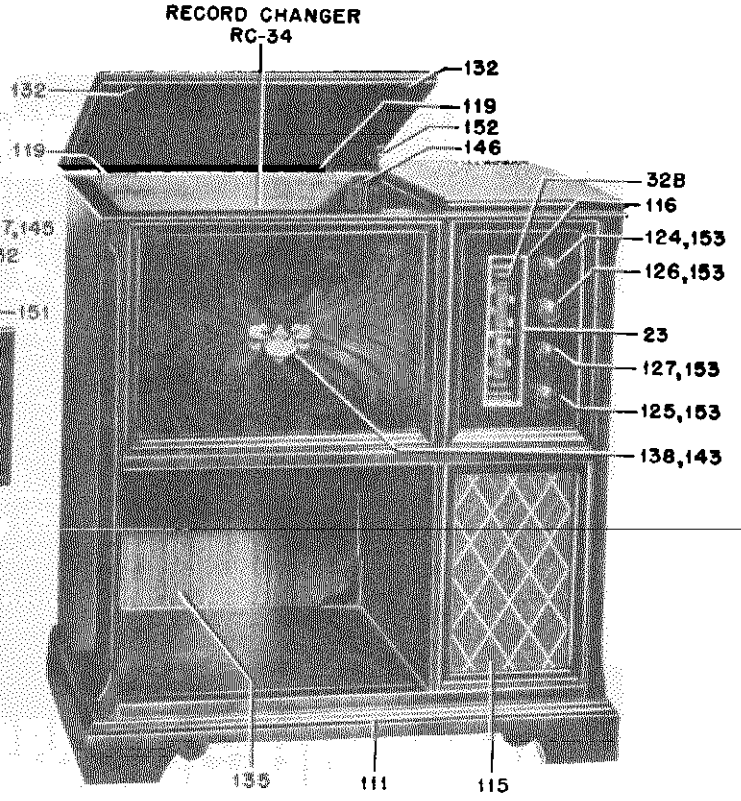

MODELS 78F11,
78F11-M, 78F12-M

MOTOROLA INC.

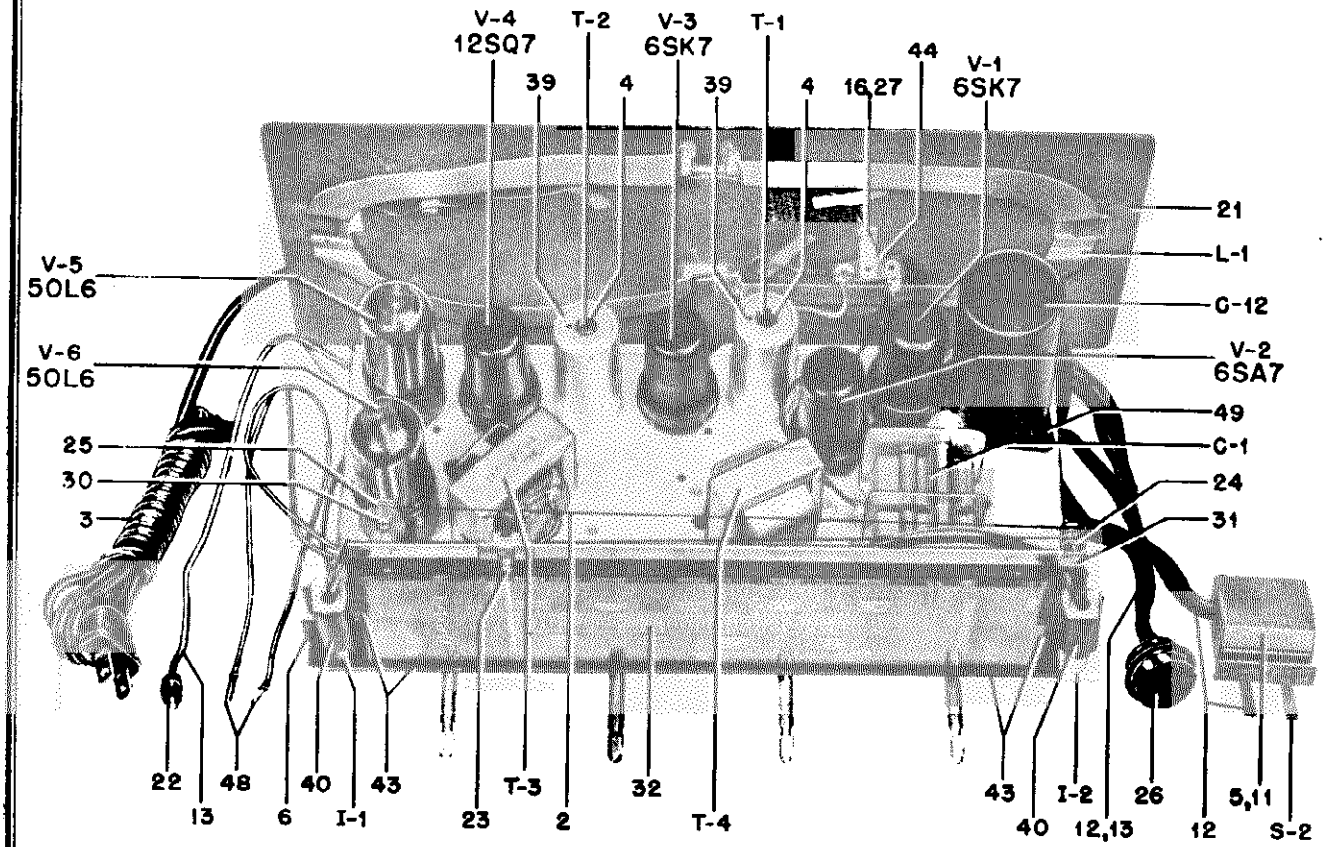

CHASSIS HS-150 & HS-155 PARTS LOCATIONS - TOP & BOTTOM VIEWS

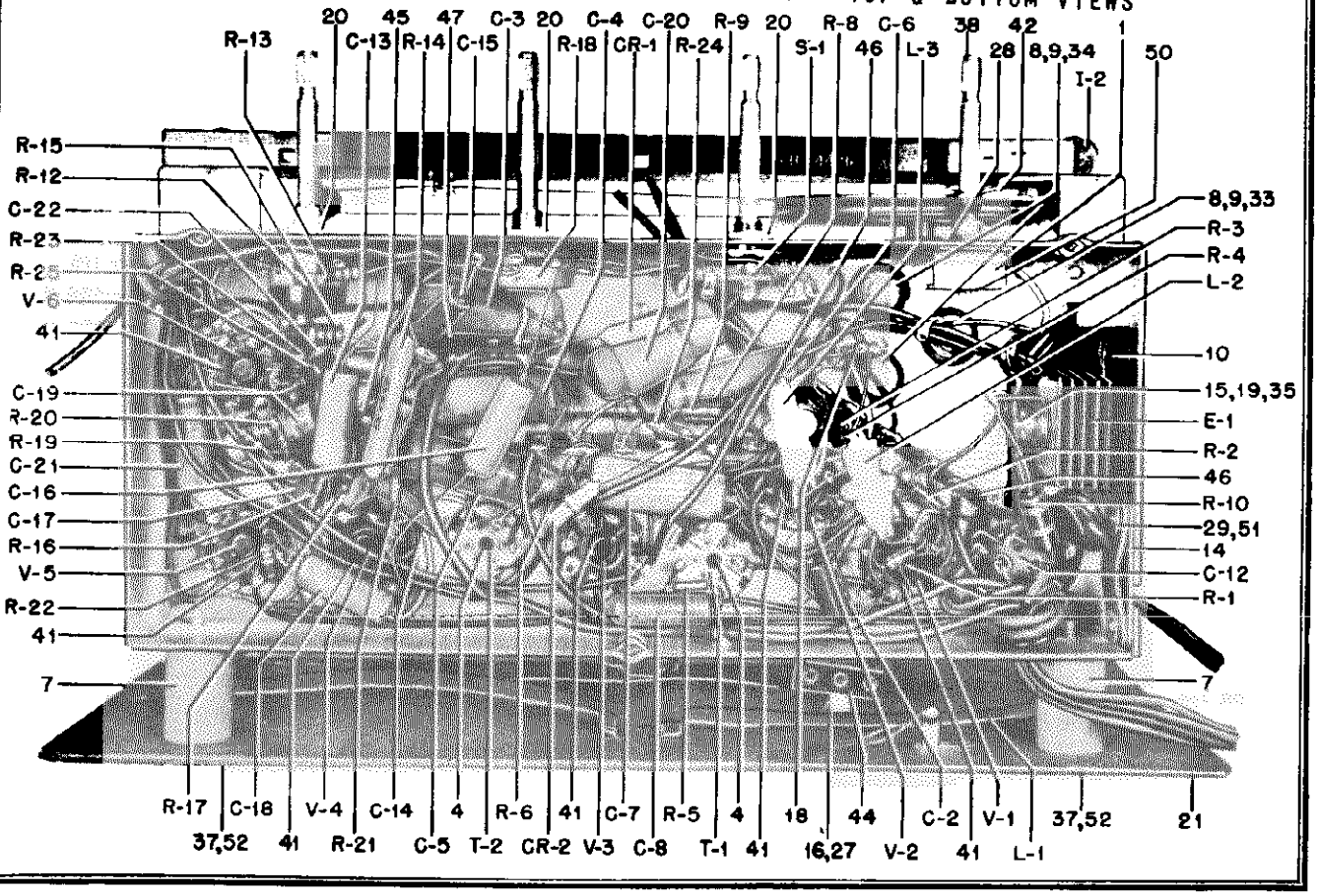

©John F. Rider

ALIGNMENT

Maximum performance can only be obtained if extreme care is exercised during alignment. Follow the procedure carefully.

A low range output meter should be connected across the speaker voice coil. Set receiver volume control to maximum. For greatest accuracy, keep output of receiver at approximately .05 watt thruout alignment by reducing generator output (not receiver volume control) as stages are brought into alignment. (.05 watt = .40 volt on output meter).

It is suggested that an isolation transformer be used between receiver and power line. If no isolation transformer is used and hum is encountered during alignment, connect the ground side of the signal generator through a .1 mf capacitor to receiver common negative (see schematic diagram) instead of the receiver chassis.

Refer to Figure 2 for location of all adjustments.

STEP	DIAL SET TO	DUMMY	SIGNAL GENERATOR CONNECTED TO	SIGNAL GENERATOR SET TO	ADJUST TRIMMER OR CORE	REMARKS
IF ALIGNMENT						
1.	Gang fully opened	.1 mf	Conv. grid (pin #8)	455 Kc	1,2,3 & 4	Adjust for maximum output.
RF ALIGNMENT						
2.	Gang fully opened	-	Radiation loop**	1620 Kc	5	Adjust for maximum. This sets osc. to dial scale*
3.	1400 Kc	-	Radiation loop**	1400 Kc	6 & 7	Tune signal for max. with receiver tuning knob, then peak trimmers 6 and 7.

* With gang fully closed, pointer should be in line with mark on extreme left hand side of dial scale.

** Connect output of signal generator to a 5" diameter, 3 turn loop and bring loop close enough to receiver loop to obtain output of .05 watt (.40V) on output meter. Vary distance between loops to maintain this output during alignment. Minimum distance between loops should never be less than 12".

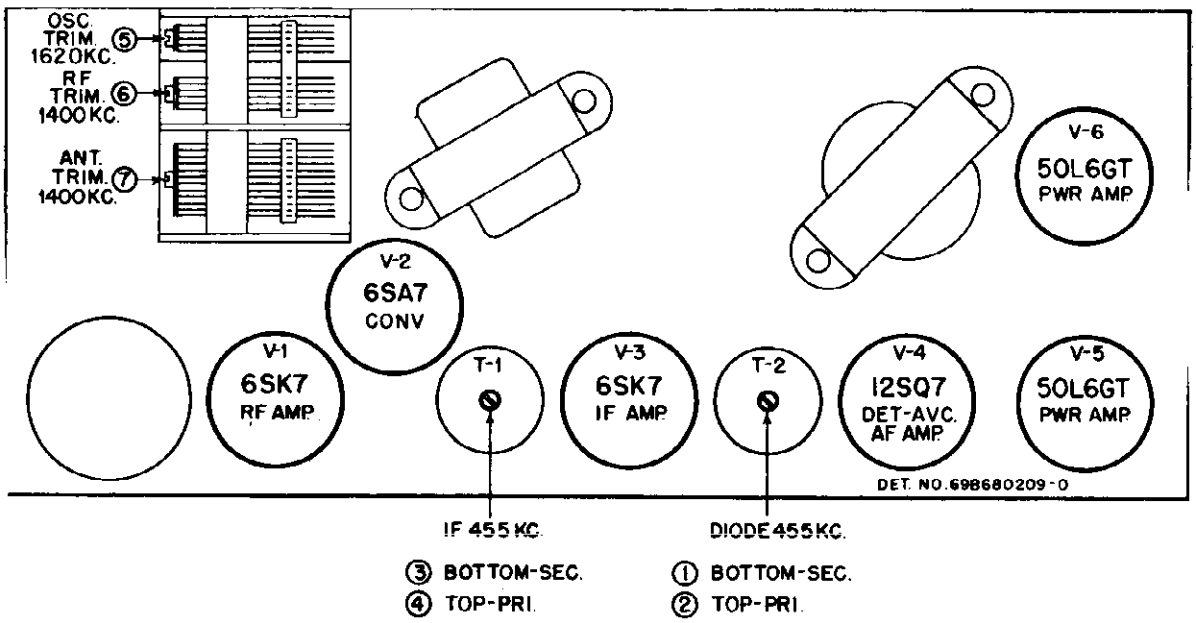

FIGURE 2. CHASSIS HS-150 & HS-155 TUBE & TRIMMER LOCATIONS

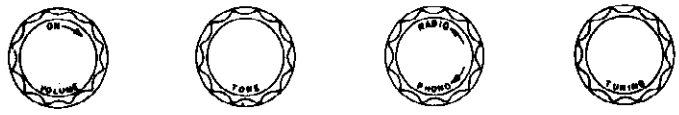

CHASSIS PARTS - ELECTRICAL

REF. NO.	PART NO.	DESCRIPTION
CAPACITORS		
C-1	1X484546	Variable, 3 gang: includes pulley .....
C-2	21R6641	Mica: 100 mmf 500V .....
C-3	8S9807	Paper: .1 mf 400V .....
C-4	8S9816	Paper: .05 mf 400V .....
C-5	8S9816	Paper: .05 mf 400V .....
C-6	8S9807	Paper: .1 mf 400V .....
C-7	8S9807	Paper: .1 mf 400V .....
C-8	8A71213	Paper: .05 mf 100V .....
C-12	23B482811	Electrolytic: 125-125-40 mf/150V, 100 mf/25V
C-13	8S9809	Paper: .01 mf 400V .....
C-14	21K77375	Ceramic: 250 mmf 500V .....
C-15	8K471628	Paper: .02 mf 100V .....
C-16	8S9813	Paper: .005 mf 600V .....
C-17	8A71213	Paper: .05 mf 100V .....
C-18	8S9809	Paper: .01 mf 400V .....
C-19	8S9809	Paper: .01 mf 400V .....
C-20	1A77283	Paper: .15 mf 200V; includes 10 turns of #24 wire .....
C-21	8S9809	Paper: .01 mf 400V .....
C-22	8S9809	Paper: .01 mf 400V .....
CAPACITOR-RESISTOR		
CR-1A, B,	21K481868	Capacitor-Resistor: consists of 250 mmf capacitor and 470,000 ohm resistor as one unit .....
CR-2A, B & C	21A473040	Capacitor-Resistor: consists of two 100 mmf capacitors and one 47,000 ohm resistor as one unit .....
RECTIFIER		
E-1	48B482807	Selenium type: 150 ma; half-wave .....
PILOT LIGHTS		
I-1,2	66X11854	Bulb: 6-8V; clear; bayonet base; #47 ...

RESISTORS		
Note:		All resistors are insulated carbon type unless otherwise specified.
R-1	6R3949	470 20% 1/2W .....
R-2	6R6028	22,000 20% 1/2W .....
R-3	6R6028	22,000 20% 1/2W .....
R-4	6R3933	220 20% 1/2W .....
R-5	6R3927	2.2 meg 20% 1/2W .....
R-6	6R6007	68 20% 1/2W .....
R-8	6R3927	2.2 meg 20% 1/2W .....
R-9	6R3927	2.2 meg 20% 1/2W .....
R-10	6R3994	27 10% 2W wirewound .....
R-12	18K471518	Volume Control: 1 meg; tapped at 300,000 ohms, includes power switch .....
R-13	6R6056	47,000 20% 1/2W .....
R-14	17K484399	560 10% 5W wirewound; coated .....
R-15	6R6336	270 10% 1W .....
R-16	6R3927	2.2 meg 20% 1/2W .....
R-17	6R6075	100,000 20% 1/2W .....
R-18	18K484386	Tone control: 1 meg .....
R-19	6R2030	12 10% 1/2W .....
R-20	6R5614	56 10% 1/2W .....
R-21	6R6015	220,000 20% 1/2W .....
R-22	6R6032	470,000 20% 1/2W .....
R-23	6R6032	470,000 20% 1/2W .....
R-24	6R6182	150,000 20% 1/2W .....
R-25	6R6330	150 10% 1W .....
SWITCH		
S-1	40A484381	Phono-Radio Switch .....
S-2	40K471447	Pushswitch: dual (Motor-Reject) .....
TRANSFORMERS		
T-1	24B482863	IF, 455 Kc: complete with iron tuning cores and padding capacitors but less shield.
COILS		
L-1	24K484516	Loop Antenna: winding only .....
L-2	24B484512	RF coil .....
L-3	24B484511	Oscillator coil .....
SPEAKER		
LS-1	50C680010	Speaker: 8" PM; 3.2 ohm voice coil .....

©John F. Rider

CHASSIS PARTS - MECHANICAL

1	7A77337	Bracket, tuning shaft
2	11M8944	Cord, dial: 18 lb black
3	30K21859	Cord, line and plug: 9 ft long
4	46A470885	Core, iron: threaded (for tuning T-1 & T-2 primary and secondary)
5	15A471444	Cover, switch (for S-2)
6	1X471776	Dial Plate, Brackets and Pulleys Assembly: complete except for dial scale & rubber scale mtg channels
7	57K470568	Dowel, back mtg: wood
8	5A70098	Eyelet, spacer (gang mtg)
9	37K15125	Grommet, gang mtg
10	14A470428	Insulator, rectifier mtg: fiber
11	14A471446	Insulator, switch cover (for S-2)
12	1X484553	Lead Assembly, phono-motor: includes leads, receptacle, pushswitch, cover and insulator; 35" long (HS-150 only)
	1X485104	Lead Assembly, phono-motor: includes leads, receptacle, pushswitch, cover and insulator; 55" long (HS-155 only).
13	1X484552	Lead Assembly, phono pick-up; includes 1-pin plug; 49" long (HS-150 only)
	1X76356	Lead Assembly, phono pick-up: includes 1-pin plug; 32" long (HS-155 only) .
14	32A24815	Lock, line cord
15	4S7650	Lockwasher: #6 internal (rectifier
16	4S7666	Lockwasher: #6 external; cad plated (terminal strip mtg)
17	29R5227	Lug, soldering: #6L; hot-tinned
18	29R5209	Lug, soldering: #8D; hot-tinned
19	2S7002	Nut: 6-32 x 5/16; steel; cad plated (rectifier mtg)
20	2S7051	Nut: 3/8-32 x 9/16; steel; cad pl; Palnut (volume control, tone control and phono-radio switch mtg)
21	240484513	Panel & Loop Assembly: includes back panel and loop antenna
22	26K71775	Plug, insulated: 1-pin (phono pickup)
23	52B481704	Pointer, dial
24	49A23960	Pulley, cord: 1/4" groove
25	49A21552	Pulley, cord: 1/2" groove
26	9K470402	Receptacle, phono-motor
27	5S7707	Rivet: .122 x 5/32 steel; nickel plated (terminal strip, trans and soldering lug mounting)
28	5S7701	Rivet: .122 x 3/16 steel; nkl pl (tuning shaft bracket and electrolytic wafer mounting)
29	5S7708	Rivet: .122 x 9/32 steel; nkl pl (line cord lock mtg)
30	5A71246	Rivet, shoulder: .187" lg (pulley mtg).
31	5A71735	Rivet, shoulder: 1/2" lg (pulley mtg).
32A	34C484382	Scale, dial: glass (HS-150 only)
32B	34C484517	Scale, dial: glass (HS-155 only)
33	3S7339	Screw: 6-32 x 5/8 plain hex head machine screw; steel; cad pl (gang mtg)
34	3S2999	Screw: 6-32 x 5/8 slotted locking type machine screw; steel; cad pl(gang mtg).
35	3S2977	Screw: 6-32 x 1-1/8 plain hex head machine screw; steel; cad pl (rectifier mtg)
36	3S7454	Screw: #8 x 1/4 PKZ plain hex head machine screw; steel; cad pl (dial assembly mounting)
37	3S7530	Screw: #8 x 1-1/2 PKZ plain hex head machine screw; steel; cad pl (back mtg).
38	1K471779	Shaft and Pulley Assembly, tuning
39	26K485936	Shield, coil (for T-1 & T-2)
40	9A482889	Socket, dial light and bracket
41	9A6790	Socket, tube: molded, octal
or	9A6788	Socket, tube: replacement type; used in place of 9A6790 when mounting ears on chassis break off
42	41A14244	Spring, tension coil (pointer & drive cord tension)
43	37K21114	Strip, channel: rubber; (dial scale mtg)
44	31K86126	Strip, terminal: 2 insulated lugs, #2 (on loop panel assembly)
45	31K470746	Strip, terminal: 3 insulated lugs, #2
46	31K471569	Strip, terminal: 5 insulated lugs, #4
47	31K471562	Strip, terminal: 5 insulated lugs, #4
48	29A5400	Terminal, plain pin (speaker terminal)
49	9A22056	Wafer, electrolytic mtg: bakelite
50	4A70015	Washer "C" (tuning shaft retainer)
51	4S1719	Washer: 3/8 x .140 x .030 thick; steel; cad pl (line cord lock mtg)
52	4S7613	Washer: 3/4 x 13/64 x .027 thick; copper oxide finish (back mtg)

CABINET PARTS

101	7A481713	Bracket, push switch mtg
102	38K482819	Button, plug: 1/4"; red mahogany finish (for concealing shipping screw holes in record changer)
103	1X485913	Button, push: "M";walnut (78F11)
104	1X485914	Button, push: "R";walnut (78F11)
105	1X485195	Button, push: "M"; mahogany (78F11M)
106	1X485196	Button, push: "R"; mahogany (78F11M)

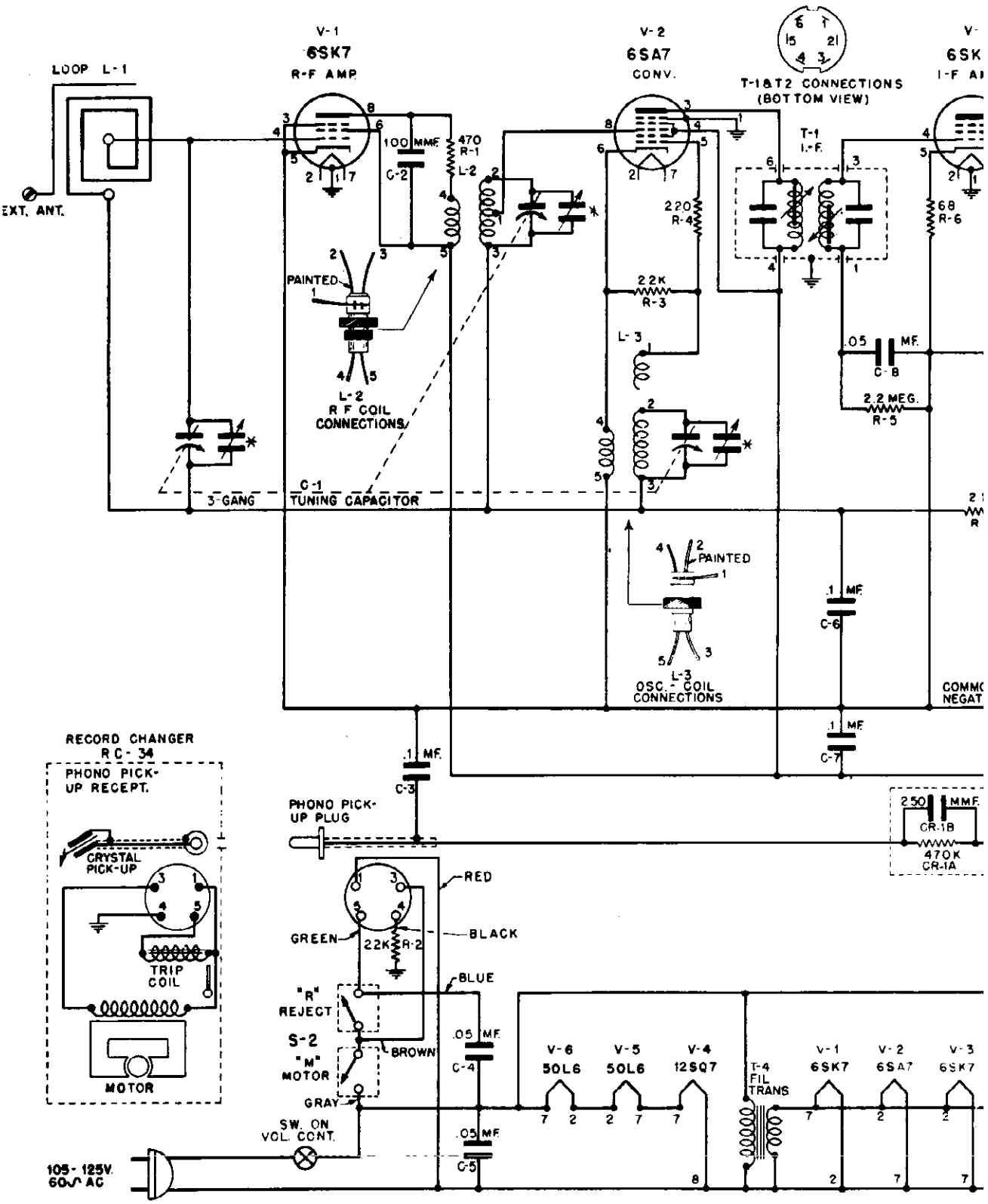
V-1
6SK7
R-F AMP
V-2
6SA7
CONV.
T-1&T2 CONNECTIONS
(BOTTOM VIEW)
LOOP L-1
EXT. ANT.
100 MMF.
C-2
470
R-1
L-2
PAINTED
L-2
R F COIL
CONNECTIONS
220
R-4
22K
R-3
T-1
I-F.
.05 MF.
C-8
2.2 MEG.
R-5
68
R-6
3-GANG
C-1
TUNING CAPACITOR
L-3
PAINTED
L-3
OSC. COIL
CONNECTIONS
.1 MF.
C-6
.1 MF.
C-7
.1 MF.
C-3
RECORD CHANGER
RC-34
PHONO PICK-
UP RECEPT.
PHONO PICK-
UP PLUG
250 MMF.
CR-1B
470K
CR-1A
CRYSTAL
PICK-UP
TRIP
COIL
MOTOR
RED
GREEN
22K R-2
BLACK
BLUE
"R"
REJECT
S-2
"M"
MOTOR
BROWN
GRAY
.05 MF.
C-4
.05 MF.
C-5
SW. ON
VOL. CONT.
105-125V.
60~ AC
V-6
50L6
V-5
50L6
V-4
12SQ7
T-4
FIL.
TRANS
V-1
6SK7
V-2
6SA7
V-3
6SK7

©John F. Rider

MOTOROLA INC.

MODELS 78F11, 78F11-M, 78F12-M, CHASSIS HS-150, HS-155

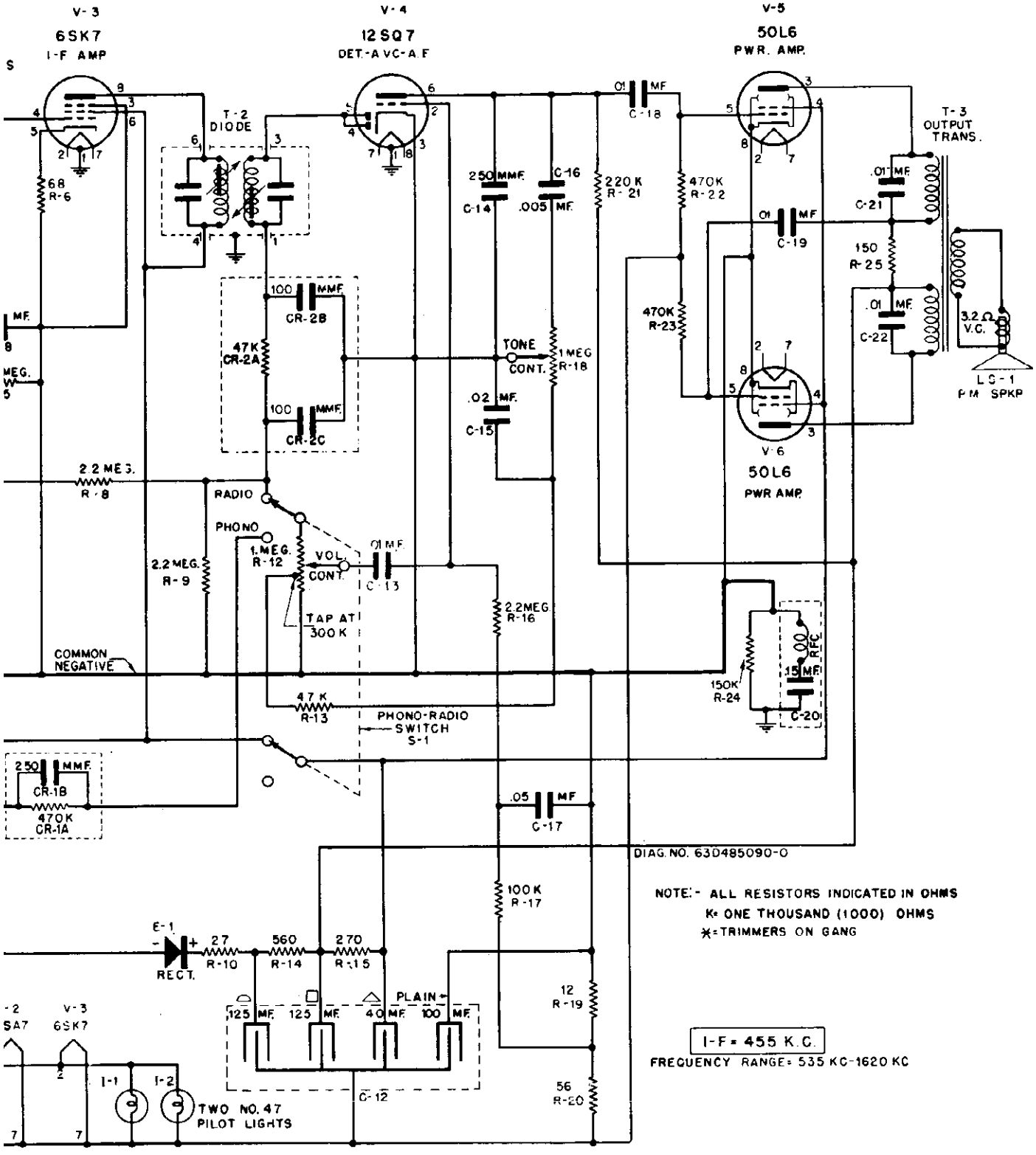

NOTE:- ALL RESISTORS INDICATED IN OHMS
K= ONE THOUSAND (1000) OHMS
*=TRIMMERS ON GANG

I-F = 455 K.C.

FREQUENCY RANGE= 535 KC-1620 KC

REF. NO.	PART NO.	DESCRIPTION
107	1X485915	Button, push: "M"; mahogany (78F12M) ...
108	1X485916	Button, push: "M"; mahogany (78F12M) ...
109	16K482799	Cabinet, spinet combination; brown mahogany (78F11) .....
110	16F481718	Cabinet, spinet combination: red mahogany (78F11M) .....
111	16F481758	Cabinet, console combination: red mahogany (78F12M) .....
112	55B72307	Catch, bullet .....
113	13K482798	Cloth, grille: brown mahogany (78F11) ..
114	13K481719	Cloth, grille: red mahogany (78F11M) ...
115	13K481763	Cloth, grille: red mahogany (78F12M) ...
116	13K482138	Escutcheon, dial: antique brass finish .
117	12A471458	Escutcheon, push button: statuary bronze finish .....
118	5A12691	Grommet, rubber (speaker cushion) .....
119	55A471394	Hinge, lid mtg (78F12M) .....
120	36K484526	Knob, control: walnut plastic; "TUNING" (78F11) .....
121	36K484528	Knob, control: walnut plastic; "ON-VOLUME" (78F11) .....
122	36K484525	Knob, control: walnut plastic; "RADIO-PHONO" (78F11) .....
123	36K484527	Knob, control: walnut plastic; "TONE" (78F11) .....
124	36K484522	Knob, control: mahogany plastic; "TUNING" (78F11M and 78F12M) .....
125	36K484524	Knob, control: mahogany plastic; "ON-VOLUME" (78F11M & 78F12M) .....
126	36K484521	Knob, control: mahogany plastic; "RADIO-PHONO" (78F11M & 78F12M) .....
127	36K484523	Knob, control: mahogany plastic; "TONE" (78F11M & 78F12M) .....
128	22S1647	Nail, furniture: #42; antique brass (rear panel mtg) .....
129	2H38759	Nut, self-locking (speaker mtg -78F11 and 78F11M) .....
130	2B680009	Nut, self-locking (speaker mtg -78F12M)..
131	2A72610	Nut, tee: 8-32 thread (on cabinet-chassis mounting) .....
132	35K470657	Pad, felt .....
133	64K484557	Panel, cabinet rear; walnut (78F11) ....
134	64K481724	Panel, cabinet rear: mahogany (78F11M) .
135	64K481725	Panel, cabinet rear: mahogany (78F12M) .
136	64C482829	Panel, record changer cover (78F11 & 11M)
137	55A481715	Pull, drawer: English antique finish (78F11 and 78F11M) .....
138	55A481759	Pull, drawer: dummy (78F12M) .....
139	55C74786	Rail, support: right-hand .....
140	55K74787	Rail, support: left-hand .....
141	3S7156	Screw: 6-32 x 3/16 slotted binder head machine screw; steel; cad pl (push switch mounting) .....
142	3K481722	Screw: 8-30 x 7/8 washerhead machine screw; antique copper finish (drawer pull mtg - 78F11 & 78F11M) .....
143	3K481761	Screw: 8-32 x 1/4 washerhead machine screw' statuary bronze (drawer pull mtg - 78F12M) .....
144	3S2963	Screw: 8-32 x 1-3/4; slotted hex head machine screw; steel; cad pl (chassis mounting - 78F12M) .....
145	3S488129	Screw: #4 x 5/8 Phillips oval head machine screw; statuary bronze finish (push button escutcheon mtg) .....
146	3S7436	Screw: #6 x 1/2 slotted round head machine screw; antique copper finish (lid support mtg - 78F12M) .....
147	3S1314	Screw: #6 x 3/4 slotted round head wood screw; statuary bronze finish (support rail mtg) .....
148	3S476106	Screw: #8 x 1 PKA slotted hex head sheet metal screw; steel; cad pl (chassis mtg-78F12M) .....doz
149	3S3396	Screw: #8 x 1-1/4 PKA plain hex head sheet metal screw; steel; cad pl (chassis mtg-78F11 and 78F11M) .....
150	3K653	Screw, speaker mounting .....doz
151	55K72308	Strike, bullet: includes nail .....
152	55B482802	Support, lid: statuary bronze finish (78F12M)
153	4K485917	Washer, felt: used behind control knobs.doz
154	4S7630	Washer: 1/2 x 7/32 x .033 thick; steel; cad pl (chassis mtg -78F12M) .....doz
155	4S8214	Washer: 7/8 x .203 x .067 thick; steel; cad pl (chassis mtg) .....doz
T-2	24B482865	Diode. 455 Kc: complete with iron tuning cores and padding capacitors but less shield
T-3	25B482808	Output Transformer .. ..
T-4	25B482810	Filament Transformer .....

© John F. Rider

MOTOROLA INC.

MODELS 95F31, 95F33,
CHASSIS HS-38; 95F31B,
95F31M, CHASSIS HS-39

FIGURE 3. CONTROLS

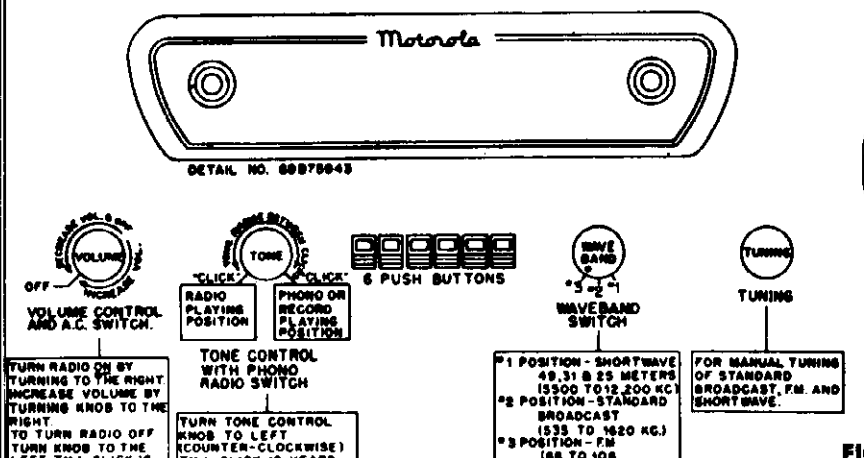

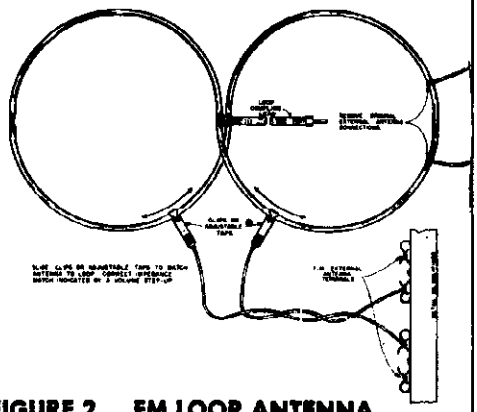

FIGURE 2. FM LOOP ANTENNA

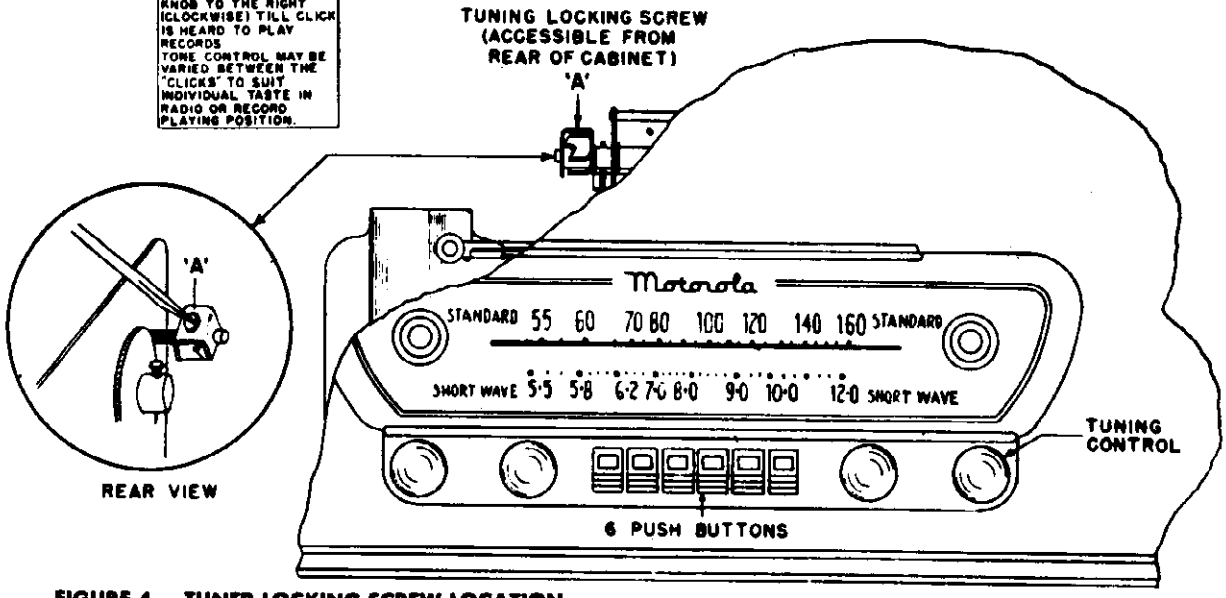

FIGURE 4. TUNER LOCKING SCREW LOCATION

INSTRUCTIONS FOR SETTING AUTOMATIC TUNER PUSH BUTTONS

1. Turn the radio ON and allow it to warm up for a period of at least fifteen minutes.
2. While waiting for the radio to warm up, loosen the tuner locking screw (A) all the way. The locking screw is accessible from the rear of the cabinet. (See Figure 4).
3. Make a list of the frequencies of the local stations you wish to tune in automatically. It is recommended that you select the most powerful stations only.
4. Turn the band switch to FM or BC position, depending on the station being setup, and carefully tune in the first station.

   NOTE: The buttons may be used on either BC, FM, or any combination of AM and FM. BE SURE TO SET THE BAND SWITCH ON THE PROPER BAND!

5. Adjust a signal generator to zero beat with the AM station.

   NOTE: While it is advisable to use a signal generator for accuracy, it is not an absolute necessity. The station signal may be used.

6. Tune to the desired station or to the signal generator, with the tuning knob (right hand control).
7. Holding the tuning knob, push the selected button and HOLD IN UNTIL THE MOTOR STOPS.
8. Repeat steps 6 and 7 for each of the buttons.
9. Carefully tighten the tuner locking screw (A).
10. Check the setting of the button by tuning in the station manually, then push the button set for that station; no effect on volume or tone should be noticed. If not correctly set, readjust--following steps 4 through 9.

MODELS 95F31, 95F33, CHASSIS HS-38; 95F31B, 95F31M, CHASSIS HS-39

MOTOROLA INC.

FM SERVICE NOTES

In some cases, people are not tuning FM sets properly. FM is more difficult to tune than AM, although Motorola receivers are easier than most. There are three peaks present; the center peak, which is the correct one, is hard to locate. The peaks on either side of the center are slightly distorted. If you get a distorted peak on only <u>one</u> side of the center, the discriminator is probably out of alignment.

Some people expect too much of FM. You cannot expect great distance. The horizon, as viewed from the transmitting antenna, is the normal service area. Many FM stations are now operating on the low power, waiting for new equipment. Reception will improve greatly when power is increased. Most of the bad reports have come from the fringe areas. In many cases reception can be improved by using a dipole antenna, mounted as high above the roof as possible, and aimed directly at the station.

Location of the radio is important when it is operated on its built-in loop antenna. Moving the set even a few feet away from its present location may increase or reduce signal strength by more than 50% because a stronger signal may exist at one location than another. Therefore, in homes where reception is poor, you may be able to improve it by placing the set against another wall. The Motorola figure 8 loop antenna is omnidirectional.

Motorola FM sets use a relatively new circuit known as the Ratio Detector, instead of the usual limiters. The following paragraph of explanation is quoted from the R.C.A. License Laboratory Bulletin:

"Since a circuit of this type is relatively immune to amplitude modulation, it is unnecessary to precede it by a limiter stage. Also, since its immunity is not a direct function of the signal strength, there is no threshold action of the type encountered where limiters are employed."

It has been thought, erroneously, that the use of limiters in an FM receiver is <u>imperative</u> for proper reception. This is not the case. In this connection, it is important to understand that a limiter requires several volts at its grid to become effective. If the received signal strength is too weak to provide the required voltage at the limiter grid, <u>the limiters do not function</u>. This means that below a certain threshold of signal level, the limiters do not work and as a result do not contribute to amplitude (noise) rejection. Furthermore, noise voltages are not purely amplitude modulated, but contain frequency modulated components against which no amplitude rejection device will discriminate.

From the above comparison, you can see that there is little, if any, difference between the two circuits insofar as noise reception is concerned. In either case, low signal levels from the FM stations will result in noise reception, if there is any noise in the neighborhood.

The main advantages of ratio detection, as used in Motorola FM are, first, very little between station noise, and second, easier tuning because the side peaks are slightly subdued (as compared to the limiter type of receiver), making it easier to find the center peak.

©John F. Rider

MOTOROLA INC. MODELS 95F31, 95F33, CHASSIS HS-38; 95F31B, 95F31N, CHASSIS HS-39

ALIGNMENT

ALIGNMENT PROCEDURE WHEN USING AM MODULATED SIGNAL GENERATOR AND STANDARD OUTPUT METER FOR COMPLETE RECEIVER ALIGNMENT.

An AM (amplitude modulated) signal generator covering the frequencies shown in alignment chart, is used to align the broadcast, short wave and FM bands. A low range output meter, connected across the speaker voice coil is used as an output indicator.

The broadcast and short wave alignment is conventional; full instructions are given in the following alignment chart.

The FM band alignment can be satisfactorily performed by following the instructions in the chart. When properly aligned, the discriminator does not respond to amplitude modulation and since an AM type signal generator is used for aligning the FM circuits, it is necessary to detune the discriminator secondary and leave it that way until all of the FM circuits have been aligned. After completing the alignment of the FM circuits, proceed to align the discriminator secondary by applying a 4.3 Mc AM signal to the control grid of the 7F8 2nd FM converter tube and adjusting the discriminator secondary core for minimum audio output. No adjustment of the FM circuits should be attempted with AM after the discriminator secondary has been properly aligned.

Use a 30% AM (amplitude modulated) signal throughout entire alignment procedure.

A dial scale should be temporarily mounted or held in position on Chassis HS-38 to facilitate calibration.

Use an insulated screwdriver when adjusting the FM tuner trimmers.

A special wrench for adjusting the slotted nuts on the tuner cores will be required. You can easily fabricate one from a Motorola auto set Volume Control Shaft and Coupling Assembly (Part No. 1B70847, $.30 list) by simply spreading out the forked ends and filing to fit. Solder the assembly together to make it rigid.

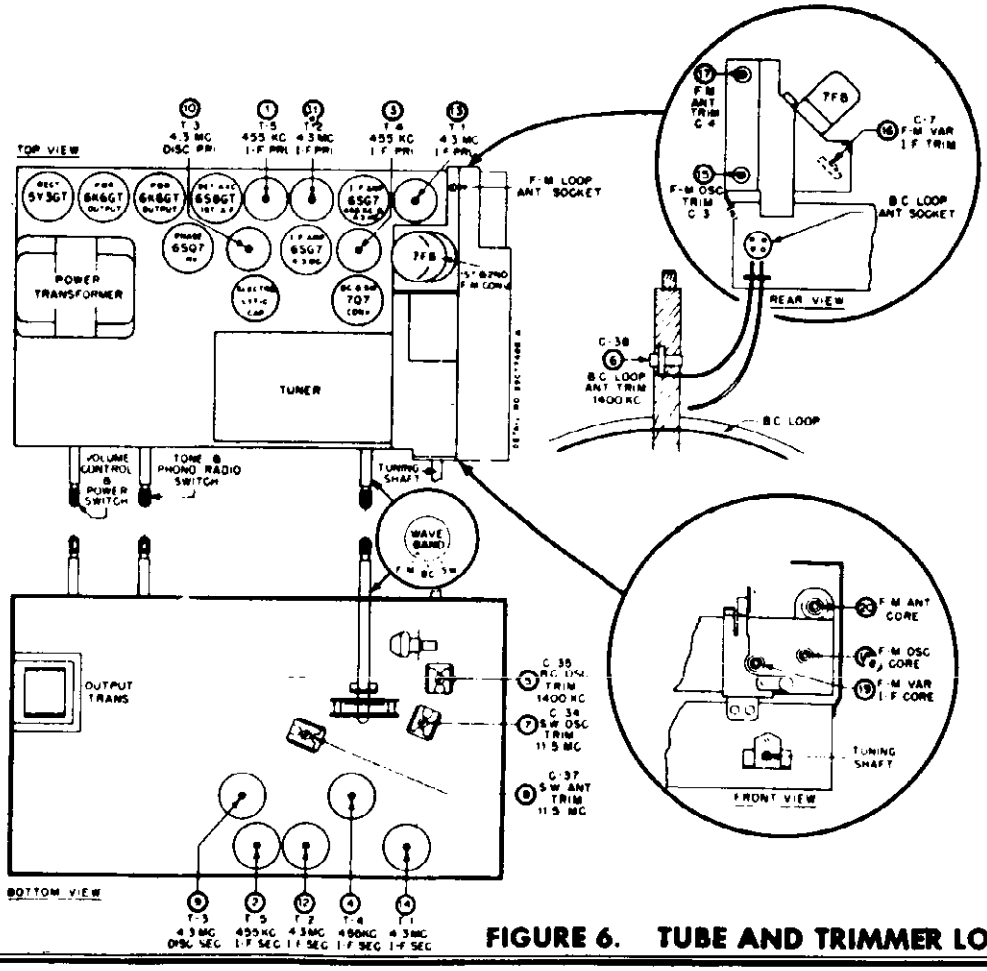

FIGURE 6. TUBE AND TRIMMER LOCATIONS

CHART I. ALIGNMENT PROCEDURE WHEN USING AM MODULATED SIGNAL GENERATOR AND STANDARD OUTPUT METER FOR COMPLETE RECEIVER ALIGNMENT.

STEP	DIAL SET TO	BAND SW. SET TO	DUMMY	SIGNAL GENERATOR CONNECTED TO	SIGNAL GENERATOR SET AT	ADJUST TRIMMER OR CORE	REMARKS
455 Kc I.F. CHANNEL ALIGNMENT							
1.	1620 KC	B.C.	.1 MF.	7Q7 B.C. & S.W. CONV. GRID (PIN #4) & CHASSIS	455 KC	1, 2, 3 & 4	ADJUST FOR MAXIMUM OUTPUT
BROADCAST BAND ALIGNMENT							
2.	1400 KC	B.C.	.1 MF.	7Q7 B.C. & S.W. CONV. GRID (PIN #4) & CHASSIS	1400 KC	5(B.C. OSC. TRIM)	SET OSCILLATOR TO DIAL. (ON CHASSIS HS-38, MOUNT OR HOLD DIAL SCALE TEMPORARILY ON CHASSIS WITH GANG FULLY MESHED, POINTER SHOULD BE AT LAST MARK ON DIAL. THEN SET TO 1400 KC. AND SET OSCILLATOR.)
3.	1400 KC	B.C.	NONE	RADIATION LOOP*	1400 KC	6(B.C. LOOP ANTENNA TRIM.)	ADJUST FOR MAXIMUM OUTPUT
SW. BAND ALIGNMENT							
4.	11.5 MC	S.W.	.1 MF	7Q7 B.C. & S.W. CONV. GRID (PIN #4) & CHASSIS	11.5 MC	7(S.W. OSC. TRIM)	SET OSC. TO DIAL. MAKE SURE OSC. IS HIGHER IN FREQUENCY THAN THE SIGNAL BY CHECKING IMAGE RESPONSE WHICH SHOULD OCCUR WITH THE INPUT SIGNAL AT 12.41 MC.
5.	11.5 MC	S.W.	50 MMF	S.W. ANT. TERMINAL AND CHASSIS.	11.5 MC	8(S.W. ANT. COIL TRIM)	B.C. LOOP PLUG SHOULD BE DISCONNECTED. ADJ. FOR MAXIMUM OUTPUT
9.2 Mc I.F. CHANNEL ALIGNMENT							
6.						9(DISC. SEC.)	DETUNE DISCRIMINATOR SECONDARY BY SCREWING CORE OUT AS FAR AS IT WILL GO.
7.	112 MC	FM	.001 MF	7F8 2ND FM CONVERTOR GRID (#1 PIN) & CHASSIS	4.3 MC	10, 11, 12, 13 & 14 (4.3 MC I.F.)	ADJUST FOR MAXIMUM OUTPUT
FM BAND ALIGNMENT							
8.						18 (FM OSC. CORE)	CHECK THE POSITION OF THE FM OSC. TUNING CORE 18. SET SPACING BETWEEN THE CORE AND BAKELITE PIECE TO WHICH IT IS MOUNTED, TO 1/32" BY TURNING TUNING CORE SLOTTED NUT.
9.	90 MC	FM	NONE	FM LOOP ANTENNA RECEPTACLE & CHASSIS REMOVE FM LOOP.	90 MC	15, 16 & 17 (FM OSC., ANT. & VARIABLE I.F. TRIM)	ADJUST FOR MAXIMUM OUTPUT
10.	105 MC	FM	NONE	FM LOOP ANTENNA RECEPTACLE & CHASSIS REMOVE FM LOOP.	105 MC	18, 19 & 20 (FM OSC., ANT. & VARIABLE I.F. CORES)	ADJUST FOR MAXIMUM OUTPUT
11.							REPEAT STEPS 9 AND 10 SEVERAL TIMES UNTIL FURTHER ADJUSTMENT DOES NOT INCREASE THE OUTPUT. MAKE THE FINAL TRIMMER ADJUSTMENT AT 105 MC. (I.E TRIMMERS 15, 16 AND 17 AT 105 MC).
12.	105 MC	FM	NONE	RADIATION LOOP *	105 MC	17 (FM ANT. TRIMMER)	ADJUST FOR MAXIMUM OUTPUT WITH FM LOOP ANTENNA CONNECTED.
ALIGN DISCRIMINATOR SECONDARY							
13.		FM	.001 MF	7F8 2ND FM CONVERTOR GRID (#1 PIN) & CHASSIS	4.3 MC	9(DISC. SEC.)	ADJUST DISCRIMINATOR SECONDARY FOR MINIMUM RESPONSE. THE CORRECT ADJUSTMENT IS THE SHARPLY DEFINED MINIMUM RESPONSE POINT BETWEEN THE TWO PEAKS.

* CONNECT OUTPUT OF SIGNAL GENERATOR TO A 5" DIAMETER, 3 TURN LOOP & RADIATE SIGNAL INTO RECEIVER LOOP, MINIMUM DISTANCE BETWEEN LOOPS SHOULD NEVER BE LESS THAN 12".

©John F. Rider

MOTOROLA INC.

MODELS 95F31, 95F33, CHASSIS HS-38; 95F31B, 95F31M, CHASSIS HS-39

CHART II. ALIGNMENT PROCEDURE WHEN USING FM SIGNAL GENERATOR AND OSCILLOSCOPE.

STEP	OPERATION
	455 Kc. I.F. Channel Alignment
1.	Same as step 1 in Chart I (Use AM signal generator)
	Broadcast Band Alignment
2.	Same as steps 2 & 3 in Chart I (Use AM signal generator)
	S. W. Band Alignment
3.	Same as steps 4 & 5 in Chart I (Use AM signal generator)
	4.3 Mc I.F. Channel Alignment Using FM Signal Generator & Oscilloscope
4.	(A) Discriminator -
	1. Connect the input terminals of the oscilloscope vertical amplifier to the high side of the receiver volume control and the chassis.
	2. Connect the FM generator synchronizing voltage output terminals to a phase shifting network, consisting of a variable 1/2 megohm resistor in series with a .002 mf capacitor. The input to the oscilloscope horizontal amplifier is connected across the .002 mf capacitor. See Figure 7. (This phase shifting network may not work with every oscilloscope. Different values of R & C may be required).
	3. Apply an FM 4.3 Mc Signal (125 Kc deviation) through a .01 mf capacitor to the control grid (pin #4) of the 6SG7 tube in the second I.F. amplifier stage.
	4. Screw discriminator secondary core (9) out as far as it will go.
	5. Adjust discriminator primary until the pattern obtained on the scope is symmetrical about the vertical axis. The phase shifting network resistor is adjusted to give only one trace. The pattern obtained is the resonance curve of the primary, whose maximum response should be at exactly 4.3 Mc. (See Figure 8).
	6. Adjust discriminator secondary until a symmetrical pattern is obtained, with peaks occurring at about 100 Kc above and below 4.3 Mc and is substantially linear between peaks. The trace should pass through the intersection of the vertical and horizontal axis. The phase shifting network should be adjusted to give only a single pattern at all times. (See Figure 9).
	(B) 4.3 Mc I.F. Amplifiers -
	1. Apply an FM 4.3 signal (100 Kc deviation) to the control grid (pin #4) of the 6SG7 tube in the 1st I.F. amplifier stage, through a .001 mf capacitor and adjust both primary and secondary cores (11 & 12) to get a symmetrical pattern as before, with peaks occurring at a slightly lower deviation.
	2. Apply an FM 4.3 Mc signal (100 Kc deviation) to the control grid (pin #1) of the 7F8 tube, and adjust both primary and secondary cores (13 & 14) until a symmetrical pattern substantially linear between peaks, is obtained.
	FM Band Alignment
5.	Check the position of the FM oscillator tuning core (18). Set the spacing between the core and the bakelite piece to which it is mounted, to 1/32" by turning tuning core slotted nut.

MODELS 95F31, 95F33, CHASSIS HS-38; 95F31B, 95F31M, CHASSIS HS-39 MOTOROLA INC.

OPERATION

STEP

6. Remove the FM loop and connect generator output directly to the receiver FM loop receptacle.

7. Set receiver dial to 90 Mc and also FM signal generator to 90 Mc. (22-1/2 Kc deviation). Adjust FM oscillator, antenna & variable I.F. trimmers (15, 16 & 17) for maximum indication on output meter. (Output meter should be connected across speaker voice coil).

8. Set receiver dial to 105 Mc and also FM signal generator to 105 Mc (22-1/2 Kc deviation). Adjust FM oscillator, antenna and variable I.F. Cores (18, 19 & 20) for maximum indication on output meter.

9. Repeat steps 7 & 8 several times until further adjustment does not increase the output. Make the final trimmer adjustment at 105 Mc. (i.e. trimmers 15, 16 and 17 at 105 Mc.).

10. Connect FM loop antenna to receiver receptacle. Radiate an FM 105 Mc (22-1/2 Kc deviation) signal into FM loop. Set receiver dial to 105 Mc and adjust trimmer (17) for maximum.

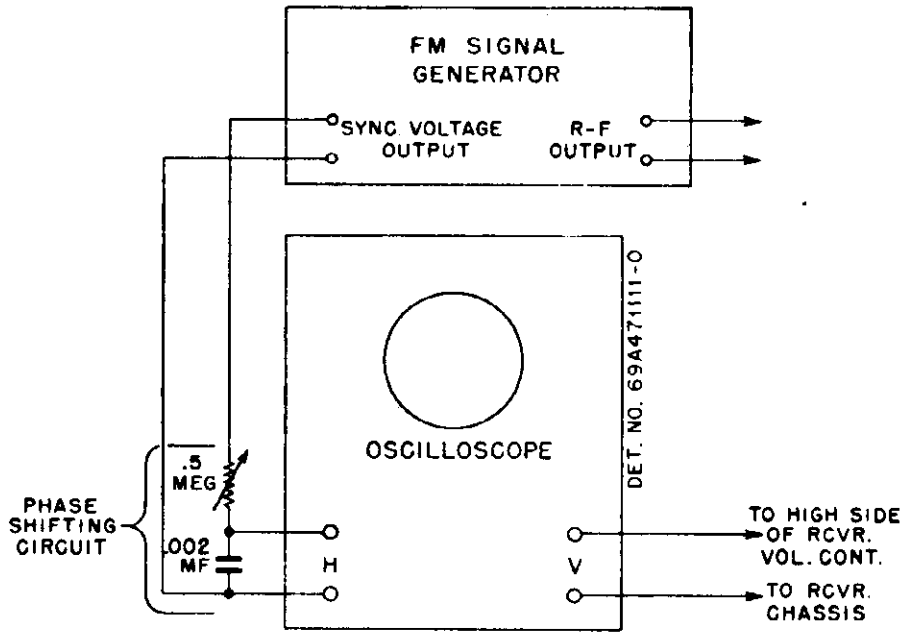

FIGURE 7. SIGNAL GENERATOR & OSCILLOSCOPE HOOK-UP

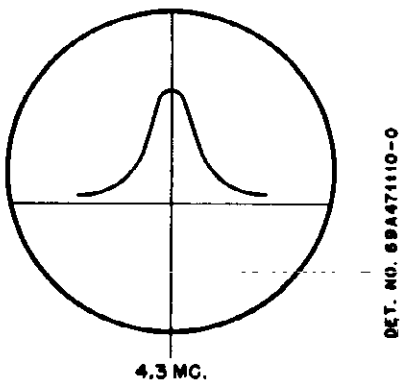

PATTERN WITH DISCRIMINATOR PRIMARY (10) CORRECTLY ADJUSTED.

FIGURE 8.

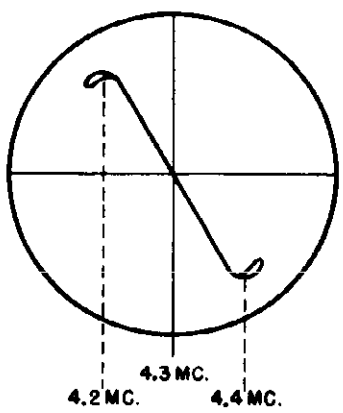

PATTERN WITH DISCRIMINATOR SECONDARY (9) CORRECTLY ADJUSTED.

FIGURE 9.

©John F. Rider

MODELS 95F31B, 95F31M, CHASSIS HS-39

MOTOROLA INC.

MODELS 95F31, 95F33, CHASSIS HS-38

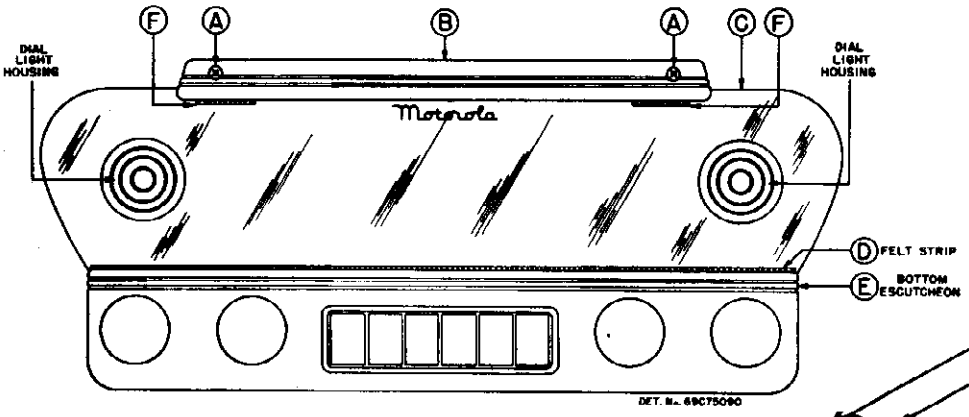

TO SERVICE LONG LIFE PILOT LIGHTS, PROCEED AS FOLLOWS:

1- UNSCREW THE TWO SCREWS MARKED 'A' AND REMOVE BAKELITE ESCUTCHEON 'B'.

2- PULL TOP OF GLASS DIAL SCALE 'G' FORWARD UNTIL DIAL LIGHT HOUSINGS CLEAR CABINET, THEN LIFT GLASS DIAL SCALE CLEAR OF CABINET.

3- REPLACE DEFECTIVE PILOT LIGHT. USE #51 BULBS ONLY.

4- BEFORE REPLACING DIAL SCALE, REMOVE FELT STRIP 'D' FROM BOTTOM ESCUTCHEON 'E'. FLATTEN FELT AND LAY OVER GROOVE IN ESCUTCHEON 'E'.

5- REPLACE DIAL SCALE BY LAYING LOWER EDGE ON FELT IN BOTTOM ESCUTCHEON 'E' AND PRESSING DIAL SCALE DOWN UNTIL PILOT LIGHT HOUSINGS SNAP INTO PLACE.

6- REPLACE UPPER ESCUTCHEON 'B'. MAKE CERTAIN THE TWO FELT STRIPS 'F' ARE PROPERLY PLACED BEFORE FASTENING ESCUTCHEON.

FIGURE 11. DIAL LIGHT REPLACEMENT DETAIL (95F33 ONLY)

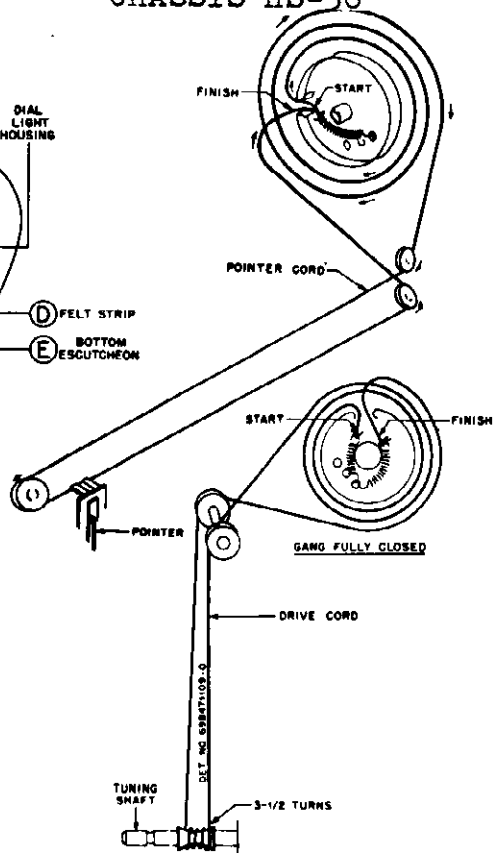

FIGURE 10. POINTER AND DRIVE CORD DETAIL

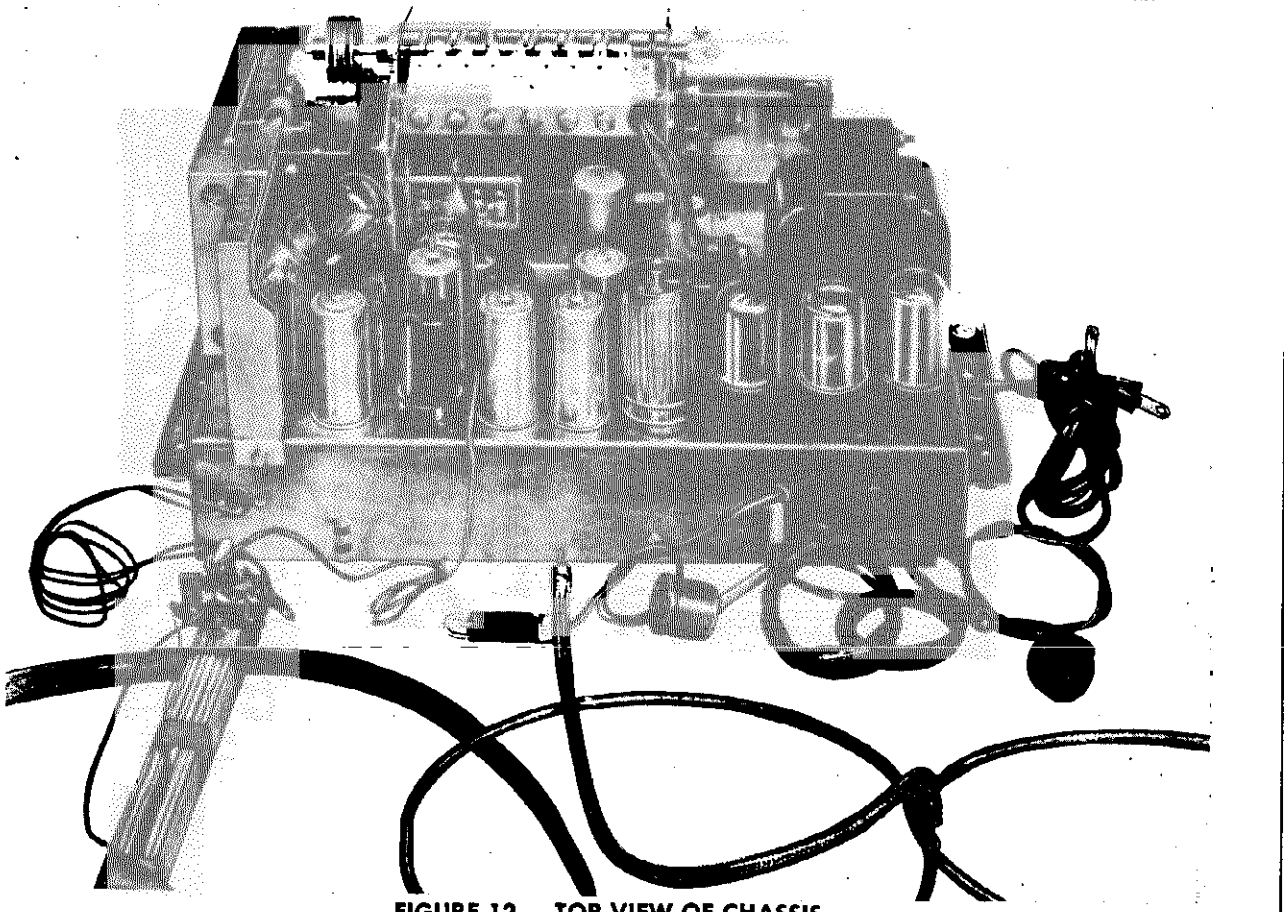

FIGURE 12. TOP VIEW OF CHASSIS

MODELS 95F31, 95F33, CHASSIS HS-38; 95F31B, 95F31M, CHASSIS HS-39

MOTOROLA INC.

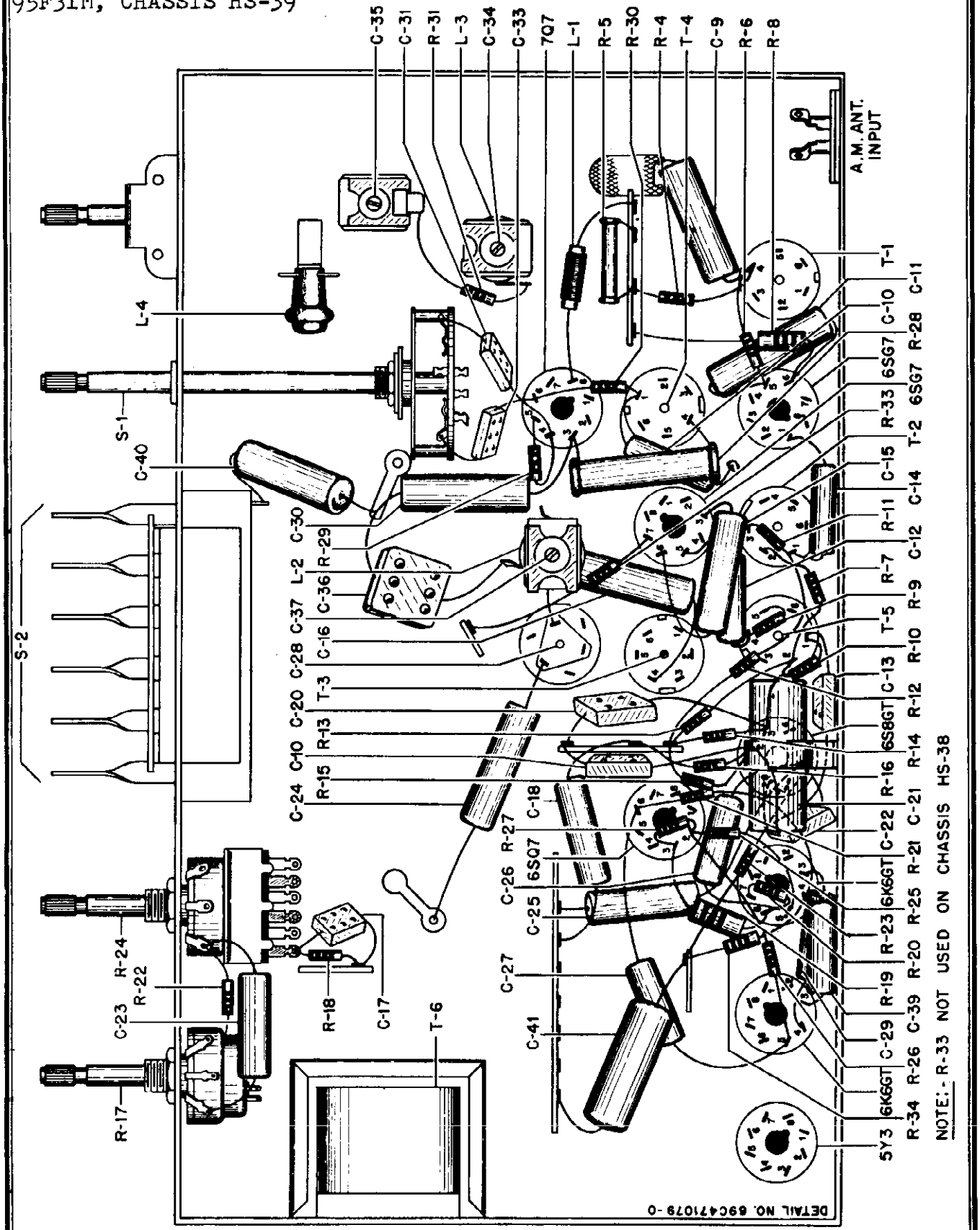

FIGURE 13. BOTTOM VIEW OF CHASSIS

© John F. Rider

CAPACITORS:

C-1	21A75479	Special: 1.3 mmf	
C-2	21A112247	Silver mica: 250 mmf	
C-3	20K74940	Variable ceramic: 7-45 mmf	
C-4	20A74939	Variable ceramic: 5-25 mmf	
C-5	21R2729	Mica: 250 mmf 500V	
C-6	21A76320	Ceramic: 16 mmf	
C-7	20K74940	Variable ceramic: 7-45 mmf	
C-8	21R2730	Mica: 500 mmf 500V	
C-9	8S9801	Paper: .05 mf 100V	
C-10	8S9809	Paper: .01 mf 400V	
C-11	8S9816	Paper: .05 mf 400V	
C-12	8S9809	Paper: .01 mf 400V	
C-13	21R6648	Mica: 250 mmf 500V	
C-14	8S9801	Paper: .01 mf 100V	
C-15	8S9816	Paper: .05 mf 400V	
C-16	8S9816	Paper: .05 mf 400V	
C-17	21R6641	Mica: 100 mmf 500V	
C-18	8S9813	Paper: .005 mf 600V	
C-19	21R6661	Mica: .004 mf 10% 300V	
C-20	21R6661	Mica: .004 mf 10% 300V	
C-21	23K77635	Electrolytic: 10 mf 100V	
C-22	21R6648	Mica: 250 mmf 500V	
C-23	8S9813	Paper: .005 mf 600V	
C-24	8S9816	Paper: .05 mf 400V	
C-25	8S9813	Paper: .005 mf 600V	
C-26	8S9809	Paper: .01 mf 400V	
C-27	8S9809	Paper: .01 mf 400V	
C-28	23A27718	Electrolytic: 30-30-20 mf/350-300-25V	
C-29	8S9813	Paper: .005 mf 600V	
C-30	8S9816	Paper: .05 mf 400V	
C-31	21R6642	Mica: 50 mmf 500V	
C-32	19B72560	Variable: 2 gang	
C-33	21R6642	Mica: 50 mmf 500V	
C-34	20A71141	Mica Trimmer: 10-80 mmf	
C-35	20A75234	Mica Trimmer: 10-80 mmf:	with mounting bracket
C-36	21R2724	Mica: 1000 mmf 5% 300V	
C-37	20A71141	Mica trimmer: 10-80 mmf	
C-38	20A71226	Mica trimmer: 2-12 mmf:	with mounting bracket
C-39	8S9813	Paper: .005 mf 600V	
C-40	8S9806	Paper: .1 mf 200V	
C-41	8S9807	Paper: .1 mf 400V	
C-42	21A112247	Silver mica: 250 mmf	

RESISTORS:

R-1	6R2109	10 meg 1/2w
R-2		
R-3	6R6013	1.5 meg 1/2w
R-4	6R6477	15,000 10% 1/2w
R-5	6R6313	22,000 10% 1w not Ins.
R-6	6R6410	33,000 10% 1/2w
R-7	6R6433	2.2 meg 10% 1/2w
R-8	6R5588	39,000 10% 1w
R-9	6R6301	1000 1/2w
R-10	6R6056	47,000 1/2w
R-11	6R6398	150,000 10% 1/2w
R-12	6R6397	22,000 10% 1/2w
R-13	6R6004	1 meg 1/2w
R-14	6R6397	22,000 10% 1/2w
R-15	6R6320	10,000 10% 1/2w
R-16	6R6446	4.7 meg 10% 1/2w
R-17	18K74891	Volume control & switch: 1 meg; tapped at 300K
R-18	6R6046	1 meg 10% 1/2w
R-19	6R3968	180 10% 2W
R-20	6R5621	10 10% 1/2w
R-21	6R6015	220,000 1/2w
R-22	6R6410	33,000 10% 1/2w
R-23	6R6000	68,000 1/2w
R-24	18A28062	Tone Control & Phono-Radio Switch;
R-25	6R6032	470,000 1/2w
R-26	6R6032	47,000 1/2w
R-27	6R6075	100,000 1/2w
R-28	6R3967	12,000 10% 3w Not Ins.
R-29	6R6028	22,000 1/2w
R-30	6R6032	470,000 1/2w
R-31		220 1/2w
R-32	6R6013	15,000 1w Not Ins.
R-33	17K77634	Wire wound: 2.7 1/2w
R-34	6R6075	100,000-1/2w

SWITCHES:

S-1	40B74864	Switch, band: 3 position
S-2	1X75820	Switch, push button: 6 button; with muting switch

COILS:

L-1	24A74989	Filament choke
L-2	24A74822	S. W. Antenna
L-3	24A74820	S. W. oscillater
L-4	24A74821	B. C. oscillator
L-5	1X76326	Loop Assembly, FM Band: with leads
	14A75142	Insulator, FM loop mtg: bakelite
L-6	24C75532	Loop Assembly, BC band: complete with leads and trimmer (95F33)
	24K76103	Same as above except for (95F31, 95F31B & 95F31M)
	29K19871	Plug, 4 pin (loop plug)

TRANSFORMERS:

T-1	24B75481	1st I.F.: 4.3 Mc; complete with iron cores and padding, capacitors, but less shield
T-2	24B75473	2nd I.F.: 4.3 Mc; complete with iron cores and padding capacitors but less shield
T-3	24B75456	Discriminator: 4.3 Mc; complete with iron cores and padding capacitors but less shield.
	26B70107	Shield, coil (for T-1, T-2, & T-3)
T-4	24B75487	I.F.: 455 Kc; complete with iron cores and padding capacitors but less shield
T-5	24B70537	Diode: 455 Kc; complete with iron cores and padding capacitors but less shield
	1A71049	Shield & Iron Core Sleeve Assembly (for T-4 & T-5)
T-6	25K74706	Output
T-7	25C75489	Power

SPEAKER:

	50B72379	Electrodynamic: 10"; 800 ohm field; 3.2 ohms V.C.

CHASSIS PARTS (HS-38 & HS-39)

	7A14684	Bracket, tuning shaft
	65X11854	Bulb: 6-8V, bayonet base; tubular; #47
	65X4151	Bulb: 6-8V, bayonet base; round; #51
	1IM8944	Cord, dial: 18 lb; black yard
	30K21859	Cord, line: 9 ft. long; with plug
	1X76406	Dial Assembly: includes pointer rail with slider, 2 mtg. brackets, 5 cord pullies and 2 pilot light sockets (HS-38 chassis)
	1X76370	Dial Plate, Brackets & Pulleys Assembly: complete dial assembly, but less pointer, glass dial scale and dial scale rubber channel strips (HS-39 chassis)
	1X76402	Lead Assembly, phono pick up; with 1 pin plug; 42" long
	1X76366	Lead Assembly, speaker: includes receptacle
	32A24815	Lock, line cord: fibre
	9A12705	Plate, electrolytic capacitor mtg: bakelite
	28K71775	Plug, 1 pin (phono pick-up)
	52B71280	Pointer, dial (HS-38)
	52B74418	Pointer, dial (HS-39)
	1X76393	Pulley Assembly: two 1-5/16" pulleys on brass bushing (tuner shaft)
	49A23960	Pulley, cord: 1/4 groove (cord guide)
	49A21552	Pulley, cord: 1/2 groove (cord guide)
	49A21741	Pulley, cord: 3/8 groove (cord guide)
	9A30680	Receptacle, 3 prong (on phono power cord)
	9K28049	Receptacle, 4 prong (loop receptacle)
	34C77423	Scale, dial: glass (HS-39 chassis)
	1X76352	Shaft Assembly, tuning
	26A26283	Shield, tube
	9A74416	Socket, pilot light (HS-38 chassis)
	9A72747	Socket, pilot light (HS-39 chassis)
	60K75432	Socket, pilot light: with clip & leads (HS-39-on cabinet)
	9A6788	Socket, tube: molded octal; plain type
	9A70165	Socket, tube: molded octal; shielded type
	9A72519	Socket, tube: molded loctal
	41A21332	Spring, tension coil (string drive)
	37K21114	Strip, channel: rubber; 1" long (dial scale mtg. on chassis HS-39)
	32A27678	Strip, shaft bearing: fibre (for band sw.)
	31A14424	Strip, terminal: 1 insulated lug, #2 mtg.
	31A15433	Strip, terminal: 1 large insulated lug, #2 mtg.

31A14655	Strip, terminal: 3 insulated lugs, #3 mtg.
31A75232	Strip, terminal: 4 insulated lugs, #3 mtg.
31A75233	Strip, terminal: 7 insulated lugs, #1 & 9 mtg.
39A24624	Wiper, tube base grounding

MISC. CHASSIS HARDWARE:

42A5480	Clip, grid: small
4S7655	Lockwasher: 3/8 internal; cadmium plated (band switch mounting)
2S7018	Nut: 3/8-32 x 1/2 hex; cadium plated (band switch mtg.)
2S7051	Nut: 3/8-32 x 9/16; hex palnut; cadmium plated (volume & tone control mtg.)
5A12814	Rivet, shoulder: 5/32 long (cord pulley mtg.)
5K74560	Rivet, shoulder: 5/16 long (cord pulley mtg.)
5A71246	Rivet, shoulder; 3/16 long (cord pulley mtg.)
3S7506	Screw: #6 x 1/4 PKZ plain hex head sheet metal screw; cadmium plated (coil mtg.)
3S7454	Screw: #8 x 1/4 PKZ plain hex head sheet metal screw; cadmium plated (general mtg.)
3S7467	Screw: #8 x 3/8 PKZ plain hex head sheet metal screw (trans. mtg.)
3S7481	Screw: #8 x 3/4 PKZ slotted hex head sheet metal screw: cadmium plated (tuner mtg.)

NOTE :- A V.T.V.M. WAS USED TO MAKE MEASUREMENTS. IF A 20,000 OHM PER VOLT METER IS USED ALL GRID & AVC VOLTAGES WILL READ LOWER.

MEASUREMENTS ARE MADE FROM TUBE BASE PIN TERMINALS TO CHASSIS.

VOLUME CONTROL ON FULL.

VOLTAGE TOLERANCE ± 10%.

RESISTANCE TOLERANCE ± 20%.

△ BAND SWITCH IN BC. POSITION; BAND SWITCH IN F.M. POSITION FOR ALL OTHER MEASUREMENTS.

PHONO RADIO SWITCH IN RADIO POSITION.

M = MEASUREMENTS MAY VARY DUE TO ELECTROLYTIC CAPACITOR IN CIRCUITS.

K = 1000 (ONE THOUSAND) OHMS.

▭ = RESISTANCE MEASUREMENTS.

◡ = VOLTAGE MEASUREMENTS.

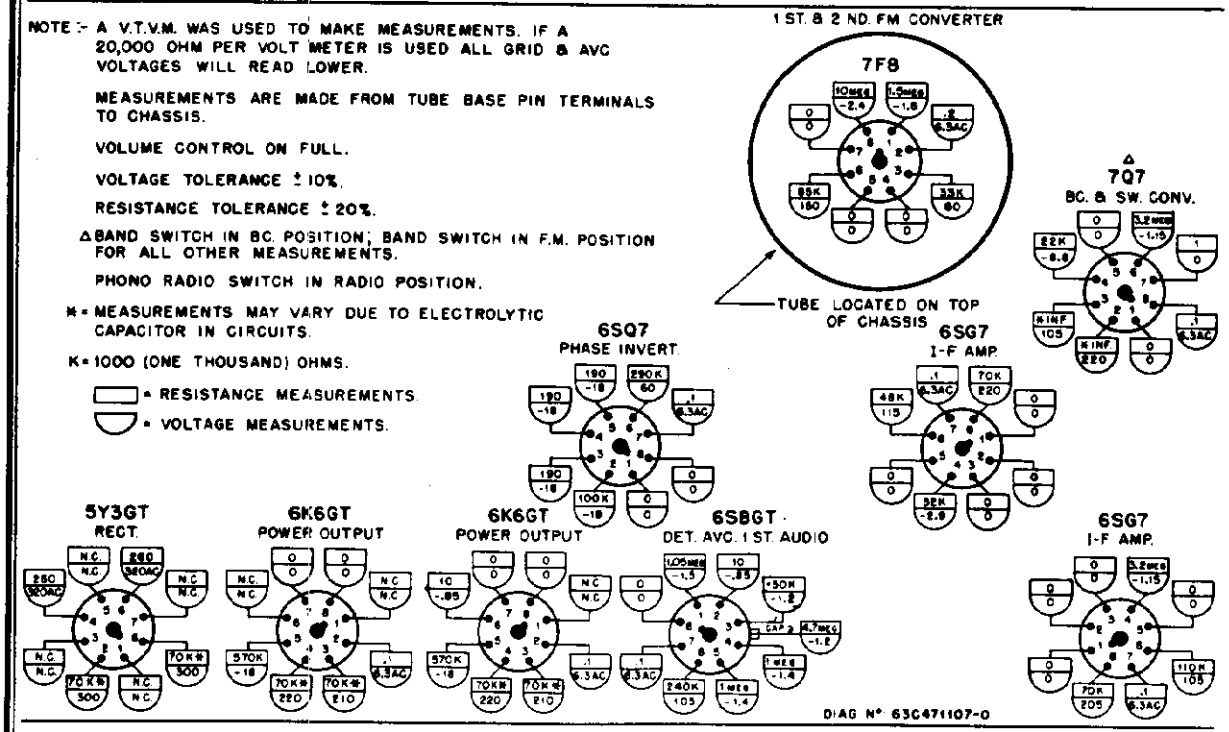

FIGURE 14. VOLTAGE AND RESISTANCE DIAGRAM

BLOCK DIAGRAMS OF RECEIVER FUNCTIONS

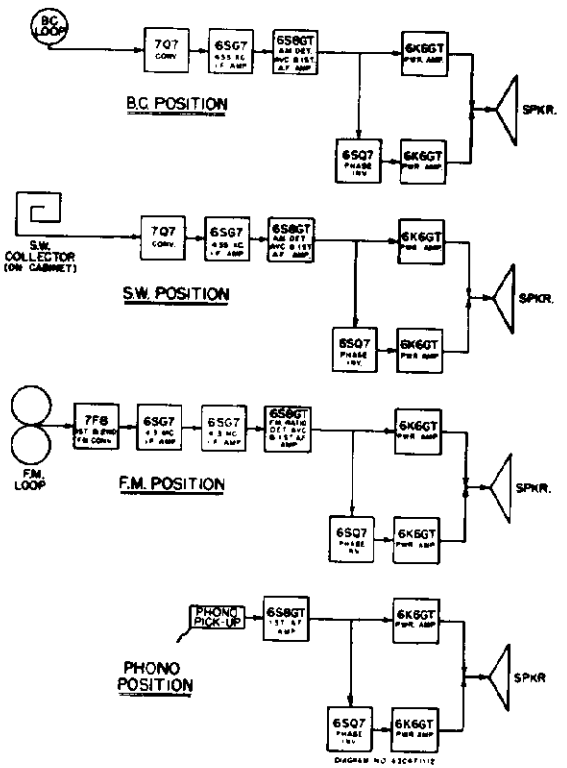

FIGURE 15 BLOCK DIAGRAMS

MODELS 95F31, 95F33, CHASSIS HS-38; 95F31B, 95F31M, CHASSIS HS-39

MOTOROLA INC.

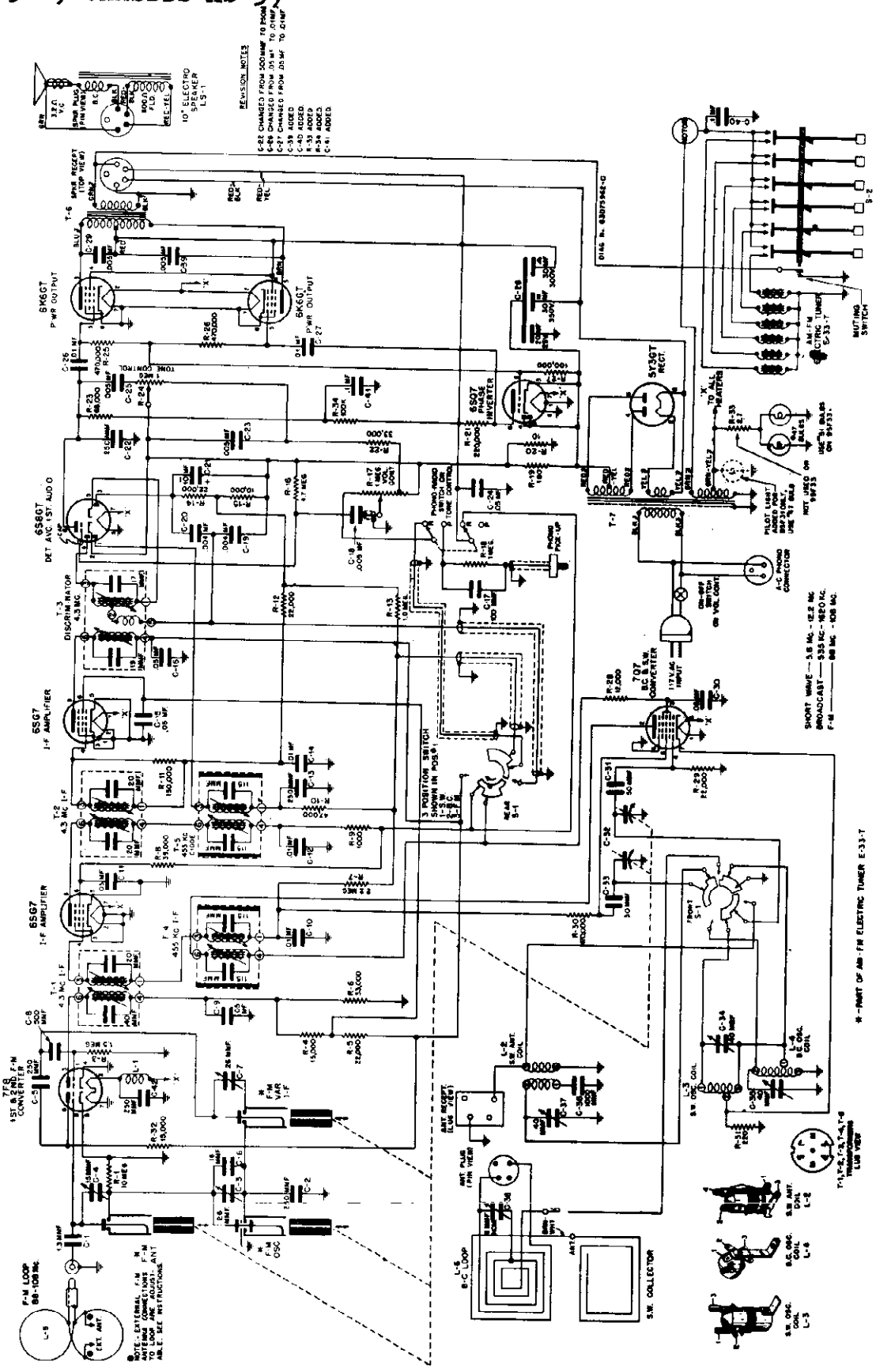

FIGURE 16. COMPLETE SCHEMATIC DIAGRAM

MODELS 95F31B, 95F31M, CHASSIS HS-39

MOTOROLA INC.

MODELS 95F31, 95F33, CHASSIS HS-38

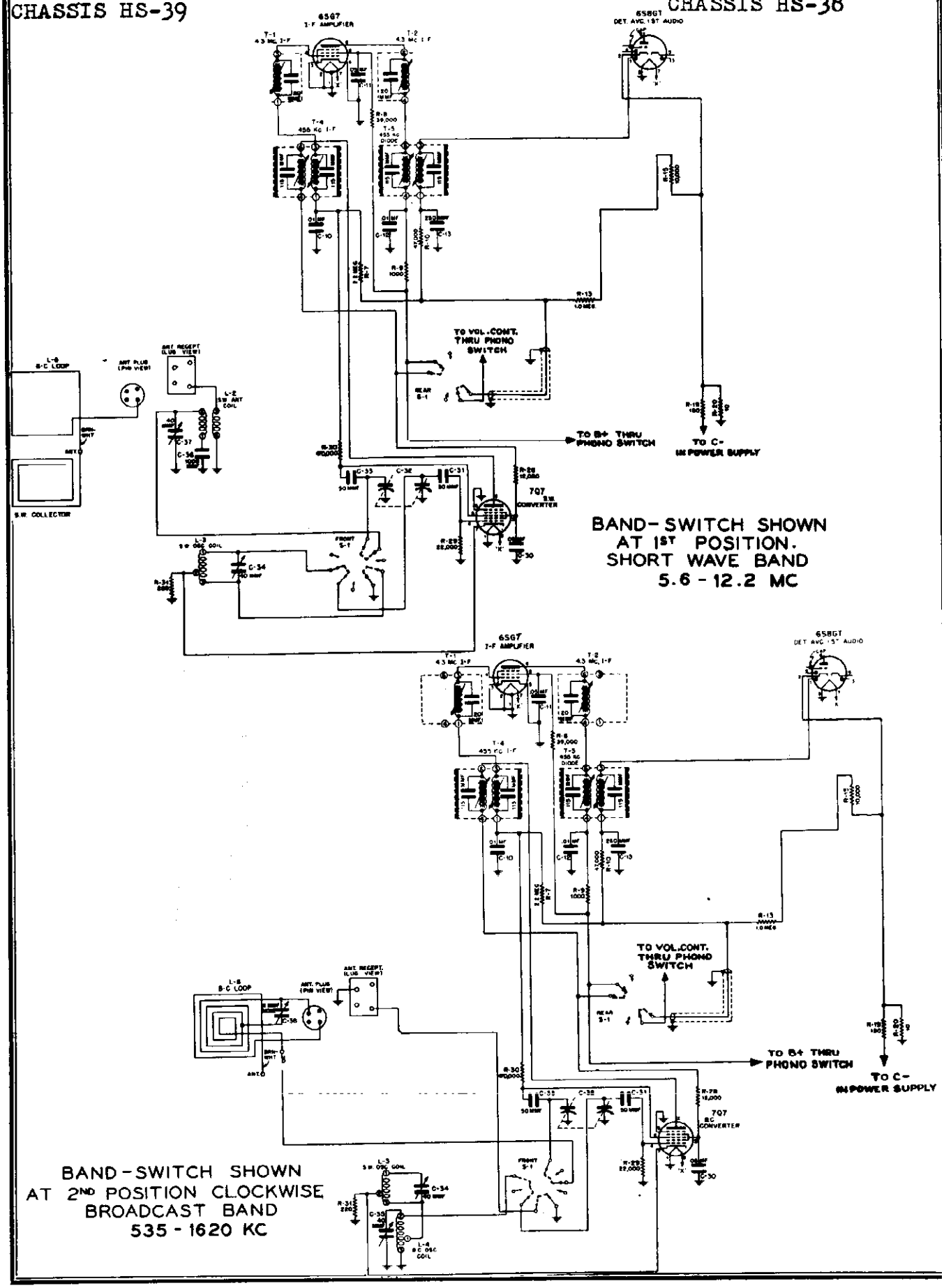

© John F. Rider

CLARI-SKEMATIX
Registered Trademark

MODELS 95F31, 95F33, CHASSIS HS-38

MOTOROLA INC.

MODELS 95F31B, 95F31M, CHASSIS HS-39

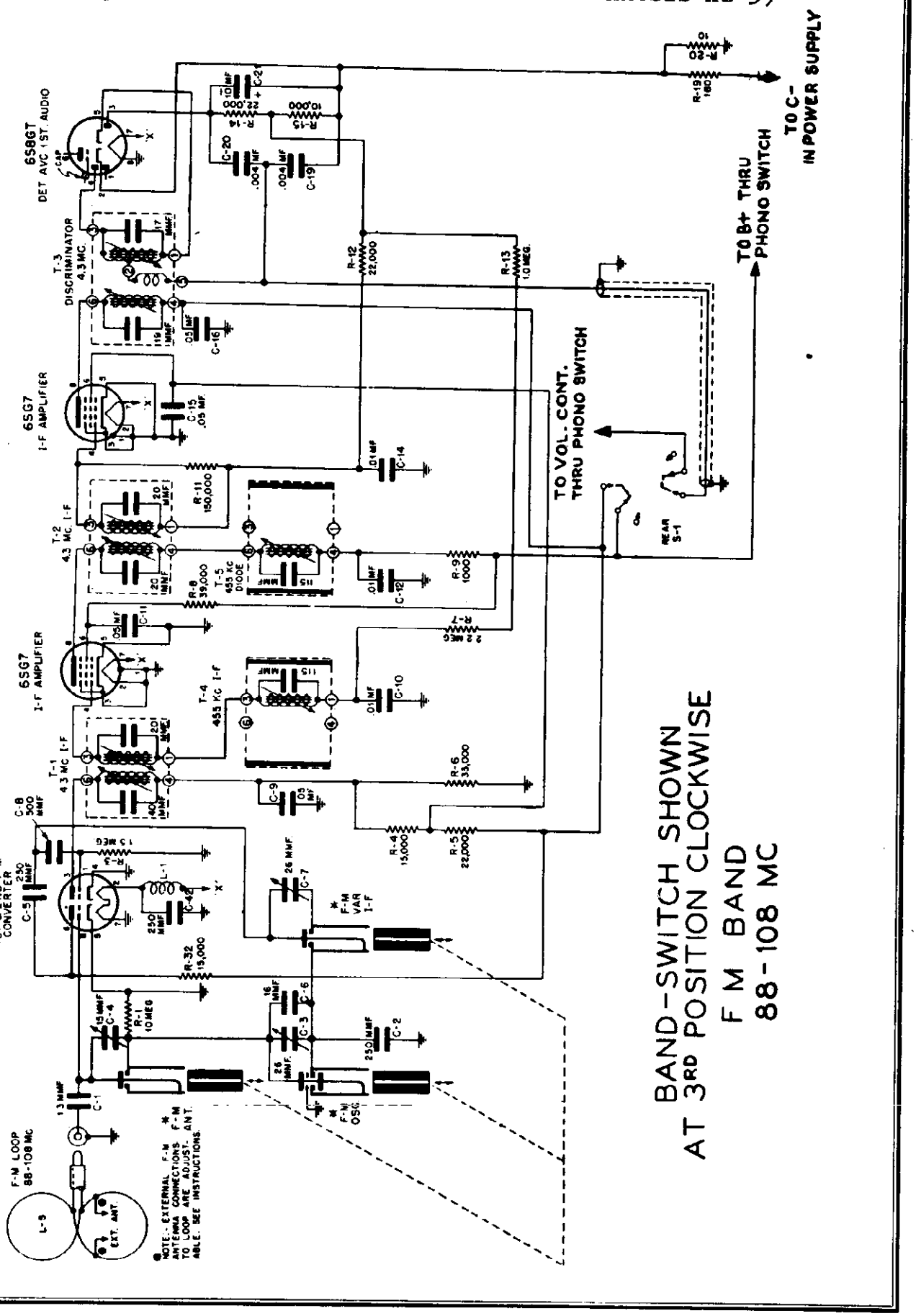

© John F. Rider

MODEL E-33-T AM-FM TUNER

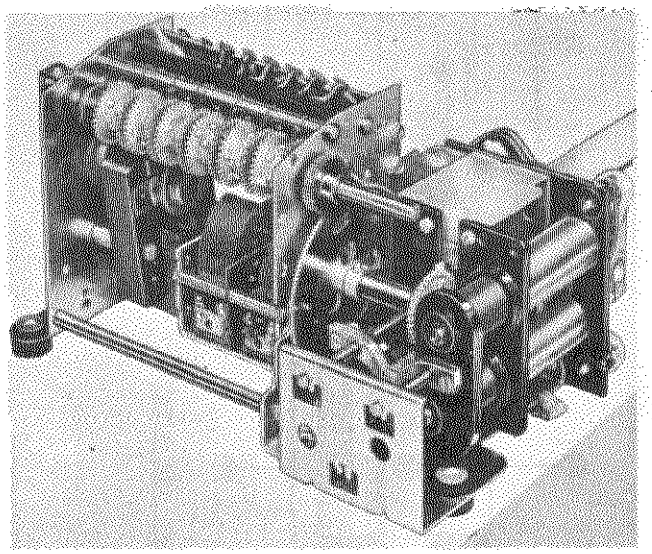

FIGURE 17. MODEL E-33-T FM-AM TUNER

Figure 17 shows the complete AM-FM Tuner E-33-T.

THEORY OF THE FM TUNER

Referring to the functional schematic diagram in Fig. 18, the triode T1 serves both as an oscillator and first converter, and triode T2 serves as the second converter. Oscillator voltage injection for the second converter is obtained through the coupling capacitor from the plate of T_1. T_1 and T_2 are sections of the 7F8 twin-triode tube.

The frequency relationships are given in Fig. 18. The oscillator F_0 beats with the incoming signal F_s to produce the first intermediate frequency F_1, which is variable. F_1 then beats with the same oscillator frequency F_0 in the second converter to produce the second intermediate frequency F_2 which is 4.3 mc. With a 100 mc signal the oscillator frequency is 47.85 mc and the variable intermediate frequency is 52.15 mc.

This system of reception permits the oscillator to be resonated with a high capacitance, 250 micromicrofarads in this case. Consequently, changes in the tube characteristics during warm-up do not produce objectionable changes in oscillator frequency. This contributes materially to the stability of the system.

The actual FM tuner schematic is shown in Figure 19.

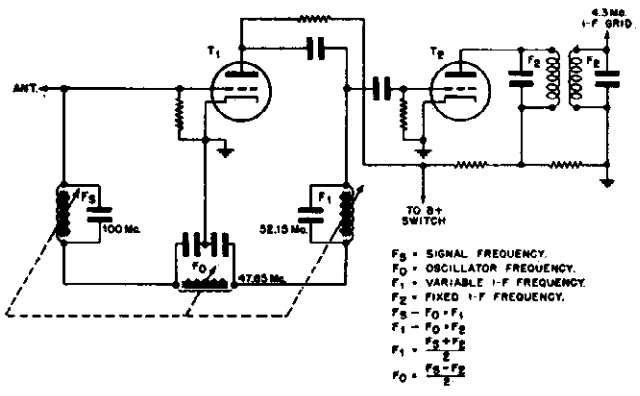

FIGURE 18. FUNCTIONAL SCHEMATIC DIAGRAM OF FM TUNER

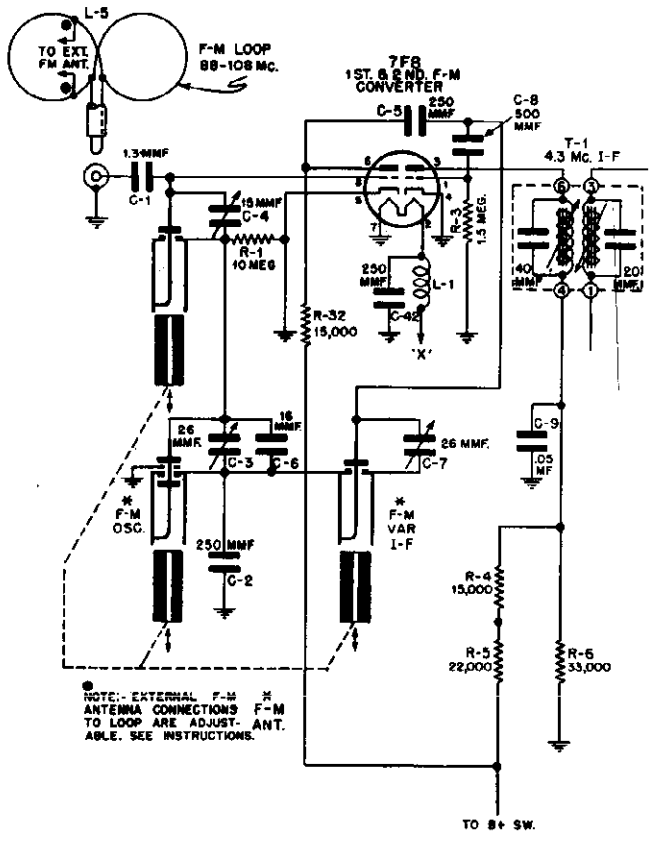

FIGURE 19. SCHEMATIC DIAGRAM OF COMPLETE FM TUNER

E-33-T MOTOROLA INC. MODELS 95F31, 95F33, CHASSIS HS 38; 95F31B, 95F31M, CHASSIS HS-39

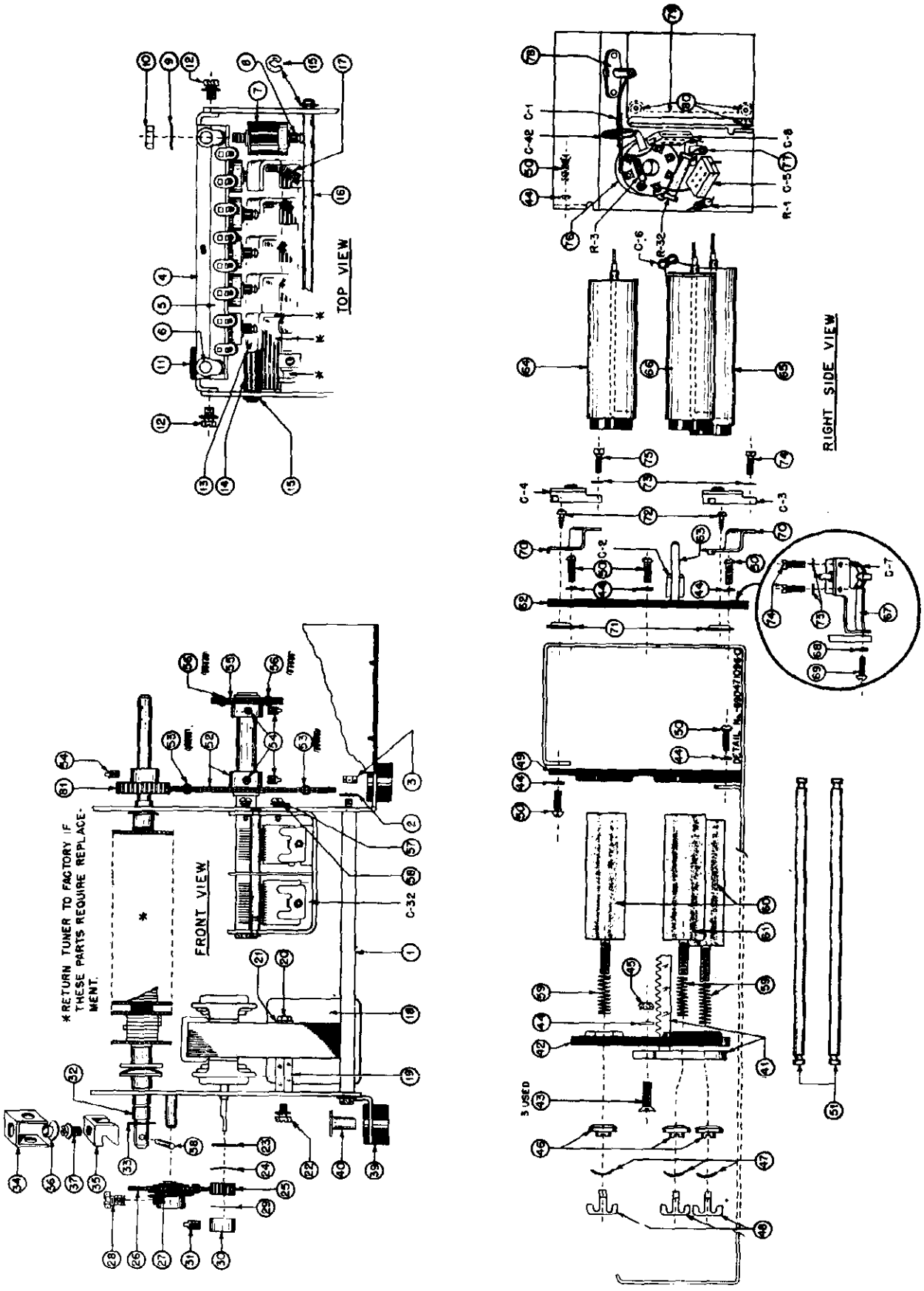

FIGURE 20. MODEL E-33-T FM-AM TUNER PARTS LOCATION

MODELS 95F31, 95F31B, 95F31M, 95F33 — MOTOROLA INC. — E-33-T

REF. NO.	PART NO.	DESCRIPTION
CAPACITORS:		
C-1	21A75479	Special: 1.3 mmf.
C-2	21A112247	Silver mica: 250 mmf.
C-3	20K74940	Variable ceramic: 7-45 mmf.
C-4	20A74939	Variable ceramic: 5-25 mmf.
C-5	21R2729	Mica: 250 mmf 500V
C-6	21A76320	Ceramic: 16 mmf.
C-7	20K74940	Variable ceramic: 7-45 mmf.
C-8	21R2730	Mica: 500 mmf 500V
C-32	19B72560	Variable; 2 gang
C-42	21A112247	Silver mica: 250 mmf.
RESISTORS:		
R-1	6R2109	10 meg 1/2w Ins.
R-3	6R3966	1.5 meg 1/2w Ins.
R-32	6R6013	15,000 1w N.I.
1	45A21419	Rod, tie: threaded
2	4S7651	Lockwasher: #8 internal
3	2S7007	Nut: 8-32 x 1/4 hex.
4	1X76383	Magnet Assembly: 6 electromagnets mounted on channel; with terminal
5	31A74480	Strip, terminal: 8 insulated lugs, #1 & 10 mtg.
6	5S7707	Rivet: .122 x 5/32 steel
7	1K75593	Magnet Assembly: single electromagnet
8	37A22059	Bumper, armature: rubber
9	4S7562	Washer: 7/16 x .187 x .033 thick
10	2S7009	Nut: 10-32 x 3/8 hex.
11	37A22664	Grommet: for 7/16" hole
12	3S7205	Lockscrew: 8-32 x 1/4 slotted hex head
13	46K75519	Rod, stop
14	11M9504	Sleeving: #4 black
15	4A21577	Washer, "C" spring
16	46A21765	Rod, stop: grooved
17	41A22507	Spring, armature
18	59B75421	Motor, tuner
19	2K75462	Nut: hex; .594 long; 6-32 thread (motor spacer)
20	3S2927	Screws: 6-32 x 7/8 slotted hex head machine screw
21	4S7650	Lockwasher: #6 internal
22	3S7350	Lockscrew: 6-32 x 1/4 slotted hex head
23	4A21409	Washer (clutch)
24	4A21408	Washer, spring (clutch)
25	44A21417	Pinion, clutch
26	1X21576	Gear & Hub Assembly
27	41A22471	Spring, cushion
28	3S7163	Screw: 6-32 x 1/4 slotted hex head machine screw
29	14A21424	Washer, fibre: 7/16 x .130 x .010 thick
30	43A21407	Bushing, clutch retaining
31	3S7114	Setscrew: 8-32 x 3/8 slab head
32	43K21412	Bushing, spacer
33		Washer
34	42A10982	Yoke, retainer
35	42A10981	Yoke, cam
36	5S7818	Eyelet: .135 x .288
37	3A10990	Screw, yoke lock
38	47A11004	Pin, drive shaft
39	37K15125	Grommet, tuner mounting
40	5A12105	Eyelet, mounting
41	44B72706	Rack, drive gear: die cast
42	64B72707	Plate, core mounting: bakelite
43	3S7184	Screw: 6-32 x 1/2 slotted flat head machine screw
44	4S2819	Lockwasher: #6 split
45	2S7005	Nut: 6-32 x 1/4 hex
46	2A72726	Nut, swivel
47	4A74936	Washer, spring
48	42A72725	Clip, swivel nut
49	64B72704	Plate, front mounting: bakelite
50	3S7185	Screw: 6-32 x 3/8 slotted round head machine screw
51	47B72712	Rod, guide
52	1X76389	Split Gear & Bushing Assembly (large)
53	41A4547	Spring, coil
54	3S7100	Setscrew: 8-32 x 5/16 slabhead
55	1X76390	Split Gear & Bushing Assembly (small)
56	41A76498	Spring, coil
57	3S7156	Screw: 6-32 x 3/16 slotted binder head machine screw
58	4S7666	Lockwasher: #6 external
59	41A74880	Spring, core tension
60	46A71749	Core, iron (ant. & Var.I.F.)
61	46K76172	Core, iron (with paint dot) (osc.)
62	1X76386	Rear Mounting Plate & Lug Assembly: bakelite plate with soldering lug
63	29R3005	Lug, soldering
64	24C75492	Inductor, VHF (Ant.): 2-1/2" long
65	24K75494	Inductor, VHF (I.F.): 2-3/4" long
66	24K75496	Inductor, VHF (Osc.): 2-5/8" long
67	7A74712	Bracket, trimmer mounting
68	4S8412	Lockwasher: #4 split
69	3S1937	Screw: 4-40 x 5/16 slotted round head machine screw
70	7A74711	Bracket, trimmer mounting
71	2A74710	Nut, Tinnerman (#4 PKZ)
72	3S3356	Screw: #4 x 5/16 PKZ slotted round head sheet metal screw
73	4A74884	Washer, trimmer: fibre
74	3S1525	Screw: 3-48 x 3/8 slotted fillister head machine screw
75	3S2975	Screw: 3-48 x 5/16 slotted fillister head machine screw
76	9K75544	Socket, tube: loctal
77	31A81399	Strip, terminal: 1 insulated lug; #1 mtg.
78	9A54664	Receptacle, ferrule: 1 prong
79	15A74714	Cover, tuner (rear)
80	3S8175	Screw: #4 x 3/16 PKZ slotted hex head sheet metal screw
81	44A21873	Pinion: gang drive

MODELS 107F31, 107F31B, CHASSIS HS-87

MOTOROLA INC.

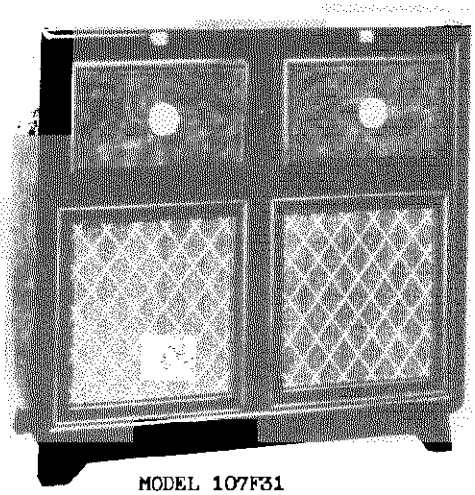

MODEL 107F31



MODEL 107F31B

IF FREQUENCY - 4.3 Mc (FM)
455 Kc (BC & SW)

TUNING RANGE - BC - 535 to 1620 Kc
SW - 5.6 to 12.2 Mc
FM - 88 to 108 Mc

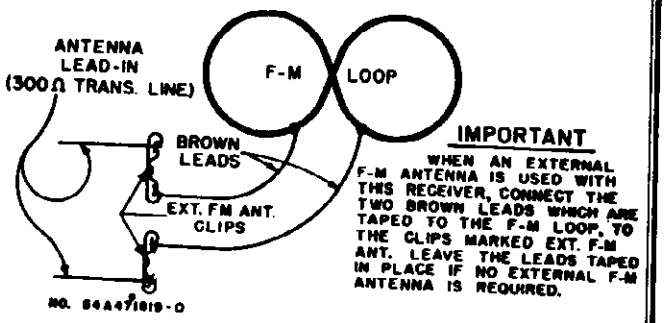

FIGURE 1. FM LOOP ANTENNA

POWER SUPPLY - 117 Volts, 60 cycles, 130 watts (with record changer)

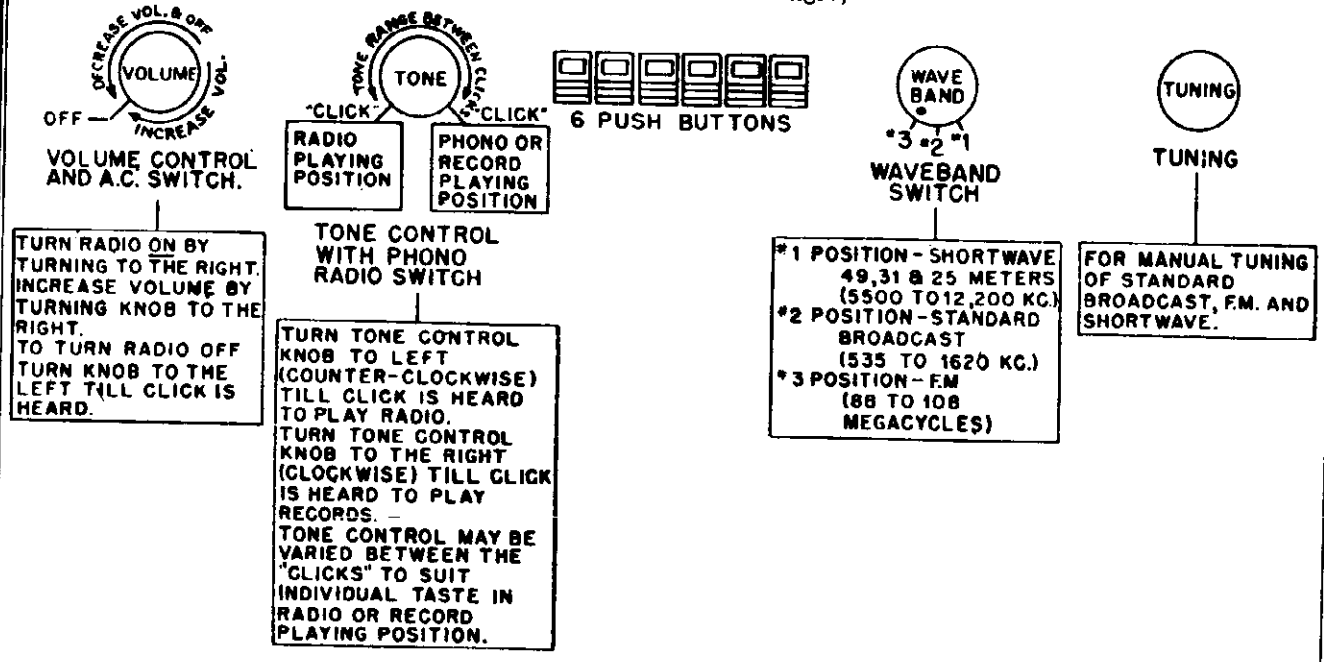

FIGURE 3. CONTROLS

MOTOROLA INC.

MODELS 107F31, 107F31B; CHASSIS HS-87

INSTRUCTIONS FOR SETTING AUTOMATIC TUNER PUSH BUTTONS

1. Turn the radio ON and allow it to warm up for a period of at least fifteen minutes.

2. While waiting for the radio to warm up, loosen the tuner locking screw (A) all the way. The locking screw is accessible from the rear of the cabinet. (See Figure 12.)

3. Make a list of the frequencies of the local stations you wish to tune in automatically. It is recommended that you select the most powerful stations only.

4. Turn the band switch to FM or BC position, depending on the station being set up, and carefully tune in the first station.

NOTE: The buttons may be used on either BC, FM or any combination of AM and FM. BE SURE TO SET THE BAND SWITCH ON THE PROPER BAND!

5. Adjust a signal generator to zero beat with the station.

NOTE: While it is advisable to use a signal generator for accuracy, it is not an absolute necessity. The station signal may be used.

6. Tune to the desired station or to the signal generator, with the tuning knob.

7. Holding the tuning knob, push the selected button and HOLD IN UNTIL THE MOTOR STOPS.

8. Repeat Steps 6 and 7 for each of the buttons.

9. Carefully tighten the tuner locking screw (A).

10. Check the setting of the button by tuning in the station manually, then push the button set for that station; no effect on volume or tone should be noticed. If not correctly set, readjust--following Steps 4 through 9.

FM SERVICE NOTES

In some cases, people are not tuning FM sets properly. FM is more difficult to tune than AM, although Motorola receivers are easier than most. There are three peaks present; the center peak, which is the correct one, is hard to locate. The peaks on either side of the center are slightly distorted. If you get a distorted peak on only one side of the center, the discriminator is probably out of alignment.

Some people expect too much of FM. You cannot expect great distance. The horizon, as viewed from the transmitting antenna, is the normal service area. Many FM stations are now operating on low power, waiting for new equipment. Reception will improve greatly when power is increased. Most of the bad reports have come from the fringe areas. In many cases, reception can be improved by using a dipole antenna, mounted as high above the roof as possible, and aimed directly at the station.

Location of the radio is important when it is operated on its built-in loop antenna. Moving the set even a few feet away from its present location may increase or reduce signal strength by more than 50% because a stronger signal may exist at one location than another. Therefore, in homes where reception is poor, you may be able to improve it by placing the set against another wall. The Motorola figure 8 loop antenna is omnidirectional.

Motorola FM sets use a relatively new circuit known as the Ratio Detector, instead of the usual limiters. The following paragraph of explanation is quoted from the R.C.A. License Laboratory Bulletin:

"Since a circuit of this type is relatively immune to amplitude modulation, it is unnecessary to precede it by a limiter stage. Also, since its immunity is not a direct function of the signal strength, there is no threshold action of the type encountered where limiters are employed."

It has been thought, erroneously, that the use of limiters in an FM receiver is imperative for proper reception. This is not the case. In this connection, it is important to understand that a limiter requires several volts at its grid to become effective. If the received signal strength is too weak to provide the required voltage at the limiter grid, the limiters do not function. This means that below a certain threshold of signal level, the limiters do not work and, as a result, do not contribute to amplitude (noise) rejection. Furthermore, noise voltages are not purely amplitude modulated, but contain frequency modulated components against which no amplitude rejection device will discriminate.

From the above comparison, you can see that there is little, if any, difference between the two circuits, insofar as noise reception is concerned. In either case, low signal levels from the FM stations will result in noise reception, if there is any noise in the neighborhood.

The main advantages of ratio detection, as used in Motorola FM are, first, very little in-between station noise, and second, easier tuning because the side peaks are slightly subdued (as compared to the limiter type of receiver), making it easier to find the center peak.

© John F. Rider

MODELS 107F31, 107F31B, CHASSIS HS-87

MOTOROLA INC.

ALIGNMENT

Maximum performance can only be obtained if extreme care is exercised during alignment.

Use an insulated screwdriver when adjusting the FM tuner trimmers.

A special wrench for adjusting the slotted nuts on the tuner cores will be required. You can easily fabricate one from a Motorola auto set Volume Control Shaft and Coupling Assembly (Part Number 1B70847, $.30 list) by simply spreading out the forked ends and filing to fit. Solder the assembly together to make it rigid.

An AM (30% amplitude modulated) signal generator covering the frequencies shown in Alignment Chart I, is used to align the broadcast and short wave and FM bands. A low range output meter, connected across the speaker voice coil, is used as an output indicator.

The broadcast and short wave band alignment is conventional; instructions are given in the following alignment chart.

The FM band alignment can be satisfactorily performed by following the instructions in the chart. When properly aligned, the discriminator does not respond to amplitude modulation and since an AM type signal generator is used for aligning the FM circuits, it is necessary to detune the discriminator secondary and leave it that way until all of the FM circuits have been aligned. After completing the alignment of the FM circuits, proceed to align the discriminator secondary by applying a 4.3 Mc AM signal to the control grid of the 2nd FM converter tube and adjusting the discriminator secondary core for minimum audio output. No adjustment of the FM circuits should be attempted with AM after the discriminator secondary has been properly aligned.

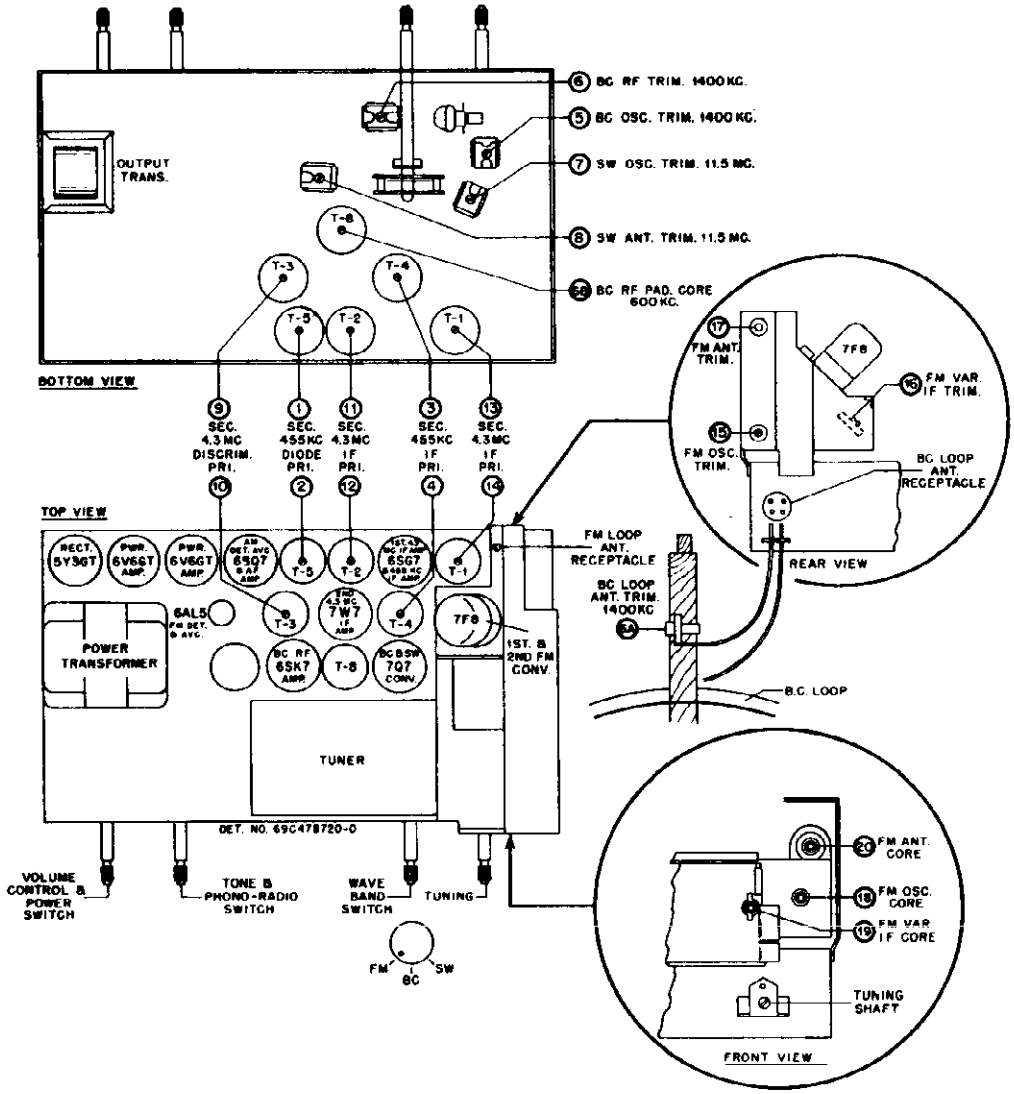

FIGURE 7. TUBE & TRIMMER LOCATIONS

©John F. Rider

CHART 1. ALIGNMENT PROCEDURE WHEN USING AM MODULATED SIGNAL GENERATOR AND STANDARD OUTPUT METER FOR COMPLETE ALIGNMENT

Refer to Figure 7 for location of all adjustment trimmers and cores.

STEP	DIAL SET TO	BAND SW. SET TO	DUMMY	SIGNAL GENERATOR CONNECTED TO	SIGNAL GENERATOR SET AT	ADJUST TRIMMER OR CORE	REMARKS
455 Kc IF CHANNEL ALIGNMENT							
1.	1620 Kc (gang fully opened)	BC	.1 mf	7Q7 BC & SW Conv. Grid (Pin #4) & Chassis	455 Kc	1,2,3 & 4	Adjust for maximum output.
BROADCAST BAND ALIGNMENT							
2.	1400 Kc	BC	.1 mf	7Q7 BC & SW Conv. Grid (Pin #4) & Chassis	1400 Kc	5(BC Osc. Trim)	This sets oscillator to dial. With gang fully meshed, pointer should be at last mark on dial; then set to 1400 Kc and set oscillator.
3.	1400 Kc	BC	None	Radiation Loop *	1400 Kc	6 & 6A (BC RF & Loop Antenna Trimmers)	Adjust for maximum output.
3A	NOTE: The inductance of the BC RF transformer (T-8) is set at time of manufacture by adjusting iron core (6B). No resetting of this core should be made unless it has been tampered with. If so, readjustment can be made as follows: Tune in 600 Kc signal and peak RF pad core (6B). Next tune in 1400 Kc signal and peak trimmer (6). Repeat both adjustments until maximum response is obtained at both ends; the last adjustment should be trimmer (6).						
SW. BAND ALIGNMENT							
4.	11.5 Mc	SW	.1 mf	7Q7 BC & SW Conv. Grid (Pin #4) & Chassis	11.5 Mc	7(SW Osc. Trim)	This sets osc. to dial. Make sure osc. is higher in frequency than the signal by checking image response which should occur with the input signal at 12.41 Mc.
5.	11.5 Mc	SW	50 mmf	SW Ant. Terminal and Chassis	11.5 Mc	8(SW Ant. Coil Trim)	BC loop plug should be disconnected. Adj. for maximum output.
4.3 Mc IF CHANNEL ALIGNMENT							
6.						9(Disc. Sec.)	Detune discriminator secondary by screwing core out as far as it will go.
7.	Extreme high freq. end.	FM	.001 mf	7F8 2nd FM Converter Grid (#1 Pin) & Chassis	4.3 Mc	10, 11, 12, 13 & 14 (4.3 Mc IF)	Adjust for maximum output.
FM BAND ALIGNMENT							
8.						18 (FM Osc. Core)	Check the position of the FM Osc. tuning core 18. Set spacing between the core and bakelite piece to which it is mounted, to 1/32" by turning tuning core slotted nut.
9.	90 Mc	FM	None	FM loop antenna receptacle and chassis; remove FM loop.	90 Mc	15,16 & 17 (FM Osc., Ant. & Variable IF Trim)	Adjust for maximum output.
10.	105 Mc	FM	None	FM loop antenna receptacle and chassis; remove FM loop	105 Mc	18,19 & 20 (FM Osc., Ant. & Variable IF cores)	Adjust for maximum output
11.							Repeat steps 9 and 10 several times until further adjustment does not increase the output. Make the final trimmer adjustment at 105 Mc (i.e., trimmers 15, 16 and 17 at 105 Mc.)
12.	105 Mc	FM	None	Radiation Loop *	105 Mc	17 (FM Ant. Trim)	Adjust for maximum output with FM loop antenna connected.
ALIGN DISCRIMINATOR SECONDARY							
13.		FM	.001 mf	7F8 2nd FM Converter Grid (#1 Pin) & Chassis	4.3 Mc	9 (Disc. Sec.)	Adjust discriminator secondary for minimum response. The correct adjustment is the sharply defined minimum response point between the two peaks.

* Connect output of signal generator to a 6" diameter, 3 turn loop & radiate signal into receiver loop. Minimum distance between loops should never be less than 12".

MODELS 107F31,107F31B, MOTOROLA INC.
CHASSIS HS-87

CHART II. ALIGNMENT PROCEDURE WHEN USING FM SIGNAL GENERATOR AND OSCILLOSCOPE

Refer to Figure 7 for location of all adjustment trimmers and cores.

STEP OPERATION

455 Kc IF Channel Alignment

1. Same as Step 1 in Chart I (Use AM signal generator)

Broadcast Band Alignment

2. Same as Steps 2, 3 & 3A in Chart I (Use AM signal generator)

SW Band Alignment

3. Same as Steps 4 & 5 in Chart I (Use AM signal generator)

4.3 Mc IF Channel Alignment Using FM Signal Generator & Oscilloscope

4. (A) Discriminator -

   1. Connect the input terminals of the oscilloscope vertical amplifier to the high side of the receiver volume control and the chassis.

   2. Connect the FM generator synchronizing voltage output terminals to a phase shifting network, consisting of a variable 1/2 megohm resistor in series with a .002 mf capacitor. The input to the oscilloscope horizontal amplifier is connected across the .002 mf capacitor. See Figure 8. (This phase shifting network may not work with every oscilloscope. Different values of R & C may be required.

   3. Apply an FM 4.3 Mc signal (125 Kc deviation) through a .01 mf capacitor to the control grid (pin #4) of the 7W7 tube in the second IF amplifier stage.

   4. Screw discriminator secondary core (9) out as far as it will go.

   5. Adjust discriminator primary (10) until the pattern obtained on the scope is symmetrical about the vertical axis. The phase shifting network resistor is adjusted to give only one trace. The pattern obtained is the resonance curve of the primary, whose maximum response should be at exactly 4.3 Mc. (See Figure 9).

   6. Adjust discriminator secondary (9) until a symmetrical pattern is obtained, with peaks occurring at about 100 Kc above and below 4.3 Mc and is substantially linear between peaks. The trace should pass through the intersection of the vertical and horizontal axis. The phase shifting network should be adjusted to give only a single pattern at all times. (See Figure 10).

   (B) 4.3 Mc IF Amplifiers -

   1. Apply an FM 4.3 signal (100 Kc deviation) to the control grid (pin #4) of the 6SG7 tube in the 1st IF amplifier stage, through a .001 mf capacitor and adjust both primary and secondary cores (11 & 12) to get a symmetrical pattern as before, with peaks occurring at a slightly lower deviation.

   2. Apply an FM 4.3 signal (100 Kc deviation) to the control grid (pin #1) of the 7F8 tube, and adjust both primary and secondary cores (13 & 14) until a symmetrical pattern substantially linear between peaks, is obtained.

FM Band Alignment

5. Check the position of the FM oscillator tuning core (18). Set the spacing between the core and the bakelite piece to which it is mounted, to 1/32" by turning tuning core slotted nut.

© John F. Rider

6. Remove the FM loop and connect generator output directly to the receiver FM loop receptacle.

7. Set receiver dial to 90 Mc and also FM signal generator to 90 Mc (22-1/2 Kc deviation). Adjust FM oscillator, antenna and variable IF trimmers (15, 16 & 17) for maximum indication on output meter. (Output meter should be connected across speaker voice coil.)

8. Set receiver dial to 105 Mc and also FM signal generator to 105 Mc (22-1/2 Kc deviation). Adjust FM oscillator, antenna and variable IF cores (18, 19 & 20) for maximum indication on output meter.

9. Repeat Steps 7 and 8 several times until further adjustment does not increase the output. Make the final trimmer adjustment at 105 Mc. (i.e., trimmers 15, 16 & 17 at 106 Mc).

10. Connect FM loop antenna to receiver receptacle. Radiate an FM 105 Mc (22-1/2 Kc deviation) signal into FM loop. Set receiver dial to 105 Mc and adjust trimmer (17) for maximum.

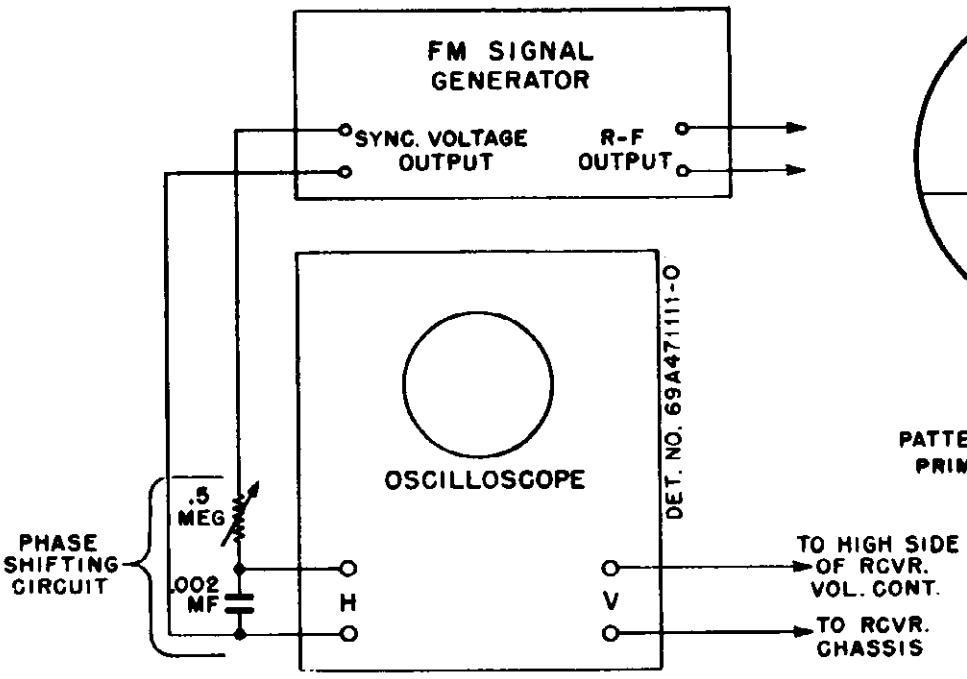

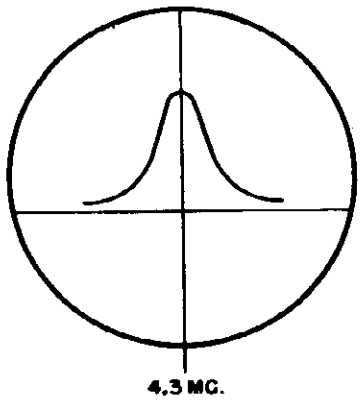

PATTERN WITH DISCRIMINATOR PRIMARY (10) CORRECTLY ADJUSTED

FIGURE 9

FIGURE 8. SIGNAL GENERATOR & OSCILLOSCOPE HOOK-UP

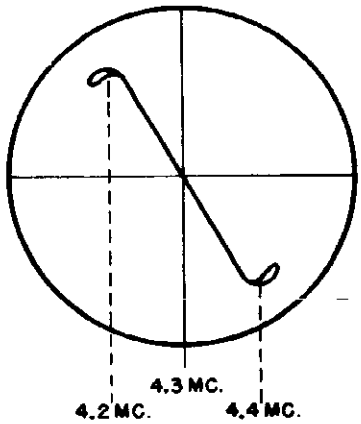

PATTERN WITH DISCRIMINATOR SECONDARY (9) CORRECTLY ADJUSTED.

FIGURE 10

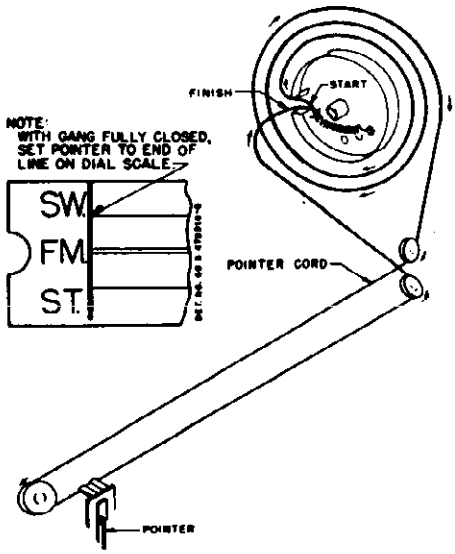

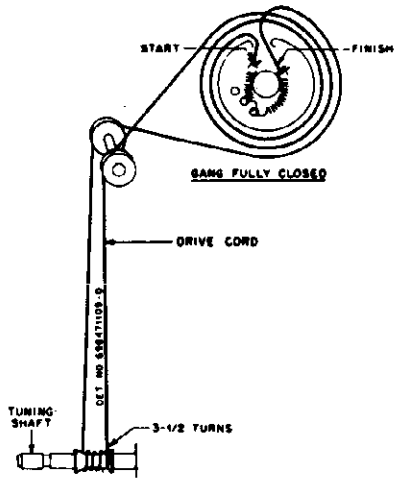

FIGURE 11. POINTER AND DRIVE CORD DETAIL

MODELS 107F31, 107F31B, CHASSIS HS-87

MOTOROLA INC.

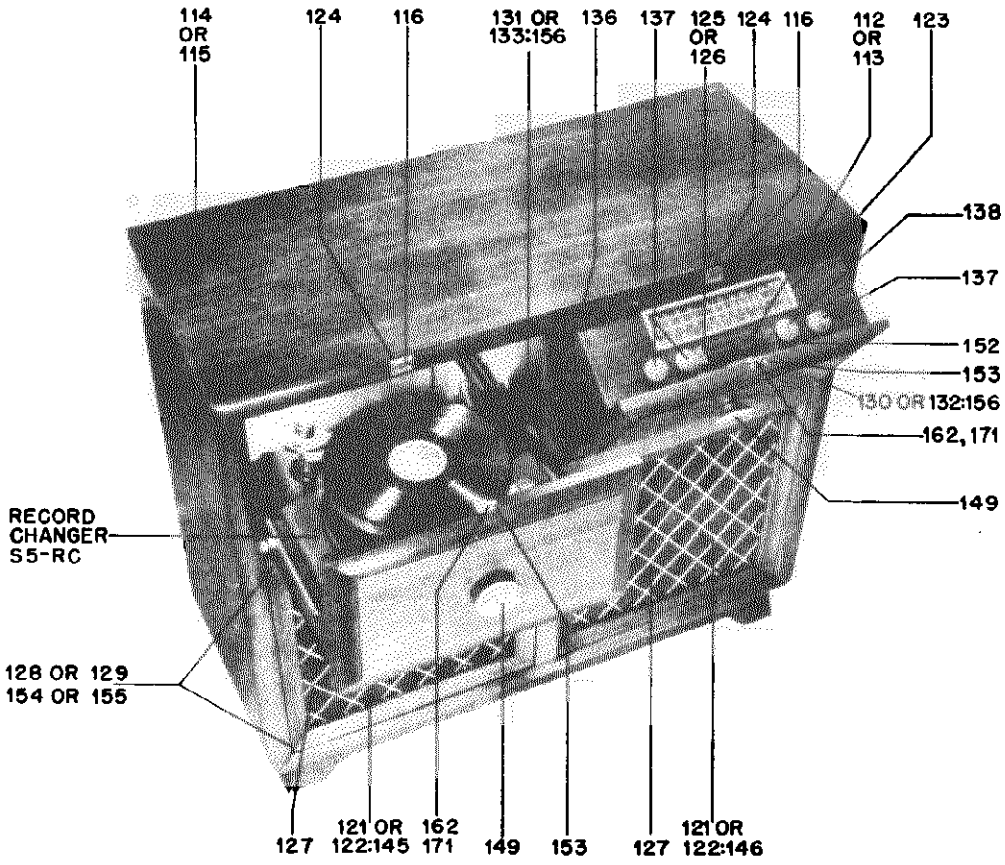

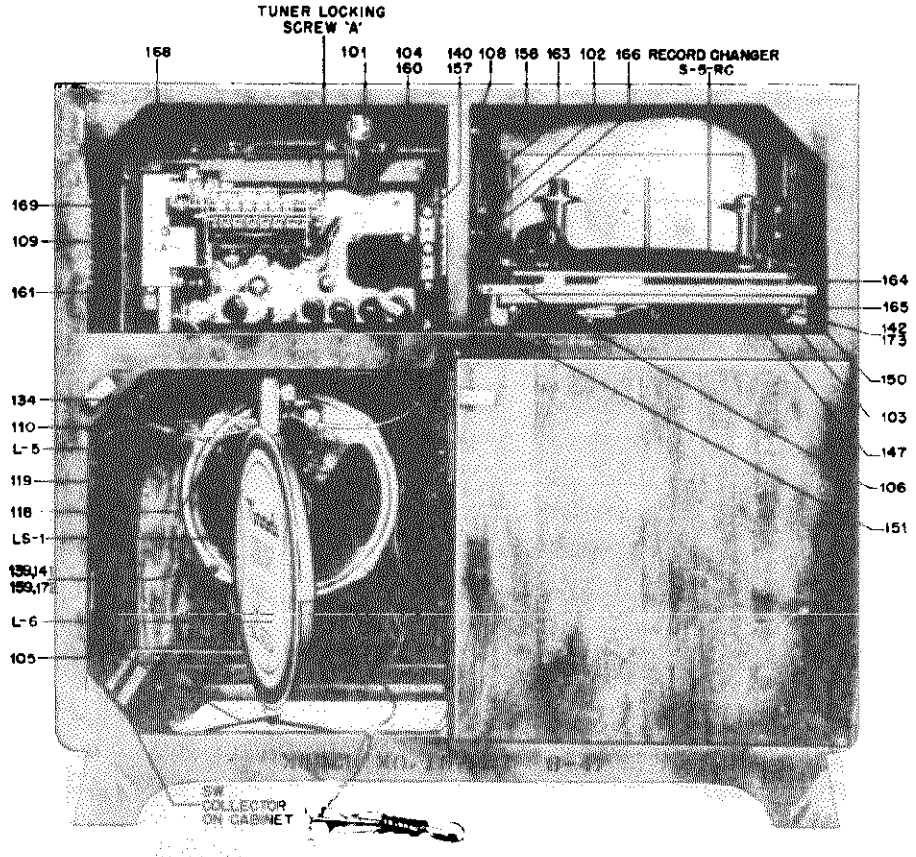

FIGURE 12. PARTS LOCATION - CABINET - MODELS 107F31 & 107F31B

©John F. Fi...

MOTOROLA INC.

MODELS 107F31, 107F31B, CHASSIS HS-87

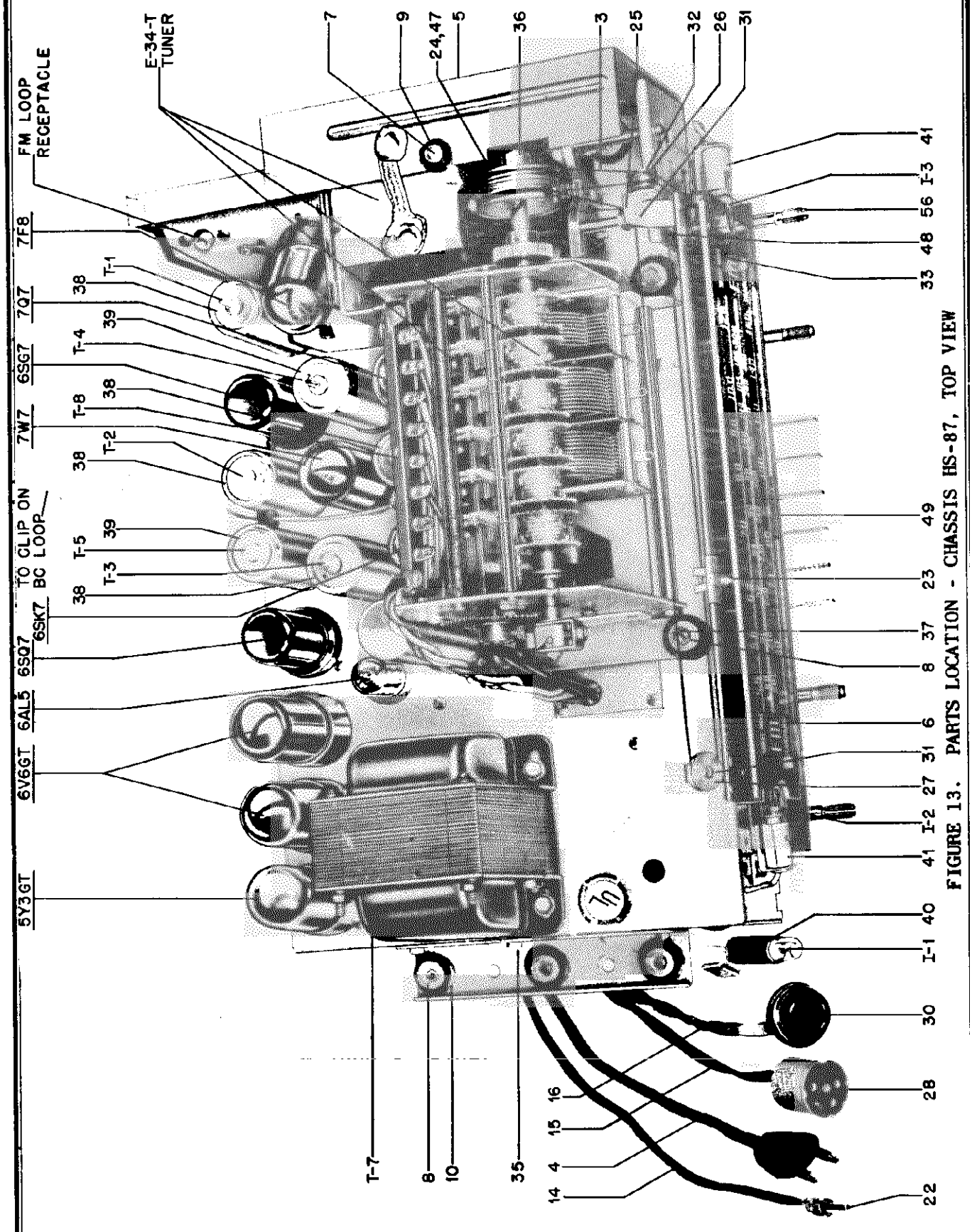

FIGURE 13. PARTS LOCATION - CHASSIS HS-87, TOP VIEW

MODELS 107F31, 107F31B, CHASSIS HD-87

MOTOROLA INC.

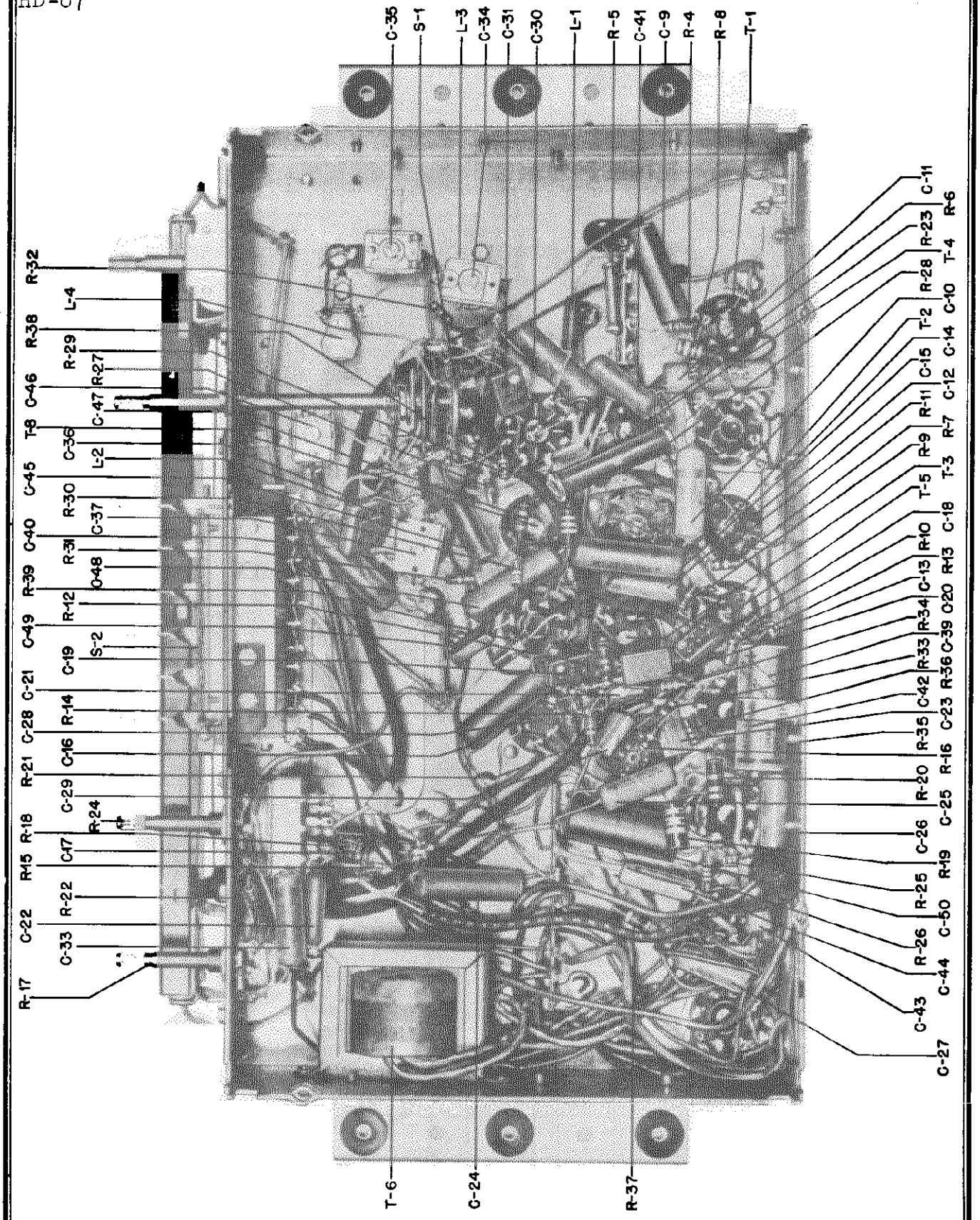

FIGURE 14. PARTS LOCATION - CHASSIS HS-87, BOTTOM VIEW ELECTRICAL PARTS

© John F. Rider

MOTOROLA INC.

MODELS 107F31, 107F31B, CHASSIS HS-87

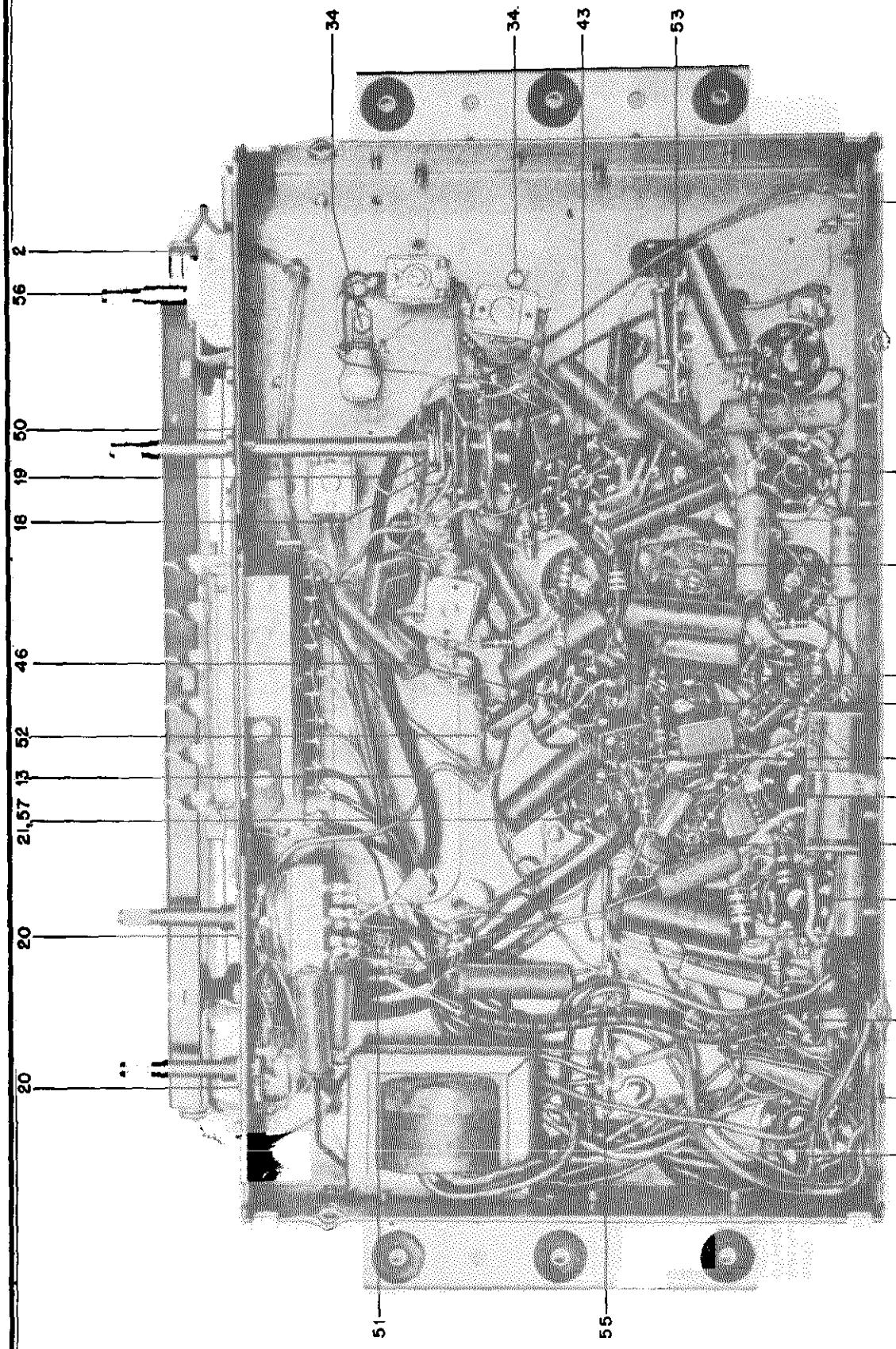

FIGURE 15. PARTS LOCATION - CHASSIS HS-87, BOTTOM VIEW - MECHANICAL PARTS

MODELS 107F31,
107F31B, CHASSIS
HS-87

MOTOROLA INC.

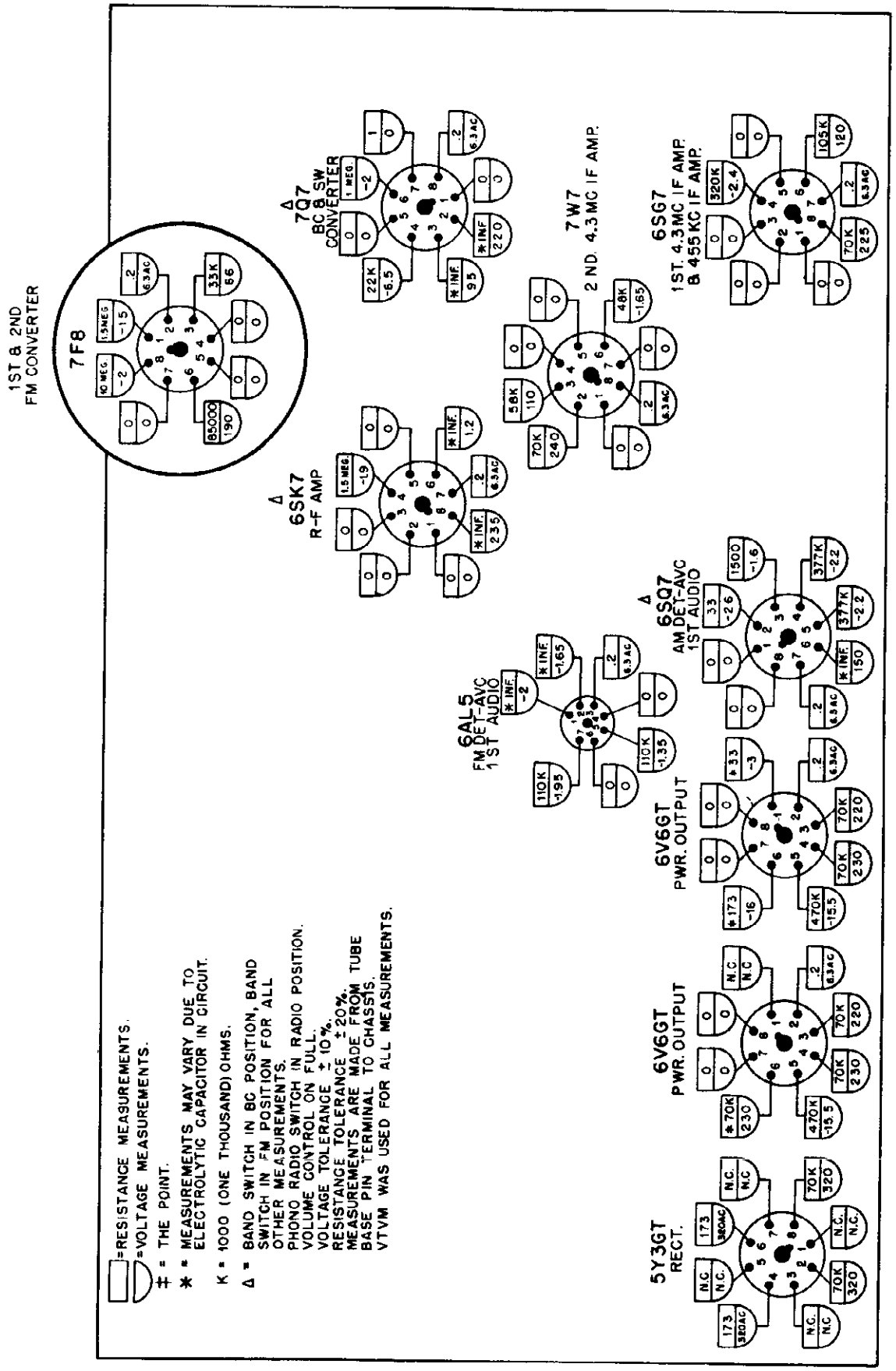

FIGURE 16. VOLTAGE & RESISTANCE DIAGRAM

MOTOROLA INC.

MODELS 107F31, 107F31B, CHASSIS HS-87

CAPACITORS

*C-1	21A75479	Special: 1.3 mmf
*C-2	21A112247	Silver Mica: 250 mmf
*C-3	20K74940	Trimmer, ceramic: 7-45 mmf
*C-4	20A74959	Trimmer, ceramic: 5-25 mmf
*C-5	21R2729	Mica: 250 mmf 500V
*C-6	21A76520	Ceramic: 16 mmf
*C-7	20K74940	Trimmer, ceramic: 7-45 mmf
*C-8	21R2730	Mica: 500 mmf 500V
C-9	8S9816	Paper: .05 mf 400 V
C-10	8S9805	Paper: .01 mf 100V
C-11	8S9816	Paper: .05 mf 400V
C-12	8S9809	Paper: .01 mf 400V
C-13	21R6506	Mica: 150 mmf 500V
C-14	8S9801	Paper: .01 mf 100V
C-15	8S9816	Paper: .05 mf 400V
C-16	8S9816	Paper: .05 mf 400V
C-17	21R6648	Mica: 250 mmf 500V
C-18	21R6506	Mica: 150 mmf 500V
C-19	21R6641	Mica: 100 mmf 500V
C-20	21R6639	Mica: 500 mmf 500V
C-21	21R6638	Mica: 1000 mmf 500V
C-22	8S9824	Paper: .002 mf 400V
C-23	21R6638	Mica: 1000 mmf 500V
C-24	8S9816	Paper: .05 mf 400V
C-25	8S9809	Paper: .01 mf 400V
C-26	8S9854	Paper: .01 mf 600V
C-27	8S9854	Paper: .01 mf 600V
C-28	23A27718	Electrolytic: 20-80-80 mf/25-350-300V
C-29	21R6638	Mica: 1000 mmf 500V
C-30	8S9816	Paper: .05 mf 500V
C-31	21R6642	Mica: 50 mmf 500V
*C-32	19C77717	Tuning, 3 gang
C-33	8S9813	Paper: .005 mf 600V
C-34	20A71141	Trimmer, mica: 10-80 mmf
C-35	20A76234	Trimmer, mica: 10-80 mmf; with mtg bracket
C-36	21R2724	Mica: 1000 mmf 5% 300V
C-37	20A71141	Trimmer, mica: 10-80 mmf
C-38	20A71226	Trimmer, mica: 2-12 mmf; includes mtg bracket; part of loop antenna
C-39	21R6641	Mica: 100 mmf 500V
C-40	8S9806	Paper: .1 mf 200V
C-41	8S9809	Paper: .01 mf 400V
C-42	23K77655	Electrolytic: 10 mf 100V
C-43	8S9824	Paper: .002 mf 400V
C-44	8S9824	Paper: .002 mf 400V
C-45	8S9801	Paper: .01 mf 100V
C-46	20A76234	Trimmer, mica: 10-80 mmf; with mtg bracket
C-47	21E471666	Ceramic: .68 mmf
C-48	8S9816	Paper: .05 mf 400V
C-49	21R6642	Mica: 50 mmf 500V
C-50	23K77655	Electrolytic: 10 mf 100V
*C-51	21A112247	Silver mica: 250 mmf

PILOT LIGHTS

I-1, 2 & 3	6SX11654	Bulb: 6.3V .15A tubular bayonet base; clear; #47

COILS

L-1	24A74959	Choke, filament
L-2	24B74822	Shortwave antenna
L-3	24A74820	Shortwave oscillator
L-4	24A74821	Broadcast oscillator
L-5	1X76526	FM loop antenna: with leads
L-6	24K476044	BC loop antenna

SPEAKER

LS-1	50B77716	Electrodynamic: 12"; 3.2 ohm VC; 600 ohm field

RESISTORS

Note: All resistors are 1/2W 20% insulated carbon type unless otherwise specified.

*R-1	6R2109	10 meg
*R-2	6R6015	15,000 1W M.I.
*R-3	6R5986	1.5 meg
R-4	6R6477	15,000 10%
R-5	6R6513	22,000 10% 1W M.I.
R-6	6R6410	33,000 10%
R-7	6R6015	220,000
R-8	6R5586	39,000 10% 1W
R-9	6R6501	1000
R-10	6R6056	47,000
R-11	6R6398	150,000 10%
R-12	6R6010	330
R-13	6R6014	330,000
R-14	6R6026	22,000
R-15	6R6014	330,000
R-16	6R6054	10,000
R-17	18K74991	Volume Control: 1 Meg; tapped at 300,000 ohms; includes power switch
R-18	6R6046	1 meg 10%
R-19	6R3991	150 10% 2W
R-20	6R476075	33 10% 1W
R-21	6R6015	220,000
R-22	6R6410	33,000 10%
R-23	6R6501	1000
R-24	18A28062	Tone Control: 1 meg; includes Phono-Radio switch
R-25	6R6052	470,000
R-26	6R6052	470,000
R-27	6R6228	680,000
R-28	6R3967	12,000 10% 3W M.I.
R-29	6R6026	22,000
R-30	6R6052	470,000
R-31	6R6015	220,000
R-32	6R6270	220 10%
R-33	6R6054	10,000
R-34	6R6056	47,000
R-35	6R6075	100,000
R-36	6R6161	1500
R-37	6R6385	300 10% 1W
R-38	6R6341	22,000 10% 1W
R-39	1K77654	2.7 Wirewound

SWITCHES

S-1	40B74864	Bandswitch, 3 position
S-2	1X75820	Pushbutton switch: 6 button; with mutin switch (complete)

TRANSFORMERS

T-1	24B75461	1st IF, 4.3 Mc: complete with iron cores and padding capacitors, but less shield
T-2	24B76473	2nd IF, 4.3 Mc: complete with iron cores and padding capacitors, but less shield
T-3	24B77714	Discriminator, 4.3 Mc: complete with iron cores and padding capacitors, but less shield
T-4	24B76467	IF, 455 Kc: complete with iron cores and padding capacitors, but less shield
T-5	24B77712	Diode, 455 Kc: complete with iron cores and padding capacitors, but less shield
T-6	25B77709	Output
T-7	25C75489	Power
T-8	24B77710	RF Broadcast: complete with iron cores but less shield

MISCELLANEOUS CHASSIS PARTS

1	1X77651	Bracket, chassis mtg: includes rubber grommets and eyelets
2	7A14664	Bracket, tuning shaft
3	11M8044	Cord, dial: 18 lb black
4	50K21859	Cord, line and plug: 2 conductor, rubber; 9 ft long
5	15C74825	Cover, tuner
6	1X76570	Dial Plate, Brackets and Pullies Assembly: less dial scale, rubber channel strips and pointer
7	6S1615	Eyelet: .205 X .184; brass (tuner cover mtg)
8	6A12105	Eyelet, mounting (chassis & tuner mtg)
9	37A4163	Grommet, rubber (tuner cover mtg)
10	37K15125	Grommet, mounting; rubber (chassis cushions)
11	1X76357	Lead Assembly: single conductor; shielded; 7" long
12	1X76358	Lead Assembly: single conductor; shielded 6" long
13	1X76359	Lead Assembly: single conductor; shielded; 10" long
14	1X470488	Lead & Plug Assembly (phono pickup connector)
15	1X76730	Leads & Phono Motor Receptacle Assembly
16	1X77732	Leads & Speaker Receptacle Assembly
17	32A24816	Lock, line cord: fibre
18	4S7655	Lockwasher: 3/8 internal; cadmium plated (bandswitch mtg)

* Part of E-34-T Tuner

© John F. Rider

MODELS 107F31, 107F31B, CHASSIS HS-87

MOTOROLA INC.

19	2S7018	Nut: 3/8-32 x 1/2 hex; cadmium plated (bandswitch mtg)
20	2S7051	Nut: 3/8-32 x 9/16 Palnut; cadmium plated (volume and tone control mtg)
21	9A12705	Plate, electrolytic capacitor mtg: bakelite
22	28K22185	Plug, insulated: 1 pin (on phono pickup lead)
23	52B74418	Pointer, dial
24	1X76593	Pulley Assembly: two 1-5/16" pullies on brass bushing
25	49A23960	Pulley, cord: 1/4 groove
26	49A21741	Pulley, cord: 3/8 groove
27	49A21552	Pulley, cord: 1/2 groove
28	9A30680	Receptacle: 5 prong (phono motor recept)
29	9K28049	Receptacle, 4 prong (BC loop ant. recept)
30	9A22367	Receptacle: 5 prong (speaker recept)
31	5A71248	Rivet, shoulder: .187 shoulder (cord pulley mtg)
32	5K74560	Rivet, shoulder: .312 shoulder (cord pulley mtg)
33	34C74423	Scale, dial: glass
34	3S7506	Screw: #6 x 1/4 PKZ plain hex head sheet metal screw; cadmium plated (BC osc. coil mtg and SW osc. coil mtg)
35	3S7454	Screw: #8 x 1/4 PKZ plain hex head sheet metal screw; cadmium plated (general mounting)
36	3S7100	Setscrew: 8-32 x 5/16 slabhead; cadmium plated
37	3S7481	Screw: #8 x 3/4 PKZ slotted hex head sheet metal screw (tuner mtg)
38	26B70107	Shield, coil (for T-1, T-2, T-3 & T-8)..
39	1A71049	Shield & Iron Core Sleeve Assembly (for T-4 and T-5)
40	60K76432	Socket, Clip & Leads
41	9A76747	Socket, dial light
42	9A471661	Socket, tube: miniature 7 prong; 1-5/16 mounting centers
43	9A72519	Socket, tube: molded, loctal
44	9A471015	Socket, tube: wafer; loctal
45	9A6788	Socket, tube: molded, octal; plain type
46	9A70165	Socket, tube: molded, octal; shielded type
47	41A21332	Spring, tension coil
48	35A75262	Strip, channel: rubber; 7/8 long (dial plate bumper)
49	57EE1114	Strip, channel: rubber; 1" long (dial scale mtg)
50	32A27678	Strip, shaft bearing: fibre
51	31A15433	Strip, terminal: 1 large insulated lug, #2 mtg
52	31K15026	Strip, terminal: 2 insulated lugs, #2 mtg
53	31A75232	Strip, terminal: 4 insulated lugs, #3 mtg
54	31K22174	Strip, terminal: 4 insulated lugs, #4 mtg
55	31A75235	Strip, terminal: 7 insulated lugs, #1 & #9 mounting
56	1X76552	Tuning Shaft & Pulley Assembly
57	9K14906	Wafer, insulating: fibre (insulates electrolytic capacitor from mtg rivets)
58	37A14868	Washer, compression: sponge rubber

CABINET PARTS - MODELS 107F31 & 107F31B

101	55B74771	Air check, tilt panel
102	45B471744	Arm, phono shelf-actuating
103	57A476151	Block, panel mounting: wood
104	7A74776	Bracket, air check mtg
105	7K71220	Bracket, loop support
106	7A471733	Bracket, phono shelf
107	7A76156	Bracket, pilot light
108	45A471739	Bushing, spacer (phono shelf actuating arm mtg)
109	7A471736	Bracket, spring anchor
110	7A74782	Bracket, tilt panel spring
111	45A471743	Bumper, rubber
112	1X477001	Button & Spring Assembly: walnut push-button with insert spring (107F31)
113	1X477002	Button & Spring Assembly: tan pushbutton with insert spring (107F31B)
114	16E471749	Cabinet, console: walnut (107F31)
115	16K471750	Cabinet, console: blonde (107F31B)
116	1X76532	Catch Assembly (panel catch)
117	56A72307	Catch, bullet
118	42K76724	Clamp, cable (FM loop adj. tape & lead mtg)
119	42K5628	Clip, Fahnestock: double
120	42A75825	Clip, mounting (phono connector mtg)
121	35K471756	Cloth, grille: walnut (107F31)
122	35K471762	Cloth, grille: blonde (107F31B)
123	13B72760	Escutcheon, dial: brass; 9" x 2-3/8"
124	13A75561	Escutcheon, panel catch push button: brass; 1" x 1-1/8"
125	13B70494	Escutcheon, push button: brown plastic; gold stripes (107F31)
126	13K76133	Escutcheon, push button: tan plastic; gold stripes (107F31B)
127	13B76158	Grille, cabinet: brushed brass finish
128	55K471695	Hinge, door (Universal): statuary bronze finish (compartment door - 107F31)
129	55K471692	Hinge, door (Universal): brass (compartment door - 107F31B)
130	55K76149	Hinge, radio door: right hand; statuary bronze finish (107F31)
131	55K76150	Hinge, radio door: left hand; statuary bronze finish (107F31)
132	55B76145	Hinge, radio door: right hand; brass (107F31B)
133	55K76146	Hinge, radio door: left hand; brass (107F31B)
134	14A75142	Insulator, FM loop mounting
135	14A75554	Insulator, light: fibre
136	60A28620	Jewel, light: amber
137	36K70511	Knob, control: plastic; plain
138	36K70513	Knob, control: plastic; with red dot
139	4S7657	Lockwasher: #8 external; cadmium plated (speaker mtg)
140	2A72610	Nut, tee: 8-32 thread (chassis mtg)
141	2S7003	Nut: 8-32 x 5/16 hex; cadmium plated (speaker mtg)
142	2S7022	Nut: 1/4-20 x 7/16 hex: cadmium plated (record changer mtg)
143	35K471751	Pad, felt: 3/4 x 3/4 x 1/8
144	35K471748	Pad, felt: 1 x 1/2 x 1/8
145	35K76174	Pad, grille (compartment door)
146	35B76173	Pad, grille (speaker panel)
147	64C478076	Panel, record changer bottom cover
148	28K19871	Plug: 4 pin (BC loop connector)
149	55A76151	Pull, door: brushed brass finish; includes mtg screw
150	55K471731	Rail, guide: left hand
151	55C471730	Rail, support: right hand
152	3S1328	Screw: #2 x 3/8 Phillips oval head wood screw; brass plated (push button escutcheon mtg)
153	3S1327	Screw: #4 x 1/2 slotted flat head wood screw; brass (panel catch & trigger plate mtg)
154	3S7441	Screw: #5 x 5/8 slotted flat head wood screw; statuary bronze finish (compartment door hinge mtg - 107F31)
155	3S1331	Screw: #5 x 5/8 slotted flat head wood screw; brass (compartment door hinge mtg-107F31B)
156	3S1346	Screw: #6 x 3/4 slotted flat head wood screw; statuary bronze finish (radio door hinge mtg)
157	3S2955	Screw: 8-32 x 1" slotted hex head machine screw; cadmium plated (chassis mtg)
158	3A75140	Screw, hook-eye
159	3K653	Screw, speaker mounting
160	2S7990	Speednut: for 3/16 diameter rod (air check rod retainer)
161	41A74775	Spring, chassis shelf
162	41A72760	Spring, coil (trigger)
163	41A471741	Spring, phono shelf actuating
164	41K72515	Spring, support-upper (record changer cushion)
165	41K72516	Spring, support-lower (record changer cushion)
166	46A471742	Stop, lever: wood; 3/4" long
167	56K72308	Strike, bullet: includes one 1/2" nail..
168	35K471753	Strip, felt: 8-3/8 x 1 x 1/8
169	35K471752	Strip, felt: 11 x 1/2 x 1/8
170	38C75528	Tabs, AM & FM Call Letters & Instructions
171	1X76553	Trigger & Plate Assembly: brushed brass finish (on phono & radio doors)
172	4S7629	Washer: 1/2 x 3/16 x .048 thick; cadmium plated (speaker mtg)
173	4S2263	Washer: 1 x 5/16 x .063 thick; cadmium plated (record changer mtg)

©John F. Rider

MOTOROLA INC.

MODEL 107F31
CHASSIS HS-8
Early

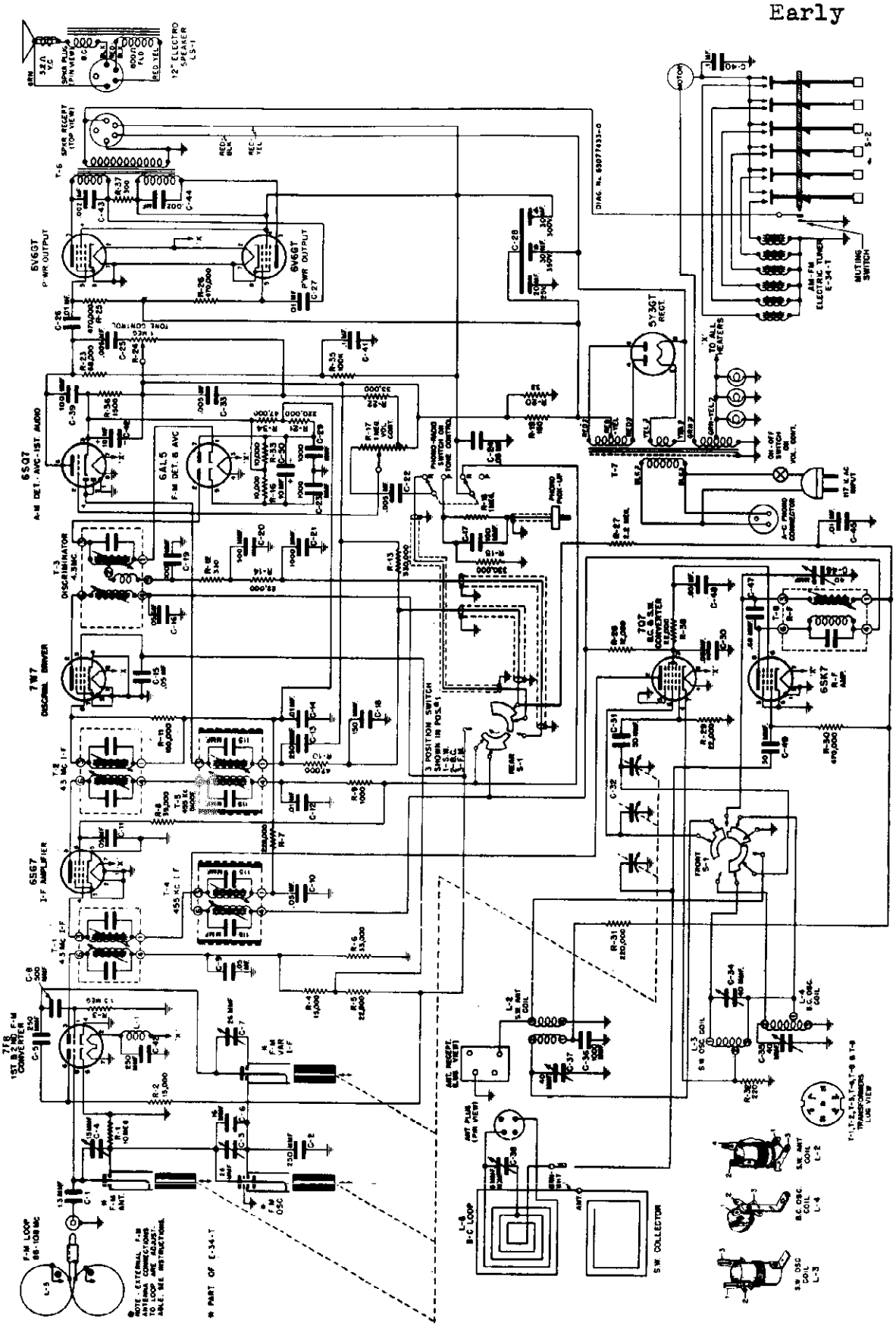

©John F. Rider

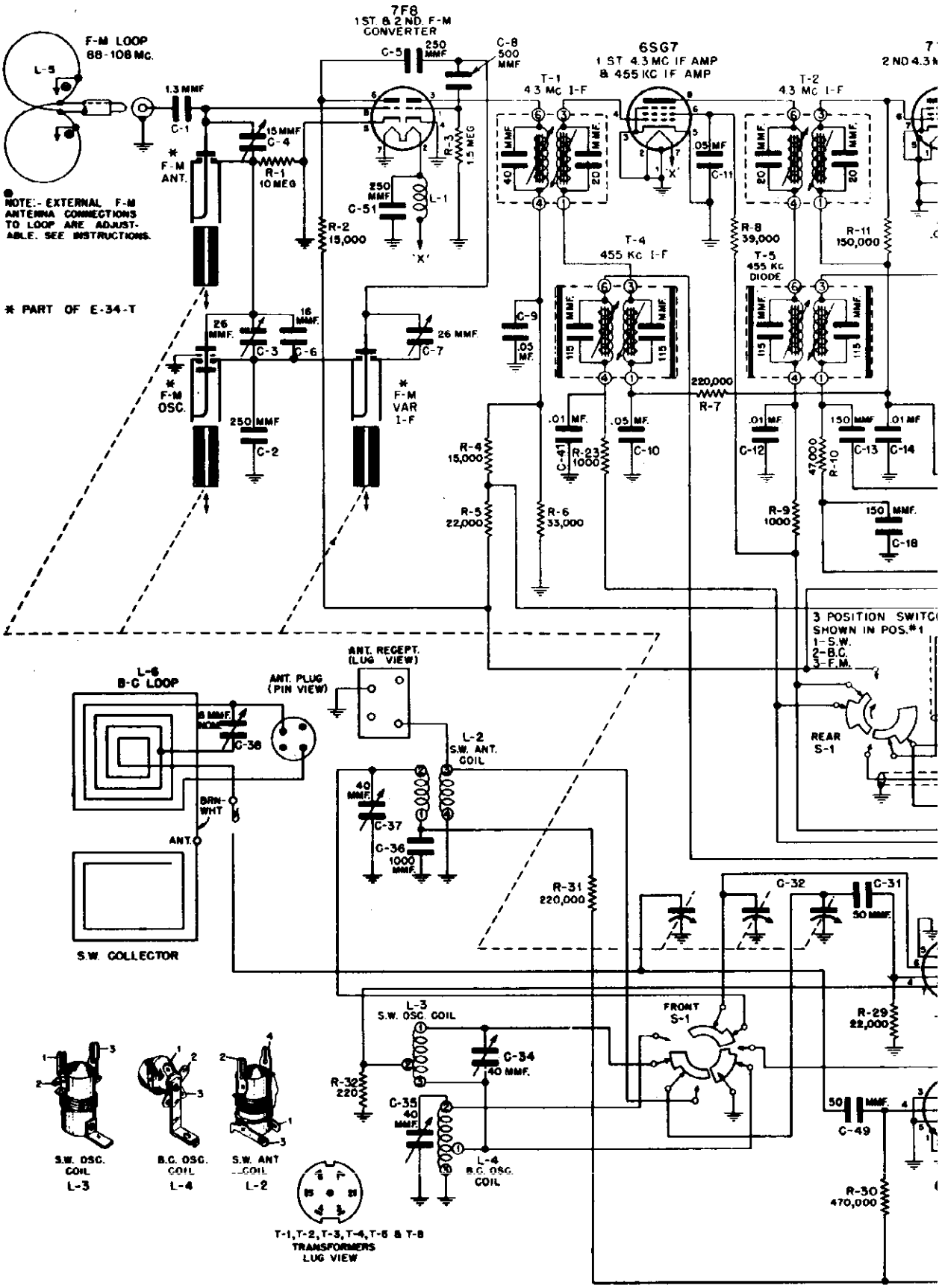

FIGURE 20. SCHE

MOTOROLA INC.

MODELS 107F31, 107F31B,
CHASSIS HS-87

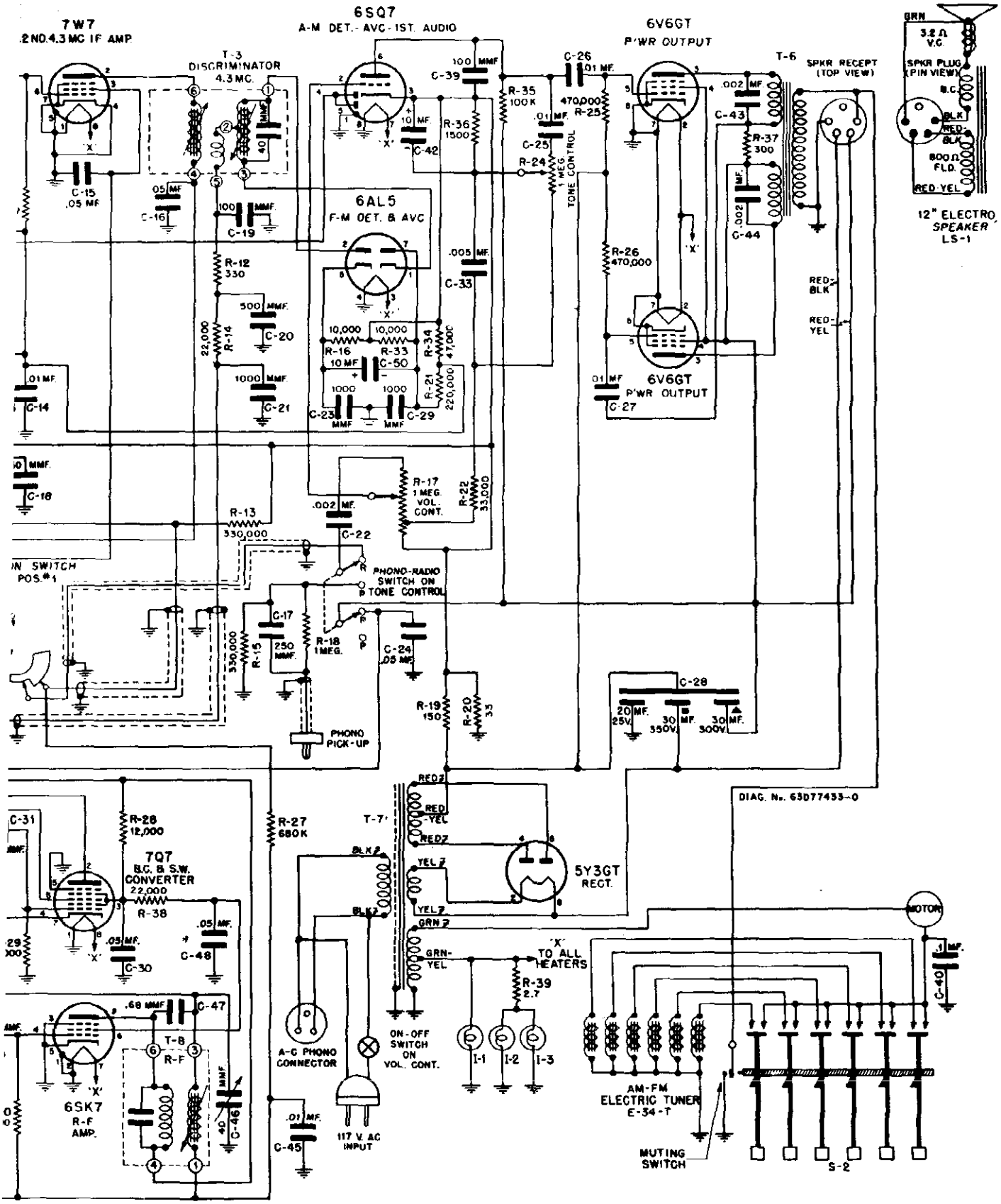

SCHEMATIC DIAGRAM -CHASSIS HS-87

CLARI-SKEMATIX
Registered Trademark

MODEL 107F31,
CHASSIS HS-87

MOTOROLA INC.

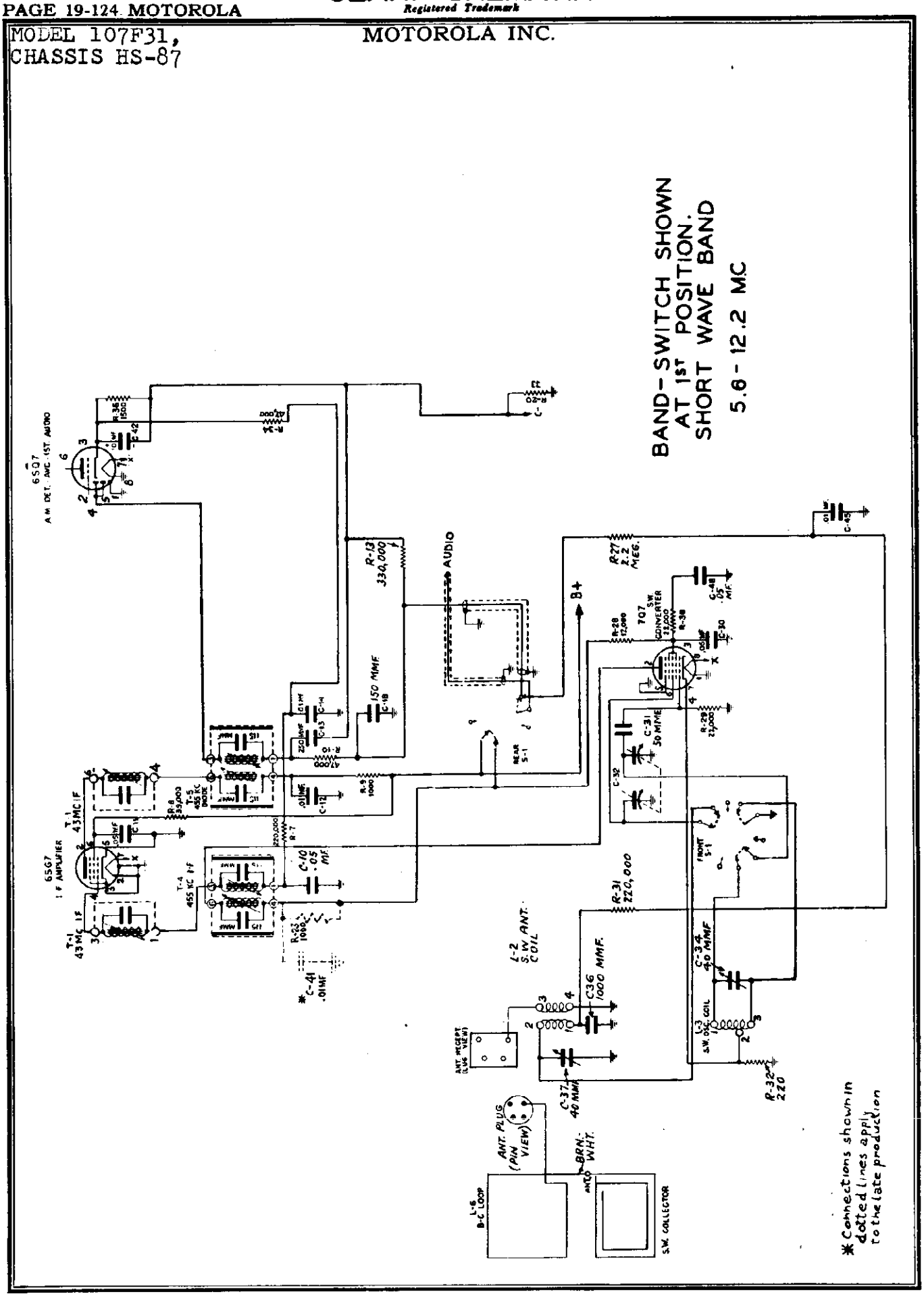

© John F. Rider

MOTOROLA INC.

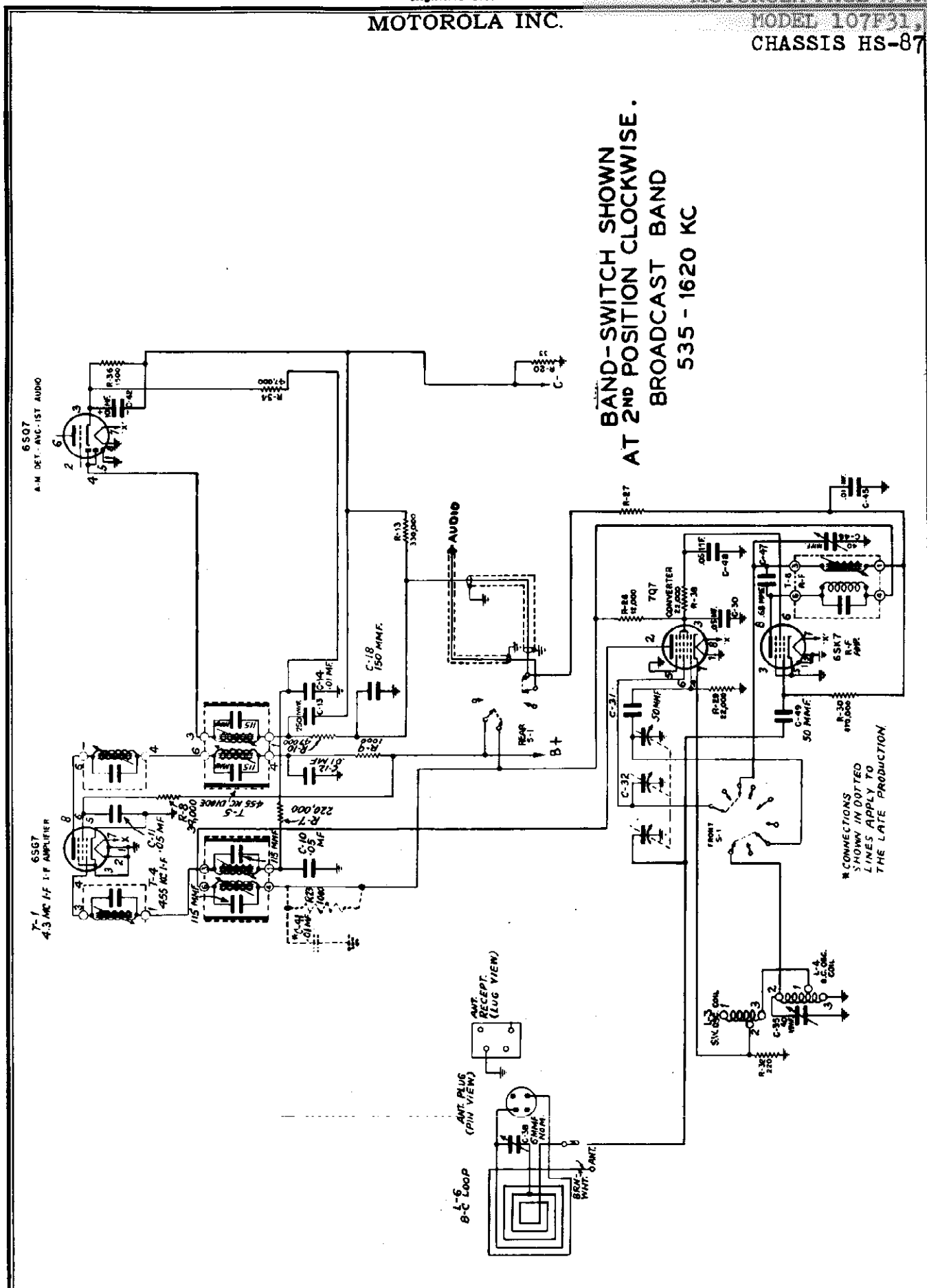

© John F. Rider

Registered Trademark

MODEL 107F31,
CHASSIS HS-87

MOTOROLA INC.

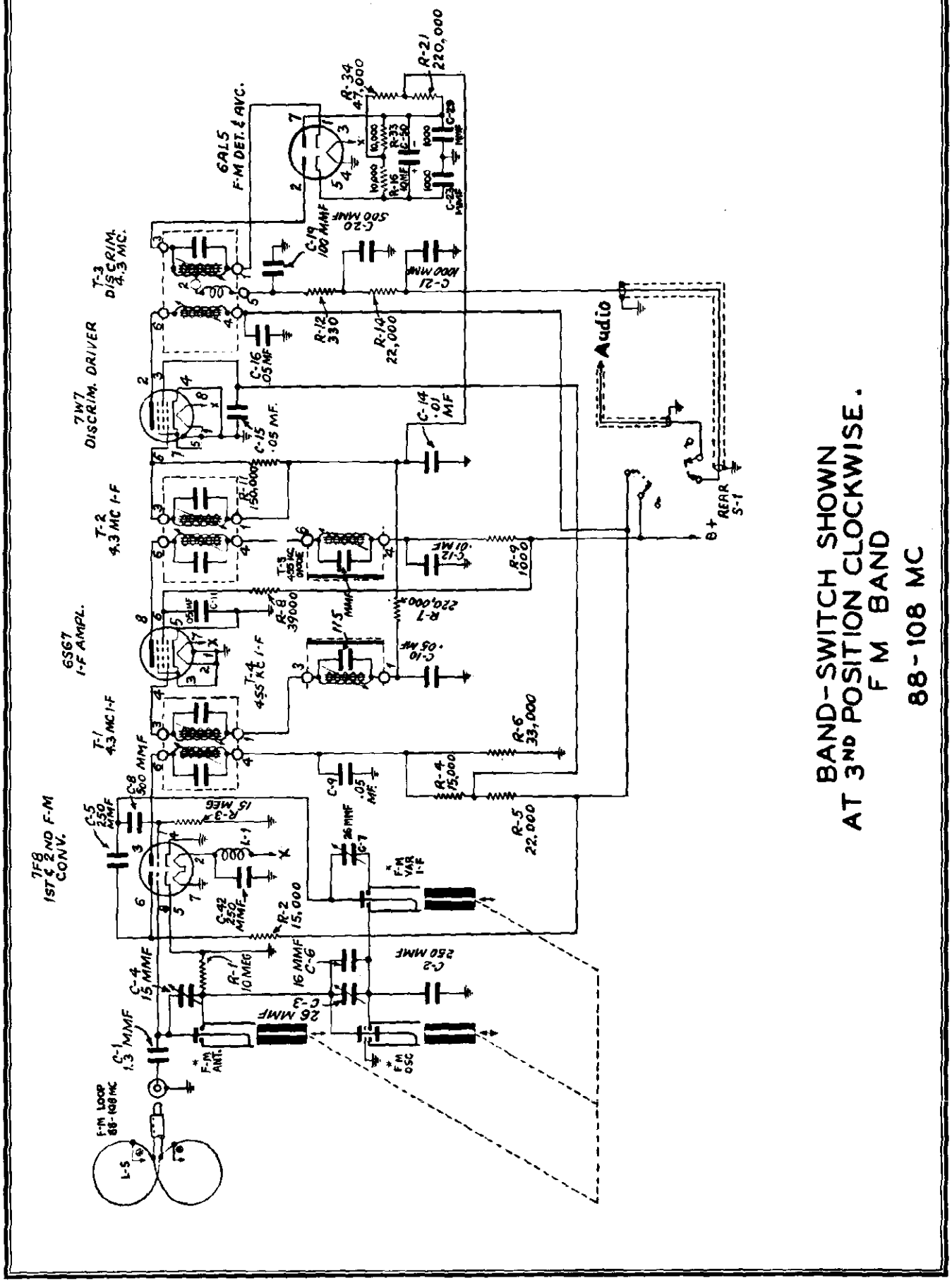

© John F. Rider

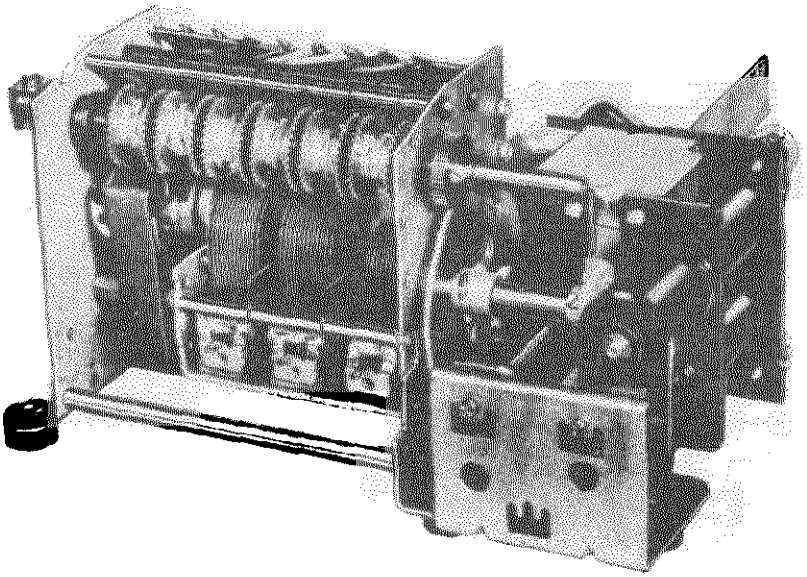

FIGURE 17. MODEL E-34-T AM-FM TUNER

THEORY OF THE FM TUNER

Referring to the functional schematic diagram in Figure 18, the triode T_1 serves both as an oscillator and first converter, and triode T_2 serves as the second converter. Oscillator voltage injection for the second converter is obtained through the coupling capacitor from the plate of T_1. T_1 and T_2 are sections of the 7F8 twin-triode tube.

The frequency relationships are given in Figure 18. The oscillator F_0 beats with the incoming signal F_s to produce the first intermediate frequency F_1, which is variable. F_1 then beats with the same oscillator frequency F_0 in the second converter to produce the second intermediate frequency F_2 which is 4.3 mc. With a 100 mc signal the oscillator frequency is 47.85 mc and the variable intermediate frequency is 52.15 mc.

This system of reception permits the oscillator to be resonated with a high capacitance, 250 micromicrofarads in this case. Consequently, changes in the tube characteristics during warm-up do not produce objectionable changes in oscillator frequency. This contributes materially to the stability of the system.

The actual FM tuner schematic is shown in Figure 20.

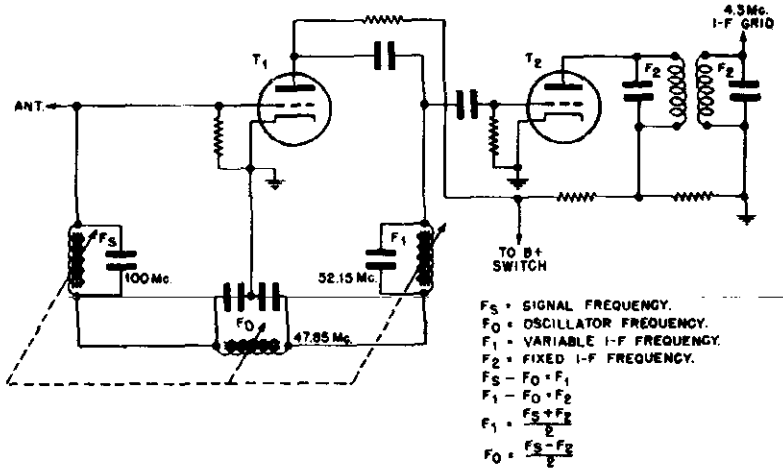

FIGURE 18. FUNCTIONAL SCHEMATIC DIAGRAM OF FM TUNER

Model E-34-T

MOTOROLA INC.

MODELS 107F31, 107F31B, CHASSIS HS-87

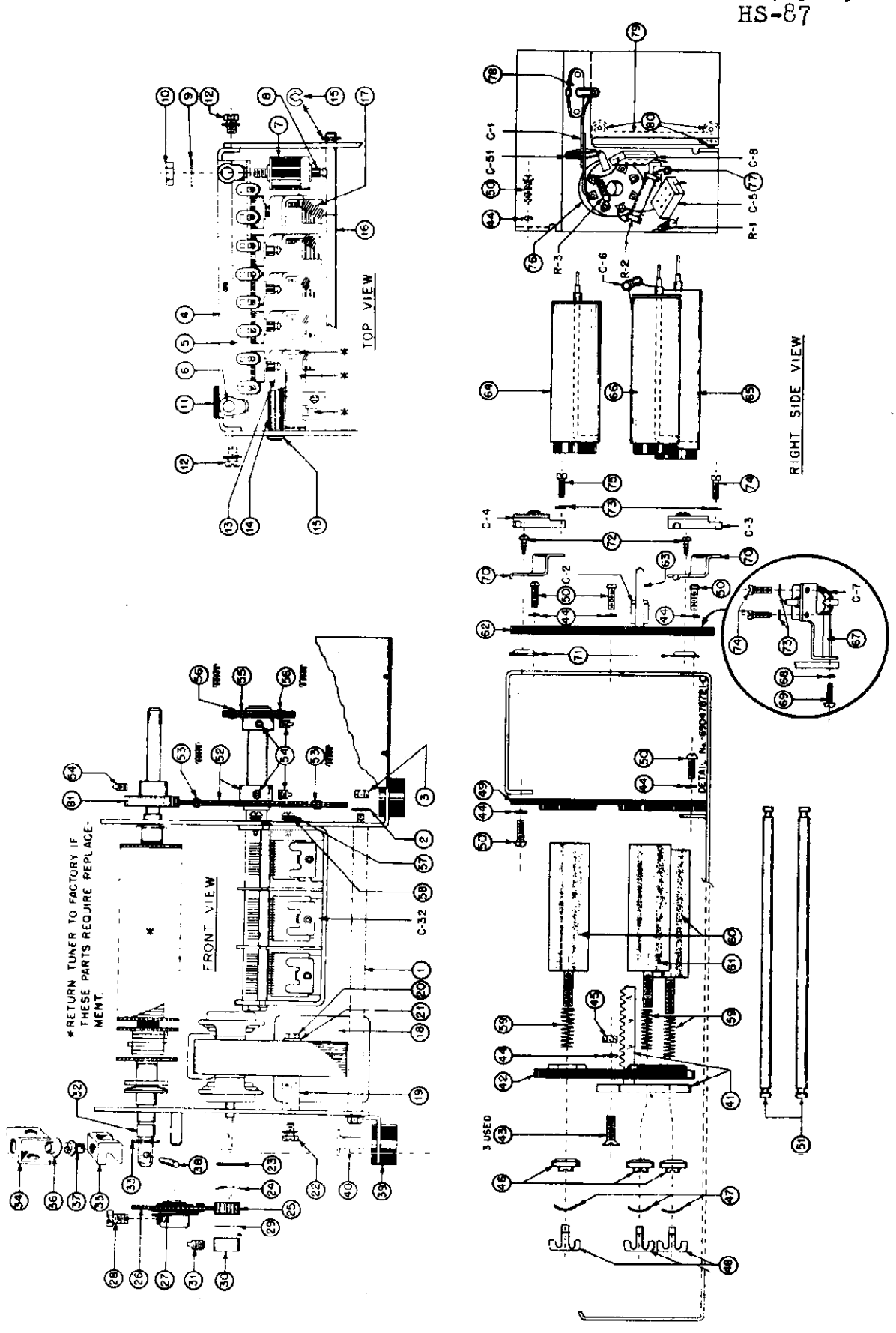

FIGURE 19. MODEL E-34-T AM-FM TUNER PARTS LOCATION

MODELS 107F31, 107F31B, CHASSIS HS-87

MOTOROLA INC.

MODEL E-34-T

PARTS LIST
MODEL E-34-T AM-FM TUNER

REF. NO.	PART NO.	DESCRIPTION
CAPACITORS		
C-1	21A75479	Special: 1.3 mmf
C-2	21A112247	Silver mica: 250 mmf
C-3	20K74940	Variable ceramic: 7-45 mmf
C-4	20A74939	Variable ceramic: 5-25 mmf
C-5	21R2729	Mica: 250 mmf 500V
C-6	21A75320	Ceramic: 16 mmf
C-7	20K74940	Variable ceramic: 7-45 mmf
C-8	21R2730	Mica: 500 mmf 500V
C-32	19C77717	Variable: 3 gang
C-51	21A112247	Silver mica: 250 mmf
RESISTORS		
R-1	6R2109	10 meg 1/2W Ins
R-2	6R6013	15,000 1W N.I.
R-3	6R3966	1.5 meg 1/2W Ins
1	45A21419	Rod, tie: threaded
2	4S7651	Lockwasher: #8 internal
3	2S7007	Nut: 8-32 x 1/4 hex
4	1X76385	Magnet Assembly: 6 electromagnets mounted on channel; with terminal strip
5	31A74480	Strip, terminal: 6 insulated lugs, #1 and 10 mtg.
6	5S7707	Rivet: .122 x 5/32 steel
7	1K75593	Magnet Assembly: single electromagnet
8	37A22059	Bumper, armature: rubber
9	4S7562	Washer: 7/16 x .187 x .033 thick
10	2S7009	Nut: 10-32 x 3/8 hex
11	37A22664	Grommet: for 7/16" hole
12	3S7205	Lockscrew: 8-32 x 1/4 slotted hex head
13	46K75519	Rod, stop
14	11M9504	Sleeving: #4 black
15	4A21577	Washer, "C" spring
16	46A21765	Rod, stop: grooved
17	41A22507	Spring, armature
18	59B75421	Motor, tuner
19	2K75462	Nut: hex; .594 long; 6-32 thread (motor spacer)
20	3S2927	Screws: 6-32 x 7/8 slotted hex head machine screw
21	4S7650	Lockwasher: #6 internal
22	3S7350	Lockscrew: 6-32 x 1/4 slotted hex head
23	4A21409	Washer (clutch)
24	4A21408	Washer, spring (clutch)
25	44A21417	Pinion, clutch; 1/4 P.D.
26	1X21576	Gear & Hub Assembly; 1-5/8 P.D.
27	41A22471	Spring, cushion
28	3S7163	Screw: 8-32 x 1/4 slotted hex head machine screw
29	14A21424	Washer, fibre: 7/16 x .130 x .010 thick.
30	43A21407	Bushing, clutch retaining
31	3S7114	Setscrew: 8-32 x 3/8 slabhead
32	43K21412	Bushing, spacer
33		Washer
34	42A10982	Yoke, retainer
35	42A10981	Yoke, cam
36	5S7618	Eyelet: .135 x .268
37	3A10990	Screw, yoke lock
38	47A11004	Pin, drive shaft
39	37K15125	Grommet, tuner mounting
40	5A12105	Eyelet, mounting
41	44B72706	Rack, drive gear: die cast
42	64B72707	Plate, core mounting: bakelite
43	3S7184	Screw: 6-32 x 1/2 slotted flat head machine screw
44	4S2619	Lockwasher: #6 split
45	2S7006	Nut: 6-32 x 1/4 hex
46	2A72726	Nut, swivel
47	4A74936	Washer, spring
48	42A72725	Clip, swivel nut
49	64B72704	Plate, front mounting: bakelite
50	3S7185	Screw: 6-32 x 3/8 slotted round head machine screw
51	47B72712	Rod, guide
52	1X76389	Split Gear & Bushing Assembly (large)
53	41A4547	Spring, coil
54	3S7100	Setscrew: 8-32 x 5/16 slabhead
55	1X76390	Split Gear & Bushing Assembly (small)
56	41A76498	Spring, coil
57	3S7156	Screw: 6-32 x 3/16 slotted binder head machine screw
58	4S7666	Lockwasher: #6 external
59	41A74880	Spring, core tension
60	46A71749	Core, Iron (ant. & var. IF)
61	46K76172	Core, iron (with paint dot) (osc)
62	1X76388	Rear Mounting Plate & Lug Assembly: bakelite plate with soldering lug
63	29R3005	Lug, soldering
64	24C75492	Inductor, VHF (Ant.): 2-1/2" long
65	24K75494	Inductor, VHF (IF): 2-3/4" long
66	24K75496	Inductor, VHF (Osc): 2-5/8" long
67	7A74712	Bracket, trimmer mounting
68	4S8412	Lockwasher: #4 split
69	3S1937	Screw: 4-40 x 5/16 slotted round head machine screw
70	7A74711	Bracket, trimmer mounting
71	2A74710	Nut, Tinnerman (#4 PKZ)
72	3S3356	Screw: #4 x 5/16 PKZ slotted round head sheet metal screw
73	4A74884	Washer, trimmer: fibre
74	3S1525	Screw: 3-48 x 3/8 slotted fillister head machine screw
75	3S2975	Screw: 3-48 x 5/16 slotted fillister head machine screw
76	9K75544	Socket, tube: loctal
77	31A81399	Strip, terminal: 1 insulated lug; #1 mounting
78	9A54664	Receptacle, ferrule: 1 prong
79	15A74714	Cover, tuner (rear)
80	3S8175	Screw: #4 x 3/16 PKZ slotted hex head sheet metal screw
81	44A21873	Pinion: gang drive

MODEL 409

MOTOROLA INC.

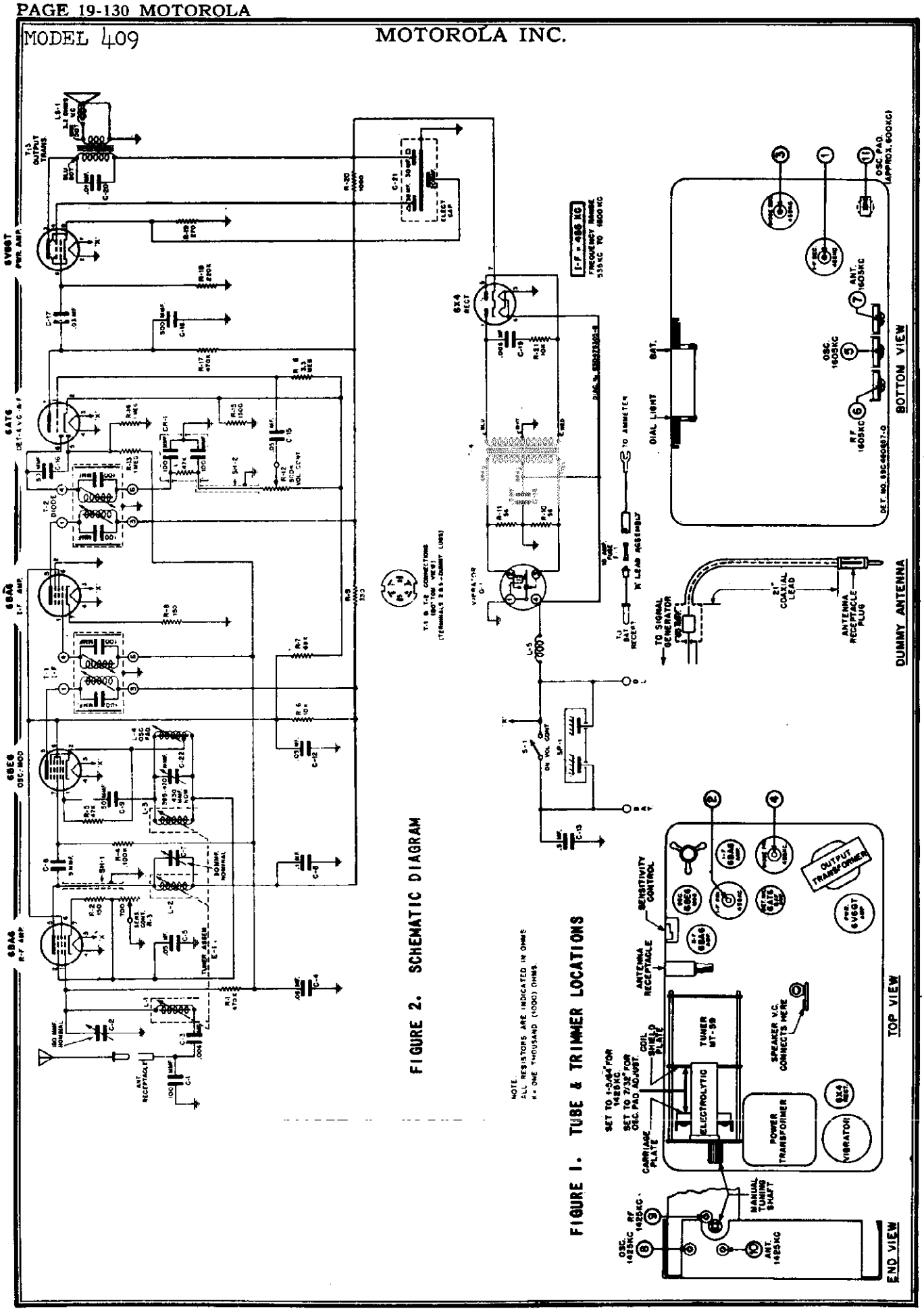

FIGURE 2. SCHEMATIC DIAGRAM

NOTE:
ALL RESISTORS ARE INDICATED IN OHMS
K = ONE THOUSAND (1000) OHMS.

FIGURE 1. TUBE & TRIMMER LOCATIONS

SET TO 1-3/64" FOR 1425 KC.
SET TO 7/32" FOR OSC. PAD ADJUST.

MOTOROLA INC. MODEL 409

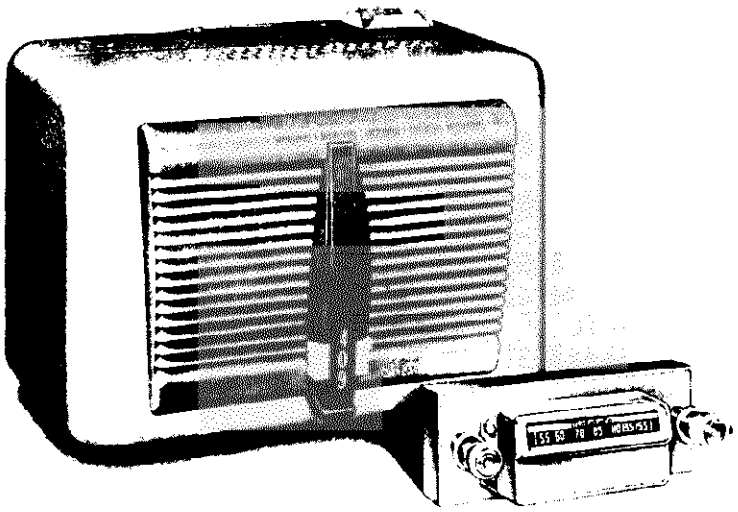

ALIGNMENT

EQUIPMENT REQUIRED

1. A special tool for adjusting the tuner cores. Use Alignment Tool, Motorola Part No. 66A76278.
2. A small screwdriver for IF & RF alignment.
3. An accurately calibrated AM modulated signal generator.
4. A low range output meter.
5. A special dummy antenna for RF alignment. Construct dummy antenna as shown in Figure 1. The 21" coaxial lead needed in its construction is the same type as used for lead-in on Motorola car antenna.

PROCEDURE

1. Remove the front and rear housings. All adjustments are now exposed.
2. Connect a PM speaker (3.2 ohm VC) to VC terminal and chassis of receiver and connect the output meter across the voice coil. If the receiver internal speaker is used, ground receiver front housing to chassis.
3. Connect a 6 volt storage battery to chassis and BATT terminal of receiver; turn receiver on and allow it to warm up for a few minutes. Set receiver volume control at maximum.
4. SENSITIVITY CONTROL. This control must be set to provide $2 \pm 1/2$ volts bias on the RF tubes before alignment is started. Measure this voltage between sensitivity control terminal and chassis.
5. For greatest accuracy, keep output of receiver at approximately 1 watt (1 watt = 1.79 volts on output meter) throughout alignment by reducing generator output (not receiver volume control) as stages are brought into alignment.
6. IF ALIGNMENT
   A. Connect high side of signal generator through .1 mf capacitor to 6BE6 grid (pin #7) and the low side to chassis. Set generator to 455 Kc and peak adjustments (1, 2, 3 & 4), in this order, for maximum output.
   B. Check alignment by repeating procedure.
7. RF ALIGNMENT
   A. Connect signal generator to antenna receptacle through special dummy antenna (60 mmf capacitor in series with 21" coax lead).
   B. Move carriage plate (by turning manual tuning shaft) to extreme high frequency position and screw coil cores out so that at least 1-1/8" of all three cores shall be outside of the coil shield can. Set signal generator to 1605 Kc and peak trimmers (5, 6 and 7), in this order.
   C. Move the carriage plate (by turning manual shaft) so carriage plate is spaced exactly 1-5/64" from coil shield plate. Set signal generator to 1425 Kc and adjust coil cores (8, 9 & 10), in this order, for maximum output.
   D. Move carriage plate (by turning manual tuning shaft) so carriage plate is spaced approximately 7/32" from coil shield plate. Leave signal generator connected but turn signal generator power off. Peak oscillator padder core (11) for maximum noise. If the padder core must be moved more than 1/2 turn from its original position, the carriage plate should be moved to extreme high frequency position, the coil cores (8, 9 & 10) should be screwed out so that 1-1/8" of each core is exposed and steps 7A, B, C & D repeated until it is necessary to move the padder core less than 1/2 turn in this step.

   IMPORTANT: Do not push in on the alignment tool when adjusting the tuner cores. The slightest inward pressure on the alignment tool may move the tuner carriage and result in inaccurate alignment.
8. SETTING THE SENSITIVITY CONTROL. After alignment is completed, set signal generator to 600 Kc and adjust its output to 1.3 microvolts. Adjust the sensitivity control to provide 1 watt output (1 watt = 1.79 volts on output meter).
9. ANTENNA TRIMMER ADJUSTMENT. Once steps 7A, B, C, D & 8 have been satisfactorily performed, no further adjustment of any alignment screws should be made except to align the antenna trimmer (7) to car antenna after receiver is installed in car. This adjustment should be made with antenna fully extended and receiver set to approximately 1400 Kc. Peak the trimmer for maximum volume of a weak station or background noise between stations.

REPLACEMENT PARTS LIST

REF. NO.	PART NO.	DESCRIPTION
CHASSIS PARTS - ELECTRICAL		
CAPACITORS		
C-1	21B77562	Ceramic: 100 mmf 500V .....
C-2	20K485811	Trimmer, variable mica: range 50 to 180 mmf (on same bracket as C-7 & C-22 and sold only as assembly) .....
C-3	8A4529	Paper: .006 mf 100V .....
C-4	8A13514	Paper: .05 mf 100V .....
C-5	8A13514	Paper: .05 mf 100V .....
C-6	21K70720	Molded: 5 mmf 500V .....
C-7	20K485811	Trimmer, variable mica: range 50 to 180 mmf (on same bracket as C-2 & C-22 and sold only as assembly) .....
C-8	8K13166	Paper: .1 mf 400V .....
C-9	21R6513	Mica: 50 mmf 300V .....
or	21K74661	Ceramic: 50 mmf 300V .....
C-12	8A14791	Paper: .05 mf 400V .....
C-13	8A17028	Paper: .5 mf 100V .....
C-14	8A19133	Paper: .5 mf 100V .....
C-15	8A13514	Paper: .05 mf 100V .....
C-16	21R6513	Mica: 50 mmf 300V .....
or	21K74661	Ceramic: 50 mmf 300V .....
C-17	8A71911	Paper: .03 mf 400V .....
C-18	21R6639	Mica: 500 mmf 500V .....
C-19	8A12840	Paper: .006 mf 1600V .....
C-20	8K23690	Paper: .01 mf 400V .....
C-21	23A473015	Electrolytic: 30-30-20 mf/ 350-300-25V .....
C-22	20K485811	Trimmer, variable mica: range 395 to 470 mmf (on same bracket as C-2 & C-7 and sold only as assembly) .....
CAPACITOR-RESISTOR		
CR-1	21A473040	Capacitor-Resistor: 100 mhf 47,000 ohms, 100 mmf .....
FUSE		
F-1	65A10266	10 Amp (3AG) .....
VIBRATOR		
G-1	48B3333	Non-sync: 4-pin .....
COILS		
L-1 & L-2*	24B71881	RF & Antenna Coil: (Specify color of paint dots on old coil when ordering) .....
L-3*	24B71879	Oscillator Coil (Specify color of paint dots on old coil when ordering) .....
L-4	24B70227	Oscillator padder coil: complete with iron tuning core
L-5	24A472535	Choke, hash .....
SPEAKER		
LS-1	50B76582 or 50B473955	5-1/4" PM: 3.2 ohm VC .....
RESISTORS		
Note:	All resistors are 1/2W, 20% insulated carbon type, unless otherwise specified.	
R-1	6R6032	470,000 .....

*Part of Tuner MT-59

REF. NO.	PART NO.	DESCRIPTION
R-2	6R3992	150 .....
R-3	18K77552	Sensitivity Control: 700 ohms
R-4	6R6075	100,000 .....
R-5	6R6056	47,000 .....
R-6	6R476060	10,000 2W .....
R-7	6R6001	68,000 .....
R-8	6R3992	150 .....
R-9	6R6010	330 .....
R-10	6R5614	56 10% .....
R-11	6R5614	56 10% .....
R-12	18A480773	Volume Control: 500,000; with SPST switch .....
R-13	6R6004	1 Meg .....
R-14	6R6004	1 Meg .....
R-15	6R6161	1500 .....
R-16	6R2118	3.3 Meg .....
R-17	6R6032	470,000 .....
R-18	6R6015	220,000 .....
R-19	6R6336	270 10% 1W .....
R-20	6R476004	1000 2W .....
R-21	6R6054	10,000 .....
SWITCHES		
S-1		Power Switch (Part of volume control) .....
SHIELD		
SH-1 & SH-2	30K472998	Cable, shielded: 5' long, single conductor .....
SPARK PLATE		
SP-1	1X472741	Spark Plate Assembly .....
TRANSFORMERS		
T-1 & T-2	24B76553	Diode or IF, 455 Kc: complete with padding capacitors and tuning iron cores, but less shield .....
T-3	25B70171	Output .....
T-4	25B472533	Power .....
TUNER		
	1X472702	Manual Tuner MT-59 .....
CHASSIS PARTS - MECHANICAL		
	42A4215	Clip, vibrator grounding ...
	58A480774	Coupling, tinnerman shaft (on volume control) .....
	1X70646	Receptacle, antenna .....
	3S7771	Rivet: .088 x 3/16 steel; nkl pl (tube socket mtg) .....
	3S7706	Rivet: .122 x 1/8 steel; nkl pl (terminal strip mtg and sensitivity control mtg) ..
	3S7707	Rivet: .122 x 5/32 steel; nkl pl (tube socket mtg) .....
	3S7701	Rivet: .122 x 3/16 steel; nkl pl (vibrator grounding clip mtg and output trans mtg) .
	3S8140	Screw, sheet metal: #8 x 3/16 PKZ plain hex head; cad pl (tuner mtg) .....
	3S7454	Screw, sheet metal: #8 x 1/4 PKZ plain hex head;cad pl (spark plate assembly & capacitor assembly mtg) .....
	3S3397	Screw, sheet metal: #8 x 5/16 PKZ plain hex head; cad pl (pwr trans mtg) ....
	26A472787	Shield, hash .....
	1A71049	Shield & Sleeve Assembly (for T-1 & T-2) .....
	9A70208	Socket, tube: 4 prong (for vibrator) .....
	9A472534	Socket, tube: miniature; 7 prong
	9A6788	Socket, tube: octal .....
	31K37504	Strip, terminal: 1 insulated lug, #1 mtg .....
	31K86126	Strip, terminal: 2 insulated lugs, #2 mtg .....
	31A472573	Strip, terminal: 2 insulated lugs, #2 mtg .....
	7A472614	Support, vol. cont. shaft alignment .....
	4S7555	Washer, flat: 1/4 x .128 x .033 thick; cad pl (output trans mtg) .....
HOUSING PARTS		
	13K580617	Escutcheon (complete) .....
	1XS80718	Housing, front: includes 2 grounding wipers; less escutcheon
	15K580640	Housing,rear .....
	5S7730	Rivet: .122 x 1/8 steel; antique copper finish (grounding wiper mtg) .....
	3S7454	Screw, sheet metal: #8 x 1/4 PKZ plain hex head; cad pl (escutcheon mtg) .....
	3S7456	Screw, sheet metal: #8 x 1/4 PKA slotted acorn head; antique copper finish (housing screws) .....
	3S2696	Screw, sheet metal: #10 x 3/8 PKA plain hex washer head; cad pl (spkr mtg) .....
	39K470032	Wiper, grounding .....
ACCESSORIES		
	3A51494	Bolt, 'J' (receiver mtg) ...
	8A4491	Capacitor, generator .....
	1X74340	Lead Assembly, dial light: complete with bulb .....
	9B473111	Lead Assembly, fuse: complete with 10 Amp fuse .....
	4S7653	Lockwasher: 5/16 int-ext; cad pl (receiver mtg) .....
	3S2863	Nut; hex: 5/16-18 x 9/16 cad pl (receiver mtg) .....
	1K75148	Shaft, flexible: with hang; 24" long .....
	6X4141	Suppressor, distributor ....

©Tahn F Rider

SECTION 1. INSTALLATION

1-1. Installation Procedure

After the NC-108 has been removed from its packing crate proceed as follows:

1. Connect a good external ground (water pipe or radiator) to the G terminal on the antenna terminal strip at the rear of the Receiver. This connection is not absolutely required but, in certain localities, better reception can be achieved by such a connection.

2. Connect the antenna as recommended in Section 1-2.

3. Connect the external audio amplifier, if one is used, as follows: connect the input terminals of the amplifier to the output terminals, X-2, at the rear of the NC-108, terminal 2 is the ground connection. The A.C. line plug of the amplifier may be connected to the A.C. socket, X-1, at the rear of the NC-108. With such a connection both units will receive their power from the same A.C. power source and the A.C. line switch on the NC-108 can be used to turn both units on and off.

4. Connect the power cord, P-1, to a 110/125 volt, 50/60 cycle, A.C. source of supply.

5. Set controls as recommended in Section 2 for the reception of stations.

1-2. Antenna Recommendations

The antenna input circuit of the NC-108 is arranged for operation from either a single-wire type, doublet type antenna or other types having impedances of 70 ohms or more. The input impedance of the antenna circuit is approximately 300 ohms.

The use of an efficient antenna with the NC-108 is strongly recommended if optimum results are to be obtained. Although, if the Receiver is to be operated in localities relatively close to F.M. transmitting stations, a single-wire antenna of from 2 to 10 feet may prove very satisfactory. The two types of antennae shown on Figure No. 2 have proven to be highly efficient. The drawing shows sufficient detail so that either one or the other type of antenna can

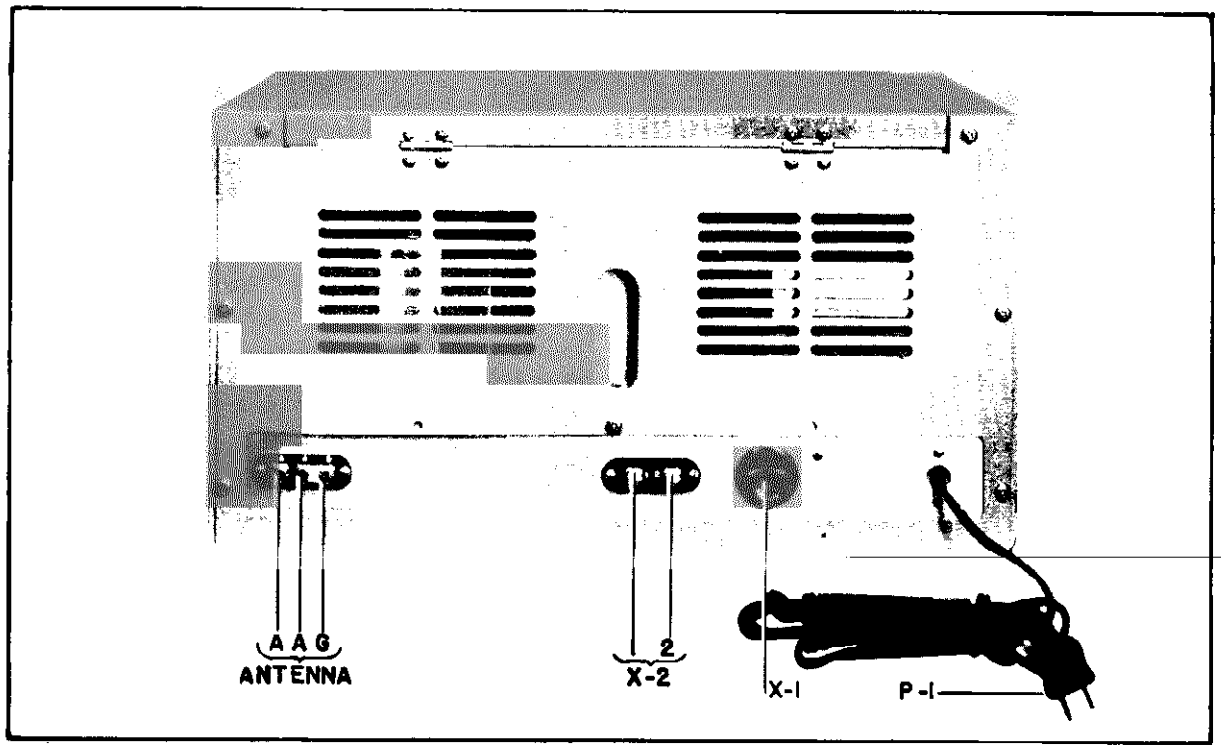

Figure No. 1. Rear View of Receiver

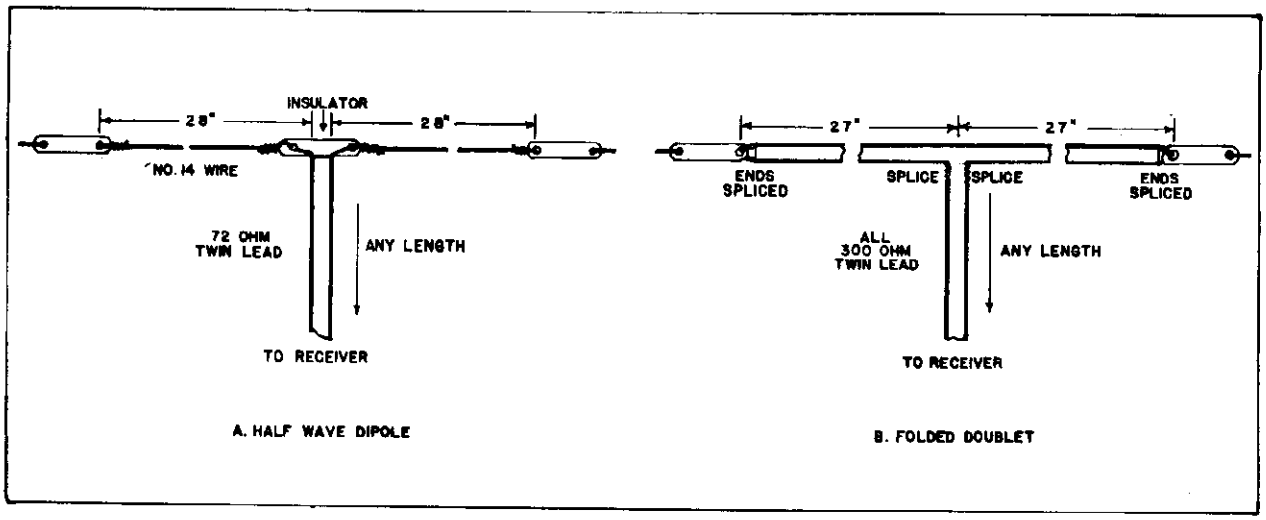

Figure No. 2. Typical Antenna Types

be easily assembled. It will be found that these types of antennae are directional, that is, best results are obtained with the antenna parallel to the transmitting antenna. Only by trial, of course, can the best position for the antenna be determined. There are also available various types of commercial antennae which are very satisfactory. Some of these are directional, while others are designed to give good results no matter what the position of the antenna is, relative to the transmitting antenna. Regardless of which type of antenna is employed, better reception will be obtained if the antenna is mounted in an area free of obstructions. Atop the roof usually proves a good mounting place.

The method of connecting the various types of antennae to the antenna terminal strip at the rear of the Receiver is as follows:

1. Single-wire type--Connect antenna to terminal A at the left of the strip.

2. Doublet type--Connect the antenna feeders to the two terminals marked A.

For either of the above type of connections attaching the metal link on the G terminal to the adjacent A terminal should be tried and left in the position giving the best reception.

SECTION 2. OPERATION

2-1. *Operating Instructions*

After the NC-108 is properly installed, as outlined in Section 2-1, it is placed in operation by adjusting the receiver controls in the following manner:

1. Set the MONITOR switch at On. This switch silences the loud-speaker on the NC-108 when it is in the Off position. The MONITOR switch positions do not effect the external amplifier-loud-speaker system connected to the NC-108.

2. Turn the VOLUME control to approximately 5. This control adjusts receiver volume from a minimum at zero to a maximum at 10.

3. Turn the TONE control from A.C. Off to zero thus turning On the Receiver and the external audio system, if the A.C. socket, X-1, is used as the power source for the external system. The Tone control progressively adjusts the tonal output of the NC-108 from normal receiver reproduction at 10 to an output at zero, in which the higher tones are subdued, emphasizing the lower tones.

4. Tune in the desired station by means of the Main Tuning knob. The dial scale is calibrated directly in megacycles and also is marked with channel indicating numbers. The correct dial setting for any specific station will be indicated as

©John F. Rider

follows:

a. NC-108T--maximum closing of the Tuning Eye.

b. NC-108R--maximum deflection of the Tuning Meter pointer.

After the four steps above have been completed, the operator may readjust the VOLUME and TONE controls to achieve the desired output characteristics of volume and tone, respectively.

2-2.. *Operation with an External Audio System*

After the external amplifier-loudspeaker system, to be used with the NC-108, has been installed as outlined in Section 2-1, operation of both units is accomplished as follows:

1. Initial adjustment of the NC-108 is the same as though it were to be used alone, and the procedure in Section 2-1 should be followed.

2. After the desired station has been properly tuned in on the NC-108, set the MONITOR switch at Off and adjust the external amplifier controls (volume and tone) for the desired output from the external loud-speaker.

It is important that the control adjustments of the NC-108 are accomplished before those of the external amplifier.

It should be noted that use of the A.C. socket, X-1, as the power source for the external audio system will permit extreme flexibility in the placement of units. After the completion of the initial adjustments, the NC-108 may be located at the operating position and the external audio system may be placed at a remote position.

SECTION 3. ALIGNMENT DATA

3-1. General

The alignment of the NC-108 may be divided into two steps:

1. Intermediate Frequency Amplifier Alignment.
2. R.F. Amplifier Alignment
   a. H.F. Oscillator
   b. Mixer and R.F. Amplifier

The necessity for any realignment may be determined by checking the performance of the NC-108 against its normal operation, as outlined in Section 2, and the dial calibration. It is recommended that any indicated realignment be accomplished by experienced personnel.

3-2. I.F. Amplifier Alignment

The intermediate frequency of the NC-108 is 10.7 megacycles. The three I.F. transformers and the ratio detector transformer have permeability tuned iron-core inductors with screw adjustments for alignment purposes. The inductor adjustments L-3, L-5, L-7 and L-11 are accessible from the top inside of the cabinet and the inductor adjustments L-4, L-6, L-8 and L-10 from the bottom inside of the cabinet. See Figure Nos. 3 and 4.

The alignment procedure is as follows:

1. Connect the "high" output lead of an accurately calibrated signal generator to the stator of the mixer portion, C-2C, of the main tuning capacitor ahd the ground lead to any convenient grounded point on the chassis. Set the signal generator at 10.7 megacycles and turn the modulation off.

2. Connect the D.C. volt probe of a high-impedance vacuum tube voltmeter to the junction of R-27 and C-36 (diode load) and the common lead to chassis. Use the 10 volt scale of the meter.

3. Connect the power cord of the NC-108 to a 110/125 volt, 50/60 cycle, A.C. source of supply.

4. Set the VOLUME control at zero.

5. Set the MONITOR switch at OFF.

6. Set the TONE control at zero.

7. Adjust the attenuator of the signal generator for a reading of approximately 3 volts on the voltmeter. (The diode load voltage is negative with respect to chassis.)

8. Adjust the I.F. inductors L-3 thru L-8 and L-10 for maximum, as indicated on the voltmeter, retarding the attenuator as necessary to maintain a low reading in the

MODELS NC-108R, NC-108T

NATIONAL COMPANY, INC.

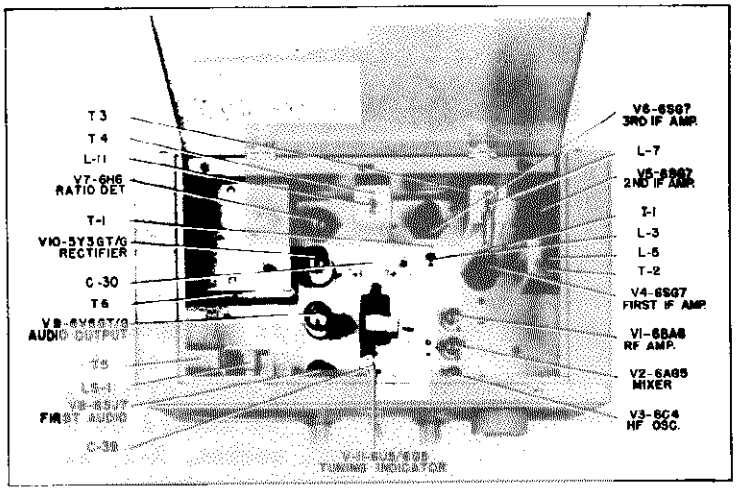

Figure No. 3. Top View of Receiver

vicinity of 3 volts on the voltmeter. The maintenance of a low meter reading is recommended to assure proper alignment.

9. Increase the attenuator of the signal generator until a reading of 10 volts is obtained on the voltmeter.

10. Connect the D.C. volt probe of the voltmeter to the junction of R-29 and C-37. Adjust the secondary inductor L-11 for a reading of 5 volts on the voltmeter without disturbing the setting of the attenuator of the signal generator.

11. Check the voltmeter reading with the voltmeter probe connected to R-27 and C-36. Repeat the adjustments of L-10 and L-11, as necessary, until the voltmeter reading obtained at R-29 and C-37 is one-half the reading at R-27 and C-36.

3-2. R.F. Amplifier Alignment

The R.F. amplifier, mixer and H.F. oscillator stages have variable trimmer capacitors, C-1, C-9 and C-5 respectively, for alignment adjustments. See Figure No. 4. Alignment is accomplished using an accurate test signal of 108 megacycles. The signal source may be a signal generator, crystal oscillator or an F.M. broadcast station of known frequency near the upper frequency limit of the NC-108. The alignment procedure is as follows:

1. Connect the signal source to the two A antenna terminals; disconnect the metal link. In the case where a signal generator is used, make the connection through a 300 ohm dummy antenna. In the case where the signal from an F.M. broadcast station is used, connect the antenna to the antenna terminals.

2. Connect the power cord of the NC-108 to a 110/125 volt, 50/60 cycle, A.C. source of supply.

3. Set the MONITOR switch at On.

4. Set the VOLUME control at approximately 5.

5. Set the TONE control at 10.

6. Set the main tuning dial pointer to the exact frequency of the test signal.

7. Adjust the H.F. oscillator trimmer capacitor, C-5, to receive the test signal.

8. Adjust trimmers C-1 and C-9 for maximum gain as observed on the visual tuning indicator.

9. Check step 7 and repeat steps 7 and 8 as necessary.

SECTION 4. MAINTENANCE AND TEST DATA

4-1. Circuit

A stage outline of the circuit employed in the NC-108 is given below together with the tube associated with each stage:

R.F. Amplifier	6BA6
Mixer	6AG5
H.F. Oscillator	6C4
First I.F. Amplifier	6SG7
Second I.F. Amplifier	6SG7
Third I.F. Amplifier	6SG7

Ratio Detector.....6H6
First Audio.....6SJ7
Audio Output.....6V6GT/G
Rectifier.....5Y3GT/G
Tuning Indicator.....6U5/6G5

The tuning indicator tube, 6U5/6G5, is used on the NC-108T only.

4-2. *General Maintenance Data*

The NC-108 is designed and constructed to assure a long period of uninterrupted service. A few service hints are given below to aid in locating individual components which, due to age or weakness, cause abnormal operation of the NC-108.

Vacuum tube failure may be evidenced by reduction in sensitivity, intermittent operation or an inoperative Receiver. Tubes may be checked in suitable tube testing equipment, or by replacement with tubes of proven quality. Care must be taken that tubes removed for checking are returned to their original sockets. Tubes of the same type will vary slightly in their individual characteristics and selection of a new tube that closely approximates the replaced tube will reduce the necessity of realignment.

Bypass or filter capacitors which become open may cause decreased sensitivity, oscillation, or complete failure of the Receiver. The defective unit can be located by temporarily connecting a good capacitor in parallel with each suspected capacitor. Leaky or short-circuited capacitors can be detected by an ohmmeter check; a zero resistance reading of the ohmmeter will indicate a shorted capacitor.

Defective resistors, sometimes caused by capacitor failure in associated circuits, can be definitely located by measuring the resistance of each resistor. The Schematic Diagram should be consulted to ascertain that any particular resistor under test is not connected in parallel with some other circuit element which might produce a false measurement. An overloaded resistor may be located by visual inspection if the resistor becomes scorched due to excessive heating.

4-3. *Voltage Tabulation*

The measurements of voltage shown on the following table are tabulated using a high-impedance vacuum tube voltmeter with a line voltage of 115 volts and the antenna disconnected. The control settings to be observed are as follows:

1. VOLUME control at zero.
2. Main tuning dial pointer at low frequency limit.
3. TONE control at zero.
4. MONITOR switch at On.

All voltages are measured between specified terminal and chassis.

TUBE TERMINAL	PIN	VOLTS ±15%
R.F. Amp. Grid	1	-.76
R.F. Amp. Plate	5	208
R.F. Amp. Screen	6	90
R.F. Amp. Cathode	2-7	0
Mixer Grid	1	0
Mixer Plate	5	203
Mixer Screen	6	173
Mixer Cathode	2-7	3.7
H.F. Osc. Plate	1	90
H.F. Osc. Grid	6	-6
H.F. Osc. Cathode	7	0
First I.F. Amp. Cathode	3-5	0
First I.F. Amp. Grid	4	-.76
First I.F. Amp. Screen	6	103
First I.F. Amp. Plate	8	187
Second I.F. Amp. Cathode	3-5	0
Second I.F. Amp. Grid	4	-.8
Second I.F. Amp. Screen	6	100
Second I.F. Amp. Plate	8	190
Third I.F. Amp. Cathode	3-5	0
Third I.F. Amp. Grid	4	0
Third I.F. Amp. Screen	6	110
Third I.F. Amp. Plate	8	175
Ratio Det. Plate No. 2	3	-.45
Ratio Det. Plate No. 1	5	-.1
Ratio Det. Cathode No. 2	4	-.1
Ratio Det. Cathode No. 1	8	0
First Audio Grid	4	0
First Audio Cathode	5	1.35
First Audio Screen	6	36
First Audio Plate	8	73
Audio Output Plate	3	201
Audio Output Screen	4	208
Audio Output Grid	5	0
Audio Output Cathode	8	10.5
Tuning Indicator Plate	2	12*
Tuning Indicator Grid	3	-.1*
Tuning Indicator Target	4	208*
Tuning Indicator Cathode	5	0*
Rectifier Filament	2	235
Rectifier Plate No. 2	4	275 A.C.
Rectifier Plate No. 1	6	275 A.C.
Rectifier Filament	8	235

* Used on NC-108T only.

MODELS NC-108R,
NC-108T

NATIONAL COMPANY, INC.

Figure No. 4. Bottom View of Receiver

The only electrical difference between the NC-108T, table model, and the NC-108R, rack model, is in the type of tuning indicator circuit used. The NC-108T employs a tuning eye tube, and the NC-108R employs a milliameter, for use as a visual tuning indicator.

The milliameter pointer on the NC-108R should be at the first scale marker with the Receiver turned on and with no signal input. If correction is required it is made by the screw-adjustment on the bezel of the meter.

©John F. Rider

NATIONAL COMPANY, INC.

MODELS NC-108R, NC-108T

SECTION 5. PARTS LIST

Symbol	Function	Rating
	CAPACITORS	
C-1	R.F. Amp. Trimmer	Ceramic, Var. 5-20 mmf.
C-2	Main Tuning	Air, Var. 3 Sec. Ganged
C-2A	R.F. Amp. Tuning	4-24 mmf., Part of C-2
C-2B	H.F. Osc. Tuning	4-24 mmf., Part of C-2
C-2C	Mixer Tuning	4-24 mmf., Part of C-2
C-3	R.F. Amp. Grid Coupling	Ceramic, 50 mmf. 500 vdcw
C-4	H.F. Osc. Plate Fil.	Ceramic, 100 mmf. 500 vdcw
C-5	H.F. Osc. Trimmer	Ceramic, Var. 5-20 mmf.
C-6	H.F. Osc. Grid Coupling	Ceramic, 100 mmf. 500 vdcw
C-7	R.F. Amp. Screen Bypass	Ceramic, 100 mmf. 500 vdcw
C-8	Mixer Grid Coupling	Ceramic, 100 mmf. 500 vdcw
C-9	Mixer Trimmer	Ceramic, Var, 5-20 mmf.
C-10	Mixer Cathode Bypass	Ceramic, C.001 mfd 500 vdcw
C-11	Mixer Screen Bypass	Ceramic, 100 mmf. 500 vdcw
C-12	T-1 Primary Tuning	Ceramic, 100 mmf. 500 vdcw
C-13	T-1 Sec. Tuning	Ceramic, 100 mmf. 500 vdcw
C-14	Mixer Plate Bypass	Paper, 0.01 mfd. 400 vdcw
C-15	1st. I.F. Amp. Grid	Paper, 0.01 mfd. 400 vdcw
C-16	1st. I.F. Amp. Screen Bypass	Paper, 0.01 mfd. 400 vdcw
C-17	T-2 Primary Tuning	Ceramic, 100 mmf. 500 vdcw
C-18	T-2 Secondary Tuning	Ceramic, 100 mmf. 500 vdcw
C-19	1st. I.F. Amp. Plate Bypass	Paper, 0.01 mfd. 400 vdcw
C-20	2nd. I.F. Amp. Grid Fil.	Paper, 0.01 mfd. 400 vdcw
C-21	2nd. I.F. Amp. Screen Bypass	Paper, 0.01 mfd. 400 vdcw
C-22	T-3 Primary Tuning	Ceramic, 100 mmf. 500 vdcw
C-23	T-3 Secondary Tuning	Ceramic, 100 mmf. 500 vdcw
C-24	2nd. I.F. Amp. Plate Bypass	Paper, 0.01 mfd. 400 vdcw
C-25	3rd. I.F. Amp. Cathode Bypass	Paper, 0.01 mfd. 400 vdcw
C-26	3rd. I.F. Amp. Screen Bypass	Paper, 0.01 mfd. 400 vdcw
C-27	A.C. Line Bypass	Paper, 0.01 mfd. 400 vdcw
C-28	R.F. Amp. Filament Bypass	Ceramic, 100 mmf. 500 vdcw
C-29	Mixer Filament Bypass	Ceramic, 100 mmf. 500 vdcw
C-30		Elect, 10+10 mfd 450 vdcw
C-30A	Power Supply Filter	Part of C-30
C-30B	Power Supply Filter	Part of C-30
C-31	T-4 Primary Tuning	Mica, 100 mmf. 500 vdcw
C-32	T-4 Secondary Tuning	Mica, 200 mmf. 500 vdcw
C-33	T-4 Secondary Tuning	Mica, 200 mmf. 500 vdcw
C-34	3rd. I.F. Amp. Plate Bypass	Paper, 0.01 mfd. 400 vdcw
C-35	Ratio Det. Load	Ceramic, 0.001 mfd 500 vdcw
C-36	Ratio Det. Load	Elect, 10 mfd 50 vdcw
C-37	De-emphasis	Ceramic, 0.001 mfd 500 vdcw
C-38	Audio Coupling	Paper, 0.01 mfd. 400 vdcw
C-39		Elect, 25+25+8 mfd
C-39A	1st. Audio Cathode Bypass	25 mfd, 50 vdcw
C-39B	1st. Audio Plate Fil.	8 mfd, 450 vdcw
C-39C	Audio Output Cathode Bypass	25 mfd, 50 vdcw
C-40	1st. Audio Screen Bypass	Paper, 0.1 mfd. 400 vdcw
C-41	Audio Output Coupling	Paper, 0.01 mfd. 400 vdcw
C-42	Tone	Paper, 0.005 mfd, 500 vdcw
C-43	B Plus Bypass	Paper, 0.01 mfd. 400 vdcw
	RESISTORS	
R-1	H.F. Osc. Plate Fil.	Fixed, 33,000 ohms 1 W
R-2	R.F. Amp. Grid	Fixed, 100,000 ohms 1/2 W
R-3	R.F. Amp. Screen Fil.	Fixed, 47,000 ohms 1/2 W
R-4	H.F. Osc. Grid	Fixed, 47,000 ohms 1/2 W
R-5	Mixer Cathode	Fixed, 2,200 ohms 1/2 W
R-6	Mixer Screen Fil.	Fixed, 100,000 ohms 1/2 W
R-7	Mixer Plate Fil.	Fixed, 2,200 ohms 1/2 W
R-8	T-1 Primary Load	Fixed, 47,000 ohms 1/2 W
R-9	T-1 Secondary Load	Fixed, 47,000 ohms 1/2 W
R-10	1st. I.F. Amp. Grid	Fixed, 220,000 ohms 1/2 W
R-11*	Tun. Indicator Plate Load	Fixed, 1,000,000 ohms 1/2W
R-12	A.V.C. Fil.	Fixed, 2,200,000 ohms 1/2W
R-13	1st. I.F. Amp. Screen Fil.	Fixed, 33,000 ohms 1/2 W
R-14	1st. I.F. Amp. Plate Fil.	Fixed, 2,200 ohms 1/2 W
R-15	T-2 Primary Load	Fixed, 47,000 ohms 1/2 W
R-16	T-2 Secondary Load	Fixed, 47,000 ohms 1/2 W
R-17	2nd. I.F. Amp. Grid	Fixed, 220,000 ohms 1/2 W
R-18	2nd. I.F. Amp. Screen Fil.	Fixed, 33,000 ohms 1/2 W
R-19	2nd. I.F. Amp. Plate Fil.	Fixed, 2,200 ohms 1/2 W
R-20	T-3 Primary Load	Fixed, 47,000 ohms 1/2 W
R-21	T-3 Secondary Load	Fixed, 47,000 ohms 1/2 W
R-22	3rd. I.F. Amp. Cathode	Fixed, 100 ohms 1/2 W
R-23	3rd. I.F. Amp. Screen Fil.	Fixed, 33,000 ohms 1/2 W
R-24	3rd. I.F. Amp. Plate Fil.	Fixed, 4,700 ohms 1/2 W
R-25	Ratio Det. Output	Fixed, 47,000 ohms 1/2 W
R-26	Ratio Det. Output	Fixed, 47,000 ohms 1/2 W
R-27	Diode Load	Fixed, 15,000 ohms 1/2 W
R-28*	Diode Load	Fixed, 4,700 ohms 1/2 W
R-28**	Diode Load	Fixed, 10,000 ohms 1/2 W

RESISTORS (Continued)		
R-29	De-emphasis	Fixed, 33,000 ohms 1/2 W
R-30	Volume Control	Variable, 500,000 ohms
R-31	1st. Audio Cathode	Fixed, 2,200 ohms 1/2 W
R-32	1st. Audio Screen Fil.	Fixed, 1,000,000 ohms 1/2W
R-33	1st. Audio Plate Load	Fixed, 220,000 ohms 1/2 W
R-34	1st. Audio Screen and Plate Fil.	Fixed, 22,000 ohms 1/2 W
R-35	Audio Output Grid	Fixed, 470,000 ohms 1/2 W
R-36	Tone Control	Variable, 500,000 ohms
R-37	Audio Output Grid Series	Fixed, 470,000 ohms 1/2 W
R-38	Audio Output Cathode	Fixed, 330 ohms 2 W
R-39**	Meter Adjusting	Fixed, 8,200 ohms 1/2 W

MISCELLANEOUS		
I-1	Dial Lamp	6-8 V., 0.15 Amp.
I-2**	Meter Lamp	6-8 V., 0.15 Amp.
L-1	R.F. Amp. Plate Load	Choke, 4 microhenries
L-2	B Plus Fil.	Choke, 4 microhenries
L-3	T-1 Primary Ind.	Var. Iron-Core
L-4	T-1 Secondary Ind.	Var. Iron-Core
L-5	T-2 Primary Ind.	Var. Iron-Core
L-6	T-2 Secondary Ind.	Var. Iron-Core

MISCELLANEOUS (Continued)		
L-7	T-3 Primary Ind.	Var. Iron-Core
L-8	T-3 Secondary Ind.	Var. Iron-Core
L-9	Fil. Choke	10 Henries, 100 ma.
L-10	T-4 Primary Ind.	Var. Iron-Core
L-11	T-4 Secondary Ind.	Var. Iron-Core
M-1**	Tun. Meter	0-1 Ma.
P-1	A.C. Power Plug	2 Contacts
S-1	A.C. Line Switch	D.P.D.T.
S-2	Monitor Switch	Toggle, S.P.D.T.
T-1	1st. I.F. Trans.	10.7 Mc.
T-2	2nd. I.F. Trans.	10.7 Mc.
T-3	3rd. I.F. Trans.	10.7 Mc.
T-4	Ratio Det. Trans.	10.7 Mc.
T-5	Audio Output Trans.	5,000/4 Ohms
T-6	Power Trans.	115 V., 50/60 cycles
X-1	A.C. Connector	2 Pole
X-2	Amplifier Connector	2 Terminals
LS-1	Loud-speaker	5" P.M.

* Used on NC-108 T only.
** Used on NC-108 R only.

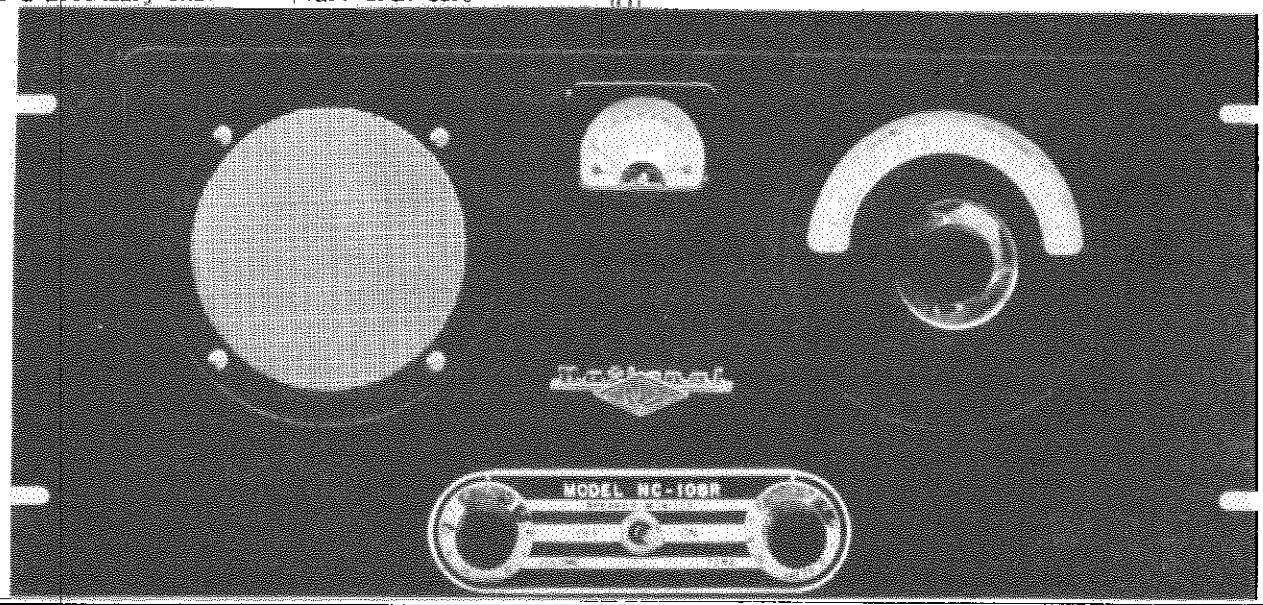

NATIONAL COMPANY, INC.

MODELS NC-108R
NC-108T

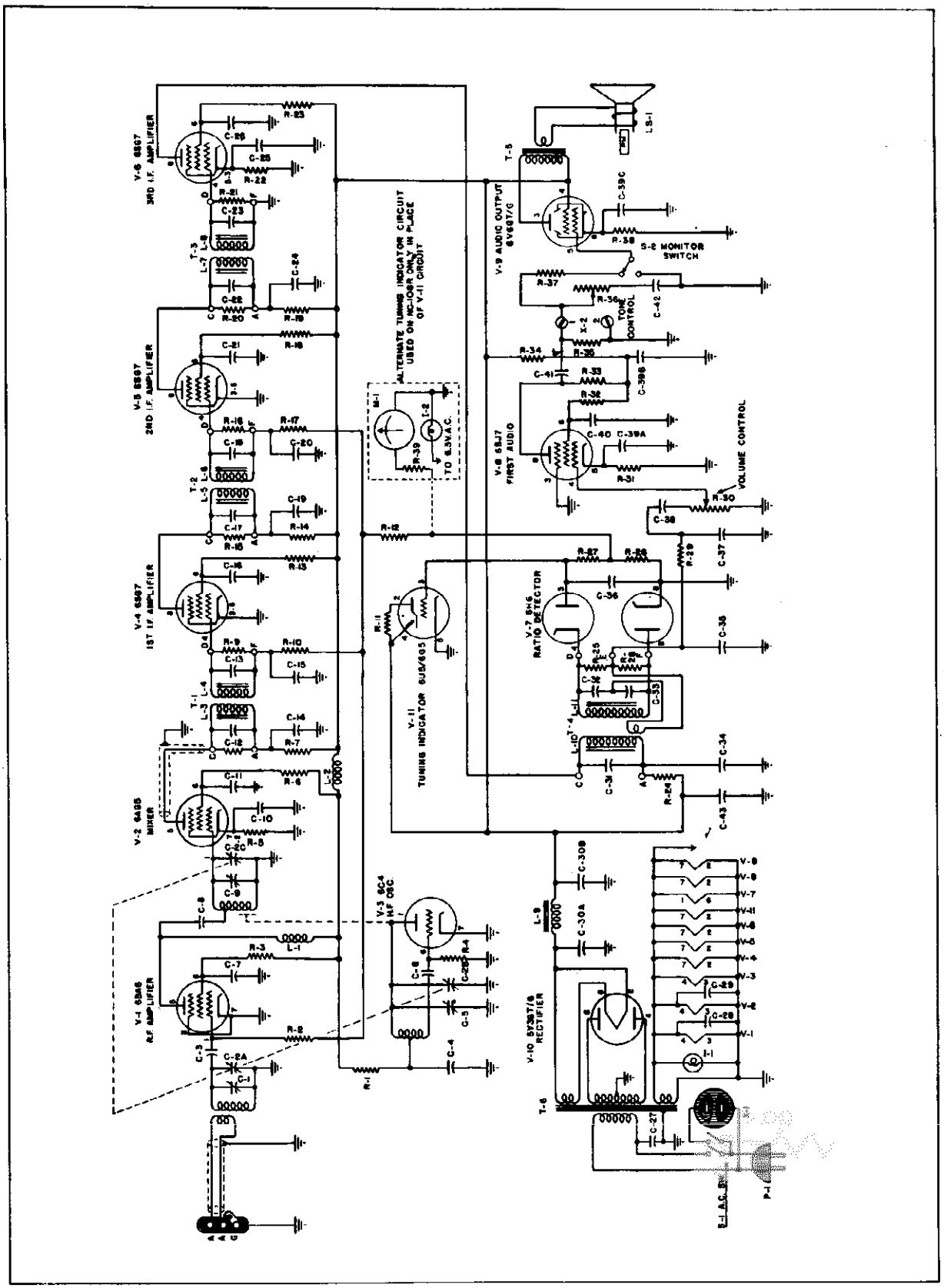

Figure No. 5. Schematic Diagram NC-108 Receiver

MODELS NC-108R, NC-108T

NATIONAL COMPANY, INC.

ADDENDA
NC-108 Receiver

1. A DE-EMPHASIS switch is mounted on the top side of the receiver chassis to the right of the power transformer. In the ON position, the de-emphasis circuit, R-29 and C-37, in the NC-108 functions in a manner to remove from the incoming signal the pre-emphasis (over-emphasis of the higher frequency tones) that is ordinarily imposed on the signal at the transmitter. The listener will, therefore, enjoy reproduction approaching "live" programs. In the OFF position, the DE-EMPHASIS switch alters the de-emphasis circuit in the NC-108 and the pre-emphasis on the signal is, for the most part, retained resulting in reproduction in which the higher frequency tones are over-emphasized.

In operation of the NC-108 the listener should select the position of the DE-EMPHASIS switch which provides, for him, the most enjoyable range of frequency tones. For example, if the NC-108 is used with an external amplifier-loud-speaker, either of which has a tendency to subdue the higher frequency tones, setting the DE-EMPHASIS switch at OFF will result in more realistic reproduction. The action of the TONE control is the same as described in paragraph 2-1 of Section 2, except that the range of the control will depend on the setting of the DE-EMPHASIS switch.

Schematically, the DE-EMPHASIS switch is an S.P.S.T. type and is connected between the ground side of capacitor, C-37, and chassis.

2. The coupling capacitor, C-8, is connected directly to the grid of the mixer tube instead of to the tap on the mixer coil as shown on the Schematic Diagram.

3. The output impedance of the NC-108 is approximately 150,000 ohms and approximately 11 volts, maximum, of undistorted output is available at the output terminals. Most amplifiers have high-impedance input circuits so that the NC-108 will work efficiently with such an amplifier without the use of a matching transformer. The 11 volts of output is more than ample, as the average amplifier requires approximately one volt for operation.

When using the NC-108 with an external amplifier, it is recommended that the interconnection be made using a low-loss shielded cable with a length not exceeding 10 feet and preferably as short as possible. This recommendation is made to prevent the attenuation of high frequency tones due to the capacity of the interconnecting cable.

However, if the NC-108 is to be used in an installation requiring a cable longer than 10 feet, a voltage divider network connected across the output terminals of the NC-108 will compensate for the resulting loss of high-frequency tones due to the longer cable. This network will result in an output with less gain at the NC-108 but this loss in gain can be tolerated when using a high gain amplifier.

The following drawing illustrates the method and components used to install the voltage divider network.

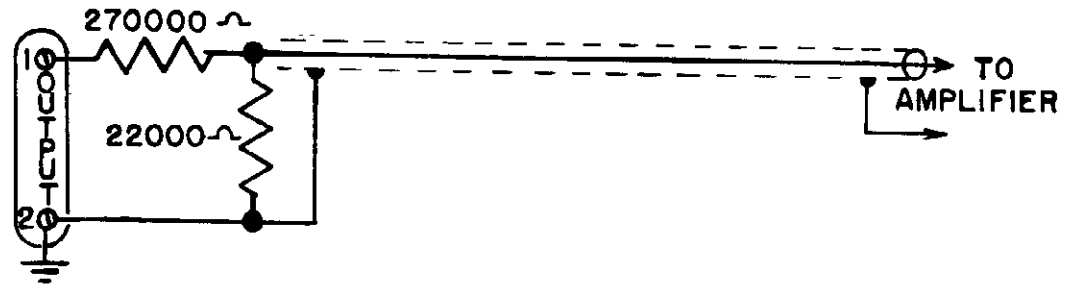

1. *Operating Instructions*

Operating instructions for the NC-183 Receiver are presented here in a non-technical manner to enable those persons not familiar with a communications-type Receiver to operate the NC-183 efficiently with a minimum of effort. To obtain the maximum in listening pleasure it is recommended that these two pages are thoroughly read before operation of the NC-183 is attempted, although no damage to the Receiver can result through improper adjustment of controls. Installation instructions have been intentionally omitted here because it is recommended that an experienced technician install the NC-183. However, in the event that an inexperienced person must, of necessity, install the Receiver, adhering to the instructions given in Section 2-3 of this Instruction Manual will enable him to do so.

The illustration on this page, identifying and locating Receiver controls, shows the operating procedure to follow in the proper sequence. This same procedure follows with a brief explanation of what each control does. The reader should refer to Section 3 of the Instruction Manual if more detailed and technical information is desired. To tune the Broadcast and Short Wave bands the operating instructions are as follows:

1. Set the SEND-RECEIVE switch at RECEIVE. The SEND position of this switch silences the Receiver for a period of time after which immediate resumption of reception may be had by setting the switch at RECEIVE.

2. Set the A.V.C.-M.V.C. switch at A.V.C. Automatic Volume Control is provided when this switch is in the A.V.C. position to compensate for fluctuating volume due to fading.

3. Set the RADIO-PHONO switch at RADIO. The PHONO position of this switch is used when a record player or similar device is connected to the Phono Input jack at the rear of the Receiver.

4. Turn A.F. GAIN control to 5. Adjustment of the audio volume is made with this control from a minimum at 0 to a maximum at 10. The setting given here is for average volume and should be adjusted to suit the listener.

5. Set the TONE control at 5. A variable selection of tonal output from a bass tone at 0 to a tone at 10 in which the highs are predominant is provided by this control. The setting recommended here will give a normal tonal output but may be changed for different types of programs.

6. Set the C.W.O. switch at OFF. This switch is used only for the reception of code signals.

7. Turn the C.W.O. control to 0. This control is used only for the reception of code signals and does not effect receiver performance with the C.W.O. switch at OFF.

8. Set the SELECTIVITY switch at OFF. This switch is generally used only when interference by other stations is encountered. Its operation is somewhat complex and is not recommended for the inexperienced operator. See Section 3 for detailed instructions.

9. Turn the PHASING control to 0. The PHASING control is used in conjunction with the

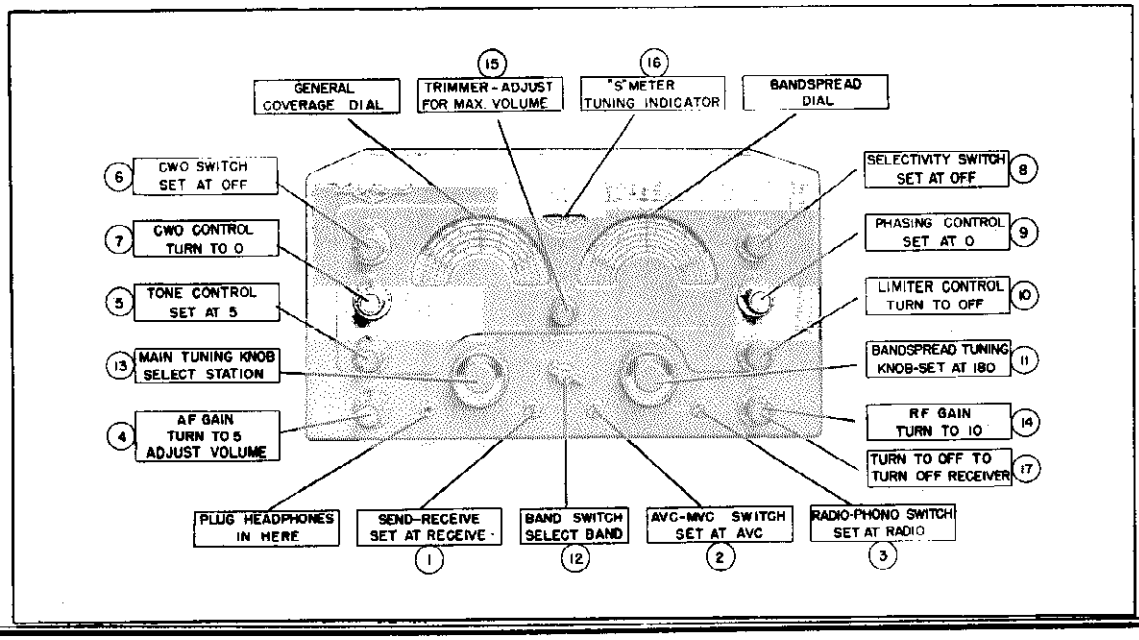

SELECTIVITY switch.

10. Turn the LIMITER control to OFF. Reduction of interference caused by static, automobile ignition, etc., can be effected by turning on the LIMITER. Its action is increasingly effective as the control is turned towards 10.

11. Turn the BANDSPREAD tuning dial knob to the set mark at 180 on the linear scale of the BANDSPREAD dial. The BANDSPREAD dial knob and scale should be kept at the above setting when the MAIN TUNING dial knob and scale are used. However, the BANDSPREAD dial may be rotated to either side of the set mark if fine tuning is preferred for Short Wave or Amateur bands.

-NOTE-

The operator is now ready to adjust the tuning controls to select the desired station. Let us, for example, suppose that the desired station is one on the Broadcast band at 1,000 kilocycles.

12. Set the BAND SWITCH at E. The BAND SWITCH selects the band of frequencies to be tuned and is marked with designating letters which correspond to the markings at the edges and throughout the dial scales.

13. Turn the MAIN TUNING dial knob to set the pointer on the GENERAL COVERAGE dial at 1.0 on the E band. Stations on the GENERAL COVERAGE dial scale are selected by means of this control.

14. Turn R.F. GAIN control to 10. This is a dual-purpose control; when turned from A.C. OFF to ON the Receiver is turned on; when turned from 0 to 10 the sensitivity (ability to receive weak and distant stations) is progressively increased to a maximum at 10.

15. Adjust the TRIMMER control for maximum volume. After a station has been tuned in, adjust this control for best reception.

16. S-METER. Maximum deflection of the meter pointer indicates the dial and TRIMMER control setting for optimum tuning.

17. Shutting off the Receiver. To shut off the Receiver, turn the R.F. GAIN control to OFF. This is the only adjustment which completely shuts off the Receiver and the only one which need be made.

2. *Frequency Coverage*

The GENERAL COVERAGE dial has five scales; four of which are calibrated directly in megacycles and the other has a linear scale numbered 0 to 200. All markings of the Standard Broadcast Band, E, are bright red for clear identification. The other three scales have red letters throughout their range for band identification plus heavy black underlines locating short-wave features marked F, A, and P indicating Foreign, Amateur and Police bands, respectively. The BAND SWITCH positions are also marked with band letter designations to correspond to the markings at the edges and throughout the dial scales. Newspapers and other publications sometimes give the frequency of stations in kilocycles, and as the dial scales of the NC-183 are calibrated in megacycles conversion from kilocycles to megacycles will facilitate location of the station on the Receiver dial. This is done by pointing off three places to the left of the decimal point on the kilocycle figure, i.e., 1,000. kilocycles becomes 1.0 megacycles.

The following table lists each band by its designating letter and the frequency coverage of that band. The frequencies are listed in both megacycles and kilocycles. Also listed are the frequencies of short-wave features to be found on the various bands.

BAND	FREQUENCY COVERAGE		POLICE	INT. B'DCAST	AMATEUR
	Megacycles	Kilocycles	Megacycles	Megacycles	Megacycles
B	12.0 - 31.0	12,000 - 31,000		15.1 - 15.3 17.7 - 17.9 21.5 - 21.7	14.0 - 14.4 21.0 - 21.5 27.160 - 27.430 28.0 - 29.7
C	4.3 - 12.0	4,300 - 12,000		6.0 - 6.2 9.5 - 9.7 11.7 - 11.9	7.0 - 7.3
D	1.6 - 4.3	1,600 - 4,300	1.6 - 1.8 2.25 - 2.5 2.7 - 2.85		3.5 - 4.0
E	0.54 - 1.6	540 - 1,600			

©John F. Rider

SECTION 1. DESCRIPTION

1-1. *General*

The new NC-183 is a deluxe Radio Receiver featuring performance and versatility "plus". Two R.F. stages give the NC-183 that extra measure of sensitivity and image rejection so often needed to insure uninterrupted reception. A double-diode noise limiter, effective on both phone and code reception, minimizes interference caused by external noise pulses. The selectivity characteristic of the NC-183 is adjustable over a wide range from broadband broadcast requirements to sharp amateur single-signal reception. Voltage regulated high-frequency and beat frequency oscillator circuits assures a minimum of frequency drift for both phone and code reception. Other highlights are an accessory connector socket, a push-pull audio output stage and an S-Meter, with a semi-permanent sensitivity adjustment, for signal strength readings of both phone and code signals.

The NC-183 provides reception of phone and code signals over its entire frequency range of 540 kcs. to 31 mcs. and 48 to 56 mcs. Calibrated bandspread tuning is furnished for the main amateur bands i.e., 6, 10-11, 20, 40 and 80 meters. Separate directly-calibrated dial scales with associated controls are used for general coverage and bandspread tuning.

1-2. *Circuit*

The NC-183 utilizes 14 tubes, plus a voltage regulator and rectifier, in a superhetrodyne circuit featuring circuit refinements such as two R.F. amplifier stages, a separate A.V.C. amplifier, a double-diode noise limiter and a push-pull audio output stage.

The circuit employed on all bands consists of two stages of radio frequency amplification, a first detector and separate stabilized high frequency oscillator, two intermediate frequency amplifier stages, a diode type second detector, an audio limiter, a high gain audio stage, a phase inverter and a push-pull audio output stage. The remainder of the Receiver includes automatic volume control, beat frequency oscillator, voltage regulator and rectifier circuits. The crystal filter is connected between the first detector and first I.F. stages.

1-3. *Tube Complement*

The NC-183 is supplied complete with tubes which are tested in the Peceiver at the time of alignment.

The tubes employed are as follows:

First R.F. Amplifier	6SG7
Second R.F. Amplifier	6SG7
First Detector	6SA7
H.F. Oscillator	6J5
First I.F. Amplifier	6SG7
Second I.F. Amplifier	6SG7
Second Detector-A.V.C. Detector	6H6
A.V.C. Amplifier	6AC7
Beat Frequency Oscillator	6SJ7
Noise Limiter	6H6
First Audio	6SJ7
Phase Inverter	6J5
Audio Output (2)	6V6GT/G
Voltage Regulator	OD3/VR-150
Rectifier	5U4G

1-4. *Tuning System*

The main tuning capacitor C-3 and the bandspread tuning capacitor C-4 are connected in parallel on all bands. Separate knobs with associated dial scales are used to operate these two capacitors to tune the frequency range of the Receiver in five bands as follows:

BAND	GENERAL COVERAGE	BANDSPREAD
A		48 - 56 Mc.
B	12 - 31 Mc.	27 - 30 Mc.
		14.0- 14.4 Mc.
C	4.3 - 12 Mc.	7.0- 7.3 Mc.
D	1.6 - 4.3 Mc.	3.5- 4.0 Mc.
E	0.54 - 1.6 Mc.	

As will be noted from the above table calibrated bandspread tuning is provided for the 6, 10-11, 20, 40 and 80 meter ama-

teur bands. This tuning system is extremely flexible, in that bandspread tuning may be employed to tune any portion of any band in the 540 kcs. to 31 mc. range.

Band changing is accomplished by means of a highly efficient bandswitch.

Tuning of the first R.F. stage on all bands can be readily adjusted to compensate for a wide range of antenna loading conditions by means of the front panel mounted antenna compensating capacitor.

1-5. *Noise Limiter*

A new concept in noise limiter design is employed in the NC-183 Receiver. This new limiter could be termed "double action plus" and the noise limiting action is equally effective whether receiving phone or code signals (C.W. oscillator On or Off). A threshold control on the front panel permits adjustments of the level at which limiting action starts.

1-6. *Crystal Filter*

The selectivity characteristic of the NC-183 is made adjustable by means of a crystal filter. This crystal filter is newly designed and incorporates features which make it highly flexible in its adjustments and superior in performance. The crystal filter provides uniform selectivity variation from the broad off position to the sharp number 5 position as well as phasing action for the attenuation of interfering signals.

1-7. *Signal Strength Meter*

An S-Meter for signal strength readings is associated with the A.V.C. circuit. The S-Meter scale is calibrated in S units from 1 to 9 with approximately 5 db per S unit and in db above S9 from 0 to 40 db. An adjustment is provided to enable the operator to change the above calibration if he so desires. For the purpose of comparing strong signals, which cause the S-Meter to read off-scale, with other weaker signals the sensitivity of the S-Meter may be lowered by retarding the R.F. GAIN control. The "no signal" S-Meter reading does not require adjustment.

1-8. *Accessory Connector Socket*

A standard octal socket is mounted on the receiver chassis wired in a manner to permit connection of various accessories such as a narrow-band F.M. adaptor, crystal calibrator, etc. The drawing of the Accessory Connector Socket on the Schematic Diagram shows the various connections made to the pins of this socket and the voltages available. It will be noted that B+ and filament voltages are made available at this socket.

1-9. *Tone Control*

The tonal output of the NC-183 Receiver may be varied to suit the listener by means of the TONE Control. This control is helpful when receiving weak signals through interference.

1-10. *Antenna Input*

Antenna input terminals are provided at the rear of the Receiver. The input circuit is suitable for use with a single wire antenna, a balanced feed line or a low impedance (70 ohm) concentric transmission line. The average input circuit impedance is approximately 300 ohms.

1-11. *Audio Output*

Two audio output circuits are provided:

(1) The audio output leads are brought to the 3 prong output socket, at the rear of the Receiver, having both 8 and 500 ohm terminals and a common ground terminal. The loud-speaker furnished with the NC-183 is fitted with a cable and plug to connect to the 8 ohm terminal on the output socket, the 500 ohm terminal being available for connection to a 500 ohm line. Approximately 8 watts of undistorted audio output power is available at the output socket while the maximum power is 11 watts.

(2) A headphone jack is front-panel mounted and is wired so as to silence the loud-speaker on the insertion of a phone plug. The headphone load impedance is not critical allowing a wide range of headphone types to be used. If greater audio output is desired the headphone jack connection at terminal No. 2 on the audio output transformer (the 8 ohm tap) may be connected to terminal No. 3 (the 500 ohm tap).

1-12. *Phono Input Jack*

A phono input jack is mounted at the rear of the Receiver and can be used to

connect auxiliary apparatus, such as a record player, to the audio system of the Receiver. This input circuit is high impedance and feeds into the 6SJ7 first audio amplifier stage.. The RADIO-PHONO switch on the front panel must be at the Phono position when the phono input jack is used. The AUDIO GAIN and TONE controls are operative with this connection.

Most record players are terminated in a single shielded wire. The phono input jack on the NC-183 is the type that accomodates a phono tip plug and if the record player to be used is not fitted with such a plug one can be easily attached. If the output circuit of the record player is low impedance (less than 100,000 ohms) better results will be obtained if a suitable resistor, with a value as specified for the particular record player, is connected across the phono tip plug to properly load the record player output circuit.

1-13. *Power Supply*

The NC-183 Receiver is designed for operation from a 110/120 volt or 220/240 volt 50/60 cycle power source. The Receiver is shipped from the factory with the power transformer wired for 110/120 volt operation only. A few simple wiring changes in the dual primary circuit of the power transformer are necessary to change the NC-183 for 220/240 volt operation. These changes are made directly on the power transformer terminal lugs and are as follows:

(a) Remove the jumper between terminals 4 and 6 and between 5 and 7.

(b) Connect a jumper between terminals 5 and 6. A drawing of both possible primary circuits is shown on the Schematic Diagram.

Normal power consumption is approximately 125 watts. The built-in power unit supplies all voltages required by the heater and B supply circuits--130 milliamperes at 280 volts and 5.1 amperes at 6.3 volts, respectively. A 2 ampere fuse is connected in one side of the A.C. input line to protect the receiver circuits against any voltage surges in the power line or short circuits in the Receiver. This fuse is mounted in an extractor post at the rear of the Receiver and is easily removed for examination or replacement.

1-14. *Loud-Speaker*

The loud-speaker supplied with the NC-183 is a 10 inch permanent magnet field type and is mounted in a cabinet finished to match the Receiver. The loud-speaker impedance is 8 ohms and the attached plug connects to the 8 ohm Receiver output circuit.

SECTION 2. INSTALLATION

2-1. *Arrangement*

The Receiver and loud-speaker may be arranged in any desired position although it is not recommended that the loud-speaker be placed on top of the Receiver as undesirable "microphonics" may result.

2-2. *Antenna Recommendations*

The antenna input circuit of the Receiver is arranged for operation from either a single-wire antenna, a doublet antenna or other types having impedances of 70 ohms or more. The antenna terminal strip, at the rear of the Receiver, has three terminals, two are for antenna connections and the other for a ground. The ground terminal has connected to it a metal link which is used to ground one antenna lead as necessary. With balanced antenna systems, such as the doublet type, the metal link is not used. With an unbalanced system, such as the single-wire antenna, it is desirable to ground the unused antenna terminal by means of the metal link. For an unbalanced system of the concentric transmission line type, it is recommended that the outside of the concentric line be grounded directly to the ground lug below the antenna terminal strip. The external ground connection to the ground lug below the antenna terminal strip should be maintained at all times.

The most practical antenna for use in installations where the Receiver is to be used over a wide range of frequencies is the single wire type. An antenna length of from 50 to 100 feet is recommended. The

antenna lead-in should be connected to one antenna terminal and the metal link used to ground the other terminal.

For best impedance matching to the antenna input circuit, an antenna with a 70 to 300 ohm transmission line is recommended. If a doublet type with a 70 to 300 ohm balanced transmission line is used the metal grounding link should not be used. For optimum results the antenna should be cut to the proper length corresponding to the desired operating frequency. See Fig. No. 1. It must be remembered that an antenna installation of this type will have maximum efficiency over a narrow band of frequencies near the frequency for which the antenna was designed and will be most useful in installations where the Receiver is tuned to one frequency or narrow band of frequencies. For other frequencies it would be desirable to connect the two transmission line leads together at one antenna terminal and the metal link used to ground the other terminal. The antenna is thus utilized as a single wire type.

In an installation where the Receiver is to be used as the receiving unit in a transmitting station, the most efficient operation will usually result from use of the transmitting antenna as a receiving antenna also. This is especially true if the transmitting antenna is of the multi-element, directional type as the same antenna gain is available for both receiving and transmitting--a very desirable condition. For switching the antenna from transmitter to receiver, an antenna change-over relay with good high-frequency insulation is recommended. A second relay for controlling the transmitter plate supply and the Re-

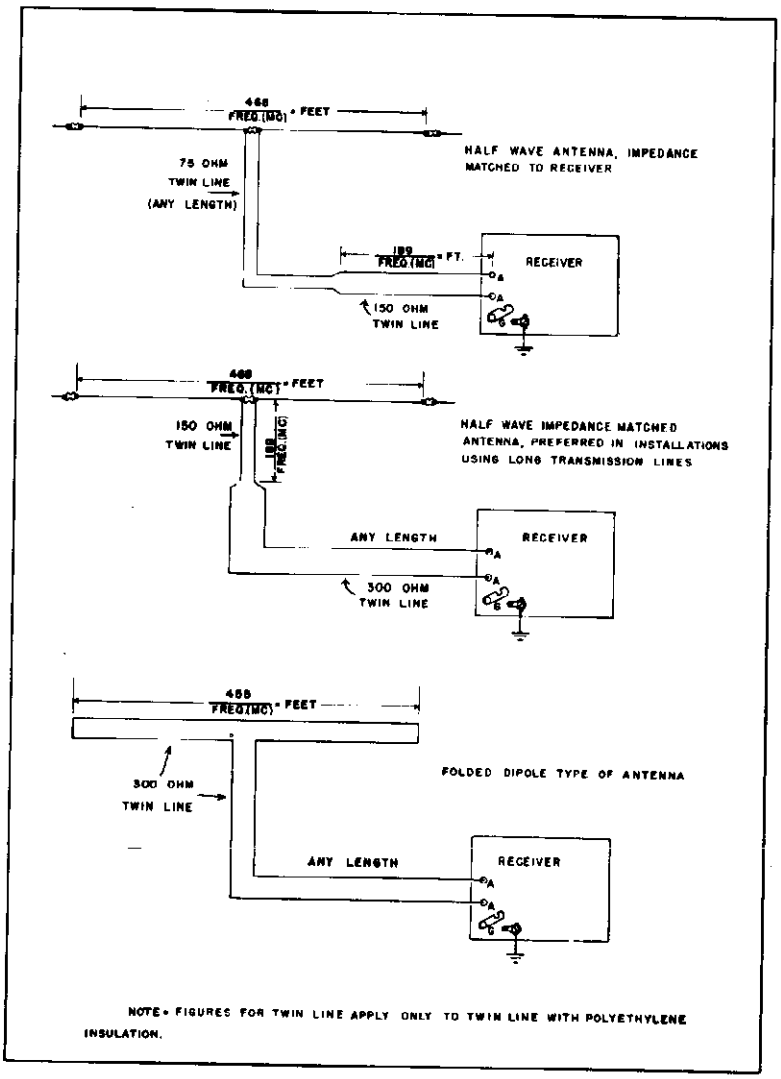

Figure No. 1. Typical Antenna Installations

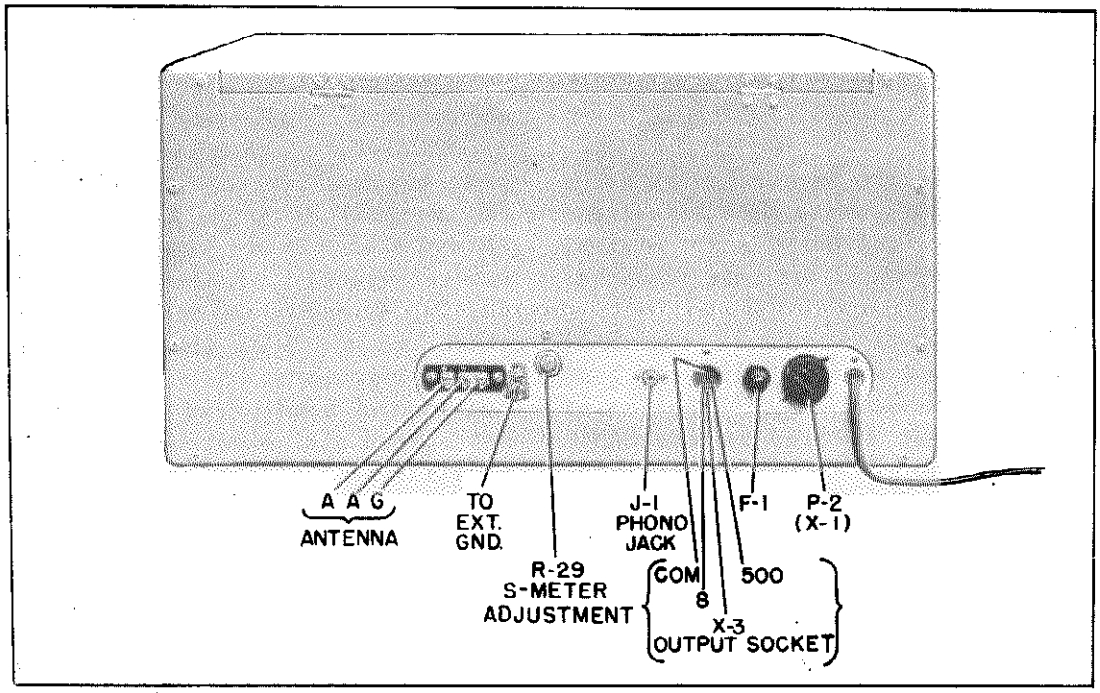

Figure No. 2. Rear View of Receiver

ceiver B+circuit may be used to achieve single-switch control of the station. This second relay should be a double pole, single throw type having one normally open pair of contacts and one normally closed pair of contacts.

2-3. *Installation Procedure*

After unpacking the Receiver and Speaker procede as follows:

(1) Seat A.C. jumper plug and all tubes firmly in their sockets.

(2) Insert the loud-speaker plug into the three pin output socket at the rear of the Receiver.

(3) Connect a good external ground to the screw-type lug located at the rear of the Receiver below the antenna terminal strip.

(4) Connect the antenna as recommended in paragraph 2-2.

(5) Connect the power cord to a 115 volt, 50/60 cycle AC source of supply.

(6) Set controls as recommended in Section 3 for reception of signals.

-NOTE-

Where the Receiver is located in the field of a relatively powerful transmitter, it is advisable to provide some means of preventing damage to the Receiver antenna coil. If a separate receiving antenna is used, a means for disconnecting or grounding the antenna during transmission periods should be provided.

2-4. *Battery Operation*

The NC-183 may be operated in portable or emergency service by connecting batteries to the terminals of the power socket located at the rear of the Receiver. An octal plug, similar to the A.C. jumper plug, may be wired and used for interconnection between batteries and Receiver. The battery plug used must be wired in accordance with the drawing shown on the Schematic Diagram. A 6 volt heater supply (storage battery) should be connected to terminals 3 and 5 and 135 to 250 volt "B" supply connected to terminals 4 and 8. The recommended "B" voltage supply for battery economy is between 135 and 180 volts. At voltages between 135 and 150 the voltage regulator tube will not ignite affecting a further battery economy. For stand-by operation in all cases it is recommended that a switch be placed in the battery B+ lead for increased battery economy as the "B" switch on the Receiver does not open the B supply circuit to the H.F. oscillator, voltage regulator, and push-pull audio output tubes. A suggested refinement is to include a switch in the A+ lead so that the tube heaters may be turned off when the Receiver is not in use without the necessity of removing the battery plug from the battery socket.

SECTION 3. OPERATION

3-1. *Controls*

All controls are identified by front panel markings for ease of identification. The controls are located in a symmetrical manner and are arranged for ease of operation.

The five positions of the BAND SWITCH are marked with identifying band letters plus numerical identification of the Amateur bands covered on the BANDSPREAD dial scale. These identifying markers correspond to the markers on the dial scale escutcheons. The BAND SWITCH does not have any limit stops so that band changing may be accomplished with a minimum of BAND SWITCH turning.

The GENERAL COVERAGE dial knob operates the main tuning capacitor and turns the main dial scale through a combination pinch drive and anti-backlash gear train. The main dial has five scales; four of which are calibrated directly in frequency, the other having a 0-200 linear scale for auxiliary logging purposes. The main dial escutcheon is marked with frequency limits in megacycles and band letter designations identifying each scale on the dial.

The BANDSPREAD tuning dial knob operates the bandspread tuning capacitor and turns the bandspread dial scale through a combination pinch drive and anti-backlash gear train which is similar to that used for general coverage tuning. The bandspread dial has six scales; five of which are calibrated in frequency for the 6, 10-11, 20, 40 and 80 meter Amateur bands, the other having a 0-200 linear scale for bandspread logging on other than the frequency calibrated bandspread frequencies. The bandspread dial escutcheon is marked with identifying band letters and amateur band designation for each scale.

The TRIMMER control operates a tuning capacitor which is connected across the first R.F. amplifier section of the main tuning capacitor. The TRIMMER control is used to tune the first R.F. amplifier stage properly under a wide variety of antenna loading conditions.

The R.F. GAIN control adjusts the amplification of the R.F. and I.F. amplifier stages. Clockwise rotation of the control (towards 10) increases Receiver gain. The A.C. POWER switch is associated with the R.F. GAIN control and A.C. power is turned ON as the R.F. GAIN control is advanced from A.C. OFF to 0 on the scale.

The A.F. GAIN control adjusts the

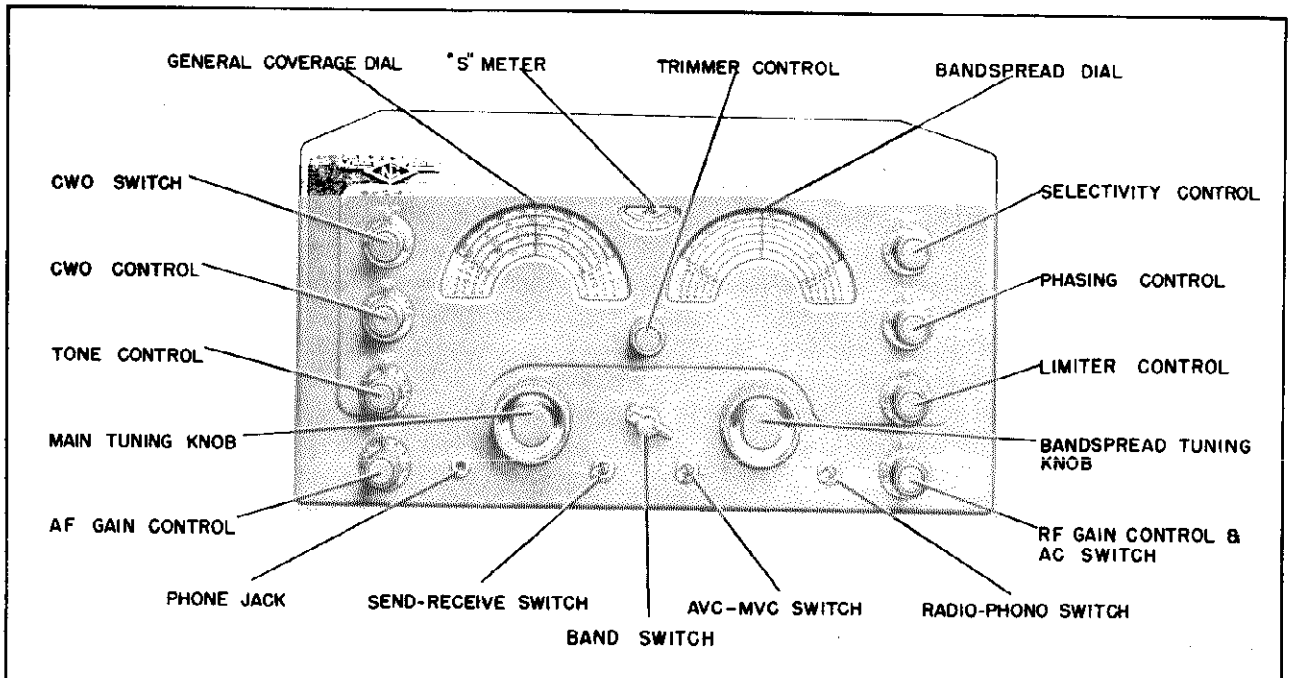

Figure No. 3. Front View of Receiver

amount of audio voltage applied to the first audio tube. Clockwise rotation of the control (towards 10) increases the audio output power of the Receiver. The A.F. GAIN control is operative when an audio signal is applied to the PHONO input jack.

The LIMITER control is used to switch the limiter into the circuit and also to adjust the threshold at which limiting action starts. The limiter is turned ON as the LIMITER control is advanced from OFF to 0 and the threshold is lowered as the control is advanced towards 10. Any noise peak voltages in excess of this adjustable threshold are prevented from reaching the audio amplifier. The limiter circuit is the double-diode type and is equally effective for both phone or code reception.

The TONE control is used to vary the frequency characteristic of the audio output of the Receiver. Turning this control towards 0 on its scale increasingly attenuates the higher frequencies.

The C.W.O. SWITCH and C.W.O. control are only used for the reception of radiotelegraph code signals. The C.W.O. SWITCH is used to turn the C.W. oscillator ON and the C.W.O. control is used to adjust the pitch of the C.W. note. At zero on the C.W.O. scale the C.W. oscillator is tuned to the intermediate frequency of the Receiver.

The PHASING and SELECTIVITY controls adjust the operation of the crystal filter. Receiver selectivity is made progressively sharper as the SELECTIVITY control is turned from OFF towards 5 on its scale. The PHASING control is inoperative with the SELECTIVITY control in the OFF position. The PHASING control is used to attenuate interfering signals and is connected in a bridge circuit so that the bridge can be balanced to reject the undesired signal.

The SEND-RECEIVE switch is used to quiet the Receiver during transmission periods or other times when it is desirable to resume reception immediately (not having to wait for the tubes to warm up). The SEND-RECEIVE switch is connected in the B circuit. See Section 2-4 for use of this switch in battery operation. The SEND-RECEIVE switch should not be used to silence the Receiver after the completion of an operating period.

External (remote) stand-by control of the Receiver may be accomplished by connecting a switch or relay to terminals 1 and 4 of the A.C. jumper plug as shown on the Schematic Diagram. This is a parallel arrangement permitting the SEND-RECEIVE switch to remain operative with the external switch or relay in the circuit.

The A.V.C.-M.V.C. switch is used to adjust the Receiver for either Automatic Volume Control or Manual Volume Control operation. Automatic Volume Control can be used for either phone or code reception. The A.V.C. time constants have been adjusted so that receiver gain does not change appreciably during average code speed reception.

The RADIO-PHONO switch is set at the Phono position when it is desired to use the audio system of the NC-183 in the event a record player or similar apparatus is connected to the Phono Input jack. In the Phono position all receiver circuits but the audio are rendered inoperative; the AUDIO GAIN and TONE controls remain operative. If it is so desired the record player may remain connected to the Receiver and normal receiver operation resumed by setting the RADIO-PHONO switch at Radio.

The screw-type adjustment at the rear of the Receiver is provided to allow the operator to adjust the sensitivity of the S-Meter. The S-Meter is calibrated at National laboratories so that approximately 50 microvolts equals S-9 and roughly 5,000 microvolts equals 40 db above S-9.

3-2. *Phone Reception*

After the equipment is properly installed, as outlined in Section 2, it is placed in operation for the reception of phone signals by adjusting the receiver controls as follows:

1. Set the SEND-RECEIVE at Receive.
2. Set the RADIO-PHONO switch at Radio.
3. Set the A.V.C.-M.V.C. switch at A.V.C.
4. Turn the C.W.O. switch to OFF.
5. Set the SELECTIVITY control at OFF.

6. Set the PHASING control at 0.
7. Set the LIMITER control at OFF.
8. Advance the R.F. GAIN control to a point between 8 and 10.
9. Set the A.F. GAIN control at the point providing the desired audio volume.
10. Adjust the TONE control to give the desired audio characteristic.

The Receiver is now adjusted for the reception of phone signals and will tune to the frequency indicated by the tuning dial and band switch settings. Set the TRIMMER control for maximum S-Meter reading after the desired station has been selected, or alternately in the absence of a signal the TRIMMER may be set for maximum receiver background noise.

The tuning system in the NC-183 is arranged for ease of operation and accuracy of calibration. However, it is necessary that the proper settings of the GENERAL COVERAGE and BANDSPREAD dials be observed to maintain accuracy of calibration. For all general coverage tuning the BANDSPREAD dial must be at the "Set" mark appearing at approximately 180 on the linear scale. For bandspread tuning the GENERAL COVERAGE dial must be set at the proper point corresponding to the Amateur band being tuned. The various "set points" are marked directly on the GENERAL COVERAGE dial scale and are clearly indicated by a circular marker containing the Amateur band designation. The following table lists the location of the GENERAL COVERAGE dial settings for bandspread tuning of the Amateur bands:

AMATEUR BAND	GENERAL COVERAGE DIAL SETTING
6	198 on linear scale
10-11	30.0 Mc.
20	14.4 Mc.
40	7.3 Mc.
80	4.0 Mc.

Tuning of the 6 meter band is accomplished by use of the BANDSPREAD dial only.

The BAND SWITCH setting determines the band of frequencies which the Receiver will tune at any one time.

With the A.V.C-M.V.C. switch set at the A.V.C. position, the R.F. GAIN control should be advanced as far as receiving conditions permit. However, if background noise proves objectionable, the R.F. GAIN control may be retarded to approximately 6 or 7 to reduce the level of background noise. The operator must remember that automatic volume control action will be restricted unless the R.F. GAIN control is fully advanced. Audio output should be adjusted entirely by means of the A.F. GAIN control.

The A.V.C.-M.V.C. switch may be set at the M.V.C. position to provide increased sensitivity in some cases. With such a setting the operator must be careful not to advance the R.F. GAIN control to a point where I.F. or audio amplifier overload occurs. Such overload is indicated by distortion. In general, the A.F. GAIN control may be set at a fixed position, approximately 5, and the R.F. GAIN control used to adjust the audio volume.

If a signal is weak and partically obscured by background noise and static, best signal-to-noise ratio will be obtained by turning the TONE control toward 0 on its scale. The most effective setting must be determined by trial as too much attenuation of the higher audio frequencies may not prove desirable.

When a signal is accompanied by static peaks or noise pulses of high intensity and short duration, the best signal-to-noise ratio will be obtained by turning the LIMITER control ON and advancing it as necessary. The optimum setting can only be determined by trial as too much limiter action may impair the audio quality.

The selectivity of the Receiver is adjusted by means of the crystal filter SELECTIVITY control. The normal setting of the SELECTIVITY control in phone reception is at one of the positions affording broad selectivity. Positions marked OFF, 1 or 2 are recommended. Selectivity may be progressively increased by turning the SELECTIVITY control to positions 3, 4 or 5. The evidences of increasing selectivity will be the attenuation of the higher frequency audio tones of the signal as well as sharper tuning. Increasing selectivity too much will attenuate these higher tones to such an extent that phone signals may become unintelligible.

The PHASING control is part of the crystal filter and is used to eliminate

or attenuate interfering heterodynes. The PHASING control is inoperative with the SELECTIVITY control in the OFF position but is operative at all other SELECTIVITY control settings. The normal setting of the PHASING control, with the crystal filter ON (SELECTIVITY control at 1, 2, 3, 4 or 5), in phone reception is at 0 on the scale. If, after a signal has been tuned in, an interfering signal causes a heterodyne or whistle the PHASING control should be adjusted until interference is reduced to a minimum. The setting of the PHASING control which provides maximum attenuation of the heterodyne will depend on the pitch of the heterodyne whistle. If the heterodyne is below 1,000 cycles, the optimum PHASING control setting will be near one end of the scale or the other, depending upon whether the interfering signal has a higher or lower frequency than the desired signal.

3-3. *C.W. Reception*

The Receiver is placed in operation for the reception of C.W. signals in the same manner as that outlined for phone reception (Section 3-2) except that the C.W.O. switch should be set at ON and the C.W.O. control set at mid-scale. The C.W. code characters are made audible by the heterodyning action of the C.W. oscillator with the incoming signal. The frequency of the C.W. oscillator can be varied by rotation of the C.W.O. control.

The sensitivity of the Receiver should be adjusted by means of the R.F. GAIN control and the audio volume by means of the A.F. GAIN control. When receiving C.W. characters with slow keying or long pauses during keying it may be desirable to set the A.V.C.-M.V.C. switch at M.V.C. so that the receiver gain does not change during keying pauses. In this case, the A.F. GAIN control should be set at a fixed position, approximately 5, and the audio volume adjusted by means of the R.F. GAIN control. In either of the above cases care should be taken not to advance the R.F. GAIN control to a point where I.F. or audio amplifier overload occurs.

The action of the TONE and LIMITER controls will be similar to that described in Section 3-2. However, in C.W. reception it will be possible to advance these controls considerably further than is desirable in phone reception since any impairing of audio quality is relatively unimportant.

Turning the C.W.O. control to either side of zero will change the characteristic pitch of the receiver background noise thus providing a means of adjusting the audio beat note to the operator's preference. The pitch will become higher as the C.W.O. oscillator is detuned from the I.F. amplifier.

Crystal filter operation for C.W. reception is similar to that described for phone reception (Section 3-2) with the exception that it is possible to utilize maximum selectivity without the loss of audio quality experienced in phone reception. When maximum selectivity is employed, i.e., SELECTIVITY control at 5, tuning is very critical and care must be taken to assure proper tuning. When tuning across the carrier of a received signal the audio beat note is very sharply peaked at a definite audio frequency. The maximum response indicates the proper dial setting. The pitch of the beat note peak may be adjusted by use of the C.W.O. control to provide an audio tone pleasing to copy. With the Receiver tuned to "crystal peak" an interfering signal may be attenuated by proper setting of the PHASING control since this control does not appreciably affect the desired signal.

A distinct advantage in the reception of weak C.W. signals through interference can be realized by use of the "single-signal" properties of the NC-183 Receiver. The C.W. oscillator should be detuned until the pitch of the receiver background noise is roughly 2,000 cycles. Under this condition the audio beat note of any C.W. code signal will show a broad peak in output at approximately 2,000 cycles. This peak is easily found by rotating the tuning dial slowly through the carrier of a received signal. This peak will appear on one side of "zero beat" only and on the other side of "zero beat" the 2,000 cycle note will be considerably weaker. It should be noted that depending on the frequency of the interfering signal better receiving conditions will be obtained by detuning the C.W.O. on one side of zero rather than on the other. The best setting of the C.W.O. con-

trol can only be determined by trial settings on either side of zero until optimum results are obtained.

3-4. *Measurement of Signal Strength*

The S-Meter in the NC-183 Receiver furnishes a means for the measurement of signal strength of incoming phone or code signals. To utilize the S-Meter the following control settings must be observed: R.F. GAIN at 10, A.V.C.-M.V.C. at A.V.C. and SELECTIVITY at OFF. The TRIMMER control should be adjusted for maximum S-Meter reading after a signal has been tuned in. All other control settings will not affect the S-Meter readings.

In instances where a strong signal causes the S-Meter to read off-scale the S-Meter sensitivity may be lowered by retarding the R.F. GAIN control until an on-scale reading is obtained. Without disturbing the setting of the R.F. GAIN control the comparative strength of this strong signal may be compared with other signals.

The sensitivity of the S-Meter is adjusted as outlined in Section 1-7, to meet average operating conditions. The S-Meter sensitivity adjustment at the rear of the Receiver enables the operator to change the sensitivity to meet the needs of his own particular installation.

SECTION 4. SERVICE AND TEST DATA

4-1. *Tube Failures*

The partial or complete failure of a vacuum tube in the Receiver may reduce the sensitivity, produce intermittent operation, or cause the equipment to be completely inoperative. If tube failure is suspected all tubes should be checked in suitable tube testing equipment, or by replacement with tubes of proven quality. Care should be taken that any tubes removed for checking purposes be returned to their original sockets thereby reducing the necessity for realignment.

Tubes of the same type will vary slightly in their individual characteristics and this fact should be borne in mind when replacements become necessary. The high frequency oscillator and I.F. tubes should be chosen with care to select a replacement which most nearly approaches the characteristics of the original tube. A replacement high frequency oscillator tube can be readily checked by noting any change in dial calibration, particularly in the amateur bandspread bands. Substitution of new I.F. amplifier tubes may possibly alter overall gain and selectivity characteristics. Instructions for realignment are given in detail in Section 6-2.

4-2. *Circuit Failures*

All components parts in the NC-183 Receiver have been carefully selected to assure an ample factor of safety. Failure may occur in individual cases and the most common, excluding tubes, will probably be due to breakdown of a capacitor or resistor. Measurement of voltages in accordance with Section 4-4 will most likely indicate where failure has occurred. A bypass capacitor which has failed may cause overload of associated resistors. These resistors should be checked for any change in resistance value. An overloaded or shorted resistor will sometimes be evidenced by scorching or discoloration on the surface of the resistor. An open capacitor, often the cause of oscillation or loss of sensitivity, may be checked by temporarily connecting a good capacitor across it. Intermittently poor connections can usually be located by lightly tapping each part with a piece of insulating material.

4-3. *Stage Gain Measurements*

The sensitivity measurements listed below are made with the Receiver set up as specified in Section 3-2 except that the A.V.C.-M.V.C. switch must be set at M.V.C. and the A.F. GAIN control at 10. An output meter with an impedance to match the Receiver output circuit (8 or 500 ohms) should be connected to the output socket in place of the loud-speaker. A three-prong plug, similar to the loud-speaker plug, can be wired for connection of the output meter to the Receiver. It is important that the

proper output impedance matching be observed, i.e., 8 or 500 ohms depending upon which terminals of the output socket are used.

The high output lead of a signal generator should be connected through a 0.001 capacitor to the pin of the tube as specified in the following table and the ground lead connected to the receiver chassis. The signal generator should be adjusted to deliver a test signal of 455 Kc. plus or minus 2 Kc. either modulated or unmodulated.

The BAND SWITCH must be set at the mid-position between the A and E bands.

With 1 watt output at the audio output socket the test signal should be within the limits specified below:

TERMINAL	TEST SIGNAL
Mixer Grid	13± 3 Microvolts
First IF Grid	170± 30 Microvolts
Sec. Det. Grid	33,000± 6,000 Microvolts

4-4. *Voltage Tabulation*

All voltage measurements should be made using a high-impedance vacuum tube volt-meter. Readings taken with any other type of instrument will differ greatly from those shown on Figure No. 4. The control settings to be observed are shown on Figure No. 4. All voltages are measured between specified terminal and chassis.

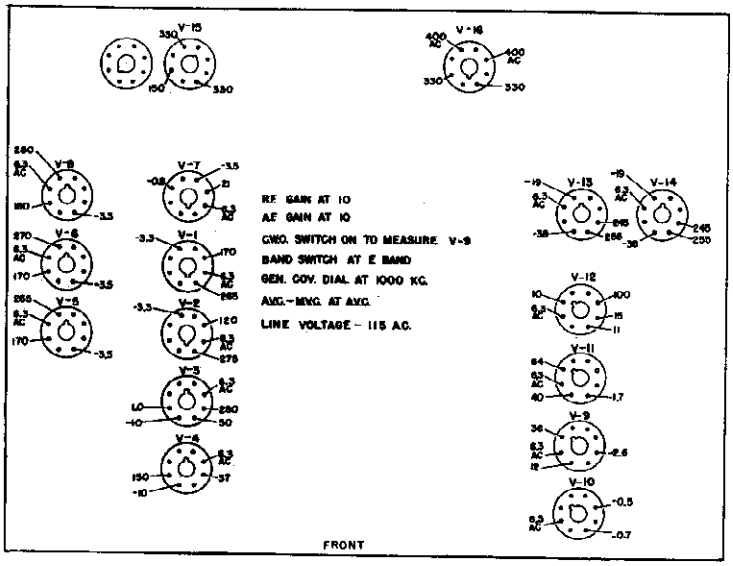

Figure No. 4. Tube Socket Voltages

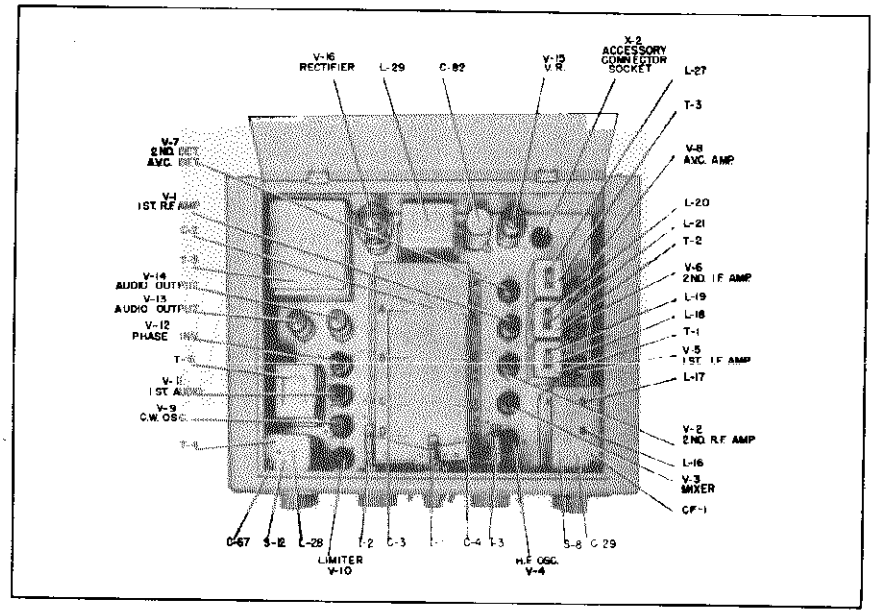

Figure No. 5. Top View of Receiver

MODEL NC-183 NATIONAL COMPANY, INC.

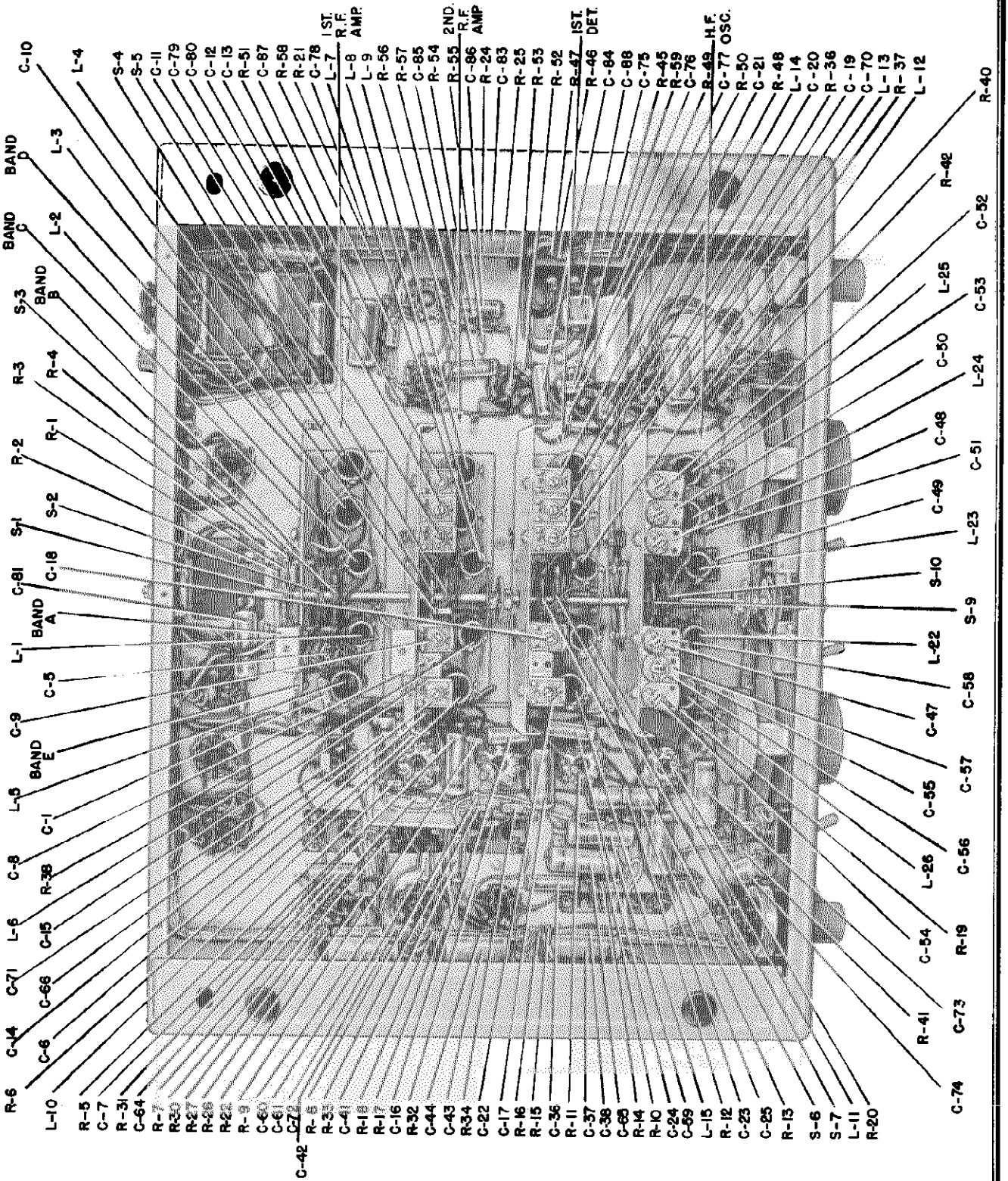

Figure No. 7. Bottom View of Receiver (Coil Compartment Side Plates Removed)

NATIONAL COMPANY, INC. MODEL NC-183

SECTION 5. **PARTS LIST**

Symbol	*Function*	*Type*	*Rating*
	CAPACITORS		
C-1	Ant. Coupling	Ceramic	250 Mmf., 500 VDCW
C-2	Trimmer Control	Air	Variable
C-3	Main Tuning	Air	Variable
C-3A	1st. R.F. Amp. Tuning	Air	Part of C-3
C-3B	2nd. R.F. Amp. Tuning	Air	Part of C-3
C-3C	1st. Det. Tuning	Air	Part of C-3
C-3D	H.F. Osc. Tuning	Air	Part of C-3
C-4	Bandspread Tuning	Air	Variable
C-4A	1st. R.F. Bandspread Tuning	Air	Part of C-4
C-4B	2nd. R.F. Bandspread Tuning	Air	Part of C-4
C-4C	1st. Det. Bandspread Tuning	Air	Part of C-4
C-4D	H.F. Osc. Bandspread Tuning	Air	Part of C-4
C-5	1st. R.F. Amp. Grid Coupling	Mica	0.001 Mfd., 300 VDCW
C-6	1st. R.F. Screen Bypass	Paper	0.01 Mfd., 600 VDCW
C-7	1st. R.F. Amp. Plate Filter	Paper	0.05 Mfd., 600 VDCW
C-8	A Band 2nd. R.F. Coupling	Ceramic	10 Mmf., 500 VDCW
C-9	A Band 2nd. R.F. Trimmer	Mica	Variable
C-10	B Band 2nd. R.F. Coupling	Ceramic	5 Mmf., 500 VDCW
C-11	B Band 2nd. R.F. Trimmer	Mica	Variable
C-12	C Band 2nd. R.F. Trimmer	Mica	Variable
C-13	D Band 2nd. R.F. Trimmer	Mica	Variable
C-14	E Band 2nd. R.F. Trimmer	Mica	Variable
C-15	2nd. R.F. Amp. Grid Coupling	Mica	0.001 Mfd., 300 VDCW
C-16	2nd. R.F. Screen Bypass	Paper	0.01 Mfd., 600 VDCW
C-17	2nd. R.F. Plate Filter	Paper	0.05 Mfd., 600 VDCW
C-18	A Band 1st. Det. Trimmer	Mica	Variable
C-19	B Band 1st. Det. Trimmer	Mica	Variable
C-20	C Band 1st. Det. Trimmer	Mica	Variable
C-21	D Band 1st. Det. Trimmer	Mica	Variable
C-22	E Band 1st. Det. Trimmer	Mica	Variable
C-23	Mixer Cathode Bypass	Paper	0.1 Mfd., 400 VDCW
C-24	Mixer Screen Bypass	Paper	0.01 Mfd., 600 VDCW
C-25	Mixer Plate Filter	Paper	0.05 Mfd., 600 VDCW
C-26	Crystal Filter Input Tuning	Mica	510 Mmf., 500 VDCW
C-27	Crystal Filter Bridge	Ceramic	85 Mmf., 500 VDCW
C-28	Crystal Filter Bridge	Ceramic	50 Mmf., 500 VDCW
C-29	Crystal Filter Phasing	Air	Variable
C-30	Crystal Filter Coupling	Ceramic	10 Mmf., 500 VDCW
C-31	Selectivity Adjusting	Ceramic	25 Mmf., 500 VDCW
C-32	Selectivity Adjusting	Ceramic	100 Mmf., 500 VDCW
C-33	Selectivity Adjusting	Ceramic	100 Mmf., 500 VDCW
C-34	Selectivity Adjusting	Ceramic	50 Mmf., 500 VDCW
C-35	Crystal Filter Output Tuning	Mica	510 Mmf., 500 VDCW

©John F. Rider

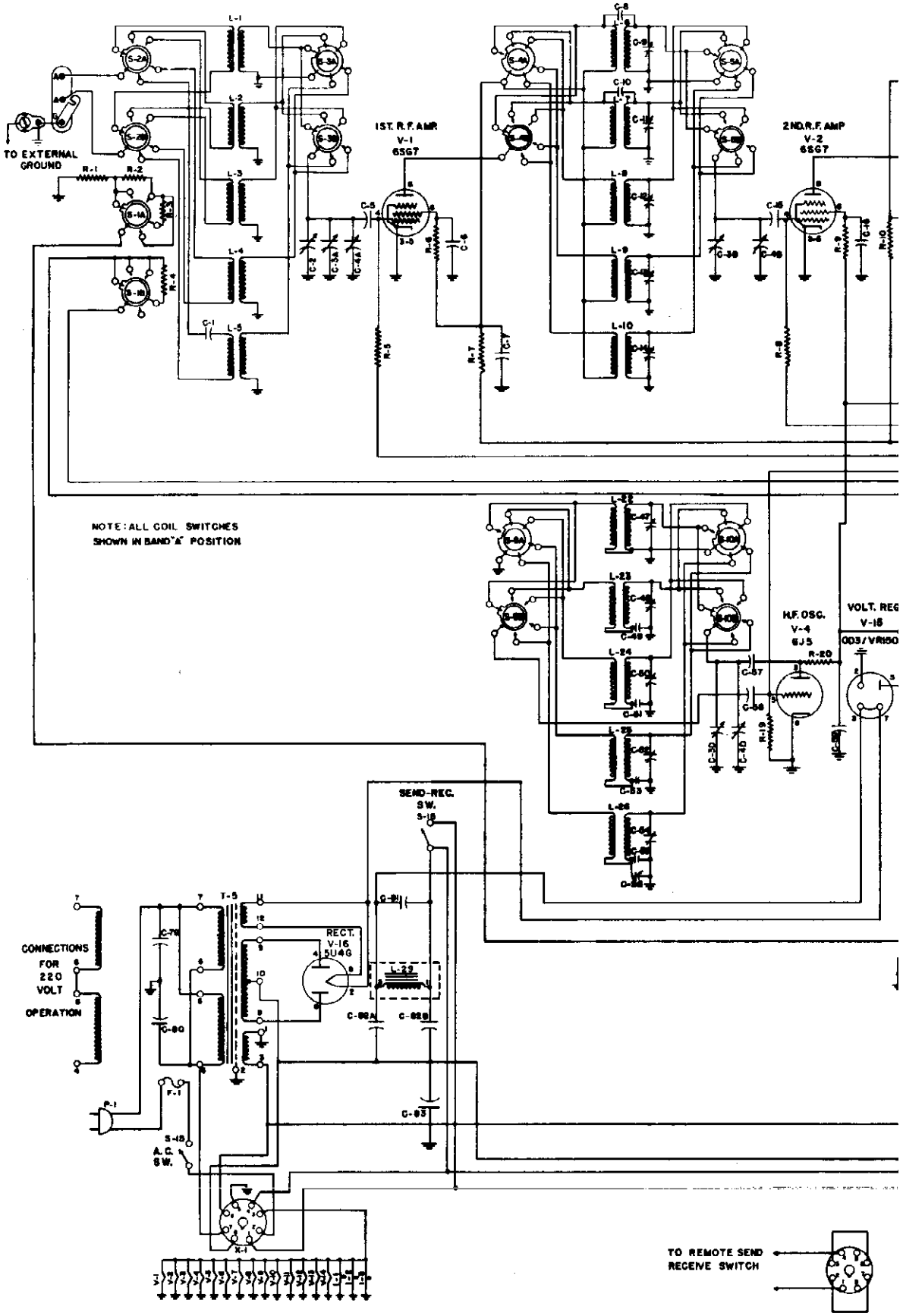

Figure No. 6. NC-1

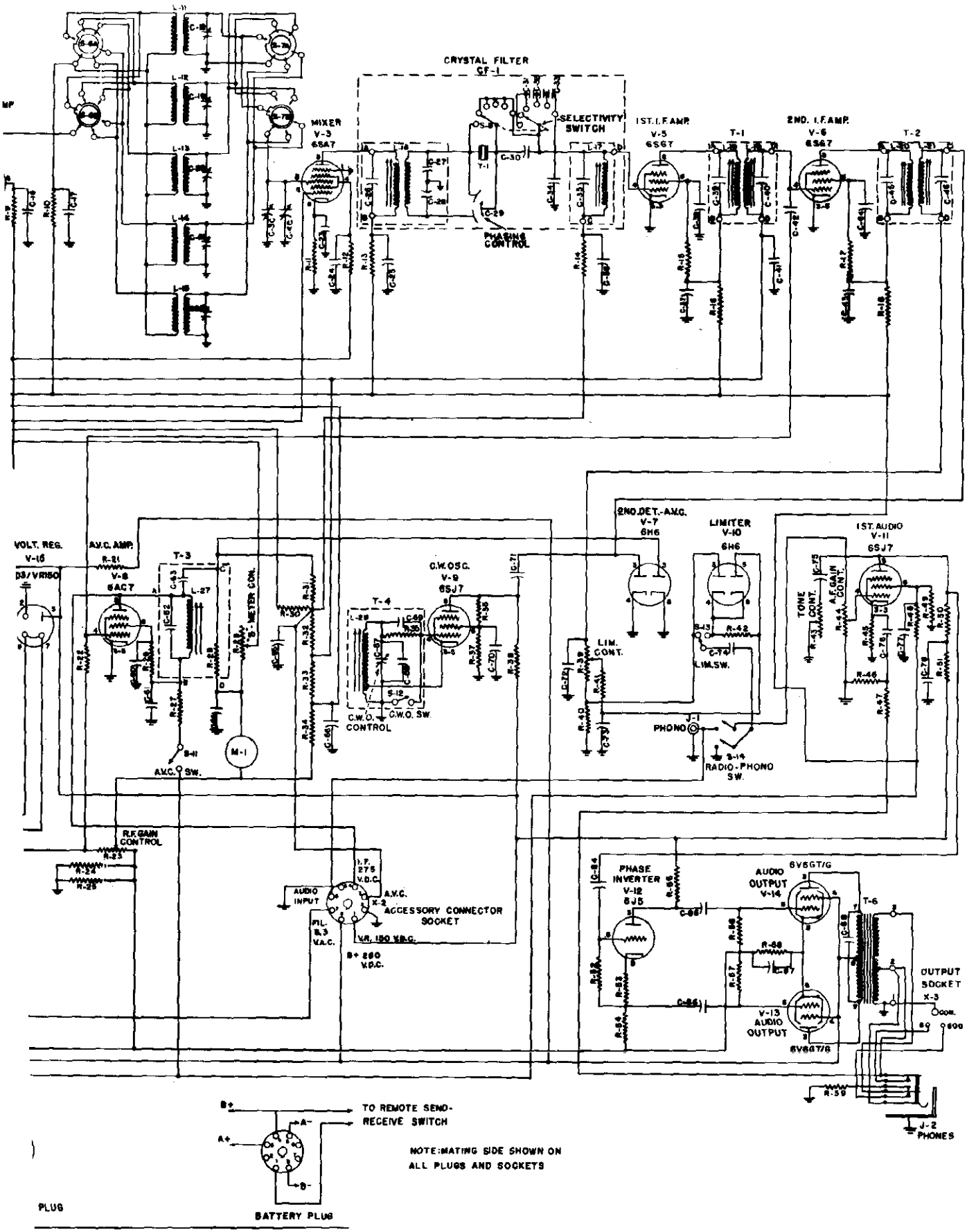

C-183 Receiver Schematic Diagram

MODEL NC-183 NATIONAL COMPANY, INC.

PARTS LIST (Continued)

Symbol	*Function*	*Type*	*Rating*
	CAPACITORS (Continued)		
C-36	1st. I.F. Grid Filter	Paper	0.01 Mfd., 600 VDCW
C-37	1st. I.F. Plate Filter	Paper	0.05 Mfd., 600 VDCW
C-38	1st. I.F. Screen Bypass	Paper	0.01 Mfd., 600 VDCW
C-39	T-1 Primary Tuning	Mica	510 Mmf., 500 VDCW
C-40	T-1 Secondary Tuning	Mica	510 Mmf., 500 VDCW
C-41	2nd. I.F. Grid Filter	Paper	0.01 Mfd., 600 VDCW
C-42	2nd. I.F. Grid to A.V.C. Grid Coupling	Ceramic	47 Mmf.
C-43	2nd. I.F. Plate Filter	Paper	0.05 Mfd., 600 VDCW
C-44	2nd. I.F. Screen Bypass	Paper	0.01 Mfd., 600 VDCW
C-45	T-2 Primary Tuning	Mica	510 Mmf., 500 VDCW
C-46	T-2 Secondary Tuning	Mica	510 Mmf., 500 VDCW
C-47	A Band H.F. Osc. Trimmer	Ceramic	Variable
C-48	B Band H.F. Osc. Trimmer	Ceramic	Variable
C-49	B Band H.F. Osc. Padder	Mica	.0085 Mfd., 300 VDCW
C-50	C Band H.F. Osc. Trimmer	Ceramic	Variable
C-51	C Band H.F. Osc. Padder	Mica	.0042 Mfd., 300 VDCW
C-52	D Band H.F. Osc. Trimmer	Ceramic	Variable
C-53	D Band H.F. Osc. Padder	Mica	1250 Mmf., 500 VDCW
C-54	E Band H.F. Osc. Trimmer	Ceramic	Variable
C-55	E Band H.F. Osc. Padder	Mica	420 Mmf., 500 VDCW
C-56	E Band H.F. Osc. Padder	Ceramic	Variable
C-57	H.F. Osc. Plate Coupling	Mica	.001 Mfd., 300 VDCW
C-58	H.F. Osc. Grid Coupling	Ceramic	100 Mmf., 500 VDCW
C-59	B Supply Filter	Paper	.1 Mfd., 400 VDCW
C-60	A.V.C. Amp. Screen Bypass	Paper	.01 Mfd., 600 VDCW
C-61	A.V.C. Amp. Plate Filter	Paper	.05 Mfd., 600 VDCW
C-62	T-3 Tuning	Mica	510 Mmf., 500 VDCW
C-63	A.V.C. Amp. to A.V.C. Rectifier Coupling	Mica	.001 Mfd., 300 VDCW
C-64	S-Meter Bypass	Paper	.01 Mfd., 600 VDCW
C-65	A.V.C. Filter	Paper	.1 Mfd., 400 VDCW
C-66	A.V.C. Filter	Paper	.1 Mfd., 400 VDCW
C-67	C.W.O. Tuning	Air	Variable
C-68	C.W.O. Tuning	Mica	270 Mmf., 500 VDCW
C-69	C.W.O. Grid Coupling	Mica	270 Mmf., 500 VDCW
C-70	C.W.O. Screen Bypass	Paper	.1 Mfd., 400 VDCW
C-71	Det. Plate to C.W.O. Plate Coupling	Ceramic	10 Mmf.,
C-72	2nd. Det. Load	Mica	270 Mmf., 500 VDCW
C-73	Limiter Plate Filter	Paper	.1 Mfd., 400 VDCW
C-74	Audio Coupling	Paper	.1 Mfd., 400 VDCW
C-75	Tone Adjusting	Paper	.005 Mfd., 500 VDCW
C-76	1st. Audio Cathode Bypass	Elect.	10 Mfd., 50 VDCW
C-77	1st. Audio Screen Bypass	Paper	.25 Mfd., 400 VDCW
C-78	1st. Audio Plate Filter	Paper	.1 Mfd., 400 VDCW

©John F. Rider

PARTS LIST (Continued)

Symbol	*Function*	*Type*	*Rating*
	CAPACITORS (Continued)		
C-79	A.C. Line Bypass	Paper	0.01 Mfd., 600 VDCW
C-80	A.C. Line Bypass	Paper	0.01 Mfd., 600 VDCW
C-81	B plus Filter	Paper	.1 Mfd., 400 VDCW
C-82		Elect.	10+10 Mfd., 475 VDCW
C-82A	Power Supply Filter	Elect.	Part of C-82
C-82B	Power Supply Filter	Elect.	Part of C-82
C-83	B Minus Bypass	Elect.	25 Mfd., 50 VDCW
C-84	1st. Audio Coupling	Paper	.01 Mfd., 600 VDCW
C-85	2nd. Audio Input Coupling	Paper	.01 Mfd., 600 VDCW
C-86	2nd. Audio Input Coupling	Paper	.01 Mfd., 600 VDCW
C-87	V-13, V-14, Cathode Bypass	Elect.	25 Mfd., 50 VDCW
C-88	Audio Compensating	Mica	.001 Mfd., 500 VDCW
	RESISTORS		
R-1	Voltage Divider	Fixed	330 Ohms, 1/2 W.
R-2	Voltage Divider	Fixed	680 Ohms, 1/2 W.
R-3	Voltage Divider	Fixed	470 Ohms, 1/2 W.
R-4	S-Meter Adjusting	Fixed	220,000 Ohms, 1/2 W.
R-5	1st. R.F. Amp. Grid	Fixed	100,000 Ohms, 1/2 W.
R-6	1st. R.F. Amp. Screen Filter	Fixed	33,000 Ohms, 1/2 W.
R-7	1st. R.F. Amp. Plate Filter	Fixed	2,200 Ohms, 1/2 W.
R-8	2nd. R.F. Amp. Grid	Fixed	100,000 Ohms, 1/2 W.
R-9	2nd. R.F. Amp. Screen Filter	Fixed	33,000 Ohms, 1/2 W.
R-10	2nd. R.F. Amp. Plate Filter	Fixed	2,200 Ohms, 1/2 W.
R-11	Mixer Cathode	Fixed	220 Ohms, 1/2 W.
R-12	Mixer Screen Filter	Fixed	33,000 Ohms, 1/2 W.
R-13	Mixer Plate Filter	Fixed	2,200 Ohms, 1/2 W.
R-14	1st. I.F. Grid Filter	Fixed	470,000 Ohms, 1/2 W.
R-15	1st. I.F. Screen Filter	Fixed	33,000 Ohms, 1/2 W.
R-16	1st. I.F. Plate Filter	Fixed	2,200 Ohms, 1/2 W.
R-17	2nd. I.F. Screen Filter	Fixed	33,000 Ohms, 1/2 W.
R-18	2nd. I.F. Plate Filter	Fixed	2,200 Ohms, 1/2 W.
R-19	H.F. Osc. Grid	Fixed	22,000 Ohms, 1/2 W.
R-20	H.F. Osc. Plate	Fixed	47,000 Ohms, 1/2 W.
R-21	V.R. Dropping	Fixed	5,000 Ohms, 10 W.
R-22	A.V.C. Amp. Grid	Fixed	470,000 Ohms, 1/2 W.
R-23	R.F. Gain Control	Variable	10,000 Ohms, 1 ½ W.
R-24	Voltage Divider	Fixed	1,000 Ohms, 2 W.
R-25	Voltage Divider	Fixed	1,000 Ohms, 2 W.
R-26	A.V.C. Amp. Screen Filter	Fixed	100,000 Ohms, 1/2 W.
R-27	A.V.C. Amp. Plate Filter	Fixed	2,200 Ohms, 1/2 W.
R-28	A.V.C. Load	Fixed	33,000 Ohms, 1/2 W.
R-29	S-Meter Adjustment	Variable	2,000,000 Ohms,

©John F. Rider

MODEL NC-183 NATIONAL COMPANY, INC.

PARTS LIST (Continued)

Symbol	Function	Type	Rating
	RESISTORS (Continued)		
R-30	S-Meter Adjusting	Fixed	150,000 Ohms, 1/2 W.
R-31	A.V.C. Voltage Divider	Fixed	470,000 Ohms, 1/2 W.
R-32	A.V.C. Voltage Divider	Fixed	470,000 Ohms, 1/2 W.
R-33	A.V.C. Voltage Divider	Fixed	270,000 Ohms, 1/2 W.
R-34	A.V.C. Voltage Divider	Fixed	220,000 Ohms, 1/2 W.
R-35	C.W. Osc. Grid Bias	Fixed	47,000 Ohms, 1/2 W.
R-36	C.W. Osc. Screen Filter	Fixed	100,000 Ohms, 1/2 W.
R-37	C.W. Osc. Screen Bleeder	Fixed	100,000 Ohms, 1/2 W.
R-38	C.W. Osc. Plate	Fixed	220,000 Ohms, 1/2 W.
R-39	Limiter Control	Variable	100,000 Ohms,
R-40	2nd. Det. Load	Fixed	68,000 Ohms, 1/2 W.
R-41	Limiter Plate Filter	Fixed	270,000 Ohms, 1/2 W.
R-42	Limiter Load	Fixed	270,000 Ohms, 1/2 W.
R-43	Tone Control	Variable	500,000 Ohms,
R-44	Audio Gain Control	Variable	500,000 Ohms,
R-45	1st. Audio Cathode	Fixed	2,200 Ohms, 1/2 W.
R-46	Inverse Feedback Voltage Divider	Fixed	100 Ohms, 1/2 W.
R-47	Inverse Feedback Voltage Divider	Fixed	4,700 Ohms, 1/2 W.
R-48	1st. Audio Screen Filter	Fixed	1,000,000 Ohms, 1/2 W.
R-49	1st. Audio Screen Bleeder	Fixed	470,000 Ohms, 1/2 W.
R-50	1st. Audio Plate Load	Fixed	100,000 Ohms, 1/2 W.
R-51	1st. Audio Plate Filter	Fixed	47,000 Ohms, 1/2 W.
R-52	Phase Inverter Grid	Fixed	470,000 Ohms, 1/2 W.
R-53	Phase Inverter Cathode Bias	Fixed	4,700 Ohms, 1/2 W.
R-54	Phase Inverter Cathode Load	Fixed	47,000 Ohms, 1/2 W.
R-55	Phase Inverter Plate Load	Fixed	47,000 Ohms, 1/2 W.
R-56	V-14 Grid	Fixed	270,000 Ohms, 1/2 W.
R-57	V-13 Grid	Fixed	270,000 Ohms, 1/2 W.
R-58	V-13 & V-14 Cathode Bias	Fixed	330 Ohms, 2 W.
R-59	Headphone Load	Fixed	470 Ohms, 2 W.
	MISCELLANEOUS		
CF-1	Crystal Filter		455 Kc.
F-1	A.C. Line Fuse		2 Amp., 250 Volts
I-1	S-Meter Lamp	No. 47	0.15 Amp., 6-8 Volts
I-2	Dial Lamp	No. 47	0.15 Amp., 6-8 Volts
I-3	Dial Lamp	No. 47	0.15 Amp., 6-8 Volts
J-1	Phono Jack		Single-Circuit
J-2	Phones Jack		Multi-Circuit
L-1	1st. R.F. Amp. Inductor	A Band	
L-2	1st. R.F. Amp. Inductor	B Band	
L-3	1st. R.F. Amp. Inductor	C Band	
L-4	1st. R.F. Amp. Inductor	D Band	

©John F. Rider

PARTS LIST (Continued)

Symbol	*Function*	*Type*	*Rating*
	MISCELLANEOUS (Continued)		
L-5	1st. R.F. Amp. Inductor	E Band	
L-6	2nd. R.F. Amp. Inductor	A Band	
L-7	2nd. R.F. Amp. Inductor	B Band	
L-8	2nd. R.F. Amp. Inductor	C Band	
L-9	2nd. R.F. Amp. Inductor	D Band	
L-10	2nd. R.F. Amp. Inductor	E Band	
L-11	1st. Det. Inductor	A Band	
L-12	1st. Det. Inductor	B Band	
L-13	1st. Det. Inductor	C Band	
L-14	1st. Det. Inductor	D Band	
L-15	1st. Det. Inductor	E Band	
L-16	CF-1 Input Tuning	Variable	Iron-Core Inductor
L-17	CF-1 Output Tuning	Variable	Iron-Core Inductor
L-18	T-1 Input Tuning	Variable	Iron-Core Inductor
L-19	T-1 Output Tuning	Variable	Iron-Core Inductor
L-20	T-2 Input Tuning	Variable	Iron-Core Inductor
L-21	T-2 Output Tuning	Variable	Iron-Core Inductor
L-22	H.F. Osc. Inductor	A Band	
L-23	H.F. Osc. Inductor	b Band	
L-24	H.F. Osc. Inductor	C Band	
L-25	H.F. Osc. Inductor	D Band	
L-26	H.F. Osc. Inductor	E Band	
L-27	T-3 Tuning	Variable	Iron-Core Inductor
L-28	T-4 Tuning	Variable	Iron-Core Inductor
L-29	Filter Choke	No. 80	17 Henries
M-1	Signal Strength Meter	S-Meter	
P-1	A.C. Line Cord and Plug		2 Contact
P-2	A.C. Jumper Plug	Octal	
S-1		Rotary	D.P. 5 Position
S-1A	Gain Adjustment		S.P. 5 Position
S-1B	S-Meter Adjustment		S.P. 5 Position
S-2	1st. R.F. Transformer Band Switch	Rotary	D.P. 5 Position
S-2A			S.P. 5 Position
S-2B			S.P. 5 Position
S-3	1st. R.F. Transformer Band Switch	Rotary	D.P. 5 Position
S-3A			S.P. 5 Position
S-3B			S.P. 5 Position
S-4	2nd. R.F. Transformer Band Switch	Rotary	D.P. 5 Position
S-4A			S.P. 5 Position
S-4B			S.P. 5 Position
S-5	2nd. R.F. Transformer Band Switch	Rotary	D.P. 5 Position
S-5A			S.P. 5 Position
S-5B			S.P. 5 Position

MODEL NC-183 NATIONAL COMPANY, INC.

PARTS LIST (Continued)

Symbol	*Function*	*Type*	*Rating*
	MISCELLANEOUS (Continued)		
S-6	1st. Det. Trans. Band Switch	Rotary	D.P. 5 Position
S-6A			S.P. 5 Position
S-6B			S.P. 5 Position
S-7	1st. Det. Trans. Band Switch	Rotary	D.P. 5 Position
S-7A			S.P. 5 Position
S-7B			S.P. 5 Position
S-8	Selectivity Control Switch	Rotary	D.P. 6 Position
S-9	H.F. Osc. Band Switch	Rotary	D.P. 5 Position
S-9A			S.P. 5 Position
S-9B			S.P. 5 Position
S-10	H.F. Osc. Band Switch	Rotary	D.P. 5 Position
S-10A			S.P. 5 Position
S-10B			S.P. 5 Position
S-11	A.V.C. Switch	Toggle	S.P.S.T.
S-12	C.W. Osc. Switch	Rotary	S.P.D.T.
S-13	Limiter Switch		S.P.D.T.
S-14	Radio-Phono Switch	Toggle	D.P.D.T.
S-15	A.C. Line Switch		S.P.S.T.
S-16	Send-Receive Switch	Toggle	S.P.S.T.
T-1	2nd. I.F. Transformer		455 Kc.
T-2	Det. Input Transformer		455 Kc.
T-3	A.V.C. Amp. Transformer		
T-4	C.W. Osc. Transformer		455 Kc.
T-5	Power Transformer		
T-6	Audio Output Transformer		
V-1	1st. R.F. Amp.	6SG7	
V-2	2nd. R.F. Amp.	6SG7	
V-3	Mixer	6SA7	
V-4	H.F. Osc.	6J5	
V-5	1st. I.F. Amp.	6SG7	
V-6	2nd. I.F. Amp.	6SG7	
V-7	2nd. Det.-A.V.C. Det.	6H6	
V-8	A.V.C. Amp.	6AC7	
V-9	C.W. Osc.	6SJ7	
V-10	Noise Limiter	6H6	
V-11	First Audio	6SJ7	
V-12	Phase Inverter	6J5	
V-13	Audio Output	6V6GT/G	
V-14	Audio Output	6V6GT/G	
V-15	Voltage Regulator	OD3/VR-150	
V-16	Rectifier	5U4G	
X-1	Battery Socket	Octal	
X-2	Accessory Connector Socket	Octal	
X-3	Output Socket	Three Pin	
Y-1	Crystal Resonator		455 Kc.

©John F. Rider

SECTION 6. ALIGNMENT DATA

6-1. *General*

All circuits in the NC-183 Receiver are carefully aligned, before shipment, using precision test equipment insuring close conformability to the alignment frequency. No realignment of the various adjustments will be required, therefore, unless the Receiver is tampered with or damaged in transit.

The necessity for any realignment can be determined by checking the performance of the Receiver against its normal operation as outlined in Section 3. In no case should realignment be attempted unless tests indicate that such realignment is necessary. Even then, it must be remembered that the NC-183 is a communications Receiver and should not be serviced or realigned by any individual who does not have a complete understanding of the functioning of the equipment and who has not had previous experience adjusting a similar type of Receiver.

Before proceding with the alignment of any circuit in the Receiver, the equipment must be set up as specified in Section 2-3, except that the antenna lead-in and loudspeaker must be disconnected. An output meter having an 8 or 500 ohm resistive load should be connected to the matching terminal on the Receiver's output socket. If it is so desired a high-impedance A.C. voltmeter may be connected to the phone output jack and used in place of the output meter.

Alignment of the equipment may be divided into two major steps:

(1) I.F. and A.V.C. Amplifier Alignment.

(2) General Coverage and Bandspread Alignment.

(a) H.F. Oscillator

(b) First Detector and R.F. Amplifiers

The circuits must be tuned in the above order when complete alignment is required.

6-2. *I.F. and A.V.C. Amplifier Alignment*

The intermediate frequency of the NC-183 Receiver is 455 kilocycles, plus or minus 2 kilocycles. The exact frequency is determined by the quartz crystal resonator Y-1.

The I.F. transformers, crystal filter, A.V.C. amplifier and C.W. oscillator transformers all have individual permeability-tuned iron core inductors with screw-type adjustments for alignment purposes. These adjustments are located on Figure No. 5.

The preliminary alignment procedure is as follows:

(1) Connect the high output lead of an accurately calibrated signal generator to the stator portion of the detector section of the main tuning capacitor C-3C and the grounded lead to any convenient grounded point on the chassis. This is a direct connection, no dummy antenna being required.

(2) Set the C.W.O. switch at ON.

(3) Set the A.V.C. switch at M.V.C.

(4) Set the PHASING control at 0.

(5) Set the SELECTIVITY control at 5.

(6) Set the A.F. GAIN control at 10.

(7) Set the R.F. GAIN control at 10.

(8) Turn the modulation of the signal generator off to provide a steady C.W. test

signal.

Adjust the output attenuator of the signal generator to provide a signal of approximately 100 microvolts and vary the tuning control of the signal generator slowly between the frequencies of 453 and 457 kilocycles. At some frequency between these limits the I.F. amplifier of the Receiver will show a very sharply peaked response, as indicated on the output meter. This frequency is that of the crystal, Y-1, and I.F. alignment, as outlined below, is made to this frequency. The C.W.O. control must be set to provide an audible beat note; the presence of this beat note can readily be determined by temporarily connecting headphones or a loud-speaker to the Receiver.

While making I.F. amplifier adjustments, it will be necessary to retard the attenuator of the signal generator if I.F. amplifier gain increases to a point where overload occurs. Without altering the frequency setting of the signal generator set the SELECTIVITY and C.W.O. switches at OFF, and turn the modulation of the signal generator ON. The I.F. tuned inductors L-16 through L-21 should, at this point, each be carefully adjusted to give a maximum reading on the output meter. The order in which these adjustments are made is not important.

To align the A.V.C. amplifier turn the A.V.C.-M.V.C. switch to A.V.C. Adjust L-27 of transformer T-3 until a well-defined dip is observed in the output meter readings. The setting of L-27 where this dip occurs will provide maximum A.V.C. action.

Turn the modulation of the signal generator OFF and turn the C.W.O. switch ON and set the C.W.O. control at 0 at which setting the C.W. oscillator should be at zero beat with the test signal. If zero beat does not occur at 0, readjust the tuneable inductor L-28, of transformer T-4 until zero beat does occur with the C.W.O. control set at 0.

6-3. *General Coverage and Bandspread Alignment*

The data given in this section applies to the alignment of the H.F. oscillator, first detector and R.F. amplifier stages. Since the main tuning capacitor and bandspread capacitor are connected in parallel on all bands General Coverage and Bandspread alignment are accomplished simultaneously. The 6 meter band, A, is tuneable by Bandspread tuning only.

The original alignment at National Laboratories is accomplished by the use of precision crystal-controlled test oscillators. No realignment of bands B, C, D and E should be attempted unless a test signal source with an accuracy of better than 1% is available. For band A, 6 meters, the test signal source must have the accuracy of precision calibrated crystals.

The need for realignment of the H.F. oscillator of bands B, C, D or E is indicated when the frequency calibration of the Receiver is in error by more than 2% at the high frequency end of any one band. Realignment of the H.F. oscillator of band A is indicated by a calibration error of 0.01%. Particular care should be taken when adjusting the high frequency oscillator trimmers. It is imperative that the high frequency oscillator is set to operate at a frequency above the first detector and R.F. amplifier frequency and not below. This can be checked by tuning in the image signal which should appear 910 kilocycles lower on the receiver dial. If it is found that the image signal does not appear at this setting the H.F. oscillator is incorrectly adjusted and the capacity of the H.F. oscillator trimmer must be decreased until the image and fundamental signals appear at the correct setting. Bands B, C and D each have an inductance adjustment, L-23, L-24, L-25, and Band E has a variable capacitor, C-56, for H.F. Oscillator alignment at the low frequency check point of these bands. After the H.F. oscillator is correctly calibrated the first detector and R.F. amplifier trimmers should be adjusted for maximum receiver gain as indicated on the output meter.

Correction of tracking errors of the first detector and R.F. amplifier stages at the low frequency check point of bands B, C and D is accomplished by the adjustments listed on the Alignment Chart. The tracking of the first detector and second R.F. amplifier stages may be checked by inserting a tuning wand into the opening of the coil form under test. Receiver gain should decrease the same amount on insertion of the iron or brass end of the tuning wand.

The tracking of the first R.F. amplifier stage of bands B, C and D may be checked by rotating the TRIMMER control, C-2. If two definite peaks in output are observed, while rotating the TRIMMER control, the first R.F. amplifier stage is tracking correctly and the TRIMMER setting at either peak is correct. The lack of a peak in output or the presence of only one peak indicates the stage is not tracking properly and correction should be made.

The locations of the adjustments referred to on the Alignment Chart are shown on Figure No. 7.

The control settings used for alignment are as outlined in Section 3-2 except that the A.V.C.-M.V.C. switch should be at M.V.C. The following Alignment Chart gives the step by step procedure to follow in effecting alignment of each band. It is important that the chart of adjustments is adhered to in the order shown for each band.

ALIGNMENT CHART

Step	Band	Adjust Signal Source To:	Set Gen. Cov. Dial At:	Set Bandspread Dial At:	Adjust To Receive Test Signal	Adjust For Maximum Output
1	A	56 Mc.	⑥ (at 198 on linear scale)	56 Mc.	C-47	C-18, C-9, C-2
1	B	30.0 Mc.	30.0 Mc.	Set Mark	C-48	C-19, C-11, C-2
2	B	14.0 Mc.	14.0 Mc.	Set Mark	L-23	L-12, L-7, L-2
3	B	30.0 Mc.	30.0 Mc.	Set Mark	C-48	Check Step 1. Repeat Steps 1, 2 and 3 if necessary.
1	C	11.0 Mc.	11.0 Mc.	Set Mark	C-50	C-20, C-12, C-2
2	C	5.0 Mc.	5.0 Mc.	Set Mark	L-24	L-13, L-8, L-3
3	C	11.0 Mc.	11.0 Mc.	Set Mark	C-50	Check Step 1. Repeat Steps 1, 2 and 3 if necessary.
1	D	4.0 Mc.	4.0 Mc.	Set Mark	C-52	C-21, C-13, C-2
2	D	1.8 Mc.	1.8 Mc.	Set Mark	L-25	L-14, L-9, L-4
3	D	4.0 Mc.	4.0 Mc.	Set Mark	C-52	Check Step 1. Repeat Steps 1, 2 and 3 if necessary.
1	E	1.5 Mc.	1.5 Mc.	Set Mark	C-54	C-22, C-14, C-2
2	E	0.6 Mc.	0.6 Mc.	Set Mark	C-56	
3	E	1.5 Mc.	1.5 Mc.	Set Mark	C-54	Check Step 1. Repeat Steps 1, 2 and 3 if necessary.

NOTE: Inductance adjustments (indicated by "L-") consist of a loop of wire inside coil form--bending the loop one way or the other adds or subtracts to the inductance.

The Set Mark referred to above is located at 180 on the linear scale.

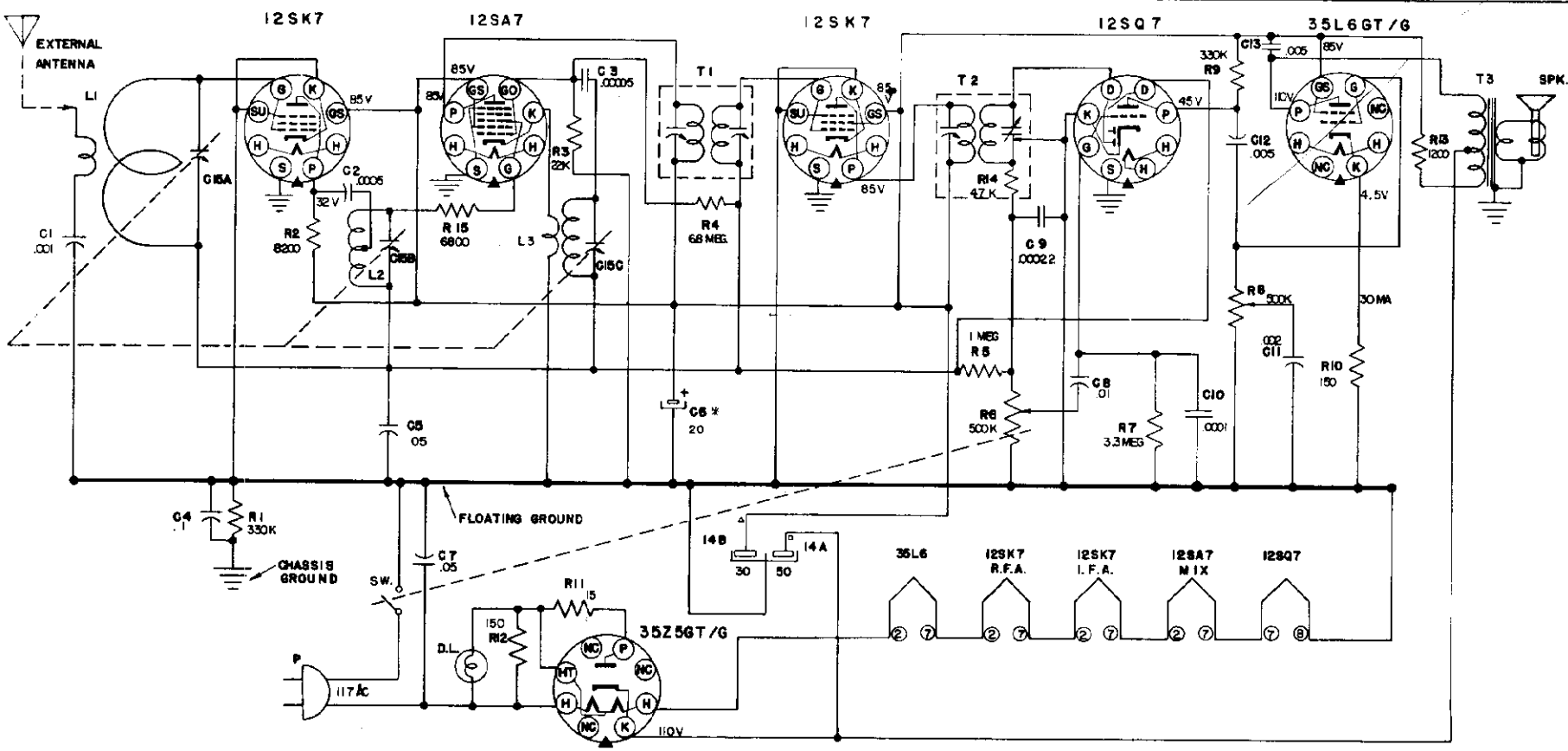

VOLTAGE MEASUREMENTS MADE WITH AN ELECTRONIC VOLTMETER, 117 V AC LINE VOLTAGE & NO SIGNAL.

K = 1000 OHM
MEG. = MEGOHM

NOTE: TUBULAR PAPER CAPACITORS CURVED LINE INDICATES OUTSIDE FOIL.

*Used only on sets with 50-30 uf. Electrolytic Condenser.

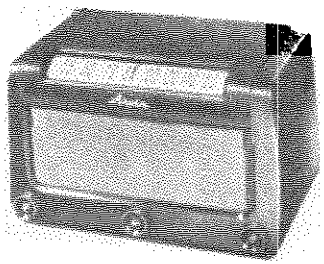

SPECIFICATIONS

FREQUENCY RANGE

Broadcast	540-1600 kc
IF	455 kc

TUBES AND FUNCTIONS

12SK7	RF Amp.
12SA7	Mixer-oscillator
12SK7	IF Amp.
12SQ7	DET-AVC AF Amp.
35L6	Output
35Z5GT	Rectifier

LOUD SPEAKER

Type: Permanent magnet, 2.15 oz. Alnico 5
Size: 5¼ Inch
Voice coil impedance ---------- 3.2 Ohms

POWER OUTPUT

Undistorted	.8 Watts
Maximum	1.1 Watts
Plate load	2000 Ohms

MODEL 160T, 161T,
CHASSIS RE-232

NOBLITT-SPARKS INDUSTRIES, INC.

ALIGNMENT PROCEDURE

PRELIMINARY:

Output meter connection	Across loudspeaker voice coil
Output meter reading to indicate 200 mw (standard output)	.8 volts
Connection of generator ground lead	Floating ground
Generator modulation	30% 400 cyclees
Position of volume control	Fully clockwise
Position of dial pointer with variable fully closed	Last mark at left end of dial

1. Connect signal generator lead through a .05 uf. condenser to converter grid. Open tuning condenser. Set signal generator to 455 Kc. Tune I. F. Transformers for maximum output.

2. Close tuning condenser and set pointer at end mark of dial. Open tuning condenser. Connect signal generator to test loop or to blue lead on set loop. Set signal generator to 1620 Kc. Tune trimmer on (C15C) oscillator section of tuning condenser for maximum output.

3. Set signal generator to 1400 Kc. Adjust tuning shaft until maximum output is abtained. Tune R. F. trimmer (C15B) and antenna trimmer (C15A) on tuning condenser for greatest output. Reset tuning shaft until output is again a maximum. Retune R. F. and antenna trimmers. Repeat this cycle of operations at 1400 Kc until no further increase of output can be obtained. Keep generator output at a low value to prevent detuning by A. V. C. action.

4. Set signal generator to 600 Kc. Adjust tuning shaft for maximum output. Adjust tuning condenser plates for maximum output.

Approximate stage by stage sensitivities with 117V. AC line voltage and .8 V. output across voice coil, should be: I. F. grid, 455 Kc – 10,000 uv., Mixer grid, 455 Kc – 130 uv., Mixer grid, 1000 Kc – 170 uv; Antenna, 1400 Kc – 100 uv/m.

TUBE LAYOUT

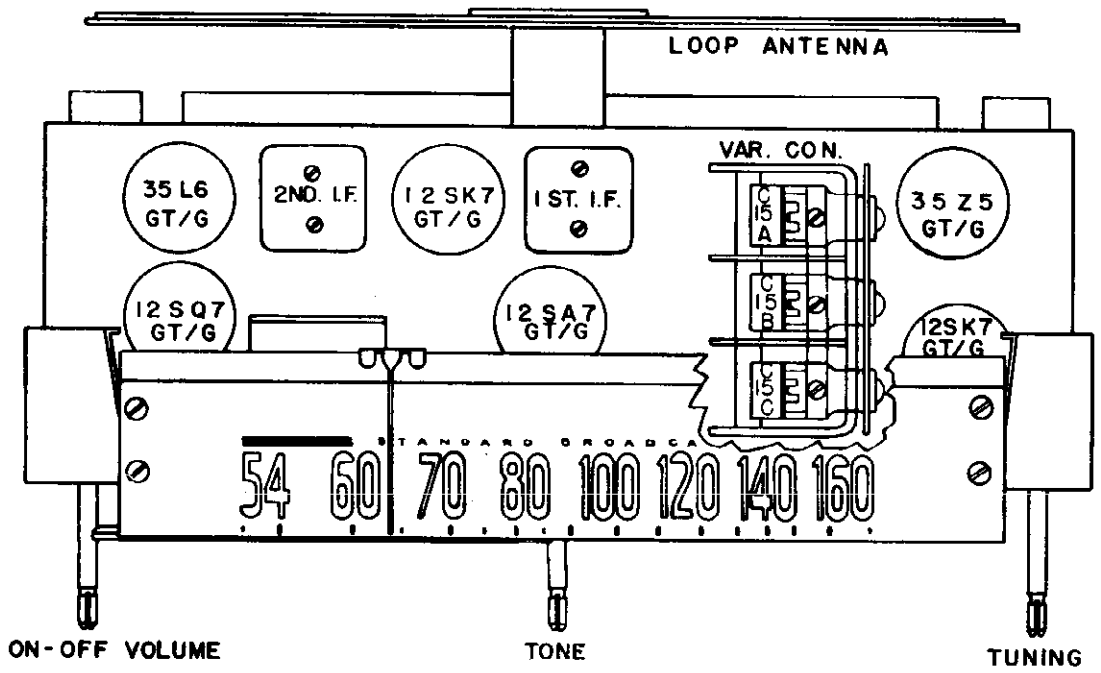

NOBLITT-SPARKS INDUSTRIES, INC.

MODEL 160T, 161T,
CHASSIS RE-232

PARTS LIST

Schematic Location	Part No.	Description
R1, 9	C20060-334	Resistor, 330,000 Ohms, 1/4 W
R2	C20120-822	Resistor, 8200 Ohms, 1/4 W
R3	C20060-223	Resistor, 22,000 Ohms, 1/4 W
R4	C20060-685	Resistor, 6.8 Megohm, 1/4 W
R5	C20060-105	Resistor, 1 Megohm, 1/4 W
R6	C21554	Volume Control, 500,000 Ohms
R7	C20060-335	Resistor, 3.3 Megohm, 1/4 W
R8	C21553	Tone Control & Switch, 500,000 Ohms
R10, 12 R11	C20060-151	Resistor, 150 Ohms, 1/4 W
R13	C20223-122	Resistor, 1200 Ohms, 2 W
R14	C200601473	Resistor, 47,000 Ohms, 1/4 W
R15	C20060-473	Resistor, 6800 Ohms, 1/4 W
C1	C20067-102	Condenser, .001 uf., 200 V., P. T.
C2	C20069-501	Condenser, .0005 uf., 600 V., P. T.
C3	C20204-500	Condenser, .00005 uf., 500 V., Ceramic
C4	C20067-104	Condenser, .1 uf., 200 V., P. T.
C5	C20067-503	Condenser, .05 uf., 200 V., P. T.
*C6	A22110	Condenser, 20 uf., 150 V. Elect.
C7	C20068-503	Condenser, .05 uf., 400 V., P. T.
C8	C20068-103	Condenser, .01 uf., 400 V., P. T.
C9	C20226-221	Condenser, .00022 uf., 350 V., Ceramic
C10	C20065-101	Condenser, .0001 uf., 500 V., Mica
C11	C20068-202	Condenser, .002 uf., 400 V., P. T.
C12, 13	C20068-502	Condenser, .005 uf., 400 V., P. T.
*C14A, B	A21578	Electrolytic Condenser, 50 uf., 150 V., 30 uf., 150 V.
**C14A, B	C22111	Electrolytic Condenser, 50 uf., 150 V. 50 uf., 150 V.
C15A, B, C	AD21569-1	Variable Condenser & Pulley Assy.
L1	AD21576-1	Antenna Loop Assembly
L2	AC21575-I	R. F. Coil Assembly
L3	AC21576-1	Oscillator Coil Assembly
T1	AC21572-1	1st I. F. Coil Assembly
T2	AC21573-1	2nd I. F. Coil Assembly
T3	AC21577-1	Output Transformer Assembly
Spk.	C21570-1	Speaker, 5-1/4" P. M.
P	A18254-1	Socket, Wafer, Plain

Schematic Location	Part No.	Description
	A19124	Snap-on Button for Mtg. Rear Cover to Cabinet
	A19132	Dial Drive Cord
	A20149-8	
	A19138-1	Spacer Eyelet for Mtg. Variable Condenser
	A19205-3	Capacitor Mtg. Clip, for Mtg. Electrolytic Condenser
	A19233-1	Socket, Wafer, Center Pin Shielded
	A19344-2	Idler Pulley
	A19351	Dial Light Bulb, Mazda C47
	A19361	Hair Pin Clip
	A20040-9	Washer, Brown Felt behind knobs (Model 160-T) (10)
	A20040-14	Washer, White Felt behind Knobs (Model 161-T) (10)
	A20077-3	Grommet, Rubber for Mtg. Variable Condenser
	A20216-1B	Speed Nut for Mtg. Name Plate (10)
	A20228-1B	Speed Nut for Mtg. Name Plate (10)
	A20229-1B	Speed Nut for Mtg. Speaker Baffle (10)
	A21330	Name Plate
	A21346-2	Socket, Dial Light
	E21536-1	Cabinet, Walnut (160-T)
	E21536-2	Cabinet, Ivory (161-T)
	C21559	Dial Crystal
	C21561	Grille
	C21562	Speaker Baffle
	C21564	Dial Pointer
	A21568	Tuning Shaft
	C21579	Felt Baffle
	A21607	Carton, Complete with Fillers
	A21737-1	Knob, Walnut (160-T)
	A21737-2	Knob, Ivory 0(161-T)
	A21979	Cabinet, Rear Cover Assembly, Walnut (160-T)
	A21980	Cabinet, Rear Cover Assembly, Ivory (161-T)
	A21981	Dial Scale & Backing Plate Assembly

* used on first 18000 sets produced.
** used on sets Produced after first 18,000.

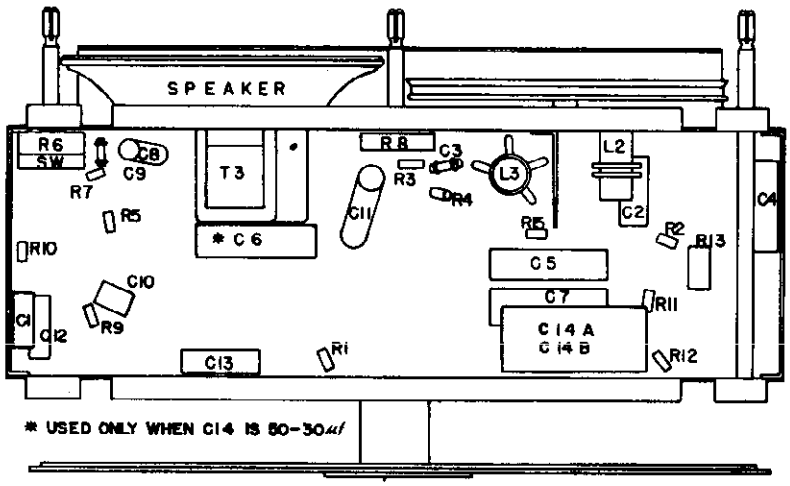

LOCATION OF PARTS UNDER CHASSIS

Models 160T is in a walnut cabinet. Model 161T is in an ivory cabinet. The Chassis is the same in both models.

MODELS 241P, 244P, NOBLITT-SPARKS INDUSTRIES, INC. CHASSIS RE-244, 2410P, -255, -256, -259, -254

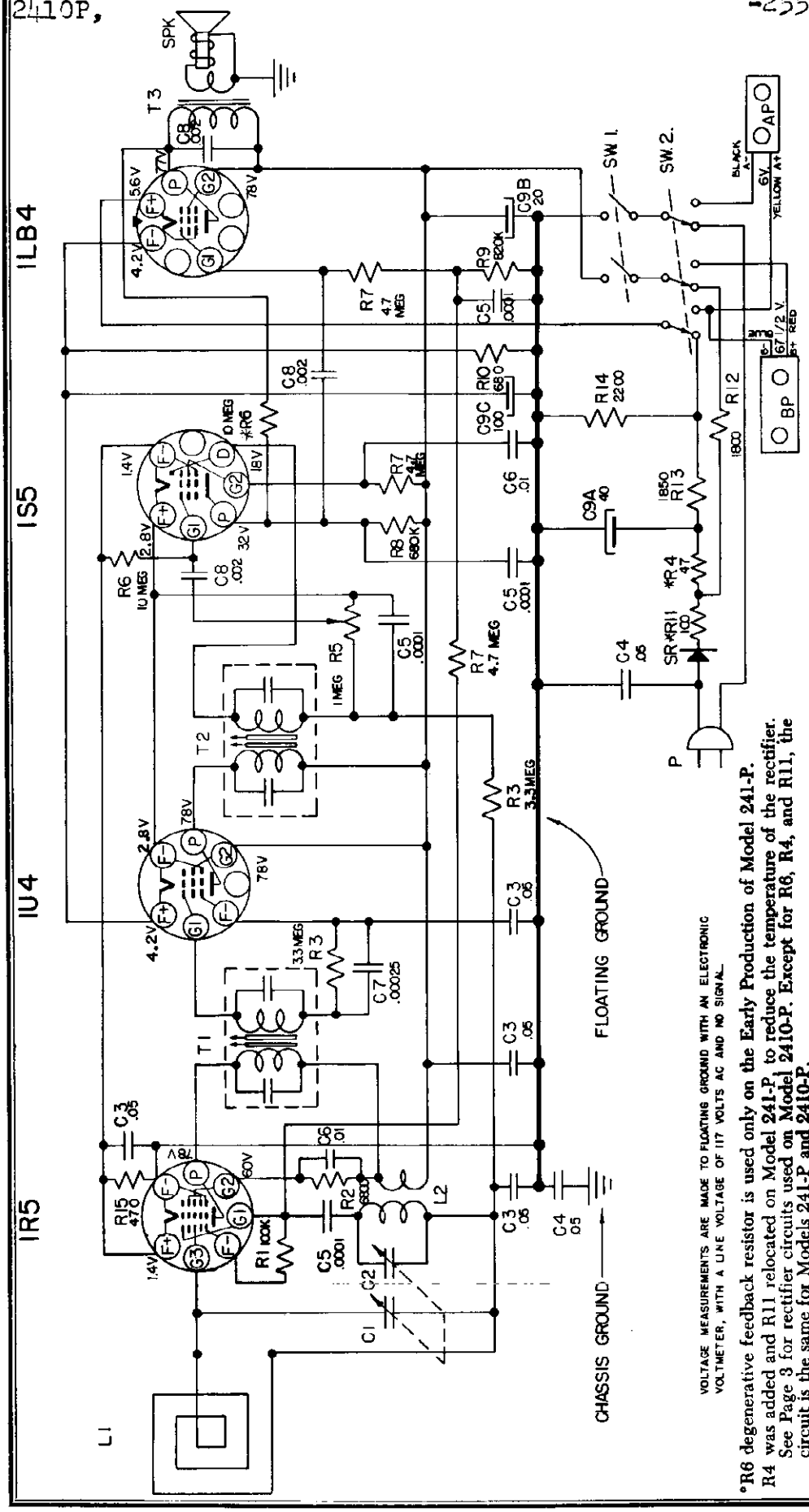

*R6 degenerative feedback resistor is used only on the Early Production of Model 241-P.
R4 was added and R11 relocated on Model 241-P, to reduce the temperature of the rectifier. See Page 3 for rectifier circuits used on Model 2410-P. Except for R6, R4, and R11, the circuit is the same for Models 241-P and 2410-P.

SPECIFICATIONS

FREQUENCY RANGE
Broadcast ---------- 540-1600 kc
IF ---------- 455 kc

TUBES AND FUNCTIONS
1R5 ---------- Mixer-oscillator
1U4 ---------- IF Amp.
1S5 ---------- DET-AVC AF Amp.
1LB4 ---------- Output

POWER SUPPLY
1. 67½ V. B Battery, Eveready Minimax, No. 467 or Equal.
4. 1½ V. D Size Flishlight Cells, 6 Volts total

LOUD SPEAKER
Type: Permanent magnet
Size: 4 Inch
Voice coil impedance ---------- 3.2 Ohms

POWER OUTPUT
Undistorted ---------- .05 Watt
Maximum ---------- .1 Watt
Plate Load ---------- 14,000 ohms

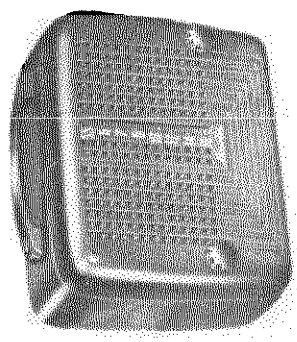

©John F. Rider

NOBLITT-SPARKS INDUSTRIES, INC. MODELS 241P, 244P, 2410P, CHASSIS RE-244 -255, -256, -259, -254

ALIGNMENT PROCEDURE

PRELIMINARY:

Output meter connection	Across loudspeaker voice coil
Output meter reading to indicate 50 MW (Standard Output)	.4 volts
Dummy antenna value to be used in series with generator output	See chart below
Connection of generator output lead	See chart below
Connection of generator ground lead	Floating ground
Generator modulation	30% 400 cycles
Position of volume control	Fully clockwise

With variable condester closed, place top edge of pointer across center of top hole on dial backing plate.
When adjusting C1, place the set loop the same distance from and in the same position with respect to the chassis and batteries, as it would be when mounted in the cabinet.

Position of Variable	Frequency of Generator	Dummy Antenna	Generator Output Connection	Trimmers Adjusted in Order Shown for Maximum Output	Function of Trimmer
Open	455	.05 mfd.	1R5 Grid (Stator of C1)	Top & Bottom of IF Trans. T2 & T1.	IF
1400	1400		*Test Loop	C2; C1, Trimmers on Variable Condenser	Oscillator
600	600		*Test Loop	**Check Point	Antenna

* Standard Hazeltine Test Loop Model 1150 or 3 turns of wire about 6" diameter, placed about one foot from the set loop.
**If weak, adjust variable condenser plates for maximum output.

The alignment procedure should be repeated in the original order for greatest accuracy. Always keep the output from the signal generator at its lowest possible value to make the AVC action of the receiver ineffective.

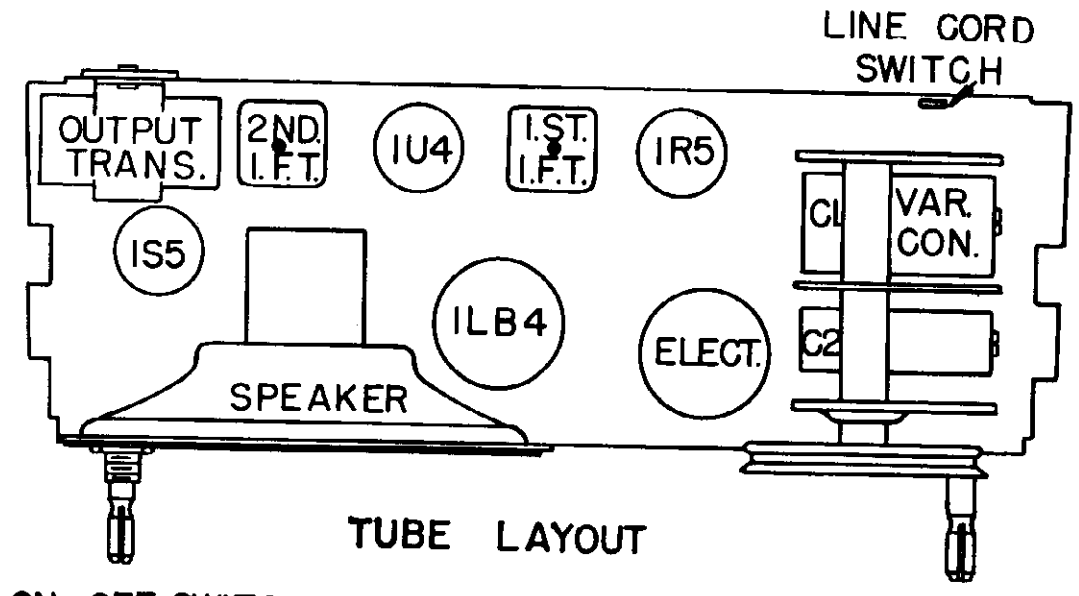

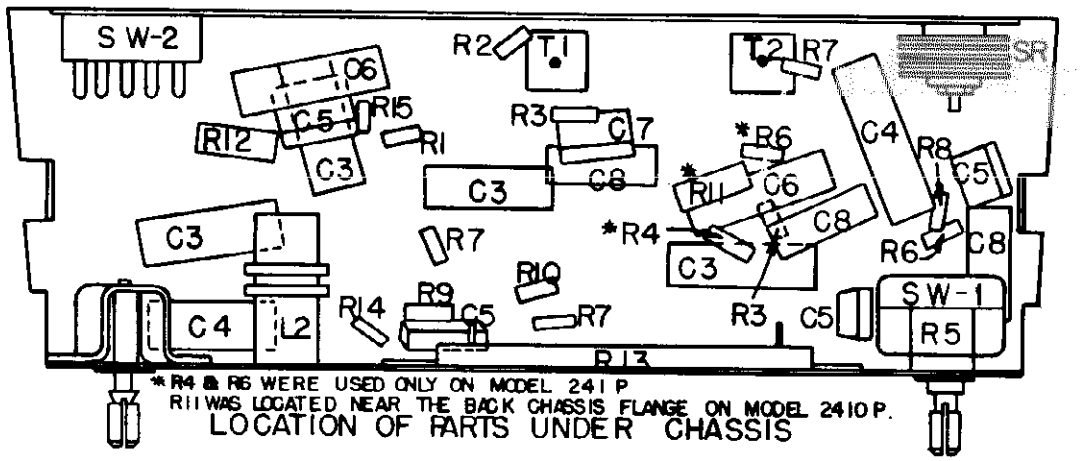

*R4 & R6 WERE USED ONLY ON MODEL 241P
R11 WAS LOCATED NEAR THE BACK CHASSIS FLANGE ON MODEL 2410P.
LOCATION OF PARTS UNDER CHASSIS

MODELS 241P, 244P, 2410P, CHASSIS RE-244, -255, -256, -259, -254

NOBLITT-SPARKS INDUSTRIES, INC.

241P, 244P & 2410P PARTS LIST

Schematic Location	Part No.	Description
R1	C20060-104	Resistor, 100,000 Ohm, 1/4 Watt
R2	C20060-682	Resistor, 6800 Ohm, 1/4 Watt
R3	C20060-335	Resistor, 3.3 Megohm, 1/4 Watt
R4 241 only	C20060-470	Resitor, 47 Ohm, 1/4 Watt
R4 2410-P c	C20060-680	Resistor, 68 Ohms 1/4 Watt
R5	C21782	Volume Control & Switch, 1 Megohm
R6	C20060-106	Resistor, 10 Megohm, 1/4 Watt
R7	C20060-475	Resistor, 4.7 Megohm, 1/4 Watt
R8	C20060-684	Resistor, 680,000 Ohm, 1/4 Watt
R9	C20120-824	Resistor, 820,000 Ohm, 1/4 Watt, + or − 10%
R10	C20060-681	Resistor, 680 Ohm, 1/4 Watt
R11	C20070-101	Resistor, 100 Ohm, 1 Watt, + or − 10%
R12	C20070-182	Resistor, 1800 Ohms, 1 Watt, + or − 10%
R13	A21816	Resistor, 1850 Ohms, 10 Watt, + or − 10%
R14	C20060-222	Resistor, 2200 Ohms, 1/4 Watt
R15	C20060-471	Resistor, 470 Ohms, 1/4 Watt
C1, C2	C19822	Condenser, Variable
C3	C20067-503	Condenser, .05 uf., 200 Volts, P. T.
C4	C20068-503	Condenser, .05 uf., 400 Volts, P. T.
C5	C20065-101	Condenser, .0001 uf., 500 Volts, Mica
C6	C20068-103	Condenser, .01 uf., 400 Volts, P. T.
C7	C20065-251	Condenser, .00025 uf., 500 Volts, Mica
C8	C20069-202	Condenser, .002 uf., 600 Volts, P. T.
C9	A21815	Condenser, Electrolytic, 40-20 uf., 150 Volts, 100 uf., 10 Volts
L1	*AC21795-( )	Antenna Loop & Cabinet Back Assy.
L2	AC21796-1	Oscillator Coil Assy.

Schematic Location	Part No.	Description
T1	C21797-1	1st I. F. Coil Assy.
T2	C21797-2	2nd I. F. Coil Assy.
T3	AC21799-1	Output Transformer Assy.
SR	A20207-1	Selenium Rectifier, 75 Ma., Federal
or	A20207-2	Selenium Rectifier, 100 Ma., Radio Receptor
Spk	C21768	Speaker, 4" P. M.
Sw-2	A21051	Slide Switch
AP	A21861	"A" Battery Cable & Terminal Strip
BP	A21842	"B" Battery Cable & Terminal Strip
P	B20246-1	Line Cord & Plug Assy.
	*AA21957-( )	Cabinet Assy., Front Sec., with Grill Cloth & Latch
	*C21766-( )	Handle
	*A21764-( )	Knob
	A21801	Line Cord Hook
	A21802	Spring, Hinge (Set of two)
	A21803	Mtg. Stud for Handle
	A21241-1A	Speed Nut for Mtg. Handle (Set of two)
	A21838	Carton (Complete with Fillers)
	A21785	Tuning Shaft
	A20077-3	Grommet, Variable Con. Mtg.
	A19138-1	Eyelet, Spacer, Variable Condenser Mtg.
	A19361	Hair Pin Clip for Tuning Shaft
	A19132	Dial Drive Cord
	*A21783-( )	Pointer
	A21792	Spring Clip, IF Coil Mtg.
	A19133	Spring, Dial Cord
	A20243-3	Socket, Miniature, Shielded
	A20243-1	Socket, Miniature, Unshielded
	A21851-1	Socket, Loctal Molded
	A21852	Electrolytic Mtg. Wafer
	AC21858-1	Battery Clip Assy.
	C21767-1	Spring Latch

* When ordering these parts use the following dash numbers as suffixes to the Part numbers.
Ivory – 1 for handle, 3 for all other Cabinet Parts; Red – 1 for all Colored Parts;
Tan – 1 for Pointer & handle – 3 for knobs, – 4 for Cabinet parts;
Green – 1 for Pointed, – 5 for knobs Cabinet parts & handle.

Model Number & Chassis Number Combinations.

Model	Chassis	Model	Chassis
241P Ivory	Re-244	241P Red	RE-245
241P Tan	RE-255	244P Green	RE-259

The above Chassis are identical except for Colored parts Model 2410 P – Chassis RE-254 was produced in Red, Ivory & Tan, all using the same Chassis Number. It has Certain Circuit Variations which are covered in this bulletin.

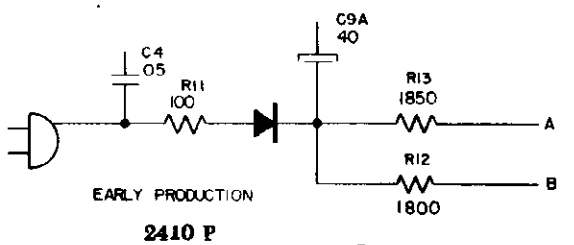

2410 P

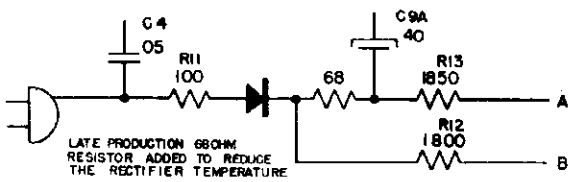

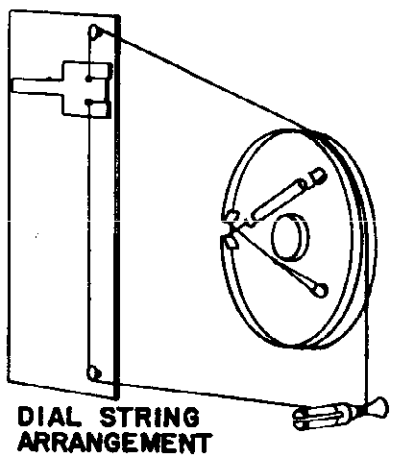

DIAL STRING ARRANGEMENT

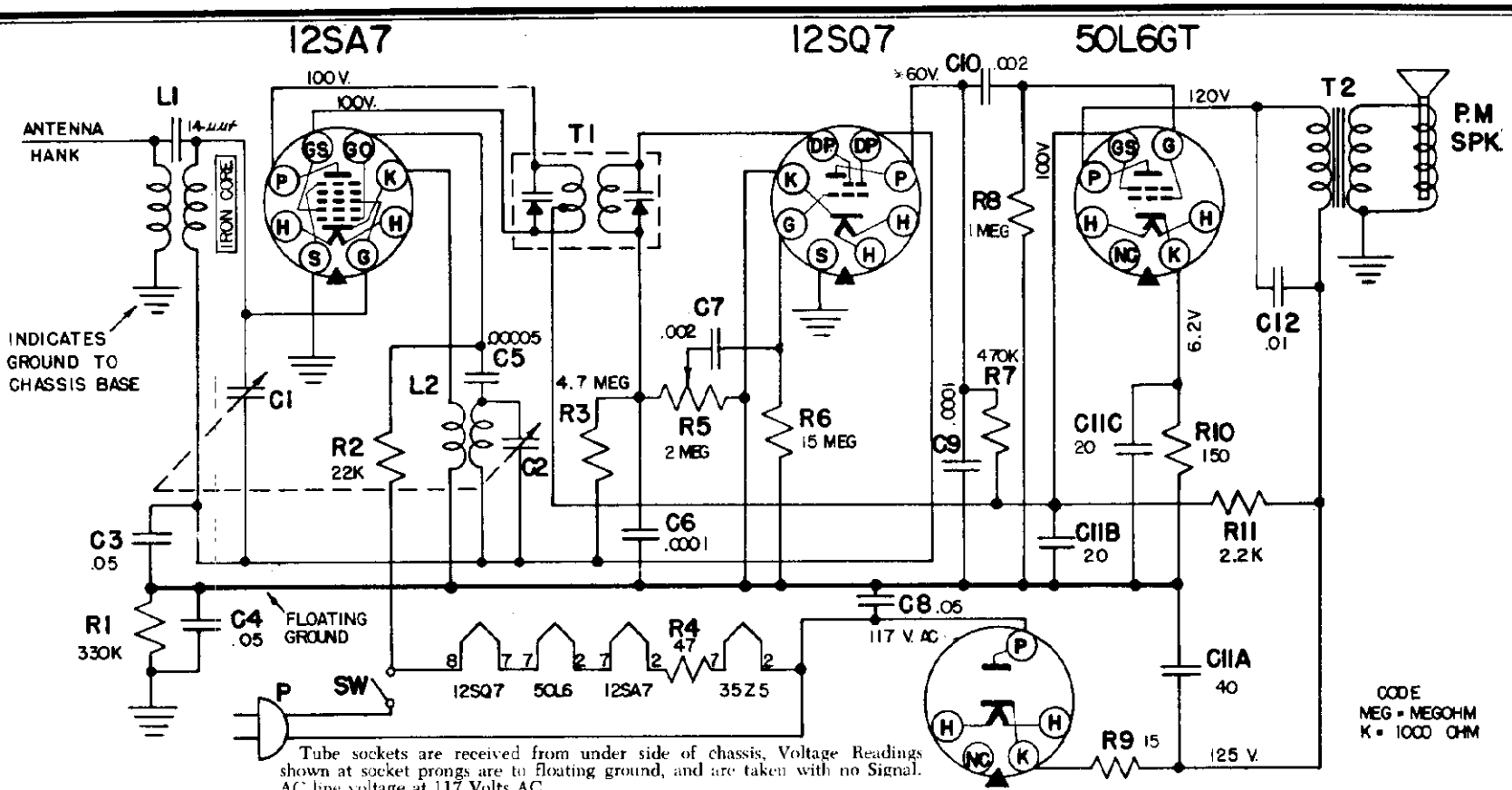

Tube sockets are received from under side of chassis, Voltage Readings shown at socket prongs are to floating ground, and are taken with no Signal. AC line voltage at 117 Volts AC.

* Measured with Vacuum tube voltmeter.

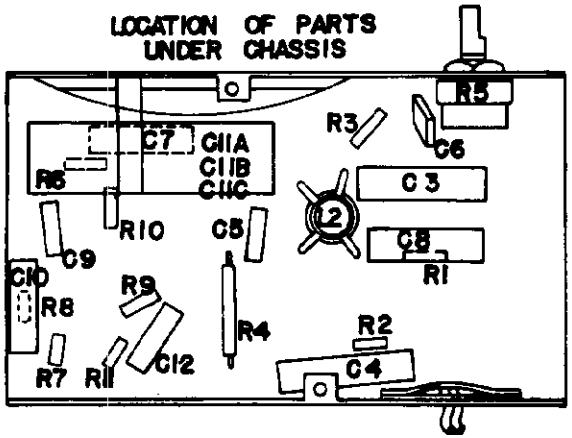

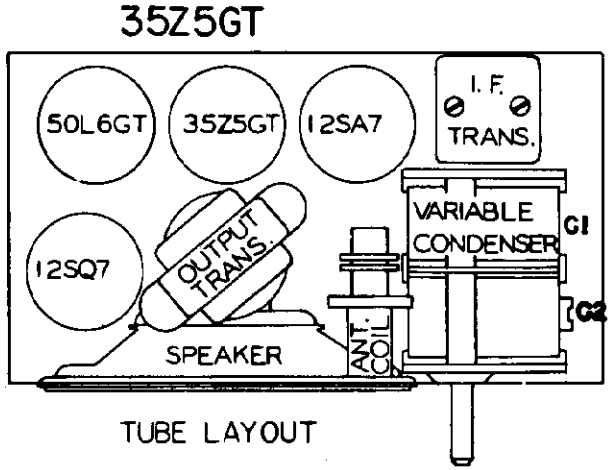

TUBE LAYOUT

NOBLITT-SPARKS INDUSTRIES, INC.
MODELS 2124, 2130,
CHASSIS RE-251

ARVIN PAGE 19

MODELS 242T, 243T, NOBLITT-SPARKS INDUSTRIES, INC.
CHASSIS RE-251

ALIGNMENT PROCEDURE

PRELIMINARY.

Output meter connection	Across loudspeaker voice coil
Output meter reading to indicate 200 milliwatts (standard output)	0.8 volts
Dummy antenna to be in series with signal generator output	See chart below
Connection of generator ground lead	Floating ground
Generator modulation	30% 400 cycles
Position of Volume Control	Fully clockwise
Position of pointer with variable fully closed	55 on dial

Position of Variable	Generator Frequency	Dummy Antenna	Generator Output Connection	Trimmers Adjusted	Trimmer Function	Approximate Sensitivity
Open	455 Kc	.05 uf.	12SA7 Grid (Stator of C-1)	2 trimmers on IF. Trans.	IF	3000 uv.
1400 Kc	1400Kc	.00005 uf.	Antenna Lug with Hank Removed	**C-2	Oscillator	360 uv.

**Since the antenna section of the variable has no trimmer, the rotor of the variable should be rocked back and forth on both sides of 1400 Kc while adjusting the oscillator trimmer for maximum output. This is to obtain the combination of rotor and trimmer setting to give perfect tracking of the two sections of the variable condenser and consequently give maximum output.

Check sensitivity at 600 Kc. If weak, adjust antenna section plates for maximum output at 600 Kc. Tracking of the condenser at points other than 1400 Kc is accomplished by bending the outside plates on the variable condenser rotor, which are cut for this purpose. When bending plates to track the condenser at any given frequency, keep in mind the fact that this will effect the tracking at all frequencies below that point. A tuning wand is very helpful in checking the tracking of this condenser, to indicate whether more or less capacity is needed.

The alignment procedure should be repeated stage by stage in the original order for greatest accuracy.

Always keep the output from the test oscillator at its lowest possible value to make the AVC action of the receiver ineffective.

REF. NO.		DESCRIPTION
R1	C20060-334	Resistor, 330,000 Ohms, ¼ W.
R2	C20060-223	Resistor, 22,000 Ohms, ¼ W.
R3	C20060-475	Resistor, 4.7 Megohms, ¼ W.
R4	A19177	Resistor, 47 Ohms, 1 W.
R5	C21630	Resistor, 2 Megohms, volume control and switch
R6	C20060-156	Resistor, 15 Megohms, ¼ W.
R7	C20060-474	Resistor, 470,000 Ohms, ¼ W.
R8	C20060-105	Resistor, 1 Megohm, ¼ W.
R9	C20060-150	Resistor, 15 Ohms, ¼ W.
R10	C20060-151	Resistor, 150 Ohms, ¼ W.
R11	C20070-222	Resistor, 2,200 Ohms, 1 W.
C1, C2	C22047	Condenser, variable
C3	C20067-503	Condenser, .05 uf., 200 V.
C4, C8	C20068-503	Condenser, .05 uf., 400 V.
C5	C20065-500	Condenser, .00005 uf., 500 V.

REF. NO.		DESCRIPTION
C6, C9	C20065-101	Condenser, .0001 uf., 500 V.
C7, C10	C20069-202	Condenser, .002 uf., 500 V.
C11A		Condenser, 40 uf., 150 V.
C11B	A19176	Condenser, 20 uf., 150 V.
C11C		Condenser, 20 uf., 25 V.
C12	C20068-103	Condenser, .01 uf., 400 V.
L1	AC18255-1	Coil, antenna
L2	AC18256-1	Coil, oscillator
T1	AC18257-1	Coil, i. f.
T2	AC18258-1	Output transformer
	*E22029-( )	Cabinet
	*C19560-( )	Cabinet back cover
	*C22028-( )	Knob, tuning
	*C22049-( )	Knob, volume
Spk.	C21626	Speaker
P	B20257-1	Line cord and plug assembly

*Be sure to use the dash number as outlined in the chart below when ordering colored parts:

MODEL	CABINET	REAR COVER	VOL. KNOB	TUN. KNOB
242T	E22029-2	C19560-2	A22049-1	C22028-1
Ivory	Ivory	Ivory	Light Tan	Light Tan
243T	E22029-3	C19560-3	A22049-2	C22028-2
Yellow	Yellow	Yellow	Lt. Blue	Lt. Blue
243T	E22029-5	C19560-5	A22049-5	C22028-5
Green	Green	Green	Banana Yellow	Banana Yellow
243T	E22029-6	C19560-6	A22049-3	C22028-3
Red	Red	Red	Pale Yellow	Pale Yellow

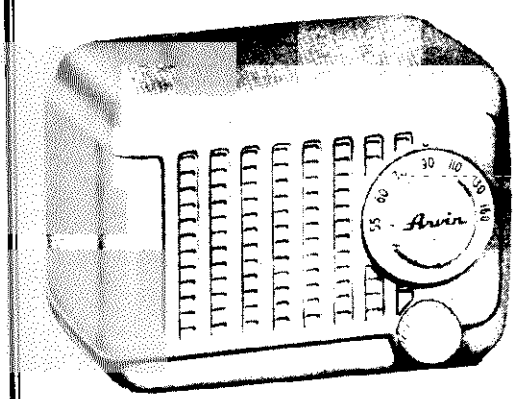

SPECIFICATIONS

FREQUENCY RANGE
- Broadcast ---------- 540-1600 kc
- IF ---------- 455 kc

TUBES AND FUNCTIONS
- 12SA7 ---------- Mixer-oscillator
- 12SQ7 ---------- Detector – AVC-AF.
- 50L6GT ---------- Output
- 35Z5GT ---------- Rectifier

POWER SUPPLY
105-125 Volts, AC-DC, 30 Watts

POWER OUTPUT
Type: Beam tube
- Undistorted ---------- .8 Watts
- Maximum ---------- 2.5 Watts
- Plate Load ---------- 2000 Ohms

LOUD SPEAKER
Type: Permanent magnet
Size: 4 inch
- Voice coil impedance ---------- 3.2 Ohms

©John F. Rider

NOBLITT-SPARKS INDUSTRIES, INC. MODELS 264T, 265T, CHASSIS RE-265

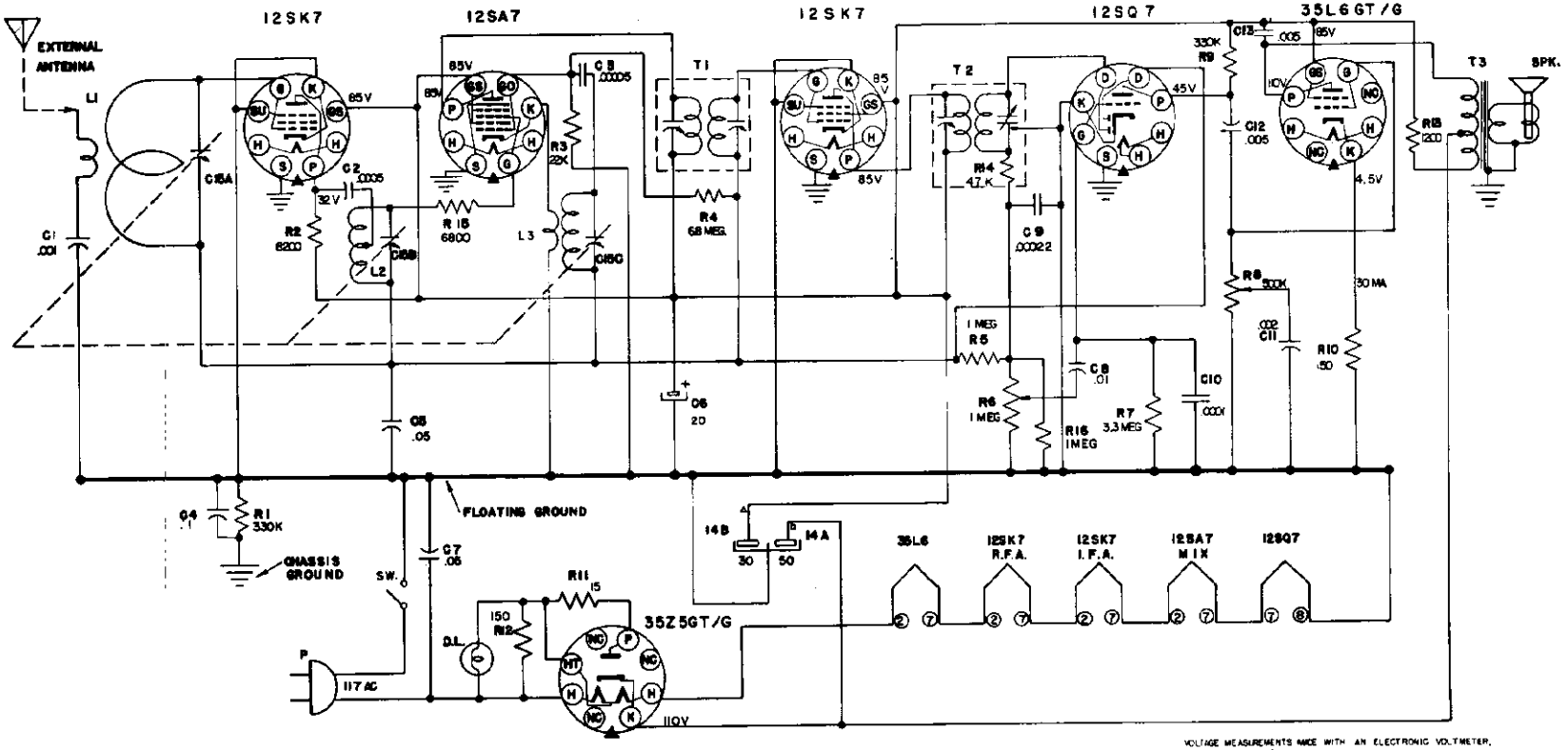

VOLTAGE MEASUREMENTS MADE WITH AN ELECTRONIC VOLTMETER, 117 V AC LINE VOLTAGE & NO SIGNAL.

K = 1000 OHM
MEG. = MEGOHM

NOTE: TUBULAR PAPER CAPACITORS CURVED LINE INDICATES OUTSIDE FOIL.

SPECIFICATIONS

FREQUENCY RANGE
- Broadcast ---------- 540-1600 kc
- IF ---------- 455 kc

TUBES AND FUNCTIONS
- 12SK7 ---------- RF Amp.
- 12SA7 ---------- Mixer-oscillator
- 12SK7 ---------- IF Amp.
- 12SQ7 ---------- DET-AVC AF Amp.
- 35L6 ---------- Output
- 35Z5GT ---------- Rectiier

POWER OUTPUT
- Undistorted ---------- .8 Watts
- Maximum ---------- 1.1 Watts
- Plate load ---------- 2000 Ohms

LOUD SPEAKER
- Type: Permanent magnet, 1.47 oz. Alnico 5
- Size: 5¼ Inch
- Voice coil impedance ---------- 3.2 Ohms

CHASSIS FEATURES
- Automatic Volume Control
- Built-in Loop
- Tuned RF Stage

OPERATING CONTROLS
1. Left knob ---------- Volume
2. Left Center knob ---------- Tone
3. Right Center knob ---------- ON-OFF Switch
4. Right ---------- Tuning

PHYSICAL DIMENSIONS
- Length ---------- 14 inches
- Height ---------- 8 1/2 inches
- Depth ---------- 8 5/16 inches

Models 264T is in a Mahogany cabinet. Model 265T is in a Bleached Mahogany cabinet. The Chassis is the same in both models.

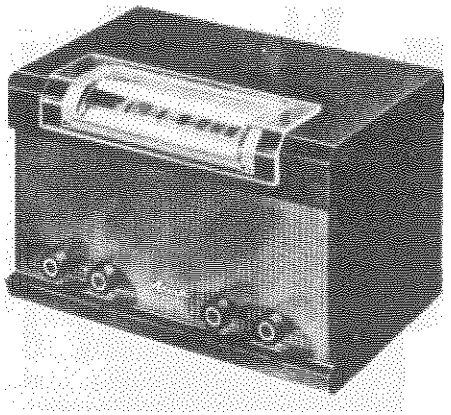

MODELS 264T, 265T, NOBLITT-SPARKS INDUSTRIES, INC.
CHASSIS RE-265

ALIGNMENT PROCEDURE

PRELIMINARY:

Output meter connection	Across loudspeaker voice coil
Output meter reading to indicate 200 mw (standard output)	.8 volts
Connection of generator ground lead	Floating ground
Generator modulation.	30% 400 cyclees
Position of volume control	Fully clockwise
Position of dial pointer with variable fully closed	Last mark at left end of dial

1. Connect signal generator lead through a .05 uf. condenser to converter grid. Open tuning condenser. Set signal generator to 455 Kc. Tune I. F. Transformers for maximum output.

2. Close tuning condenser and set pointer at end mark of dial. Open tuning condenser. Connect signal generator to test loop or to blue lead on set loop. Set signal generator to 1620 Kc. Tune trimmer on (C15C) oscillator section of tuning condenser for maximum output.

3. Set signal generator to 1400 Kc. Adjust tuning shaft until maximum output is abtained. Tune R. F. trimmer (C15B) and antenna trimmer (C15A) on tuning condenser for greatest output. Reset tuning shaft until output is again a maximum. Retune R. F. and antenna trimmers. Repeat this cycle of operations at 1400 Kc until no further increase of output can be obtained. Keep generator output at a low value to prevent detuning by A. V. C. action.

4. Set signal generator to 600 Kc. Adjust tuning shaft for maximum output. Adjust tuning condenser plates for maximum output.

Approximate stage by stage sensitivities with 117V. AC line voltage and .8 V. output across voice coil, should be: I. F. grid, 455 Kc – 10,000 uv., Mixer grid, 455 Kc – 150 uv., Mixer grid, 1000 Kc – 170 uv; Antenna, 1400 Kc – 100 uv/m.

TUBE LAYOUT

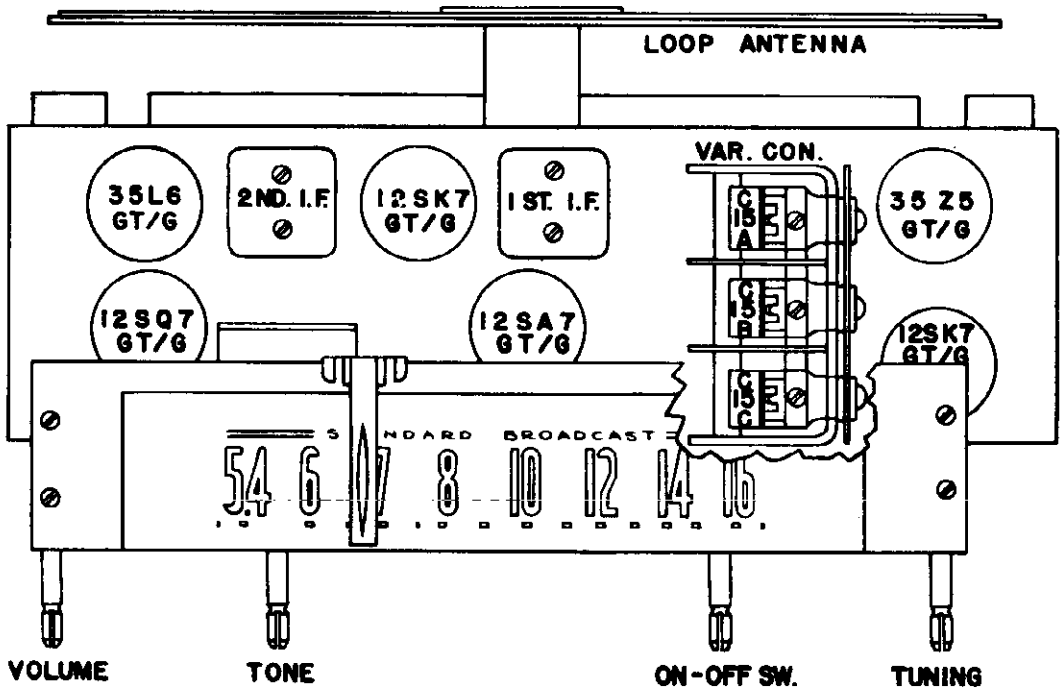

© John F. Rider

NOBLITT-SPARKS INDUSTRIES, INC. MODELS 264T, 265T, CHASSIS RE-265

PARTS LIST

Schematic Location	Part No.	Description
R1, 9	C20060-334	Resistor, 330,000 Ohms, ¼ W
R2	C20120-822	Resistor, 8200 Ohms, ¼ W
R3	C20060-223	Resistor, 22,000 Ohms, ¼ W
R4	C20060-685	Resistor, 6.8 Megohm, ¼ W
R5, R16	C20060-105	Resistor, 1 Megohm, ¼ W
R6	C21404-1	Volume Control, 1 Megohm
R7	C20060-335	Resistor, 3.3 Megohm, ¼ W
R8	C21405-1	Tone Control & Switch, 500,000 Ohms
R10, 12	C20060-151	Resistor, 150 Ohms, ¼ W
R11	C20060-150	Resistor, 15 Ohms, ¼ W
R13	C20223-122	Resistor, 1200 Ohms, 2 W
R14	C20060-473	Resistor, 47,000 Ohms, ¼ W
R15	C20060-682	Resistor, 6800 Ohms, ¼ W
C1	C20067-102	Condenser, .001 uf., 200 V., P. T.
C2	C20069-501	Condenser, .0005 uf., 600 V., P. T.
C3	C20204-500	Condenser, .00005 uf., 500 V., Ceramic
C4	C20067-104	Condenser, .1 uf., 200 V., P. T.
C5	C20067-503	Condenser, .05 uf., 200 V., P. T.
*C6	A22110	Condenser, .20 uf., 150 V. Elect.
C7	C20068-503	Condenser, .05 uf., 400 V., P. T.
C8	C20068-103	Condenser, .01 uf., 400 V., P. T.
C9	C20226-221	Condenser, .00022 uf., 350 V., Ceramic
C10	C20065-101	Condenser, .0001 uf., 500 V., Mica
C11	C20068-202	Condenser, .002 uf., 400 V., P. T.
C12, 13	C20068-502	Condenser, .005 uf., 400 V., P. T.
*C14A, B	A21578	Electrolytic Condenser, 50 uf., 150 V., 30 uf., 150 V.
C14A, B	C22111	Electrolytic Condenser, 50 uf., 150 V. 50 uf., 150 V.
C15A, B, C	AD22154-1	Variable Condenser & Pulley Assy.
L1	AD21574-1	Antenna Loop Assembly
L2	AC21575-1	R. F. Coil Assembly
L3	AC21576-1	Oscillator Coil Assembly
T1	AC21572-1	1st I. F. Coil Assembly
T2	AC21573-1	2nd I. F. Coil Assembly
T3	AC21577-1	Output Transformer Assembly

Schematic Location	Part No.	Description
Spk.	C21331	Speaker, 5-1/4" P. M.
DL	A19351	Dial Light Bulb
P	B20138-12	Line Cord and Plug Assembly.
SW	C22157	Switch On-Off
	R21379-3	Cabinet Mahogany 264-T
	R21379-4	Cabinet Bleached Mahogany 265-T
	A21700	Carton Complete with Fillers
	A19361	Clip, Hairpin for Tuning Shaft
	A19205-3	Clip, Electrolytic Condenser Mounting
	A19132	Cord, Dial Drive
	AC21377-1	Dial Pointer
	D22152	Dial Scale
	D21365	Escutcheon Clear Lucite
	C21426	Grille, Cabinet Front
	C21498	Grille Felt
	A20077-3	Grommet, Rubber under Variable Condenser
	A20202-2	Idler Pulley (Quantity of 5)
	C21427	Knob, Volume
	C21428	Knob, Tuning
	C22150	Knob, On-Off
	C22151	Knob, Tone
	A21330	Name Plate
	D21434	Rear Cover
	A20196-2	Rivet, Tubular, Shoulder (For Mtg. Idler Pulley Qty. of 5)
	A20196-4	Rivet, Tubular, Shoulder (For Mtg. Idler Pulley Qty. of 5)
	A21442	Shaft, Tuning
	A21346-2	Socket, Dial Light
	A19233-1	Socket, Tube, Wafer Center Pin Shielded
	A18254-1	Socket, Tube, Wafer Plain
	A19579	Socket, Speaker
	A19138-1	Spacer Eyelet, Variable Condenser Mounting
	A19295	Spring, Dial Drive Cord
	A20040-9	Washers, Brown Felt, Behind Knobs (Qty. of 10)

*C6 Part C22110 was used only on sets where C14 was Part 21578 50-30 mfd. Part 21578 was replaced by Part 22111, 50-50 mfd. in later production.

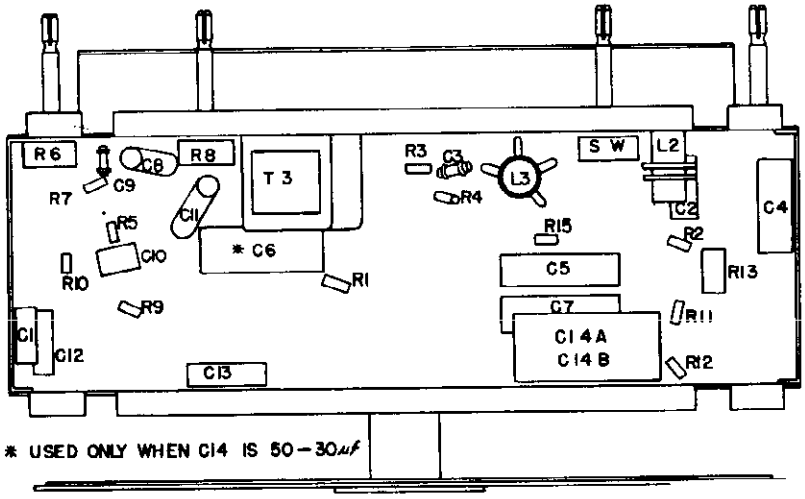

LOCATION OF PARTS UNDER CHASSIS

MODELS 442, 444AH, CHASSIS RE-91, RE-200

NOBLITT-SPARKS INDUSTRIES, INC.

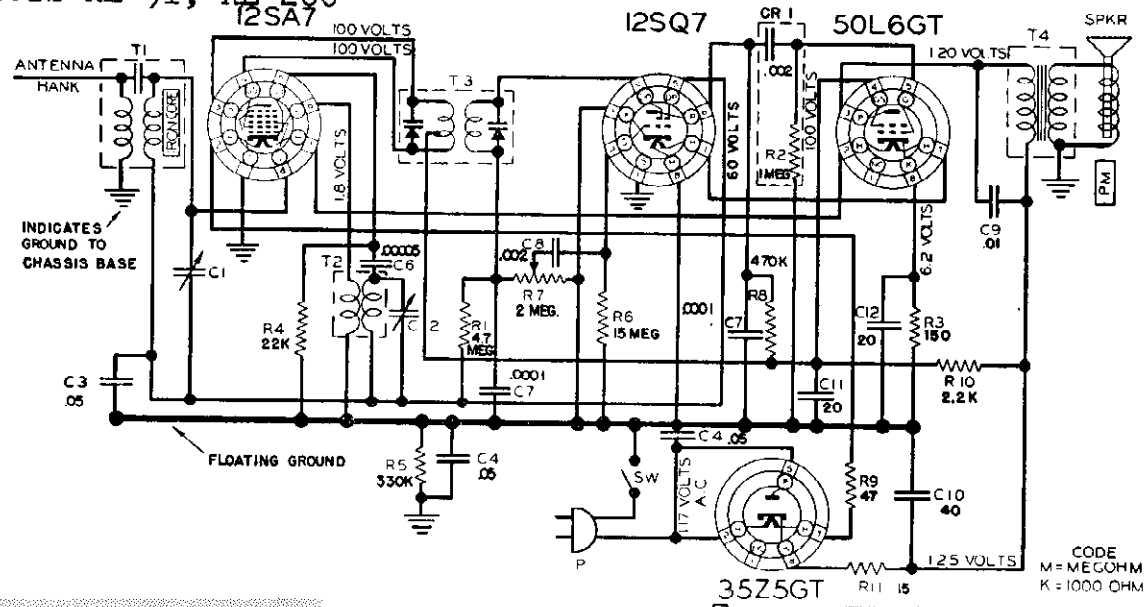

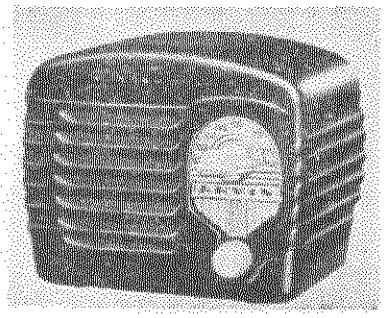

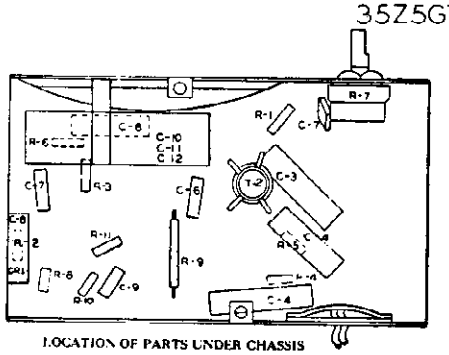

LOCATION OF PARTS UNDER CHASSIS

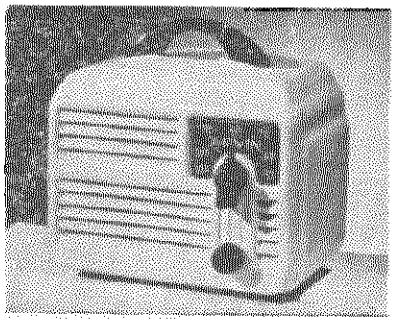

Model 444-AH is the same as Model 444 except for the handle and cabinet.

Model 442 is wired from the same Schematic Diagram as the Model 444 and 444-AH but has different components as indicated in the Parts List.

Some of the first Model 442 chassis had the same components as the Model 444 chassis except for the chassis base.

The symbol CR1 on the Schematic Diagram represents a capristor which contains a .002 condenser and a 1 megohm resistor in one unit. This is used only on the Model 442.

FREQUENCY RANGE

Broadcast	540-1600 kc
IF	455 kc

TUBES AND FUNCTIONS

12SA7	Mixer-oscillator
12SQ7	Detector-AVC-AF
50L6GT	Output
35Z5GT	Rectifier

POWER SUPPLY

105-125 Volts AC-DC, 35 Watts

POWER OUTPUT

Type: Beam tube

Undistorted	.8 Watts
Maximum	2.5 Watts
Plate load	2000 ohms

LOUD SPEAKER

Type: Permanent magnet
Size: 4 inch

Voice coil impedance	3.2 ohms

PARTS LIST

REF. NO.	PART NO.	DESCRIPTION
R1	C20060-475	Resistor, 4.7 megohms, ¼ watt
*R2	Part of A21642	Resistor, 1 megohm
**R2	C20060-105	Resistor, 1 megohm, ¼ watt
R3	C20060-151	Resistor, 150 ohms, ¼ watt
R4	C20060-223	Resistor, 22,000 ohms, ¼ watt
R5	C20060-334	Resistor, 330,000 ohms, ¼ watt
R6	C20060-156	Resistor, 15 megohms, ¼ watt
R7	C21630	Resistor, 2 megohms, Vol. control & sw.
R8	C20060-474	Resistor, 470,000 ohms, ¼ watt
R9	A19177	Resistor, 47 ohms, 1 watt
R10	C20070-222	Resistor, 2,200 ohms, 1 watt
R11	C20060-150	Resistor, 15 ohms, ¼ watt
C1, C2	B17116	Condenser, variable
C3	C20067-503	Condenser, .05 mfd., 200 volt
C4	C20068-503	Condenser, .05 mfd., 400 volt
*C6	A21643	Condenser, .00005 mfd
**C6	C20065-500	Condenser, .00005 mfd., 500 volt
*C7	A21645	Condenser, .0001 mfd.
**C7	C20065-101	Condenser, .0001 mfd., 500 volt
*C8	C20068-202	Condenser, .002 mfd., 400 volt
**C8	C20069-202	Condenser, .002 mfd., 500 volt
*C9	C20203-103	Condenser, .01 mfd., 350 volt, ceramic
**C9	C20068-103	Condenser, .01 mfd., 400 volt
C10)		Condenser, 40 mfd., 150 volt
C11)	A19176	Condenser, 20 mfd., 150 volt
C12)		Condenser, 20 mfd., 25 volt
T1	AC18255-1	Coil, Antenna
T2	AC18256-1	Coil, Oscillator
T3	AC18257-1	Coil, I. F.
T4	AC18258-1	Output Transformer
	A18263	Dial Scale Emblem
	*D16511-2	Cabinet, Black
	**E18124-3	Cabinet, Ivory
	*A18592-2	Knob, Tuning, Ivory
	**A18261-3	Knob, Tuning, Ivory
	*A21632	Knob, Volume, Ivory
	**A18262-3	Knob, Volume, Ivory
*Spk.	C21626	Speaker
**Spk.	B17209	Speaker
C5	C20068-502	Condenser, .005 mfd., 400 volt
*CR-1	A21642	Capristor, 002 uf., condenser and 1 megohm Resistor
	**A17010	Handle
	A21635	Carton with Fillers
	**A21666	Carton with Fillers
	B20237-1	Line Cord and Plug Assembly

*Used on Model 442 only.
**Used on Model 444AH only.

MODELS 547, 547A, CHASSIS RE-242

NOBLITT-SPARKS INDUSTRIES, INC.

MODELS 442, 444AH CHASSIS RE-91, RE-200

ALIGNMENT PROCEDURE

PRELIMINARY:

Output meter connection	Across loudspeaker voice coil
Output meter reading to indicate 200 milliwatts (standard output)	0.8 volts
Dummy antenna to be in series with signal generator output	See chart below
Connection of generator ground lead	Floating ground
Generator modulation	30% 400 cycles
Position of Volume Control	Fully clockwise
Position of pointer with variable fully closed	54 on dial

Position of Variable	Generator Frequency	Dummy Antenna	Generator Output Connection	Trimmers Adjuster	Trimmer Function	Approximate Sensitivity
Open	455 Kc	.05 uf	12SA7 Grid (Stator of C-1)	2 trimmers on top of T-3	IF	3000 uv
1400 Kc	1400 Kc	.00005 uf	Antenna lug with Ant. Removed	**C-2	Oscillator	360 uv

**Since the antenna section of the variable has no trimmer, the rotor of the variable should be rocked back and forth on both sides of 1400 Kc while adjusting the oscillator trimmer for maximum output. This is to obtain the combination of rotor and trimmer setting to give perfect tracking of the two sections of the variable condenser and consequently give maximum output.

Check sensitivity at 600 Kc. If weak, adjust antenna section plates for maximum output at 600 Kc. Tracking of the condenser at points other than 1400 Kc is accomplished by bending the outside plates on the variable condenser rotor, which are cut for this purpose. When bending plates to track the condenser at any given frequency, keep in mind the fact that this will affect the tracking at all frequencies below the point where the plates are bent. A tuning wand is very helpful in checking the tracking of this condenser, to indicate whether more or less capacity is needed.

The alignment procedure should be repeated stage by stage in the original order for greatest accuracy.

Always keep the output from the test oscillator at its lowest possible value to make the AVC action of the receiver ineffective.

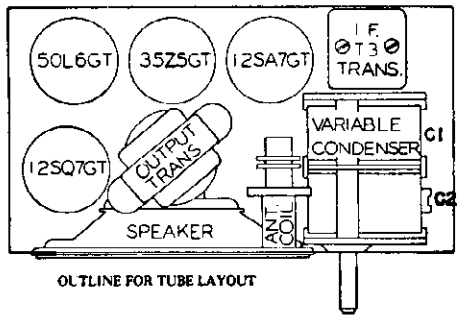

OUTLINE FOR TUBE LAYOUT

MODELS 442, 444AH, CHASSIS RE-91, RE-200

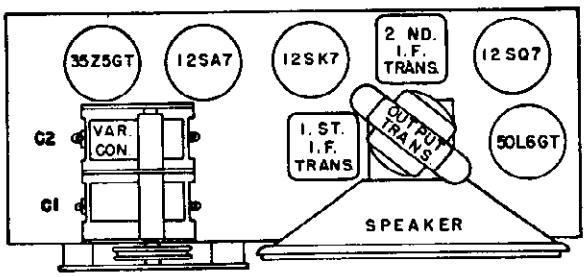

OUTLINE FOR TUBE LAYOUT

MODELS 547, 547A, CHASSIS RE-242

ALIGNMENT PROCEDURE

PRELIMINARY:

Output meter connection	Across loudspeaker voice coil
Output meter reading to indicate 200 milliwatts (standard output)	0.8 volts
Dummy antenna to be used in series with generator output	See chart below
Connection of generator output lead	See chart below
Connection of generator ground lead	Floating ground
Generator modulation	30% 400 cycles
Position of Volume Control	Fully clockwise
Position of dial pointer with variable fully closed	Horizontal

Place the set loop in the same position with respect to the rear of the chassis, and the same distance from the chassis, as it would be with the set mounted in the cabinet.

Position of Variable	Frequency of Generator	Dummy Antenna	Generator Output Connection	Trimmers Adjusted In Order Shown For Maximum Output	Function of Trimmer
Open	455	.05 mfd.	12SA7 Grid (Stator of C-1)	Top of 2nd & 1st IF trans. T2 & T1	IF
1400	1400		*Test Loop	C2; C1, Trimmers on Variable Condenser	Osc. Ant.
600	600		*Test Loop	Check Point (If weak, adjust variable plates for maximum output.)	

*Standard Hazeltine Test Loop Model 1150 or 3 turns of wire about 6" in diameter, placed about one foot from the set loop.

The alignment procedure should be repeated in the original order for greatest accuracy. Always keep the output from the signal generator at its lowest possible value to make the AVC action of the receiver ineffective.

CHASSIS RE-242 NOBLITT-SPARKS INDUSTRIES, INC. MODELS 547, 547A,

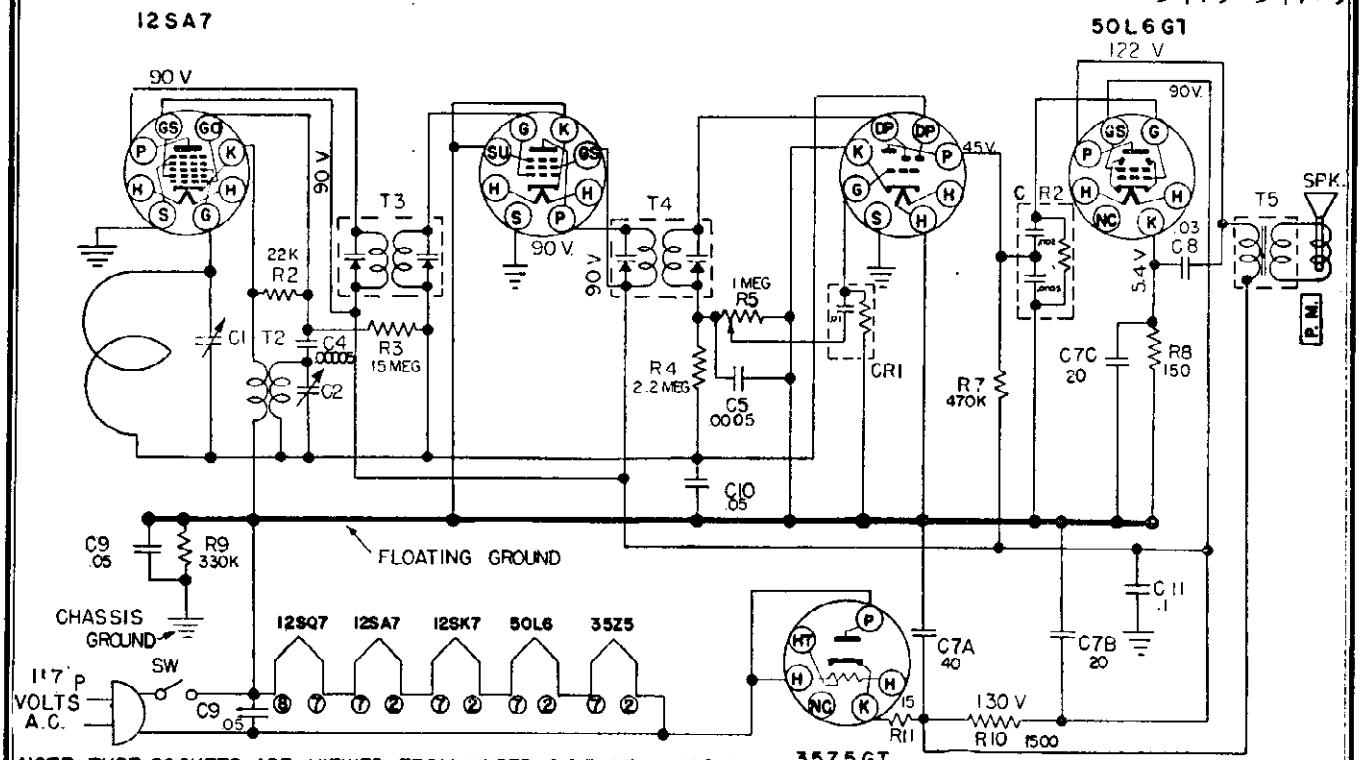

NOTE: TUBE SOCKETS ARE VIEWED FROM UNDER SIDE OF CHASSIS. VOLTAGE READINGS SHOWN AT SOCKET PRONGS ARE TO FLOATING GROUND AND ARE TAKEN WITH NO SIGNAL. A.C. LINE VOLTAGE AT 117 VOLTS. WHERE NO READING IS GIVEN, THE VOLTAGE IS ZERO OR TOO LOW TO READ.

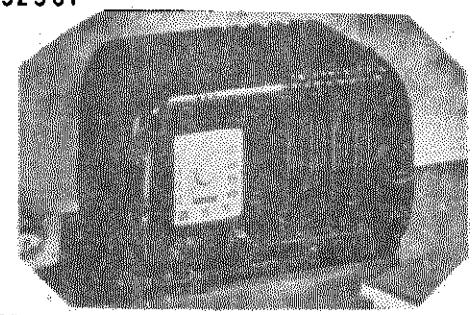

LOUD SPEAKER
- Type: Permanent magnet
- Size: 4 inch
- Voice coil impedance ..... 3.2 ohms

FREQUENCY RANGE
- Broadcast ..... 540-1600 kc
- IF ..... 455 kc

TUBES AND FUNCTIONS
- 12SA7 ..... Mixer-oscillator
- 12SK7 ..... IF Amp.
- 12SQ7GT ..... DET-AVC-AF
- 50L6GT ..... Output
- 35Z5GT ..... Rectifier

POWER SUPPLY
- 105-125 Volts AC-DC, 35 Watts

POWER OUTPUT
- Undistorted ..... .8 Watts
- Maximum ..... 2.5 Watts
- Plate load ..... 2000 ohms

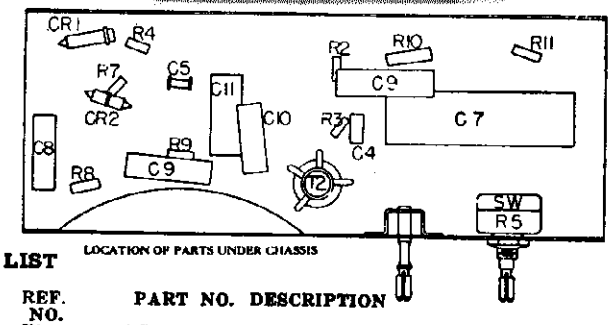

LOCATION OF PARTS UNDER CHASSIS

PARTS LIST

REF. NO.	PART NO.	DESCRIPTION
R2	C20060-223	Resistor, 22,000 ohm, ¼ w
R3	C20060-156	Resistor, 15 megohm, ¼ w
R4	C20060-225	Resistor, 2.2 megohm, ¼ w
R5	B17291	Volume control & sw., 1 megohm
R7	C20060-474	Resistor, 470,000 ohm, ¼ w
R8	C20060-151	Resistor, 150 ohm, ¼ w
R9	C20060-334	Resistor, 330,000 ohm, ¼ w
R10	C20070-152	Resistor, 1,500 ohm 1 w
R11	C20060-150	Resistor, 15 ohm, ¼ w
C1, C2	B18869	Variable condenser
C4	A21648	Condenser, .00005 mfd., molded
C5	C20203-501	Condenser, .0005 mfd., 300 volt ceramic
C7	A19136	Condenser, elect., 40-20 mfd., 150 V, 20 mfd. - 25 V
C8	C20068-308	Condenser, .03 mfd., 400 volt P. T.
C9	C20068-508	Condenser, .05 mfd., 400 volt, P. T.
C10	C20067-508	Condenser, .05 mfd., 200 volt, P. T.
C11	C20068-104	Condenser, .1 mfd., 400 volt, P. T.
CR1	A21660	Capristor, 4.7 meg. resistor, .01 ufd. condenser
CR2	A21659	Capristor, 470 K resistor, .002 ufd. and .0005 ufd. condenser
T1	AC21647-1	Antenna Loop Assembly
T2	AC18646-1	Oscillator Coil
T3	AC18908-1	1st I. F. Coil
T4	AC18909-1	2nd I. F. Coil
T5	AC18647-1	Output Transformer
Spk.	C21657	Speaker
	E17232-3	Cabinet, Black
	E17232-2	Cabinet, Ivory
	A17304	Dial Crystal
	A19474	Knobs
	A19125	Grille Cloth
	A17296	Tuning Shaft
	A18640-1	Dial Scale
	A19132	Dial Drive Cord
	A19188	Spring
	A19205-3	Cap. Mtg. Clip
	A19233-1	Socket, Tube Shielded
	A18254-1	Socket, Tube Plain
	A16482	Tube Shield
	B20138-1	Line Cord and Plug Assembly
	A19478-1	Dial Pointer
	A19141	Terminal Strip
	A19547	Two Conductor Shielded Leads
	A21945	Speaker and Transformer Assembly
	A21651	Shipping Carton
	A19124	Snap on Button (10)

Models 547 and 547A are identical except for cabinets. Model 547 is in a walnut cabinet. Model 547A is in an ivory cabinet.

NORTHERN RADIO CO.

TYPES N600, N602,
MODELS A, B, C, D,
DQ, DQT, DT, E, ED

TYPE N600 TWO BAND COMMUNICATIONS RECEIVERS
TYPE N602 THREE BAND COMMUNICATIONS RECEIVERS

DESCRIPTION OF EQUIPMENT

The latest Type N600 and N602 Receivers are available in six different models for either direct or alternating current operation. Model A - 6 Volt DC and Model B - 12 Volt DC Receivers are designed for operation from 6 and 12 volt storage batteries, where other sources of power are not available. Model C - 32 Volt DC and Model D -115 Volt DC Receivers are designed especially for marine installations and operate directly from the ship's battery without the use of a built-in power supply. Model E - 115 Volt AC Receiver is primarily designed for land stations and operated from a 115 Volt 50 - 60 cycle a.c. source. Model ED - 115 Volt AC-DC Receiver operates from either source, as implied, and is equally suited for marine or land installations.

The characteristics of the six models are essentially similar, with the exception of the audio frequency amplifier and power supply. The radio frequency components and controls are identical, thus the operation, alignment, servicing, etc., are the same. The following data is pertinent to the six models, describing them collectively where they are similar and individually where they are at variance.

One radio frequency stage of amplification employing a 6K7 eliminates the image frequency signal and insures an effective signal to noise ratio.

A separate oscillator employing a 6J5 reduces frequency drift to a minimum and improves the general stability of the receiver.

A 6L7 mixer converts the incoming signal to the intermediate frequency, where it is amplified by a second 6K7. By the use of iron core intermediate transformers sufficient gain and selectivity are obtained with a single stage. This permits the use of the other 6K7 as a radio frequency amplifier where it is considerably more effective as well as increasing the stability of the receiver.

Detection is accomplished by means of the diode in a type 6Q7. The rectified voltage is filtered and applied to the grids of the previous stages to provide automatic volume control.

When provision is made for c.w. reception, a 6J5 beat frequency oscillator is added. This is coupled into the diode detector to produce an audible tone when beating with the intermediate frequency. Receivers so equipped, are designated by the letter T following the model letter.

The triode section of the 6Q7 amplifies the diode output, functioning as the first audio stage. In the Model A - 6 Volt DC Receiver, the Model B - 12 Volt DC Receiver and the Model E - 115 Volt AC Receiver the power amplifier is a 6F6G, which is driven directly by the first audio stage. The Model C - 32 Volt DC Receiver incorporates a 25L6G Driver stage. This Driver is excited by the first audio stage and, in turn, excites the power amplifier which consists of four 25L6G's connected in push-pull parallel. A single 25L6G power amplifier driven by the first audio stage, is used in the Model D - 115 Volt DC Receiver and the Model ED - 115 Volt AC-DC Receiver.

In receivers equipped with an inter-carrier squelch circuit, the triode section of the 6Q7 functions as the squelch control and a 6F5 is added for the first audio stage. The 6F5 then feeds the respective power amplifiers as described in the preceding paragraph. Receivers so equipped, are designated by the letter Q following the model letter.

An output power of approximately 2½ watts is obtained from the 6F6G power amplifier in the Model A - 6 Volt DC Receiver, Model B - 12 Volt DC Receiver and Model E - 115 Volt AC Receiver. The 25L6G push-pull parallel power amplifier in the Model C - 32 Volt DC Receiver has an output of approximately ½ watt, which provides ample volume from the built-in speaker. In the Model D - 115 Volt DC Receiver and the Model ED - 115 Volt AC-DC Receiver, an output of approximately 2 watts is obtained from the 25L6G power amplifier. The built-in speaker is of the permanent magnet dynamic type.

Plate power for the Model A - 6 Volt DC Receiver and the Model B - 12 Volt DC Receiver is obtained from a built-in power supply of the vibrator type. The Model C - 32 Volt DC Receiver and the Model D - 115 Volt DC Receiver have no built-in power supply, all power being obtained directly from the ship's battery. Plate power for the Model E - 115 Volt AC Receiver is provided by a conventional rectifier-filter system using an 80 tube. In the Model ED - 115 Volt AC-DC Receiver, plate power is obtained from a half-wave rectifier-filter system using a 25Z6GT tube.

TYPES N600, N602, MODELS A,B,C,D,DQ, DQT,DT,E,ED

NORTHERN RADIO CO.

Controls

(1) Power switch marked "POWER". This switch functions as the Off-On control for the receiver.

(2) FOR TYPE N600 ONLY

Band Switch marked "BAND A-B". In position "A" the receiver is tuneable over the range between 1550 and 4200 kilocycles. In position "B" the receiver is tuneable between 550 and 1600 kilocycles.

(2) FOR TYPE N602 ONLY

Band Switch marked "BAND A-B-C". In position "A" the receiver is tuneable over the range between 540 and 1680 kilocycles, in position "B" between 1660 and 5350 kilocycles and in position "C" between 5.35 and 15.8 megacycles.

(3) FOR TYPE N600 ONLY

Receiver tuning. A semi-circular dial with a five-to-one reduction drive mechanism is employed as the tuning control. The band A scale is calibrated in kilocycles and the band B scale in megacycles. The dial is illuminated from the rear. A vernier dial with 100 divisions is provided for accurate station logging.

(3) FOR TYPE N602 ONLY

Receiver tuning. A semi-circular dial with a 33 to 1 reduction drive mechanism is employed as the tuning control. The band A and band B scales are calibrated in kilocycles and the band C scale in megacycles. Translucent material is used for the dial to permit illumination from the rear.

(4) Radio frequency gain control marked "SENSITIVITY". This control serves to limit the maximum sensitivity of the receiver.

(5) Audio frequency gain control marked "VOLUME". This controls the audio amplification after detection and functions as the volume control for the receiver.

(6) Tone control marked "TONE". This control reduces the high frequency response of the audio system and is used in receiving thru sharp high-pitched noise.

(7) Inter-carrier squelch control marked "SQUELCH". This control, if incorporated, determines the signal level at which the squelch tube functions to block the first audio grid and silence the receiver.

(8) Speaker - handset switch marked "SPEAKER" and "HANDSET". This switch connects the audio output of the receiver to the built-in speaker or to the receiver portion of the handset, as indicated.

(9) Headphone jack marked "PHONES". When the phones are plugged into the jack, the built-in speaker is disconnected from the circuit.

(10) Remote speaker jack marked "REM. SPKR.". This jack is connected directly across the audio output of the receiver to permit the use of a remote speaker in addition to the built-in speaker.

(11) Dial light switch marked "LIGHTS". This switch functions as the Off-On control for the dial lights, and is provided so that the lights may be turned off when it is necessary to darken the pilot house.

(12) Beat frequency oscillator switch marked "B.F.O.". This switch, if provided, functions as the Off-On control for the beat frequency oscillator, which is used for the reception of code signals.

(13) Beat frequency oscillator pitch control marked "PITCH". This control, if provided, varies the oscillator frequency over a narrow range to permit adjustment of the resultant audio tone.

INSTALLATION

The receiver is usually mounted in the transmitter cabinet, or housed in a separate cabinet which is bolted to the transmitter to form a compact communication unit. When separately housed, the receiver may be mounted in any desired location.

Connections

(1) Power & Control. Power for the receiver is obtained thru the cable or cables at the rear of the chassis. When used in conjunction with a transmitter the proper cables are provided for connection to the power and receiver control circuits in that particular transmitter. If the receiver is used separately, wires may be connected to the cable terminal points for power and external control. If external control is not required, the plate supply line "B break" circuit must be closed and the voice coil line returned to ground on the panel. Refer to drawings for circuit data.

(2) Ground. The receiver is grounded in the usual installation thru connection to the transmitter and between cabinets. If used separately the ground

should be connected to the cabinet. The receiver chassis is insulated from the panel and cabinet to permit a positive or negative ground in the D.C. Models, consequently a direct ground must not be connected to the chassis.

(3) Antenna. The regular receiver antenna connection is made thru the control cable and transmitter. If the receiver is used separately, connection may be made to the cable terminal marked "ANT". Refer to drawings for circuit data.

OPERATION

The operation of the receiver is similar to any regular communications receiver with similar capabilities. The following suggestions will aid in obtaining the most satisfactory results.

Place the receiver in operating condition as follows: Throw the POWER switch to the ON (up) position. Set the BAND switch to the band in which the desired frequency is located. Throw the SPEAKER - HANDSET switch to the SPEAKER position. Throw the LIGHTS switch to the On (up) position. Set the SENSITIVITY control to the point of maximum sensitivity by tuning in a clockwise direction to the end of the 270 degree rotation. If a Squelch Circuit is incorporated, set the SQUELCH control to the non-operating point by turning in a clockwise direction, to the end of the 270 degree rotation until the switch clicks. Then adjust the VOLUME control until some noise is heard. The receiver is now ready for the reception of phone signals. If a Beat Frequency Oscillator is provided, code signals may be received as described in the last paragraph under "General Procedure".

General Procedure

When tuning for a station it is necessary to tune slowly past the point where the station is expected. After having found the station tune on both sides of the best point in order to make sure its location. Operation to one side of the correct spot will result in distorted signals.

During periods when no phone signals are being received the AVC (Automatic Volume Control) will increase the volume to maximum (if the SENSITIVITY control is full on) and some noise will result. The incoming signal, however, reduces the amplification through the AVC action and consequently the noise level. If the prevailing noise level is high the SENSITIVITY control may be turned down to limit the maximum sensitivity of the receiver, or it may be similarly used to prevent very strong local signals from blocking the receiver.

The control to use for setting the signal volume at a comfortable room level is the VOLUME control. If the SENSITIVITY control is used for this purpose the AVC will not function properly.

If a squelch circuit is incorporated, the SQUELCH control should be adjusted for as low a signal level as possible to permit the reception of weak signals. Never adjust beyond the point where average noise drops out, or where only an occasional noise peak is heard. Refer to paragraph 8 under "Alignment" for further data.

If a beat frequency oscillator is provided code signals may be received as follows: Throw the B.F.O. switch to the On (up) position. Set the PITCH control so that the white dot on the knob is up. Tune in the station and adjust to approximately zero beat. Next adjust the PITCH control to obtain the desired beat note, and the SENSITIVITY control to set the r.f. signal at a level which produces a clear tone, as evidenced by a smooth pitch adjustment down to approximately zero beat. Then adjust the VOLUME control to set the signal volume at a comfortable level.

Note: Data relative to the operation of any controls not mentioned in this section will be found under "Controls".

MAINTENANCE

Receiver Alignment

(1) Before proceeding with the alignment, the #6 pin on the 7 prong control cable socket or plug must be connected to the panel to complete the voice coil circuit. It will also be necessary to provide a connection between the #4 and #5 pins to close the B break circuit.

(2) A signal generator set to 456 kilocycles should be used in aligning the intermediate frequency amplifier. Remove the grid clip from the 6L7 and connect the signal generator between grid and ground. If a signal generator is not available, tune in some convenient signal that is not too strong.

(3) For indication of correct tuning, an output meter or high resistance a.c. voltmeter should be connected between the power amplifier plate and chassis. A blocking condenser (.1 uf. or more) must be connected in series with the hot lead to the plate. If a low range meter (15 v. or less) is available, it may be plugged into the phone jack.

(4) Tune the trimmers on top of the I.F. transformers for maximum output meter deflection. It will be found best to experiment with the input level which gives the best indication.

(5) FOR TYPE N600 ONLY

After having tuned the intermediate amplifier, the grid clip should be replaced on the 6L7, the band switch set for band A and a signal of approximately 3500 kilocycles applied to the antenna input. This can be the signal from a distant station or a standard signal generator. Adjust the oscillator trimmer (top right hole in osc. shield can) so the signal is properly tuned in. Then adjust the R.F. and Detector trimmers for maximum signal. These are accessible through the top right holes in the next two shield cans. Refer to drawings for parts location.

(5) FOR TYPE N602 ONLY

After having tuned the intermediate amplifier, the grid clip should be replaced on the 6L7, the band switch set for band A and a signal of approximately 1400 kilocycles applied to the antenna input. This can be the signal from a distant station or a standard signal generator. Adjust the oscillator trimmer (top hole in left side of osc. shield can) so the signal is properly tuned in. Then adjust the R.F. and Detector trimmers for maximum signal. These are accessible through the top holes in the left side of the next two shield cans. Refer to drawings for parts location.

(6) FOR TYPE N600 ONLY

The above procedure should be followed with the band switch set for band B and an input signal of 1400 kilocycles applied to the antenna input. The trimmers for this band are accessible through the top left holes in the three shield cans, directly opposite the band A trimmers.

(6) FOR TYPE N602 ONLY

The above procedure should be followed for bands B and C. Set the band switch to band B, apply a signal of 4000 kilocycles to the antenna input and adjust the band B trimmers, accessible through the center holes in the left side of the shield cans. Then set the band switch to band C, apply a signal of 14 megacycles and adjust the band C trimmers, accessible through the bottom holes in the shield cans.

(7) FOR TYPE N600 ONLY

The signal should now be set to 1800 kilocycles for band A or 600 kilocycles for band B and the receiver tuned to this frequency. The padding condenser for the band being aligned should be adjusted to give maximum output while rocking the tuning condenser slightly to locate the most favorable position. It is advisable to return to the aligning point and repeat the adjustments given for best results. Refer to drawings for parts location.

(7) FOR TYPE N602 ONLY

The signal should now be set to 600 kilocycles for band A or 1800 kilocycles for band B and the receiver tuned to this frequency. The padding condenser for the band being aligned should be adjusted to give maximum output while rocking the tuning condenser slightly to locate the most favorable position. It is advisable to return to the aligning (trimming) point and repeat the adjustments given for best results. No padding adjustment is required for band C. Refer to drawings for parts location.

(8) If a squelch circuit is incorporated, it should be checked for normal operation. Rotating the SQUELCH control in a clockwise direction, decreases the signal level required to overcome the blocking bias and consequently increases the apparent sensitivity of the receiver. At the end of the clockwise rotation, a switch operates to short out the 6Q7 plate - 6F5 grid bias resistor and make the squelch inoperative. If operating properly, the squelch circuit should easily discriminate between signal levels differing by a voltage ratio of 2 to 1, that is, when adjusted so that a nominal signal input of 5 microvolts just drops out, increasing the input to 10 microvolts should bring the signal in again. This operation should hold down to an input of 2 microvolts, or less. If the operation is not normal, check the 6Q7 and 6F5 tubes, and the 6F5 grid bias, cathode and plate voltages. Refer to Test Readings and drawings.

(9) The beat frequency oscillator, if provided, should now be adjusted as follows: Set the receiver tuning dial pointer at about center scale on band A, introduce a modulated signal from the generator, carefully adjust the generator to resonance and cut off the modulation. Then throw the B.F.O. Switch to the On (up) position, set the PITCH Control so that the white dot on the knob is up and adjust the Trimmer on top of the B.F.O. Coil shield until resonance (zero beat) is obtained.

©John F. Rider

Servicing

When the receiver has been removed from the cabinet for servicing, the #6 pin on the 7 pin control cable socket or plug must be connected to the panel to complete the voice coil circuit. It will also be necessary to provide a connection between the #4 and #5 pins to close the B break circuit.

First the power source should be checked to make sure that all tubes are receiving correct filament and plate voltages, then the tubes should be suspected and replaced with the spares, one at a time, as a check on their operation.

After checking tubes, testing should progress from the receiver output to the input stage by stage eliminating each as it is found to operate properly. Listening in the loud speaker while testing will help greatly. The usual voltmeter and/or ohmmeter tests should be used in isolating the trouble. It is always best to test each stage in a logical definite order, in order to determine the location of the defect. After having found the location of the trouble, it can be quickly eliminated.

CAUTION: The negative side of the power line is common to the chassis in the D.C. Models, but the chassis is insulated from ground (panel and cabinet) to permit operation from a power source with either a negative or positive ground. Consequently, if the positive side of the power line is grounded, the chassis becomes Hot to ground and care must be used when removing same to avoid contact with the cabinet or a blown receiver fuse (F1) will result. Opening both sides of the incoming power line before removing the chassis will prevent this. In this connection it should be noted that all control shafts have an insulating washer between shaft, knob and panel which must not be removed in the event of knob replacement. If the negative side of the power line is grounded, no care need be used. Refer to drawings for circuit data.

Type N600 Receivers

and Type N602 Receivers

Model C & CT - 32 Volts, DC

Test Readings

The following test readings indicate average normal operating conditions:

Models	Stage	Tubes	Plate Volts	Screen Volts	Grid Volts	Cath. Volts	°Fil. Volts
C & CT	R.F.A.	6K7	30.0	30.0	*Var.	0.6	6
C & CT	Mixer	6L7	29.5	30.0	x1.5 av.	0.1	6
C & CT	Osc.	6J5	30.0	--	x2.8 av.	0	6
C & CT	I.F.A.	6K7	29.5	30.0	*Var.	0.6	6
C & CT	Det. &	6Q7	*Var.	--	--	0	6
C & CT	1st A.F.	Same	5.5	--	0	0	Same
C & CT	2nd A.F.	25L6GT	22.5	30.5	0	3.0	24
C & CT	A.F.P.A.	4-25L6GT	30.5	32.0	0	2.8	24
CT	B.F.O.	6J5	12.5	--	--	0	6

Input voltage during test - 32 Volts.
Total filament current - Mdl. C, 1.7 Amps. - Mdl. CT, 2 Amps.
Total plate current - 36 Ma.

*Variable - dependent on signal and avc voltage. This also applies to the mixer (detector) control grid not listed above.

xAverage - mixer injection and oscillator grid voltages read with a VTVM having a d.c. input resistance of 11 megohms. These voltages vary over the frequency range.

°Filament voltage readings taken with dropping resistor R23 adjusted for 30 volts across the series-parallel filament circuit.

Note: Normal readings may vary plus or minus 6% from the values given. The maximum variation should not exceed 10%. Readings are taken with the SENSITIVITY (r.f. gain) control set at maximum. All voltages, except filament, are read between the circuit points and chassis. The meter should have a resistance of 1000 ohms per volt and a 50 or 60 volt scale should be used, if comparative readings are to be obtained. Current values may be computed by dividing the voltage across resistors by their resistance. Refer to drawings and "Parts List" for data.

PARTS LIST N600C

Type N600 Receivers
Models C & CT - 32 Volts, DC

Condensers:

C1	Antenna isolating	C-D 1W-3D5 .005 uf. 300 v.
C2.1	R.F. Amp. tuning	RCC Type RC Mdl 317 3 gang 365 uuf.
C2.2	Detector tuning	Part of C2.1 assembly - 365 uuf.
C2.3	Oscillator tuning	Part of C2.1 assembly - 365 uuf.
C3.1	Ant. trimmer - band A	Part of L1.1 assembly
C3.2	Ant. trimmer - band B	Part of L1.2 assembly
C4	R.F. Amp. grid filter	C-D DT-4S5 .05 uf. 400 v.
C5	R.F. Amp. cathode bypass	C-D DT-4P1 .1 uf. 400 v.
C6.1	R.F. trimmer - band A	Part of L2.1 assembly
C6.2	R.F. trimmer - band B	Part of L2.2 assembly
C7	Det. grid filter	C-D DT-4S5 .05 uf. 400 v.
C8	Mixer cathode bypass	C-D DT-4P1 .1 uf. 400 v.
C9.1	Osc. trimmer - band A	Part of L3.1 assembly
C9.2	Osc. trimmer - band B	Part of L3.2 assembly
C10.1	Osc. padding - band A	Miller #160A 360 - 1000 uuf.
C10.2	Osc. padding - band A	C-D 5W-5T5 .0005 uf. 500 v.
C10.3	Osc. padding - band B	Miller #160A 360 - 1000 uuf.
C11	Osc. grid blocking	C-D 5W-5Q5 .00005 uf. 500 v.
C12	Osc. - Mixer coupling	C-D 5W-5T1 .0001 uf. 500 v.
C13	Plate & screen bypass	C-D DT-4P1 .1 uf. 400 v.
C14.1	First I.F.T. pri. tuning	Part of T1 assembly
C14.2	First I.F.T. sec. tuning	Part of T1 assembly
C15	I.F. Amp. grid filter	C-D DT-4P1 .1 uf. 400 v.
C16	I.F. Amp. cathode bypass	C-D DT-4P1 .1 uf. 400 v.
C17.1	Second I.F.T. pri. tuning	Part of T2 assembly
C17.2	Second I.F.T. sec. tuning	Part of T2 assembly
C18	Diode Det. r.f. bypass	C-D 5W-5T2 .0002 uf. 500 v.
C19	Diode Det. r.f. filter	C-D 5W-5T2 .0002 uf. 500 v.
C20	A.V.C. filter	C-D DT-4P1 .1 uf. 400 v.
C21	R13 A.F. coupling	C-D DT 4S5 .05 uf. 400 v.
C22	First A.F. grid coupling	C-D DT-4S5 .05 uf. 400 v.
C23	Second A.F. grid coupling	C-D DT-4S5 .05 uf. 400 v.
C24	Second A.F. cath. bypass	C-D BR-102A 10 uf. 25 v.
C25	Tone control	C-D DT-4S5 .05 uf. 400 v.
C26	A.F. Pwr. Amp. grid bypass	C-D 1W-5D1 .001 uf. 500 v.
C27	Plate power filter - out.	Mallory WB-39 50 uf. 50 v.
C28	Plate power filter - in.	C-D DT-4W1 1 uf. 400 v.
C29	32 Volt line bypass	C-D DT-4P1 .1 uf. 400 v.
C30	A.F. Pwr. Amp. plate bypass	C-D DT-4S1 .Cluf. 400V

Condensers - Mdl. CT:

C30	B.F. Osc. tuning	Part of L7 assembly
C31	B.F. Osc. pitch control	Bud LC-1641 15 uuf.
C32	B.F. Osc. grid blocking	C-D 5W-5T2 .0002 uf. 500 v.
C33	B.F. Osc. - Diode coupling	C-D 5W-5Q1 .00001 uf. 500 v.

Inductances:

L1.1	Ant. coil - band A	Miller #3996 ANT.
L1.2	Ant. coil - band B	Part of L1.1 assembly
L2.1	R.F. coil - band A	Miller #3996 R.F.
L2.2	R.F. coil - band B	Part of L2.1 assembly
L3.1	Osc. coil - band A	Miller #3996 OSC.
L3.2	Osc. coil - band B	Part of L3.1 assembly
L4	Plate power filter	Thermador D-9 2H. 125 Ma.

Inductances - Mdl. CT:

L5	B.F. Osc. coil	Miller #512-C-5 B.F.O. unit

Resistors:

R1	Sensitivity (R.F.) control	Centralab AF-110 10000 ohm pot.
R2	R.F. Amp. grid filter	IRC BT½ .1 megohm ½ w.
R3	R.F. Amp. cathode bias	IRC BW½ 100 ohms ½ w.
R4	Det. grid filter	IRC BT½ .1 megohm ½ w.
R5	Mixer cathode bias	IRC BW½ 100 ohms ½ w.
R6	Mixer grid leak	IRC BT½ 50000 ohms ½ w.
R7	Osc. grid leak	IRC BT½ 50000 ohms ½ w.
R8	I.F. Amp. grid filter	IRC BT½ .1 megohm ½ w.
R9	I.F. Amp. cath. bias	IRC BW½ 100 ohms ½ w.
R10	A.V.C. filter	IRC BT½ .5 megohm ½ w.
R11	A.V.C. load	IRC BT½ .5 megohm ½ w.
R12	Diode Det. r.f. filter	IRC BT½ 30000 ohms ½ w.
R13	Volume (A.F.) control	Centralab A-130 .5 meg. pot.
R14	First A.F. grid coupling	IRC BT½ 1. megohm ½ w.
R15	First A.F. plate coupling	IRC BT½ .25 megohm ½ w.
R16	Second A.F. grid coupling	IRC BT½ .4 megohm ½ w.
R17	Second A.F. cathode bias	IRC BT½ 600 ohms ½ w.
R18	Tone control	Centralab AF-115 25000 ohm pot.
R19.1	A.F. Pwr. grid stabilizer	IRC BT½ 600 ohms ½ w.
R19.2	A.F. Pwr. grid stabilizer	IRC BT½ 600 ohms ½ w.
R20	A.F. Pwr. cathode bias	IRC BW1 100 ohms 1 w.
R21	Handset-receiver shunt	IRC BW1 10 ohms 1w.
R22	Headphone shunt	IRC BW1 10 ohms 1w.
R23	Filament dropping	Ohmite #0361 3 ohms 25 w.
R24	Plate power filter	IRC BW1 150 ohms 1 w.
R25	Dial light dropping	Ohmite BD 250 ohms 10 w.

Resistors - Mdl. CT:

R26	B.F. Osc. grid leak	IRC BT½ .1 megohm ½ w.
R27	B.F. Osc. plate coup.	IRC BW½ 500 ohms ½ w.
R28	B.F. Osc. plate drop.	IRC BT½ 30000 ohms ½ w.
R29	B.F. Osc. fil. drop.	Ohmite #0368 100 ohms 25 w.

Switches:

S1.1	Ant. coils - primary	Centralab Part D 3P. 3 position
S1.2	Ant. coils - secondary	Part of S1.1 assembly
S2.1	R.F. coils - primary	Centralab Part D 3P. 3 position
S2.2	R.F. coils - secondary	Part of S2.1 assembly
S3.1	Osc. coils - plate	Centralab Part D 3P. 3 position
S3.2	Osc. coils - grid	Part of S3.1 assembly
S4	Power - 32 V. line	H&H #20902 D.P.S.T. 3A. tog.
S5	Speaker - Handset	H&H #21189 S.P.D.T. 3A. tog.
S6	Lights - Dial	H&H #20992 S.P.S.T. 3A. tog.

Switches - Mdl. CT:

S7	B.F. Osc. control	H&H #20902 D.P.S.T. 3A. tog.

Transformers:

T1	I.F. Amp. input	Miller #612-C1 input
T2	I.F. Amp. output	Miller #612-C4 output - diode
T3	A.F. Pwr. Amp. input	Thermador G-26 driver 1.33:1
T4	A.F. Pwr. Amp. output	NRC #600C-10-1 output 23:1

Tubes:

6K7	R.F. Amplifier	Sylvania or equiv. type 6K7
6L7	Mixer	Sylvania or equiv. type 6L7
6J5	Oscillator	Sylvania or equiv. type 6J5
6K7	I.F. Amplifier	Sylvania or equiv. type 6K7
6Q7	Diode Det.- AVC.-First A.F.	Sylvania or equiv. type 6Q7
25L6GT	Second A.F. Amplifier	Sylvania or equiv. type 25L6GT
25L6GT	A.F. Power Amplifier	Sylvania or equiv. type 25L6GT See "Note" re metal tubes

Tubes - Mdl. CT:

6J5	B.F. Oscillator	Sylvania or equiv. type 6J5

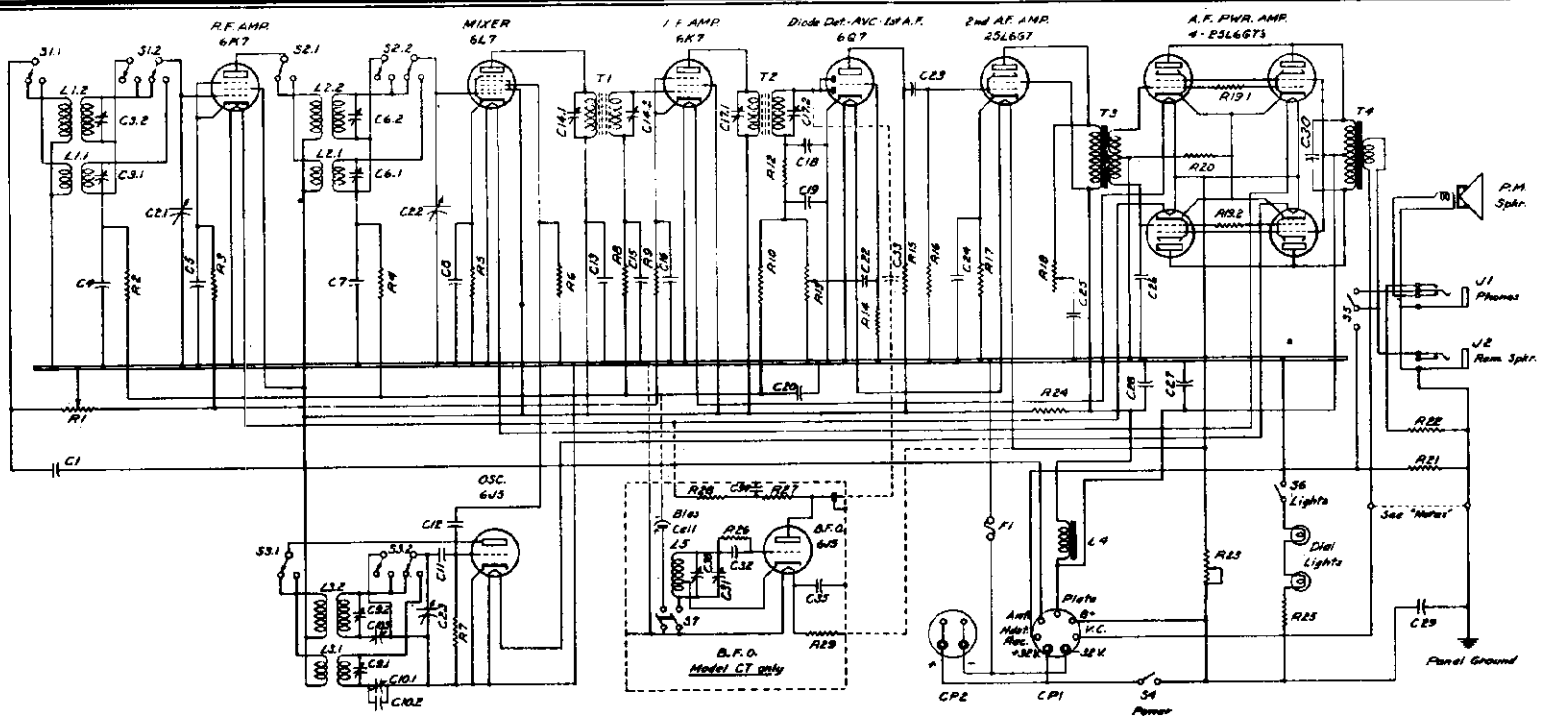

Band A - 1500 to 4200 KC.
Band B - 550 to 1500 KC.
I.F. - 456 KC.

NOTES:
All band switches shown in "B" position.
V.C. is strapped to Panel Gnd. when receiver is used with N501 Transmitter.

PARTS LIST N600C

Miscellaneous:

Dynamic Speaker	Jensen ST-445 or Utah 6P 6" PM
Dial lights	Sylvania 347 6-8 V.150 Ma. m.b.b.
Dial light sockets	Drake #206CE dial light bkt.
32 Volt line fuse F1	Killark or equiv. 3AG 5 amp.
Fuse holder	Littelfuse #341001 extractor post
Headphone jack J1	Mallory #703A Junior
Remote speaker jack J2	Carter #2A single closed cir.
Control cable plug CP1	Amphenol #61-CP7S 7 prong
*Power cable plug CP2	Amphenol #61-CP4 4 prong
Tube sockets	Amphenol 88 8 prong
Tuning dial mechanism	Bud D-1729 vernier dial
Tuning dial scale	NRC #915-10 Std. 2 band

Miscellaneous - Mdl. CT:

R.F. - I.F. fixed bias	Mallory 1½ V. grid bias cell

*Used only where power is not obtained thru the control cable.

Note: Metal tubes may be replaced with GT tubes, if necessary

TYPE N600,
MODEL C

NORTHERN RADIO CO.

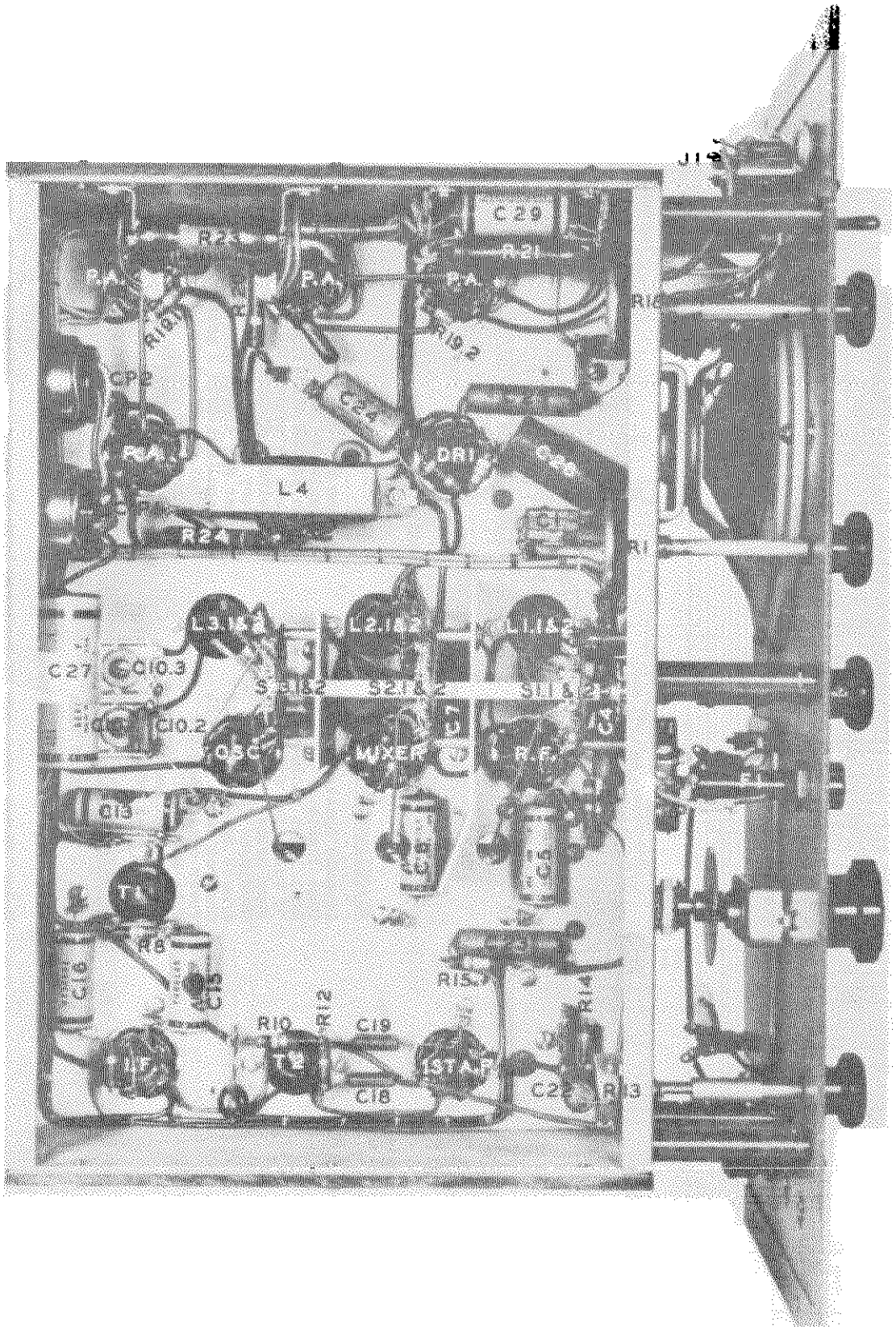

600C RECEIVER
BOTTOM VIEW

NORTHERN RADIO CO.

TYPE N600, MODELS C, CT, D, DQ, DT, DQT

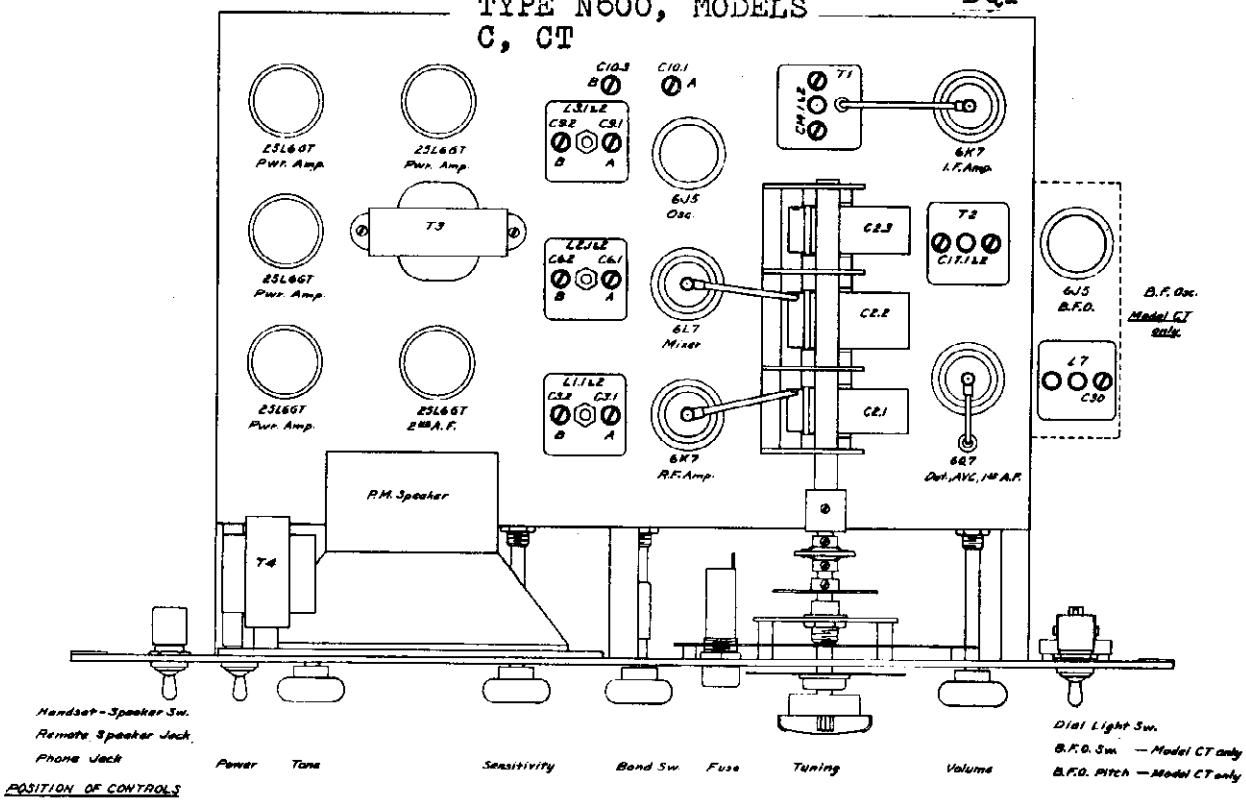

Type N600 Receivers

Models D, DQ, DT & DQT - 115 Volts, DC

TYPE N600, MODELS D, DQ, DT, DQT

Test Readings

The following test readings indicate average normal operating conditions:

Models	Stage	Tubes	Plate Volts	Screen Volts	Grid Volts	Cath. Volts	Fil. Volts
All	R.F.A.	6K7	106.5	68.5	*Var.	1.6	6
All	Mixer	6L7	105.5	68.5	x4.0 av.	1.7	6
All	Osc.	6J5	106.5	--	x9.8 av.	0	6
All	I.F.A.	6K7	95.5	68.5	*Var.	1.5	6
D & DT	Det. &	6Q7	*Var.	--	--	0	6
D & DT	1st A.F.	Same	53.0	--	0	0	Same
All	A.F.P.A.	25L6GT	86.5	106.5	0	6.5	24
DQ & DQT	Det. &	6Q7	*Var.	--	--	0	6
DQ & DQT	Squelch	Same	10.0(Sq.off)	--	*Var.	0	Same
DQ & DQT	1st A.F.	6F5	62.5	--	1.0	10.4	6
DT & DQT	B.F.O.	6J5	25.0	--	--	0	6

Input voltage during test - 115 volts.
Total filament current - .44 Amp.
Total plate current - 65 Ma.

*Variable - dependent on signal and avc voltage. This also applies to the mixer (detector) control grid not listed above.

xAverage - mixer injection and oscillator grid voltages read with a VTVM having a d.c. input resistance of 11 megohms. These voltages vary over the frequency range.

Note: Normal readings may vary plus or minus 6% from the values given. The maximum variation should not exceed 10%. Readings are taken with the SENSITIVITY (r.f. gain) control set at maximum. All voltages are read between the circuit points and chassis, except the filaments and 6F5 grid. The latter is read between the cathode and grid taps on the squelch voltage divider. The meter should have a resistance of 1000 ohms per volt and a 300 volt (or higher) scale should be used where there is much resistance in the circuit, if comparative readings are to be obtained. Current values may be computed by dividing the voltage across resistors by their resistance. Refer to drawings and "Parts List" for data.

PARTS LIST N600D

Type N600 Receivers
Model D, DQ, DT & DQT - 115 Volts, D.C.

Condensers:

C1	Antenna isolating	C-D 1W-3D5 .005 uf. 300 v.
C2.1	R.F. Amp. tuning	RCC Type RC Mdl 317 3 gang 365 uuf
C2.2	Detector tuning	Part of C2.1 assembly - 365 uuf.
C2.3	Oscillator tuning	Part of C2.1 assembly - 365 uuf.
C3.1	Ant. trimmer - band A	Part of L1.1 assembly
C3.2	Ant. trimmer - band B	Part of L1.2 assembly
C4	R.F. Amp. grid filter	C-D DT-4S5 .05 uf. 400 v.
C5	R.F. Amp. cathode bypass	C-D DT-4P1 .1 uf. 400 v.
C6	Screen bypass	C-D DT-4P25 .25 uf. 400 v.
C7.1	R.F. trimmer - band A	Part of L2.1 assembly
C7.2	R.F. trimmer - band B	Part of L2.2 assembly
C8	Det. grid filter	C-D DT-4S5 .05 uf. 400 v.
C9	Mixer cathode bypass	C-D DT 4P1 .1 uf. 400 v.
C10	Plate bypass	C-D DT-4P1 .1 uf. 400 v.
C11.1	Osc. trimmer - band A	Part of L3.1 assembly
C11.2	Osc. trimmer - band B	Part of L3.2 assembly
C12.1	Osc. padding - band A	Miller #160A 360 - 1000 uuf.
C12.2	Osc. padding - band A	C-D 5W-5T5 .0005 uf. 500 v.
C12.3	Osc. padding - band B	Miller #160A 360 - 1000 uuf.
C13	Osc. grid blocking	C-D 5W-5Q5 .00005 uf. 500 v.
C14	Osc.- Mixer coupling	C-D 5W-5T1 .0001 uf. 500 v.
C15.1	First I.F.T. pri. tuning	Part of T1 assembly
C15.2	First I.F.T. sec. tuning	Part of T1 assembly
C16	I.F. Amp. grid filter	C-D DT-4P1 .1 uf. 400 v.
C17	I.F. Amp cathode bypass	C-D DT-4P1 .1 uf. 400 v.
C18	I.F. Amp. plate filter	C-D DT-4P1 .1 uf. 400 v.
C19.1	Second I.F.T. pri. tuning	Part of T2 assembly
C19.2	Second I.F.T. sec. tuning	Part of T2 assembly
C20	Diode Det r.f. bypass	C-D 5W-5T2 .0002 uf. 500 v.
C21	Diode Det. r.f. filter	C-D 5W-5T2, .0002 uf. 500 v.
C22	A.V.C. filter	C-D DT-4P1 .1 uf. 400 v.
C23	R15 A.F. coupling	C-D DT-4S5 .05 uf. 400 v.
C24	First A.F. grid coupling	C-D DT-4S2 .02 uf. 400 v.
C25	Pwr. Amp. grid coupling	C-D DT-4S2 .02 uf. 400 v.
C26	Pwr. Amp. cath. bypass	C-D BR-102A 10 uf. 25 v.
C27	Tone control	C-D DT-4S5 .05 uf. 400 v.
C28	Plate Pwr. filter - out.	C-D BR-825 8 uf. 250 v.
C29	Plate Pwr. filter - in	C-D BR-825 8 uf. 250 v.
C30	115 V. line bypass - panel	C-D DT-4P1 .1 uf. 400 v.
C31	115 V. line bypass	C-D DT-4S5 .05 uf. 400 v.
C32	Pwr. Amp. plate bypass	C-D 1D-5D6 .006uf 500v

Condensers - Mdl. DQ:

C22	First A.F. cath. bypass	C-D BR-102A 10 uf. 25 v.

Condensers - Mdls. DT & DQT:

C32	B.F. Osc. tuning	Part of L5 assembly
C33	B.F. Osc. pitch control	Bud LC-1641 15 uuf.
C34	B.F. Osc. grid blocking	C-D 5W-5T2 .0002 uf. 500 v.
C35	B.F. Osc. - diode coup.	C-D 5W-5Q1 .00001 uf. 500 v.
C36	B.F. Osc. plate filter	C-D DT-4S5 .05 uf. 400 v.
C37	B.F. Osc. filament bypass	C-D DT-4S1 .01 uf. 400 v.

Inductances:

L1.1	Ant. coil - band A	Miller #3996 ANT.
L1.2	Ant. coil - band B	Part of L1.1 assembly
L2.1	R.F. coil - band A	Miller #3996 R.F.
L2.2	R.F. coil - band B	Part of L2.1 assembly
L3.1	Osc. coil - band A	Miller #3996 OSC.
L3.2	Osc. coil - band B	Part of L3.1 assembly
L4	Plate power filter ch.	Thermador D9 2H. 125 Ma.

Inductances - Mdls. DR & DQT:

L5	B.F. Osc. coil	Miller #512-C-5 B.F.O. unit

Resistors:

R1	Sensitivity (R.F.) control	Centralab AF-110 10000 ohm pot
R2	R.F. Amp. grid filter	IRC BT½ .1 megohm ½ w.
R3	R.F. Amp. cathode bias	IRC BW½ 350 ohms ½ w.
R4	Detector grid filter	IRC BT½ .1 megohm ½ w.
R5	Mixer cathode bias	IRC BW½ 350 ohms ½ w.
R6	Mixer grid leak	IRC BT½ 50000 ohms ½ w.
R7	Oscillator grid leak	IRC BT½ 50000 ohms ½ w.
R8	I.F. Amp. grid filter	IRC BT½ .1 megohm ½ w.
R9	I.F. Amp. cathode bias	IRC BW½ 350 ohms ½ w.
R10	I.F. Amp. plate filter	IRC BT½ 3000 ohms ½ w.
R11	Screen dropping	IRC BT1 7500 ohms 1 w.
R12	Diode Det. r.f. filter	IRC BT½ 30000 ohms ½ w.
R13	A.V.C. filter	IRC BT½ .5 megohm ½ w.
R14	A.V.C. load	IRC BT½ .5 megohm ½ w.
R15	Volume (A.F.) control	Centralab A-130 .5 meg. pot.
R16	First A.F. grid coupling	IRC BT½ 1. megohm ½ w.
R17	First A.F. plate coupling	IRC BT½ .25 megohm ½ w.
R18	Pwr. Amp. grid coup.	IRC BT½ .4 megohm ½ w.
R19	Pwr. Amp. cathode bias	IRC BT1 150 ohms 1 w.
R20	Tone control	Centralab AF-115 25000 ohm pot
R21	Handset - receiver shunt	IRC BW1 10 ohms 1w.
R22	Headphone shunt	IRC BW1 10 ohms 1w.
R23	Fil. voltage dropping	Ohmite #0567 200 ohms 50 w.
R24	Dial light voltage drop.	Ohmite #0375 1000 ohms 25 w.

Resistors - Mdl. DQ:

R14	Squelch control	Centralab A-128 .5 meg. pot.
R15	Volume (A.F.) control	Centralab A-132 1. meg. pot.
R16	First A.F. grid coupling	IRC BT½ 1. megohm ½ w.
R25	6Q7 plate - 6F5 block. bias	IRC BT½ 1. megohm ½ w.
R26	Squelch voltage divider	IRC BT1 2000 ohms 1 w.
R27	Squelch voltage divider	IRC BW1/2 200 ohms 1/2w
R28	Squelch voltage dropping	IRC BT2 20000 ohms 2 w.

Resistors - Mdls. DT & DQT:

R29	B.F. Osc. grid leak	IRC BT½ .1 megohm ½ w.
R30	B.F. Osc. plate coup.	IRC BW½ 500 ohms ½ w.
R31	B.F. Osc. plate drop.	IRC BT½ .1 megohm ½ w.

Switches:

S1.1	Ant. coils - primary	Centralab Part D 3P. 3 pos.
S1.2	Ant. coils - secondary	Part of S1.1 assembly
S2.1	R.F. coils - primary	Centralab Part D 3P. 3 pos.
S2.2	R.F. coils - secondary	Part of S2.1 assembly
S3.1	Osc. coils - plate	Centralab Part D 3P. 3 pos.
S3.2	Osc. coils - grid	Part of S3.1 assembly
S4	Power - 115 V. line	H&H #20902-Z D.P.S.T. 3A. tog.
S5	Speaker - Handset	H&H #21189 S.P.D.T. 3A. tog.
S6	Lights - dial	H&H #20992 S.P.S.T. 3A. tog.

Switches - Mdl. DQ:

S7	Squelch Off - On control	Centralab K-16 switch cover Part of R14 assembly

Switches - Mdls. DT & DQT:

S8	B.F. Osc. Off - On control	H&H #20902-Z D.P.S.T. 3A. tog.

NORTHERN RADIO CO.

TYPE N600, MODELS D, DQ, DT, DQT

PARTS LIST N600D

Transformers:

T1	I.F. Amp. input	Miller #612-C1 input
T2	I.F. Amp. output	Miller #612-C4 output - diode
T3	A.F. Pwr. Amp. output	NRC #600C-10-1 output

Tubes:

6K7	R.F. Amplifier	Sylvania or equiv. type 6K7
6L7	Mixer	Sylvania or equiv. type 6L7
6J5	Oscillator	Sylvania or equiv. type 6J5
6K7	I.F. Amplifier	Sylvania or equiv. type 6K7
6Q7	Diode Det.- AVC - First A.F.	Sylvania or equiv. type 6Q7
25L6GT	A.F. Power Amplifier	Sylvania or equiv. type 25L6GT See "Note" re metal tubes

Tubes - Mdl. DQ:

6Q7	Diode Det.- AVC - Squelch	Same as above
6F5	First A.F. Amplifier	Sylvania or equiv. type 6F5

Tubes - Mdls. DT & DQT:

6J5	B.F. Oscillator	Sylvania or equiv. type 6J5

Miscellaneous:

Dynamic speaker	Jensen ST-445 or Utah 6P 6" PM
Dial lights	Sylvania S-47 6-8 v. 150 Ma. m.b.b.
Dial light sockets	Drake #206CE dial lig. bkts.
115 V. line fuse F1	Killark or equiv. 3AG 3Amp.
Fuse holder	Littelfuse #341001 extractor post
Headphone jack J1	Mallory #703A Junior
Remote spkr. jack J2	Carter #2A single closed cir.
Band switch knob	Crowe #6144 1-1/8" rd. blk. pointer
Control knobs	Crowe #6132 1-1/8" rd. blk.
Control cable plug CP1	Amphenol #61-CP7S 7 prong
Control cable plugs	Amphenol PF7S & PM7S 7 prong
*Power cable plug CP2	Amphenol #61-CP4 4 prong
Tube sockets	Amphenol 8S 8 prong
Tuning dial mechanism	Bud D-1729 vernier dial
Tuning dial scale	NRC #915-10 std. 2 band

*Used only where power is not obtained thru the control cable.

Note: Metal tubes may be replaced with GT tubes, if necessary

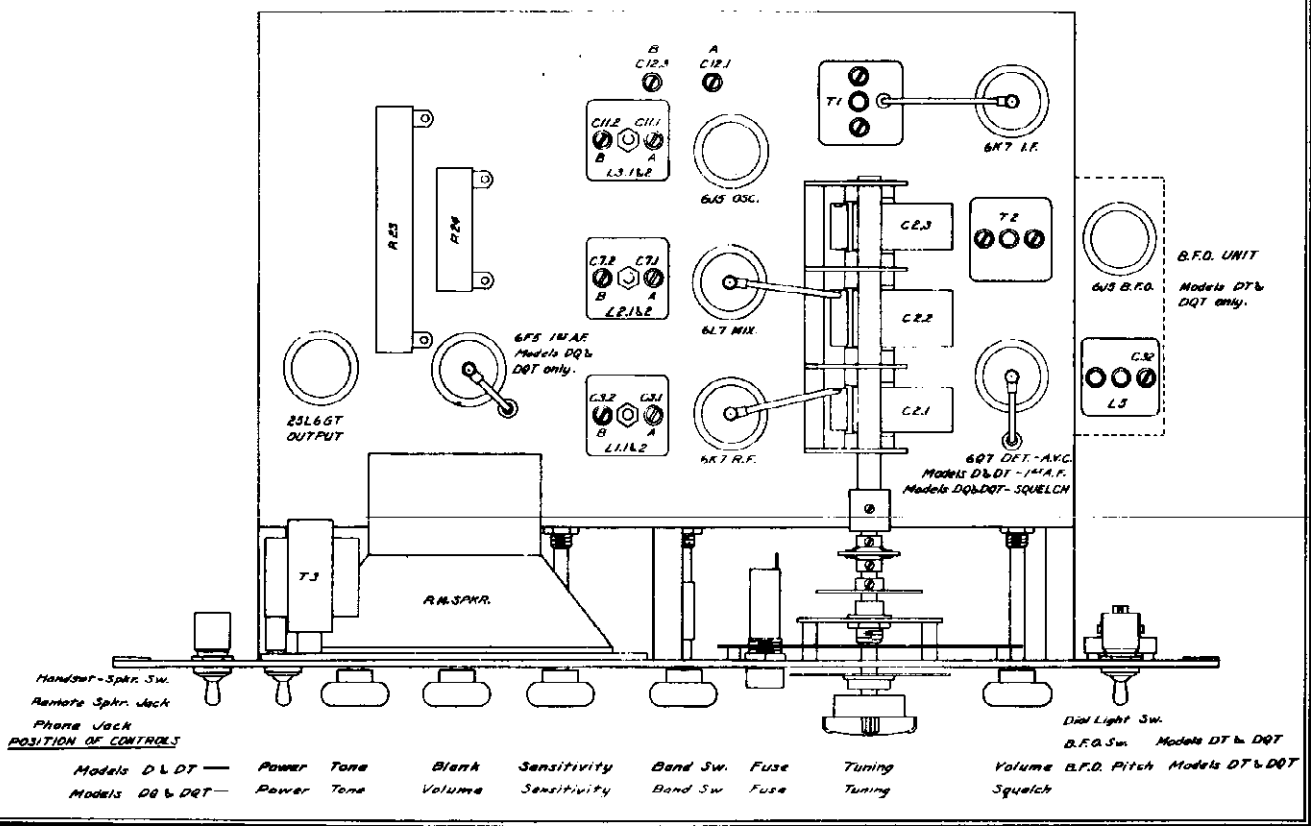

TYPE N600,
MODEL DQ

NORTHERN RADIO CO.

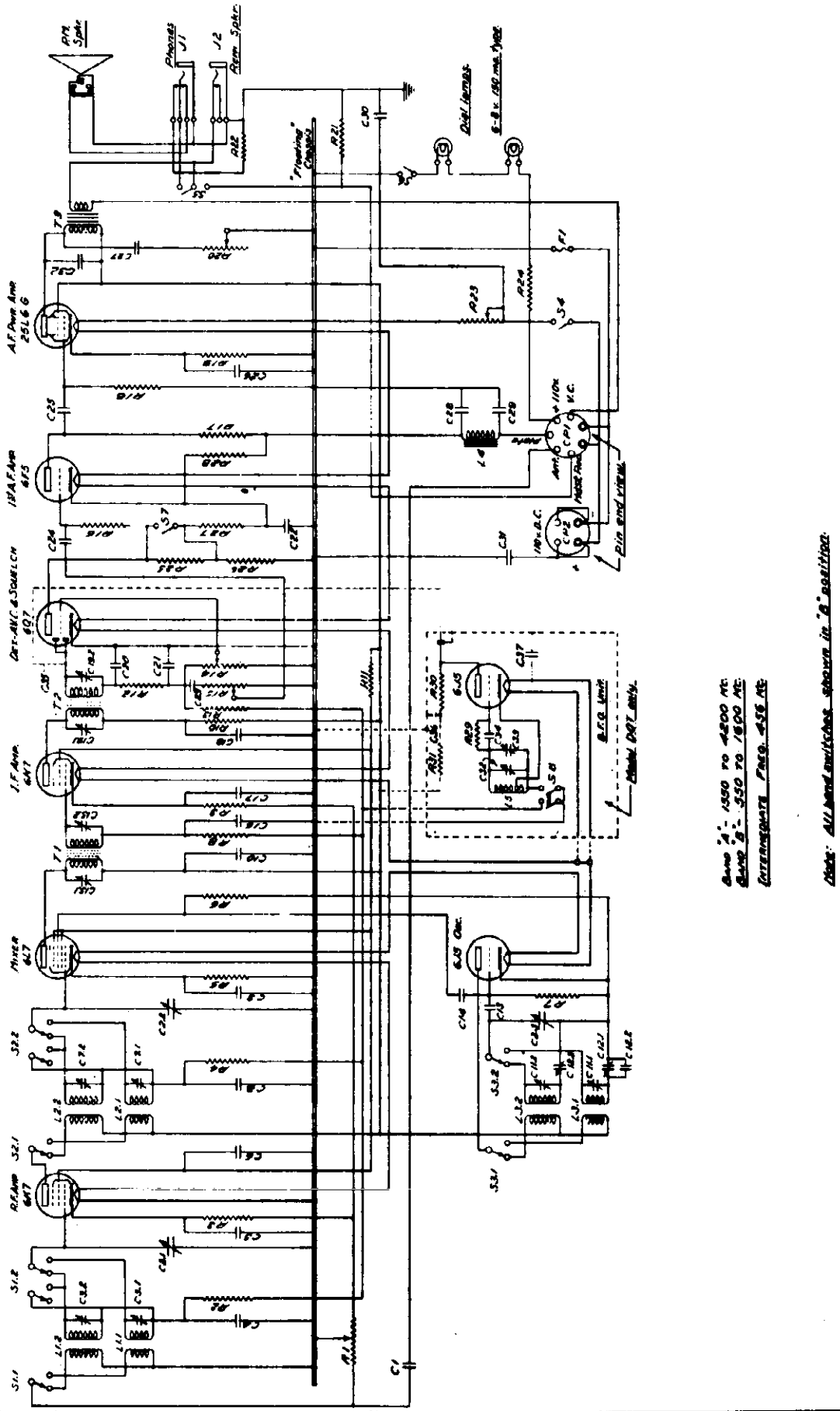

NORTHERN RADIO CO.

TYPE N600,
MODEL DQ

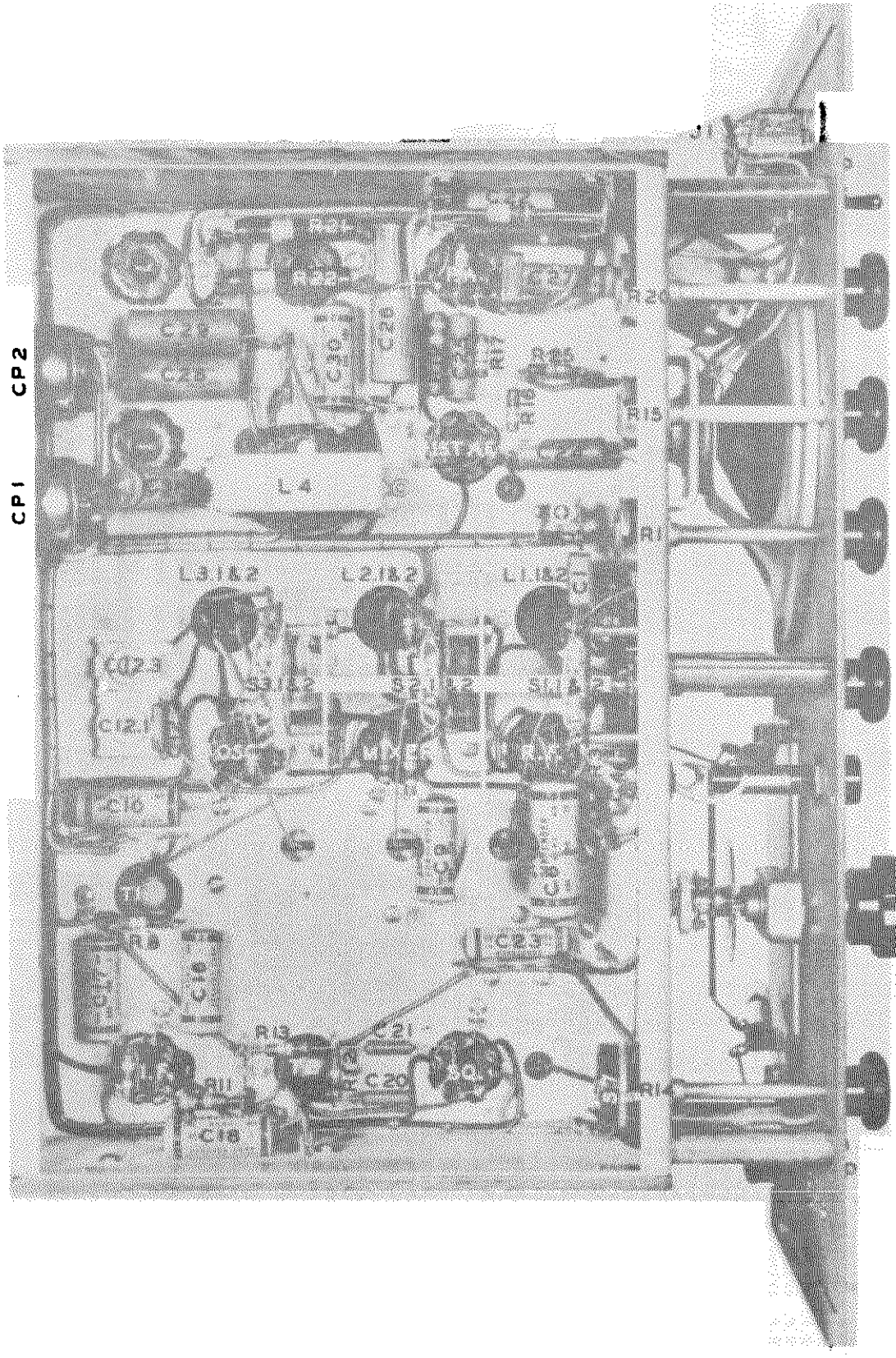

600DQ RECEIVER
BOTTOM VIEW

PARTS LIST N602C
Type N602 Receivers
Models C & CT - 32 Volts, DC

Condensers - Models C & CT:

C1	Antenna isolating	C-D 1W-3D5 .005 uf. 300 v.
C2.1	R.F. Amp. tuning	RC #817092 3 gang 365 uuf.
C2.2	Detector tuning	Part of C2.1 assembly - 365 uuf.
C2.3	Oscillator tuning	Part of C2.1 assembly - 365 uuf.
C3.1	Ant. trimmer - band A	Part of L1.1 assembly
C3.2	Ant. trimmer - band B	Part of L1.2 assembly
C3.3	Ant. trimmer - band C	Part of L1.3 assembly
C4	R.F. Amp. grid filter	C-D DT-4S5 .05 uf. 400 v.
C5	R.F. Amp. cathode bypass	C-D DT-4P1 .1 uf. 400 v.
C6.1	R.F. trimmer - band A	Part of L2.1 assembly
C6.2	R.F. trimmer - band B	Part of L2.2 assembly
C6.3	R.F. trimmer - band C	Part of L2.3 assembly
C7	Det. grid filter	C-D DT-4S5 .05 uf. 400 v.
C8	Mixer cathode bypass	C-D DT-4P1 .1 uf. 400 v.
C9.1	Osc. trimmer - band A	Part of L3.1 assembly
C9.2	Osc. trimmer - band B	Part of L3.2 assembly
C9.3	Osc. trimmer - band C	Part of L3.3 assembly
C10.1	Osc. padding - band A	NRC #602C-10-2 290-800 uuf.
C10.2	Osc. padding - band B	Miller #160A 360-1000 uuf.
C10.3	Osc. padding - band B	C-D 1W-5D1 .001 uf. 500 v.
C10.4	Osc. padding - band C	C-D 1D-5D5 .005 uf. 500 v.
C11	Osc. grid blocking	C-D 5W-5Q5 .00005 uf. 500 v.
C12	Osc. - Mixer coupling	C-D 5W-5T1 .0001 uf. 500 v.
C13	Plate & screen bypass	C-D DT-4P1 .1 uf. 400 v.
C14.1	First I.F.T. pri. tuning	Part of T1 assembly
C14.2	First I.F.T. sec. tuning	Part of T1 assembly
C15	I.F. Amp. grid filter	C-D DT-4P1 .1 uf. 400 v.
C16	I.F. Amp. cathode bypass	C-D DT-4P1 .1 uf. 400 v.
C17.1	Second I.F.T. pri. tuning	Part of T2 assembly
C17.2	Second I.F.T. sec. tuning	Part of T2 assembly
C18	Diode Det. r.f. bypass	C-D 5W-5T2 .0002 uf. 500 v.
C19	Diode Det. r.f. filter	C-D 5W-5T2 .0002 uf. 500 v.
C20	Not used	
C21	First A.F. grid coupling	C-D DT-4S5 .05 uf. 400 v.
C22	Second A.F. grid coupling	C-D DT-4S5 .05 uf. 400 v.
C23	Second A.F. cath. bypass	C-D BR-102A 10 uf. 25 v.
C24	Tone control	C-D DT-4S5 .05 uf. 400 v.
C25	A.F. Pwr. Amp. plate bypass	C-D DT-4S1 .01 uf. 400 v.
C26	Plate power filter - out.	Mallory WB-39 50 uf. 50 v.
C27	Plate power filter - in.	C-D DT-4W1 1. uf. 400 v.
C28	32 Volt line bypass	C-D DT-4P1 .1 uf. 400 v.

Condensers - Model CT:

C29	B.F. Osc. tuning	Part of L7 assembly
C30	B.F. Osc. pitch control	Bud LC-1641 15 uuf.
C31	B.F. Osc. grid blocking	C-D 5W-5T2 .0002 uf. 500 v.
C32	B.F. Osc. - Diode coupling	C-D 5W-5Q1 .00001 uf. 500 v.
C33	B.F. Osc. plate filter	C-D DT-4S5 .05 uf. 400 v.
C34	B.F. Osc. fil. bypass	C-D DT-4S1 .01 uf. 400 v.

Inductances - Model C & CT:

L1.1	Ant. coil - band A	Miller #626-A 3 band
L1.2	Ant. coil - band B	Part of L1.1 assembly
L1.3	Ant. coil - band C	Part of L1.1 assembly
L2.1	R.F. coil - band A	Miller #626-RF 3 band
L2.2	R.F. coil - band B	Part of L2.1 assembly
L2.3	R.F. coil - band C	Part of L2.1 assembly
L3.1	Osc. coil - band A	NRC #602C-10-3 3 band
L3.2	Osc. coil - band B	Part of L3.1 assembly
L3.3	Osc. coil - band C	Part of L3.1 assembly
L4	Plate power filter	Thermador D-9 2H. 125 Ma.

Inductances - Model CT:

L5	B.F. Osc. coil	Miller #512-C-5 B.F.O. unit

Resistors - Models C & CT:

R1	Sensitivity (R.F.) control	Centralab AF-110 10000 ohm pot.
R2	R.F. Amp. grid filter	IRC BT½ .1 megohm ½ w.
R3	R.F. Amp. cathode bias	IRC BW½ 100 ohms ½ w.
R4	Det. grid filter	IRC BT½ .1 megohm ½ w.
R5	Mixer cathode bias	IRC BW½ 100 ohms ½ w.
R6	Mixer grid leak	IRC BT½ 51000 ohms ½ w.
R7	L3.3 primary shunt	IRC BT½ 1200 ohms ½ w.
R8	Osc. grid leak	IRC BT½ 51000 ohms ½ w.
R9	I.F. Amp. grid filter	IRC BT½ .1 megohm ½ w.
R10	I.F. Amp. cath. bias	IRC BW½ 100 ohms ½ w.
R11	A.V.C. filter	IRC BT½ .51 megohm ½ w.
R12	Diode Det. r.f. filter	IRC BT½ 30000 ohms ½ w.
R13	Volume control & AVC load	Centralab A-130 .5 meg. pot.
R14	First A.F. grid coupling	IRC BT½ 1. megohm ½ w.
R15	First A.F. plate coupling	IRC BT½ .25 megohm ½ w.
R16	Second A.F. grid coupling	IRC BT½ .39 megohm ½ w.
R17	Second A.F. cathode bias	IRC BT½ 620 ohms ½ w.
R18	Tone control	Centralab AF-115 25000 ohm pot.
R19.1	A.F. Pwr. grid stabilizer	IRC BT½ 620 ohms ½ w.
R19.2	A.F. Pwr. grid stabilizer	IRC BT½ 620 ohms ½ w.
R20	A.F. Pwr. cathode bias	IRC BW1 100 ohms 1 w.
R21	Handset-receiver shunt	IRC BW1 10 ohms 1w.
R22	Headphone shunt	IRC BW1 10 ohms 1w.
R23	Filament dropping	Ohmite #0361 3 ohms 25 w.
R24	Plate power filter	IRC BW1 150 ohms 1 w.
R25	Dial light dropping	Ohmite BD 250 ohms 10 w.

Resistors - Model CT:

R26	B.F. Osc. grid leak	IRC BT½ .1 megohm ½ w.
R27	B.F. Osc. plate coup.	IRC BW½ 510 ohms ½ w.
R28	B.F. Osc. plate drop.	IRC BT½ 30000 ohms ½ w.
R29	B.F. Osc. fil. drop.	Ohmite #0368 100 ohms 25 w.

Switches - Models C & CT:

S1.1	Ant. coils - primary	Centralab Part D 3P. 3 position
S1.2	Ant. coils - secondary	Part of S1.1 assembly
S1.3	Ant. coils - secondary short.	Part of S1.1 assembly
S2.1	R.F. coils - primary	Centralab Part D 3P. 3 position
S2.2	R.F. coils - secondary	Part of S2.1 assembly
S2.3	R.F. coils - secondary short.	Part of S2.1 assembly
S3.1	Osc. coils - plate	Centralab Part D 3P. 3 position
S3.2	Osc. coils - grid	Part of S3.1 assembly
S3.3	Osc. coils - grid shorting	Part of S3.1 assembly
S4	Power - 32 V. line	H&H #20902 D.P.S.T. 3A. tog.
S5	Speaker - Handset	H&H #21189 S.P.D.T. 3A. tog.
S6	Lights - Dial	H&H #20992 S.P.S.T. 3A. tog.

Switches - Model CT:

S7	B.F. Osc. control	H&H #20902 D.P.S.T. 3A. tog.

Transformers - Models C & CT:

T1	I.F. Amp. input	Miller #612-C1 input
T2	I.F. Amp. output	Miller #612-C4 output - diode
T3	A.F. Pwr. Amp. input	Thermador G-26 driver 1.33:1
T4	A.F. Pwr. Amp. output	NRC #602C-10-1 output 23:1

Tubes - Models C & CT:

6K7	R.F. Amplifier	Sylvania or equiv. type 6K7
6L7	Mixer	Sylvania or equiv. type 6L7

NORTHERN RADIO CO.

TYPE N602,
MODELS C, CT

PARTS LIST N602C

Tubes - Models C & CT:

6J5	Oscillator	Sylvania or equiv. type 6J5
6K7	I.F. Amplifier	Sylvania or equiv. type 6K7
6Q7	Diode Det.- AVC. - First A.F.	Sylvania or equiv. type 6Q7
25L6GT	Second A.F. Amplifier	Sylvania or equiv. type 25L6GT
25L6GT	A.F. Power Amplifier	Sylvania or equiv. type 25L6GT (4) See "Note" re metal tubes

Tubes - Model CT:

6J5	B.F. Oscillator	Sylvania or equiv. type 6J5

Miscellaneous - Models C & CT:

	Dynamic Speaker	Jensen ST-445 or Utah 6P 6" PM
	Dial lights	Sylvania S47 6-8 V. 150 Ma. m.b.b.
	Dial light sockets	Drake #206CE dial light bkt.
F1	32 Volt line fuse	Killark or equiv. 3AG 5 amp.
	Fuse holder	Littelfuse #341001 extractor post
J1	Headphone jack	Mallory #703A Junior
J2	Remote speaker jack	Carter #2A single closed cir.
	Control cable plugs	Amphenol PF7S & PM7S 7 prong
CP1	Control cable plug-chassis	Amphenol #61-CP7S 7 prong
CP2	*Power cable plug-chassis	Amphenol #61-CP4 4 prong
	Band switch knob	Crowe #6144 1-1/8" rd. blk. pointer
	Control knobs	Crowe #6132 1-1/8" rd. blk.
	Tube sockets	Amphenol S8 8 prong
	Tuning dial mechanism	NRC #602C-11-1 33:1
	Tuning dial scale	NRC #915-11 std. 3 band

Miscellaneous - Model CT:

B1	R.F. - I.F. fixed bias	Mallory 1½ V. grid bias cell

*Used only where power is not obtained thru the control cable.

Note: Metal tubes may be replaced with GT tubes, if necessary

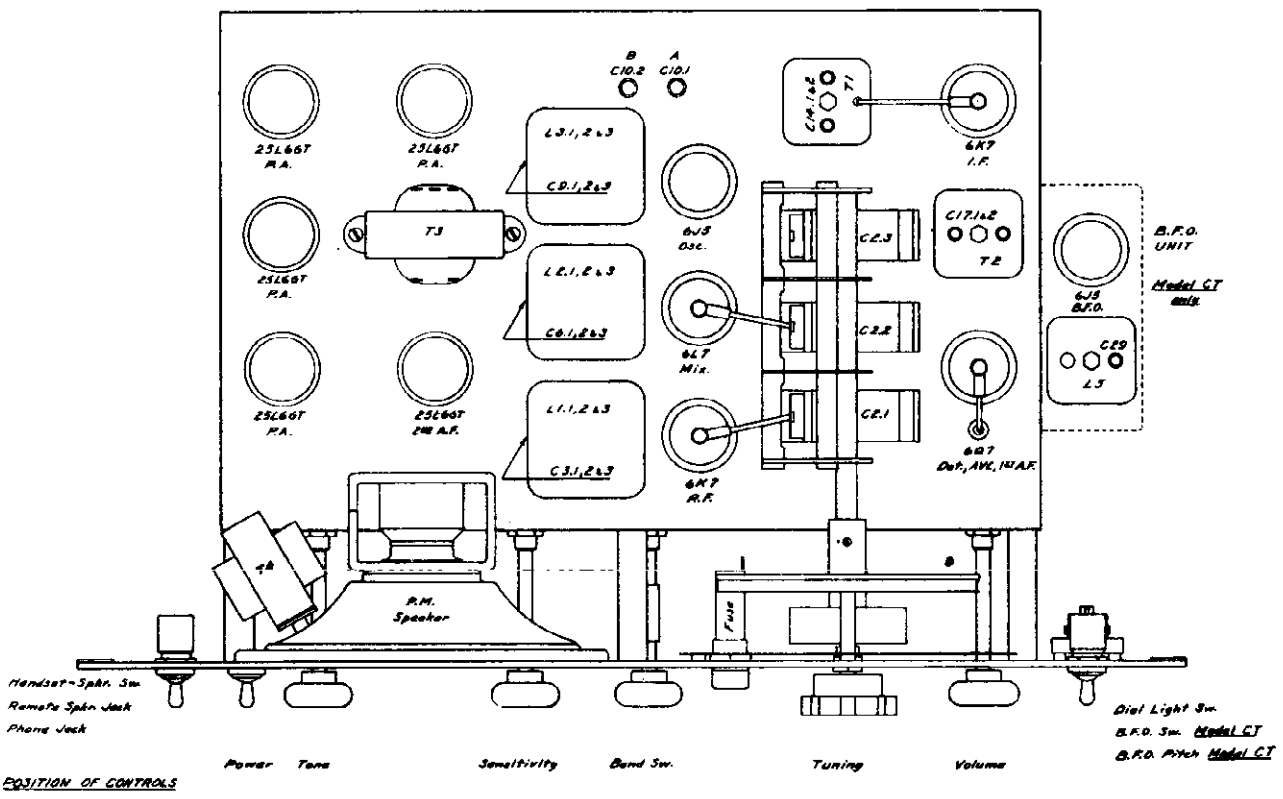

©John F. Rider

TYPE N602,
MODEL C

NORTHERN RADIO CO.

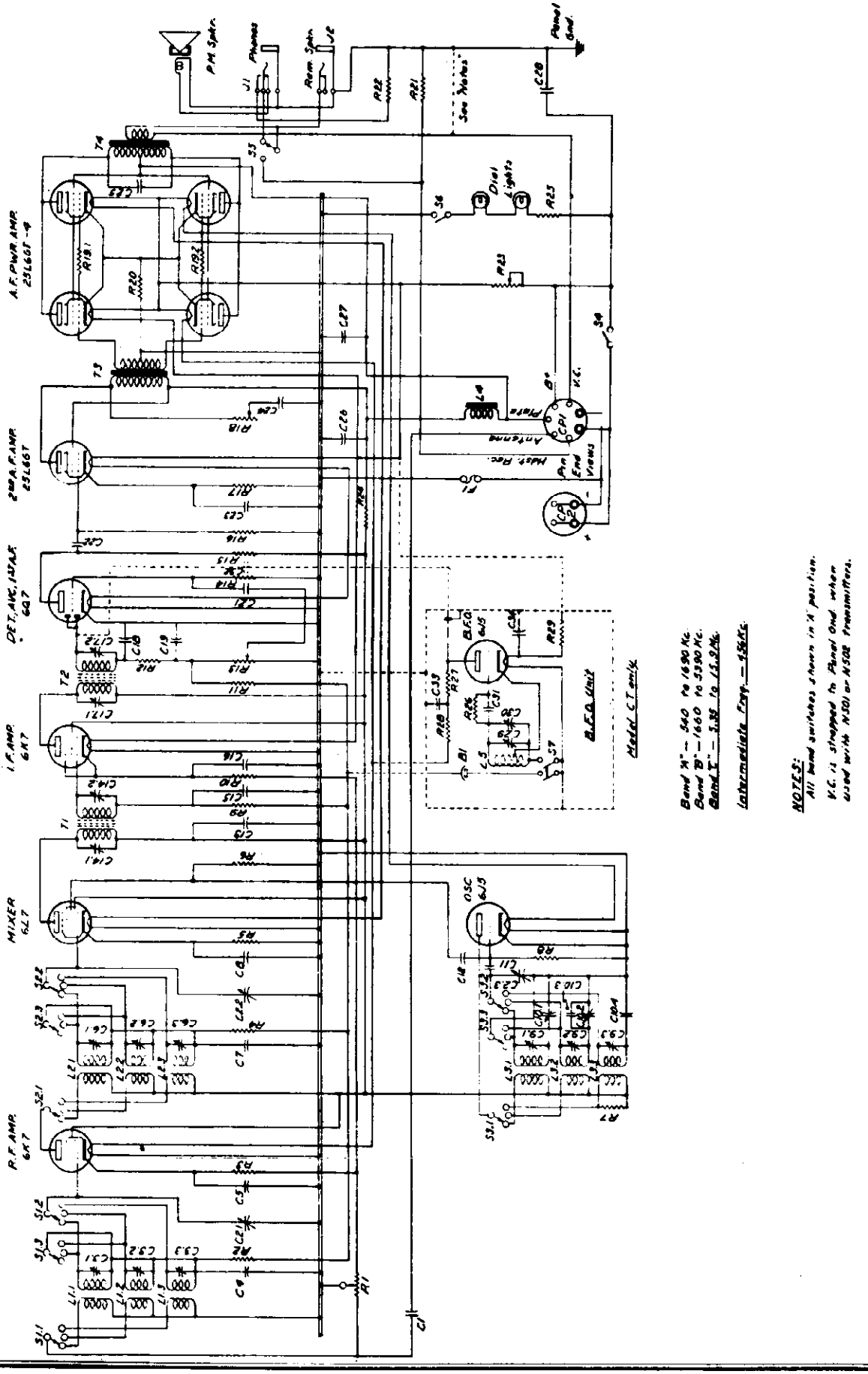

©

NORTHERN RADIO CO.

TYPE N602,
MODEL C

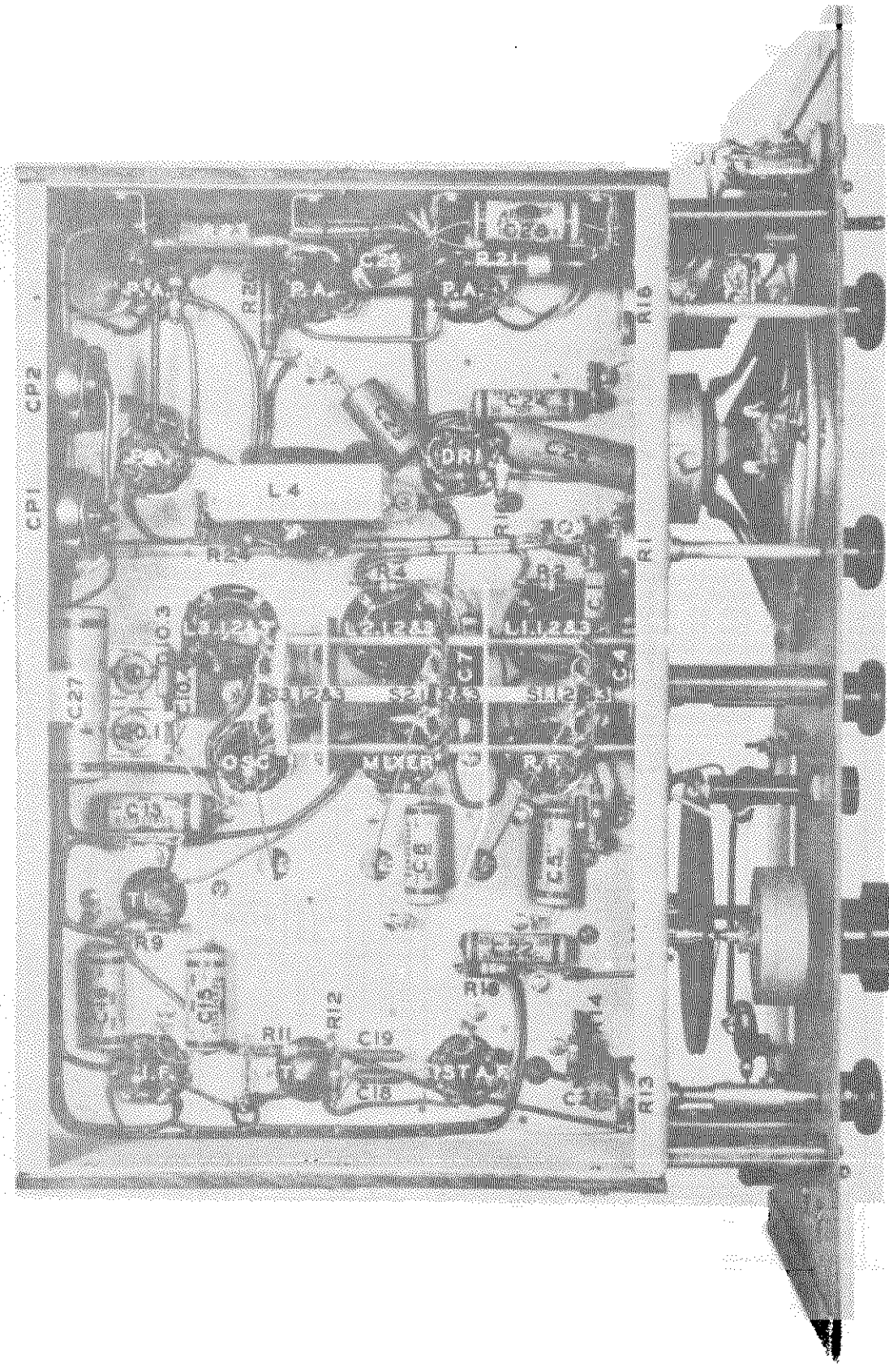

602C RECEIVER
BOTTOM VIEW

TYPE N602, MODELS D, DQ, DQT, DT

Test Readings

The following test readings indicate average normal operating conditions:

Models	Stage	Tubes	Plate Volts	Screen Volts	Grid Volts	Cath. Volts	Fil. Volts
All	R.F.A.	6K7	111.8	71.1	*Var.	1.5	6
All	Mixer	6L7	110.7	71.1	x4.0 av.	1.8	6
All	Osc.	6J5	111.8	--	x9.8 av.	0	6
All	I.F.A.	6K7	101.3	71.1	*Var.	1.4	6
D & DT	Det. &	6Q7	*Var.	--	--	0	6
D & DT	1st A.F.	Same	55.4	--	0	0	Same
All	A.F.P.A.	25L6GT	107.7	111.8	0	7.3	24
DQ & DQT	Det. &	6Q7	*Var.	--	--	0	6
DQ & DQT	Squelch	Same	9.4(Sq.off)	--	*Var.	0	Same
DQ & DQT	1st A.F.	6F5	60.6	--	1.0	10.4	6
DT & DQT	B.F.O.	6J5	26.1	--	--	0	6

Input voltage during test - 115 volts.
Total filament current - .44 Amp.
Total plate current - 75 Ma.

*Variable - dependent on signal and avc voltage. This also applies to the mixer (detector) control grid not listed above.

xAverage - mixer injection and oscillator grid voltages read with a VTVM having a d.c. input resistance of 11 megohms. These voltages vary over the frequency range.

Note: Normal readings may vary plus or minus 6% from the values given. The maximum variation should not exceed 10%. Readings are taken with the SENSITIVITY (r.f. gain) control set at maximum. All voltages are read between the circuit points and chassis, except the filaments and 6F5 grid. The latter is read between the cathode and grid taps on the squelch voltage divider. The meter should have a resistance of 1000 ohms per volt and a 300 volt (or higher) scale should be used where there is much resistance in the circuit, if comparative readings are to be obtained. Current values may be computed by dividing the voltage across resistors by their resistance. Refer to drawings and "Parts List" for data.

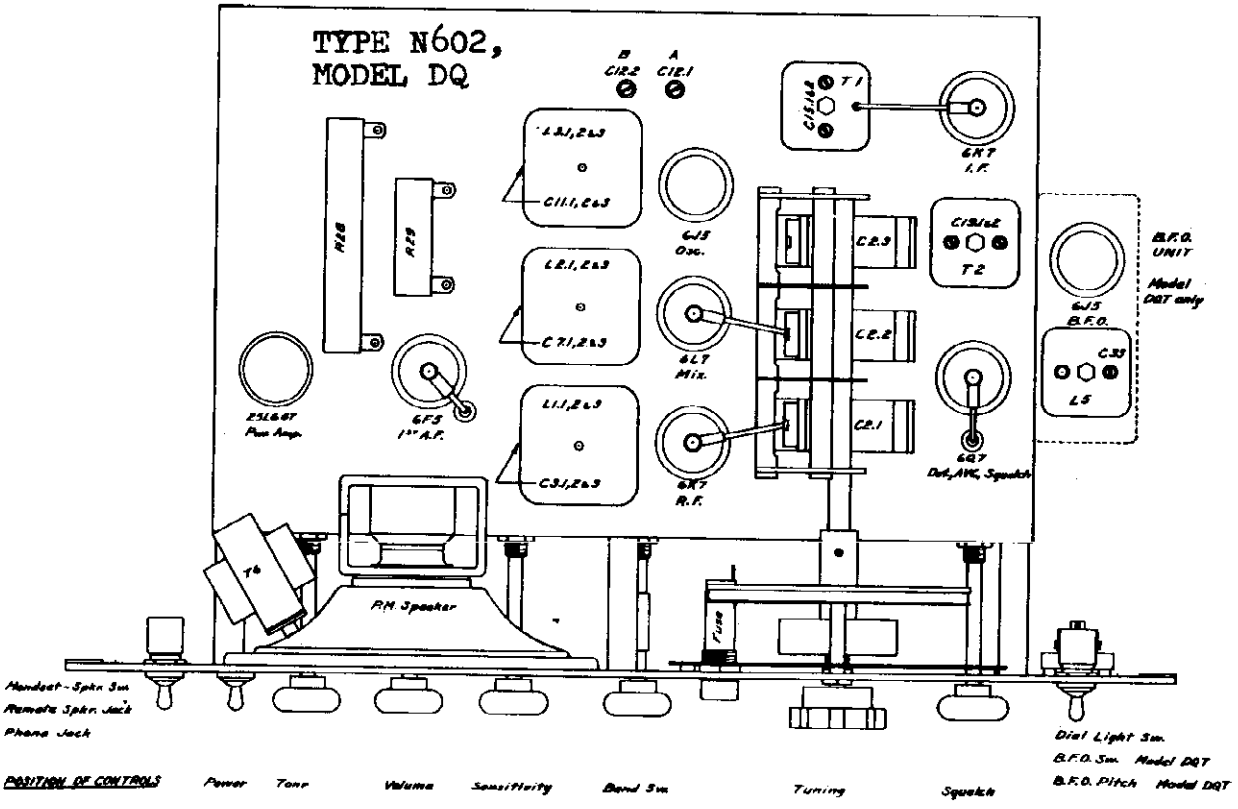

PARTS LIST N602D
Type N602 Receivers
Models D, DQ, DT & DQT - 115 Volts, D.C.

Condensers - All Models:

C1	Antenna isolating	C-D 1D-5D5 .005 uf. 500 v.
C2.1	R.F. Amp. tuning	RC #817092 3 gang 365 uuf.
C2.2	Detector tuning	Part of C2.1 assembly - 365 uuf.
C2.3	Oscillator tuning	Part of C2.1 assembly - 365 uuf.
C3.1	Ant. trimmer - band A	Part of L1.1 assembly
C3.2	Ant. trimmer - band B	Part of L1.2 assembly
C3.3	Ant. trimmer - band C	Part of L1.3 assembly
C4	R.F. Amp. grid filter	C-D DT-4S5 .05 uf. 400 v.
C5	R.F. Amp. cathode bypass	C-D DT-4P1 .1 uf. 400 v.
C6	Screen bypass	C-D DT-4P25 .25 uf. 400 v.
C7.1	R.F. trimmer - band A	Part of L2.1 assembly
C7.2	R.F. trimmer - band B	Part of L2.2 assembly
C7.3	R.F. trimmer - band C	Part of L2.3 assembly
C8	Det. grid filter	C-D DT-4S5 .05 uf. 400 v.
C9	Mixer cathode bypass	C-D DT-4P1 .1 uf. 400 v.
C10	Plate bypass	C-D DT-4P1 .1 uf. 400 v.
C11.1	Osc. trimmer - band A	Part of L3.1 assembly
C11.2	Osc. trimmer - band B	Part of L3.2 assembly
C11.3	Osc. trimmer - band C	Part of L3.3 assembly
C12.1	Osc. padding - band A	NRC #602D-10-2 290-800 uuf.
C12.2	Osc. padding - band B	Miller #160A 360-1000 uuf.
C12.3	Osc. padding - band B	C-D 1W-5D1 .001 uf. 500 v.
C12.4	Osc. padding - band C	C-D 1D-5D5 .005 uf. 500 v.
C13	Osc. grid blocking	C-D 5W-5Q5 .00005 uf. 500 v.
C14	Osc. - Mixer coupling	C-D 5W-5T1 .0001 uf. 500 v.
C15.1	First I.F.T. pri. tuning	Part of T1 assembly
C15.2	First I.F.T. sec. tuning	Part of T1 assembly
C16	I.F. Amp. grid filter	C-D DT-4P1 .1 uf. 400 v.
C17	I.F. Amp. cathode bypass	C-D DT-4P1 .1 uf. 400 v.
C18	I.F. Amp. plate filter	C-D DT-4P1 .1 uf. 400 v.
C19.1	Second I.F.T. pri. tuning	Part of T2 assembly
C19.2	Second I.F.T. sec. tuning	Part of T2 assembly
C20	Diode Det. R.F. bypass	C-D 5W-5T2 .0002 uf. 500 v.
C21	Diode Det. r.f. filter	C-D 5W-5T2 .0002 uf. 500 v.
C23	First A.F. grid coupling	C-D DT-4S2 .02 uf. 400 v.
C25	Pwr. Amp. grid coupling	C-D DT-4S2 .02 uf. 400 v.
C26	Pwr. Amp. cathode bypass	C-D BR-102A 10 uf. 25 v.
C27	Tone control	C-D DT-4S5 .05 uf. 400 v.
C28	Pwr. Amp. plate bypass	C-D 1D-5D6 .006 uf. 500 v.
C29	Plate power filter - RF & AF	C-D BR-825 8 uf. 250 v.
C30	Plate power filter - Pwr. Amp.	C-D BR-825 8 uf. 250 v.
C31	115 V. line bypass - panel	C-D DT-4P1 .1 uf. 400 v.
C32	115 V. line bypass - chassis	C-D DT-4S5 .05 uf. 400 v.

Condensers - Models DQ & DQT:

C22	R16 A.F. coupling	C-D DT-4S5 .05 uf. 400 v.
C24	First A.F. cathode bypass	C-D BR-102A 10 uf. 25 v.

Condensers - Models DT & DQT:

C33	B.F. Osc. tuning	Part of L5 assembly
C34	B.F. Osc. pitch control	Bud LC-1641 15 uuf.
C35	B.F. Osc. grid blocking	C-D 5W-5T2 .0002 uf. 500 v.
C36	B.F. Osc. - Diode coupling	C-D 5W-5Q1 .00001 uf. 500 v.
C37	B.F. Osc. plate filter	C-D DT-4S5 .05 uf. 400 v.
C38	B.F. Osc. filament bypass	C-D DT-4S1 .01 uf. 400 v.

Inductances - All Models:

L1.1	Ant. coil - band A	Miller #626-A 3 band
L1.2	Ant. coil - band B	Part of L1.1 assembly
L2.1	R.F. coil - band A	Miller #626-RF 3 band
L2.2	R.F. coil - band B	Part of L2.1 assembly
L2.3	R.F. coil - band C	Part of L2.1 assembly
L3.1	Osc. coil - band A	NRC #602D-10-3 3 band
L3.2	Osc. coil - band B	Part of L3.1 assembly
L3.3	Osc. coil - band C	Part of L3.1 assembly
L4	Plate power filter choke	Thermador D-9 2H. 125 Ma.

Inductances - Models DT & DQT:

L5	B.F. Osc. coil	Miller #512-C-5 B.F.O. unit

Resistors - All Models:

R1	Sensitivity (R.F.) control	Centralab AF-110 10000 ohm pot.
R2	R.F. Amp. grid filter	IRC BT½ .1 megohm ½ w.
R3	R.F. Amp. cathode bias	IRC BW½ 360 ohms ½ w.
R4	Detector grid filter	IRC BT½ .1 megohm ½ w.
R5	Mixer cathode bias	IRC BW½ 360 ohms ½ w.
R6	Mixer grid leak	IRC BT½ 51000 ohms ½ w.
R7	L3.3 primary shunt	IRC BT½ 1200 ohms ½ w.
R8	Osc. grid leak	IRC BT½ 51000 ohms ½ w.
R9	I.F. Amp. grid filter	IRC BT½ .1 megohm ½ w.
R10	I.F. Amp. cathode bias	IRC BW½ 360 ohms ½ w.
R11	I.F. Amp. plate filter	IRC BT½ 3000 ohms ½ w.
R12	Screen dropping	IRC BT1 7500 ohms 1 w.
R13	Diode Det. r.f. filter	IRC BT½ 30000 ohms ½ w.
R14	A.V.C. filter	IRC BT½ .51 megohm ½ w.
R21	First A.F. grid coupling	IRC BT½ 1. megohm ½ w.
R22	First A.F. plate coupling	IRC BT½ .25 megohm ½ w.
R23	Pwr. Amp. grid coupling	IRC BT½ .39 megohm ½ w.
R24	Pwr. Amp. cathode bias	IRC BT1 150 ohms 1 w.
R25	Tone control	Centralab AF-115 25000 ohm pot.
R26	Headphone shunt	IRC BW1 10 ohms 1w.
R27	Handset-receiver shunt	IRC BW1 10 ohms 1w.
R28	Fil. voltage dropping	Ohmite #0567 200 ohms 50 w.
R29	Dial light voltage drop.	Ohmite #0375 1000 ohms 25 w.
R30	Pwr. Amp. plate filter	IRC BW1 51 ohms 1 w.

Resistors - Models D & DT:

R16	Volume control & AVC load	Centralab A-130 .5 meg. pot.

Resistors - Models DQ & DQT:

R15	Squelch control - A.V.C. load	Centralab A-128 .5 meg. pot.
R16	Volume (A.F.) control	Centralab A-132 1. meg. pot.
R17	Squelch voltage divider	IRC BT1 2000 ohms 1 w.
R18	Squelch voltage divider	IRC BW½ 200 ohms ½ w.
R19	Squelch voltage dropping	IRC BT2 20000 ohms 2 w.
R20	6Q7 plate - 6F5 block. bias	IRC BT½ 1. megohm ½ w.

Resistors - Models DT & DQT:

R31	B.F. Osc. grid leak	IRC BT½ .1 megohm ½ w.
R32	B.F. Osc. plate coupling	IRC BW½ 510 ohms ½ w.
R33	B.F. Osc. plate dropping	IRC BT½ .1 megohm ½ w.

Switches - All Models:

S1.1	Ant. coils - primary	Centralab Part D 3P. 3 position
S1.2	Ant. coils - secondary	Part of S1.1 assembly
S1.3	Ant. coils - secondary short.	Part of S1.1 assembly
S2.1	R.F. coils - primary	Centralab Part D 3P. 3 position
S2.2	R.F. coils - secondary	Part of S2.1 assembly
S2.3	R.F. coils - secondary short.	Part of S2.1 assembly
S3.1	Osc. coils - plate	Centralab Part D 3P. 3 position
S3.2	Osc. coils - grid	Part of S3.1 assembly

TYPE N602, MODELS D, DQ, DQT, DT

NORTHERN RADIO CO.

SCHEMATIC MODEL DQ

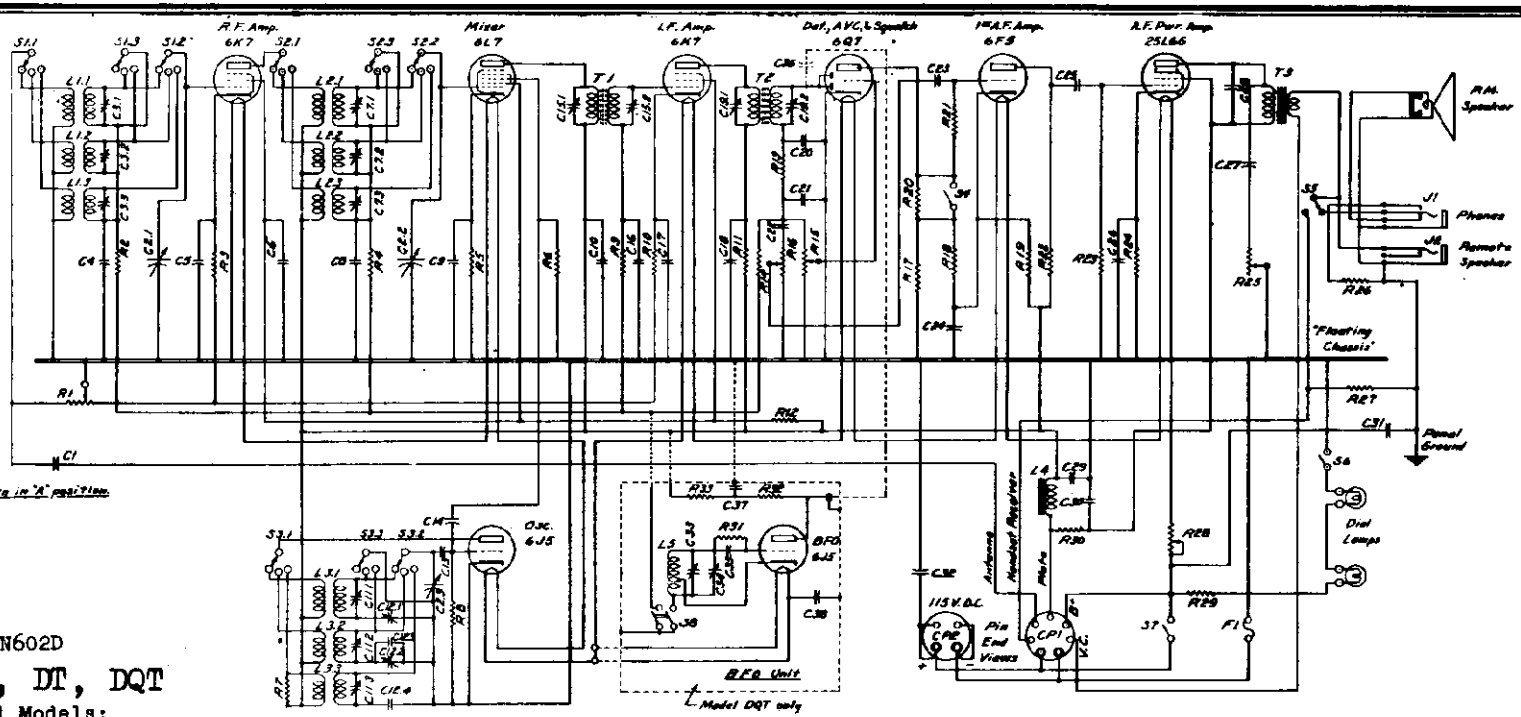

Band "A" - 540 to 1690 Kc.
Band "B" - 1660 to 5390 Kc.
Band "C" - 5.35 to 15.9 Mc.

Intermediate Freq. - 456 Kc.

Note: All band switches shown in "A" position.

PARTS LIST N602D

MODELS D, DQ, DT, DQT

Switches - All Models:

S3.3	Osc. coils - grid shorting	Part of S3.1 assembly
S5	Speaker-Handset	H&H #21189 S.P.D.T. 3A. tog.
S6	Lights - dial	H&H #20992 S.P.S.T. 3A. tog.
S7	Power - 115 V. line	H&H #20902-Z D.P.S.T. 3A. tog.

Switches - Models DQ & DQT:

S4	Squelch Off-On control	Centralab K-16 switch cover

Switches - Models DT & DQT:

S8	B.F. Osc. Off-On control	H&H #20902-Z D.P.S.T. 3A. tog.

Transformers - All Models:

T1	I.F. Amp. input	Miller #612-C1 input
T2	I.F. Amp. output	Miller #612-C4 output - diode
T3	A.F. Pwr. Amp. output	NRC #602D-10-1 output 23:1

Tubes - All Models:

6K7	R.F. Amplifier	Sylvania or equiv. type 6K7
6L7	Mixer	Sylvania or equiv. type 6L7
6J5	Oscillator	Sylvania or equiv. type 6J5
6K7	I.F. Amplifier	Sylvania or equiv. type 6K7
25L6GT	A.F. Power Amplifier	Sylvania or equiv. type 25L6GT
		See "Note" re metal tubes

Tubes - Models D & DT:

6Q7	Diode Det. - AVC - First A.F.	Sylvania or equiv. type 6Q7

Tubes - Models DQ & DQT:

6Q7	Diode Det. - AVC - Squelch	Sylvania or equiv. type 6Q7
6F5	First A.F. Amplifier	Sylvania or equiv. type 6F5

Tubes - Models DT & DQT:

6J5	B.F. Oscillator	Sylvania or equiv. type 6J5

Miscellaneous:

	Dynamic speaker	Jensen ST-445 or Utah 6P 6" PM
	Dial lamps	Sylvania S-47 6-8 V. 150 Ma. m.b.b.
	Dial lamp sockets	Drake #206CE dial light bkts.
F1	115 Volt line fuse	Killark or equiv. 3AG 3 Amp.
	Fuse holder	Littelfuse #341001 extractor post
J1	Headphone jack	Mallory #703A Junior
J2	Remote speaker jack	Carter #2A single closed circuit
	Control cable plugs	Amphenol PF7S & PM7S 7 prong
CP1	Control cable plug - chassis	Amphenol #61-CP7S 7 prong
CP2	*Power cable plug - chassis	Amphenol #61-CP4 4 prong
	Band switch knob	Crowe #6144 1-1/8" rd. blk. pointer
	Control knobs	Crowe #6132 1-1/8" rd. black
	Tube sockets	Amphenol S8 8 prong
	Tuning dial mechanism	NRC #602D-11-1 33:1
	Tuning dial scale	NRC #915-11 std. 3 band

*Used only where power is not obtained thru the control cable.

Note: Metal tubes may be replaced with GT tubes, if necessary.

©John F. Dilen

NORTHERN RADIO CO.

TYPE N602,
MODEL DQ

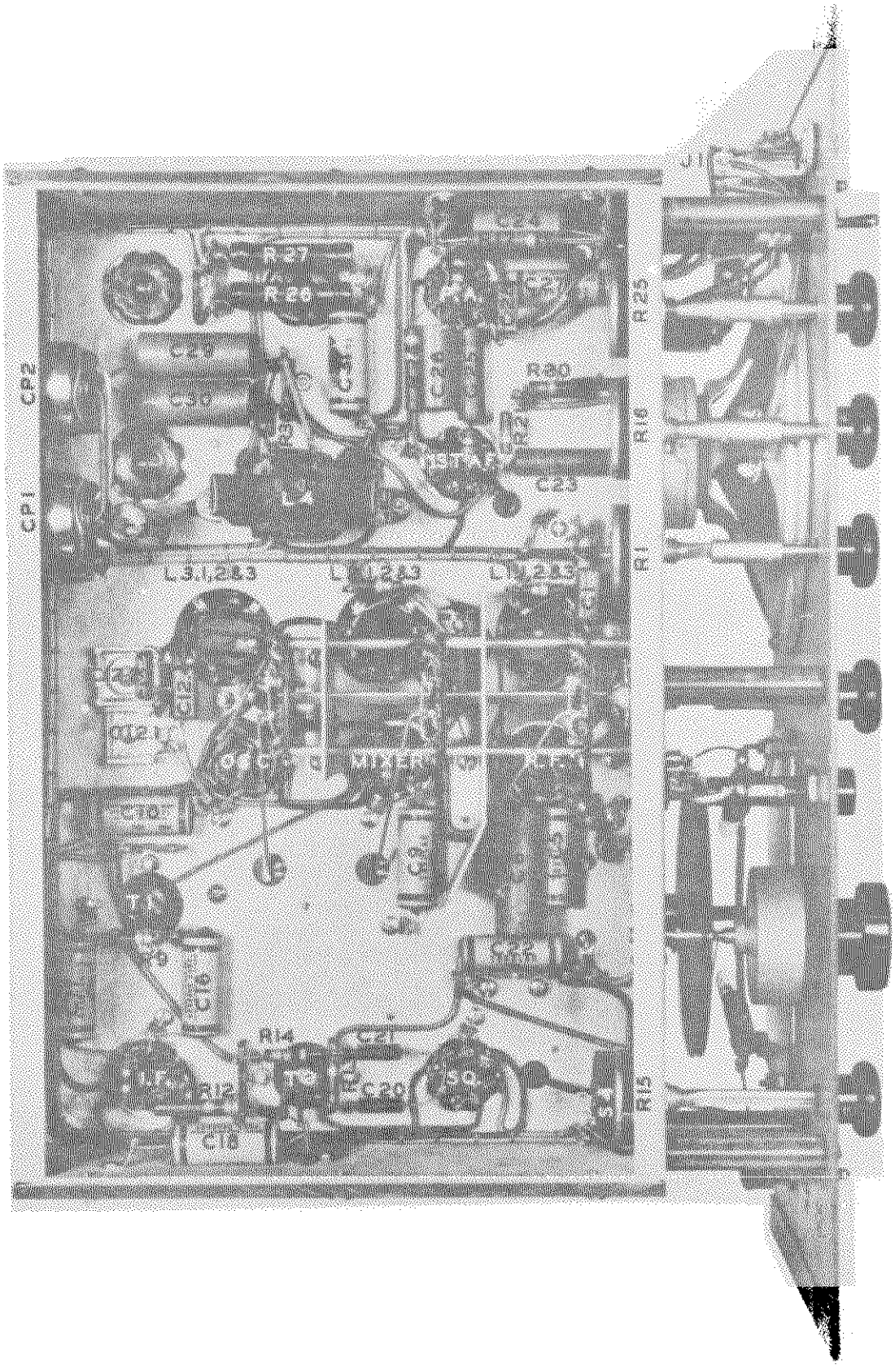

602DQ RECEIVER
BOTTOM VIEW

OLYMPIC RADIO & TELEV. INC.

MODELS 7-532V, 7-532W

Model 7-532W Walnut

Model 7-532V Ivory

Frequency Range: Standard Broadcast 530-1700 kc.
Frequency Modulation (FM) 88-108 MC

Power Requirement: 105-125 volts a-c 50-60 cycles or 105-125 volts d-c

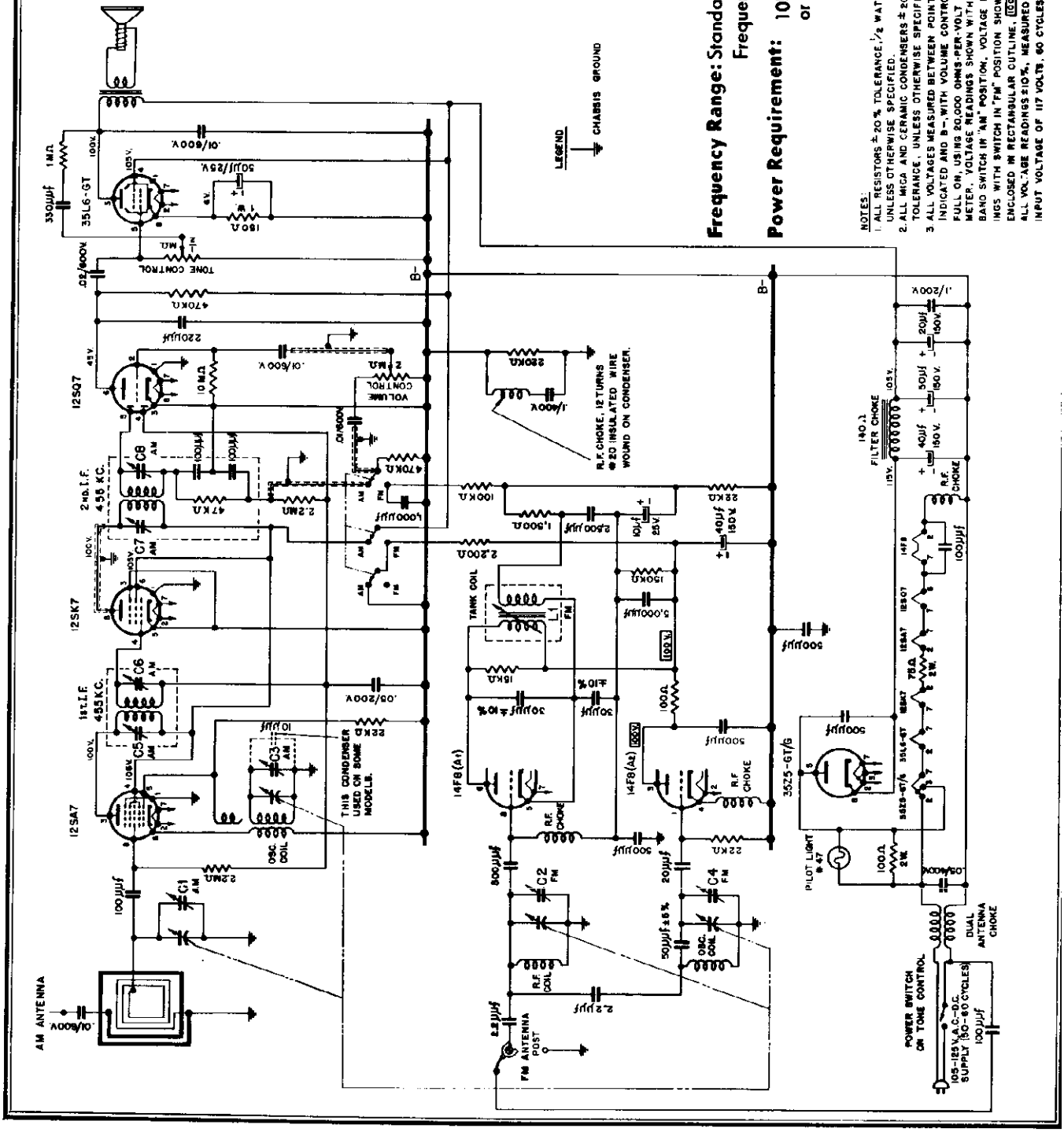

TUBE & TRIMMER LAYOUT

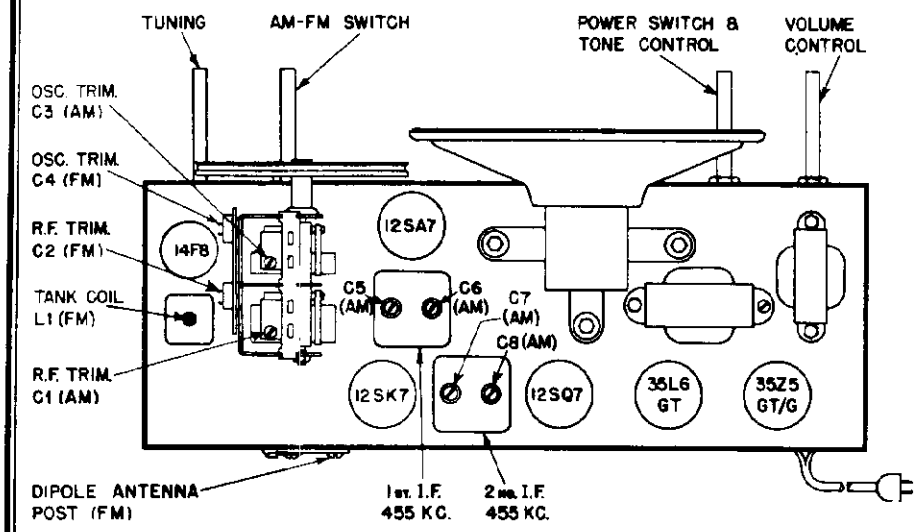

ALIGNMENT PROCEDURE CHART

STEP	SET BAND SWITCH ON	CONNECT HIGH SIDE OF SIGNAL GENERATOR TO—	SET SIGNAL GENERATOR TO—	TURN POINTER DIAL TO—	ADJUST THE FOLLOWING FOR MAXIMUM OUTPUT (KEEP SIGNAL FROM SIGNAL GENERATOR AS LOW AS POSSIBLE)
1	A.M.	R.F. SECTION OF VARIABLE CONDENSER OR PIN 4 OF THE 12SK7 TUBE IN SERIES WITH A .1MFD. 400 VOLT CONDENSER.	455 KC.	EXTREME RIGHT HAND POSITION. (CONDENSER PLATES FULLY OPEN).	C8 AND C7 (2nd. I.F. TRANSFORMER)
2	A.M.	R.F. SECTION OF VARIABLE CONDENSER OR PIN 8 OF THE 12SA7 TUBE IN SERIES WITH A .1MFD. 400 VOLT CONDENSER.	455 KC.	EXTREME RIGHT HAND POSITION. (CONDENSER PLATES FULLY OPEN).	C6 AND C5 (1st. I.F. TRANSFORMER)
3	A.M.	REPEAT STEPS 1 AND 2			
4	A.M.	USE RADIATED SIGNAL (CONNECT BOTH SIDES OF SIGNAL GENERATOR TO RADIATION LOOP)	1700 KC.	1700 KC. CALIBRATION POINT ON DIFFUSER PLATE.	C3 (OSCILLATOR TRIMMER)
5	A.M.		1400 KC.	RESONANCE, APPROXIMATELY 1400 KC. CALIBRATION POINT ON DIFFUSER PLATE	C1 (ANTENNA TRIMMER)

STEP	SET BAND SWITCH ON	CONNECT HIGH SIDE OF SIGNAL GENERATOR TO—	SET SIGNAL GENERATOR TO—	TURN POINTER DIAL TO—	ADJUST THE FOLLOWING FOR MINIMUM NOISE USING AN UNMODULATED SIGNAL (KEEP SIGNAL FROM SIGNAL GENERATOR AS LOW AS POSSIBLE)
6	F.M.	FM ANTENNA POST IN SERIES WITH A 300 OHM RESISTOR	21.75 MC.	EXTREME RIGHT HAND POSITION. (CONDENSER PLATES FULLY OPEN).	L1 (TUNING SLUG ON TANK COIL)
7	F.M.		107 MC.	107 MC. CALIBRATION POINT ON DIFFUSER PLATE.	C4 (OSCILLATOR TRIMMER)
8	F.M.		103 MC.	RESONANCE, APPROXIMATELY 103 MC CALIBRATION POINT ON DIFFUSER PLATE.	C2 (ANTENNA TRIMMER) ROCK VARIABLE FOR MAXIMUM SIGNAL

Note: All tubes and the pilot light may be replaced without removing chassis from cabinet. Remove the cardboard back, and the screw holding the loop to the mounting bracket, then lift loop carefully off the bracket so as to avoid breaking of the wires connecting the loop to the chassis.

SERVICE AND ALIGNMENT INSTRUCTIONS

This receiver has been carefully aligned in the factory and the circuit is unusually stable. Realigning should only be attempted when necessary and only with a proper signal generator and in accordance with the service instructions. The receiver cannot be aligned on modulated signals. To insure proper broadcast alignment it is recommended to use a radiated signal. To radiate the signal connect a loop of about 6" to 8" diameter 1 turn of #14 or #12 wire across the output of the signal generator and place this loop parallel to the loop of the receiver to be aligned at a distance of 8" or 10". For complete alignment instructions on AM and FM Bands see alignment chart.

ALIGNMENT Equipment required: Modulated r-f signal generator, output meter, insulated screw driver, two .1 mfd. 400 volt condensers, one 300 ohm resistor. An FM signal generator is not required for the alignment of this receiver.

With the receiver removed from the cabinet connect output meter across voice coil. Connect ground side of the signal generator in series with a .1/400 volt condenser to the common B—; turn volume control fully on, and keeping the output of the signal generator as low as possible, proceed in the sequence as shown on the alignment chart.

To facilitate alignment of the receiver when removed from cabinet, calibration points are provided on the light diffuser plate, which is mounted to the chassis.

CAUTION: The diffuser strip is assembled to the chassis with 2 PK screws. The one at the left is fastened down tight. The one on the right should be backed off about 2 turns from tight position in order to permit free expansion of the strip and thereby avoid warpage which will interfere with proper movement of the pointer.

Before aligning, close the variable condenser fully counterclockwise (plates fully closed) and check that pointer coincides with the reference dot (extreme left dot) on the diffuser plate.

MODELS 7-532V, 7-532W — OLYMPIC RADIO & TELEV. INC. — MODELS 7-532W, 7-532V, MODELS 7-537W, 7-537V

REPLACEMENT PARTS LIST

Part No.	Description
BU-187	Bulb—#47 Mazda pilot light bulb
CA-154-1W	Cabinet—walnut bakelite cabinet
CA-154-1V	Cabinet—ivory bakelite cabinet
CCA-101M	Condenser—100 mmfd. ±20% ceramic condenser
CCA-102M	Condenser—1000 mmfd. ±20% ceramic condenser
CCA-200M	Condenser—20mmfd. ±20% ceramic condenser
CCA-501M	Condenser—500 mmfd. ±20% ceramic condenser
CCA-L300K	Condenser—30 mmfd. ±10% ceramic condenser (negative 080)
CCA-U500J	Condenser—50 mmfd. ±5% ceramic condenser (negative 750)
CCD-502X	Condenser—5000 mmfd. disc condenser
CCR-252M	Condenser—2500 mmfd. ±20% ceramic condenser
CK-114	Choke—140 ohms 85 mils filter choke
CK-1109	Choke—dual antenna choke
CK-1127	Choke—r-f choke
CL-1111	Coil—F.M. r-f coil
CL-1113	Coil—F.M. oscillator coil
CL-1129	Coil—broadcast oscillator coil
CO-791	Condenser—50+20+40/150 W.V. electrolytic condenser
CO-808	Condenser—50 mfd. 25 W.V. electrolytic condenser
CO-1112	Condenser—2.2 mmfd. ±20% fixed condenser
CO-1133	Condenser—10 mfd. 25 W.V. electrolytic condenser
CO-1248	Condenser—40 mfd. 150 W.V. electrolytic condenser
CT-1114	Condenser—3-12 mmfd. ceramic trimmer condenser
CV-841	Condenser—2 gang variable condenser
DL-1115	Dial—glass dial scale
KN-671	Knob—walnut knob marked "Volume"
KN-672	Knob—walnut knob marked "Off-On Tone"
KN-673	Knob—walnut knob marked "Tuning"
KN-1117	Knob—walnut knob marked "AM-FM"
KN-675	Knob—ivory knob marked "Volume"
KN-676	Knob—ivory knob marked "Off-On Tone"
KN-677	Knob—ivory knob marked "Tuning"
KN-1118	Knob—ivory knob marked "AM-FM"
LP-1122	Loop—loop antenna
PO-334	Pointer—dial pointer
PT-105	Control—2 megohms volume control
PT-106	Control—½ megohm tone control with S.P.S.T. switch
RCM20A100M	Condenser—10 mmf. ±20% mica condenser
RCM20A221M	Condenser—220 mmf. ±20% mica condenser
RCM20A331M	Condenser—330 mmf. ±20% mica condenser
RCP10W2104A	Condenser—.1/200 W.V. tubular paper condenser
RCP10W2503A	Condenser—.05/200 W.V. tubular paper condenser
RCP10W4104L	Condenser—.1/400 W.V. tubular paper condenser*
RCP10W4503A	Condenser—.05/400 W.V. tubular paper condenser
RCP10W6103A	Condenser—.01/600 W.V. tubular paper condenser
RCP10W6203A	Condenser—.02/600 W.V. tubular paper condenser
REB-101M	Resistor—100 ohms ±20% ½ watt resistor
REB-104M	Resistor—100,000 ohms ±20% ½ watt resistor
REB-105M	Resistor—1 megohm ±20% ½ watt resistor
REB-106M	Resistor—10 megohms ±20% ½ watt resistor
REB-152M	Resistor—1500 ohms ±20% ½ watt resistor
REB-153M	Resistor—15,000 ohms ±20% ½ watt resistor
REB-154M	Resistor—150,00 ohms ±20% ½ watt resistor
REB-222M	Resistor—2200 ohms ±20% ½ watt resistor
REB-223M	Resistor—22,000 ohms ±20% ½ watt resistor
REB-224M	Resistor—220,000 ohms ±20% ½ watt resistor
REB-225M	Resistor—2.2 megohms ±20% ½ watt resistor
REB-474M	Resistor—470,000 ohms ±20% ½ watt resistor
REC-151M	Resistor—150 ohms ±20% 1 watt resistor
RED-101M	Resistor—100 ohms ±20% 2 watt resistor
SK-792	Speaker—6" p.m. speaker
SP-191	Spring—drive shaft retaining spring
SP-218	Spring—dial drive spring
ST-412	Back—printed cardboard back
ST-1120	Diffuser—light diffuser plate with calibration marks
SW-1121	Switch—3 pole double throw switch
TR-781	Transformer—455 kc I.F. input transformer
TR-782	Transformer—455 kc I.F. output transformer
TR-904	Transformer—output transformer for 35L6
TR-1123	Coil—tank coil

* When ordering specify "with r-f choke"

MODELS 7-537V, 7-537W

PART NUMBER	DESCRIPTION
BU 187	Bulb—#47 Mazda pilot light bulb
CA 327W	Cabinet—walnut bakelite cabinet
CA 327V	Cabinet—ivory bakelite cabinet
CA 327X	Cabinet—black bakelite cabinet
CCA 101M	Condenser—100 mmfd ±20% ceramic condenser
CCA 102M	Condenser—1000 mmfd ±20% ceramic condenser
CCA 200M	Condenser—20 mmfd ± 20% ceramic condenser
CCA 501M	Condenser—500 mmfd ±20% ceramic condenser
CCA L300K	Condenser—30 mmfd ±10% ceramic condenser (negative 080
CCA U500J	Condenser—50 mmfd ±5% ceramic condenser (negative 750)
CCD 502X	Condenser—5000 mmfd disc type condenser
CCR 252M	Condenser—2500 mmfd ±20% ceramic condenser
CK 1109	Choke—dual antenna choke
CK 1127	Choke—r-f choke (F.M.)
CL 1111	Coil—F. M. r-f coil
CL 1113	Coil—F.M. oscillator coil
CL 1129	Coil—B.C. oscillator coil
CO 111	Condenser—40+40/150 W.V. & 50/25 W.V. electrolytic condenser
CO 1112	Condenser—2.2 mmfd ±20% fixed condenser
CO 1133	Condenser—10 mfd 25 W.V. electrolytic condenser
CO 1222	Condenser—10 mfd 150 W.V. electrolytic condenser
CR 169	Crystal—round dial crystal
CT 1114	Condenser—3-12 mmfd zero temperature coefficient trimmer condenser
CV 1141	Condenser—2 gang variable a-m; f-m condenser
DL 1144	Dial—plastic dial
KN 1077	Knob walnut knob marked "Off-On Volume"
KN 1078	Knob—Walnut knob marked "Tuning"
KN 1224	Knob—walnut knob marked "AM-FM"
KN 1103	Knob—ivory knob marked "Off-On Volume"
KN 1104	Knob—ivory knob marked "Tuning"
KN 1225	Knob—ivory knob marked "AM-FM"
LP 1268	Loop—loop-antenna
PO 259W	Pointer—molded walnut pointer
PO 259V	Pointer—molded ivory pointer
PT 102	Control—½ megohm volume control with s.p.s.t. switch
RCM20A 100M	Condenser—10 mmfd ±20% mica condenser
RCM20A 221M	Condenser—220 mmfd ±20% mica condenser
RCP10W 2104A	Condenser—.1/200 W.V. tubular paper condenser
RCP10W 2503A	Condenser—.05/200 W.V. tubular paper condenser
RCP10W 4203A	Condenser—.02/400 W.V. tubular paper condenser
RCP10W 4503A	Condenser—.05/400 W.V. tubular paper condenser
RCP10W 6103A	Condenser—.01/600 W.V. tubular paper condenser
RCP10W 6502A	Condenser—.005/600 W.V. tubular paper condenser
REB 101M	Resistor—100 ohms ±20% ½ watt resistor
REB 104M	Resistor—100,000 ohms ±20% ½ watt resistor
REB 106M	Resistor—10 megohms ±20% ½ watt resistor
REB 152M	Resistor—1500 ohms ±20% ½ watt resistor
REB 153M	Resistor—15,000 ohms ±20% ½ watt resistor
REB 154M	Resistor—150,000 ohms ±20% ½ watt resistor
REB 222M	Resistor—2200 ohms ±20% ½ watt resistor
REB 223M	Resistor—22,000 ohms ±20% ½ watt resistor
REB 225M	Resistor—2.2 megohms ±20% ½ watt resistor
REB 474M	Resistor 470,000 ohms ±20% ½ watt resistor
REC 151M	Resistor—150 ohms ±20% 1 watt resistor
REC 221K	Resistor—220 ohms ±10% 1 watt resistor
RED 102M	Resistor—1000 ohms ±20% 2 watt resistor
RED 750M	Resistor—75 ohms ±20% 2 watt resistor
SK 1128	Speaker—5" permanent magnet speaker
SO 1260	Socket—pilot light socket assembly
SP 191	Spring—drive shaft retaining spring
SP 218	Spring—pointer drive spring
ST 255-1	Back—cardboard back
SW 1158	Switch—T.P.D.T. band switch
TR 707	Transformer—455 k.c. input I.F. transformer
TR 708	Transformer—455 k.c. output I.F. transformer
TR 1123	Transformer—f.m. tank coil

TUBE & TRIMMER LAYOUT

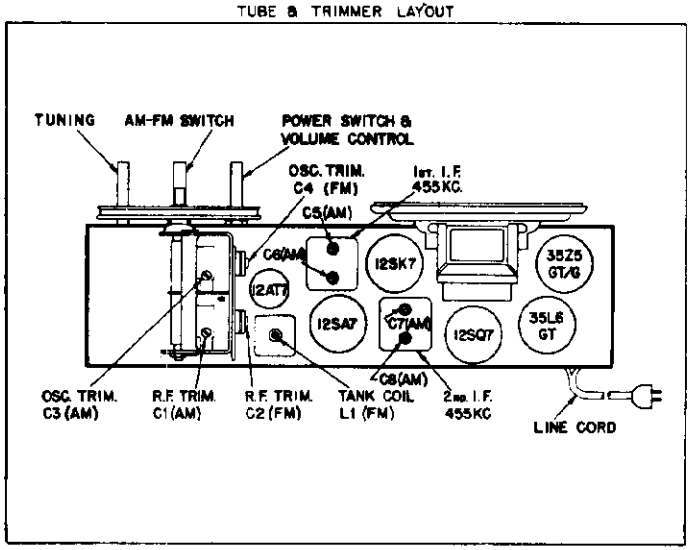

ALIGNMENT PROCEDURE CHART

STEP	SET BAND SWITCH ON	CONNECT HIGH SIDE OF SIGNAL GENERATOR TO—	SET SIGNAL GENERATOR TO—	TURN RECEIVER DIAL TO—	ADJUST THE FOLLOWING FOR MAXIMUM OUTPUT (KEEP SIGNAL FROM SIGNAL GENERATOR AS LOW AS POSSIBLE)
1	A.M.	R.F. SECTION OF VARIABLE CONDENSER OR PIN 4 OF THE 12SK7 TUBE IN SERIES WITH A .1MFD, 400 VOLT CONDENSER.	455 KC.	FULL CLOCKWISE POSITION (CONDENSER PLATES FULLY OPEN).	C8 AND C7 (2nd. I.F. TRANSFORMER)
2	A.M.	R.F. SECTION OF VARIABLE CONDENSER OR PIN 8 OF THE 12SA7 TUBE IN SERIES WITH A .1MFD, 400 VOLT CONDENSER.	455 KC.	FULL CLOCKWISE POSITION (CONDENSER PLATES FULLY OPEN).	C6 AND C5 (1st. I.F. TRANSFORMER)
3	A.M.	REPEAT STEPS 1 AND 2			
4	A.M.	USE RADIATED SIGNAL (CONNECT BOTH SIDES OF SIGNAL GENERATOR TO RADIATION LOOP).	1700 KC.	1700 K.C. (170 ON DIAL)	C3 (OSCILLATOR TRIMMER)
5	A.M.		1400 KC.	RESONANCE (APPROX. 140 ON DIAL.)	C1 (ANTENNA TRIMMER)

STEP	SET BAND SWITCH ON	CONNECT HIGH SIDE OF SIGNAL GENERATOR TO—	SET SIGNAL GENERATOR TO—	TURN RECEIVER DIAL TO—	ADJUST THE FOLLOWING FOR MINIMUM NOISE, AS INDICATED ON OUTPUT METER, USING AM UNMODULATED SIGNAL (KEEP SIGNAL FROM SIGNAL GENERATOR AS LOW AS POSSIBLE)
6	F.M.	R.F. SECTION OF VARIABLE CONDENSER IN SERIES WITH A 300 OHM RESISTOR.	21.75 MC.	FULL CLOCKWISE POSITION (CONDENSER PLATES FULLY OPEN).	L1 (TUNING SLUG ON TANK COIL)
7	F.M.		107 MC.	107 MC. (APPROX. 107 ON DIAL).	C4 (OSCILLATOR TRIMMER)
8	F.M.		103 MC.	RESONANCE (APPROX. 103 ON DIAL).	C2 (ANTENNA TRIMMER) ROCK VARIABLE FOR MAXIMUM SIGNAL

SERVICE AND ALIGNMENT INSTRUCTIONS

This receiver has been carefully aligned in the factory and the circuit is unusually stable. Realigning should only be attempted when necessary and only with a proper signal generator and in accordance with the service instructions. The receiver cannot be aligned on modulated signals. To insure proper broadcast alignment it is recommended to use a radiated signal. To radiate the signal connect a loop of about 6" to 8" diameter 1 turn of #14 or #12 wire across the output of the signal generator and place this loop parallel to the loop of the receiver to be aligned at a distance of 8" or 10". For complete alignment instructions on AM and FM Bands see alignment chart.

ALIGNMENT

Equipment required: Modulated r-f signal generator, output meter, insulated screw driver, two .1 mfd. 400 volt condensers, one 300 ohm resistor. An FM signal generator is not required for the alignment of this receiver.

With the receiver removed from the cabinet connect output meter across voice coil. Connect ground side of the signal generator in series with a .1/400 volt condenser to the common B—; turn volume control fully on, and keeping the output of the signal generator as low as possible, proceed in the sequence as shown on the alignment chart.

Before aligning, close the variable condenser fully counter clockwise (plates fully closed) and check that pointer coincides with the reference line. (horizontal line running through center of dial).

OLYMPIC RADIO & TELEV. INC.

MODELS 7-537V, 7-537W

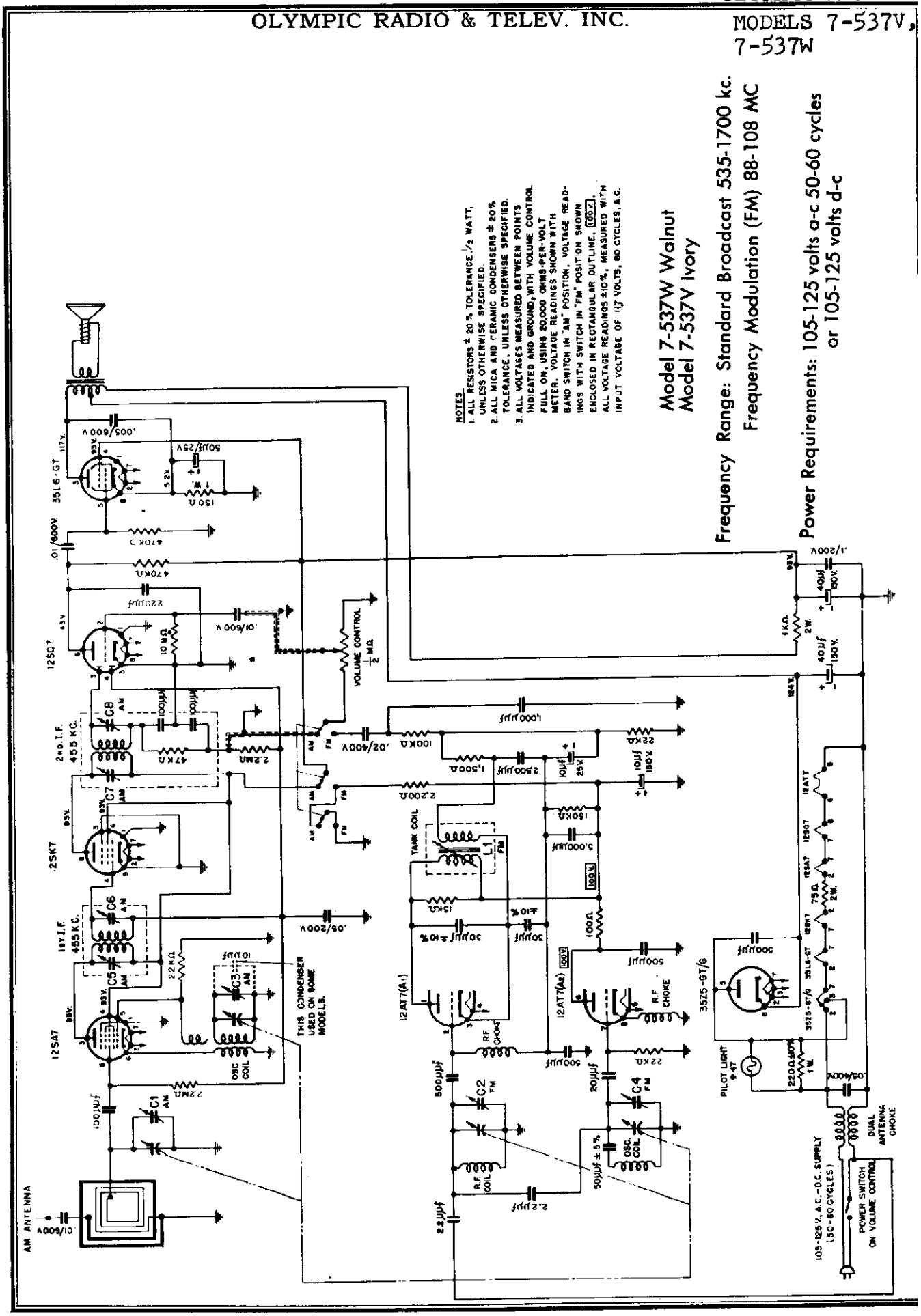

MODELS 7-622,
7-638

OLYMPIC RADIO & TELEV. INC.

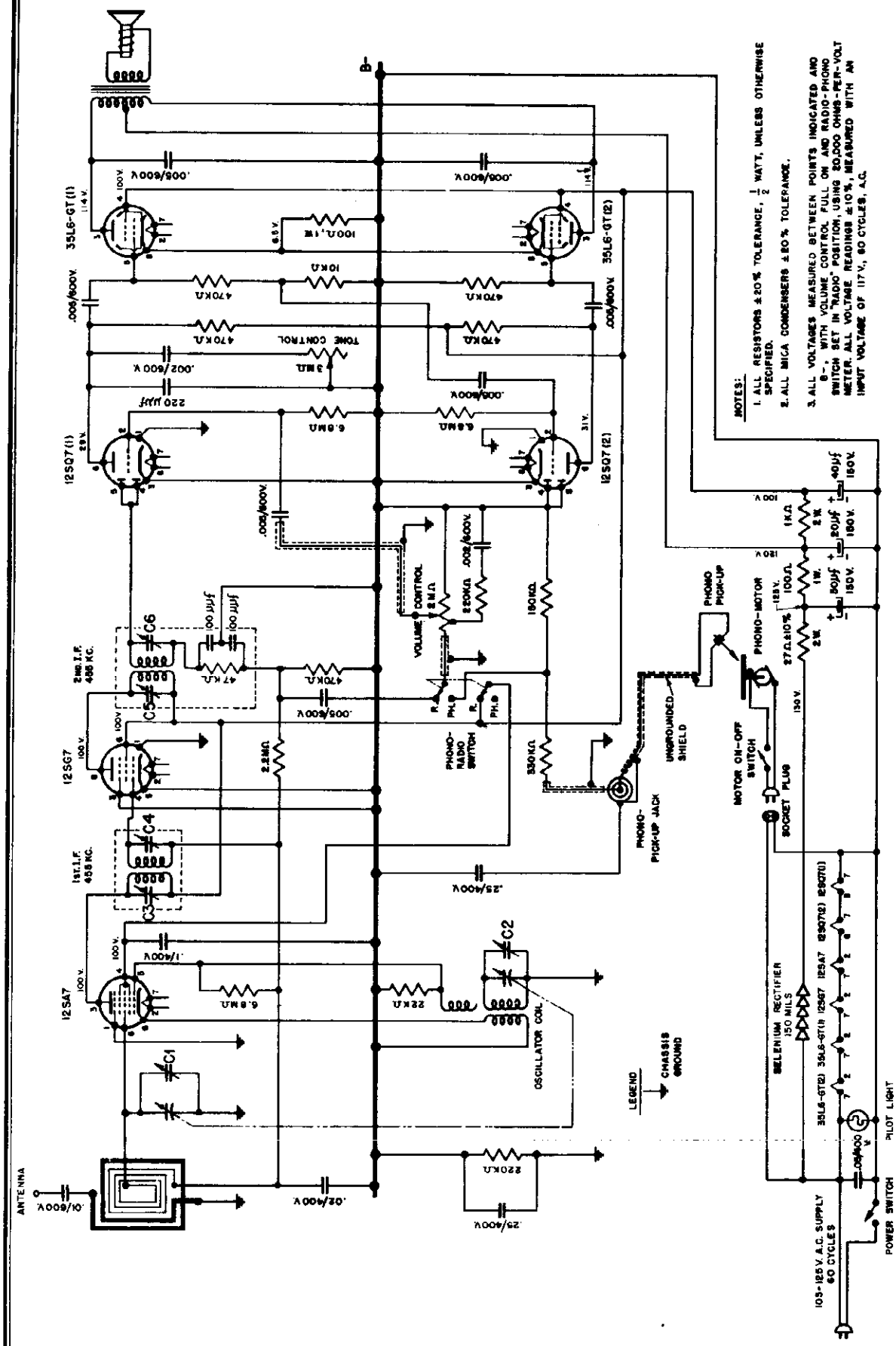

Frequency Range: 537 k.c. to 1700 k.c.

Power Requirement: 105-125 volts a-c 60 cycles

Power Consumption: Receiver: 40 watts Receiver with Record Changer: 55 watts

RECORD CHANGERS:Con Inst. Model 700 Series RCD SH 10 1

SERVICE AND ALIGNMENT INSTRUCTIONS

For tube replacement it is not necessary to remove the chassis from its cabinet. Tilt cabinet forward and the tubes will be accessible through the opening in the cabinet bottom. To service this receiver it is necessary to remove the motorboard first and then remove the chassis through the top opening of the cabinet. To do this unfasten the screws holding the motorboard in place, lift the entire motorboard with the record changer, disconnect motor and pick-up plugs from chassis and remove motorboard. Now unsolder the leads from the chassis on the loop, or remove the screw holding the loop to the cabinet side to permit removal of the loop with the chassis. The chassis can now be removed by unfastening the two (2) screws holding it to the base plate. WHEN REMOVING THE CHANGER BE SURE TO PLACE IT IN A POSITION WHEREBY THE CHANGER MECHANISM WILL NOT BE DAMAGED.

To insure proper alignment it is suggested to use a radiated signal. To radiate a signal connect a loop of about 6" to 8" diameter, (one turn of #14 or #12 wire) across the output of the signal generator and place this loop parallel to the loop of the receiver to be aligned, at a distance of about 8" or 10". While aligning keep the distance between the receiver loop and the chassis approximately equal to their distance when assembled in their cabinet.

ALIGNMENT:

Equipment Required: Modulated r-f signal generator; output meter; insulated screw driver; one .1 mfd 400 volts and one 50 mmfd 400 volts condenser; one radiation loop.

With the receiver removed from the cabinet, connect output meter across voice coil. Turn volume control fully on, and keeping the output of the signal generator as low as possible, proceed in the sequence as shown on the alignment chart.

To facilitate alignment of the receiver when removed from cabinet, calibration points are provided on the pointer slide bar (see drawing).

Before aligning, close the variable condenser fully counterclockwise (plates fully closed) and check that edge of pointer carriage coincides with the "reference line" on the pointer slidebar.

ALIGNMENT PROCEDURE CHART

STEP	CONNECT HIGH SIDE OF SIGNAL GENERATOR TO-	SET SIGNAL GENERATOR TO-	SET EDGE OF POINTER CARRIAGE TO-	ADJUST THE FOLLOWING FOR MAXIMUM OUTPUT. (KEEP SIGNAL FROM SIGNAL GENERATOR AS LOW AS POSSIBLE)
1	R.F. SECTION OF VARIABLE CONDENSER IN SERIES WITH A .1 MFD. 400 VOLT CONDENSER.	455 KC.	EXTREME RIGHTHAND POSITION. (CONDENSER PLATES FULLY OPEN.)	C6, C5, C4, C3 AND REPEAT IN SAME ORDER. (1ST AND 2ND I.F. TRANSFORMERS)
2	USE RADIATED SIGNAL (CONNECT BOTH SIDES OF SIGNAL GENERATOR TO RADIATION LOOP)	1400 KC.	1400 KC. CALIBRATION POINT.	C2 AND C1 OSCILLATOR AND R.F. TRIMMERS
3		600 KC.	RESONANCE (APPROXIMATELY 600 KC. CALIBRATION POINT.)	CHECK THAT EDGE OF POINTER CARRIAGE (AT RESONANCE) COINCIDES WITH 600 KC. CALIBRATION POINT.

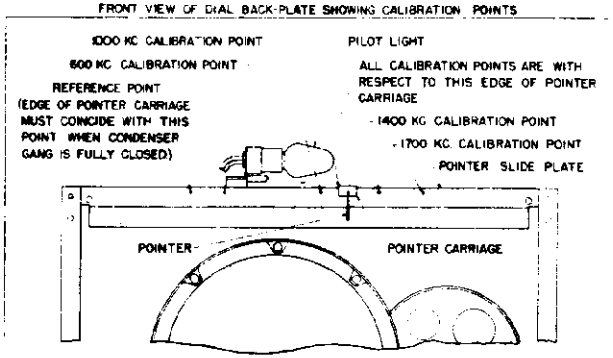

The pick-up is of the low pressure crystal type and is equipped with a permanent type needle which will give about 4,000 playings before requiring replacement. When first used a pronounced needle scratch will be heard which will be greatly reduced after about twenty playings. This "breaking-in-period" is essential on all needles of the permanent type in order to permit the point to become polished.

MODELS 7-622, 7-638 — OLYMPIC RADIO & TELEV. INC.

Part No.	Description
BU 910	Bulb—110 Volt pilot light bulb
CA 845	Cabinet—wood cabinet (for model 7-622 only)
CA 1098	Cabinet—wood cabinet (for model 7-638 only)
CL 869	Coil—oscillator coil
CO 791	Condenser—50/20 and 40/150 W.V. electrolytic cond.
CV 769	Condenser—2 gang variable condenser
DL 913	Dial—glass dial scale
KN 671	Knob—walnut knob marked "Volume"
KN 672	Knob—walnut knob marked "Off-On-Tone"
KN 673	Knob—walnut knob marked "Tuning"
KN 919	Knob—walnut knob marked "Phono-Radio"
LP 951	Loop—loop antenna
PO 959	Pointer—dial pointer
PT 793	Control—2 megohm tapped volume control
PT 794	Control—3 megohm tone control with Off-On Switch
RCM20A221M	Condenser—220 mmfd ±20% mica condenser
RCP10W4104L	Condenser—.1/400 W.V. tubular paper condenser
RCP10W4203A	Condenser—.02/400 W.V. tubular paper condenser
RCP10W4254A	Condenser—.25/400 W.V. tubular paper condenser
RCP10W4503A	Condenser—.05/400 W.V. tubular paper condenser
RCP10W6103A	Condenser—.01/600 W.V. tubular paper condenser
RCP10W6202M	Condenser—.002/600 W.V. tubular paper condenser
RCP10W6502A	Condenser—.005/600 W.V. tubular paper condenser
REB 103M	Resistor—10,000 ohms ±20% 1/2 watt resistor
REB 154M	Resistor—150,000 ohms ±20% 1/2 watt resistor
REB 223M	Resistor—22,000 ohms ±20% 1/2 watt resistor
REB 224M	Resistor—220,000 ohms ±20% 1/2 watt resistor
REB 225M	Resistor—2.2 megohms ±20% 1/2 watt resistor
REB 334M	Resistor—330,000 ohms ±20% 1/2 watt resistor
REB 474M	Resistor—470,000 ohms ±20% 1/2 watt resistor
REB 685M	Resistor—6.8 megohms ±20% 1/2 watt resistor
REC 101M	Resistor—100 ohms ±20% 1 watt resistor
RED 102M	Resistor—1000 ohms ±20% 2 watt resistor
RED 270K	Resistor 27 ohms ±10% 2 watt resistor
RF 849	Rectifier—150 mil. selenium rectifier
SK 792	Speaker—6 inch permanent magnet speaker
SP 191	Spring—dial drive lock spring
SP 218	Spring—pointer drive spring
SW 141	Switch—phono-radio switch
TR 707	Transformer—455 K.C. I.F. input transformer
TR 708	Transformer—455 K.C. I.F. output transformer
TR 818	Transformer—audio output transformer

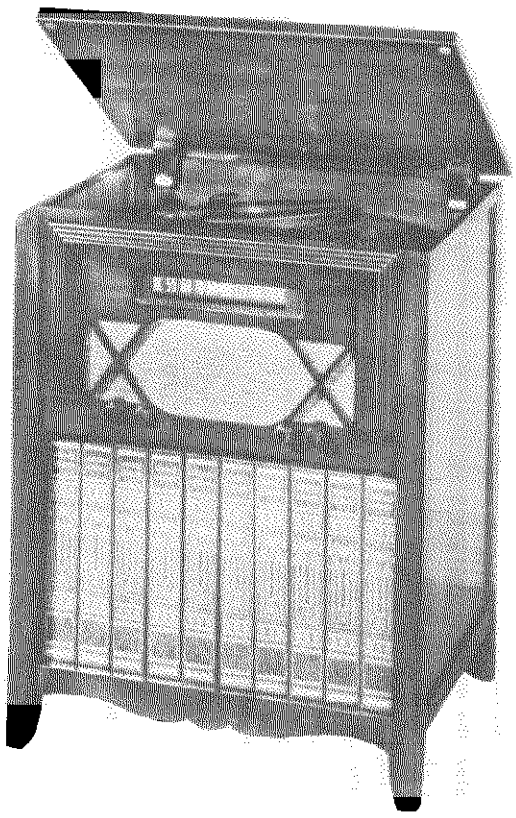

MODEL 7-638

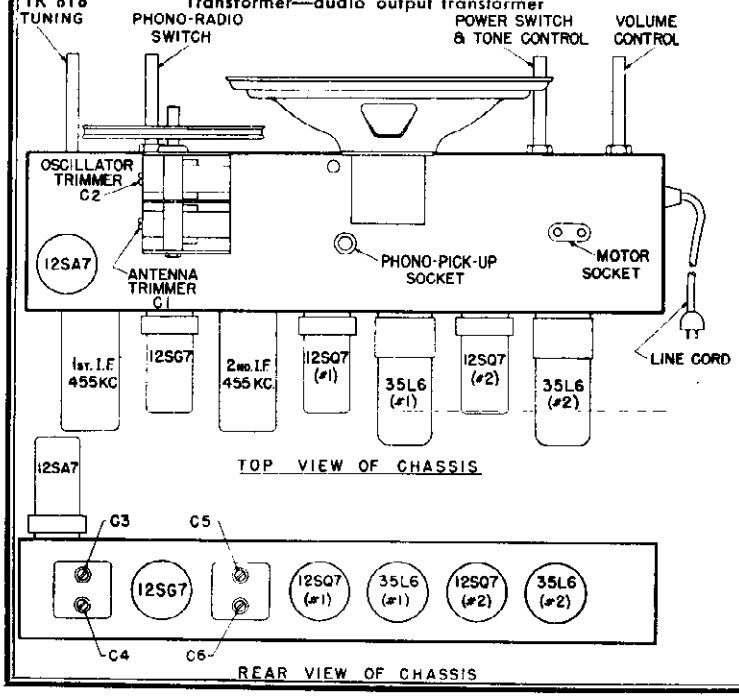

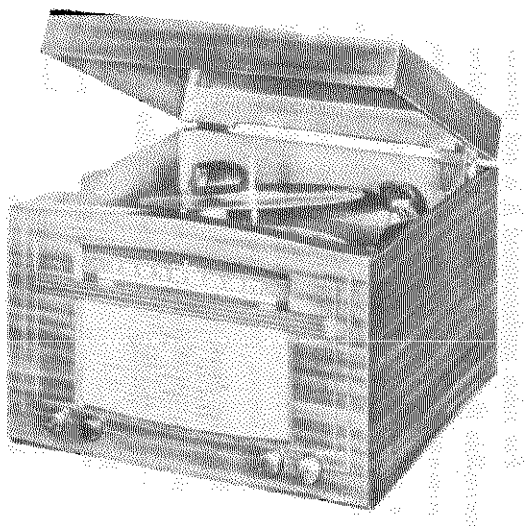

MODEL 7-622

©John F. Rider

OLYMPIC RADIO & TELEV. INC. MODELS 7-925, 7-934 7-936, 7-939

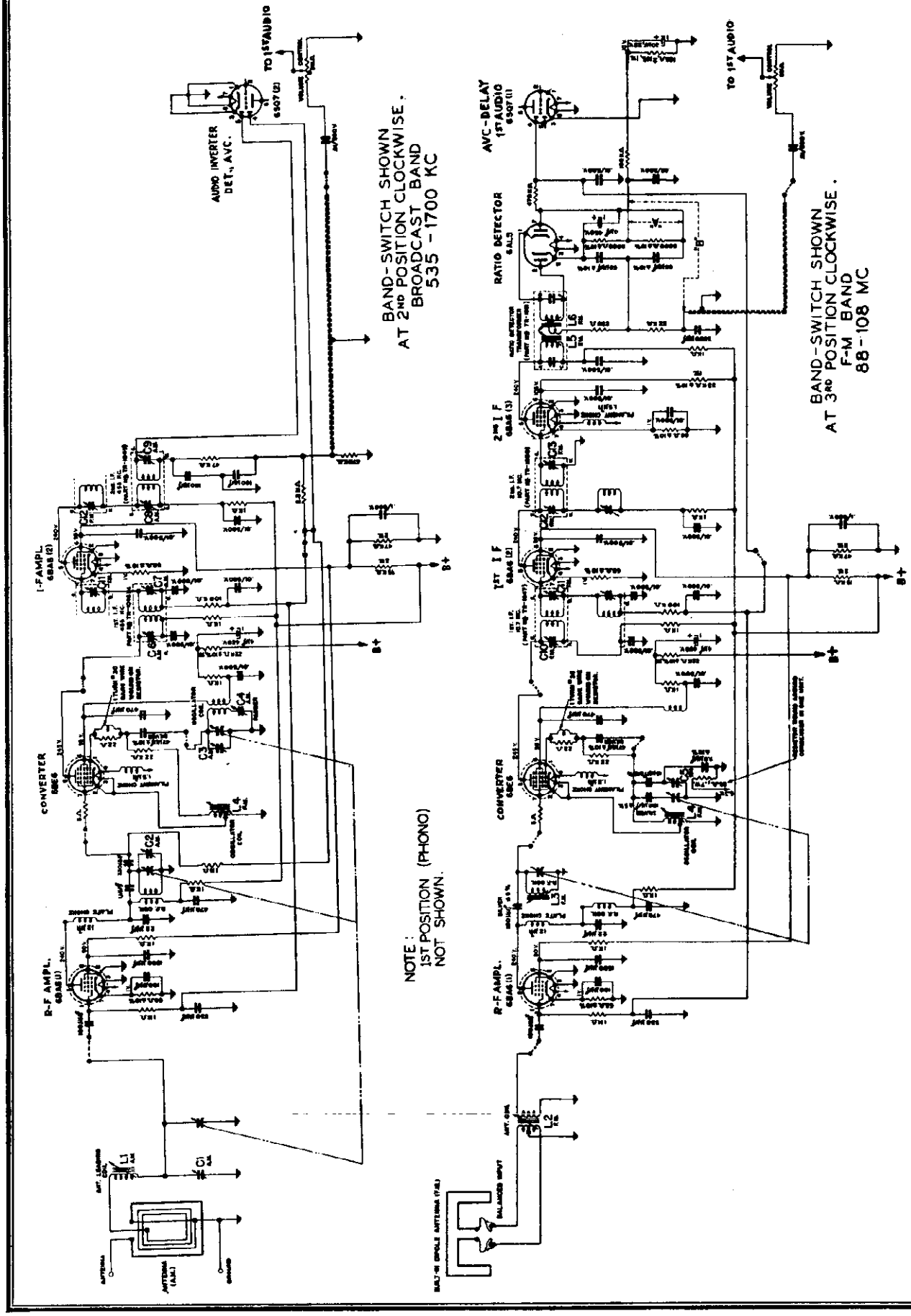

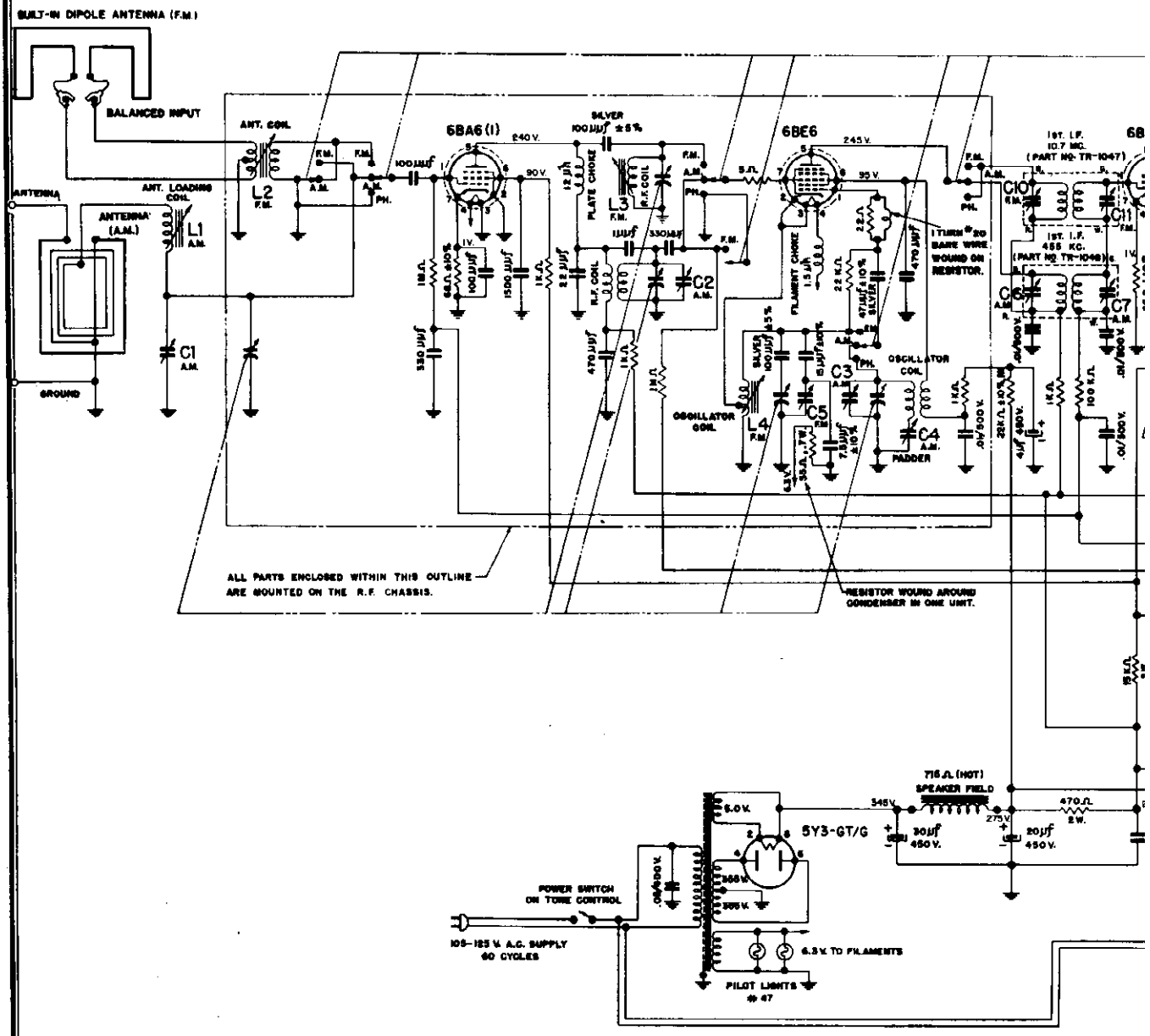

RI

Part No.	Description
CA-846	Cabinet—console used for model #7-934
CA-847	Cabinet—console used for model #7-925
CA-907	Cabinet—console used for model #7-936
CA-1101	Cabinet—console used for model #7-939
CCA-332M	Condenser—3300 mmfd. ±20% Hi K ceramicon
CCA-U150K	Condenser—15 mmfd. ±10% (N750) ceramicon
CCR-152M	Condenser—1500 mmfd. ±20% Hi K ceramicon
CK-1057	Choke—12 μh plate choke
CK-1058	Choke—1.5 μh filament choke
CL-998	Coil—broadcast antenna loading coil
CL-1025	Coil—broadcast oscillator coil
CL-1026	Coil—broadcast r-f coil
CL-1031	Coil—F.M. antenna coil
CL-1032	Coil—F.M. r-f coil
CL-1033	Coil—F.M. oscillator coil
CO-311	Condenser—1 mmfd. ±20% fixed condenser (gimmick)
CO-715	Condenser—.05/400 W.V. molded paper condenser
CO-768	Condenser—30/20/450 W.V. & 20/25 W.V. electrolytic condenser
CO-890	Condenser—7.5 mmfd. ±10% (N750) ceramic condenser with 55 ohm heater
CO-1056	Condenser—4 mfd. 450 W.V. electrolytic condenser

Part No.	Description
CO-M-5103	Condenser—.01/500 W.V. midget tubular pape
CT-388	Condenser—220-680 mmfd. padder
CT-939	Condenser—3-35 mmfd. trimmer
CT-1002	Condenser—1.6-18 mmfd. trimmer
CT-1036	Condenser—3-12 mmfd. F.M. trimmer
CV-1053	Condenser—3 gang variable condenser
DL-1070	Dial—glass dial scale
IC-1015	Core—iron core for CL-998
IC-1088	Core—iron core for CL-1031
KN-422	Knob—walnut knob marked "Volume"
KN-423	Knob—walnut knob marked "Off-On-Tone"
KN-425	Knob—walnut knob marked "Tuning"
KN-1074	Knob—walnut knob marked "FM-AM-Phono"
LP-1008	Loop—loop antenna
PO-1011	Pointer
PT-567	Control—2 megohm tapped volume control
PT-568	Control—3 megohm tone control with S.P.S.T. sw
RCM20A101M	Condenser—100 mmfd. ±20% mica condenser
RCM20A220M	Condenser—22 mmfd. ±20% mica condenser
RCM20A331M	Condenser—330 mmfd. ±20% mica condenser
RCM20A471M	Condenser—470 mmfd. ±20% mica condenser
RCM20A680K	Condenser—68 mmfd. ±10% mica condenser
RCM20CX101J	Condenser—100 mmfd. ±5% silver mica

RADIO & TELEV. INC.

MODELS 7-925, 7-934, 7-936, 7-939

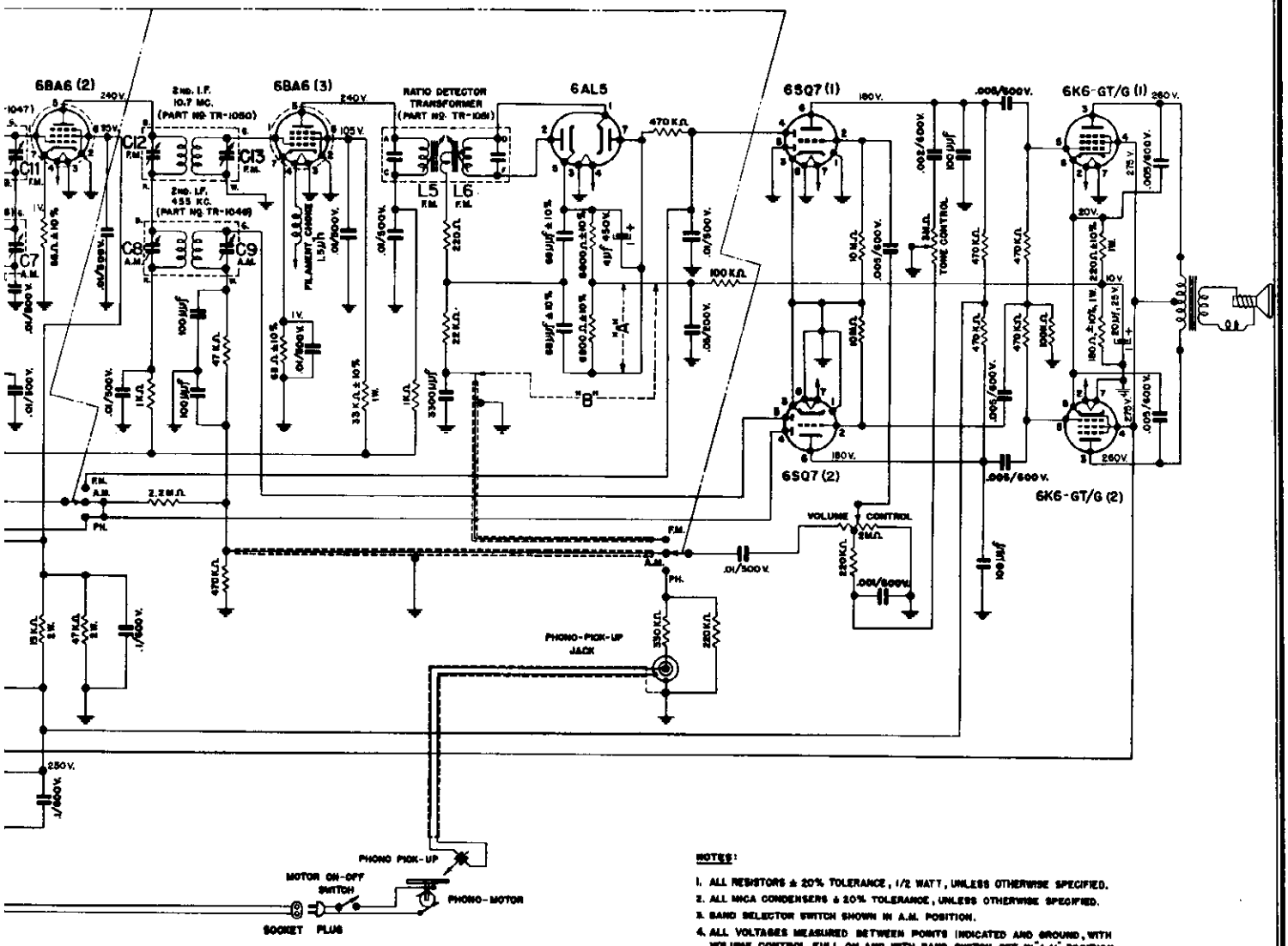

COLOR CODE FOR I.F. TRANSFORMERS.

B. BLUE
G. GREEN
R. RED
W. WHITE

NOTES:

1. ALL RESISTORS ± 20% TOLERANCE, 1/2 WATT, UNLESS OTHERWISE SPECIFIED.
2. ALL MICA CONDENSERS ± 20% TOLERANCE, UNLESS OTHERWISE SPECIFIED.
3. BAND SELECTOR SWITCH SHOWN IN A.M. POSITION.
4. ALL VOLTAGES MEASURED BETWEEN POINTS INDICATED AND GROUND, WITH VOLUME CONTROL FULL ON AND WITH BAND SWITCH SET IN "A.M." POSITION, USING 20,000 OHMS-PER-VOLT METER. ALL VOLTAGE READINGS ± 10%, MEASURED WITH AN INPUT VOLTAGE OF 117 V., 60 CYCLES, A.C.

REPLACEMENT PARTS

	Part No.	Description
r paper condenser	RCM20CX470K	Condenser—47 mmfd. ±10% silver mica
	RCP10W2503A	Condenser—.05/200 W.V. paper tub. condenser
	RCP10W6102A	Condenser—.001/600 W.V. paper tub. condenser
	RCP10W6103A	Condenser—.01/600 W.V. paper tub. condenser
	RCP10W6104A	Condenser—.1/600 W.V. paper tub. condenser
	RCP10W6202M	Condenser—.002/600 W.V. paper tub. condenser
	RCP10W6502A	Condenser—.005/600 W.V. paper tub. condenser
	REB 100M	Resistor—10 ohms ±20% 1/2W. resistor
	REB 102M	Resistor—1000 ohms ±20% 1/2W. resistor
	REB 104M	Resistor—100,000 ohms ±20% 1/2W. resistor
"	REB 105M	Resistor—1 megohm ±20% 1/2W. resistor
	REB 106M	Resistor—10 megohms ±20% 1/2W. resistor
no"	REB 220M	Resistor—22 ohms ±20% 1/2W. resistor
	REB 221M	Resistor—220 ohms ±20% 1/2W. resistor
	REB 223M	Resistor—22,000 ohms ±20% 1/2W. resistor
ol	REB 224M	Resistor—220,000 ohms ±20% 1/2W. resistor
S.T. switch	REB 225M	Resistor—2.2 megohms ±20% 1/2W. resistor
denser	REB 334M	Resistor—330,000 ohms ±20% 1/2W. resistor
lenser	REB 473M	Resistor—47,000 ohms ±20% 1/2W. resistor
denser	REB 474M	Resistor—470,000 ohms ±20% 1/2W. resistor
denser	REB 680K	Resistor—68 ohms ±10% 1/2W. resistor
enser	REB 682K	Resistor—6800 ohms ±10% 1/2W. resistor
	REC 181K	Resistor—180 ohms ±10% 1W. resistor

Part No.	Description
REC 221K	Resistor—220 ohms ±10% 1W. resistor
REC 223K	Resistor—22,000 ohms ±10% 1W. resistor
REC 333K	Resistor—33,000 ohms ±10% 1W. resistor
RED 153M	Resistor—15,000 ohms ±20% 2W. resistor
RED 471M	Resistor—470 ohms ±20% 2W. resistor
RED 473M	Resistor—47,000 ohms ±20% 2W. resistor
RX-844	Automatic record changer for model 7-925 only
RX-227-1	Automatic record changer for models 7-934 and 7-936
RX-524	Automatic record changer for model 7-939
SK-384	Speaker—12" dynamic speaker (715 ohms)
SP-191	Spring—dial drive lock spring
SP-218	Spring—pointer drive spring
SW-843	Switch—band switch
TR-1047	Transformer—10.7 mc first F.M. I.F. transformer
TR-1048	Transformer—455 kc first A.M. I.F. transformer
TR-1049	Transformer—455 kc second A.M. I.F. transformer
TR-1050	Transformer—10.7 mc second F.M. I.F. transformer
TR-1051	Transformer—ratio detector transformer
TR-1052	Transformer—power transformer (110 mA.)
WI-1018	Wire—3 conductor parallel cable
WI-1079	Wire—300 ohms transmission line

RECORD CHANGERS: For 7-925, Webster Model 56, RCD.CH. 15-10; For 7-93[illegible]

MODELS 7-925, 7-934, 7-936, 7-939

OLYMPIC RADIO & TELEV. INC.

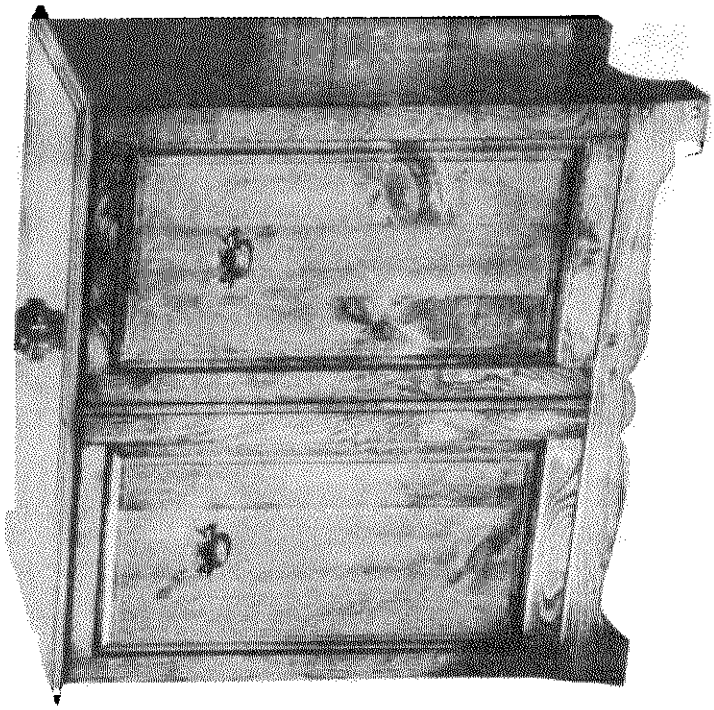

MODEL 7-936

Frequency Range: A.M. 535-1700 kc. and F.M. 88-108 mc

Power Requirement: 105-125 Volts a-c 60 cycles

Power Consumption: Receiver on a-m: 103 watts
Receiver with Record Changer: 120 watts

TUBE & TRIMMER LAYOUT

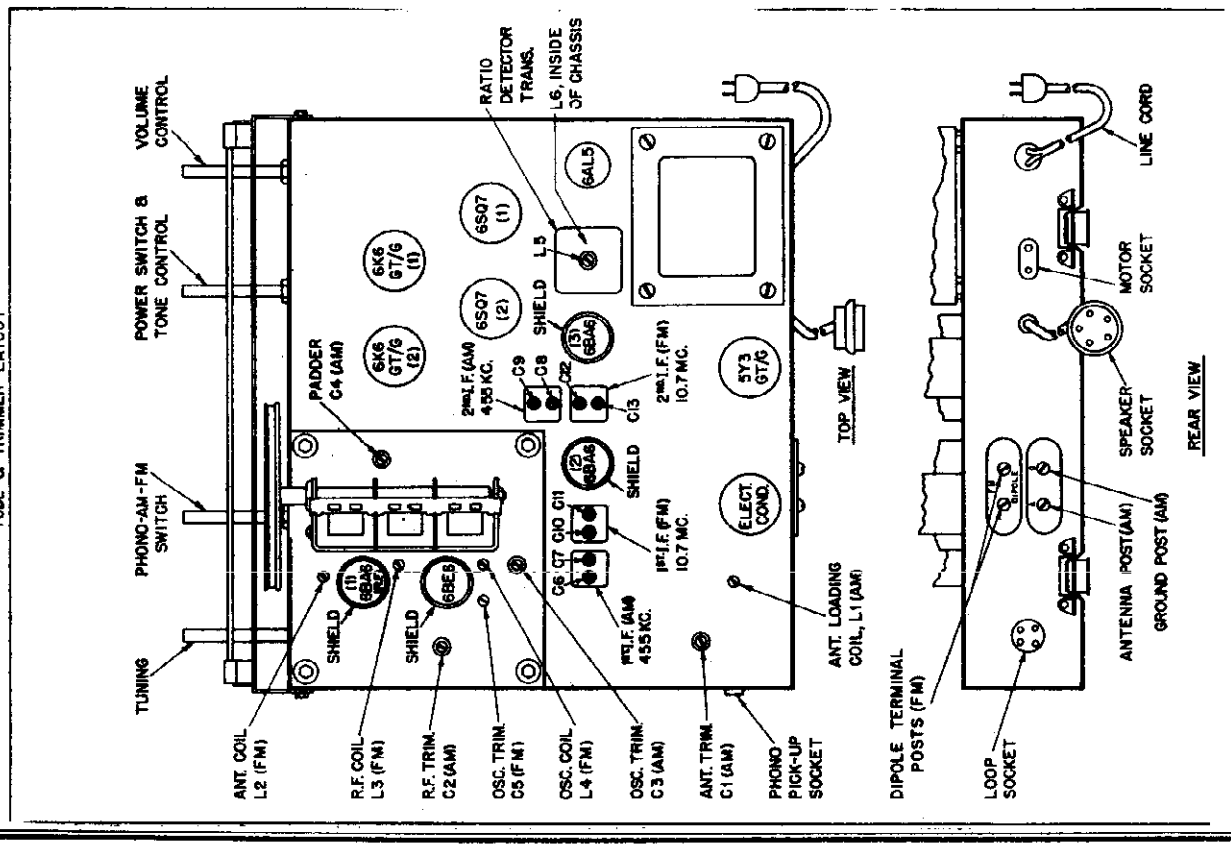

©John F. Rider

OLYMPIC RADIO & TELEV. INC. MODELS 7-925, 7-934, 7-936, 7-939

ALIGNMENT PROCEDURE CHART

STEP	SET BAND SWITCH ON-	CONNECT HIGH SIDE OF SIGNAL GENERATOR TO-	SET SIGNAL GENERATOR TO-	TURN POINTER TO-	READ OUTPUT ON-	ADJUST THE FOLLOWING- (KEEP SIGNAL FROM SIGNAL GENERATOR AS LOW AS POSSIBLE).
1	F. M.	PIN 1 OF 6BA6 (3) TUBE FOR .1 VOLT SIGNAL.	10.7 MC. UNMODULATED SIGNAL.	EXTREME RIGHT HAND POSITION. (CONDENSER PLATES FULLY OPEN).	VACUUM TUBE VOLTMETER ACROSS 6800 OHM RESISTOR (SEE "A" ON CIRCUIT DIAGRAM).	L5 (RATIO DETECTOR) FOR MAXIMUM READING.
					VACUUM TUBE VOLTMETER ACROSS "B" ON CIRCUIT DIAGRAM.	L6 (RATIO DETECTOR) FOR ZERO READING.
2	F. M.	PIN 7 OF 6BE6 TUBE IN SERIES WITH A .1MFD., 400 VOLT CONDENSER.			VACUUM TUBE VOLTMETER ACROSS 6800 OHM RESISTOR (SEE "A" ON CIRCUIT DIAGRAM).	C13 AND C12 (2nd. I.F. TRANSFORMER) FOR MAXIMUM READING.
3	F. M.					C11 AND C10 (1st. I.F. TRANSFORMER) FOR MAXIMUM READING.
4	A.M.	R.F. SECTION OF VARIABLE CONDENSER OR PIN 7 OF THE 6BE6 TUBE IN SERIES WITH A .1 MFD.,400 VOLT CONDENSER.	455 KC.		OUTPUT METER ACROSS SPEAKER VOICE COIL.	C9 AND C8 (2nd. I.F. TRANSFORMER) FOR MAXIMUM OUTPUT.
5	A.M.					C7 AND C6 (1st. I.F. TRANSFORMER) FOR MAXIMUM OUTPUT.
6	F. M.	REPEAT STEPS 2 AND 3.				
7	A.M.	ANTENNA SECTION OF VARIABLE CONDENSER OR PIN 1 OF THE 6BA6 TUBE IN SERIES WITH A .1MFD., 400 VOLT CONDENSER.	1700 KC.	1700 KC. ON DIAL.	OUTPUT METER ACROSS SPEAKER VOICE COIL.	C3 (OSCILLATOR TRIMMER) FOR MAXIMUM OUTPUT.
8	A.M.		1500 KC.	RESONANCE, APPROXIMATELY 1500 KC. ON DIAL.		C2 (R.F. TRIMMER) FOR MAXIMUM OUTPUT.
9	A.M.		600 KC.	RESONANCE, APPROXIMATELY 600 KC. ON DIAL.		C4 (PADDER) ROCK VARIABLE FOR MAXIMUM SIGNAL.
10	A.M.	REPEAT STEPS 7, 8 AND 9.				
11	A.M.	USE RADIATED SIGNAL (CONNECT BOTH SIDES OF SIGNAL GENERATOR TO RADIATION LOOP).	600 KC.	RESONANCE, APPROXIMATELY 600 KC. ON DIAL.	OUTPUT METER ACROSS SPEAKER VOICE COIL.	L1 (ANTENNA LOADING COIL) ROCK VARIABLE FOR MAXIMUM SIGNAL.
12	A.M.		1500 KC.	RESONANCE, APPROXIMATELY 1500 KC. ON DIAL.		C1 (ANTENNA TRIMMER) FOR MAXIMUM OUTPUT.
13	A.M.	REPEAT STEPS 11 AND 12.				
14	F. M.	CONNECT F.M. SIGNAL GENERATOR TO DIPOLE TERMINAL POSTS WITH A 150 OHM RESISTOR IN SERIES WITH EACH SIDE. 30% MODULATED SIGNAL.	108 MC.	108 MC. ON DIAL.	OUTPUT METER ACROSS SPEAKER VOICE COIL.	C5 (OSCILLATOR TRIMMER) FOR MAXIMUM OUTPUT.
15	F. M.		88 MC.	88 MC. ON DIAL. (CHECK IMAGE AT 109.4 MC.).		L4 (OSCILLATOR COIL) FOR MAXIMUM OUTPUT.
16	F. M.	REPEAT STEPS 14 AND 15.				
17	F. M.		102 MC.	102 MC. ON DIAL.	OUTPUT METER ACROSS SPEAKER VOICE COIL.	L3 (R.F. COIL) FOR MAXIMUM OUTPUT.
						L2 (ANTENNA COIL) FOR MAXIMUM OUTPUT.

The pick-up is of the low-pressure crystal type and is equipped with a permanent needle which will give about 4,000 playings before requiring replacement. When first used a pronounced needle scratch will be heard which will be greatly reduced after about twenty playings. This "breaking in" period is essential on all needles of the permanent type in order to permit the point to become polished.

This instrument is equipped with a sensitive 9 tube plus rectifier superheterodyne receiver. The rotatable built-in loop antenna will provide satisfactory reception under all normal operating conditions. The loop is mounted between springs, so that it can be freely rotated to the best position for reception. Once this position is established it is no longer necessary to make any further loop adjustments. The directional characteristic of the loop is particularly useful for the elimination of elevator noises or other local electrical disturbances.

SERVICE AND ALIGNMENT INSTRUCTIONS

To remove the chassis from the console, it is first necessary to disconnect the loop connector plug, the female connector plug on the speaker, the phono input plug, the motor plug and the two F.M. lugs on the F.M. antenna terminal post. Then remove the four knobs and the four screws holding the chassis to its mounting panel.

CAUTION: WHEN REMOVING THE CHANGER BE SURE TO PLACE IT IN A POSITION IN WHICH THE CHANGER MECHANISM WILL NOT BE DAMAGED.

ALIGNMENT

Equipment Required: Modulated a-m, r-f signal generator; modulated f-m signal generator covering the range from 88 to 108 megacycles; vacuum tube voltmeter; output meter; insulated screw driver; radiation loop (1 turn of about 6" to 8" diameter of #12 or #14 wire connected across output of signal generator and placed parallel to receiver loop about 8" or 10" away); one .1 mfd 400 volt condenser; two 150 ohm resistors.

With the receiver removed from the cabinet, connect output meter, or vacuum tube voltmeter and signal generator as indicated in the alignment procedure chart and keeping the output of the generator as low as possible, proceed exactly in the sequence as shown on the chart.

Before aligning, close the variable condenser fully counter clockwise (plates fully closed) and check that pointer coincides with the reference line on the dial.

ALIGNMENT PROCEDURE CHART

STEP	SET BAND SWITCH ON-	CONNECT HIGH SIDE OF SIGNAL GENERATOR TO-	SET SIGNAL GENERATOR TO-	TURN POINTER TO-	READ OUTPUT ON-	ADJUST THE FOLLOWING- (KEEP SIGNAL FROM SIGNAL GENERATOR AS LOW AS POSSIBLE).
1	F.M.	PIN 1 OF 6BA6 (3) TUBE FOR .1 VOLT SIGNAL.	10.7 MC. UNMODULATED SIGNAL.	EXTREME RIGHT HAND POSITION. (CONDENSER PLATES FULLY OPEN).	VACUUM TUBE VOLTMETER ACROSS 6800 OHM RESISTOR (SEE "A" ON CIRCUIT DIAGRAM).	L5 (RATIO DETECTOR) FOR MAXIMUM READING.
					VACUUM TUBE VOLTMETER ACROSS "B" ON CIRCUIT DIAGRAM.	L6 (RATIO DETECTOR) FOR ZERO READING.
2	F.M.	PIN 7 OF 6BE6 TUBE IN SERIES WITH A .1MFD, 400 VOLT CONDENSER.			VACUUM TUBE VOLTMETER ACROSS 6800 OHM RESISTOR (SEE "A" ON CIRCUIT DIAGRAM).	C13 AND C12 (2nd I.F. TRANSFORMER) FOR MAXIMUM READING.
3	F.M.					C11 AND C10 (1st I.F. TRANSFORMER) FOR MAXIMUM READING.
4	A.M.	R.F. SECTION OF VARIABLE CONDENSER OR PIN 7 OF THE 6BE6 TUBE IN SERIES WITH A .1MFD, 400 VOLT CONDENSER.	455 KC.		OUTPUT METER ACROSS SPEAKER VOICE COIL.	C9 AND C8 (2nd I.F. TRANSFORMER) FOR MAXIMUM OUTPUT.
5	A.M.					C7 AND C6 (1st I.F. TRANSFORMER) FOR MAXIMUM OUTPUT.
6	F.M.	REPEAT STEPS 2 AND 3.				
7	A.M.	ANTENNA SECTION OF VARIABLE CONDENSER OR PIN 1 OF THE 6BA6 TUBE IN SERIES WITH A .1MFD., 400 VOLT CONDENSER.	1700 KC.	1700 KC. ON DIAL.	OUTPUT METER ACROSS SPEAKER VOICE COIL.	C5 (OSCILLATOR TRIMMER) FOR MAXIMUM OUTPUT.
8	A.M.		1500 KC.	RESONANCE, APPROXIMATELY 1500 KC. ON DIAL.		C2 (R.F. TRIMMER) FOR MAXIMUM OUTPUT.
9	A.M.		600 KC.	RESONANCE, APPROXIMATELY 600 KC. ON DIAL.		C4 (PADDER) ROCK VARIABLE FOR MAXIMUM SIGNAL.
10	A.M.	REPEAT STEPS 7, 8 AND 9.				
11	A.M.	USE RADIATED SIGNAL (CONNECT BOTH SIDES OF SIGNAL GENERATOR TO RADIATION LOOP).	600 KC.	RESONANCE, APPROXIMATELY 600 KC. ON DIAL.	OUTPUT METER ACROSS SPEAKER VOICE COIL.	L1 (ANTENNA LOADING COIL) ROCK VARIABLE FOR MAXIMUM SIGNAL.
12	A.M.		1500 KC.	RESONANCE, APPROXIMATELY 1500 KC. ON DIAL.		C1 (ANTENNA TRIMMER) FOR MAXIMUM OUTPUT
13	A.M.	REPEAT STEPS 11 AND 12.				
14	F.M.	CONNECT LOW SIDE OF F.M. SIGNAL GENERATOR TO DIPOLE TERMINAL POST DIRECTLY ABOVE "G" POST OF A.M. STRIP, AND CONNECT HIGH SIDE OF F.M. GENERATOR IN SERIES WITH A 300 OHM RESISTOR TO OTHER DIPOLE TERMINAL. USE 30% MODULATED F.M. SIGNAL.	108 MC.	108 MC. ON DIAL.	OUTPUT METER ACROSS SPEAKER VOICE COIL.	C5 (OSCILLATOR TRIMMER) FOR MAXIMUM OUTPUT.
15	F.M.		88 MC.	88 MC. ON DIAL. (CHECK IMAGE AT 109.4 MC.).		L4 (OSCILLATOR COIL) FOR MAXIMUM OUTPUT.
16	F.M.	REPEAT STEPS 14 AND 15.				
17	F.M.		102 MC.	RESONANCE, APPROXIMATELY 102 MC. ON DIAL	OUTPUT METER ACROSS SPEAKER VOICE COIL.	L3 (R.F. COIL) FOR MAXIMUM OUTPUT.
			108 MC.	108 MC. ON DIAL		C14 (ANTENNA TRIMMER) FOR MAXIMUM OUTPUT.

Frequency Range: A.M. 535-1700 kc. and F.M. 88-108 mc

Power Requirement: 105-125 Volts a-c 60 cycles

Power Consumption: Receiver on a-m: 103 watts
Receiver with Record Changer: 120 watts

To remove the chassis from the console, it is first necessary to disconnect the loop connector plug, the female connector plug on the speaker, the phono input plug, the motor plug and the two F.M. lugs on the F.M. antenna terminal post. Then remove the four knobs and the four screws holding the chassis to its mounting panel.

CAUTION: WHEN REMOVING THE CHANGER BE SURE TO PLACE IT IN A POSITION IN WHICH THE CHANGER MECHANISM WILL NOT BE DAMAGED.

ALIGNMENT

Equipment Required: Modulated a-m, r-f signal generator; modulated f-m signal generator covering the range from 88 to 108 megacycles; vacuum tube voltmeter; output meter; insulated screw driver; radiation loop (1 turn of about 6" to 8" diameter of #12 or #14 wire connected across output of signal generator and placed parallel to receiver loop about 8" or 10" away); one .1 mfd 400 volt condenser; two 150 ohm resistors.

With the receiver removed from the cabinet, connect output meter, or vacuum tube voltmeter and signal generator as indicated in the alignment procedure chart and keeping the output of the generator as low as possible, proceed exactly in the sequence as shown on the chart.

Before aligning, close the variable condenser fully counter clockwise (plates fully closed) and check that pointer coincides with the reference line on the dial.

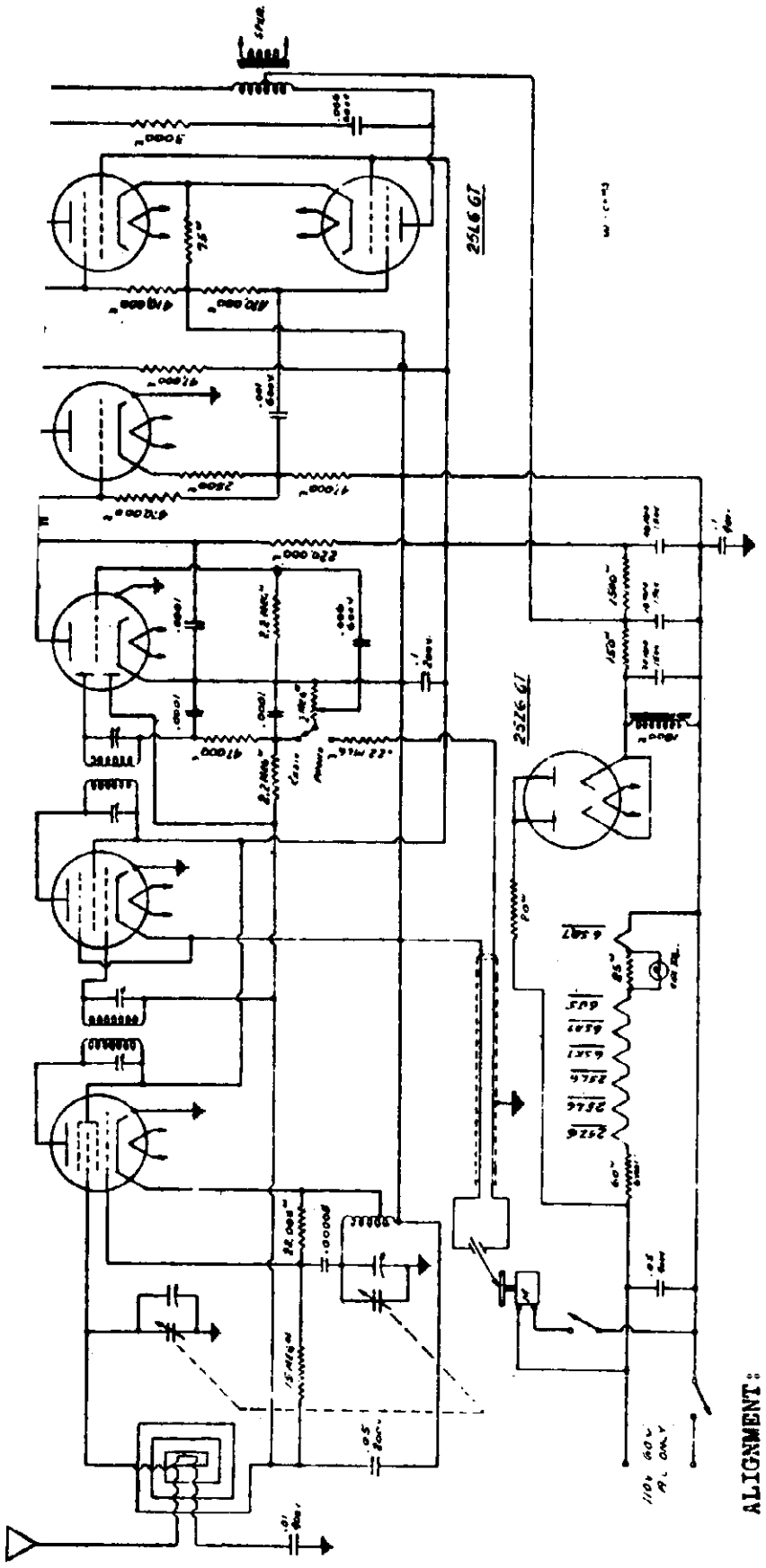

ALIGNMENT:

Should it be necessary to re-align the receiver, proceed in the usual manner by first adjusting the I.F. transformers for maximum output as indicated by an output meter connected across the plate and B-bus through a series condenser.

NOTE:---This chassis is wired with a common negative bus instead of grounding directly to the chassis and therefore all negative connections are to be made to the B-bus instead of the chassis. In connecting the signal generator connect the high side to the antenna section of the tuning condenser and the low side to the B-bus. Now rotate the dial to 1500 K.C. and with a 1500 K.C. signal radiating from a dummy loop of the signal generator first adjust the oscillator trimmer for maximum output and follow with an adjustment of the antenna trimmer for maximum output. No further adjustments are required.

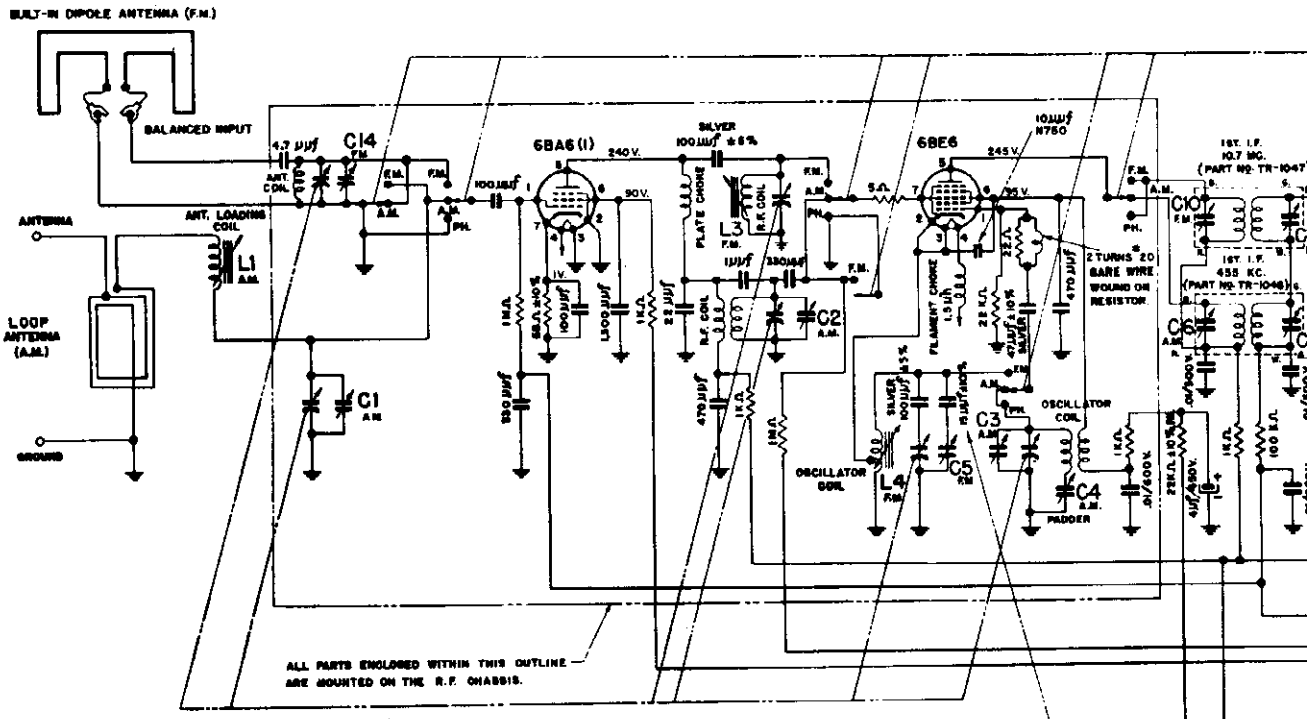

REPLACEMENT PARTS

Part No.	Description
CA-846	Cabinet—console used for model #7-934
CA-847	Cabinet—console used for model #7-925
CA-907	Cabinet—console used for model #7-936
CCA-332M	Condenser—3300 mmfd. ±20% Hi K ceramicon
CCA-U150K	Condenser—15 mmfd. ±10% (N750) ceramicon
CCR-152M	Condenser—1500 mmfd. ±20% Hi K ceramicon
CCR-U100K	Condenser—10mmfd. ±10% (N750) ceramicon
CK-1057	Choke—plate choke
CK-1058	Choke—1.5 μh filament choke
CL-1025	Coil—broadcast oscillator coil
CL-1026	Coil—broadcast r-f coil
CL-1032	Coil—F.M. r-f coil
CL-1033	Coil—F.M. oscillator coil
CL-1269	Coil—F.M. antenna coil
CL-1278	Coil—broadcast antenna loading coil
CO-311	Condenser—1 mmfd. ±20% fixed condenser (gimmick)
CO-715	Condenser—.05/400 W.V. molded paper condenser
CO-1056	Condenser—4 mfd. 450 W.V. electrolytic condenser
CO-1083	Condenser—4.7 mmfd. ±20% fixed condenser
CO-1270	Condenser—30/500 W.V. & 20+4/450 W.V. electrolytic condenser
CO-M-5103	Condenser—.01/500 W.V. midget tubular paper condenser
CT-388	Condenser—220-680 mmfd. padder
CT-939	Condenser—3-35 mmfd. trimmer
CT-1002	Condenser—1.6-18 mmfd. trimmer
CT-1036	Condenser—3-12 mmfd. F.M. trimmer
CV-1053	Condenser—3 gang variable condenser
DL-1070-1	Dial—glass dial scale
IC-1015	Core—iron core for CL-1278
KN-422	Knob—walnut knob marked "Volume"
KN-423	Knob—walnut knob marked "Off-On-Tone"
KN-425	Knob—walnut knob marked "Tuning"
KN-1074	Knob—walnut knob marked "FM-AM-Phono"
PO-1011	Pointer
PT-567	Control—2 megohm tapped volume control
PT-568	Control—3 megohm tone control with S.P.S.T. switch
RCM20A101M	Condenser—100 mmfd. ±20% mica condenser
RCM20A151K	Condenser—150 mmfd. ±10% mica condenser
RCM20A220M	Condenser—22 mmfd. ±20% mica condenser
RCM20A331M	Condenser—330 mmfd. ±20% mica condenser
RCM20A471M	Condenser—470 mmfd. ±20% mica condenser
RCM20CX101J	Condenser—100 mmfd. ±5% silver mica
RCM20CX470K	Condenser—47 mmfd. ±10% silver mica
RCP10W2503A	Condenser—.05/200 W.V. paper tub. condenser
RCP10W6102A	Condenser—.001/600 W.V. paper tub. condenser
RCP10W6103A	Condenser—.01/600 W.V. paper tub. condenser
RCP10W6104A	Condenser—.1/600 W.V. paper tub. condenser
RCP10W6202M	Condenser—.002/600 W.V. paper tub. condenser
RCP10W6502A	Condenser—.005/600 W.V. paper tub. condenser
REB 100M	Resistor—10 ohms ±20% ½W. resistor
REB 102M	Resistor—1000 ohms ±20% ½W. resistor
REB 103K	Resistor—10,000 ohms ±10% ½W. resistor
REB 104K	Resistor—100,000 ohms ±10% ½W. resistor
REB 104M	Resistor—100,000 ohms ±20% ½W. resistor
REB 105M	Resistor—1 megohm ±20% ½W. resistor
REB 106M	Resistor—10 megohms ±20% ½W. resistor
REB 155K	Resistor—1.5 megohms ±10% ½W. resistor
REB 220M	Resistor—22 ohms ±20% ½W. resistor
REB 221M	Resistor—220 ohms ±20% ½W. resistor
REB 223M	Resistor—22,000 ohms ±20% ½W. resistor
REB 224M	Resistor—220,000 ohms ±20% ½W. resistor
REB 225M	Resistor—2.2 megohms ± 20% ½W. resistor
REB 334M	Resistor—330,000 ohms ±20% ½W. resistor
REB 473M	Resistor—47,000 ohms ±20% ½W. resistor
REB 474M	Resistor—470,000 ohms ±20% ½W. resistor
REB 680K	Resistor—68 ohms ±10% ½W. resistor
REC 223K	Resistor—22,000 ohms ±10% 1W. resistor
REC 333K	Resistor—33,000 ohms ±10% 1W. resistor
RED 153M	Resistor—15,000 ohms ±20% 2W. resistor
RED 391M	Resistor—390 ohms ±20% 2W. resistor
RED 471M	Resistor—470 ohms ±20% 2W. resistor
RED 473M	Resistor—47,000 ohms ±20% 2W. resistor
SK-384	Speaker—12" dynamic speaker (715 ohms)
SP-191	Spring—dial drive lock spring
SP-218	Spring—pointer drive spring
SW-843	Switch—band switch
TR-1047	Transformer—10.7 mc first F.M. I.F. transformer
TR-1048	Transformer—455 kc first A.M. I.F. transformer
TR-1049	Transformer—455 kc second A.M. I.F. transformer
TR-1050	Transformer—10.7 mc second F.M. I.F. transformer
TR-1051-1	Transformer—ratio detector transformer
TR-1052	Transformer—power transformer (110 mA.)
WI-1079	Wire—300 ohms transmission line

IO & TELEV. INC.

MODELS 8-92
8-934, 8-93

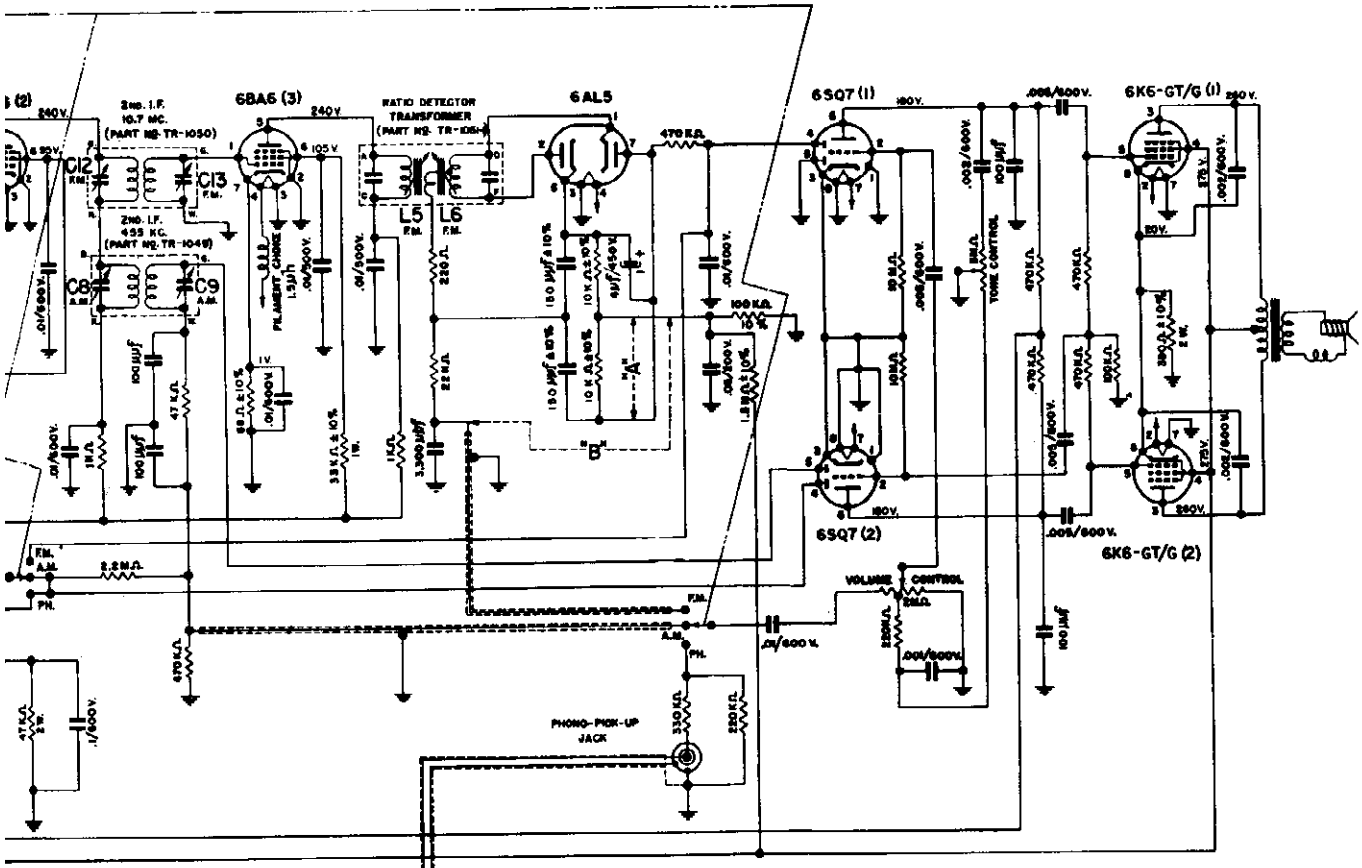

COLOR CODE FOR I.F. TRANSFORMERS.

B. BLUE
G. GREEN
R. RED
W. WHITE

NOTES:

1. ALL RESISTORS ± 20% TOLERANCE, 1/2 WATT, UNLESS OTHERWISE SPECIFIED.
2. ALL MICA CONDENSERS ± 20% TOLERANCE, UNLESS OTHERWISE SPECIFIED.
3. BAND SELECTOR SWITCH SHOWN IN A.M. POSITION.
4. ALL VOLTAGES MEASURED BETWEEN POINTS INDICATED AND GROUND, WITH VOLUME CONTROL FULL ON AND WITH BAND SWITCH SET IN "A.M." POSITION, USING 20,000 OHMS-PER-VOLT METER. ALL VOLTAGE READINGS ± 10%, MEASURED WITH AN INPUT VOLTAGE OF 117 V., 60 CYCLES, A.C.

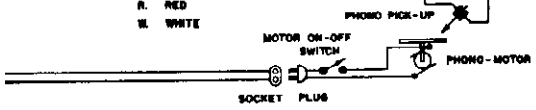

TUBE & TRIMMER LAYOUT

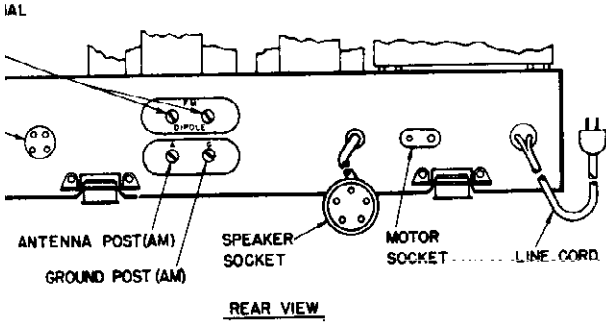

REAR VIEW

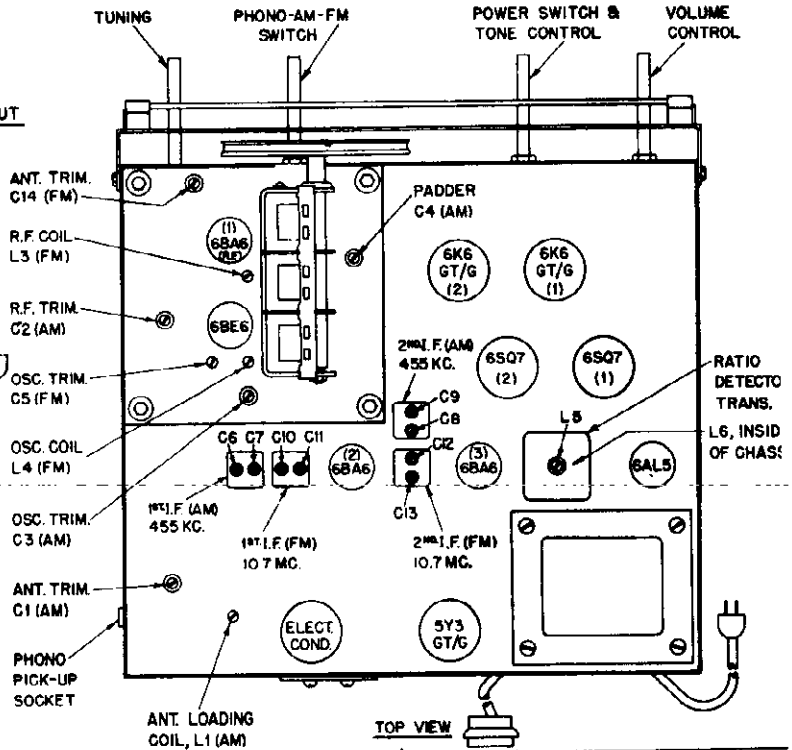

RECORD CHANGERS: For 8-925, Webster Model 156, RCD.CH. 19-1; For 8-93

PACKARD-BELL CO.

MODEL 884, 892

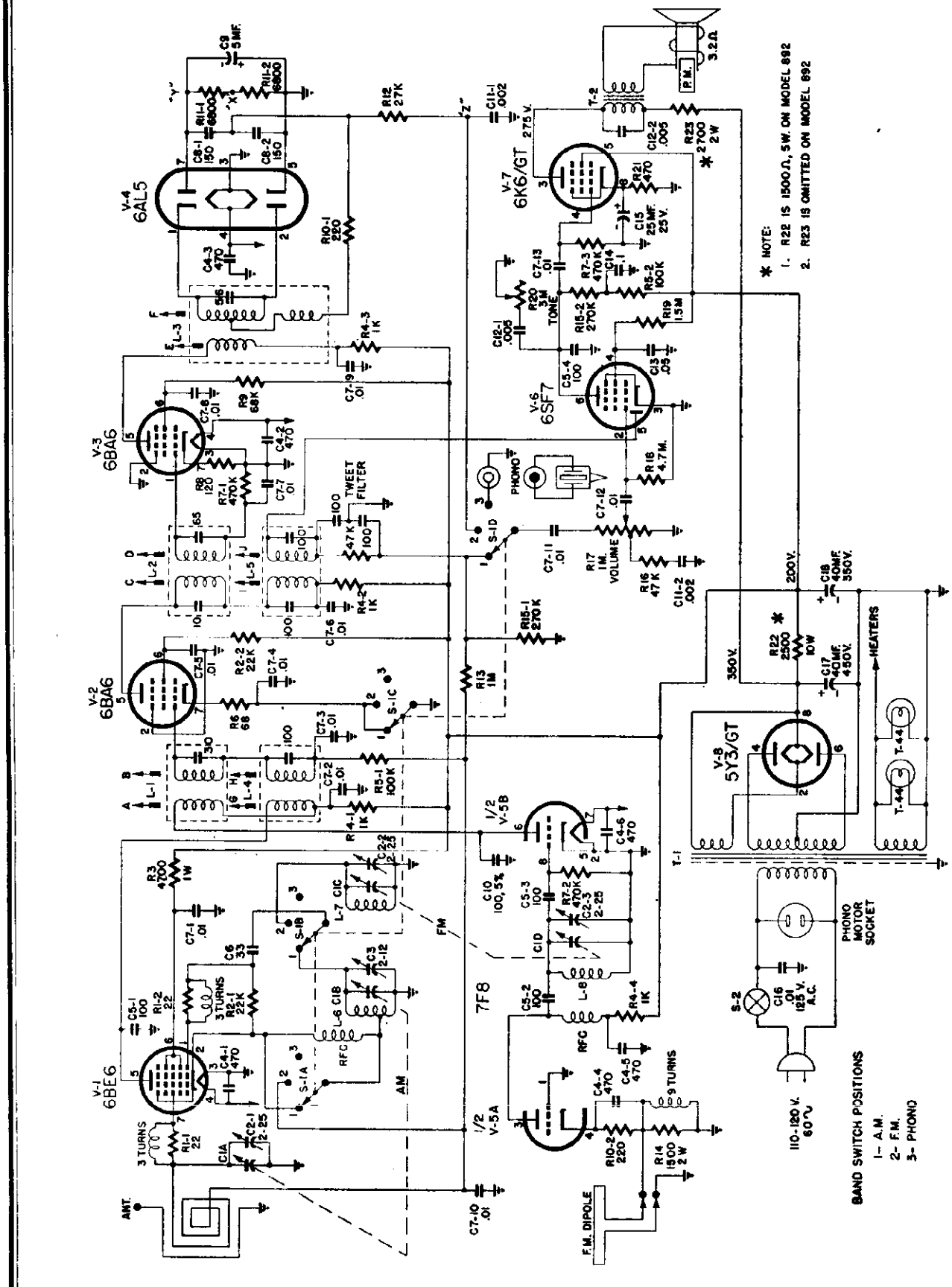

MODEL 884, 892 PACKARD-BELL CO.

SPECIFICATIONS

Overall Dimensions:

	884	892		884	892
Height	12⅛"	34¼"	Depth	16¼"	21½"
Width	18¼"	21¼"	Weight	35 Lbs.	85 Lbs.

Electrical Rating:

Line Voltage . . . . 110-120 volts, 50-60 cycle, A.C.
Power Consumption . . 75 watts

Tuning Frequency Range:

AM . . . . . 540 to 1620 KC
FM . . . . . 87.5 to 108.5 MC

Intermediate Frequency:

AM . . . . . 455 KC
FM . . . . . 10.7 MC

Electrical Output:

Maximum . . . . . 2 watts

Loudspeaker:

	884	892
Type	Permanent Magnet	
Outside Cone Dia.	6½"	10"
Voice Coil Impedance	3.2 ohms at 400 cycles	
Magnet Rating	2.15 Oz. Alnico V	3.16 Oz. Alnico V

Tubes:

Tube	No.	Function
6BE6	V-1	Oscillator & AM Converter
6BA6	V-2	I-F Amplifier
6BA6	V-3	FM Driver
6AL5	V-4	FM Detector
7F8	V-5A, B	FM R-F Amplifier & Converter
6SF7	V-6	AM Detector & Audio
6K6/GT	V-7	Power Amplifier
5Y3/GT	V-8	Rectifier

GENERAL INFORMATION

Models 884 and 892 are combination AM-FM radio phonograph receivers. Model 884 is housed in a wooden table model cabinet, and model 892 in a wooden consolette cabinet. The chassis wiring in each model is the same except as noted in the schematic diagram. Both models employ a specially designed "Hi-Q" loop antenna and a permanent magnet dynamic speaker.

For information concerning the record changer, refer to Webster Model 148 Automatic Record Changer Service Manual.

SPECIAL SERVICE INFORMATION

Stage Gain Measurements — AM

Measurements taken with volume and tone controls maximum. Switch in Radio position.

Standard Output . . . . . 50 milliwatts
Dummy Antenna . . . . . 200 Mmf.
Antenna to Converter Grid . . . . 4X at 1000 KC
Converter Grid to 1st I-F Grid . . 40X at 455 KC
1st I-F Grid to 2nd Detector . . . 125X at 455 KC
Overall Audio Gain . . 18 MV into phono socket for 50 MW output at 1000 cycles

Stage Gain Measurements — FM

Dummy Antenna . . . 270 ohms
Dipole to Converter Grid . . . . 5X at 98 MC
Converter Grid to 1st I-F Grid . . 70X at 10.7 MC
I-F Grid to Driver Grid . . . . . 33X at 10.7 MC

Oscillator Cathode Voltages:

AM		FM	
1500 KC	3.5 volts AC	108 MC	1.4 volts AC
1000 KC	3.0 volts AC	98 MC	1.4 volts AC
600 KC	2.9 volts AC	88 MC	1.8 volts AC

D.C. Resistance Measurements:

AM 1st & 2nd I-F Coils
Primary . . . . . 20 ohms
Secondary . . . . . 20 ohms
FM I-F windings about 1.0 ohm.
Oscillator Coil
Ground to Tap . . . 1.0 ohm
Ground to Finish . . . 9.0 ohms

NOTE: Due to the variation in winding methods, the D.C. resistance on all coils is subject to a 20% tolerance.

ALIGNMENT PROCEDURE — AM

Alignment procedure consists of the 3 steps outlined in the Alignment Chart. Connect the test oscillator leads to the mixer grid and ground in series with an .01 Mfd. Capacitor for step No. 1, I-F Alignment.

Use the Hazeltine Standard Test Loop No. 1150 or a reasonable substitute for the balance of the alignment. Place the test loop about two feet from the receiver loop in a vertical position.

NOTE: Make certain that each alignment step is done with a minimum input signal.

ALIGNMENT CHART — AM

STEP	CONNECT TEST OSC. TO	TEST OSC. SETTING	POINTER SETTING	ADJUST FOR MAX. OUTPUT
1	6BE6 Grid & Gnd. .01 Mfd. Capac.	455 KC	540 KC	Trimmers G, H, I, J
2	Standard Test Loop	1620 KC	1620 KC	Trimmer L to 1620
3	Standard Test Loop	1500 KC	1500 KC	Trimmer K

ALIGNMENT PROCEDURE — FM

Connect a Vacuum Tube Voltmeter between points X and Y on schematic diagram, and a Center-Zero meter between points X and Z on schematic diagram.

ALIGNMENT CHART — FM

STEP	CONNECT TEST OSC. TO	TEST OSC. SETTING	POINTER SETTING	ADJUST
1	Terminals 1 & 8 of 7F8	10.7 MC	88 MC	A, B, C, D, E for max. on V.T.V.M. & F for zero on Center-Zero meter
2	Repeat Step No. 1			
3	Dipole Terminals thru 300 ohms	108 MC	108 MC	N & M for max. on V.T.V.M.

NOTE: 1. Rock the variable condenser when adjusting M, step 3.
2. Reset F for zero if necessary, to coincide with max. on V.T.V.M. after step 3.

© John F. Rider

PACKARD-BELL CO. MODEL 884, 8

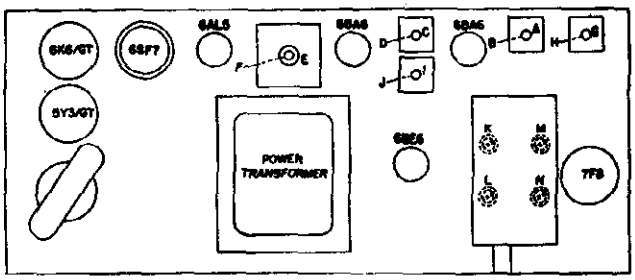

TRIMMER LOCATIONS

A—Primary, 1st FM I-F
B—(bottom) Secondary, 1st FM I-F
C—Primary, 2nd FM I-F
D—(bottom) Secondary, 2nd FM I-F
E—Primary, FM Ratio Detector
F—(bottom) Secondary, FM Ratio Detector
G—Primary, 1st AM I-F
H—(bottom) Secondary, 1st AM I-F
I—Primary, 2nd AM I-F
J—(bottom) Secondary, 2nd AM I-F
K—AM R-F Trimmer M—FM R-F Trimmer
L—AM Oscillator Trimmer N—FM Oscillator Trimmer

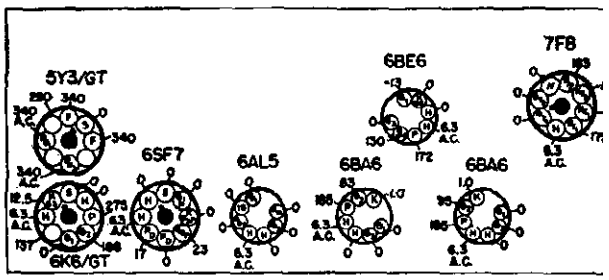

SOCKET VOLTAGES

All D.C. voltages measured with a vacuum tube voltmet from socket contacts to chassis. A.C. voltages measur with a 1000 ohms per volt A.C. meter from socket conta to chassis. Volume and tone controls maximum. Switch Radio position. No signal. 117 volts A.C. line voltage. voltages shown are positive D.C. unless otherwise not

TABLE OF REPLACEMENT PARTS

Part No.	Ref. Sym.	Description
21073		Cabinet (884)
21077		Cabinet (892)
23526A	C1A,B,C,D	Condenser, variable, with pulley
23916	C4-1 to 6	Capacitor, ceramic, 470 Mmf. 20%
23914	C5-1 to 4	Capacitor, ceramic, 100 Mmf. 20%
23940	C6	Capacitor, ceramic, 33 Mmf. N750 10%
23023-1	C7-1 to 18	Capacitor, tubular, .01 Mf. 500 V.
23942	C8-1 to 2	Capacitor, ceramic, 150 Mmf. 10%
24038	C9	Capacitor, electrolytic, 5 Mf. 50 V.
23941	C10	Capacitor, ceramic, 100 Mmf. NPO 5%
23002	C11-1 to 2	Capacitor, tubular, .002 Mf. 600 V.
23004	C12-1 to 2	Capacitor, tubular, .005 Mf. 600 V.
23009	C13	Capacitor, tubular, .05 Mf. 400 V.
23011	C14	Capacitor, tubular, .1 Mf. 400 V.
24006	C15	Capacitor, electrolytic, 25 Mf. 25 V.
23932	C16	Capacitor, tubular, .01 Mf. 125 V.A.C.
24030	C17	Capacitor, electrolytic, 40 Mf. 450 V.
24004-1	C18	Capacitor, electrolytic, 40 Mf. 350 V.
29032	L-1	Coil, 1st FM I-F
29022A	L-2	Coil, 2nd FM I-F
29037	L-3	Coil, FM Ratio Detector
29033	L-4	Coil, 1st AM I-F
29034	L-5	Coil, 2nd AM I-F
29202	L-6	Coil, AM Oscillator
29214	L-7	Coil, FM Oscillator
29111	L-8	Coil, FM R-F
29325		Loop, broadcast
29326		Dipole, FM
29104		Choke, R-F
32007-1		Cord, A.C. 8'
38104		Dial, stationized (884)
38105		Dial, stationized (892)
52008-AS		Knob, Dark Brown (884)
52008-BY		Knob, Oak (884)
52008-AL		Knob, Ivory (892)
52008-BM		Knob, Light Mahogany (892)
54001		Lamp, dial #44 0.250 Amp.
58029		Record changer, Webster Model 148
63026		Cartridge, pickup, Shure P-30
66004		Plug, pin

Part No.	Ref. Sym.	Description
67033		Pointer, dial (884)
67015		Pointer, dial (892)
69003C		Pulley
73005	R1-1 to 2	Resistor, 22 ohm, ½w. 10%
73041	R2-1 to 2	Resistor, 22,000 ohm, ½w. 10%
73075	R3	Resistor, 4700 ohm, 1w. 10%
73025	R4-1 to 4	Resistor, 1000 ohm, ½w. 10%
73047	R5-1 to 2	Resistor, 100,000 ohm, ½w. 20%
73011	R6	Resistor, 68 ohm, ½w. 10%
73051	R7-1 to 3	Resistor, 470,000 ohm, ½w. 20%
73080	R8	Resistor, 120 ohm, 1w. 10%
73046	R9	Resistor, 68,000 ohm, ½w. 10%
73017	R10-1 to 2	Resistor, 220 ohm, ½w. 10%
73035	R11-1 to 2	Resistor, 6800 ohm, ½w. 10%
73042	R12	Resistor, 27,000 ohm, ½w. 10%
73073	R13	Resistor, 1 megohm, 1w. 10%
73126	R14	Resistor, 1500 ohm, 2w. 10%
73049-3	R15-1 to 2	Resistor, 270,000 ohm, ½w. 20%
73045	R16	Resistor, 47,000 ohm, ½w. 10%
25010	R17	Control, volume, with switch, 1 megol
73057	R18	Resistor, 4.7 megohm, 1w. 10%
73054	R19	Resistor, 1.5 megohm, 1w. 10%
25509	R20	Control, tone, 3 megohm
73078	R21	Resistor, 470 ohm, 1w. 10%
73917	R22	Resistor, 2500 ohm, 10w. 10% w.w.(88
		1500 ohm, 5w. 10% w.w.(89
73128	R23	Resistor, 2700 ohm, 2w. 10% (884 onl
78048		Shield, tube
79002-2		Socket, tube, 8 prong
79005		Socket, phono
79012		Socket, tube, miniature
79007		Socket, phono motor
79056		Socket, tube, lock-in (7F8)
79058A		Socket, lamp
79061		Socket, tube, miniature shock
83302		Speaker, 6½" P.M. (884)
83705		Speaker, 10" P.M. (892)
86022A	S1A,B,C,D	Switch, band
89006	T-1	Transformer, power
89402	T-2	Transformer, output, 8,000 to 3.2 oh

MODEL 1272

PACKARD-BELL CO.

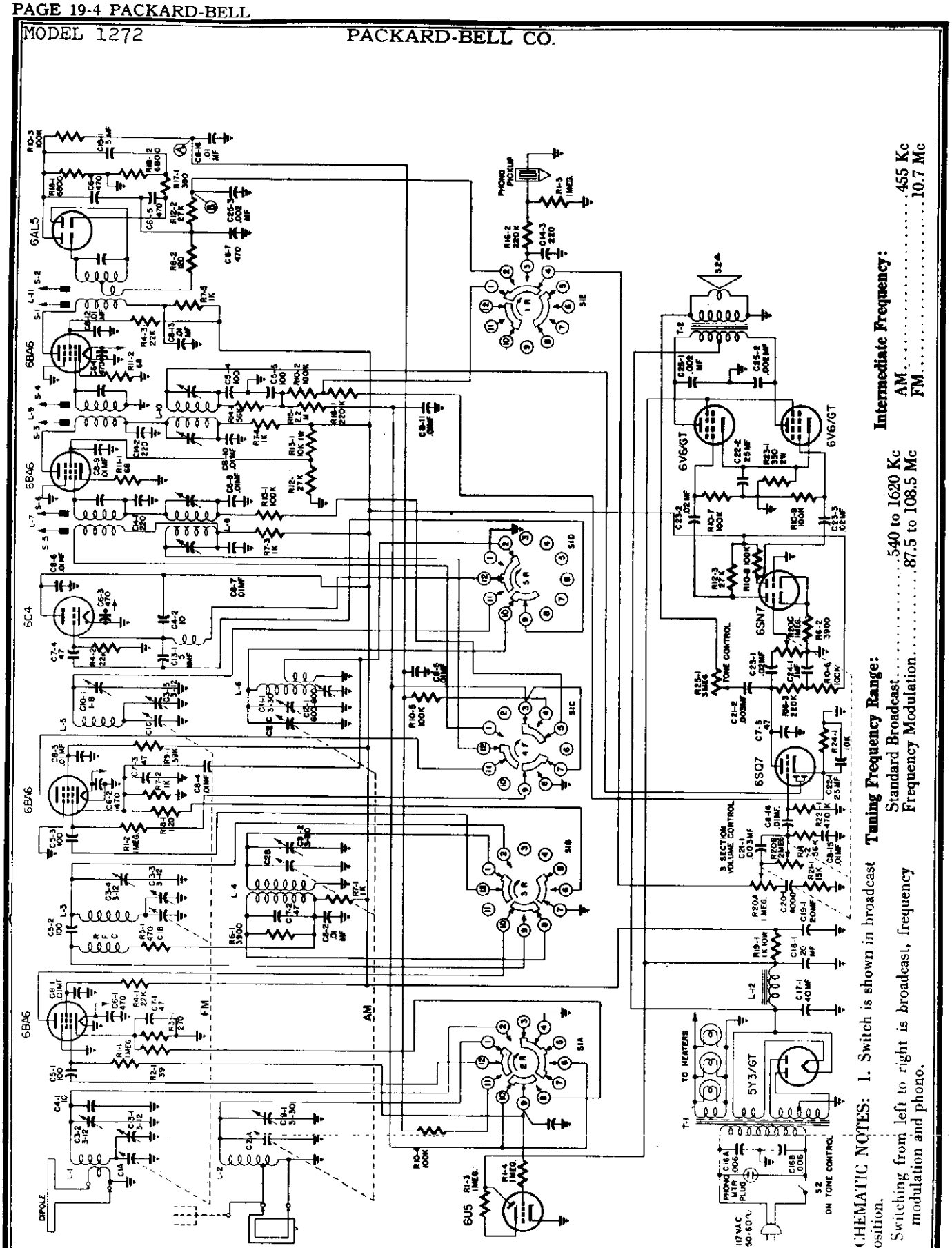

Intermediate Frequency:
AM.....455 Kc
FM.....10.7 Mc

Tuning Frequency Range:
Standard Broadcast.....540 to 1620 Kc
Frequency Modulation.....87.5 to 108.5 Mc

SCHEMATIC NOTES: 1. Switch is shown in broadcast position.
2. Switching from left to right is broadcast, frequency modulation and phono.

©John F. Rider

PACKARD-BELL CO.

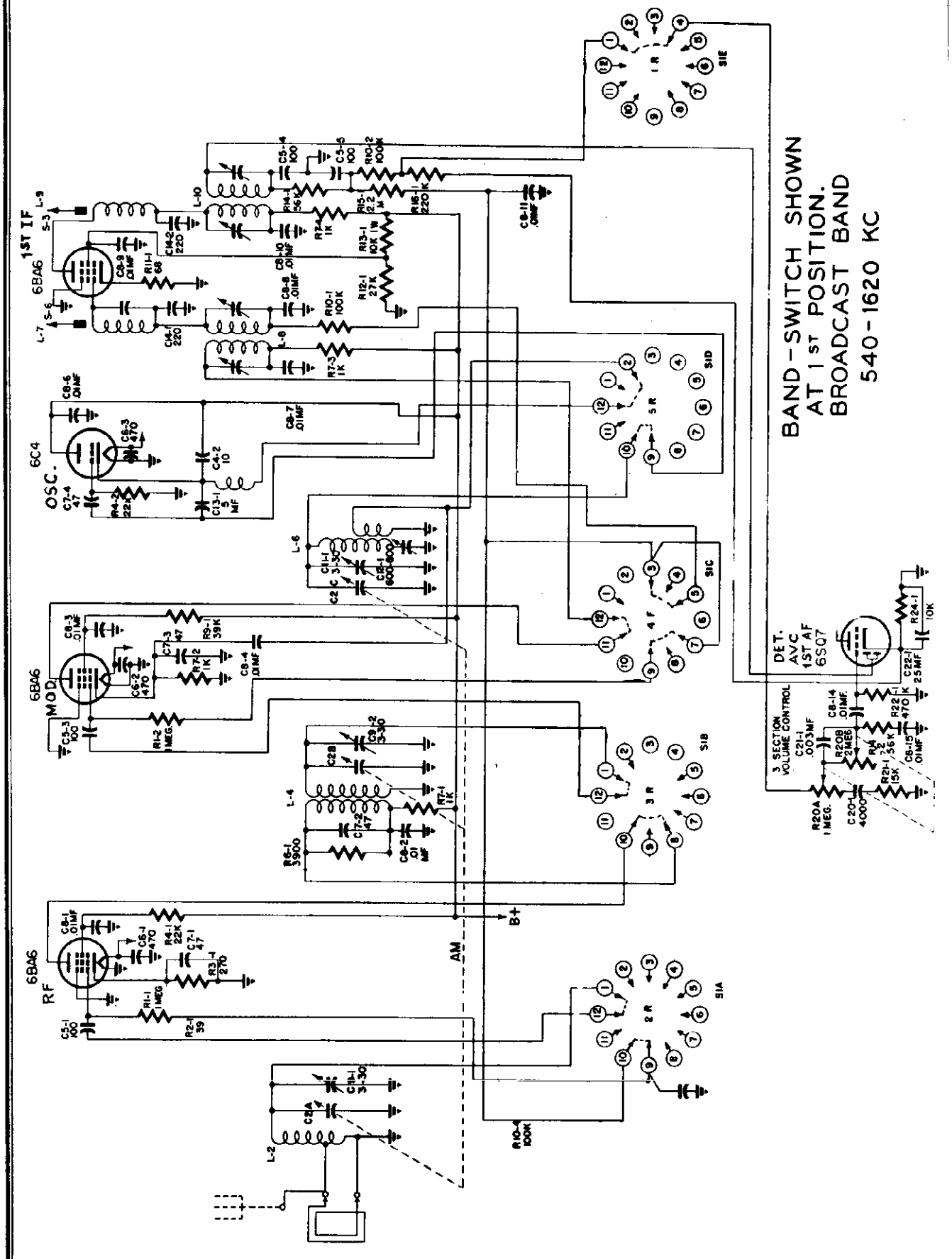

CLARI-SKEMATIX
Registered Trademark

MODEL 1272

PACKARD-BELL CO.

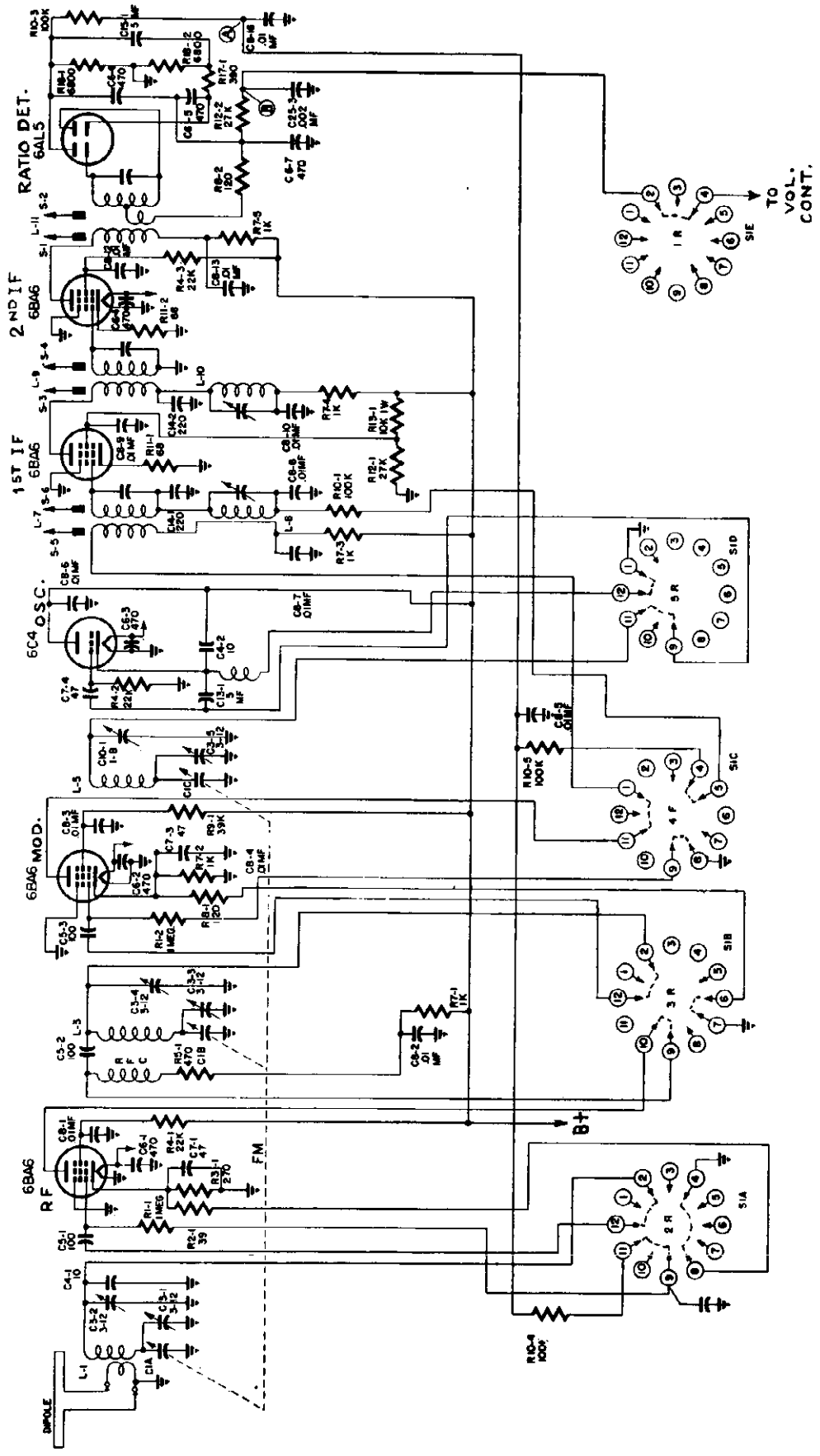

BAND-SWITCH SHOWN
AT 2ND POSITION CLOCKWISE.
F-M BAND
87.5 - 108.5 MC

GENERAL INFORMATION

Model 1272 is a 2 band console radio phonograph combination with Standard Broadcast and Frequency Modulation. It has 12 tubes including the rectifier and tuning eye, and employs a 12 inch permanent magnet speaker.

Listed below are some of the features included in this model:

1. Standard Broadcast and Frequency modulation bands
2. Phonograph with automatic record changer.
3. Tuning eye for accurate tuning of stations.

NOTE: R-23 which is called out 330 ohms, 2 watts in the schematic may be two 680 ohm, 1 watt resistors in parallel. Either is satisfactory.

SPECIAL SERVICE INFORMATION

Stage Gain Measurements: A M

Measurements taken with volume and tone controls maximum. Band Switch in Standard Broadcast position.

AVC shorted out.

Standard Output	50 milliwatts
Dummy Antenna	200 Mmf.
Antenna Post to R.F. Grid	12X at 1000 Kc
R.F. Grid to Converter Grid	6X at 1000 Kc
Converter Grid to 1st I.F. Grid	30X at 455 Kc
1st I.F. Grid to 2nd Detector	100X at 455 Kc
Overall Audio Gain	5000X at 1 watt 400 cycles

Stage Gain Measurements: F M

Measurements taken with volume and tone controls maximum. Band Switch in Frequency Modulation position.

AVC shorted out.

Dummy Antenna	270 ohms
Dipole Terminal to R.F. Grid	9X at 98 Mc
R.F. Grid to Converter Grid	7X at 98 Mc
Converter Grid to 1st I.F. Grid	49X at 10.7 Mc
1st I.F. Grid to Driver Grid	35X at 10.7 Mc

OSCILLATOR CATHODE VOLTAGES:

Measured at 117 Volts AC line voltage with AC vacuum tube voltmeter input loading above 10 Megohms.

1620 KC	3.5 volts AC
1300 KC	3.3 volts AC
750 KC	2.5 volts AC
550 KC	2.2 volts AC

OSCILLATOR GRID CURRENT: FM

Measured at 117 volt line voltage with DC microammeter connected in series with ground end of the 22,000 ohm grid resistor.

108 MC	180 microamps
98 MC	300 microamps
88 MC	440 microamps

D.C. RESISTANCE MEASUREMENTS:

I.F. COILS

1st I.F.		2nd I.F.	
Primary	17 ohms	Primary	10 ohms
Secondary	10 ohms	Secondary	17 ohms*

*Note: To obtain the true reading of the secondary of the 2nd I.F. coil it must be removed from the can. This is so because of the 56,000 ohm resistor in series with the AVC lead inside the can.

OSCILLATOR COIL

Primary	1 ohm
Secondary	6 ohms

ANTENNA COIL

Start to Finish	12.2 ohms
Start to Tap	10.5 ohms

R.F. COIL

Primary	5.8 ohms
Secondary	4.2 ohms

NOTE: Due to the variation of winding methods, the D.C. resistance on all coils is subject to a 20% tolerance.

Loudspeaker:

Type	Permanent magnet
Outside Cone Diameter	12"
Voice Coil Impedance	3.2 ohms at 400 cycles
Magnet Rating	6.8 oz. Alnico 5

Tubes:

Tube	No.	Function
6BA6	V-1	R.F. Amplifier
6BA6	V-2	Modulator
6C4	V-3	Oscillator
6BA6	V-4	1st I.F. Amplifier
6BA6	V-5	2nd I.F. Amplifier
6AL5	V-6	Detector
6SQ7	V-7	Audio Amplifier
6SN7-GT	V-8	Inverter
6V6-GT	V-9	Power Amplifier
6V6-GT	V-10	Power Amplifier
5Y3-GT	V-11	Rectifier
6U5-6G5	V-12	Tuning Eye

Electrical Rating:

Line Voltage	110 - 120 volts 50-60 cycle AC
Power Consumption	120 watts

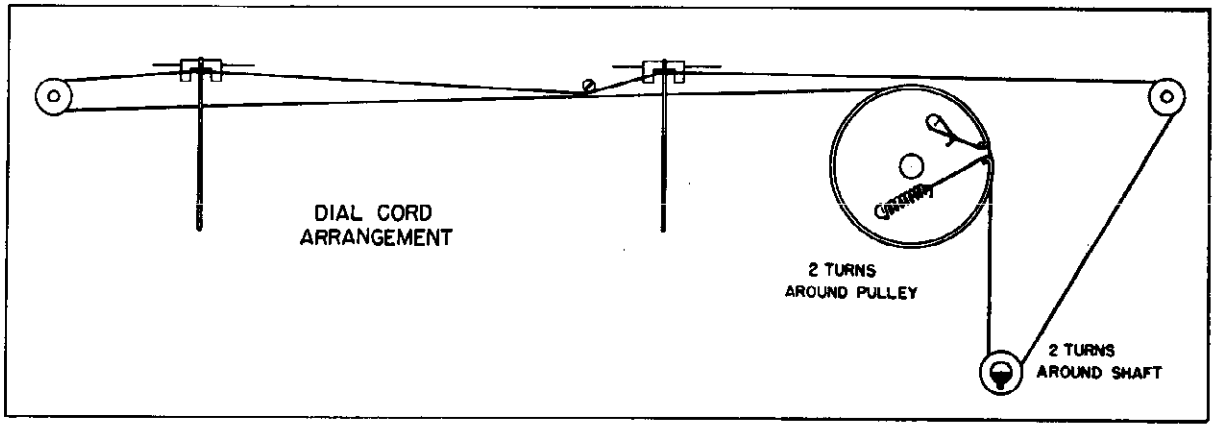

Dial Cord Arrangement

MODEL 1272 PACKARD-BELL CO.

ALIGNMENT PROCEDURE

Alignment procedure consists of the steps outlined in the Alignment Chart. Make certain that each allignment step is done with a minimum input signal.

ALIGNMENT CHART AM

Step	Connect Test Osc. to	Test Osc. Setting	Pointer Setting	Adjust for Max. Output
Step	Connect Test Osc. to	Test Osc. Setting	Pointer Setting	Adjust for Max. Output
1	Mixer grid & ground	455 Kc	540 Kc	Trimmers A,B,C,D
2	R.F. grid & ground	1500 Kc	1500 Kc	Trimmers F & G
3	R.F. grid & ground	600 Kc	600 Kc	Trimmer E
4	Repeat Step No. 2			
5	Standard Test loop	1500 Kc	1500 Kc	Trimmer H
6	Check stationizing. Slide pointer on string if stations are uniformily off in one direction.			

NOTE: 1. Rock variable condenser for step 3.
2. Standard Test Loop is Hazeltine #1150 or a reasonable substitue.

EQUIPMENT REQUIRED FOR FM ALIGNMENT

1. Signal generator capable of generating signals at 10.7 Mc, and from 88 to 108 Mc.

2. Vacuum tube voltmeter connected to point "A" (on schematic).

3. Center-zero D.C. voltmeter connected to point "B" (on schematic).

ALIGNMENT CHART FM

ALIGNMENT PROCEDURE

Step	Connect Test Osc. to	Test Osc. Setting	Pointer Setting	Adjust for Max. Output
1	R.F. grid & ground	10.7 Mc	88 Mc	S-1,S-3,S-4 S-5,S-6
2	Adjust S-2 for zero on zero-center meter.			
3	Repeat Steps 1 and 2.			
4	Doublet Terminals thru 270 ohms	88 Mc	88 Mc	Trimmers I, K, M
5	Doublet Terminals thru 270 ohms	108 Mc	108 Mc	Trimmers J, L, M
6	Repeat Step No. 4.			

NOTE: 1. Rock variable condenser for step 4.

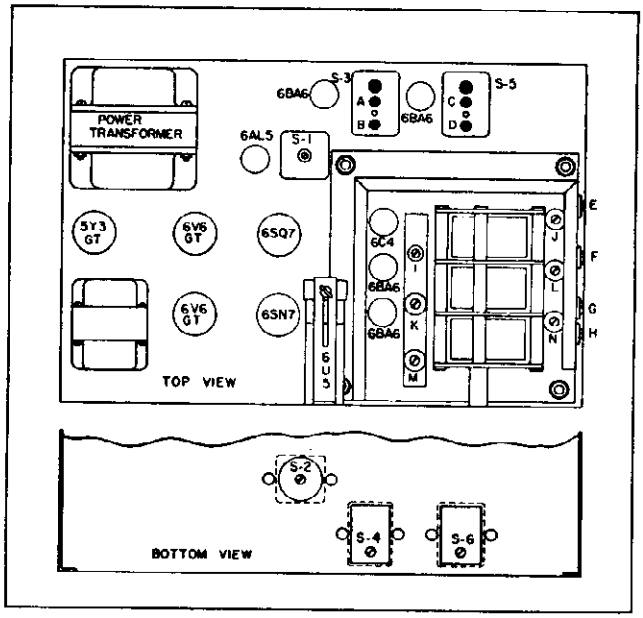

Trimmer Locations

A I.F. Trimmer
B I.F. Trimmer
C I.F. Trimmer
D I.F. Trimmer
E B.C. Oscillator Padder
F B.C. Oscillator Trimmer
G B.C. R.F. Trimmer
H B.C. Antenna Trimmer
I F.M. Oscillator Low Frequency Trimmer
J F.M. Oscillator High Frequency Trimmer
K F.M. R.F. Low Frequency Trimmer
L F.M. R.F. High Frequency Trimmer
M F.M. Antenna Low Frequency Trimmer
N F.M. Antenna High Frequency Trimmer

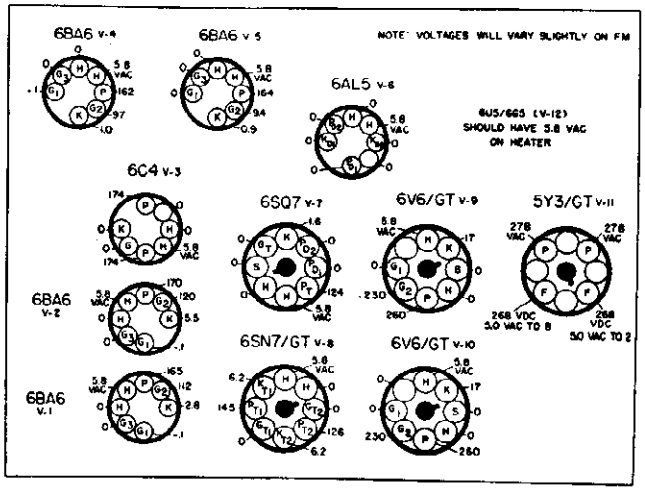

Voltage Chart

No signal
117 volts A.C. line voltage.
Switch in Standard Broadcast position.

All voltages shown are positive D.C. except heater voltages which are all 5.8 V.A.C.

A.C. voltages measured with a 1000 ohm per volt A.C. meter. Volume and tone controls maximum.

© John F. Rider

PACKARD-BELL CO. MODEL 1272

PART NO.	REF. SYMBOL	DESCRIPTION
18088		Bracket, tuning eye
21045BN		Cabinet, dark Mahogany
21045BG		Cabinet, Walnut
21045CU		Cabinet, Natural Mahogany
21045BC		Cabinet, Bleached
21045-1		Cabinet back, right
21045-2		Cabinet back, left
21057A		Cabinet motorboard
23515	C1A to C2C	Capacitor, Variable
23408	C3-1 to 5	Capacitor, trimmer, Single 3-12 Mmf.
23909	C4-1 to 2	Capacitor, ceramic, 10 Mmf. 500 V.
23227	C5-1 to 5	Capacitor, ceramic, 100 Mmf. 500 V.
23229	C6-1 to 7	Capacitor, mica, 470 Mmf. 500 V.
23912	C7-1 to 5	Capacitor, ceramic, 47 Mmf. 500V.
23022	C8-1 to 15	Capacitor, tubular, .01 Mf. 400 V.
23400A	C9-1	Capacitor, trimmer, Dual 3-30 Mmf.
23409	C10-1	Capacitor, trimmer, Single 1-8 Mmf.
23406	C11-1	Capacitor, trimmer, Single 3-30 Mmf.
23402	C12-1	Capacitor, trimmer, Single 600-800 Mmf.
24038	C13-1	Capacitor, electrolytic, 5Mmf 50 V.
23206	C14-1 to 3	Capacitor, mica, 220 Mmf. 500 V.
23908	C15-1	Capacitor, ceramic, 5 Mmf 500 V.
23901	C16-1	Capacitor, trimmer, Dual .006-.006 Mmf. (metal case)
24030	C17-1	Capacitor, electrolytic, 40 Mf. 450 V.
24001	C18-1	Capacitor, electrolytic, 20 Mf. 450 V.
24003	C19-1	Capacitor, electrolytic, 20 Mf. 350 V.
23208	C20-1	Capacitor, mica, 4000 Mfm. 500 V.
23016	C21-1 to 2	Capacitor, tubular, .003 Mf. 600 V.
24006	C22-1	Capacitor, electrolytic, 25 Mf. 25 V.
23007	C23-1 to 3	Capacitor, tubular, .02 Mf. 600 V.
23011	C24-1	Capacitor, tubular, .1 Mf. 400 V.
23002	C25-1 to 3	Capacitor, tubular, .002 Mf. 600 V.
27001		Choke, filter
28005A		Clip, antenna
28020		Clip, tuning eye.
29406	L1	Coil, FM antenna
29400	L2	Coil, BC antenna
29104	L3	Coil, Choke R.F.
29102F	L4	Coil, B.C. R.F.
29106	L5	Coil, F.M. R.F. Oscillator
29205C	L6	Coil, B.C. Oscillator
29011	L7, L8	Coil, 1st I.F. AM, FM.
20912	L9, L10	Coil, 2nd I.F. AM, FM
29018	L11	Coil, Ratio detector, FM
29315		Antenna, B.C. Loop
29321		Antenna, F.M. Dipole
32003C		Cord, AC
38069		Dial, stationized
38070		Dial, Eastern
40003		Dial cord
40101C		Drive, planetary
52019BG		Knob, control, Walnut
52019BN		Knob, control, dark mahogany
52019CU		Knob, control, natural mahogany
52019BC		Knob, control, bleached
52020BC		Knob, Control, Bleach
52020BN		Knob, Control, Dark Mahogany
520201CU		Knob, Control, Natural Mahogany
52020BG		Knob, Control, Walnut
54002		Lamp, dial, #47
58022A		Changer, Record, Webster #56

PART NO.	REF. SYMBOL	DESCRIPTION
63026		Pickup Cartridge, Sure Bros. P-30
69003C		Pulley, idler
69006A		Pulley, variable capacitor
73053	R1-1 to 5	Resistor, 1 megohm, ½ w, 10%
73008	R2-1 to 2	Resistor, 39 ohm, ½ w,10%
73018	R3-1	Resistor, 270 ohm, ½ w, 10%
73041	R4-1 to 4	Resistor, 22,000 ohms, ½ w, 10%
73021	R5-1	Resistor, 470 ohm, ½ w, 10%
73032	R6-1 to 2	Resistor, 3900 ohm, ½ w, 10%
73025	R7-1 to 5	Resistor, 1,000 ohm, ½ w, 10%
73014	R8-1 to 2	Resistor, 120 ohm, ½w, 10%
73073	R13-1	Resistor, 10,000 ohm ½ w, 10%
73060	R14-1	Resistor, 56,000 ohm, ½ w, 10%
73055	R15-1	Resistor, 2.2 megohm, ½w, 20%
73049	R16-1 to 3	Resistor, 220,000 ohm, ½ w, 20%
73020	R17-1	Resistor, 390 ohm, ½ w, 10%
73035	R18-1 to 2	Resistor, 6800 ohm, ½ w, 10%
73919	R19-1	Resistor, 1000 ohm 10 w, 10%
25008	R20-1	Control, volume, 3 section
73044	R9-1	Resistor, 39,000 ohm ½ w, 10%
73047	R10-1 to 9	Resistor, 100,000 ohm, ½ w, 20%
73011	R11-1	Resistor, 68 ohm, ½ w, 10%
73042	R12-1 to 2	Resistor, 27,000 ohm, ½ w, 10%
73039	R21-1	Resistor, 15,000 ohm, ½ w, 10%
73045	R22-1 to 3	Resistor, 47,000 ohm, ½ w, 10%
73131	R23-1	Resistor, 330 ohm, ½w, 10%
73037	R24-1	Resistor, 10,000 ohm, ½ w, 10%
50202A	R25-1	Control, tone, with switch
79002		Socket, tube, 8 prong
79007		Socket, phono motor, A.C.
79010B		Socket, lamp
79018		Socket, speaker
79033		Socket, compartment lamp
79035		Socket, tube, miniature
79045		Socket, antenna
79041		Socket, tunning eye
83802		Speaker, 12″ PM
84028		Spring, dial
86016B	S1A to S1E	Switch, band
89013	T1	Transformer, power
89404	T2	Transformer, output

PACKARD-BELL CO. MODEL 1273

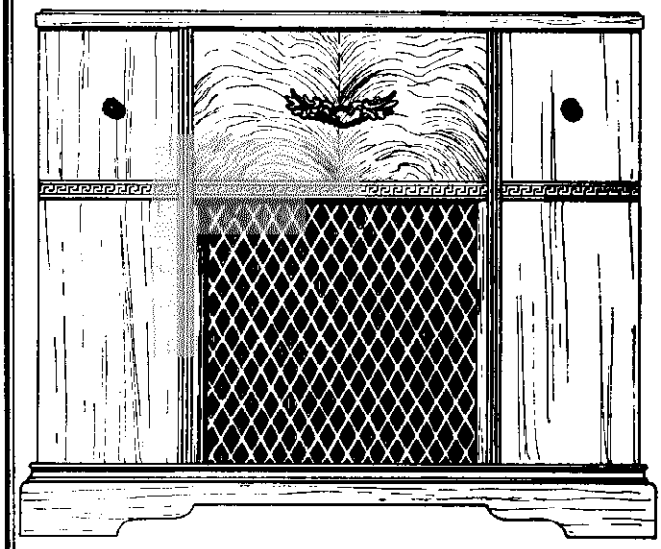

Electrical Rating:
Line Voltage . . . . . 110–120 volts 50–60 cycle AC
Power Consumption . . 110 watts including phonograph

Tuning Frequency Range:
Standard Broadcast . . 540 to 1620 Kc
Frequency Modulation . 87.5 to 108.5 Mc.

Intermediate Frequency:
AM . . . . . 455 Kc
FM . . . . . 10.7 Mc

Loudspeaker:
Type . . . . . Permanent Magnet
Outside Cone Diameter . 12″
Voice Coil Impedance . 3.2 ohms at 400 cycles
Magnet Rating . . . . 6.8 Oz. Alnico V

Tubes:

Tube:	No.:	Function:
6BA6	V-1	R.F. Amplifier
6BA6	V-2	Mixer
6BA6	V-3	I.F. Amplifier
6BA6	V-4	Driver
6AL5	V-5	F.M. Detector
6H6	V-6	A.M. Detector—AVC
6SF7	V-7	Audio Amplifier
6SN7-GT	V-8	Phase Inverter
6C4	V-9	Oscillator
6V6-GT	V-10	Output
6V6-GT	V-11	Output
5Y3-GT	V-12	Rectifier
6U5-6G5	V-13	Tuning Eye

GENERAL INFORMATION

Model 1273 is a 2 band console PhonOcord. It has 13 tubes including the rectifier and tuning eye, and employes a 12-inch speaker.

Listed below are some of the features included in this model:

1. Standard Broadcast from 540 to 1620 Kc.
2. Frequency Modulation from 87.5 to 108.5 Mc.
3. Tuning Eye for accurate tuning of stations.
4. Home recording combined with an automatic record changer.

In an early run of this model, R-4 connected to the Plate of the 6C4 instead of to R-5. Also you may find two 680 ohm resistors in place of the 330 ohm 2 watt resistor. Either is satisfactory.

RECORDING HEAD PRESSURE

The proper recording head pressure is 1¼ oz. Adjustment of this pressure is made by turning the small screw on the top of the recording arm. This adjustment is very critical and should be made in quarter turns. TURN THE SCREW CLOCKWISE TO INCREASE THE CUTTING DEPTH and COUNTERCLOCKWISE TO DECREASE THE CUTTING DEPTH.

This adjustment is made at the factory with an ordinary postal scale, consequently, field adjustments should be made in a like manner.

BRIEF DESCRIPTION OF COMPRESSION CIRCUIT

One diode section of the 6H6 serves as the compressor rectifier. The compression system is automatic, and is in the circuit on both record positions. A portion of the output voltage is rectified by the 6H6 and varies grid bias of the first audio, 6SF7.

HOW TO CHECK COMPRESSION VOLTAGE

Turn the Selector Switch to Radio Record position. Feed a 2 volt (RMS) 1000 cycle signal into the diode return of the 2nd I.F. (brown lead). Connect the leads of a vacuum tube voltmeter to the point indicated on Figure 4, Schematic Diagram, and ground. The voltage at this point should be approximately a minus 2.5 volts.

SPECIAL SERVICE INFORMATION

STAGE GAIN MEASUREMENTS, AM:

Measurements taken with volume and tone controls maximum. Band Switch in Standard Broadcast position.
AVC shorted out.
Standard Output . . . 50 milliwatts
Dummy Antenna . . . 200 Mmf.
Antenna Post to R.F. grid . . . . . 12X at 1000 KC
R.F. grid to Converter grid . . . . . 9X at 1000 Kc
Converter grid to 1st I.F. grid . . . . . 20X at 455 Kc
1st R.F. grid to 2nd Detector . . . . . 40X at 455 Kc
Overall Audio Gain . . . . 4600X at 1 watt 400 cycles

STAGE GAIN MEASUREMENTS, FM:

Measurements taken with volume and tone controls maximum. Band switch in Frequency Modulation position.
AVC shorted out.
Dummy Antenna . . . 270 ohms
Dipole Terminal to R.F. grid . . . . . 0.9X at 98 Mc
Converter grid to 1st I.F. grid . . . . . 12X at 10.7 Mc
1st I.F. grid to Driver grid . . . . . 45X at 10.7 Mc

OSCILLATOR CATHODE VOLTAGES:

Measured at 117 volts AC line voltage with AC vacuum tube voltmeter input loading above 10 Megohms.
1620 KC . . . . . 8.5 volts AC
1200 KC . . . . . 8.2 volts AC
800 KC . . . . . 5.5 volts AC
540 KC . . . . . 2.5 volts AC

OSCILLATOR GRID CURRENT, FM:

Measured at 117 volts line voltage with DC microammeter connected in series with ground end of the 22,000 ohm grid resistor.
108 MC . . . . . 190 Microamps
98 MC . . . . . 200 Microamps
88 MC . . . . . 220 Microamps

©John F. Rider

MODEL 1273 PACKARD-BELL CO.

ALIGNMENT PROCEDURE

Alignment procedure consists of the steps outlined in the Alignment Chart. Make certain that each alignment step is done with a minimum input signal.

ALIGNMENT CHART A M

STEP	CONNECT TEST OSC. TO	TEST OSC. SETTING	POINTER SETTING	ADJUST FOR MAX. OUTPUT
1	Mixer grid & ground	455 Kc	540 Kc	Trimmers A, B, C, D
2	R.F. grid & ground	1500 Kc	1500 Kc	Trimmers G & H
3	R.F. grid & ground	600 Kc	600 Kc	Trimmer E
4	Repeat Step No. 2			
5	Standard Test Loop	1500 Kc	1500 Kc	Trimmer F
6	Check stationizing Slide pointer on string if stations are uniformly off in one direction.			

NOTE: 1. Rock variable condenser for Step No. 3.
2. Standard Test Loop is Hazeltine No. 1150 or a reasonable substitute.

EQUIPMENT REQUIRED FOR FM ALIGNMENT

1. Vacuum tube type voltmeter connected to point "A" (on schematic) for Step No. 1.
2. Center-zero D.C. voltmeter connected to point "B" (on schematic) for step No. 2.

ALIGNMENT CHART F M

STEP	CONNECT TEST OSC. TO	TEST OSC. SETTING	POINTER SETTING	ADJUST FOR MAX. OUTPUT
1	R.F. grid & ground	10.7 Mc	88 Mc	S-1, S-3, S-4, S-5, S-6
2	Adjust S-2 for zero on zero-center meter.			
3	Repeat steps 1 and 2.			
4	Doublet terminals thru 270 ohms	108 Mc	108 Mc	Trimmers J, I, K
5	Doublet terminals thru 270 ohms	88 Mc	88 Mc	S-7, S-8
6	Repeat step No. 4.			

NOTE: Rock variable condenser for step No. 4.

D.C. RESISTANCE MEASUREMENTS:

I.F. COILS:

1st I.F.		2nd I.F.:	
Primary	17 ohms	Primary	10 ohms
Secondary	10 ohms	Secondary	17 ohms*

*NOTE: To obtain the true reading of the secondary of the 2nd I.F. coil, it must be removed from the can. This is true because of the 56,000 ohm resistor in series with the AVC lead inside the can.

Oscillator Coil:
Primary . . . . . 1 ohm
Secondary . . . . . 6 ohms

Antenna Coil:
Start to Finish . . . 12.2 ohms
Start to Tap . . . . 10.5 ohms

R.F. Coil:
Primary . . . . . 5.8 ohms
Secondary . . . . . 4.2 ohms

NOTE: Due to the variation of winding methods, the D.C. resistance on all coils is subject to a 20% tolerance.

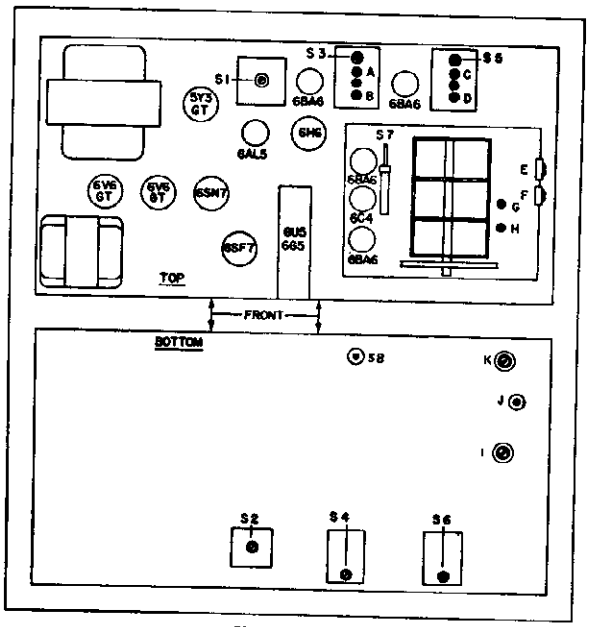

TRIMMER LOCATION

A—I.F. trimmer
B—I.F. trimmer
C—I.F. trimmer
D—I.F. trimmer
E—B.C. padder
F—Antenna trimmer
G—B.C. osc. trimmer
H—B.C. R.F. trimmer
I—F.M. R.F. trimmer
J—F.M. osc. trimmer
K—F.M. antenna trimmer

SOCKET VOLTAGES

All D.C. voltages measured with a vacuum tube voltmeter from socket contacts to chassis.—A.C. voltage measured with a 1000 ohms per volt A.C. meter from socket contacts to chassis. —Volume and tone controls maximum.—Switch in Radio Receive position. No signal. 117 volts A.C. line. All voltages shown are positive D.C. unless otherwise noted.

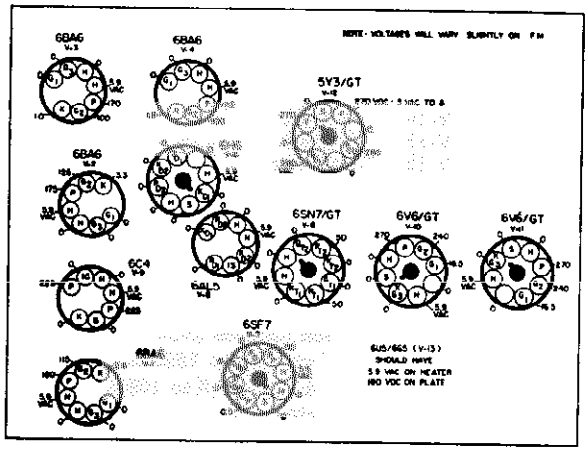

SOCKET VOLTAGE

©John F. Rider

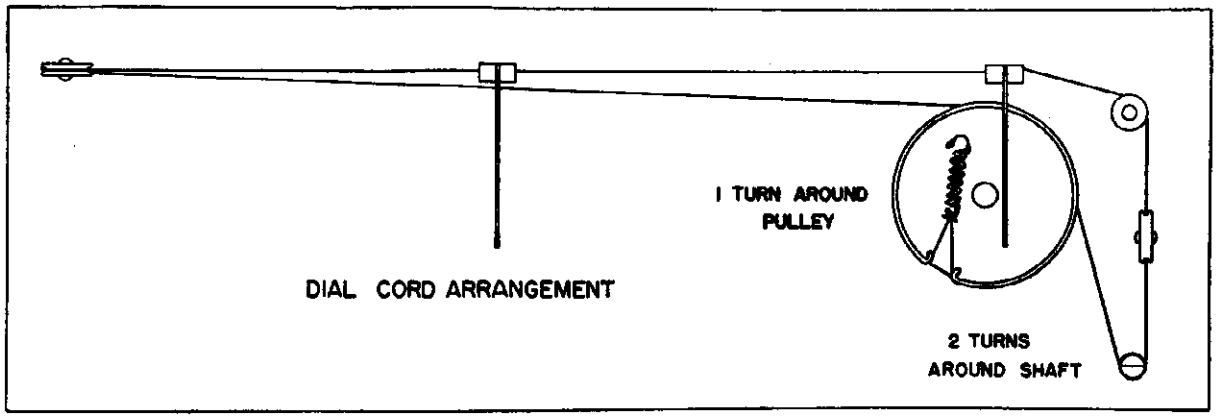

Dial Cord Diagram

TABLE OF REPLACEABLE PARTS

PART NO.	REF. SYMBOL	DESCRIPTION
21058		Cabinet
23525	C1,A,B,C	Capacitor, variable
23406	C3-1	Capacitor, trimmer, single 3-30 Mmf.
23408	C4-1 to 2	Capacitor, trimmer, single 3-12 Mmf.
23915	C5-1 to 5	Capacitor, ceramic, 220 Mmf. 20%
23916	C6-1 to 6	Capacitor, ceramic, 470 Mmf. 20%
23912	C7-1 to 5	Capacitor, ceramic, 47 Mmf. 20%
23931	C8-1 to 2	Capacitor, tubular, .005 Mmf. "HI-KAP"
23023	C9-1 to 7	Capacitor, tubular, .01 Mf. 500 V.
23908	C10-1	Capacitor, ceramic, 5 Mmf. 20%
23401	C11-1 to 2	Capacitor, trimmer, dual 3-30 Mmf.
23022	C12-1 to 6	Capacitor, tubular, .01 Mf. 400 V.
23016	C13-1	Capacitor, tubular, .003 Mf. 600 V.
24038	C14-1	Capacitor, electrolytic, 5 Mf. 50 V.
23914	C15-1	Capacitor, ceramic, 100 Mmf. 500 V.
23004	C16-1 to 3	Capacitor, tubular, .005 Mf. 600 V.
23019	C17-1	Capacitor, tubular, .1 Mf. 200 V.
23020	C18-1	Capacitor, tubular, .2 Mf. 400 V.
23011	C19-1	Capacitor, .1 Mf. 400 V.
23007	C20-1 to 4	Capacitor, tubular, .02 Mf. 600 V.
23409	C21-1	Capacitor, trimmer, single 1-8 Mmf.
23402	C22-1	Capacitor, padder, 800 Mmf.
23002	C23-1 to 3	Capacitor, tubular, .002 Mf. 600 V.
23208	C24-1	Capacitor, mica, 4000 Mmf.
24006	C25-1	Capacitor, electrolytic, 25 Mf. 25 V.
24012	C26-1	Capacitor, electrolytic, 20 Mf. 350 V.
24004B	C27-1	Capacitor, electrolytic, 40 Mf. 350 V.
24030	C28-1	Capacitor, electrolytic, 40 Mf. 450 V.
23901	C29-1	Capacitor, dual .006 in can
23930	F1	Capacitor, tweet filter
29400	L1	Coil, B.C. antenna
29409	L2	Coil, F.M. antenna
29102F	L3	Coil, B.C. R.F.
29104	L4	Coil, R.F. choke
29109	L5-A & B	Coil, F.M. R.F. oscillator
29011	L6	Coil, 1st I.F. A.M., F.M.
29012	L7	Coil, 2nd I.F. A.M., F.M.
29018	L8	Coil, F.M. ratio detector
29205C	L9	Coil, B.C. oscillator
29104	L10	Coil, R.F. choke
29321		F.M. dipole
32003C		Cord, A.C.
36024		Cartridge, cutter
38073		Dial, stationized
38074		Dial, export
41017		Escutcheon
52001A-BG		Knob, control
52014BG		Knob, bar type
54001		Lamp, pilot, 0.250 Amp.
57004		Microphone with cable
57005		Microphone handle
57006		Microphone base
58004E		Recorder, changer
59002		Needle, cutter
63026		Cartridge, pickup, Shure P-30

PART NO.	REF. SYMBOL	DESCRIPTION
65065G		Plate, dial
65066A		Plate, rear
66001		Plug, pin
66004		Plug, speaker
66013		Plug, microphone
67030		Pointer assembly
68163		Instruction book
69001		Pulley
69013A		Pulley
69006A		Pulley, variable
73053	R1-1 to 7	Resistor, carbon, 1 Meg. ½ w. 20%
73008	R2-1	Resistor, carbon, 39 ohm, ½ w. 10%
73018	R3-1	Resistor, carbon, 270 ohm, ½ w. 10%
73041	R4-1 to 4	Resistor, carbon, 22,000 ohm, ½ w. 10%
73025	R5-1 to 5	Resistor, carbon, 1,000 ohm, ½ w. 10%
73017	R6-1	Resistor, carbon, 220 ohm, ½ w. 10%
73047	R7-1 to 7	Resistor, carbon, 100,000 ohm, ½ w. 20%
73011	R8-1	Resistor, carbon, 68 ohm, ½ w. 10%
73078	R9-1	Resistor, carbon, 10,000 ohm, 1 w. 10%
73049	R10-1 to 7	Resistor, carbon, 220,000 ohm, ½ w. 20%
73046	R11-1	Resistor, carbon, 68,000 ohm, ½ w. 10%
73033	R12-1	Resistor, carbon, 4700 ohm, ½ w. 10%
73014	R13-1 to 2	Resistor, carbon, 120 ohm, ½ w. 10%
73042	R14-1 to 3	Resistor, carbon, 27,000 ohm, ½ w. 10%
73035	R15-1 to 3	Resistor, carbon, 6800 ohm, ½ w. 10%
73051	R16-1	Resistor, carbon, 470,000 ohm, ½ w. 20%
73057	R17-1 to 2	Resistor, carbon, 4.7 meg. ½ w. 20%
73054	R18-1 to 2	Resistor, carbon, 1.5 meg. ½ w. 20%
73032	R19-1	Resistor, carbon, 3900 ohm, ½ w. 10%
73060	R20-1	Resistor, carbon, 56,000 ohm, ½ w. 10%
73039	R21-1	Resistor, carbon, 15,000 ohm, ½ w. 10%
26016	R22-A,B,C	Control, volume, 3 section
73910	R23-1	Resistor, wire wound, ½ ohm, 1 w.
73131	R24-1	Resistor, carbon, 330 ohm, 2 w. 10%
73903	R25-1	Resistor, wire wound, 15 ohm, 1 w.
73915	R26-1	Resistor, carbon, 1,000 ohm, 5 w. 10%
73120	R27-1 to 2	Resistor, carbon, 1,000 ohm, 2 w. 10%
26510	R28-1	Control, tone
73055	R29-1	Resistor, carbon, 2.2 meg. ½ w. 20%
77020		Shaft, dial
79002		Socket, tube, 8 prong
79035		Socket, tube miniature
79004		Socket, microphone
79005		Socket, pickup
79018		Socket, speaker and cutter
79041		Socket, tuning eye
79007		Socket, A.C.
79010B		Socket, lamp
79045		Socket, antenna terminal strip
83802		Speaker, 12" PM
86009A	S1	Switch, phono, etc.
86017B	S2	Switch, band
89013	T1	Transformer, power
89404	T2	Transformer, output, 10,000 ohm to 3.2 ohms

MODEL 1273 PACKARD-BELL CO.

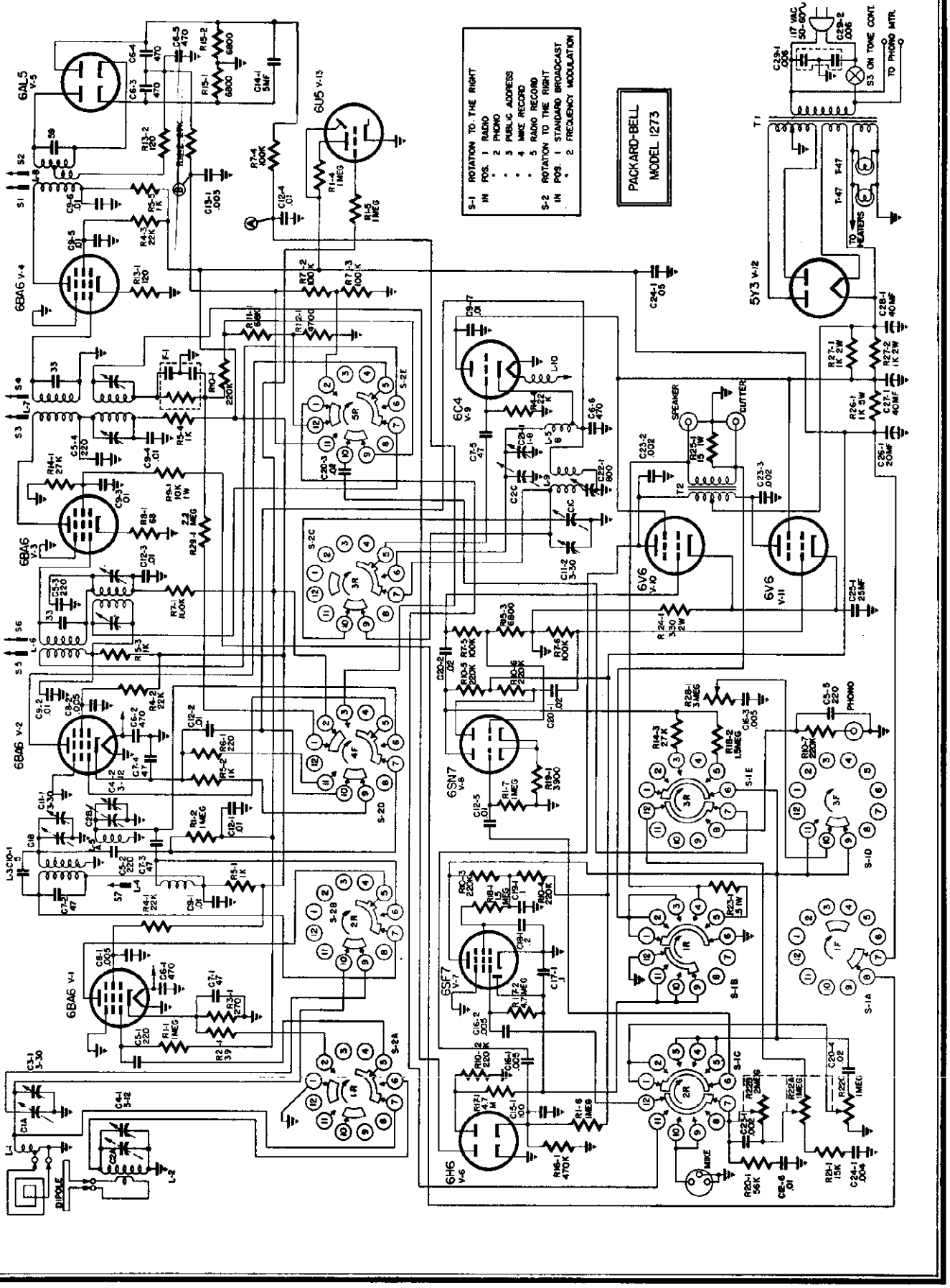

©John F. Rider

GENERAL INFORMATION

Model 1472 is a two band dual turntable, console PhonOcord. It has 12 tubes, plus a tuning eye and power rectifier, and employs a 12-inch electro dynamic speaker.

Listed below are some of the features included in this model:

1. Standard Broadcast—540 to 1620 KC.
2. Frequency Modulation—87.5 to 108.5 MC.
3. Cathode Ray tuning indicator.
4. Push-button home recording and automatic record changer.

Electrical Rating:
Line Voltage . 110–120 volts, 50–60 cycles A.C.
Power Consumption . . . . . 188 watts

Tuning Frequency Range:
Standard Broadcast . . . 540 to 1620 KC.
Frequency Modulation . 87.5 to 108.5 MC.

Intermediate Frequency:
AM . . . . . 455 KC
FM . . . . . 10.7 MC

Loudspeaker:
Type . . . . . Electro Dynamic
Outside Cone Diameter . 12"
Voice Coil Impedance . . 3.2 ohms at 400 cycles
Field Coil . . . . . 500 ohms D.C.

Eletrical Power Output:
Maximum . . . . . 15 watts
Undistorted . . . . . 10 watts

Tubes:

Tube	No.	Function
6BA6	V-1	R.F. Amplifier
6BA6	V-2	Mixer
6C4	V-3	Oscillator
6BA6	V-4	1st I.F. Amplifier
6BA6	V-5	Driver
6AL5	V-6	F.M. Detector
6SF7	V-7	Audio Amplifier, A.M. Detector
6SN7-GT	V-8	Phase Inverter
6V6-GT	V-9	Power Amplifier
6V6-GT	V-10	Power Amplifier
6SK7	V-11	Microphone Amplifier
6H6	V-12	Compressor Rectifier
5U4-G	V-13	Power Rectifier
6U5-6G5	V-14	Tuning Eye

NOTE: R26-2 shown as 1.5 M was replaced by 680 K in some instances to compensate for variations in recording level. See Special Service Information for method of checking for proper recording level.

SPECIAL SERVICE INFORMATION

Recording Head Pressure:

The proper recording head pressure is 1¼ ounces and is indicated by a small red dot on the indicator located on the cutter arm. In the event this has varied due to shipping vibrations it may be re-set with the aid of an ordinary pocket type postage scale. To increase pressure turn indicator wheel clock-wise. Turn counter-clockwise to decrease pressure.

Brief Description of Compression Circuit:

One diode section of the 6H6 serves as the compressor rectifier. Delay is accomplished by applying a positive potential to the cathode of the 6H6. A portion of the output voltage is rectified by the 6H6 and varies the grid bias of the 1st audio tube 6SF7.

How to Check Compression Voltage:

Turn the Selector Switch to BC position and press the push-button labeled Record Program. Feed a 2 volt (RMS) 1000 cycle signal into the 2nd detector diode return between the 56K and 220K ohm resistors. Connect a V.T.V.M. to the termination of the 4.7 megohm resistor and .1 mfd. condenser in the control grid circuit of the 6SF7. This should read between 2.5 to 3.5 volts negative.

How to Check Recording Level (Radio Record):

Substitute a 3 ohm resistor in place of the cutting head and with the same test setup as outlined in the preceding paragraph the voltage across this resistor should be between 1.1 and 1.5 volts A.C.

How to Check Recording Level (Record Phono):

Turn the Selector Switch to Phono position, press Record Program pushbutton and feed a 1000 cycle signal of 0.8 volts into the Phono input socket. Substitute a 3 ohm resistor in place of the cutting head. The voltage across the cutter should read between 1.1 and 1.5 volts A.C.

Socket Voltages:

All voltages shown are positive D.C. unless otherwise noted. Heater voltages are 6.3 volts A.C.

D.C. voltages measured with a vacuum tube voltmeter from socket contacts to chassis.

A.C. voltages measured with a 1000 ohms per volt A.C. meter from socket contacts to chassis. Volume and tone controls maximum.

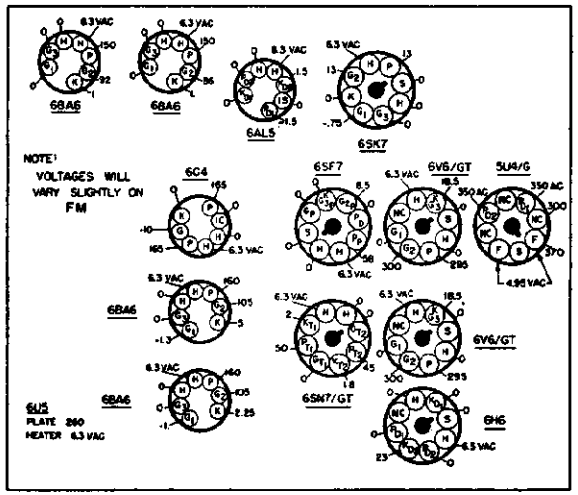

SOCKET VOLTAGES

Stage Gain Measurements: AM

Measurements taken with volume and tone controls maximum. Band Switch in Standard Broadcast position. AVC shorted out.

Standard Output	50 milliwatts
Dummy Antenna	200 Mmf.
Antenna Post to R.F. Grid	12X at 1000 KC
R.F. Grid to Converter Grid	6X at 1000 KC
Converter Grid to 1st I.F. Grid	30X at 455 KC
1st I.F. Grid to 2nd Detector	100X at 455 KC
Overall Audio Gain	0.1 volt into phono socket for 1.0 watt output at 400 cycles

Stage Gain Measurements: FM

Measurements taken with volume and tone controls maximum. Band Switch in Frequency Modulation position. AVC shorted out.

Dummy Antenna	270 ohms
Dipole Terminal to R.F. Grid	1.0X at 98 MC
R.F. Grid to Converter Grid	7X at 98 MC
Converter Grid to 1st I.F. Grid	49X at 10.7 MC
1st I.F. Grid to Driver Grid	35X at 10.7 MC

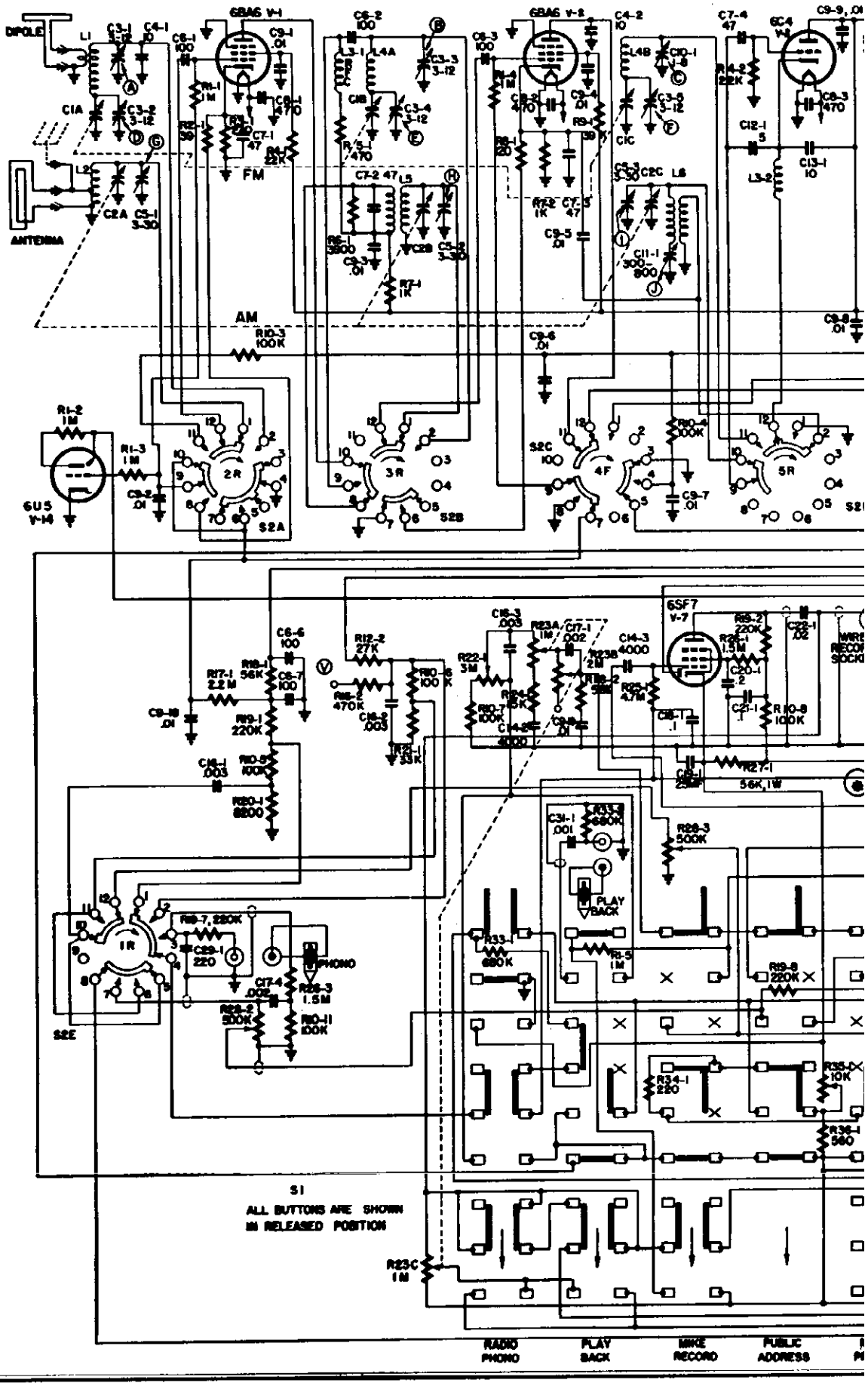
DIPOLE
ANTENNA
FM
AM
6BA6 V-1
6BA6 V-2
6C4 V-4
6U5 V-14
6SF7 V-7
S1
ALL BUTTONS ARE SHOWN IN RELEASED POSITION
RADIO PHONO
PLAY BACK
MIKE RECORD
PUBLIC ADDRESS

©John F. Rider

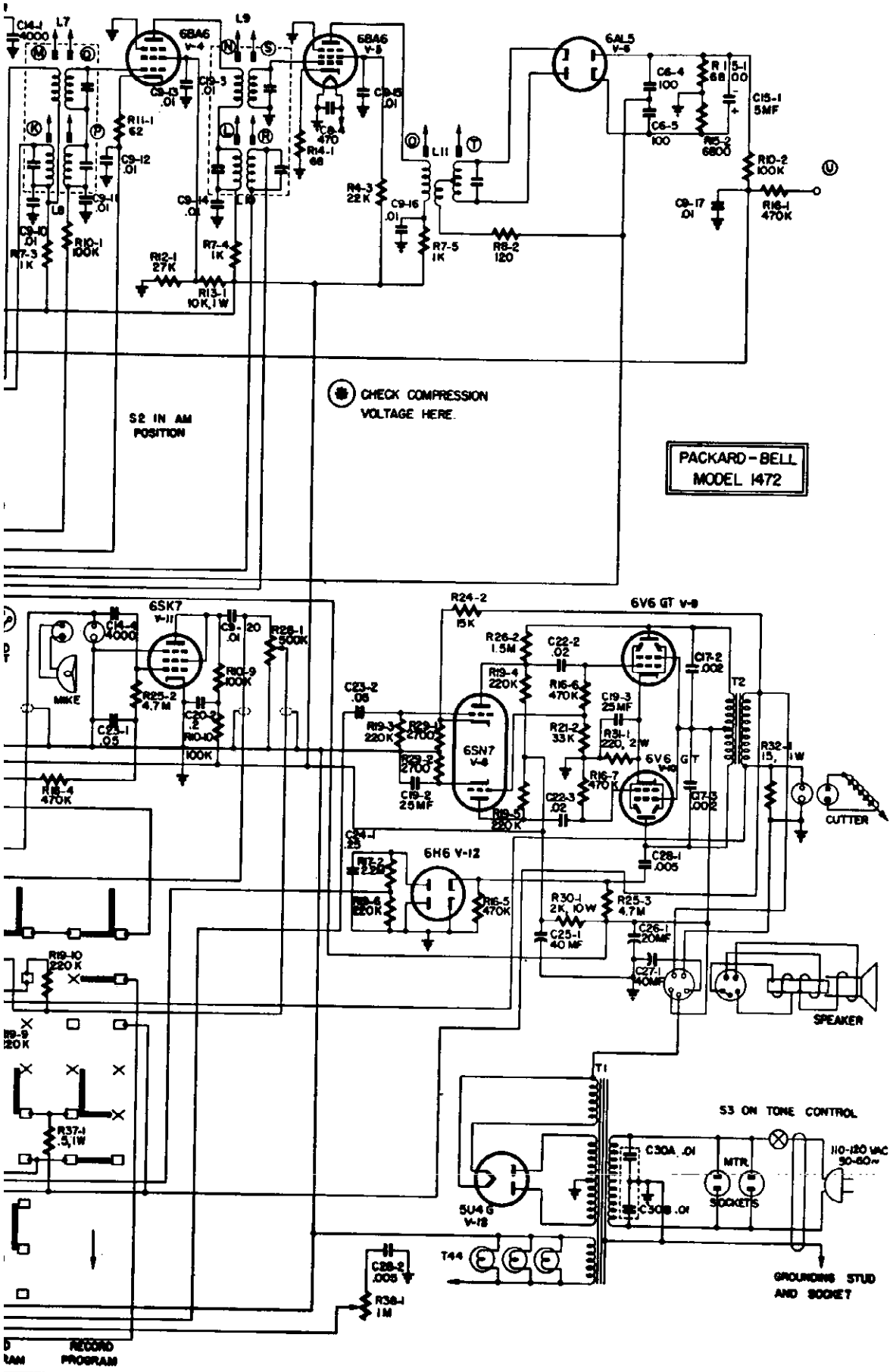
6BA6 V-4
6BA6 V-5
6AL5 V-6
6SK7 V-11
6SN7 V-9
6V6 GT V-8
6V6 GT V-10
6H6 V-12
5U4 G V-13
S2 IN AM POSITION
CHECK COMPRESSION VOLTAGE HERE.
PACKARD-BELL MODEL 1472
S3 ON TONE CONTROL
110-120 VAC 50-60~
MIKE
CUTTER
SPEAKER
MTR.
SOCKETS
GROUNDING STUD AND SOCKET
RECORD PROGRAM

MODEL 1472 PACKARD-BELL CO.

Alignment Procedure:

Alignment procedure consists of the steps outlined in the two alignment charts. A.M. alignment is carried out with minimum signal input. F.M. alignment signal should be strong enough to produce 3 volts A.V.C. voltage.

ALIGNMENT CHART AM

STEP	CONNECT TEST OSC. TO	TEST OSC. SETTING	POINTER SETTING	ADJUST FOR MAX. OUTPUT
1	Mixer Grid & Ground	455 KC	540 KC	Trimmers R. L. P. K
2	R.F. Grid & Ground	1500 KC	1500 KC	Trimmers I & H
3	R.F. Grid & Ground	600 KC	600 KC	Trimmer J
4	Repeat Step No. 2			
5	Standard Test Loop	1500 KC	1500 KC	Trimmer G
6	Check stationizing. Slide pointer on string if stations are uniformly off in one direction.			

NOTE: 1. Rock variable condenser for step 3.

2. Standard Test Loop is Hazeltine No. 1150 or a reasonable substitute.

Equipment Required for F.M. Alignment

1. Signal generator capable of generating signals at 10.7 MC and from 88 to 108 MC.
2. Vacuum tube voltmeter connected to point "A" (on Schematic).
3. Center-zero D.C. voltmeter connected to point "B" (on Schematic).

ALIGNMENT CHART FM

STEP	CONNECT TEST OSC. TO	TEST OSC. SETTING	POINTER SETTING	ADJUST FOR MAX. A.V.C.
1	R.F. Grid & Ground	10.7 MC	88 MC	O, S, N, Q, M
2	Adjust T for zero on zero-center meter.			
3	Repeat Steps 1 and 2.			
4	Doublet Terminals thru 270 Ohms	88 MC	88 MC	Trimmers F, E, D
5	Doublet Terminals thru 270 Ohms	108 MC	108 MC	Trimmers C, B, A
6	Repeat Step No. 4.			

NOTE: 1. Rock variable condenser for step 4.

Oscillator Cathode Voltages:

Measured at 117 volts AC line voltage with an AC vacuum tube voltmeter input impedance above 10 megohms.

1620 KC . . . . . 3.8 volts A.C.
1300 KC . . . . . 3.6 volts A.C.
750 KC . . . . . 2.8 volts A.C.
550 KC . . . . . 2.5 volts A.C.

Oscillator Grid Current: FM

Measured at 117 volts A.C. line voltage with a D.C. microammeter connected in series with ground end of the 22,000 ohm grid resistor.

108 MC . . . . . 200 Microamps
98 MC . . . . . 330 Microamps
88 MC . . . . . 480 Microamps

D.C. Resistance Measurements:

A.M. I.F. Coils

1st I.F.		2nd I.F.	
Primary	9.0 ohms	Primary	9.0 ohms
Secondary	9.0 ohms	Secondary	9.0 ohms

A.M. Oscillator Coil
Primary . . . . . 1.0 ohms
Secondary . . . . . 6.0 ohms

A.M. Antenna Coil
Start to Finish . . . . 12.2 ohms
Start to Tap . . . . . 10.5 ohms

A.M. R.F. Coil
Primary . . . . . 5.8 ohms
Secondary . . . . . 4.2 ohms

NOTE: Due to the variation in winding methods, the D.C. resistance on all coils is subject to a 20% tolerance.

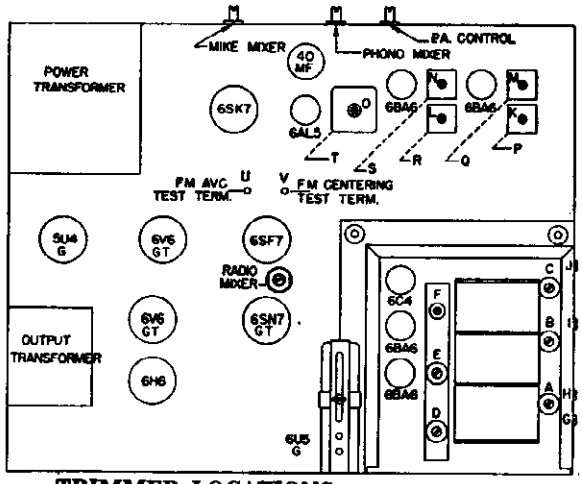

TRIMMER LOCATIONS

A—F.M. Antenna High Frequency Trimmer
B—F.M. R.F. High Frequency Trimmer
C—F.M. Oscillator High Frequency Trimmer
D—F.M. Antenna Low Frequency Trimmer
E—F.M. R.F. Low Frequency Trimmer
F—F.M. Oscillator Low Frequency Trimmer
G—A.M. Antenna Trimmer
H—A.M. R.F. Trimmer
I—A.M. Oscillator High Frequency Trimmer
J—A.M. Oscillator Low Frequency Trimmer
K—A.M. 1st I.F. Primary
L—A.M. 2nd I.F. Primary
M—F.M. 1st I.F. Primary
N—F.M. 2nd I.F. Primary
O—F.M. Ratio Detector Primary
P—(Bottom) A.M. 1st I.F. Secondary
Q—(Bottom) F.M. 1st I.F. Secondary
R—(Bottom) A.M. 2nd I.F. Secondary
S—(Bottom) F.M. 2nd I.F. Secondary
T—(Bottom) F.M. Centering Adjustment

©John F. Rider

PART NO.	REF. SYMBOL	DESCRIPTION
19018		Bushing, knob
21059		Cabinet
21059-7		Cabinet drawer panel
21059-1		Cabinet back, left upper
21059-3		Cabinet back, left lower
21059-2		Cabinet back, right
23515A	C1 A,B,C C2 A,B,C	Capacitor, variable, 3 gang with F. M. sections
23408	C3-1 to 5	Capacitor, trimmer, Single 3-12 Mmf.
23923	C4-1	Capacitor, ceramic, 10 Mmf. 500 V. NPO
23406	C5-1 to 3	Capacitor, trimmer, Single 3-30 Mmf.
23914	C6-1 to 7	Capacitor, ceramic, 100 Mmf. 500 V.
23912-1	C7-1 to 4	Capacitor, ceramic, 47 Mmf. 500 V.
23916	C8-1 to 4	Capacitor, ceramic, 470 Mmf. 500 V.
23023	C9-1 to 19	Capacitor, tubular, .01 Mf. 500 V.
23410	C10-1	Capacitor, trimmer, Single 1-8 Mmf.
23402	C11-1	Capacitor, trimmer, Single 300-800 Mmf
23917	C12-1	Capacitor, ceramic, 5 Mmf. 500 V. N 1400
23918	C13-1	Capacitor, ceramic, 10 Mmf. 500 V. N 1400
23208	C14-1 to 4	Capacitor, mica, 4000 Mmf. 500 V.
24038	C15-1	Capacitor, electrolytic, 5 Mf. 50 V.
23016	C16-1 to 3	Capacitor, tubular, .003 Mf. 600 V.
23002	C17-1 to 4	Capacitor, tubular, .002 Mf. 600 V.
23019	C18-1	Capacitor, tubular, .1 Mf. 200 V.
24006	C19-1 to 3	Capacitor, electrolytic, 25 Mf. 25 V
23020	C20-1 to 2	Capacitor, tubular, .2 Mf. 400 V.
23011	C21-1	Capacitor, tubular, .1 Mf. 400 V.
23007	C22-1 to 3	Capacitor, tubular, .02 Mf. 600 V.
23017	C23-1 to 2	Capacitor, tubular, .05 Mf. 200 V.
23021	C24-1	Capacitor, tubular, .25 Mf. 200 V.
24004-2	C25-1	Capacitor, electrolytic, 40 Mf. 350 V.
24001	C26-1	Capacitor, electrolytic, 20 Mf. 450 V.
24014	C27-1	Capacitor, electrolytic, 40 Mf. 450 V.
23004	C28-1 to 2	Capacitor, tubular, .005 Mf. 600 V.
23915	C29-1	Capacitor, ceramic, 220 Mmf. 500 V.
23932	C30A, B	Capacitor, ceramic, .01 Mf. 125 VAC
23001	C31-1	Capacitor, tubular, .001 Mf. 600 V.
28004A		Clip, turntable
28005A		Clip, antenna
28020		Clip, tuning eye
29406	L-1	Coil, F. M. Antenna
29400B	L-2	Coil, B. C. Antenna
29104	L-3	Coil, R. F. Choke
29106	L-4AB	Coil, F. M. R. F. Oscillator
29102F	L-5	Coil, B. C. R. F.
29205C	L-6	Coil, B. C. Oscillator
29020	L-7	Coil, 1st I. F. F. M.
29021	L-8	Coil, 1st I. F. A. M.
29022A	L-9	Coil, 2nd I. F. F. M.
29023	L-10	Coil, 2nd I. F. A. M.
29018	L-11	Coil, Ratio Detector, F. M.
32020		Cord, AC 8' 3 Conductor
32006B		Cord, AC 1½'
36019		Cutter, Assembly
36021		Cutter Cartridge-Universal Magnetic-3.2 ohms
38077		Dial, stationized
38078		Dial, Eastern
40003		Cord, Dial

PART NO.	REF. SYMBOL	DESCRIPTION
40101C		Drive, Planetary
52019Y		Knob, Control—Gold (2)
52019CU		Knob, Control—Mahogany (2)
52019BG		Knob, Control—Walnut (2)
52020BG		Knob, Control—Walnut (2)
52020Y		Knob, Control—Gold (2)
52020CU		Knob, Control—Mahogany (2)
52023CU		Knob, Push Button—Mahogany (6)
52023BG		Knob, Push Button—Walnut (6)
52023Y		Knob, Push Button—Gold (6)
52035A-S		Knob, Dual Control—Statuary Bronze (1)
52035A-K		Knob, Dual Control—Brass (1)
52035A-Y		Knob, Dual Control—Gold (1)
54001		Lamp, Dial—T-44 (0.25 amp.)
58022A		Changer—Webster 56
57008		Microphone, Dynamic Universal
57008-2		Microphone, base and handle
57008-1		Microphone Cable with Connector
58001-5		Recording Motor
58006		Turntable Recorder
59002		Needle, cutter
59001		Needle, pickup playback
63005B		Pickup, assembly
63027-2		Pickup, clip
63005-1		Pickup Arm Rest
63003		Pickup Cartridge Astatic L-71A (Playback)
63026		Pickup Cartridge, Shure P-30 (Phono)
66004		Plug, Phono Playback
66021		Plug, Phono AC
66019		Plug, Mike
66020		Plug, Speaker
69003C		Pulley, Idler-Recorder
69006A		Pulley, dial
73053	R1-1 to 5	Resistor carbon, 1 megohm ½W 20%
73008	R2-1	Resistor carbon, 39 ohm ½W 10%
73018-1	R3-1	Resistor carbon, 270 ohm ½W 10%
73041	R4-1 to 3	Resistor carbon, 22,000 ohm ½W 10%
73021	R5-1	Resistor carbon, 470 ohm ½W 10%
73032	R6-1	Resistor carbon, 3900 ohm ½W 10%
73025	R7-1 to 5	Resistor carbon, 1000 ohm ½W 10%
73014	R8-1 to 2	Resistor carbon, 120 ohm ½W 10%
73044-1	R9-1	Resistor carbon, 39,000 ohm ½W 10%
73047	R10-1 to 11	Resistor carbon, 100,000 ohm ½W 20%
73010-1	R11-1	Resistor carbon, 62 ohm ½W 10%
73042	R12-1 to 2	Resistor carbon, 27,000 ohm ½W 10%

PART NO.	REF. SYMBOL	DESCRIPTION
73073	R13-1	Resistor carbon, 10,000 ohm 1W 10%
73011	R14-1	Resistor carbon, 68 ohm ½W 10%
73035	R15-1 to 2	Resistor carbon, 6800 ohm ½W 10%
73051	R16-1 to 7	Resistor carbon, 470,000 ohm ½W 20%
73055	R17-1 to 2	Resistor carbon, 2.2 megohm ½W 20%
73060	R18-1 to 2	Resistor carbon, 56,000 ohm ½W 20%
73049	R19-1 to 10	Resistor carbon, 220,000 ohm ½W 20%
73036	R20-1	Resistor carbon, 8200 ohm ½W 10%
73043	R21-1 to 2	Resistor carbon, 33,000 ohm ½W 10%
Part of 25508B	R22-1	Control, bass, 3 megohm
25008	R23-A,B,C	"Volume", 1 megohm-2 megohm-1 megohm
73039	R24-1 to 2	Resistor carbon, 15,000 ohm ½W 10%
73057	R25-1 to 3	Resistor carbon, 4.7 megohm ½W 20%
73054	R25-1 to 3	Resistor carbon, 1.5 megohm ½W 20%
73076	R27-1	Resistor carbon, 56,000 ohm ½W 20%
25800	R28-1 to 3	Controls, Mixer 500,000 ohms
73030	R29-1 to 2	Resistor carbon, 2700 ohm ½W 10%
73920	R30-1	Resistor, 2000 ohm 2W Wire Wound
73130	R31-1	Resistor carbon, 220 ohm 2W 10%
73903	R32-1	Resistor, 15 ohm 1W Wire Wound
73052	R33-1 to 2	Resistor carbon, 680,000 ohm ½W 20%
73017	R34-1	Resistor carbon, 220 ohm ½W 10%
25802	R35-1	Control—P.A. 10,000 ohm
73022	R36-1	Resistor carbon, 560 ohm ½W 10%
73910	R37-1	Resistor, ½ohm 1W Wire Wound
Part of 25508B	R38-1	Control Treble, 1 megohm
79002		Socket, tube 8 prong
79004		Socket, Wire record 3 prong
79005		Socket, Compartment light
79007		Socket, Phono AC
79010B		Socket, Lamp
79017		Socket, Microphone
79018		Socket, Phono
79051		Socket, Tube miniature
79048		Socket, Speaker with cable
79041		Socket, Tuning eye
79045		Socket, Loop
79046		Socket, Cutter
79049		Socket, Electrolytic Mounting
83803A		Speaker, 12" Electro-Dynamic
86016B	S2A,B,C,D	Switch, Band
86301A	S1	Switch, Push Button
86701A		Switch, Slide
88106		Terminal Test
89023	T-1	Transformer, power
89416A	T-2	Transformer, output, 8,000 to 3.2 ohms

PHILCO CORP. MODEL C4608, Code 121; Mopar MODEL 802, Chrysler

CIRCUIT DESCRIPTION

The circuit of the Model C4608 custom-built auto radio consists of a 7A7 r-f stage, a 7B8 converter, a 7A7 i-f stage, a 7B6 second detector and first audio, a 7A4 phase inverter, and two 7C5 tubes in push-pull in the output. The power supply is of the six-volt non-synchronous vibrator type, using a 7Y4 full-wave rectifier.

An unusually high signal-to-noise ratio is achieved in this set by the use of a permeability-tuned r-f stage, coupled to the converter by a band-pass r-f transformer. This transformer is designed to give maximum transfer of signals in the broadcast band, while greatly attenuating all other frequencies. Permeability tuning of both r-f and oscillator stages provides the best possible sensitivity, selectivity, and stability. Both push-button and manual tuning utilize this markedly superior method.

Automatic volume control is provided by filtering the rectified voltage from the diode section of the second detector-first audio tube, and applying it to the grids of the r-f and converter stages.

A feature of the audio system is the continuously variable tone control, which consists of an inverse feed-back circuit built around the first audio stage.

The phase-inverter stage provides push-pull drive for the output tubes, by means of equal load resistances in the plate and cathode circuits of the inverter tube. One signal is taken from the plate, and the other, equal in amplitude but opposite in phase, is taken from the cathode. The push-pull output stage delivers a full five watts of audio power through the output transformer to the electro-dynamic speaker.

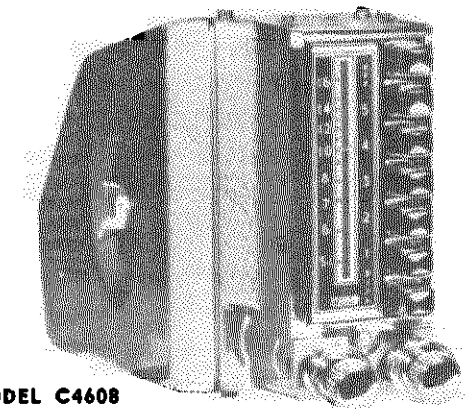

MODEL C4608

SPECIFICATIONS

CIRCUIT ..... **Eight-tube, superheterodyne**
FREQUENCY RANGE ..... **540 to 1600 kc.**
INTERMEDIATE FREQUENCY ..... **455 kc.**
PHILCO TUBES **7A4, 7A7 (2), 7B6, 7B8, 7C5 (2) 7Y4**
POWER INPUT ..... **6.3 volts, 9.2 amps.**
ANTENNA ..... **Retractable-tip, Philco Part No. 91-0484**

All components in the receiver circuit are symbolized and located as follows:

C—condenser	LS—loud speaker	T—transformer
I—pilot lamp	R—resistor	VB—vibrator
L—choke or coil	S—switch	Z—electrical assembly

100-series components are in section 1—the power supply.
200-series components are in section 2—the audio system.
300-series components are in section 3—the i-f and second detector.
400-series components are in section 4—the r-f and first detector.

PHILCO TROUBLE-SHOOTING PROCEDURE

In this manual, the circuit is divided into four sections, with a schematic and chassis layout, showing test points, for each section. The trouble-shooting procedure for each section is outlined in a chart. Tests indicated by a large asterisk (*) provide sectional master checks, making it possible to eliminate each section as a source of trouble without going through its entire test chart. Wherever trouble is found (indicated by failure to get a "Normal Indication" on any test) it should be isolated by voltage and resistance checks of the parts associated with the point under test, and remedied before testing further.

Before starting the trouble-shooting procedure, the following steps are recommended:

1. Before connecting the receiver to a source of power, inspect both sides of the chassis. Make sure that all tubes are securely in their sockets, and look for any broken or shorted connections, burned resistors, or other obvious sources of trouble.

2. Connect the receiver to the power source (6.3 volts, d. c.), and ascertain that all the tube filaments are lighted. If the 7Y4 rectifier is observed to be defective, check the filter condensers (C100 A, B, and C) for short circuits before inserting a new tube.

3. Turn the volume control fully on and set the sensitivity control (shown in Figure 9, page 6) at maximum. Connect an antenna or a signal generator to the antenna receptacle, and ascertain that the receiver definitely does not operate properly.

MODEL C4608, Code 121; PHILCO CORP.
Mopar MODEL 802,
Chrysler

TESTS TO ISOLATE TROUBLE WITHIN

SECTION 1

With the exception of the first, make all measurements for this section with a high-quality volt-ohmmeter, using the applicable d-c range. All voltages given in this manual are average, and were measured with the volume control set at minimum.

NOTE: If the vibrator (VB100) is found to be defective, check C101 and C100 for shorts before inserting a new vibrator.

TEST POINTS	NORMAL INDICATION	POSSIBLE CAUSE OF ABNORMAL INDICATION
Ammeter (0-30 amps, d-c) in series with power souurce.	9.2 amps	Defective power-supply components (isolate by following tests)
A to B—	215 volts	Defective 7Y4, VB100, C100, C101, T100.
C to B—	195 volts	Open R101, leaky C100B, C100C.
D to B—	180 volts	Open R102, leaky C100C.

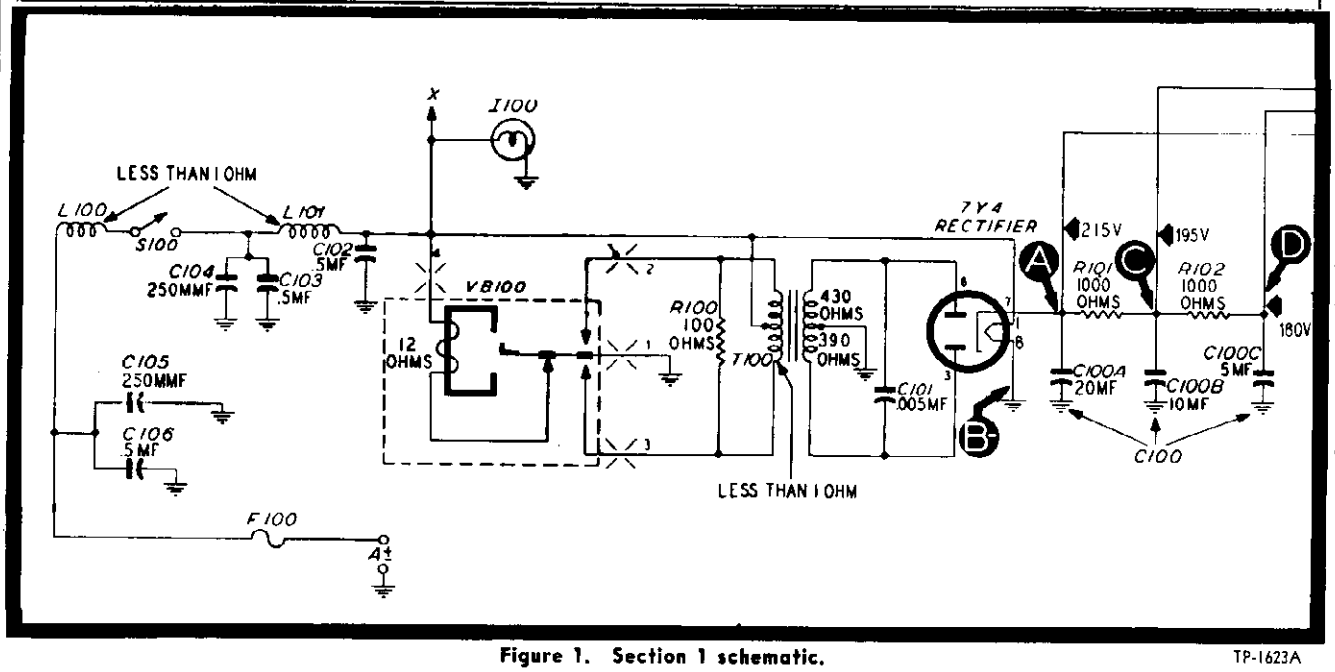

Figure 1. Section 1 schematic. TP-1623A

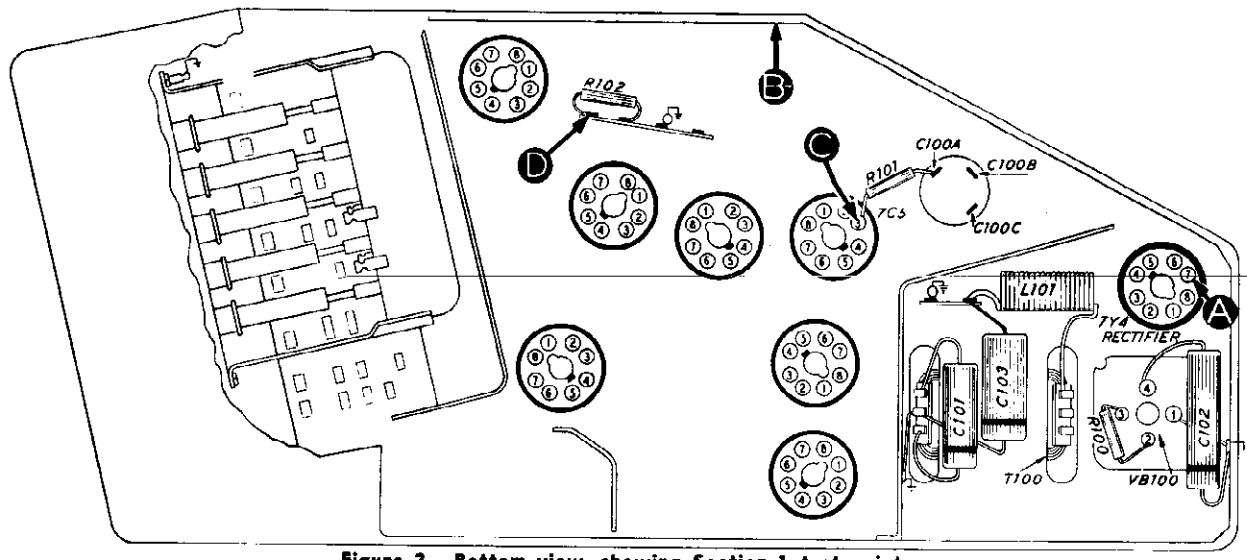

Figure 2. Bottom view, showing Section 1 test points. TP-1623E

Mopar MODEL 802, Chrysler PHILCO CORP. MODEL C4608, Code 121;

TESTS TO ISOLATE TROUBLE WITHIN

SECTION 2

For all tests in this section, use an audio signal. Connect the generator output lead through a condenser (.01 to .25 mf.) to the test points indicated; connect the generator ground lead to the receiver chassis (B–). Set the receiver volume control at maximum, and adjust the signal-generator output for a loud, clear signal on the first test.

TEST POINTS	NORMAL INDICATION	POSSIBLE CAUSE OF ABNORMAL INDICATION
E to B– (Remove 7A4)	Loud, clear signal from speaker.	Defective 7C5, T200, LS200; open R205; leaky C201.
F to B– (7A4 removed)	Loud, clear signal, same as previous test.	Defective 7C5, T200; leaky C202.
G to B– (7A4 removed)	Loud, clear signal.	Open C201.
H to B– (7A4 removed)	Loud, clear signal.	Open C202.
J to B– (Replace 7A4)	Clear signal, louder than previous tests.	Defective 7A4, C200; open R202, R201.

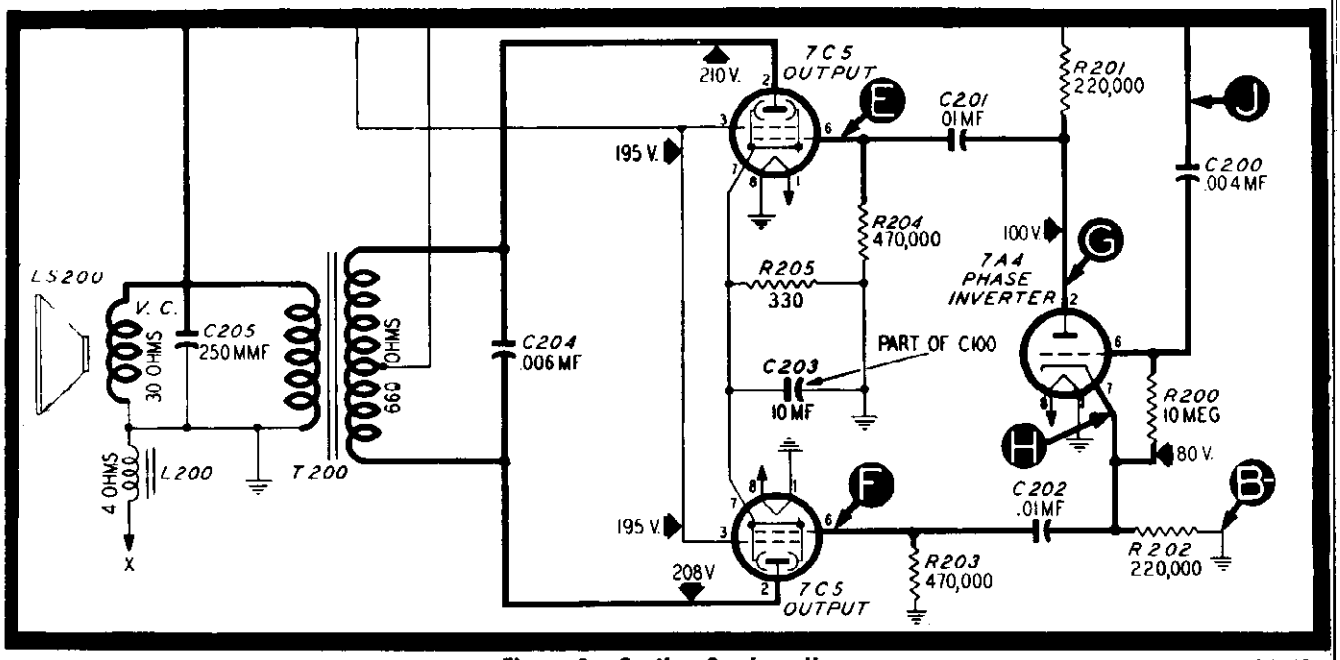

Figure 3. Section 2 schematic. TP-1623B

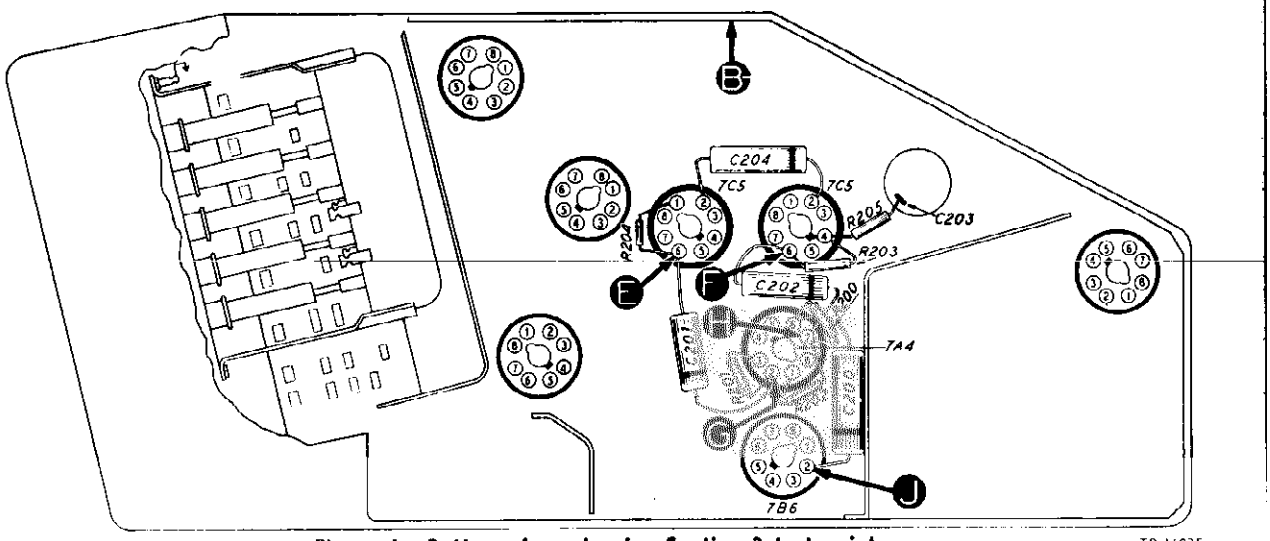

Figure 4. Bottom view, showing Section 3 test points. TP-1623F

MODEL C4608, Code 121; PHILCO CORP.
Mopar MODEL 802, **TESTS TO ISOLATE TROUBLE WITHIN**
Chrysler

SECTION 3

For the first two tests in this section, use an audio signal. For the last two, use a modulated 455-kc signal. Connect the signal-generator output lead through a condenser (.01 to .25 mf.) to the test points indicated; connect the generator ground lead to the receiver chassis (B–). Set the receiver volume control at maximum, and adjust the signal-generator output for a loud, clear signal on the first test.

TEST POINTS	NORMAL INDICATION	POSSIBLE CAUSE OF ABNORMAL INDICATION
K to B– (audio sig.)	Loud, clear signal.	Defective 7B6; open R306, C304; shorted C305.
L to B– (audio sig.)	Loud, clear signal.	Open R307, C303; defective volume control (rotate through entire range for complete check.)
M to B– (455-kc. sig.)	Loud, clear signal.	Defective 7A7, Z301; open R302, R304; shorted C403 (see Section 4 for location.)
N to B– (455-kc. sig.)	Loud, clear signal.	Defective Z300.

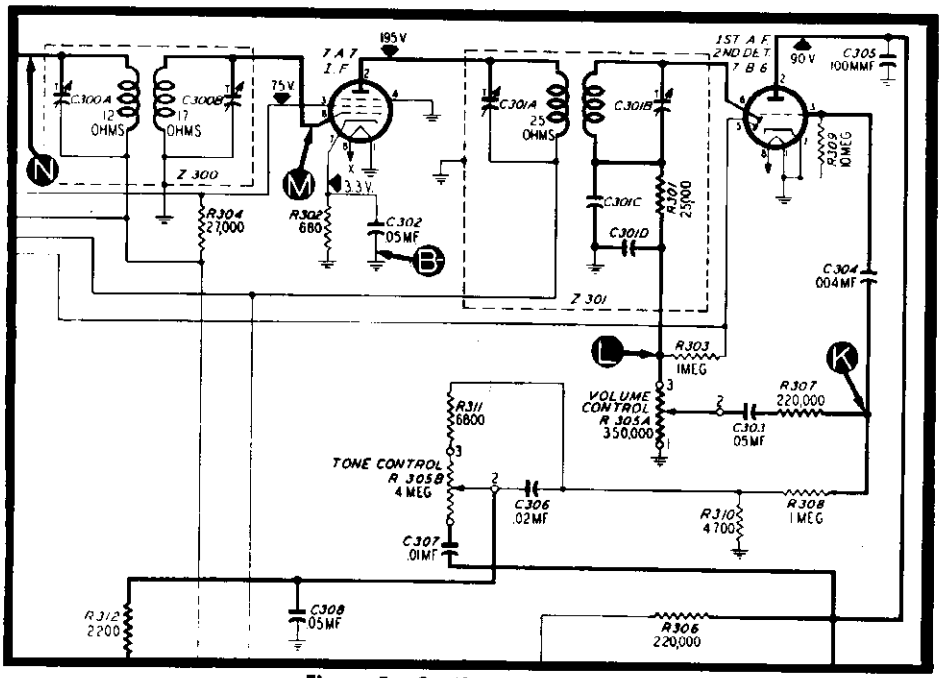

Figure 5. Section 3 schematic. TP-1623C

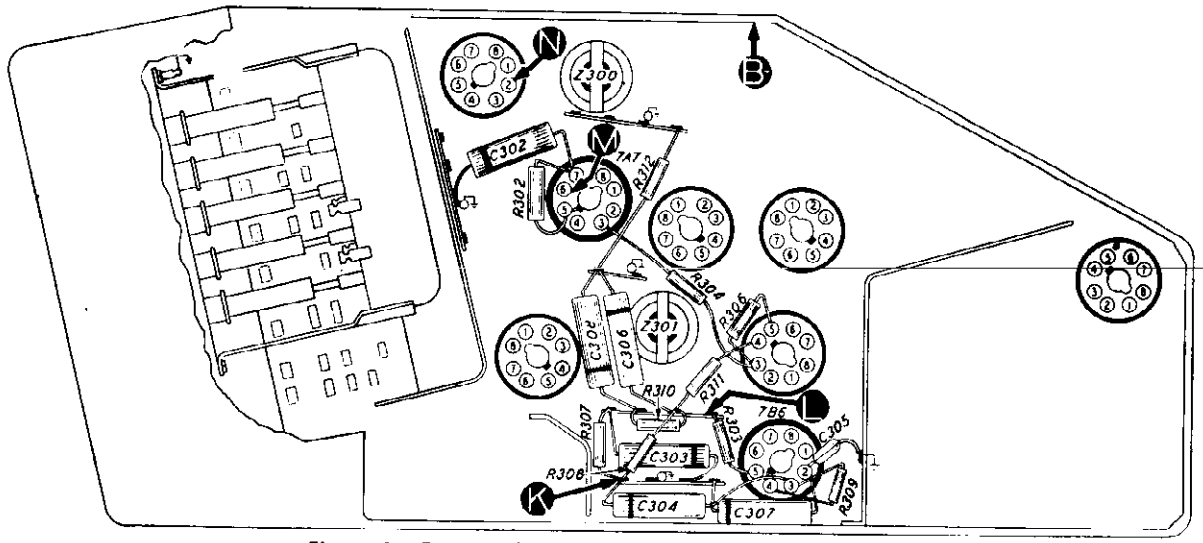

Figure 6. Bottom view, showing Section 3 test points. TP-1623G

PHILCO CORP.

MODEL C4608, Code 121;
Mopar MODEL 802,
Chrysler

SECTION 4

1. Attach the positive lead of a 20,000-ohms-per-volt meter to the receiver chassis, and the prod end of the negative lead through a 50,000-ohm resistor to point S. Set the meter on a 10-volt or similar range. Depress the "Dial" push-button, and rotate the tuning control through its entire range. Absence of voltage at any point indicates that the oscillator is not functioning. If so, check the components listed in the first test in the chart below.

2. Set the volume and sensitivity controls at maximum. Proceed through the chart tests below, connecting the signal-generator output lead through a condenser (.01 to .25 mf.) to the test points indicated. The "NORMAL INDICATION" in each test will be a loud, clear signal when the signal generator is tuned to the same frequency as the receiver.

TEST POINTS	PUSH-BUTTON SETTING	POSSIBLE CAUSE OF ABNORMAL INDICATION
P to B—	"DIAL"	Defective 7B8, L403, L404A, or push-button switch; open R404, C405, C407, C408, C409.
P to B—	pre-tuned, 1 to 5	Defective oscillator coils L401E to K, or push-button switches.
Q to B—	"DIAL"	Defective 7A7, Z400, L404A, L404C, or push-button switch; open R402, R401 (rotate R401 through its entire range for complete check.)
Q to B—	pre-tuned, 1 to 5	Defective r-f coils L401 A to E, or push-button switches.
R to B—	"DIAL"	Defective L402, C404, L404A, L404C, or push-button switch.
R to B—	pre-tuned, 1 to 5	Defective r-f coils L401A to E, or push-button switches.

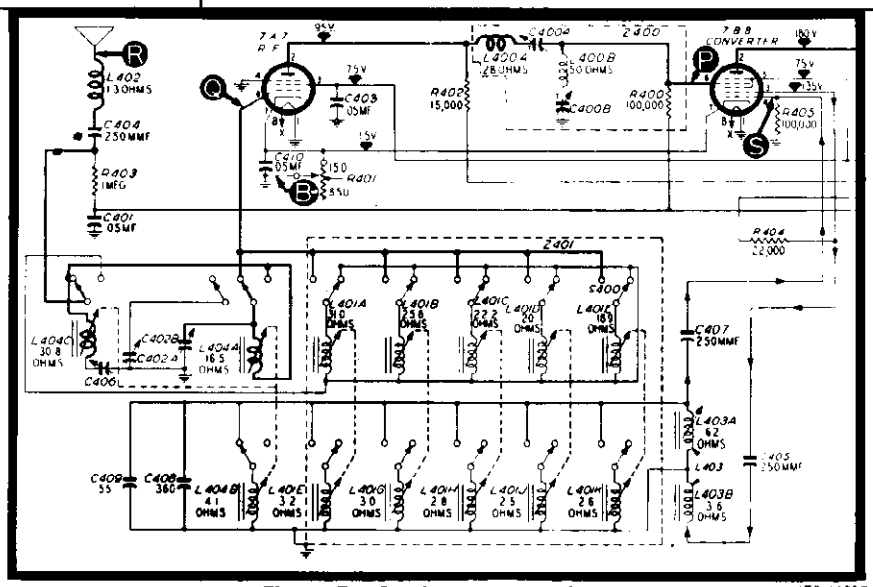

Figure 7. Section 4 schematic. TP-1623D

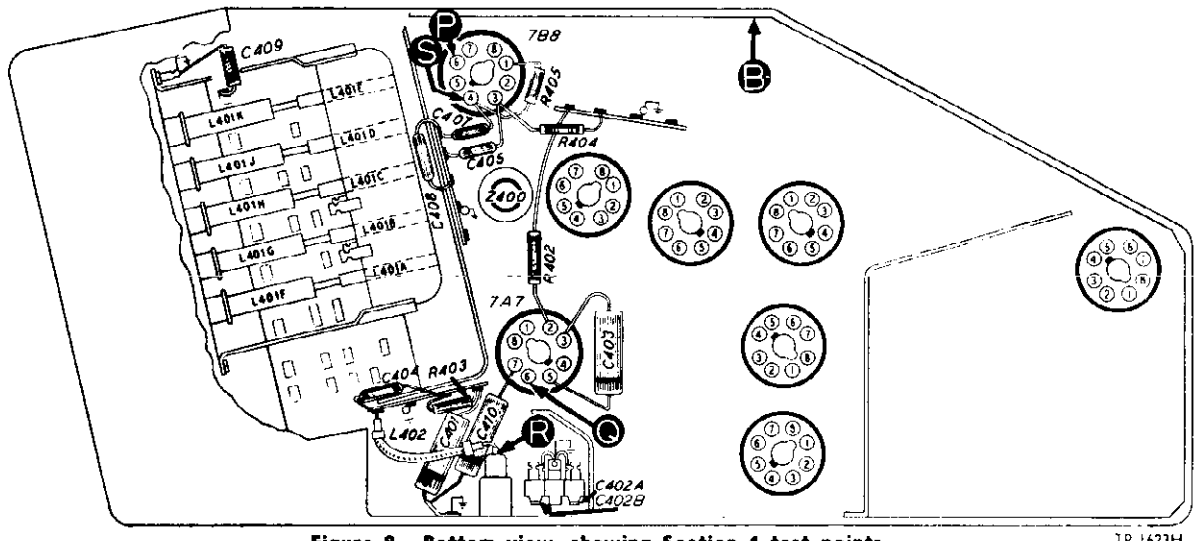

Figure 8. Bottom view, showing Section 4 test points. TP-1623H

© John F. Rider

ALIGNMENT PROCEDURE

CONNECT THE OUTPUT METER between the voice-coil lug on the speaker and ground.

CONNECT THE SIGNAL-GENERATOR output lead as follows: For the i-f alignment (the first step in the chart), connect through a 20-mmf. condenser to pin 6 of the 7B8 converter. For the r-f alignment (all steps after the first), connect through a 20-mmf. condenser in series with an antenna lead (Part No. 95-0181) to the antenna receptacle. If the antenna lead is not available, connect a 30-mmf. condenser from the antenna receptacle to ground.

CALIBRATE THE DIAL as follows: Turn the tuning control to its maximum clockwise position. The pointer should then be at 1600 kc. If not, insert a stiff rod 2¼" into the small hole on the left side of the control head, near the number 8 on the dial scale. Rotate the tuning control until the pointer mechanism is stopped by the rod, and continue rotating the control for a fraction of a turn, to slide the pointer mechanism a short distance along the drive cord. Repeat this operation until the pointer coincides with the 1600-kc. mark on the dial when the tuning control is fully clockwise.

SET THE RECEIVER CONTROLS as follows: Set the tone control at "VOICE" (maximum high position). Set the volume and sensitivity controls at maximum. Adjust the signal-generator output as alignment progresses to keep the meter needle near center scale.

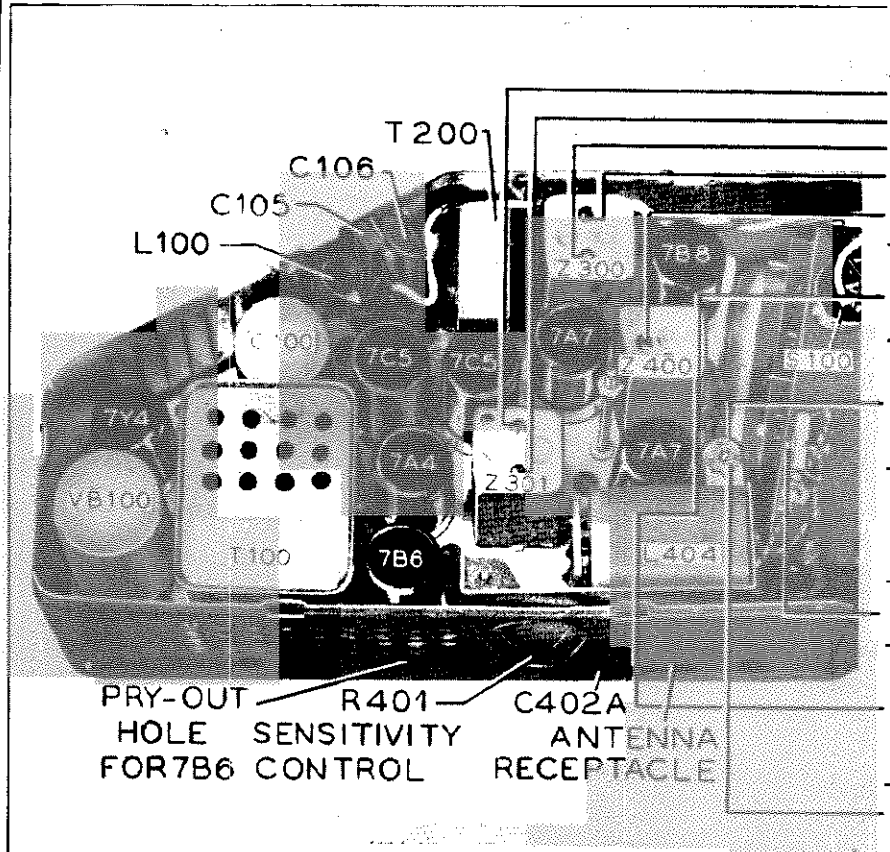

Figure 9. Chassis view, showing trimmer locations.

ADJUST IN ORDER	SPECIAL INSTRUCTIONS	DIAL SETTINGS SIG. GEN.	DIAL SETTINGS RECEIVER
C301B Max. C301A Max. C300B Max. C300A Max. C400B Min.	Ground pin 4 of the 7B8. Adjust the i-f trimmers for maximum in the order listed. Then adjust the i-f trap condenser (C400B) for minimum output.	455 kc.	1600 kc.
C402B Max.	Remove the ground from pin 4 of the 7B8. Adjust for maximum output.	1500 kc.	1500 kc.
L403A Max.	Adjust for overall maximum while rocking the tuning control.	580 kc.	580 kc.
	Tune the receiver for maximum output with the tuning control set at 550 kc.	550 kc.	550 kc. (approx.)
C406 Min.	Adjust for minimum output.	1460 kc.	550 kc.
C402B Max.	Adjust for maximum output. Final adjustment to be made after re-installing the set in the car.	1500 kc.	Tune in 1500 kc. signal
L403A Max.	Adjust for overall maximum while rocking the tuning control.	580 kc.	580 kc.

PHILCO CORP.

MODEL C4608, Code 121;
Mopar MODEL 802,
Chrysler

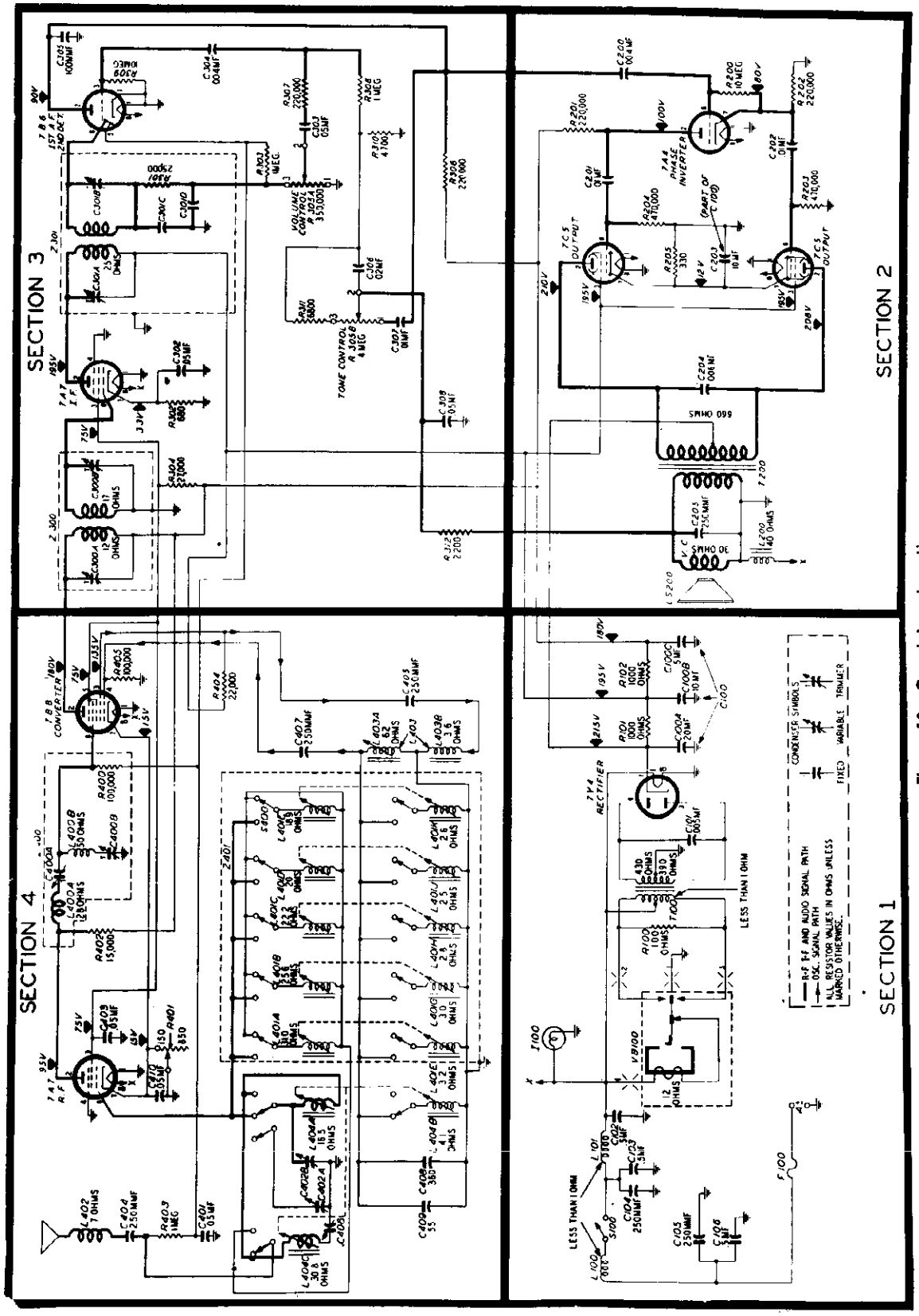

Figure 10. Complete schematic.

NOTE: All voltage, capacity, and resistance values shown are average. The voltages between B- (chassis) and other points indicated were measured with a 20,000 ohms-per-volt meter, with the volume control at minimum and the tuning control at 550 kc.

MODEL C4608, Code 121; PHILCO CORP. Mopar MODEL 802, Chrysler

REPLACEMENT PARTS LIST

NOTE: Parts marked with an asterisk (*) are general replacement items, and the numbers will not be identical with those used on factory assemblies. Use only the "Service Part No." shown in the parts list when ordering replacements.

SECTION 1

Reference	Description	Service Part No.
C100	Condenser, electrolytic	61-0150*
	C100A: condenser, 20 mf.	Part of C100
	C100B: condenser, 10 mf.	Part of C100
	C100C: condenser, 5 mf.	Part of C100
C101	Condenser, .005 mf.	61-0153*
C102	Condenser, .5 mf.	61-0134*
C103	Condenser, .5 mf.	61-0137*
C104	Condenser, 250 mmf.	60-10255007*
C105	Condenser, 250 mmf.	60-10255007*
C106	Condenser, .5 mf.	61-0137*
F100	Fuse	45-2559
I100	Lamp, pilot	34-2064*
L100	Choke, "A"	32-1644
L101	Choke, vibrator	65-0389
R100	Resistor, 100 ohms	66-1104340*
R101	Resistor, 1,000 ohms	66-2104340*
R102	Resistor, 1,000 ohms	66-2104340*
S100	Switch, on-off	67-0046*
T100	Transformer, power	65-0347*
VB100	Vibrator	83-0026*

SECTION 2

C200	Condenser, .004 mf.	61-0179*
C201	Condenser, .01 mf.	61-0120*
C202	Condenser, .01 mf.	61-0169*
C203	Condenser, 10 mf.	Part of C100
C204	Condenser, .006 mf.	61-0105*
C205	Condenser, 250 mmf.	60-10255007*
L200	Coil, field	Part of LS200
LS200	Speaker unit	73-0042*
	Replacement cone	91-0164
R200	Resistor, 10 megs.	66-6101540*
R201	Resistor, 220,000 ohms	66-4221540*
R202	Resistor, 220,000 ohms	66-4221540*
R203	Resistor, 470,000 ohms	66-4471540*
R204	Resistor, 470,000 ohms	66,4471540*
R205	Resistor, 330 ohms	66-1334340*
T200	Transformer, output	65-0363*

SECTION 3

C302	Condenser, .05 mf.	61-0101*
C303	Condenser, .05 mf.	61-0101*
C304	Condenser, .004 mf.	61-0179*
C305	Condenser, 100 mmf.	60-10145307*
C306	Condenser, .02 mf.	61-0154*
C307	Condenser, .01 mf.	60-10105007*
C308	Condenser, .05 mf.	61-0101*
R302	Resistor, 680 ohms	66-1683340*
R303	Resistor, 1 meg.	66-5101540*
R304	Resistor, 27,000 ohms	66-3274340*
R305	Control, volume	67-0040*
	R305A: control, volume, 350,000 ohms	Part of R305
	R305B: control, tone, 4 meg.	Part of R305
R306	Resistor, 220,000 ohms	66-4221540*
R307	Resistor, 220,000 ohms	66-4221540*
R308	Resistor, 1 meg.	66-5101540*
R309	Resistor, 10 megs.	66-6101540*
R310	Resistor, 4,700 ohms	66-2471340*
R311	Resistor, 6,800 ohms	66-2681540*
R312	Resistor, 2,200 ohms	66-2221540*
Z300	Transformer, 1st i-f	65-0365
	C300A: condenser, trimmer	Part of Z300
	C300B: condenser, trimmer	Part of Z300
Z301	Transformer, 2nd i-f	65-0366
	C301A: condenser, trimmer	Part of Z301
	C301B: condenser, trimmer	Part of Z301
	C301C: condenser	Part of Z301
	C301D: condenser	Part of Z301
	R301: resistor	Part of Z301

SECTION 4

C401	Condenser, .05 mf.	61-0101*
C402	Condenser, antenna assembly	77-0788
	C402A: condenser, trimmer	Part of C402
	C402B: condenser, trimmer	Part of C402
C403	Condenser, .05 mf.	61-0111*
C404	Condenser, 250 mmf.	60-10255007*
C405	Condenser, 250 mmf.	60-10255007*
C406	Condenser, trimmer	63-0069
C407	Condenser, 250 mmf.	60-10255007*
C408	Condenser, 360 mmf.	30-1220-13*
C409	Condenser, 55 mmf.	61-0149*
C410	Condenser, .05 mf.	61-0101*
L402	Choke, antenna	65-0437
L403	Coil, oscillator shunt	65-0440
	Iron core and screw assembly	57-2325
	Mounting nut	218-1341
L404	Manual tuning unit assembly	77-0962
	Coil assembly, antenna	65-0449
	Coil assembly, oscillator	65-0439
	Coil, assembly, image trap	65-0382

SECTION 4 (Continued)

Reference	Description	Service Part No.
	Control, sensitivity, 1,000 ohms (R401)	67-0025*
	Core assembly, iron, image trap	77-0677
	Core, iron, antenna	57-1702
	Core, iron, oscillator	57-1703
	Guide assembly, core	77-0678
	Nut, backlash	57-1706
	Pin, hair	57-1868FA1
	Shaft, core guide	57-1672FA3
	Shaft, manual tuning	77-0767
	Spring, backlash nut	57-1705FA1
	Spring, coil retaining	57-1673
	Spring, core guide	57-1708
R401	Control, sensitivity (Part of L404)	67-0025*
R402	Resistor, 15,000 ohms	66-3153340*
R403	Resistor, 1 meg.	66-5101540*
R404	Resistor, 22,000 ohms	66-3223340*
R405	Resistor, 100,000 ohms	66-4101540*
Z400	Transformer, r-f and i-f wave trap	65-0421
	C400A: condenser, trimmer	Part of Z400
	C400B: condenser, trimmer	Part of Z400
	L400A: coil, r-f plate	Part of Z400
	L400B: coil, i-f trap	Part of Z400
	R400: resistor, 100,000 ohms	Part of Z400
Z401	Tuning unit assembly, push-button (complete)	77-0943
	Condenser, ceramicon	61-0149*
	Condenser, padder	63-0069
	Coupling, push-button link	57-1700
	S400: switch, push-button	Part of Z401

MISCELLANEOUS

Front housing assembly	77-0941FC64
Cover, tube side	77-0879
Cover, wiring side	57-2186FC64
Receptacle, antenna	57-0591FA3
Socket, tube	27-6151*
Socket, vibrator	27-6044*
Tuning unit	77-0943
Front, housing	57-2211FC64
Push-button assembly (Dodge)	76-1910
Push-button assembly (Plymouth, De Soto, Chrysler)	76-1851
Cord, pointer drive (25-foot spool)	45-1459
Core and key assembly, push-button (off)	76-1955
Core and key assembly, push-button No. 2	76-1956
Core and key assembly, push-button No. 3	76-1957
Core and key assembly, push-button No. 4	76-1958
Core and key assembly, push-button No. 5	76-1959
Core and key assembly, push-button No. 6	76-1960
Core and key assembly, push-button (dial)	76-1961
Cover, nut (Chrome)	57-1683FA8
Cover, push-button (MoPar, Dodge)	56-3386
Dial, glass (Dodge)	27-5898
Dial, glass (Plymouth, MoPar)	27-5897
Bezel (Dodge)	57-2220FA8
Bezel (Plymouth, De Soto, Chrysler)	57-2221FA8
Bracket, diffusing screen	57-2242FA3
Pointer, dial	55-1366
Screen, diffusing	55-1428
Socket assembly, pilot lamp	76-1678
Spring, dial mounting	57-2218FA1
Drum assembly, tone indicator	77-0914
Cord, tone drum drive (25-foot spool)	45-1459
Shaft assembly, color cup	76-1855
Spring, tone indicator color drum	57-1693
Washer, "U", tone drum shaft	28-5990FE12
Fuse lead assembly	77-0052
Contact	54-4344
Housing, fuse	56-3595FA3
Spring	56-3593FA1
Tube, insulating	54-7192
Washer, fibre	54-7191
Set mounting	
Bolt	IW16167FA3
Grille spacer	57-2358FA8
Knob, manual-volume	77-0688
Knob (nut cover)	57-1683FA8
Knob, tone	57-1682FA8
Nut	IW19996FA3
Shaft, tuning	57-2217FA3
Spacer	57-1042FA3
Washer	97-0073FA1
Washer	W417FA3
Speaker mounting	
Nut	IW19988FA3
Stud and bushing assembly	77-0400
Suppressor kit	
Braid, bonding	95-0073
Clip	56-6276
Condenser, generator	61-0156*
Condenser, ignition switch	61-0177*
Filter assembly, fuel guage	67-0050*
Suppressor, distributor	33-1196*

PHILCO CORP. MODEL C4608, Code 122; Chrysler

Functionally, both sets are identical, but there have been several parts changes in Code 122 which, because of their effect upon the characteristics and adjustment of the set, definitely require the correct substitution. These changes involve the parts listed below.

In Code 122, the sensitivity control is replaced by a fixed resistor; also, the i-f transformers and wave trap are replaced by units which use permeability tuning instead of trimmer-condenser tuning.

Physically, the alignment procedure remains the same, except that the transformers are of the K type; therefore, the primary must be adjusted from the bottom of the can, while the secondary is adjusted from the top.

We suggest that you examine the list below and order the new parts. We feel that these parts may be required in the course of warranty service.

SECTION 1

Reference Symbol	Description	Service Part No. (Code 122)	Service Part No. (Code 121)
L101	Choke, vibrator	32-4170	65-0389

SECTION 2

C200	Condenser, grid blocking, .005 mf.	45-3502	61-0179
C201	Condenser, grid blocking, .01 mf.	61-0120	61-0105
C202	Condenser, grid blocking, .01 mf.	61-0120	61-0105
C204	Condenser, plate by-pass, .007 mf.	61-0127	61-0105
T200	Transformer, output	32-8316-1	65-0363

SECTION 3

Reference Symbol	Description	Service Part No. (Code 122)	Service Part No. (Code 121)
C304	Condenser, grid blocking, .005 mf.	45-3502	61-0179
C307	Condenser, tone compensation, .01 mf.	61-0120	61-0105
R302	Resistor, cathode bias, 470 ohms	66-1473340	61-1683340
Z300	Transformer, 1st i-f	32-4160	65-0365
Z301	Transformer, 2nd i-f	32-4161	65-0366

SECTION 4

L404	Manual-tuning-unit assembly	77-0666-2	77-0962
R401	Resistor, cathode bias, 220 ohms (replaces sensitivity control in Code 121)	66-1223340	67-0025
Z400	Transformer, r-f and i-f wave trap	32-4162	65-0421
Z401	Tuning-unit assembly, push-button (complete)	77-0657-1	77-0943

NOTE: On a small percentage of the first sets made, some difficulty may be encountered in keeping the i-f transformers aligned. If the radio is weak or the i-f transformers are far out of alignment, adjust the cores. If they seem to turn very easily, it will be necessary to replace the entire i-f transformer. This condition may occur only on some sets made prior to run #4, for Model C-4608, Code 122 only.

© John F. Rider

TROUBLE SHOOTING

Section 2

For the tests in this section, use an audio-frequency signal generator. Connect the generator ground lead to the chassis, test point C; connect the output lead through a .1-mf. condenser to the test points indicated in the chart.

Turn the volume control to maximum, and the tone control fully counterclockwise. Adjust the signal-generator output as required for each step.

If the "NORMAL INDICATION" is obtained in step 1, proceed with the tests for Section 3. If not, isolate and correct the trouble in this section.

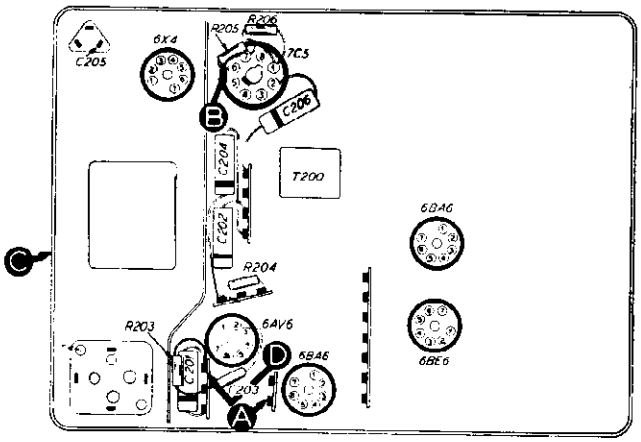

TP-4049B

Bottom View, Showing Section 2 Test Points

STEP	TEST POINT	NORMAL INDICATION	POSSIBLE CAUSE OF ABNORMAL INDICATION
1	A	Loud, clear signal with weak signal input.	Trouble in this section. Isolate by the following tests.
2	B	Loud, clear signal with strong signal input.	Defective: 7C5. Open: R206, T200, LS200. Shorted: C203, C206, T200. Leaky: C206, C203.
3	D	Loud, clear signal with weak signal input.	Defective: 6AV6. Open: C204, R204. Shorted or leaky: C204, C202 (rotate R202).
4	A	Loud, clear signal with weak signal input.	Open: C201, R203. Shorted: C304*. Leaky: C304*.

Listening Test: Distortion may be caused by shorted or leaky C201, C204, or C205, or by open R203 or R205.

* This part, located in another section, may cause abnormal indication in this section.

TROUBLE SHOOTING

Section 3

For the tests in this section, use an r-f signal generator, with modulated output, set at 455 kc. Connect the generator ground lead to the chassis, test point C; connect the output lead through a .1-mf. condenser to the test points indicated in the chart.

Depress manual-tuning push button.

Turn the volume control to maximum, and the tone control fully counterclockwise.

If the "NORMAL INDICATION" is obtained in step 1, proceed with the tests for Section 4; if not, isolate and correct the trouble in this section.

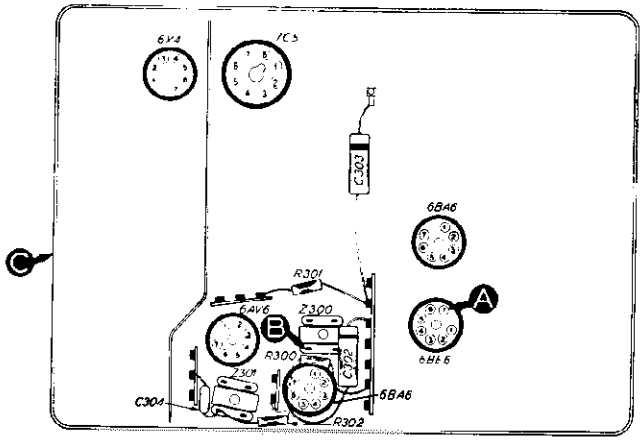

TP-4049C

Bottom View, Showing Section 3 Test Points

Since the circuit location of test point A for this section is the same as that of test point B for Section 4, the effectiveness of step 1 as a master check is dependent upon the condition of certain parts in Section 4; these parts are listed below under "POSSIBLE CAUSE OF ABNORMAL INDICATION."

STEP	TEST POINT	NORMAL INDICATION	POSSIBLE CAUSE OF ABNORMAL INDICATION
1	A	Loud, clear signal with weak signal input.	Trouble in this section. Isolate by the following tests.
2	B	Loud, clear signal with moderate signal input.	Defective: 6BA6, Z301. Misaligned: Z301. Open: R300, R301, R302. Shorted: C302, C303, C304.
3	A	Loud, clear signal with weak signal input.	Defective: 6BE6*, Z300. Misaligned: Z300. Open: L403*.

* This part, located in another section, may cause abnormal indication in this section.

© John F. Rider

TROUBLE SHOOTING

Section 4

For the tests in this section, with the exception of the oscillator tests, use an r-f signal generator, with modulated output. Connect the generator ground lead to the chassis, test point C; connect the output lead through a .1-mf. condenser to the test points indicated in the chart.

Turn the radio volume control to maximum, and the tone control fully counterclockwise.

If the "NORMAL INDICATION" is not obtained in step 1 (a), isolate and correct the trouble before making the test in step 1 (b).

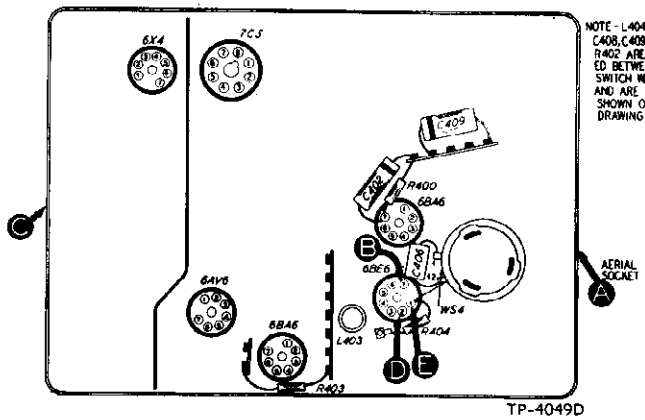

Figure 4. Bottom View, Showing Section 4 Test Points (locations of C404, WS1, 2, 3, 4, Z401, and Z402 are shown in figure 6)

STEP	TEST POINT	SIG. GEN. FREQ.	RADIO TUNING	NORMAL INDICATION	POSSIBLE CAUSE OF ABNORMAL INDICATION
1 (a)	A	1000 kc.	Manual. Tune to signal.	Loud, clear signal with weak signal input.	Trouble in manual-tuning circuits; isolate by steps 2, 3, and 4, and correct trouble before proceeding.
1 (b)	A	Tune to freq. of each button.	Push button. Depress each button.	Loud, clear signal with weak signal input.	Trouble in push-button-tuning circuits; isolate by steps 5, 6, and 7.

MANUAL-TUNING TESTS

2	B	1000 kc.	Manual. Tune to signal.	Loud, clear signal with moderate signal input.	Defective: 6BE6. Open: R402. Trouble in oscillator circuit (step 3).
3	E to D Osc. Test (see note below).		Manual. Tune through range.	Negative 2 to 4 volts.	Defective: 6BE6, WS2(F). Open: L403, L402C, C406, C407, C408, R404. Shorted or leaky: C406, C407, C408.
4	A	1000 kc.	Manual. Tune to signal.	Loud, clear signal with weak signal input.	Defective: 6BA6, WS3(R), WS3(F), WS1(F), WS1(R), WS2(R). Open: L405, L402B, L402A, R400, R401, R402, R403, R405, C409, C404. Shorted or leaky: C409, C405, C404, C401.

PUSH-BUTTON-TUNING TESTS

5	B	Tune to freq. of each button.	Push button. Depress each button.	Loud, clear signal with moderate signal input.	Defective: WS1(F), WS1(R). Trouble in oscillator circuit (step 6).
6	E to D Osc. Test (see note below).		Push button. Depress each button.	Negative 2 to 4 volts.	Defective: WS2(F). Open or shorted: L401F, L401G, L401H, L401I, L401J.
7	A	Tune to freq. of each button.	Push button. Depress each button.	Loud, clear signal with weak signal input.	Defective: WS3(R), WS3(F), WS1(F), WS1(R), WS2(R), Z400. Open: L401A, L401B, L401C, L401D, L401E. Misaligned: Z400.

OSCILLATOR TESTS (steps 3 and 6)

Connect positive lead of high-resistance voltmeter to test point D (pin 2, cathode of 6BE6); connect prod end of negative lead through 100,000-ohm isolating resistor to test point E (pin 1, osc. grid of 6BE6). Use suitable meter range, such as 0—10 volts. Proper operation of oscillator is indicated by negative voltage, 2 to 4 volts (measured with 20,000-ohms-per-volt meter), throughout range of manual tuning, step 3, and of push-button tuning, step 6.

SETTING PUSH BUTTONS

Each adjusting rod controls ganged tuning cores for both aerial and oscillator circuits, so that only a single adjustment is required for a given frequency. The ganged tuning cores are adjusted by turning the small plastic knobs, numbered 1, 2, 3, 4, and 5, on the front of the radio.

1. Use an r-f signal generator to furnish test signals at the approximate frequencies of the desired stations. Connect the generator ground lead to the chassis. Connect the output lead through a 30-mmf. condenser to the aerial receptacle; connect another 30-mmf. condenser between the aerial receptacle and the chassis.

©John F. Rider

2. Turn on the power, set the volume control to maximum, and turn the tone control fully counter-clockwise.

3. Starting with the lowest frequency desired, set the signal generator, depress button No. 1 and adjust knob No. 1 for maximum output. Repeat the procedure for buttons 2, 3, 4, and 5.

4. After the radio is installed in the car, and the aerial connected, allow a fifteen-minute warm-up period, then readjust the tuning for each button while listening to the station for which the adjustment is being made.

REPLACEMENT PARTS LIST

NOTE: Part numbers marked with an asterisk (*) are general replacement items. These numbers may not be identical with those on factory assemblies; also, the electrical values of some replacement items may differ from the values indicated in the schematic diagram and parts list. The values substituted in any case are so chosen that the operation of the radio will be either unchanged or improved. When ordering replacements, use only the "Service Part No."

SECTION 1

Reference Symbol	Description	Service Part No.
C100	Condenser, r-f by-pass, 330 mmf.	62-133001001
C101	Condenser, by-pass, .5 mf.	61-0137*
C102	Condenser, by-pass, 330 mmf.	62-133001001
C103	Condenser, by-pass, .5 mf.	61-0137*
C104	Condenser, buffer, .005 mf.	61-0153*
C105	Condenser, electrolytic, 2-section	61-0089
C105A	Condenser, filter, 15 mf., 350v	Part of C105
C105B	Condenser, filter, 10 mf., 350v	Part of C105
C106	Condenser, by-pass, .25 mf.	61-0125
C107	Condenser, by-pass, .05 mf.	30-4590
I100	Pilot lamp	34-2040
I101	Pilot lamp	34-2040
I102	Pilot lamp	34-2040
I103	Pilot lamp	34-2040
I104	Pilot lamp	34-2040
I105	Pilot lamp	34-2040
J100	Socket, control plug	27-6234
J101	Socket, foot control	27-6186*
L100	Choke, "A"	65-0037
L101	Choke, "A"	32-4170
L102	Solenoid	Part of Z100
PB1	Push-button switch	Part of Z101
PB2	Push-button switch	Part of Z101
PB3	Push-button switch	Part of Z101
PB4	Push-button switch	Part of Z101
PB5	Push-button switch	Part of Z101
PB6	Push-button switch	Part of Z101
PL100	Plug, control head	76-3124
R100	Resistor, damping, 100 ohms	66-1104340*
R101	Resistor, damping, 100 ohms	66-1104340*
R102	Resistor, filter, 1000 ohms	66-2104340*
R103	Resistor, filter, 4700 ohms	66-2473340*
S100	Switch, off-on	Part of R200
S101	Switch, muting	Part of Z101
S102	Switch, solenoid interrupter	Part of Z100
T100	Transformer, power	32-8313
VB100	Vibrator	45-6307*
WS4(F)	Wafer section, homing	Part of Z100
WS4(R)	Wafer section, homing	Part of Z100
Z100	Solenoid-and-wafer-switch assembly	76-2945
Z101	Switch-and-lamp-housing assembly	76-2957

SECTION 2

C200	Condenser, tone compensation, .01 mf. (in control head)	61-0120*
C201	Condenser, d-c blocking, .004 mf.	61-0179*
C202	Condenser, tone compensation, .01 mf. (in control head)	61-0120*
C203	Condenser, r-f by-pass, 100 mmf.	30-1224-18
C204	Condenser, d-c blocking, .01 mf.	61-0120*
C205	Condenser, cathode by-pass, 20 mf., 25v	Part of C105
C206	Condenser, tone compensation, .006 mf.	61-0105*
LS200	Loud-speaker	38-1609-6
R200	Volume control	
	Universal	33-5557
	Buick, special	33-5557-1
R201	Resistor, tone compensation, 15,000 ohms (in control head)	66-3153340*
R202	Tone control, 5 megohms (in control head)	Part of R200
R203	Resistor, grid return, 10 megohms	66-6103340*
R204	Resistor, plate load, 220,000 ohms	66-4223340*
R205	Resistor, grid return, 470,000 ohms	66-4473340*
R206	Resistor, cathode bias, 220 ohms	66-1223340*
T200	Transformer, output	32-8315

SECTION 3

C300A	Condenser, fixed trimmer, 107 mmf.	Part of Z300
C300B	Condenser, fixed trimmer, 86 mmf.	Part of Z300
C301A	Condenser, fixed trimmer, 131 mmf.	Part of Z301
C301B	Condenser, fixed trimmer, 106 mmf.	Part of Z301
C302	Condenser, cathode by-pass, .05 mf.	61-0122*
C303	Condenser, screen grid by-pass, .05 mf.	61-0122*

SECTION 3 (Continued)

Reference Symbol	Description	Service Part No.
C304	Condenser, r-f by-pass, 100 mmf.	30-1224-18
R300	Resistor, cathode bias, 2200 ohms	66-2223340*
R301	Resistor, screen dropping, 27,000 ohms	66-3273340*
R302	Resistor, r-f filter, 27,000 ohms	66-3273340*
Z300	Transformer, 1st i-f	32-4160
Z301	Transformer, 2nd i-f	32-4161

SECTION 4

C400A	Condenser, d-c blocking	Part of Z400
C400B	Condenser, fixed padder	Part of Z400
C401	Condenser, aerial padder	63-0055
C402	Condenser, cathode by-pass, .05 mf.	61-0122*
C403	Condenser, a-v-c filter, .05 mf.	61-0122*
C404	Condenser, fixed padder, 180 mmf.	60-10205307*
C405	Condenser, r-f trimmer	63-0055
C406	Condenser, grid blocking, 100 mmf.	30-1224-18
C407	Condenser, shunt, 380 mmf.	30-1220-37
C408	Condenser, shunt, 54.5 mmf.	61-0149
C409	Condenser, d-c blocking, 180 mmf.	60-10205307*
L400A	Coil, i-f trap	Part of Z400
L400B	Coil, i-f trap	Part of Z400
L401A	Coil, aerial, push-button	Part of Z401
L401B	Coil, aerial, push-button	Part of Z401
L401C	Coil, aerial, push-button	Part of Z401
L401D	Coil, aerial, push-button	Part of Z401
L401E	Coil, aerial, push-button	Part of Z401
L401F	Coil, osc. tuning, push-button	Part of Z401
L401G	Coil, osc. tuning, push-button	Part of Z401
L401H	Coil, osc. tuning, push-button	Part of Z401
L401I	Coil, osc. tuning, push-button	Part of Z401
L401J	Coil, osc. tuning, push-button	Part of Z401
L402A	Coil, aerial, manual (part of Z402)	65-0443-4
L402B	Coil, r-f, manual (part of Z402)	65-0443-5
L402C	Coil, oscillator, manual (part of Z402)	65-0443-6
L403	Coil, oscillator shunt	32-4110
L404	Coil, aerial	65-0437
R400	Resistor, cathode bias, 220 ohms	66-1223340*
R401	Resistor, plate dropping, 10,000 ohms	66-3103340*
R402	Resistor, grid return, 1 megohm	66-5103340*
R403	Resistor, a-v-c filter, 1 megohm	66-5103340*
R404	Resistor, grid return, 22,000 ohms	66-3223340*
R405	Resistor, cathode bias, 220 ohms	66-1223340*
Z400	Trap assembly, i.f.	32-4182
Z401	Coil assembly, push-button	76-2715
Z402	Coil assembly, push-button	76-2919
WS1(F)	Wafer section, r.f.	Part of Z100
WS1(R)	Wafer section, r.f.	Part of Z100
WS2(F)	Wafer section, osc.	Part of Z100
WS2(R)	Wafer section, osc.	Part of Z100
WS3(F)	Wafer section, aerial	Part of Z100
WS3(R)	Wafer section, aerial	Part of Z100

MISCELLANEOUS

Description	Service Part No.
"A"-lead assembly	41-3187-1
Braid, bonding	95-0073
Cap, lamp-housing	54-4408
Clip, anti-rattle spring	28-2488FA1
Clip, spring, cover grounding	57-1335
Cover, tube side	76-3015FJ21
Cover, wiring side	56-4421FJ21
Driver-and-shaft assembly	76-2716
Housing assembly	76-2879FJ21
Knob, push-button	56-4406
Plate, speaker mtg.	56-4557FA3
Screen, speaker	57-4557FA3
Slider assembly, manual tuner	76-2730
Socket, Loktal	27-6138
Socket, miniature	27-6226
Socket, speaker	55-0438-1
Spring, back-lash nut, manual tuner	57-1705FA1
Spring, core guide, manual tuner	57-1708

©John F. Rider

ALIGNM

NOTE: THE CONTROL UN

DIAL POINTER—With tuning cable disengaged, set tuning-core gang to full-mesh position; turn dial of tuning control to low-frequency end until pointer stops, then engage tuning cable.

OUTPUT METER—Connect across voice-coil minals.

SIGNAL GENERATOR—Connect ground lea chassis; connect output lead as indicated in chart modulated output.

STEP	SIGNAL GENERATOR		RADIO		AD
	CONNECTIONS TO RADIO	FREQUENCY	TUNING	SPECIAL INSTRUCTIONS	
1	Through .05-mf. condenser to aerial receptacle.	455 kc.	Manual. 1600 kc.	Adjust, in order given, for maximum output.	TC TC TC TC
2	Same as step 1.	455 kc.	Any push button except manual tuning.	Adjust for minimum output.	TC
3	Dummy aerial (see note below).	580 kc.	Manual. 580 kc.	Adjust for maximum output while rocking tuning control.	TC
4	Same as step 3.	1600 kc.	Manual. Tune to signal.	Adjust for maximum output.	C4 C4
5	Same as step 3.	1400 kc.	Manual. Tune to signal.	Re-engage tuning cable for correct calibration.	
6	Repeat steps 3, 4, and 5 until no further improvement is obtained.				
7	After reinstalling radio in car, adjust C401 for maximum output from weak station near 1400 kc. Re-engage t control for correct dial calibration.				

DUMMY AERIAL: Connect generator output lead through 30-mmf. condenser to aerial receptacle; connect another 3 condenser between aerial receptacle and chassis.

TROUBLE SHOOTING

Section 1

NOTE: For all trouble-shooting tests given in this manual, the control unit should be plugged into the radio.

Make the tests for this section with a d-c voltmeter, connecting the leads between test point C (chassis) and the test points indicated in the chart. The voltage readings given were taken with a 20,000-ohms-per-volt meter, with an "A" supply voltage of 6.6 volts, d.c.

Turn on the power and depress the manual-tuning button. Turn the volume control to minimum, and the tone control fully counterclockwise.

If the "NORMAL INDICATION" is obtained in step 1, proceed with the tests for Section 2; if not, isolate and correct the trouble in this section.

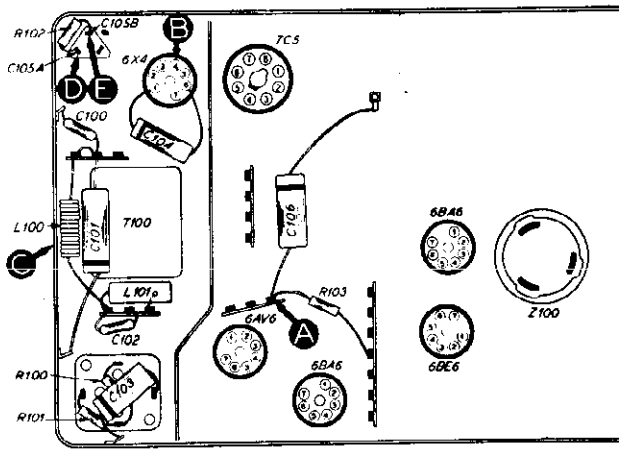

TP-4049

Bottom View, Showing Section 1 Te Points

©John F. Rider

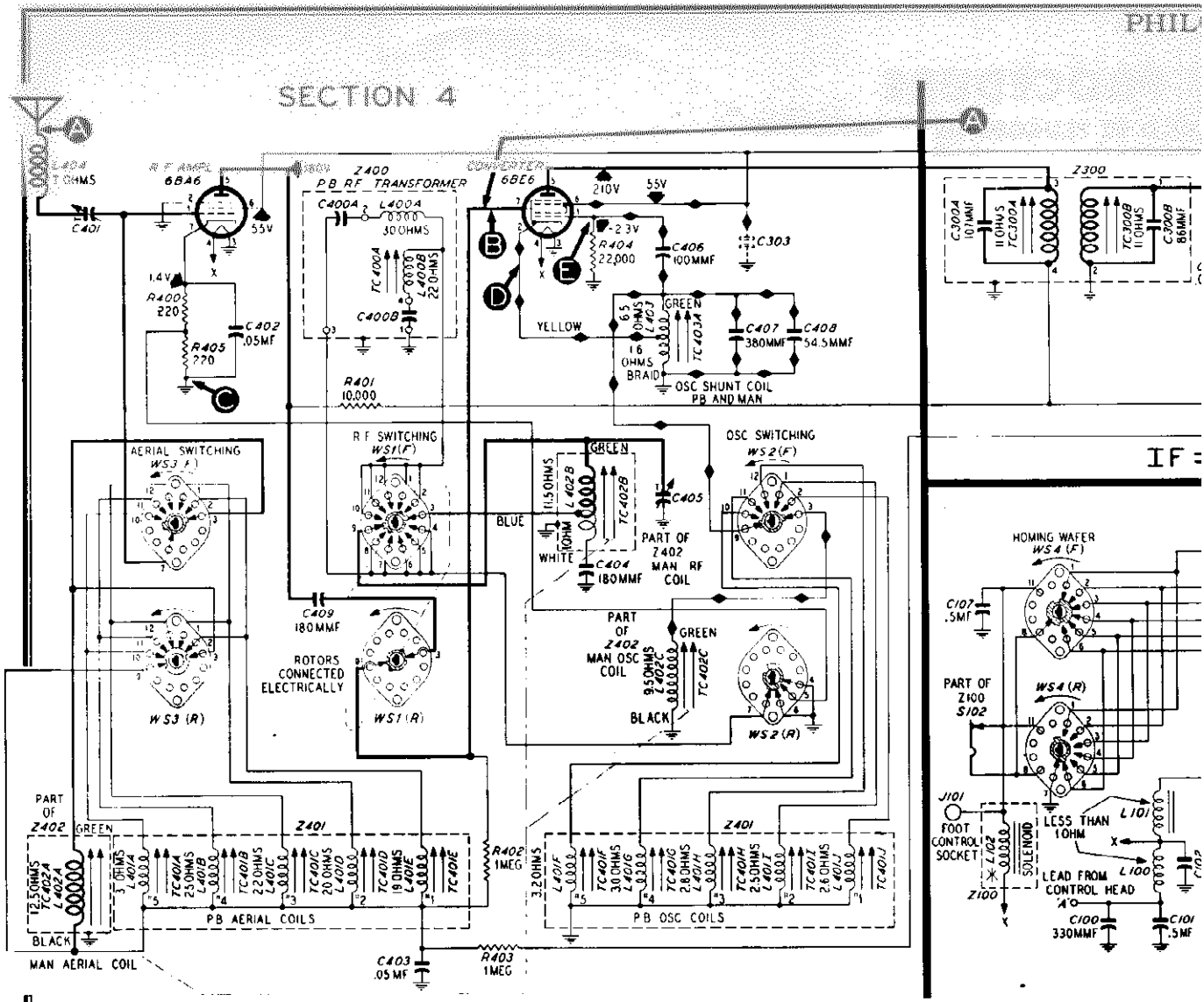

SWITCH WAFERS NUMBERED FROM TOP OF SET

FRONT CONTACTS SHOWN AS VIEWED FROM FRONT

REAR CONTACTS, LOOKING THROUGH FROM FRONT

SWITCH WAFERS SHOWN IN MANUAL POSITION

✳ L102 AND WAFER SWITCH ASSEMBLY ARE PART OF Z100.

✕ DESIGNATES SOCKET OR PLUG CONNECTIONS

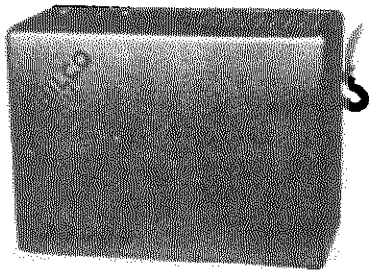

SPECIFICATIONS

CIRCUIT	Six-tube superheterodyne
FREQUENCY RANGE	535—1600 kc.
PUSH BUTTONS	Six: five for station selection; one for manual tuning
AUDIO OUTPUT	3 watts
POWER INPUT	8 amperes at 6.6 volts, d.c.
AERIAL	Any Philco auto-radio aerial
PHILCO TUBES (6)	6BA6 (2), 6BE6, 6AV6, 7C5, 6X4

Circuit Description

Philco Auto Radio Model CR-8 is a six-tube superheterodyne radio of the universal-mounting type. The speaker and control head are separately mounted.

The aerial input circuit is designed for maximum reduction of signal interference without loss of signal strength. Permeability tuning is used for all main circuits. Of the six push buttons, located on the control head, five are used for automatic station selection, and one selects manual tuning. A foot switch and cable assembly (Foot Control Kit, Philco Part No. 45-1545) is available, for automatic tuning of stations by foot control; the switch cable is connected by plugging it into the pin jack, J101. The pilot lamps are connected, through the switch wafers, in a series-parallel circuit; the wiring is so arranged that the lamp which glows above the push button in use is in series with the parallel combination of the other five lamps.

Sectiona

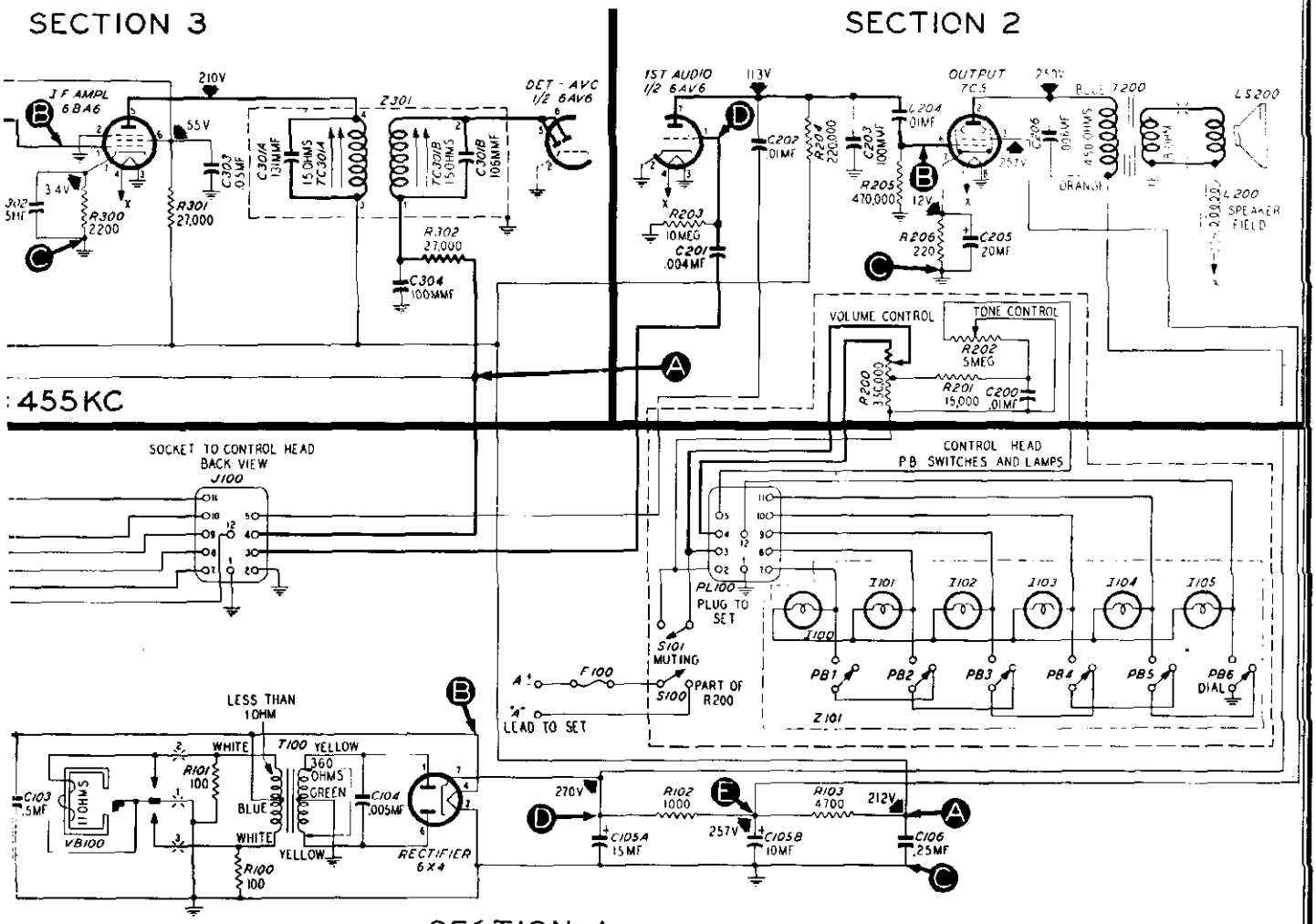

zed Schematic Diagram, Showing Test Points

A tuned r-f amplifier stage, incorporating a 6BA6 ntode, provides good sensitivity and selectivity. The nverter, a 6BE6, works into a 6BA6 i-f amplifier, nich operates at 455 kc.

The 6AV6 duo-diode, triode tube provides detection d a-v-c voltage in the diode section; the triode sec-n functions as the first audio amplifier. The first dio stage is resistance-coupled to the 7C5 beam-wer output amplifier. Approximately three watts audio power is supplied to the electrodynamic :aker.

The power supply includes a non-synchronous vi-ıtor and a type 6X4 rectifier.

To avoid possible damage to the radio, the following preliminary checks should be made before turning on the power:

1. Inspect both the top and the bottom of the chassis. Make sure that all tubes are secure in the proper sockets, and look for any broken or shorted connections, burned resistors, or other obvious sources of trouble.

2. Measure the resistance between B+ (pin 7 of 6X4 rectifier tube) and the radio chassis, test point C, with the ohmmeter polarity such that the highest resistance reading is obtained. If the reading is lower than 5,000 ohms, check condensers C105A, C105B, and C106 for leakage or shorts.

The resistance value above, which is much lower than normal, is not intended as a quality check of these condensers; the value given is the lowest at which the rectifier will operate safely while the voltage tests of Section 1 are performed.

O CORP.

NT PROCEDURE

SHOULD BE PLUGGED INTO THE RADIO.

RADIO CONTROLS—Turn volume control to maximum, and tone control fully counterclockwise; use push buttons as directed in chart.

OUTPUT LEVEL—During alignment, adjust signal-generator output to maintain output-meter indication below 1 volt.

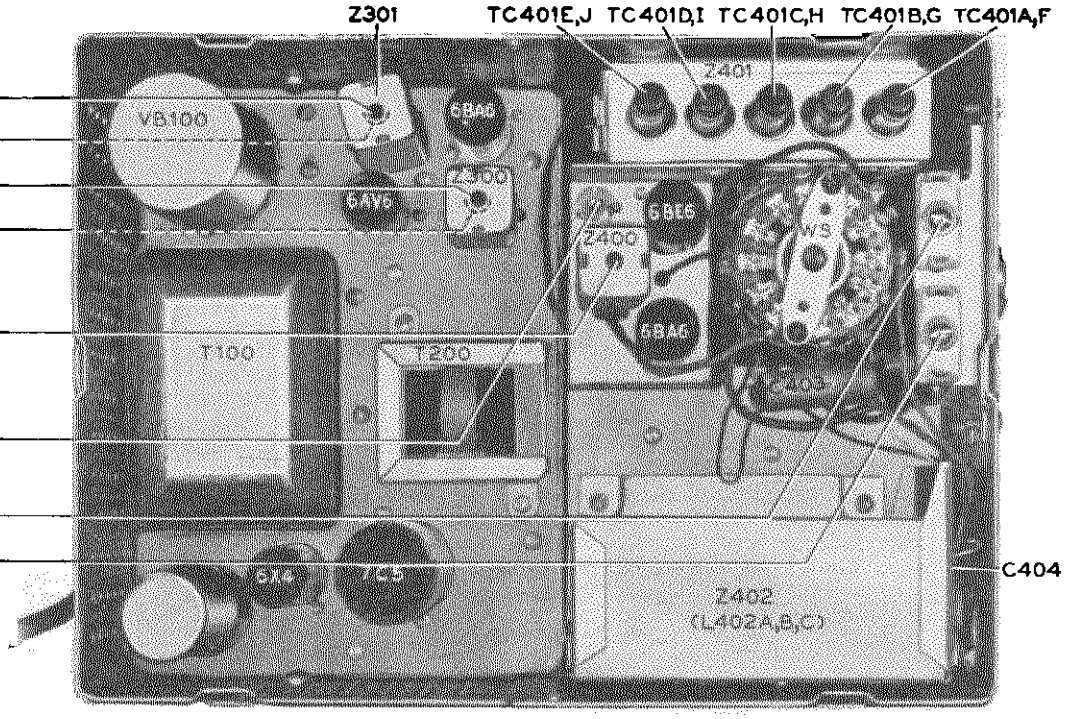

Top View, Showing Trimmer and Tuning-Core Locations
(dotted lines indicate tuning screws located at bottom of chassis)

STEP	TEST POINT	NORMAL INDICATION	ABNORMAL INDICATION	POSSIBLE CAUSE OF ABNORMAL INDICATION
1	A B	212v 6.6v		Trouble in this section. Isolate by the following tests.
2	B	6.6v	No voltage Low voltage	Open: F100, S100, L100, L101. Weak battery. Leaky: C100, C101, C102. Defective: VB100.
3	D	270v	No voltage Low voltage	Open: T100. Shorted: C100, C101, C102, C103, T100, C105A, C104. Defective: VB100, 6X4. Leaky: C105A. Defective: 6X4.
4	E	257v	No voltage Low voltage	Open: R102. Shorted: C105B. Leaky: C105B. Changed resistance: R102.
5	A	212v	No voltage Low voltage	Open: R103. Shorted: C106. Leaky: C106. Changed resistance: R103.

ALIGNMENT

DIAL POINTER — Set tuning-core gang to full-mesh position. Adjust dial pointer to coincide with index mark, to left of "55."

OUTPUT METER — Connect across voice-coil circuit.

SIGNAL GENERATOR — Connect ground lead to chassis; connect output lead as indicated in chart. Use modulated output.

RADIO CONTROLS — Set volume control to maximum, and tone control fully clockwise. Set tuning control and push buttons as directed in chart.

STEP	SIGNAL GENERATOR		RADIO		ADJUST
	CONNECTIONS TO RADIO	DIAL SETTING	PUSH BUTTON AND DIAL	SPECIAL INSTRUCTIONS	
1	Through .05 mf. condenser to mixer grid (pin 7) of 6BE6.	455 kc.	Manual. 1600 kc.	Adjust, in order given, for maximum output. (TC301A and TC300A are reached through holes in bottom of i-f transformers.)	TC301B — 2nd i TC301A — 2nd i TC300B — 1st i- TC300A — 1st i-
2	Through .05 mf. condenser to aerial receptacle.	455 kc.	Any push button except manual.	Adjust for minimum output.	TC400 — i-f trap
3	Through dummy aerial to aerial receptacle.	580 kc.	Manual. 580 kc.	Adjust for maximum, while rocking tuning control.	TC404 — osc. pc
4	Same as step 3.	1400 kc.	Manual. Tune to signal.	Adjust, in order given, for maximum output.	C407A — aerial C407B — r-f (sh
5	Repeat steps 3 and 4 until no further improvement is obtained.				
6	After reinstalling radio in car, with aerial connected, depress manual push button, and tune in weak station near 140 then adjust aerial series trimmer, C407A, for maximum output.				

TROUBLE-SHOOTING *Procedure*

For rapid trouble shooting, the radio circuit is divided into four sections, as follows:

Section 1—the power supply
Section 2—the audio circuits
Section 3—the i-f, detector, and a-v-c circuits
Section 4—the r-f and converter circuits

Test points are specified for each section, and are indicated in the sectionalized schematic diagram. The trouble-shooting procedure given for each section includes a simplified test chart and a bottom view of the chassis, showing the locations of the test points and the components of that section.

In each chart, the first step is a master check for determining whether trouble exists in that section, without going through the entire chart.

Failure to obtain the "NORMAL INDICATION" in any given step indicates trouble within the circuit under test.

After isolating the trouble to a single stage, the defect is located by: first, testing the tube; second, measuring tube electrode voltages; third, measuring circuit resistances; fourth, substituting condensers. The trouble revealed should be corrected before testing further.

Preliminary Checks

To avoid possible damage to the radio, the following preliminary checks should be made before connecting the radio to a source of power.

1. Inspect both the top and the bottom of t chassis. Make sure that all tubes are secure in t proper sockets, and look for any broken or short connections, burned resistors, blown fuse, or oth obvious indications of trouble.

2. Measure the resistance between B+ (pin 7 6X4 rectifier) and the chassis, test point C. When t ohmmeter test leads are connected in the proper pola ity, the highest resistance reading will be obtained. the reading is lower than 2775 ohms, check condense C105A and C105B for leakage or shorts.

NOTE: The resistance value above, which is much lower than normal, is not intended as a quality check of these condensers; the value given is the lowest at which the rectifier will operate safely while the voltage tests of Section 1 are performed.

3. If the fuse is blown, check the vibrator befo installing a new fuse; if the vibrator is defective, che the buffer condenser, C104, before installing a ne vibrator.

©John F. Rider

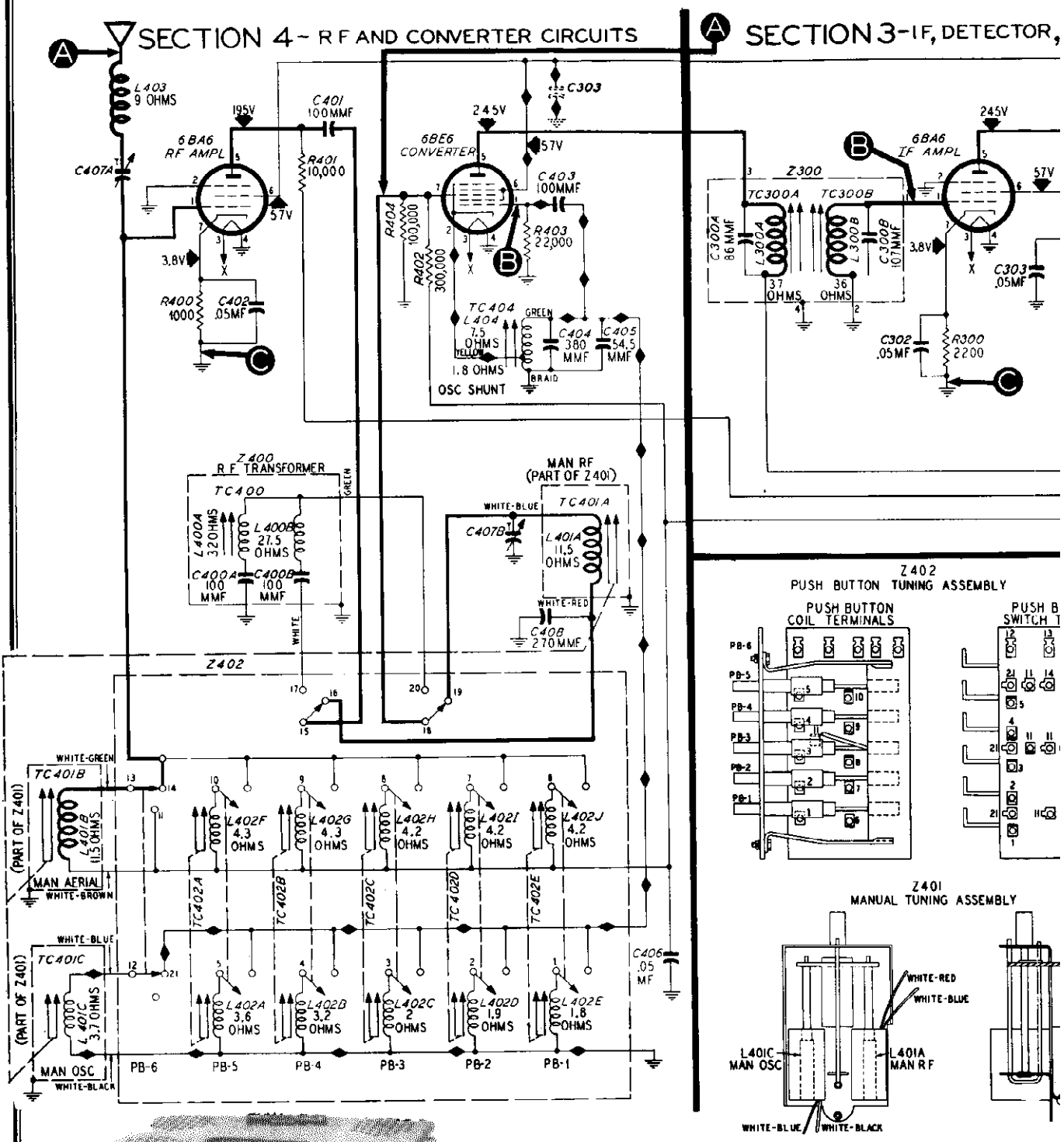

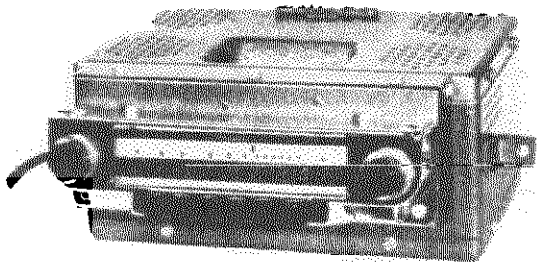

SPECIFICATIONS

CIRCUIT .....Six-tube superheterodyne

FREQUENCY RANGE ..535—1600 kc.

PUSH BUTTONS .....Six: five for station selection; one for manual tuning

INTERMEDIATE FREQUENCY .....455 kc.

AUDIO OUTPUT .....2.5 watts

POWER INPUT .....7.3 amperes at 6.6 volts, d.c., with p-m speaker; 8.9 amperes at 6.6 volts, d.c., with electro-dynamic speaker

AERIAL .....Any Philco Auto-Radio Aerial

PHILCO TUBES (6) ....6BA6(2), 6BE6, 6AV6, 6AQ5, 6X4

©John F. Rider

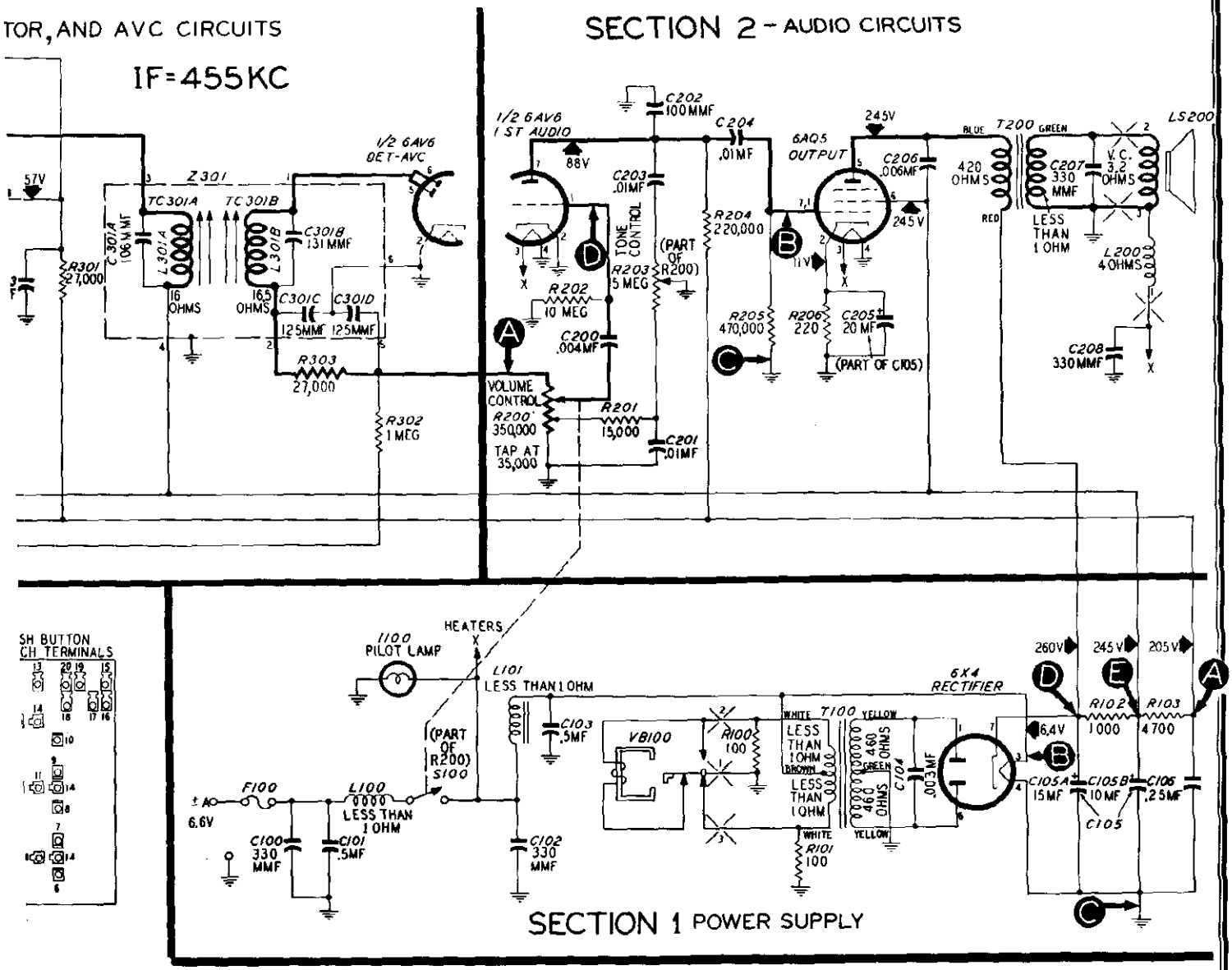

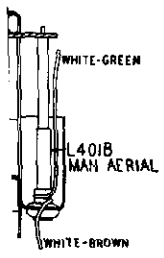

NOTES:- ALL VOLTAGE READINGS SHOWN WERE TAKEN WITH A 20,000-OHMS-PER-VOLT D C VOLTMETER, CONNECTED BETWEEN CHASSIS AND THE POINTS INDICATED.

THE INPUT VOLTAGE WAS 6.6 V D C

PUSH BUTTON SWITCH SHOWN IN MANUAL POSITION.

R F, I F, AND AUDIO SIGNAL PATH

OSC SIGNAL PATH

INDICATES SOCKET OR PLUG CONNECTIONS

ALL RESISTOR VALUES IN OHMS UNLESS MARKED OTHERWISE.

CONDENSER SYMBOLS

FIXED TRIMMER ELECTROLYTIC

Circuit Description

Philco Model CR-9 is an auto radio of the custom-mounting type. The speaker is separately mounted. Permeability tuning is used in all r-f and i-f circuits. Of the six push buttons, five are used for instant automatic tuning of stations, and one for selecting manual tuning. In manual tuning, three tuned circuits are used. In push-button tuning, two tuned circuits are used, plus a broad-band r-f transformer (Z400) containing an i-f wave trap.

The circuit includes a 6BA6 r-f amplifier, a 6BE6 converter, a 6BA6 i-f amplifier, a 6AV6 detector, a.v.c., and first audio amplifier, and a 6AQ5 output amplifier. The power supply has a non-synchronous vibrator and a 6X4 rectifier. An iron-core choke (L101) is used for hash elimination.

The radio may come equipped with either an electrodynamic or a permanent-magnet speaker. Replacement speakers of either type are available; the speaker socket connections for both types are shown in the schematic diagram.

PROCEDURE

OUTPUT LEVEL — During alignment, adjust signal-generator output to maintain output-meter indication below 1.5 volts.

DUMMY AERIAL — For steps 3, 4, and 5, connect signal-generator output lead through 30-mmf. condenser to aerial receptacle; connect another 30-mmf. condenser from receptacle to chassis.

IMPORTANT! These instructions for the use of a dummy aerial must be carefully followed if the radio is to perform at its best after being reinstalled in the car.

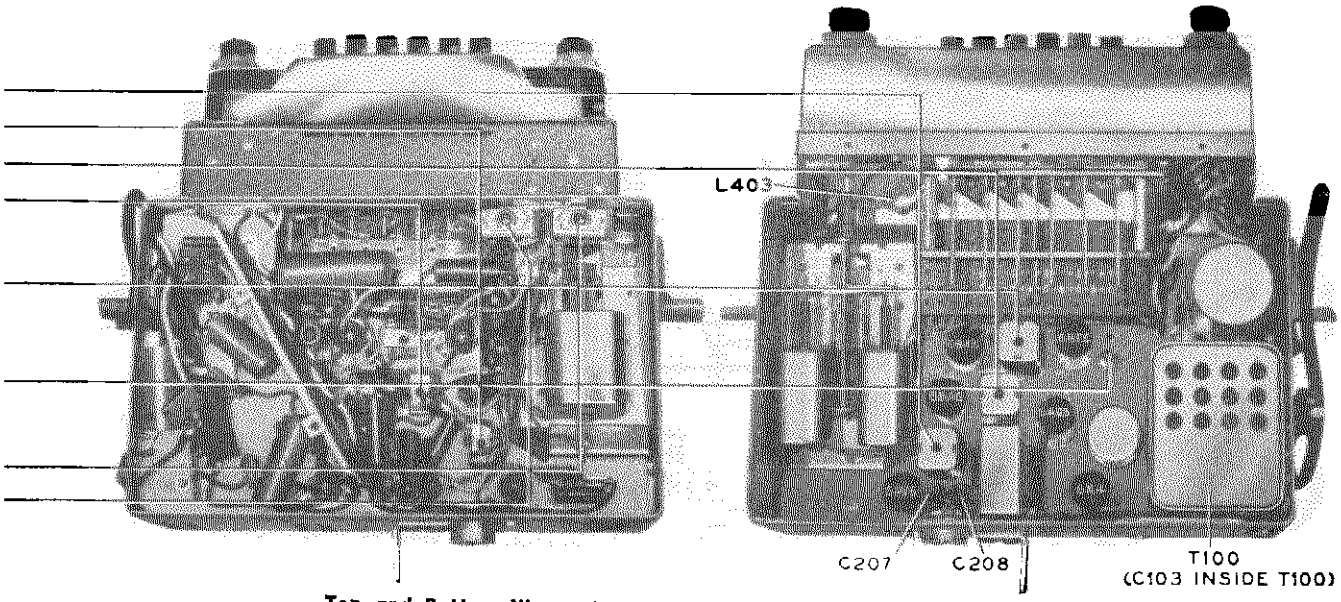

Top and Bottom Views, Showing Trimmer and Tuning-Core Locations

SETTING PUSH BUTTONS

The adjustments are made by removing the push-button caps and turning each of the adjusting rods. Each rod controls ganged tuning cores for both aerial and oscillator circuits, so that only a single adjustment is required for a given frequency.

Use an r-f signal generator to furnish test signals at the approximate frequencies of the desired stations. Connect the dummy aerial described in the alignment procedure.

1. Turn on the power, and allow the radio to warm up for 15 minutes. Set the volume control for a moderate level, and the tone control fully clockwise.

2. Starting with the lowest frequency desired, set the signal generator, depress PB-5 (fifth from left), and adjust the rod for maximum output. Repeat the procedure for each remaining button, working from right to left.

The frequency ranges of the buttons are as follows:

PUSH BUTTON (Left to right, from front)	FREQUENCY RANGE
PB-1	850—1600 kc.
PB-2	750—1400 kc.
PB-3	700—1300 kc.
PB-4	650—1150 kc.
PB-5	540—1000 kc.

3. With the radio in the car, and the aerial connected, make a final adjustment of each rod while listening to the station for which the adjustment is being made.

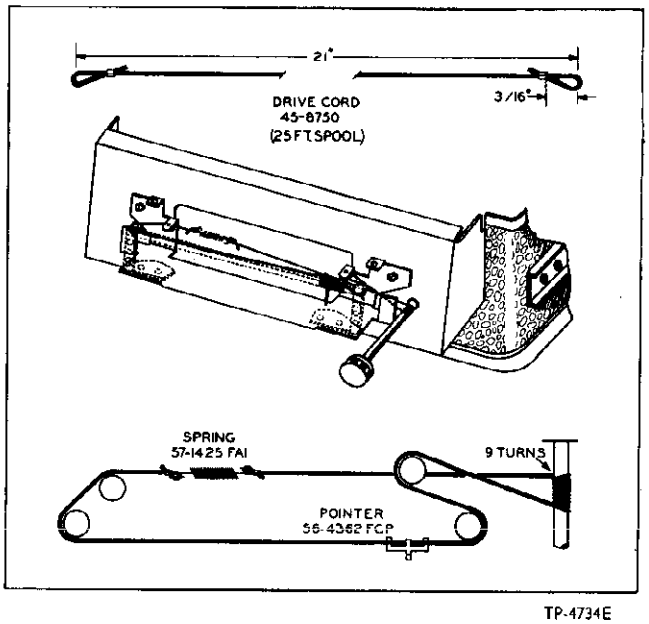

Drive-Cord Installation Details

TROUBLE SHOOTING

Section 1 — Power Supply

Make the tests for this section with a d-c voltmeter, connecting the leads between the chassis and the test points indicated in the chart. The voltage readings given were taken with a 20,000-ohms-per-volt meter, with an input voltage of 6.6v, d.c. to the radio.

Depress the manual push button; set the volume control to minimum, and tone control fully clockwise.

Follow the steps in the order given. If the "NORMAL INDICATION" is obtained in step 1, proceed with the tests for Section 2 (audio circuits); if not, isolate and correct the trouble in this section.

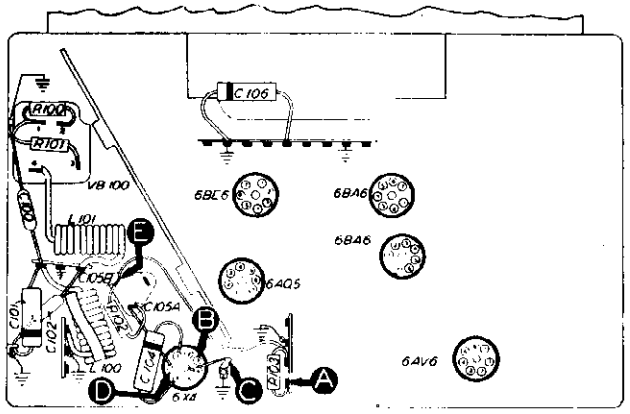

TP-4734A

Bottom View, Showing Section 1 Test Points (location of C103 shown in figure 6)

STEP	TEST POINT	NORMAL INDICATION	ABNORMAL INDICATION	POSSIBLE CAUSE OF ABNORMAL INDICATION
1	A	205v		Trouble in this section. Isolate by the following tests.
2	B	6.4v	No voltage Low voltage	Open: F100, L100, S100, L101. Leaky: C100, C101, C102, C103. Weak battery.
3	D	280v	No voltage Low voltage High voltage	Defective: VB100†, 6X4. Open: T100. Shorted: T100, C104, C105A. Defective: 6X4, VB100†. Leaky: C105A, C104. Shorted: C105B, T100. Open: C105A, T100. Open: R102. T200*, R207*.
4	E	245v	No voltage Low voltage High voltage	Open: R102. Shorted: C105B. Leaky: C105B. Changed resistance: R102. Open: R103, R207*.
5	A	205v	No voltage Low voltage	Shorted: C106. Open: R103. Leaky: C106. Changed resistance: R103.
Listening Test: Abnormal hum may be caused by open C105A, C105B, or C104.				

*This part, located in another section, may cause abnormal indication in this section.
†If the vibrator is defective, check the buffer condenser, C104, before installing a new vibrator.

TROUBLE SHOOTING

Section 2 — Audio Circuits

For the tests in this section, use an audio-frequency signal generator. Connect the generator ground lead to the chassis, test point C; connect the output lead through a .1-mf. condenser to the test points indicated in the chart.

Depress the manual push button; set the volume control to maximum, and the tone control fully clockwise.

If the "NORMAL INDICATION" is obtained in step 1, proceed with the tests for Section 3 (i-f, detector, and a-v-c circuits); if not, isolate and correct the trouble in this section.

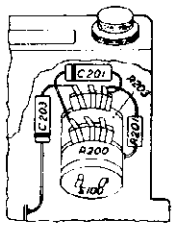

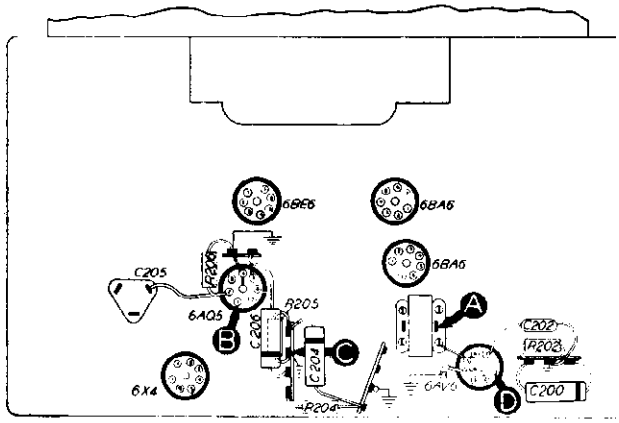

TP-4734B

Bottom View, Showing Section 2 Test Points (locations of C207 and C208 shown in figure 6)

STEP	TEST POINT	NORMAL INDICATION	POSSIBLE CAUSE OF ABNORMAL INDICATION
1	A	Loud, clear signal with weak signal input.	Trouble in this section. Isolate by the following tests.
2	B	Clear signal with strong signal input.	Defective: 6AQ5. Open: T200, LS200, L200, R206. Shorted: T200, C206, C207, C204, C202.
3	D	Loud, clear signal with weak signal input.	Defective: 6AV6 (triode section). Open: C204, R204. Shorted or leaky: C203 (rotate R203 through range).
4	A	Loud, clear signal with weak signal input.	Open: R200 (rotate through range), C200.
Listening Test: Distortion may be caused by shorted or leaky C200, C204, C205, or open R202, R205.			

Section 3 — I-F, Detector, and A-V-C Circuits TROUBLE SHOOTING

For the tests in this section, use an r-f signal generator, with modulated output, set at 455 kc. Connect the generator ground lead to the chassis, test point C; connect the output lead through a .1-mf. condenser to the test points indicated in the chart.

Depress the manual push button; set the volume control to maximum, and the tone control fully clockwise.

If the "NORMAL INDICATION" is obtained in step 1, proceed with the tests for Section 4 (r-f and converter circuits); if not, isolate and correct the trouble in this section.

Since the circuit location of test point A for this section is in Section 4, the effectiveness of step 1 as a master check is dependent upon the condition of certain parts in Section 4; these parts are listed below under "POSSIBLE CAUSE OF ABNORMAL INDICATION."

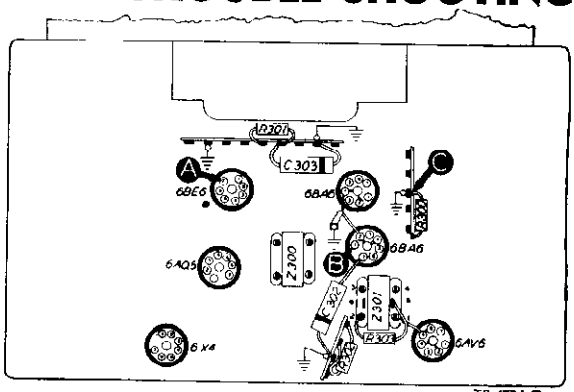

TP-4734-C

Bottom View, Showing Section 3 Test Points

STEP	TEST POINT	NORMAL INDICATION	POSSIBLE CAUSE OF ABNORMAL INDICATION
1	A	Loud, clear signal with weak signal input.	Trouble in this section. Isolate by the following tests.
2	B	Clear signal with weak signal input.	Defective: 6AV6 (diode section), 6BA6. Misaligned: Z301. Open: L301A, L301B, R301, R300, C301A, C301B, R303. Shorted: C301C, C303, C301A, C301B, C301D, C300B.
3	A	Same as step 1.	Defective: 6BE6*. Misaligned: Z300. Open: L300A, L300B, L404*, C407B*. Shorted: C300A, C300B.

*This part, located in another section, may cause abnormal indication in this section.

Section 4 — R-F and Converter Circuits TROUBLE SHOOTING

For the tests in this section, with the exception of the oscillator tests, use an r-f signal generator, with modulated output. Connect the generator ground lead to the chassis, test point C; connect the output lead through a .1-mf. condenser to the test points indicated in the chart.

Set the volume control to maximum, and the tone control fully clockwise.

Set the push buttons, tuning control, and signal-generator frequency as indicated in the chart.

If the "NORMAL INDICATION" is not obtained in step 1(a) and (b), isolate the trouble by following the remaining steps.

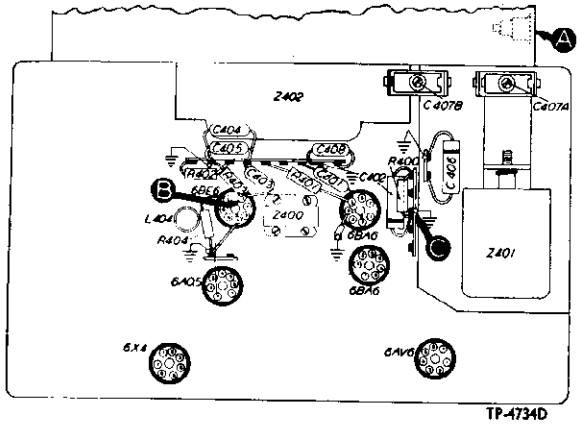

TP-4734D

Bottom View, Showing Section 4 Test Points (location of L403 shown in figure 6)

STEP	TEST POINT	SIGNAL GEN. FREQUENCY	RADIO TUNING	NORMAL INDICATION	POSSIBLE CAUSE OF ABNORMAL INDICATION
1 (a)	A	1000 kc.	Manual. Tune to signal.	Loud, clear signal with weak signal input.	Trouble in manual-tuning circuits. Isolate by steps 2 and 3, and correct trouble before proceeding.
1 (b)	A	Tune to freq. of each push button	Depress each station push button.	Same as step 1 (a).	Trouble in push-button-tuning circuits. Isolate by steps 4 and 5.
2	B (Osc. test; see note below.)		Manual. Tune through range.	Negative .8 to 1.4 volts.	Defective: 6BE6 (osc. section). Open: R403, C403, L404, L401C, C404, C405, PB-6. Shorted: L404, L401C, C404, C405.
3	A	1000 kc.	Manual. Tune to signal.	Same as step 1 (a).	Defective: 6BA6. Open: L403, L401A, L401B, R400, R401, C401, PB-6, C408. Shorted: C408, C401, L401A, L401B.
4	B (Osc. test; see note below.)		Depress each station push button.	Negative 1.1 to 1.4 volts.	Open: Osc. coil or switch associated with any push button. Shorted: Osc. coil associated with any push button.
5	A	Tune to freq. of each push button	Depress each station push button.	Loud, clear signal with weak signal input.	Open: L400B, C400B, C407B, ant. coil associated with any push button. Shorted: L400B, C407A, ant. coil associated with any push button.

OSCILLATOR TEST

Connect the positive lead of a high-resistance voltmeter to the chassis, test point C; connect the prod end of the negative lead through a 100,000-ohm isolating resistor to the oscillator grid (pin 1) of the 6BE6, test point B. Proper operation of the oscillator is indicated by negative voltages of approximately the values given in the chart (measured with 20,000-ohms-per-volt meter), throughout the tuning range.

©John F. Rider

SECTION 1
POWER SUPPLY

Reference Symbol	Description	Service Part No.
C100	Condenser, line filter, 330 mmf.	60-10335407*
C101	Condenser, line filter, .5 mf.	61-0137*
C102	Condenser, spark filter, 330 mmf.	60-10335407*
C103	Condenser, "A" filter, .5 mf.	61-0137*
C104	Condenser, buffer, .003 mf.	61-0115
C105	Condenser, electrolytic, 3-section	81-0089
C105A	Condenser, filter, 15 mf., 350v	Part of C105
C105B	Condenser, filter, 10 mf., 350v	Part of C105
C106	Condenser, plate filter, .25 mf.	61-0125
F100	Fuse, line, 14 amperes	45-2559
I100	Pilot lamp	34-2064
L100	Choke, "A"	65-0037
L101	Choke, "A", iron core	32-4170
R100	Resistor, damping, 100 ohms	66-1104340*
R101	Resistor, damping, 100 ohms	66-1104340*
R102	Resistor, filter, 1000 ohms	66-2104340*
R103	Resistor, filter, 4700 ohms	66-2473340*
S100	Switch, on-off	Part of R200
VB100	Vibrator	83-0026
T100	Transformer, power	32-8314-2

SECTION 2
AUDIO CIRCUITS

C200	Condenser, d-c blocking, .004 mf.	45-3502*
C201	Condenser, tone compensation, .01 mf.	30-4650-24
C202	Condenser, r-f by-pass, 100 mmf.	60-10105407*
C203	Condenser, tone control, .01 mf.	61-0120*
C204	Condenser, d-c blocking, .01 mf.	61-0120*
C205	Condenser, cathode by-pass, 20 mf., 25v	Part of C105
C206	Condenser, tone compensation, .006 mf.	61-0127*
C207	Condenser, hash filter, 330 mmf.	60-10335407*
C208	Condenser, hash filter, 330 mmf.	60-10335407*
L200	Speaker, field	Part of LS200 (electrodynamic)
LS200	Speaker	
	Electrodynamic	36-1622-1
	Permanent magnet	36-1622-2
R200	Volume control (with on-off switch and tone control), 350,000 ohms (tap at 35,000 ohms)	33-5537-3
R201	Resistor, tone compensation, 15,000 ohms	66-3153340*
R202	Resistor, grid return, 10 megohms	66-6103340*
R203	Tone control, 5 megohms	Part of R200
R204	Resistor, plate load, 220,000 ohms	66-4223340*
R205	Resistor, grid return, 470,000 ohms	66-4473340*
R206	Resistor, cathode bias, 220 ohms	66-1224340*
T200	Transformer, output	65-0317

SECTION 3
I-F, DETECTOR, AND A-V-C CIRCUITS

C300A	Condenser, shunt, 86 mmf.	Part of Z300
C300B	Condenser, shunt, 107 mmf.	Part of Z300
C301A	Condenser, shunt, 106 mmf.	Part of Z301
C301B	Condenser, shunt, 131 mmf.	Part of Z301
C301C	Condenser, i-f filter, 125 mmf.	Part of Z301
C301D	Condenser, i-f filter, 125 mmf.	Part of Z301
C302	Condenser, catohde by-pass, .05 mf.	61-0122*
C303	Condenser, screen by-pass, .05 mf.	61-0122*
L300A	Transformer, primary, 1st i-f	Part of Z300
L300B	Transformer, secondary, 1st i-f	Part of Z300
L301A	Transformer, primary, 2nd i-f	Part of Z301
L301B	Transformer, secondary, 2nd i-f	Part of Z301
R300	Resistor, cathode bias, 2200 ohms	66-2224340*
R301	Resistor, screen dropping, 27,000 ohms	66-3273350*
R302	Resistor, a-v-c filter, 1 megohm	66-5103340*
R303	Resistor, i-f filter, 27,000 ohms	66-3273340*
TC300A	Tuning core, primary,1st i-f	Part of Z300
TC300B	Tuning core, secondary, 1st i-f	Part of Z300
TC301A	Tuning core, primary, 2nd i-f	Part of Z301
TC301B	Tuning core, secondary, 2nd i-f	Part of Z301
Z300	Transformer, 1st i-f	32-4160
Z301	Transformer, 2nd i-f	32-4240

SECTION 4
R-F AND CONVERTER CIRCUITS

C400A	Condenser, i-f trap, 100 mmf.	Part of Z400
C400B	Condenser, d-c blocking, 100 mmf.	Part of Z400
C401	Condenser, d-c blocking, 100 mmf.	60-10105407*
C402	Condenser, cathode by-pass, .05 mf.	61-0122*
C403	Condenser, d-c blocking, 100 mmf.	62-10105407*
C404	Condenser, shunt, 380 mmf.	40-1220-37
C405	Condenser, shunt, 54.5 mmf.	61-0149
C406	Condenser, a-v-c filter, .05 mf.	61-0122*
C407	Condenser, trimmer, 2-section	63-0035-6
C407A	Condenser, aerial trimmer	Part of C407
C407B	Condenser, r-f trimmer	Part of C407
C408	Condenser, series, 270 mmf.	60-10275407*
L400A	Coil, i-f trap	Part of Z400
L400B	Coil, band pass	Part of Z400
L401A	Coil, r-f, manual	Part of Z401
L401B	Coil, aerial, manual	Part of Z401
L401C	Coil, oscillator, manual	Part of Z401
L402A	Coil, oscillator, PB-5	Part of Z402
L402B	Coil, oscillator, PB-4	Part of Z402
L402C	Coil, oscillator, PB-3	Part of Z402
L402D	Coil, oscillator, PB-2	Part of Z402
L402E	Coil, oscillator, PB-1	Part of Z402
L402F	Coil, aerial, PB-5	Part of Z402
L402G	Coil, aerial, PB-4	Part of Z402
L402H	Coil, aerial, PB-3	Part of Z402
L402I	Coil, aerial, PB-2	Part of Z402
L402J	Coil, aerial, PB-1	Part of Z402
L403	Choke, spark	65-0439
L404	Coil, oscillator shunt	32-4110
PB-1	Push button No. 1	Part of Z402
PB-2	Push button No. 2	Part of Z402
PB-3	Push button No. 3	Part of Z402
PB-4	Push button No. 4	Part of Z402
PB-5	Push button No. 5	Part of Z402
PB-6	Push button, manual	Part of Z402
R400	Resistor, cathode bias, 1000 ohms	66-2103340*
R401	Resistor, plate load, 10,000 ohms	66-3104340*
R402	Resistor, grid return, 330,000 ohms	66-4333340*
R403	Resistor, grid bias, 22,000 ohms	66-3223340*
R404	Resistor, grid return, 100,000 ohms	66-4103340*
TC400	Tuning core, i-f trap	Part of Z400
TC401A	Tuning core, r-f, manual	Part of Z401
TC401B	Tuning core, aerial, manual	Part of Z401
TC401C	Tuning core, oscillator; manual	Part of Z401
TC402A	Tuning core, aerial and osc., PB-5	Part of Z402
TC402B	Tuning core, aerial and osc., PB-4	Part of Z402
TC402C	Tuning core, aerial and osc., PB-3	Part of Z402
TC402D	Tuning core, aerial and osc., PB-2	Part of Z402
TC402E	Tuning core, aerial and osc., PB-1	Part of Z402
T404	Tuning core, osc. padding	Part of L404
Z400	Transformer, r-f	32-4162
Z401	Manual-tuning assembly	76-3348
Z402	Push-button assembly	76-3349

MISCELLANEOUS

Description	Service Part No.
Background-plate-and-bracket assembly	76-3351
Bezel	56-4459-2FA8
Cable, speaker (electrodynamic)	41-3801-2
Cable, speaker (permanent magnet)	41-3801-3
Clip, dial mtg.	56-4456FA1
Cord, drive, (25-ft. spool)	45-8750
Cover-and-button assembly	76-3639FJ21
Cover, push button	56-3386-1FJ32
Cover, tube side	76-3355FJ21
Dial scale	27-5983
Fuse-lead assembly	76-2070-91
Gasket, speaker	55-1482
Grommet, "A" lead	27-4596
Hairpin (manual-tuner shaft)	57-1868FA11
Housing-and-bracket assembly	76-3354FJ21
Knob, adjusting	27-4687-5
Knob, tone control	77-1025-3
Knob, dummy	77-1026
Pointer	56-4362FCP
Push-button assembly	
Link	56-4034FCP
Core-and-key-assembly, push button	77-0915-1
Set-Mounting Kit	
Bracket	56-4767-2FA3
Screw, 12—24 x 5/8"	1W10677FA3
Washer, flat	1W52420FA3
Lock washer, ext.	1W24259FA1
Nut	1W19992FA3
Bolt, hook	57-2468FA3
Shaft (manual tuner)	56-5124FA3
Socket assembly, pilot lamp	76-1677-1
Socket, aerial	57-0590-1FA3
Socket, speaker	55-0438-1FA3
Socket, tube	27-6226
Socket, vibrator	27-8153
Spring, drive cord	57-1425FA1
Suppression kit	40-7486
Condenser, interference filter	30-4007
Resistor, distributor	33-1196

MODEL P-4735, Packard

PHILCO CORP.

TROUBLE SHOOTING

Section 1

Make the tests for this section with a d-c voltmeter, connecting the leads between test point B (B–) and the test points indicated in the chart. The voltage readings given were taken with a 20,000-ohms-per-volt meter, with an "A"-supply voltage of 6.6 volts, d.c.

Turn on the power, and set the sensitivity control to maximum (clockwise).

Turn the volume control to minimum, and the tone control fully counterclockwise.

If the "NORMAL INDICATION" is obtained in step 1, proceed with the tests for Section 2; if not, isolate and correct the trouble in this section.

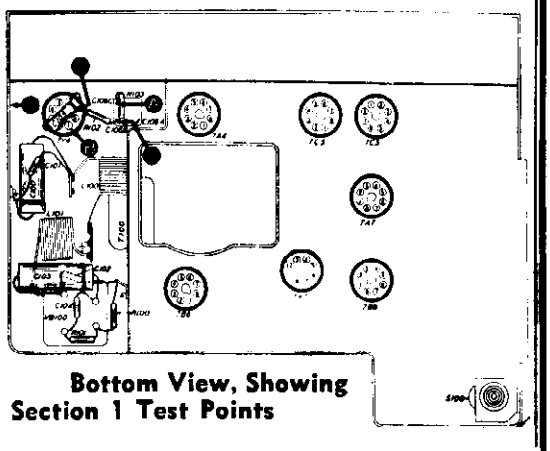

Bottom View, Showing Section 1 Test Points

STEP	TEST POINT	NORMAL INDICATION	ABNORMAL INDICATION	POSSIBLE CAUSE OF ABNORMAL INDICATION
1	A B	165v 6.6v		Trouble in this section. Isolate by the following tests.
2	B	6.6v	No voltage	Open: F100, L100, L101, S100. Shorted: C100, C101, C102, C103, C104.
			Low voltage	Weak battery.
3	D	220v	No voltage	Defective: VB100, 7Y4. Shorted: C105, C106A, T100. Open: T100.
			Low voltage	Defective: 7Y4. Open: C106A. Leaky: C105, C106A.
			High voltage	Open: T200*, R102, R211*.
4	E	200v	No voltage	Shorted: C106B, R102.
			Low voltage	Changed value: R102. Leaky: C106B.
5	A	165v	No voltage	Open: R103. Shorted: C106C.
			Low voltage	Leaky: C106C. Changed value: R103.

* This part, located in another section, may cause abnormal indication in this section.

TROUBLE SHOOTING

Section 2

For the tests in this section, use an audio-frequency signal generator. Connect the generator ground lead to the chassis, test point C; connect the output lead through a .1-mf. condenser to the test points indicated in the chart.

Turn the volume control to maximum, and the tone control fully counterclockwise. Adjust the signal-generator output as required for each step.

If the "NORMAL INDICATION" is obtained in step 1, proceed with the tests for Section 3. If not, isolate and correct the trouble in this section.

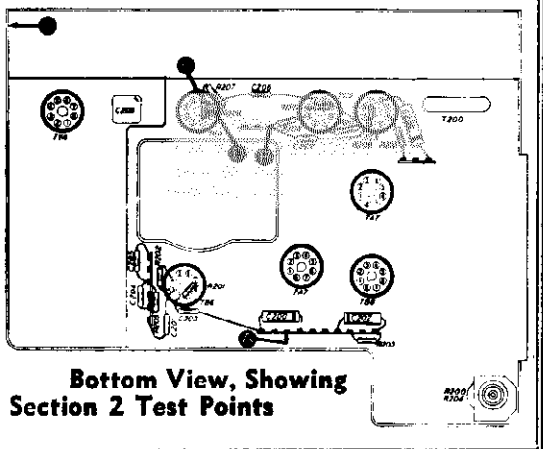

Bottom View, Showing Section 2 Test Points

STEP	TEST POINT	NORMAL INDICATION	POSSIBLE CAUSE OF ABNORMAL INDICATION
1	A	Loud, clear signal with weak signal input.	Trouble in this section. Isolate by the following tests.
2	B (Remove 7A4)	Clear signal with strong signal input.	Defective: 7C5, L5200. Shorted or leaky: C209, T200. Open: R211, R209, T200, C207.
3	D	Same as step 2.	Defective: 7C5. Open: T200. Shorted: T200, C206.
4	E (Replace 7A4)	Loud, clear signal with moderate signal input.	Open: R207, R206, R208. Shorted or leaky: C204, C205, C203 (rotate R204). Defective: 7A4.
5	A	Same as step 1.	Defective: 7B6, R200 (rotate through range). Open: R200, R201, C201, R205.

Listening Test: Rotate tone control, R204, through range; lack of treble attenuation may be caused by open C203 or R204; lack of bass accentuation may be caused by open R212, R204, R203, or C202, or by shorted or leaky C202. Distortion may be caused by leaky C201, C205, C206, or C207.

PHILCO CORP.

MODEL P-4735, Packard

TROUBLE SHOOTING

Section 3

For the tests in this section, use an r-f signal generator, with modulated output, set at 265 kc. Connect the generator ground lead to the chassis, test point C; connect the output lead through a .1-mf. condenser to the test points indicated in the chart.

Turn the volume control to maximum, and the tone control fully counterclockwise. Set the sensitivity control to maximum.

If the "NORMAL INDICATION" is obtained in step 1, proceed with the tests for Section 4; if not, isolate and correct the trouble in this section.

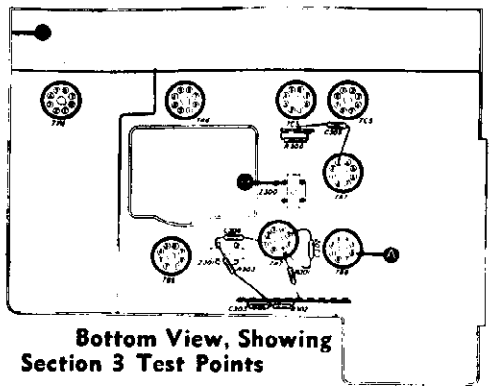

Bottom View, Showing Section 3 Test Points

Since the circuit location of test point A for this section is the same as that of test point B for Section 4, the effectiveness of step 1 as a master check is dependent upon the condition of certain parts in Section 4; these parts are listed under "POSSIBLE CAUSE OF ABNORMAL INDICATION."

STEP	TEST POINT	NORMAL INDICATION	POSSIBLE CAUSE OF ABNORMAL INDICATION
1	A	Loud, clear signal with weak signal input.	Trouble in this section. Isolate by the following tests.
2	B	Loud, clear signal with moderate signal input.	Defective: 7A7, 7B6 (diode section). Misaligned: Z301. Open: Z301 pri. or sec., C301A, C301B, R301, R300, R406* (rotate through range), R303. Shorted: Z301 pri. or sec., C301A, C301B, C300B, C303, C304, C305.
3	C	Loud, clear signal with weak signal input.	Defective: 7B8.* Misaligned: Z300. Open: Z300 pri. or sec., C300A, C300B. Shorted: C405,* Z300 pri., C300A, C300B.

* This part, located in another section, may cause abnormal indication in this section.

TROUBLE SHOOTING

Section 4

For the tests in this section, with the exception of the oscillator test, use an r-f signal generator, with modulated output. Connect the generator ground lead to the chassis, test point C; connect the output lead through a .1-mf. condenser to the test points indicated in the chart.

Turn the volume control to maximum, and the tone control fully counterclockwise. Set the sensitivity control to maximum.

If the "NORMAL INDICATION" is not obtained in step 1, isolate the trouble by following the remaining steps.

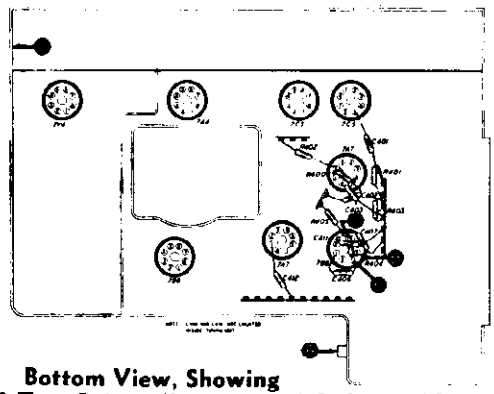

Bottom View, Showing Section 4 Test Points (locations of C404, L401, R406, and Z400 are shown in figure 6)

STEP	TEST POINT	SIG. GEN. FREQ.	RADIO TUNING	NORMAL INDICATION	POSSIBLE CAUSE OF ABNORMAL INDICATION
1	A	1000 kc.	Tune to signal.	Loud, clear signal with weak signal input.	Trouble in this section. Isolate by the following tests.
2	B	1000 kc.	Tune to signal.	Loud, clear signal with moderate signal input.	Defective: 7B8. Shorted: L400B, C404, C405. Trouble in oscillator circuit (step 3).
3	D to E Osc. Test (see note below)		Tune through range.	Negative 2 to 4 volts.	Shorted or leaky: C411, C410, C407, C408, C409. Open: C411, L400D, C407, R404, R405, R406, L400C, C408, C410. Shorted: L400C, L400D.
4	A	1000 kc.	Tune to signal.	Loud, clear signal with weak signal input.	Defective: 7A7. Open: L401, R400, R401, R402, C403, R403, L400B, L400A. Shorted or leaky: C403, C412, C404.

OSCILLATOR TEST

Connect positive lead of high-resistance voltmeter to test point E (pin 7, cathode of 7B8); connect prod end of negative lead through 100,000-ohm isolating resistor to test point D (pin 4, osc. grid of 7B8). Use suitable meter range, such as 0—10 volts. Proper operation of oscillator is indicated by negative voltage, 2 to 4 volts (measured with 20,000-ohms-per-volt meter), throughout tuning range.

MODEL P-4735, Packard

PHILCO CORP.

REPLACEMENT PARTS LIST

NOTE

Part numbers marked with an asterisk (*) are general replacement items. These numbers may not be identical with those on factory assemblies; also, the electrical values of some replacement items may differ from the values indicated in the schematic diagram and parts list. The values substituted in any case are so chosen that the operation of the radio will be either unchanged or improved. When ordering replacements, use only the "Service Part No."

SECTION 1

Reference Symbol	Description	Service Part No.
C100	Condenser, by-pass, .5 mf.	61-0137*
C101	Condenser, r-f by-pass, 220 mmf.	60-10205307*
C102	Condenser, r-f by-pass, 220 mmf.	60-10205307*
C103	Condenser, by-pass, .5 mf.	61-0137*
C104	Condenser, r-f by-pass 220 mmf.	60-10205307*
C105	Condenser, buffer, .003 mf.	61-0115
C106	Condenser, electrolytic, 4-section	61-0150
C106A	Condenser, input filter, 20 mf., 350v	Part of C106
C106B	Condenser, filter, 10 mf., 350v	Part of C106
C106C	Condenser, filter, 5 mf., 300v	Part of C106
C208	Condenser (see Section 2)	Part of C106
F100	Fuse	45-2559
I100	Lamp, pilot	34-2039
I101	Lamp, pilot	34-2039
L100	Choke, "A"	32-1644
L101	Choke, vibrator	65-0151
R100	Resistor, damping, 100 ohms	66-1104340*
R101	Resistor, damping, 100 ohms	66-1104340*
R102	Resistor, filter, 1000 ohms	66-2104340*
R103	Resistor, filter, 4700 ohms	66-2474340*
S100	Switch, on-off	Part of R200
T100	Transformer, power	32-8314-1
VB100	Vibrator	83-0026

SECTION 2

C200	Condenser, cathode by-pass, .25 mf.	61-0125*
C201	Condenser, d-c blocking, .0047 mf.	45-3502*
C202	Condenser, feedback, .068 mf.	45-3501*
C203	Condenser, tone compensation, .0082 mf.	61-0174*
C204	Condenser, r-f by-pass, 100 mmf.	60-10105407*
C205	Condenser, d-c blocking, .0047 mf.	45-3502*
C206	Condenser, d-c blocking, .01 mf.	61-0120*
C207	Condenser, d-c blocking, .01 mf.	61-0120*
C208	Condenser, cathode by-pass, 10 mf., 25v.	Part of C106
C209	Condenser, tone compensation .0068 mf.	45-3501*
L200	Speaker field	Part of LS200
LS200	Speaker	36-1609-4
R200	Volume control, 350,000 ohms	33-5557-2
R201	Resistor, cathode bias, 470 ohms	66-1473340*
R202	Resistor, grid return, 10 megohms	66-6103340*
R203	Resistor, feedback, 2200 ohms	66-2223340*
R204	Potentiometer, tone control, 4 megohms.	Part of R200
R205	Resistor, plate load, 220,000 ohms	66-4223340*
R206	Resistor, cathode load, 220,000 ohms.	66-4223340*
R207	Resistor, grid return, 10 megohms	66-6103340*
R208	Resistor, plate load, 220,000 ohms	66-4223340*
R209	Resistor, grid return, 470,000 ohms	66-4473340*
R210	Resistor, grid return, 470,000 ohms	66-4473340*
R211	Resistor, cathode bias, 330 ohms	66-1334340*
R212	Resistor, feedback, 1500 ohms	66-2153340
T200	Transformer, output	32-8325

SECTION 3

C300A	Condenser, fixed trimmer, 107 mmf.	Part of Z300
C300B	Condenser, fixed trimmer, 86.6 mmf.	Part of Z300
C301A	Condenser, fixed trimmer, 107 mmf.	Part of Z301
C301B	Condenser, fixed trimmer, 86.6 mmf.	Part of Z301
C302	Condenser, cathode by-pass, .047 mf.	61-0122*
C303	Condenser, r-f by-pass, 220 mmf.	60-10205307*
C304	Condenser, r-f by-pass, 220 mmf.	60-10205307*
C305	Condenser, screen by-pass, .047 mf.	61-0122*
R300	Resistor, screen dropping, 27,000 ohms	66-3273340*
R301	Resistor, cathode bias, 1500 ohms	66-2153340*
R302	Resistor, a-v-c filter, 1 megohm	66-5103340*

SECTION 3 (Continued)

R303	Resistor, i-f filter, 27,000 ohms	66-3273340*
Z300	Transformer, 1st i-f	32-4160-2
Z301	Transformer, 2nd i-f	32-4161-2

SECTION 4

C400	Condenser, trimmer (ant. comp.)	31-6472
C401	Condenser, a-v-c by-pass, .047 mf.	61-0122*
C402	Condenser, cathode by-pass, .047 mf.	61-0122*
C403	Condenser, d-c blocking, 220 mmf.	60-10205307*
C404	Condenser, series, 100 mmf.	60-10105237
C405	Condenser, r-f trimmer	63-0052
C406	Condenser, cathode by-pass, .047 mf.	61-0122*
C407	Condenser, d-c blocking, 100 mmf.	60-10105407*
C408	Condenser, shunt, 215 mmf.	30-1220-4*
C409	Condenser, osc. trimmer	63-0055
C410	Condenser, shunt, 54.5 mmf.	62-056409001*
C411	Condenser, d-c blocking, 220 mmf.	30-1220-4*
C412	Condenser, a-v-c filter, .047 mf.	61-0122*
L400A	Coil, aerial tuning (part of Z400)	65-0349
L400B	Coil, r-f tuning (part of Z400)	65-0359
L400C	Coil, osc. tuning (part of Z400)	65-0350
L400D	Coil, osc. shunt (part of Z400)	65-0351
L401	Choke, aerial	65-0437
R400	Resistor, cathode bias, 820 ohms	66-1823340*
R401	Resistor, a-v-c decoupling, 68,000 ohms.	66-3683340*
R402	Resistor, plate load, 10,000 ohms	66-3103340*
R403	Resistor, grid return, 68,000 ohms	66-3683340*
R404	Resistor, grid bias, 100,000 ohms	66-4103340*
R405	Resistor, plate feed, 22,000 ohms	66-3223340*
R406	Resistor, sensitivity control, 900 ohms (200-ohm minimum)	67-0036
Z400	Tuner assembly	77-0588-2

MISCELLANEOUS

Description	Service Part No.
Bezel Assembly	
Bezel	56-4693FA8
Dial	27-5962
Knob, manual tuning	56-4729FA8
Bumper support	54-4475
Cap, push-button	56-4747FA8
Cap, push-button (ends)	56-4746FA8
Connector, aerial	57-1243FA3
Cover-and-button assembly, tube side	76-3069FJ41
Cover, wiring side	56-4696FJ41
Fuse-lead assembly	76-3067
Housing-and-bracket assembly	76-3041FJ41
Knob, tone control	56-4699FA3
Knob, volume control	27-4687-6
Lead, "A"	76-3067-1
Shield, power-transformer	57-0875-1
Socket, Loktal	27-6207
Socket, vibrator	27-6153
Tuning-Unit Hardware	
Background assembly, dial	76-3126
Core, iron	57-1659
Core (oscillator), iron	57-1542
Core (r.f.), iron	57-1542
Filter, pilot lamp	54-7393
Insert assembly, push-button (center)	76-3074
Insert assembly, push-button (end)	76-3074-1
Insert assembly, push-button (manual)	76-3074-2
Lamp-socket assembly	41-3737-3

© John F. Rider

ALIGNMENT I

DIAL POINTER—Turn manual tuning knob until pointer stops at high-frequency end of dial; if pointer does not coincide with index mark at 1600 kc., carefully bend it to the correct position.

OUTPUT METER—Connect across voice-coil terminals.

SIGNAL GENERATOR—Connect ground lead to chassis; connect output lead as indicated in chart. Use modulated output.

RADIO CONTROLS—Set volume and sensitivity controls to maximum. Set tone control for maximum signal (approximate center of range).

STEP	SIGNAL GENERATOR		RADIO		ADJUST
	CONNECTIONS TO RADIO	DIAL SETTING	DIAL SETTING	SPECIAL INSTRUCTIONS	
1	Through .1-mf. condenser to aerial receptacle.	265 kc.	540 kc.	Adjust trimmers, in order given, for maximum output.	TC301B TC301A TC300B TC300A
2	Through dummy aerial.	1600 kc.	Tune to signal.	Adjust for maximum.	C405
3	Same as step 2.	1400 kc.	1400 kc.	Adjust for maximum.	C409
4	Same as step 2.	580 kc.	Tune to signal.	Adjust for maximum while rocking tuning control.	TC400D
5	Repeat steps 2, 3, and 4 until no further improvement is obtained.				
6	After reinstalling radio in car, with aerial connected, adjust C401 for maximum output from weak station near 1400 If the radio is to be used in an area having local broadcasting stations, the sensitivity control may be adjusted somewhat lower sensitivity, to permit quieter operation.				

SETTING PUSH BUTTONS

Any one of the five station push buttons may be set for any frequency within the broadcast band.

1. Turn on the power, and allow the radio to warm up for fifteen minutes.
2. Pull off the five uppermost push-button knobs (the lower knob selects manual tuning), thus exposing the shafts which operate the tuning mechanism.
3. Depress one of the shafts until it locks in, then rotate the shaft to tune in the desired station; turning the shaft causes the dial pointer to move, indicating the frequency to which the circuits are tuned.
4. Repeat the procedure for each button. Replace the knobs.

TROUBLE-SH

For rapid trouble shooting into four sections, with te section; these sections and the schematic diagram. T dure given for each sectio chart and a bottom view locations of the test points section.

In each chart, the first determining whether trou without going through the

Failure to obtain "NO any given step indicates under test.

After isolating the trou defect is located by: first, measuring tube electrode circuit resistances; fourth The trouble revealed shoul ing further.

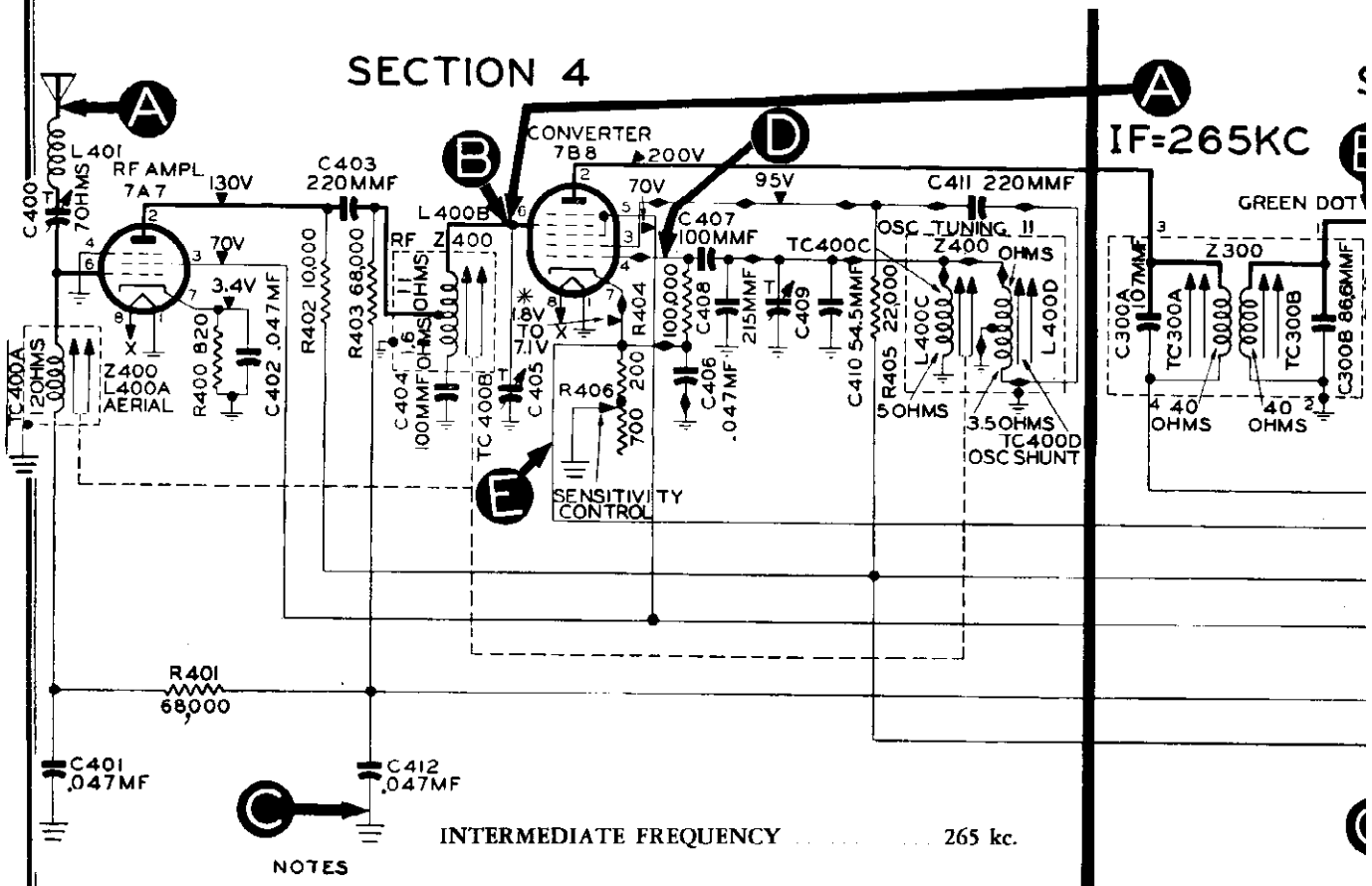

ALL RESISTOR VALUES IN OHMS UNLESS MARKED OTHERWISE.

CONDENSER SYMBOLS

FIXED VARIABLE TRIMMER ELECTROLYTIC

RF IF AND AUDIO SIGNAL PATH.

OSC SIGNAL PATH

INDICATES SOCKET OR PLUG CONNECTIONS

VOLTAGES AT BOTH MAXIMUM AND MINIMUM SETTINGS OF SENSITIVITY CONTROL

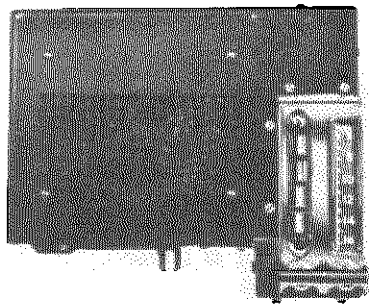

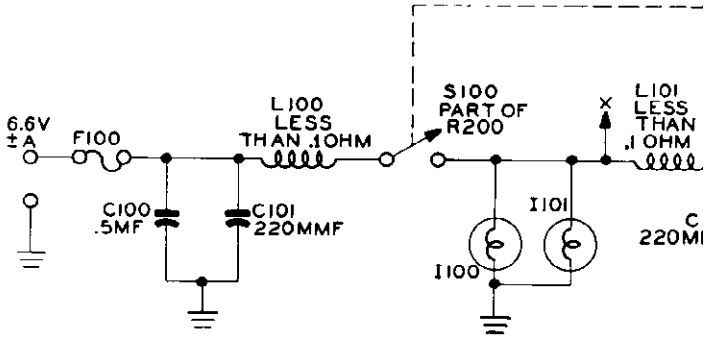

Sectionalized Schematic Diagram, Showing Test Poir

CIRCUIT	Eight-tube superheterodyne
FREQUENCY RANGE	540—1600 kc.
PUSH BUTTONS	Six: five for station selection; one for manual tuning
AUDIO OUTPUT	5.9 watts
POWER INPUT	8.8 amperes at 6.6 volts, d.c.
AERIAL	Retractable-tip, Philco Part No. 45-1468-1
PHILCO TUBES (8)	7A7 (2), 7B8, 7B6, 7A4, 7C5 (2), 7Y4

Circuit Description

The circuit is an eight-tube superheterodyne, using permeability tuning. Of the six push buttons, five are used for automatic station selection, and one selects manual tuning. The ganged tuning cores of the aerial, r-f, and oscillator circuits are mechanically actuated (by pantograph drive) for either push-button or manual operation.

The tuned-r-f amplifier stage employs a 7A7. The converter, a 7B8, works into a 7A7 i-f amplifier, which operates at 265 kc.

The 7B6 duo-diode, triode tube provides detection and a-v-c voltage in the diode section; the triode sec-

©John F. Rider

PHILCO CORP.

MODEL P-4735, Packard

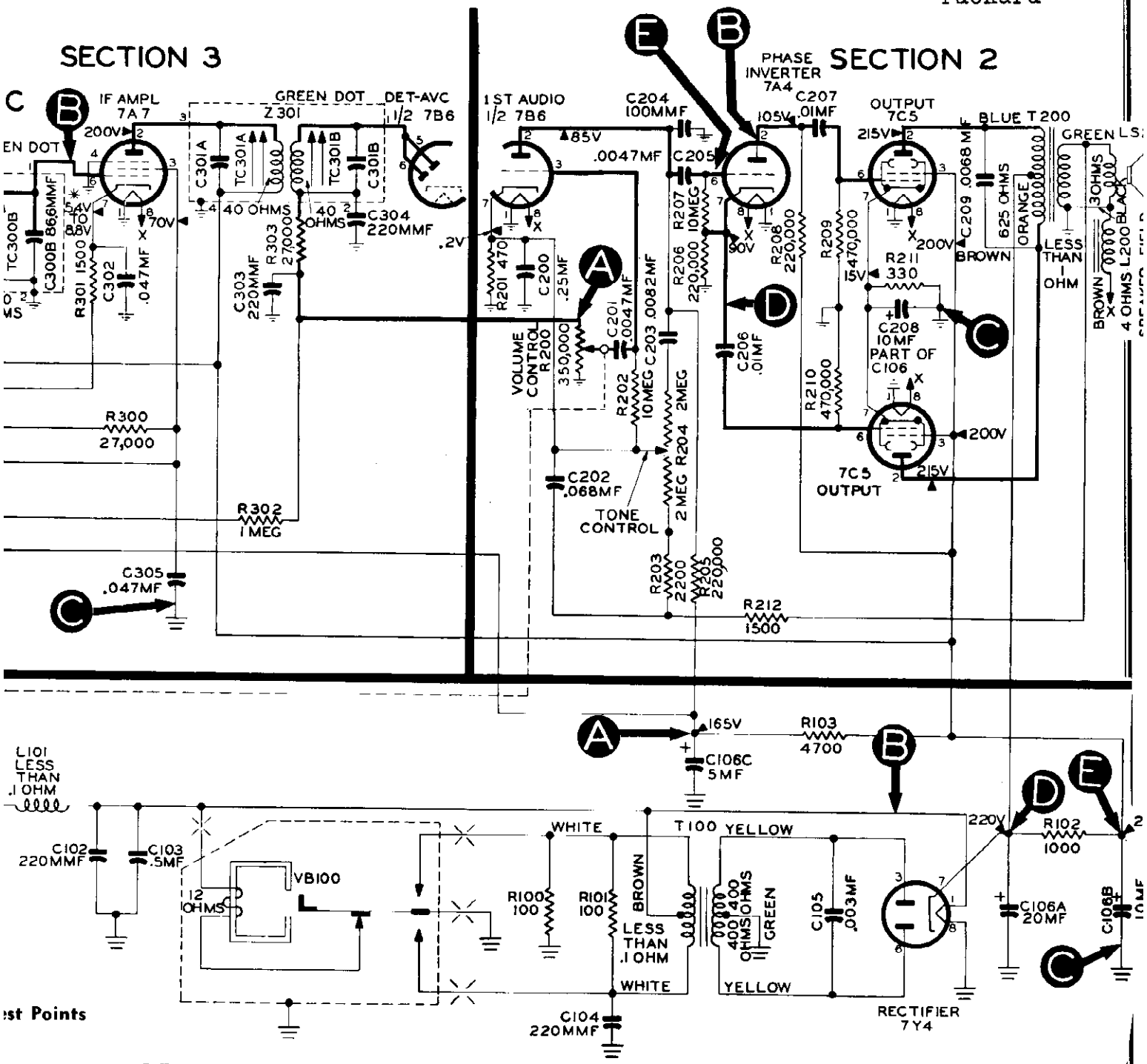

tion functions as the first audio amplifier. A 7A4 plate-and-cathode-loaded phase inverter drives the two 7C5 push-pull output amplifiers, which, at full output, provide 5.9 watts of audio power to the electrodynamic speaker.

The power-supply circuit incorporates a non-synchronous vibrator and a 7Y4 full-wave rectifier.

A variable sensitivity control, R406, is connected in the common cathode circuit of the converter and i-f tubes. This control is mounted on the chassis as shown in figure 6, and may be adjusted with a screwdriver, inserted through a hole in the back of the radio; in areas where most reception is from local stations, the control should be set for lower sensitivity, to permit quieter operation of the radio.

The tone control is part of a feed-back circuit in which the feedback to the first audio stage is degenerative at high audio frequencies and regenerative at the lower frequencies.

RP.

ROCEDURE

OUTPUT LEVEL—During alignment, adjust signal-generator output to maintain output-meter indication below 1 volt.

DUMMY AERIAL—For steps 2, 3, and 4, either of two dummy-aerial connections should be used: (1) connect generator output lead through 22-mmf. condenser to shielded aerial lead (Philco Part No. 45-1468-1) plugged into aerial receptacle; (2) connect output lead through 22-mmf. condenser to aerial receptacle, then connect 30-mmf. condenser from receptacle to chassis.

IMPORTANT: The above instructions for the dummy aerial must be carefully followed if the radio is to perform at its best after being reinstalled in the car.

Top View, Trimmer and Tuning-Core Locations

(dotted lines indicate tuning screws located at bottom of chassis)

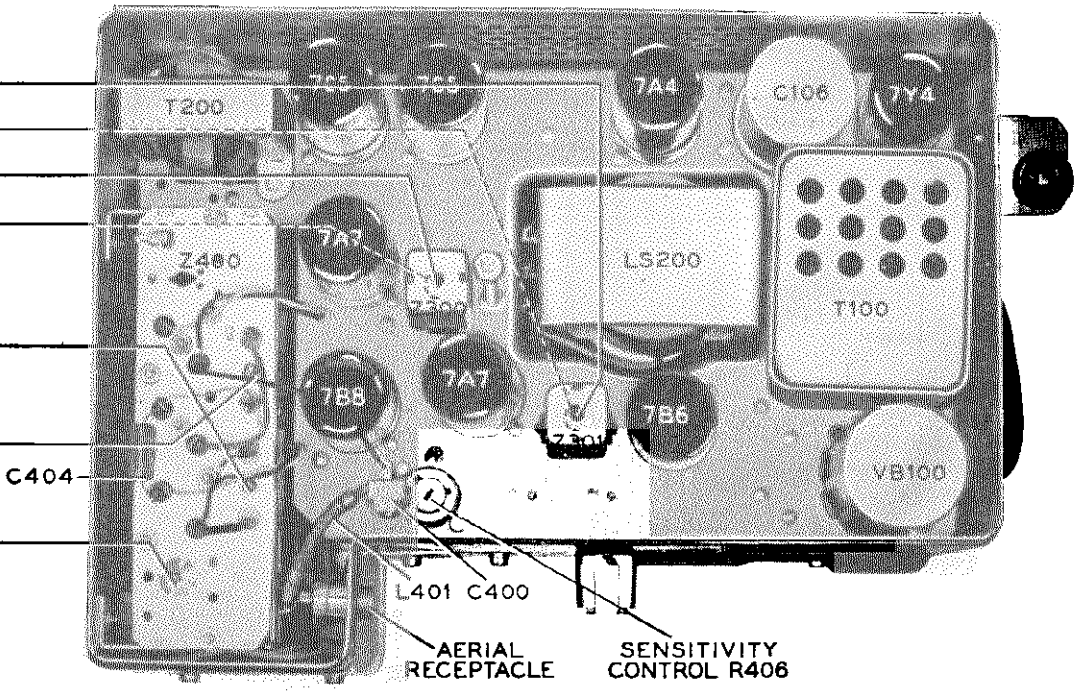

OTING Procedure

ıe radio circuit is divided
points specified for each
ıt points are indicated in
trouble-shooting proce-
ncludes a simplified test
the chassis showing the
d the components of that

p is a master check for
: exists in that section,
ıtire test procedure.
IAL INDICATION" in
uble within the circuit

: to a single stage, the
:sting the tube; second,
.tages; third, measuring
substituting condensers.
be corrected before test-

Preliminary Checks

To avoid possible damage to the radio, the following preliminary checks should be made before turning on the power:

1. Inspect both the top and the bottom of the chassis. Make sure that all tubes are secure in the proper sockets, and look for any broken or shorted connections, burned resistors, or other obvious sources of trouble.

2. Measure the resistance between B+ (pin 7 of 7Y4 rectifier tube) and the radio chassis, test point C, with the ohmmeter polarity such that the highest resistance reading is obtained. If the reading is lower than 2700 ohms, check condensers C106A and C106B for leakage or shorts. The resistance value above, which is much lower than normal, is not intended as a quality check of these condensers; the value given is the lowest at which the rectifier will operate safely while the voltage tests of Section 1 are performed.

If the fuse is open, check the vibrator before installing a new fuse; if the vibrator is defective, check the buffer condenser, C105, for leak or short.

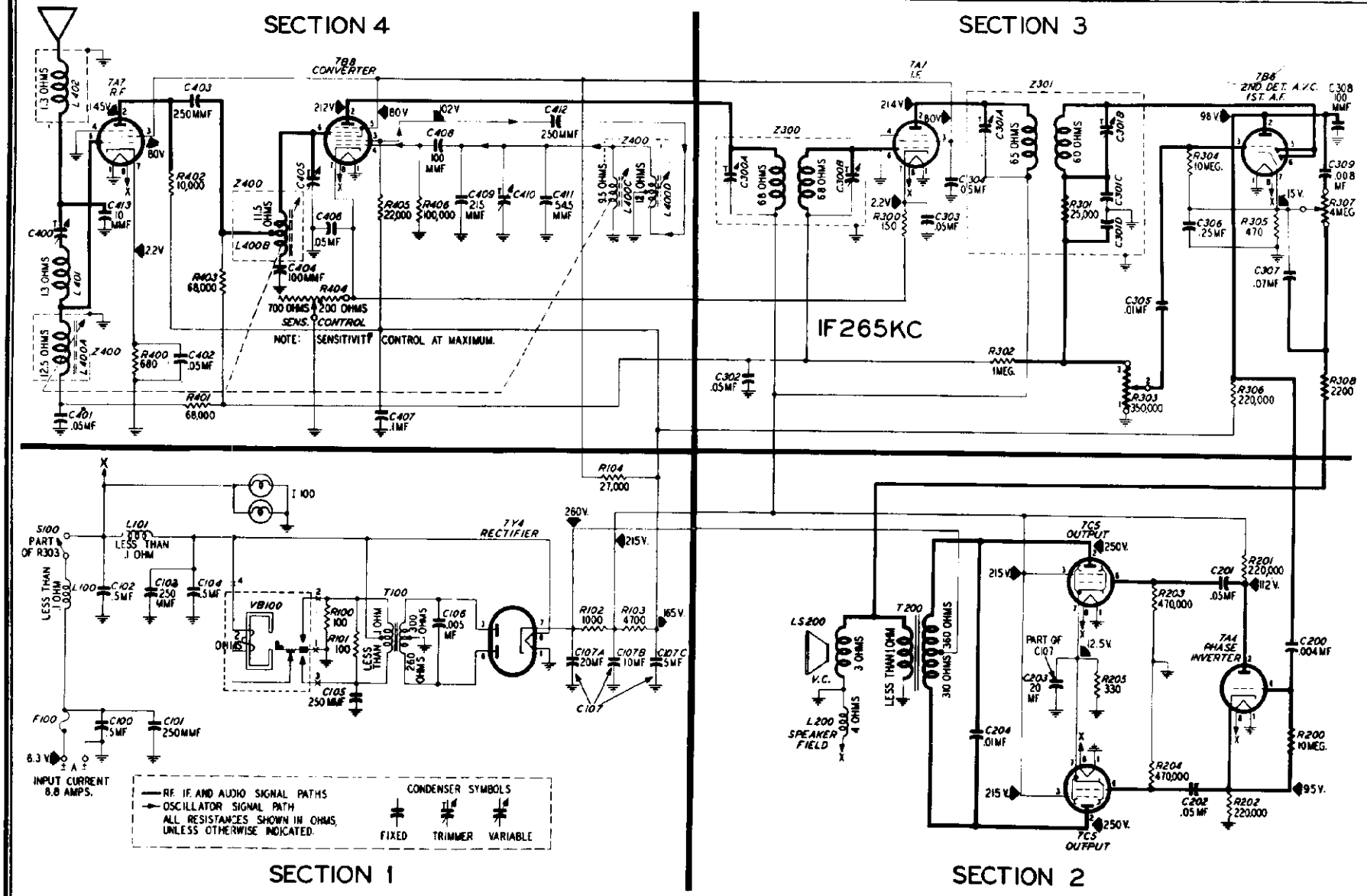

NOTE: All voltage, capacity, and resistance values shown are average. The voltages were measured between the points indicated and the receiver chassis (B–), using a 20,000-ohms-per-volt meter, with 6.3 volts d-c input to the receiver power supply; the volume control was set at minimum, and the tuning control at 540 kc.

ALIGNMENT PROCEDURE

CONNECT THE SIGNAL-GENERATOR output lead as follows:

For the i-f alignment (the first step in the chart), connect through a .05-mf. condenser to the aerial connector.

For the r-f alignment (all steps after the first), inject the signal through a dummy aerial consisting of a 20-mmf. condenser in series with an aerial lead (Part No. 95-0181) plugged in to the aerial receptacle. If an aerial lead is not available, connect a 30-mmf. condenser from the aerial receptacle to ground, and inject the signal through the 20-mmf. condenser alone. **The foregoing instruction must be carefully followed if the receiver is to give its best performance after being reinstalled in the car.**

CONNECT THE OUTPUT METER between the voice-coil lug on the speaker and the receiver chassis.

ADJUST THE RECEIVER CONTROLS as follows:

Set the volume and sensitivity controls at maximum. Set the tone control for maximum signal output (approximately the center of its range).

ADJUST THE SIGNAL-GENERATOR OUTPUT as alignment progresses to keep the meter needle near center scale, using the lowest range on the output meter.

AFTER REINSTALLING THE RECEIVER in the car and connecting the aerial, make the following adjustments: Set the aerial trimmer for maximum signal strength on a weak station near 1400 kc. Set the sensitivity control for low sensitivity, if the receiver is to be used mainly for local-station reception, or higher sensitivity depending on the degree of distant-station reception desired. The lower the sensitivity can be set, the less will be the noise and interference pickup.

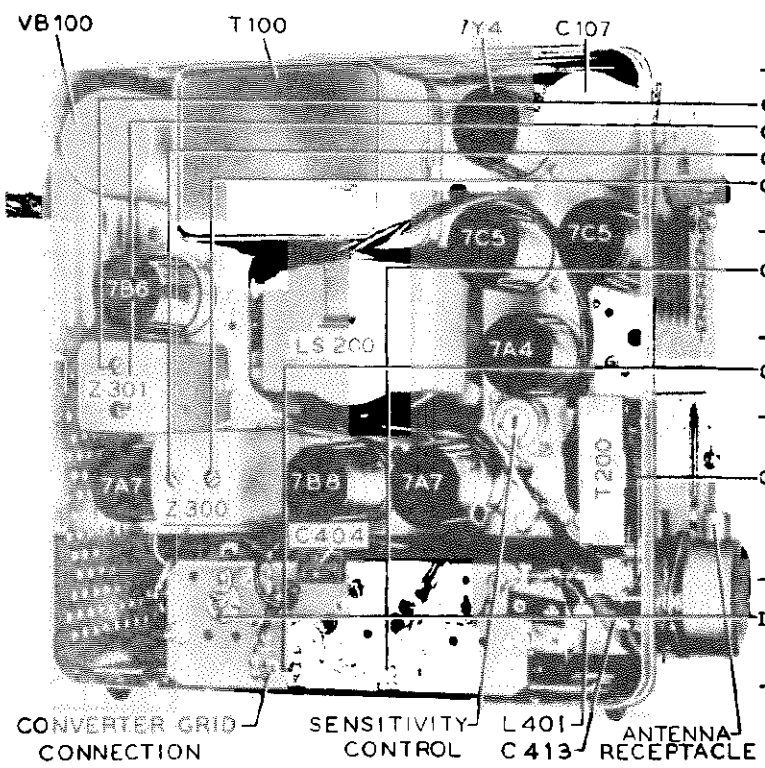

Chassis view, showing trimmer locations.

ADJUST IN ORDER	SPECIAL INSTRUCTIONS	DIAL SETTINGS SIG. GEN.	DIAL SETTINGS RECEIVER
C301B C301A C300B C300A	Ground pin 4 of the 7B8. Adjust for maximum in order as numbered, and then repeat procedure.	265 kc.	540 kc.
C410	Remove the ground from pin 4 of the 7B8. Adjust for maximum.	1600 kc.	1600 kc.
C405	Adjust for maximum.	1400 kc.	1400 kc.
C400	Adjust for maximum. Final adjustment to be made after installation in car, with aerial connected.	1400 kc.	1400 kc.
L400D	Adjust for maximum while rocking tuning control back and forth across signal.	580 kc.	580 kc.
	Repeat all steps after the first.		

© John F. Rider

TESTS TO ISOLATE TROUBLE WITHIN SECTION 1

MAKE TEST NO. 1 FIRST !

If the "NORMAL INDICATION" for this test is obtained, proceed to Test No. 1 in the next section. If not, continue through the chart to isolate and remedy the trouble in this section.

Make all measurements for this section with a volt-ohmmeter, using the applicable d-c range. All voltages given in this manual are average, and were taken with a 20,000 ohms-per-volt meter, with 6.3 volts d-c input; the volume control was set at minimum, and the tuning control at 540 kc.

WARNING: If the 7Y4 rectifier is found to be defective, check the main filter condenser, C107, for shorts before inserting a new tube. If the vibrator is found to be defective, check C106 for a short before inserting a new vibrator.

	TEST POINTS	NORMAL INDICATION	POSSIBLE CAUSE OF ABNORMAL INDICATION
1.	D to B—	165 volts	Trouble within Section 1. Isolate by following tests.
2.	A to B—	260 volts	Defective 7Y4, VB100, T100, C105, C106, C107A, or C107B.
3.	C to B—	215 volts	Defective R102, C107B or C107C.
4.	D to B—	165 volts	Defective R103, C107C or C407 (see Section 4 for location).

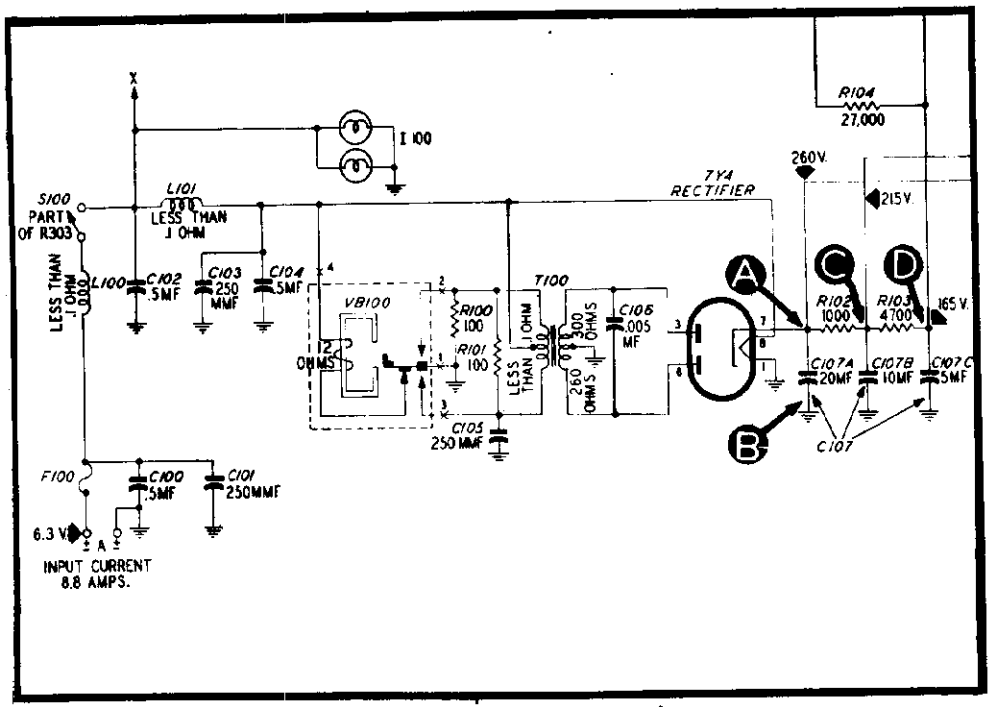

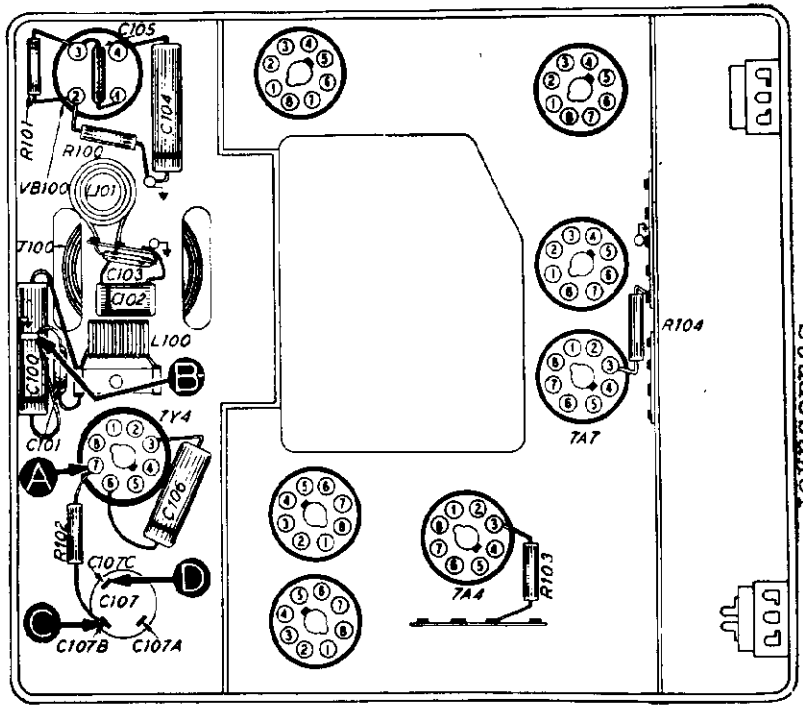

Bottom view, showing Section 1 test points.

MAKE TEST NO. 1 FIRST !

If the "NORMAL INDICATION" for this test is obtained, proceed to Test No. 1 in the next section. If not, continue through the chart to isolate and remedy the trouble in this section.

TESTS TO ISOLATE TROUBLE WITHIN SECTION 2

For all tests in this section, use an audio signal. Connect the generator output lead through a condenser (.01 to .25 mf.) to the test points indicated; connect the ground lead to the receiver chassis (B–). Set the receiver volume control at maximum, and adjust the signal-generator output for a loud, clear signal.

	TEST POINTS	NORMAL INDICATION	POSSIBLE CAUSE OF ABNORMAL INDICATION
1.	H to B–	Loud, clear signal.	Trouble within Section 2. Isolate by following tests.
2.	E to B– (Remove 7A4)	Loud, clear signal.	Defective 7C5, T200, LS200, R203, R205, C201, C203, or C204.
3.	F to B– (7A4 removed)	Loud, clear signal, same as preceding test.	Defective 7C5, T200, R204, or C202.
4.	G to B– (Replace 7A4)	Clear signal, louder than preceding test.	Defective 7A4, R202, R201, R200, or C200.
5.	H to B–	Loud, clear signal, same as preceding test.	Defective C200, R200, or C308 (see Section 3 for location).

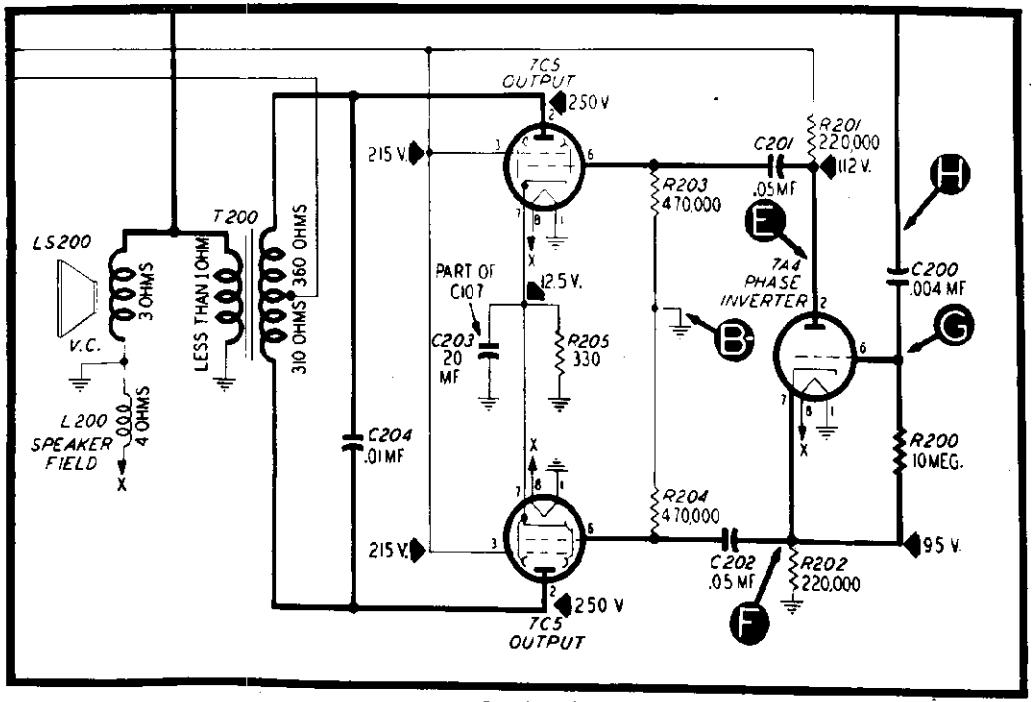

Section 2 schematic.

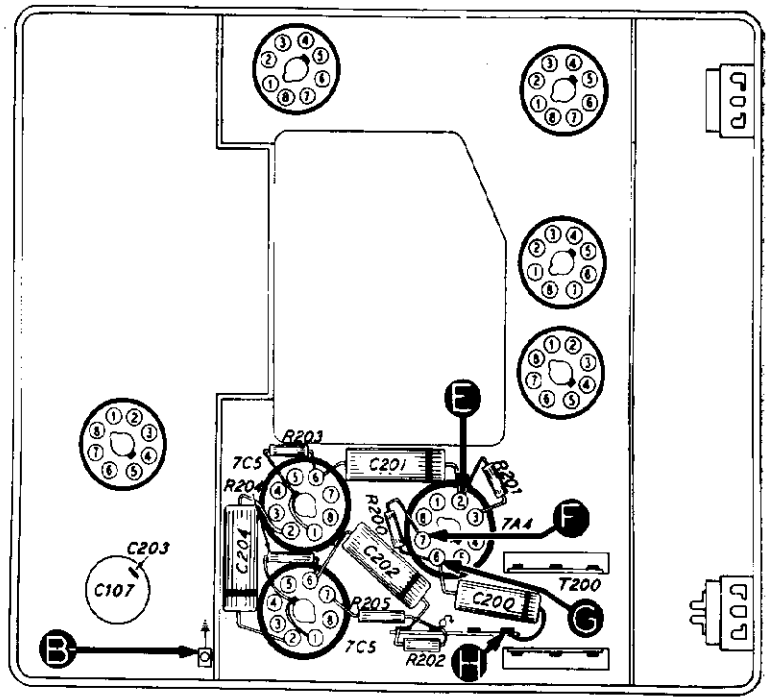

Bottom view, showing Section 2 test points.

MAKE TEST NO. 1 FIRST!

If the "NORMAL INDICATION" for this test is obtained, proceed to Test No. 1 in the next section. If not, continue through the chart to isolate and remedy the trouble in this section.

TESTS TO ISOLATE TROUBLE WITHIN SECTION 3

For the second and third tests in the chart for this section, use an audio signal. For the first, and the last two, use a modulated 265-kc. signal. Connect the signal-generator output lead through a condenser (.01 to .25 mf.) to the test points indicated; connect the ground lead to the receiver chassis (B–). Set the receiver volume control at maximum, and adjust the signal-generator output for a loud, clear signal.

	TEST POINTS	NORMAL INDICATION	POSSIBLE CAUSE OF ABNORMAL INDICATION
1.	M to B– (265-kc. signal)	Loud, clear signal.	Trouble within Section 3. Isolate by following tests.
2.	J to B– (audio signal)	Loud, clear signal.	Defective 7B6, R306, R305, R304, C306, or C308.
3.	K to B– (audio signal)	Loud, clear signal.	Defective C305 or R303 (rotate R303 through its entire range for complete check).
4.	L to B– (265-kc. signal)	Loud, clear signal.	Defective 7A7, C303, C304, R104 (shown in Section 1), R300, R404 (shown in Section 4), or Z301.
5.	M to B– (265-kc. signal)	Loud, clear signal.	Defective R302, C302, or Z300.

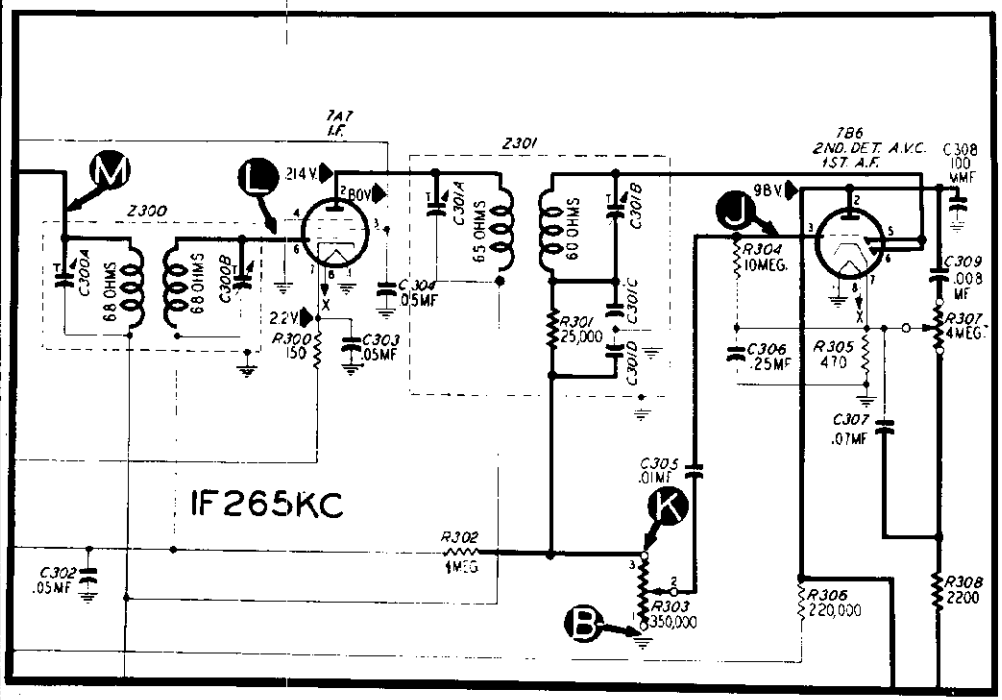

Section 3 schematic.

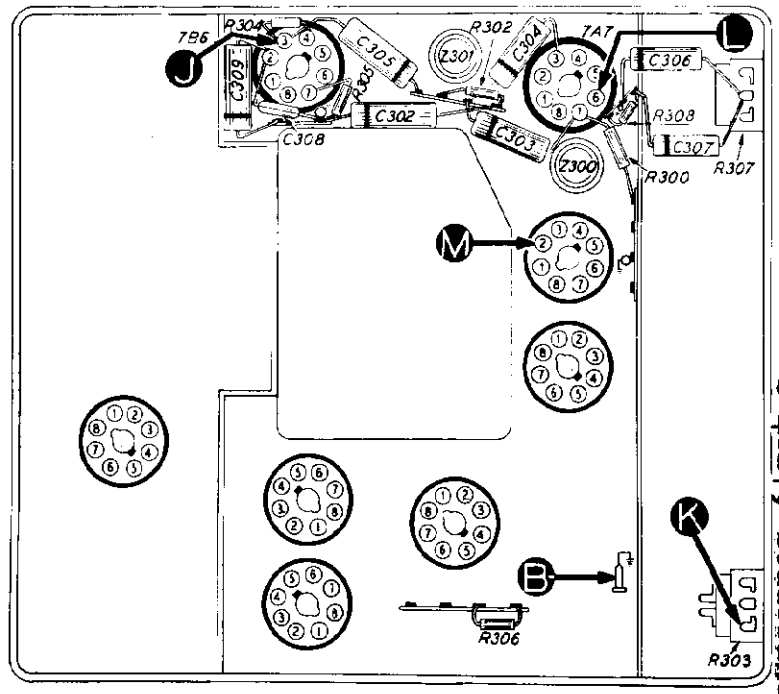

Bottom view, showing Section 3 test points.

TESTS TO ISOLATE TROUBLE WITHIN SECTION 4

MAKE TEST NO. 1 FIRST !

If the "NORMAL INDICATION" for this test is not obtained, continue through the chart to isolate and remedy the trouble in this section.

PRELIMINARY OSCILLATOR CHECK:

Attach the positive lead of a 20,000-ohms-per-volt meter (10-volt range) to the receiver chassis, and the prod end of the negative lead through 50,000 ohms to point S. Rotate the tuning control; absence of voltage indicates that the oscillator is not functioning. If this is the case, check the components listed in the second test below.

FOR CHART TESTS 1 - 5:

Connect the signal - generator output lead through a condenser (.01 to .25 mf.) to the test points indicated; connect the ground lead to the receiver chassis. Set the receiver volume control at maximum, tune the signal generator and receiver to 1000 kc., and adjust the generator output for a loud, clear signal.

	TEST POINTS	NORMAL INDICATION	POSSIBLE CAUSE OF ABNORMAL INDICATION
1.	R to B–	Loud, clear signal.	Trouble within Section 4. Isolate by following tests.
2.	N to B–	Loud, clear signal.	Defective 7B8, L400C, L400D, R403, R404, R405, R406, C403, C405, C408, C409, C410, C411, or C412.
3.	P to B–	Loud, clear signal.	Defective C403, C404, R403, or L400B.
4.	Q to B–	Clear signal, louder than preceding test.	Defective 7A7, L400A, R400, R402, or C402.
5.	R to B–	Loud, clear signal.	Defective L401, L402, C400, C401, C413, or R401.

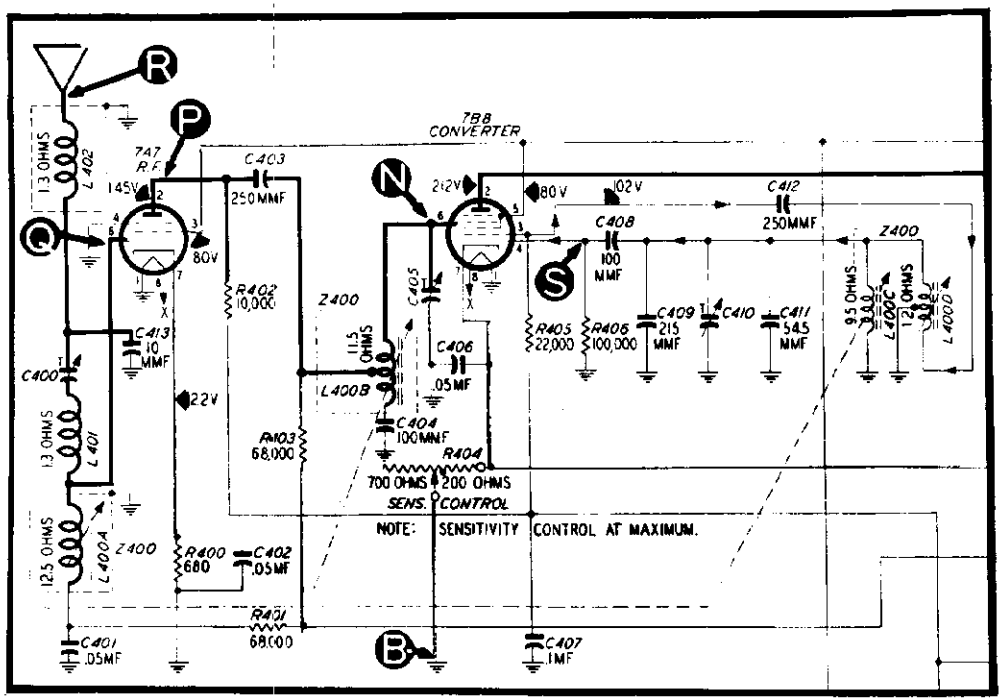

Section 4 schematic.

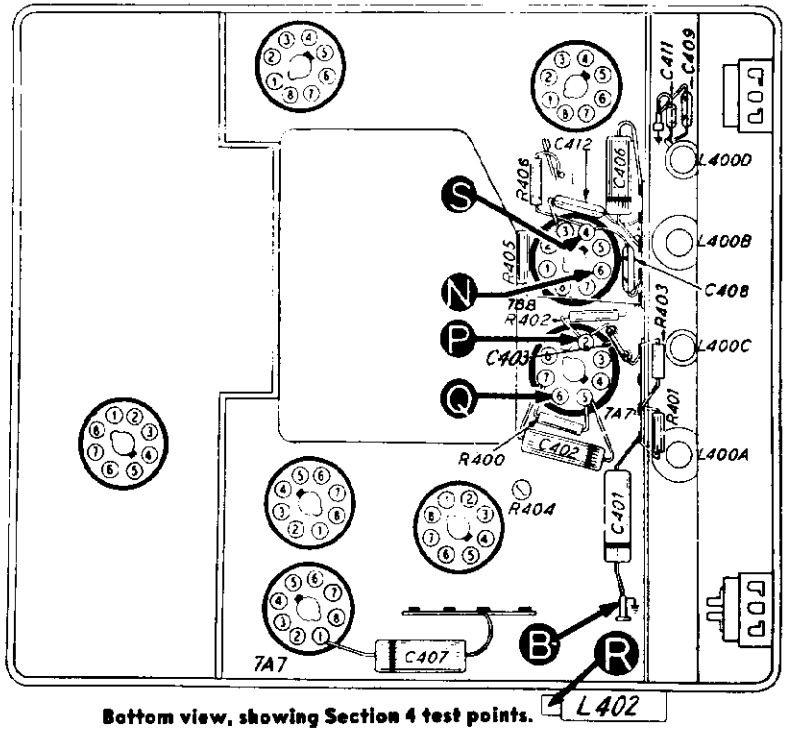

Bottom view, showing Section 4 test points.

PHILCO CORP.

MODELS S-4626, S-4627, Studebaker

CIRCUIT DESCRIPTION

The circuit of the S4626 consists of a 7A7 r-f amplifier, a 7B8 converter, a 7A7 i-f amplifier, a 7B6 second detector–first audio, and an audio power amplifier using two 7C5's in push-pull, driven by a 7A4 phase inverter. The power supply is of the six-volt non-synchronous vibrator type, using a 7Y4 rectifier.

The aerial input circuit is designed for maximum interference elimination, without sacrifice of signal strength. Permeability tuning, controlled by a pantograph tuning unit, is used for both the r-f and oscillator stages. This method of tuning assures maximum sensitivity, selectivity, and stability for this type of receiver. A sensitivity control is provided (identified in figure 9, page 6), which consists of a variable resistor in the common cathode circuit of the converter and i-f stages. This should be adjusted for lower sensitivity in areas where most reception is from local stations, in order to minimize noise pickup.

The S4626 uses an intermediate frequency of 265 kc.

Two features of the audio system are the tone control, which is an inverse feed-back circuit built around the first audio amplifier, and the push-pull output stage, which delivers a full five watts of audio power to the dynamic speaker.

SECTION 1

Reference No.	Description	Service Part No.
C100	Condenser, .5 mf.	61-0137*
C101	Condenser, 250 mmf.	60-10245307*
C102	Condenser, .5 mf.	61-0137*
C103	Condenser, 250 mmf.	60-10245307*
C104	Condenser, .5 mf.	61-0137*
C105	Condenser, 250 mmf.	60-10245307*
C106	Condenser, .005 mf.	61-0153*
C107	Condenser, electrolytic	61-0150*
	C107A: condenser, 20 mf.	Part of C107
	C107B: condenser, 10 mf.	Part of C107
	C107C: condenser, 5 mf.	Part of C107
F100	Fuse	45-2559
I100	Lamp, pilot	34-2064*
L100	Choke, "A"	32-1644
L101	Choke, vibrator	65-0151
R100	Resistor, 100 ohms	66-1104340*
R101	Resistor, 100 ohms	66-1104340*
R102	Resistor, 1,000 ohms	66-2104340*
R103	Resistor,, 4,700 ohms	66-2474340*
R104	Resistor, 27,000 ohms	66-3274340*
S100	Switch, off-on	Part of R303
T100	Transformer, power	65-0358*
VB100	Vibrator	83-0026*

SECTION 2

C200	Condenser, .004 mf.	61-0129*
C201	Condenser, .05 mf.	61-0170*
C202	Condenser, .05 mf.	61-0170*
C203	Condenser, 20 mf.	Part of C107
C204	Condenser, .01 mf.	61-0124*
L200	Field, speaker	Part of LS200
LS200	Speaker	73-0068*
R200	Resistor, 10 megs	66-6103340*
R201	Resistor, 220,000 ohms	66-4223340*
R202	Resistor, 220,000 ohms	66-4223340*
R203	Resistor, 470,000 ohms	66-4473340*
R204	Resistor, 470,000 ohms	66-4473340*
R205	Resistor, 330 ohms	66-1334340*
T200	Transformer, output	65-0409*

SECTION 3

C302	Condenser, .05 mf.	61-0122*
C303	Condenser, .05 mf.	61-0122*
C304	Condenser, .05 mf.	61-0122*
C305	Condenser, .01 mf.	61-0120*
C306	Condenser, .25 mf.	61-0125*
C307	Condenser, .07 mf.	61-0152*
C308	Condenser, 100 mmf.	60-10105407*
C309	Condenser, .008 mf.	61-0174*
R300	Resistor, 150 ohms	66-1153340*
R302	Resistor, 1 meg.	66-5103340*
R303	Control, volume, 350,000 ohms	33-5522*
R304	Resistor, 10 megs.	66-6103340*
R305	Resistor, 470 ohms	66-1473340*
R306	Resistor, 220,000 ohms	66-4223340*
R307	Control, tone, 4 mega.	33-5521*
R308	Resistor, 2,200 ohms	66-2223340*
Z300	Transformer, 1st i-f	65-0352
	Z300A: condenser, trimmer	Part of Z300
	Z300B: condenser, trimmer	Part of Z300
Z301	Transformer, 2nd i-f	65-0410
	Z301A: condenser, trimmer	Part of Z301
	Z301B: condenser, trimmer	Part of Z301
	Z301C: condenser	Part of Z301
	Z301D: condenser	Part of Z301
	R301: resistor, 25,000 ohms	Part of Z301

SECTION 4

C400	Condenser, trimmer aerial	63-0053
C401	Condenser, .05 mf.	61-0122*
C402	Condenser, .05 mf.	61-0122*
C403	Condenser, 250 mmf.	60-10245307*
C404	Condenser, 100 mmf.	60-10105407*
C405	Condenser, trimmer	Part of Z400*
C406	Condenser, .05 mf.	61-0122*

SECTION 4 (Continued)

Reference No.	Description	Service Part No.
C407	Condenser, .1 mf.	61-0113*
C408	Condenser, 100 mmf.	60-10105407*
C409	Condenser, 215 mmf. (silver mica) (Part of Z400)	61-0148
C410	Condenser, trimmer	Part of Z400
C411	Condenser, 54.5 mmf. (silver mica) (Part of Z400)	61-0149
C412	Condenser, 250 mmf.	60-10245307*
C413	Condenser, 10 mmf.	60-00105407
L401	Choke, antenna	65-0428
L402	Choke, antenna spark	65-0459
R400	Resistor, 680 ohms	66-1683340*
R401	Resistor, 68,000 ohms	66-3683340*
R402	Resistor, 10,000 ohms	66-3103340*
R403	Resistor, 68,000 ohms	66-3683340*
R404	Control, sensitivity	67-0036*
R405	Resistor, 22,000 ohms	66-3223340*
R406	Resistor, 100,000 ohms	66-4103340*
Z400	Pantograph tuning assembly	76-1990
	L400A: coil, r-f grid tuning (Part of Z400)	65-0349
	L400B: coil, converter grid tuning (Part of Z400)	65-0359
	L400C: coil, oscillator grid tuning (Part of Z400)	65-0350
	L400D: coil, oscillator tracking (Part of Z400)	65-0351

MISCELLANEOUS

"A" lead assembly (fuse-to-set)	77-0638
Cable and clamp assembly	77-0639
Cap, fuse, male	56-3594FA3
Clamp, "A" lead	28-1644FA3
Contact	54-4344
"A" lead assembly (fuse-to-ign. sw.)	77-0052
Contact	54-4344
Grommet	27-4676
Housing, fuse	28-5610
Spring, fuse housing	28-8841
Washer, fuse housing (fibre)	27-9049
Washer, fuse housing (rubber)	4169
Bezel assembly	
Back plate, dial	57-1487FA3
Bezel and stud assembly	76-2156
Dial	27-5905
Felt, dial	54-4267
Spring, dial retaining	28-9007FA1
Housing parts	
Button, plug	57-2646FA1
Button, plug (chrome)	2W15748FA8
Choke housing and connector assembly	65-0459
Cover, tube side	57-2415FC59
Cover, wiring side	57-1548FC59
Gasket, speaker (side cover)	55-1045
Housing assembly	77-1039FC59
Knobs	
Control knob assembly (tone and volume)	77-1043
Nut-cover assembly	76-2171
Manual-tuning knob assembly	57-2379
Extension, manual knob	56-3867
Spacer, manual knob	37-1669
Spring, manual knob	57-1628FA1
Push-button knob assembly	76-1984
Spring, push-button	57-1651
Pilot lamp socket assembly, left-hand	76-2157
Bracket, left-hand	57-2342FA3
Pilot lamp socket assembly, right-hand	76-2158
Bracket, right-hand	57-2343FA3
Set mounting parts	
Bolt, hook	97-0135FA3
Nut, wing	1W23750FA3
Nut	97-0229
Socket, tube (loktal)	27-6138*
Socket, vibrator (4-pin)	27-6153*
Speaker mounting parts	
Nut, speaker mounting	1W19988FA3
Screw, speaker mounting	W1582FA3
Washer, lock	1W24257FA1
Suppression parts	
Braid, copper	95-0073
Condenser, generator	30-4632
Distributor filter assembly	77-0947
Nipple, distributor cable	54-7139
Resistor, distributor	33-1333
Strap, fender ground	77-0966
Strap, ground	77-0336
Tuning unit parts	
Core, iron (antenna)	57-1540
Core, iron (oscillator)	57-1542
Core, iron (shunt oscillator tracking)	57-1659
Core, iron (r-f)	57-1541
Pointer and cam assembly	76-2079
Spring, tuning core draw bar	57-1649
Spring, latch bar	57-1650
Spring, pointer	57-1653

MODELS S-4626, S-4627, Studebaker

PHILCO CORP.

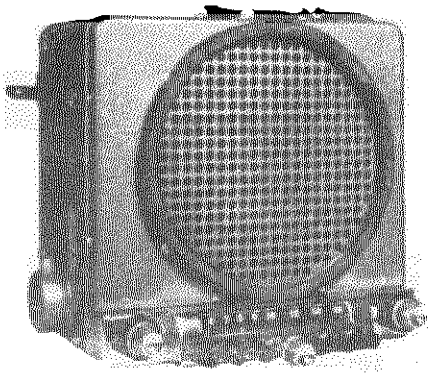

SPECIFICATIONS

CIRCUIT .....Eight-tube, superheterodyne
FREQUENCY RANGE .....540 to 1600 kc.
INTERMEDIATE FREQUENCY .....265 kc.
POWER INPUT .....6.3 volts, 8.8 amperes, d.c.
PHILCO TUBES.....7A7(2), 7B8, 7B6, 7A4, 7C5(2), 7Y4
AERIAL.....Retractable-tip, Philco Part No. 91-0230

The dial scale on the S-4627 is a fluorescent type to match the panel indicators of the 1947 cars. The dial pointer and cam assembly is different thus giving a new part number to the tuning assembly which otherwise is the same. The "A" lead is dressed to the left side of the radio case instead of the right side for convenience to the new position of the ignition switch. A clip is provided on the side of the case to hold the fuse holder and prevent it from rattling against the set. The receiver is mounted in the same position as in the 1946 car, but hook bolts of a new design are provided to fit the installation.

The suppression material is different and complete information on the suppression of ignition interference is given in the installation instructions with the radio.

IMPORTANT

The aerial and aerial lead-in form part of the r-f tuning circuit. When testing or aligning this receiver on the bench it is important that an aerial dummy load of equal capacity be used.

TROUBLE-SHOOTING PROCEDURE

This service manual provides a logical trouble-shooting procedure for the S4626, which will facilitate the isolation of most of the faults that may be encountered. The circuit is divided into four sections, with a schematic and chassis layout, showing test points, for each section. The trouble-shooting procedure is outlined in a chart for each section. The first test in each chart is a sectional master check, making it possible to eliminate the section under test as a source of trouble without going through its entire chart procedure.

Wherever trouble is indicated (by failure to get a "Normal Indication" on any one test) it should be isolated by voltage and resistance checks of the parts associated with the point under test, and remedied before testing further.

PRELIMINARY CHECKS

The following preliminary checks are recommended:

1. Carefully inspect both sides of the chassis. Make sure that all the tubes are secure, and look for bad connections, burned resistors, or other mechanical faults.

2. Check the fuse, and connect the receiver to a source of power (6.3 volts, d.c.). Look for unlighted tube filaments, overheated resistors (smoke, sweating, etc.), and listen for the hum of the vibrator.

3. Check the tubes and the vibrator. WARNING: If the 7Y4 is defective, check C107 for shorts before inserting a new tube. If the vibrator is defective, check C106 for a short before inserting a new vibrator.

New part numbers have been given to the following items and apply only to the S-4627 receivers.

SECTION 4

Reference Number	Description	Model S-4627 Service Part No.
C400	Condenser, trimmer	31-6472
Z400	Pantograph tuning assembly	77-0970-1

MISCELLANEOUS

Bezel assembly	
Dial	27-5923
Set mounting parts	
Bolt, hook	56-3740
Tuning-unit parts	
Pointer and cam assembly	76-2482

The following additional parts are supplied with the Model S-4627:

Set mounting parts	
Nut, hex mounting	97-0229FA3
Suppression parts	
Condenser, ignition-coil	30-4007-1
Ground strap, heater-cable	76-2505
Bolt, heater-cable-clamp	1W10636FA3
#8 lock washer	1W35046FA1
Nut, heater-cable clamp-bolt	1W19988FA3
Ground strap, battery-cable	76-2557
Ground strap, windshield-wiper-motor	76-2556

Suppression parts in the Model S-4626 list that are not used in Model S-4627 are:

Distributor filter assembly	77-0947
Strap, fender-ground	77-0966
Strap, ground	77-0336

PHILCO AUTO RADIO

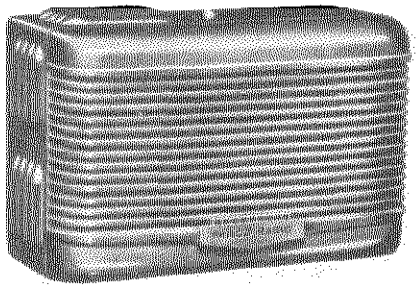

Model UN6-400

SPECIFICATIONS

CIRCUIT	Six-tube, superheterodyne
FREQUENCY RANGE	550 to 1580 kc.
INTERMEDIATE FREQUENCY	455 kc.
POWER INPUT	6.3 volts, 8.3 amperes
PHILCO TUBES USED	7A7(2), 7B8, 7B6, 7C5, 7Y4
ANTENNA	Philco universal auto radio type

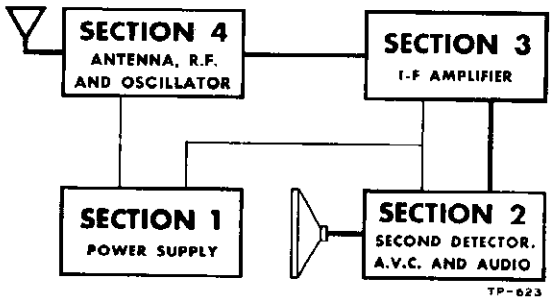

Figure 1. Block diagram (Heavy lines indicate signal path.)

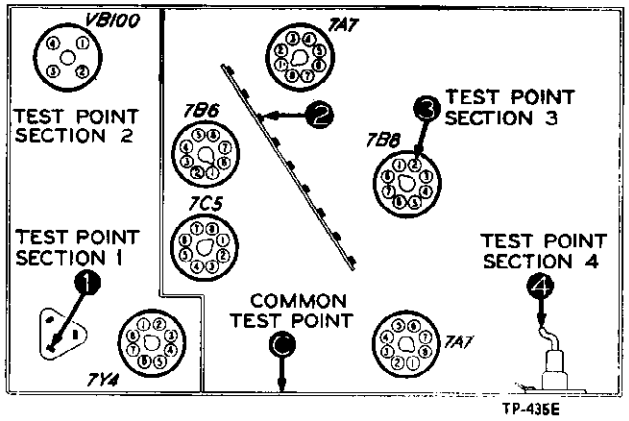

Figure 2. Bottom view, showing test points.

PHILCO TROUBLE-SHOOTING PROCEDURE

In this manual, the receiver circuit is divided into four sections, as shown in figure 1. One test point is designated for each section, as shown in figure 2. Normal indications, secured when checking these points, eliminate the section under test as a source of trouble. Isolation of the faulty part is accomplished by testing in the order shown in the sectional test charts. A high-quality signal generator and volt-ohmmeter, an ammeter (0-30 amperes, d.c.), and a 6.3-volt d-c power source are required. The voltage readings shown were taken with a 20,000-ohms-per-volt meter.

To localize trouble, connect the receiver to the 6.3-volt d-c power source, and turn the receiver volume control to maximum; see that all tube filaments are lighted; then proceed in the order given in the following chart. When abnormal indications appear, make voltage and resistance checks of the circuit under test. Remedy any defect encountered before proceeding with the next step.

TESTS TO LOCALIZE TROUBLE TO ONE SECTION

SECTION	TEST	NORMAL RESULTS
1	Place ammeter in series with power source and check current drain. Measure voltage between point 1 and chassis (C).	Approximately 8.3 amps. 235 volts.
2	Apply audio signal between point 2 and chassis, through a condenser (.01 to .25 mf.).	Loud, clear signal from speaker.
3	Apply a weak, modulated r-f signal (455 kc.) between point 3 and chassis, through a condenser (.01 to .25 mf.).	Loud, clear signal.
4	Turn tuning condenser to half-meshed position. Apply weak, modulated r-f signal between point 4 and chassis, through a condenser (.01 to .25 mf.). Tune signal generator until the signal is heard in the speaker.	Loud, clear signal.

MODEL UN6-400 PHILCO CORP.

TESTS TO ISOLATE TROUBLE WITHIN SECTION 1

With the exception of the first, make all measurements for this section with a volt-ohmmeter, using the applicable d-c range. The voltages given were taken with the set operating and the volume control set at minimum.

TEST POINTS	NORMAL READING	POSSIBLE CAUSE OF ABNORMAL READING
Connect ammeter (0-30) in series with power source.	8.3 amps.	Excessively high or low current indicates defective VB100, T100, C103, or 7Y4.
A to C	250 volts	Defective 7Y4 or C104.
B to C	235 volts	Defective C104, open R102, or shorted C202 (see Section 2 for location).

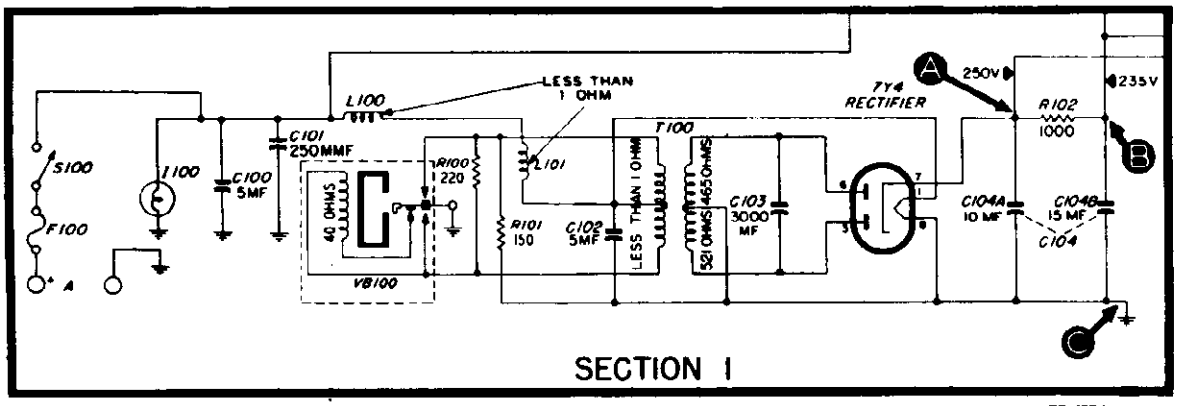

Figure 3. Section 1 schematic. TP-435A

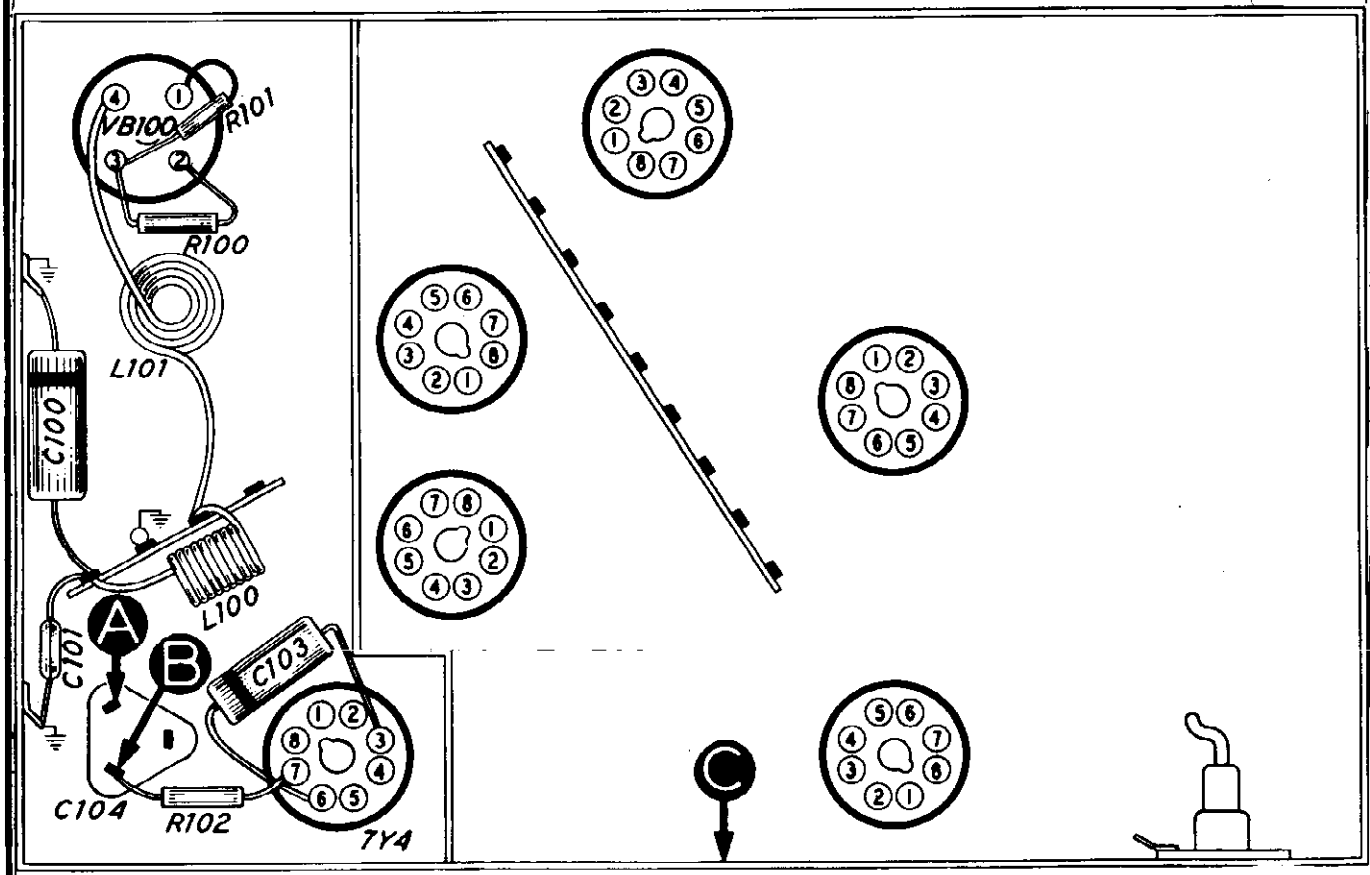

Figure 4. Bottom view, showing Section 1 test points. TP-435F

TESTS TO ISOLATE TROUBLE WITHIN SECTION 2

For all tests in this section, use an audio signal. Connect the generator output lead through a condenser (.01 to .25 mf.) to the points indicated; connect the ground lead to the receiver chassis (C). Set the receiver volume control at maximum and adjust the signal-generator output for a loud, clear signal.

TEST POINTS	NORMAL INDICATION	POSSIBLE CAUSE OF ABNORMAL INDICATION
D to C	Loud, clear signal from speaker.	Defective 7C5, T200, LS200, C205, or C206.
E to C	Loud, clear signal.	Open C205.
F to C	Clear signal, noticeably louder than preceding test.	Defective 7B6, or open R203, R202, or R406.
G to C	Loud, clear signal, same as preceding test.	Open C200, or defective R200 (rotate R200 through its entire range for complete check).

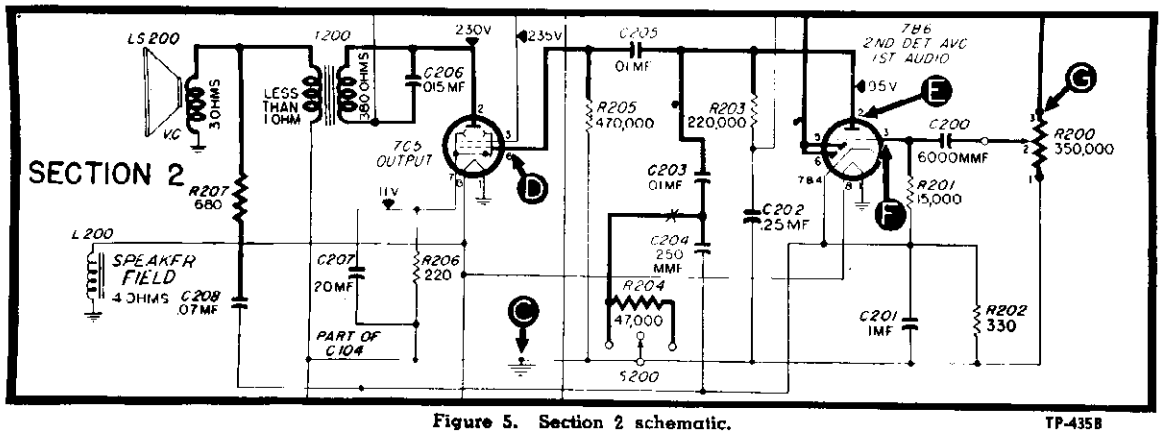

Figure 5. Section 2 schematic. TP-435B

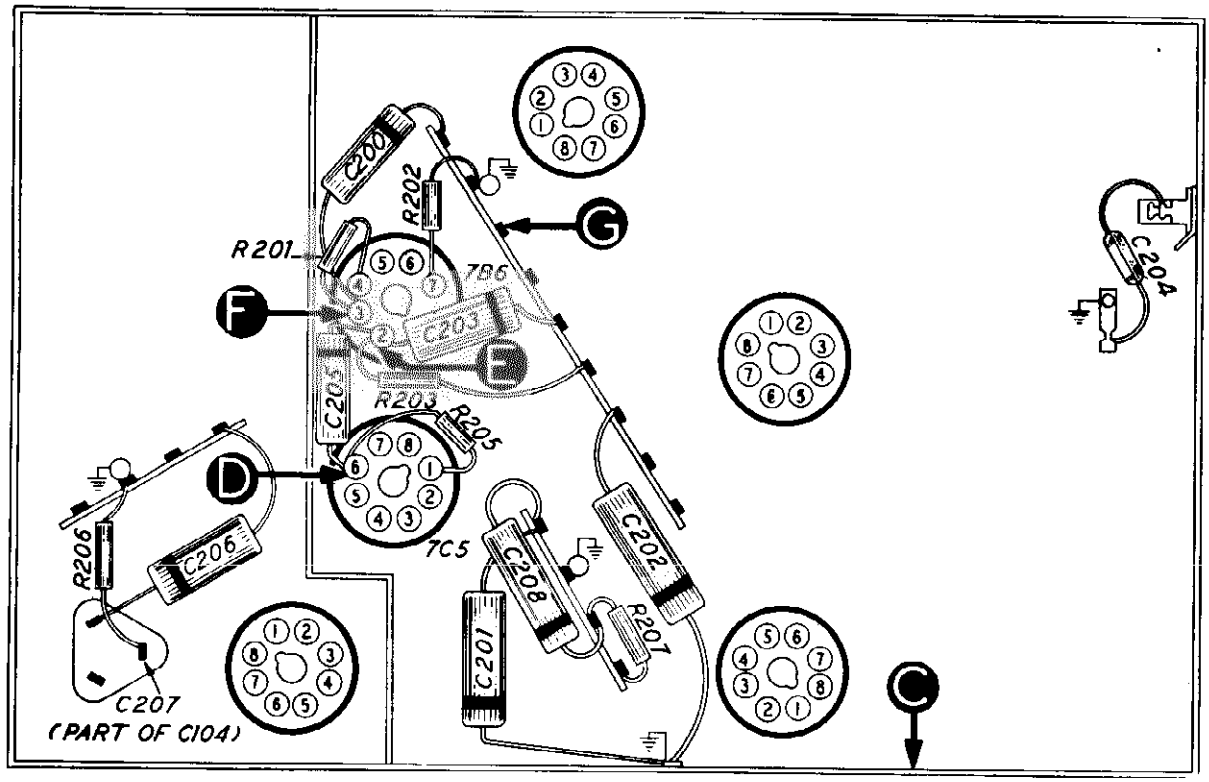

Figure 6. Bottom view, showing Section 2 test points. TP-435G

TESTS TO ISOLATE TROUBLE WITHIN SECTION 3

For all tests in this section, set the signal generator at 455 kc., with modulation on. Connect the generator output lead through a condenser (.01 to .25 mf.) to the points indicated; connect the ground lead to the receiver chassis (C). Set the receiver volume control at maximum and adjust the signal-generator output for a loud, clear signal.

TEST POINTS	NORMAL INDICATION	POSSIBLE CAUSE OF ABNORMAL INDICATION
H to C	Loud, clear signal from speaker.	Defective 7A7 or Z301, open R300, R302, or R404, or shorted C406.
J to C	Loud, clear signal.	Defective or misaligned Z300.

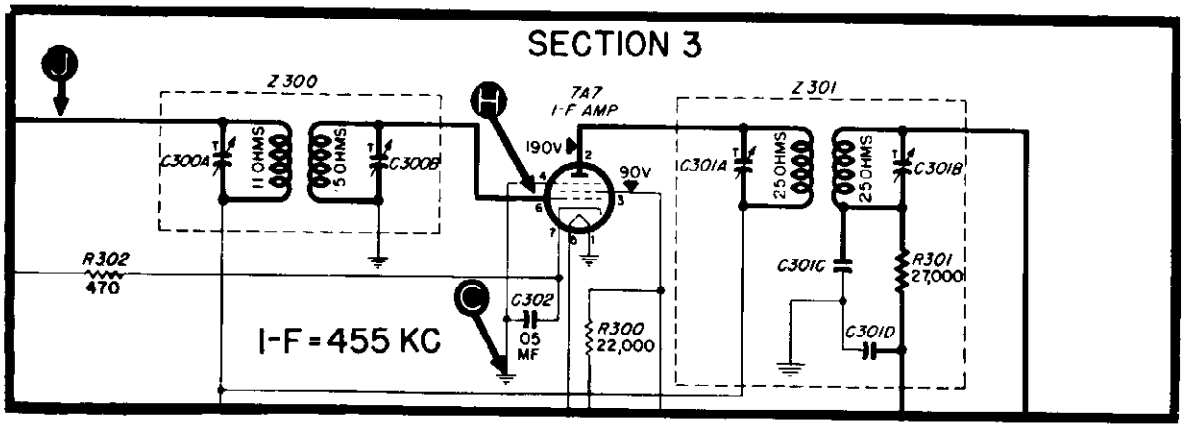

Figure 7. Section 3 schematic. TP-435C

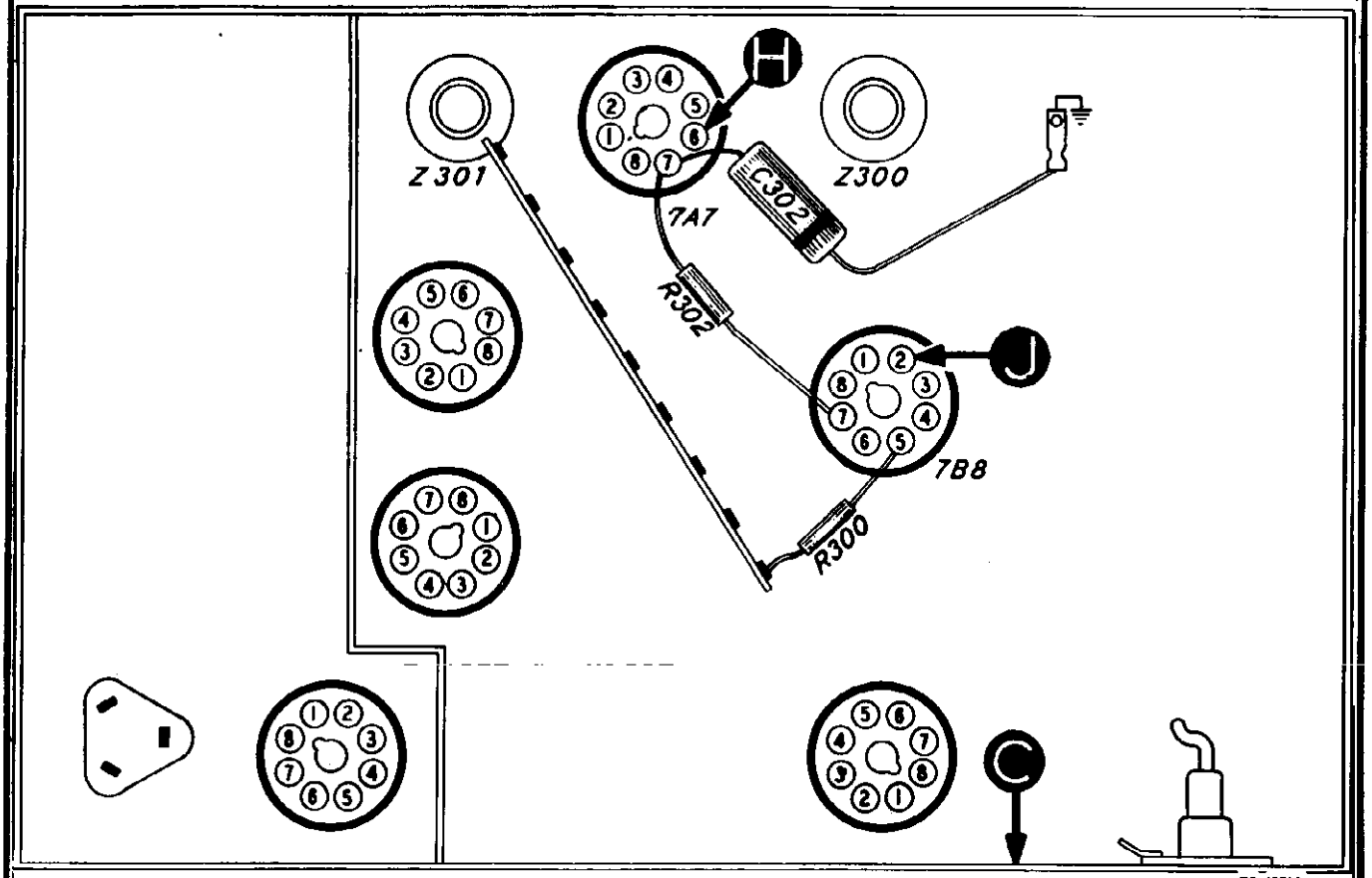

Figure 8. Bottom view, showing Section 3 test points. TP-435H

TESTS TO ISOLATE TROUBLE WITHIN SECTION 4

1. Set the volume control at maximum. Rotate the tuning condenser through its entire range. Any scraping noise from the speaker indicates bent plates, or dirt between plates or on wiper contacts. Remedy such conditions before proceeding further.

2. Attach the positive lead of a 20,000-ohms-per-volt meter to chassis and the prod end of the negative lead through a 50,000-ohm resistor to point P. Set the meter on a 10-volt or similar range, and rotate the tuning condenser through its entire range. Absence of voltage at any point indicates that the oscillator is not functioning. If so, check the components listed in the first test below.

3. Connect the signal generator as for previous tests, tune the generator and receiver to 1000 kc., and proceed as below.

TEST POINTS	NORMAL INDICATION	POSSIBLE CAUSE OF ABNORMAL INDICATION
K to C (chassis)	Loud, clear signal from speaker.	Defective 7B8, L402, C407, or open R407, R403 or C411.
L to C	Loud, clear signal.	Open C407.
M to C	Loud, clear signal.	Defective 7A7, or open R400 or R401.
N to C	Loud, clear signal.	Defective L400, C400, or L401.

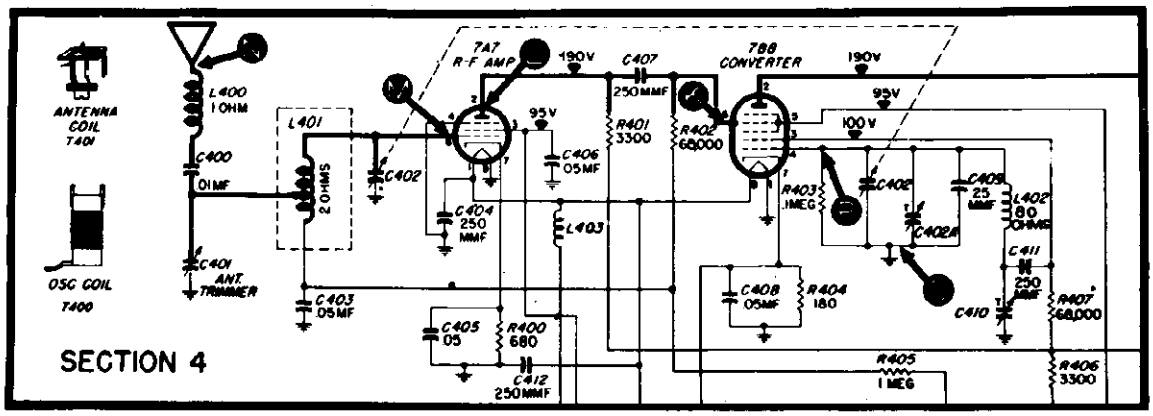

Figure 9. Section 4 schematic. TP-436D

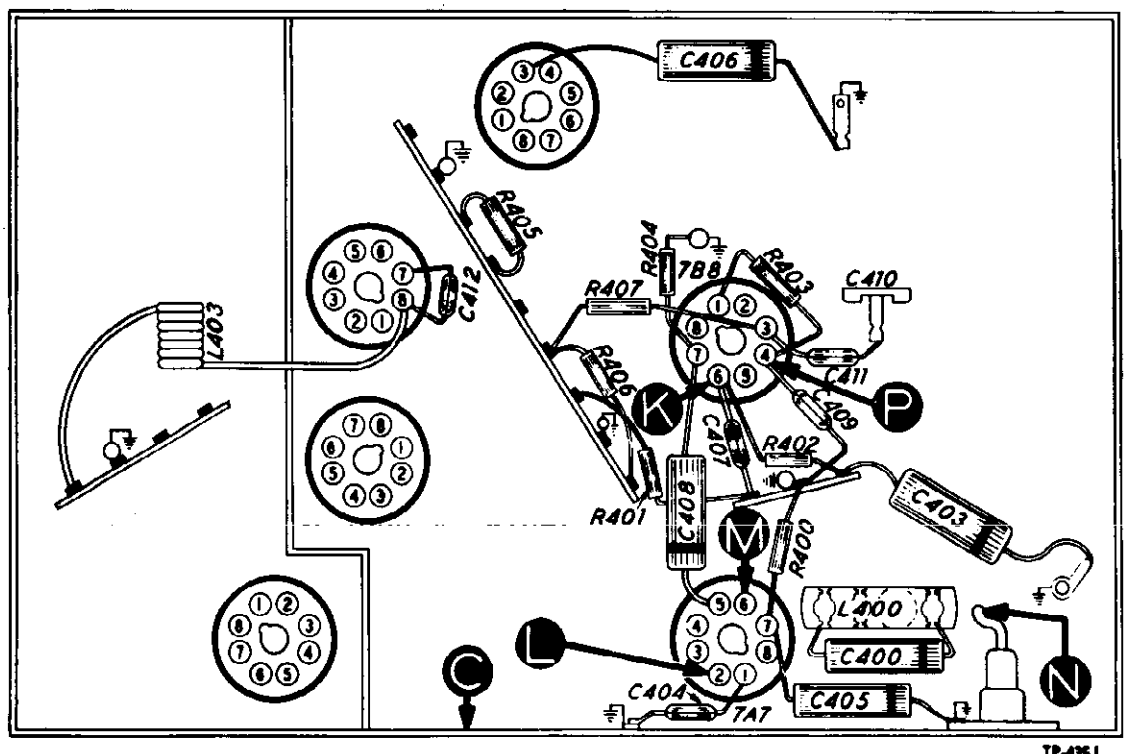

Figure 10. Bottom view, showing Section 4 test points. TP-435J

© John F. Rider

MODEL UN6-400 PHILCO CORP.

PRELIMINARY INSTRUCTIONS

Remove the top chassis cover to reach adjustments.

OUTPUT METER:

Connect to the voice-coil lugs on the speaker.

SIGNAL GENERATOR:

Set the receiver volume control at maximum. Adjust the signal-generator output to give a readable deflection on the output meter, using a meter range that best indicates small changes in output. Reduce the signal-generator output as alignment progresses, to prevent the meter needle from going off scale. Adjust all trimmers listed for maximum output.

DIAL CALIBRATION:

When the radio is re-installed in the car, the dial pointer must be set to coincide with the index dot at the low-frequency end of the dial, with the tuning condenser fully meshed.

ALIGNMENT CHART

	SIGNAL GENERATOR		RECEIVER		
	Connections to Receiver	Dial Setting	Tuning-Condenser Setting	Special Instructions	Adjust Trimmers
1	Through a .05 mf. condenser to stator of antenna section of tuning gang.	455 kc.	Fully meshed.	Ground stator of oscillator section of gang. Adjust in given order, and then repeat adjustment.	C301B C301A C300B C300A
2	Through a 10-mmf. condenser in series with antenna lead, Philco Part No. 95-0185, to antenna connector.	1580 kc.	Fully open.	Remove ground from oscillator section of gang. Adjust for maximum.	C402A
3	Same as 2.	1400 kc.	Tune in 1400 kc. signal.	Adjust for maximum. (Final adjustment should be made with receiver in car, connected to car antenna.)	C401
4	Same as 2.	580 kc.	Tune to maximum.	Adjust while rocking tuning condenser.	C410
5	Same as 2.			Repeat steps 2, 3, and 4.	

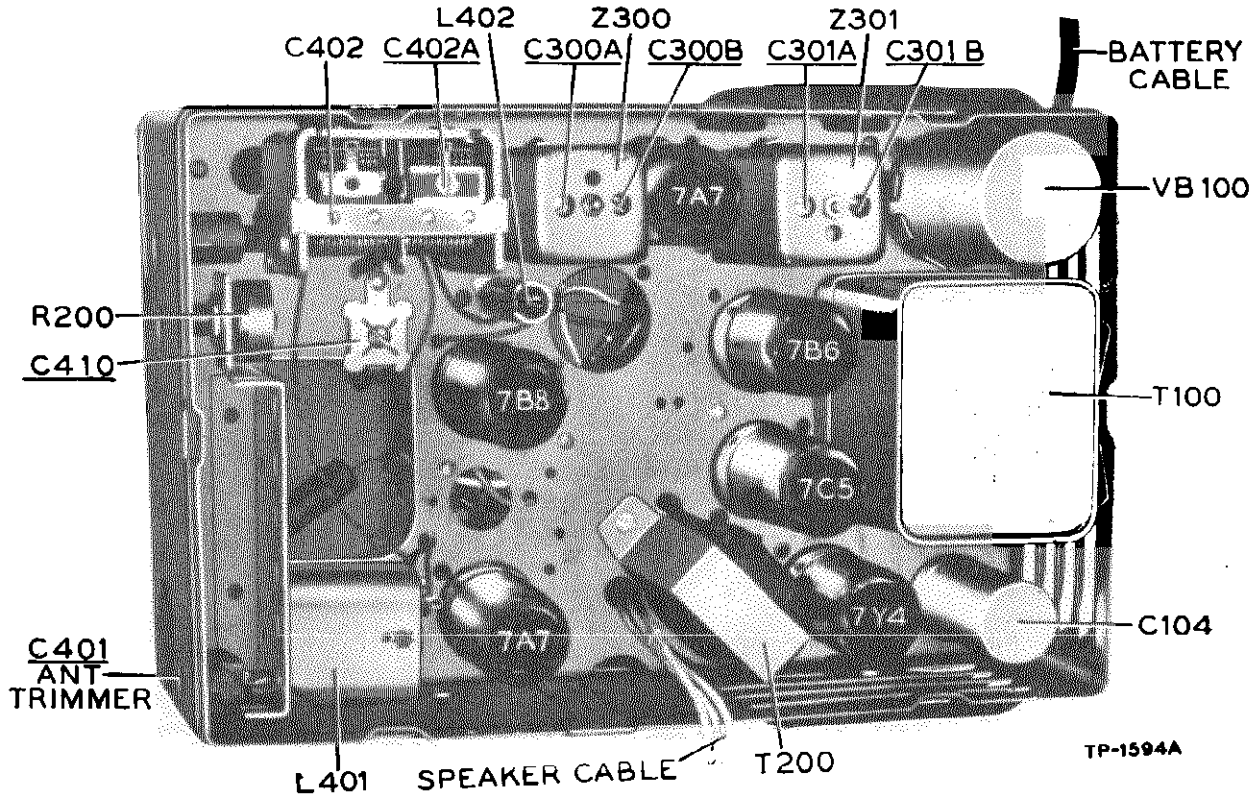

Figure 11. Top view, showing trimmer-condenser locations.

© John F. Rider

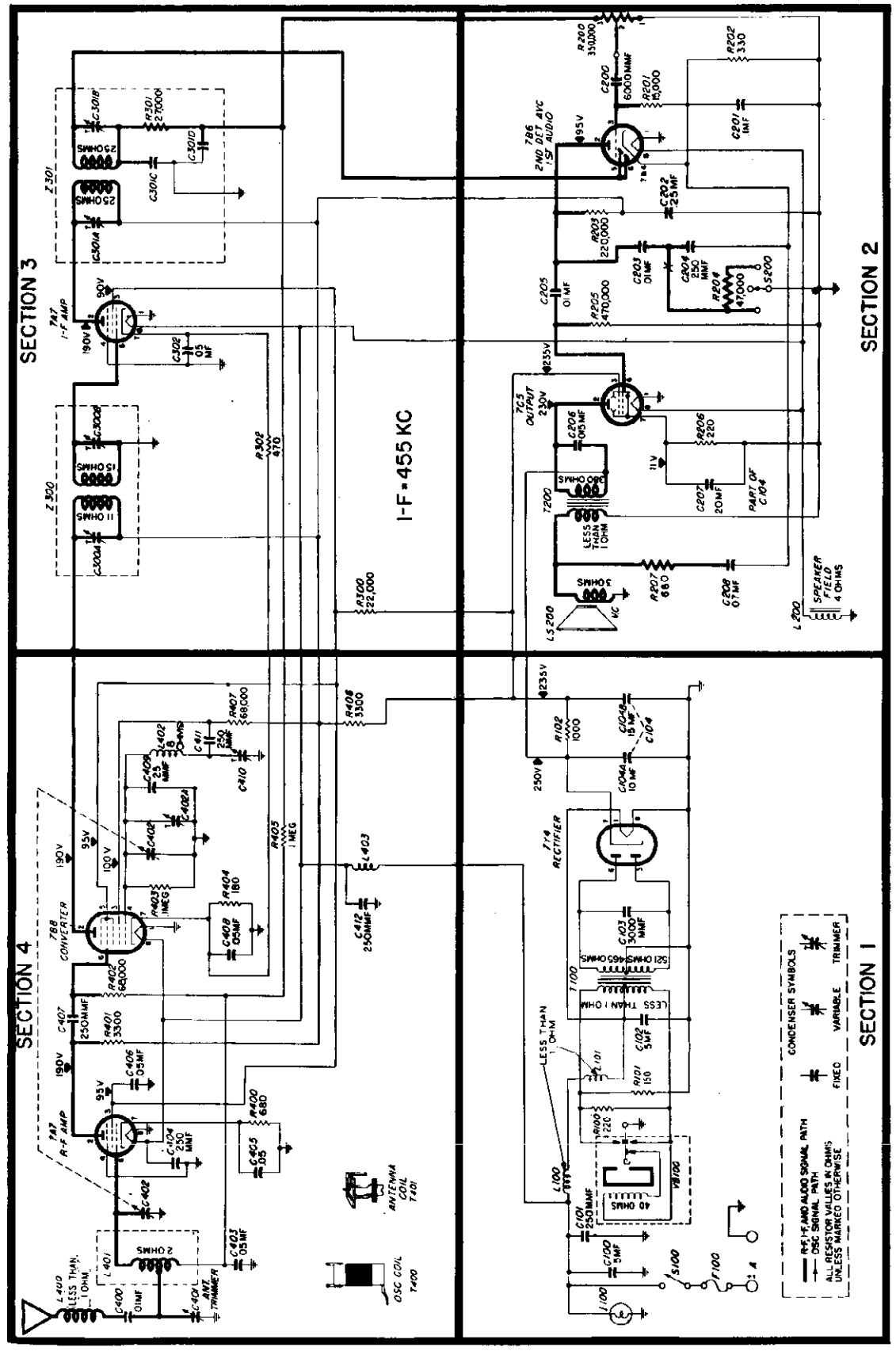

Figure 12. Complete schematic.

NOTE: All voltage, capacity, and resistance values shown are average. The voltages were measured with a 20,000-ohms-per-volt meter between the indicated test points and chassis (C).

REPLACEMENT PARTS LIST — Model UN6-400

Symbol designations used in the schematic and parts list are as follows:

LA—loop antenna
LS—loudspeaker
R—resistor
C—condenser
I—pilot lamp
L—choke or coil
S—switch
T—transformer
W—power cord and plug
Z—i-f transformer assembly

NOTE: Parts marked with an asterisk (*) are general replacement items, and the numbers will not be identical with those used on factory assemblies. Use only the "Service Part No." shown in the parts list when ordering replacements.

SECTION 1

Reference	Description	Service Part No.
C100	Condenser, .5 mf.	61-0137*
C101	Condenser, 250 mmf.	60-1024037
C103	Condenser, 3,000 mmf.	61-0115
C104	Condenser, electrolytic, 10-15-20 mf.	61-0089
	C104A: condenser, 10 mf.	Part of C104
	C104B: condenser, 15 mf.	Part of C104
I100	Lamp, pilot	34-2039
L100	Choke, "A"	65-0037
L101	Choke, vibrator	65-0433
R100	Resistor, 220 ohms	66-1223340
R101	Resistor, 150 ohms	66-1153340
R102	Resistor, 1,000 ohms	66-2104340
S100	Switch	85-0112
T100	Transformer, power	65-0234*
VB100	Vibrator	83-0026*

SECTION 2

C200	Condenser, 6,000 mmf.	30-4504*
C201	Condenser, .1 mf.	30-4527*
C202	Condenser, .25 mf.	61-0125
C203	Condenser, .01 mf.	61-0120
C204	Condenser, 250 mmf.	60-10245307*
C205	Condenser, .01 mf.	61-0120
C206	Condenser, .015 mf.	61-0138
C207	Condenser, 20 mf.	Part of C104
C208	Condenser, .07 mf.	61-0152
LS200	Speaker	73-0059
	L200: coil, field	Part of LS200
R200	Control, volume, 350,000 ohms	67-0043
R201	Resistor, 15 megs.	66-6151540
R202	Resistor, 330 ohms	66-1333340
R203	Resistor, 220,000 ohms	66-4223340
R204	Resistor, 47,000 ohms	66-3473340*
R205	Resistor, 470,000 ohms	66-4473340*
R206	Resistor, 220 ohms	66-1224360
R207	Resistor, 680 ohms	66-2153340
S200	Switch, tone-control	77-0733
T200	Transformer, output	65-0419

SECTION 3

Z300	Transformer, 1st i-f	65-0319
	C300A: condenser, trimmer	Part of Z300
	C300B: condenser, trimmer	Part of Z300
Z301	Transformer, 2nd i-f	65-0320
	C301A: condenser, trimmer	Part of Z301
	C301B: condenser, trimmer	Part of Z301
	C301C: condenser, a-v-c filter	Part of Z301
	C301D: condenser, a-v-c filter	Part of Z301
	R301: Resistor, 27,000 ohms	Part of Z301
C302	Condenser, .05 mf.	30-4519*
R300	Resistor, 22,000 ohms	66-3224340
R302	Resistor, 470 ohms	66-1474360*

SECTION 4

C400	Condenser, .01 mf.	61-0120*
C401	Condenser, trimmer (antenna)	77-0545
C402	Condenser, tuning	63-0077
	C402A: condenser, trimmer	Part of C402
C403	Condenser, .05 mf.	30-4518*
C404	Condenser, 250 mmf.	60-10245307*

SECTION 4 (Continued)

Reference	Description	Service Part No.
C405	Condenser, .05 mf.	30-4518*
C406	Condenser, .05 mf.	30-4518*
C407	Condenser, 250 mmf.	60-10245307*
C408	Condenser, .05 mf.	30-4518*
C409	Condenser, 25 mmf.	60-00245307*
C410	Condenser, trimmer	63-0048
C411	Condenser, 250 mmf.	60-10245307*
C412	Condenser, 250 mmf.	60-10245307*
R400	Resistor, 680 ohms	66-1684360*
R401	Resistor, 3,300 ohms	66-2333340*
R402	Resistor, 68,000 ohms	66-3683340*
R403	Resistor, 100,000 ohms	66-4103340*
R404	Resistor, 180 ohms	66-1184360*
R405	Resistor, 1 meg.	66-5103340*
R406	Resistor, 3,300 ohms	66-2334340
R407	Resistor, 68,000 ohms	66-3683340*
L400	Choke, antenna	65-0168
L401	Coil, antenna-transformer	65-0323
L402	Coil, oscillator	65-0420
L403	Choke, "A"	65-0452

MISCELLANEOUS

Description	Service Part No.
Control assembly	42-5866
Cord, drive (25-foot spool)	45-1459
Dial	55-1194
Lead, "A" (control to set)	38-8221
Lead, "A" (control to fuse)	41-3387
Lead, "A" (fuse to ammeter)	77-0235
Lead, tone-control	95-0135
Plate, dial background	57-1888
Pointer	57-1889
Shaft assembly, tuning	57-1385
Shaft assembly, volume	57-1384
Sleeve, knob	57-1324FA3
Socket assembly, pilot-lamp	77-0541
Housing assembly	77-0751FJ20
Cover, tube-and-speaker side	57-1943FJ20
Cover, wiring side	57-1345FJ20
Screw, cover mounting	1W21813FA26
Set mounting kit	40-8536
Bolt, hook, set mounting	57-1340FA3
Clamp, cable	57-1463FA1
Lockwasher, set mounting	1W57223FA1
Nut, set mounting	1W21291FA3
Speaker mounting hardware	
Cloth, grille	89-0013
Lockwasher, speaker mounting	1W24257FA1
Screw, speaker mounting	1W19672FA3
Suppressor kit	40-8102
Condenser, interference	30-4007
Resistor, distributor	33-1196
Clamp, "A" lead	57-1429
Clamp, vibrator	57-1637FA3
Clip, coil-mounting	28-5002FA1
Connector, antenna	57-0591
Grommet, tuning-condenser mounting	27-4596
Screw, tuning-coil and volume-control assembly	1W19670FA3
Shield, power	57-1744FA3
Socket, tube	27-8128*
Socket, vibrator	27-8153*

© John F. Rider

PHILCO CORP.

MODELS 46-421, 46-421-I

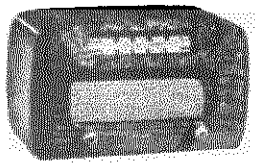

MODEL 46-421

MODEL 46-421-I

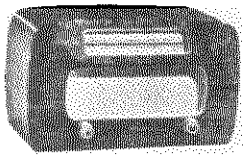

SPECIFICATIONS

CABINET.....Model 46-421, walnut finish
Model 46-421-I, ivory finish
CIRCUIT.....Six tube superheterodyne
FREQUENCY RANGE.....540 to 1620 kc.

POWER INPUT
A.C. or D.C., 105 to 120 volts
POWER CONSUMPTION
30 watts at 117 volts
AERIAL.....Loop fastened to chasis; terminal also provided for outside aerial

INTERMEDIATE FREQUENCY.....455 kc.
PHILCO TUBES USED.....7C7, 7A8, 7B7, 7C6, 50L6GT, 35Z5GT/G
PILOT LAMP.....6-8-volt bayonet base, Part No. 34-2068

PHILCO TROUBLE-SHOOTING PROCEDURE

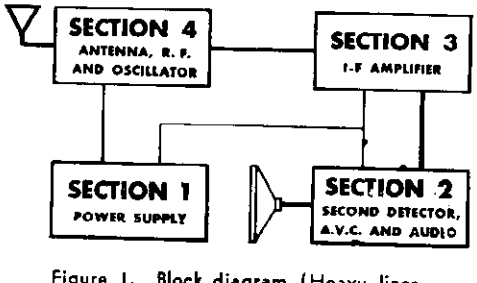

Figure 1. Block diagram (Heavy lines indicate signal path).

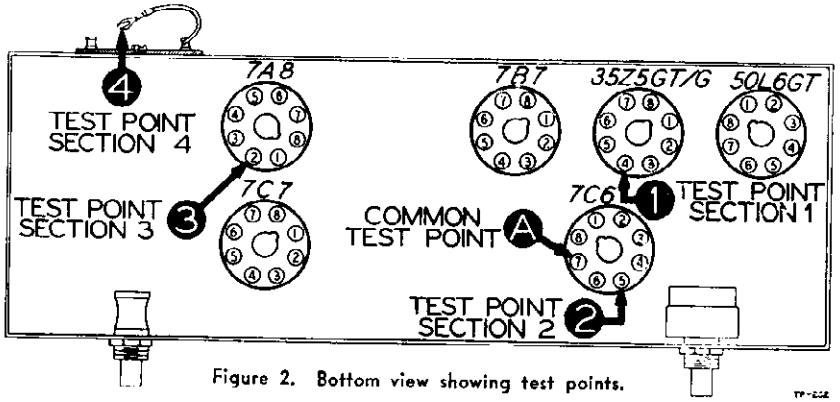

Figure 2. Bottom view showing test points.

In this bulletin, the receiver circuit is divided into four sections, as shown in figure 1. One test point is designated for each section, see figure 2, and tests made at these points localize the trouble to one section. After the trouble has been localized to one section by the tests given below, proceed with the tests outlined for that section. The equipment required for all tests outlined in this bulletin is a quality signal generator and a volt-ohm-meter. Voltage readings shown in this bulletin were measured with a 20,000-ohm-per-volt meter. Connect the receiver to the power line, turn the volume control full on, and see that all tube filaments are lighted. Proceed with the section tests given in the following chart. If a normal result is not obtained at any test point, the trouble is in the section under test.

TESTS TO LOCALIZE TROUBLE TO ONE SECTION

SECTION	TEST	NORMAL RESULTS
1	Measure voltage between points 1 (+) and A (B–).	90 volts*.
2**	Apply audio signal between points 2 and A.	Loud, clear signal.
3**	Apply a weak, modulated r-f signal (455 kc.) between points 3 and A.	Loud, clear signal.
4**	Apply a weak, modulated r-f signal (frequency to which set is tuned) between points 4 and A.	Loud, clear signal.

*For 117-volt a-c input. When operating from a d-c power line and no voltage is measured, reverse the power plug.
**Connect signal generator output lead through a condenser (.01 to .25 mf.).

© John F. Rider

MODELS 46-421, 46-421-I

PHILCO CORP.

TESTS TO ISOLATE TROUBLE WITHIN SECTION 1

Test Points	Normal Reading	Possible Cause of Abnormal Reading
B to A	90 volts	No voltage indicates defective 35Z5GT/G tube, shorted condenser C101, or open speaker field. Low voltage indicates defective 35Z5GT/G tube, or leaky condenser C101, or shorted condenser C203.
C to A	118 volts	No voltage indicates defective 35Z5GT/G tube, or shorted condenser C101. Low voltage indicates defective 35Z5GT/G tube, or open condenser C101, or shorted condenser C203.

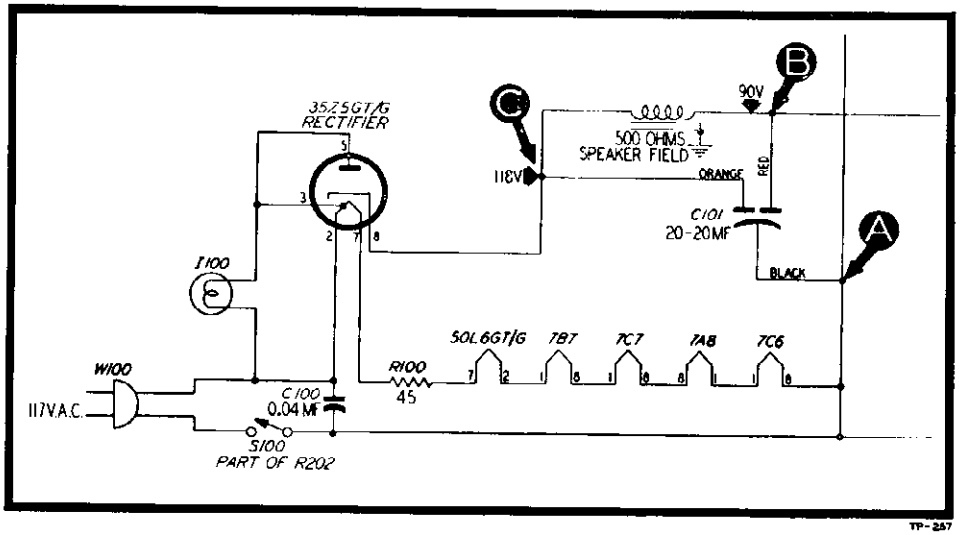

Make all tests for this section with a volt-ohmmeter, using the 0-250v d-c range. See figures 3 and 4 for location of test points.

Figure 3. Section 1 schematic.

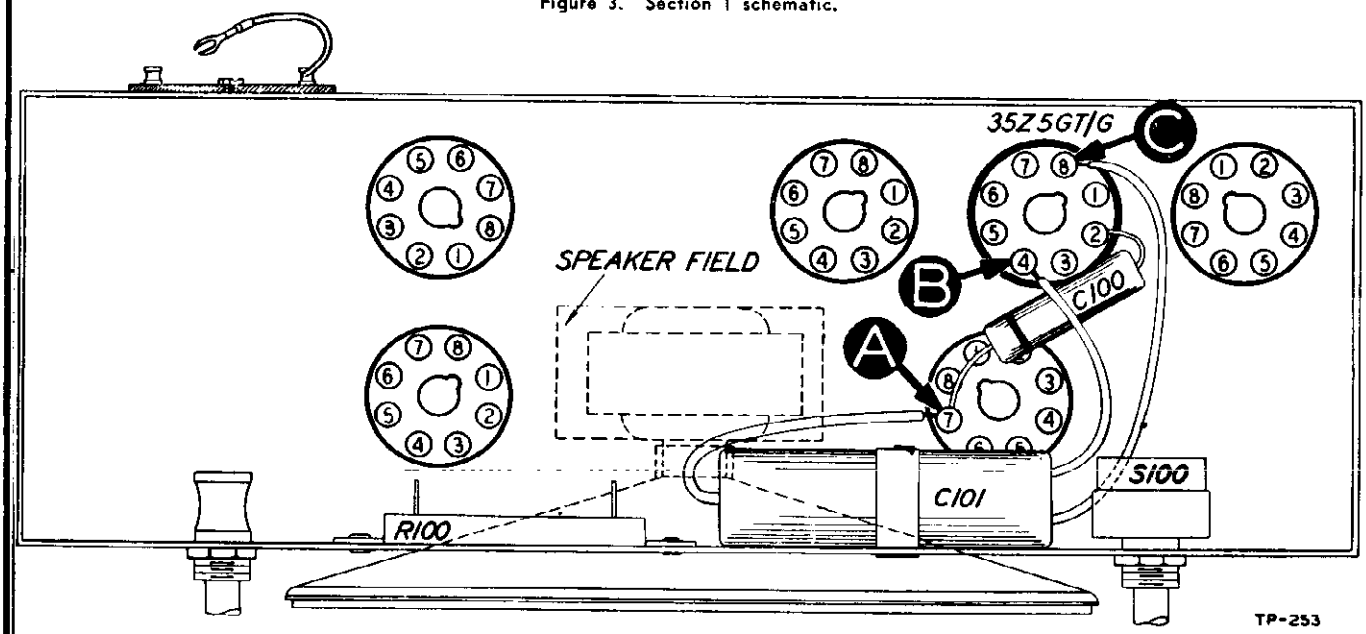

Figure 4. Bottom view showing section 1 test points.

© John F. Rider

PHILCO CORP.

MODELS 46-421, 46-421-I

TESTS TO ISOLATE TROUBLE WITHIN SECTION 2

Test Points	Normal Indication	Possible Cause of Abnormal Indication
D to A	Audible signal from speaker.	No signal indicates defective 50L6GT tube, defective output transformer T200, defective speaker LS200, shorted condenser C202 or C203, or open resistor R205.
E to A	Audible signal, same as previous test.	No signal indicates open condenser C201.
F to A	Noticeable increase of audible signal.	No signal indicates defective 7C6 tube, or open resistor R203.
G to A	With volume control full on, audible signal, same as previous test.	No signal indicates open condenser C200, or open volume control R202.

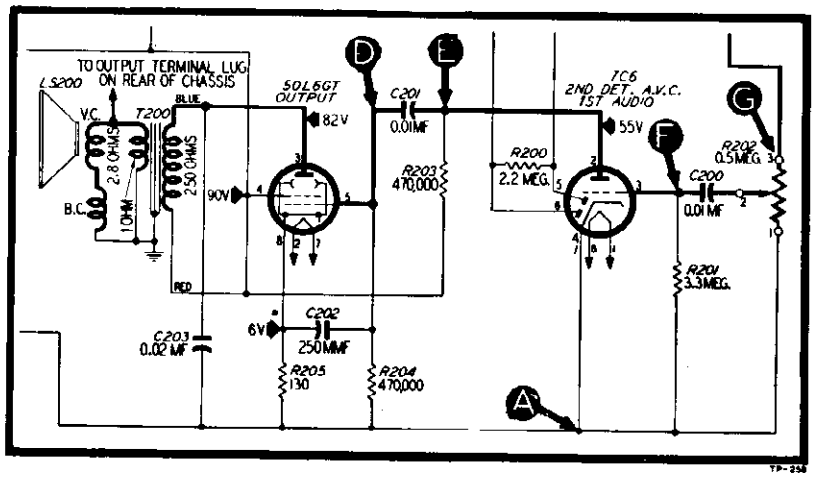

For all tests in this section, use the audio range of a signal generator. Connect the output lead through a condenser (.01 to .25 mf.); ground lead to point A.

Figure 5. Section 2 schematic.

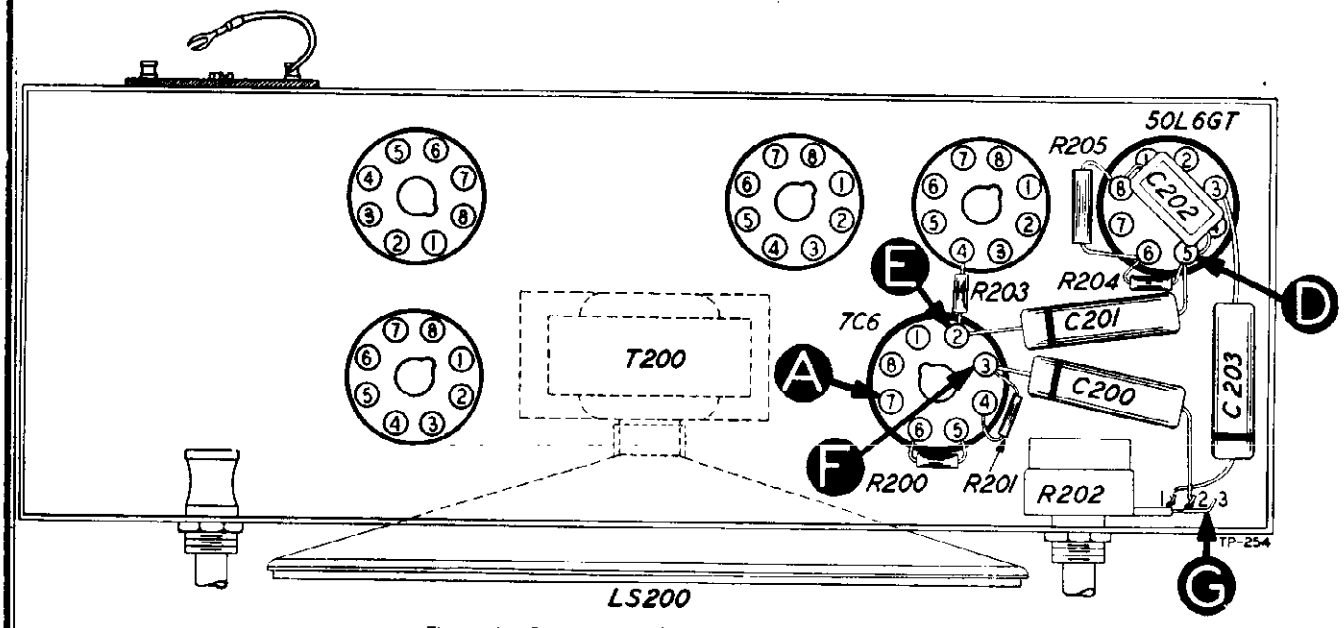

Figure 6. Bottom view showing section 2 test points.

MODELS 46-421, 46-421-I

PHILCO CORP.

TESTS TO ISOLATE TROUBLE WITHIN SECTION 3

Test Points	Normal Indication	Possible Cause of Abnormal Indication
H to A	Audible signal from speaker.	No signal indicates defective 7B7 tube, defective i-f transformer Z300, defective 7C6 tube, defective resistor R301, or shorted condenser C303.
J to A	Audible signal from speaker.	No signal indicates defective i-f transformer Z301.

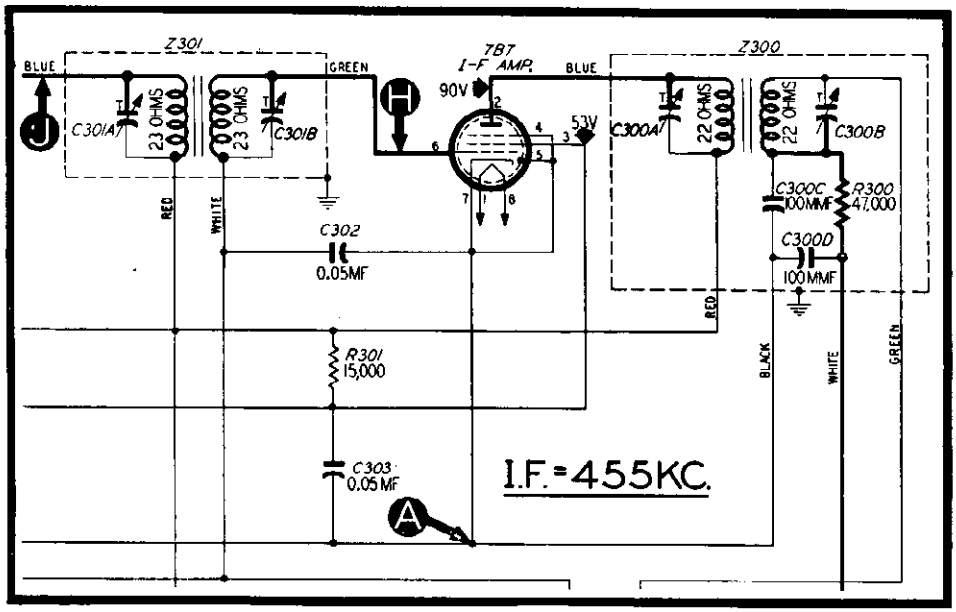

For all tests in this section, set the signal generator to 455 kc., modulation on. Connect the output lead through a condenser (.01 to .25 mf.); ground lead to point A.

Figure 7. Section 3 schematic.

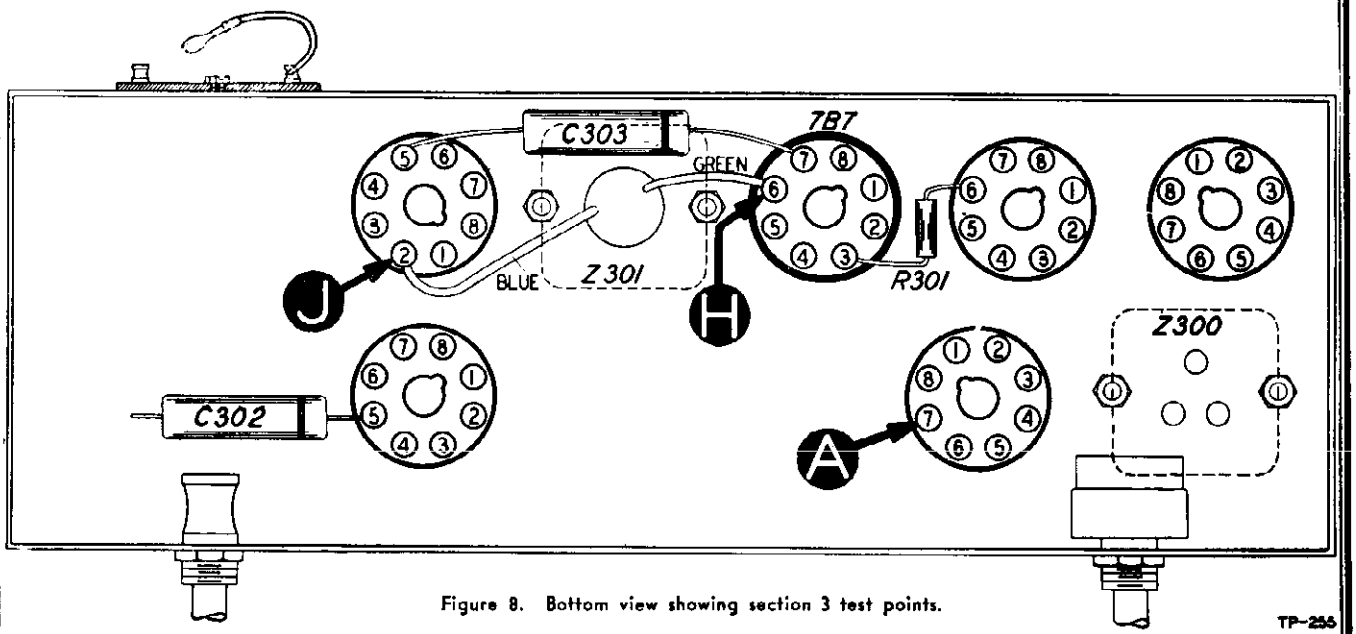

Figure 8. Bottom view showing section 3 test points.

TP-255

PHILCO CORP.

MODELS 46-421, 46-421-I

TESTS TO ISOLATE TROUBLE WITHIN SECTION 4

Test Points	Normal Indication	Possible Cause of Abnormal Indication
K to A	Audible signal from speaker.	No signal indicates defective 7A8 tube, defective oscillator transformer T400, defective resistors R400 or R402, defective condenser C400, or shorted plates of condenser C404.
L to A	Audible signal from speaker.	No signal indicates defective r-f transformer T401.
M to A	Increase in audible signal from speaker.	No signal indicates defective 7C7 tube.
N to A	Same signal output as previous step.	No signal indicates defective antenna transformer T402, loop LA400, coupling condenser C402, or shorted plates of condenser C404.

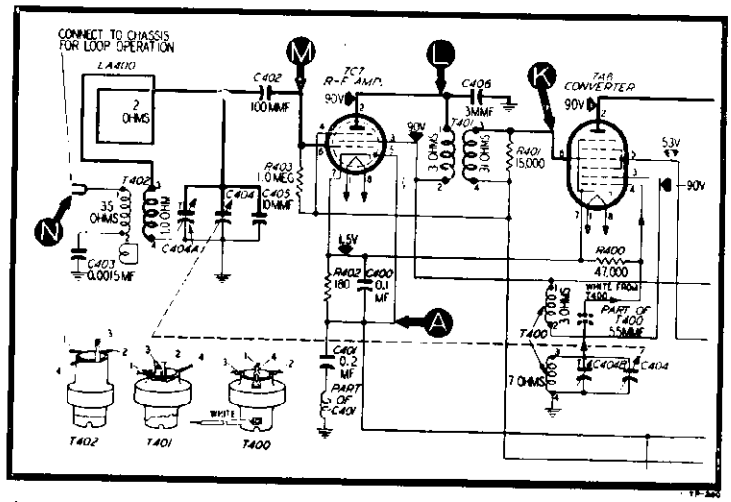

For all tests in this section, set the signal generator and the receiver to 540 kc. Connect the output lead of the signal generator through a condenser (.01 to .25 mf.); ground lead to point A.

Figure 9. Section 4 schematic.

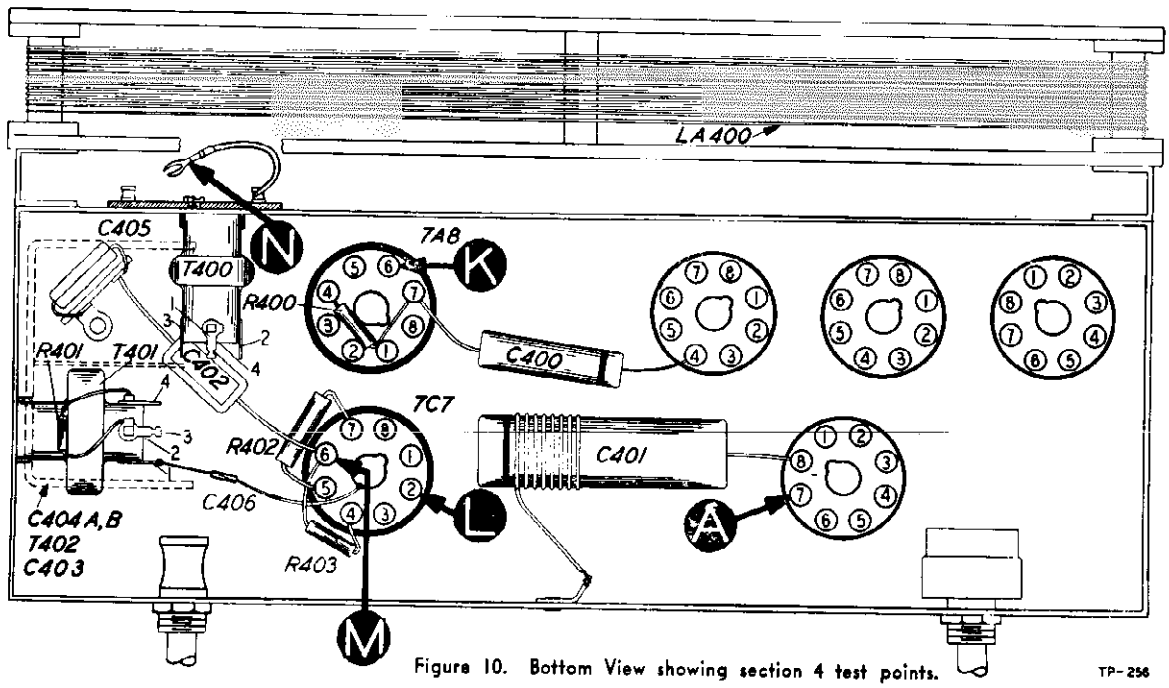

Figure 10. Bottom View showing section 4 test points.

TP-256

MODELS 46-421, 46-421-I

PHILCO CORP.

CONNECTING ALIGNING EQUIPMENT

OUTPUT METER. Connect to output (left hand) and ground (center) lugs of terminal panel on rear of chassis as shown in figure 11.

SIGNAL GENERATOR. Use a 100-mmf. condenser to couple the signal-generator output lead to the receiver. Adjust the output of the signal generator to give a signal strength sufficient to cause a readable deflection of the output meter, using the range on the meter which best indicates small variations in output. Reduce the output of the signal generator if the pointer of the output meter goes off scale as alignment progresses.

Make all adjustments in the order listed.

ALIGNMENT CHART

SIGNAL GENERATOR		RECEIVER				
Connections to Receiver	Dial Setting (kc.)	Dial Setting (kc.)	Volume Control Setting	Special Instructions	Adjust Trimmers in Given Order	Adjust Trimmers For
Stator plate terminal, antenna section of tuning condenser, and B–.	455	540	Max	Turn C-301B down tight. Turn tuning condenser plates to full-meshed position. Make sure that dial pointer is set to the left index line (small mark stamped on lower left side of scale plate reflector). This setting corresponds to a dial setting of 540 KC.	C300A C300B C301A C301B	Maximum output
Aerial lead and B–.	1600	1600	Max	Turn tuning condenser until dial pointer is on the first small index line (from right side) stamped on the scale plate reflector. This setting corresponds to a dial setting of 1600 KC.	C404B	Maximum output
Aerial lead and B–.	1500	1500	Max	Turn tuning condenser until dial pointer is on the second small index line (from right side) stamped on the scale plate reflector. This setting corresponds to a dial setting of 1500 KC.	C404A	Maximum output

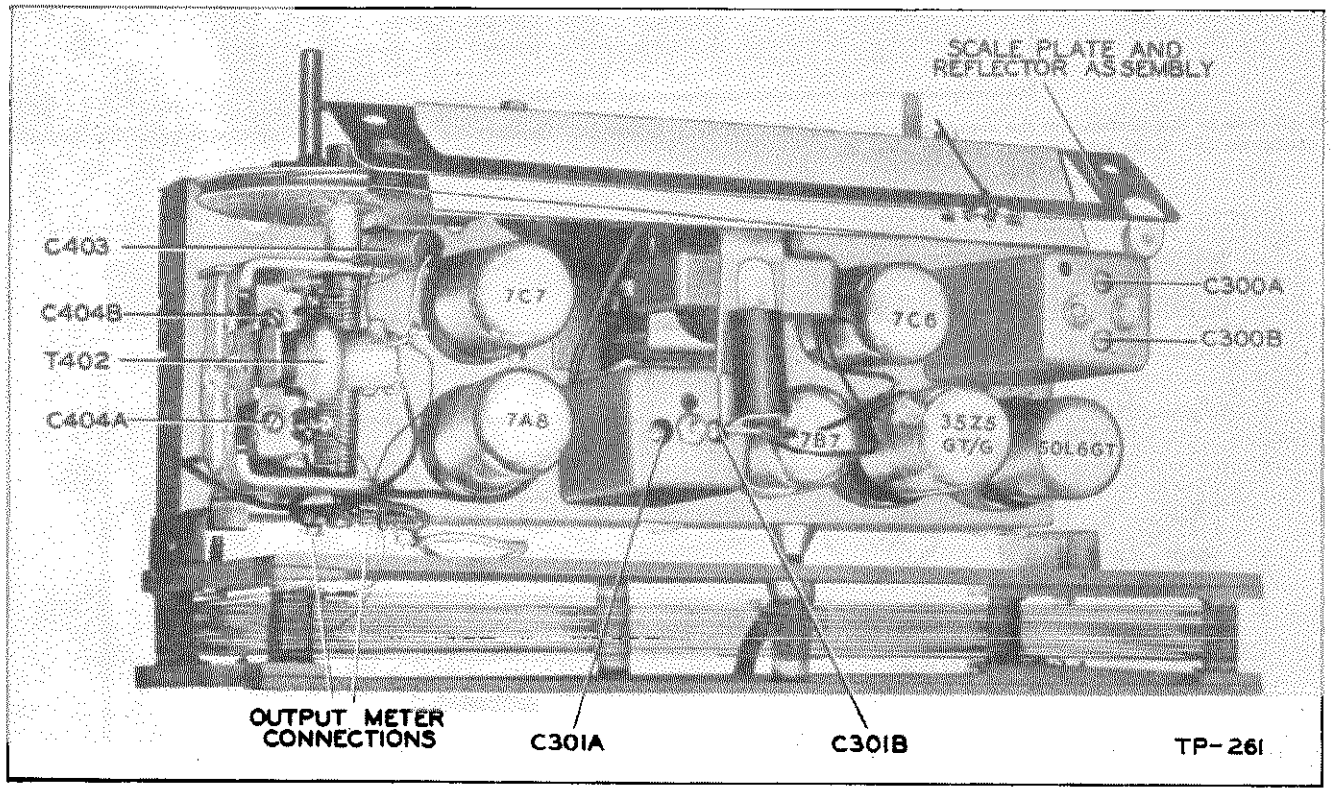

Figure 11. Top view showing trimmer condenser locations.

PHILCO CORP.

MODELS 46-421, 46-421-I

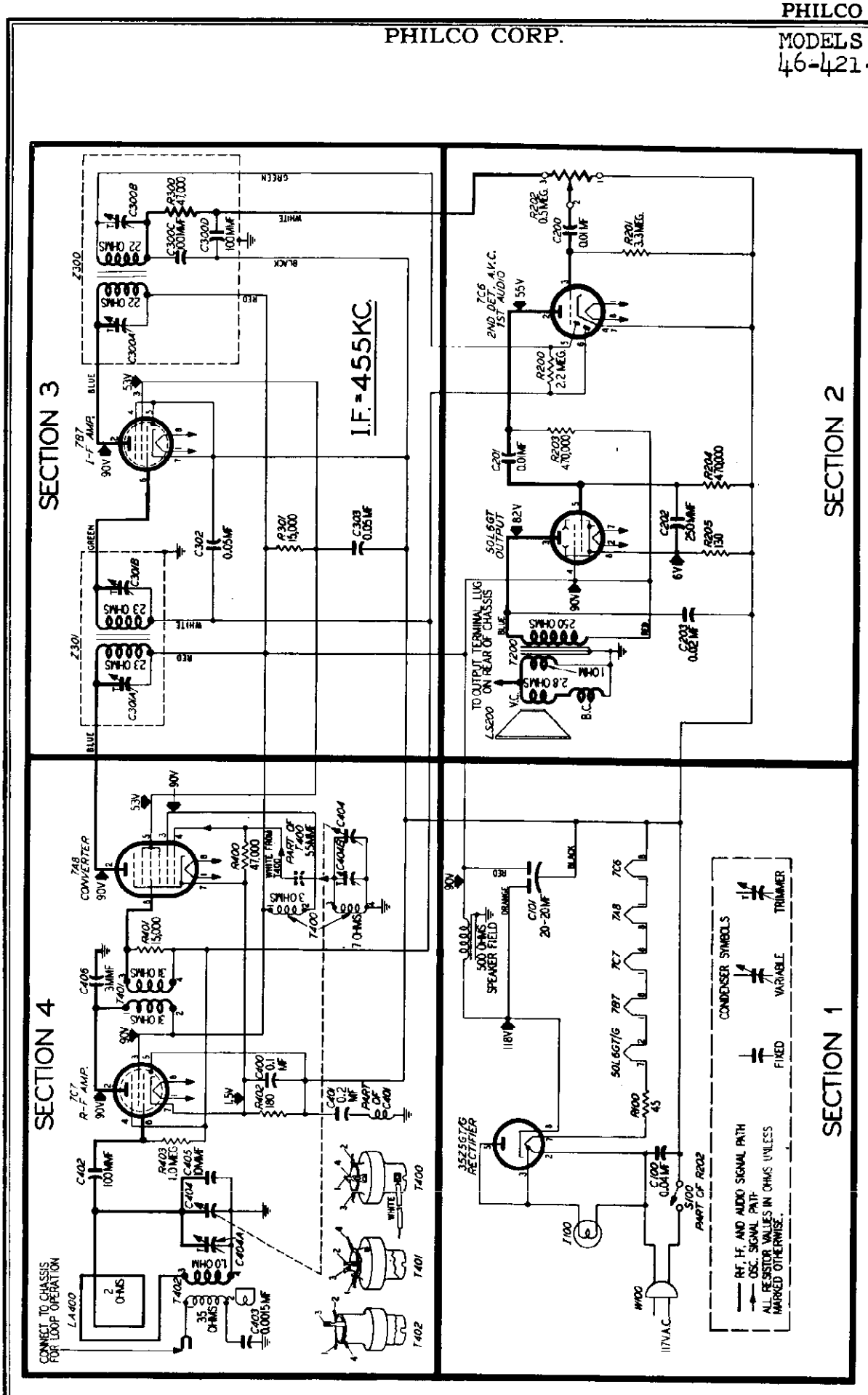

TP-335

Figure 12. Complete schematic.

NOTE: All voltages and all capacity and resistance values shown are average. Voltages were measured between B- and the points indicated with a 20,000-ohm-per-volt meter; volume control at minimum, tuning condenser plates fully meshed.

MODELS 46-421, 46-421-I

PHILCO CORP.

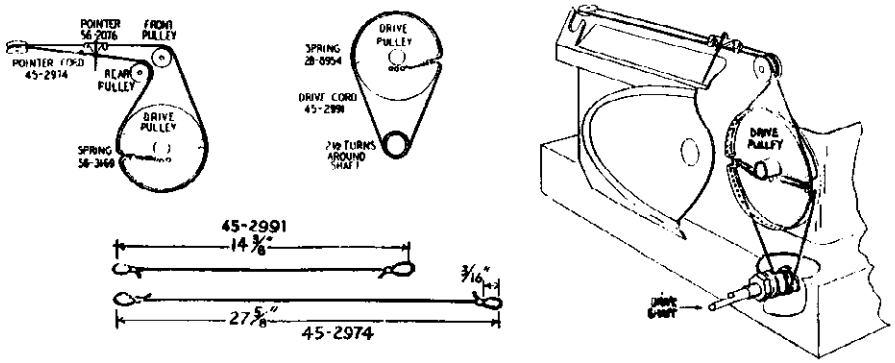

Figure 13. Drive cord installation details.

NOTE: Parts marked with an asterisk (*) are general replacement items and the numbers will not be identical with those used on factory assemblies. ALWAYS USE THE PART NUMBERS SHOWN IN THIS PARTS LIST WHEN ORDERING.

Symbol designations used in the schematics and parts list are as follows:

C—condenser
I—Pilot lamp
LA—loop antenna
LS—loudspeaker
R—resistor
S—switch
T—transformer
W—power cord and plug
Z—i-f transformer assembly

SECTION 1

Reference Number	Description	Service Part No.
C100	Condenser, .04 mf., 400V	30-4119
C101	Condenser, 20-20 mf., 150 V	30-2547*
I100	Pilot Lamp, 6-8V., 150 ma.	34-2068
R100	Resistor, 50 ohms	33-3432
S100	Switch, Power	Part of R-202
W100	Power Cord and Plug	L-3199

SECTION 2

C200	Condenser, .01 mf., 400V.	61-0120*
C201	Condenser, .01 mf., 400V.	61-0120*
C202	Condenser, 250 mmf.	60-10245307*
C203	Condenser, .02 mf., 400V.	30-4599*
LS200	Speaker (with output transformer)	36-1591
R200	Resistor, 2.2 meg.	66-5223340*
R201	Resistor, 3.3 meg.	66-5333340*
R202	Volume Control, .5 meg.	33-5469
R203	Resistor, 470,000 ohms	66-4473340*
R204	Resistor, 470,000 ohms	66-4473340*
R205	Resistor, 130 ohms	66-1133340
T200	Transformer, Output	Part of LS-200

SECTION 3

C300A	Condenser, Trimmer	Part of Z-300
C300B	Condenser, Trimmer	Part of Z-300
C300C	Condenser, 100 mmf.	Part of Z-300
C300D	Condenser, 100 mmf.	Part of Z-300
C301A	Condenser, Trimmer	Part of Z-301
C301B	Condenser, Trimmer	Part of Z-301
C302	Condenser, .05 mf., 200V.	30-4518*
C303	Condenser, .05 mf., 200V.	30-4518*
R300	Resistor, 47,000 ohms	Part of Z-300
R301	Resistor, 15,000 ohms	66-3153340
Z300	Transformer, 2nd I-F	32-4014
Z301	Transformer, 1st I-F	32-3962

SECTION 4

Reference Number	Description	Service Part No.
C400	Condenser, .1 mf., 200V.	30-4527*
C401	Condenser and Choke Assy.	76-1198
C402	Condenser, 100 mmf.	60-10105407*
C403	Condenser, .0015 mf., 600V.	30-4621
C404	Condenser, 2-Section Tuning	31-2659
C404A	Condenser, Trimmer	Part of C-404
C404B	Condenser, Trimmer	Part of C-404
C405	Condenser, 10 mmf.	60-00105407
C-406	Condenser, 3 mmf.	30-1221
LA400	Loop Aerial	76-1877
R400	Resistor, 47,000 ohms	66-3473340*
R401	Resistor, 15,000 ohms	Part of T-401
R402	Resistor, 180 ohms	66-1184360*
R403	Resistor, 1 meg.	66-5103340*
T400	Transformer, Oscillator	32-3613
T401	Transformer, R-F	32-3595
T402	Transformer, Antenna	32-3394

MISCELLANEOUS

Baffle and cloth assembly, Model 46-421	40-6745
Model 46-421-I	40-6747
Backing plate, tuning condenser mounting	56-2105FA3
Bracket, antenna coil mounting	56-2058FA3
Cabinet, Model 46-421	10630
Model 46-421-I	10630A
Clamp, dial scale mounting	56-2088
Clamp, electrolytic condenser mounting	56-1346FA5
Clip, coil mounting	28 5002FE7
Dial scale, Model 46-421	27-5849
Model 46-421-I	27-5845
Drive cord, tuning condenser (25 ft. Spool)	45-2991*
Drive cord, pointer (25 ft. Spool)	45-2974*
Foot, felt	W-2190
Grommet, rubber, tuning condenser mounting	27-4610
Knob and spring assembly, Model 46-421	54-4227
Model 46-421-I	54-4228
Pointer, dial scale	56-2076FCP
Rubber band, dial scale mounting	54-4176
Scale plate and light reflector assembly	76-1476
Light reflector	27-9816
Screw-washer combination, chassis mounting	1W37656FA3
Shaft, tuning drive	31-2664
Shield, loctal tube	56-2731*
Socket, loctal	27-6138*
Socket octal	27-6199*
Socket assembly, pilot lamp	76-2142
Spring, tuning condenser drive cord	28-8954
Spring, pointer drive cord	56-3167
Wiring panel, 2 lug	12W45646
Wiring panel, 3 lug	76-2148

© John F. Rider

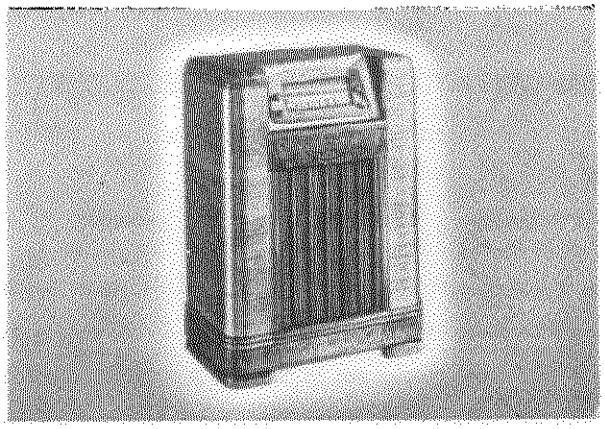

TP-1442

MODEL 47-1227 SPECIFICATIONS

CABINET	Wood, walnut finish
CIRCUIT	Nine-tube superheterodyne
FREQUENCY RANGES:	
Broadcast	540 to 1720 kc
Frequency Modulation	88 to 108 mc
AUDIO OUTPUT	6 watts
OPERATING VOLTAGE	105—120 volts, 60 cycles, a.c.
POWER CONSUMPTION	110 watts
AERIALS	Built-in low-impedance loop and FM dipole. Provision for external aerial.
INTERMEDIATE FREQUENCIES:	
AM	455 kc
FM	9.1 mc
RECORD PLAYER	Philco Automatic Record Changer, Model D-10
SPEAKER	12" electrodynamic
PHILCO TUBES (9)	6AG5, 7F8, 6BA6, 7R7, 7X7, 6J5GT, 6K6GT (2), 5AZ4
PANEL LAMPS (2)	6—8-volt, Part No. 34-2040
BIN LAMP	6—8-volt, Part No. 34-2039

CIRCUIT DESCRIPTION

The Philco Model 47-1227 is a nine-tube superheterodyne radio-phonograph combination providing reception on the standard broadcast band, 540—1720 kc and the FM band, 88—108 mc.

A low-impedance loop within the cabinet provides adequate signal pickup on the broadcast band. Satisfactory FM reception usually requires the use of an outdoor dipole aerial (Philco Part No. 45-1462). In areas of high signal strength, however, the dipole built into the cabinet is sufficient for FM operation.

A tuned r-f stage, using a type 6AG5 high-frequency pentode tube, functions on the FM band. The converter stage employs a 7F8 high-frequency double triode. The converter and r-f stages are built on a separate chassis, to insure reliable performance at high frequencies. These stages provide high signal-to-noise ratio, high conversion efficiency, and good image rejection.

Two transformer-coupled i-f stages are used The i-f transformers have two sets of windings one set is tuned to 455 kc for AM operation, the other to 9.1 mc for FM operation. Switching of the windings to attenuate undesired beat frequencies is necessary only in the first i-f transformer. The large difference between intermediate frequencies makes further switching unnecessary.

The first i-f stage employs a 6BA6 (miniature type) high-frequency pentode amplifier; the pen

tode section of a 7R7 double-diode-pentode tube functions as the second i-f amplifier. One diode of the 7R7 tube is used for AM detection, while the other diode develops a-v-c voltage.

The ratio-detector circuit used for FM detection operates through the two diodes of the 7X7 tube; this circuit has good noise-reducing properties and a superior tuning characteristic. The triode section of the 7X7 tube is used as a first audio and phono amplifier stage. The output of the AM detector, FM detector, or phono pickup is switched into this circuit by the operation of the function switch.

A type 6J5GT triode tube operates as a phase inverter, driving the two 6K6GT output tubes in push-pull operation.

A more uniform frequency response is obtained by the use of inverse feedback. The inverse-feedback voltage is taken from the secondary of the output transformer, and applied through resistor R211 to the junction of R204 and the volume control.

The TONE control is continuously variable; with clockwise rotation, the bass is increased, and as rotation is continued, the high frequencies are attenuated.

The 12-inch electrodynamic speaker provides excellent bass reproduction.

PHILCO TROUBLE-SHOOTING PROCEDURE

In this manual, the circuit is divided into four sections, with individual chassis base layouts and a complete schematic showing test points for each section. The first step in each trouble-shooting chart is a master check, which makes it possible to determine whether trouble exists in that section without going through the entire test procedure. Failure to secure the "Normal Indication" in a given step indicates trouble, which should then be located by voltage, resistance, or capacitance checks of the parts associated with the point under test, and remedied before testing further.

For service information on the record changer, refer to the service manual PR-1156 for the Philco Automatic Record Changer, Models D-10 and D-10A.

SYMBOLIZATION AND TERMINOLOGY

All components in the radio circuit are symbolized and located as follows:

C—condenser	LA—loop aerial	S—switch
I—pilot lamp	LS—loudspeaker	T—transformer
L—choke or coil	R—resistor	Z—electrical ass'y

100-series components are in Section 1 — power supply

200-series components are in Section 2 — audio amplifier

300-series components are in Section 3 — i-f amplifier, second detector and/or discriminator, and a.v.c.

400-series components are in Section 4 — the aerial, r-f and oscillator.

The main switch assembly, commonly referred to in the past as the "Band Switch", is used, in many instances, for various purposes in addition to band switching. Therefore, in this manual, the main wafer-switch assembly is designated as the "Function Switch".

PRELIMINARY CHECKS

The following preliminary checks are recommended, before turning on the radio.

1. Carefully inspect both top and bottom of the chassis. Make sure that all tubes are secure in the proper positions. Look for bad connections, burnt resistors, or other obvious faults.

2. Measure the resistance between B+ (pin no. 8 of the 5AZ4 rectifier tube) and the radio chassis, with the ohmmeter polarity such that it gives the highest resistance reading; if the reading is lower than 50,000 ohms, check condensers C102, and C103 (A and B) for leakage or shorts.

CALIBRATING DIAL BACKPLATE

When the radio chassis is removed from the cabinet, dial calibration and alignment points may be marked by small pencil dots made on the dial-backplate assembly below the pointer.

The method of measuring for these points is illustrated in figure 1, which shows the relationship between dial marking and scale backplate.

Hold a ruler against the scale backplate in the position shown. Make dots at the proper points for the desired frequency settings. When the ruler is correctly placed, the index point is 1-9/16 inches from the reference point, as shown in figure 1.

With the tuning gang fully meshed, the pointer should be adjusted on the dial drive cord to coincide with the index mark.

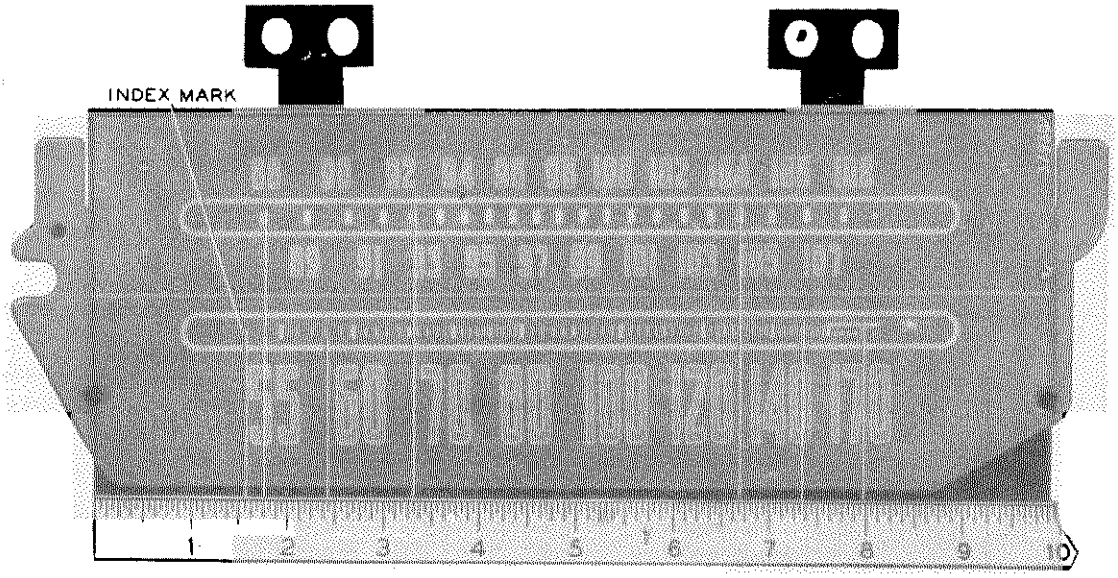

FIGURE 1. DIAL-BACKPLATE CALIBRATION MEASUREMENTS. TP-2827

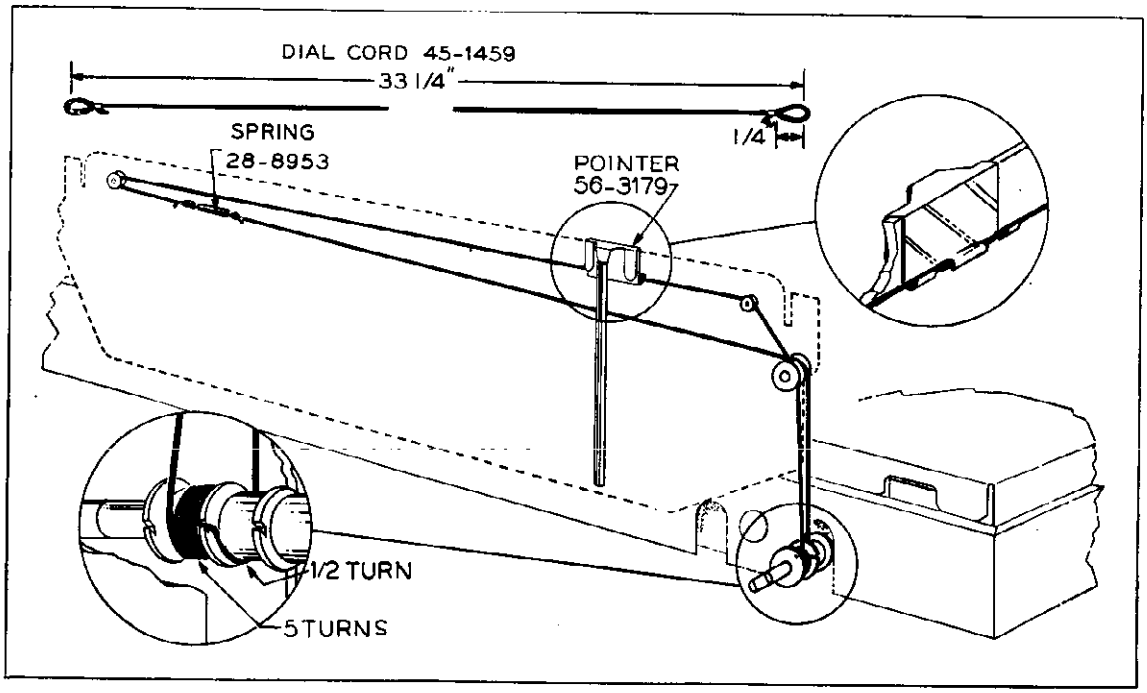

FIGURE 2. POINTER-DRIVE-CORD INSTALLATION DETAILS.

MODEL 47-1227 PHILCO CORP.

SECTION 1 – TROUBLE SHOOTING

CAUTION: Do not turn on power with speaker disconnected, as this may cause damage to the radio.

Make all tests for this section with a volt-ohmmeter, using the applicable d-c ranges. Voltages were taken with a 20,000-ohms-per-volt meter at a line voltage of 117 volts, a.c. The VOLUME control was set at minimum and the TONE control fully counterclockwise; the function switch was set in BC (broadcast) position. See figure 3 for location of test points. Follow steps in proper sequence; if the "Normal Indication" is obtained in step 1, proceed with tests for Section 2; if not, isolate and remedy the trouble in this section. It will be noted that certain parts in other sections of the radio are listed under "Possible Cause of Abnormal Indication" because they may produce abnormal indication in Section 1.

STEP	TEST POINTS	NORMAL INDICATION	ABNORMAL INDICATION	POSSIBLE CAUSE OF ABNORMAL INDICATION
1	D to C E to C	208 volts 290 volts	No voltage or incorrect voltage	Trouble in this section. Isolate by the following tests.
2	A to C	350 volts	No voltage	Defective 5AZ4 tube, T100, S100 or W100. Shorted C102. Open R100.
			Low voltage	Defective 5AZ4 tube. Shorted or leaky C102, C308, C311, C322, C309, C408 or C409. Shorted or leaky C103A or C103B.
			High voltage	Open L100, R101 or T200.
3	B to C	Negative 20 volts	High voltage Low or no voltage	Open R100. Shorted R100. Weak 6K6GT tubes.
4	D to C	208 volts	No voltage Low voltage High voltage	Shorted C103B. Open R101. Leaky C103B, C319, C307 or C310. Open R300 or R303.
5	E to C	290 volts	No voltage Low voltage High voltage	Shorted C103A. Open L100. Leaky C211, C212, or C103A. Grounded T200. Shorted L100. Weak 6K6GT tubes.
Listening Test			Abnormal hum may be caused by open C100, C101, C102 or C103A.	

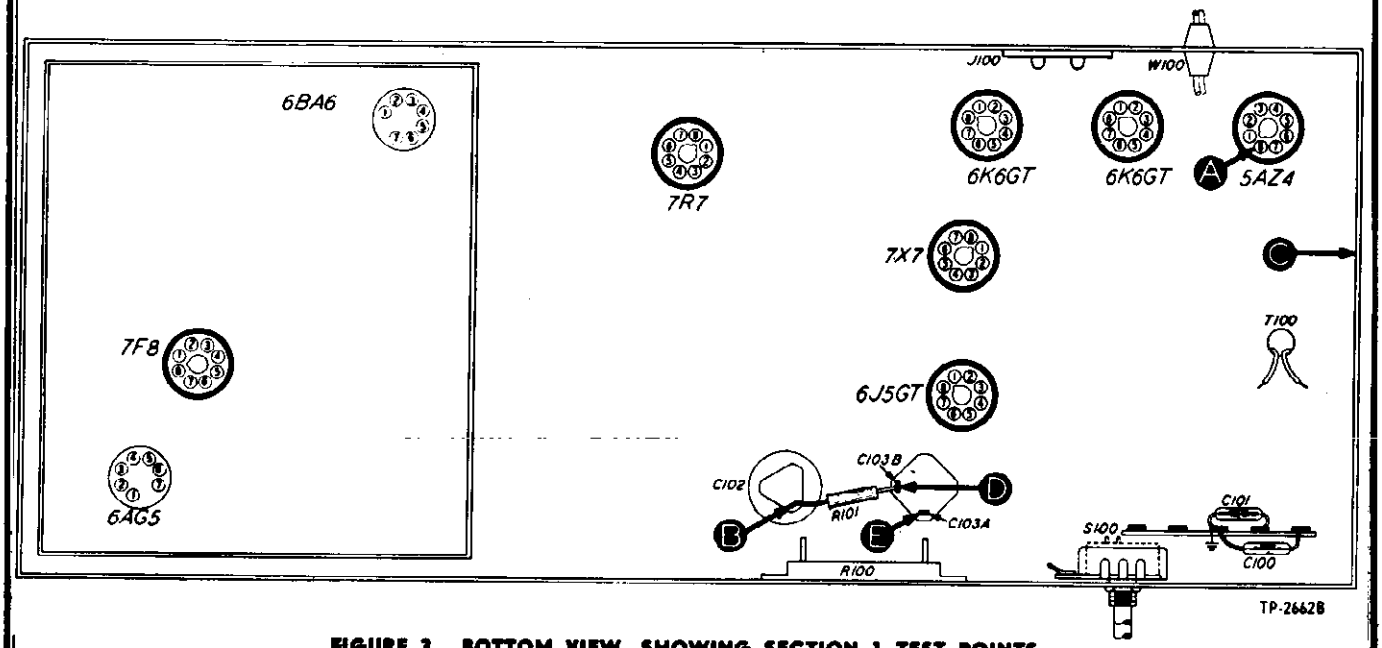

FIGURE 3. BOTTOM VIEW, SHOWING SECTION 1 TEST POINTS.

© John F. Rider

SECTION 2 – TROUBLE SHOOTING

Connect the audio-signal generator ground lead to test point "C" (chassis); connect the output lead through a .1-mf condenser to the test points indicated in the chart. Set the radio VOLUME control to maximum and adjust the signal-generator output as indicated in the chart. If the "Normal Indication" is obtained in step 1, proceed to Section 3; if not, isolate and remedy the trouble in this section.

STEP	TEST POINT	NORMAL INDICATION	POSSIBLE CAUSE OF ABNORMAL INDICATION
1	A	Loud, clear signal with low signal-generator output.	Trouble within this section. Isolate by the following tests.
2	B (Remove 6J5GT tube)	Loud, clear signal with high signal-generator output.	Defective 6K6GT tube, T200 or LS200. Open R214. Shorted or leaky C212 or C214.
3	D (Remove 6J5GT tube)	Same as step 2.	Defective 6K6GT tube. Shorted or leaky C211. Open R215.
4	E (Replace 6J5GT tube)	Loud, clear signal with moderate signal-generator output.	Defective 6J5GT tube. Open R212, R209 or R210. Leaky or shorted C210.
5	F	Loud, clear signal with low signal-generator output.	Defective 7X7 tube. Open R207 or C210. Shorted C206.
6	A	Same as step 5.	Shorted C202, C201 or C326. Open R201, C203, R203 or C208.
7	PL200 (Function switch on PHONO)	Same as step 5.	Defective PL200 or FS2 (R).
Listening Test		Distortion may be caused by leaky C210, C212, C211, C213 or C214. Hum will result if C213 is open.	

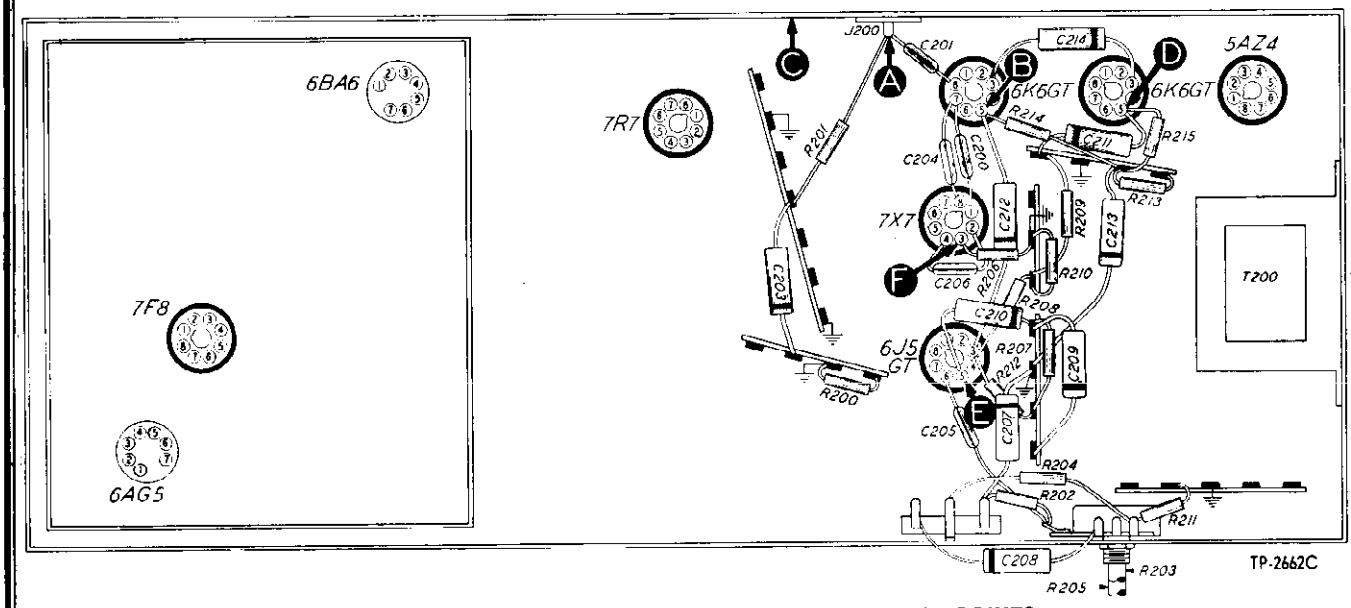

FIGURE 4. BOTTOM VIEW, SHOWING SECTION 2 TEST POINTS.

SECTION 3 – TROUBLE SHOOTING

AM TESTS

For the following tests, use an r-f signal generator, with modulated output, set at 455 kc. Connect the generator ground lead to the radio chassis, test point "C"; connect the output lead through a .1-mf condenser to the test points indicated.

Turn the radio VOLUME control to maximum, function switch to BC (broadcast) position, and TONE control fully counterclockwise.

If the "Normal Indication" is obtained in the first step, proceed to the FM tests, or to the tests in Section 4; if not, isolate and remedy the trouble in this section.

STEP	TEST POINT	NORMAL INDICATION	POSSIBLE CAUSE OF ABNORMAL INDICATION
1	A	Loud, clear signal with low signal-generator output.	Trouble within this section. Isolate by the following tests.
2	B	Loud, clear signal with high signal-generator output.	Defective 7R7 tube or Z302. Improperly aligned Z302. Open R313 or R314. Leaky or shorted C322, C321 or C326. Defective switch FS3 (R) or FS2 (R).
3	D	Loud, clear signal with moderate signal-generator output.	Defective or misaligned Z301. Defective 6BA6 tube. Open R306, R304, R305 or C307. Shorted or leaky C308, C309, C307, C311, or C310.
4	A	Loud, clear signal with low signal-generator output.	Defective or misaligned Z300. Shorted or leaky C303, C304, C305. Defective FS4 (R) or FS4 (F). Open R301.
Listening Test		Distorted signal with hum, may be caused by open C307, or C319.	

FM TESTS

Follow the instructions preliminary to the AM test chart, except set the signal-generator frequency to 9.1 mc, and detune to one side or the other until a satisfactory test signal is obtained; set function switch to FM position.

© John F. Rider

SECTION 3 — *Continued*

The most satisfactory check on the operation of the discriminator circuit is the ability to make proper alignment, as described on pages 14, 15 and 16.

STEP	TEST POINT	NORMAL INDICATION	POSSIBLE CAUSE OF ABNORMAL INDICATION
1	B	Loud, clear signal with high signal-generator output.	Defective 7X7 tube or C325. Open R318. Leaky or shorted C324, C328 or C323. Defective or misaligned Z302.
2	D	Same as step 1.	Same parts as listed in AM tests, step 3.
3	A	Loud, clear signal with low signal-generator output.	Same parts as listed in AM tests, step 4.

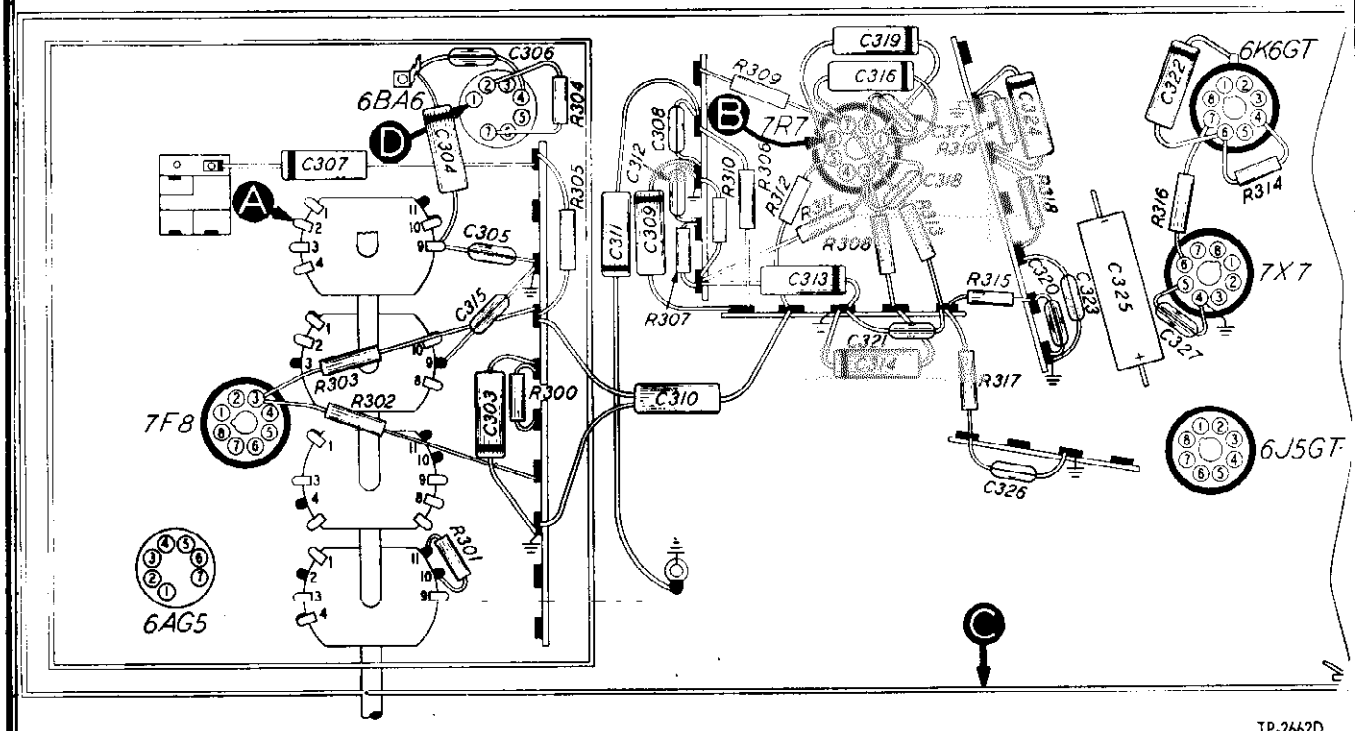

TP-2662D

FIGURE 5. BOTTOM VIEW, SHOWING SECTION 3 TEST POINTS.

MODEL 47-1227 PHILCO CORP.

SECTION 4 – TROUBLE SHOOTING

For tests indicated in this section with the exception of oscillator test, use an r-f signal generator with modulated output. Connect the generator ground lead to the radio chassis, test point "C"; connect the output lead through a .1-mf condenser to the test points indicated.

Turn the VOLUME control to maximum and the TONE control to nearly OFF position.

Set the function switch, TUNING control, and signal-generator frequency as indicated in chart.

Oscillator test: (AM tests, step 3, FM tests, step 3). Attach the positive lead of a high-resistance voltmeter to the 7F8 oscillator cathode (pin 4). Connect the negative lead through a 100,000-ohm isolating resistor to the 7F8 oscillator grid (pin 1) test point "D". Use a suitable meter range (0-10 to 0-50 volts).

Absence of negative grid voltage in either AM or FM position of function switch indicates that the oscillator is not functioning; check the parts listed in the chart for the oscillator tests.

AM TESTS

STEP	TEST POINT	SIG. GEN. FREQUENCY	FUNCTION SWITCH AND TUNING CONTROL	NORMAL INDICATION	POSSIBLE CAUSE OF ABNORMAL INDICATION
1	A	1000 kc	BC. Tune to signal from generator.	Loud, clear signal with low generator input.	Trouble in this section. Isolate by the following tests.
2	B	1000 kc	Same as step 1.	Same as step 1.	Defective 7F8 tube, Z300, C400, L406 or R408. Open C303, C402B, R405, R406, R303 or R300. Misaligned Z300. Trouble in oscillator section (step 3).
3	D (Osc. test)	Not used	BC. Rotate 540-1720 kc	Negative 2 to 3 volts.	Defective 7F8 tube, FS3 (F), FS2 (F), C411, C412, C413, C402B, L404 or C400.
4	A	1000 kc	BC. Tune to signal from generator.	Loud, clear signal with low generator input.	Defective L400, C400, C401 or FS1 (R). Open R404 or C410.

FM TESTS

1	E	95 mc	FM. Tune to signal from generator.	Loud, clear signal with low generator input.	Trouble in this section. Isolate by the following tests.

© John F. Rider

SECTION 4 — *Continued*

STEP	TEST POINT	SIG. GEN. FREQUENCY	FUNCTION SWITCH AND TUNING CONTROL	NORMAL INDICATION	POSSIBLE CAUSE OF ABNORMAL INDICATION
2	B	95 mc	Same as step 1.	Same as step 1.	Same troubles as in AM tests, step 2.
3	D (Osc. test)	Not used	FM. Rotate 88 to 108 mc.	Negative Voltage. Approx. 1 volt.	Defective 7F8 tube, FS3 (R), FS2 (R), C411, C412, C413, C400 or L405.
4	F	95 mc	FM. Tune to signal from generator.	Loud, clear signal with low generator input.	Defective C407, L403, C400, C400B, or FS1 (R).
5	E	95 mc	FM. Tune to signal from generator.	Loud, clear signal with low generator input.	Defective 6AG5 tube, C400, L401 or C400A. Open R400, R401, R402, R403, L402 or C403. Shorted or leaky C408 or C409.

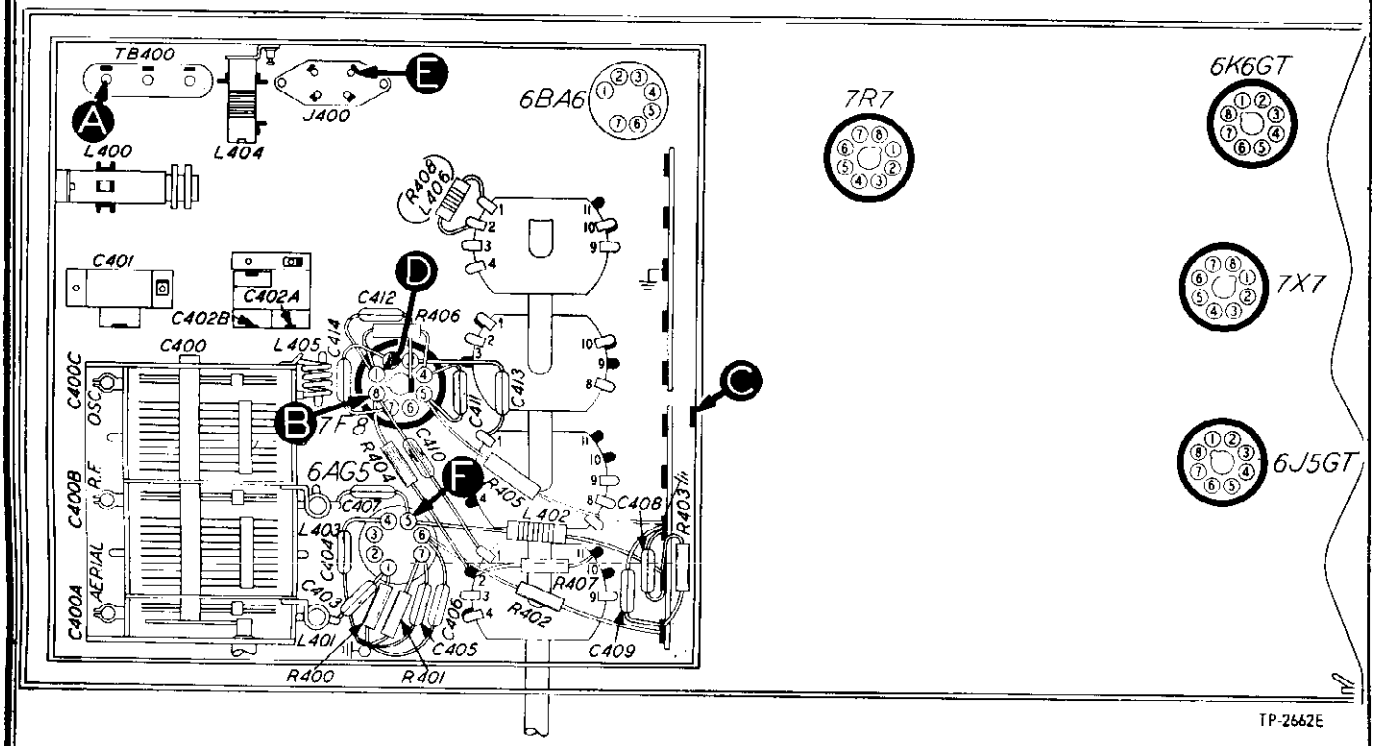

FIGURE 6. BOTTOM VIEW, SHOWING SECTION 4 TEST POINTS.

© John F. Rider

MODEL 47-1227 PHILCO CORP.

REPLACEMENT PARTS LIST

NOTE: Parts marked with an asterisk (*) are general replacement items, and the numbers may not be identical with those on factory assemblies; also, the electrical values of some replacement items furnished may differ from the values indicated in the schematic and parts list. The values substituted in any case are so chosen that the operation of the instrument will be either unchanged or improved. When ordering replacements, use only the "Service Part No." in this parts list.

SECTION 1

Reference No.	Description	Service Part No.
C100	Condenser, .01 mf, line filter	61-0120*
C101	Condenser, .01 mf, line filter	61-0120*
C102	Condenser, electrolytic 20 mf, high-voltage filter	30-2555*
C103	Condenser, electrolytic	30-2556*
	C301A: condenser, 25 mf, high-voltage filter	Part of C103
	C103B: condenser, 10 mf, isolating filter	Part of C103
I100	Lamp, bin	34-2039*
I101	Lamp, panel	34-2040*
I102	Lamp, panel	34-2040*
J100	Socket, a-c phono power	27-6200
L100	Field, speaker	Part of LS200
R100	Resistor, 165 ohms, 6K6 bias	33-3435-1
R101	Resistor, 15,000 ohms, voltage-dropping	66-3155340*
S100	Switch, power ON-OFF	Part of R205
S101	Bin-light switch	42-1702
S102	Switch, phono a-c power	Part of 42-1803
T100	Transformer, power	32-8248
W100	Cord, line	L-3199

SECTION 2

C200	Condenser, 100 mmf, filament by-pass	60-10105407*
C201	Condenser, 100 mmf, r-f by-pass	60-10105407*
C202	Condenser, 100 mmf, r-f by-pass	60-10105407*
C203	Condenser, .006 mf, audio coupling	45-3500-7*
C204	Condenser, 100 mmf, filament by-pass	60-10105407*
C205	Condenser, 100 mmf, audio by-pass	60-10105407*
C206	Condenser, 100 mmf, plate by-pass	60-10105407*
C207	Condenser, .01 mf, bass compensation	61-0120*
C208	Condenser, .006 mf, audio coupling	45-3500-7*
C209	Condenser, .01 mf, audio by-pass	61-0120*
C210	Condenser, .006 mf, audio coupling	45-3500-7*
C211	Condenser, .006 mf, audio coupling	45-3500-7*
C212	Condenser, .006 mf, audio coupling	45-3500-7*
C213	Condenser, .1 mf, grid phasing	61-0113*
C214	Condenser, .003 mf, audio by-pass	61-0117*
J200	Socket—FM TEST	27-6180
LS200	Speaker	36-1595
PL200	Cable and plug assembly, phono-input	41-3735-2
R200	Resistor, 150,000 ohms, phono grid load	66-4153340*
R201	Resistor, 100,000 ohms, r-f decoupling	66-4103340*
R202	Resistor, 33,000 ohms, bass compensating	66-3333340
R203	Control, VOLUME, 2 meg. (tap at 1 meg.)	33-5535-1
R204	Resistor, 4.7 ohms, audio inverse feedback	66-9473340
R205	Control, TONE, 6 meg.	33-5538-1
R206	Resistor, 10 meg., grid leak, first audio	66-6103340*
R207	Resistor, 220,000 ohms, plate load 7X7	66-4223340*
R208	Resistor, 1 meg., grid load	66-5103340*
R209	Resistor, 4700 ohms, cathode bias	66-2473340*
R210	Resistor, 47,000 ohms, cathode bias	66-3473340*
R211	Resistor, 68 ohms, audio feedback	66-0683340*
R212	Resistor, 56,000 ohms, plate load 6J5	66-356340*
R213	Resistor, 150,000 ohms, grid phasing	66-4153340*
R214	Resistor, 330,000 ohms, grid load	66-4333340*
R215	Resistor, 330,000 ohms, grid load	66-4333340*
T200	Transformer, output	32-8274

SECTION 3

Reference No.	Description	Service Part No.
C303	Condenser, .01 mf, plate decoupling	61-0120*
C304	Condenser, .01 mf, a-v-c decoupling	61-0120*
C305	Condenser, 100 mmf, a-v-c decoupling	60-10105407*
C306	Condenser, 100 mmf, filament by-pass	60-10105407*
C307	Condenser, .01 mf, screen by-pass	61-0120*
C308	Condenser, 100 mmf., plate decoupling	60-10105407*
C309	Condenser, .01 mf, plate decoupling	61-0120*
C310	Condenser, .01 mf, by-pass plate decoupling	30-4641
C311	Condenser, .01 mf, plate decoupling	61-0120*
C312	Condenser, 250 mmf, a-v-c decoupling	60-10255237*
C313	Condenser, .01 mf, a-v-c decoupling	61-0120*
C314	Condenser, .01 mf, a-v-c filter	61-0120*
C315	Condenser, 100 mmf, a-v-c decoupling	60-10105407*
C316	Condenser, .05 mf, cathode by-pass	61-0122*
C317	Condenser, 100 mmf, filament by-pass	60-10105407*
C318	Condenser, 100 mmf, a-v-c coupling	60-10105407*
C319	Condenser, .01 mf, screen by-pass	61-0120*
C320	Condenser, 100 mmf, r-f by-pass	60-10105407*
C321	Condenser, 100 mmf, r-f by-pass	60-10105407*
C322	Condenser, .05 mf, plate decoupling	61-0122*
C323	Condenser, 100 mmf, r-f by-pass	60-10105407*
C324	Condenser, .008 mf, r-f by-pass	61-0174*
C325	Condenser, 5 mf, noise limiter	30-2417*
C326	Condenser, 100 mmf, r-f by-pass	60-10105407*
C327	Condenser, 6 mmf, r-f by-pass	30-1224-9
C328	Condenser, 100 mmf, r-f by-pass	66-10105407*
R300	Resistor, 47,000 ohms, plate load, 7F8	66-3473340*
R301	Resistor, 2.2 meg., a-v-c decoupling	66-5223340*
R302	Resistor, 4700 ohms, plate load	66-2473340*
R303	Resistor, 33,000 ohms, plate load	66-3333340*
R304	Resistor, 68 ohms, cathode bias	66-0683340*
R305	Resistor, 10,000 ohms, screen dropping	66-3103340*
R306	Resistor, 1,000 ohms, plate load	66-2103340*
R307	Resistor, 2.2 meg., a-v-c decoupling	66-5223340*
R308	Resistor, 3.3 meg., a-v-c filter	66-5333340*
R309	Resistor, 150 ohms, cathode bias	66-1153340*
R310	Resistor, 220,000 ohms, a-v-c load	66-4223340*
R311	Resistor, 820,000 ohms, a-v-c load	66-4823340*
R312	Resistor, 33,000 ohms, screen dropping	66-3333340*
R313	Resistor, 330,000 ohms, r-f return	66-4333340*
R314	Resistor, 1000 ohms, plate load	66-2103340*
R315	Resistor, 47,000 ohms, diode decoupling	66-3473340*
R316	Resistor, 47,000 ohms, noise limiter	66-3473340*
R317	Resistor, 100,000 ohms, diode decoupling	66-4103340*
R318	Resistor, 100,000 ohms, FM decoupling	66-4103340*
R319	Resistor, 6.8 meg., discriminator load	66-5683340*
Z300	Transformer, 1st i-f	32-4146*
	C300A: condenser, FM trimmer	Part of Z300
	C300B: condenser, 3000 mmf, AM tuning	Part of Z300
	C300C: condenser, 6 mmf, i-f coupling	Part of Z300
	C300D: condenser, FM trimmer	Part of Z300
	C300E: condenser, AM trimmer	Part of Z300
	TC300, tuning core, AM	Part of Z300
Z301	Transformer, 2nd i-f	32-4156*
	C301A: condenser, FM trimmer	Part of Z301
	C301B: condenser, 300 mmf, AM tuning	Part of Z301
	C301C: condenser, FM trimmer	Part of Z301
	C301D: condenser, AM trimmer	Part of Z301

REPLACEMENT PARTS LIST — Continued

SECTION 3 — Continued

Reference No.	Description	Service Part No.
Z302	Transformer, 3rd i-f	32-4147*
	C302A: condenser, 470 mmf, AM tuning	Part of Z302
	C302B: condenser, AM trimmer	Part of Z302
	C302C: condenser, 27 mmf, FM coupling	Part of Z302
	C302D: condenser, FM trimmer	Part of Z302
	C302E: condenser, 25 mmf, FM tuning	Part of Z302
	C302F: condenser, 15 mmf, FM tuning	Part of Z302
	TC302: tuning core, FM tuning	Part of Z302

SECTION 4

C400	Condenser, tuning gang	31-2703-2
	C400A: condenser, FM aerial trimmer	Part of C400
	C400B: condenser, FM mixer trimmer	Part of C400
	C400C: condenser, FM oscillator trimmer	Part of C400
C401	Condenser, 1500-kc trimmer	31-6473
C402	Condenser trimmer assembly, two-section	31-6475-5
	C402A: condenser, shunt trimmer, BC osc.	Part of C402
	C402B: condenser, series trimmer, BC osc.	Part of C402
C403	Condenser, 51 mmf, FM coupling	60-00515307*
C404	Condenser, 100 mmf, filament by-pass	60-10105407*
C405	Condenser, 100 mmf, cathode by-pass	60-10105407*
C406	Condenser, 100 mmf, screen by-pass	60-10105407*
C407	Condenser, 33 mmf, FM coupling	60-00305307*
C408	Condenser, 1500 mmf, plate by-pass 6AG5	60-20155404*
C409	Condenser, 1500 mmf, screen by-pass 6AG5	60-20155404*
C410	Condenser, 220 mmf, converter coupling	60-10245307*
C411	Condenser, 750 mmf, cathode coupling	60-10755301*
C412	Condenser, 100 mmf, grid by-pass	60-10105407*
C413	Condenser, 220 mmf, osc. coupling	60-10245307*
C414	Condenser, 100 mmf, filament by-pass	60-10105407*
J400	Socket, 4-prong, external aerial	27-6214-1
L400	Coil, BC aerial	32-4033-2
L401	Coil, FM aerial	32-4158
L402	Choke, plate choke	32-4061
L403	Coil, FM r-f	32-4159
L404	Coil, BC oscillator	32-4019-4
L405	Coil, FM oscillator	32-4018-2
L406	Choke, parasitic oscillation suppressor	32-4157
LA400	Loop assembly, broadcast	76-1989
R400	Resistor, 2.2 meg., grid load	66-5223340*
R401	Resistor, 150 ohms, cathode bias	66-1151540
R402	Resistor, 47,000 ohms, screen dropping	66-3473340*
R403	Resistor, 1000 ohms, plate decoupling	66-2103340*
R404	Resistor, 2.2 meg., a-v-c decoupling	66-5223340*
R405	Resistor, 1500 ohms, cathode bias	66-2153340*
R406	Resistor, 15,000 ohms, grid leak	66-3153340*
R407	Resistor, 470,000 ohms, a-v-c decoupling	66-4473340*
R408	Resistor, 1500 ohms, a-v-c parasitic oscillation suppressor	Part of L406
FS	Function switch	42-1803
	FS1, section, function switch	Part of 42-1803
	FS2, section, function switch	Part of 42-1803
	FS3, section, function switch	Part of 42-1803
	FS4, section, function switch	Part of 42-1803
TB400	Terminal panel, aerial	38-9942

MISCELLANEOUS

Description	Service Part No.
Bin-Light Parts:	
Bin-light cable, socket and switch assembly	76-2728
Cord, pull (25-ft. spool)	45-1420*
Lamp, bin-light	34-2039*
Spring, pull-cord	28-8991
Cable assembly	41-3754-5
Cable, shielded	41-3754-11
Cabinet and Cabinet Hardware:	
Loop assembly, BC	76-1989
Spring washer (loop mtg.)	28-4186
Loop assembly, FM	76-2029-9
Washer (2 reqd.)	1W52540FA3
Bin mechanism, left hand	76-2176
Bin mechanism, right-hand	76-2174
Cabinet	10643C
Baffle, wood	219041
Baffle and cloth assembly	40-6770
Bezel, wood	16602
Bolt, speaker-mounting	W1587
Dial-scale plate assembly	76-2005
Frame, mounting assembly	76-2199
Hinge, baffle	45-6200
Lamp bracket	56-2332
Grommet (superstructure mounting)	27-4596
Capacitor mounting wafer	45-6409*
Chassis Mounting Hardware:	
Foot assembly, (4) mounting grommet	54-4122
Nut, "T"	W2502FA3
Washer	W2271FA3
Clip, aerial	28-5002FA1
Clip, BC oscillator	56-4303FA1
Dial-Scale Hardware:	
Cord, pointer-drive (25-ft, spool)	45-1459*
Pointer	56-3179
Scale and backplate assembly	76-2226-3
Mounting screws (4)	1W24894FE11
Spacer (2), scale backplate	56-3279FA3
Rubber band	54-4234
Spring, pointer-drive-cord	28-8953
Grommet (2), superstructure mtg. — sub. and plate assy.	27-4596
Spacer (2), superstructure mtg. — sub. and plate assy.	1W29184FA3
Washer (2)	1W52116FA3
Screw (2)	1W25349FA3
Function switch	42-1803
Function-Switch Hardware:	
Link assembly	76-2186
Phono OFF-ON switch	Part of 42-1803
Shaft	56-3298FA11
Washer, "C"	1W42535FA3
Grommet (3), r-f chassis mounting	54-4295
Knob (4)	54-4105
Lamp, panel (2)	34-2040*
Lamp-socket assembly, panel (2)	76-2109
Washer	1W52237FA3
Record Changer Mounting Parts:	
Bolt (4), changer-mounting	56-3295
Grommet (4), changer-mounting	54-4313
Nut, "T" (4), changer-mounting	1W56643FA3
Palnut (4), changer-mounting	1W29061FA3
Spring (8), changer-mounting	56-3043
Socket (3), Loktal	27-6138*
Socket (1), Loktal (7F8)	27-6213*
Socket (1), Miniature (6BA6)	27-6203-4
Socket (3), octal	27-6199*
Socket (1), Miniature (6AG5)	27-6203-3
Speaker Hardware:	
Bolt, mounting	W1587FA3
Cable and plug assembly	41-3701
Nut (4), speaker-mounting	1W19988FA3
Plug, speaker-cable	27-4419-2

MODEL 47-1227 PHILCO CORP.

AM ALIGNMENT PROCEDURE

When the complete AM and FM alignments are to be made, the AM alignment should be made first; if FM alignment is not required, the AM alignment alone may be made.

RADIO DIAL POINTER: With tuning-condenser plates fully meshed, adjust pointer to coincide with index mark at low-frequency end of scale.

VOLUME CONTROL: Maximum clockwise.

TONE CONTROL: Maximum counterclockwise.

AM SIGNAL GENERATOR: Connect ground lead to radio chassis and output lead as indicated in chart.

OUTPUT METER: Connect between terminal 3 (voice-coil connection) of aerial terminal strip (TB400) and chassis.

OUTPUT LEVEL: During alignment, the input signal must be attenuated to hold the output-meter reading below 1.5 volts.

RADIO FUNCTION SWITCH, RADIO DIAL and SIGNAL GENERATOR: Set as indicated in chart.

NOTE: Make up a coil of insulated wire consisting of 6 to 8 turns, about 6" in diameter. Connect coil ends to the signal generator leads and suspend coil near radio broadcast loop.

FM ALIGNMENT PROCEDURE

NOTE: Make AM alignment first.

D-C METER: Connect the negative lead of a 20,000-ohms-per-volt meter to pin 6 of the 7X7 tube and the positive lead to chassis (across the 5-mf condenser, C325, in the discriminator circuit). Use 10-volt meter range.

AM SIGNAL GENERATOR: Use modulated output for the entire alignment. The generator must have sufficient output to give a reading of approximately 9 volts on the d-c meter and the signal should be attenuated during the alignment to keep the meter at this value. Connect the generator ground lead to chassis and the output lead as indicated in the chart.

RADIO FUNCTION SWITCH, RADIO DIAL and SIGNAL GENERATOR: Set as indicated in chart. Allow the radio and generator to warm up for 15 minutes before starting the alignment.

NOTE 1: The resonance of the circuits using coils L401, L403, and L405 may be checked with a powdered-iron tuning core, such as Part No. 56-6100. If the signal strength (meter reading) increases when the iron end is inserted in the coil, compress the turns slightly. If the signal increases when the threaded brass end is inserted, spread the turns. Do not compress or spread the turns excessively; only a small change is required at these frequencies.

NOTE 2: Oscillator coil L405 — Adjust coil for maximum meter reading.

NOTE 3: R-F coil L403 — Adjust coil for maximum meter reading while rocking tuning control.

NOTE 4: Aerial coil L401 — Adjust coil for maximum meter reading.

© John F. Rider

AM A

SIGNAL GENERATOR			RADIO		
STEP	CONNECTIONS TO RADIO	DIAL	FUNCTION SWITCH	DIAL	SPECIAL INSTRUCTIONS
1	Through .1-mf condenser to terminal 1 of TB400	455 kc	BC	540 kc	Adjust for maximum once onl in order.
2	6" coil loosely coupled to loop. See note*	580 kc	BC	580 kc	Adjust for maximum.
3	Same as step 2	1700 kc	BC	1700 kc	Adjust for maximum.
4	Same as step 2	1500 kc	BC	1500 kc	Adjust for maximum.
5	Same as step 2	580 kc	BC	580 kc (approx.)	Rock tuning condenser while a justing for maximum.
6	Repeat steps 3, 4, 5 and 4 in order until no improvement results.				

FM ALIGNMENT CHART

SIGNAL GENERATOR			RADIO		
STEP	CONNECTIONS TO RADIO	DIAL	FUNCTION SWITCH	DIAL	SPECIAL INSTRUCTIONS
1	Through .1-mf condenser to (pin 1) 6BA6 (test point E)	9.1 mc	FM	88 mc	Attenuate signal to give approximate volt meter reading. Adjust for maxin Repeat until no further improveme noticed. After this step, do not touch of these trimmers except C302D in st
2	Through a .1-mf condenser to (pin 8) 7F8 (test point B)	9.1 mc	FM	88 mc	Attenuate signal to give approximate volt meter reading. Adjust for maxin Repeat until no further improveme noticed. After this step, do not touch of these trimmers.
3	Same as step 2	9.1 mc	FM	88 mc	Double check the adjustment of C302 make sure that minimum audio outp obtained from the speaker. This is a cal adjustment. Turn trimmer very sl
4	Connect signal generator to terminal 4, J400	105 mc	FM	105 mc	Maximum meter reading. This is the lator high-frequency padder adjustme
5	Same as step 4	105 mc	FM	105 mc	Max. — rock tuning control.
6	Same as step 4	105 mc	FM	105 mc	Maximum meter reading.
7	Same as step 4	92 mc	FM	92 mc	Adjust L405. See notes 1 and 2.
8	Same as step 4	92 mc	FM	92 mc	Adjust L403. See notes 1 and 3.
9	Same as step 4	92 mc	FM	92 mc	Adjust L401. See notes 1 and 4.
10	Repeat steps 4 through 10 until no further increase is obtained.				

FIGURE 9. CHASSIS

©John F. Rider

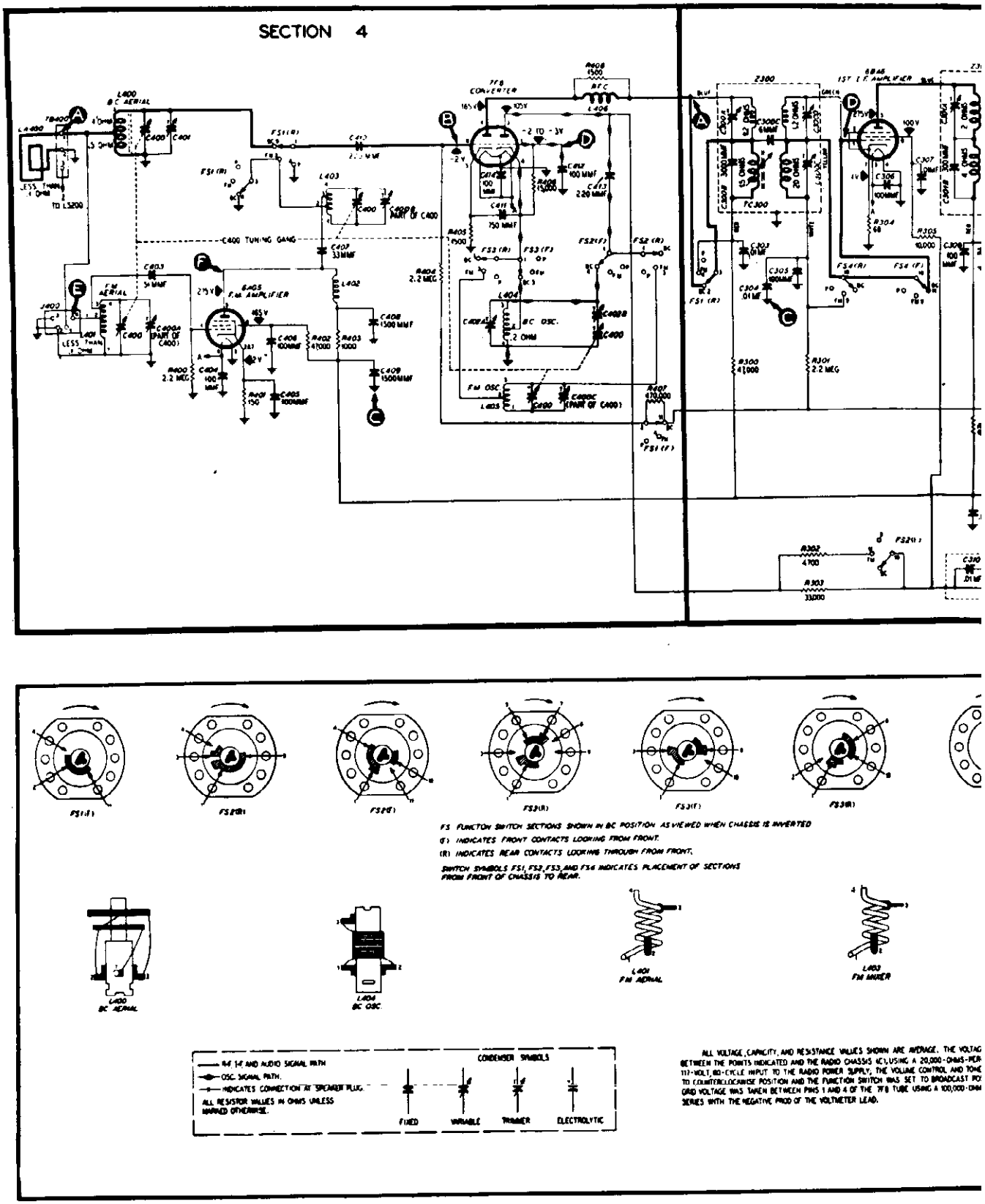

FIGURE 7. PHILCO RADIO-PHONOGRAPH MODEL 47-1227 —

©John F. Rider

PHILCO CORP.

MODEL 47-1227

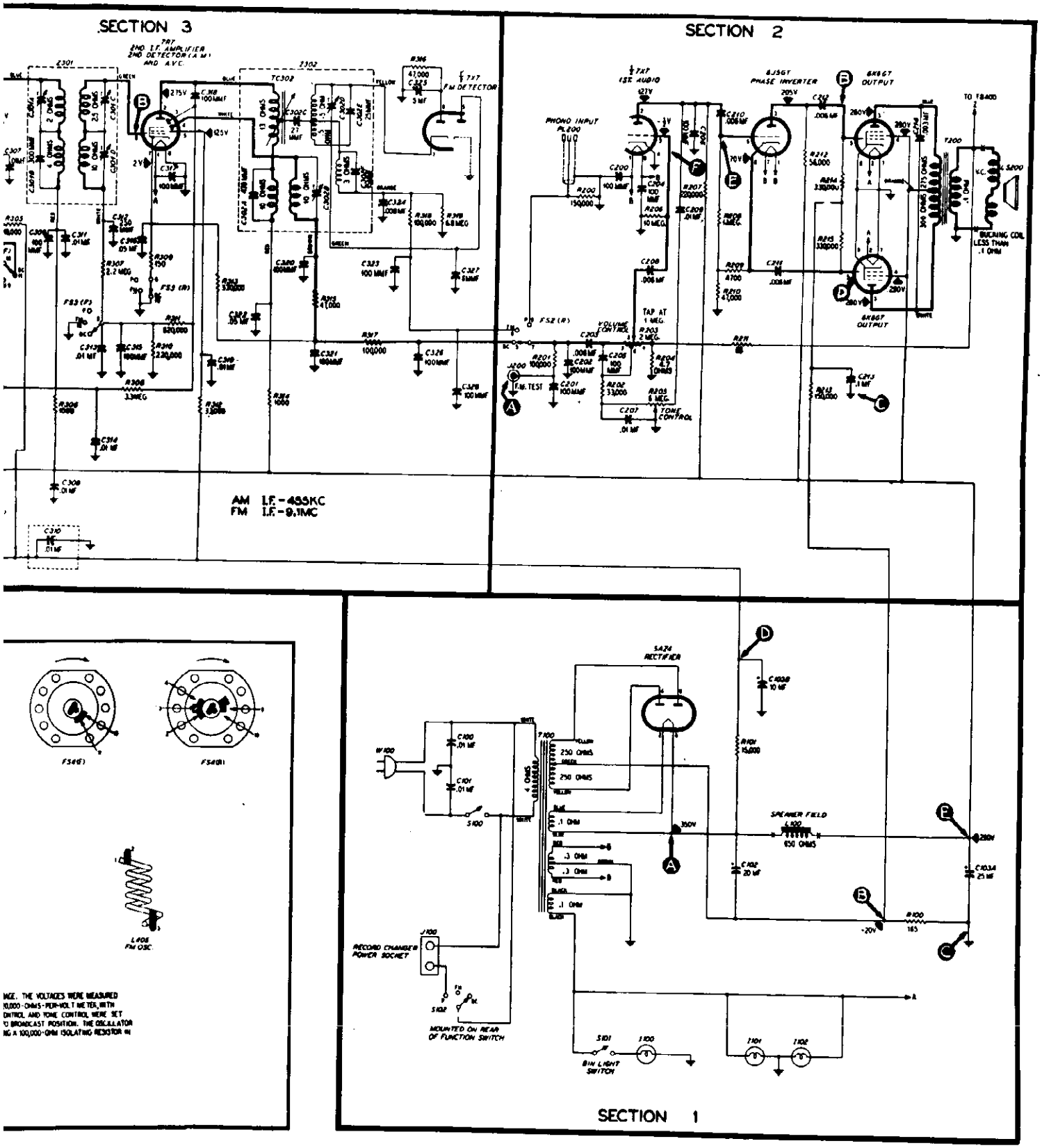

1227 — COMPLETE SECTIONALIZED SCHEMATIC, SHOWING TEST POINTS.

TP-2662

GNMENT CHART

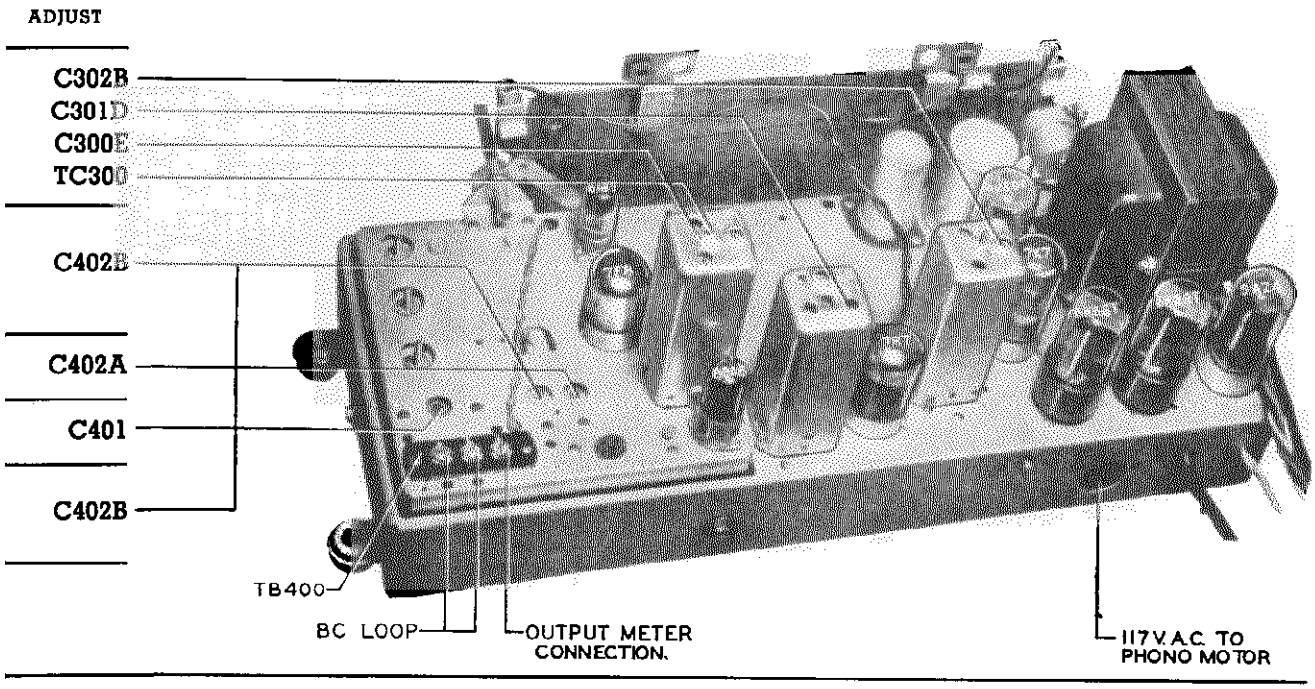

FIGURE 8. CHASSIS VIEW, SHOWING AM TRIMMER LOCATIONS.

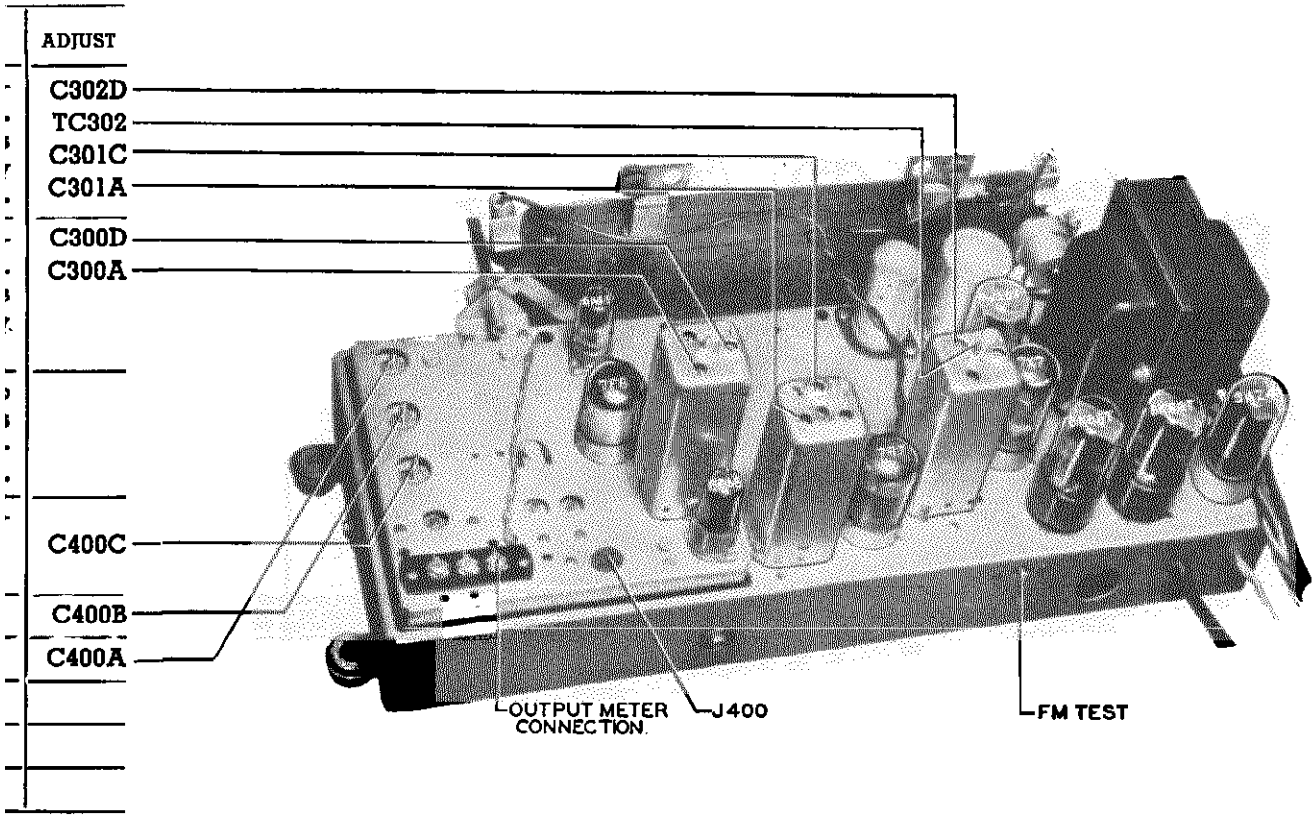

N, SHOWING FM TRIMMER LOCATIONS.

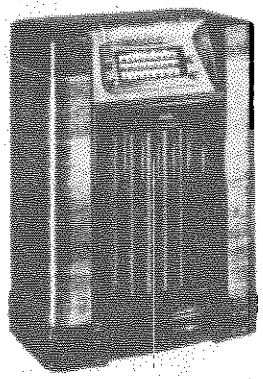

CIRCUIT	Nine-tube superheterodyne
FREQUENCY RANGES:	
BROADCAST	540 to 1720 kc.
SHORT WAVE	9.3 to 15.5 mc.
FM	88 to 108 mc.
AUDIO OUTPUT	10 watts
PUSH BUTTONS	Six: Five for broadcast-station selection, one for phono operation
OPERATING VOLTAGE	105—120 volts, 60 cycles, a.c.
POWER CONSUMPTION	110 watts
AERIALS	Built-in cabinet loop, dipole, or external aerial
INTERMEDIATE FREQUENCIES:	
AM	455 kc.
FM	9.1 mc.
PHILCO TUBES USED (9)	6AG5, 7F8, 6BA6, 7R7, 7X7, 7AF7, 6V6GT (2), 5Y3GT
RECORD PLAYER	Philco Automatic Record Changer, Model D-10A
PANEL LAMPS (2)	6—8-volt, Part No. 34-2040
BIN LAMP	6—8-volt, Part No. 34-2039

PRELIMINARY CHECKS

Before connecting the radio to a source of power, the following steps are recommended:

1. Inspect both top and bottom of the chassis. Make sure that all tubes are secure in their proper sockets, and look for any broken or shorted connections, burned resistors, or other obvious sources of trouble.

2. Measure the resistance between B+ (pin no. 8 of 5Y3GT rectifier tube) and the radio chassis. When the ohmmeter test leads are connected in proper polarity, the highest resistance reading will be obtained. If the reading is lower that 50,0 ohms, check condensers C102 and C103 for leakage or shorts.

SYMBOLIZATION AND TERMINOLOGY

All components in the radio circuit are symbolized and located as follows:

C—condenser LA—loop antenna S—switch
I—pilot lamp LS—loudspeaker T—transformer
L—choke or coil R—resistor Z—electrical ass'y

100-series components are in section 1 — the power supply

200-series components are in section 2 — the audio amplifier

300-series components are in section 3 — the i-f amplifier, second detector and/or discriminator, and a.v.c.

400-series components are in section 4 — the antenna, r-f and oscillator.

CALIBRATING DIAL BACKPLATE

When the radio chassis has been removed from the cabinet, dial calibration and alignment points may be marked on the dial backplate below the pointer.

The method of measuring for these points is illustrated in figure 1. Hold a ruler against the scale backplate, with the start of the ruler at the reference line shown, and mark pencil dots at the proper points for the required frequency settings. When the ruler is correctly placed, the index mark is 1½ inches from the reference point indicated in figure 1.

With the tuning gang fully meshed, the pointer should be adjusted on the dial drive cord to coincide with the index mark.

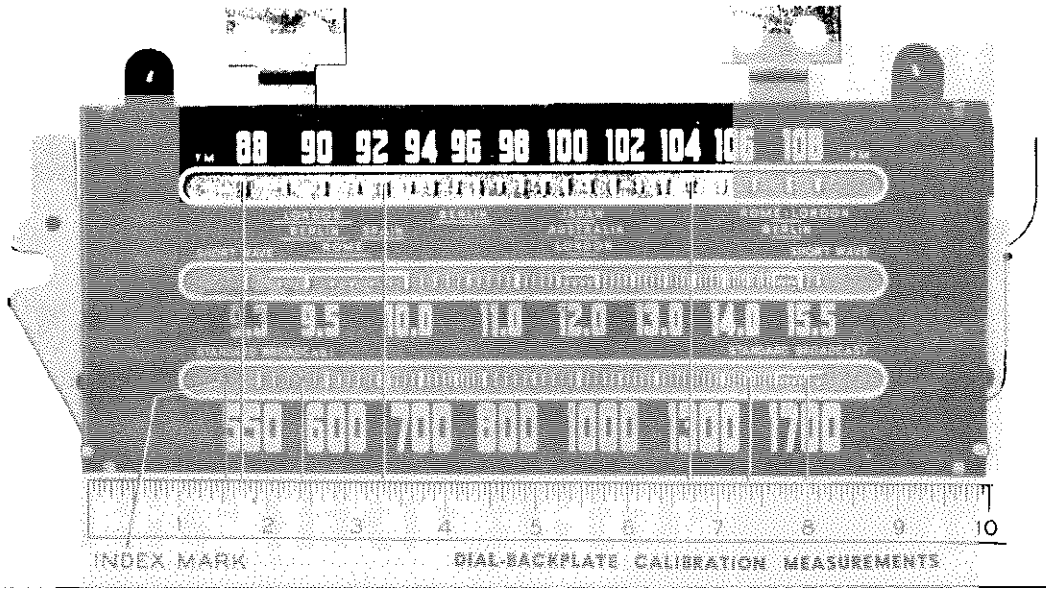

CIRCUIT DESCRIPTION

The radio is designed with three tuning ranges, covering the standard broadcast, short-wave and FM bands by manual tuning. In addition, six push buttons are provided, one for phono-radio switching and five for automatic instant tuning of stations in the broadcast band. The function switch selects manual tuning on the broadcast, short-wave or FM bands, or push-button tuning. The ON-OFF switch is combined with the tone control.

A low-impedance loop within the cabinet provides adequate signal pickup for the broadcast and short-wave bands. In most locations, the built-in FM aerial provides satisfactory reception on the FM band. In areas where FM signals are weak, an outdoor dipole aerial (Philco Part No. 45-1462) will provide additional pickup.

A high-frequency r-f pentode, type 6AG5, is used in the r-f stage (FM only) and a type 7F8 high-frequency dual-triode is employed as a converter. These stages provide high signal-to-noise ratio, high conversion efficiency and good image rejection.

Two transformer-coupled i-f stages are used. The transformers have two sets of windings; one set is tuned to 455 kc for AM reception, the other to 9.1 mc for FM operation. Both primary and secondary FM windings are tuned to provide additional gain at 9.1 mc. A 6BA6 high-frequency pentode is used in the first i-f amplifier stage and the pentode section of a 7R7 high-gain r-f amplifier is used in the second i-f stage. The diode section of the 7R7 is used for AM detection. The high gain achieved in the i-f amplifier at 9.1 mc gives improved FM reception by providing ample signal for proper operation of the FM detector.

A discriminator circuit having improved noise-reducing properties and a superior tuning characteristic is used for FM reception. Greater noise reduction on FM is achieved by preventing short-time amplitude variations across the secondary of the discriminator transformer. The two diodes of a 7X7 tube are connected in series with the secondary, with a large condenser (5 mf) connected across the output circuit of the diodes. As a result of the high current which flows to this condenser whenever the diodes conduct in series, amplitude variations across the secondary are dissipated.

The high-mu triode section of the 7X7 tube is used in the first audio stage. The output of this stage is applied to one section of a dual-triode 7AF7 tube which operates as a phase inverter to drive the two 6V6GT push-pull output tubes. When the PHONO push button is depressed, the cathode circuit of the second i-f amplifier is opened and the other section (phono preamplifier) of the 7AF7 tube is connected to the volume-control circuit in the input of the 7X7 tube.

The push-pull audio-output stage furnishes approximately 10 watts output to the 12-inch electrodynamic loudspeaker.

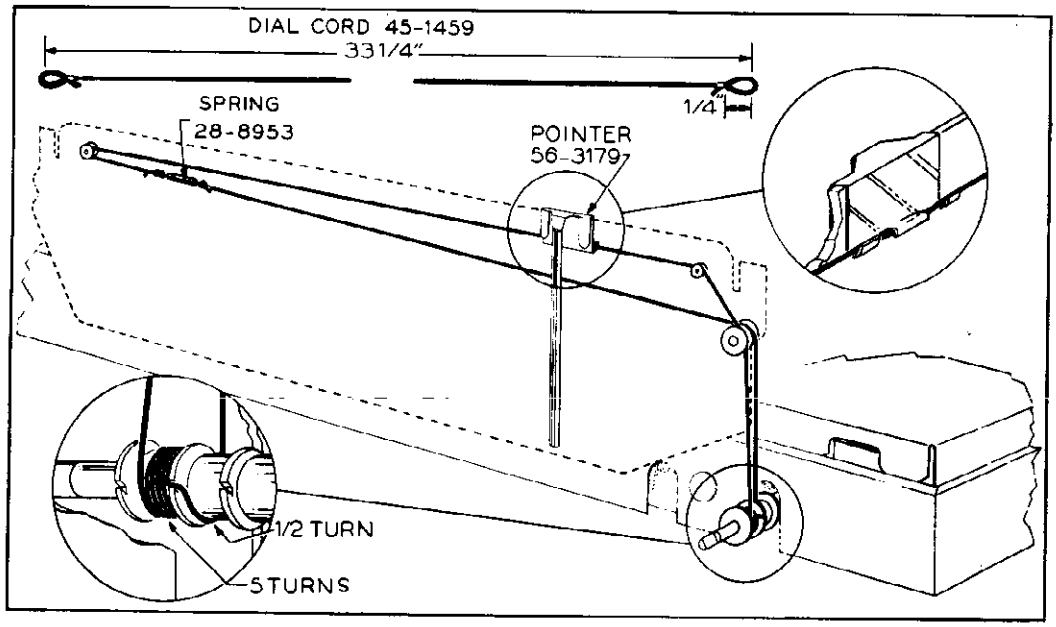

POINTER-DRIVE-CORD INSTALLATION DETAILS.

SECTION 1 – TROUBLE SHOOTING

CAUTION: Do not turn on power with speaker disconnected, as this may cause damage to the set.

Make the tests for this section with a d-c voltmeter, connecting the leads to the test points indicated in the chart and in figure 3. The voltages given were taken with a 20,000-ohms-per-volt meter at a line voltage of 117 volts a.c.

With function switch set to push-button position, turn volume control to minimum and tone control to nearly off position.

Follow steps in proper sequence; if "NORMAL INDICATION" is obtained in step 1, proceed with tests for Section 2; if not, isolate and remedy the trouble in this section.

It will be noted that certain parts in other sections of the radio are listed under "POSSIBLE CAUSE OF ABNORMAL INDICATION", since they may produce abnormal voltage readings in Section 1.

STEP	TEST POINTS	NORMAL INDICATION	ABNORMAL INDICATION	POSSIBLE CAUSE OF ABNORMAL INDICATION
1	E to C D to C	240 volts 190 volts	No voltage or incorrect voltage	Trouble in this section. Isolate by the following tests.
2	A to C	310 volts	No voltage	Defective 5Y3GT, T100, S100, W100, L100. Shorted C103. Open R100.
			Low voltage	Defective 5Y3GT, C103, C102A, C419, C314.
			High voltage	Open R100, L100, or T200.
3	B to C	Negative 16 volts	Low or no voltage	Shorted R101.
			High voltage	Open R101.
4	D to C	190 volts	No voltage	Open R100. Shorted C102A.
			Low voltage	Leaky C102A, C103. Defective C419.
			High voltage	Open L100. T200.
5	E to C	240 volts	No voltage	Open L100. Shorted C103.
			Low voltage	Shorted or leaky C102B, C216.
			High voltage	Shorted L100. Open R100, T200.
Listening test			Abnormal hum may be caused by open C102A or C103.	

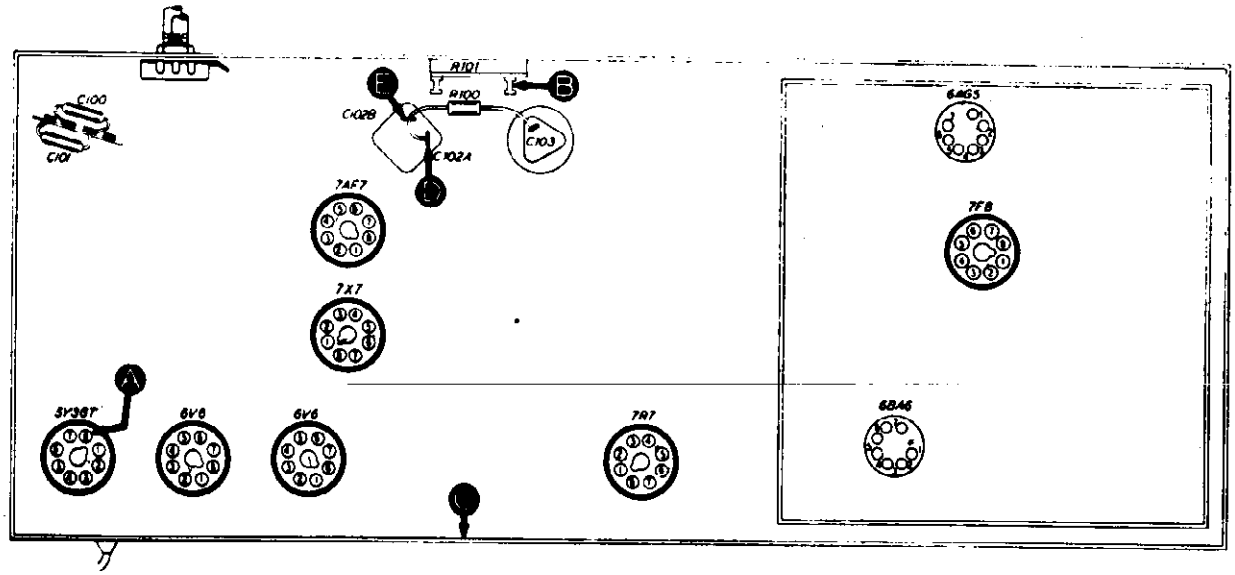

BOTTOM VIEW, SHOWING SECTION 1 TEST POINTS.

MODEL 47-1230 PHILCO CORP.

SECTION 2 – TROUBLE SHOOTING

For all tests in this section, use an audio-frequency signal generator. Connect the generator ground lead to the radio chassis, test point "C"; connect the output lead through a .1-mf condenser to the test points indicated.

Set the radio volume control at maximum, tone control at nearly off position and depress the PHONO push button. Adjust the signal-generator output as required for each step.

If the "NORMAL INDICATION" is obtained in step 1, proceed to the tests in Section 3. If not, isolate and remedy the trouble in this section.

STEP	TEST POINT	NORMAL INDICATION	POSSIBLE CAUSE OF ABNORMAL INDICATION
1	L J	Loud, clear signal with weak signal input	Trouble within this section. Isolate by the following tests.
2	A (7AF7 tube removed)	Loud, clear signal with strong signal input	Defective 6V6GT tube, T200 or LS200. Shorted or leaky C216 or C213.
3	B	Loud, clear signal with strong signal input	Defective 6V6GT tube. Shorted or leaky C208.
4	D	Loud, clear signal with strong signal input	Open C213, R215, R216.
5	E	Loud, clear signal with strong signal input	Open C208 or R217.
6	F (7AF7 tube replaced)	Clear signal, louder than preceding test	Defective 7AF7 tube, C204, R203, R206, R207.
7	G	Clear signal, same volume as step 6	Defective C200, R202. Open C204.
8	H	Loud, clear signal with moderate signal input	Defective 7X7 tube, C205, C308. Open R208.
9	J	Loud, clear signal with moderate signal input	Open R200, C202. Shorted C201, C203. Defective R201 (rotate through entire range).
10	K	Loud, clear signal with moderate signal input	Defective C211, C212.
11	L	Loud, clear signal with weak signal input	Defective 7AF7 tube, push button PB1. Shorted C215.

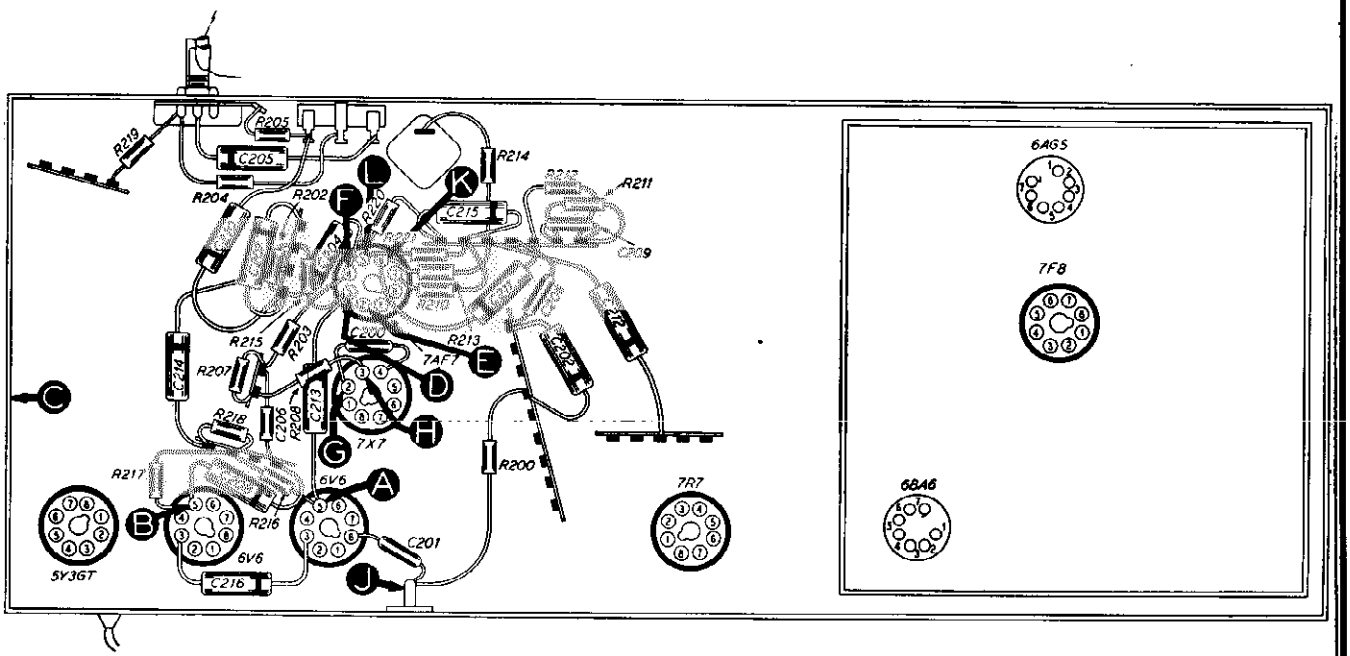

BOTTOM VIEW, SHOWING SECTION 2 TEST POINTS.

© John F. Rider

SECTION 3 – TROUBLE SHOOTING

AM TESTS

For the following tests us an r-f signal generator with modulated output set at 455 kc. Connect the generator ground lead to the radio chassis, test point "C", and connect the output lead through a .1-mf condenser to the test points indicated.

Turn the radio volume control to maximum, tone control to nearly off position and set function switch to push-button position.

If the "NORMAL INDICATION" is obtained in the first step, proceed to the FM tests, or to the tests in Section 4; if not, isolate and remedy the trouble in this section.

STEP	TEST POINT	NORMAL INDICATION	POSSIBLE CAUSE OF ABNORMAL INDICATION
1	E	Loud, clear signal with low signal-generator input	Trouble within this section. Isolate by the following tests.
2	A	Normal signal with moderate input	Defective 7R7 tube, 7X7 tube, Z302. Improperly aligned Z302. Defective C314, C419, C317, C310, C311, C315, C312, C314, C328, FS4 (F).
3	B	Same as step 2.	Defective C308, C309. Defective or improperly aligned Z301.
4	D	Much stronger signal than in step 3; decrease input to obtain normal signal	Defective 6BA6 tube, C307. Open R303, R302, FS4 (R), C303, C305.
5	E	Approximately the same strength signal as in step 4	Defective C304, FS4 (R). Defective or improperly aligned Z300.
	Listening test with station tuned in	Normal, clear reception	Distorted signal with hum: defective R316 or FS4 (F). Intense hum or motorboating: open C419 or C328.

NOTE: Test points marked with an asterisk (*) on the base view are physically located in a different position from the same test points on the corresponding section of the main schematic. However, both test points are electrically identical, but the one shown on the base view has been chosen for greatest accessability during servicing procedure.

FM TESTS

Set the function switch to FM position and follow the instructions preliminary to the AM tests with these exceptions; set the signal-generator frequency to 9.1 mc and detune to one side or the other until a satisfactory test signal is obtained.

STEP	TEST POINT	NORMAL INDICATION	POSSIBLE CAUSE OF ABNORMAL INDICATION
1	A	Normal signal with moderate input	Defective or improperly aligned Z302. Defective FS4 (F).
2	B	Same strength signal as in step 1	Defective Z301.
3	D	Much stronger signal than in step 2; decrease input to obtain normal signal	Same parts listed in AM section, step 4.
4	E	Approximately the same strength signal as in step 3	Defective Z300 or any other part listed in AM section, step 5.

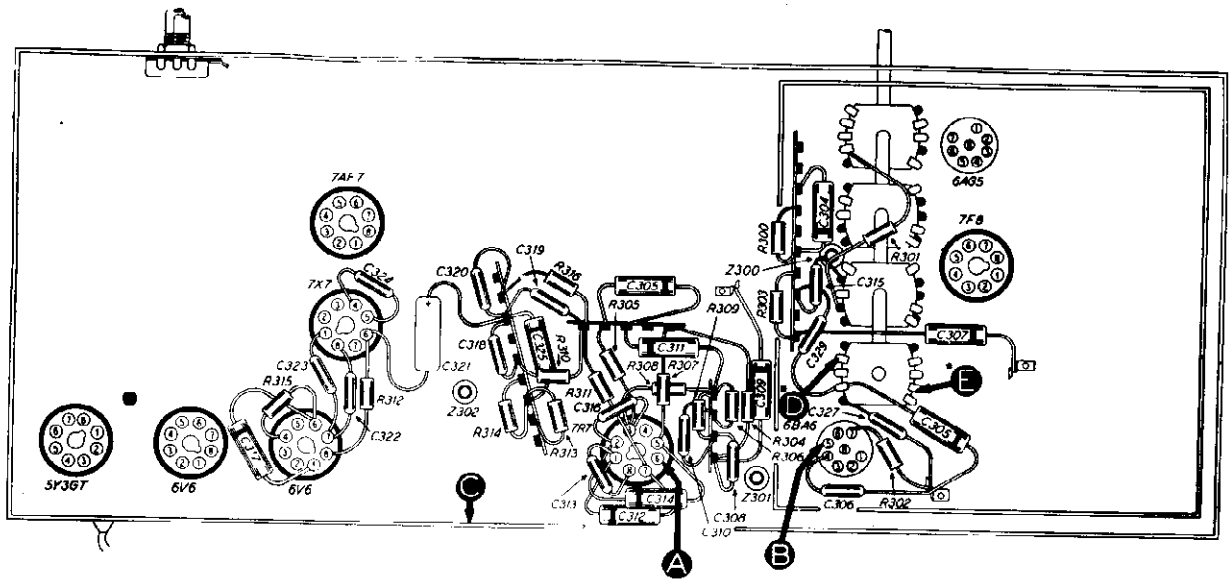

BOTTOM VIEW, SHOWING SECTION 3 TEST POINTS.

SECTION 4 – TROUBLE SHOOTING

For tests indicated in this section, with the exception of oscillator test, use an r-f signal generator with modulated output. Connect the generator ground lead to the radio chassis, test point "C", and connect the output lead through a .1-mf condenser to the test points indicated.

Turn the radio volume control to maximum and tone control to nearly off position.
Set the function switch, tuning control and signal-generator frequency as indicated in chart.

For oscillator tests (AM test chart, step 3; FM test chart, step 3) attach the positive lead of a high-resistance voltmeter to the 7F8 oscillator cathode, test point "E" (pin 4). Connect the negative lead through a 100,000-ohm isolating resistor to the 7F8 oscillator grid (pin 1), test point "F". Use a suitable meter range (0—10 volts).

Absence of negative grid voltage in either AM or FM position of function switch indicates that the oscillator is not working; check the parts listed in the chart for the oscillator tests.

FM TESTS

STEP	TEST POINT	SIG. GEN. SETTING	FUNCTION SWITCH AND TUNING CONTROL	NORMAL INDICATION	POSSIBLE CAUSE OF ABNORMAL INDICATION
1	D	95 mc	FM. Tune to signal from generator	Loud, clear signal with low signal input.	Trouble in this section. Isolate by the following tests.
2	A	95 mc	Same as step 1	Same as step 1	Defective 7F8 tube, C412, C414, C413, FS4 (R), R406. Defective or misaligned Z300. Trouble in FM oscillator circuit (step 3).
3	E to F (osc. test)	Not used	FM. Tune through range	Negative approx. 3 volts	Defective 7F8 tube, FS2 (F), FS2 (R), FS3 (R), L406
4	G	95 mc	FM. Tune to signal from generator	Loud, clear signal with moderate signal input	Defective FS1 (R), C410, C411, C421, L404, L405.
5	D	95 mc	FM. Tune to signal from generator	Loud, clear signal with low signal input	Defective 6AG5 tube, C406, C408, C409, L403.

©John F. Rider

PHILCO CORP. MODEL 47-1230

AM TESTS

STEP	TEST POINT	SIG. GEN. SETTING	FUNCTION SWITCH AND TUNING CONTROL	NORMAL INDICATION	POSSIBLE CAUSE OF ABNORMAL INDICATION
1	B	1000 kc	BC (dial). Tune to signal from generator	Loud, clear signal with low generator input	Trouble in this section. Isolate by the following tests.
2	A	1000 kc	Same as step 1	Same as above	Defective 7F8 tube, C412, C414, C413, FS4 (R), R406. Open R300, R405. Shorted or leaky C304. Defective or misaligned Z300. Trouble in oscillator circuit (step 3).
3	E to F (osc. test)	Not used	BC. Tune through range	Negative approx. 3 volts	Defective 7F8 tube, C413, C414, C417, FS2 (F), FS2 (R), FS3 (R), R409. Shorted or leaky C419. Defective L408, C420.
4	B	1000 kc	BC (dial). Tune to signal from generator	Loud, clear signal with low generator input	Defective L401, FS3 (R), FS1 (R), C412.
5	B	Through range of each push button	PB. Operate each push button	Same as above	Defective FS3 (R), FS1 (R), PB 2, 3, 4, 5, 6. Trouble in push-button oscillator circuit (step 6).
6	E to F (osc. test)	Not used	PB. Operate each button		Defective 7F8 tube, FS2 (F), FS2 (R), L400 A, B, C, D, E or PB 2, 3, 4, 5, 6. C401, C402 or R400.
7	B	12 mc	SW. Tune to signal from generator		Defective FS1 (R), FS3 (R), L402, C404 or trouble in short-wave oscillator circuit (step 8).
8	E to F (osc. test)	Not used	SW. Tune through range	Negative approx. 3 volts	Defective 7F8 tube, FS2 (F), FS2 (R), FS3 (R), L408.

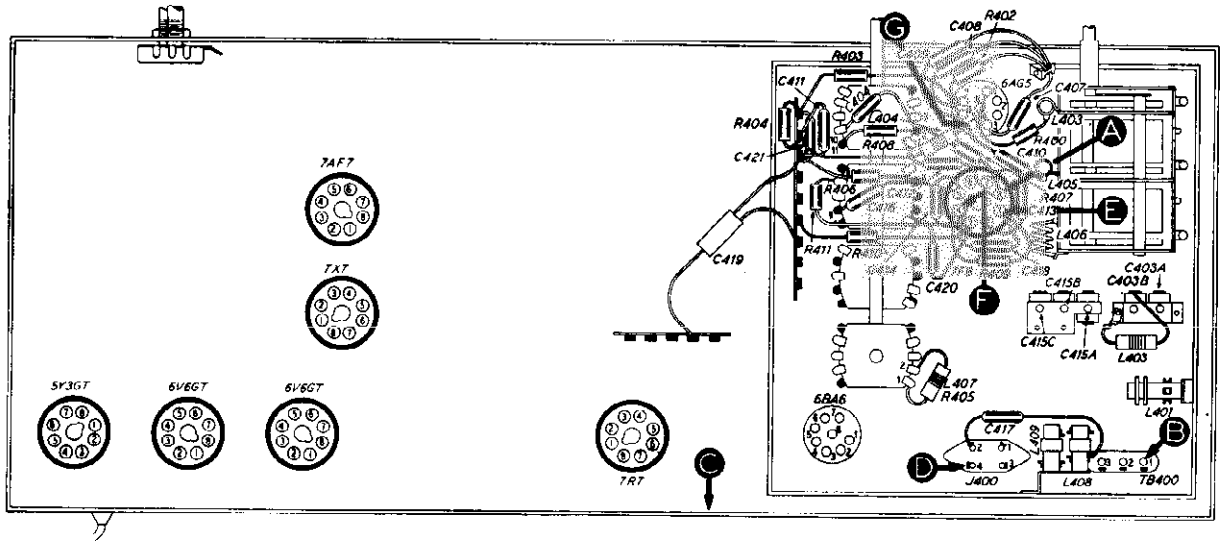

BOTTOM VIEW, SHOWING SECTION 4 TEST POINTS.

MODEL 47-1230 PHILCO CORP.

AM ALIGNMENT PROCEDURE

When the complete AM and FM alignment is to be made, the AM alignment should be made FIRST, however, if FM alignment is not required, the AM alignment alone may be made.

CONNECT OUTPUT METER between terminal 3 (voice-coil connection) of aerial terminal board and chassis.

ADJUST RADIO DIAL POINTER, with tuning-condenser plates fully meshed, to make pointer coincide with index mark at low-frequency end of scale.

CONNECT AM SIGNAL GENERATOR ground lead to radio chassis; connect output lead as indicated in chart.

SET VOLUME CONTROL at maximum and TONE CONTROL at nearly off position.

SET SIGNAL GENERATOR, RADIO FUNCTION SWITCH and RADIO DIAL as indicated in chart.

OUTPUT LEVEL: During alignment, the input signal must be attenuated to hold the output-meter reading below 1.5 volts.

NOTE: Make up a coil of wire, using 6 or 8 turns, about 6 inches in diameter; connect the signal-generator leads and suspend near the radio broadcast loop.

FM ALIGNMENT PROCEDURE

NOTE: Make AM alignment first.

Connect the negative lead of a 20,000-ohms-per-volt, d-c meter, to pin 6 of the 7X7 tube and the positive lead to ground (across the 5-mf condenser, C321, in the discriminator circuit). Use 10-volt range.

Use an r-f signal generator with MODULATED output for the entire alignment. The generator must have sufficient output to give a meter reading greater than 8.5 volts; the reading on the meter should be kept at approximately 9 volts throughout the alignment. Connect the generator ground lead to chassis and the output lead as indicated in the chart.

Set the function switch to FM position. Allow the radio and generator to warm up 15 minutes before starting the alignment.

NOTE: The resonance of the circuits using coils L403, L405 and L406 may be checked by the use of a powdered-iron tuning core, such as Philco Part No. 56-6100. If the signal strength (meter reading) increases when the iron end is inserted in the coil, compress the turns slightly. If the signal increases when the threaded brass end is inserted, spread the turns.

Do not spread or compress turns excessively, since only a small change is required at these frequencies.

Oscillator coil L406: Adjust coil for maximum meter reading.

R-F coil L405: Adjust coil for maximum meter reading while rocking tuning control.

Aerial coil L403: Adjust coil for maximum meter reading.

SETTING THE PUSH BUTTONS

1. Connect the output meter between terminal no. 3 on aerial terminal board and radio chassis.
2. Turn the radio volume control to maximum and the tone control counterclockwise to nearly OFF position.
3. Turn the radio function switch to PB position.
4. Couple the signal generator loosely through a coil of wire to the radio loop aerial, as described in AM alignment Procedure above.
5. Turn on the power and allow the radio to warm up for 15 minutes before starting the adjustments.
6. Starting with the lowest frequency desired, set the signal-generator frequency, push the button, and adjust the associated oscillator tuning core and aerial trimmer for maximum indication on the output meter. During alignment, the input signal must be attenuated to hold the output-meter reading below 1.5 volts.
7. Reset the signal-generator frequency and repeat the procedure for each remaining push button.
8. Turn off the signal generator and make a final adjustment of all tuning cores and trimmer condensers while listening to the stations for which the adjustments are being made.

PUSH-BUTTON (Left to right from front)	FREQUENCY RANGE	OSCILLATOR TUNING CORE	AERIAL TRIMMER
Phono	.....	.....	.....
PB1	540-1000 kc	L400A	C400A
PB2	600-1200 kc	L400B	C400B
PB3	650-1300 kc	L400C	C400C
PB4	850-1500 kc	L400D	C400D
PB5	900-1600 kc	L400E	C400E

© John F. Rider

PHILCO CORP.

MODEL 47-1230

NOTE: Parts marked with an asterisk (*) are general replacement items, and the numbers may not be identical with those on factory assemblies; also, the electrical values of some replacement items furnished may differ from the values indicated in the schematic and parts list. The values substituted in any case are so chosen that the operation of the radio will be either unchanged or improved. When ordering replacements, use only the "Service Part No." in this parts list.

SECTION 1

Reference No.	Description	Service Part No.
C100	Condenser, .01 mf, line filter	61-0120*
C101	Condenser, .01 mf, line filter	61-0120*
C102	Condenser, two section, electrolytic	30-2570-11
	C102A: condenser, 25 mf, electrolytic, power-supply filter	Part of C102
	C102B: condenser, 25 mf, electrolytic, power-supply filter	Part of C102
C103	Condenser, 20 mf, electrolytic, screen-supply filter	30-2555
C104	Condenser, 100 mmf, r-f by-pass	60-10105237*
I100	Lamp, panel	34-2040
I101	Lamp, panel	34-2040
I102	Lamp, bin-light	30-2039
L100	Field, speaker	Part of LS200
R100	Resistor, 15,000 ohms, isolating	66-3155340
R101	Resistor, 135 ohms, bias	33-3435-2
T100	Transformer, power	32-8248
S100	Switch, power on-off	Part of R209
S101	Switch, bin light	42-1702
W100	Cord, line	L3351

SECTION 2

C200	Condenser, 100 mmf, plate r-f by-pass	60-10105237*
C201	Condenser, 100 mmf, r-f by-pass	60-10105237*
C202	Condenser, .006 mf, audio coupling	45-3500-7*
C203	Condenser, 100 mmf, r-f by-pass	60-10105237*
C204	Condenser, .006 mf, audio coupling	45-3500-7*
C205	Condenser, .006 mf, audio coupling	45-3500-7*
C206	Condenser, 100 mmf, r-f by-pass	60-10105237*
C207	Condenser, .01 mf, audio by-pass	61-0120*
C208	Condenser, .006 mf, cathode by-pass	45-3500-7*
C209	Condenser, 100 mmf, r-f by-pass	60-10105237*
C210	Condenser, .01 mf, audio by-pass	61-0120*
C211	Condenser, .01 mf, audio by-pass	61-0120*
C212	Condenser, .2 mf, audio by-pass	45-3500-3*
C213	Condenser, .006 mf, audio coupling	45-3500-7*
C214	Condenser, .2 mf, audio by-pass	45-3500-3*
C215	Condenser, .001 mf, r-f by-pass	45-3500-5*
C216	Condenser, .003, high-frequency cut	61-0117*
J200	Socket, FM test	27-6180*
R200	Resistor, 100,000 ohms, decoupling	66-4103340*
R201	Control, volume, 2 megohms	33-5535-1
R202	Resistor, 220,000 ohms, plate dropping	66-4223340*
R203	Resistor, 1 megohm, grid	66-5103340*
R204	Resistor, 4.7 ohms, degeneration	66-9473340*
R205	Resistor, 33,000 ohms, bass compensation	66-3333340*
R206	Resistor, 4700 ohms, cathode	66-2473340*
R207	Resistor, 47,000 ohms, decoupling	66-3473340*
R208	Resistor, 2 megohms, grid	66-6103340*
R209	Control, tone, 4 megohms	33-5538-1
R210	Resistor, 6800 ohms, cathode	66-2683340*
R211	Resistor, 150,000 ohms, decoupling	66-4153340*
R212	Resistor, 220,000 ohms, decoupling	66-4223340*
R213	Resistor, 150,000 ohms, plate dropping	66-4153340*
R214	Resistor, 47,000 ohms, decoupling	66-3473340*
R215	Resistor, 56,000 ohms, plate dropping	66-3563340*
R216	Resistor, 330,000 ohms, grid	66-4333340*
R217	Resistor, 330,000 ohms, grid	66-4333340*
R218	Resistor, 150,000 ohms, bias filter	66-4153340*
R219	Resistor, 68 ohms, degeneration	66-0683340*
R220	Resistor, 220,000 ohms, decoupling	66-4223340*
R221	Resistor, 4.7 megohms, decoupling	66-5473340*

SECTION 2 (Continued)

Reference No.	Description	Service Part No.
T200	Transformer, output	32-8274
LS200	Loudspeaker	36-1595

SECTION 3

C303	Condenser, .01 mf, r-f by-pass	61-0120*
C304	Condenser, .01 mf, plate r-f by-pass	61-0120*
C305	Condenser, .01 mf, a-v-c filter	61-0120*
C306	Condenser, 100 mmf, filament r-f by-pass	60-10105237*
C307	Condenser, .01 mf, screen r-f by-pass	61-0120*
C308	Condenser, 100 mmf, plate r-f by-pass	60-10105237*
C309	Condenser, .01 mf, plate r-f by-pass	61-0120*
C310	Condenser, 250 mmf, r-f by-pass	60-10255237*
C311	Condenser, .01 mf, a-v-c filter	61-0120*
C312	Condenser, .05 mf, cathode by-pass	61-0170*
C313	Condenser, 100 mmf, filament r-f by-pass	60-10105237*
C314	Condenser, .01 mf, screen r-f by-pass	61-0120*
C315	Condenser, 100 mmf, a-v-c r-f by-pass	60-10105237*
C316	Condenser, 100 mmf, plate r-f by-pass	60-10105237*
C317	Condenser, .05 mf, plate r-f by-pass	61-0170*
C318	Condenser, 100 mmf, r-f by-pass	60-10105237*
C319	Condenser, 100 mmf, r-f by-pass	60-10105237*
C320	Condenser, 100 mmf, r-f by-pass	60-10105237*
C321	Condenser, 5 mf, electrolytic, discriminator	30-2417
C322	Condenser, 100 mmf, filament r-f by-pass	60-10105237*
C323	Condenser, 100 mmf, filament r-f by-pass	60-10105237*
C324	Condenser, 6 mmf, discriminator	30-1224-9
C325	Condenser, .008 mf, r-f by-pass	61-0174*
C326	Condenser, 100 mmf, r-f by-pass	60-10105237*
C327	Condenser, 100 mmf, r-f by-pass	60-10105237*
C328	Condenser, .01 mf, B bus by-pass	61-0120*
C329	Condenser, 100 mmf, r-f by-pass	60-10105237*
R300	Resistor, 47,000 ohms, plate dropping	66-3473340*
R301	Resistor, 2.2 megohms, decoupling	66-5223340*
R302	Resistor, 68 ohms, cathode	66-0683340*
R303	Resistor, 27,000 ohms, screen dropping	66-3273340*
R304	Resistor, 1000 ohms, decoupling	66-2103340*
R305	Resistor, 3.3 megohms, a-v-c filter	66-5333340*
R306	Resistor, 150 ohms, cathode	66-1153340*
R307	Resistor, 68,000 ohms, screen dropping	66-3683340*
R308	Resistor, 820,000 ohms, a.v.c.	66-4823340*
R309	Resistor, 220,000 ohms, a.v.c.	66-4223340*
R310	Resistor, 47,000 ohms, diode load	66-3473340*
R311	Resistor, 330,000 ohms, diode load	66-4333340*
R312	Resistor, 47,000 ohms, discriminator	66-3473340*
R313	Resistor, 6.8 megohms, discriminator	66-5683340*
R314	Resistor, 100,000 ohms, discriminator	66-4103340*
R315	Resistor, 1000 ohms, decoupling	66-2103340*
R316	Resistor, 100,000 ohms, decoupling	66-4103340*
Z300	Transformer, 1st i-f	32-4146
	C300A: condenser, trimmer	Part of Z300
	C300B: condenser, trimmer	Part of Z300
	C300C: condenser, 3000 mmf	Part of Z300
	C300D: condenser, trimmer	Part of Z300
	C300E: condenser, 6 mmf, coupling	Part of Z300
Z301	Transformer, 2nd i-f	32-4156
	C301A: condenser, trimmer	Part of Z301
	C301B: condenser, trimmer	Part of Z301
	C301C: condenser, 300 mmf	Part of Z301
	C301D: condenser, trimmer	Part of Z301
Z302	Transformer, AM detector/FM discriminator	32-4147
	C302A: condenser, 27 mmf	Part of Z302
	C302B: condenser, trimmer	Part of Z302
	C302C: condenser, 25 mmf	Part of Z302
	C302D: condenser, 470 mmf	Part of Z302
	C302E: condenser, trimmer	Part of Z302

MODEL 47-1230 PHILCO CORP.

SECTION 4

Reference No.	Description	Service Part No.
C400	Push-button padder-strip assembly	31-6479-1
	C400A, B, C, D, and E: condensers	Part of C400
C401	Condenser, 220 mmf, r-f voltage divider	30-1224-4
C402	Condenser, 1000 mmf, r-f voltage divider	30-1224-15
C403	Condenser, 2-section, trimmer	31-6476
	C403A: condenser, shunt trimmer, BC aerial	Part of C403
	C403B: condenser, shunt trimmer, SW aerial	Part of C403
C404	Condenser, 250 mmf, spread tuning, SW aerial coil	60-10255237*
C405	Condenser, main tuning gang	31-2703-2
	C405A: condenser, FM aerial coil trimmer	Part of C405
	C405B: condenser, FM r-f coil trimmer	Part of C405
	C405C: condenser, FM osc. coil trimmer	Part of C405
C407	Condenser, 100 mmf, filament r-f by-pass	60-10105237*
C408	Condenser, 100 mmf, r-f by-pass	60-10105237*
C409	Condenser, 1500 mmf, screen r-f by-pass	60-20155404*
C410	Condenser, 33 mmf, r-f coupling	30-1223-6*
	SW osc. coil	60-10255237*
C411	Condenser, 1500 mmf, r-f by-pass	60-20155404*
C412	Condenser, 250 mmf, mixer grid, blocking	60-10255237*
C413	Condenser, 100 mmf, filament r-f by-pass	60-10105237*
C414	Condenser, 750 mmf, cathode coupling	60-10755301*
C415	Condenser, trimmer and padder assembly, 3-section	31-6464
	C415A: BC osc. series padder	Part of C415
	C415B: BC osc. shunt trimmer	Part of C415
	C415C: SW osc. shunt trimmer	Part of C415
C416	Condenser, 250 mmf, spread tuning,	
C417	Condenser, 6 mmf, neutralizing (SW)	30-1224-9
C418	Condenser, 100 mmf, osc. grid feedback	60-10105237*
C419	Condenser, .01 mf, B · by-pass	61-0120*
C420	Condenser, 250 mmf, osc. plate feedback	60-10255237*
C421	Condenser, 1500 mmf, B · bus r-f by-pass	60-20155404*
J400	Socket, external aerial	27-6214-1
L400	Push-button coils	
	L400A, B, C: coil, push-button	32-4059-2
	L400D, E: coil, push-button	32-3779
L401	Coil, broadcast aerial	32-4033-2
L402	Coil, FM aerial	32-4158
L403	Coil, short-wave aerial	32-4050-6
L404	Coil, r-f choke	32-4061
L405	Coil, FM r-f	32-4159
L406	Coil, FM oscillator	32-4018-2
L407	Coil, choke, parasitic suppressor	32-4157
L408	Coil, broadcast oscillator	32-4019-4
L409	Coil, short-wave oscillator	32-4113
LA400	Broadcast-loop assembly	76-1989
R400	Resistor, 10 ohms, FM grid	66-0103340*
R401	Resistor, 6800 ohms, push-button oscillator cathode	66-2683340*
R402	Resistor, 150 ohms, FM r-f cathode	66-1153340*
R403	Resistor, 47,000 ohms, FM r-f screen dropping	66-3473340*
R404	Resistor, 1000 ohms, FM r-f plate decoupling	66-2103340*
R405	Resistor, 1500 ohms, mixer plate parasitic suppressor	Part of C407
R406	Resistor, 1500 ohms, mixer cathode	66-2153340*
R407	Resistor, 2.2 megohms, mixer grid	66-5223340*
R408	Resistor, 470,000 ohms, isolating	66-4473340*
R409	Resistor, 15,000 ohms, oscillator grid	66-3153340*
R410	Resistor, 33,000 ohms, plate dropping	66-3333340*
R411	Resistor, 47,000 ohms, dropping	66-3473340*
R412	Resistor, 6800 ohms, push-button oscillator grid	66-2683340*

SECTION 4 (Continued)

Reference No.	Description	Service Part No.
S400	Switch, function	42-1801
TB400	Terminal board, aerial	38-9942

MISCELLANEOUS

Description	Service Part No.
Bin-Light Parts:	
Bin-light cable, socket and switch assembly	76-2728
Bracket, bin-light	56-2332
Bracket, switch	56-3373
Cord, pull (25-ft. spool)	45-1420
Socket assembly, bin-light lamp	41-3742
Spring, pull-cord	28-8991
Cabinet and Cabinet Hardware:	
Back, cardboard	40-6825
Baffle, wood	219054
Baffle and cloth assembly	40-6772
Bezel, wood	16601
Bin mechanism, left-hand	76-2176
Bin mechanism, right-hand	76-2174
Cabinet	10645D
Dial scale and backplate assembly	76-2226-2
Foot, glide	45-6042
Frame, mounting assembly	76-2199
Front, tilt	45-6308
Hinge	45-6200
Stud, back cardboard	W2235FA9
Clip, BC aerial coil	28-5002FA1
Clip, BC or SW oscillator coil	56-4303FA1
Dial-Scale Hardware:	
Cord, pointer drive (25-ft. spool)	45-1459
Pointer	56-3179
Scale backplate and pulley assembly	76-2005
Spacer, scale backplate	56-3279
Spring, pointer-drive-cord	28-8953
Function-Switch Hardware:	
Bracket assembly, shaft	76-2187FA3
Link assembly	76-2186
Shaft, link assembly	56-3271FA11
Washer, "C"	1W42535FA3
Grommet, r-f chassis mounting	54-4295
Knob, tuning	54-4105
Lamp, panel	34-2040
Lamp-socket assembly, panel	54-7278
Loop assembly, BC	76-1989
Push-Button-Assembly Hardware:	
Bracket and lug assembly, rear mounting	76-2214
Core, push-button tuning	56-6100
Cover, push-button switch assembly	76-1343
Grommet, push-button switch mounting	27-4596
Knob, push-button	54-4217
Screw, mounting bracket	1W19670FA3
Sleeve, push-button switch mounting	28-5665FA3
Spring strip, tuning-core stabilizer	56-2249
Switch, a.c., phono motor	42-1756
Tab kit	40-6786
Tab cover	27-5737
Terminal strip, push-button coil mounting	56-2250
Record Changer Mounting Parts, etc.:	
Bolt, changer-mounting	56-3295
Grommet, changer-mounting	54-4313
Nut, T, changer-mounting	1W56643FA3
Palnut, changer-mounting	1W29061FA3
Spring, changer-mounting	56-3043
Cable and plug assembly, phono input	41-3735-2
Transformer, phono input	32-8256
Shield, panel lamp	54-7278
Scale backplate and pulley assembly	76-2005
Socket, external aerial	27-6214-1
Socket, Loktal	27-6177
Socket, Loktal	27-6213
Socket, miniature 7-pin (mica-filled)	27-6203-1
Socket, octal	27-6174
Socket, phono power	27-6200
Speaker Hardware:	
Bolt, mounting	W1587
Cable and plug assembly	41-3701
Nut, speaker-mounting	1W19988FA3
Plug, speaker-cable	27-4419-2
Wafer, capacitor-mounting	54-7101

a John F. Rider

MODEL 47-1230

AM ALIGNMENT CHART

SIGNAL GENERATOR			RADIO		
STEP	CONNECTIONS TO RADIO	FREQUENCY	FUNCTION SWITCH	FREQUENCY	SPECIAL INSTRUCTIONS
1	Through .1-mf condenser to terminal 3 of TB400	455 kc	BDCST	540 kc	Adjust trimmers for maximum output-meter reading. Align ONCE ONLY in the order given.
2	Loosely coupled to radio loop. (See Note *)	15 mc	SW	15 mc	Start with loose trimmer screw and adjust for maximum on FIRST signal heard. Image should be heard at 14.1 mc.
3	Same	15 mc	SW	15 mc	Adjust for maximum while rocking tuning control.
4	Same		BDCST		Preset C415A by tightening then backing off 1/4 turn.
5	Same	1700 kc	BDCST	1700 kc	Adjust for maximum.
6	Same	1500 kc	BDCST	1500 kc	Adjust for maximum.
7	Same	580 kc	BDCST	580 kc	Adjust for maximum while rocking tuning control.
8	Repeat steps 5, 6 and 7 until no further increase is noted.				

FM ALIGNMENT CHART

SIGNAL GENERATOR			RADIO		
STEP	CONNECTIONS TO RADIO	FREQUENCY	FUNCTION SWITCH	FREQUENCY	SPECIAL INSTRUCTIONS
1	Through .1-mf condenser to pin 1 of 6BA6 (test point D)	9.1 mc	FM	88 mc	Attenuate signal to give approximately a 10-volt meter reading. Adjust for maximum. Repeat until no further improvement is noted. After this step do not touch any of these trimmers except C302B (in step 3).
2	Through .1-mf condenser to pin 8 of 7F8 (test point A)	9.1 mc	FM	88 mc	Attenuate signal to give approximately a 10-volt reading. Adjust for maximum. Repeat until no further improvement is noted. After this step do not touch these trimmers.
3	Same	9.1 mc	FM	88 mc	Double check adjustment of C302B to make certain that minimum audio output is obtained from speaker. This is a critical adjustment: turn trimmer very slowly.
4	Connect to pin 4, J400	105 mc	FM	105 mc	Maximum meter reading. This is the oscillator high-frequency padder adjustment.
5	Same	105 mc	FM	105 mc	Adjust for maximum while rocking tuning control.
6	Same	105 mc	FM	105 mc	Adjust for maximum.
7	Same	92 mc	FM	92 mc	Adjust L406. (See note **).
8	Same	92 mc	FM	92 mc	Adjust L405. (See note **).
9	Same	92 mc	FM	92 mc	Adjust L403. (See note **).
10	Repeat steps 4 through 10 until no further increase is obtained.				

©John F. Rider

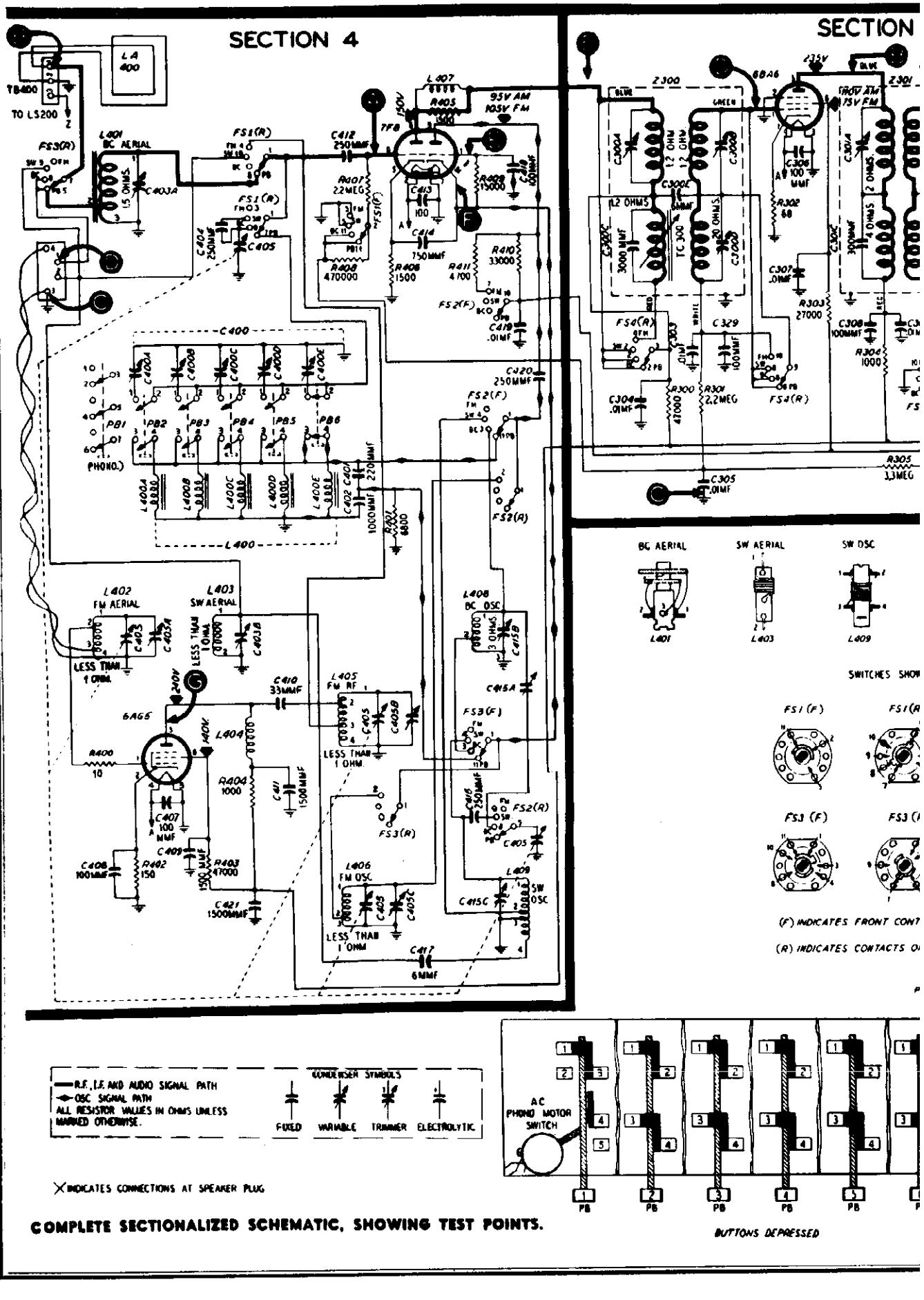

COMPLETE SECTIONALIZED SCHEMATIC, SHOWING TEST POINTS.

CORP

MODEL 47-1230

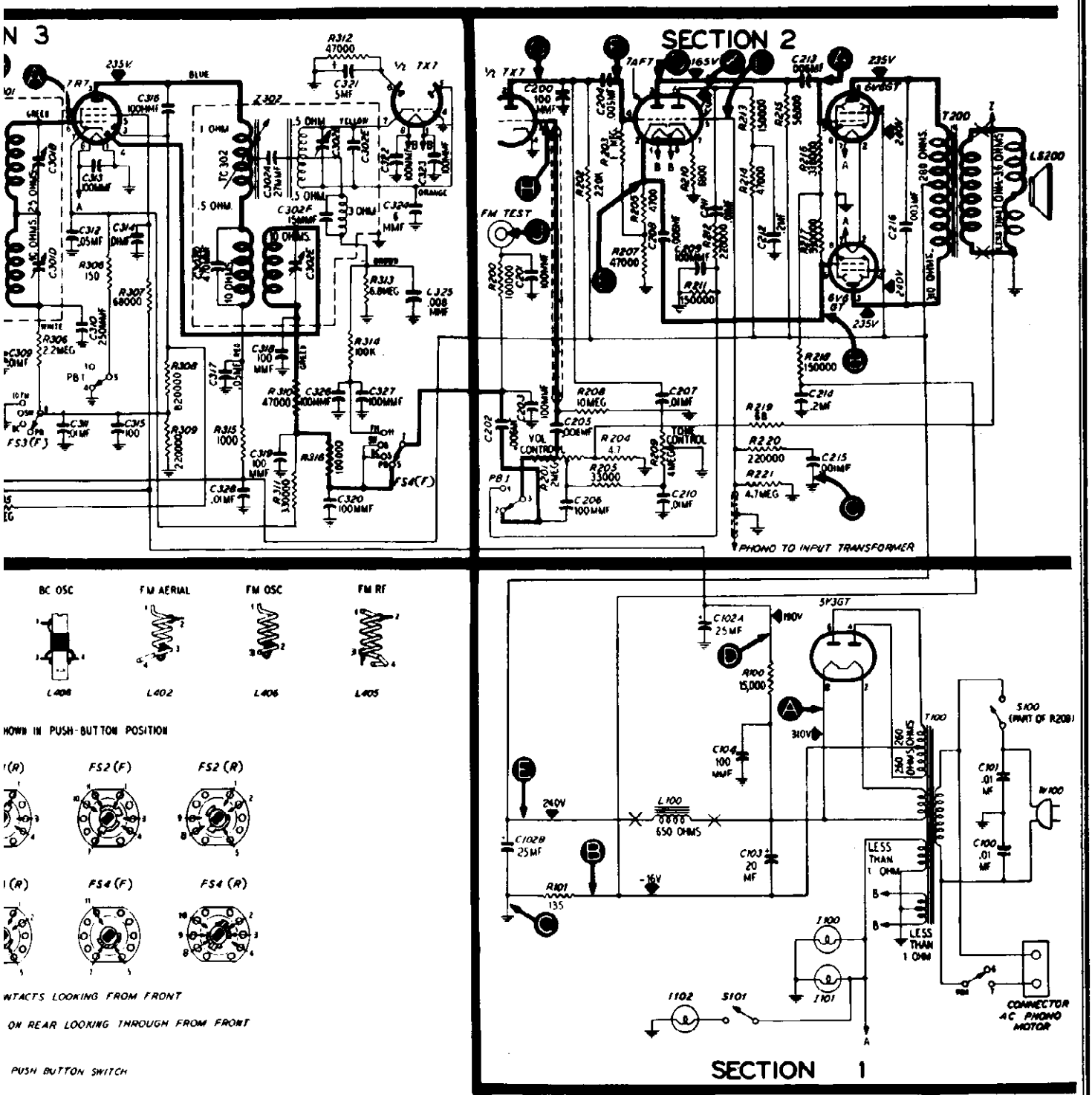

NOTE

ALL VOLTAGE, CAPACITY AND RESISTANCE VALUES SHOWN ARE AVERAGE. THE VOLTAGES WERE MEASURED BETWEEN THE POINTS INDICATED AND THE RADIO CHASSIS (C), USING A 20,000 OHMS-PER-VOLT METER, WITH 117-VOLT, 60-CYCLE INPUT TO THE RADIO POWER SUPPLY. THE VOLUME AND TONE CONTROLS WERE SET TO COUNTERCLOCKWISE POSITIONS, AND THE FUNCTION SWITCH WAS SET TO PUSH-BUTTON POSITION

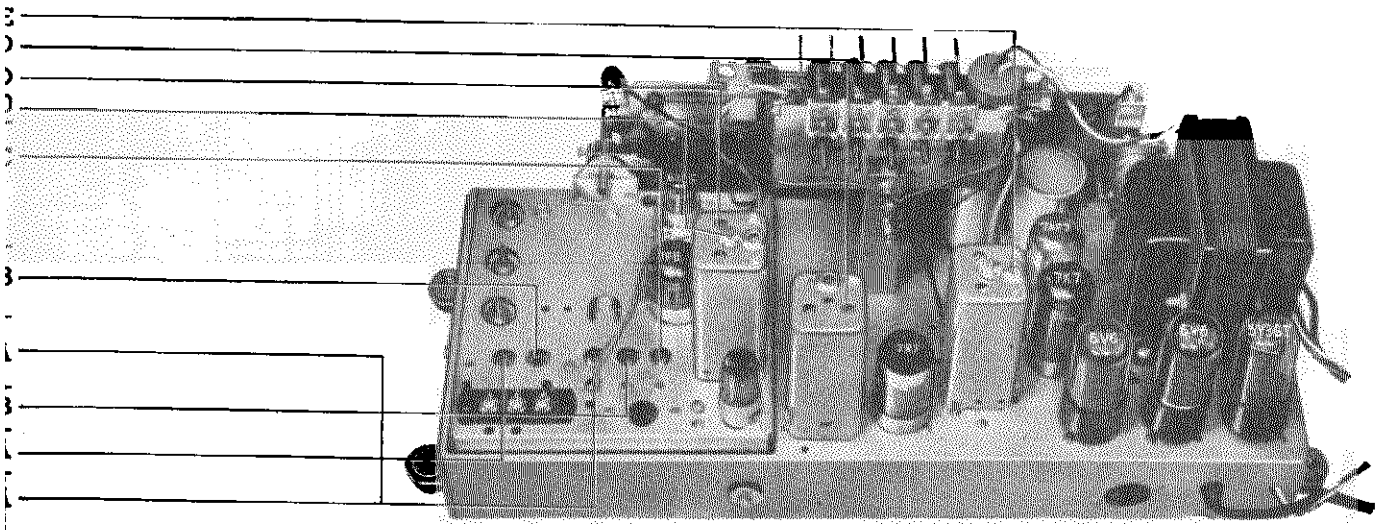

CHASSIS VIEW, SHOWING AM TRIMMER LOCATIONS.

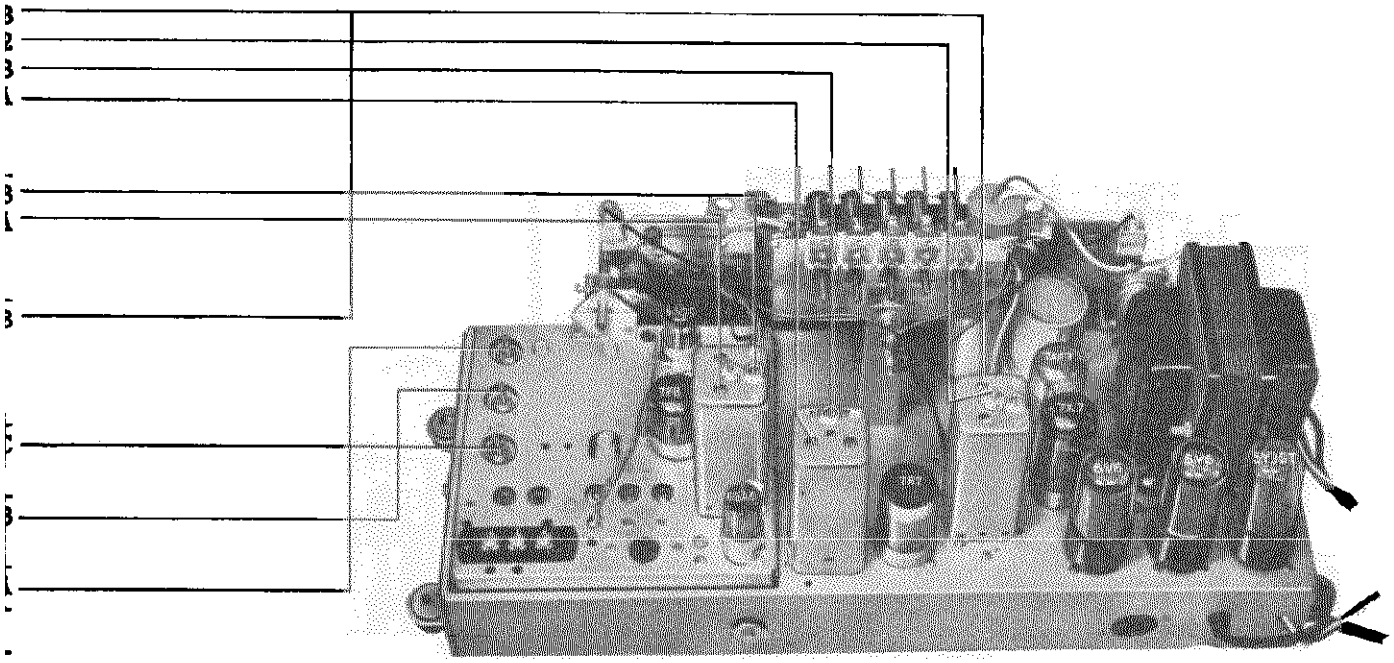

CHASSIS VIEW, SHOWING FM TRIMMER LOCATIONS.

Philco TROUBLE SHOOTING *Procedure*

For rapid trouble shooting, the radio circuit is divided into four sections, with test points specified for each section; these sections and test points are indicated in the schematic diagram. The trouble-shooting procedure given for each section includes a simplified test chart and a bottom view of the chassis showing the locations of the test points and the components of that section.

In each chart, the first step is a master check for determining whether trouble exists in that section, without going through the entire test procedure.

Failure to obtain the "NORMAL INDICATION" in any given step indicates trouble within the circuit under test.

After isolating the trouble to a single stage, the defect is located by: first, testing the tube; second, measuring tube electrode voltages; third, measuring circuit resistances; fourth, substituting condensers. The trouble revealed should be corrected before testing further.

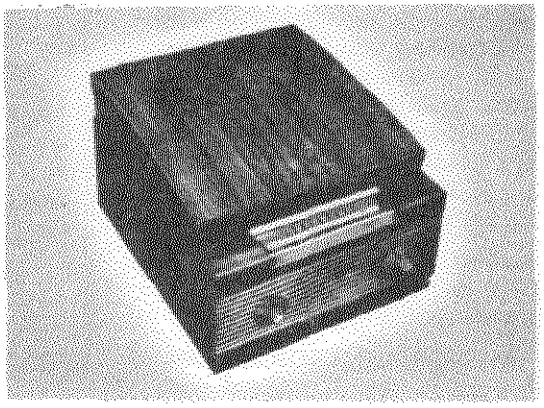

MODEL 48-1253

SPECIFICATIONS

CABINET	Wood, walnut finish
CIRCUIT	Five-tube superheterodyne
FREQUENCY RANGE	540—1600 kc.
AUDIO OUTPUT	2.2 watts
OPERATING VOLTAGE	105—120 volts, 60 cycles, a.c.
POWER CONSUMPTION	
Radio	60 watts
Phonograph	30 watts
AERIAL	Built-in high-impedance loop; terminal provided for external aerial
INTERMEDIATE FREQUENCY	455 kc.
PHILCO TUBES (5)	7A8, 7B7, 7C6, 50A5, 50X6
PHONOGRAPH	Philco Automatic Record Changer Model M-8 (for service information, see manual PR-1478)

TP-3632

Circuit Description

Philco Model 48-1253 is a table-model radio-phonograph combination consisting of a five-tube superheterodyne radio and a Philco Model M-8 Automatic Record Changer, operating on a.c. only. The tuning range is 540—1600 kc. The built-in high-impedance loop aerial is adequate in most areas; where greater pickup is required, an external aerial may be connected. When the external aerial is not in use, the aerial lead on the radio should be connected to the chassis.

The converter stage employs a 7A8 pentagrid converter. The i-f amplifier is a 7B7 high-transconductance tube, followed by a 7C6 duo-diode, triode, operating as detector, a.v.c., and first-audio amplifier. The 50A5 output tube works into a permanent-magnet dynamic speaker.

In the power supply, a 50X6 operates in a voltage-doubler circuit. A resistance-capacitance type of filter is used.

For service information on the record changer, refer to service manual PR-1478, Philco Automatic Record Changer Model M-8.

Preliminary Checks

To avoid possible damage to the radio, the following preliminary checks should be made before turning on the power:

1. Inspect both the top and the bottom of the chassis. Make sure that all tubes are secure in the proper sockets, and look for any broken or shorted connections, burned resistors, or other obvious sources of trouble.

2. Measure the resistance between B+ (pin 2 of 50X6 rectifier tube) and the B– bus, test point B. When the ohmmeter test leads are connected in the proper polarity, the highest resistance reading will be obtained. If the reading is lower than 3700 ohms, check condensers C101, C102, and C103A for leakage or shorts.

The resistance value above, which is much lower than normal, is not intended as a quality check of these condensers; the value given is the lowest at which the rectifier will operate safely while the voltage tests of Section 1 are performed.

MODEL 48-1253 PHILCO CORP.

Section 1 TROUBLE SHOOTING

Make the tests for this section with a d-c voltmeter. Connect the negative lead to B–, test point B; connect the positive lead to the test points indicated in the chart. The voltage readings given were taken with a 20,000-ohms-per-volt meter at a line voltage of 117 volts, a.c.

Set the radio-phono switch to RADIO, and the volume control to minimum.

If the "NORMAL INDICATION" is obtained in step 1, proceed with the tests for Section 2; if not, isolate and correct the trouble in this section.

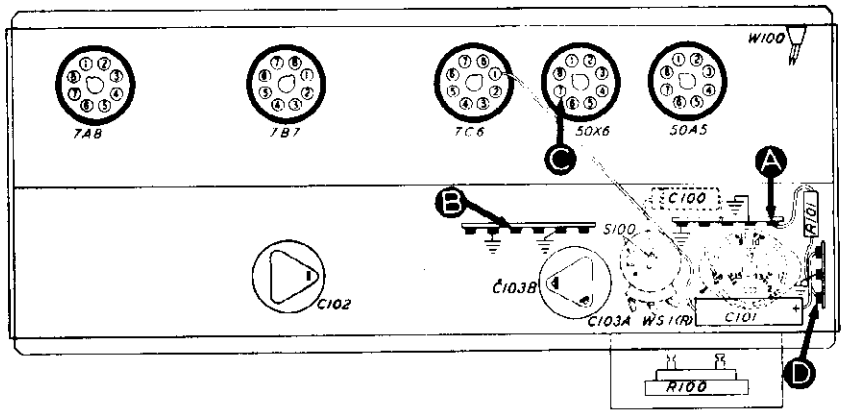

Figure 1. Bottom View, Showing Section 1 Test Points

STEP	TEST POINT	NORMAL INDICATION	POSSIBLE CAUSE OF ABNORMAL INDICATION
1	A	96v	Trouble in this section. Isolate by the following tests.
2	C	220v	Defective: 50X6. Shorted or leaky: C101, C102. Open: R100, C101, C102, S100, WS-1(R).
3	D	207v	Shorted or leaky: C103A. Open: C103A, R101, T200*, R204*.
4	A	96v	Shorted or leaky: C103B. Open: R204*.
Listening test: Abnormal hum may be caused by open C101, C102, C103A, or C103B.			

* This part, located in another section, may cause abnormal indication in this section.

Section 2 TROUBLE SHOOTING

For the tests in this section, use an audio-frequency signal generator. Connect the generator ground lead to B–, test point B; connect the output lead through a .1-mf. condenser to the test points indicated in the chart.

Set the volume control to maximum. For all the tests except step 5, set the radio-phono switch to RADIO.

If the "NORMAL INDICATION" is obtained in step 1, proceed with the tests for Section 3. If not, isolate and correct the trouble in this section.

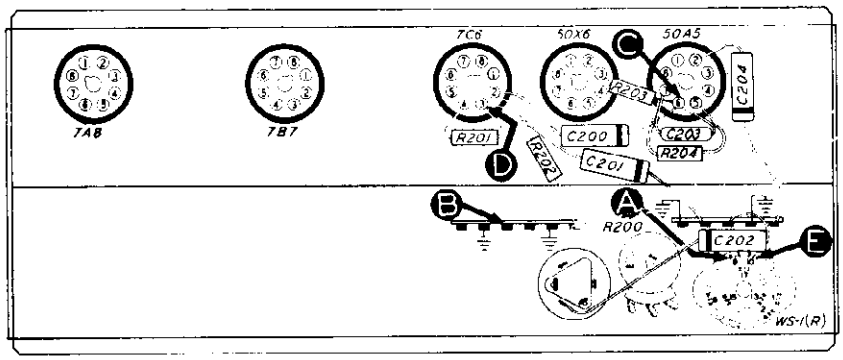

Figure 2. Bottom View, Showing Section 2 Test Points

STEP	TEST POINT	NORMAL INDICATION	POSSIBLE CAUSE OF ABNORMAL INDICATION
1	A	Loud, clear signal with weak signal input.	Trouble in this section. Isolate by the following tests.
2	C	Clear signal with strong signal input.	Defective: 50A5. Open: LS200, T200, R204, R203. Shorted: LS200, T200, C200, C204, C203. Leaky: C200, C203, C204.
3	D	Same as step 1.	Defective: 7C6. Open: R202, R203, C200. Shorted: C200.
4	A	Same as step 1.	Open: WS-1(R), C201, R200 (rotate through range).
5*	E	Same as step 1.	Open: WS-1(R).
Listening Test: Distortion may be caused by open R201 or R203, or by shorted or leaky C201. Hum in phono operation may be caused by open C202.			

* Radio-phono switch in PHONO position.

Section 3 TROUBLE SHOOTING

For the tests in this section, use an r-f signal generator, with modulated output, set at 455 kc. Connect the generator ground lead to B–, test point B; connect the output lead through a .1-mf. condenser to the test points indicated in the chart.

Set the radio-phono switch to RADIO, and the volume control to maximum.

If the "NORMAL INDICATION" is obtained in step 1, proceed with the tests for Section 4; if not, isolate and correct the trouble in this section.

Since the circuit location of test point A for this section is the same as that of test point C for Section 4, the effectiveness of step 1 as a master check is dependent upon the condition of certain parts in Section 4; these parts are listed under "POSSIBLE CAUSE OF ABNORMAL INDICATION."

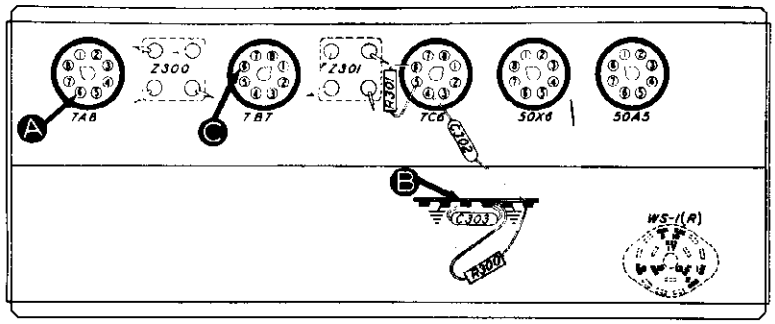

Figure 3. Bottom View, Showing Section 3 Test Points

STEP	TEST POINT	NORMAL INDICATION	POSSIBLE CAUSE OF ABNORMAL INDICATION
1	A	Loud, clear signal with weak signal input.	Trouble in this section. Isolate by the following tests.
2	C	Clear signal with strong signal input.	Defective: 7B7, 7C6 (diode section). Open or shorted: Z301 pri. or sec., C301A, C301B. Misaligned: Z301. Open: R404*, R300, WS-1(R). Shorted: C302, C303. Shorted or leaky: C405*.
3	A	Same as step 1.	Defective: 7A8*. Open or shorted: Z300 pri. or sec., C300A, C300B. Misaligned: Z300.

* This part, located in another section, may cause abnormal indication in this section.

Section 4 TROUBLE SHOOTING

For the tests in this section, with the exception of the oscillator test, use an r-f signal generator, with modulated output. Connect the generator ground lead to B–, test point B; connect the output lead through a .1-mf. condenser to the test points indicated in the chart.

Set the radio-phono switch to RADIO, and the volume control to maximum.

If the "NORMAL INDICATION" is not obtained in step 1, isolate the trouble by following the remaining steps.

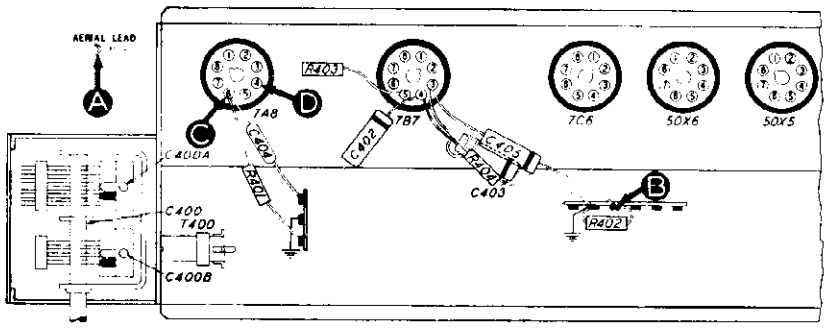

Figure 4. Bottom View, Showing Section 4 Test Points

STEP	TEST POINT	SIG. GEN. FREQ.	RADIO TUNING	NORMAL INDICATION	POSSIBLE CAUSE OF ABNORMAL INDICATION
1	A	1000 kc.	Tune to signal.	Loud, clear signal with weak signal input.	Trouble in this section. Isolate by the following tests.
2	C	1000 kc.	Tune to signal.	Same as step 1.	Shorted: C400, C400A. Trouble in oscillator circuit (step 3).
3	D to B Osc. Test (see note below).	—	Tune through range.	Negative 2.4 to 3 volts.	Defective: 7A8. Open or shorted: T400 pri. or sec., C400B. Shorted: C400.
4	A	1000 kc.	Tune to signal.	Same as step 1.	Open: C401, C404, LA400, C400A. Shorted: C400A.

Listening Test: Hum may be caused by open R401 or C402.

OSCILLATOR TEST

Connect the positive lead of a high-resistance voltmeter to B–, test point B; connect the prod end of the negative lead through a 100,000-ohm isolating resistor to the 7A8 oscillator grid (pin 4), test point D. Use a suitable meter range, such as 0—10 volts. Proper operation of the oscillator is indicated by a negative voltage, 2.4 to 3 volts (measured with a 20,000 ohms-per-volt meter), throughout the tuning range.

MODEL 48-1253 PHILCO CORP.

REPLACEMENT PARTS LIST

NOTE

Part numbers marked with an asterisk (*) are general replacement items. These numbers may not be identical with those on factory assemblies; also, the electrical values of some replacement items may differ from the values indicated in the schematic diagram and parts list. The values substituted in any case are so chosen that the operation of the radio will be either unchanged or improved. When ordering replacements, use only the "Service Part No."

SECTION 1

Reference Symbol	Description	Service Part No.
C100	Condenser, line filter, .05 mf.	61-0122*
C101	Condenser, electrolytic, voltage doubler, 15 mf., 200v	30-2568-13
C102	Condenser, electrolytic, voltage doubler, 15 mf., 200 v	30-2575-11
C103	Condenser, electrolytic, 2-section	30-2568-14
C103A	Condenser, filter, 40 mf., 250v	Part of C103
C103B	Condenser, filter, 10 mf., 250v	Part of C103
I100	Pilot lamp	34-2477*
R100	Resistor, filter, 500 ohms	33-3435-3
R101	Resistor, filter, 15,000 ohms	66-3154340*
S100	Switch, off-on	Part of R200
W100	Line cord and plug	41-3755-16
WS	Wafer switch (single wafer), radio-phono	42-1824
WS-1(R)	Wafer-switch section	Part of WS

SECTION 2

C200	Condenser, d-c blocking, .006 mf.	45-3500-7*
C201	Condenser, d-c blocking, .01 mf.	61-0120*
C202	Condenser, by-pass, .2 mf.	45-3500-3*
C203	Condenser, by-pass, 220 mmf.	60-10205307*
C204	Condenser, tone compensation, .05 mf.	61-0122*
LS200	Speaker	36-1625
R200	Volume control, .5 megohm	33-5558
R201	Resistor, grid bias, 10 megohms	66-6103340*
R202	Resistor, plate load, 470,000 ohms	66-4473340*
R203	Resistor, grid return, 470,000 ohms	66-4473340*
R204	Resistor, cathode bias, 130 ohms	66-1133340*
T200	Transformer, output	32-8329
WS-1(R)	Wafer-switch section (see WS, Section 1)	Part of WS

SECTION 3

C300A	Condenser, trimmer	Part of Z300
C300B	Condenser, trimmer	Part of Z300
C301A	Condenser, trimmer	Part of Z301
C301B	Condenser, trimmer	Part of Z301
C302	Condenser, i-f filter, 100 mmf.	60-10105407*
C303	Condenser, i-f filter, 100 mmf.	60-10105407*
R300	Resistor, i-f filter, 47,000 ohms	66-3473340*
R301	Resistor, a-v-c filter, 2.2 megohms	66-5223340*
WS-1(R)	Wafer-switch section (see WS, Section 1)	Part of WS
Z300	Transformer, 1st i-f	32-3962-3
Z301	Transformer, 2nd i-f	32-3948-11

SECTION 4

Reference Symbol	Description	Service Part No.
C400	Condenser, tuning gang	31-2727-1
C400A	Condenser, r-f trimmer	Part of C400
C400B	Condenser, oscillator trimmer	Part of C400
C401	Condenser, blocking, 5 mmf.	30-1221-5*
C402	Condenser, a-v-c filter, .05 mf.	61-0122*
C403	Condenser-and-choke assembly, r-f by-pass, .2 mf.	76-1161
C404	Condenser, d-c blocking, 100 mmf.	60-10105407*
C405	Condenser, screen by-pass, .05 mf.	61-0122*
LA400	Loop aerial	76-2127-5
R400	Resistor, aerial discharge, 150,000 ohms	66-4153340*
R401	Resistor, grid load, 1 megohm	66-5103340*
R402	Resistor, leakage, 120,000 ohms	66-4123340*
R403	Resistor, grid return, 120,000 ohms	66-4123340*
R404	Resistor, screen dropping, 47,000 ohms	66-3473340*
T400	Transformer, oscillator	32-4095-2

MISCELLANEOUS

Description	Service Part No.
Backplate Assembly and Hardware	
Backplate assembly	76-3228
Drive cord (25-foot spool), tuning gang	45-8750*
Drive cord (25-foot spool), pointer	45-8750*
Panel, diffusing	76-3203
Pointer, dial	56-4992
Spring, gang drive	56-2617
Spring, diffusing panel	56-4989FA3
Spring, pointer	28-8953
Cabinet and Hardware	
Baffle and cloth	40-6956
Cabinet	10684
Foot, rubber	54-4377
Hinge	45-6067
Lid support	45-6061
Scale, dial	27-5976
Scale trim, bottom	56-4998
Scale trim, top	56-4999
Strap, scale mounting	56-2088
Changer Mounting Hardware	
Grommet	54-4313
Plate, corner	56-3103
Nut	1W56643FA3
Spring	56-3043FA15
Cable, pickup	41-3735-11
Knob, radio-phono	54-4484
Knob, tuning	76-3138
Knob, volume	76-3138-1
Link assembly, radio-phono switch	76-3229
Palnut	1W29061FA3
Pilot-lamp-socket assembly	27-6233-9
Pulley and shaft	76-3204
Socket, loktal	27-6138*
Shield, tube	56-2731

ALIGNMEN

The radio may be aligned with t
signal generator, it is necessary to

DIAL POINTER—Turn tuning condensers to full-mesh position. Adjust dial pointer to index dot, located to the left of "55."

OUTPUT METER—Connect between right-ha (output) lug and center (chassis) lug of termi panel shown in figure 6.

STEP	SIGNAL GENERATOR		RADIO		ADJUS
	CONNECTIONS TO RADIO	DIAL SETTING	DIAL SETTING	SPECIAL INSTRUCTIONS	
1				Turn C301B (copper screw) down tight.	
2	Ground lead to B–; output lead through .05-mf. condenser to pin 6 of 7A8 (test point C of Section 4).	455 kc.	540 kc.	Adjust trimmers, in order given, for maximum output.	C301 C301 C300 C300
3	Radiating loop (see note below).	1600 kc.	1600 kc.	Adjust for maximum.	C400
4	Same as step 3.	1500 kc.	1500 kc.	Adjust for maximum.	C400

RADIATING LOOP: Make up a coil of insulated wire consisting of 6 to 8 turns, about 6 inches in diameter. Connect coil end signal-generator leads, and suspend coil near radio loop.

SYMBOLIZATION

The components in the radio circuit are symbolized according to the types of parts and the sections of the radio in which the parts are located. The prefix letter of the symbol designates the type of part, as follows:

C—condenser
I—pilot lamp
L—choke or coil
LA—loop aerial
LS—loud-speaker
R—resistor
S—switch
T—transformer
WS—wafer switch
Z—electrical assembly

The number of the symbol designates the section in which the part is located, as follows:

100-series components are in Section 1—the power supply.
200-series components are in Section 2—the audio circuits.
300-series components are in Section 3—the i-f amplifier, detector, and a-v-c circuits.
400-series components are in Section 4—the aerial and oscillator circuits.

A suffix letter identifies the part as a component of the assembly which bears an identical number without a suffix letter, and with perhaps a different prefix letter.

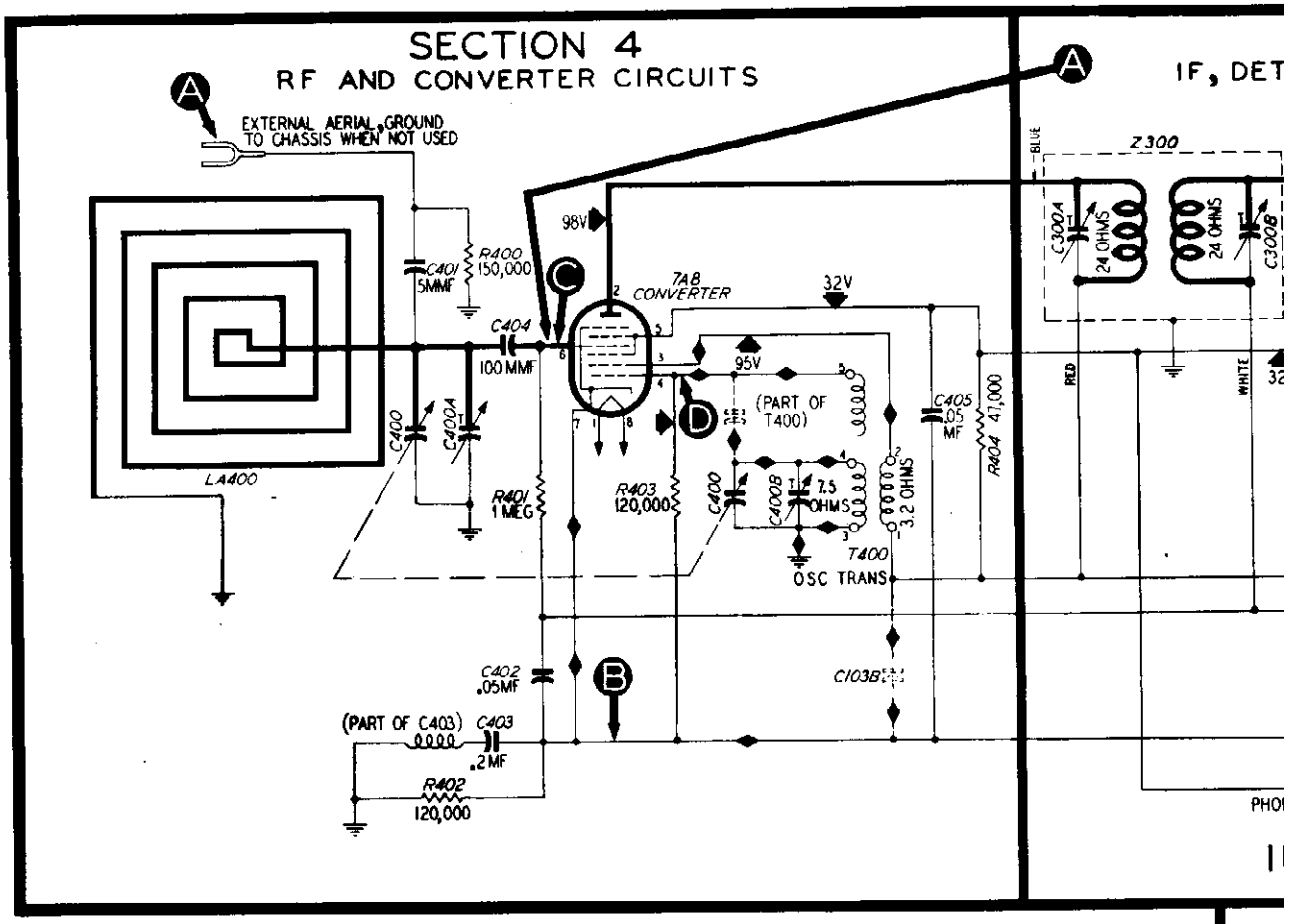

Figure 5. Philco Radio Model 48-1253, Sect

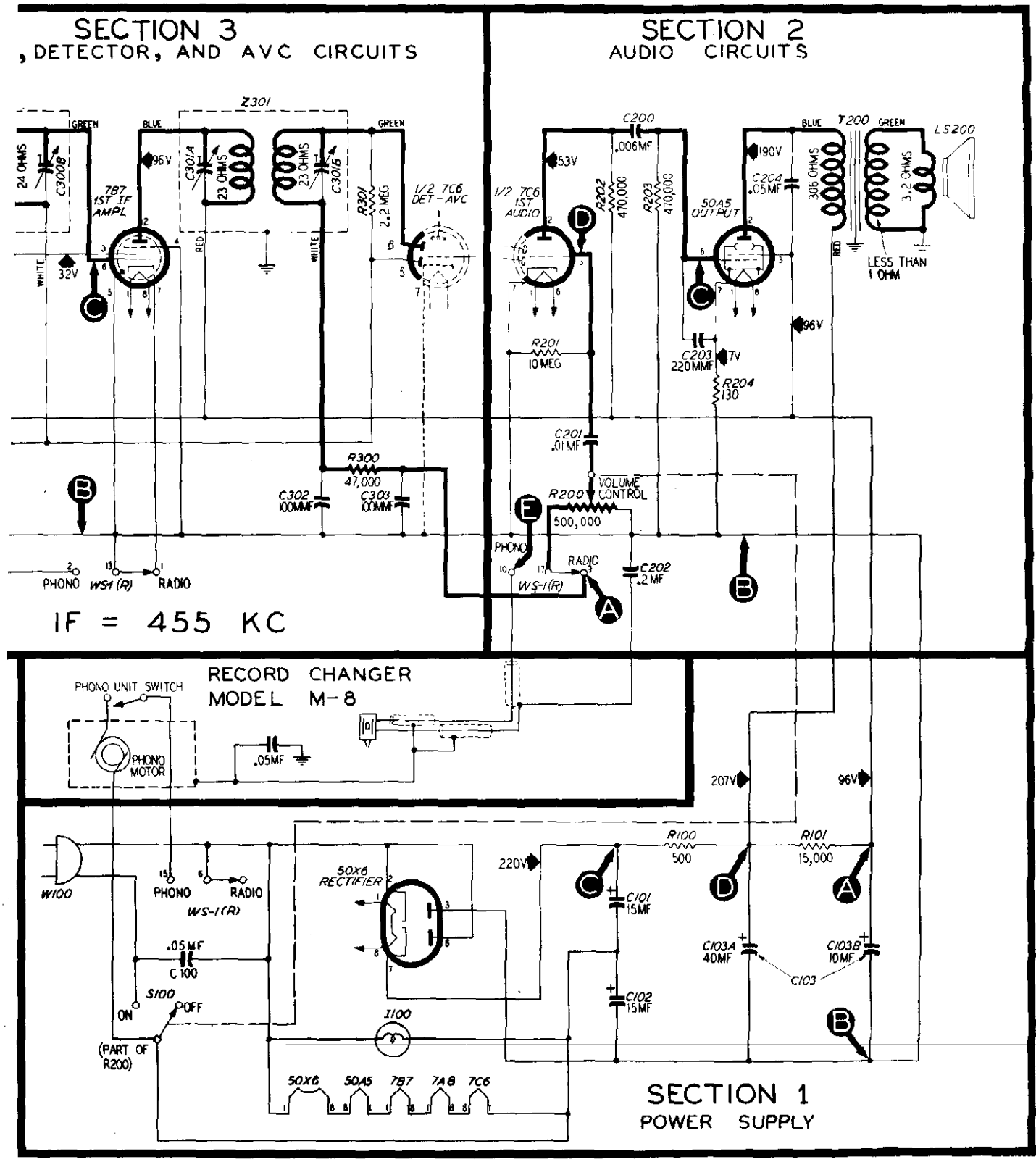

TP-4091

3, Sectionalized Schematic Diagram, Showing Test Points

PROCEDURE

hassis in the cabinet. To connect the
ove the bottom plate from the chassis.

SIGNAL GENERATOR—Connect as indicated in chart.

OUTPUT LEVEL—During alignment, input signal must be attenuated to hold output-meter reading below .5 volt.

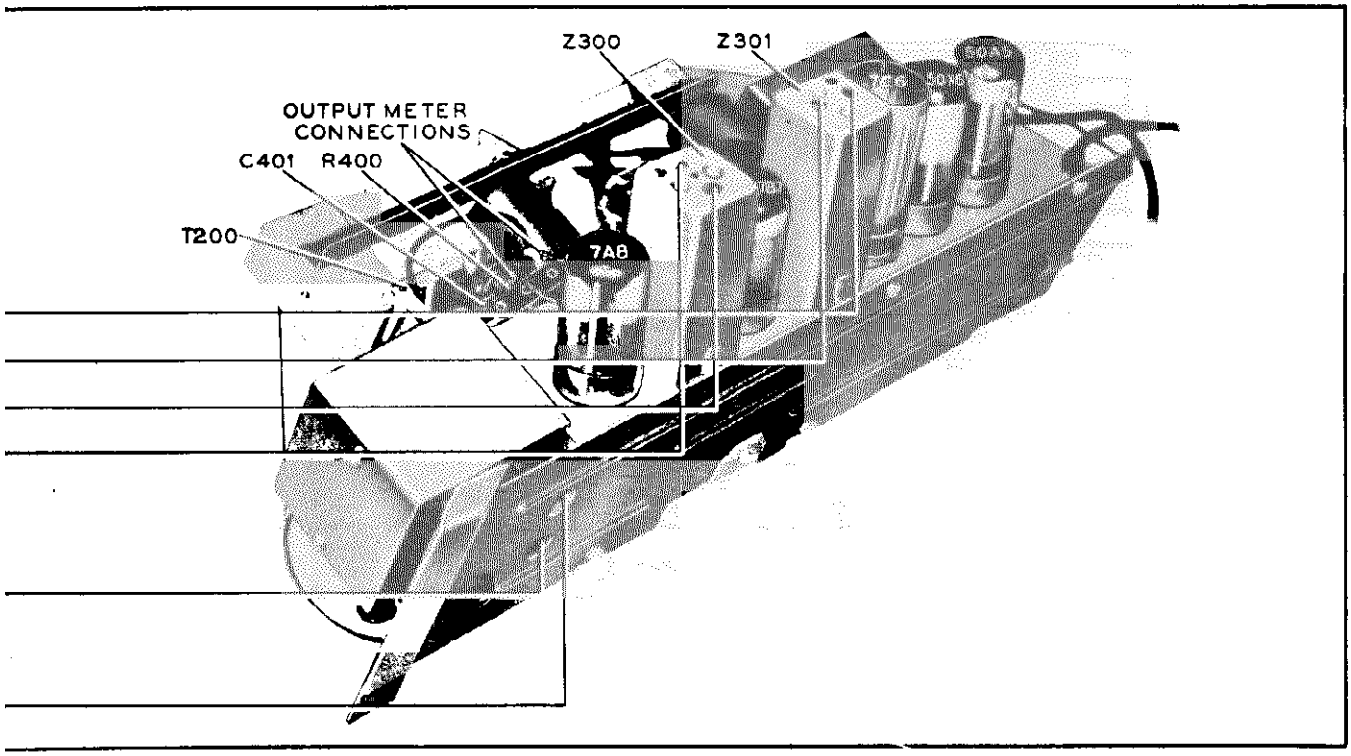

TP-3982

Figure 6. Chassis View, Showing Trimmer Locations

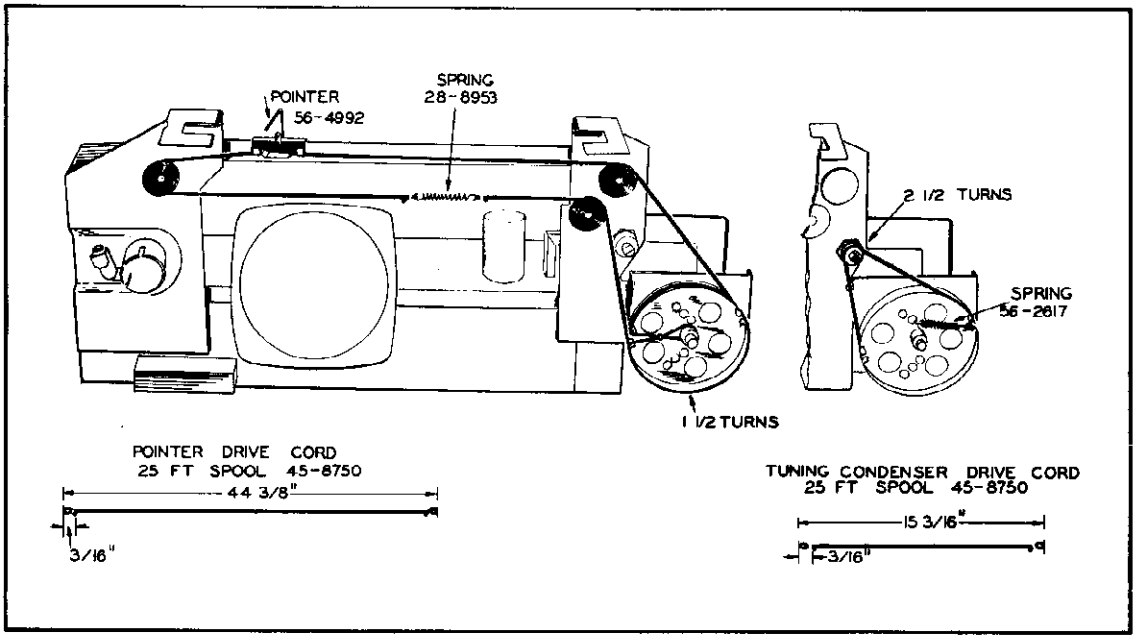

Figure 7. Drive-Cord Installation Details

MODEL 48-1264

P

AM ALIGNMENT CHART

STEP	SIGNAL GENERATOR		RADIO			ADJU
	CONNECTIONS TO RADIO	DIAL	WAFER SWITCH	DIAL	SPECIAL INSTRUCTIONS	
1	Through .1-mf. condenser to terminal 1 of TB400.	455 kc.	BC	540 kc.	Adjust for maximum, once only, in order.	C C C TC
2	Radiating loop (see note below).	580 kc.	BC	580 kc.	Adjust for maximum.	C
3	Same as step 2.	1700 kc.	BC	1700 kc.	Adjust for maximum.	C
4	Same as step 2.	1500 kc.	BC	1500 kc.	Adjust for maximum.	
5	Same as step 2.	580 kc.	BC	580 kc. (approx.)	Rock tuning condenser while adjusting for maximum.	C
6	Repeat steps 3, 4, 5, and 4, in order, until no further improvement is obtained.					

RADIATING LOOP: Make up a coil of insulated wire consisting of 6 to 8 turns, about 6" in diameter. Connect coil en signal-generator leads, and suspend coil near radio broadcast loop.

FM ALIGNMENT CHART

STEP	SIGNAL GENERATOR		RADIO			ADJU
	CONNECTIONS TO RADIO	DIAL	WAFER SWITCH	DIAL	SPECIAL INSTRUCTIONS	
1	Through .1-mf. condenser to pin 1 of 6BA6 (test point D, figure 5).	9.1 mc.	FM	88 mc.	Adjust for maximum. Repeat until no further improvement is noticed. After this step, do not touch any of these trimmers except C302D (step 3).	C T C C
2	Through .1-mf. condenser to pin 8 of 7F8 (test point A, figure 5).	9.1 mc.	FM	88 mc.	Adjust for maximum. Repeat until no further improvement is noticed. After this step, do not touch either of these trimmers.	C C
3	Same as step 2.	9.1 mc.	FM	88 mc.	Double-check the adjustment of C302D to make sure that minimum audio output is obtained from the speaker. Use output meter. This is a critical adjustment; turn trimmer very slowly.	
4	Connect signal generator to terminal 4 of J409.	105 mc.	FM	105 mc.	Maximum meter reading. This is the oscillator high-frequency padder adjustment.	C
5	Same as step 4.	105 mc.	FM	105 mc.	Maximum — Rock tuning control.	C
6	Same as step 4.	105 mc.	FM	105 mc.	Maximum.	C
7	Same as step 4.	92 mc.	FM	92 mc.	Adjust L405. See notes 1 and 2.	
8	Same as step 4.	92 mc.	FM	92 mc.	Adjust L403. See notes 1 and 3.	
9	Same as step 4.	92 mc.	FM	92 mc.	Adjust L401. See notes 1 and 4.	
10	Repeat steps 4 through 9 until no further increase is obtained.					

©John F. Rider

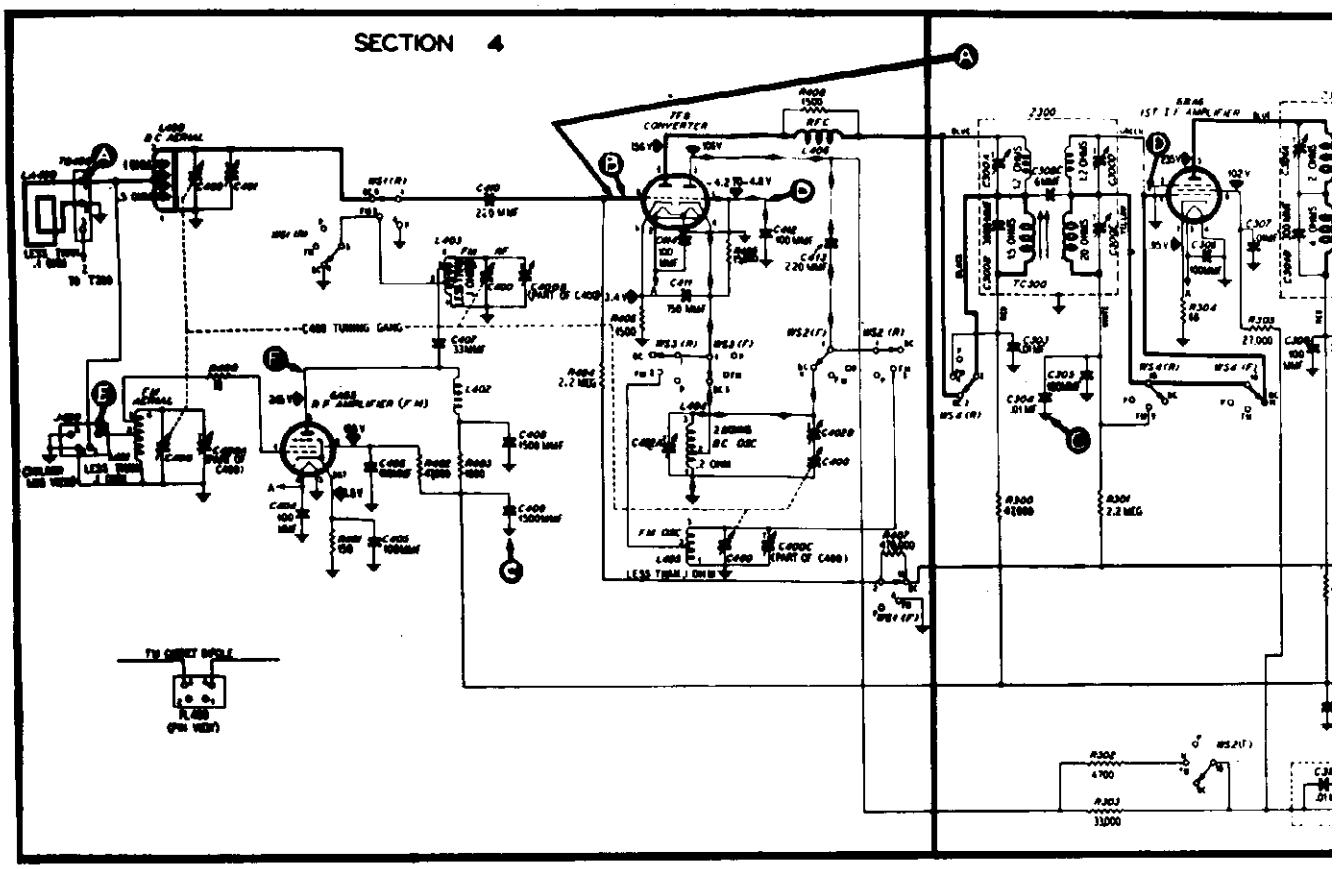
SECTION 4
TFB CONVERTER
RFC
C400 TUNING GANG
C400 100 MMF
C400 220 MMF
C400 750 MMF
C400 1500 MMF
C400 1500MMF
C400 2.0 MMF
C400 33MMF
C400 100 MMF
C400 1000MMF
C400 (PART OF C400)
C400A (PART OF C400)
C400B (PART OF C400)
C400C (PART OF C400)
C400D
C402
C403
C404
C405
C406
C407
C408
C409
C410
C411
C412
C413
C414
C415
C416
C417
C418
C419
C420
C421
C422
C423
C424
C425
C426
C427
C428
C429
C430
C431
C432
C433
C434
C435
C436
C437
C438
C439
C440
C441

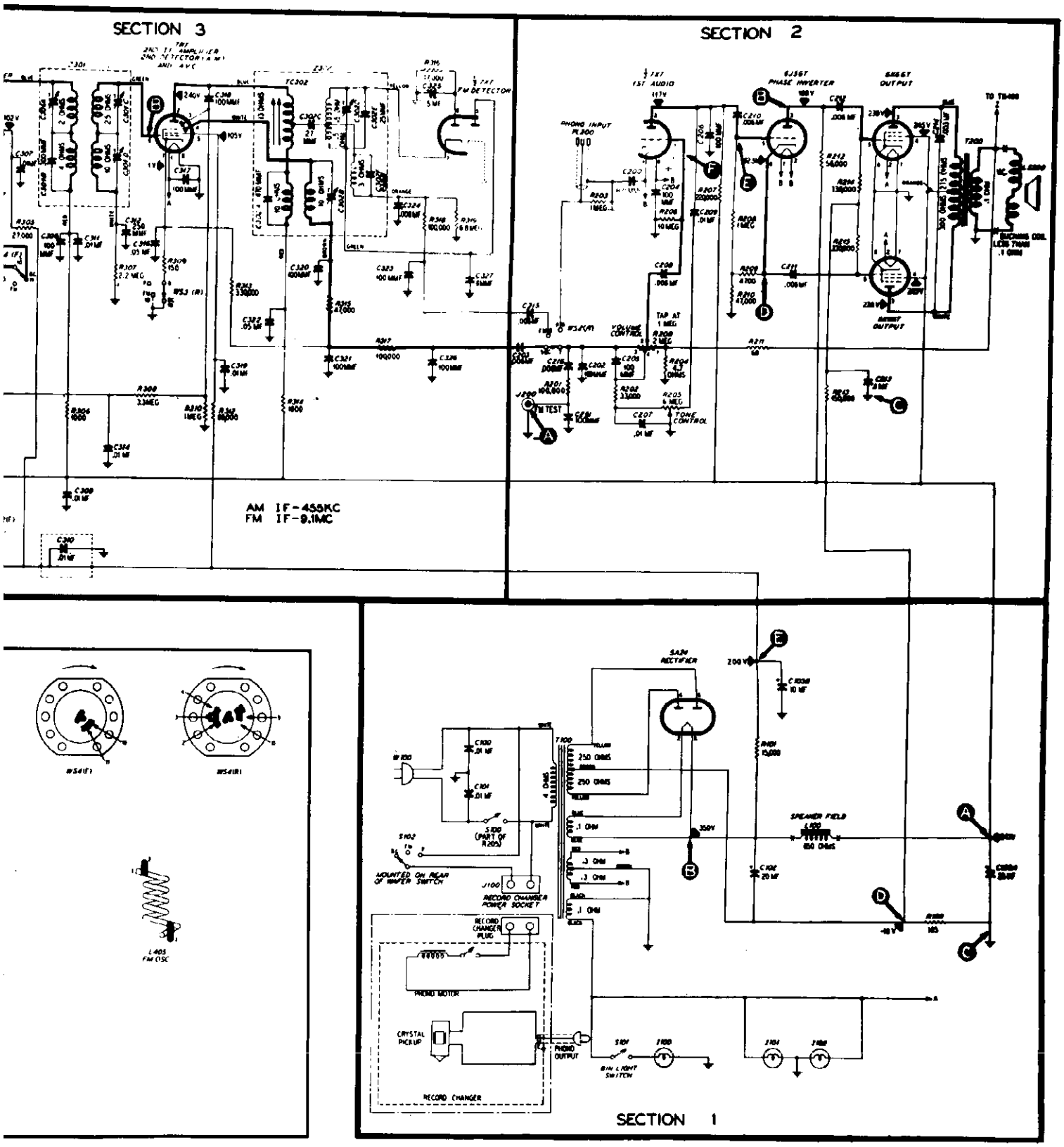

48-1264, Sectionalized Schematic Diagram, Showing Test Points

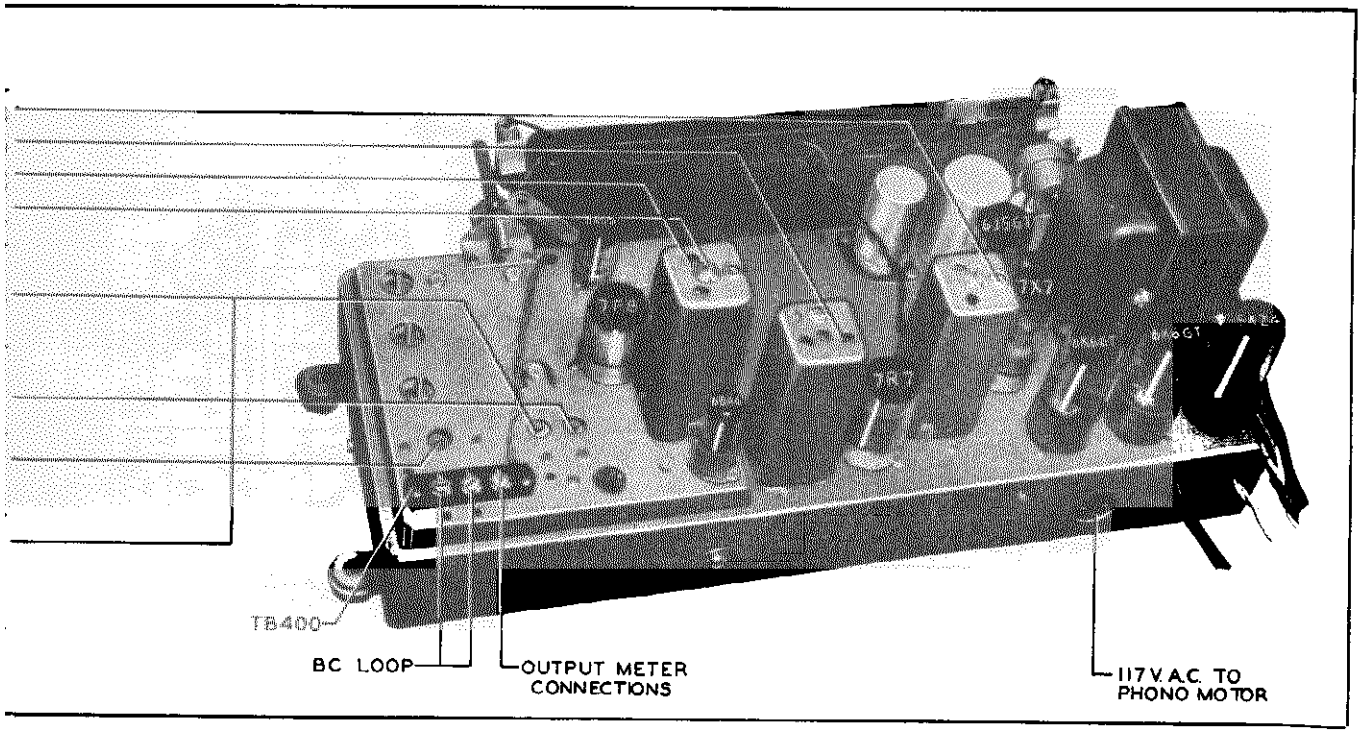

TP-2911

Figure 8. Top View, Showing AM Trimmer Locations

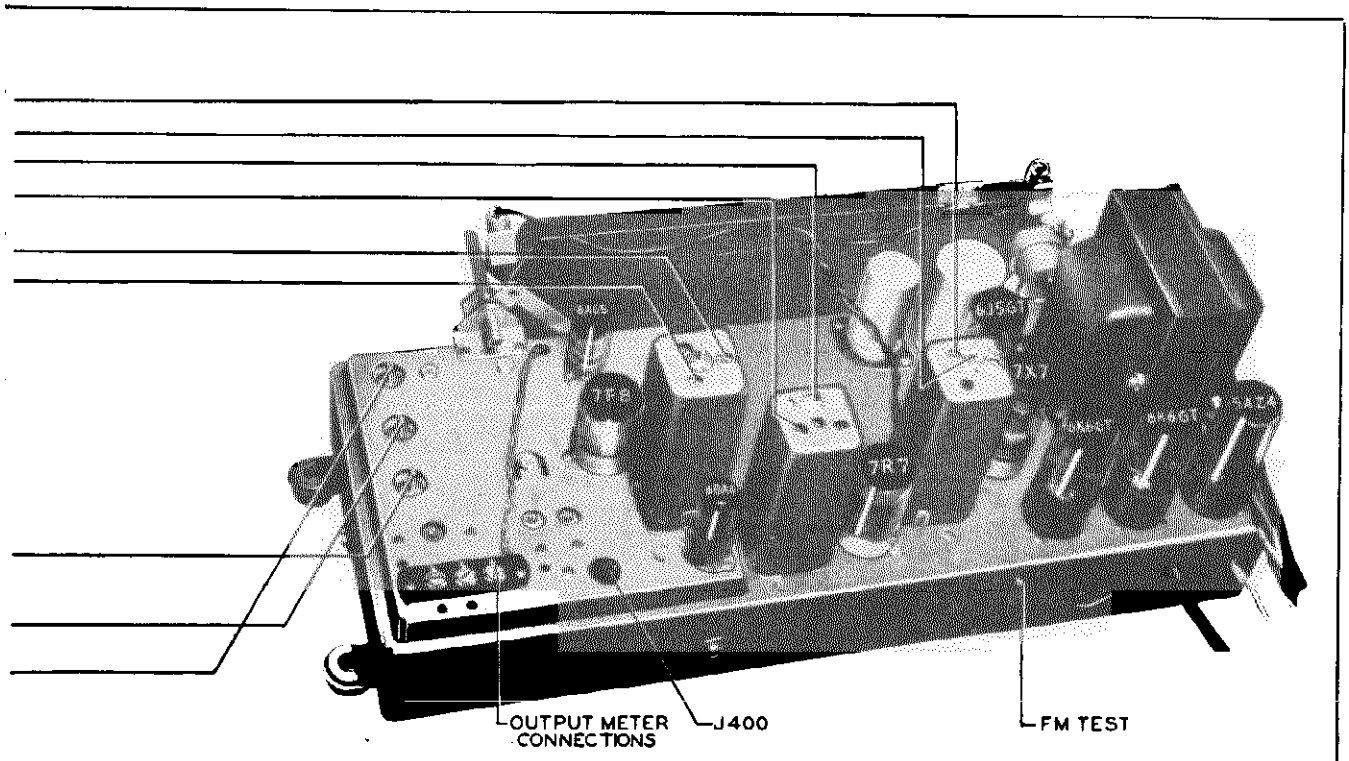

Figure 9. Top View, Showing FM Trimmer Locations

AM ALIGNMENT PROCEDURE

When the complete AM and FM alignments are to be made, the AM alignment should be made first; if FM alignment is not required, the AM alignment alone may be made.

DIAL POINTER: With tuning-condenser plates fully meshed, adjust pointer to coincide with index mark at low-frequency end of scale. See "CALIBRATING DIAL BACKPLATE," page 2.

VOLUME CONTROL: Set to maximum.

TONE CONTROL: Set to maximum counterclockwise, near the "off" position.

AM R-F SIGNAL GENERATOR: Connect ground lead to radio chassis, and output lead as indicated in chart. Use modulated output.

OUTPUT METER: Connect between terminal 3 (voice-coil connection) of aerial terminal panel (TB400) and chassis.

OUTPUT LEVEL: During alignment input signal must be attenuated to hold output-meter reading below 1.5 volts.

RADIO WAFER SWITCH, RADIO DIAL, and SIGNAL-GENERATOR DIAL: Set as indicated in chart.

FM ALIGNMENT PROCEDURE

MAKE AM ALIGNMENT FIRST

OUTPUT METER: Connect as for AM alignment (this meter is used only in step 3).

D-C METER: Connect a 20,000-ohms-per-volt meter across the 5-mf. condenser, C325, in the FM detector circuit —the negative lead to pin 6 of the 7X7 tube and the positive lead to the chassis. Use the 10-volt meter range.

AM R-F SIGNAL GENERATOR: Use modulated output for the entire alignment. The generator must have sufficient output to give a reading of approximately 9 volts on the d-c meter, and the signal should be attenuated during the alignment to keep the meter at this value. Connect the generator ground lead to the chassis, and the output lead as indicated in the chart.

RADIO WAFER SWITCH, RADIO DIAL, and SIGNAL-GENERATOR DIAL: Set as indicated in chart. Allow the radio and generator to warm up for 15 minutes before starting the alignment.

NOTE 1: The resonance of the circuits using coils L401, L403, and L405 may be checked with a powdered-iron tuning core, such as Part No. 56-6100. If the signal strength (meter reading) increases when the iron end is inserted in the coil, compress the turns slightly. If the signal increases when the threaded brass end is inserted, spread the turns. Do not compress or spread the turns excessively; only a small change is required at these frequencies.

NOTE 2: Oscillator coil L405—Adjust coil for maximum meter reading.

NOTE 3: R-F coil L403—Adjust coil for maximum meter reading while rocking tuning control.

NOTE 4: Aerial coil L401—Adjust coil for maximum meter reading.

MODEL 48-1264 PHILCO CORP.

Model 48-1264, Code 122, is identical to Model 48-1264, Code 121, with the following exceptions:

1. The FM r-f amplifier tube, type 6AG5, was changed to a type 6AU6 tube. In making this change, the suppressor grid (pin 2) of the 6AU6 was connected to ground (pin 3).
2. Resistor R402, 47,000 ohms, was changed to 33,000 ohms, Part No. 66-3333340.
3. Condenser C325, 5 mf., 50v (noise suppressor), was changed to 2 mf., 50v, Part No. 30-2417-7.
4. Condenser C202, 100 mmf., was removed.

Circuit Description

Philco Model 48-1264 is a nine-tube superheterodyne radio-phonograph combination providing reception on the standard broadcast band, 540—1720 kc., and the FM band, 88—108 mc.

A low-impedance loop within the cabinet provides adequate signal pickup on the broadcast band. Satisfactory FM reception usually requires the use of an outdoor dipole aerial (Philco Part No. 45-1462). In areas of high signal strength, however, the dipole built into the cabinet is sufficient for FM operation.

A tuned r-f stage, using a type 6AG5 high-frequency pentode, functions on the FM band. The converter stage employs a 7F8 high-frequency double triode. The converter and r-f stages are built on a separate chassis, to insure reliable performance at high frequencies. These stages provide high signal-to-noise ratio, high conversion efficiency, and good image rejection.

Two transformer-coupled i-f stages are used. The i-f transformers have two sets of windings; one set is tuned to 455 kc. for AM operation, and the other to 9.1 mc. for FM operation.

The first i-f stage employs a 6BA6 (miniature type) high-frequency pentode amplifier; the pentode section of a 7R7 double-diode pentode functions as the second i-f amplifier. One diode of this tube is used for AM detection, while the other diode develops a-v-c voltage.

The ratio-detector circuit used for FM detection operates through the two diodes of the 7X7 tube; this circuit has good noise-reducing properties and a superior tuning characteristic. The triode section of the 7X7 is used as a first-audio and phono-amplifier stage. The output of the AM detector, FM detector, or phono pickup is switched into this circuit by the wafer switch.

A type 6J5GT triode operates as a phase inverter, driving the two 6K6GT output tubes in push-pull operation.

A more uniform frequency response is obtained by the use of inverse feedback. This feed-back voltage is taken from the secondary of the output transformer, and applied through resistor R211 to the junction of R204 and the volume control.

The 12-inch electrodynamic speaker provides excellent bass reproduction.

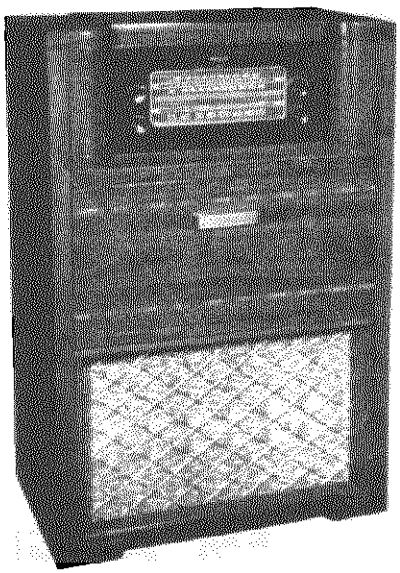

MODEL 48-1264

SPECIFICATIONS

CABINET	Wood, light mahogany or walnut finish
CIRCUIT	Nine-tube superheterodyne
FREQUENCY RANGES:	
Broadcast	540—1720 kc.
FM	88—108 mc.
AUDIO OUTPUT	6 watts
OPERATING VOLTAGE	105—120 volts, 60 cycles, a.c.
POWER CONSUMPTION	110 watts
AERIALS	Built-in low-impedance loop, and FM dipole; provision for external aerial
INTERMEDIATE FREQUENCIES:	
AM	455 kc.
FM	9.1 mc.
PHONOGRAPH	Philco Automatic Record Changer, Model D-10 *(for service information, see manual PR-1156)*
SPEAKER	12" electrodynamic
PHILCO TUBES (9)	6AG5, 7F8, 6BA6, 7R7, 7X7, 6J5GT, 6K6GT (2), 5AZ4

Philco TROUBLE-SHOOTING *Procedure*

For rapid trouble shooting, the radio circuit is divided into four sections, with test points specified for each section; these sections and test points are indicated in the schematic diagram. The trouble-shooting procedure given for each section includes a simplified test chart and a bottom view of the chassis showing the locations of the test points and components of that section.

In each chart, the first step is a master check for determining whether trouble exists in that section, without going through the entire test procedure.

Failure to obtain the "NORMAL INDICATION" in any given step indicates trouble within the circuit under test.

After isolating the trouble to a single stage, the defect is located by: first, testing the tube; second, measuring the tube electrode voltages; third, measuring circuit resistances; fourth, substituting condensers. The trouble revealed should be corrected before testing further.

Preliminary Checks

To avoid possible damage to the radio, the following preliminary checks should be made before turning on the power:

1. Carefully inspect both the top and the bottom of the chassis. Make sure that all tubes are secure in the proper sockets. Look for any broken or shorted connections, burned resistors, or other obvious faults.

2. Measure the resistance between B+ (pin 8 of the 5AZ4 rectifier) and the radio chassis, with the ohmmeter polarity such that it gives the highest resistance reading; if the reading is lower than 3500 ohms, check condensers C102, C103A, and C103B for leakage or shorts.

The above resistance value, which is much lower than normal, is not intended as a quality check of these condensers; the value given is the lowest at which the rectifier will operate safely while the voltage tests of Section 1 are performed.

CALIBRATING DIAL BACKPLATE

When the radio chassis has been removed from the cabinet, dial calibration and alignment points may be marked on the dial backplate below the pointer.

The measurements for these points are shown in figure 1. Hold a ruler against the scale backplate, with the start of the ruler at the reference line shown, and mark pencil dots at the proper points for the required frequency settings. When the ruler is correctly placed, the index mark is approximately 1-9/16" from the edge of the backplate.

With the tuning gang fully meshed, the pointer should be adjusted on the drive cord to coincide with the index mark.

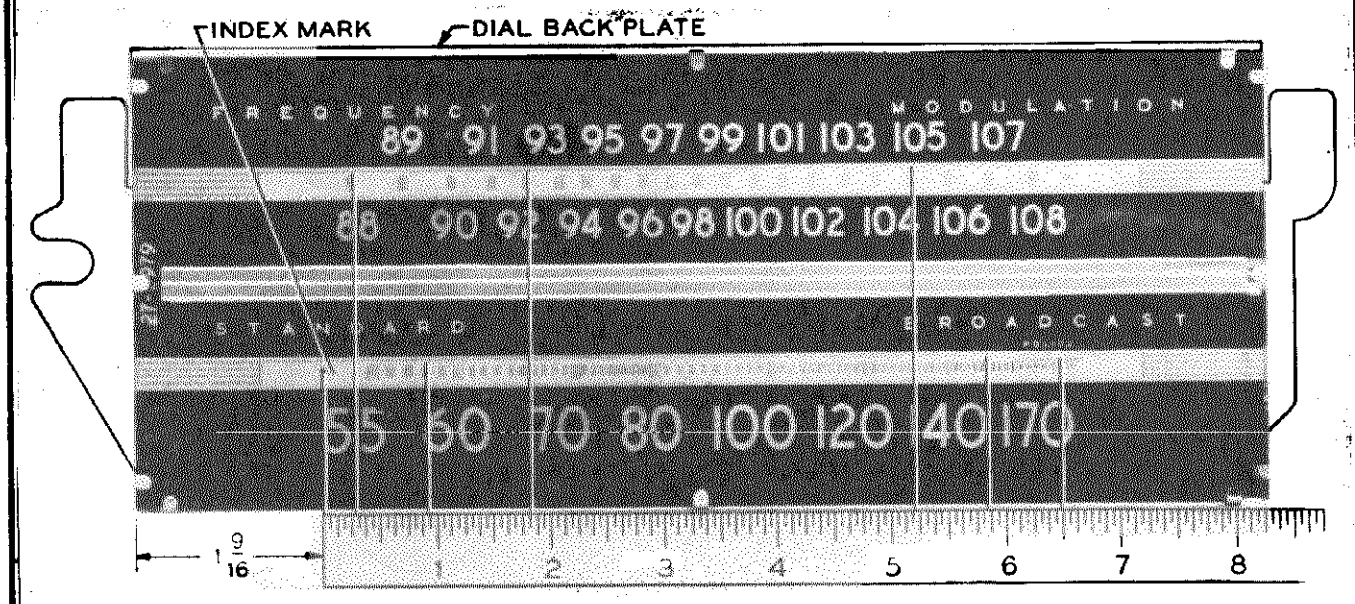

Figure 1. Dial-Backplate Calibration Measurements

SYMBOLIZATION

The components in the radio circuit are symbolized according to the types of parts and the sections of the radio in which the parts are located. The prefix letter of the symbol designates the type of part, as follows:

C—condenser
I—pilot lamp
L—choke or coil
LA—loop aerial
LS—loud speaker
R—resistor
S—switch
T—transformer
WS—wafer switch
Z—electrical assembly

The number of the symbol designates the section in which the part is located, as follows:

100-series components are in Section 1—the power supply.
200-series components are in Section 2—the audio circuits.
300-series components are in Section 3—the i-f amplifier, detector, and a-v-c circuits.
400-series components are in Section 4—the aerial, r-f, and oscillator circuits.

A suffix letter identifies the part as a component of the assembly which bears an identical number without a suffix letter, and with perhaps a different prefix letter.

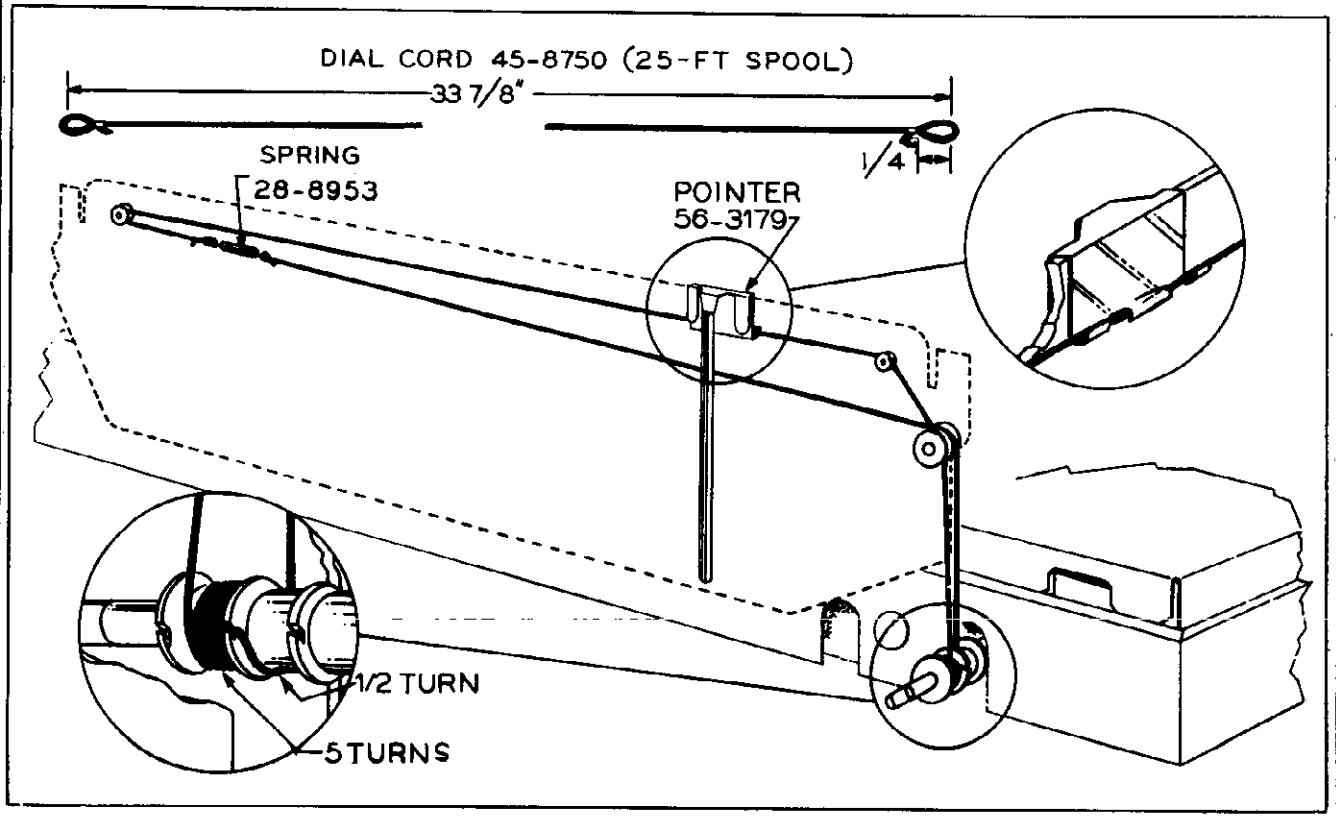

Figure 2. Pointer-Drive-Cord Installation Details

Section 1 TROUBLE SHOOTING

CAUTION: Do not turn on the power with the speaker disconnected, as this may cause damage to the radio.

For the tests in this section, use a d-c voltmeter. Connect the voltmeter leads between the chassis, test point C, and the test points indicated in the chart. The voltage readings given were taken with a 20,000-ohms-per-volt meter, at a line voltage of 117 volts, a.c.

Set the volume control to minimum, and the tone control near the "off" position. Set the wafer switch to the broadcast (BC) position.

If the "NORMAL INDICATION" is obtained in step 1, proceed with the tests for Section 2; if not, isolate and correct the trouble in this section.

Step	Test Point	Normal Indication	Abnormal Indication	Possible Cause of Abnormal Indication
1	E A	200v 245v	*	Trouble within this section. Isolate by the following tests.
2	B	350v	No voltage Low voltage High voltage	Defective: 5AZ4, T100, S100, W100. Shorted: C102. Open: R100. Defective: 5AZ4. Shorted or leaky: C102, C308*, C311*, C322*, C309* C408*, C409*, C103A, C103B. Open: L100, R101, T200*.
3	D	Negative 18v	Low or no voltage High voltage	Shorted: R100. Weak 6K6GT tubes. Open: R100.
4	E	200v	No voltage Low voltage	Shorted: C103B. Open: R101. Leaky: C103B, C319*, C307*, C310*.
5	A	245v	No voltage Low voltage High voltage	Shorted: C103A. Open: L100. Leaky: C103A. Grounded T200*. Shorted: L100. Weak 6K6GT tubes.
Listening Test: Abnormal hum may be caused by open C100, C101, C102, or C103A.				

*This part, located in another section, may cause abnormal indication in this section.

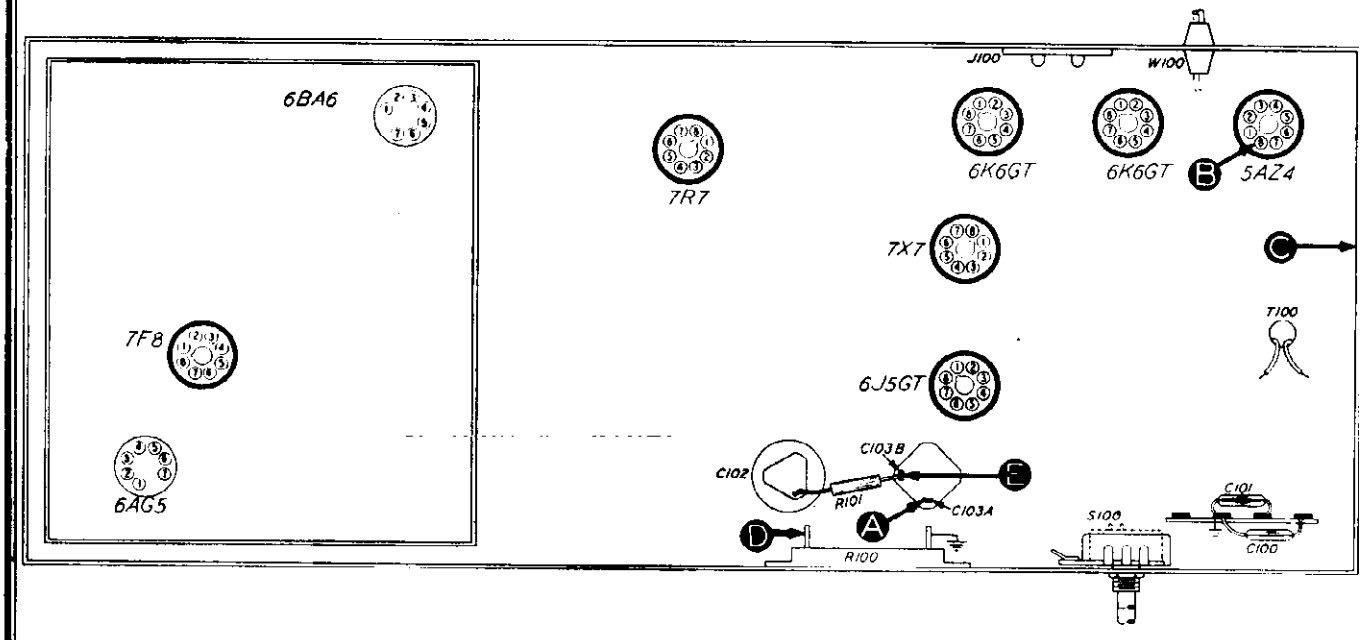

Figure 3. Bottom View, Showing Section 1 Test Points

Section 2 TROUBLE SHOOTING

For the tests in this section, use an audio-frequency signal generator. Connect the generator ground lead to the chassis, test point C; connect the output lead through a .1-mf. condenser to the test points indicated in the chart.

Set the volume control to maximum, and the tone control near the "off" position. Adjust the signal-generator output as required for each step.

If the "NORMAL INDICATION" is obtained in step 1, proceed with the tests for Section 3; if not, isolate and correct the trouble in this section.

Step	Test Point	Normal Indication	Possible Cause of Abnormal Indication
1	A	Loud, clear signal with weak signal input.	Trouble within this section. Isolate by the following tests.
2	B (Remove 6J5GT tube)	Clear signal with strong signal input.	Defective: 6K6GT, T200, LS200. Open: C212, R214. Shorted or leaky: C212, C214.
3	D (6J5GT removed)	Same as step 2.	Defective: 6K6GT. Shorted or leaky: C211. Open: R215, C211, T200.
4	E (Replace 6J5GT tube)	Loud, clear signal with moderate signal input.	Defective: 6J5GT. Open: R212, R209, R210. Shorted or leaky: C210, C206.
5	F	Loud, clear signal with weak signal input.	Defective: 7X7. Open: R207, C210.
6	A	Same as step 5.	Shorted: C202, C201, C326*. Open: C208, C216, R201, R200 (rotate through range).
7	PL200 (Wafer switch on PHONO)	Same as step 5.	Defective: PL200, WS2(R).
Listening Test: Distortion may be caused by leaky C210, C211, C212, C213, or C214. Hum will result if C213 is open.			

*This part, located in another section, may cause abnormal indication in this section.

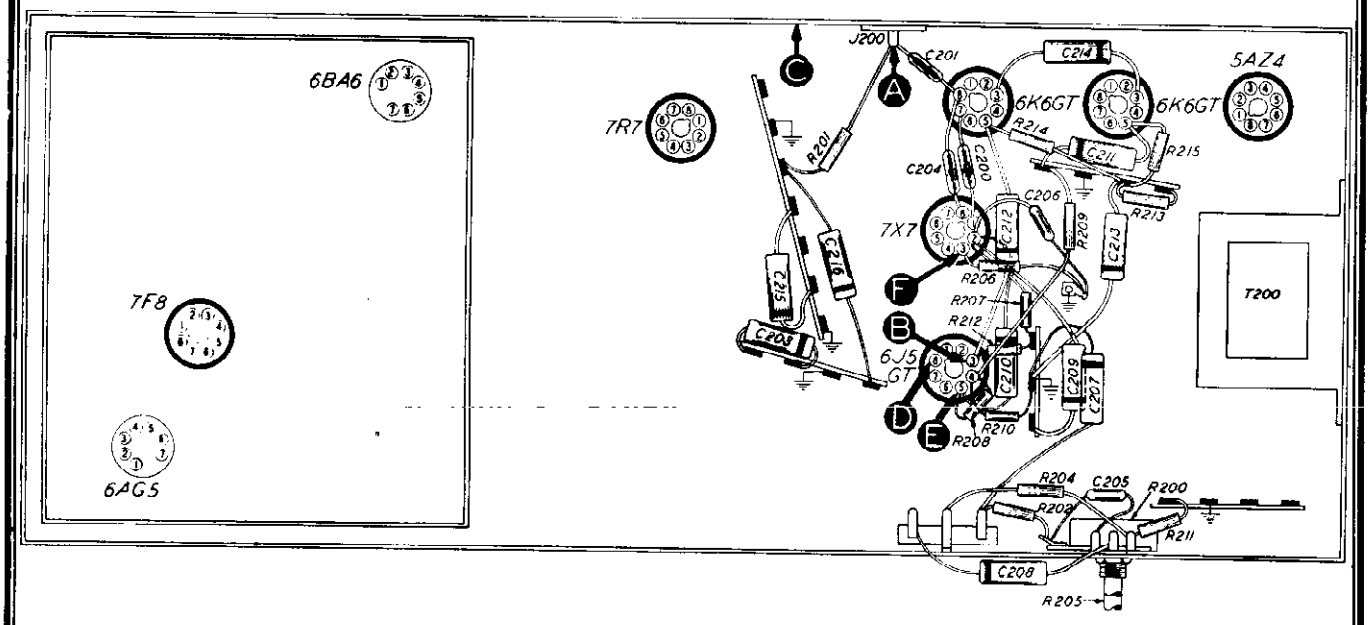

Figure 4. Bottom View, Showing Section 2 Test Points

© John F. Rider

Section 3 TROUBLE SHOOTING

AM CIRCUITS

For the following tests, use an r-f signal generator, with modulated output, set at 455 kc. Connect the generator ground lead to the chassis, test point C; connect the output lead through a .1-mf. condenser to the test points indicated in the chart.

Set the volume control to maximum, the wafer switch to the broadcast (BC) position, and the tone control near the "off" position.

If the "NORMAL INDICATION" is obtained in step 1, proceed with the tests for the FM circuits, or to the tests in Section 4; if not, isolate and correct the trouble in the AM circuits.

Since the circuit location of test point A for this section is the same as that of test point B for Section 4, the effectiveness of step 1 as a master check is dependent upon the condition of certain parts in Section 4; these parts are listed under "POSSIBLE CAUSE OF ABNORMAL INDICATION."

Step	Test Point	Normal Indication	Possible Cause of Abnormal Indication
1	A	Loud, clear signal with weak signal input.	Trouble in AM circuits. Isolate by the following tests.
2	B	Loud, clear signal with strong signal input.	Defective: 7R7, Z302, WS3(R), WS2(R). Shorted or leaky: C320, C321, C322. Open: R309, R312, R313, R314, R315, R317. Misaligned: Z302.
3	D	Loud, clear signal with moderate signal input.	Defective: 6BA6, Z301. Shorted or leaky: C307, C308, C309, C311. Open: R306, R304, R305, C307. Misaligned: Z301.
4	A	Loud, clear signal with weak signal input.	Defective: 7F8*, Z300, WS4(R), WS4(F). Shorted or leaky: C303, C304, C305. Open: R300, R301, R405*. Misaligned: Z300.
Listening Test: Distortion, with hum, may be caused by open C307 or C319.			

*This part, located in another section, may cause abnormal indication in this section.

FM CIRCUITS

These tests are also made with an AM r-f signal generator, using modulated output. Observe the instructions preliminary to the tests for the AM circuits, with the following exceptions: set the wafer switch to the FM position; set the signal-generator frequency to 9.1 mc., and detune to one side or the other until a satisfactory test signal is obtained.

The best indication of satisfactory FM-detector operation is the ability of this circuit to take the alignment properly (see page 14).

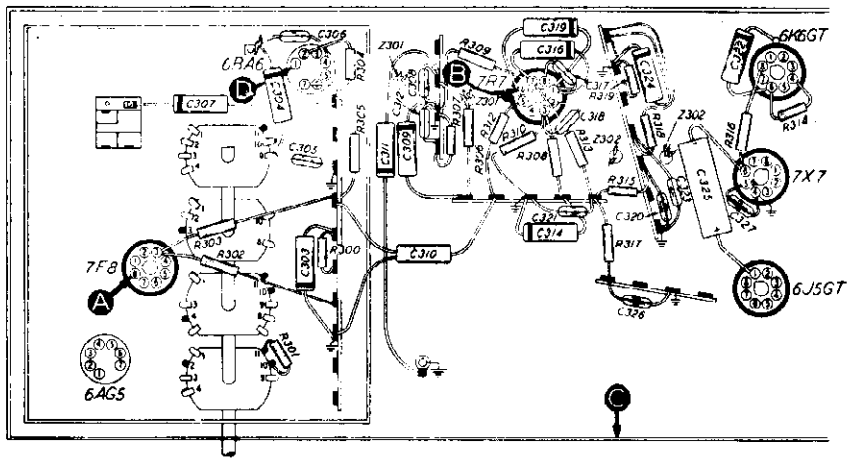

Figure 5. Bottom View, Showing Section 3 Test Points

Step	Test Point	Normal Indication	Possible Cause of Abnormal Indication
1	B	Loud, clear signal with strong signal input.	Defective: 7R7, 7X7 (diode section), C325, Z302. Shorted or leaky: C323, C324, C205*. Open: R318, R319. Misaligned: Z302.
2	D	Loud, clear signal with moderate signal input.	Same parts listed in AM test chart, step 3.
3	A	Loud, clear signal with weak signal input.	Same parts listed in AM test chart, step 4 and WS4(R), WS4(F).

© John F. Rider

MODEL 48-1264 PHILCO CORP.

Section 4

TROUBLE SHOOTING

For the tests in this section, with the exception of the oscillator tests, use an AM r-f signal generator, with modulated output. Connect the generator ground lead to the chassis, test point C; connect the output lead through a .1-mf. condenser to the test points indicated in the charts.

Set the volume control to maximum, and the tone control near the "off" position.

For the AM-circuit tests, set the wafer switch to the BC position, and set the signal-generator and radio dials to 1000 kc.

For the FM-circuit tests, set the wafer switch to the FM position, and set the signal-generator and radio dials to 95 mc. (detune the generator to one side or the other until a satisfactory test signal is obtained).

OSCILLATOR TESTS: For the oscillator tests (step 3 in each chart), connect the positive lead of a high-resistance voltmeter to the 7F8 oscillator cathode (pin 4); connect the prod end of the negative lead through a 100,000-ohm isolating resistor to the 7F8 oscillator grid (pin 1), test point D. Use a suitable meter range, such as 0—10 volts. Proper operation of the oscillator for either AM or FM is indicated by a negative voltage throughout the range of the tuning condensers (the normal oscillator voltages given in the charts were measured with a 20,000-ohms-per-volt meter).

AM CIRCUITS

Step	Test Point	Normal Indication	Possible Cause of Abnormal Indication
1	A	Loud, clear signal with weak signal input.	Trouble in AM circuits. Isolate by the following tests.
2	B	Same as step 1.	Defective: 7F8. Shorted: C400. Open: L406, R408, C411. Trouble in oscillator circuit (step 3).
3	D Osc. Test	Negative 2 to 3 volts (turn tuning control through range.)	Defective: 7F8, WS3(F), WS2(F). Shorted: C411, C412, C413, C402B, C402A, C400, L404. Open: R406, R303*, L404, C412, C413.
4	A	Same as step 1.	Defective: WS1(R). Shorted: L400, C401. Open: L400, R404, C410.

*This part, located in another section, may cause abnormal indication in this section.

FM CIRCUITS

Step	Test Point	Normal Indication	Possible Cause of Abnormal Indication
1	E	Loud, clear signal with weak signal input.	Trouble in FM circuits. Isolate by the following tests.
2	B	Loud, clear signal with moderately weak signal input.	Same parts listed in AM test chart, step 2.
3	D Osc. Test	Negative. 1 volt (approx.).	Defective: 7F8, WS3(R), WS2(R), C400, C400C. Open: L405.
4	F	Loud, clear signal with moderately weak signal input.	Defective: WS1(R). Open: C407.
5	E	Loud, clear signal with weak signal input.	Defective: 6AG5. Shorted: C400, C400A. Shorted or leaky: C408, C406, C407. Open: R400, R401, R402, R403, L402.

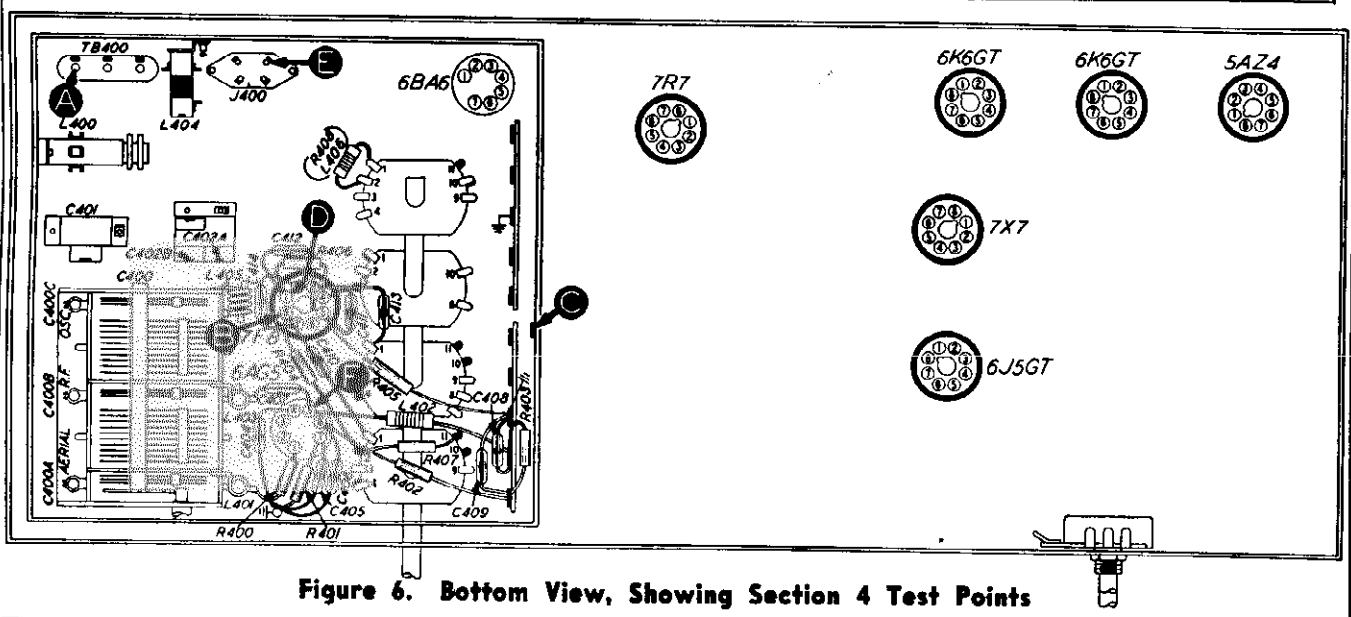

Figure 6. Bottom View, Showing Section 4 Test Points

© John F. Rider

PHILCO CORP.

REPLACEMENT PARTS LIST

NOTE

Part numbers marked with an asterisk (*) are general replacement items. These numbers may not be identical with those on factory assemblies; also, the electrical values of some replacement items may differ from the value indicated in the schematic diagram and parts list. The values substituted in any case are so chosen that the operation of the radio will be either unchanged or improved. When ordering replacements, use only the "Service Part No."

SECTION 1

Reference Symbol	Description	Service Part No.
C100	Condenser, line filter, .01 mf.	61-0120*
C101	Condenser, line filter, .01 mf.	61-0120*
C102	Condenser, electrolytic, high-voltage, filter, 20 mf.	30-2555*
C103	Condenser, electrolytic, 2-section	30-2556*
C103A	Condenser, high-voltage filter, 25 mf.	Part of C103
C103B	Condenser, isolating filter, 10 mf.	Part of C103
I100	Lamp, bin	34-2039*
I101	Lamp, panel	34-2064*
I102	Lamp, panel	34-2064*
J100	Socket, a-c phono power	27-6200
L100	Field, speaker	Part of LS200
R100	Resistor, bias, 165 ohms	33-3435-1
R101	Resistor, voltage dropping, 15,000 ohms	66-3155340*
S100	Switch, power on-off	Part of R205
S101	Switch, bin lamp	42-1702
S102	Switch, a-c phono power	Part of 42-1803
T100	Transformer, a-c power	32-8248
W100	Line cord and plug	L3339

SECTION 2

Reference Symbol	Description	Service Part No.
C200	Condenser, filament by-pass, 100 mmf.	60-10105407*
C201	Condenser, r-f by-pass, 100 mmf.	60-10105407*
C202	Condenser, r-f by-pass, 100 mmf.	60-10105407*
C203	Condenser, d-c blocking, .006 mf.	45-3500-7*
C204	Condenser, filament by-pass, 100 mmf.	60-10105407*
C205	Condenser, audio by-pass, 100 mmf.	60-10105407*
C206	Condenser, plate by-pass, 100 mmf.	60-10105407*
C207	Condenser, bass compensation, .01 mf.	61-0120*
C208	Condenser, d-c blocking, .006 mf.	45-3500-7*
C209	Condenser, tone compensation, .01 mf.	61-0120*

SECTION 2 (Cont.)

Reference Symbol	Description	Service Part No.
C210	Condenser, d-c blocking, .006 mf.	45-3500-7
C211	Condenser, d-c blocking, .006 mf.	45-3500-7
C212	Condenser, d-c blocking, .006 mf.	45-3500-7
C213	Condenser, audio by-pass, .1 mf.	61-0113
C214	Condenser, tone compensation, .003 mf.	61-0117
C215	Condenser, d-c blocking, .006 mf.	45-3500-7
C216	Condenser, coupling, .006 mf.	45-3500-7
J200	Socket, FM test	27-6180
LS200	Speaker	36-1595
PL200	Cable-and-plug assembly, phono input	41-3735-2
R200	Volume control, 2 meg. (tap at 1 meg.)	33-5535-1
R201	Resistor, r-f decoupling, 100,000 ohms	66-4103340
R202	Resistor, bass compensation, 33,000 ohms	66-3333340
R203	Resistor, phono grid load, 1 megohm	66-5103340
R204	Resistor, inverse feedback, 4.7 ohms	66-9473340
R205	Tone control, 6 megohms	33-5538-1
R206	Resistor, grid leak, 1st audio, 10 megohms	66-6103340
R207	Resistor, plate load, 220,000 ohms	66-4223340
R208	Resistor, grid load, 1 megohm	66-5103340
R209	Resistor, cathode bias, 4700 ohms	66-2473340
R210	Resistor, cathode load, 47,000 ohms	66-3473340
R211	Resistor, inverse feedback, 68 ohms	66-0683340
R212	Resistor, plate load, 56,000 ohms	66-3563340
R213	Resistor, filter, 150,000 ohms	66-4153340
R214	Resistor, grid load, 330,000 ohms	66-4333340
R215	Resistor, grid load, 330,000 ohms	66-4333340
T200	Transformer, output	32-8274

SECTION 3

Reference Symbol	Description	Service Part No.
C300A	Condenser, FM trimmer	Part of Z300
C300B	Condenser, AM tuning, 3000 mmf.	Part of Z300
C300C	Condenser, i-f coupling, 6 mmf.	Part of Z300

MODEL 48-1264 PHILCO CORP.

REPLACEMENT PARTS LIST (Continued)

SECTION 3 (Cont.)

Reference Symbol	Description	Service Part No.
C300D	Condenser, FM trimmer	Part of Z300
C300E	Condenser, AM trimmer	Part of Z300
C301A	Condenser, FM trimmer	Part of Z301
C301B	Condenser, AM tuning, 300 mmf.	Part of Z301
C301C	Condenser, FM trimmer	Part of Z301
C301D	Condenser, AM trimmer	Part of Z301
C302A	Condenser, AM tuning, 470 mmf.	Part of Z302
C302B	Condenser, AM trimmer	Part of Z302
C302C	Condenser, FM coupling, 27 mmf.	Part of Z302
C302D	Condenser, FM trimmer	Part ofZ302
C302E	Condenser, FM tuning, 25 mmf.	Part of Z302
C302F	Condenser, FM tuning, 15 mmf.	Part of Z302
C303	Condenser, plate by-pass, .01 mf.	61-0120*
C304	Condenser, a-v-c- by-pass, .01 mf.	61-0120*
C305	Condenser, a-v-c by-pass, 100 mmf.	60-10105407*
C306	Condenser, filament by-pass, 100 mmf.	60-10105407*
C307	Condenser, screen by-pass, .01 mf.	61-0120*
C308	Condenser, plate by-pass, 100 mmf.	60-10105407*
C309	Condenser, plate decoupling, .01 mf.	61-0120*
C310	Condenser, plate by-pass, .01 mf.	30-4641
C311	Condenser, plate by-pass, .01 mf.	61-0120*
C312	Condenser, a-v-c by-pass, 250 mmf.	60-10255237*
C313	Not used	
C314	Condenser, a-v-c- filter, .01 mf.	61-0120*
C315	Not used	
C316	Condenser, cathode by-pass, .05 mf.	61-0122*
C317	Condenser, filament by-pass, 100 mmf.	60-10105407*
C318	Condenser, d-c blocking, 100 mmf.	60-10105407*
C319	Condenser, screen by-pass, .01 mf.	61-0120*
C320	Condenser, r-f by-pass, 100 mmf.	60-10105407*
C321	Condenser, r-f by-pass, 100 mmf.	60-10105407*
C322	Condenser, plate decoupling, .05 mf.	61-0122*
C323	Condenser, r-f by-pass, 100 mmf.	60-10105407*
C324	Condenser, r-f by-pass, .008 mf.	61-0174*
C325	Condenser, noise suppressor, 5 mf.	30-2417*
C326	Condenser, r-f by-pass, 100 mmf.	60-10105407*
C327	Condenser, coupling, 6 mmf.	30-1224-9
C328	Not used	
R300	Resistor, plate dropping, 47,000 ohms	66-3473340*
R301	Resistor, a-v-c decoupling, 2.2 megohms	66-5223340*
R302	Resistor, plate dropping, 4700 ohms	66-2473340*
R303	Resistor, plate dropping, 33,000 ohms	66-3333340*

SECTION 3 (Cont.)

Reference Symbol	Description	Service Part No.
R304	Resistor, cathode bias, 68 ohms	66-0683340*
R305	Resistor, screen dropping, 27,000 ohms	66-3273340*
R306	Resistor, plate decoupling, 1000 ohms	66-2103340*
R307	Resistor, grid return, 2.2 megohms	66-5223340*
R308	Resistor, a-v-c filter, 3.3 megohms	66-5333340*
R309	Resistor cathode bias, 150 ohms	66-1153340*
R310	Resistor, a-v-c load, 1 megohm	66-5103340*
R311	Not used	
R312	Resistor, screen dropping, 68,000 ohms	66-3683340*
R313	Resistor, diode load, 330,000 ohms	66-4333340*
R314	Resistor, plate decoupling, 1000 ohms	66-2103340*
R315	Resistor, diode decoupling, 47,000 ohms	66-3473340*
R316	Resistor, noise suppressor, 47,000 ohms	66-3473340*
R317	Resistor, diode decoupling, 100,000 ohms	66-4103340*
R318	Resistor, FM decoupling, 100,000 ohms	66-4103340*
R319	Resistor, FM-detector load, 6.8 megohms	66-5683340*
TC300A	Tuning core, AM tuning	Part of Z300
TC302A	Tuning core, FM tuning	Part of Z302
Z300	Transformer, 1st i-f, including C300A, C300B, C300C, C300D, C300E, and TC300A	32-4146*
Z301	Transformer, 2nd i-f, including C301A, C301B, C301C, and C301D	32-4156*
Z302	Transformer, 3rd i-f, including C302A, C302B, C302C, C302D, C302E, C302F, and TC302A	32-4147*

SECTION 4

Reference Symbol	Description	Service Part No.
C400	Condenser, tuning gang	31-2703-2
C400A	Condenser, FM aerial trimmer	Part of C400
C400B	Condenser, FM r-f trimmer	Part of C400
C400C	Condenser, FM oscillator trimmer	Part of C400
C401	Condenser, 1500-kc. trimmer	31-6473
C402	Condenser, trimmer assembly, 2-section	31-6476-5
C402A	Condenser, shunt trimmer, BC oscillator	Part of C402
C402B	Condenser, series trimmer, BC oscillator	Part of C402
C403	Not used	
C404	Condenser, filament by-pass, 100 mmf.	60-10105407*
C405	Condenser, cathode by-pass, 100 mmf.	60-10105407*

© John F. Rider

REPLACEMENT PARTS LIST (Continued)

SECTION 4 (Cont.)

Reference Symbol	Description	Service Part No.
C406	Condenser, screen by-pass, 100 mmf.	60-10105407*
C407	Condenser, d-c blocking, 33 mmf.	60-00305307*
C408	Condenser, plate by pass, 1500 mmf.	60-20155404*
C409	Condenser, screen by-pass, 1500 mmf.	60-20155404*
C410	Condenser, d-c blocking, 220 mmf.	60-10245307*
C411	Condenser, d-c blocking, 750 mmf.	60-10755301*
C412	Condenser, grid return, 100 mmf.	60-10105407*
C413	Condenser, d-c blocking, 220 mmf.	60-10245307*
C414	Condenser, filament by-pass, 100 mmf.	60-10105407*
J400	Socket, 4-prong, external aerial	27-6214-1
L400	Coil, BC aerial	32-4033-2
L401	Coil, FM aerial	32-4158
L402	Choke, plate	32-4061
L403	Coil, FM r-f	32-4159
L404	Coil, BC oscillator	32-4019-4
L405	Coil, FM oscillator	32-4018-2
L406	Choke, parasitic suppressor, including R408	32-4157
LA400	Loop assembly, broadcast	76-2262-1
R400	Resistor, parasitic suppressor, 10 ohms	66-0103340*
R401	Resistor, cathode bias, 150 ohms	66-1151540*
R402	Resistor, screen dropping, 47,000 ohms	66-3473340*
R403	Resistor, plate decoupling, 1000 ohms	66-2103340*
R404	Resistor, grid return, 2.2 megohms	66-5223340*
R405	Resistor, cathode bias, 1500 ohms	66-2153340*
R406	Resistor, grid leak, 15,000 ohms	66-3153340*
R407	Resistor, grid return, 470,000 ohms	66-4473340*
R408	Resistor, parasitic suppressor, 1500 ohms	Part of L406
TB400	Aerial terminal panel	38-9942
WS	Wafer switch	42-1803
WS1	1st section, wafer switch	Part of WS
WS2	2nd section, wafer switch	Part of WS
WS3	3rd section, wafer switch	Part of WS
WS4	4th section, wafer switch	Part of WS

MISCELLANEOUS

Description	Service Part No.
Bin Hardware	
Cable-socket-and-switch assembly, bin light	76-2728-5
Door, bin, changer 48-1264W	45-6396
Door, bin, changer 48-1264L	45-6397
Cabinet and Cabinet Hardware	
Baffle and cloth	40-6932
Baffle, wood	219087
Bezel, metal	56-4878
Cabinet, walnut, less scale	10683
Cabinet, light mahogany, less scale	10683A
Frame assembly	76-3222
Grille, wire	56-4985
Loop assembly, FM cabinet dipole	76-2029-10
Scale, dial	76-3187-1
Strap, dial-scale mounting	56-4916
Cable, shielded	41-3754-11
Cable, speaker	41-3734-7
Dial Backplate and Associated Hardware	
Backplate and pulley assembly	76-2005-3
Cord, pointer drive (25-ft. spool)	45-8750*
Pointer	56-3179
Spring, pointer-drive-cord	28-8953
Knob	54-4486
Lamp-socket assembly, pilot	76-2109
Plug, speaker	27-4419-2
Record-Changer Mounting Hardware	
Bolt	56-3295-1FA15
Grommet	54-4313
Nut	1W56643FA3
Palnut	1W29061FA3
Spring	56-3043-FA15
Socket, loktal (7F8 only)	27-6213
Socket, loktal	27-6138*
Socket, miniature (6AG5)	27-6203-1
Socket, miniature (6BA6)	27-6226
Socket, octal	27-6174
Wafer-Switch Hardware	
Link assembly	76-2186-3
Shaft	56-3298FA11
Washer, "C"	1W42535FA3

MODELS 48-1274, 48-1276

PHILCO CORP.

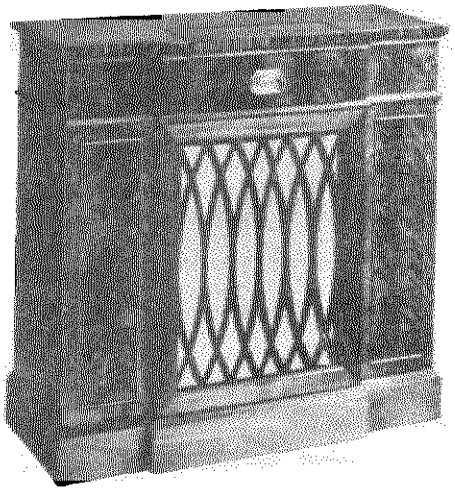

TP-1400

MODEL 48-1274

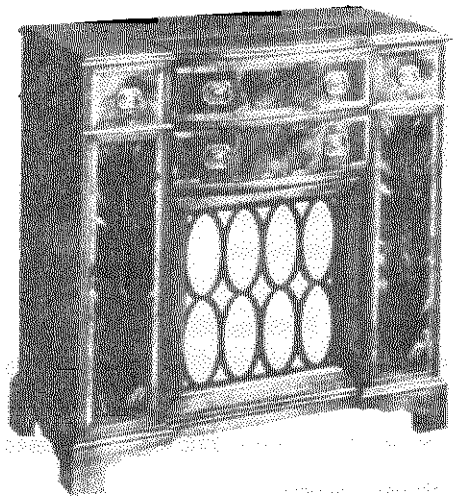

MODEL 48-1276

SPECIFICATIONS

CABINET	
Model 48-1274	Wood, mahogany or walnut finish
Model 48-1276	Wood, mahogany finish
CIRCUIT	Sixteen-tube superheterodyne
FREQUENCY RANGES	
Broadcast	540—1720 kc.
Short Wave	9.25—15.5 mc.
Frequency Modulation	88—108 mc.
AUDIO OUTPUT	15 watts
PUSH BUTTONS	Ten: One for power OFF; one for phono operation; three for manual-tuning band selection (BC, SW, or FM); five for automatic (motor-driven) station and band selection (BC or FM)
OPERATING VOLTAGE	105—125 volts, 60 cycles, a.c.
POWER CONSUMPTION	
Radio	175 watts
Phonograph	20 watts
AERIALS	Built-in loop for broadcast and short wave; cabinet dipole for FM; provision for external aerial
INTERMEDIATE FREQUENCIES	
AM	455 kc.
FM	9.1 mc.
PHILCO TUBES (16)	6AU6, 7E5, 7H7(2), 7B7, 7F8, FM1000, 6J5GT(3), 7E6, 6L6GA(2), 7F7, 7E7, 5U4G
PHONOGRAPH	Philco Automatic Record Changer, Model M-4 (for service information, see manual PR-1157)
MOTOR-DRIVEN TUNING MECHANISM	Philco Electromechanical Push-Button Tuner (for service information, see manual PR-1481)

MODELS 48-1274, 48-1276

TOR, AND AVC CIRCUITS

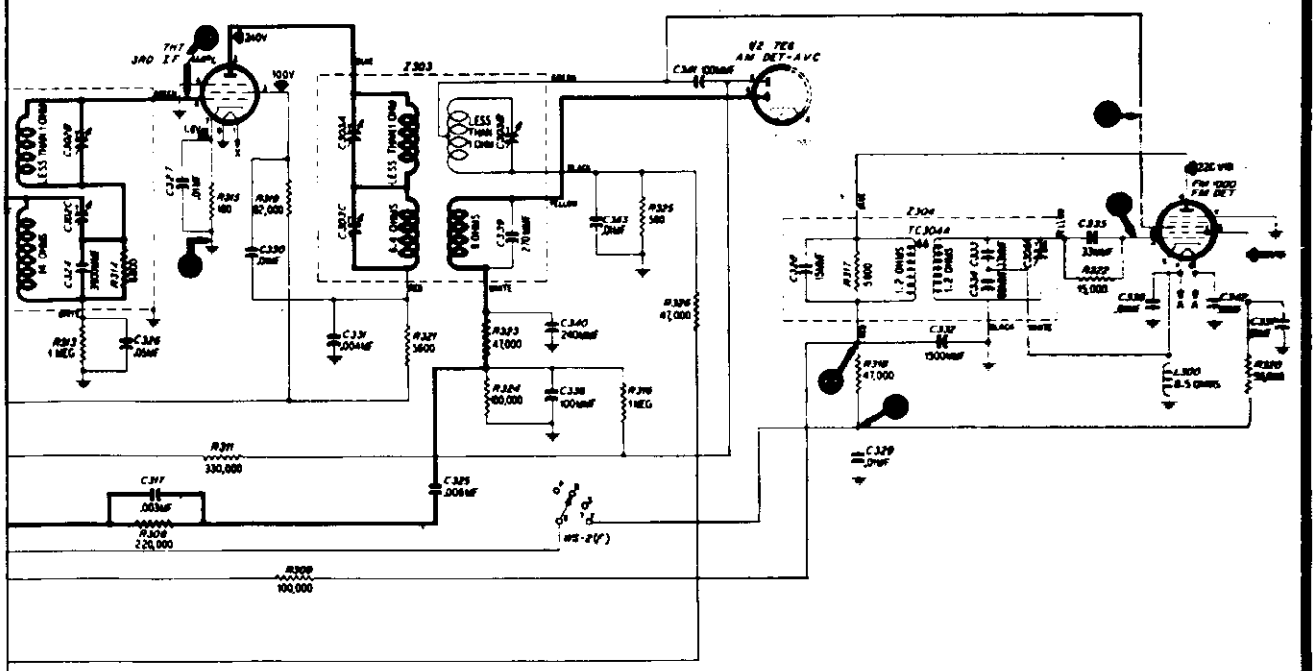

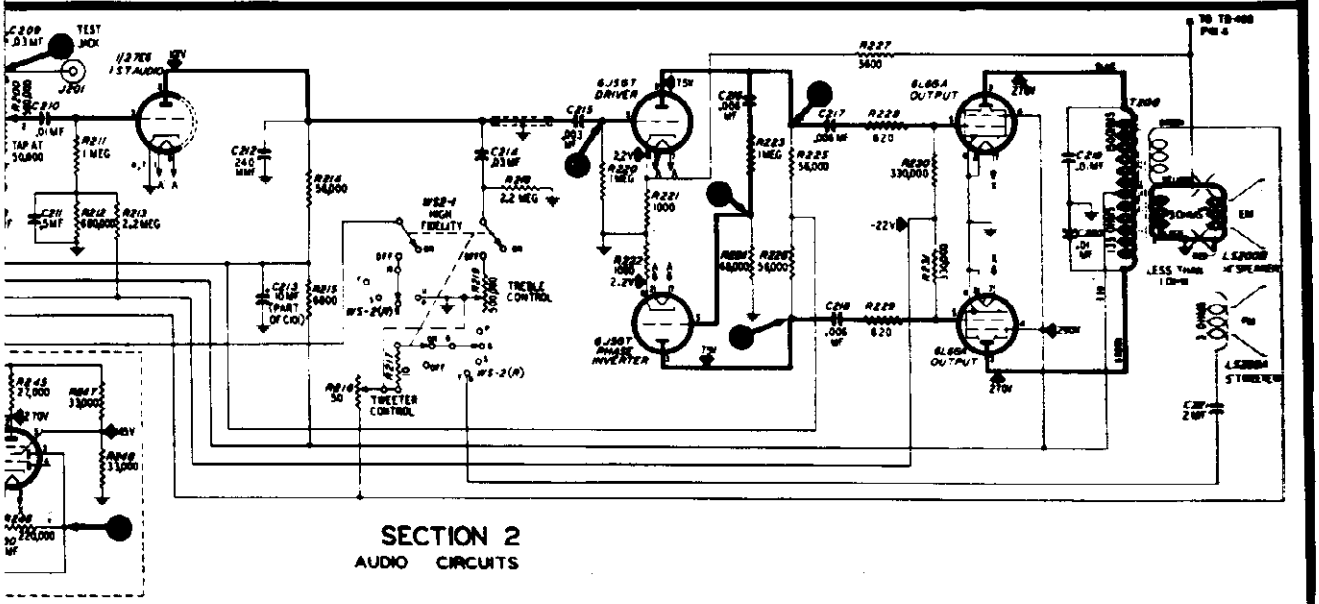

SECTION 2
AUDIO CIRCUITS

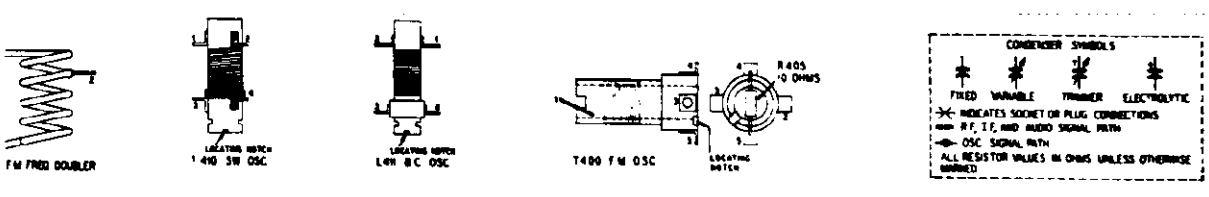

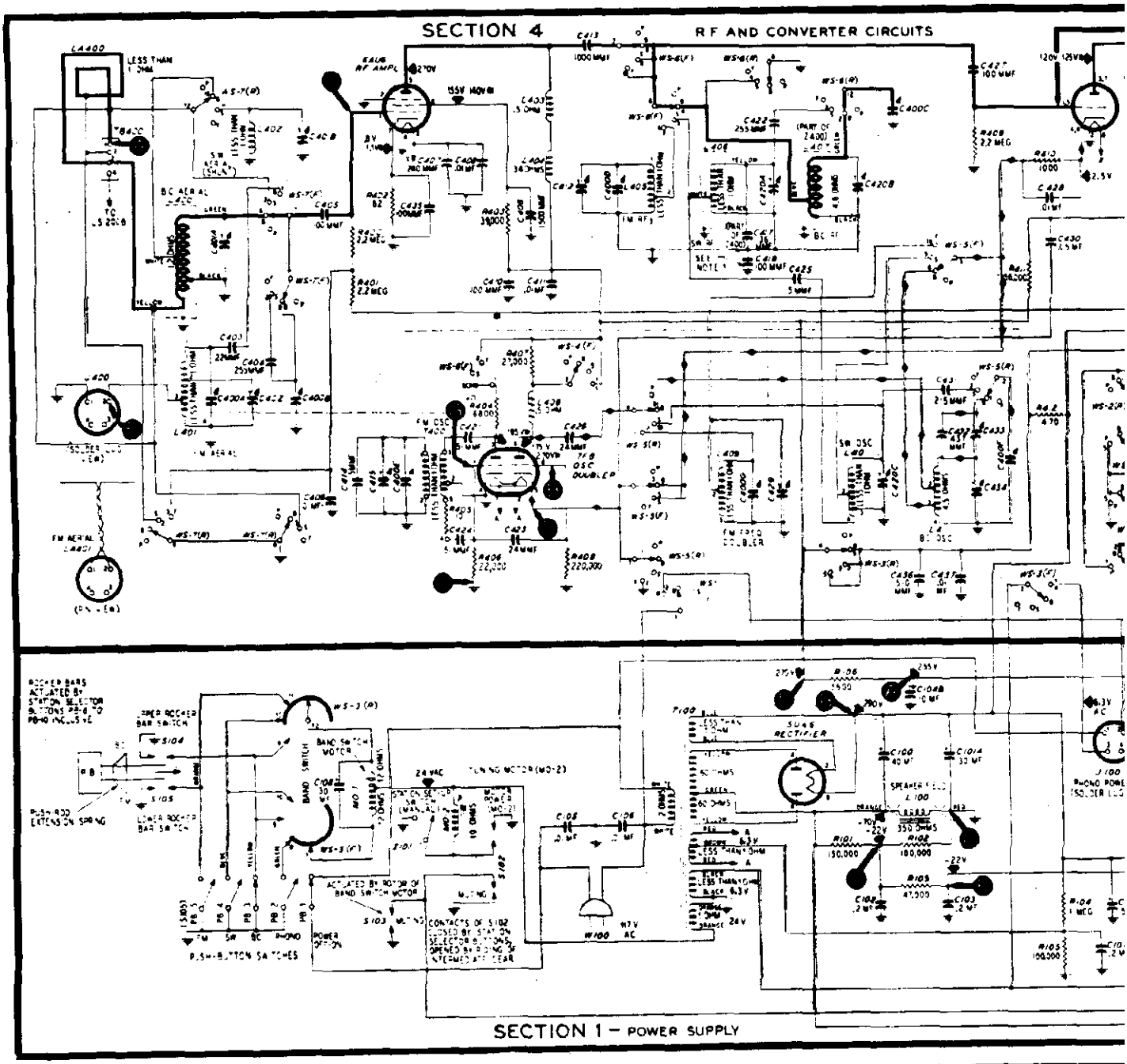

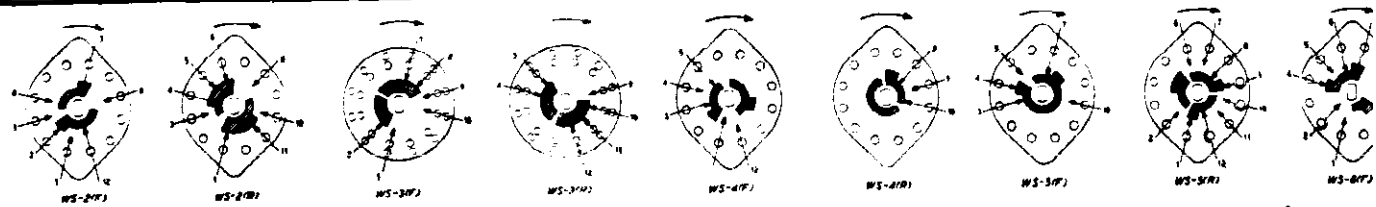

◀ VOLTAGES MEASURED WITH BAND (WAFER) SWITCH IN FM POSITION

BAND (WAFER) SWITCH SECTIONS SHOWN IN BROADCAST POSITION LOOKING INVERTED CHASSIS, FACING CONTROLS, RIGHT-HAND SIDE OF WAFERS IS CONSIDERED AS THE FRONT – WAFERS SYMBOLIZED WS-1, WS-2, ETC., FROM RIGHT TO LEFT. (F) INDICATES FRONT CONTACTS, LOOKING FROM RIGHT-HAND END OF CHASSIS. (R) INDICATES REAR CONTACTS, LOOKING THROUGH FROM RIGHT-HAND END OF CHASSIS. SEE FIGURE 6

F-FM
S-SHORT

BAND (WAFER) SWITCH POS

FIGURE 8.

©John F. Rider

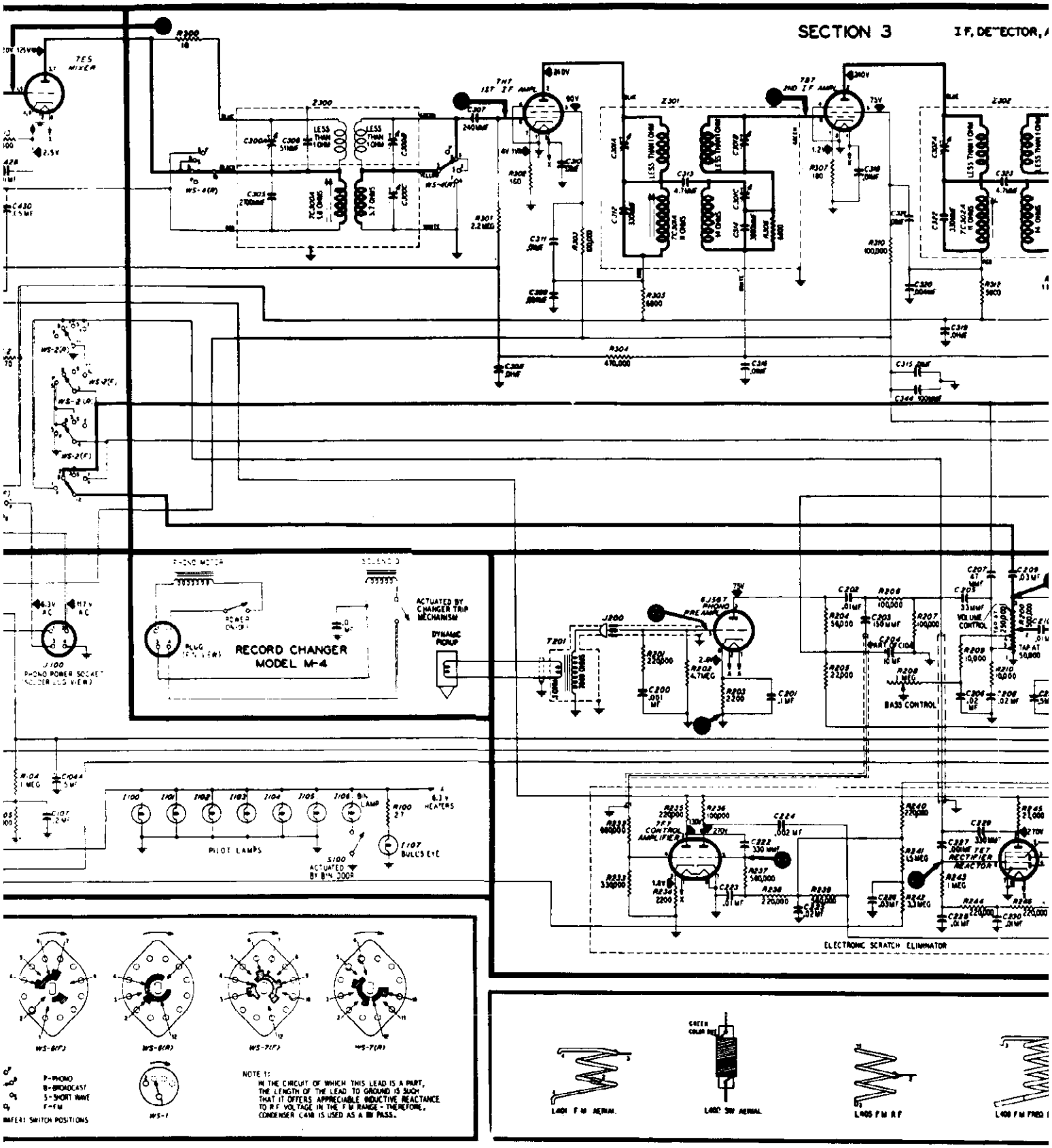

IGURE 8. PHILCO RADIO-PHONOGRAPH MODELS 48-1274 AND 48-1276, SECTIONALIZED SCHEMATIC DIAGRAM, SHOWING TEST POINTS

MODELS 48-1274, 48-1276

ECTOR, AND AVC CIRCUITS

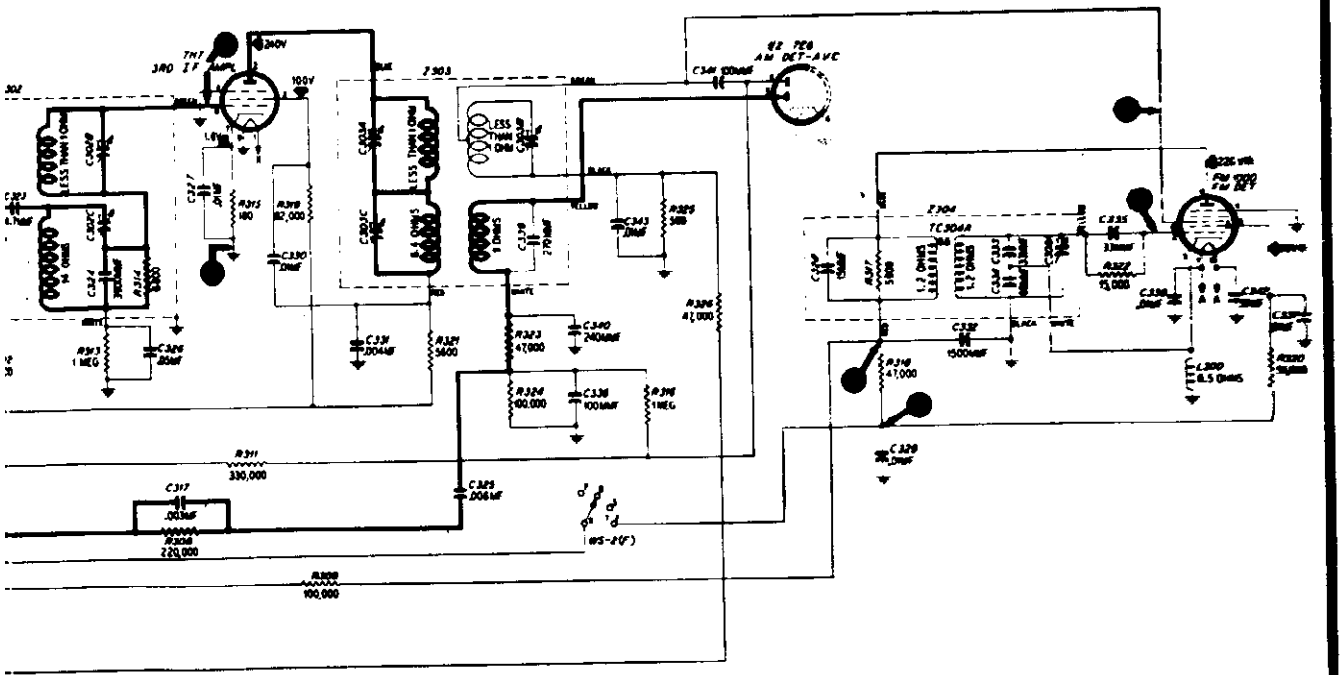

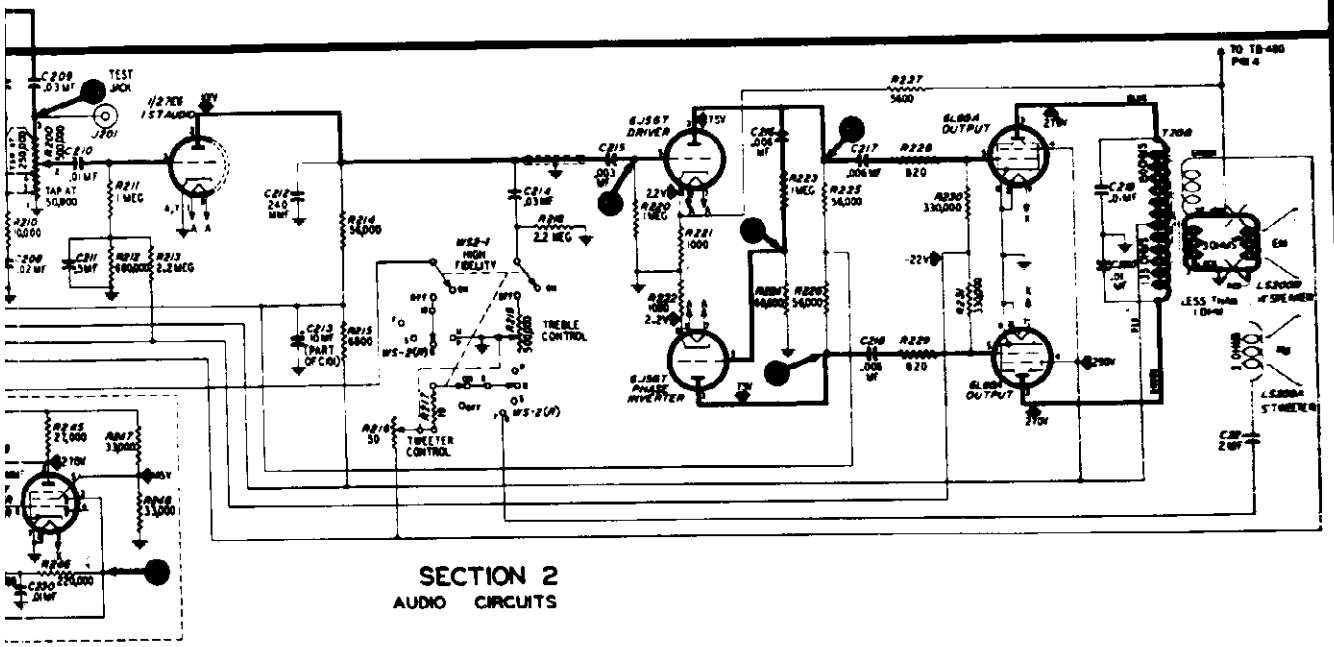

SECTION 2
AUDIO CIRCUITS

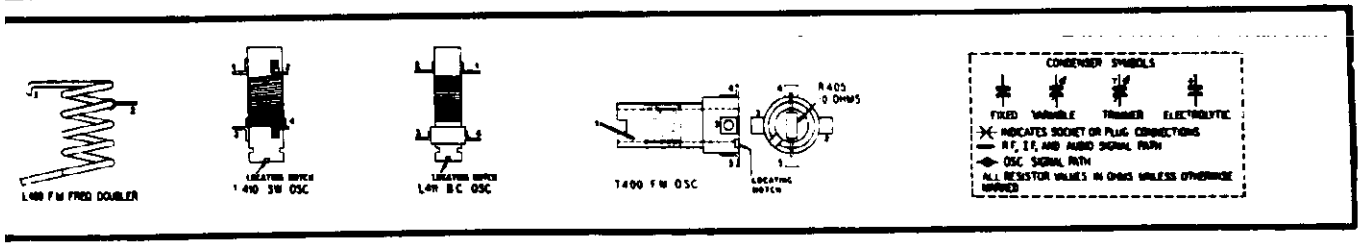

INTS

MODELS 48-1274, 48-1276

SETTING PUSH BUTTONS

NOTE: Before setting the push buttons, allow the radio to warm up for about 15 minutes.

1. Depress the BC push button, and rotate the tuning control until the Allen setscrew in the main camshaft is accessible from the rear of the chassis, as shown in figure 9.

2. Loosen the setscrew four turns.

CAUTION: Remove the wrench before proceeding with the next step.

3. Determine the dial positions of the desired stations (both FM and broadcast) in order, from left to right, and place the station tabs of these stations, in the same order, in the station-selector buttons.

4. Position the push-rod extension spring of the station-selector button so that it will engage the correct rocker bar (upper bar for broadcast, and lower bar for FM).

5. Depress the button for the band of the station to be set up on the left-hand station-selector button. Manually tune the radio to this station, and, while holding the manual-tuning control, depress the station-selector button.

6. After the tuning motor stops, operate the set-up switch (see figure 9); hold the set-up switch closed until the motor stalls, then release it.

7. Set the remaining four station-selector buttons, from left to right, in the same manner.

8. Depress the BC button, and again rotate the tuning control until the Allen setscrew is accessible; tighten the setscrew and remove the wrench.

STEP	SIGNAL GENERATOR	
	CONNECTION TO RADIO	DIAL SETTING
1	Through .1-mf. condenser to stator of ant. section of tuning gang.	455 kc.
2	Radiating loop (See note below.)	15 mc.
3	Same as step 2.	15 mc.
4	Same as step 2.	1720 kc.
5	Same as step 2.	580 kc.
6	Same as step 2.	1500 kc.
7	Same as step 2.	1500 kc.
8	Repeat steps 4. 5. 6. and 7 until no further increase is ob	

RADIATING LOOP: Make up a coil of insulated wire, consisting of about 6" in diameter. Connect coil ends to signal-generator leads, an near radio-broadcast loop.

STEP	SIGNAL GENERATOR	
	CONNECTION TO RADIO	DIAL SETTING
1	To control grid (pin 5) of 7E5 (through hole in side of r-f chassis).	9.1 mc. (Mod. on)
2	Same as step 1.	9.1 mc. (Mod. on)
3	Same as step 1.	9.1 mc. (Mod. on)
4	Same as step 1.	9.1 mc. (Mod. on)
5	Same as step 1.	9.1 mc. (Mod. on)
6	Same as step 1.	9.1 mc. (Mod. on)
7	Same as step 1.	9.1 mc. (Mod. on)
8	To control grid (pin 6) of 7H7 third i.f.	9.1 mc. (Mod. off)
9	Same as step 8.	9.1 mc. (Mod. off)
10	To terminal 2 of J400 (see note 5).	105 mc. (Mod. on)
11	Same as step 10.	105 mc. (Mod. on)
12	Same as step 10.	92 mc. (Mod. on)
13	Repeat steps 10 and 11 until no further increase is obtai	
14	Same as step 10.	105 mc. (Mod. on)
15	See note 7.	105 mc. (Mod. on)
16	Same as step 13.	92 mc. (Mod. on)
17	Repeat steps 14. 15. and 16 until no further increase is o	

ATOR		RADIO			ADJUST
	DIAL SETTING	BAND	DIAL SETTING	SPECIAL INSTRUCTIONS	
or	455 kc.	BC	1700 kc.	Adjust trimmers, in order given, for maximum output. Do not repeat adjustments.	C303C — 4th C302C — 3rd TC302A — 3r C301C — 2nd TC301A — 2n C300C — 1st TC300A — 1s
r.)	15 mc.	SW	15 mc.	Adjust for maximum. (Image should be heard with generator tuned to 14.1 mc.)	C420C —
	15 mc.	SW	15 mc.	Adjust for maximum while rocking tuning control.	C420A — C401B — S
	1720 kc.	BC	1720 kc.	Adjust for maximum.	C434 — Bc. osc
	580 kc.	BC	580 kc.	Adjust for maximum.	C433 — Bc. osc
	1500 kc.	BC	1500 kc.	Adjust for maximum.	C420B —
	1500 kc.	BC	1500 kc.	Adjust for maximum.	C401A — B

no further increase is obtained.

ated wire, consisting of 6 to 8 turns,
inal-generator leads, and suspend coil

FIGU

FM ALIGNMENT CHART

TOR		RADIO		ADJUST
	DIAL SETTING	DIAL SETTING	SPECIAL INSTRUCTIONS	
	9.1 mc. (Mod. on)	Tuning gang fully closed.	Connect jumper between pin 2 (oscillator grid) of FM1000 and chassis (see note 1). Connect loading network (see note 2) between top of trimmer C303B and chassis (see note 3). Adjust for maximum.	C303A — 4th
	9.1 mc. (Mod. on)	Same as step 1.	Connect loading network between pin 2 (blue lead) of 7H7 third i.f. and chassis. Adjust for maximum.	C303B — 4th
	9.1 mc. (Mod. on)	Same as step 1.	Connect loading network between pin 6 (green lead) of 7H7 third i.f. and chassis. Adjust for maximum.	C302A — 3rd
	9.1 mc. (Mod. on)	Same as step 1.	Connect loading network between pin 2 (blue lead) of 7B7 second i.f. and chassis. Adjust for maximum.	C302B — 3rd
	9.1 mc. (Mod. on)	Same as step 1.	Connect loading network between pin 6 (green lead) of 7B7 second i.f. and chassis. Adjust for maximum.	C301A — 2nd
	9.1 mc. (Mod. on)	Same as step 1.	Connect loading network between pin 2 (blue lead) of 7H7 first i.f. and chassis. Adjust for maximum.	C301B — 2nd
	9.1 mc. (Mod. on)	Same as step 1.	Leave loading network connected as in step 6. Adjust for maximum.	C300B — 1st C300A — 1st
	9.1 mc. (Mod. off)	Same as step 1.	Remove loading network, and remove jumper from pin 2 of FM1000 and chassis. Connect jumper between pin 4 (blue lead) of FM1000 and test point H (Section 3). Adjust for zero beat.	C304A — De
	9.1 mc. (Mod. off)	Same as step 1.	Remove jumper used in step 8. Adjust for zero beat (see note 4).	TC304A — De
	105 mc. (Mod. on)	105 mc.	Connect jumper between pin 2 of FM1000 and chassis. Adjust for maximum.	C415 — F
	105 mc. (Mod. on)	105 mc.	Same as step 10.	C429 — Freq.
	92 mc. (Mod. on)	92 mc.	Adjust coil L409 for maximum (see note 6).	Freq.-doubler t

urther increase is obtained.

	105 mc. (Mod. on)	105 mc.	Adjust for maximum while rocking tuning control.	C412
	105 mc. (Mod. on)	105 mc.	Adjust for maximum.	C402 —
	92 mc. (Mod. on)	92 mc.	Adjust coils L405 and L401 for maximum (see note 6).	R-f and aerial t

no further increase is obtained.

AM ALIGNMENT CHART

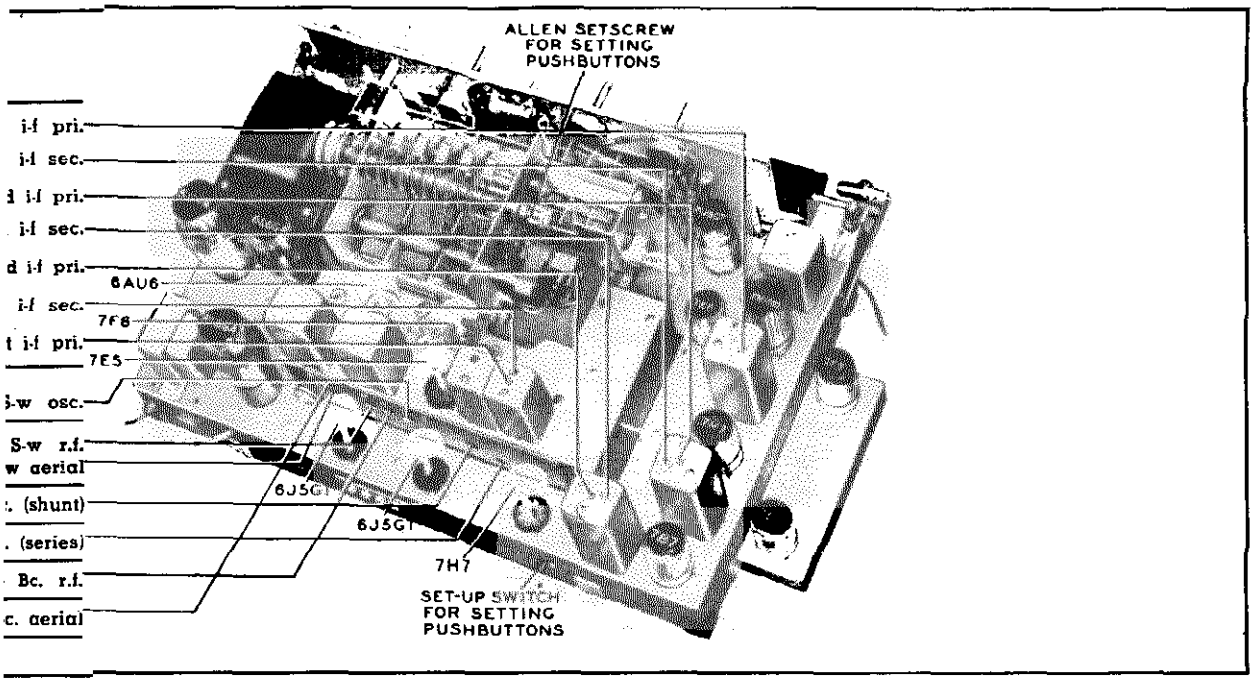

JRE 9. TOP VIEW, SHOWING AM TRIMMER LOCATIONS TP-3782

FIGURE 10. TOP VIEW, SHOWING FM TRIMMER LOCATIONS TP-3782

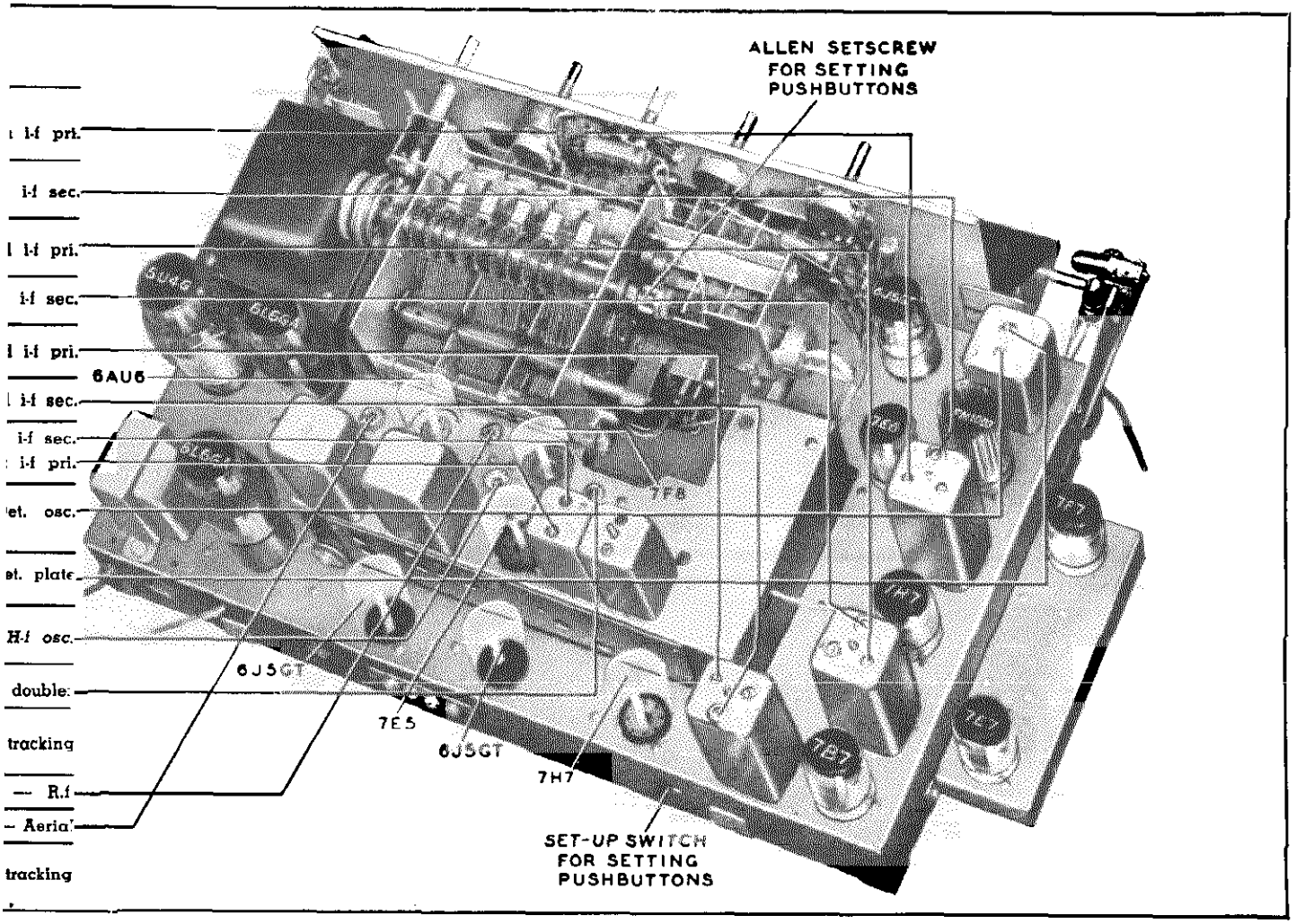

PHILCO CORP.

MODELS 48-1274, 48-1276

AM ALIGNMENT PROCEDURE

CAUTION: Do not turn on the power with the speaker disconnected, or the radio may be damaged.

When the complete AM and FM alignments are to be made, the AM alignment should be made first; if AM alignment is not required, the FM alignment alone may be made. Before starting the alignment, allow the radio to warm up for about 15 minutes.

DIAL POINTER: With the tuning-condenser plates fully meshed, adjust the pointer to coincide with the index mark at the low-frequency end of the scale. See CALIBRATING DIAL BACKPLATE, page 12.

RADIO CONTROLS: Set the volume control to maximum. Turn the bass control fully counterclockwise, and the treble control fully clockwise.

AM R-F SIGNAL GENERATOR: Connect the ground lead to the radio chassis, and the output lead as indicated in the chart. Use modulated output.

OUTPUT METER: Connect between terminal 4 (voice-coil connection) of the aerial terminal panel and the chassis.

OUTPUT LEVEL: During the alignment, the input signal must be attenuated to hold the output-meter reading below 1.5 volts.

BAND PUSH BUTTONS, RADIO DIAL, AND SIGNAL-GENERATOR DIAL: Set as indicated in the chart.

FM ALIGNMENT PROCEDURE

MAKE AM ALIGNMENT FIRST

Follow the instructions preliminary to the AM alignment chart, except for the band selection; depress the FM push button. Use an AM r-f signal generator, with or without modulation, as indicated in the chart.

FM ALIGNMENT NOTES

1. When pin 2 of the FM1000 tube is shorted to the chassis, the detector oscillator is made inoperative, and the circuit is converted to an AM detector.
2. Make the loading network by connecting a 4700-ohm resistor and a .1-mf. condenser in series. Attach an alligator clip to each free end of the network. This network, when connected across the primary or secondary of an overcoupled i-f transformer, loads the circuit so that the transformer coupling is effectively below the critical value; the unloaded winding may then be correctly tuned to the center intermediate frequency.
3. The top of trimmer, C303B, can be reached only from the top of the shield can. Slide a length of flattened solder or wire down between the ceramic form and the edge of the trimmer plate. Attach the loading network between this connection and the chassis.
4. It is essential that the output of the generator be kept below the level at which the detector oscillator locks in, or an erroneous zero beat will be obtained. When a single very sharp zero-beat point in obtained, the adjustment is correct.
5. The use of a signal generator for steps 10 to 16, inclusive, is recommended only if the available generator is sufficiently accurate to insure correct frequency settings; otherwise, an alternate procedure employing FM broadcast-station signals instead of a signal generator is recommended. For adjustments at the high-frequency end of the band, use the station nearest 105 mc.; for the low-frequency adjustments, use the station nearest 92 mc. If the circuits are greatly misaligned, it may be necessary to adjust the trimmers and coils for maximum noise at each end of the band before station signals can be heard.
6. Check circuit resonance with a tuning wand. If the brass end, when placed in or near the coil, increases the output-meter reading, spread the coil turns; if the powdered-iron end increases the reading, compress the turns. If both ends cause a decrease in output, the coil is correctly tuned. Do not change the coils excessively, since only a small adjustment is required at these frequencies.
7. To feed signals from the signal generator into the aerial circuit of the radio, make two simple dipole aerials. Each aerial may consist of two 30-inch lengths of rubber-covered wire. Connect one dipole aerial to terminals 1 and 2 on the FM aerial socket. Connect the other to the signal-generator leads. Arrange the two aerials several feet apart.

SYMBOLIZATION

The components in the radio circuit are symbolized according to the types of parts and the sections of the radio in which the parts are located. The prefix letter of the symbol designates the type of part, as follows:

C—condenser	LA —loop aerial	PB—push-button switch	T —transformer
I —pilot lamp	LS —loud-speaker	R —resistor	WS—wafer switch
L—choke or coil	MO—motor	S —switch	Z —electrical assembly

The number of the symbol designates the section in which the part is located, as follows:

100-series components are in Section 1 — the power supply
200-series components are in Section 2 — the audio circuits
300-series components are in Section 3 — the i-f, detector, and a-v-c circuits
400-series components are in Section 4 — the r-f and converter circuits

A suffix letter identifies the part as a component of the assembly which bears an identical number without a suffix letter, and with perhaps a different prefix letter.

MODELS 48-1274, 48-1276

PHILCO CORP.

CIRCUIT DESCRIPTION

Philco Models 48-1274 and 48-1276 are 16-tube radio-phonograph combinations incorporating a sensitive superheterodyne radio and a Philco Automatic Record Changer, Model M-4. The two models are essentially identical except for the cabinets and cabinet hardware, as indicated in the Replacement Parts List.

Aerial System

A built-in, low-impedance loop provides signal pickup on the broadcast and short-wave bands. The cabinet dipole aerial gives satisfactory FM reception in areas of moderately high signal strength. For greater pickup on the FM band, the Philco Dipole Outdoor Aerial, Part No. 45-1462, should be used. To increase the pickup on all three bands, use the Philco Aerial Coupler, Part No. 76-2353, with the outdoor dipole. Information on aerial and coupler connections is given in external-aerial bulletin PR-1200.

Push Buttons

Nine of the ten push buttons are used for the selection of band, phono operation, or automatic station tuning; any one of these turns on the power. The OFF button turns off the power.

Push-Button Band Selectors

Any one of three push buttons (BC, SW, FM) selects the band for manual tuning by operating a motor-driven band switch. A muting switch, shorting out the speaker voice-coil circuit, operates simultaneously.

Push-Button Phono Switch

The PHONO push button operates the motor-driven band switch to select phono operation, and applies the power to the phonograph control on the record changer. The muting switch operates simultaneously.

Push-Button Station Selectors

Five push buttons are used for selecting any one of five standard-broadcast or FM stations. These buttons operate the motor-driven tuning mechanism, and, in addition, automatically actuate the motor-driven band switch whenever a band change is required. The muting switch operates simultaneously.

Radio Circuit

A 6AU6 r-f pentode is used as a tuned-r-f amplifier on all bands. See figure 8. Frequency conversion is accomplished by separate mixer and oscillator tubes. A 7E5, arranged for cathode injection, functions as the mixer on all bands. The oscillator system employs a 7F8 double triode. One section of this tube is employed as the oscillator for broadcast and short-wave reception. For FM reception, the second section of the tube, functioning as the oscillator, operates on frequencies of one-half those usually employed, while the first section of the tube functions as a frequency doubler, the tuning circuit being tracked with that of the oscillator. Another unique feature of the FM oscillator is the separate tuned circuit, which is inductively coupled to the untuned feed-back circuit. These oscillator design features achieve unusual stability.

The three stages of i-f amplification employ two 7H7's and one 7B7. In the i-f transformers the FM windings (9.1 mc.) are in series with the AM windings (455 kc.). The windings of the first i-f transformer are switched, to provide additional image rejection and conversion efficiency. No switching is required for the other i-f transformers.

The diode sections of the 7E6 provide AM detection and a.v.c.; the triode section of this tube functions as the first audio amplifier. For FM reception, the Philco Advanced FM Detector, using an FM1000, provides good sensitivity and noise rejection.

A positive voltage taken from a voltage divider (R104 and R105) is applied, through the center tap of the filament winding, to the first-audio and phono-preamplifier tubes; by making the filaments positive with respect to the cathodes and grids, emission from the filaments to these elements is prevented, and a-c hum is reduced in both radio and phono operation.

The first audio amplifier is resistance-coupled to a 6J5GT driver, which is resistance-coupled to one of the 6L6GA output tubes and, through a voltage divider (R223 and R224), to a 6J5GT phase inverter; the phase inverter drives the other 6L6GA output tube. Inverse feed-back voltage, taken from the secondary of the output transformer, is applied through a voltage divider (R221 and R227) to the 6J5GT driver, thus improving the fidelity of the audio system.

Both the tweeter and the large reproducer of the coaxial speaker system are used for FM reception. The tweeter is disconnected for broadcast and short-wave reception, and also for phono operation.

Phono Preamplifier

A 6J5GT is used in the phono-preamplifier stage. In phono operation, this stage is resistance-coupled to the first audio amplifier (triode section of the 7E6).

Scratch Eliminator

The Philco Electronic Scratch Eliminator, which is used in phono operation, reduces the high-frequency surface noise during the low-volume passages of a

record, and permits maximum treble response during the high-volume passages. The circuit employs a 7F7 double triode as a two-stage audio amplifier, and a 7E7 double diode, pentode as a half-wave rectifier and a reactance tube. The latter functions as a variable capacitance (at the output circuit of the phono preamplifier) which shunts a controlled portion of the higher audio frequencies to ground. The bias on the grid of the reactance tube controls the effective shunt capacitance, which becomes maximum with low bias, and minimum with high bias. The control bias is obtained from the audio signal, of which a definite amount is taken off, amplified by the 7F7, and rectified by the diode section of the 7E7.

High-Fidelity Switch

The high-fidelity switch, operating in conjunction with a band-switch section, WS-2(R), performs the following functions:

For broadcast and short-wave operation, the fidelity switch in the OFF position switches the treble control into the circuit, and in the ON position disconnects the treble control.

For FM operation, the fidelity switch in the ON position connects the tweeter speaker into the circuit, and also connects that section of the treble control which controls the output of the tweeter; in the OFF position the fidelity switch disconnects the tweeter, and connects the treble control into the circuit.

For phono operation, the fidelity switch in the OFF position turns on the scratch eliminator, and switches the treble control into the circuit; in the ON position the switch disconnects the treble control, and turns off the scratch eliminator.

Treble Control

The treble control has two variable-resistance sections; the .5-megohm potentiometer operates in conjunction with a .05-mf. condenser for treble-attenuation control, and is in the circuit whenever the high-fidelity switch is in the OFF position; the 50-ohm potentiometer controls the output of the tweeter speaker for FM high-fidelity operation, and is in the circuit when the high-fidelity switch is in the ON position (with the FM push button depressed).

Bass Control

The bass control is in the circuit for both radio and phono operation. This control, a 1-megohm potentiometer, is combined with C206 and R209 to furnish any desired degree of bass accentuation.

PHILCO AUTOMATIC BAND SELECTOR

The Philco Automatic Band Selector consists of a motor-driven band switch (figure 5), operated by the various push buttons. The position of the switch is selected manually, by the BC, SW, FM, or PHONO push-button, or automatically, by any of the five station-selector push buttons.

The motor is a reversible, shaded-pole, induction motor, operating on 24 volts a.c. The operation of the motor is controlled through the contacts on the "homing" wafer, WS-3(F) and WS-3(R), which is a section of the band switch; the contacts on both sides of this wafer are shown schematically in figure 8. The direction of motor rotation depends upon which section of the center-tapped field is energized; therefore, the direction in which the band switch is driven is determined by the position of the homing-wafer rotor when a given band-selector switch is closed. In manual band selection, motor power is applied to the homing wafer by the contacts of the BC, SW, FM, or PHONO push button. In automatic band selection, the power is applied by either S104 for the standard broadcast band, or by S105 for the FM band. Switches S104 and S105 are combined with the upper and lower rocker bars, respectively, located on the front of the Philco Electromechanical Push-Button Tuner. Either bar is mechanically actuated, when a given station-selector button is depressed, by the individual push-rod extension spring, which is positioned so as to strike the rocker bar for the band in which the station is located.

When any one of the push-button switches is closed, power is supplied to the motor until the moving rotor of the homing wafer breaks that circuit. Over-shooting is prevented by the use of a clutch, mounted on the motor shaft. When the motor is idle, a spring holds its rotor off-center with respect to the electromagnetic field, and keeps the motor disengaged from the gear train. When power is applied to the motor, the rotor attempts to center itself in the field, thus engaging the clutch in the gear train. When the power is removed, the clutch is immediately disengaged by the action of the spring.

As the clutch is disengaged, the muting switch (leaf type) is pushed open by the motor shaft. When the motor operates, the muting switch is allowed to close.

For an example of the band-changing operation, assume that the idle condition is as indicated in the schematic diagram, showing the BC push button, PB-3, depressed. Now, if PB-5 is depressed, the motor circuit is completed through contact 11 and the rotor of WS-3(R), thence through the upper section of the motor field winding. Power is supplied to the motor until the band switch is rotated sufficiently to break the circuit between contact 11 and the rotor of WS-3(R). At this instant, the rotor of the motor is thrown outward, disengaging the clutch from the gear train.

From the idle position shown, if PB-2, instead of PB-5, is depressed, the motor circuit is completed through contact 8 and the rotor of WS-3(F), thence through the lower section of the motor field winding, thus causing motor rotation in the direction opposite to that of the instance cited above.

MODELS 48-1274, 48-1276

PHILCO CORP.

PHILCO ELECTROMECHANICAL PUSH-BUTTON TUNER

As previously mentioned, the Philco Electromechanical Push-Button Tuner provides both automatic tuning and band selection, for five stations in the standard broadcast and FM bands, by the operation of push buttons. The five station-selector buttons operate the motor-driven tuning mechanism.

Band selection is determined by the position of the push-rod extension spring, one of these being attached to each of the five push rods; the push-rod extensions facing upward lock in the upper rocker bar (standard broadcast) when the buttons are depressed; the extensions facing downward lock in the lower rocker bar (FM).

The tuning-condenser gang is rotated to the correct position by the motor-driven tuning mechanism, which is operated by a 24-volt, a-c, series-wound motor. A 4-contact leaf switch (S102), located at the rear of the push rods, applies the motor power and closes the muting circuit when any of the five station-selector buttons is depressed; this switch is locked in the closed position by a small latch on the push rod, which hooks onto the actuator bar. When the tuning gang locks in the preset position, the intermediate gear of the gear train rides upward and trips the actuator bar, to release the small latch, thus removing the motor power and opening the muting switch.

The set-up switch (S101), which is used for setting the station-selector buttons, is connected in parallel with the motor power switch, and is operated by a small button located on the rear of the chassis.

Since the functioning of the tuning mechanism itself is somewhat complex, a detailed description of the tuner, with illustrations and complete service information, is presented in a separate manual, PHILCO ELECTROMECHANICAL PUSH-BUTTON TUNER, PR-1481.

PHILCO TROUBLE-SHOOTING PROCEDURE

For rapid trouble shooting, the radio circuit is divided into four sections, as follows:

Section 1—the power supply

Section 2—the audio circuits

Section 3—the i-f, detector, and a-v-c circuits

Section 4—the r-f and converter circuits

Test points are specified for each section, and are indicated in the sectionalized schematic diagram. The trouble-shooting procedure given for each section includes a simplified test chart and a bottom view of the chassis showing the locations of the test points and the components of that section.

In each chart, the first step is a master check for determining whether trouble exists in that section, without going through the entire test procedure.

Failure to obtain the "NORMAL INDICATION" in any given step indicates trouble within the circuit under test.

After isolating the trouble to a single stage, the defect is located by: first, testing the tube; second, measuring tube electrode voltages; third, measuring circuit resistances; fourth, substituting condensers. The trouble revealed should be corrected before testing further.

Important

To avoid the possibility of altering FM operation, special care should be used in replacing any part. Replacement parts should be placed in the same physical positions as the original parts; connections should be of the same length, and should be soldered to the same points. The placement or length of leads should not be changed.

PRELIMINARY CHECKS

To avoid possible damage to the radio, the following preliminary checks should be made before connecting the radio to a source of power:

1. Inspect both the top and the bottom of the chassis. Make sure that all tubes are secure in the proper sockets, and look for any broken or shorted connections, burned resistors, or other obvious sources of trouble.

2. Measure the resistance across condenser C100 (see figure 1). When the ohmmeter test leads are connected in the proper polarity, the highest resistance reading will be obtained. If the reading is lower than 1500 ohms, check condensers C100, C101A, C104A, C436, C437, C410, and C411 for leakage or shorts.

The resistance value above, which is much lower than normal, is not intended as a quality check of these condensers; the value given is the lowest at which the rectifier will operate safely while the voltage tests of Section 1 are performed.

PHILCO CORP.

MODELS 48-1274, 48-1276

Section 1 — Power Supply

TROUBLE SHOOTING

CAUTION: *Do not turn on the power with the speaker disconnected, or the radio may be damaged.*

Make the tests for this section with a d-c voltmeter; connect the leads between the chassis, test point C, and the test points indicated in the chart. The voltage readings given were taken with a 20,000-ohms-per-volt meter, at a line voltage of 117 volts, a.c.

Depress the BC push button, PB-3; set the volume control to minimum, and the bass and treble controls fully clockwise.

Follow the steps in the order given. If the "NORMAL INDICATION" is obtained in step 1, proceed with the tests for Section 2 (audio circuits); if not, isolate and correct the trouble in this section.

STEP	TEST POINT	NORMAL INDICATION	ABNORMAL INDICATION	POSSIBLE CAUSE OF ABNORMAL INDICATION
1	A	255v		Trouble in this section. Isolate by the following tests.
2	B	290v	Low voltage	Defective: 5U4G. Leaky: C100, C101A, C436*, C437*, C104A, C319*. Open: L100, T100, C100. Shorted: T100.
			No voltage	Defective: 5U4G. Open: PB-1, T100. Shorted: C101A, C104A, C319*.
			High voltage	Open: T200.
3	D	270v	Low voltage	Increased resistance: R412*. Leaky: C436*, C437*, C411*, C410*, C413*.
			No voltage	Open: R412*, WS-3(R). Shorted: C436*, C437*, C416*, C419*, C411*, C410*, C413*.
4	A	255v	Low voltage	Increased resistance: R106. Leaky: C104B, C315*, C344*, C329* (in FM operation only).
			No voltage	Open: R106. Shorted: C104B, C315*, C344*.
5	E	Negative 22v	Low voltage	Increased resistance: R101. Decreased resistance: R102.
			No voltage	Open: R101. Shorted: C102.
			High voltage	Open: R102. L100.
6	F	Negative 22v	No voltage	Open: R103. Shorted: C103.
Listening Test: Abnormal hum may be caused by open C101A, C104A, or C104B.				

* This part, located in another section, may cause abnormal indication in this section.

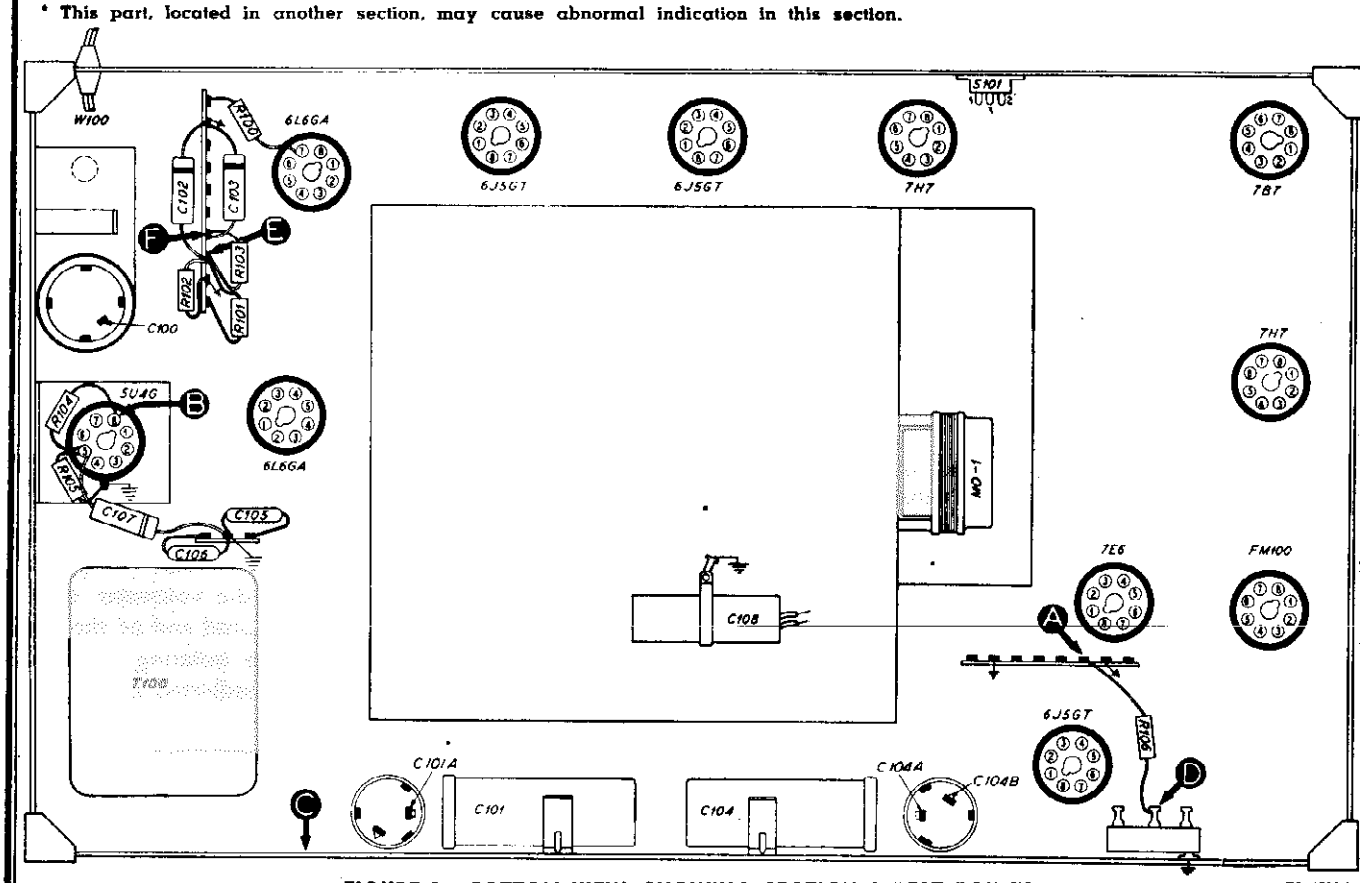

FIGURE 1. BOTTOM VIEW, SHOWING SECTION 1 TEST POINTS

TP-4723A

MODELS 48-1274, 48-1276

PHILCO CORP.

Section 2 — Audio Circuits

TROUBLE SHOOTING

AUDIO-AMPLIFIER AND PHONO-PREAMPLIFIER TESTS

Use an audio-frequency signal generator. Connect the generator ground lead to the chassis, test point C; connect the output lead through a .1-mf. condenser to the test points indicated in the chart.

Set the volume control to maximum, and the bass and treble controls fully clockwise. Depress the phono push button, PB-2.

If the "NORMAL INDICATION" is obtained in step 1, proceed with the scratch-eliminator tests; if not, isolate and correct the trouble in the audio-amplifier or phono-preamplifier circuits.

STEP	TEST POINT	NORMAL INDICATION	POSSIBLE CAUSE OF ABNORMAL INDICATION
1	A	Loud, clear signal with weak signal input.	Trouble in this section. Isolate by the following tests.
2	B (Remove 6J5GT phase inverter.)	Loud, clear signal with strong signal input.	Defective: 6L6GA. Open: LS200, T200, R230, C217, R228. Shorted or leaky: C217, C219.
3	D (Phase inverter removed.)	Loud, clear signal with strong signal input.	Defective: 6L6GA. Open: T200, R231, C218, R229. Shorted or leaky: C218, C220.
4	F (Phase inverter removed.)	Loud, clear signal with strong signal input.	Defective: 6J5GT driver. Open: R225, R221. Shorted or leaky: C215, C212.
5	E (Replace 6J5GT phase inverter.)	Loud, clear signal with strong signal input.	Defective: 6J5GT phase inverter. Open: R226, R222, R224. Shorted: C216.
6	G	Loud, clear signal with moderate signal input.	Defective: 7E6. Open: R200 (rotate through range), R214, R211, R212, C210, C215, R215. Shorted: C213. Leaky: C215, C213.
7	A	Loud, clear signal with weak signal input.	Defective: 6J5GT phono preamplifier. Open: R204, R205, C202, WS-2(F), R203, R202. Shorted or leaky: C204, C202.
Listening Test: Distortion may be caused by open R211 or R202, or by leaky C210 or C209.			

SCRATCH-ELIMINATOR TESTS

Except for the volume control, set the radio controls as directed for the audio-amplifier and phono-preamplifier tests; set the volume control to maximum for all steps except 1(b); for this step, adjust the volume control as indicated in the chart.

Turn the scratch eliminator on or off as indicated in the chart. (The scratch eliminator is on when the high-fidelity switch is in the OFF position.)

Connect an output meter between terminal 4 (voice-coil connection) of the aerial terminal panel and the chassis.

Connect the ground lead of an audio signal generator to the chassis, test point C; connect the output lead through a .1-mf. condenser to the test points indicated in the chart. Set the generator for 5000 cycles. Adjust the generator output as indicated in the chart.

If normal operation is indicated by the tests in step 1, (a) and (b), proceed with the tests for Section 3 (i-f, detector, and a-v-c circuits); if not, isolate and correct the trouble in the scratch-eliminator circuits.

NOTE: For steps 2, 3, and 4, connect the positive lead of a 20,000-ohms-per-volt, d-c voltmeter to the chassis, test point C; connect the prod end of the negative lead through a 100,000-ohm isolating resistor to the "VOLTMETER" test points indicated in the chart.

STEP	TEST POINT	SIGNAL GENERATOR OUTPUT	VOLTMETER	SPECIAL INSTRUCTIONS	POSSIBLE CAUSE OF ABNORMAL INDICATION
1 (a)	A	Adjust for 6v output-meter reading, with scratch eliminator off.		Turn scratch eliminator on; output voltage should drop to 2.5v (approx.).	

John F. Rider

PHILCO CORP.

MODELS 48-1274, 48-1276

Section 2 — Audio Circuits (Cont.) TROUBLE SHOOTING

STEP	TEST POINT	SIGNAL GENERATOR OUTPUT	VOLT-METER	SPECIAL INSTRUCTIONS	POSSIBLE CAUSE OF ABNORMAL INDICATION
1 (b)	A	Same as for step 1 (a).		Reduce volume control to obtain output-meter reading of 1v. Increase generator output to obtain output-meter reading of 6v. Turn scratch eliminator on; output voltage should not drop more than 1.5v (approx.).	Trouble in scratch-eliminator circuits. Isolate by the following tests.
2	H	See SPECIAL INSTRUCTIONS column.	J	With scratch eliminator on, increase generator output to obtain 11v, negative; failure to obtain this value indicates trouble.	Defective: 7F7, 7E7 (diode section). Open: R236, C224, R239, R240. Shorted or leaky: C224, C225.
3	H	Same setting which produced 11v reading in step 2, with scratch eliminator on.	K	With scratch eliminator on, voltage at point K should be 5v, negative.	Open: R243, R244, R246. Shorted or leaky: C228, C230, C227.
4	A	Same setting which produced 11v reading in step 2, with scratch eliminator on.	J	With scratch eliminator on, voltage at point J should be approx. 28v, negative.	Defective: 7F7. Open: R235, C222, R237, R234, R233, R232, C203. Shorted or leaky: C203, C222, C223.
5	A	Adjust for 6v output-meter reading, with scratch eliminator off.		Turn scratch eliminator on; output voltage should drop to 2.5v (approx.).	Defective: 7E7 (pentode section). Open: R245, R247, R248, C227, C229. Shorted or leaky: C229.

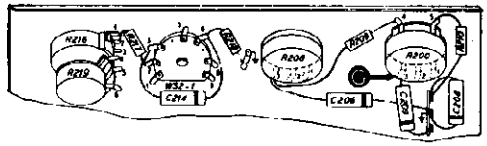

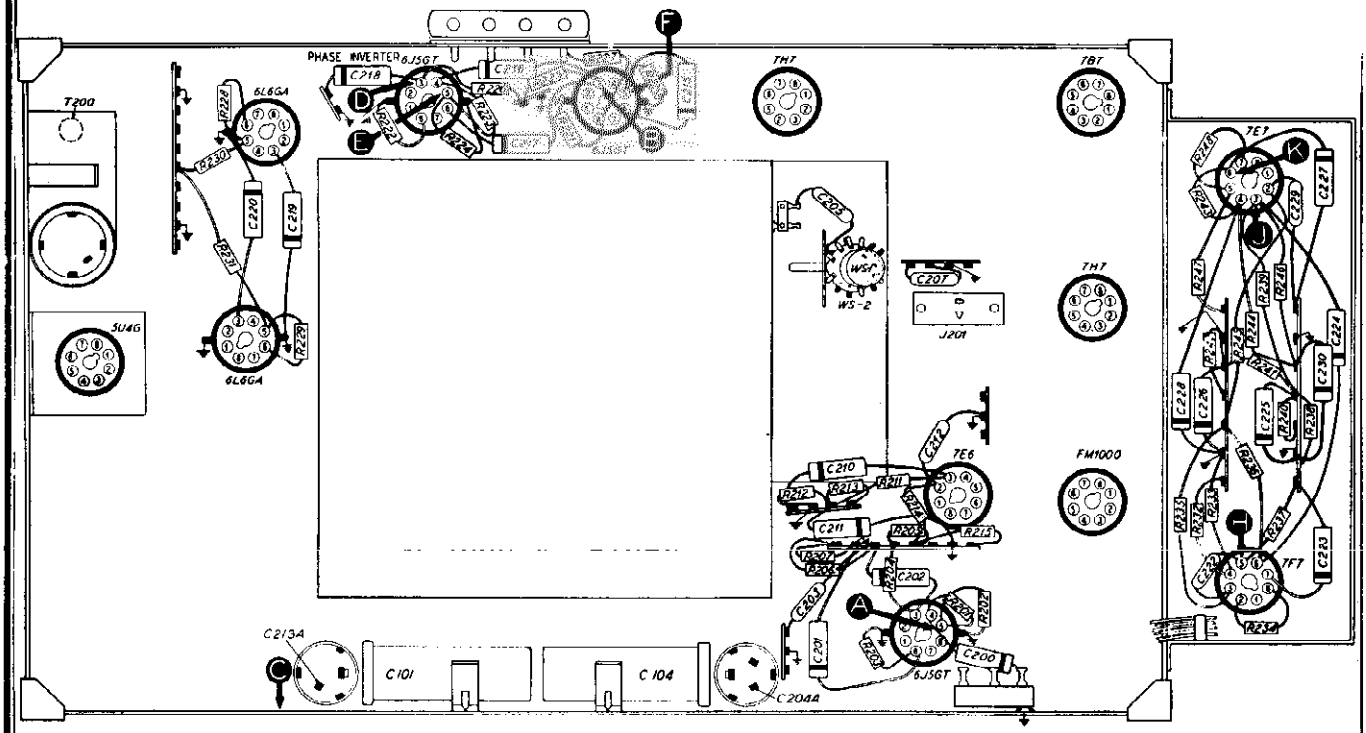

FIGURE 2. BOTTOM VIEW, SHOWING SECTION 2 TEST POINTS

TP-4723B

© John F. Rider

MODELS 48-1274, 48-1276

PHILCO CORP.

Section 3 — I-F, Detector, and A-V-C Circuits TROUBLE SHOOTING

AM CIRCUITS

Use an r-f signal generator, with modulated output, set at 455 kc. Connect the generator ground lead to the chassis, test point C; connect the output lead through a .1-mf. condenser to the test points indicated in the chart.

Depress the BC push button, PB-3. Set the volume control to maximum and turn the bass and treble controls fully clockwise.

If the "NORMAL INDICATION" is obtained in step 1, proceed with the tests for the FM circuits, or the tests for Section 4; if not, isolate and correct the trouble in the AM circuits.

Since the circuit location of test point A for this section is in Section 4, the effectiveness of step 1 as a master check is dependent upon the condition of certain parts in Section 4; these parts are listed below under "POSSIBLE CAUSE OF ABNORMAL INDICATION."

STEP	TEST POINT	NORMAL INDICATION	POSSIBLE CAUSE OF ABNORMAL INDICATION
1	A	Loud, clear signal with weak signal input.	Trouble in AM circuits. Isolate by the following tests.
2	B	Loud, clear signal with strong signal input.	Defective: 7H7. Misaligned: Z303. Open: R315, Z303 pri. or sec., R323, C325, WS-2(F), R321, R319, R324, C339. Shorted: C330, C331, C340, C336, C323, Z302 sec.
3	D	Loud, clear signal with moderate signal input.	Defective: 7B7. Misaligned: Z302. Open: R307, R310, R312, R313, Z302 pri. or sec., C322, C302C, C324, C321, C320. Shorted: Z302 pri. or sec., C322, C302C, C313, C324, C320.
4	E	Loud, clear signal with weak signal input.	Defective: 7H7. Misaligned: Z301. Open: R301, R302, R303, R304, R311, R305, Z301 pri. or sec., C312, C313, C314, C309, C311. Shorted: C309, C312, C301C, C314, Z301 pri. or sec.
5	A	Loud, clear signal with less signal input than in step 4.	Defective: 7E5. Misaligned: Z300. Open: Z300 pri. or sec. (AM), WS-5(F), WS-4(R), R411*, R410*, C307, C305. Shorted: Z300 pri. or sec. (AM), C305, C300C, C430*.

* This part, located in another section, may cause abnormal indication in this section.

FM CIRCUITS

The tests for the FM circuits are made with an AM r-f signal generator and a 20,000-ohms-per-volt, d-c voltmeter.

In steps 1(a), 4, 5, 6, 7, and 8, the oscillator section of the FM detector is made inoperative, thereby converting the circuit to an AM detector, and making it possible to use an AM signal for testing the i-f amplifiers and a section of the detector; the remaining section of the detector is tested by steps 1(b), 2, and 3.

In step 1(b), an unmodulated r-f signal is used to check the FM response of the detector; the test is made by observing the d-c voltage drops across the audio load resistor (R318) for different input frequencies within the i-f range of the detector. In steps 2 and 3, d-c voltage and r-f signal tests, respectively, are used to check the oscillator action in the FM detector.

Set the volume control to maximum, and turn the bass and treble controls fully clockwise. Depress the FM push button, PB-5, and turn the high-fidelity switch on. Connect the generator ground lead to the chassis, test point C; connect the output lead through a .1-mf. condenser to the test points indicated in the chart.

NOTE: The "TEST POINT" column refers to signal-generator connections in all cases except step 2, in which the test is made with the voltmeter only.

If the "NORMAL INDICATION" is obtained in step 1, (a) and (b), proceed with the tests for Section 4; if not, isolate and correct the trouble in the FM circuits.

Since the circuit location of test point A for this section is in Section 4, the effectiveness of step 1(a), as a master check is dependent upon the condition of certain parts in Section 4; these parts are listed below under "POSSIBLE CAUSE OF ABNORMAL INDICATION."

© John F. Rider

PHILCO CORP.

MODELS 48-1274, 48-1276

Section 3 — I-F, Detector, and A-V-C Circuits TROUBLE SHOOTING

(CONTINUED)

STEP	TEST POINT	SPECIAL INSTRUCTIONS	NORMAL INDICATION	POSSIBLE CAUSE OF ABNORMAL INDICATION
1 (a)	A (I-f Ampl. Check.)	Set generator to 9.1 mc. (mod. on). Short test point G (pin 2 of FM1000) to chassis.	Loud, clear signal with very weak signal input.	Trouble in FM circuits. Isolate by steps 4, 5, 6, 7, and 8.
1 (b)	B (FM Det. Check.)	Set generator to 9.1 mc (mod. off) with high output. Remove short from test point G. Connect positive lead of voltmeter to test point H, and negative lead to test point J. Use 50-volt range.	15 to 30 volts for 9.1-mc. signal or NO signal. 12 to 20 volts when generator is set at 80 kc. above or 80 kc. below 9.1 mc.	Trouble in FM detector circuit. Isolate by steps 2 and 3.
2	G (FM Det. Osc. Check.)	Connect positive lead of d-c voltmeter to chassis; connect prod end of negative lead through 100,000-ohm isolating resistor to test point G. Use 10-volt range.	Negative 2.5 volts (approx.).	Defective: FM1000. Open: C335, R322, Z304 sec., C333, C334. Shorted: C335, C333, C334, C301A, Z304 sec.
3	B	Using low to moderate output (mod. off), tune generator across 9.1 mc.	Beat signal, with zero beat at 9.1 mc.	Misaligned: Z304. Shorted: Z304 pri. or sec. Changed value: C333, C334. Open: C301A, C338.
4	F	Set generator to 9.1 mc. (mod. on). Short test point G to chassis. Short test point B (for this step only) to chassis.	Clear signal with strong signal input.	Defective: FM1000. Open: L300, Z304 pri., R318, R320, WS-2(F). Shorted or leaky: C337, C332, C329, C303B.
5	B	Set generator to 9.1 mc. (mod. on). Leave test point G shorted. Remove short from test point B.	Loud, clear signal with strong signal input.	Defective: 7H7 (3rd i.f.). Shorted or leaky: C303A. Open: Z303 sec. (FM), R325, R326. Misaligned: Z303.
6	D	Set generator to 9.1 mc. (mod. on). Leave test point G shorted.	Loud, clear signal with moderate signal input.	Defective: 7B7. Misaligned: Z302. Shorted: C302A, C302E.
7	E	Set generator to 9.1 mc. (mod. on). Leave test point G shorted.	Loud, clear signal with weak signal input.	Defective: 7H7 (1st i.f.). Misaligned: Z301. Shorted: C301A, C301B.
8	A	Set generator to 9.1 mc. (mod. on). Leave test point G shorted.	Loud, clear signal with very weak signal input.	Defective: 7E5*. Misaligned: Z300. Open: WS-4(R), Z300 pri. or sec., L401*. Shorted: C308, C300A, C300B.

* This part, located in another section, may cause abnormal indication in this section.

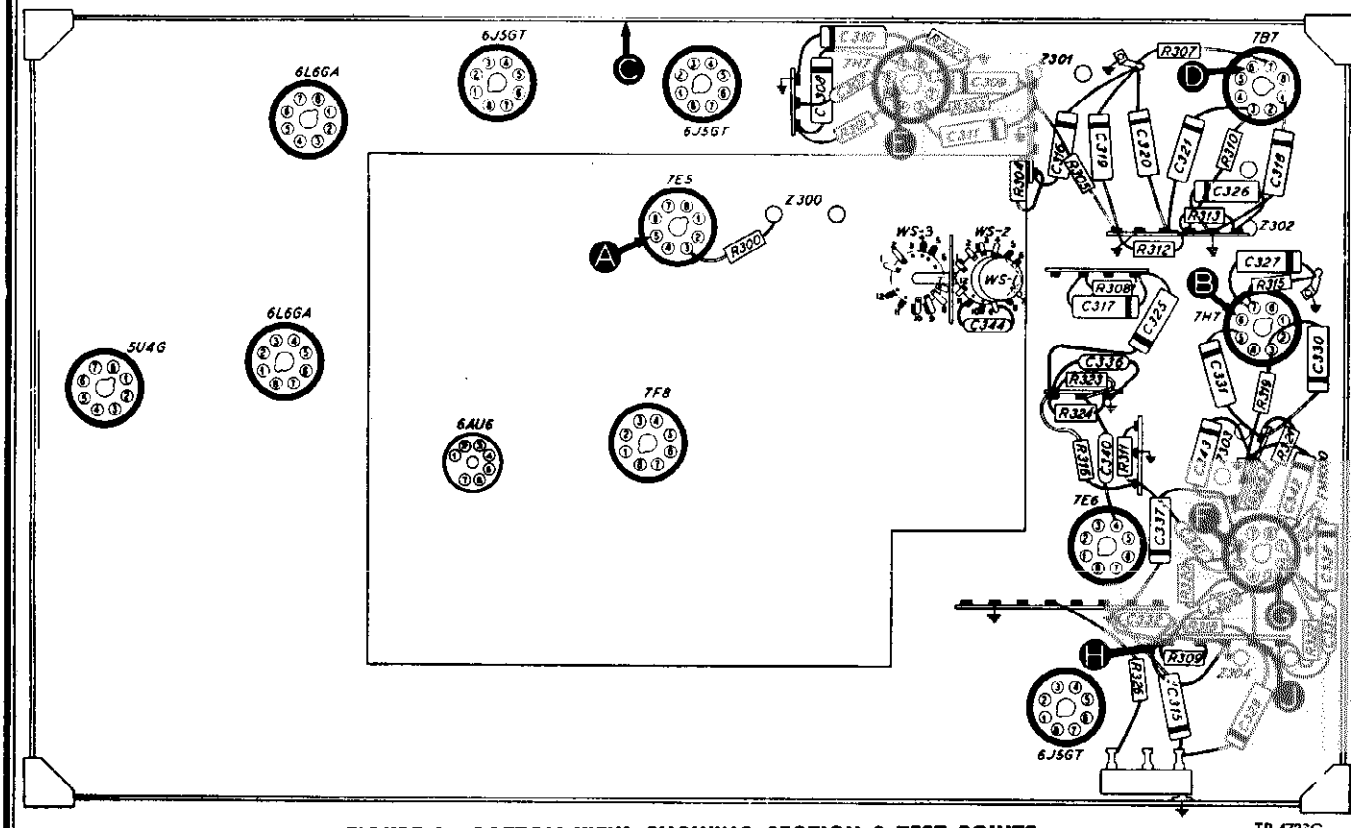

FIGURE 3. BOTTOM VIEW, SHOWING SECTION 3 TEST POINTS

TP-4723C

MODELS 48-1274, 48-1276

PHILCO CORP.

Section 4 — R-F and Converter Circuits

TROUBLE SHOOTING

For the tests in this section, with the exception of the oscillator and frequency-doubler tests, use an AM r-f signal generator, with modulated output. Connect the generator ground lead to the chassis, test point C; connect the output lead as indicated in the chart. Set the volume control to maximum, and turn the bass and treble controls fully clockwise. Depress the push buttons indicated in the chart.

OSCILLATOR AND FREQUENCY-DOUBLER TESTS: For the broadcast and short-wave oscillator tests (steps 2 and 5), and the FM frequency-doubler test (step 9), connect the positive lead of a 20,000-ohms-per-volt meter to test point D; connect the prod end of the negative lead through a 100,000-ohm isolating resistor to test point B. For the FM oscillator test (step 8), transfer the negative lead and isolating resistor to test point G. The negative grid-voltage readings given in the chart are those obtained when operation is normal. Absence of negative grid voltage at any dial position indicates that the oscillator (or the frequency doubler) is not operating properly.

STEP	TEST POINT	SIGNAL GENERATOR	RADIO TUNING	NORMAL INDICATION	POSSIBLE CAUSE OF ABNORMAL INDICATION
1(a)	A	1000 kc. Through .1-mf. condenser.	BC (PB-3). Tune to signal.	Loud, clear signal with weak signal input.	Trouble in broadcast circuits. Isolate by steps 2, 3, and 4.
1(b)	A	11 mc. Through .1-mf. condenser.	SW (PB-4). Tune to signal.	Loud, clear signal with weak signal input.	Trouble in short-wave circuits. Isolate by steps 5, 6, and 7.
1(c)	F	98 mc. Through 100-mmf. condenser.	FM (PB-5). Short test point G, Section 3, to chassis. Tune to signal.	Loud, clear signal with weak signal input.	Trouble in FM circuits. Isolate by steps 8, 9, 10, and 11.
2	B to D Osc. Test.		BC (PB-3). Tune through range.	Negative 1.5 to 4 volts.	Defective: 7F8. Open: WS-5(F), WS-5(R), L411, C432, L408, R408, C423, C426, R407. Shorted or leaky: C423, C426, C434, C432, C433, L411. Shorted: C400F.
3	E	1000 kc. Through .1-mf. condenser.	BC (PB-3). Tune to signal.	Loud, clear signal with moderate signal input.	Defective: 6AU6. Open: R402, R403, L404, L403, C413, WS-6(F), WS-6(R), L407, C427, R409. Shorted or leaky: C410, C411. Shorted: L407, C400C.
4	A	1000 kc. Through .1-mf. condenser.	BC (PB-3). Tune to signal.	Loud, clear signal with weak signal input.	Open: WS-7(R), WS-7(F), L400, C405, R400, LA400. Shorted or leaky: C401A, C400B, C405.
5	B to D Osc. Test.		SW (PB-4). Tune through range.	Negative 1.5 to 2 volts.	Defective: 7F8. Open: WS-5(R), WS-5(F), L410, C431. Shorted or leaky: C420C, C431. Shorted: L410.
6	E	11 mc. Through .1-mf. condenser.	SW (PB-4). Tune to signal.	Loud, clear signal with moderate signal input.	Open: WS-6(F), WS-6(R), L406, C422, C417. Shorted or leaky: C422, C420A, C417. Shorted: L406.
7	A	11 mc. Through .1-mf. condenser.	SW (PB-4). Tune to signal.	Loud, clear signal with weak signal input.	Open: WS-7(R), WS-7(F), L402, C404. Shorted or leaky: C401B, C404.
8	G Osc. Test.		FM (PB-5). Tune through range.	Negative 3.5 to 4 volts.	Defective: 7F8. Open: WS-6(F), R404, C421, C424, R406, R405, T400. Shorted or leaky: C421, C424, C414, C415. Shorted: C400E.
9	B to D Frequency Doubler Test.		FM (PB-5). Tune through range.	Negative 2.5 to 3.5 volts.	Defective: 7F8. Open: WS-5(F), WS-5(R), L409. Shorted: C400G, C429.
10	E	98 mc. Through 100-mmf. condenser.	FM (PB-5). Short test point G, Section 3, to chassis. Tune to signal.	Loud, clear signal with moderate signal input.	Open: WS-6(F), WS-6(R), L405, C412, C418. Shorted or leaky: C412. Shorted: C400D.
11	F	98 mc. Through 100-mmf. condenser.	FM (PB-5). Test point G shorted. Tune to signal.	Loud, clear signal with slightly less input than in step 9.	Open: WS-7(F), L401, C403, C402. Shorted or leaky: C402, C403. Shorted: C400M.

PHILCO CORP.

MODELS 48-1274, 48-1276

Section 4 — R-F and Converter Circuits (CONTINUED)

TROUBLE SHOOTING

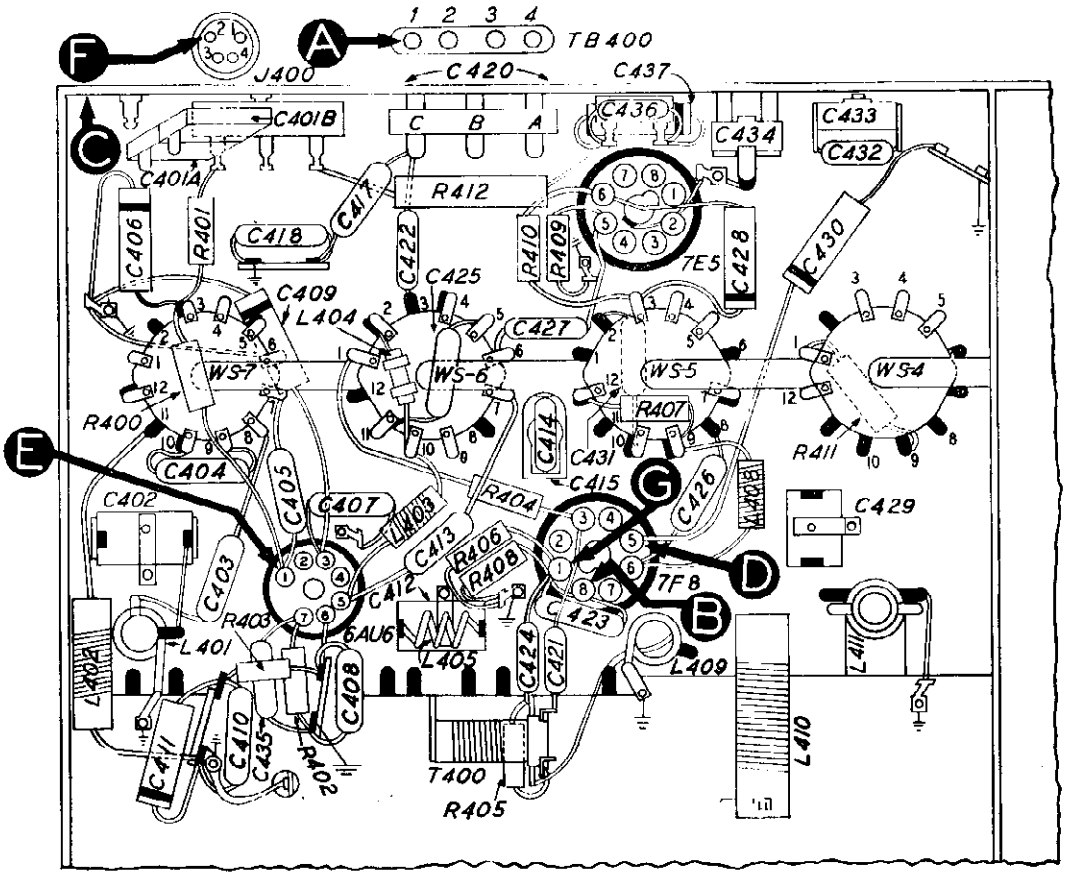

FIGURE 4. BOTTOM VIEW, SHOWING SECTION 4 TEST POINTS TP 4723D

SERVICING PHILCO AUTOMATIC BAND SELECTOR

To make the motor-driven band switch accessible for repairs, remove the four self-tapping screws holding the r-f chassis, and unsolder a sufficient number of connecting wires to allow the r-f chassis to drop away from the main chassis about six inches.

To obtain access to the band-switch components, unsolder the wires and parts connected to the rear plate on the r-f chassis, and remove the plate.

To replace individual switch wafers, loosen the two Allen setscrews locking the drive gear to the switch shaft, and remove the two nuts from the tie rods, at the motor end. See figure 5. Then slide the tie rods and switch shaft through the holes in the side of the r-f chassis.

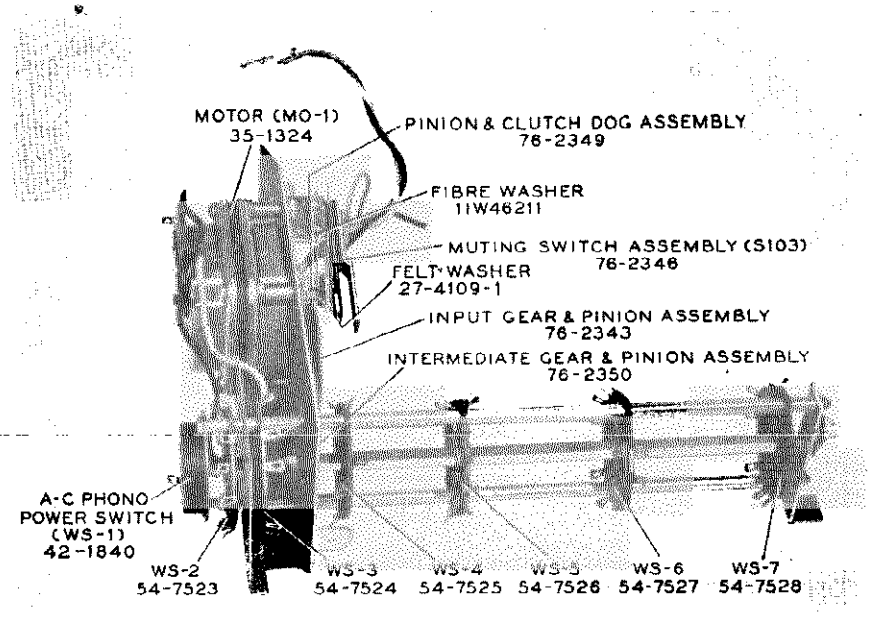

FIGURE 5. PHILCO AUTOMATIC-BAND-SELECTOR MECHANISM TP-4406

MODELS 48-1274, 48-1276

PHILCO CORP.

CALIBRATING DIAL BACKPLATE

With the radio out of the cabinet, dial calibration points should be located by making pencil marks on the backplate, below the pointer. Figure 6 shows the measurements for these points with respect to the left-hand edge of the backplate.

NOTE: The dial scale shown in figure 6 is for Model 48-1274. Although this scale is shorter than that for Model 48-1276, the calibration of the two scales is identical, and the relationship between the backplate and the calibration points is the same for both models.

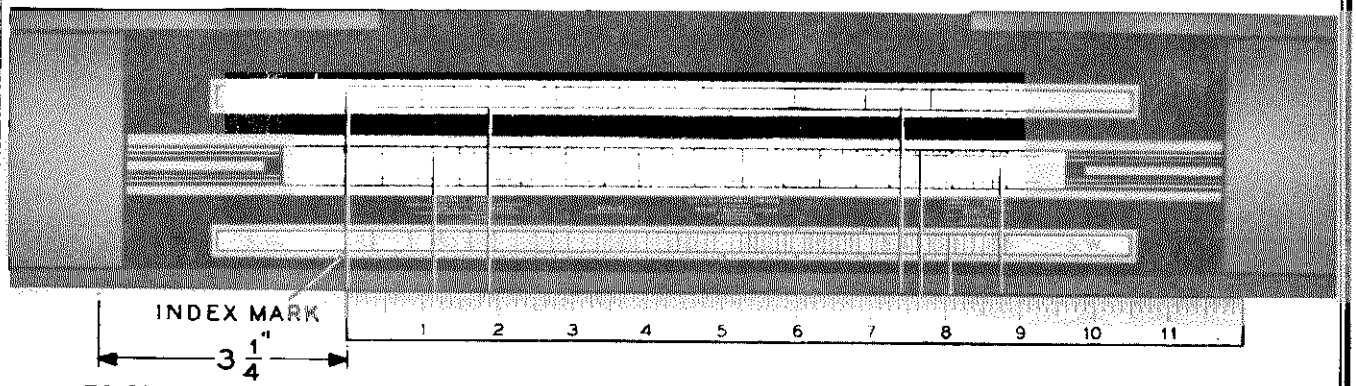

FIGURE 6. DIAL-BACKPLATE CALIBRATION MEASUREMENTS TP-4291

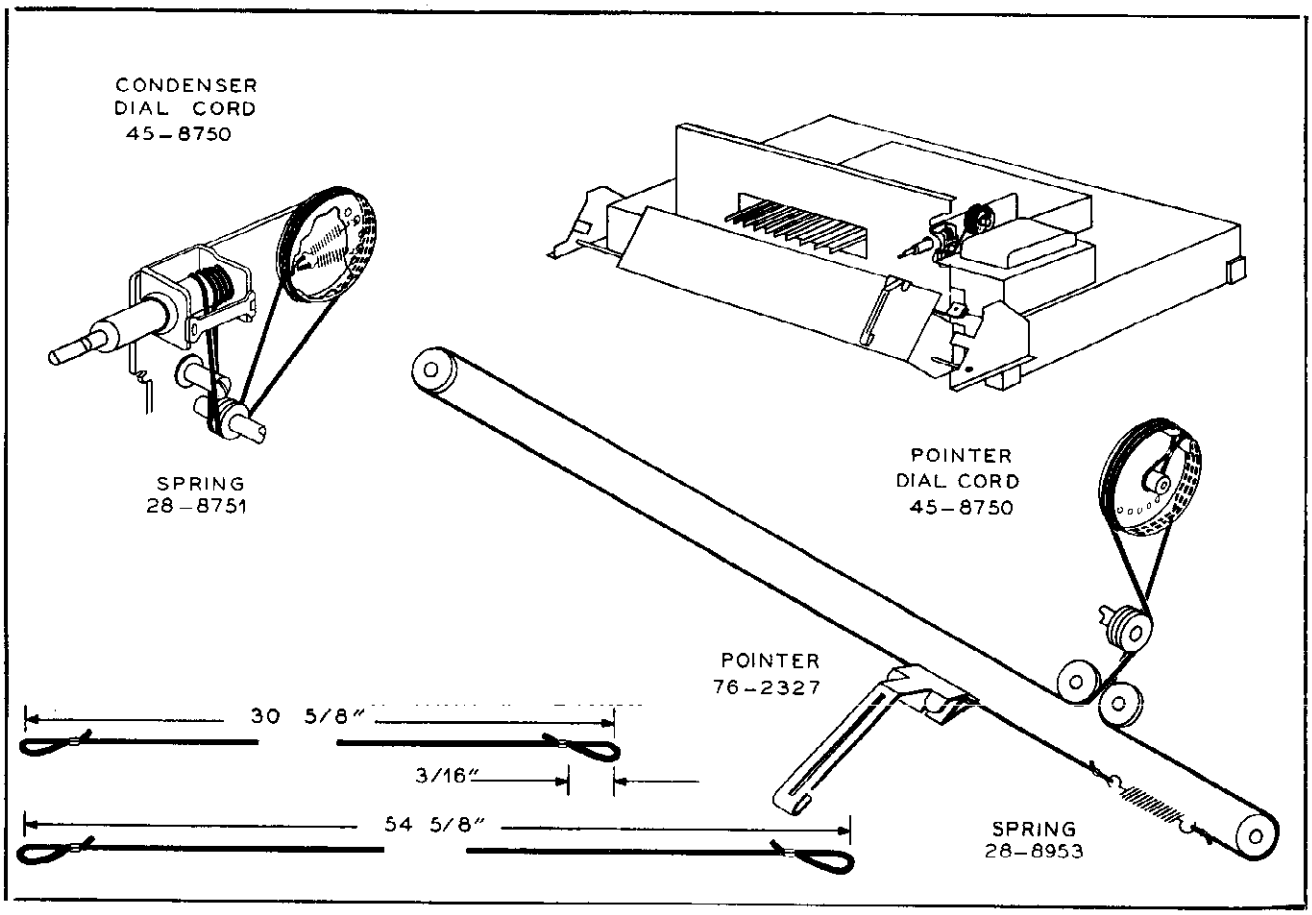

FIGURE 7. DRIVE-CORD INSTALLATION DETAILS TP-4723E

© John F. Rider

REPLACEMENT PARTS LIST

NOTE: Part numbers marked with an asterisk (*) are general replacement items. These numbers may not be identical with those on factory assemblies; also, the electrical values of some replacement items may differ from the values indicated in the schematic diagram and parts list. The values substituted in any case are so chosen that the operation of the radio will be either unchanged or improved. When ordering replacements, use only the "Service Part No."

SECTION 1 — POWER SUPPLY

Reference Symbol	Description	Service Part No.
C100	Condenser, electrolytic, input filter, 40 mf., 450v	30-2588-20
C101	Condenser, electrolytic, 2-section	30-2570-3*
C101A	Condenser, filter, 30 mf., 450v	Part of C101
C102	Condenser, bias filter, .2 mf.	45-3500-3*
C103	Condenser, bias filter, .2 mf.	45-3500-3*
C104	Condenser, electrolytic, 2-section	30-2570-5*
C104A	Condenser, filter, 15 mf., 450v	Part of C104
C104B	Condenser, filter, 10 mf., 450v	Part of C104
C105	Condenser, line filter, .01 mf.	30-1226-1
C106	Condenser, line filter, .01 mf.	30-1226-1
C107	Condenser, by-pass, .2 mf.	45-3500-3*
C108	Condenser, a-c electrolytic, 30 mf., 30v, 60 cycles	30-2572
I100 to I105	Lamp, pilot	34-2064
I106	Lamp, bin	34-2039
I107	Lamp, bull's-eye	34-2040
J100	Socket, phono power	27-6182
L100	Coil, speaker field	Part of LS200
MO-1	Motor, band switching (part of 76-2333-1)	35-1324
MO-2	Motor, push-button tuning (part of 76-2150)	76-2428
PB-1	Push-button switch, master power off-on (part of 76-2150)	42-1789
PB-2	Push-button switch, PHONO	Part of 76-2150
PB-3	Push-button switch, BC	Part of 76-2150
PB-4	Push-button switch, SW	Part of 76-2150
PB-5	Push-button switch (rod actuating S105), FM	Part of 76-2150
PB-6 to PB-10	Push-button rod	Part of 76-2150
R100	Resistor, bull's-eye dropping, 27 ohms	66-0273340*
R101	Resistor, voltage divider, 150,000 ohms	66-4153340*
R102	Resistor, voltage divider, 100,000 ohms	66-4103340*
R103	Resistor, filter, 47,000 ohms	66-3473340*
R104	Resistor, voltage divider, 1 megohm	66-5103340*
R105	Resistor, voltage divider, 100,000 ohms	66-4103340*
R106	Resistor, filter, 5600 ohms	66-2564340*
S100	Switch, bin lamp	76-2140-2
S101	Switch, set-up	42-1702
S102	Switch, tuning motor	Part of 76-2150
S103	Switch, muting (part of 76-2333)	76-2346
S104	Switch, AM	Part of 76-2150
S105	Switch, FM	Part of 76-2150
T100	Transformer, power	32-8286
WS-3 (F. R)	Switch, wafer (part of 76-2333-1)	54-7524
W100	Power cord and plug	L3351

SECTION 2 — AUDIO CIRCUITS

C200	Condenser, tone compensation, .001 mf.	45-3500-5*
C201	Condenser, cathode by-pass, .1 mf.	61-0113*
C202	Condenser, d-c blocking, .01 mf.	61-0120*
C203	Condenser, d-c blocking, 150 mmf.	60-10155407*
C204	Condenser, audio by-pass, 10 mf.	Part of C104
C205	Condenser, tone compensation, 33 mmf.	60-00365307*
C206	Condenser, tone compensation, .02 mf.	61-0108*
C207	Condenser, tone compensation, 47 mmf.	60-00515307*
C208	Condenser, tone compensation, .02 mf.	61-0108*
C209	Condenser, d-c blocking, .03 mf.	45-3500-1*
C210	Condenser, d-c blocking, .01 mf.	61-0120*
C211	Condenser, audio by-pass, .5 mf.	61-0133*
C212	Condenser, r-f by-pass, 240 mmf.	60-10245307*
C213	Condenser, audio by-pass, 10 mf., 450v.	Part of C101
C214	Condenser, tone compensation, .03 mf.	45-3500-1*
C215	Condenser, d-c blocking, .003 mf.	61-0109*
C216	Condenser, d-c blocking, .006 mf.	61-0105*
C217	Condenser, d-c blocking, .006 mf.	61-0105*
C218	Condenser, d-c blocking, .006 mf.	61-0105*
C219	Condenser, tone compensation, .01 mf.	61-0120
C220	Condenser, tone compensation, .01 mf.	61-0120
C221	Condenser, frequency cross-over filter, 2 mf.	45-3030
C222	Condenser, d-c blocking, 330 mmf.	60-10335407*
C223	Condenser, audio by-pass, .01 mf.	61-0120*
C224	Condenser, d-c blocking, .002 mf.	61-0062*
C225	Condenser, filter, .02 mf.	61-0108*
C226	Condenser, filter, .03 mf.	45-3500-1*
C227	Condenser, coupling, .001 mf.	45-3500-5*
C228	Condenser, filter, .01 mf.	61-0120*
C229	Condenser, d-c blocking, 330 mmf.	60-10335407*
C230	Condenser, filter, .01 mf.	61-0120*
J200	Jack and cable, phono input	41-3735-1
J201	Test jack	27-6180
LS200	Speaker, coaxial	36-1612
LS200A	Speaker, tweeter (part of 36-1612)	36-1612-1
LS200B	Speaker, woofer	Part of 36-1612
R200	Volume control, .5 megohm (taps at 50,000 ohms and 250,000 ohms)	33-5535-6
R201	Resistor, tone compensation, 220,000 ohms	66-4223340*
R202	Resistor, grid return, 4.7 megohms	66-5473340*
R203	Resistor, cathode bias, 2200 ohms	66-2223340*
R204	Resistor, plate load, 56,000 ohms	66-3563340*
R205	Resistor, plate decoupling, 22,000 ohms	66-3223340*
R206	Resistor, voltage divider, 100,000 ohms	66-4103340*
R207	Resistor, voltage divider, 100,000 ohms	66-4103340*
R208	Bass control, 1 megohm	33-5539-9
R209	Resistor, tone compensation, 10,000 ohms	66-3103340*
R210	Resistor, tone compensation, 10,000 ohms	66-3103340*
R211	Resistor, grid return, 1 megohm	66-5103340*
R212	Resistor, voltage divider, 680,000 ohms	66-4683340*
R213	Resistor, voltage divider, 2.2 megohms	66-5223340*
R214	Resistor, plate load, 56,000 ohms	66-3564340*
R215	Resistor, plate decoupling, 6800 ohms	66-2683340*
R216	Tweeter control (variable), 50 ohms	Part of R219
R217	Resistor, voltage dropping, 10 ohms	66-0103340*
R218	Resistor, tone compen., 2.2 megohms	66-5223340*
R219	Treble control, .5 megohm	33-5543
R220	Resistor, grid return, 1 megohm	66-5103340*
R221	Resistor, cathode bias, 1000 ohms	66-2103340*
R222	Resistor, cathode bias, 1000 ohms	66-2103340*
R223	Resistor, phase-inverter voltage divider, 1 megohm	66-5103340*
R224	Resistor, phase-inverter voltage divider, 68,000 ohms	66-3683340*
R225	Resistor, plate load, 56,000 ohms	66-3564340*
R226	Resistor, plate load, 56,000 ohms	66-3564340*
R227	Resistor, inverse-feedback voltage divider, 5600 ohms	66-2563340*
R228	Resistor, parasitic suppressor, 820 ohms	66-1823340*
R229	Resistor, parasitic suppressor, 820 ohms	66-1823340*
R230	Resistor, grid return, 330,000 ohms	66-4333340*
R231	Resistor, grid return, 330,000 ohms	66-4333340*
R232	Resistor, voltage divider, 680,000 ohms	66-4683340*
R233	Resistor, grid return, 330,000 ohms	66-4333340*
R234	Resistor, cathode bias, 2200 ohms	66-2223340*
R235	Resistor, plate load, 220,000 ohms	66-4223340*
R236	Resistor, plate load, 100,000 ohms	66-4103340*
R237	Resistor, grid return, 560,000 ohms	66-4563340*
R238	Resistor, bias filter, 220,000 ohms	66-4223340*
R239	Resistor, bias filter, 560,000 ohms	66-4563340*
R240	Resistor, bias volt. div., 220,000 ohms	66-4223340*
R241	Resistor, bias volt. div., 1.5 megohms	66-5153340*
R242	Resistor, bias decoupling, 3.3 megohms	66-5333340*
R243	Resistor, grid return, 1 megohm	66-5103340*
R244	Resistor, filter, 220,000 ohms	66-4223340*
R245	Resistor, plate load, 27,000 ohms	66-3273340*
R246	Resistor, filter, 220,000 ohms	66-4223340*
R247	Resistor, voltage divider, 33,000 ohms	66-3333340*
R248	Resistor, voltage divider, 33,000 ohms	66-3333340*
T200	Transformer, output	32-8287
T201	Transformer, phono input	32-8256
WS-2 (R)	Switch-wafer section (part of 76-2333-1)	54-7523
WS2-1	High-fidelity switch	42-1785

Parts list changes:

C108	Condenser, electrolytic, 45 mf., 30v, 60 cycles	30-2355-2
LA401	Loop, FM Aerial	76-2029-13 or 76-2381-3
MO2	Motor, Pushbutton tuning, part of 76-2150	35-1336
R412	Resistor, filter, 470 ohms	66-1474340
	Bin mechanism, left hand	76-3223-7
	Bin mechanism, right hand	76-3223-8

NOTE: Above listed bin mechanisms are not interchangeable with those listed in the Service Manual. When replacing mechanisms with these part numbers, replace both sides.

Cabinet top, 48-1274-M	45-6429
Two section lid, 48-1274-M	45-6426
Tilt front, 48-1274-M	45-6427
Instrument panel, 48-1274-M	45-6428
Cabinet, 48-1276	10657A
Two section lid, 48-1276	45-6430
Tilt front, 48-1276	45-6431
Instrument panel, 48-1276	45-6432
Cabinet top, 48-1276	45-6433

MODELS 48-1274, 48-1276

PHILCO CORP.

REPLACEMENT PARTS LIST

SECTION 3

I-F, DETECTOR, AND A-V-C CIRCUITS

Reference Symbol	Description	Service Part No.
C300A	Condenser, trimmer	Part of Z300
C300B	Condenser, trimmer	Part of Z300
C300C	Condenser, trimmer	Part of Z300
C301A	Condenser, trimmer	Part of Z301
C301B	Condenser, trimmer	Part of Z301
C301C	Condenser, trimmer	Part of Z301
C302A	Condenser, trimmer	Part of Z302
C302B	Condenser, trimmer	Part of Z302
C302C	Condenser, trimmer	Part of Z302
C303A	Condenser, trimmer	Part of Z303
C303B	Condenser, trimmer	Part of Z303
C303C	Condenser, trimmer	Part of Z303
C304A	Condenser, trimmer	Part of Z304
C305	Condenser, shunt (part of Z300), 2700 mmf.	60-20275404*
C306	Condenser, shunt (part of Z300), 51 mmf.	60-00515237*
C307	Condenser, d-c blocking, 240 mmf.	60-10245307*
C308	Condenser, a-v-c by-pass, .01 mf.	61-0120*
C309	Condenser, plate by-pass, .004 mf.	61-0179*
C310	Condenser, filament by-pass, .01 mf.	61-0120*
C311	Condenser, screen by-pass, .01 mf.	61-0120*
C312	Condenser, shunt (part of Z301), 330 mmf.	60-10335407*
C313	Condenser, d-c block. (part of Z301), 4.7 mmf.	30-1224-5*
C314	Condenser, shunt (part of Z301), 3900 mmf.	60-20395404*
C315	Condenser, r-f by-pass, .01 mf.	61-0120*
C316	Condenser, a-v-c filter, .01 mf.	61-0120*
C317	Condenser, tone compensation, .003 mf.	61-0109*
C318	Condenser, filament by-pass, .01 mf.	61-0120*
C319	Condenser, r-f by-pass, .01 mf.	61-0120*
C320	Condenser, plate by-pass, .004 mf.	61-0179*
C321	Condenser, screen by-pass, .01 mf.	61-0120*
C322	Condenser, shunt (part of Z302), 330 mmf.	60-10335407*
C323	Condenser, d-c blocking (part of Z302), 4.7 mmf.	30-1224-5*
C324	Condenser, shunt (part of Z302), 3900 mmf.	60-20395404*
C325	Condenser, d-c blocking, .006 mf.	61-0105*
C326	Condenser, r-f by-pass, .05 mf.	61-0122*
C327	Condenser, cathode by-pass, .01 mf.	61-0120*
C328	Condenser, shunt (part of Z304), 15 mmf.	30-1223-3*
C329	Condenser, r-f by-pass, .01 mf.	61-0120*
C330	Condenser, screen by-pass, .01 mf.	61-0120*
C331	Condenser, plate by-pass, .004 mf.	61-0179*
C332	Condenser, r-f by-pass, 1500 mmf.	60-20155404*
C333	Condenser, r-f voltage divider (part of Z304), 33 mmf.	30-1223-6*
C334	Condenser, r-f voltage divider (part of Z304), 68 mmf.	60-00685237*
C335	Condenser, d-c blocking, 33 mmf.	60-00365307*
C336	Condenser, r-f by-pass, 100 mmf.	60-10105407*
C337	Condenser, screen by-pass, .01 mf.	61-0120*
C338	Condenser, filament by-pass, .01 mf.	61-0120*
C339	Condenser, shunt (part of Z303), 270 mmf.	30-1220-5*
C340	Condenser, r-f by-pass, 240 mmf.	60-10245307*
C341	Condenser, d-c blocking, 100 mmf.	60-10105407*
C342	Condenser, filament by-pass, .01 mf.	61-0120*
C343	Condenser, r-f by-pass, .01 mf.	61-0120*
C344	Condenser, r-f by-pass, 100 mmf.	60-10105407*
L300	Choke, r-f	32-3352
R300	Resistor, parasitic suppressor, 10 ohms	66-0103340*
R301	Resistor, grid return, 2.2 megohms	66-5223340*
R302	Resistor, cathode bias, 180 ohms	66-1183340*
R303	Resistor, screen dropping, 100,000 ohms	66-4103340*
R304	Resistor, a-v-c decoupling, 470,000 ohms	66-4473340*
R305	Resistor, plate decoupling, 6800 ohms	66-2683340*
R306	Resistor, loading (part of Z301), 6800 ohms	66-2683340*
R307	Resistor, cathode bias, 180 ohms	66-1183340*
R308	Resistor, tone compensation, 220,000 ohms	66-4223340*
R309	Resistor, decoupling, 100,000 ohms	66-4103340*

SECTION 3 (Continued)

I-F, DETECTOR, AND A-V-C CIRCUITS

Reference Symbol	Description	Service Part No.
R310	Resistor, screen dropping, 100,000 ohms	66-4103340*
R311	Resistor, a-v-c filter, 330,000 ohms	66-4333340*
R312	Resistor, plate decoupling, 5600 ohms	66-2563340*
R313	Resistor, grid return, 1 megohm	66-5103340*
R314	Resistor, loading (part of Z302), 6800 ohms	66-2683340*
R315	Resistor, cathode bias, 180 ohms	66-1183340*
R316	Resistor, a-v-c diode load, 1 megohm	66-5103340*
R317	Resistor, loading (part of Z304), 5600 ohms	66-2563340*
R318	Resistor, audio load, FM detector, 47,000 ohms	66-3473340*
R319	Resistor, screen dropping, 82,000 ohms	66-3823340*
R320	Resistor, screen dropping, 56,000 ohms	66-3563340*
R321	Resistor, plate decoupling, 5600 ohms	66-2563340*
R322	Resistor, grid leak, 15,000 ohms	66-3153340*
R323	Resistor, filter, 47,000 ohms	66-3473340*
R324	Resistor, diode load, 100,000 ohms	66-4103340*
R325	Resistor, voltage divider, 560 ohms	66-1563340*
R326	Resistor, voltage divider, 47,000 ohms	66-3473340*
WS-4 (R)	Switch-wafer section (part of 76-2333-1)	54-7525
WS-2 (F)	Switch-wafer section (part of 76-2333-1)	54-7523
Z300	Transformer, 1st i-f	32-4072
Z301	Transformer, 2nd i-f	32-4060
Z302	Transformer, 3rd i-f	32-4060
Z303	Transformer, 4th i-f	32-4003-1
Z304	Transformer, FM detector	32-4004

SECTION 4

R-F AND CONVERTER CIRCUITS

C400	Condenser, tuning gang (See Note, Page 15)	Part of 76-2150
C400A	Condenser, tuning-gang section	Part of C400
C400B	Condenser, tuning-gang section	Part of C400
C400C	Condenser, tuning-gang section	Part of C400
C400D	Condenser, tuning-gang section	Part of C400
C400E	Condenser, tuning-gang section	Part of C400
C400F	Condenser, tuning-gang section	Part of C400
C400G	Condenser, tuning-gang section	Part of C400
C401	Condenser, trimmer, 2-section	31-6476-3
C401A	Condenser, trimmer, bc aerial	Part of C401
C401B	Condenser, trimmer, s-w aerial	Part of C401
C402	Condenser, trimmer, FM aerial	31-6473-4
C403	Condenser, blocking, FM, 22 mmf.	62-022009001
C404	Condenser, series tracking, s-w aerial, 255 mmf.	30-1220-24
C405	Condenser, d-c blocking, 100 mmf.	60-10105407*
C406	Condenser, a-v-c by-pass, .01 mf.	61-0120*
C407	Condenser, filament by-pass, 240 mmf.	60-10245307*
C408	Condenser, screen by-pass, 1500 mmf.	30-1225-1*
C409	Condenser, filament by-pass, .01 mf.	61-0120*
C410	Condenser, plate by-pass, 100 mmf.	60-10105407*
C411	Condenser, plate by-pass, .01 mf.	61-0120*
C412	Condenser, trimmer, FM r-f	31-6473-4
C413	Condenser, d-c blocking, 1000 mmf.	30-1225*
C414	Condenser, shunt, FM osc., 5 mmf.	60-90505007*
C415	Condenser, trimmer, FM osc.	31-6480
C416	Not used	
C417	Condenser, s-w r-f shunt, 36 mmf.	30-1224
C418	Condenser, r-f by-pass, 100 mmf.	60-10105407*
C419	Not used	
C420	Condenser, trimmer, 3-section	31-6477-1
C420A	Condenser, trimmer, s-w r-f	Part of C420
C420B	Condenser, trimmer, bc, r-f	Part of C420
C420C	Condenser, trimmer, s-w osc.	Part of C420
C421	Condenser, d-c blocking, 51 mmf.	30-1224-2
C422	Condenser, series tracking, s-w r-f, 255 mmf.	30-1220-24
C423	Condenser, d-c blocking, 24 mmf.	30-1224-4
C424	Condenser, d-c blocking, 51 mmf.	30-1224-2
C425	Condenser, neutralizing, s-w, 5 mmf.	60-90505007*
C426	Condenser, d-c blocking, 24 mmf.	30-1224-4
C427	Condenser, d-c blocking, 100 mmf.	60-10105407*
C428	Condenser, cathode by-pass, .01 mf.	61-0120*

PHILCO CORP.

MODELS 48-1274, 48-1276

REPLACEMENT PARTS LIST

SECTION 4 (Continued)
R-F AND CONVERTER CIRCUITS

Reference Symbol	Description	Service Part No.
C429	Condenser, trimmer, freq. doubler	31-6473-4
C430	Condenser, r-f by-pass, .05 mf.	61-0122*
C431	Condenser, series tracking, s-w osc., 215 mmf.	30-1220-4
C432	Condenser, series-padder shunt, bc. osc., 437 mmf.	30-1220-22
C433	Condenser, series padder, bc. osc.	31-6473-4
C434	Condenser, shunt trimmer, bc. osc.	31-6480-1
C435	Condenser, cathode by-pass, 100 mmf.	60-10105407*
C436	Condenser, by-pass, 510 mmf.	60-10515307*
C437	Condenser, by-pass, .01 mf.	61-0120*
L400	Coil, bc. aerial	32-4141
L401	Coil, FM aerial	32-4235
L402	Coil, shunt, s-w aerial	32-4050-5
L403	Coil, 6AU6 plate choke, FM	32-4061
L404	Coil. 6AU6 plate choke, AM	32-4189
L405	Coil, FM r-f	32-4067
L406	Coil, s-w r-f	Part of Z400
L407	Coil, bc. r-f	Part of Z400
L408	Coil, plate choke, osc.-doubler	32-4061
L409	Coil, frequency doubler	32-4071
L410	Coil, s-w osc.	32-4069
L411	Coil, bc. osc.	32-4188
LA400	Loop aerial	76-2344
LA401	FM aerial	76-2029-12
J400	Jack, FM aerial	27-6214-1
R400	Resistor, grid return, 2.2 megohms	66-5223340*
R401	Resistor, a-v-c volt. div., 2.2 megohms	66-5223340*
R402	Resistor, cathode bias, 82 ohms	66-0823340*
R403	Resistor, screen dropping, 39,000 ohms	66-3393340*
R404	Resistor, plate load, 6800 ohms	66-2683340*
R405	Resistor, parasitic suppressor, 10 ohms	66-0103340*
R406	Resistor, grid bias, 22,000 ohms	66-3223340*
R407	Resistor, plate load (AM), 27,000 ohms	66-3273340*
R408	Resistor, grid bias, 220,000 ohms	66-4223340*
R409	Resistor, grid return, 2.2 megohms	66-5223340*
R410	Resistor, cathode bias, 1000 ohms	66-2103340*
R411	Resistor, plate decoupling, 56,000 ohms	66-3563340*
R412	Resistor, filter, 470 ohms	66-3564340*
T400	Transformer, FM osc.	32-4070
TB400	Terminal panel, loop aerial	38-9870
WS-1	A-c switch, phono power off-on (part of 76-2333-1)	42-1840
WS-2 (F, R)	Switch-wafer (part of 76-2333-1)	54-7523
WS-3 (F, R)	Switch-wafer (part of 76-2333-1)	54-7524
WS-5 (F, R)	Switch-wafer (part of 76-2333-1)	54-7526
WS-6 (F, R)	Switch-wafer (part of 76-2333-1)	54-7527
WS-7 (F, R)	Switch-wafer (part of 76-2333-1)	54-7528
Z400	Transformer assembly, bc. and s-w r-f	32-4187

MISCELLANEOUS

Description	Model	Service Part No.
Bin lamp switch-and-cable assembly	48-1274, 76	76-2429-2
Bin lamp	48-1274, 76	34-2039
Cable and plug, speaker	48-1274, 76	41-3734-2
Cabinet Parts and Hardware		
Baffle, speaker	48-1274	219049
Baffle, speaker	48-1276	219048
Baffle and cloth	48-1274	40-6786
Baffle and cloth	48-1276	40-6820
Bin mechanism, l.h.	48-1274, 76	76-3223-2
Bin mechanism, r.h.	48-1274, 76	76-3223-3
Bracket, pilot lamp, l.h.	48-1274	56-3550-1FA3
Bracket, pilot lamp, r.h.	48-1274	56-3550-FA3
Bracket and cradle	48-1274	76-2188
Cabinet	48-1274 (mahogany)	10658B
Cabinet	48-1276	10657
Cabinet back	48-1274	40-6830
Cabinet back	48-1276	40-6831
Dome	48-1274, 76	45-6042
Hinge, continuous	48-1274	56-3627
Hinge, continuous	48-1276	56-3627-2
Hinge, lid separator	48-1274, 76	45-6301
Hinge, lid	48-1276	56-3837

MISCELLANEOUS (Continued)

Description	Model	Service Part No.
Hinge, pivot (2 req.)	48-1274, 76	45-6036
Lamp bracket	48-1274, 76	56-2332
Plate, high fidelity	48-1274, 76	56-4403FA30
Pull, door, brass	48-1274	56-3927
Pull, door, brass (2 req.)	48-1276	56-3928
Pull, door, brass (4 req.)	48-1276	56-3972
Chassis Mtg. Hardware		
Grounding spring	48-1274, 76	57-2140
Foot, rubber	48-1274, 76	54-4040
Dial Backplate and Hardware		
Backplate-and-pulley assembly	48-1274, 76	76-2326
Collar and pulley	48-1274, 76	76-2343
Dial backplate	48-1274, 76	56-3544
Drive cord, pointer (25-ft. spool)	48-1274, 76	45-8750*
Drive cord, tuning condenser (25-ft. spool)	48-1274, 76	45-8750*
Light conductor (plexiglass)	48-1274, 76	54-7279
Pointer	48-1274, 76	76-2327
Spring, pointer drive	48-1274, 76	28-8953
Spring, tuning-condenser drive	48-1274, 76	28-8751
Dial Scale and Hardware		
Dial-scale-and-rubber-shim assembly	48-1274 (mahogany)	76-3202
Dial-scale-and-rubber-shim assembly	48-1274 (walnut)	76-3202-1
Dial-scale-and-rubber-shim assembly	48-1276	76-3202-2
Scale bracket	48-1274, 76	56-3833
Scale bracket	48-1274, 76	56-3832
Knob	48-1274 (mahogany), 76	54-4329
Knob, high-fidelity	48-1274 (mahogany), 76	54-4338
Knob, push button	48-1274, 76	54-4292-1
Lamp brace (pilot)	48-1276	56-3628FA3
Lamp-socket assembly, pilot	48-1274, 76	76-2109-3
Lamp-socket assembly, telltale	48-1274, 76	41-3737-1
Mtg. frame	48-1276	76-2198
Pilot-lamp assembly	48-1274, 76	76-2109-3
Push-button cap	48-1274, 76	54-4294
Socket, loktal (1 req.)	48-1274, 76	27-6207-1
Socket, loktal (8 req.)	48-1274, 76	27-6138*
Socket, octal	48-1274, 76	27-6174
Socket, miniature	48-1274, 76	27-6203-1
Shield, 6AU6 tube	48-1274, 76	56-3978-1FA3
Shield, pilot lamp	48-1274, 76	56-3549
Tab, OFF	48-1274, 76	54-4317-1
Tab, BC	48-1274, 76	54-4317-2
Tab, SW	48-1274, 76	54-4317-3
Tab, FM	48-1274, 76	54-4317-4
Tab, PHONO	48-1274, 76	54-4317-5
Tab kit (station call letters)	48-1274, 76	40-6943
Telltale jewel	48-1274, 76	54-4304
Tuner assembly (Philco Electromechanical Push-Button Tuner)	48-1274, 76	76-2150
Wrench, push-button setting	48-1274, 76	W2524

NOTE: Tuning-condenser gang is not separately replaceable. Order "Tuner assembly (Philco Electromechanical Push-Button Tuner), 76-2150."

PHILCO AUTOMATIC BAND SELECTOR

Description	Service Part No.
A-c switch (WS-1), phono power	42-1840
Gear-and-switch assembly	76-2333-1
Gear-and-pinion assembly (input)	76-2348
Gear-and-pinion assembly (intermediate)	76-2350
Switch wafer WS-2, (F, R)	54-7523
Switch wafer WS-3, (F, R)	54-7524
Switch wafer WS-4, (F, R)	54-7525
Switch wafer WS-5, (F, R)	54-7526
Switch wafer WS-6, (F, R)	54-7527
Switch wafer WS-7, (F, R)	54-7528
Motor	35-1324
Muting-switch assembly (S103)	76-2346
Pinion-and-clutch-dog assembly	76-2349
Washer, felt	27-4109-1
Washer, fibre	11W46211

MODEL 49-100 PHILCO CORP.

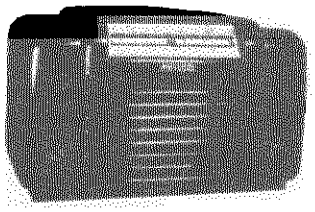

MODEL 49-100

SPECIFICATIONS

CABINET	Plastic, brown finish
CIRCUIT	Four-tube superheterodyne
FREQUENCY RANGE	540 to 1720 kc.
AUDIO OUTPUT	220 mw.
POWER SUPPLY	Battery pack, Philco P-60B-6L
PLATE VOLTAGE AND CURRENT	90 volts, 10 ma.
FILAMENT VOLTAGE AND CURRENT,	1.5 volts, .25 amp.
POWER CONSUMPTION (total, plate and filament)	1 watt
AERIAL	External, Philco Part No. 45-1469
INTERMEDIATE FREQUENCY	455 kc.
PHILCO TUBES (4)	1LA6, 1LN5, 1LH4, 3LF4

Philco TROUBLE-SHOOTING Procedure

For rapid trouble shooting, the radio circuit is divided into four sections, with test points specified for each section; these sections and test points are indicated in the schematic diagram. The trouble-shooting procedure given for each section includes a simplified test chart and a bottom view of the chassis showing the locations of the test points and the components of that section.

In each chart, the first step is a master check for determining whether trouble exists in that section, without going through the entire test procedure.

Failure to obtain the "NORMAL INDICATION" in any given step indicates trouble within the circuit under test.

After isolating the trouble to a single stage, the defect is located by: first, testing the tube; second, measuring tube electrode voltages; third, measuring circuit resistances; fourth, substituting condensers. The trouble revealed should be corrected before testing further.

Circuit Description

Philco Model 49-100 is a four-tube, battery-operated superheterodyne, providing reception on the standard broadcast band, 540-1720 kc. Manual tuning is employed. A 100-foot (overall), outdoor aerial, such as Philco Part No. 45-1469, is recommended.

The converter stage employs a type 1LA6 pentagrid converter tube; in this tube, the oscillator signal is fed to the mixer section through the electron stream within the tube.

A type 1LN5 pentode tube is used in the i-f amplifier stage. The diode section of the 1LH4 tube provides detection and a-v-c voltage, and the triode section functions as the first audio amplifier.

The first audio stage is resistance-coupled to the type 3LF4 output tube, which drives the permanent-magnet dynamic loud-speaker.

Preliminary Checks

The following preliminary checks should be made before turning on the radio:

1. Carefully inspect the top and bottom of the chassis. Make sure that all tubes are secure in the proper sockets, and look for any broken or shorted connections, burned resistors, or other obvious sources of trouble.

2. Disconnect the battery, and measure the resistance between B+ (red lead of battery plug) and chassis, with the ohmmeter polarity such that the highest resistance reading is obtained. If this reading is lower than 10,000 ohms, check condensers C100, C203, and C404 for leakage or shorts.

TROUBLE SHOOTING

Section 1

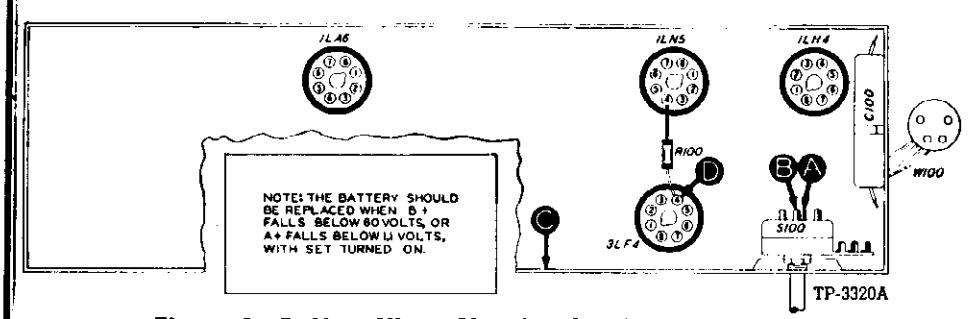

Figure 1. Bottom View, Showing Section 1 Test Points

For the tests in this section, use a d-c voltmeter, connecting the leads between the chassis, test point C, and the test points indicated in the chart. The voltages indicated were obtained from a fresh battery pack, and were measured with a 20,000-ohms-per-volt meter, with the radio turned on.

If the "NORMAL INDICATION" is obtained in the first step, proceed with the tests for Section 2; if not, isolate and correct the trouble in this section.

STEP	TEST POINT	NORMAL INDICATION	ABNORMAL INDICATION	POSSIBLE CAUSE OF ABNORMAL INDICATION
1	A B D	85 volts 1.5 volts Negative 5 volts		Trouble within this section. Isolate by the following tests.
2	A	85 volts	No voltage Low voltage	Open battery cable. Defective S100. Open R100. Shorted C100. Weak battery. Change in value of R100. Leaky C100. Excessive current drain in Sections 2, 3, or 4.
3	B	1.5 volts	No voltage Low voltage	Open battery cable. Defective S100. Weak battery.
4	D	Negative 5 volts		Change in value of R100. Open R100. Excessive current drain in Sections 2, 3, or 4.

TROUBLE SHOOTING

Section 2

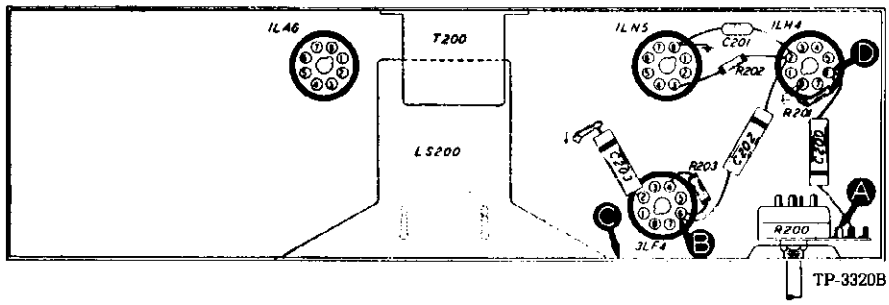

Figure 2. Bottom View, Showing Section 2 Test Points

For the tests in this section, use an audio signal. Connect the signal-generator ground lead to the radio chassis, test point C; connect the output lead through a .1-mf. condenser to the test points indicated in the chart. Set the radio volume control to maximum.

If the "NORMAL INDICATION" is obtained in the first step, proceed with the tests for Section 3; if not, isolate and correct the trouble in this section.

STEP	TEST POINT	NORMAL INDICATION	POSSIBLE CAUSE OF ABNORMAL INDICATION
1	A	Loud, clear signal with moderate signal input.	Trouble within this section. Isolate by the following tests.
2	B	Normal, clear signal with strong signal input.	Defective 3LF4 tube, T200, or LS200. Shorted or leaky C203 or C201.
3	D	Loud, clear signal with moderate signal input.	Defective 1LH4 tube. Open R202 or C202.
4	A	Loud, clear signal with moderate signal input.	Defective R200. Shorted C301D. Open C200.
Listening Test: Distortion may be caused by leaky C201, C202, C203, or C200, or by open R203 or R201.			

TROUBLE SHOOTING

Section 3

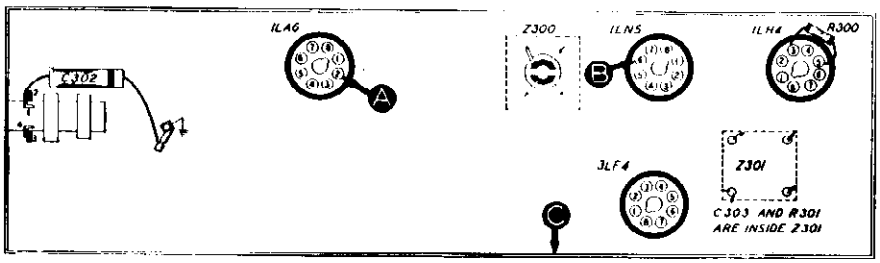

TP-3320C

Figure 3. Bottom View, Showing Section 3 Test Points

For the tests in this section, use an r-f signal generator with frequency set at 455 kc. (modulated output). Connect the generator ground lead to the chassis, test point C; connect the output lead through a .1-mf. condenser to the test points indicated in the chart. Set the radio volume control to maximum.

If the "NORMAL INDICATION" is obtained in the first step, proceed with the tests for Section 4; if not, isolate and correct the trouble in this section.

STEP	TEST POINT	NORMAL INDICATION	POSSIBLE CAUSE OF ABNORMAL INDICATION
1	A	Loud, clear signal with moderate signal input.	Trouble within this section. Isolate by the following tests.
2	B	Loud, clear signal with moderate signal input.	Defective 1LN5 or 1LH4 (diode section) tube. Defective or misaligned Z301. Open C302.
3	A	Loud, clear signal with moderate signal input.	Defective or misaligned Z300.

TROUBLE SHOOTING

Section 4

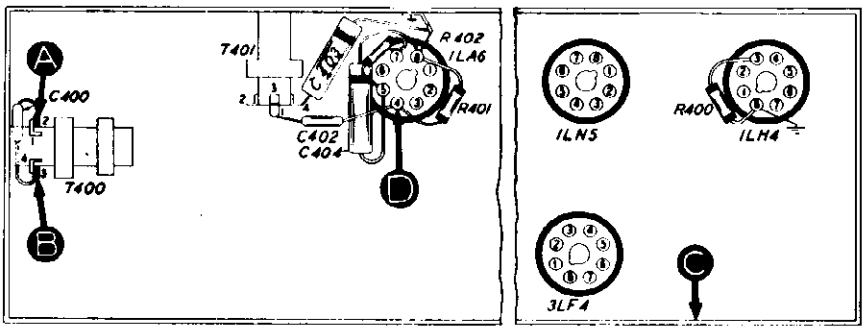

TP-3320D

Figure 4. Bottom View, Showing Section 4 Test Points

For the tests in this section, use an r-f signal generator with modulated output. Connect the generator ground lead to the chassis, test point C; connect the output lead through a .1-mf. condenser to the test points indicated in the chart. Set the generator and radio dials as noted in the chart.

Inspect the tuning condensers for bent plates, dirt, or poor wiper contacts; any of these conditions will cause noise.

If the "NORMAL INDICATION" is not obtained in the first step, isolate the trouble by following the remaining steps.

STEP	TEST POINT	DIAL SETTINGS		NORMAL INDICATION	POSSIBLE CAUSE OF ABNORMAL INDICATION
		SIG. GEN.	RADIO		
1	A	540 kc.	540 kc.	Loud, clear signal with low signal input.	Trouble within this section. Isolate by the following tests.
2	B	540 kc.	540 kc.	Loud, clear signal with moderate signal input.	Defective 1LA6 tube, C401, C401A, or oscillator circuit. Shorted C404. Misaligned Z300.
3	D Osc. test (See Note below.)		540 to 1720 kc.	Negative voltage (at least 1.5 volts) over complete range.	Defective 1LA6 tube, T401, C401, or C401B. Open R401, R402, C402, or C403. Shorted or leaky C402 or C403.
4	A	540 kc.	540 kc.	Loud, clear signal with low signal input.	Defective T400 or C401.

NOTE: Connect positive lead of 20,000-ohms-per-volt meter to the chassis, test point C; connect prod end of negative lead through 100,000-ohm isolating resistor to test point D (oscillator grid, pin 4 of 1LA6 tube).

© John F. Rider

ALIGNME

TURN ON RADIO POWER, AN

DIAL—Alignment points should be marked on the dial backplate. Measurements for these points are shown in the composite dial-and-backplate photo, figure 8. With tuning condensers fully meshed, set dial pointer to index mark.

OUTPUT METER—Connect across speaker voic

STEP	SIGNAL GENERATOR		RADIO		A
	CONNECTIONS TO RADIO	DIAL SETTING	DIAL SETTING	SPECIAL INSTRUCTIONS	
1	Through .1-mf. condenser to stator of aerial tuning condenser.	455 kc.	Tuning condenser fully meshed.	Adjust trimmers, in order given, for maximum output.	C C C
2	Through 200-mmf. condenser to external aerial connector.	1700 kc.	1700 kc.	Adjust for maximum output.	C
3	Same as Step 2.	1500 kc.	1500 kc. (approx.)	Tune radio to generator signal, and adjust trimmer for maximum output.	C

SYMBOLIZATION AND TERMINOLOGY

All components in the radio circuit are symbolized and located as follows:

C—condenser	LA—loop aerial	S—switch
I—pilot lamp	LS—loud-speaker	T—transformer
L—choke or coil	R—resistor	Z—electrical assembly

100-series components are in Section 1—the power supply.

200-series components are in Section 2—the audio circuits.

300-series components are in Section 3—the i-f, detector, and a-v-c circuits.

400-series components are in Section 4—the r-f and converter circuits.

©John F. Rider

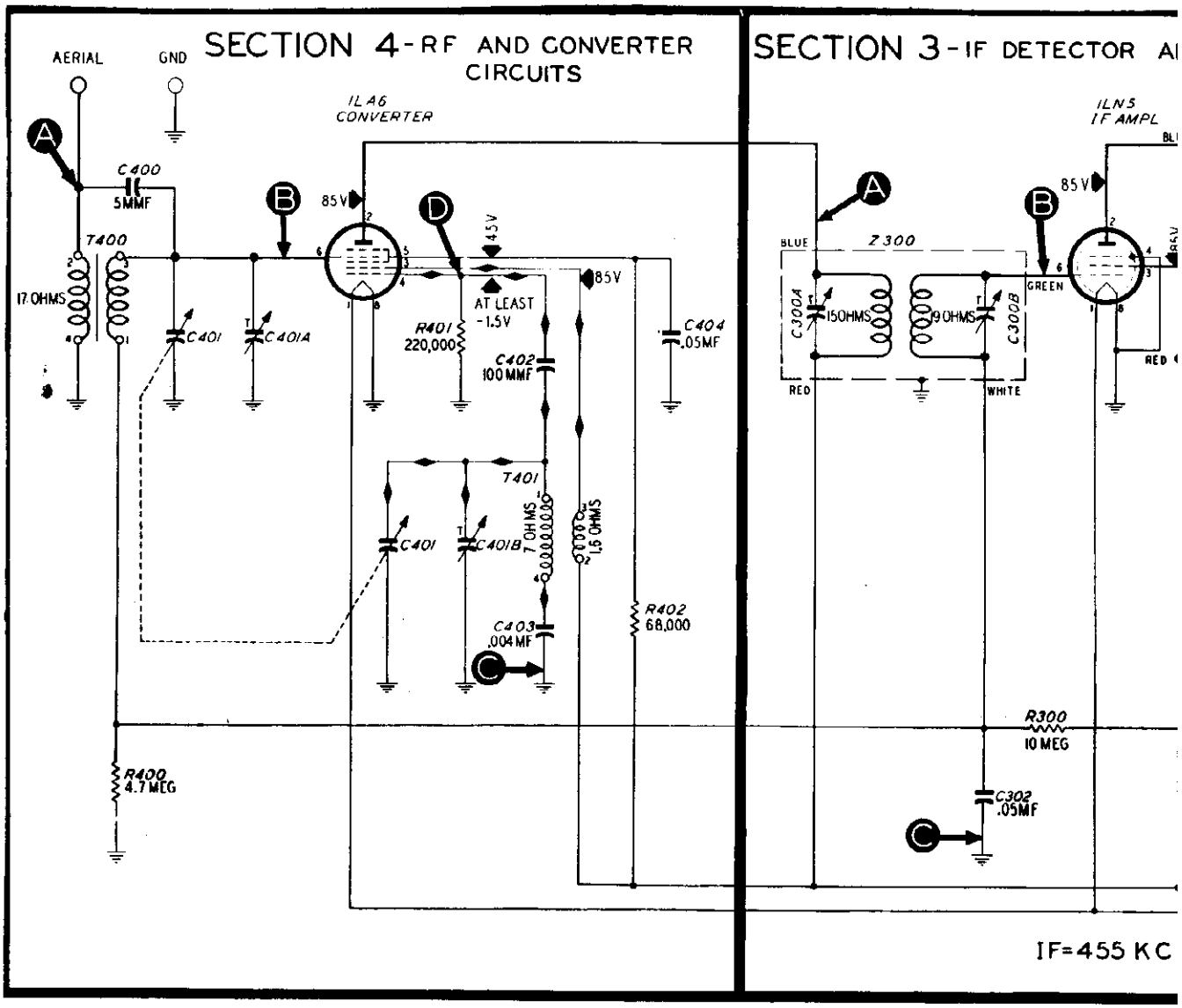

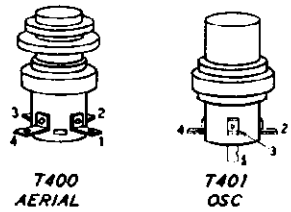

NOTE: THE VOLTAGES INDICATED ON THE SCHEMATIC DIAGRAM ARE AVERAGE VALUES. THE VOLTAGES WERE MEASURED BETWEEN THE POINTS INDICATED AND THE CHASSIS, USING A 20,000-OHMS-PER-VOLT METER, WITH A FRESH BATTERY.

OSCILLATOR GRID VOLTAGE WAS MEASURED BETWEEN THE CHASSIS AND OSC. GRID (PIN 4) OF THE 1LA6 TUBE, USING A 100,000-OHM ISOLATING RESISTOR IN SERIES WITH THE PROD END OF THE NEGATIVE VOLTMETER LEAD.

— R F, I F, AND AUDIO SIGNAL PATH

—◆— OSC SIGNAL PATH

ALL RESISTOR VALUES IN OHMS UNLESS MARKED OTHERWISE

CONDENSER SYMBOLS

FIXED VARIABLE TRIMMER ELECTROLYTIC

FIGURE 5. PHILCO RADIO MODEL 49-100, COMPLETE

©John F. Rider

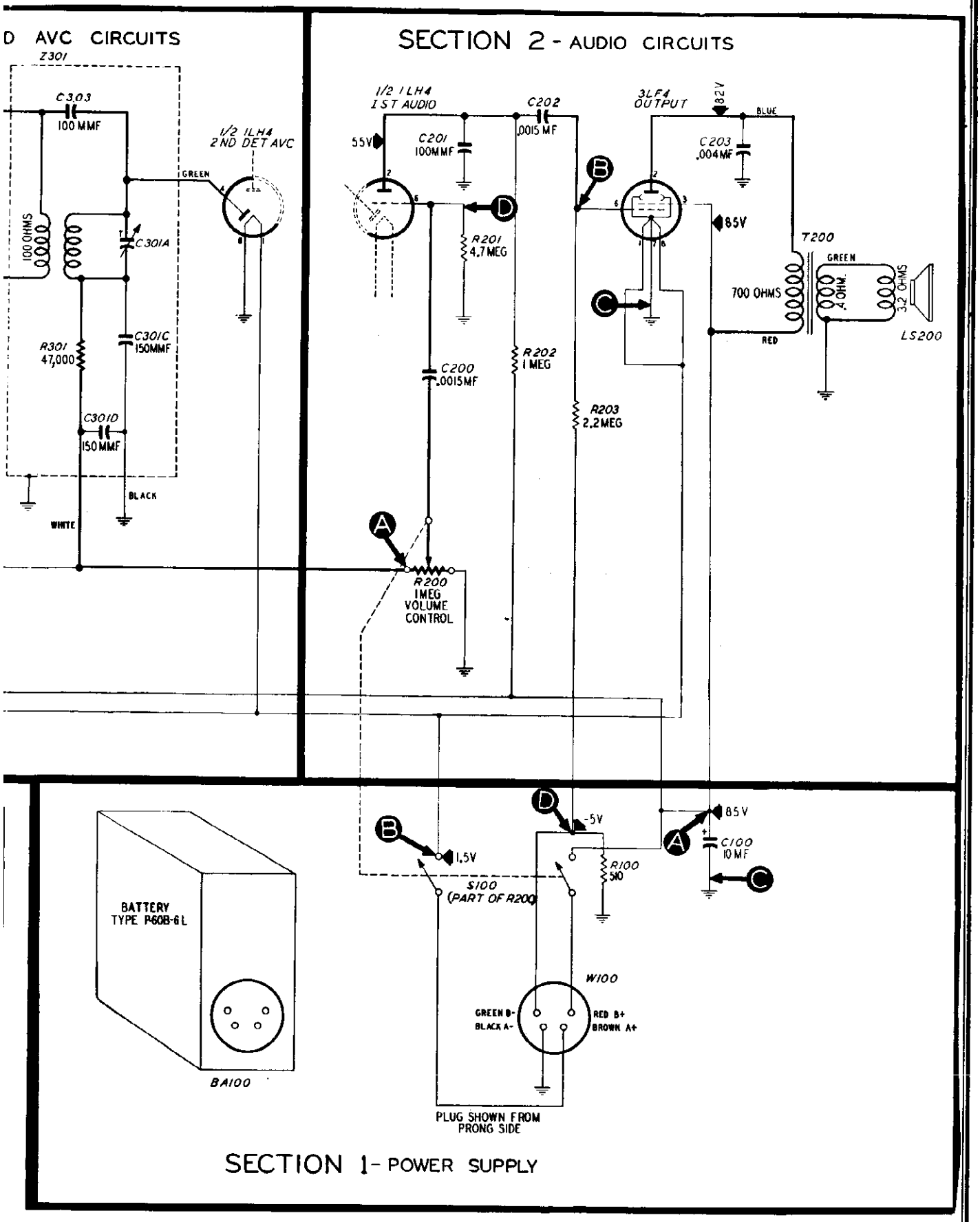

ECTIONALIZED SCHEMATIC, SHOWING ALL TEST POINTS

PROCEDURE

T VOLUME CONTROL TO MAXIMUM

SIGNAL GENERATOR—Connect ground lead to chassis; connect output lead as indicated in chart.

OUTPUT LEVEL—During alignment, adjust signal-generator output to maintain output-meter indication below 1 volt.

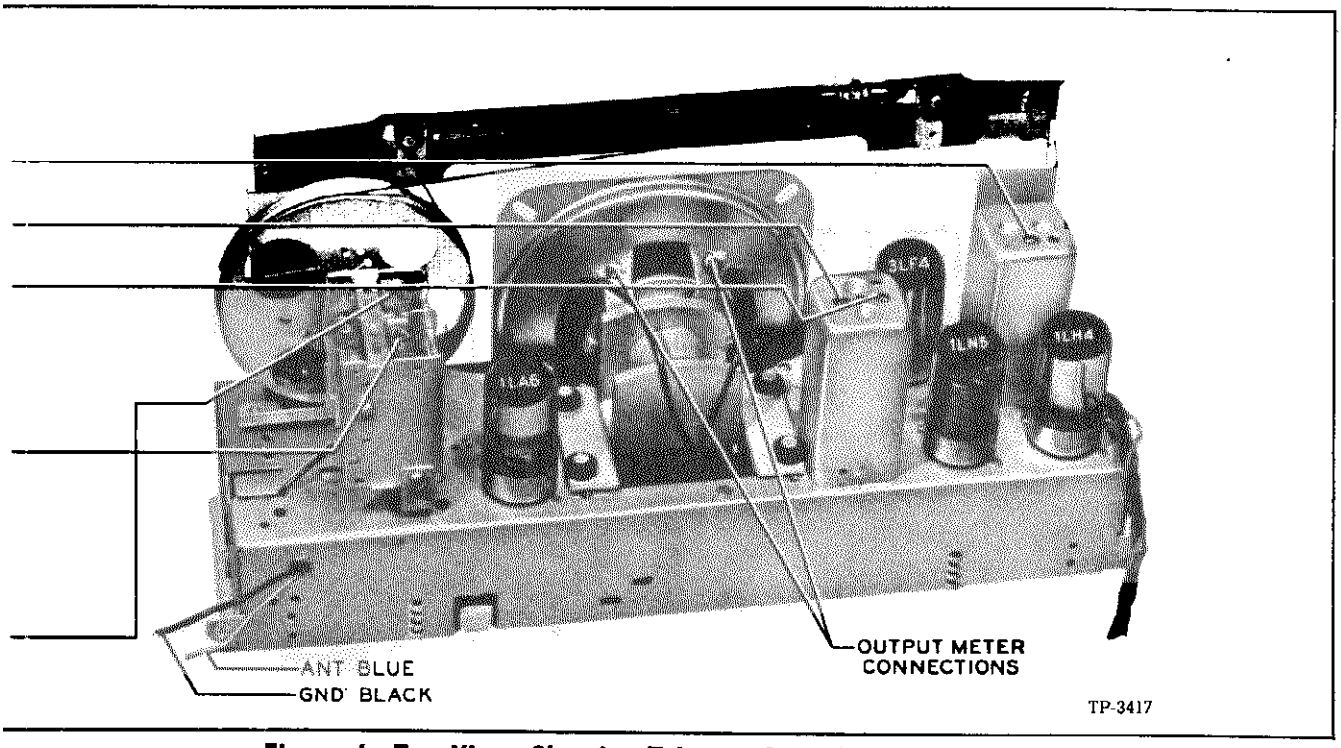

Figure 6. Top View, Showing Trimmer Locations

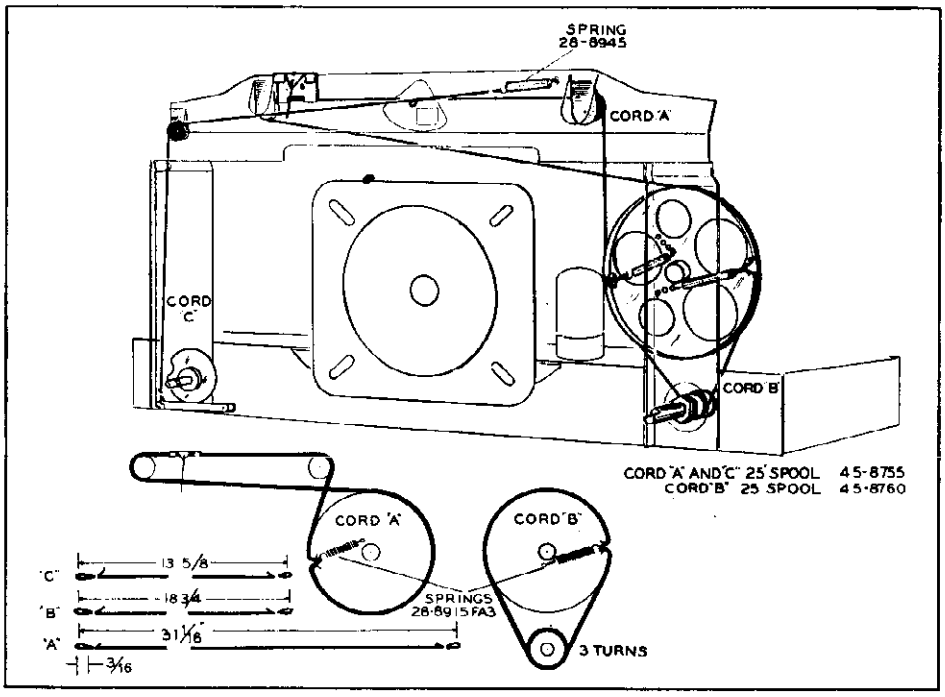

Figure 7. Drive-Cord Installation Details

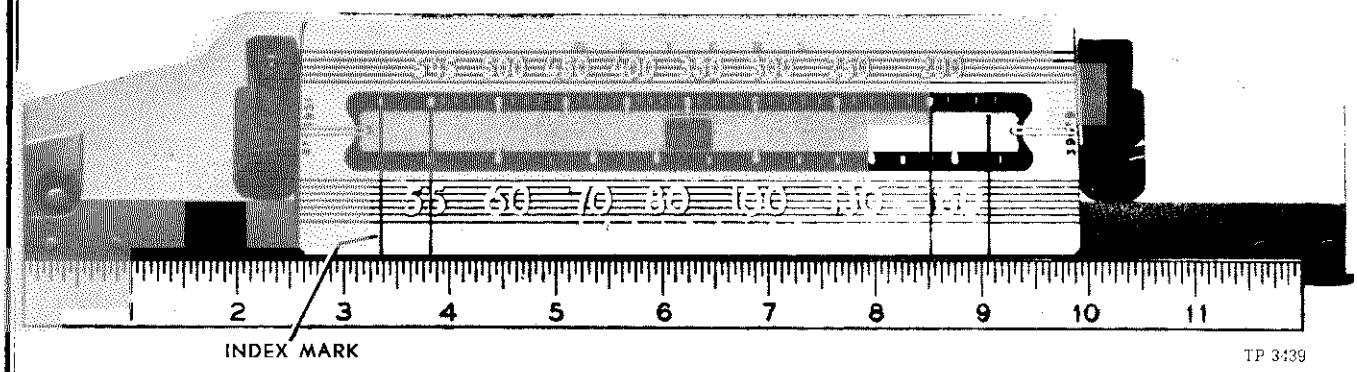

Figure 8. Composite Dial and Backplate, Calibration Details

REPLACEMENT PARTS LIST

NOTE: Part numbers marked with an asterisk (*) in the following parts list are general replacement items. These numbers may not be identical with those on factory assemblies; also, the electrical values of some replacement items may differ from the values indicated in the schematic diagram and parts list. The values substituted in any case are so chosen that the operation of the radio will be either unchanged or improved. When ordering replacements, use only the "Service Part No."

SECTION 1

Reference Symbol	Description	Service Part No.
BA100	Battery pack	P-60B-6L
C100	Condenser, electrolytic, 10 mf., a-f and r-f by-pass	30-2540*
R100	Resistor, 510 ohms, bias	66-1513340*
S100	Switch, power	Part of R200
W100	Battery-cable assembly	41-3477-1

SECTION 2

C200	Condenser, .0015 mf., d-c blocking	30-4621*
C201	Condenser, 100 mmf., r-f by-pass	60-10105407*
C202	Condenser, .0015 mf., d-c blocking	30-4621*
C203	Condenser, .004 mf., tone compensation	30-4623*
LS200	Speaker	36-1507-3
R200	Volume control, 1 megohm	33-5554
R201	Resistor, 4.7 megohms, d-c grid return	66-5473340*
R202	Resistor, 1 megohm, plate load	66-5103340*
R203	Resistor, 2.2 megohms, d-c grid return	66-5223340*
T200	Output transformer	32-8323

SECTION 3

C300A	Condenser, trimmer	Part of Z300
C300B	Condenser, trimmer	Part of Z300
C301A	Condenser, trimmer	Part of Z301
C301B	Not used	
C301C	Condenser, 150 mmf., i-f filter	Part of Z301
C301D	Condenser, 150 mmf., i-f filter	Part of Z301
C302	Condenser, .05 mf., a-v-c filter	30-4518*
C303	Condenser, 100 mmf., coupling, part of Z301	30-1225-2*
R300	Resistor, 10 megohms, a-v-c filter	66-6103340*
R301	Resistor, 47,000 ohms, i-f filter, part of Z301	66-3473340*
Z300	Transformer, 1st i-f, includes C300A and C300B	32-3949-1*
Z301	Transformer, 2nd i-f, includes C301A, C301C, C301D, C303, and R301	32-3897*

SECTION 4

Reference Symbol	Description	Service Part No.
C400	Condenser, 5 mmf., coupling	60-90505007
C401	Condenser, main tuning	31-2721-1
C401A:	Condenser, trimmer, aerial coil	Part of C401
C401B:	Condenser, trimmer, osc. coil	Part of C401
C402	Condenser, 100 mmf., osc. grid	30-1225-2*
C403	Condenser, .004 mf., osc. tracking	30-4623*
C404	Condenser, .05 mf., r-f by-pass	30-4518*
R400	Resistor, 4.7 megohms, a-v-c voltage divider	66-5473340*
R401	Resistor, 220,000 ohms, osc. grid leak	66-4223340*
R402	Resistor, 68,000 ohms, screen dropping	66-3683340*
T400	Transformer, aerial	32-3919-2
T401	Transformer, oscillator	32-3385-4

MISCELLANEOUS

Description	Service Part No.
Cabinet, Less Dial Scale	10618A
Cabinet Hardware	
Baffle and cloth assembly	40-6910
Dial Scale	27-5951
Dial-Scale Hardware	
Screw, strap mtg.	1W23129FA3
Strap, scale mtg., r.h.	56-2672FA3
Strap, scale mtg., l.h.	56-2671FA3
Knob (2)	54-4323
Stud, baffle mtg.	W2235-2FA9
Scale Plate, Flag and Upright Assembly	76-3131
Cord, drive (25-ft. spool) for flag	45-8755
Cord, drive (25-ft. spool), for pointer	45-8755
Pointer	56-2896
Spring, flag drive	28-8945FA3
Spring, cam plate, flag drive	57-0701FA1
Spring, retaining	57-1468FA1
Transfer-lever assembly	76-1655-2
Socket, Loktal	27-6207
Tuning-Condenser Hardware	
Cord, drive (25-ft. spool), for tuning condenser	45-8760
Spring, tuning-condenser drive	28-8913FA3
Tuning-shaft assembly	31-2640

MODEL 49-101 PHILCO CORP.

Circuit Description

Philco Model 49-101 is a four-tube superheterodyne operating on a.c., d.c., or battery, and providing reception on the standard-broadcast band. A 100-foot (overall length), outdoor aerial, such as Philco Part No. 45-1469, is recommended.

The aerial is transformer-coupled to the 1R5 converter, where the incoming signal is converted to the 455-kc. intermediate frequency. A 1T4 is used in a single high-gain stage of i-f amplification, which employs neutralization to suppress oscillation. A 1.5-mmf. condenser, C304, feeds part of the i-f voltage, of the proper phase, back to the 1T4 grid through the tube-socket capacitance.

A 1U5 diode-pentode is used in the detector, a-v-c, and first audio circuits. The pentode section is resistance-coupled to a 3V4 pentode output amplifier, which works into a p-m speaker.

The d-c operating voltages are obtained from either a battery pack, Philco type P-326, or from a 105—120 volt, a-c or d-c power line. For power-line operation, the plate, screen, and filament voltages are provided by a power supply using a selenium rectifier (CR100).

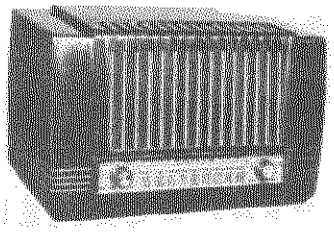

MODEL 49-101

SPECIFICATIONS

CABINET	Molded Polystyrene (dark brown)
CIRCUIT	Four-tube superheterodyne
FREQUENCY RANGE	540—1600 kc.
AUDIO OUTPUT	160 milliwatts
OPERATING VOLTAGES	Battery: "B", 90 volts; "A", 7.5 volts. A.c./d.c.: 105—120 volts
POWER CONSUMPTION	Battery: "B", 13 ma. at 90 volts; "A", 50 ma. at 7.5 volts. A.c./d.c.: 25 watts
AERIAL	Terminal provided for external aerial
INTERMEDIATE FREQUENCY	455 kc.
PHILCO TUBES (4)	1R5, 1T4, 1U5, 3V4
BATTERY TYPE	Philco P-326

TP-6524

Philco TROUBLE-SHOOTING Procedure

For rapid trouble shooting, the radio circuit is divided into four sections, with test points specified for each section; these sections and test points are indicated in the schematic diagram. The trouble-shooting procedure given for each section includes a simplified test chart and a bottom view of the chassis showing the locations of the test points and the components of that section.

In each chart, the first step is a master check for determining whether trouble exists in that section, without going through the entire chart.

Failure to obtain the "NORMAL INDICATION" in any given step indicates trouble within the circuit under test.

After isolating the trouble to a single stage, the defect is located by: first, testing the tube; second, measuring tube electrode voltages; third, measuring circuit resistances; fourth, substituting condensers. The trouble revealed should be corrected before testing further.

Preliminary Checks

To avoid possible damage to the radio, the following preliminary checks should be made before turning on the power:

1. Inspect both the top and the bottom of the chassis. Make sure that all tubes are secure in the proper sockets, and look for any broken or shorted connections, burned resistors, or other obvious sources of trouble.

2. Check the total filament resistance, with the power switch turned on, the battery plug disconnected from the battery, and the change-over switch in the battery position (power-cord plug inserted in receptacle on rear of chassis). If the resistance between the A+ and A– pins on the battery plug is higher than 100 ohms, one of the tube filaments is probably open.

NOTE: If the 3V4 filament is open, check condenser C202 before replacing the tube.

3. Measure the resistance between B+ (output of selenium rectifier), test point D, and B–, test point B. See figure 1. When the ohmmeter leads are connected in the proper polarity, the highest resistance reading will be obtained. If the reading is lower than 2000 ohms, check condensers C101A and C101B for leakage or shorts.

The resistance value above, which is much lower than normal, does not represent a quality check of these condensers; it is the lowest value which will permit the rectifier to operate safely while the voltage checks of Section 1 (power supply) are performed.

©John F. Rider

Section 1—Power Supply

TROUBLE SHOOTING

Make the tests for this section with a d-c voltmeter. Connect the negative lead to B–, test point B; connect the positive lead to the test points indicated in the chart. The voltage readings given were taken with a 20,000-ohms-per-volt meter at a line voltage of 117 volts, a.c.

Set the volume control to minimum.

The battery pack should be replaced when the "A" voltage drops below 5 volts, or the "B" voltage drops below 60 volts.

If the "NORMAL INDICATION" is obtained in step 1, proceed with the tests for Section 2 (audio circuits); if not, isolate and correct the trouble in this section.

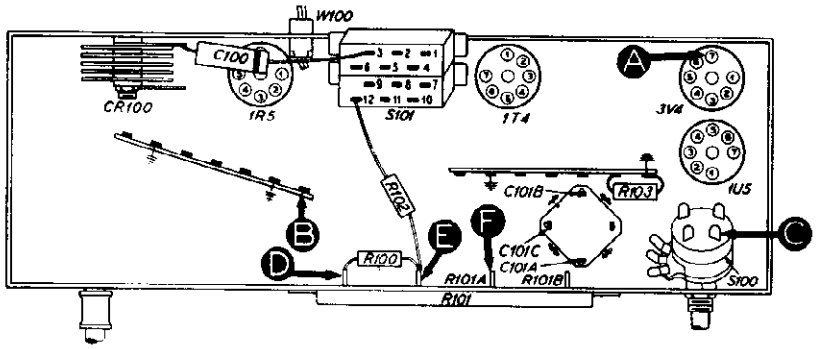

Figure 1. Bottom View, Showing Section 1 Test Points TP-5355A

STEP	TEST POINT	NORMAL INDICATION	ABNORMAL INDICATION	POSSIBLE CAUSE OF ABNORMAL INDICATION
1(a) 1(b)	A C	7.5v 90v		Trouble in this section. Isolate by the following tests.
2	D	125v	Low voltage No voltage	Defective: CR100. Open: C101A. Defective: CR100. Open: S100, S101.
3	E	120v	Low voltage No voltage	Changed resistance: R100. Leaky: C101A. Open: R100. Shorted: C101A.
4	F	65v	Low voltage No voltage	Changed resistance: R101A. Leaky: C101B. Open: R101A. Shorted: C101B.
5	A	7.5v	Low voltage High voltage No voltage	Changed resistance: R101B. Open: One or more filaments, R205*. Open: R101B, S101.
6	C	90v	Low voltage High voltage No voltage	Changed resistance: R102. Leaky: C101C. Open: R205*, T200*, S100. Open: R102, S101. Shorted: C101C.
Listening Test: Abnormal hum may be caused by open C101B, C101C, or C202*.				

*This part, located in another section, may cause abnormal indication in this section.

Section 2—Audio Circuits

TROUBLE SHOOTING

For the tests in this section, use an audio-frequency signal generator. Connect the generator ground lead to B–, test point B; connect the output lead through a .1-mf. condenser to the test points indicated in the chart.

Set the radio volume control to maximum.

If the "NORMAL INDICATION" is obtained in step 1, proceed with the tests for Section 3 (i-f, detector, and a-v-c circuits); if not, isolate and correct the trouble in this section.

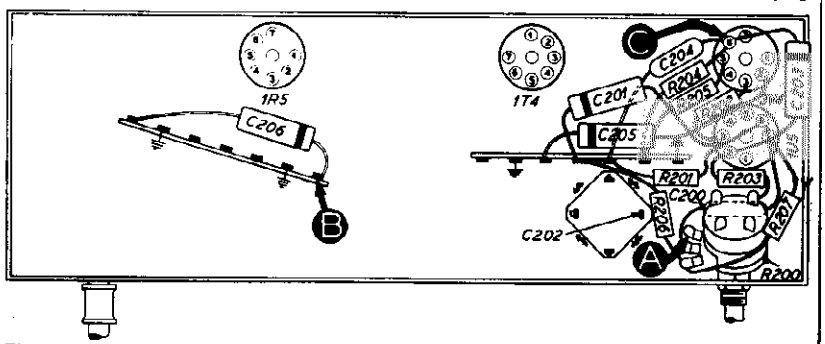

Figure 2. Bottom View, Showing Section 2 Test Points TP-5355B

STEP	TEST POINT	NORMAL INDICATION	POSSIBLE CAUSE OF ABNORMAL INDICATION
1	A	Loud, clear speaker output with moderate generator input.	Trouble in this section. Isolate by the following tests.
2	C	Clear speaker output with strong generator input.	Defective: 3V4, LS200. Open: R204, T200. Shorted: C203, C204, C205, T200.
3	A	Same as step 1.	Defective: 1U5, R200 (rotate). Open: C200, R201, R202, R203, C203. Shorted: C201, C301C*.
Listening Test: Distortion may be caused by leaky or shorted C203, or by changed resistance of R202. Distortion or strong signals may be caused by leaky or shorted C200.			

*This part, located in another section, may cause abnormal indication in this section.

© John F. Rider

MODEL 49-101 PHILCO CORP.

Section 3—I-F, Detector, And A-V-C Circuits

TROUBLE SHOOTING

For the tests in this section, use an r-f signal generator, with modulated output, set at 455 kc. Connect the generator ground lead to B–, test point B; connect the output lead through a .1-mf. condenser to the test points indicated in the chart.

Set the radio volume control to maximum.

If the "NORMAL INDICATION" is obtained in step 1, proceed with the tests for Section 4 (r-f and converter circuits); if not, isolate and correct the trouble in this section.

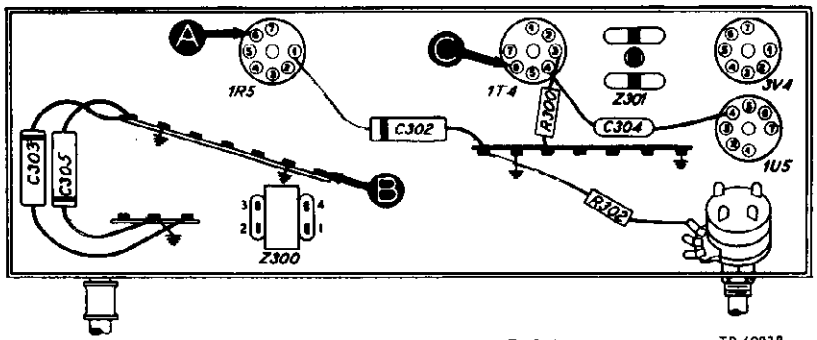

Figure 3. Bottom View, Showing Section 3 Test Points TP-6983B

To provide a complete i-f amplifier check, test point A for this section is placed at the grid of the mixer in Section 4; therefore, the effectiveness of step 1 as a master check is dependent upon the condition of certain parts in the mixer circuit. These parts are listed below under "POSSIBLE CAUSE OF ABNORMAL INDICATION."

STEP	TEST POINT	NORMAL INDICATION	POSSIBLE CAUSE OF ABNORMAL INDICATION
1	A	Loud, clear speaker output with weak generator input.	Trouble in this section. Isolate by the following tests.
2	C	Loud, clear output with moderate input.	Defective: 1T4, 1U5 (diode section). Misaligned: Z301. Open: R300, C303, L301A, R301, L301B, C301A. Shorted: C300B, C303, L301A, L301B, C301A, C301B.
3	A	Same as step 1.	Defective: 1R5*. Misaligned: Z300. Open: C300A, L300A, L300B, C300B, T400*. Shorted: C400A*, C400B*, C300A, L300A, L300B, C300B.

*This part, located in another section, may cause abnormal indication in this section.

Section 4—R-F And Converter Circuits

TROUBLE SHOOTING

For the tests in this section, with the exception of the oscillator test, use an r-f signal generator with modulated output. Connect the generator ground lead to B–, test point B; connect the output lead through a .1-mf. condenser to the test points indicated in the chart.

Set the radio volume control to maximum. Set the tuning control and signal-generator frequency as indicated in the chart.

If the "NORMAL INDICATION" is obtained in step 1, further steps should be unnecessary; if not, isolate and correct the trouble in this section. If the trouble is not revealed by the tests for this section, check the alignment.

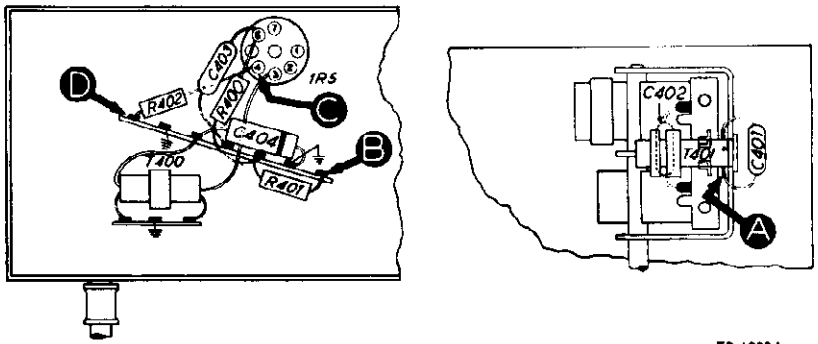

Figure 4. Bottom View, Showing Section 4 Test Points TP-6983A

STEP	TEST POINT	SIGNAL GEN. FREQUENCY	RADIO TUNING	NORMAL INDICATION	POSSIBLE CAUSE OF ABNORMAL INDICATION
1	A	1000 kc.	Tune to signal.	Loud, clear speaker output with weak generator input.	Trouble in this section. Isolate by the following tests.
2	C to D (Osc. test: see note below.)		Rotate through range.	Negative 5 to 10 volts.	Defective: 1R5. Open: R402, T400, C404. Shorted: C402, C400, C400A.
3	A	1000 kc.	Tune to signal.	Same as step 1.	Open: C401, C403, R401, R400, T400. Shorted: C400, C400B.

ALIGNMEN

DIAL—Calibration and pointer-index measurements are shown in figure 7. With tuning condenser fully meshed, set pointer to index mark.

RADIO CONTROLS—Set volume control to maximum.

OUTPUT METER—Connect across voice-coil terminals.

SIGNAL GENERATOR—Use modulated output.

STEP	SIGNAL GENERATOR		RADIO		
	CONNECTION TO RADIO	DIAL SETTING	DIAL SETTING	SPECIAL INSTRUCTIONS	
1	Ground lead to B– (test point B in figure 4). Positive lead through .05-mf. condenser to external-aerial lead. Make sure that radio loop aerial is connected to radio.	455 kc.	Tuning condenser fully meshed.	Adjust, in order given, for maximum output.	C30 TC TC
2	Radiating loop (see note below).	1600 kc.	1600 kc.	Adjust for maximum output.	
3	Same as step 2.	1500 kc.	1500 kc.	Adjust for maximum output while rocking tuning condenser.	

RADIATING LOOP: Make up a 6—8-turn, 6-inch-diameter loop, using insulated wire; connect to si leads and place near radio loop aerial. Make sure that radio loop aerial is connected to radio.

CALIBRATING DIAL BACKPLATE

When the radio chassis has been removed from the cabinet, dial-calibration and ali points may be marked on the dial (chassis) backplate at the end of the pointer with a The method of measuring for these points is illustrated in figure 7.

With the tuning gang fully meshed, the pointer should be adjusted on the dial-dri to coincide with the index mark.

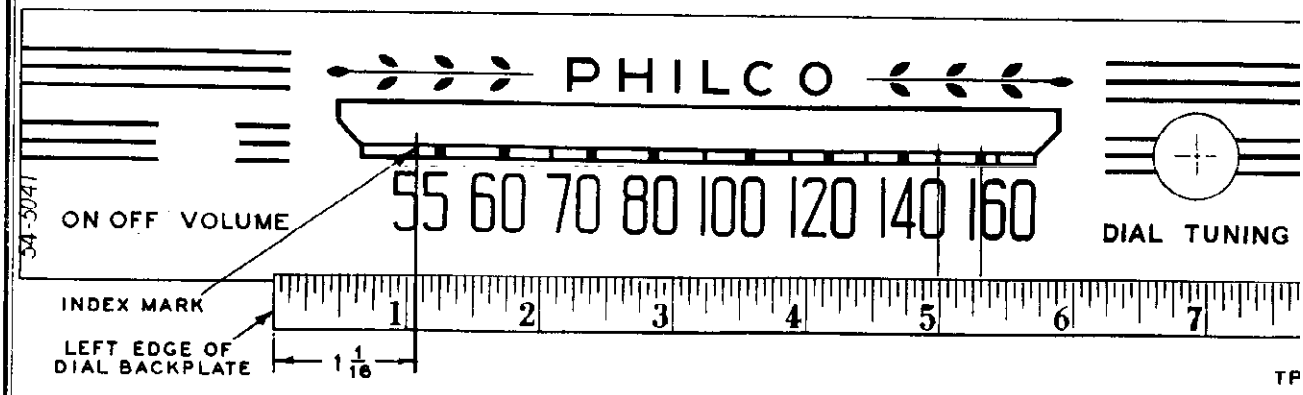

Figure 7. Dial-Backplate Calibration Measurements

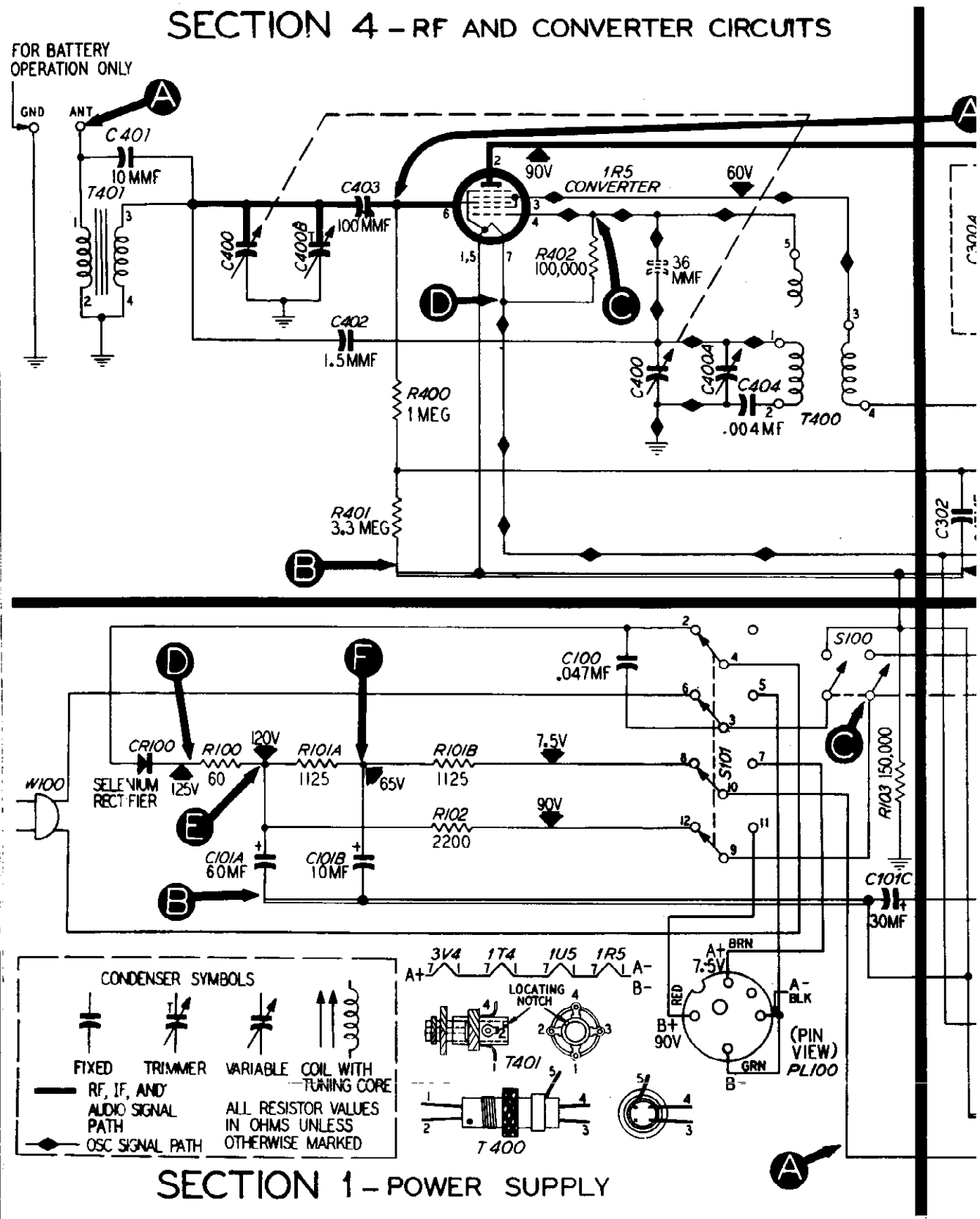

Figure 5. Philco Model 49-101, Section

OSCILLATOR TEST: Connect the positive lead of a high-resistance voltmeter to test point D; connect the prod end of the range, such as 0—10 volts. Proper operation of the oscillator is indicated by negative voltage within the range given in the

SECTION 3 — IF, DETECTOR, AND AVC CIRCUITS

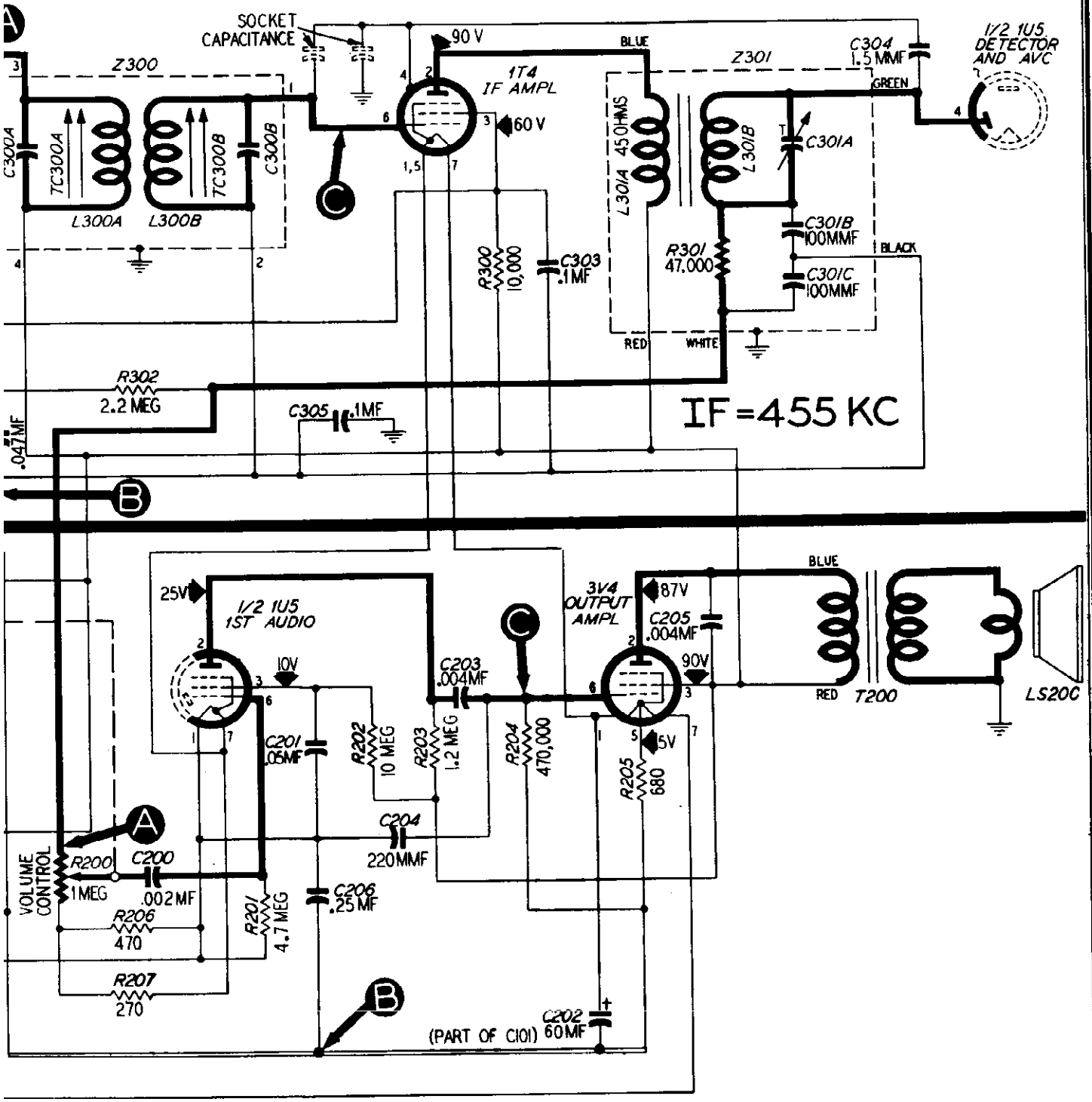

SECTION 2 — AUDIO CIRCUITS

nalized Schematic Diagram, Showing Test Points

e negative lead through a 100,000-ohm isolating resistor to the oscillator grid (pin 4 of the 1R5), test point C. Use a suitable meter e chart (measured with a 20,000-ohms-per-volt meter) throughout the tuning range.

PROCEDURE

UT LEVEL—During alignment, adjust signal-generator output to maintain output-meter indication below

AL NOTE—The orientation of the loop with respect to the chassis is critical for correct tracking. During ent, with the cabinet back (containing the loop) laid down on the bench, the chassis should be laid on its n approximately its normal relation to the loop.

IST

nd i-f sec.

1st i-f sec.

-1st i-f pri.

00A—osc.

0B—aerial

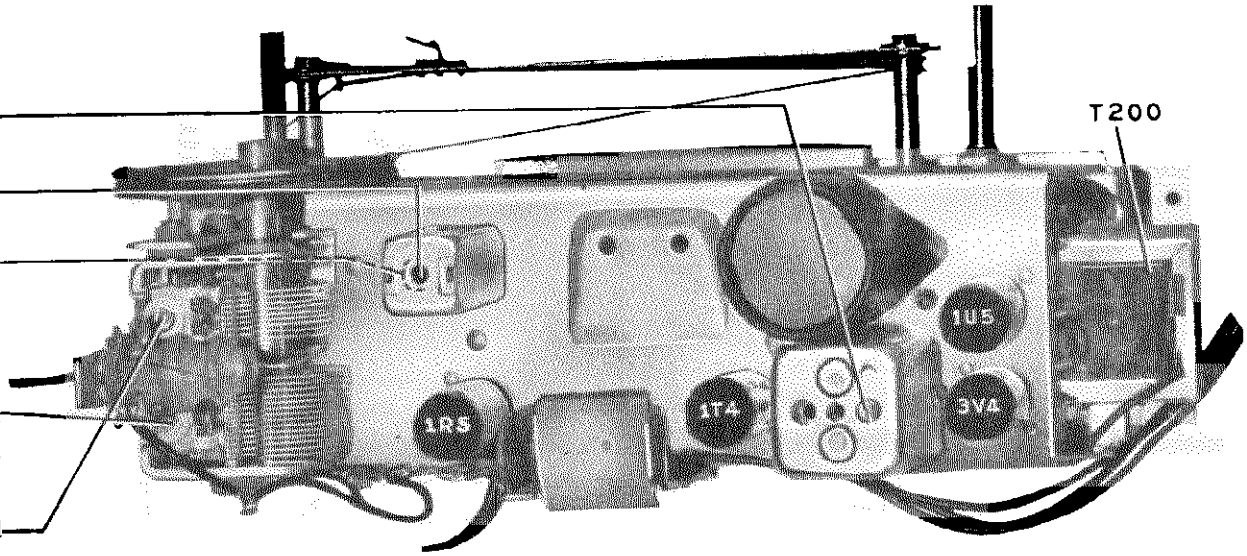

enerator

Figure 6. Top View, Showing Trimmer Locations

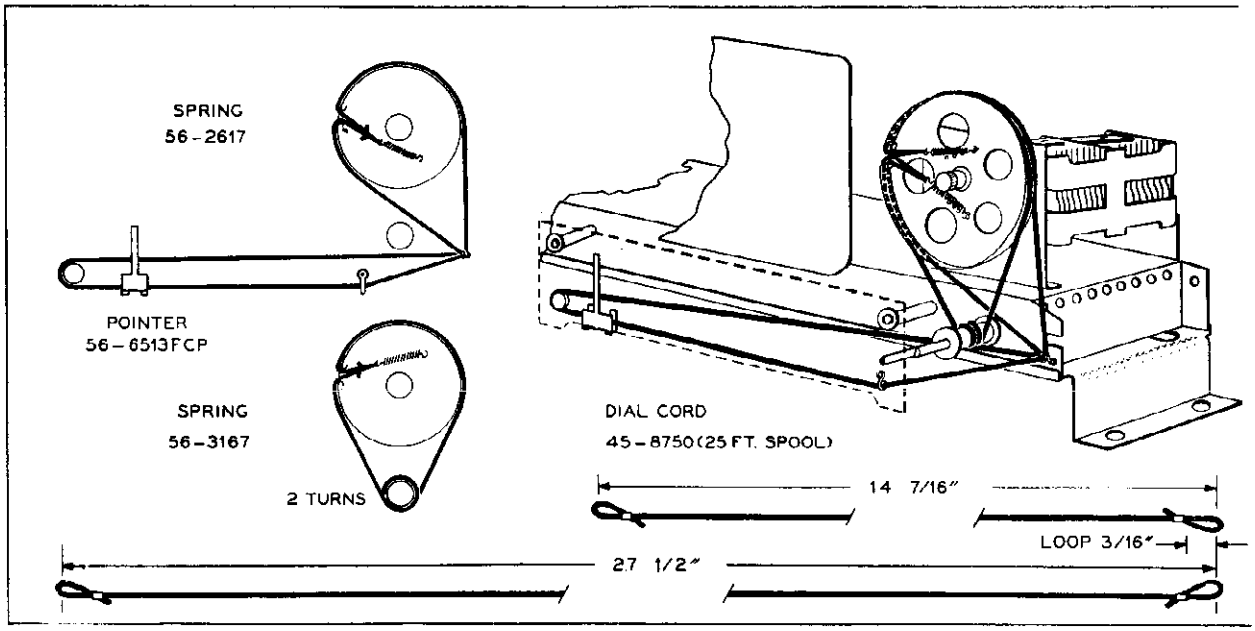

Figure 8. Drive-Cord Installation Details

TP-6983C

PHILCO CORP. MODEL 49-101

SYMBOLIZATION

The components in the radio circuit are symbolized according to the types of parts and the sections of the radio in which the parts are located. The prefix letter of the symbol designates the type of part, as follows:

C —condenser
I —pilot lamp
L —choke or coil
LA—loop aerial
LS—loud-speaker
R —resistor
S —switch
T —transformer
W—line cord
Z —electrical assembly

The number of the symbol designates the section in which the part is located, as follows:

100-series components are in Section 1—the power supply
200-series components are in Section 2—the audio circuits
300-series components are in Section 3—the i-f, detector, and a-v-c circuits
400-series components are in Section 4—the r-f and converter circuits

A suffix letter identifies the part as a component of the assembly which bears an identical number without a suffix letter, and with perhaps a different prefix letter.

REPLACEMENT PARTS LIST

NOTE: Part numbers identified by an asterisk (*) are general-replacement items. These numbers may not be identical with those on factory assemblies; also, the electrical values of some replacement items may differ from the values indicated in the schematic diagram and parts list. The values substituted in any case are so chosen that the operation of the radio will be either unchanged or improved. When ordering replacements, use only the "Service Part No."

SECTION 1
POWER SUPPLY

Reference Symbol	Description	Service Part No.
C100	Condenser, line filter, .047 mf.	61-0122*
C101	Condenser, electrolytic, filter, 4-section	30-2568-26
C101A	Condenser, filter, 60 mf., 150v	Part of C101
C101B	Condenser, filter, 10 mf., 150v	Part of C101
C101C	Condenser, filter, 30 mf., 150v	Part of C101
CR100	Rectifier, selenium	34-8003
PL100	Battery-cable-and-plug assembly	41-3712-4
R100	Resistor, current-limiting, 60 ohms, 1w	33-1334
R101	Resistor, 2-section	33-3431-5
R101A	Resistor, filament dropping, 1125 ohms	Part of R101
R101B	Resistor, filament dropping, 1125 ohms	Part of R101
R102	Resistor, filter, 2200 ohms	66-2223340*
R103	Resistor, leakage, 150,000 ohms	66-4153340*
S100	Switch, on-off	Part of R200
S101	Switch, change-over	42-1821
W100	Line-cord-and-plug assembly	L-2183*

SECTION 2
AUDIO CIRCUITS

C200	Condenser, d-c blocking, .002 mf.	61-0108*
C201	Condenser, screen by-pass, .05 mf.	61-0122*
C202	Condenser, filter, 60 mf., 25v	Part of C101
C203	Condenser, d-c blocking, .004 mf.	61-0179*
C204	Condenser, r-f by-pass, 220 mmf.	30-1224-20*
C205	Condenser, tone compensation, .004 mf.	61-0179*
C206	Condenser, by-pass, .25 mf.	61-0125*
LS200	Speaker, p-m	36-1629-1
R200	Volume control (with on-off switch), 1 megohm	33-5538-28
R201	Resistor, grid return, 4.7 megohms	66-5473340*
R202	Resistor, screen dropping, 10 megohms	66-6103340*
R203	Resistor, plate load, 1.2 megohms	66-5123340*
R204	Resistor, grid return, 470,000 ohms	66-4473340*
R205	Resistor, bias, 680 ohms	66-1683340*
R206	Resistor, diode return, 470 ohms	66-1473340*
R207	Resistor, diode return, 270 ohms	66-1273340*
T200	Transformer, output	32-8259-3

SECTION 3
I-F, DETECTOR, AND A-V-C CIRCUITS

C300A	Condenser, shunt, fixed trimmer	Part of Z300
C300B	Condenser, shunt, fixed trimmer	Part of Z300
C301A	Condenser, trimmer	Part of Z301
C301B	Condenser, filter	Part of Z301
C301C	Condenser, filter	Part of Z301
C302	Condenser, a-v-c filter, .047 mf.	61-0122*
C303	Condenser, screen by-pass, .1 mf.	61-0113*

SECTION 3 (Continued)
I-F, DETECTOR, AND A-V-C CIRCUITS

C304	Condenser, neutralizing, 1.5 mmf.	30-1221-3
C305	Condenser, i-f by-pass, .1 mf.	61-0113*
L300A	Transformer primary, 1st i-f	Part of Z300
L300B	Transformer secondary, 1st i-f	Part of Z300
L301A	Transformer primary, 2nd i-f	Part of Z301
L301B	Transformer secondary, 2nd i-f	Part of Z301
R300	Resistor, screen dropping, 10,000 ohms	66-3103340*
R301	Resistor, filter, 47,000 ohms (part of Z301)	66-3473340*
R302	Resistor, a-v-c filter, 2.2 megohms	66-5223340*
TC300A	Tuning core, 1st i-f pri.	Part of Z300
TC300B	Tuning core, 1st i-f sec.	Part of Z300
Z300	Transformer, 1st i-f	32-4160-4
Z301	Transformer, 2nd i-f	32-3987-3

SECTION 4
R-F AND CONVERTER CIRCUITS

C400	Condenser, tuning gang	31-2727-2
C400A	Condenser, trimmer, oscillator	Part of C400
C400B	Condenser, trimmer, aerial	Part of C400
C401	Condenser, isolating, 10 mmf.	30-1224-26*
C402	Condenser, neutralizing, 1.5 mmf.	30-1221-3
C403	Condenser, d-c blocking, 100 mmf.	62-110009001
C404	Condenser, fixed padder, .004 mf.	61-0179*
R400	Resistor, a-v-c divider, 1 megohm	66-5103340*
R401	Resistor, grid return, 3.3 megohms	66-5333340*
R402	Resistor, oscillator grid bias, 100,000 ohms	66-4103340*
T400	Transformer, oscillator	32-4282-1
T401	Transformer, aerial	32-3919-4

MISCELLANEOUS

Description	Service Part No.
Cabinet and Cabinet Parts	
Baffle-and-cloth assembly	40-7600
Back	54-7695
Cabinet	10732
Dial Hardware	
Dial-backplate assembly	76-4357
Drive cord (25-ft. spool)	45-8750*
Pointer	56-6513FCP
Scale	54-5041
Knob (2 required)	54-4227-5
Shaft-and-pulley assembly	76-3671-1
Socket, miniature (4 required)	27-6203
Spring, drive cord	56-2617
Switch-lever assembly	78-3666

MODELS 49-500, 49-500-I, 49-506

PHILCO CORP.

GENERAL INFORMATION

Philco Model 49-506 is a 5-tube superheterodyne. This set employs the same chassis as that used in Models 49-500 and 49-500-I, but is housed in a new-style cabinet which is supplied in either of two finishes, walnut or mahogany.

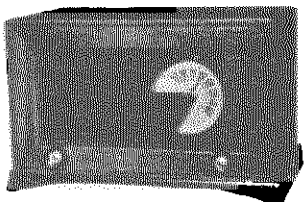

MODEL 49-506

SPECIFICATIONS

CABINET	Wood, with plastic grille; walnut or mahogany finish

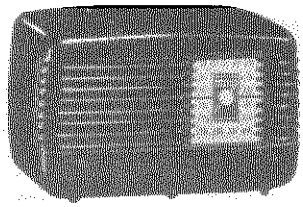

MODEL 49-500 (Walnut)

MODEL 49-500-I (Ivory)

SPECIFICATIONS

CABINET	Bakelite
CIRCUIT	Five-tube superheterodyne
FREQUENCY RANGE	540 to 1620 kc.
OPERATING VOLTAGE	105 to 120 volts, a.c. or d.c.
POWER CONSUMPTION	30 watts
AERIAL	Loop fastened to cabinet; terminal also provided for outside aerial
INTERMEDIATE FREQUENCY	455 kc.
PHILCO TUBES (5)	7A8, 14A7, 14B6, 50A5, 35Z5GT

TP-2667

Circuit Description

The Philco Models 49-500 and 49-500-I are 5-tube, table-model superheterodyne radios, providing reception in the standard broadcast band.

The high-impedance loop aerial normally provides adequate signal pickup. An external aerial may be connected, if desired, by detaching the aerial lead (shown in figure 6) from the chassis, and connecting the lead to an external aerial lead-in. Do not use a ground.

The loop is coupled to the 7A8 converter tube. Variable-condenser tuning is employed, the oscillator rotor-section plates being shaped to obtain tracking, thus eliminating the necessity for a series padding condenser.

The 7A8 is transformer coupled to the 14A7 i-f amplifier, which is also transformer coupled to the diodes of the 14B6 second detector — first audio-frequency amplifier. A-v-c voltage is applied to the control grids of both the i-f and converter tubes.

The triode section of the 14B6 is the first audio stage, and is resistance coupled to the 50A5 output tube. The output tube is transformer coupled to a permanent-magnet dynamic speaker.

D-c operating voltages are obtained from a 35Z5GT half-wave rectifier, the output of which is filtered by a two-section resistor-condenser filter.

Condenser C304 in Section 3 is a special condenser, inductively wound to form a series-tuned circuit, resonant at the intermediate frequency. This special condenser offers less impedance at this frequency than a conventional condenser, thus permitting higher i-f gain, with no tendency toward instability. Since the tuning gang is connected to the chassis, by-passing at broadcast and short-wave frequencies is adequate. The inductive effect is negligible at audio frequencies.

The 150,000-ohm resistor, R100, in Section 1, prevents hum which might otherwise occur under conditions of high humidity.

Philco TROUBLE-SHOOTING *Procedure*

In this manual, the schematic diagram is divided into four sections, with a chassis layout for each section, showing components and test points for each section. The test points are also indicated on the schematic diagram in the corresponding section. A simplified trouble-shooting procedure is given in a chart for each section. The first step in each chart is a master check, indicating whether trouble exists in that section. Failure to obtain the "NORMAL INDICATION" in a given step indicates trouble, which should be located by voltage, resistance, or capacitance checks of parts indicated in the step, and remedied before testing further.

Preliminary Checks

To avoid possible damage to the radio, the following preliminary checks should be made before turning on the power:

1. Carefully inspect both top and bottom of the chassis. Make sure that all tubes are secure in the proper sockets (see figure 6), and look for bad connections, burned resistors, or other obvious sources of trouble.
2. Measure the resistance between B+ and B- (test points C and B in figure 1), using the ohmmeter polarity giving the highest resistance reading; if the reading is lower than 50,000 ohms, check C101A, C101B, and C101C, for leakage or shorts. This resistance value, which is much lower than normal, does not represent a quality check of these condensers; it is the lowest value which will permit the rectifier to operate safely while the voltage tests of Section 1 (power supply) are performed.

PHILCO CORP.

MODELS 49-500, 49-500-I, 49-506

Section 1 — Power Supply

TROUBLE SHOOTING

For the tests in this section, use a d-c voltmeter; connect the leads to the test points indicated in the chart. The voltages shown were taken with a 20,000-ohms-per-volt meter at a line voltage of 117 volts, 60 cycles.

Turn the volume control to minimum, and set the dial pointer at 540 kc.

If the "NORMAL INDICATION" is obtained in step 1, proceed with tests for Section 2 (audio circuits); if not, isolate and correct the trouble within this section.

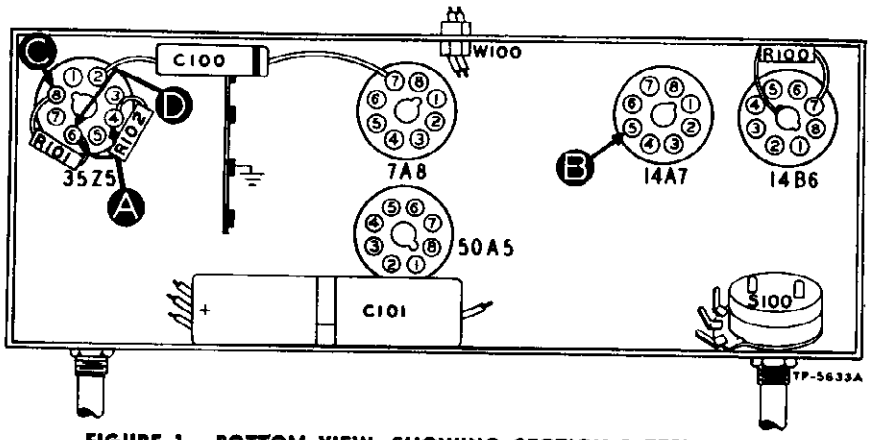

FIGURE 1. BOTTOM VIEW, SHOWING SECTION 1 TEST POINTS

STEP	TEST POINT	NORMAL INDICATION	ABNORMAL INDICATION	POSSIBLE CAUSE OF ABNORMAL INDICATION
1	A to B	90v		Trouble within this section; isolate by the following tests.
2	C to B	115v	No voltage Low voltage High voltage	Defective 35Z5GT. Shorted: C101A. Defective: 35Z5GT. Open: C101A or 1100. Leaky: C101A. Open: R101.
3	D to B	105v	No voltage Low voltage High voltage	Shorted: C101B. Open: C101B. Leaky: C101B or C203. Open: R102, T200, or R204.
4	A to B	90v	No voltage Low voltage High voltage	Shorted: C101C. Leaky: C101C. Open: R204.

Listening Test: Abnormal hum may be caused by open C101A, C101B, or C101C.

Section 2 — Audio Circuits

TROUBLE SHOOTING

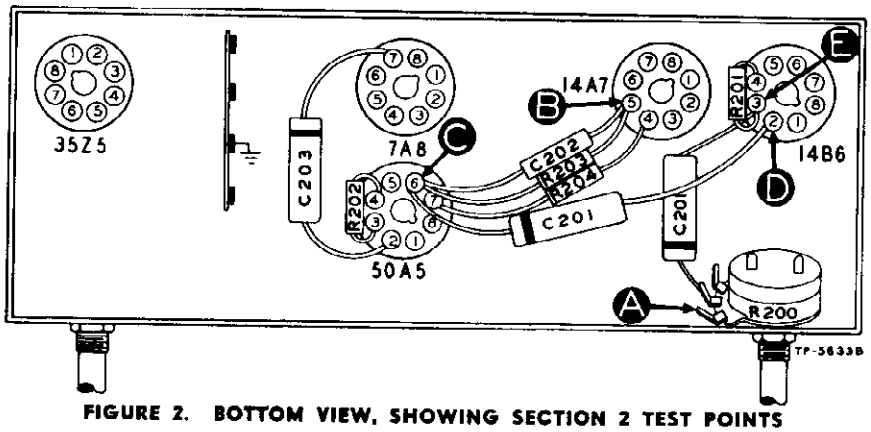

FIGURE 2. BOTTOM VIEW, SHOWING SECTION 2 TEST POINTS

For the tests in this section, use an audio-signal generator. Connect the ground lead of the generator to B; connect the output lead through a .1-mf. condenser to the test points indicated in the chart. Set the volume control at maximum. If the "NORMAL INDICATION" is obtained in step 1, proceed with the tests for Section 3 (i-f, detector, and a-v-c circuits); if not, isolate and correct the trouble within this section.

STEP	TEST POINT	NORMAL INDICATION	POSSIBLE CAUSE OF ABNORMAL INDICATION
1	A	Loud, clear signal with weak signal-generator input.	Trouble within this section; isolate by the following tests.
2	C	Clear signal with weak signal-generator input.	No signal — Open or shorted: LS200 or T200. Shorted: C203. Open: R204. Defective: 50A5. Weak or distorted signal — Defective: 50A5 or LS200. Leaky: C202 or C201. Open: R203. Shorted: R204.
3	D	Same as step 2.	No signal — Open: C201. Weak or distorted signal — Leaky: C201.
4	E	Same as step 1.	No signal — Open: R202. Defective: 14B6. Weak or distorted signal — Shorted: C200. Open: R201. Defective: 14B6.
5	A	Same as step 1.	No signal — Open: C200. Shorted: C300D. Weak or distorted signal — Open: R200 (rotate through range).

MODELS 49-500, 49-500-I, 49-506

PHILCO CORP.

Section 3 — I-F, Detector, and A-V-C Circuits TROUBLE SHOOTING

For the tests in this section, use an r-f signal generator, with modulated output, set to 455 kc. Connect the ground lead of the signal generator to B; connect the output lead through a .1-mf. condenser to the test points indicated in the chart. Set the volume control at maximum. If the "NORMAL INDICATION" is obtained in step 1, proceed with the tests for Section 4 (r-f and converter circuits); if not, isolate and correct the trouble within this section.

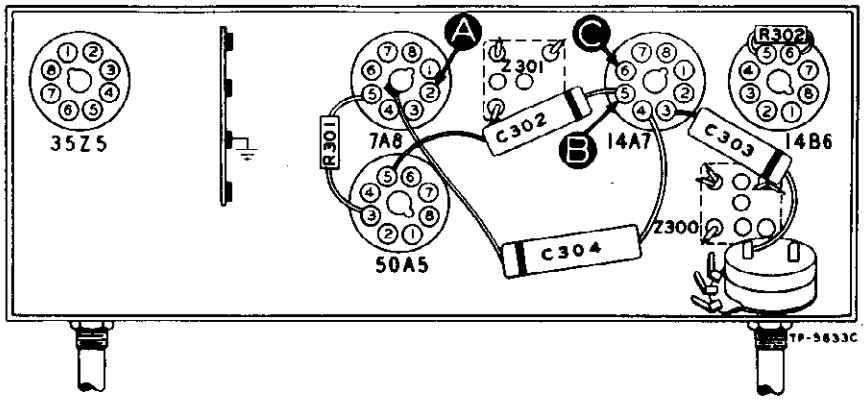

FIGURE 3. BOTTOM VIEW, SHOWING SECTION 3 TEST POINTS

STEP	TEST POINT	NORMAL INDICATION	POSSIBLE CAUSE OF ABNORMAL INDICATION
1	A	Clear signal with weak signal-generator input.	Trouble within this section; isolate by the following tests.
2	C	Same as step 1.	No signal — Open or shorted: Z300. Defective: 14B6 or 14A7. Open: R301. Shorted: C303. Weak or distorted signal — Leaky: C303. Open: C303 or C304. Defective: 14B6 or 14A7. Misaligned: Z300. Leaky or open: C302.
3	A	Same as step 1.	No signal — Open or shorted: Z301. Weak or distorted signal — Misaligned: Z301.

Section 4 — R-F and Converter Circuits TROUBLE SHOOTING

For the tests in this section, use an r-f signal generator, with modulated output. Connect the generator ground lead to B; connect the output lead through a .1-mf. condenser to the test points indicated in the chart.

Inspect the tuning condensers for bent plates, dirt, or poor wiper contacts; any or all of these will cause noise. If the "NORMAL INDICATION" is not obtained in step 1, isolate the trouble by following the remaining steps.

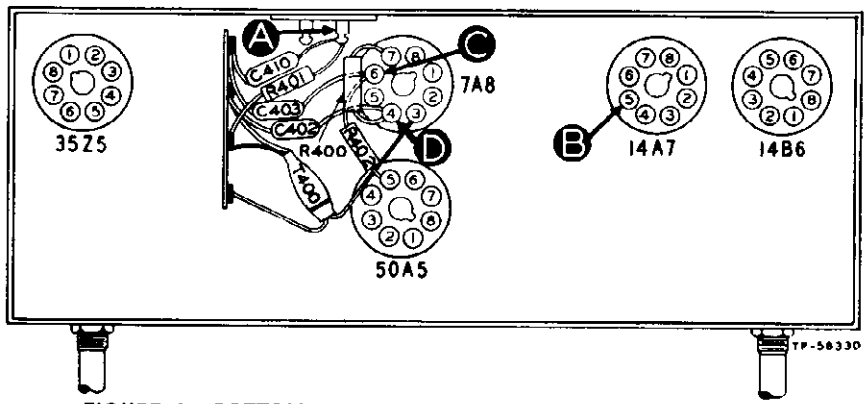

FIGURE 4. BOTTOM VIEW, SHOWING SECTION 4 TEST POINTS

STEP	TEST POINT	DIAL SETTINGS		NORMAL INDICATION	POSSIBLE CAUSE OF ABNORMAL INDICATION
		SIG. GEN.	RADIO		
1	A	540 kc.	540 kc.	Clear signal with weak signal-generator input.	Trouble within this section; isolate by the following tests.
2	D (Osc. test; see note below.)		540 to 1620 kc.	Negative 9 to 12 volts.	Open or shorted: T400, C402, or R400. Shorted: C400 or C400B. Defective: 7A8.
3	C	540 kc.	540 kc.	Same as step 1.	No signal — Open or shorted: Z301. Shorted: C400 or C400A. Defective 7A8. Weak or distorted signal — Shorted or open: LA400. Defective: 7A8.
4	A	540 kc.	540 kc.	Same as step 1.	Weak signal — Open: C401.

OSCILLATOR-TEST NOTE: Connect positive lead of a 20,000-ohms-per-volt meter to B; connect prod end of negative lead through a 100,000-ohm isolating resistor to test point D. Proper operation of oscillator is indicated by a negative voltage of 9 to 12 volts throughout range of tuning condenser.

© John F. Rider

MODELS 49-500,
49-500-I, 49-506

PH

ALIGNME

TURN ON THE RADIO, AND S

DIAL POINTER — Turn tuning condensers to full-mesh position. Set dial pointer to index dot, located to the left of "55."

OUTPUT METER — Connect to left (outpu lug and center (chassis) lug of terminal pan shown in figure 6.

STEP	SIGNAL GENERATOR		RADIO	
	CONNECTIONS TO RADIO	DIAL SETTING	DIAL SETTING	SPECIAL INSTRUCTIONS
1				Turn C301B (copper screw) down tight.
2	Through .1-mf. condenser to pin 6 of 7A8 converter.	455 kc.	540 kc.	Adjust trimmers, in order given, for maximum output.
3	Through 100-mmf. condenser to external aerial connector.	1600 kc.	1600 kc.	Disconnect external aerial lug from chassis. Adjust trimmer for maximum output.
4	Same as step 3.	1500 kc.	1500 kc.	Adjust for maximum output.

MISCELLANEOUS

Description	Service Part No.
Cabinet	
Walnut	10728
Mahogany	10728A
Cabinet Hardware	
Back	54-7682
Baffle-and-cloth assembly	
Walnut	40-6945
Mahogany	40-6945-1
Fastener, acetate window (4)	56-6161FE7
Knob	
Walnut	54-4527-11
Mahogany	54-4527-10
Window, acetate	54-4504

Description	Service Part No.
Dial-Scale Hardware	
Cord, drive (25-ft. spool)	45-8750*
Pointer	54-4505
Scale, dial	27-5978-2
Spring, (drive cord)	56-2617
Pilot-lamp assembly	76-1280
Shaft assembly, drive	31-2718
Socket, Loktal	27-6138*
Socket, octal	27-6174*

REPLACEMI

Replacement parts are th
49-500-I, with the exception

SI

Reference Symbol	Desc
C100	Condenser, lin

SI

LA400	Loop aerial

©John F. Rider

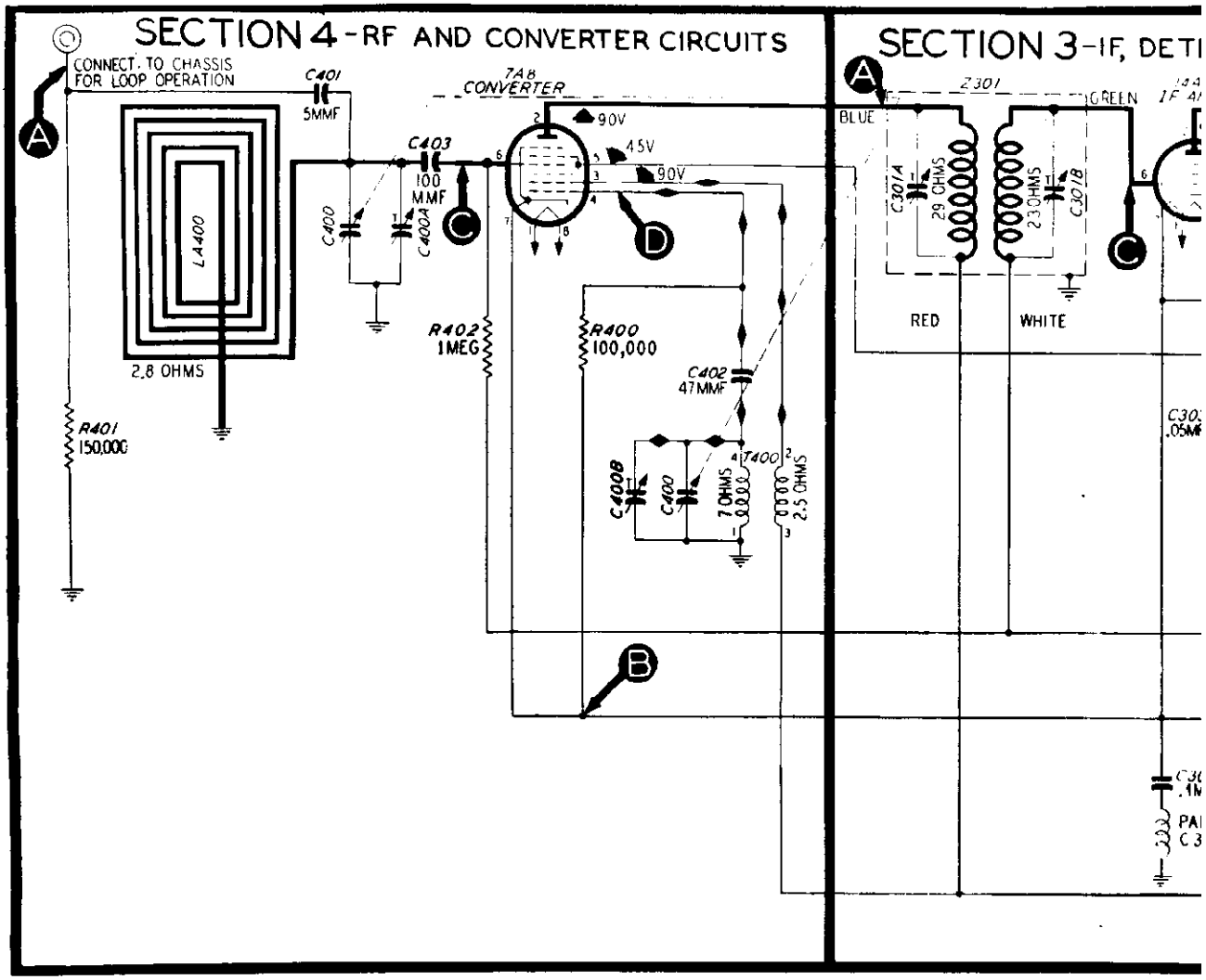

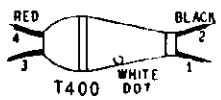

RF IF AND AUDIO SIGNAL PATH
OSC SIGNAL PATH
ALL RESISTOR VALUES IN OHMS UNLESS MARKED OTHERWISE.

CONDENSER SYMBOLS

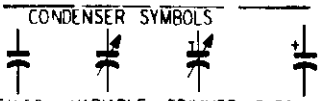

NOTE: ALL VOLTAGES AND CAPACITY AND RESISTANCE VALUES SHOWN ARE AVERAGE. THE VOLTAGES BETWEEN TEST POINT B AND OTHER POINTS INDICATED WERE MEASURED WITH A 20,000-OHMS-PER-VOLT METER VOLUME CONTROL AT MINIMUM AND TUNING CONDENSER PLATES FULLY MESHED.

©John F. Rider

ILCO CORP.

MODELS 49-500, 49-500-I, 49-506

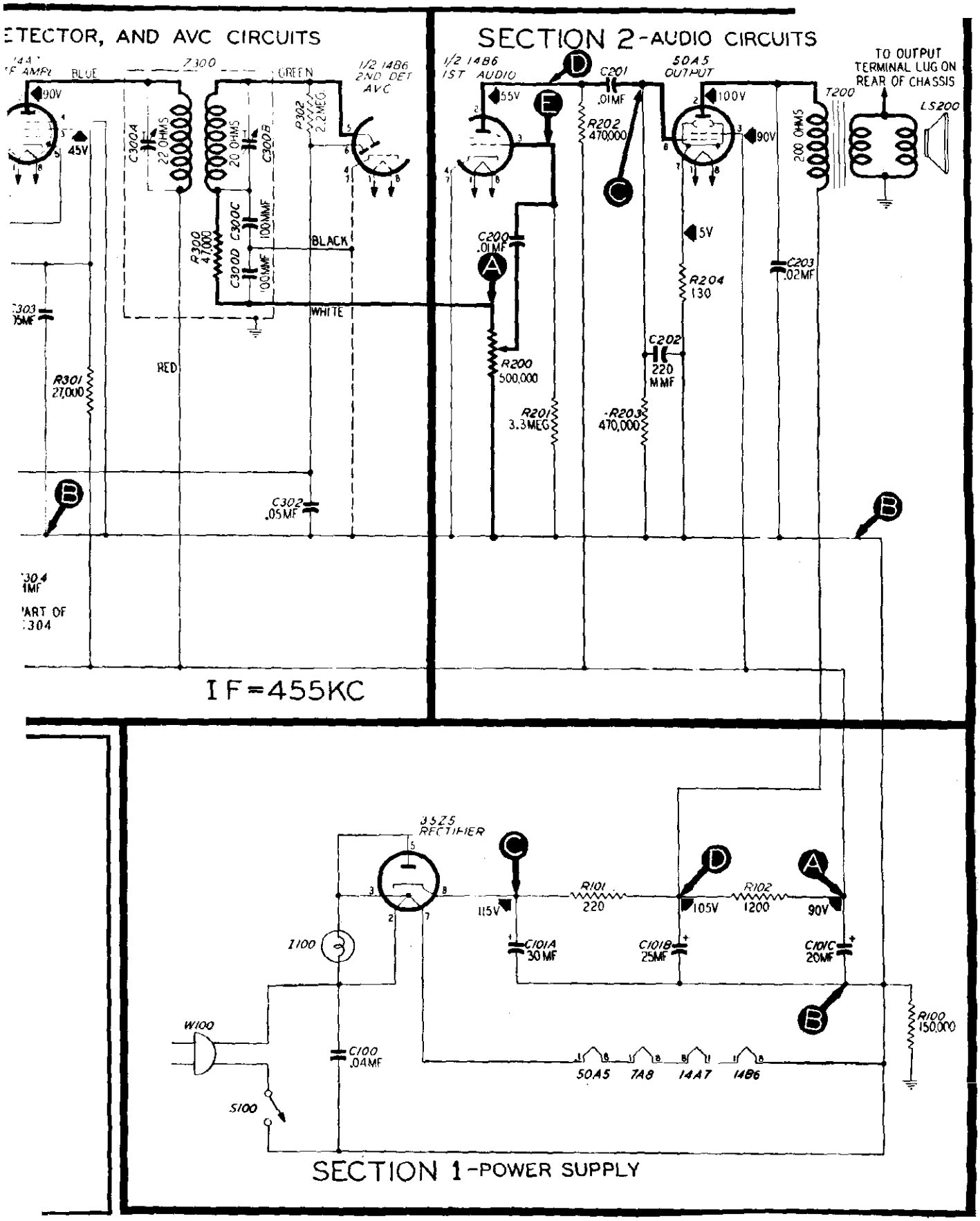

SECTIONALIZED SCHEMATIC DIAGRAM, SHOWING TEST POINTS

PROCEDURE

HE VOLUME CONTROL TO MAXIMUM.

SIGNAL GENERATOR — Connect ground lead to B; connect output lead as indicated in the chart.

OUTPUT LEVEL — During alignment, adjust signal-generator output to maintain output-meter indication below 1.25 volts.

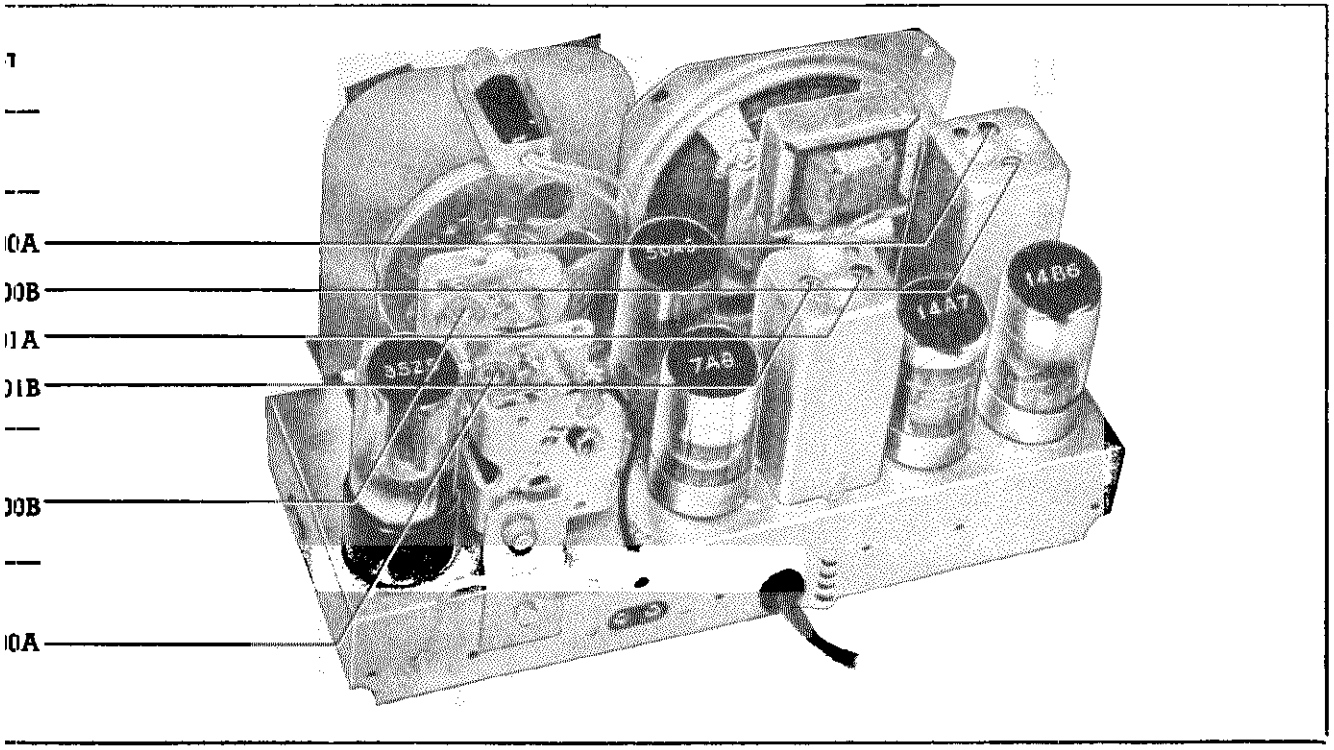

FIGURE 6. TOP VIEW, SHOWING TRIMMER LOCATIONS

TP 6000

PARTS LIST

as those in Models 49-500 and
below.

ON 1

	Service Part No.
.04 mf.	30-1226-17

ON 4

	32-4052-28

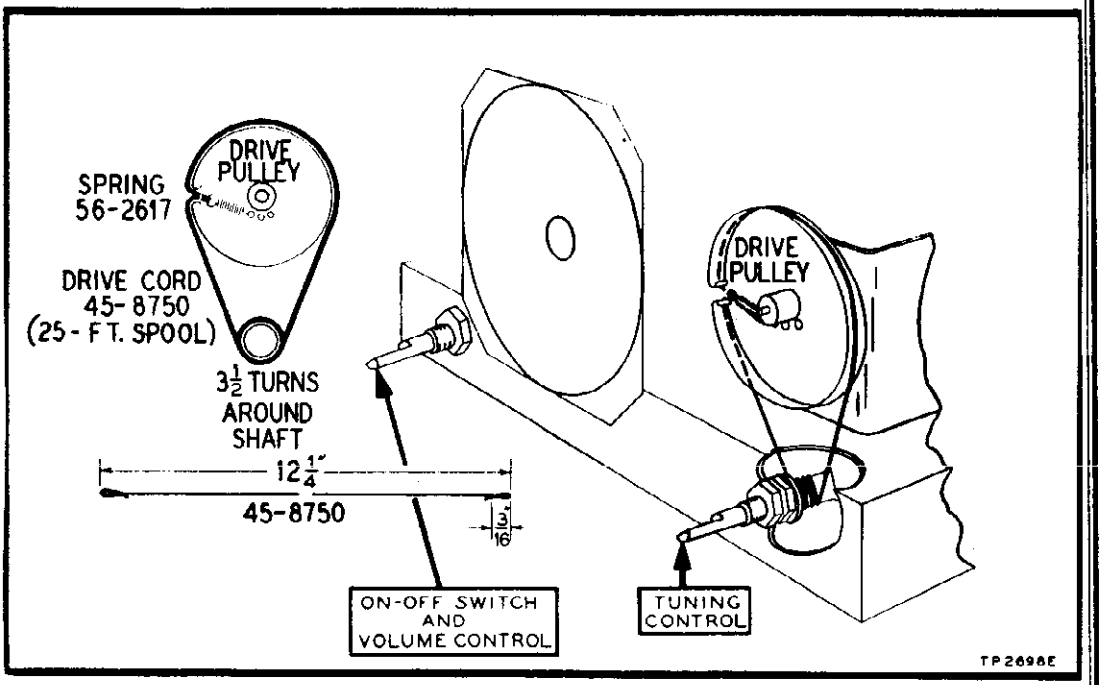

FIGURE 7. DRIVE-CORD INSTALLATION DETAILS

PHILCO CORP.

MODELS 49-500, 49-500-I, 49-506

REPLACEMENT PARTS LIST

NOTE: Parts marked with an asterisk (*) are general replacement items, and the numbers listed may not be identical with those on factory assemblies; also, the electrical values of some replacement items furnished may differ from the values indicated in the schematic diagram and parts list. The values substituted in any case are so chosen that the operation of the radio will be either unchanged or improved. When ordering replacements, use only the "Service Part No."

SECTION 1

POWER SUPPLY

Reference Symbol	Description	Service Part No.
C100	Condenser, line filter, .04 mf.	45-3500-2*
C101	Condenser, electrolytic, 3-section filter	30-2573
C101A	Condenser, electrolytic, 30 mf.	Part of C101
C101B	Condenser, electrolytic, 25 mf.	Part of C101
C101C	Condenser, electrolytic, 20 mf.	Part of C101
I100	Panel lamp	34-2068
R100	Resistor, leakage, 150,000 ohms	66-4153340*
R101	Resistor, filter, 220 ohms	66-1224340*
R102	Resistor, filter, 1200 ohms	66-2123340*
S100	Switch, power	Part of R200
W100	Power cord and plug	L2183*

SECTION 2

AUDIO CIRCUITS

C200	Condenser, coupling, .01 mf.	61-0120*
C201	Condenser, coupling, .01 mf.	61-0120*
C202	Condenser, by-pass, 220 mmf.	62-122001001
C203	Condenser, by-pass, .02 mf.	61-0108*
LS200	Speaker	36-1614
R200	Volume control (with power switch), 500,000 ohms	33-5429
R201	Resistor, grid load, 3.3 megohms	66-5333340*
R202	Resistor, plate load, 470,000 ohms	66-4473340*
R203	Resistor, grid load, 470,000 ohms	66-4473340*
R204	Resistor, bias, 130 ohms	66-1123340*
T200	Output transformer	Part of LS200

SECTION 3

I-F, DETECTOR, AND A-V-C CIRCUITS

C302	Condenser, a-v-c by-pass, .05 mf.	61-0122
C303	Condenser, screen by-pass, .05 mf.	61-0122*
C304	Condenser, special i-f by-pass, .1 mf.	30-4644-1
R300	Resistor, diode load, 47,000 ohms	Part of Z300
R301	Resistor, screen, 27,000 ohms	66-3273340*
R302	Resistor, a-v-c, 2.2 megohms	66-5223340*
Z300	Transformer, 2nd i-f	45-6365*
C300A	Condenser, trimmer	Part of Z300
C300B	Condenser, trimmer	Part of Z300
C300C	Condenser, by-pass, 100 mmf.	Part of Z300
C300D	Condenser, by-pass, 100 mmf.	Part of Z300
Z301	Transformer, 1st i-f	45-6365
C301A	Condenser, trimmer	Part of Z301
C301B	Condenser, trimmer	Part of Z301

SECTION 4

R-F AND CONVERTER CIRCUITS

Reference Symbol	Description	Service Part No.
C400	Condenser, tuning, 2-section	31-2727-1
C400A	Condenser, trimmer	Part of C400
C400B	Condenser, trimmer	Part of C400
C401	Condenser, coupling, 5 mmf.	60-90505007*
C402	Condenser, isolating, 47 mmf.	60-00515307*
C403	Condenser, blocking, 100 mmf.	60-10105407*
LA400	Loop aerial	32-4052-5
R400	Resistor, osc., grid, 100,000 ohms	66-4103340*
R401	Resistor, aerial discharge, 150,000 ohms	66-4153340*
R402	Resistor, grid return, 1 megohm	66-5103340*
T400	Transformer, oscillator	32-4263

MISCELLANEOUS

Description	Service Part No.
Cabinet	
Model 49-500	10542D
Model 49-500-I	10542E
Cabinet Hardware	
Back	
Model 49-500	27-9879
Model 49-500-I	27-9922
Fastener, acetate window (6)	28-4278FA1
Foot, felt	W2190
Knob	
Model 49-500	27-4820
Model 49-500-I	54-4118
Window, acetate	54-4088
Dial-Scale Hardware	
Cord, drive (25-ft. spool)	45-8750
Pointer	27-4891-1
Scale, dial	
Model 49-500	27-5965
Model 49-500-I	27-5965-1
Screw, scale mounting	1W19674FA3
Spring, drive cord	56-2617
Washer, scale mounting	2W54094
Panel, terminal, loop aerial	76-2148
Panel, lamp assembly	76-1472
Shaft, drive assembly	31-2718
Socket, Loktal	27-6138*
Socket, octal	27-6174*

REPLACEMENT PARTS LIST

NOTE: Part numbers identified by an asterisk (*) indicate general replacement items. These numbers may not be identical with those on factory assemblies; also, the electrical values of some replacement items may differ from the values indicated in the schematic diagram and replacement parts list. The values substituted in any case are so chosen that the operation of the radio will be either unchanged or improved. When ordering replacements, use only the "Service Part No."

SECTION 1
POWER SUPPLY

Reference Symbol	Description	Service Part No.
C100	Condenser, line filter, .04 mf.	30-4119*
C101	Condenser, electrolytic, 3-section	30-2575-10*
C101A	Condenser, filter, 30 mf.	Part of C101
C101B	Condenser, filter, 25 mf.	Part of C101
C101C	Condenser, filter, 20 mf.	Part of C101
I100	Lamp, pilot, 6.3v	34-2068
R100	Resistor, filter, 220 ohms	66-1224340*
R101	Resistor, filter, 1200 ohms	66-2123340*
R102	Resistor, leakage, 150,000 ohms	66-4153340*
S100	Switch, on-off	Part of R200
W100	Line cord	L-2183*

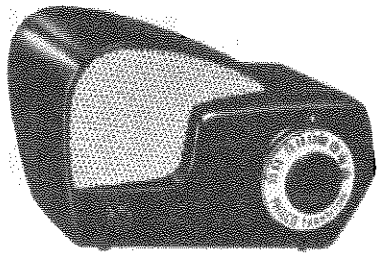

MODEL 49-501 (Brown)
MODEL 49-501-I (Ivory)

SPECIFICATIONS

CABINET	
Model 49-501	Phenolic plastic, brown
Model 49-501-I	Phenolic plastic, ivory
CIRCUIT	Five-tube superheterodyne
FREQUENCY RANGE	540—1620 kc.
AUDIO OUTPUT	1 watt
OPERATING VOLTAGE	117 volts, a.c. or d.c.
POWER CONSUMPTION	30 watts
AERIAL	Loop fastened to cabinet; terminal provided for external aerial.
INTERMEDIATE FREQUENCY	455 kc.
PHILCO TUBES (5)	7A8, 14A7, 14B6, 50A5, 35Y4

TP-5859

PHILCO CORP.

MODELS 49-501, 49-501-I

TROUBLE SHOOTING

POWER SUPPLY

For the tests in this section, use a d-c voltmeter. Connect the negative lead to B–, test point B; connect the positive lead to the test points indicated in the chart. The voltage readings given were taken with a 20,000-ohms-per-volt meter at a line voltage of 117 volts, a.c.

Turn on the power and set the volume control to minimum.

If the "NORMAL INDICATION" is obtained in step 1, proceed with the tests for Section 2 (audio circuits); if not, isolate and correct the trouble in this section.

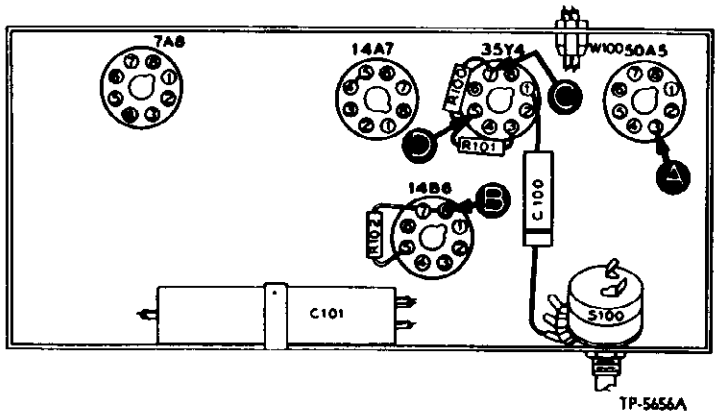

Figure 1. Bottom View, Showing Section 1 Test Points

STEP	TEST POINT	NORMAL INDICATION	ABNORMAL INDICATION	POSSIBLE CAUSE OF ABNORMAL INDICATION
1	A	92v		Trouble within this section. Isolate by the following tests.
2	C	105v	No voltage	Defective: 35Y4. Open: S100, W100. Shorted: C101A.
			Low voltage	Open: C101A. Defective: 35Y4. Leaky: C101A.
			High voltage	Open: R100.
3	D	116v	No voltage	Shorted: C101B. Open: R100.
			Low voltage	Open: C101B. Leaky: C101B, C202*.
			High voltage	Open: R101, T200*, R203*.
4	A	92v	No voltage	Shorted: C101C. Open: R101.
			Low voltage	Leaky: C101C.
Listening Test: Abnormal hum may be caused by open C101A, C101B, or C101C.				

* This part, located in another section, may cause abnormal indication in this section.

Section 2
AUDIO CIRCUITS

TROUBLE SHOOTING

For the tests in this section, use an audio-frequency signal generator. Connect the generator ground lead to B–, test point B; connect the output lead through a .1-mf. condenser to the test points indicated in the chart.

Set the volume control to maximum.

If the "NORMAL INDICATION" is obtained in step 1, proceed with the tests for Section 3 (i-f, detector, and a-v-c circuits); if not, isolate and correct the trouble in this section.

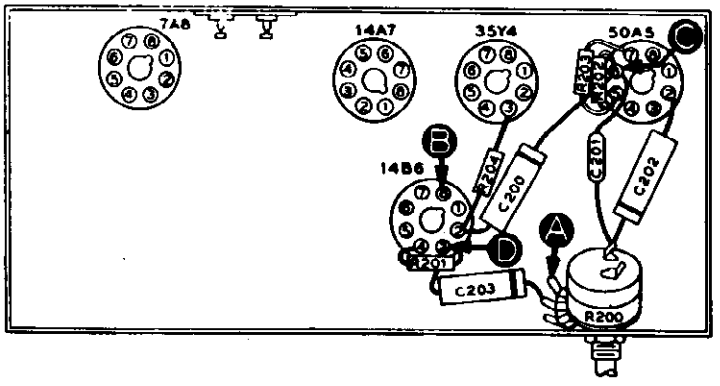

Figure 2. Bottom View, Showing Section 2 Test Points

STEP	TEST POINT	NORMAL INDICATION	POSSIBLE CAUSE OF ABNORMAL INDICATION
1	A	Loud, clear speaker output with weak signal-generator input.	Trouble within this section. Isolate by the following tests.
2	C	Clear output with strong input.	Defective: 50A5, LS200. Shorted: C201, C202. Open: R203, T200.
3	D	Same as step 2.	Defecive: 14B6. Shorted: C200. Open: R204, R202, C200.
4	A	Same as step 1.	Shorted: C301D*. Open: R200, R201, C203.
Listening Test: Distortion may be caused by shorted or leaky C200.			

* This part, located in another section, may cause abnormal indication in this section.

MODELS 49-501, 49-501-I

PHILCO CORP.

TROUBLE SHOOTING

I-F, DETECTOR, AND A-V-C CIRCUITS

For the tests in this section, use an r-f signal generator, with modulated output, set at 455 kc. Connect the generator ground lead to B–, test point B; connect the output lead through a .1-mf. condenser to the test points indicated in the chart.

Set the volume control to maximum.

If the "NORMAL INDICATION" is obtained in step 1, proceed with the tests for Section 4 (r-f and converter circuits); if not, isolate and correct the trouble in this section.

To provide a complete i-f amplifier check, test point A for this section is placed at the grid of the converter in Section 4; therefore, the effectiveness of step 1 as a master check is dependent upon the condition of certain parts in the converter circuit. These parts are listed below under the "POSSIBLE CAUSE OF ABNORMAL INDICATION."

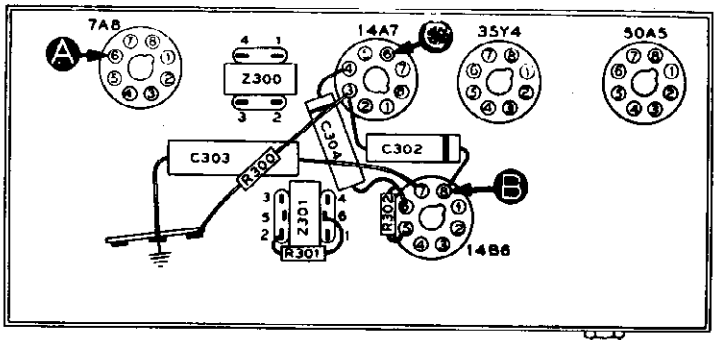

Figure 3. Bottom View, Showing Section 3 Test Points

STEP	TEST POINT	NORMAL INDICATION	POSSIBLE CAUSE OF ABNORMAL INDICATION
1	A	Loud, clear speaker output with weak signal-generator input.	Trouble within this section. Isolate by the following tests.
2	C	Same as step 1.	Defective: 14A7, 14B6. Shorted: L300B, C300B, L301A, L301B, C301A, C301B, C301C, C301D. Open: L301A, L301B, C301A, C301B, C302, R300, R301. Misaligned: Z301.
3	A	Same as step 1.	Defective: 7A8*. Shorted: C400*, C400A*, L300A, C300A. Open: L300A, L300B, C300A, C300B. Misaligned: Z300.

* This part, located in another section, may cause abnormal indication in this section.

TROUBLE SHOOTING

Section 4
R-F AND CONVERTER CIRCUITS

For the tests in this section, with the exception of the oscillator test, use an r-f signal generator with modulated output. Connect the generator ground lead to B–, test point B; connect the output lead through a .1-mf. condenser to the test points indicated in the chart.

Set the volume control to maximum. Set the tuning control and the signal-generator frequency as indicated in the chart.

If the "NORMAL INDICATION" is not obtained in step 1, isolate and correct the trouble in this section. If the trouble is not revealed by the tests for this section, check the alignment.

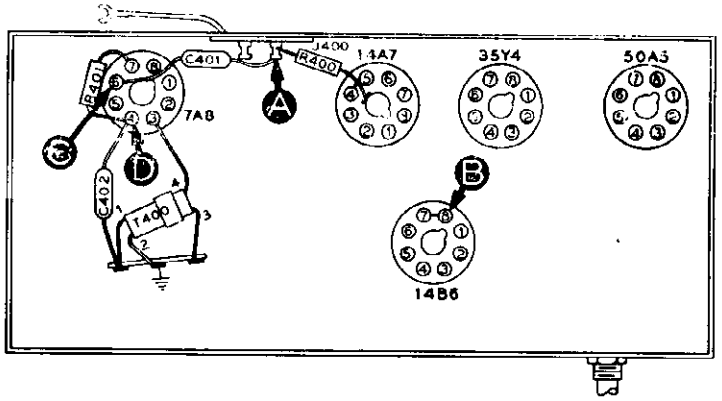

Figure 4. Bottom View, Showing Section 4 Test Points

STEP	TEST POINT	SIG. GEN. FREQ.	RADIO TUNING	NORMAL INDICATION	POSSIBLE CAUSE OF ABNORMAL INDICATION
1	A	1000 kc.	1000 kc.	Clear speaker output with weak signal-generator input.	Trouble within this section. Isolate by the following tests.
2	D (Osc. test; see note below.)		Rotate through range.	Negative 8 to 10 volts.	Shorted: T400, C400, C400B. Open: C402, R401, T400. Defective: 7A8.
3	C	1000 kc.	1000 kc.	Same as step 1.	Defective: 7A8. Shorted: C400, C400A, LA400. Open: LA400.
4	A	1000 kc.	1000 kc.	Same as step 1.	Open: C401.

OSCILLATOR TEST: Connect the positive lead of a high-resistance voltmeter to B–, test point B; connect the prod end of the negative lead through a 100,000-ohm isolating resistor to the oscillator grid (pin 4 of 7A8), test point D. Proper operation of the oscillator is indicated by a negative voltage of the value given in the chart (measured with a 20,000-ohms-per-volt meter) throughout the tuning range.

© John F. Rider

MODELS 49-501,
49-501-I

ALIGN

OUTPUT METER — Connect across voice-coil terminals.

SIGNAL GENERATOR—Connect as indic
Use modulated output.

STEP	SIGNAL GENERATOR		RADIO		A
	CONNECTION TO RADIO	DIAL SETTING	DIAL SETTING	SPECIAL INSTRUCTIONS	
1	Ground lead to B–; output lead through .1-mf. condenser to pin 6 of 7A8.	455 kc.	Tuning condenser fully meshed.	Adjust tuning cores, in order given, for maximum output	TC301 TC301 TC300 TC300
2	Radiating loop (see note below).	1600 kc.	1600 kc.	Adjust trimmer for maximum output.	C400B
3	Same as step 2.	1500 kc.	1500 kc.	Adjust trimmer for maximum output.	C400A

RADIATING LOOP: Make up a 6 to 8 turn, 6-inch-diameter loop from insulated wire; connect to signal-generator place near radio loop aerial. The loop aerial must be connected.

SYMBOLIZATION

The components in the radio circuit are symbolized according to the types of parts and the sectic of the radio in which the parts are located. The prefix letter of the symbol designates the type part as follows:

C—condenser
I—pilot lamp
L—choke or coil
LA—loop aerial
LS—loud-speaker
R—resistor
S—switch
T—transformer
W—line-cord-and-plug assembly
Z—electrical assembly

The number of the symbol designates the section in which the part is located as follows:

100-series components are in Section 1—the power supply.

200-series components are in Section 2—the audio circuits.

300-series components are in Section 3—the i-f, detector, and a-v-c circuits.

400-series components are in Section 4—the r-f and converter circuits.

©John F. Rider

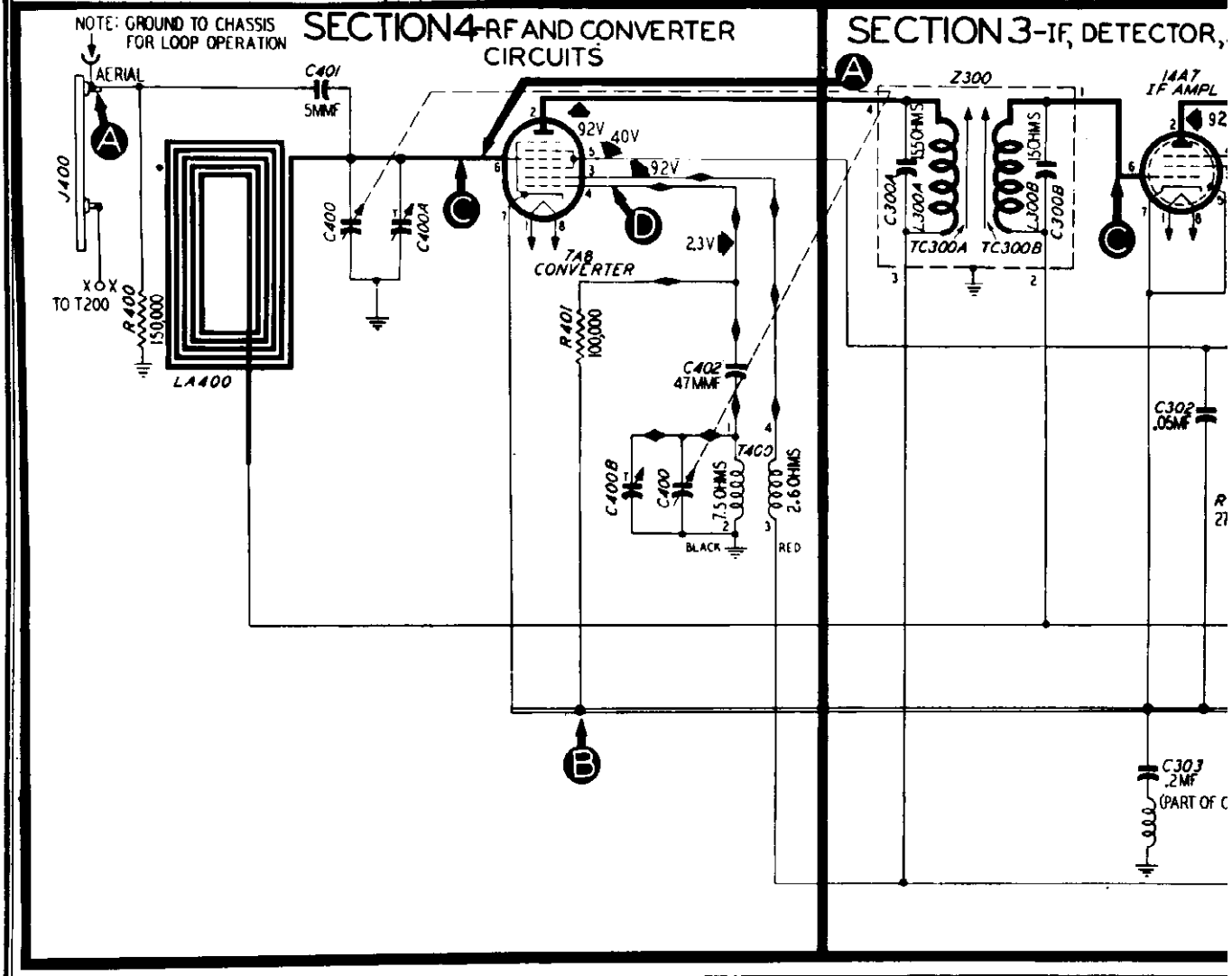



T400

RF, IF, AND AUDIO SIGNAL PATH
OSC SIGNAL PATH
ALL RESISTOR VALUES IN OHMS UNLESS MARKED OTHERWISE

CONDENSER SYMBOLS

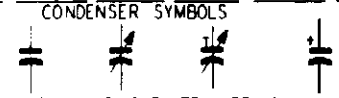

ALL VOLTAGES WERE MEASURED AT 117 VOLTS, A.C., WITH A 20,000-OHMS-PER-VOLT METER

©John F. Rider

O CORP. MODELS 49-501, 49-501-I

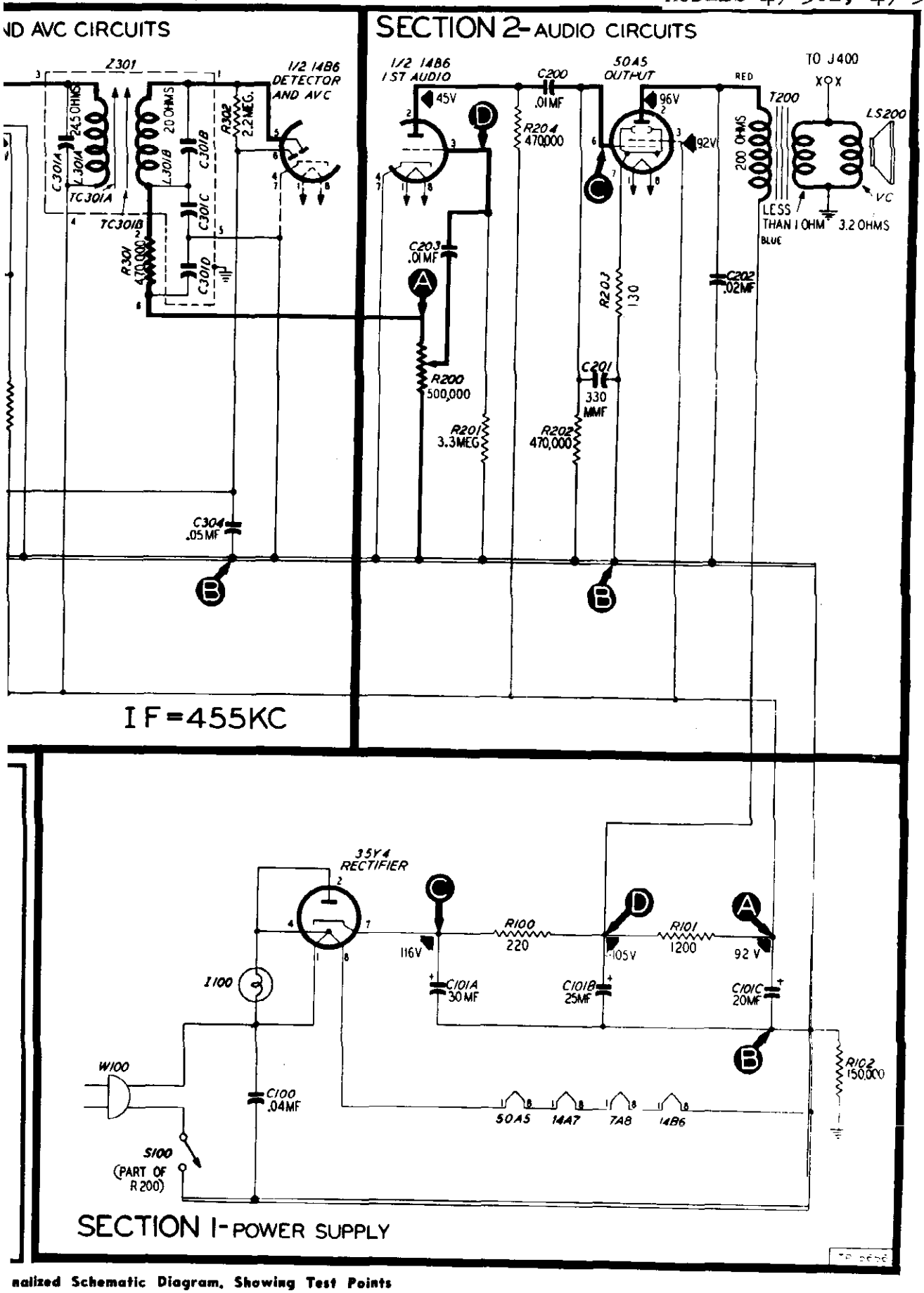

nalized Schematic Diagram, Showing Test Points

ENT PROCEDURE

chart. RADIO CONTROLS—Set volume control to maximum, and rotate tuning control until tuning condenser is fully meshed.

T

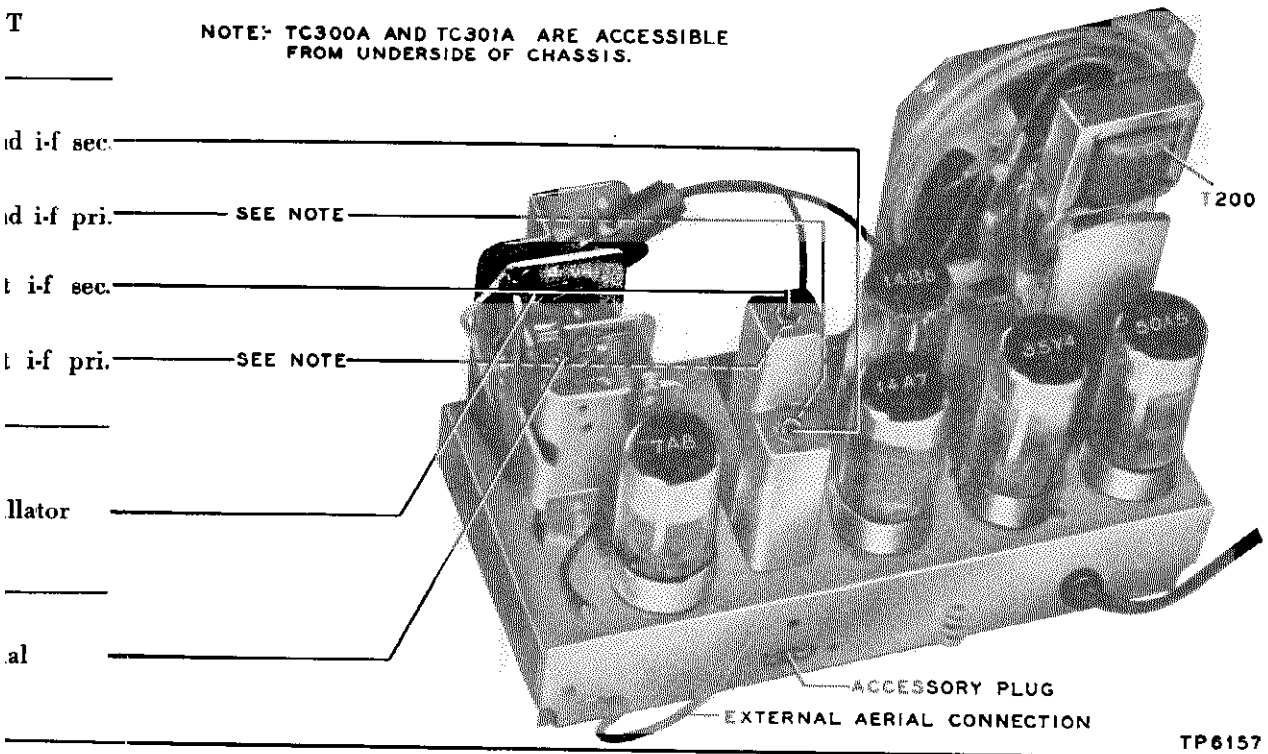

id

Figure 6. Top View, Showing Trimmer Locations

OUTPUT LEVEL—During alignment, adjust signal-generator output to maintain output-meter indication below 1.25 volts.

Circuit Description

Philco Radio Models 49-501 and 49-501-I are 5-tube, table-model superheterodynes, providing reception in the standard broadcast band.

A high-impedance loop aerial normally provides adequate signal pickup. An external aerial may be connected, if desired, by detaching the aerial lead from the chassis, and connecting it to the external aerial lead-in. Do not use a ground.

The loop aerial is coupled to the 7A8 converter. The aerial and oscillator circuits are tuned by ganged, variable condensers, and the oscillator rotor-section plates are properly shaped to obtain tracking, thus eliminating the necessity for a series padding condenser.

The 7A8 converter is transformer-coupled to the 14A7 i-f amplifier, which is also transformer-coupled to the diodes of the 14B6 second detector—first audio amplifier. A-v-c voltage is applied to the control grids of both the i-f amplifier and converter tubes. The triode section of the 14B6 is the first audio stage, and is resistance-coupled to the 50A5 output tube. The output tube is transformer-coupled to a permanent-magnet speaker.

D-c operating voltages are supplied from a 35Y4 half-wave rectifier, and filtered by a three-section resistor-condenser network.

Condenser C303 is a special condenser inductively wound to form a series-tuned circuit, resonant at the intermediate frequency. This condenser offers less impedance at this frequency than a conventional condenser, and thus permits higher i-f gain, with no tendency toward instability.

The 150,000-ohm resistor, R102, prevents hum which might otherwise occur under conditions of high humidity.

PHILCO CORP.

MODELS 49-501, 49-501-I

REPLACEMENT PARTS LIST—Continued

SECTION 2
AUDIO CIRCUITS

Reference Symbol	Description	Service Part No.
C200	Condenser, d-c blocking, .01 mf.	61-0120*
C201	Condenser, r-f by-pass, 330 mmf.	60-10335407*
C202	Condenser, tone compensation, .02 mf.	30-4599*
C203	Condenser, d-c blocking, .01 mf.	61-0120*
LS200	Speaker	36-1627
R200	Volume control, .5 megohm	45-5019*
R201	Resistor, grid return, 3.3 megohms	66-5333340*
R202	Resistor, grid return, 470,000 ohms	66-4473340*
R203	Resistor, cathode bias, 130 ohms	66-1123340*
R204	Resistor, plate load, 470,000 ohms	66-4473340*
T200	Transformer, output	Part of LS200

SECTION 3
I-F, DETECTOR, AND A-V-C CIRCUITS

C300A	Condenser, fixed trimmer, primary, 1st i-f	Part of Z300
C300B	Condenser, fixed trimmer, secondary, 1st i-f	Part of Z300
C301A	Condenser, fixed trimmer, primary, 2nd i-f	Part of Z301
C301B	Condenser, fixed trimmer, secondary, 2nd i-f	Part of Z301
C301C	Condenser, a-v-c filter	Part of Z301
C301D	Condenser, a-v-c filter	Part of Z301
C302	Condenser, screen by-pass, .05 mf.	30-4519*
C303	Condenser, special i-f by-pass, .2 mf.	30-4644
C304	Condenser, a-v-c filter, .05 mf.	30-4519*
L300A	Coil, primary, 1st i-f	Part of Z300
L300B	Coil, secondary, 1st i-f	Part of Z300
L301A	Coil, primary 2nd i-f	Part of Z301
L301B	Coil, secondary, 2nd i-f	Part of Z301
R300	Resistor, screen dropping, 27,000 ohms	66-3273340*
R301	Resistor, diode load, 47,000 ohms	66-3473340*
R302	Resistor, a-v-c filter, 2.2 megohms	66-5223340*
TC300A	Tuning core, primary 1st i-f	Part of Z300
TC300B	Tuning core, secondary, 1st i-f	Part of Z300

SECTION 3 (Continued)
I-F, DETECTOR, AND A-V-C CIRCUITS

Reference Symbol	Description	Service Part No.
TC301A	Tuning core, primary 2nd i-f	Part of Z301
TC301B	Tuning core, secondary, 2nd i-f	Part of Z301
Z300	Transformer, 1st i-f	32-4160-6*
Z301	Transformer, 2nd i-f	32-4240*

SECTION 4
R-F AND CONVERTER CIRCUITS

C400	Condenser, tuning gang	31-2731*
C400A	Condenser, trimmer, aerial	Part of C400
C400B	Condenser, trimmer, osc.	Part of C400
C401	Condenser, isolating, 5 mmf.	30-1223*
C402	Condenser, isolating, 47 mmf.	30-1224-2*
LA400	Aerial, loop	32-4052-19
R400	Resistor, isolating, 150,000 ohms	66-4153340*
R401	Resistor, grid return, 100,000 ohms	66-4103340*
T400	Coil, oscillator	32-4263

MISCELLANEOUS

Description	Service Part No.
Bracket, speaker	56-5653FA3
Cabinet (less scale)	
Model 49-501	10710
Model 49-501-I	10710A
Cabinet Hardware	
Back	
Model 49-501	54-7619
Model 49-501-I	54-7619-1
Baffle, speaker	54-4586
Fastener, cabinet back	2W2235-2FA9
Grille, metal	
Model 49-501	56-5769-FCP
Model 49-501-I	56-5769-1FCP
Knob	
Model 49-501	27-4815-3
Model 49-501-I	54-4118
Knob assembly	
Model 49-501	54-4581
Model 49-501-I	54-4581-1
Pilot-light assembly	27-6233-18
Scale, dial	
Model 49-501	54-5008
Model 49-501-I	54-5008-1
Speed fastener, baffle mounting	56-5857FE7
Speed fastener, baffle mounting	1W60211FE7
Socket, Loktal	27-6138*

© John F. Rider

MODEL 49-503 PHILCO CORP.

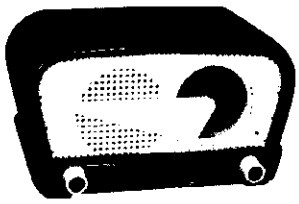

MODEL 49-503

SPECIFICATIONS

CABINET	Plastic, ebony or green
CIRCUIT	Five-tube superheterodyne
FREQUENCY RANGE	540 to 1620 kc.
AUDIO OUTPUT	1 watt
OPERATING VOLTAGE	105 to 125 volts, a.c./d.c.
POWER CONSUMPTION	30 watts
AERIAL	Built-in high-impedance loop; provision for connecting an external aerial
INTERMEDIATE FREQUENCY	455 kc.
PHILCO TUBES (5)	7A8, 14B6, 14A7, 50A5, 35Z5GT

Circuit Description

Philco Radio Model 49-503 is a five-tube superheterodyne, providing reception in the standard broadcast band. A built-in high-impedance loop aerial normally provides adequate signal pickup; an external aerial may be connected, if desired, by detaching the aerial lead (shown in figure 6) from the chassis and connecting this lead to an external aerial lead-in. Do not use a ground.

The loop is coupled to a 7A8 converter. Variable-condenser tuning is employed; the oscillator rotor-section plates are shaped to obtain tracking, thus eliminating the need for a series-padding condenser.

The 7A8 is transformer-coupled to a 14A7 i-f amplifier, which is also transformer-coupled to a 14B6 second detector —first audio amplifier. A-v-c voltage is applied to the control grids of the i-f-amplifier and converter tubes.

The triode section of the 14B6 is the first audio stage, and is resistance-coupled to a 50A5 output tube. The output tube is transformer-coupled to a permanent-magnet speaker.

D-c operating voltages are obtained from a 35Z5GT half-wave rectifier, the output of which is filtered by a two-section, resistor-condenser filter.

Condenser C304 is a special condenser, inductively wound to form a series tuned circuit, resonant at the intermediate frequency. This special condenser offers less impedance at this frequency than a conventional condenser, thus permitting high i-f gain with no tendency toward instability.

The 150,000-ohm resistor, R100, prevents hum which might otherwise occur under conditions of high humidity.

Philco TROUBLE-SHOOTING Procedure

For rapid trouble shooting, the radio circuit is divided into four sections, with test points specified for each section; these sections and test points are indicated in the schematic diagram. The trouble-shooting procedure given for each section includes a simplified test chart and a bottom view of the chassis showing the locations of the test points and the components of that section.

In each chart, the first step is a master check for determining whether trouble exists in that section, without going through the entire test procedure.

Failure to obtain the "NORMAL INDICATION" in any given step indicates trouble within the circuit under test.

After isolating the trouble to a single stage, the defect is located by: first, testing the tube; second, measuring tube electrode voltages; third, measuring circuit resistances; fourth, substituting condensers. The trouble revealed should be corrected before testing further.

Preliminary Checks

To avoid possible damage to the radio, the following preliminary checks should be made before it is turned on:

1. Inspect both the top and the bottom of the chassis. Make sure that all tubes are secure in the proper sockets, and look for any broken or shorter connections, burned resistors, or other obvious sources of trouble.

2. Measure the resistance between B+ (pin 7 of 35Z5GT) and B—, test point B. When the ohmmeter test leads are connected in the proper polarity, the highest resistance reading will be obtained. If the reading is lower than 1500 ohms, check condensers C101A, C101B, and C203 for leakage or shorts. The resistance value given is much lower than normal, and is not intended as a quality check of these condensers; the value given is the lowest at which the rectifier will operate safely while the voltage checks of Section 1 (power supply) are performed.

Section 1—Power Supply

TROUBLE SHOOTING

For the tests in this section, use a d-c voltmeter. Connect the negative lead to B—, test point B; connect the positive lead to the test points indicated in the chart. The voltage readings given were taken with a 20,000-ohms-per-volt meter at a line voltage of 117 volts, a.c.

Turn on the power, and set the volume control to minimum.

If the "NORMAL INDICATION" is obtained in step 1, proceed with the tests for Section 2 (audio circuits); if not, isolate and correct the trouble in this section.

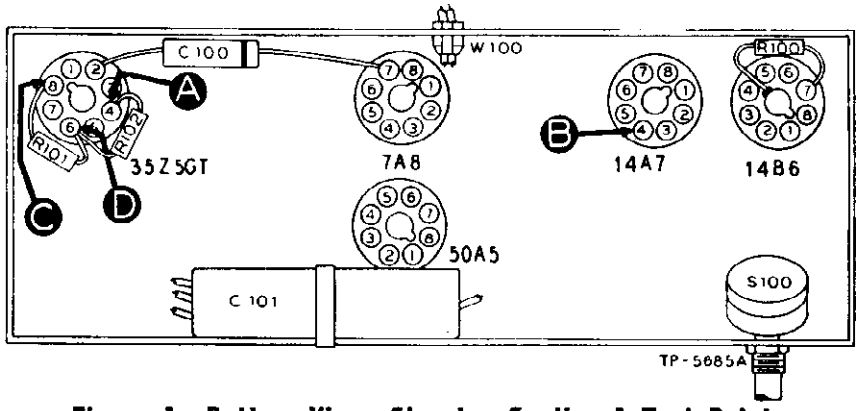

Figure 1. Bottom View, Showing Section 1 Test Points

STEP	TEST POINT	NORMAL INDICATION	ABNORMAL INDICATION	POSSIBLE CAUSE OF ABNORMAL INDICATION
1	A	90 v.		Trouble within this section. Isolate by the following tests.
2	C	115 v.	No voltage. Low voltage. High voltage.	Defective: 35Z5GT. Open: S100, W100. Shorted: C101A. Leaky: C101A. Open: R101.
3	D	105 v.	No voltage. Low voltage. High voltage.	Shorted: C101B. Open: R101. Leaky: C101B. Shorted: C203.* Open: R102.
4	A	90 v.	No voltage. Low voltage. High voltage.	Shorted: C101C. Open: R102. Leaky: C101B, C101C. Open: R204.*

Listening Test: Abnormal hum may be caused by open C101A, C101B, or C101C.

* This part, located in another section, may cause abnormal indication in this section.

Section 2—Audio Circuits

TROUBLE SHOOTING

For the tests in this section, use an audio-frequency signal generator. Connect the generator ground lead to B—, test point B; connect the output lead through a .1-mf. condenser to the test points indicated in the chart.

Set the volume control to maximum.

If the "NORMAL INDICATION" is obtained in step 1, proceed with the tests for Section 3 (i-f, detector, and a-v-c circuits); if not, isolate and correct the trouble in this section.

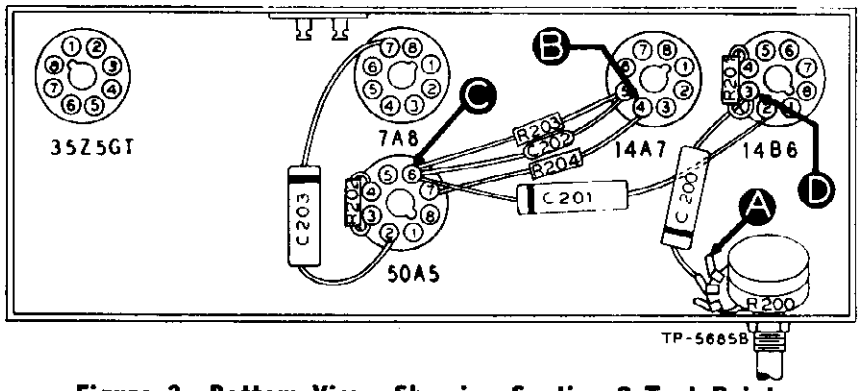

Figure 2. Bottom View, Showing Section 2 Test Points

STEP	TEST POINT	NORMAL INDICATION	POSSIBLE CAUSE OF ABNORMAL INDICATION
1	A	Loud, clear speaker output with weak generator input.	Trouble within this section. Isolate by the following tests.
2	C	Loud, clear output with strong input.	Defective: 50A5, LS200. Shorted: C202, C203. Open: R204, T200.
3	D	Same as step 1.	Defective: 14B6. Shorted: C201. Open: R201, R202, C201.
4	A	Same as step 1.	Shorted: C200, C301D.* Open: R200 (rotate through range).

* This part, located in another section, may cause abnormal indication in this section.

MODEL 49-503 PHILCO CORP.

Section 3—I-F, Detector, and A-V-C Circuits — TROUBLE SHOOTING

For the tests in this section, use an r-f signal generator, with modulated output, set at 455 kc. Connect the generator ground lead to B—, test point B; connect the output lead through a .1-mf. condenser to the test points indicated in the chart.

Set the volume control to maximum, and rotate the tuning control until the tuning condenser is fully meshed.

If the "NORMAL INDICATION" is obtained in step 1, proceed with the tests for Section 4 (r-f and converter circuits); if not, isolate and correct the trouble in this section.

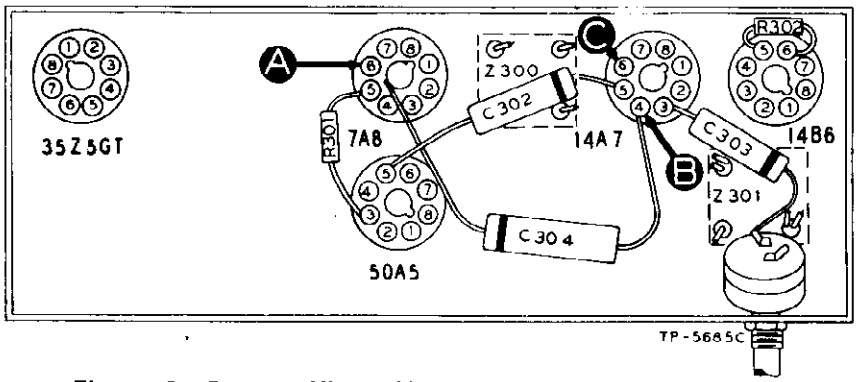

Figure 3. Bottom View, Showing Section 3 Test Points

To provide a complete i-f-amplifier check, test point A for this section is placed at the grid of the mixer in Section 4; therefore, the effectiveness of step 1 as a master check is dependent upon the condition of certain parts in the mixer circuit. These parts are listed below under the "POSSIBLE CAUSE OF ABNORMAL INDICATION."

STEP	TEST POINT	NORMAL INDICATION	POSSIBLE CAUSE OF ABNORMAL INDICATION
1	A	Loud, clear speaker output with weak generator input.	Trouble within this section. Isolate by the following tests.
2	C	Same as step 1.	Defective: 14A7, 14B6. Shorted: C303, Z300, Z301. Open: R301, Z300, Z301. Misaligned: Z301.
3	A	Same as step 1.	Defective: 7A8.* Open or shorted: Z300. Misaligned: Z300.

* This part, located in another section, may cause abnormal indication in this section.

Section 4—R-F and Converter Circuits — TROUBLE SHOOTING

For the tests in this section, with the exception of the oscillator test, use an r-f signal generator with modulated output. Connect the generator ground lead to B—, test point B; connect the output lead through a .1-mf. condenser to the test points indicated in the chart.

Set the volume control to maximum, and set the tuning control and the signal-generator frequency as indicated in the chart.

If the "NORMAL INDICATION" is not obtained in step 1, isolate and correct the trouble in this section. If the trouble is not revealed by the tests for this section, check the alignment.

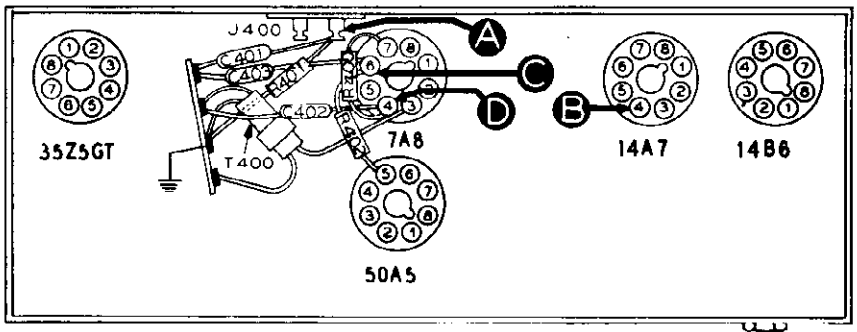

Figure 4. Bottom View, Showing Section 4 Test Points

STEP	TEST POINT	SIG. GEN. FREQ.	RADIO TUNING	NORMAL INDICATION	POSSIBLE CAUSE OF ABNORMAL INDICATION
1	A	1000 kc.	1000 kc.	Loud, clear speaker output with weak generator input.	Trouble within this section. Isolate by the following tests.
2	D (Osc. test; see note below.)		Rotate through range.	Negative 7 to 10 volts.	Defective: 7A8. Shorted: C400, C402, C400B. Open: T400, C402, R400.
3	C	1000 kc.	1000 kc.	Same as step 1.	Defective: 7A8. Shorted: C400, C400A, C403.
4	A	1000 kc.	1000 kc.	Same as step 1.	Open: C401, C403. Shorted: LA400.

OSCILLATOR TEST: Connect the positive lead of a high-resistance voltmeter to B—, test point B; connect the prod end of the negative lead through a 100,000-ohm isolating resistor to the oscillator grid (pin 4 of 7A8), test point D. Use a suitable meter range, such as 0—10 volts. Proper operation of the oscillator is indicated by negative voltage of approximately the value given in the chart (measured with 20,000-ohms-per-volt meter) throughout the tuning range.

© John F. Rider

ALIGNME

DIAL With tuning condenser fully meshed, set pointer to index dot located to left of 55.

OUTPUT METER—Connect one lead to pin on left-hand side of plug at rear of chassis; connect other lead to B—.

SIGNAL GENE ground lead to indicated in chart

STEP	SIGNAL GENERATOR		RADIO		
	CONNECTION TO RADIO	DIAL SETTING	DIAL SETTING	SPECIAL INSTRUCTIONS	
1	Through .1-mf. condenser to pin 6 of 7A8.	455 kc.	540 kc.	Adjust trimmers, in order given, for maximum output.	C3 C3 C3 C3
2	Through 100-mmf. condenser to external aerial connector. (External aerial connector must be disconnected from chassis.)	1600 kc.	1600 kc.	Adjust trimmer for maximum output.	
3	Same as step 2.	1500 kc.	1500 kc.	Adjust trimmer for maximum output.	

SYMBOLIZATION

The components in the radio circuit are symbolized according to the types of parts and the sections of the radio in which the parts are located. The prefix letter of the symbol designates the type of part as follows:

C—condenser	LA—loop aerial	S—switch
I—pilot lamp	LS—loud-speaker	T—transformer
L—choke or coil	R—resistor	W—line cord

Z—electrical assembly

The number of the symbol designates the section in which the part is located, as follows:

100-series components are in Section 1—the power supply.

200-series components are in Section 2—the audio circuits.

300-series components are in Section 3—the i-f, detector, and a-v-c circuits.

400-series components are in Section 4—the r-f and converter circuits.

©John F. Rider

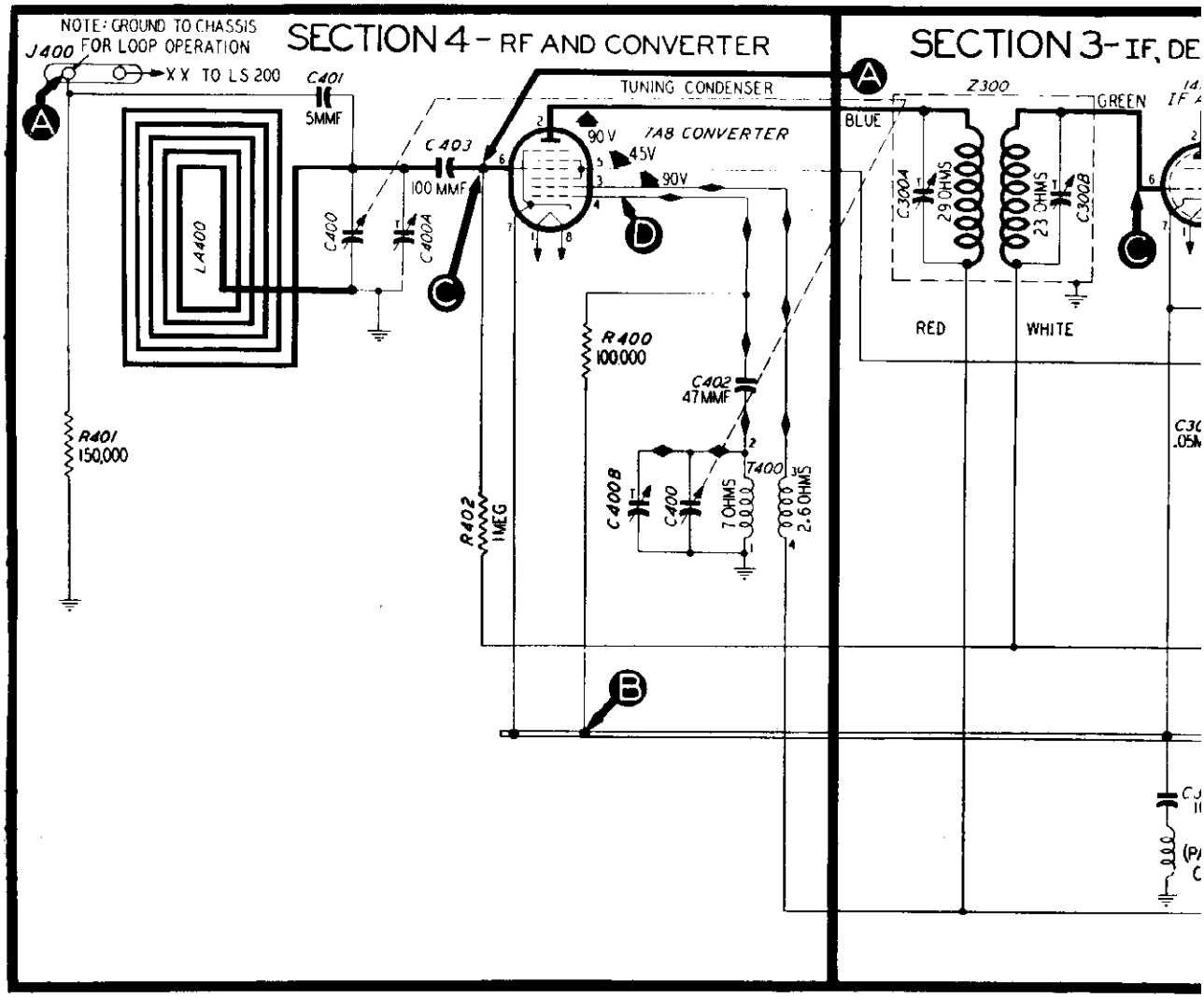

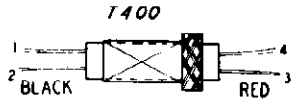

RF, I F, AND AUDIO SIGNAL PATH
OSC SIGNAL PATH
ALL RESISTOR VALUES IN OHMS UNLESS MARKED OTHERWISE

CONDENSER SYMBOLS

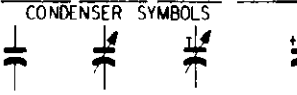

ALL VOLTAGES WERE TAKEN WITH A 20,000 OHMS PER VOLT METER AT A LINE VOLTAGE OF 117 VOLTS A.C.

Figure 5. Philco Radio Model 49-503, Secti

©John F. Rider

ILCO CORP. MODEL 49-503

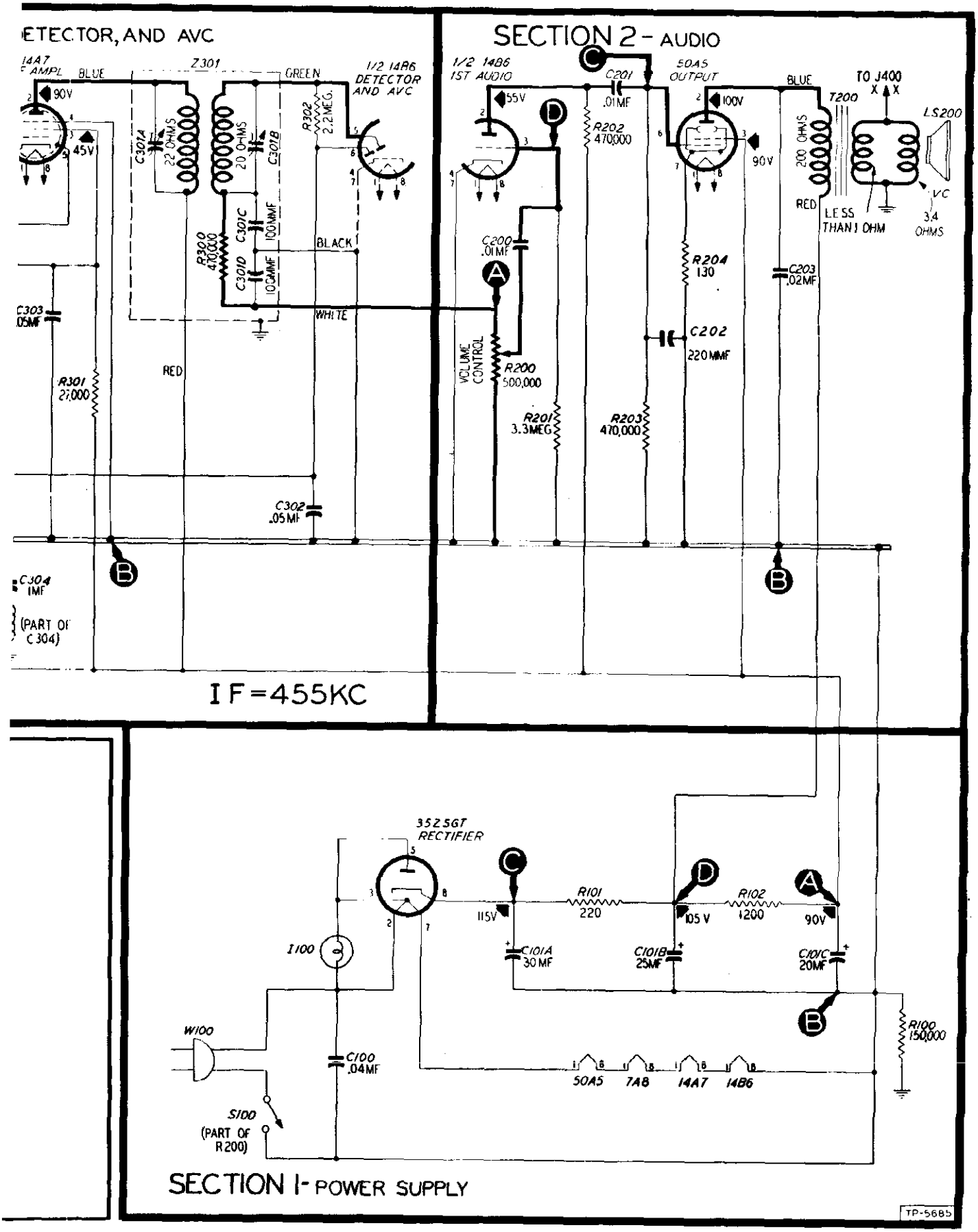

ectionalized Schematic Diagram, Showing Test Points

PROCEDURE

OR—Connect generator connect output lead as e modulated output.

RADIO CONTROLS—Set volume control to maximum.

OUTPUT LEVEL—During alignment, adjust signal-generator output to maintain output-meter indication below 1.25 volts.

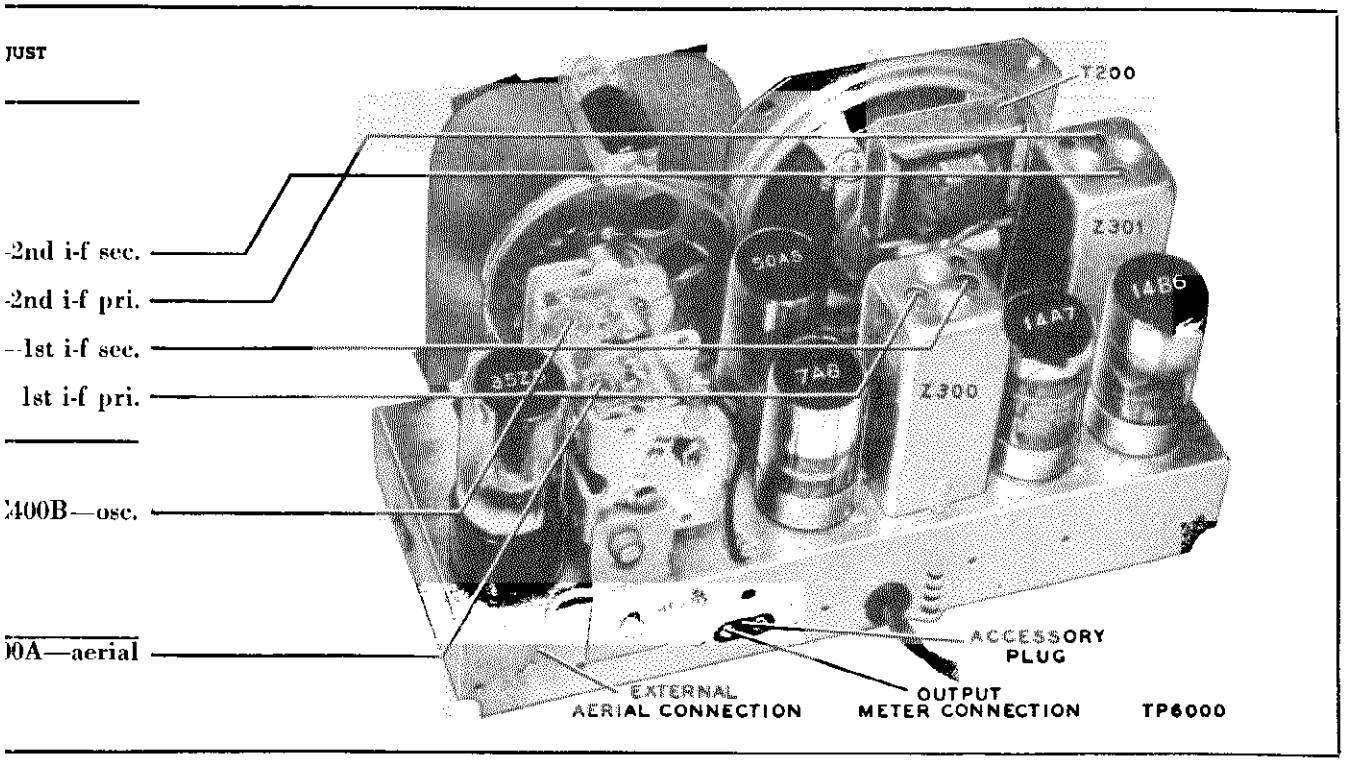

Figure 6. Top View, Showing Trimmer Locations

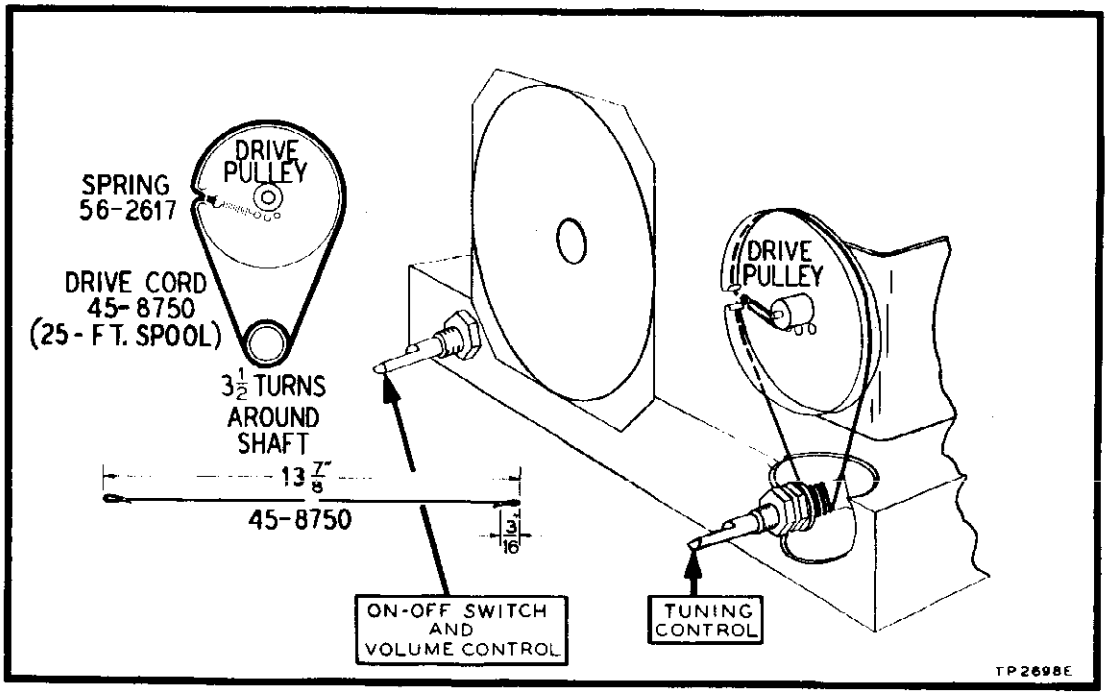

Figure 7. Drive-Cord Installation Details

PHILCO CORP. MODEL 49-503

REPLACEMENT PARTS LIST

NOTE: Part numbers identified by an asterisk (*) indicate general replacement items. These numbers may not be identical with those on factory assemblies; also, the electrical values of some replacement items may differ from the values indicated in the schematic diagram and replacement parts list. The values substituted in any case are so chosen that the operation of the radio will be either unchanged or improved. When ordering replacements, use only the "Service Part No."

SECTION 1—POWER SUPPLY

Reference Symbol	Description	Service Part No.
C100	Condenser, line filter, .04 mf.	45-3500-2
C101	Condenser, electrolytic, 3-section	30-2573
C101A:	Condenser, filter, 30 mf., 150 v.	Part of C101
C101B:	Condenser, filter, 25 mf., 150 v.	Part of C101
C101C:	Condenser, filter, 20 mf., 150 v.	Part of C101
I100	Lamp, pilot	34-2068*
R100	Resistor, leakage, 150,000 ohms.	66-4153340*
R101	Resistor, filter, 220 ohms	66-1224340*
R102	Resistor, filter, 1200 ohms.	66-2123340*
S100	Switch, on-off	Part of R200
W100	Line cord and plug	L-2183*

SECTION 2—AUDIO CIRCUITS

C200	Condenser, blocking, .01 mf.	61-0120*
C201	Condenser, d-c blocking, .01 mf.	61-0120*
C202	Condenser, parasitic suppressor, 220 mmf.	62-122001001*
C203	Condenser, tone compensation, .02 mf.	61-0108*
LS200	Speaker	36-1614
R200	Volume control (with power switch), 500,000 ohms	33-5429
R201	Resistor, grid return, 3.3 megohms.	66-5333340*
R202	Resistor, plate load, 470,000 ohms.	66-4473340*
R203	Resistor, grid return, 470,000 ohms.	66-4473340*
R204	Resistor, cathode bias, 130 ohms.	66-1133340*
T200	Output transformer	Part of LS200

SECTION 3—I-F, DETECTOR, AND A-V-C CIRCUITS

C300A	Condenser, trimmer, 1st i-f primary.	Part of Z300
C300B	Condenser, trimmer, 1st i-f secondary.	Part of Z300
C301A	Condenser, trimmer, 2nd i-f primary.	Part of Z301
C301B	Condenser, trimmer, 2nd i-f secondary	Part of Z301
C301C	Condenser, by-pass, 100 mmf.	Part of Z301
C301D	Condenser, by-pass, 100 mmf.	Part of Z301
C302	Condenser, a-v-c by-pass, .05 mf.	61-0122*
C303	Condenser, screen by-pass, .05 mf.	61-0122*
C304	Condenser-and-choke assembly, .1 mf.	30-4644-1
R300	Resistor, diode load, 470,000 ohms.	66-4473340*
R301	Resistor, screen dropping, 27,000 ohms	66-3273340*
R302	Resistor, a-v-c filter, 2.2 megohms.	66-5223340*
Z300	Transformer, 1st i-f	32-3967
Z301	Transformer, 2nd i-f	32-3952

SECTION 4—R-F AND CONVERTER CIRCUITS

C400	Condenser, tuning gang	31-2727-1
C400A:	Condenser, trimmer, aerial	Part of C400
C400B:	Condenser, trimmer, oscillator	Part of C400
C401	Condenser, aerial isolating, 5 mmf.	30-1224-5
C402	Condenser, isolating, 47 mmf.	30-1224-2
C403	Condenser, blocking, 100 mmf.	60-10105407*
LA400	Aerial, high-impedance loop	32-4052-11
R400	Resistor, grid return, 100,000 ohms.	66-4103340*
R401	Resistor, aerial discharge, 150,000 ohms	66-4153340*
R402	Resistor, grid return, 1 megohm.	66-5103340*
T400	Transformer, oscillator	32-4263

MISCELLANEOUS

Description	Service Part No.
Cabinet and Cabinet Parts	
Back-and-clip assembly	76-4268
Baffle and cloth	40-6945
Cabinet, ebony	10690B
Cabinet, green	10690A
Grille, plastic	54-4506-3
Knob assembly, ebony (2 required)	54-4486-4
Knob assembly, green (2 required)	54-4486-3
Shaft assembly	31-2718
Window, acetate	54-4504
Window fastener (4 required)	56-6161FE7
Dial-Scale Hardware	
Drive cord (25-ft. spool)	45-8750*
Fastener, speed	56-5028FA9
Pointer	54-4505
Scale	27-5978-2
Spring	56-2617
Pilot-lamp-socket assembly	76-1280
Socket, Loktal	27-6138
Socket, octal	27-6174

© John F. Rider

MODELS 49-504, 49-504-I

PHILCO CORP.

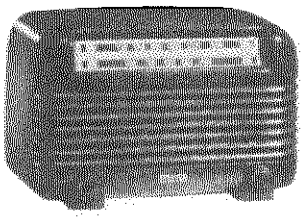

MODEL 49-504 (Walnut)
MODEL 49-504-I (Ivory)

Circuit Description

The Philco Radio Model 49-504 is a five-tube, table-model superheterodyne, providing reception in the standard-broadcast band.

The high-impedance loop aerial normally provides adequate signal pickup. Provisions are made for the connection of an external aerial.

The loop is coupled to the 7A8 converter. Variable condenser tuning is employed; the oscillator rotor-section plates are properly shaped to obtain tracking, thus eliminating the need for a series padding condenser.

The 7A8 is transformer-coupled to the 14A7 i-f amplifier, which is also transformer-coupled to the diodes of the 14B6 second detector — first audio-frequency amplifier. A-v-c voltage is applied to the control grids of both the i-f and converter tubes.

The triode section of the 14B6 is the first audio stage, and is resistance-coupled to the 50A5 output stage. The output tube is transformer-coupled to the permanent-magnet dynamic speaker.

D-c operating voltages are obtained from the 35Z5GT half-wave rectifier, the output of which is filtered by a two-section resistor-condenser filter.

Condenser C302 in Section 3 is a special condenser, inductively wound to form a series-tuned circuit, resonant at the intermediate frequency. This special condenser offers less impedance at this frequency than a conventional condenser, thus permitting higher i-f gain, with no tendency towards instability. The inductive effect at audio frequencies is negligible. Since the tuning gang is connected to the chassis, by-passing at broadcast frequencies is adequate.

Resistor R100, the 150,000-ohm resistor in Section 1, prevents hum which might otherwise occur under conditions of high humidity.

SPECIFICATIONS

CABINET	Plastic (ivory or walnut)
CIRCUIT	Five-tube superheterodyne
FREQUENCY RANGE	540—1620 kc.
OPERATING VOLTAGE	105—120 volts, a.c. or d.c.
POWER CONSUMPTION	30 watts
AERIAL	Loop fastened to cabinet; terminal also provided for outside aerial
INTERMEDIATE FREQUENCY	455 kc.
PHILCO TUBES (5)	7A8, 14A7, 14B6, 50A5, 35Z5GT

Philco TROUBLE-SHOOTING *Procedure*

For rapid trouble shooting, the radio circuit is divided into four sections, with test points specified for each section; these sections and test points are indicated in the schematic diagram. The trouble-shooting procedure given for each section includes a simplified test chart and a bottom view of the chassis showing the locations of the test points and the components of that section.

In each chart, the first step is a master check for determining whether trouble exists in that section without going through the entire test procedure.

Failure to obtain the "NORMAL INDICATION" in any given step indicates trouble within the circuit under test.

After isolating the trouble to a single stage, the defect is located by: first, testing the tube; second, measuring tube-electrode voltages; third, measuring circuit resistances; fourth, substituting condensers. The trouble revealed should be corrected before testing further.

Preliminary Checks

To avoid possible damage to the radio, the following preliminary checks should be made before turning on the power.

1. Inspect the top and bottom of the chassis. Make sure that all tubes are secure in the proper sockets, and look for any broken or shorted connections, burned resistors, or other obvious sources of trouble.
2. Measure the resistance between B+ (pin 8 of the 35Z5GT rectifier) and B– (test point B). When the ohmmeter test leads are connected in the proper polarity, the highest resistance reading will be obtained. If the reading is lower than 1500 ohms, check condensers C101A, C101B, and C101C for leakage or shorts. The resistance value, which is much lower than normal, is not intended as a quality check of these condensers; the value given is the lowest at which the rectifier will operate safely while the voltage tests of Section 1 (power supply) are performed.

©John F. Rider

PHILCO CORP.

MODELS 49-504, 49-504-I

Section 1 — Power Supply

TROUBLE SHOOTING

For the tests in this section, use a d-c voltmeter. Connect the negative lead to B–, test point B; connect the positive lead to the test points indicated in the chart. The voltage readings given were taken with a 20,000-ohms-per-volt meter, at a line voltage of 117 volts, a-c.

Turn on the power, and set the volume control to minimum.

If the "NORMAL INDICATION" is obtained in step 1, proceed with the tests for Section 2 (audio circuits); if not, isolate and correct the trouble in this section.

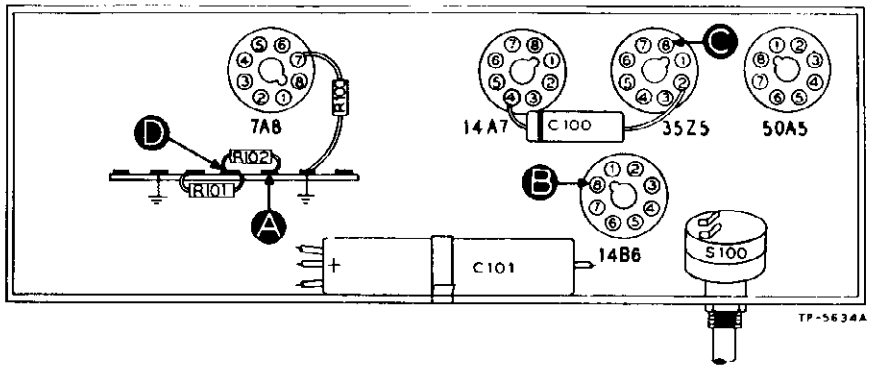

FIGURE 1. BOTTOM VIEW, SHOWING SECTION 1 TEST POINTS

STEP	TEST POINT	NORMAL INDICATION	ABNORMAL INDICATION	POSSIBLE CAUSE OF ABNORMAL INDICATION
1	A	107v		Trouble within this section. Isolate by the following tests.
2	C	130v	No voltage Low voltage High voltage	Defective: 35Z5GT, S100, W100. Shorted: C101A. Defective: 35Z5GT. Open: C101A, I100. Leaky: C101A. Open: R101, R102, R203*, T200*.
3	D	120v	No voltage Low voltage High voltage	Shorted: C101B. Open: R101. Shorted: C203*. Leaky: C101B, C203*. Open: R102, R203*, T200*.
4	A	107v	No voltage Low voltage High voltage	Shorted: C101C. Leaky: C101C. Open: R203*.
Listening Test: Abnormal hum may be caused by open C101B, C101C, or R100.				

* This part, located in another section, may cause abnormal indication in this section.

Section 2 — Audio Circuits

TROUBLE SHOOTING

For the tests in this section, use an audio signal generator. Connect the ground lead of the generator to B–, test point B; connect the output lead through a .1-mf. condenser to the test points indicated in the chart.

Set the radio volume control to maximum.

If the "NORMAL INDICATION" is obtained in step 1, proceed with the tests for Section 3 (i-f, detector, and a-v-c circuits); if not, isolate and correct the trouble in this section.

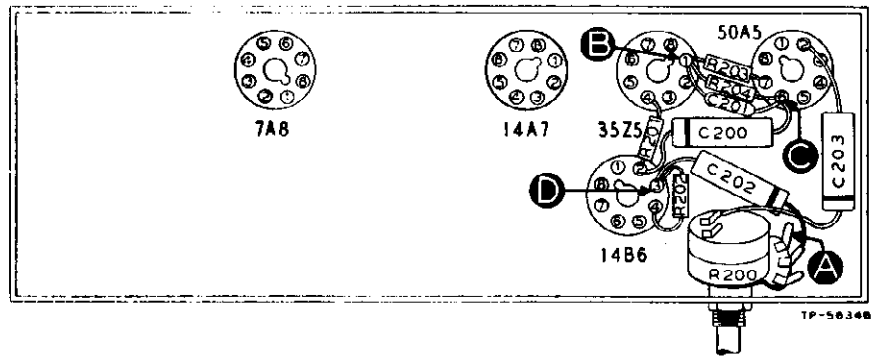

FIGURE 2. BOTTOM VIEW, SHOWING SECTION 2 TEST POINTS

STEP	TEST POINT	NORMAL INDICATION	POSSIBLE CAUSE OF ABNORMAL INDICATION
1	A	Loud, clear signal with weak signal input.	Trouble within this section. Isolate by the following tests.
2	C	Clear signal with strong signal input.	No signal—Open or shorted: LS200, T200. Shorted: C201, C203. Open: R203. Defective: 50A5.
3	D	Same as step 1.	Open: R201, R202, R204. Open, shorted, or leaky: C200. Defective: 14B6.
4	A	Same as step 1.	Open: R200 (rotate through entire range). Open, shorted, or leaky: C202. Shorted: C301D*.

* This part, located in another section, may cause trouble in this section.

© John F. Rider

MODELS 49-504, 49-504-I

PHILCO CORP.

Section 3 — I-F, Detector, and A-V-C Circuits TROUBLE SHOOTING

For the tests in this section use an r-f signal generator, with modulated output, set at 455 kc. Connect the generator ground lead to B–, test point B; connect the output lead through a .1-mf. condenser to the test points indicated in the chart.

If the "NORMAL INDICATION" is obtained in step 1, proceed with the tests for Section 4 (r-f and converter circuits); if not, isolate and correct the trouble in this section.

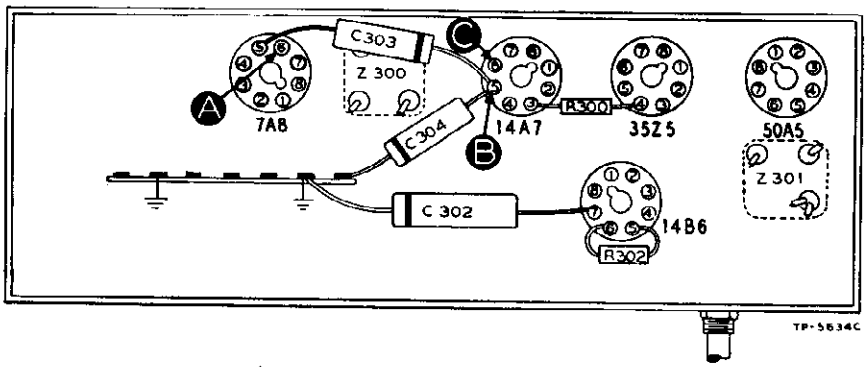

FIGURE 3. BOTTOM VIEW, SHOWING SECTION 3 TEST POINTS

STEP	TEST POINT	NORMAL INDICATION	POSSIBLE CAUSE OF ABNORMAL INDICATION
1	A	Clear signal with weak signal input.	Trouble within this section. Isolate by the following tests.
2	C	Clear signal with moderate signal input.	Defective or misaligned: Z301. Defective: 14B6 (diode section), 14A7. Open: R300, C302. Shorted, leaky, or open: C303.
3	A	Same as step 1.	Defective or misaligned: Z300. Defective: 7A8*. Open: C302, LA400*.

* This part, located in another section, may cause trouble in this section.

Section 4 — R-F and Converter Circuits TROUBLE SHOOTING

For the tests in this section, with the exception of the oscillator test, use an r-f signal generator with modulated output. Connect the generator ground lead to B–, test point B; connect the output lead through a .1-mf. condenser to the test points indicated in the chart.

Set the radio volume control to maximum.

Set the radio and signal-generator dials as indicated in the chart.

If the "NORMAL INDICATION" is not obtained in step 1, isolate and correct the trouble in this section.

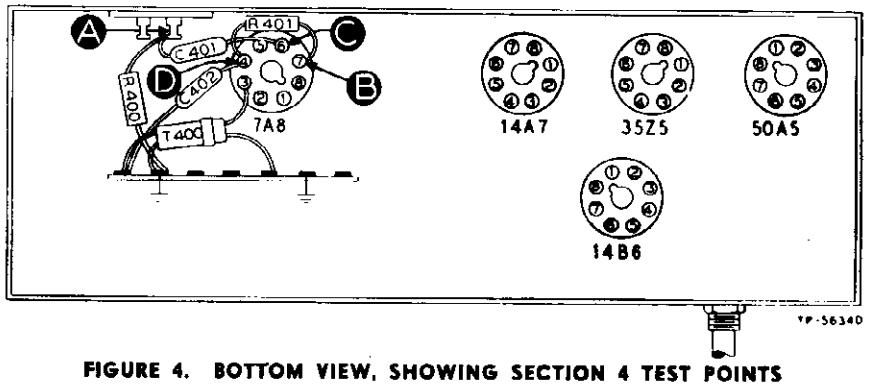

FIGURE 4. BOTTOM VIEW, SHOWING SECTION 4 TEST POINTS

STEP	TEST POINT	DIAL SETTINGS		NORMAL INDICATION	POSSIBLE CAUSE OF ABNORMAL INDICATION
		SIG. GEN.	RADIO		
1	A	540 kc.	540 kc.	Clear signal with weak signal input.	Trouble within this section. Isolate by the following tests.
2	C	540 kc.	540 kc.	Same as step 1.	Shorted: C400, C400A. Defective: 7A8. Trouble in oscillator section.
3	D (Osc. test; see note below.)		540 to 1620 kc.	Negative 7 to 11 volts.	Defective: T400, 7A8. Open or shorted: C402. Shorted: C400, C400B.
4	A	540 kc.	540 kc.	Same as step 1.	Defective: LA400. Open C401.

OSCILLATOR-TEST NOTE: Connect positive lead of high-resistance voltmeter to B–, test point B; connect prod end of negative lead through a 100,000-ohm isolating resistor to the 7A8 oscillator grid, test point D. Use suitable meter range, such as 0—50 volts. Proper operation of oscillator is indicated by negative voltage of 7 to 11 volts (measured with a 20,000-ohms-per-volt meter) throughout range of tuning control.

© John F. Rider

MODELS 49-504,
49-504-I

ALIGNMEN

TURN ON THE RADIO, AND SE

DIAL — Turn tuning condensers to full-mesh position. Set dial pointer to coincide with index mark, located to the left of "550."

OUTPUT METER — Connect to left (output) terminal jack and chassis, as shown in figure 6.

STEP	SIGNAL GENERATOR		RADIO		ADJUS
	CONNECTIONS TO RADIO	DIAL SETTING	DIAL SETTING	SPECIAL INSTRUCTIONS	
1	Ground lead to B–; output lead through a .1-mf. condenser to pin 6 of 7A8 converter.	455 kc.	540 kc.	Turn C300B (copper screw) fully tight, then adjust trimmers, in order given, for maximum output.	C3 C3 C3 C3
2	Radiating loop (see note below).	1600 kc.	1600 kc.	Adjust for maximum.	C4
3	Same as step 2.	1500 kc.	1500 kc.	Adjust for maximum.	C4

NOTE: Make up a six-to-eight-turn, 6-inch-diameter loop, using insulated wire; connect to signal-generat leads and place near radio loop.

SYMBOLIZATION

The components in the radio circuit are symbolized according to the types of parts and the sections of the radio in which the parts are located. The prefix letter of the symbol designates the type of part, as follows:

C—condenser	LA—loop aerial	S—switch
I—pilot lamp	LS—loud-speaker	T—transformer
L—choke or coil	R—resistor	Z—electrical assembly

The number of the symbol designates the section in which the part is located, as follows:

100-series components are in Section 1—the power supply.

200-series components are in Section 2—the audio circuits.

300-series components are in Section 3—the i-f, detector, and a-v-c circuits.

400-series components are in Section 4—the r-f and converter circuits.

©John F. Rider

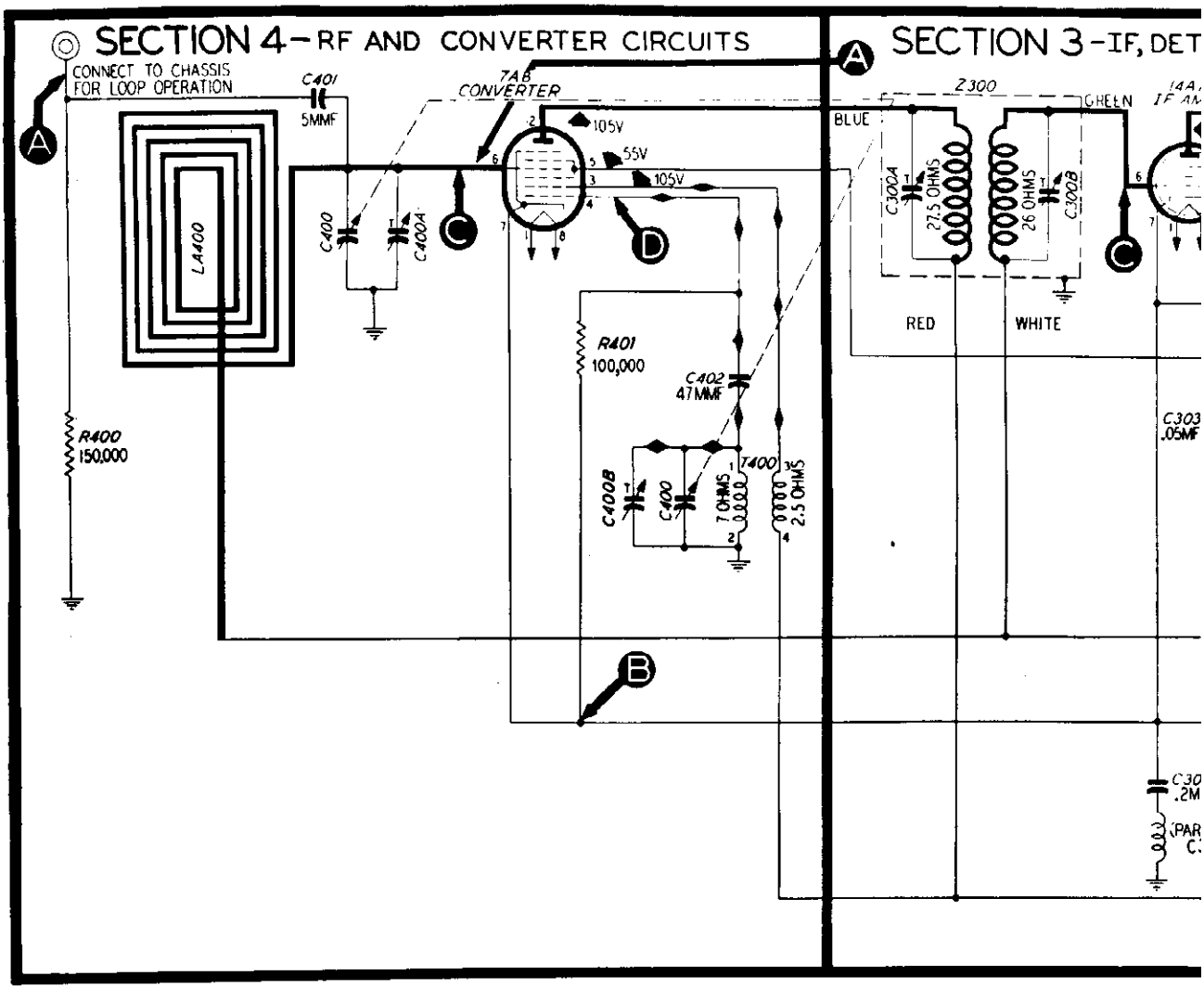

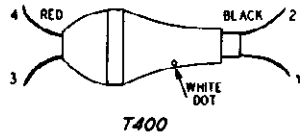

RF, IF, AND AUDIO SIGNAL PATH
OSC SIGNAL PATH
ALL RESISTOR VALUES IN OHMS UNLESS MARKED OTHERWISE

CONDENSER SYMBOLS

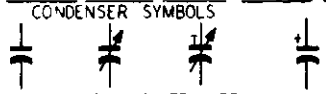

FIGURE 5. PHILCO RADIO MODELS 49-504 AND 49-504-I.

CO CORP.

MODELS 49-504, 49-504-I

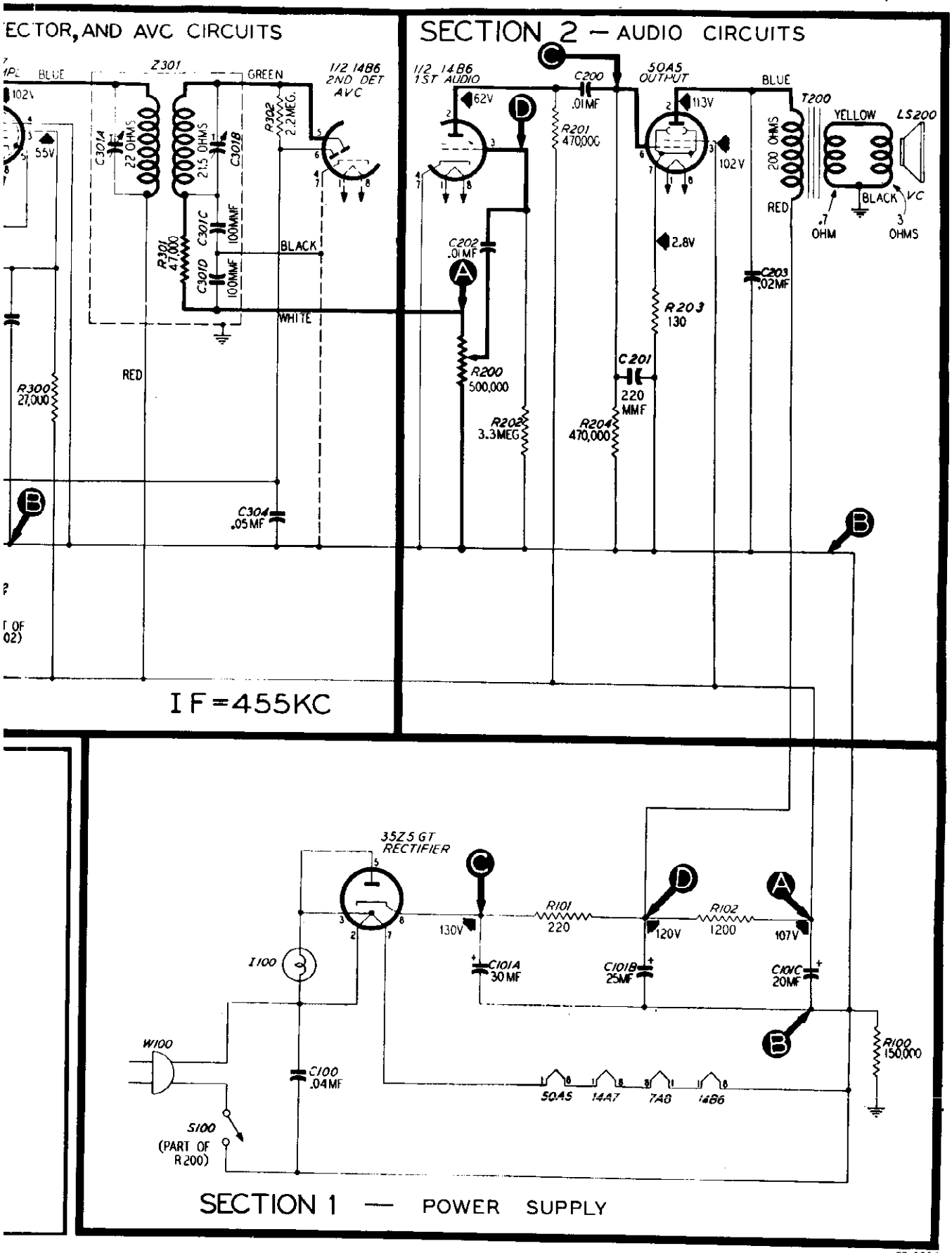

ECTIONALIZED SCHEMATIC DIAGRAM, SHOWING TEST POINTS

) CORP.

PROCEDURE

IE VOLUME CONTROL TO MAXIMUM.

of SIGNAL GENERATOR — Connect as indicated in chart. Use modulated output.

OUTPUT LEVEL — During alignment, adjust signal-generator output to maintain output-meter indication below 1.25 volts.

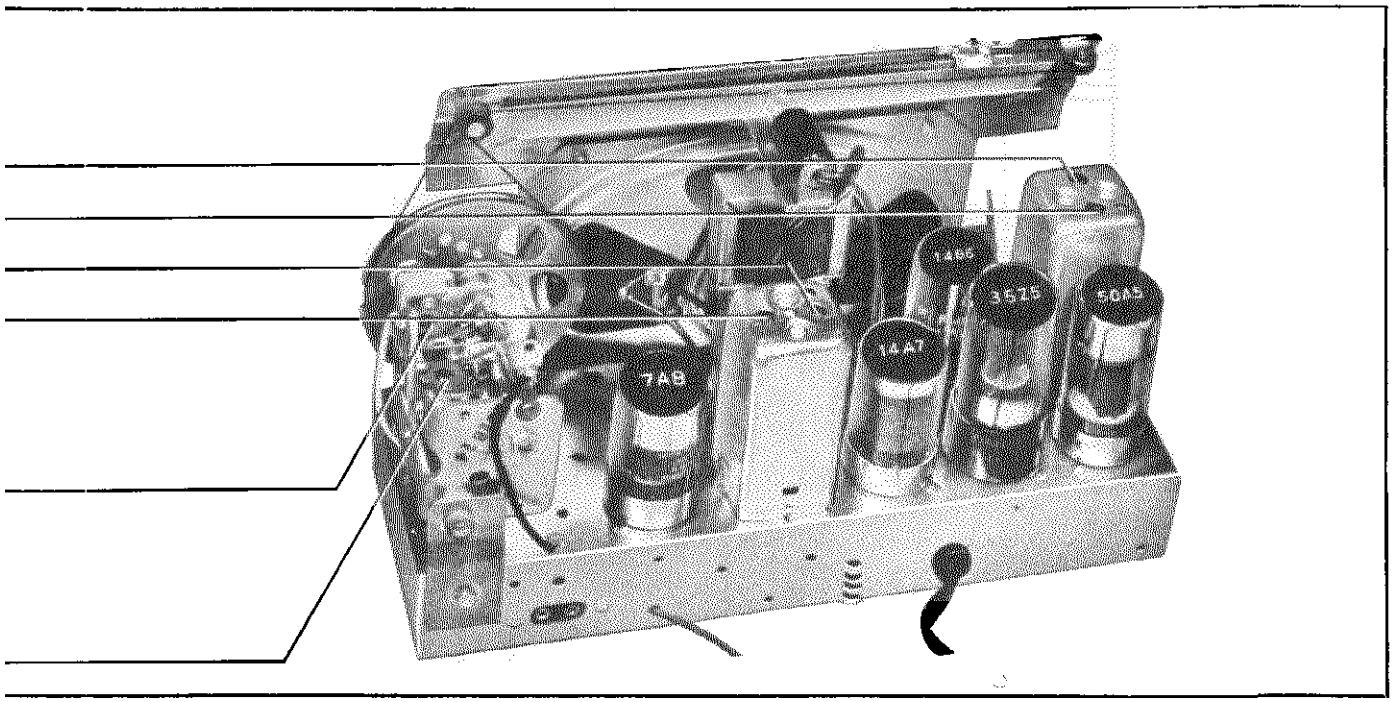

TP-6161

FIGURE 6. TOP VIEW, SHOWING TRIMMER LOCATIONS

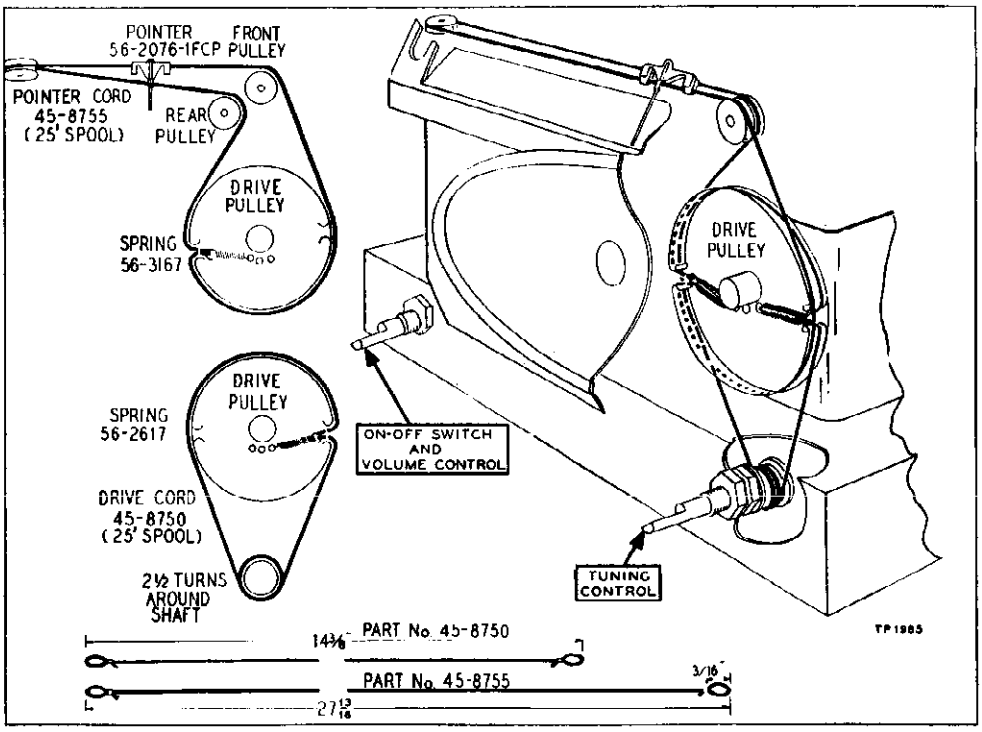

FIGURE 7. DRIVE-CORD INSTALLATION DETAILS

PHILCO CORP.

MODELS 49-504, 49-504-I

REPLACEMENT PARTS LIST

NOTE: Part numbers marked with an asterisk (*) are general replacement items. These numbers may not be identical with those on factory assemblies; also, the electrical values of some replacement items may differ from the values indicated in the schematic diagram and parts list. The values substituted in any case are so chosen that the operation of the radio will be either unchanged or improved. When ordering replacements, use only the "Service Part No."

SECTION 1

POWER SUPPLY

Reference Symbol	Description	Service Part No.
C100	Condenser, line filter, .04 mf.	45-3500-2*
C101	Condenser, electrolytic, 3-section	30-2573*
C101A	Condenser, filter, 30 mf.	Part of C101
C101B	Condenser, filter, 25 mf.	Part of C101
C101C	Condenser, filter, 20 mf.	Part of C101
I100	Lamp, pilot	34-2068
R100	Resistor, leakage, 150,000 ohms	66-4153340*
R101	Resistor, filter, 220 ohms	66-1224340*
R102	Resistor, filter, 1200 ohms	66-2123340*
S100	Switch, power	Part of R200
W100	Power cord and plug	L-3199

SECTION 2

AUDIO CIRCUITS

C200	Condenser, blocking, .01 mf.	61-0120*
C201	Condenser, by-pass, 220 mmf.	62-122001001*
C202	Condenser, blocking, .01 mf.	61-0120*
C203	Condenser, tone compensating, .02 mf.	61-0108*
LS200	Speaker	36-1615
R200	Volume control; .5 megohm	45-5019*
R201	Resistor, plate load, 470,000 ohms	66-4473340*
R202	Resistor, grid load, 3.3 megohms	66-5333340*
R203	Resistor, bias, 130 ohms	66-1123340*
R204	Resistor, grid load, 470,000 ohms	66-4473340*
T200	Transformer, output	Part of LS200

SECTION 3

I-F, DETECTOR, AND A-V-C CIRCUITS

C300A	Condenser, trimmer	Part of Z300
C300B	Condenser, trimmer	Part of Z300
C301A	Condenser, trimmer	Part of Z301
C301B	Condenser, trimmer	Part of Z301
C301C	Condenser, by-pass	Part of Z301
C301D	Condenser, by-pass	Part of Z301
C302	Condenser and choke assembly, i-f by-pass, .2 mf.	30-4644
C303	Condenser, screen by-pass, .05 mf.	61-0122*
C304	Condenser, a-v-c filter, .05 mf.	61-0122*
R300	Resistor, screen dropping, 27,000 ohms	66-3273340
R301	Resistor, i-f filter, 47,000 ohms	Part of Z301
R302	Resistor, a-v-c filter, 2.2 megohms	66-5223340*
Z300	Transformer, 1st i-f, including C300A and C300B	32-3968
Z301	Transformer, 2nd i-f, including C301A, C301B, C301C, C301D, and R301	45-6365*

SECTION 4

R-F AND CONVERTER CIRCUITS

Reference Symbol	Description	Service Part No.
C400	Condenser, tuning, 2-section	31-2527-2
C400A	Condenser, trimmer	Part of C400
C400B	Condenser, trimmer	Part of C400
C401	Condenser, coupling, 5 mmf.	60-90505007*
C402	Condenser, isolating, 47 mmf.	60-00515307*
LA400	Loop aerial	32-4052-4
R400	Resistor, aerial discharge, 150,000 ohms	66-4153340*
R401	Resistor, oscillator grid, 100,000 ohms	66-4103340*
T400	Transformer, oscillator	32-4263

MISCELLANEOUS

Description	Service Part No.
Cabinet	
Model 49-504 (less scale)	10524P
Model 49-504-I (less scale)	10524R
Cabinet Hardware	
Back	
Model 49-504	27-9817
Model 49-504-I	27-9870
Knob assembly	
Model 49-504	54-4052
Model 49-504-I	27-4805
Scale, dial	
Model 49-504	27-5907
Model 49-504-I	27-5908
Scale strap	56-2059FA3
Screw	1W23129FA3
Stud, back mounting (4)	W2235FA9
Dial Backplate and Associated Hardware	
Cord, drive (pointer)	45-8755
Cord, drive (gang)	45-8750
Dial-backplate assembly	
Model 49-504	76-1476
Model 49-504-I	76-1192
Diffusing panel, Model 49-504-I	54-4343
Light reflector, Model 49-504	27-9816-1*
Pointer	56-2076-1
Spring	
Gang drive cord	56-2617
Pointer drive cord	56-3167
Spring clip, diffusing screen, Model 49-504-I	56-3587
Pilot-lamp assembly	76-2142
Shaft, assembly	31-2663
Socket, tube	
Loktal	27-6138*
Octal	27-6174

MODEL 49-505 PHILCO CORP.

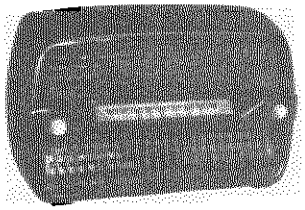

MODEL 49-505

Circuit Description

The Philco Radio, Model 49-505, is a five-tube, table-model superheterodyne, providing reception in the standard-broadcast band.

The high-impedance loop aerial normally provides adequate signal pickup. Provisions are made for the connection of an external aerial.

The loop is coupled to the 7A8 converter. Variable-condenser tuning is employed; the oscillator rotor-section plates are properly shaped to obtain tracking, thus eliminating the necessity for a series padding condenser.

The 7A8 is transformer-coupled to the 14A7 i-f amplifier, which is also transformer-coupled to the diodes of the 14B6 second detector—first audio-frequency amplifier. A-v-c voltage is applied to the control grids of both the i-f and converter tubes.

The triode section of the 14B6 is the first audio stage, and is resistance-coupled to the 50A5 output stage. The output tube works into a permanent-magnet dynamic speaker.

D-c operating voltages are obtained from the 35Y4 half-wave rectifier, the output of which is filtered by a two-section resistor-condenser filter.

Condenser C302 in Section 3 is a special condenser, inductively wound to form a series-tuned circuit, resonant at the intermediate frequency. This special condenser offers less impedance at this frequency than a conventional condenser, thus permitting higher i-f gain, with no tendency toward instability. The inductive effect at audio frequencies is negligible. Since the tuning gang is connected to the chassis, by-passing at broadcast frequencies is adequate.

Resistor R100, the 150,000-ohm resistor in Section 1, prevents hum which might otherwise occur under conditions of high humidity.

SPECIFICATIONS

CABINET	**Plastic (walnut)**
CIRCUIT	**Five-tube superheterodyne**
FREQUENCY RANGE	**540—1620 kc.**
OPERATING VOLTAGE	**105—120 volts, a.c. or d.c.**
POWER CONSUMPTION	**30 watts**
AERIAL	**Loop fastened to cabinet; connection also provided for outside aerial**
INTERMEDIATE FREQUENCY	**455 kc.**
PHILCO TUBES (5)	**7A8, 14A7, 14B6, 50A5, 35Y4**

Philco TROUBLE-SHOOTING Procedure

For rapid trouble shooting, the radio circuit is divided into four sections, with test points specified for each section; these sections and test points are indicated in the schematic diagram. The trouble-shooting procedure given for each section includes a simplified test chart and a bottom view of the chassis showing the locations of the test points and the components of that section.

In each chart, the first step is a master check for determining whether trouble exists in that section without going through the entire test procedure.

Failure to obtain the "NORMAL INDICATION" in any given step indicates trouble within the circuit under test.

After isolating the trouble to a single stage, the defect is located by: first, testing the tube; second, measuring tube-electrode voltages; third, measuring circuit resistances; fourth, substituting condensers. The trouble revealed should be corrected before testing further.

Preliminary Checks

To avoid possible damage to the radio, the following preliminary checks should be made before turning on the power.

1. Inspect the top and bottom of the chassis. Make sure that all tubes are secure in the proper sockets, and look for any broken or shorted connections, burned resistors, or other obvious sources of trouble.
2. Measure the resistance between B+ (pin 7 of the 35Y4 rectifier) and B— (test point B). When the ohmmeter test leads are connected in the proper polarity, the highest resistance reading will be obtained. If the reading is lower than 1500 ohms, check condensers C101A, C101B, and C101C for leakage or shorts.

The resistance value, which is much lower than normal, is not intended as a quality check of these condensers; the value given is the lowest at which the rectifier will operate safely while the voltage tests of Section 1 (power supply) are performed.

Section 1—Power Supply

TROUBLE SHOOTING

For the tests in this section, use a d-c voltmeter. Connect the negative lead to B–, test point B; connect the positive lead to the test points indicated in the chart. The voltage readings given were taken with a 20,000-ohms-per-volt meter, at a line voltage of 117 volts, a.c.

Turn on the power, and set the volume control to minimum.

If the "NORMAL INDICATION" is obtained in step 1, proceed with the tests for Section 2 (audio circuits); if not, isolate and correct the trouble in this section.

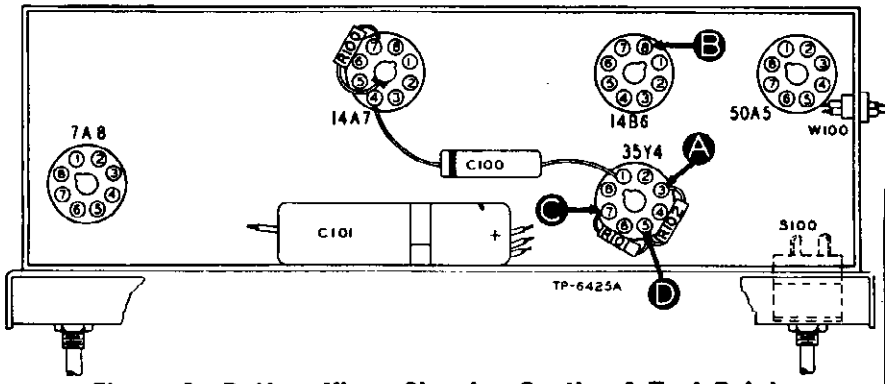

Figure 1. Bottom View, Showing Section 1 Test Points

STEP	TEST POINT	NORMAL INDICATION	ABNORMAL INDICATION	POSSIBLE CAUSE OF ABNORMAL INDICATION
1	A	107 volts		Trouble within this section. Isolate by the following tests.
2	C	130 volts	No voltage	Defective: 35Y4, S100, W100. Shorted: C101A.
			Low voltage	Defective: 35Y4. Open: C101A, I100. Leaky: C101A.
			High voltage	Open: R101, R102, R203*, T200*.
3	D	120 volts	No voltage	Shorted: C101B. Open: R101.
			Low voltage	Shorted: C203*. Leaky: C101B, C203*.
			High voltage	Open: R102, R203*, T200*.
4	A	107 volts	No voltage	Shorted: C101C.
			Low voltage	Leaky: C101C.
			High voltage	Open: R203*.
Listening Test: Abnormal hum may be caused by open C101B, C101C, or R100.				

* This part, located in another section, may cause abnormal indication in this section.

Section 2—Audio Circuits

TROUBLE SHOOTING

For the tests in this section, use an audio signal generator. Connect the ground lead of the generator to B–, test point B; connect the output lead through a .1-mf. condenser to the test points indicated in the chart.

Set the radio volume control to maximum.

If the "NORMAL INDICATION" is obtained in step 1, proceed with the tests for Section 3 (i-f, detector, and a-v-c circuits). If not, isolate and correct the trouble in this section.

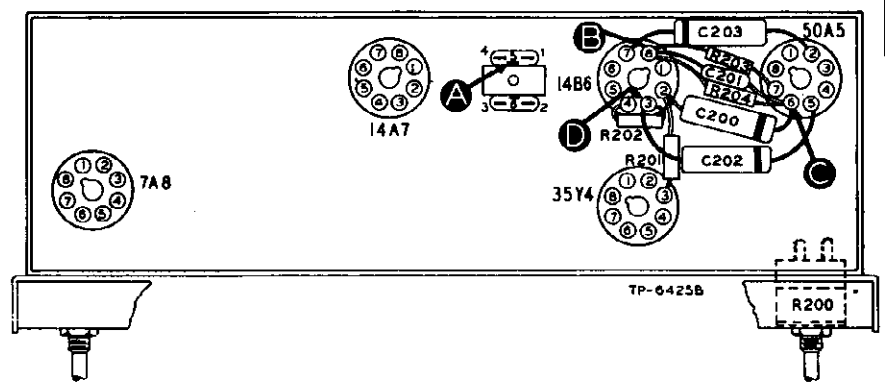

Figure 2. Bottom View, Showing Section 2 Test Points

STEP	TEST POINT	NORMAL INDICATION	POSSIBLE CAUSE OF ABNORMAL INDICATION
1	A	Loud, clear signal with weak signal input.	Trouble within this section. Isolate by the following tests.
2	C	Clear signal with strong signal input.	Open or shorted: LS200, T200. Shorted: C201, C203. Open: R203. Defective: 50A5.
3	D	Same as step 1.	Open: R201, R202, R204. Open, shorted, or leaky: C200. Defective: 14B6.
4	A	Same as step 1.	Defective: R200 (rotate through entire range). Open, shorted, or leaky: C202. Shorted: C301D*.

* This part, located in another section, may cause abnormal indication in this section.

© John F. Rider

MODEL 49-505 PHILCO CORP.

Section 3—I-F, Detector, and A-v-c Circuits — TROUBLE SHOOTING

For the tests in this section, use an r-f signal generator, with modulated output, set at 455 kc. Connect the generator ground lead to B–, test point B; connect the output lead through a .1-mf. condenser to the test points indicated in the chart.

Set the radio volume control to maximum.

If the "NORMAL INDICATION" is obtained in step 1, proceed with the tests for Section 4 (r-f and converter circuits); if not, isolate and correct the trouble in this section.

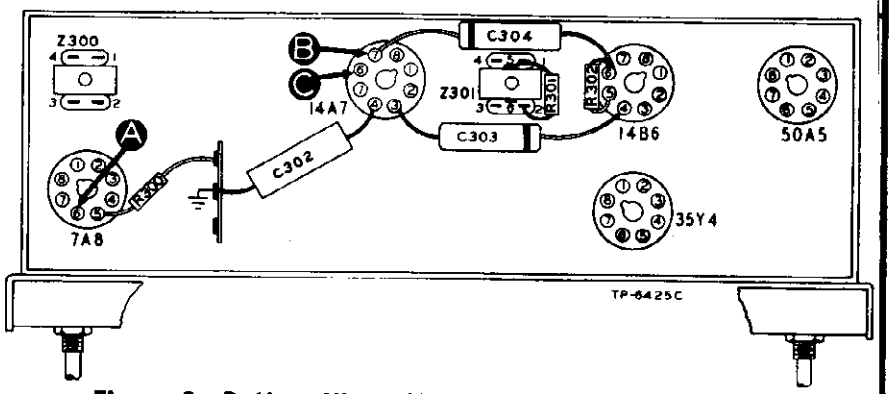

Figure 3. Bottom View, Showing Section 3 Test Points

STEP	TEST POINT	NORMAL INDICATION	POSSIBLE CAUSE OF ABNORMAL INDICATION
1	A	Clear signal with weak signal input.	Trouble within this section. Isolate by the following tests.
2	C	Clear signal with moderate signal input.	Misaligned: Z301. Defective: 14B6 (diode section), 14A7. Open: R300, C302. Shorted, leaky, or open: C303, Z301.
3	A	Same as step 1.	Defective or misaligned: Z300. Defective: 7A8*. Open: C302, LA400*, Z300. Shorted: Z300.

* This part, located in another section, may cause abnormal indication in this section.

Section 4—R-F and Converter Circuits — TROUBLE SHOOTING

For the tests in this section, with the exception of the oscillator test, use an r-f signal generator with modulated output. Connect the generator ground lead to B–, test point B; connect the output lead through a .1-mf. condenser to the test points indicated in the chart.

Set the radio volume control to maximum.

Set the radio and signal-generator dials as indicated in the chart.

If the "NORMAL INDICATION" is not obtained in step 1, isolate and correct the trouble in this section.

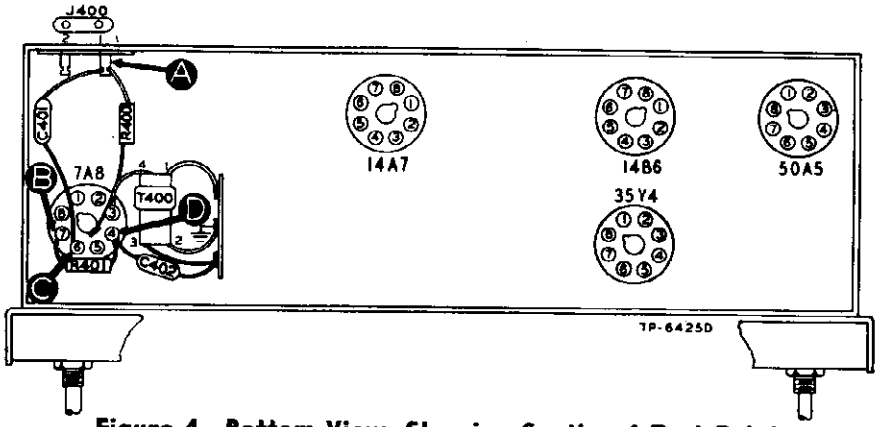

Figure 4. Bottom View, Showing Section 4 Test Points

STEP	TEST POINT	DIAL SETTINGS		NORMAL INDICATION	POSSIBLE CAUSE OF ABNORMAL INDICATION
		SIG. GEN.	RADIO		
1	A	540 kc.	540 kc.	Clear signal with weak signal input.	Trouble within this section. Isolate by the following tests.
2	C	540 kc.	540 kc.	Same as step 1.	Shorted: C400, C400A. Defective: 7A8. Trouble in oscillator section.
3	Oscillator Test (see Note below)		540 to 1620 kc.	Negative 7 to 11 volts.	Defective: 7A8. Open or shorted: C402, T400. Shorted: C400, C400B.
4	A	540 kc.	540 kc.	Same as step 1.	Defective: LA400. Open: C401.

OSCILLATOR-TEST NOTE: Connect positive lead of high-resistance voltmeter to B–, test point B; connect prod end of negative lead through a 100,000-ohm isolating resistor to the 7A8 oscillator grid, test point D. Use suitable meter range, such as 0—50 volts. Proper operation of oscillator is indicated by negative voltage of 7 to 11 volts (measured with a 20,000-ohms-per-volt meter) throughout range of tuning control.

© John F. Rider

MODEL 49-505

ALIGNMI

TURN ON THE RADIO, AND S

DIAL—Turn tuning condensers to full-mesh position. Set dial pointer to coincide with index mark; see figure 7.

OUTPUT METER—Connect to left (output) termina J400 and chassis.

STEP	SIGNAL GENERATOR		RADIO		ADJ
	CONNECTIONS TO RADIO	DIAL SETTING	DIAL SETTING	SPECIAL INSTRUCTIONS	
1	Ground lead to B−; output lead through .1-mf. condenser to test point C of Section 4.	455 kc.	540 kc.	Adjust tuning cores, in order given, for maximum output.	TC301B— TC301A— TC300B— TC300A—
2	Radiating loop (see note below).	1600 kc.	1600 kc.	Adjust for maximum.	C
3	Same as step 2.	1500 kc.	1500 kc.	Adjust for maximum.	C40

RADIATING LOOP: Make up a six-to-eight-turn, 6-inch-diameter loop, using insulated wire; connect to signal-generator leads and place near radio loop.

SYMBOLIZATION

The components in the radio circuit are symbolized according to the types of parts and the sections of the radio in which the parts are located. The prefix letter of the symbol designates the type of part, as follows:

C—condenser	LA—loop aerial	S—switch
I—pilot lamp	LS—loud-speaker	T—transformer
L—choke or coil	R—resistor	Z—electrical assembly

The number of the symbol designates the section in which the part is located, as follows:

100-series components are in Section 1—the power supply.
200-series components are in Section 2—the audio circuits.
300-series components are in Section 3—the i-f, detector, and a-v-c circuits.
400-series components are in Section 4—the r-f and converter circuits.

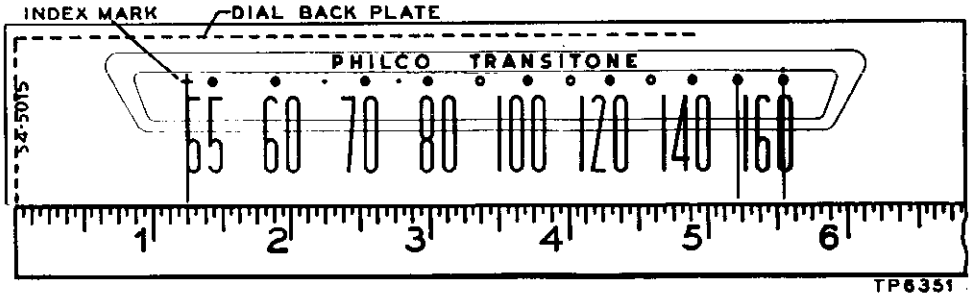

Figure 7. Calibration Measurements for Dial Backplate

©John F. Rider

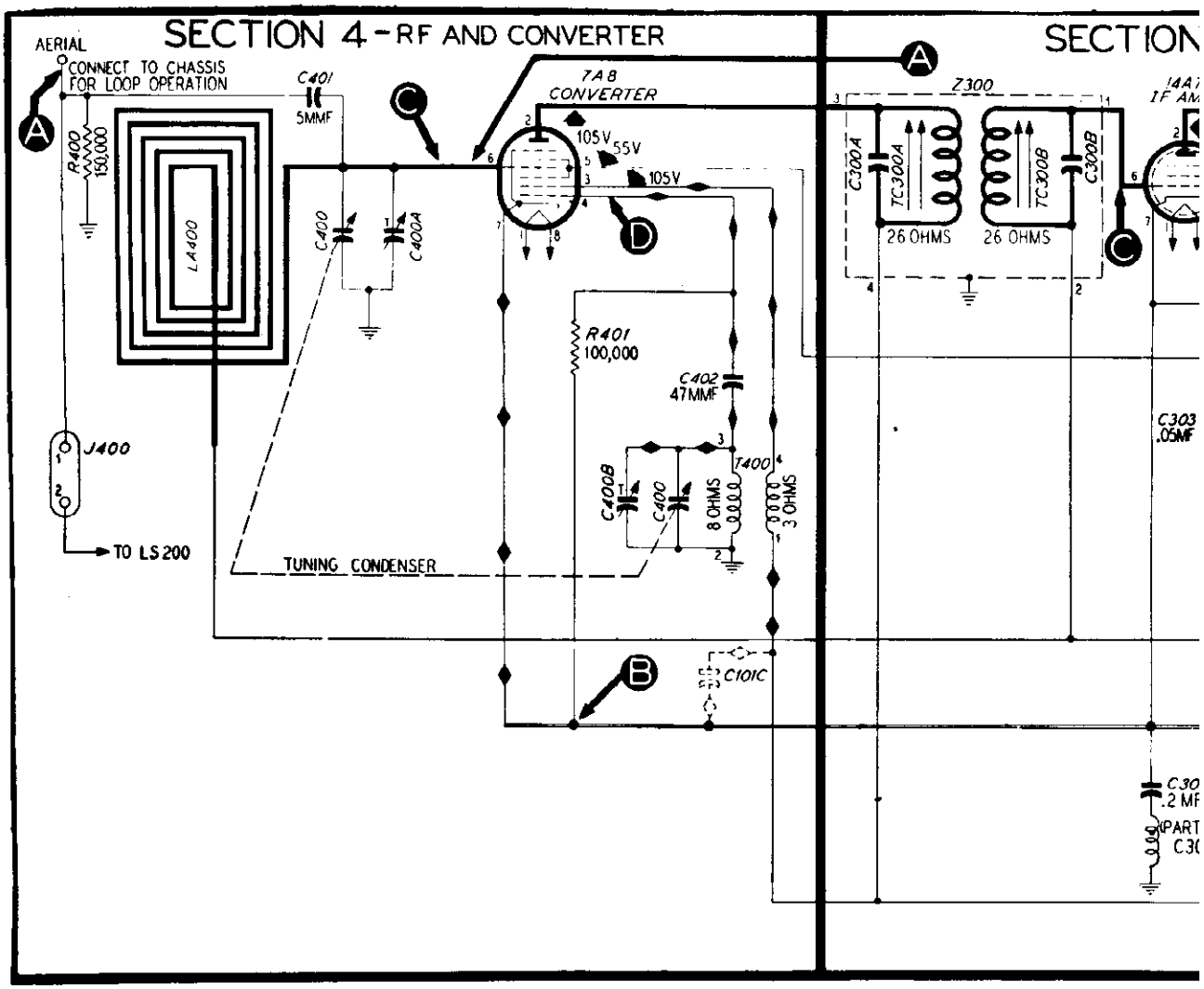

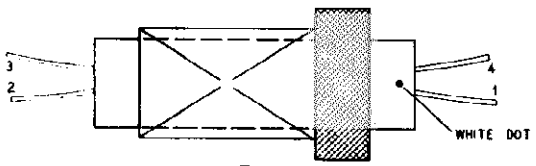

T400

RF, I F, AND AUDIO
OSC SIGNAL PATH
ALL RESISTOR VALUES IN OHMS UNLESS MARKED OTHERWISE
⊗ INDICATES LESS THAN 1 OHM

CONDENSER SYMBOLS

FIXED VARIABLE TRIMMER ELECTROLYTIC COIL WITH TUNING CORE

ALL VOLTAGES MEASURED FROM B- WITH 20,000-OHMS-PER-VOLT METER AT A LINE VOLTAGE OF 117 V.A.C.

Figure 5. Philco Radio Model 49-505, Sectio

ILCO CORP.

MODEL 49-505

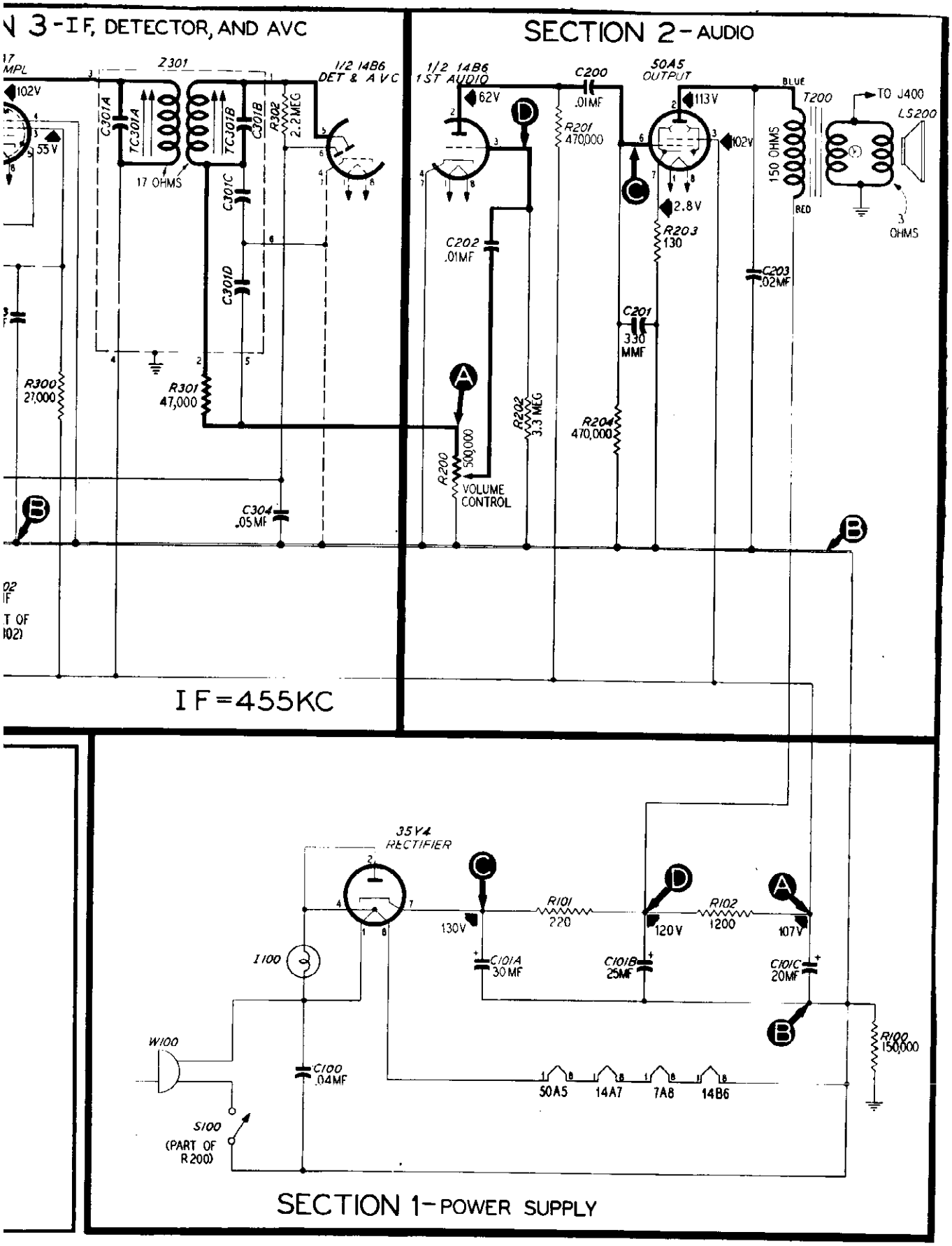

TP-6425

nalized Schematic Diagram, Showing Test Points

PROCEDURE

HE VOLUME CONTROL TO MAXIMUM

SIGNAL GENERATOR—Connect as indicated in chart. Use modulated output.

OUTPUT LEVEL—During alignment, adjust signal-generator output to hold output-meter indication below 1.25 volts.

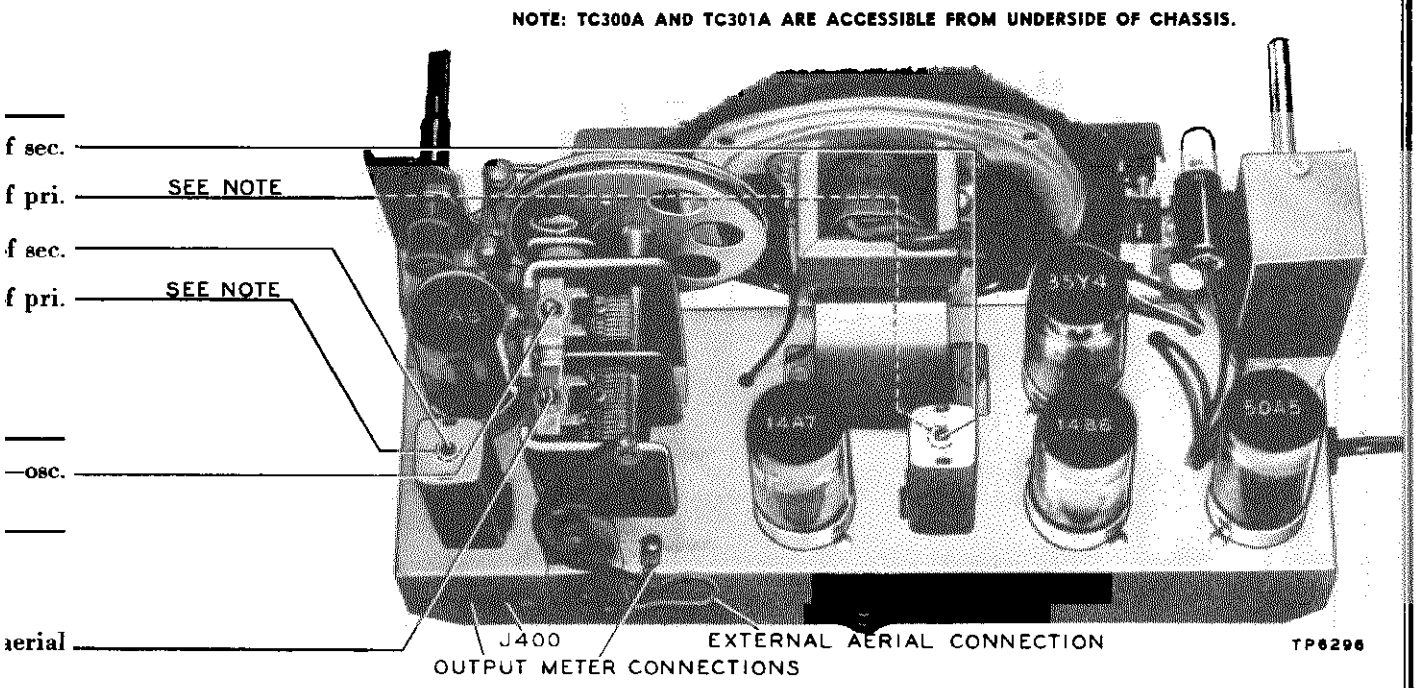

Figure 6. Top View, Showing Trimmer Locations

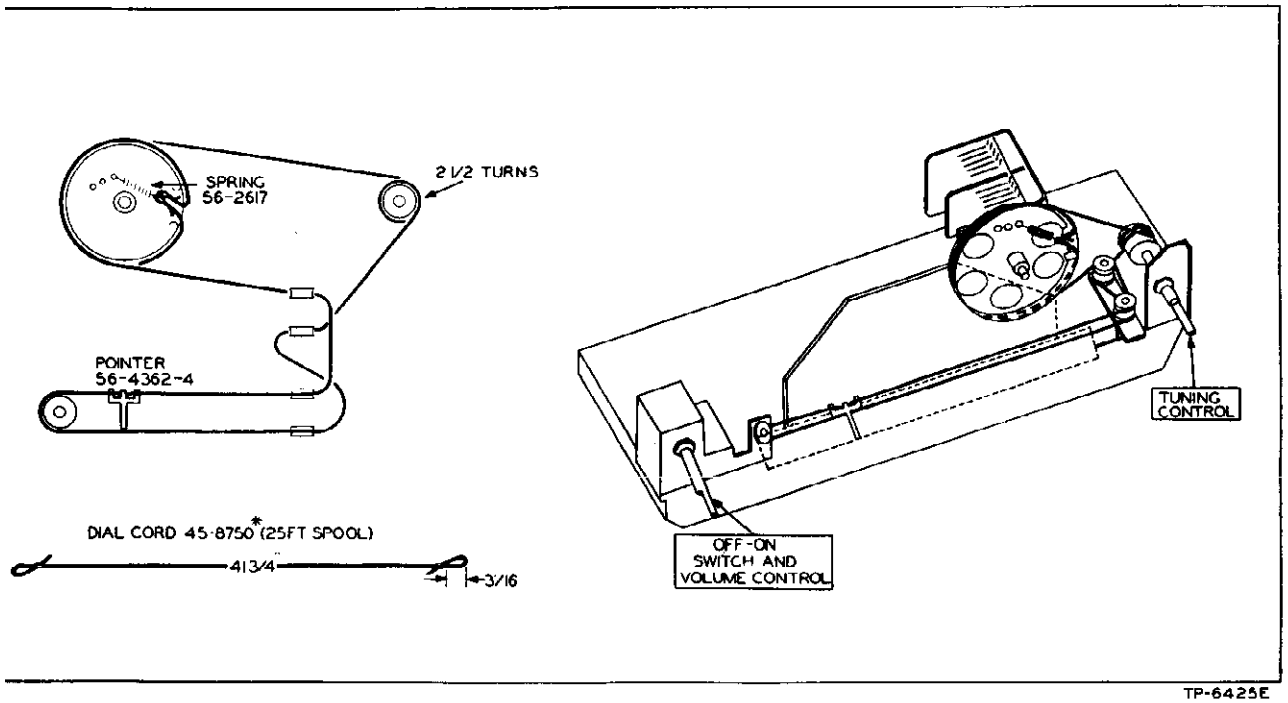

Figure 8. Drive-Cord Installation Details

REPLACEMENT PARTS LIST

NOTE: An asterisk (*) indicates a general replacement item. The part numbers of these items may not be identical with those on factory parts; also, the electrical values of some replacement items may differ from the values given in the schematic diagram and parts list. The values substituted in any case are so chosen that the operation of the radio will be either unchanged or improved. When ordering replacements, use only the "Service Part No."

SECTION 1—POWER SUPPLY

Reference Symbol	Description	Service Part No.
C100	Condenser, line filter, .04 mf	45-3500-2*
C101	Condenser, electrolytic, 3-section	30-2574*
C101A:	Condenser, filter, 30 mf	Part of C101
C101B:	Condenser, filter, 25 mf	Part of C101
C101C:	Condenser, filter, 20 mf	Part of C101
I100	Lamp, pilot	34-2068
R100	Resistor, leakage, 150,000 ohms	66-4153340*
R101	Resistor, filter, 220 ohms	66-1224340
R102	Resistor, filter, 1200 ohms	66-2124340
S100	Switch, power	Part of R200
W100	Power cord and plug	L-2183*

SECTION 2—AUDIO

C200	Condenser, blocking, .01 mf	61-0120*
C201	Condenser, by-pass, 330 mmf	62-133001001*
C202	Condenser, blocking, .01 mf	61-0120*
C203	Condenser, tone compensating, .02 mf	61-0108*
LS200	Speaker	36-1625-6
R200	Volume control, .5 megohm	45-5007*
R201	Resistor, plate load, 470,000 ohms	66-4473340*
R202	Resistor, grid load, 3.3 megohms	66-5333340*
R203	Resistor, bias, 130 ohms	66-1123340*
R204	Resistor, grid load, 470,000 ohms	66-4473340*
T200	Transformer, output	Part of LS200

SECTION 3—I-F, DET., AND A-V-C

C300A	Condenser, fixed trimmer	Part of Z300
C300B	Condenser, fixed trimmer	Part of Z300
C301A	Condenser, fixed trimmer	Part of Z301
C301B	Condenser, fixed trimmer	Part of Z301
C301C	Condenser, by-pass	Part of Z301
C301D	Condenser, by-pass	Part of Z301
C302	Condenser and choke assembly, i-f by-pass, .2 mf	30-4644
C303	Condenser, screen by-pass, .05 mf	61-0122*
C304	Condenser, a-v-c filter, .05 mf	61-0122*
R300	Resistor, screen dropping, 27,000 ohms	66-3273340
R301	Resistor, i-f filter, 47,000 ohms	66-3473340*
R302	Resistor, a-v-c filter, 2.2 megohms	66-5223340*
TC300A	Tuning core	Part of Z300

SECTION 3—I-F, DET., AND A-V-C (Continued)

Reference Symbol	Description	Service Part No.
TC300B	Tuning core	Part of Z300
TC301A	Tuning core	Part of Z301
TC301B	Tuning core	Part of Z301
Z300	Transformer, 1st i-f, including TC300A, TC300B, C300A, and C300B	32-4160-6
Z301	Transformer, 2nd i-f, including TC301A, TC301B, C301A, C301B, C301C, and C301D	32-4240

SECTION 4—R-F AND CONVERTER

C400	Condenser, tuning, 2-section	31-2727-1
C400A:	Condenser, trimmer	Part of C400
C400B:	Condenser, trimmer	Part of C400
C401	Condenser, coupling, 5 mmf	30-1224-5*
C402	Condenser, isolating, 47 mmf	30-1224-2*
LA400	Loop aerial	32-4052-24
R400	Resistor, aerial discharge, 150,000 ohms	66-4153340*
R401	Resistor, oscillator grid, 100,000 ohms	66-4103340*
T400	Transformer, oscillator	32-4263

MISCELLANEOUS

Description	Service Part No.
Baffle-and-cloth assembly	40-7525
Bracket, rear condenser mounting	56-5701FA3
Bracket, scale	56-5698FA3
Cabinet	10717
Cord, drive (25-foot spool)	45-8750*
Cover, bottom	56-5706FA3
Cover, handle	54-4596
Cover, volume control	56-5699FA3
Knob	54-4609
Pilot-lamp-socket assembly	27-6233-12
Plate, guard	54-7709
Pointer	56-4362-4FCP
Rail, pointer	56-5697FCP
Rubber mount	27-4771-1
Scale-and-backplate assembly	76-4167
Shaft assembly, drive	78-4075
Socket, tube	27-6177
Spring	56-2617
Stud, baffle	W2235-1FA9

MODEL 49-602 PHILCO CORP.

Circuit Description

Philco Model 49-602 is a portable four-tube superheterodyne providing reception on the standard-broadcast band. A high-impedance loop within the cabinet normally provides adequate signal pickup. However, provisions have been made for connecting an external aerial, if required.

The aerial circuit works directly into a 1R5 converter, where the incoming signal is converted to the 455-kc. intermediate frequency. A 1T4 is used in a single high-gain stage of i-f amplification, which employs neutralization to suppress oscillation. A 1.5-mmf. condenser, C304, feeds part of the i-f voltage, of the proper phase, back to the 1T4 grid through the tube-socket capacitance.

A 1U5 diode-pentode is used in the detector, a-v-c, and first audio circuits. The pentode section is resistance-coupled to a 3V4 pentode output amplifier, which works into a p-m speaker.

The d-c operating voltages are obtained from either a battery pack, Philco type P-361, or from a 105—120 volt, a-c or d-c power line. For power-line operation, the plate, screen, and filament voltages are provided by a power supply using a selenium rectifier, CR100.

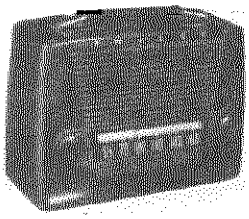

SPECIFICATIONS

CABINET	Molded Polystyrene (maroon, tan, ivory or green)
CIRCUIT	Four-tube superheterodyne
FREQUENCY RANGE	540—1600 kc.
AUDIO OUTPUT	160 milliwatts
OPERATING VOLTAGES	Battery: "B", 90 volts; "A", 7.5 volts. A.c./d.c.: 105—120 volts
POWER CONSUMPTION	Battery: "B", 13 ma. at 90 volts; "A", 50 ma. at 7.5 volts. A.c./d.c.: 25 watts
AERIAL	Built-in high-impedance loop; terminal also provided for external aerial
INTERMEDIATE FREQUENCY	455 kc.
PHILCO TUBES (4)	1R5, 1T4, 1U5, 3V4
BATTERY TYPE	Philco P-361

TP-4523

Philco TROUBLE-SHOOTING Procedure

For rapid trouble shooting, the radio circuit is divided into four sections, with test points specified for each section; these sections and test points are indicated in the schematic diagram. The trouble-shooting procedure given for each section includes a simplified test chart and a bottom view of the chassis showing the locations of the test points and the components of that section.

In each chart, the first step is a master check for determining whether trouble exists in that section, without going through the entire chart.

Failure to obtain the "NORMAL INDICATION" in any given step indicates trouble within the circuit under test.

After isolating the trouble to a single stage, the defect is located by: first, testing the tube; second, measuring tube electrode voltages; third, measuring circuit resistances; fourth, substituting condensers. The trouble revealed should be corrected before testing further.

Preliminary Checks

To avoid possible damage to the radio, the following preliminary checks should be made before turning on the power:

1. Inspect both the top and the bottom of the chassis. Make sure that all tubes are secure in the proper sockets, and look for any broken or shorted connections, burned resistors, or other obvious sources of trouble.

2. Check the total filament resistance, with the power switch turned on, the battery plug disconnected from the battery, and the change-over switch in the battery position (power-cord plug inserted in receptacle on rear of chassis). If the resistance between the A+ and A—pins on the battery plug is higher than 100 ohms, one of the tube filaments is probably open.

NOTE: If the 3V4 filament is open, check condenser C202 before replacing the tube.

3. Measure the resistance between B+ (output of selenium rectifier), test point D, and B—, test point B. See figure 1. When the ohmmeter leads are connected in the proper polarity, the highest resistance reading will be obtained. If the reading is lower than 2000 ohms, check condensers C101A and C101B for leakage or shorts.

The resistance value above, which is much lower than normal, does not represent a quality check of these condensers; it is the lowest value which will permit the rectifier to operate safely while the voltage checks of Section 1 (power supply) are performed.

© John F. Rider

TROUBLE SHOOTING

Section 1—Power Supply

Make the tests for this section wi h a d-c voltmeter. Connect the negative lead to B—, test point B; connect the positive lead to the test points indicated in the chart. The voltage readings given were taken with a 20,000-ohms-per-volt meter at a line voltage of 117 volts, a.c.

Set the volume control to minimum.

The battery pack should be replaced when the "A" voltage drops below 5 volts, or the "B" voltage drops below 60 volts.

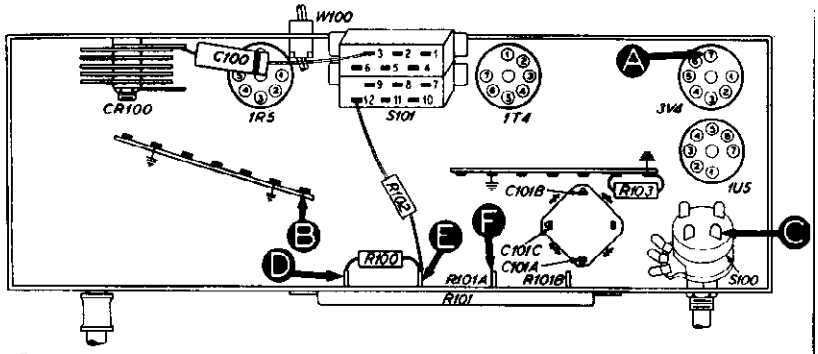

Figure 1. Bottom View, Showing Section 1 Test Points TP-5355A

If the "NORMAL INDICATION" is obtained in step 1, proceed with the tests for Section 2 (audio circuits); if not, isolate and correct the trouble in this section.

STEP	TEST POINT	NORMAL INDICATION	ABNORMAL INDICATION	POSSIBLE CAUSE OF ABNORMAL INDICATION
1(a) 1(b)	A C	7.5v 90v		Trouble in this section. Isolate by the following tests.
2	D	125v	Low voltage No voltage	Defective: CR100. Open C101A. Defective: CR100. Open: S100, S101.
3	E	120v	Low voltage No voltage	Changed resistance: R100. Leaky: C101A. Open: R100. Shorted: C101A.
4	F	65v	Low voltage No voltage	Changed resistance: R101A. Leaky: C101B. Open: R101A. Shorted: C101B.
5	A	7.5v	Low voltage High voltage No voltage	Changed resistance: R101B. Open: One or more filaments, R205*. Open: R101B, S101.
6	C	90v	Low voltage High voltage No voltage	Changed resistance: R102. Leaky: C101C. Open: R205*, T200*, S100. Open: R102, S101. Shorted: C101C.
Listening Test: Abnormal hum may be caused by open C101B, C101C, or C202*.				

*This part, located in another section, may cause abnormal indication in this section.

TROUBLE SHOOTING

Section 2—Audio Circuits

For the tests in this section, use an audio-frequency signal generator. Connect the generator ground lead to B—, test point B; connect the output lead through a .1-mf. condenser to the test points indicated in the chart.

Set the radio volume control to maximum.

If the "NORMAL INDICATION" is obtained in step 1, proceed with the tests for Section 3 (i-f, detector, and a-v-c circuits); if not, isolate and correct the trouble in this section.

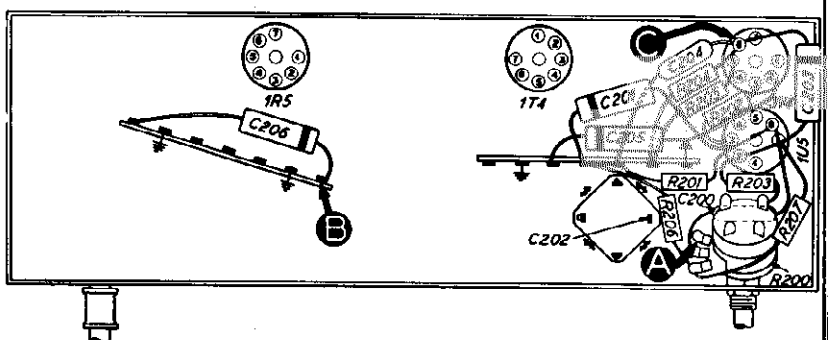

Figure 2. Bottom View, Showing Section 2 Test Points TP-5355B

STEP	TEST POINT	NORMAL INDICATION	POSSIBLE CAUSE OF ABNORMAL INDICATION
1	A	Loud, clear speaker output with moderate generator input.	Trouble in this section. Isolate by the following tests.
2	C	Clear speaker output with strong generator input.	Defective: 3V4, LS200. Open: R204, T200. Shorted: C203, C204, C205, T200.
3	A	Same as step 1.	Defective: 1U5, R200 (rotate). Open: C200, R201, R202, R203. C203. Shorted: C201, C301C*.
Listening Test: Distortion may be caused by leaky or shorted C203, or by changed resistance of R202. Distortion or strong signals may be caused by leaky or shorted C200.			

*This part, located in another section, may cause abnormal indication in this section.

MODEL 49-602 PHILCO CORP.

Section 3—I-F, Detector, And A-V-C Circuits

TROUBLE SHOOTING

For the tests in this section, use an r-f signal generator, with modulated output, set at 455 kc. Connect the generator ground lead to B—, test point B; connect the output lead through a .1-mf. condenser to the test points indicated in the chart.

Set the radio volume control to maximum.

If the "NORMAL INDICATION" is obtained in step 1, proceed with the tests for Section 4 (r-f and converter circuits); if not, isolate and correct the trouble in this section.

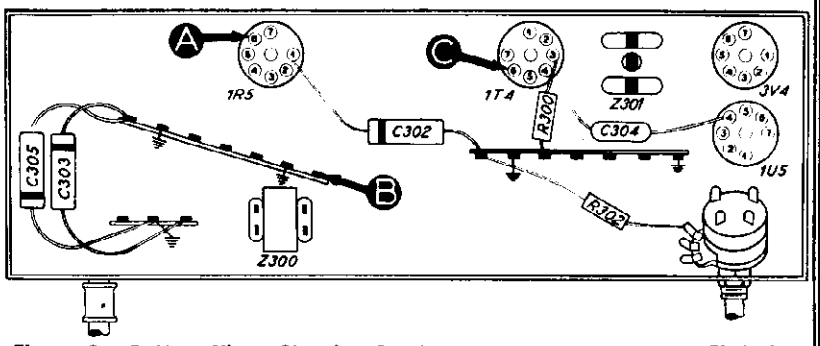

Figure 3. Bottom View, Showing Section 3 Test Points TP-5355C

To provide a complete i-f amplifier check, test point A for this section is placed at the grid of the mixer in Section 4; therefore, the effectiveness of step 1 as a master check is dependent upon the condition of certain parts in the mixer circuit. These parts are listed below under "POSSIBLE CAUSE OF ABNORMAL INDICATION."

STEP	TEST POINT	NORMAL INDICATION	POSSIBLE CAUSE OF ABNORMAL INDICATION
1	A	Loud, clear speaker output with weak generator input.	Trouble in this section. Isolate by the following tests.
2	C	Loud, clear output with moderate input.	Defective: 1T4, 1U5 (diode section). Misaligned: Z301. Open: R300, C303, L301A, R301, L301B, C301A. Shorted: C300B, C303, L301A, L301B, C301A, C301B.
3	A	Same as step 1.	Defective: 1R5*. Misaligned: Z300. Open: C300A, L300A, L300B, C300B, T400*. Shorted: C400A*, C400B*, C300A, L300A, L300B, C300B.

*This part, located in another section, may cause abnormal indication in this section.

Section 4—R-F And Converter Circuits

TROUBLE SHOOTING

For the tests in this section, with the exception of the oscillator test, use an r-f signal generator with modulated output. Connect the generator ground lead to B—, test point B; connect the output lead through a .1-mf. condenser to the test points indicated in the chart.

Set the radio volume control to maximum. Set the tuning control and signal-generator frequency as indicated in the chart.

If the "NORMAL INDICATION" is obtained in step 1, further tests should be unnecessary; if not, isolate and correct the trouble in this section. If the trouble is not revealed by the tests for this section, check the alignment.

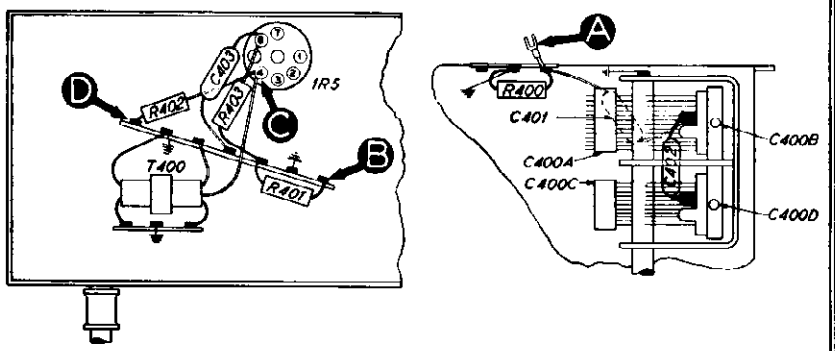

Figure 4. Bottom View, Showing Section 4 Test Points TP-5355D

STEP	TEST POINT	SIGNAL GEN. FREQUENCY	RADIO TUNING	NORMAL INDICATION	POSSIBLE CAUSE OF ABNORMAL INDICATION
1	A	1000 kc.	Tune to signal.	Loud, clear speaker output with weak generator input.	Trouble in this section. Isolate by the following tests.
2	C to D (Osc. test; see note below.)		Rotate through range.	Negative 5 to 10 volts.	Defective: 1R5. Open: R402, T400. Shorted: C402, C400C, C400D.
3	A	1000 kc.	Tune to signal.	Same as step 1.	Open: C401, C403, R401, R403, LA400.

© John F. Rider

ALIGNM

DIAL—Calibration and pointer-index measurements are shown in figure 7. With tuning condenser fully meshed, set pointer to index mark.

RADIO CONTROLS—Set volume control to maximum.

OUTPUT METER—Connect across voice-coil terminals.

SIGNAL GENERATOR—Use modulated output.

STEP	SIGNAL GENERATOR		RADIO		
	CONNECTION TO RADIO	DIAL SETTING	DIAL SETTING	SPECIAL INSTRUCTIONS	
1	Ground lead to B— (test point B in figure 4). Positive lead through .05-mf. condenser to external-aerial lead. Make sure that radio loop aerial is connected to radio.	455 kc.	Tuning condenser fully meshed.	Adjust, in order given, for maximum output.	C301A TC30(TC30
2.	Radiating loop (see note below).	1600 kc.	1600 kc.	Adjust for maximum output.	
3	Same as step 2.	1500 kc.	1500 kc.	Adjust for maximum output while rocking tuning condenser.	

RADIATING LOOP: Make up a 6—8-turn, 6-inch-diameter loop, using insulated wire; connect to signal-leads and place near radio loop aerial. Make sure that radio loop aerial is connected to radio.

CALIBRATING DIAL BACKPLATE

When the radio chassis has been removed from the cabinet, dial calibration an points may be marked on the dial (chassis) backplate at the end of the pointer wi The method of measuring for these points is illustrated in figure 7.

With the tuning gang fully meshed, the pointer should be adjusted on the dia to coincide with the index mark.

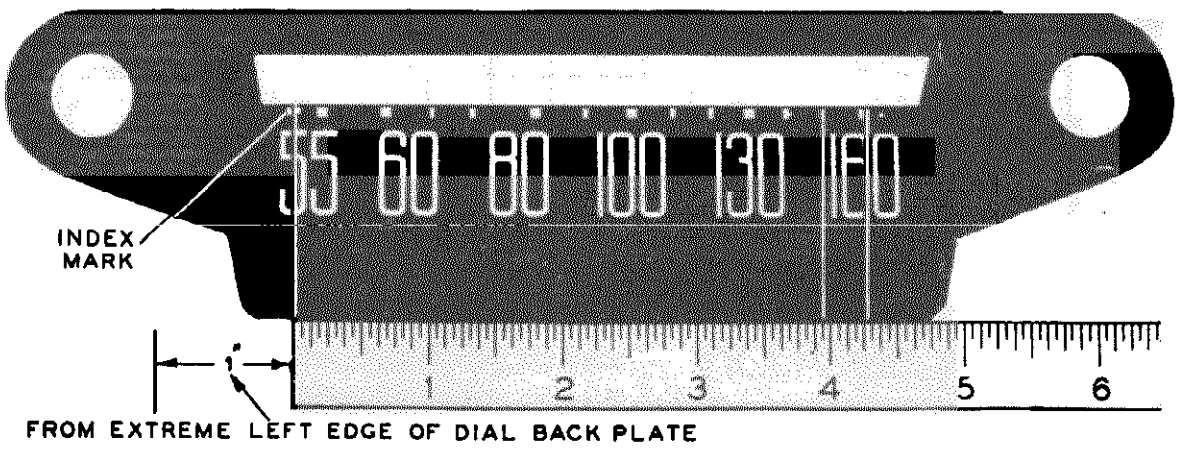

Figure 7. Dial-Backplate Calibration Measurements

TP-5776

©John F. Rider

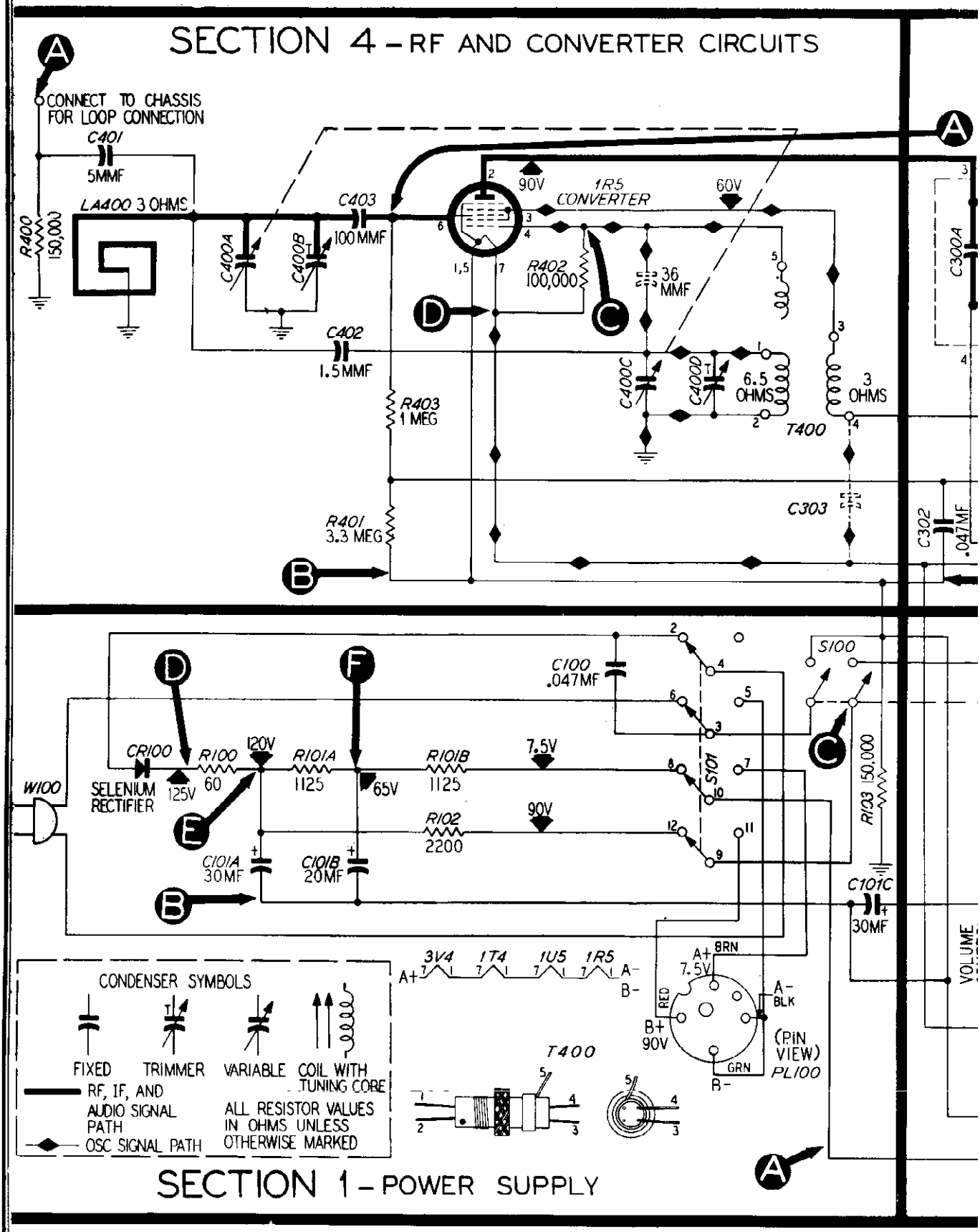

Figure 5. Philco Model 49-602, Sectiona

OSCILLATOR TEST: Connect the positive lead of a high-resistance voltmeter to test point D; connect the prod end of the negati such as 0—10 volts. Proper operation of the oscillator is indicated by negative voltage within the range given in the chart (measu

SECTION 3 — IF, DETECTOR AND AVC CIRCUITS

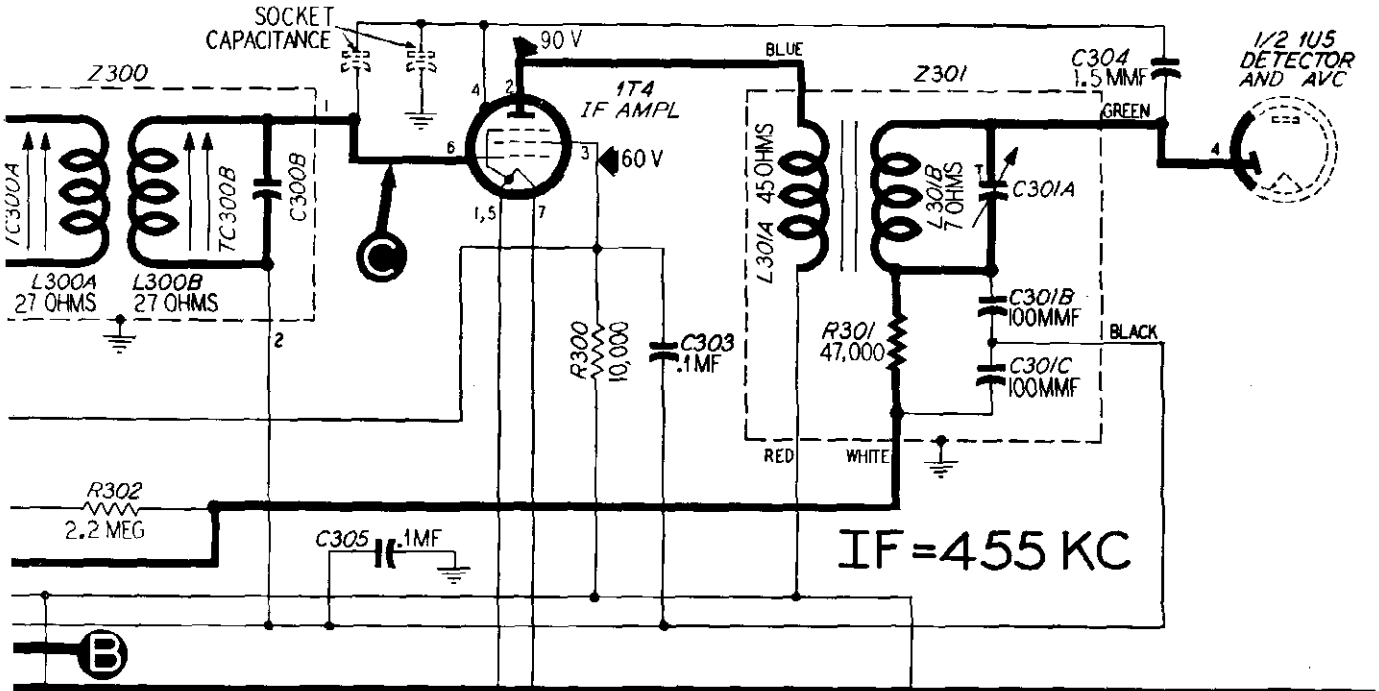

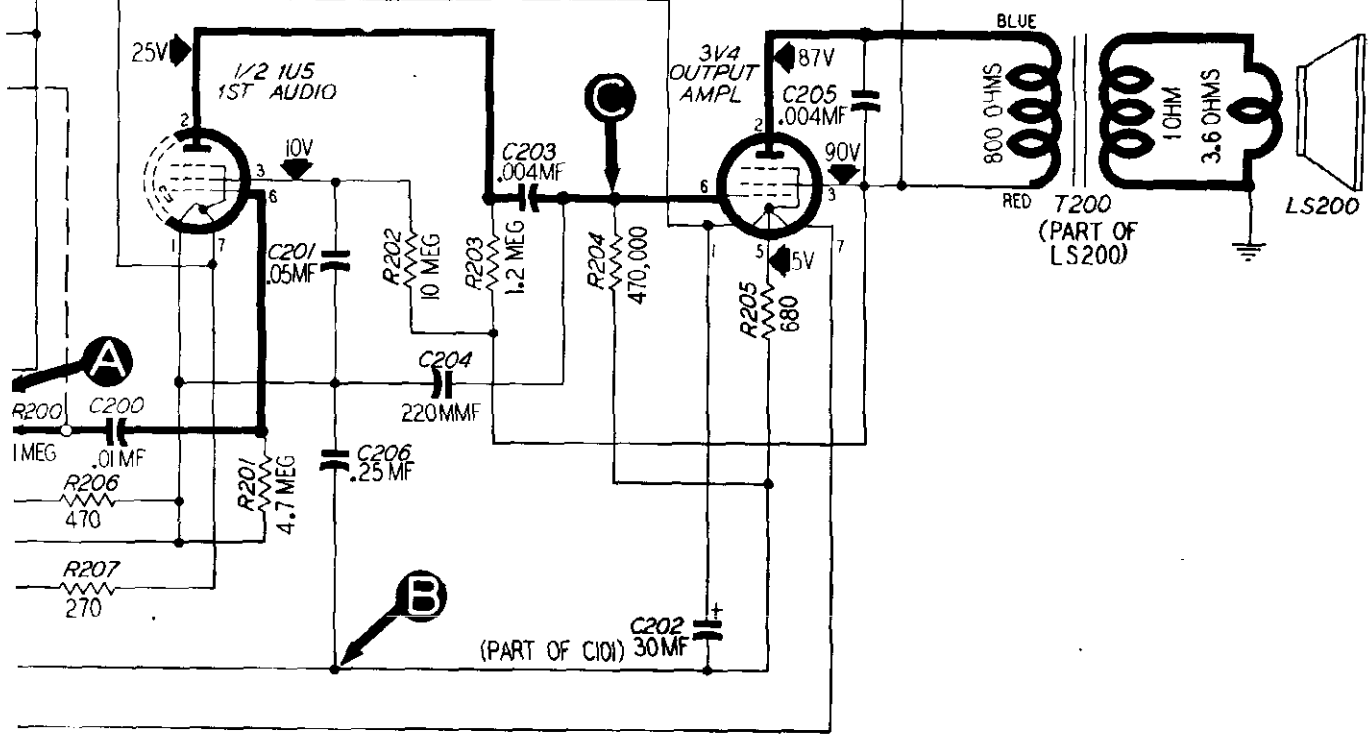

SECTION 2 — AUDIO CIRCUITS

Schematic Diagram, Showing Test Points

ad through a 100,000-ohm isolating resistor to the oscillator grid (pin 4 of the 1R5), test point C. Use a suitable meter range, vith a 20,000-ohms-per-volt meter) throughout the tuning range.

IT PROCEDURE

)UTPUT LEVEL—During alignment, adjust signal-generator output to maintain output-meter indication below 5 volt.

SPECIAL NOTE—The orientation of the loop with respect to the chassis is critical for correct tracking. During alignment, with the cabinet back (containing the loop) laid down on the bench, the chassis should be laid on its back, in approximately its normal relation to the loop.

ST

d i-f sec.

st i-f sec.

lst i-f pri.

)D—osc.

3—aerial

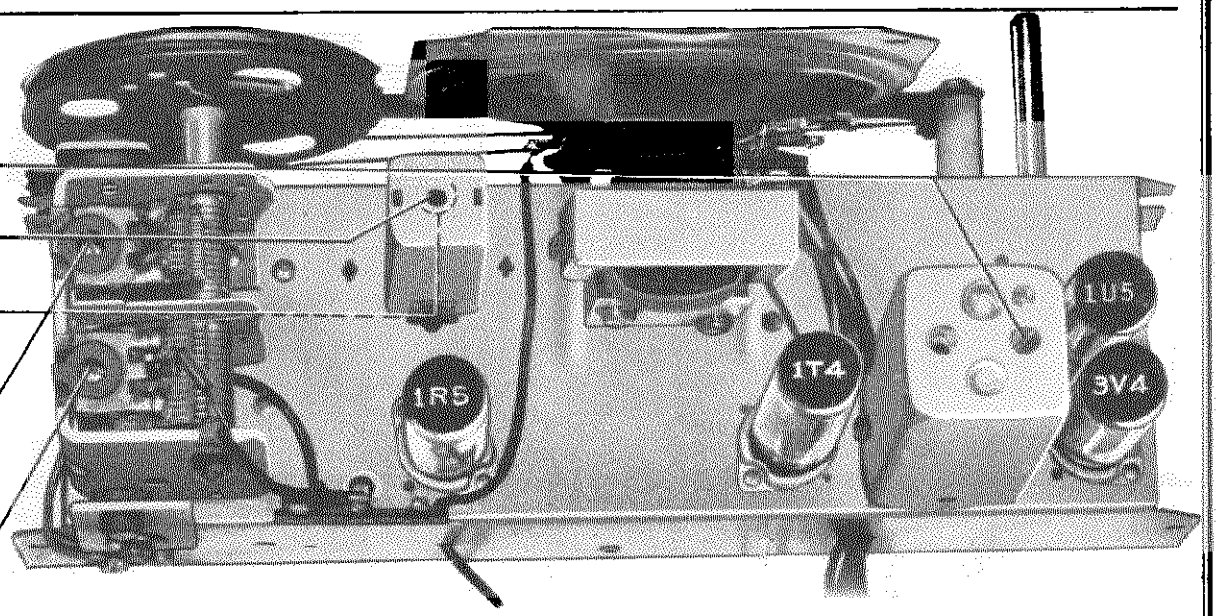

Figure 6. Top View, Showing Trimmer Locations

rator

ıment
encil.

cord

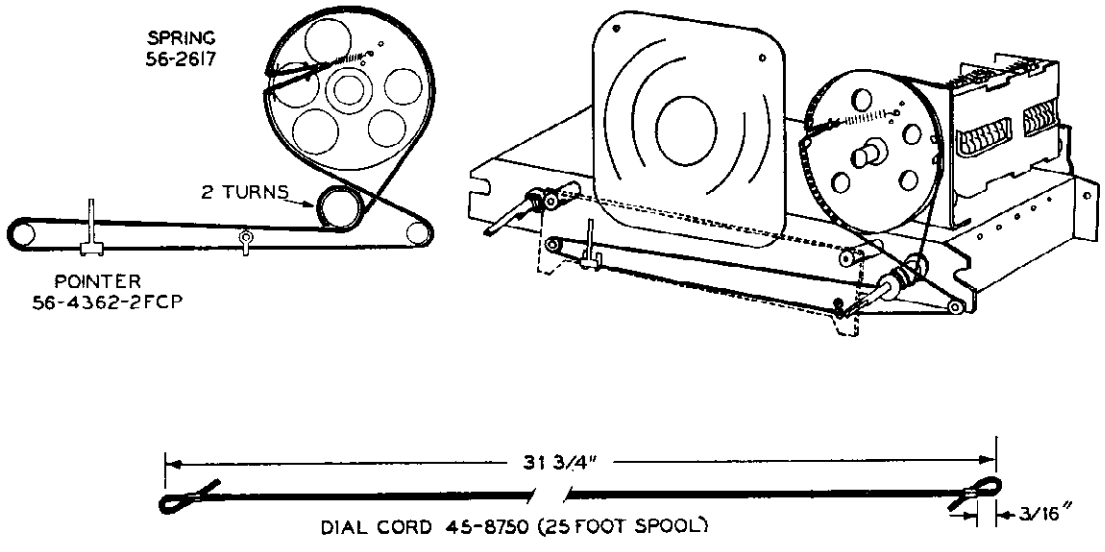

Figure 8. Drive-Cord Installation Details

TP-535

PHILCO CORP. MODEL 49-602

REPLACEMENT PARTS LIST

SECTION 1
POWER SUPPLY

Reference Symbol	Description	Service Part No.
C100	Condenser, line filter, .047 mf.	61-0122*
C101	Condenser, electrolytic, 4-section	30-2568-21
C101A	Condenser, filter, 30 mf., 150v	Part of C101
C101B	Condenser, filter, 20 mf., 150v	Part of C101
C101C	Condenser, filter, 30 mf., 150v	Part of C101
CR100	Rectifier, selenium	34-8003-1
PL100	Battery-cable-and-plug assembly	41-3712-3
R100	Resistor, current limiting, 60 ohms, 1 watt	33-1334
R101	Resistor, 2-section	33-3431-5
R101A	Resistor, filament-dropping, 1125 ohms, 3 watts	Part of R101
R101B	Resistor, filament-dropping, 1125 ohms, 3 watts	Part of R101
R102	Resistor, filter, 2200 ohms	66-2223340*
R103	Resistor, leakage 150,000 ohms	66-4153340*
S100	Switch, on-off	Part of 33-5538-28
S101	Switch, change-over	42-1821
W100	Line-cord-and-plug assembly	L2183*

SECTION 2
AUDIO CIRCUITS

C200	Condenser, d-c blocking, .01 mf.	61-0120*
C201	Condenser, screen by-pass, .05 mf.	61-0122*
C202	Condenser, filter, 30 mf., 25v	Part of 30-2568-21
C203	Condenser, d-c blocking, .004 mf.	61-0179*
C204	Condenser, r-f by-pass, 220 mmf.	62-122001001*
C205	Condenser, tone compensation, .004 mf.	61-0179*
C206	Condenser, by-pass, .25 mf.	61-0125*
LS200	Loud-speaker, p-m	36-1627-1
R200	Volume control, 1 megohm	33-5538-28
R201	Resistor, grid return, 4.7 megohms	66-5473340*
R202	Resistor, screen dropping, 10 megohms	66-6103340*
R203	Resistor, plate load, 1.2 megohms	66-5123340*
R204	Resistor, grid return, 470,000 ohms	66-4473340*
R205	Resistor, bias, 680 ohms	66-1683340*
R206	Resistor, diode return, 470 ohms	66-1473340*
R207	Resistor, diode return, 270 ohms	66-1273340*
T200	Transformer, output	Part of LS200

SECTION 3
I-F, DETECTOR, AND A-V-C CIRCUITS

C300A	Condenser, shunt	Part of Z300
C300B	Condenser, shunt	Part of Z300
C301A	Condenser, trimmer	Part of Z301
C301B	Condenser, filter	Part of Z301
C301C	Condenser, filter	Part of Z301
C302	Condenser, a-v-c filter, .047 mf.	61-0122
C303	Condenser, screen by-pass, .1 mf.	61-0113*
C304	Condenser, neutralizing, 1.5 mmf.	30-1221-3

SECTION 3 (Continued)
I-F, DETECTOR, AND A-V-C CIRCUITS

C305	Condenser, i-f by-pass, .1 mf.	30-4527
L300A	Transformer primary, 1st i-f	Part of Z300
L300B	Transformer secondary, 1st i-f	Part of Z300
L301A	Transformer primary, 2nd i-f	Part of Z301
L301B	Transformer secondary, 2nd i-f	Part of Z301
R300	Resistor, screen dropping, 10,000 ohms	66-3103340*
R301	Resistor, filter, 47,000 ohms (Part of Z301)	66-3473340*
R302	Resistor, a-v-c filter, 2.2 megohms	66-5223340*
Z300	Transformer, 1st i-f	32-4160-4
Z301	Transformer, 2nd i-f	32-3987-2*

SECTION 4
R-F AND CONVERTER CIRCUITS

C400	Condenser, tuning gang	31-2727-2
C400A	Condenser, tuning, aerial section	Part of C400
C400B	Condenser, trimmer, aerial	Part of C400
C400C	Condenser, tuning, oscillator section	Part of C400
C400D	Condenser, trimmer, oscillator	Part of C400
C401	Condenser, isolating, 5 mmf.	30-1224-5*
C402	Condenser, neutralizing, 1.5 mmf.	30-1221-3
C403	Condenser, d-c blocking, 100 mmf.	60-10105407*
LA400	Loop aerial	32-4274
R400	Resistor, leakage, 150,000 ohms	66-4153340*
R401	Resistor, grid return, 3.3 megohms	66-5333340*
R402	Resistor, oscillator bias, 100,000 ohms	66-4103340*
R403	Resistor, a-v-c divider, 1 megohm	66-5103340*
T400	Transformer, oscillator	32-4282

MISCELLANEOUS

Description	Service Part No.
Cabinet and Cabinet Parts	
Cabinet (M), maroon	10703
Cabinet (T), tan	10703A
Cabinet (I), ivory	10703B
Cabinet (G), green	10703C
Handle	76-3742
Lever assembly, switch	76-3666
Terminal, aerial strip	76-3674
Dial-Scale Hardware	
Dial-backplate assembly	58-5425FCP
Drive cord, 25-foot spool	45-8750*
Pointer	56-4382-2FCP
Spring, drive-cord	56-2617
Knob (M)	54-4557
Knob (T)	54-4557-1
Knob (I)	54-4557-2
Knob (G)	54-4557-3
Socket, tube, miniature	27-8203
Spring, voltage change-over switch	28-9010FA1—Part of 76-3666

MODEL 49-605 PHILCO CORP.

Circuit Description

Philco Model 49-605 is a six-tube, portable, superheterodyne radio, operating on a self-contained battery or a standard power source of a.c. or d.c. High sensitivity, selectivity, and power output are outstanding features. The frequency range is 540—1600 kc. The built-in loop aerial is adequate in most localities. Where signal strength is low, an external aerial may be used.

The tuned r-f stage, using a 1T4, provides a high signal-to-noise ratio. The converter employs a type 1R5 pentagrid converter.

The i-f stage, using another 1T4, has double-tuned transformers operating at 265 kc.; the voltage gain of this stage is increased considerably by positive screen feedback taken from the tertiary winding of the second i-f transformer.

The diode section of the 1U5 provides detection and a-v-c voltage. The pentode section functions as the first audio stage; this stage is resistance-coupled to the 3LF4 output amplifier. The speaker is a permanent-magnet dynamic type.

For a-c or d-c power-line operation, plate, screen, and filament power is supplied through the 117Z3 rectifier.

Philco TROUBLE-SHOOTING Procedure

For rapid trouble shooting, the radio circuit is divided into four sections, with test points specified for each section; these sections and test points are indicated in the schematic diagram. The trouble-shooting procedure given for each section includes a simplified test chart and a bottom view of the chassis showing the locations of the test points and components of that section.

In each chart, the first step is a master check for determining whether trouble exists in that section, without going through the entire test procedure.

Failure to obtain the "NORMAL INDICATION" in any given step indicates trouble within the circuit under test.

After isolating the trouble to a single stage, the defect is located by: first, testing the tube; second, measuring tube electrode voltages; third, measuring circuit resistances; fourth, substituting condensers. The trouble revealed should be corrected before testing further.

Preliminary Checks

To avoid possible damage to the radio, the following preliminary checks should be made before turning on the power:

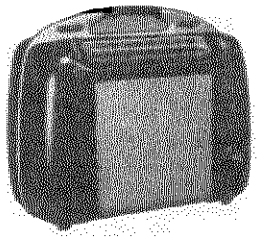

MODEL 49-605

SPECIFICATIONS

CABINET	2-piece plastic, metal frame
CIRCUIT	6-tube superheterodyne
FREQUENCY RANGE	540—1600 kc.
AUDIO OUTPUT	160 milliwatts
OPERATING VOLTAGES	Battery: "B", 90 volts; "A", 9 volts. A.c./d.c.: 105—120 volts
POWER CONSUMPTION	Battery: "B", 12 ma. at 90 volts; "A", 50 ma. at 9 volts. A.c./d.c.: 25 watts
AERIAL	Built-in loop; terminal also provided for external aerial
INTERMEDIATE FREQUENCY	265 kc.
PHILCO TUBES (6)	1T4 (2), 1R5, 1U5, 3LF4, 117Z3
BATTERY TYPE	Philco P-841A

TP-5854A

1. Inspect the top and bottom of the chassis. Make sure that all tubes are secure in the proper sockets, and look for any broken or shorted connections, burned resistors, or other obvious indications of trouble.

2. Check the total filament resistance by measuring between the A+ and A– pins on the battery-cable plug (disconnected from battery) while holding down the change-over switch, S100. If the resistance is higher than 100 ohms, one of the tube filaments is probably open.

3. With the change-over switch in the a.c./d.c. position, measure the resistance between B+ (pin 6 of the 117Z3 rectifier) and B–, test point B. When the ohmmeter test leads are connected in the proper polarity, the highest resistance reading will be obtained. If the reading is lower than 1100 ohms, check condensers C100A, C100B, and C100C for leakage or shorts.

The resistance value above, which is much lower than normal, is not intended as a quality check of these condensers; the value given is the lowest at which the rectifier will operate safely while the voltage tests of Section 1 (power supply) are performed.

©John F. Rider

PHILCO CORP. MODEL 49-605

Section 1

TROUBLE SHOOTING

POWER SUPPLY

For the tests in this section, use a d-c volt meter. Connect the negative lead to B–, test point B; connect the positive lead to the test points indicated in the chart. The voltage readings given were taken with a 20,000-ohms-per-volt meter, at a line voltage of 117 volts, a.c.

Turn on the power, and set the volume control to minimum.

If the "NORMAL INDICATION" is obtained in step 1, proceed with the tests for Section 2 (audio circuits); if not, isolate and correct the trouble in this section.

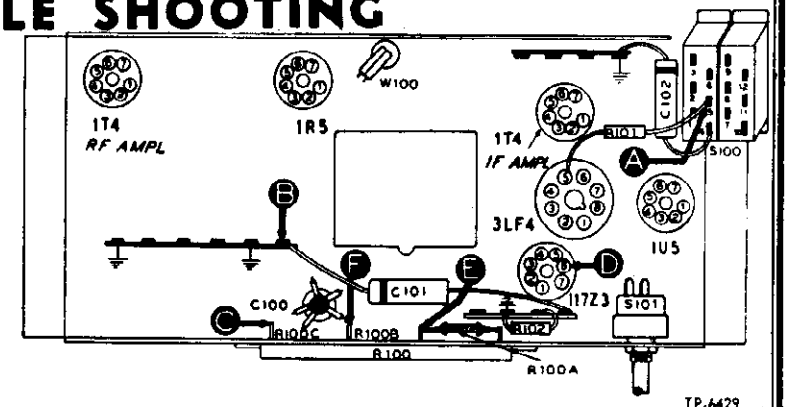

FIGURE 1. BOTTOM VIEW, SHOWING SECTION 1 TEST POINTS

STEP	TEST POINT	NORMAL INDICATION	ABNORMAL INDICATION	POSSIBLE CAUSE OF ABNORMAL INDICATION
1	A C	80 volts 8.5 volts		Trouble in this section. Isolate by the following tests.
2	D	105 volts	High voltage. Low voltage. No voltage.	Open: R100A, R100B, R100C, R101, T200*. Defective: S100, S101. Defective: 117Z3. Leaky: C100A. Leaky or shorted: C100B, C100C, C100D. Defective: 117Z3, S100, S101, W100.
3	E	99 volts	Low voltage. No voltage.	Defective: R100A. Leaky: C100A. Shorted: C100B, C100C, C100D. Open: R100A. Shorted: C100A.
4	F	55 volts	Low voltage. No voltage.	Defective: R100B. Shorted: C100C, C100D. Leaky: C100B. Open: R100B. Shorted: C100B.
5	A	80 volts	Low voltage. No voltage.	Defective: R101. Leaky: C100C. Open: R101. Shorted: C100C.
6	C	8.5 volts	High voltage. Low voltage. No voltage.	Defective: Any tube, R207*, S100, S101. Leaky: C100D. Defective: R100C. Open: R100C. Shorted: C100D.
Listening Test: Distortion or abnormal hum may be caused by open C100B, C100C, or C100D.				
* This part, located in another section, may cause abnormal indication in this section.				
BATTERY VOLTAGE: Replace battery when (with radio turned on) "B" voltage falls below 60 volts, or "A" voltage falls below 7.2 volts.				

Section 2

TROUBLE SHOOTING

AUDIO

For the tests in this section, use an audio-frequency signal generator. Connect the generator ground lead to B–, test point B; connect the output lead through a .1-mf. condenser to the test points indicated in the chart.

Set the radio volume control to maximum. Adjust the signal-generator output as required for each step.

If the "NORMAL INDICATION" is obtained in step 1, proceed with the tests for Section 3 (i-f, detector, and a-v-c circuits); if not, isolate and correct the trouble in this section.

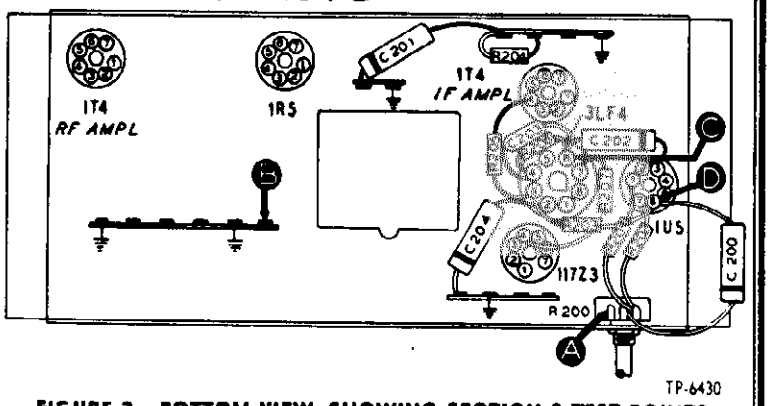

FIGURE 2. BOTTOM VIEW, SHOWING SECTION 2 TEST POINTS

STEP	TEST POINT	NORMAL INDICATION	POSSIBLE CAUSE OF ABNORMAL INDICATION
1	A	Loud, clear signal with weak signal input.	Trouble in this section. Isolate by the following tests.
2	C	Clear, signal with strong signal input.	Defective: 3LF4, LS200. Open: T200, R207, R206. Shorted: C203, C204.
3	D	Loud, clear signal with weak signal input.	Defective: 1U5. Open: C202, C201, R205, R204, R203. Shorted or leaky: C202, C201.
4	A	Loud, clear signal with weak signal input.	Defective: R200. Open: C200, R201, R202.
Listening Test: Distortion on strong signals may be caused by shorted or leaky C200.			

Section 3 TROUBLE SHOOTING

I-F, DETECTOR, AND A-V-C

For the tests in this section, use an r-f signal generator, with modulated output, set at 265 kc. Connect the generator ground lead to B–, test point B; connect the output lead through a .1-mf. condenser to the test points indicated in the chart.

Set the radio volume control to maximum.

If the "NORMAL INDICATION" is obtained in the first step, proceed with the tests for Section 4 (r-f and converter circuits); if not, isolate and correct the trouble in this section.

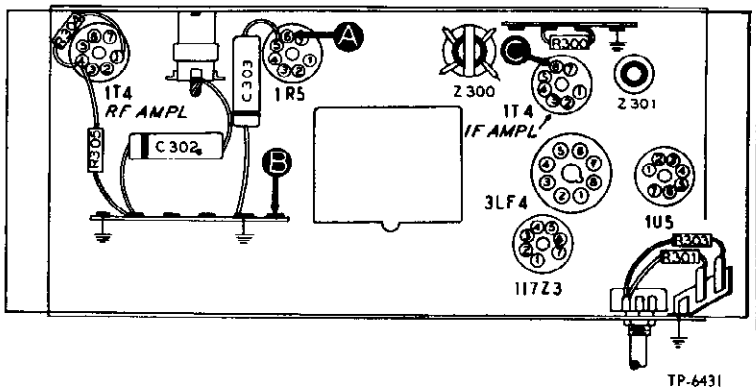

TP-6431

FIGURE 3. BOTTOM VIEW, SHOWING SECTION 3 TEST POINTS

Since the circuit location of test point A for this section is the same as that of test point C for Section 4, the effectiveness of step 1 as a master check is dependent upon the condition of certain parts in Section 4; these parts are listed below under "POSSIBLE CAUSE OF ABNORMAL INDICATION."

STEP	TEST POINT	NORMAL INDICATION	POSSIBLE CAUSE OF ABNORMAL INDICATION
1	A	Loud, clear signal with weak signal input.	Trouble in this section. Isolate by the following tests.
2	C	Clear signal with strong signal input.	Defective: 1T4. Misaligned: Z301. Open: R300, C302, Z301. Shorted or leaky: C302. Shorted: Z301.
3	A	Loud, clear signal with weak signal input.	Defective: 1R5*. Misaligned: Z300. Shorted: C406*, Z300. Open: Z300.

* This part, located in another section, may cause abnormal indication in this section.

Section 4 TROUBLE SHOOTING

R-F AND CONVERTER

For the tests in this section, with the exception of the oscillator test, use an r-f signal generator with modulated output. Connect the generator ground lead to B–, test point B; connect the output lead through a .1-mf. condenser to the test points indicated in the chart.

Set the radio volume control to maximum.

Set the radio and signal-generator dials as indicated in the chart.

If the "NORMAL INDICATION" is not obtained in step 1, isolate the trouble by following the remaining steps.

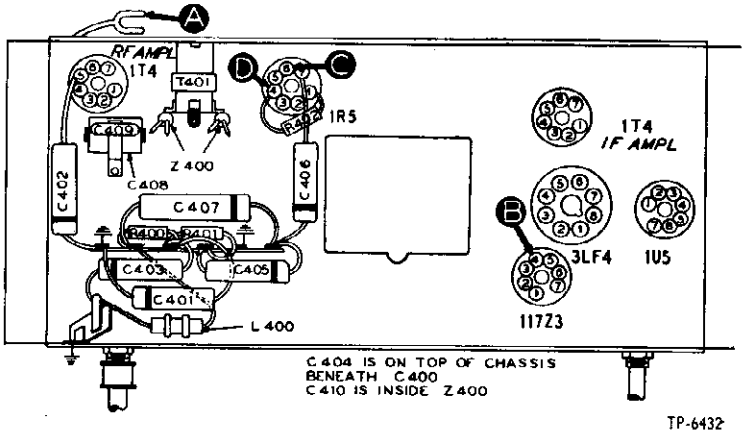

TP-6432

FIGURE 4. BOTTOM VIEW, SHOWING SECTION 4 TEST POINTS (Location of T400 shown in figure 6.)

STEP	TEST POINT	DIAL SETTINGS		NORMAL INDICATION	POSSIBLE CAUSE OF ABNORMAL INDICATION
		SIG. GEN.	RADIO		
1	A	1000 kc.	1000 kc.	Loud, clear signal with weak signal input.	Trouble in this section. Isolate by the following tests.
2	C	1000 kc.	1000 kc.	Clear signal with strong signal input.	Defective: 1R5. Open: C405, C406. Trouble in oscillator circuit.
3	B to D (Osc. test; see note below.)		Rotate tuning control.	Negative 4 to 8 volts.	Defective: 1R5 (osc. section). Open: R402, T400. Shorted: C408, C409, C404, C400, C400C, T400.
4	A	1000 kc.	1000 kc.	Loud, clear signal with weak signal input.	Defective: 1T4. Shorted: C400, C400A, C400B, T400, Z400, C401, C402, C403. Open: R400, R401, T400, Z400.

MODEL 49-605

PHILC

ALIGNMENT

THE ALIGNMENT SHOULD BE MADE WITH THE RADIO II

DIAL—Turn tuning condensers to full-mesh position. Set dial pointer to coincide with index mark at low-frequency end of dial (see figure 7).

OUTPUT METER—Connect between chassis and v coil terminal on output transformer, T200.

STEP	SIGNAL GENERATOR		RADIO		ADJU
	CONNECTIONS TO RADIO	DIAL SETTING	DIAL SETTING	SPECIAL INSTRUCTIONS	
1	Ground lead to lug on T400 (see figure 6); output lead to ext. aerial lug.	265 kc.	Set at index mark.	Turn C300B fully tight, then adjust trimmers, in order given, for maximum output.	C3 C3 C3 C3
2	Radiating loop (see note below).	1600 kc.	1600 kc.	Adjust for maximum.	C4
3	Same as step 2.	580 kc.	580 kc.	Adjust for maximum while rocking tuning control.	(
4	Same as step 2.	1600 kc.	1600 kc.	Adjust for maximum.	C4
5	Same as step 2.	1500 kc.	1500 kc.	Adjust for maximum.	C4
6	Same as step 2.	1500 kc.	1500 kc.	Adjust for maximum.	C4
7	Repeat steps 3, 4, 5, and 6 until no further improvement is obtained.				

RADIATING LOOP: Make up a six-to-eight-turn, 6-inch diameter loop, using insulated wire; connect to signal-generator leads place near radio loop.

SYMBOLIZATION

The components in the radio circuit are symbolized according to the types of parts and the sections of the radio in which the are located. The prefix letter of the symbol designates the type of part, as follows:

C—condenser
I—pilot lamp
L—choke or coil
LA—loop aerial
LS—loud-speaker
R—resistor
S—switch
T—transformer
Z—electrical assembly

The number of the symbol designates the section in which the part is located, as follows:
100-series components are in Section 1—the power supply
200-series components are in Section 2—the audio circuits
300-series components are in Section 3—the i-f amplifier, detector, and a-v-c circuits
400-series components are in Section 4—the r-f and converter circuits

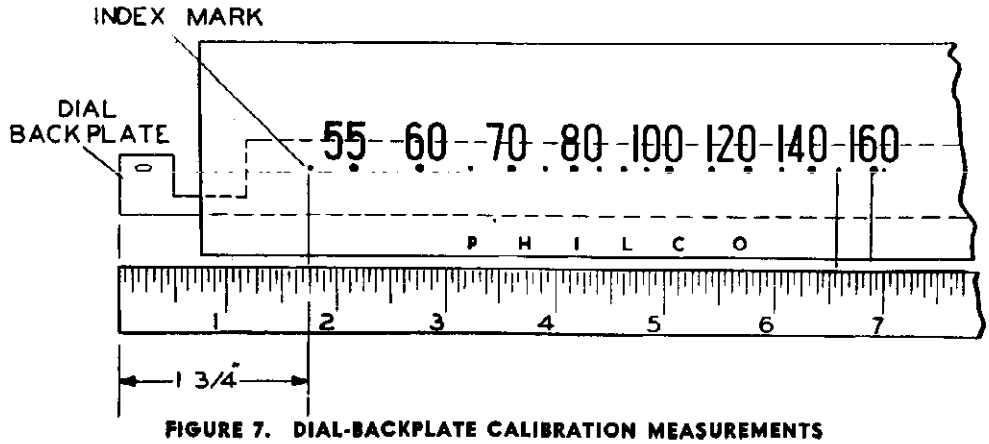

FIGURE 7. DIAL-BACKPLATE CALIBRATION MEASUREMENTS

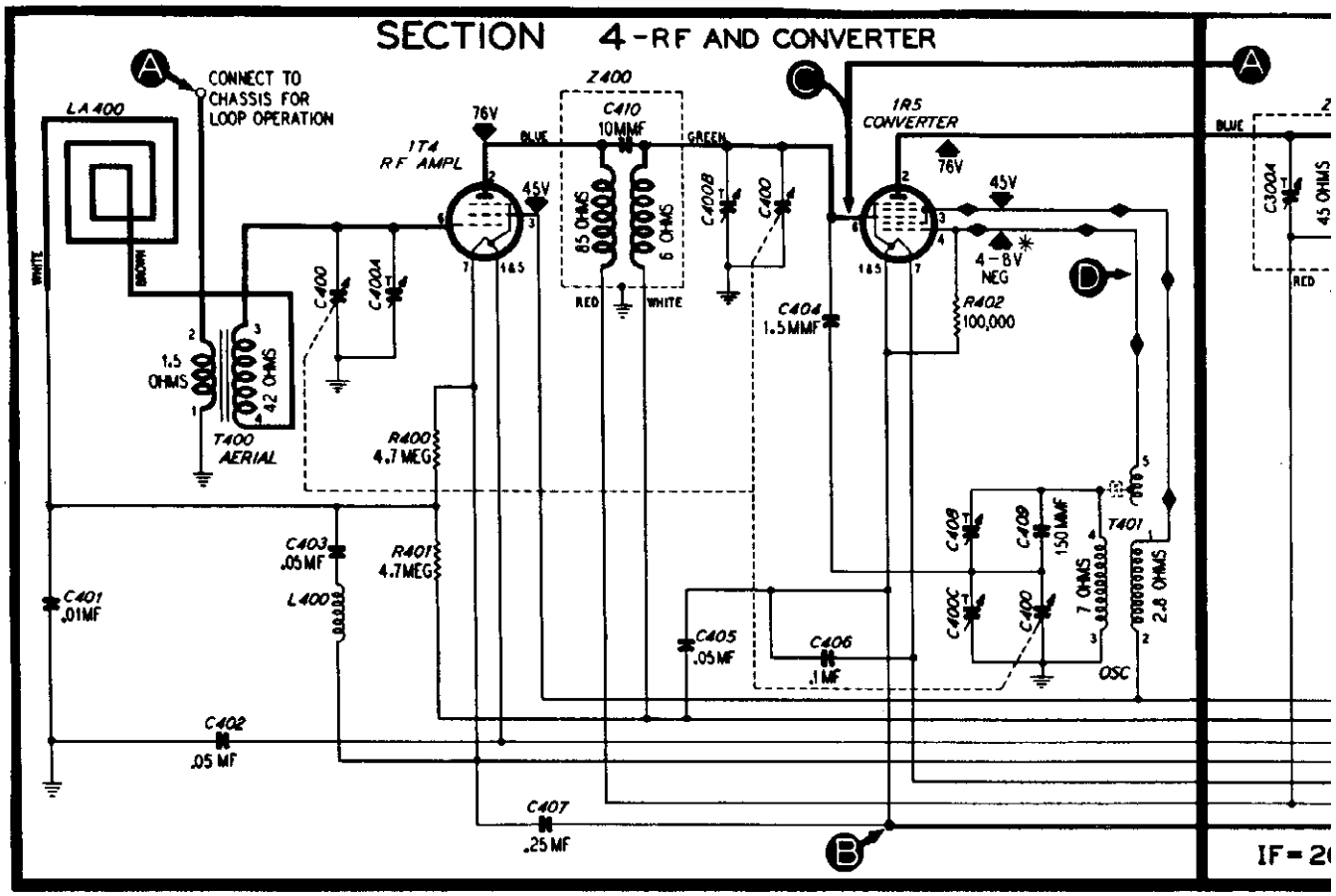

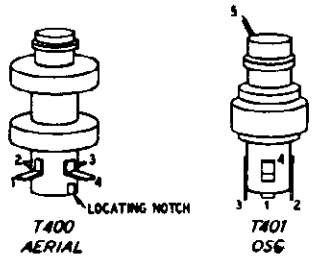

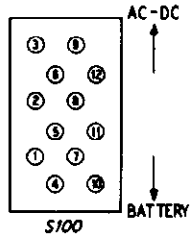

ALL VOLTAGES MEASURED FROM B- WITH 20,000-OHMS-PER-VOLT METER AT A LINE VOLTAGE OF 117 V A C

✳ MEASURED WITH 100,000 OHM RESISTOR IN SERIES WITH NEG PROD

CONDENSER SYMBOLS

FIXED VARIABLE TRIMMER ELECTROLYTIC

R.F, I.F, AND AUDIO SIGNAL PATH

OSCILLATOR SIGNAL PATH

ALL RESISTOR VALUES IN OHMS UNLESS MARKED OTHERWISE

FIGURE 5. PHILCO RADIO MODEL 49-605, SECTIO

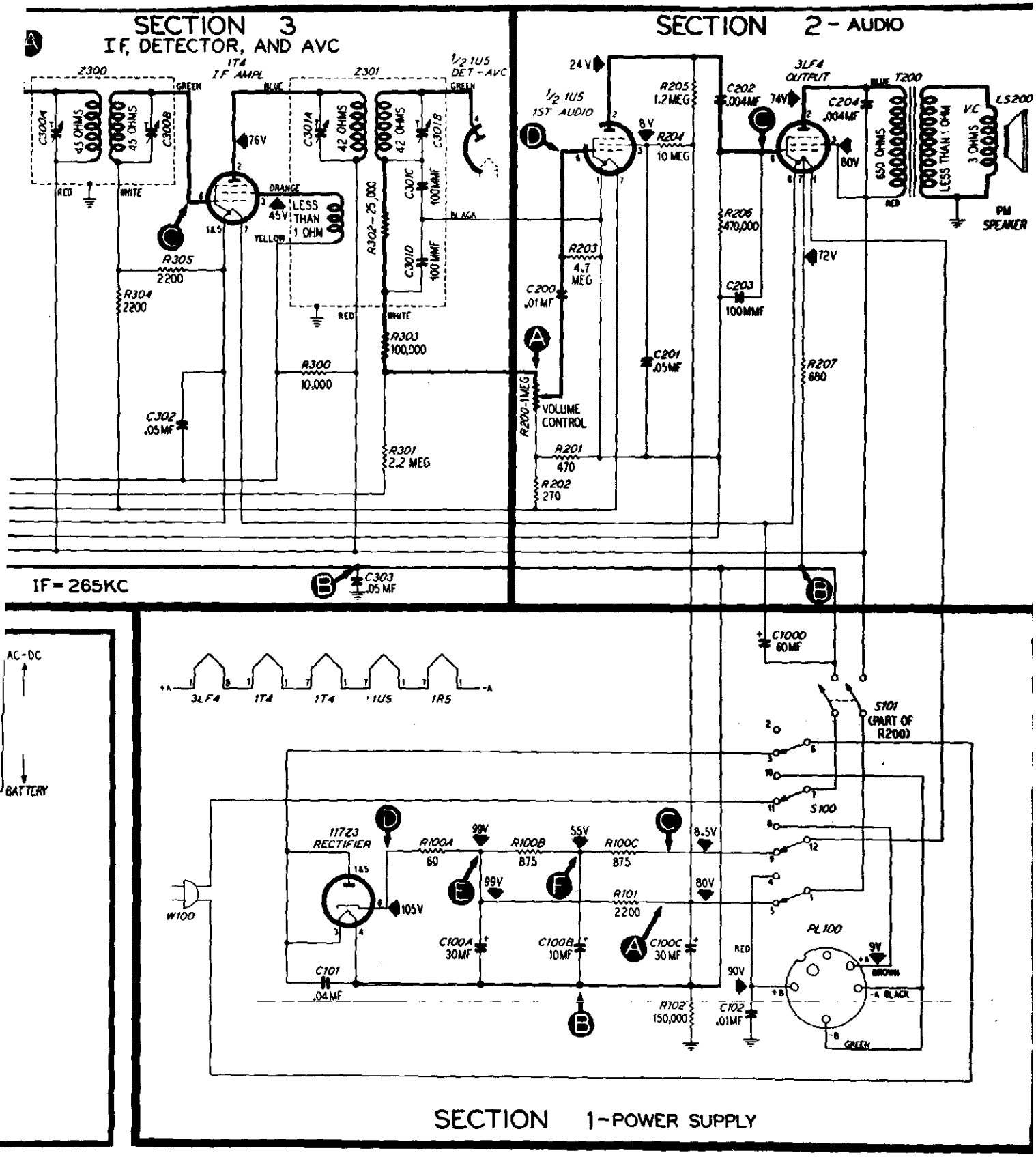

19-605. SECTIONALIZED SCHEMATIC DIAGRAM, SHOWING TEST POINTS

ORP.

ROCEDURE

LLED IN THE CABINET AND THE LOOP CONNECTED

SIGNAL GENERATOR (modulated)—Connect as indicated in chart.

OUTPUT LEVEL—During alignment, adjust signal-generator output to maintain output-meter indication below .4 volt.

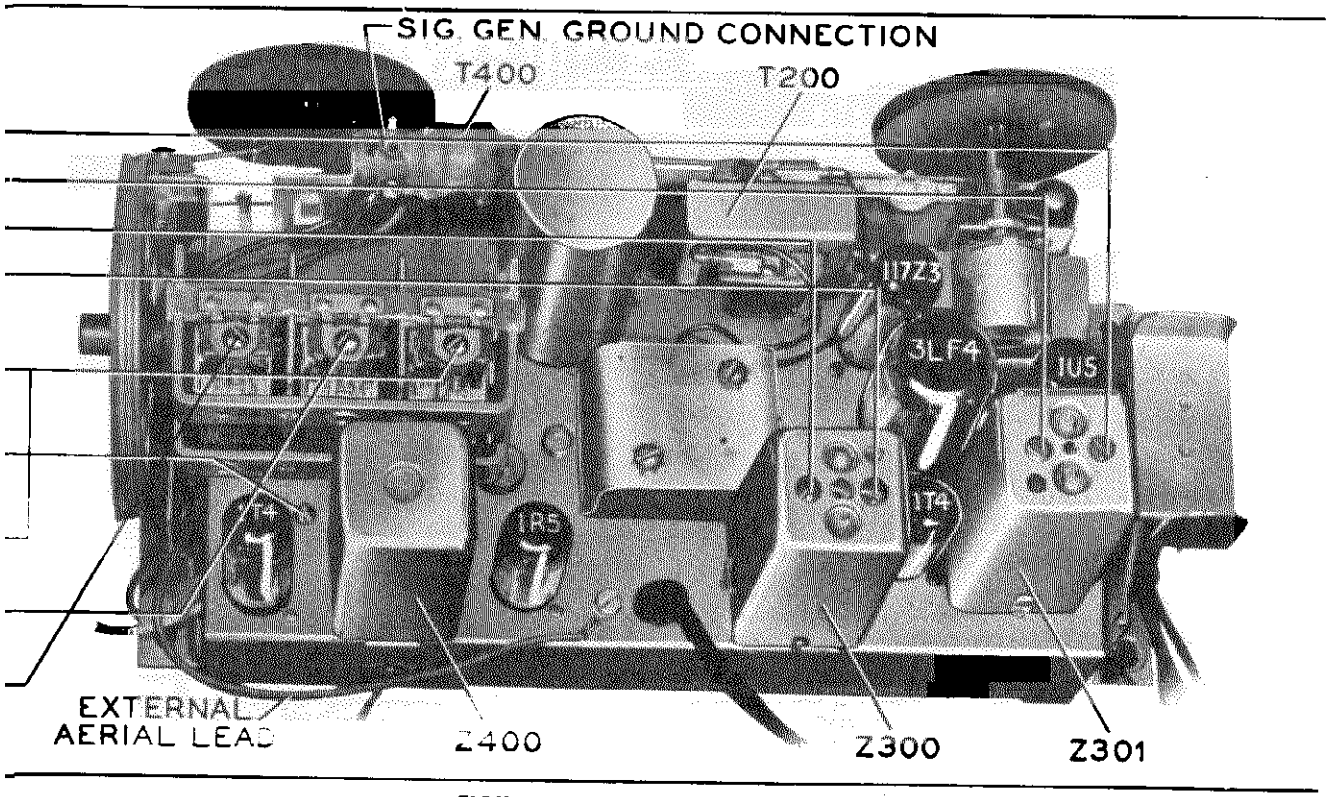

FIGURE 6. TOP VIEW, SHOWING TRIMMER LOCATIONS

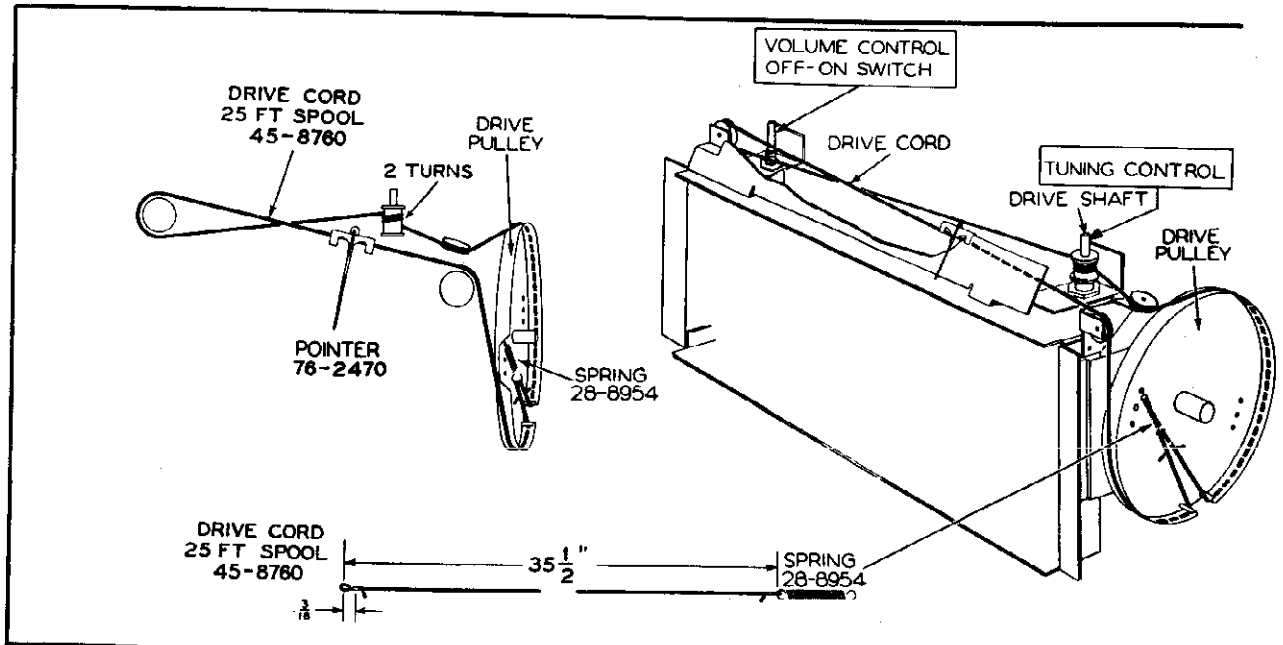

FIGURE 8. DRIVE-CORD INSTALLATION DETAILS

PHILCO CORP. MODEL 49-605

REPLACEMENT PARTS LIST

NOTE: An asterisk (*) indicates a general replacement item. The part numbers of these items may not be identical with those on factory parts; also, the electrical values of some replacement items may differ from the values given in the schematic diagram and parts list. The values substituted in any case are so chosen that the operation of the radio will be either unchanged or improved. When ordering replacements, use only the "Service Part No."

SECTION 1
POWER SUPPLY CIRCUIT

Reference Symbol	Description	Service Part No.
C100	Condenser, electrolytic, 4-section	30-2560-4
C100A	Condenser, filter, 30 mf.	Part of C100
C100B	Condenser, filter, 10 mf.	Part of C100
C100C	Condenser, filter, 30 mf.	Part of C100
C100D	Condenser, bias-resistor by-pass, 60 mf.	Part of C100
C101	Condenser, line filter, .04 mf.	45-3500-2*
C102	Condenser, by-pass, .01 mf.	61-0120*
PL100	Battery cable and plug	41-3712-1
R100	Resistor, 3-section	33-3431-4
R100A	Resistor, filament dropping, 60 ohms	Part of R100
R100B	Resistor, filament dropping, 875 ohms	Part of R100
R100C	Resistor, filament dropping, 875 ohms	Part of R100
R101	Resistor, plate dropping, 2200 ohms	66-2223340*
R102	Resistor, leakage, 150,000 ohms*	66-4153340*
S100	Switch, change-over	42-1821
S101	Switch, on-off	Part of R200
W100	Power cord and plug	41-3755-17

SECTION 2
AUDIO CIRCUITS

C200	Condenser, coupling, .01 mf.	61-0120*
C201	Condenser, screen by-pass, .05 mf.	61-0122*
C202	Condenser, d-c blocking, .004 mf.	61-0179*
C203	Condenser, r-f by-pass, 100 mmf.	62-110009001*
C204	Condenser, tone compensating, .004 mf.	61-0179
LS200	Speaker	36-1598-1
R200	Volume control (with on-off switch), 1 megohm	33-5538-43
R201	Resistor, grid return, 470 ohms	66-1473340*
R202	Resistor, grid return, 270 ohms	66-1273340*
R203	Resistor, grid return, 4.7 megohms	66-5473340*
R204	Resistor, screen dropping, 10 megohms	66-6103340*
R205	Resistor, plate load, 1.2 megohms	66-5123340*
R206	Resistor, grid return, 470,000 ohms	66-4473340*
R207	Resistor, bias, 680 ohms	66-1683340*
T200	Output transformer	32-8259

SECTION 3
I-F, DETECTOR, AND A-V-C CIRCUITS

C300A	Condenser, trimmer, primary	Part of Z300
C300B	Condenser, trimmer, secondary	Part of Z300
C301A	Condenser, trimmer, primary	Part of Z301
C301B	Condenser, trimmer, secondary	Part of Z301
C301C	Condenser, i-f filter, 100 mmf.	Part of Z301
C301D	Condenser, i-f filter, 100 mmf.	Part of Z301
C302	Condenser, screen by-pass, .05 mf.	61-0122*
C303	Condenser, i-f by-pass, .05 mf.	61-0122*
R300	Resistor, screen dropping, 10,000 ohms	66-3103340*
R301	Resistor, a-v-c filter, 2.2 megohms	66-5223340*
R302	Resistor, filter, 25,000 ohms	Part of Z301
R303	Resistor, a-v-c filter, 100,000 ohms	66-4103340
R304	Resistor, grid return, 2200 ohms	66-2223340*
R305	Resistor, grid return, 2200 ohms	66-2223340*
Z300	Transformer, 1st i-f, including C300A and C300B	32-3970
Z301	Transformer, 2nd i-f, including C301A, C301B, C301C, and C301D	32-3971-2

SECTION 4
R-F AND CONVERTER CIRCUITS

Reference Symbol	Description	Service Part No.
C400	Condenser, tuning, 3-section	31-2689
C400A	Condenser, aerial trimmer	Part of C400
C400B	Condenser, r-f trimmer	Part of C400
C400C	Condenser, oscillator trimmer	Part of C400
C401	Condenser, i-f by-pass, .01 mf.	61-0120*
C402	Condenser, by-pass, .05 mf.	61-0122*
C403	Condenser, by-pass, .05 mf.	61-0122*
C404	Condenser, neutralizing, 1.5 mmf.	30-1221-3
C405	Condenser, by-pass, .05 mf.	61-0122*
C406	Condenser, by-pass, .1 mf.	61-0113*
C407	Condenser, by-pass, .25 mf.	61-0125
C408	Condenser, oscillator series padder	31-6410
C409	Condenser, tracking, 150 mmf.	60-10155407*
C410	Condenser, coupling, 10 mmf. (part of Z400)	62-010009001
LA400	Loop aerial	32-4080
L400	Choke	32-4007
R400	Resistor, grid return, 4.7 megohms	66-5473340*
R401	Resistor, a-v-c filter, 4.7 megohms	66-5473340*
R402	Resistor, osc. grid leak, 100,000 ohms	66-4103340
T400	Aerial transformer	32-3972
T401	Oscillator transformer	32-4095-1
Z400	R-f transformer, including C410	32-4210

MISCELLANEOUS

Description	Service Part No.
Cabinet (whole)	10726
Cabinet back half	54-4626
Cabinet front half	54-4625
Back catch assembly	76-2273
Casting, frame	56-5835
Foot, rubber	54-4650
Grille	56-6365
Fasteners	W-2543FE7
Handle, plastic	54-4646
Hinge	56-6419
Clip, coil mounting	28-5002FCP
Dial backplate	56-5833FCP
Cord, drive (25-ft. spool)	45-8750*
Pointer	56-5630-4FCP
Pulley-and-bracket assembly	76-4115
Scale, dial, plastic	54-5031
Spring, drive cord	28-8954
Cover switch (volume control)	56-5834-FA3
Grommet, tuning-condenser mounting (3 required)	27-4596
Knob (2 required)	54-4627
Shaft and pulley	76-2028
Socket, Loktal	27-6138
Socket, miniature	27-6226
Switch-plunger assembly	76-3061

e John F. Rider

Section 1—Power Supply

TROUBLE SHOOTING

For the tests in this section, use a d-c voltmeter. Connect the negative lead to B—, test point B; connect the positive lead to the test points indicated in the chart. The voltage readings given were taken with a 20,000-ohms-per-volt meter, at a line voltage of 117 volts, a.c.

Turn on the power, and set the volume control to minimum.

If the "NORMAL INDICATION" is obtained in step 1, proceed with the tests for Section 2 (audio circuits); if not, isolate and correct the trouble in this section.

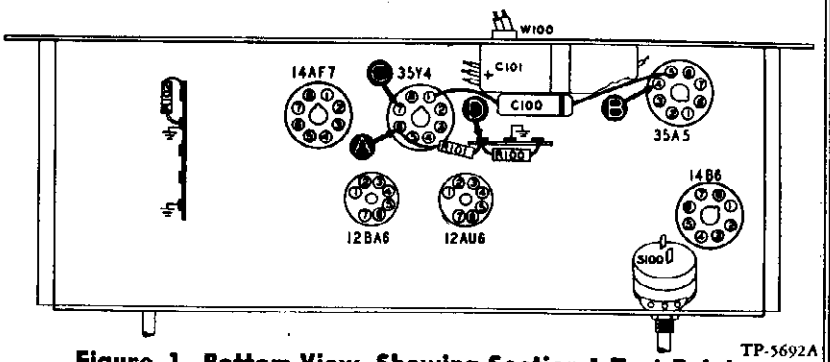

Figure 1. Bottom View, Showing Section 1 Test Points

STEP	TEST POINT	NORMAL INDICATION	ABNORMAL INDICATION	POSSIBLE CAUSE OF ABNORMAL INDICATION
1	A	90 volts		Trouble in this section. Isolate by the following tests.
2	C	105 volts	No voltage Low voltage High voltage	Defective: 35Y4. Shorted: C100, C101A. Open: S100, W100. Defective: 35Y4. Leaky: C101A. Shorted: C101B. Open: C101A, R100.
3	D	115 volts	No voltage Low voltage High voltage	Shorted: C101B. Open: C101A. Leaky: C101B. Shorted: C101C, C203*. Open: R101.
4	A	90 volts	No voltage Low voltage	Shorted: C101C. Open: R101. Leaky: C101C. Shorted: C203*, C306*, C408*.
Listening Test: Abnormal hum may be caused by open C101A, C101B, or C101C.				

*This part, located in another section, may cause abnormal indication in this section.

Section 2—Audio Circuits

TROUBLE SHOOTING

For the tests in this section, use an audio-frequency signal generator. Connect the generator ground lead to B—, test point B; connect the output lead through a .1-mf. condenser to the test points indicated in the chart.

Set the volume control to maximum.

If the "NORMAL INDICATION" is obtained in step 1, proceed with the tests for Section 3 (i-f, detector, and a-v-c circuits); if not, isolate and correct the trouble in this section.

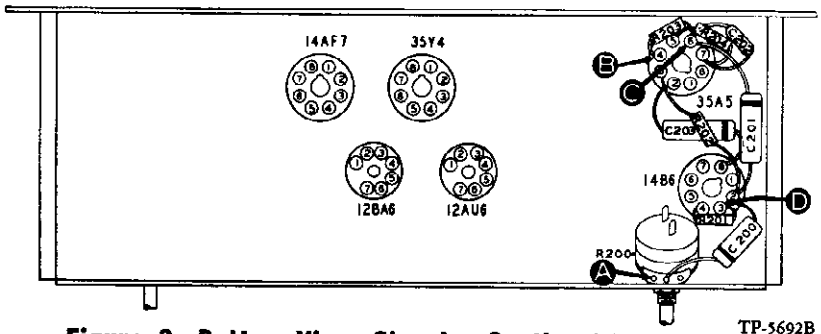

Figure 2. Bottom View, Showing Section 2 Test Points

STEP	TEST POINT	NORMAL INDICATION	POSSIBLE CAUSE OF ABNORMAL INDICATION
1	A	Loud, clear speaker output with weak generator input.	Trouble in this section. Isolate by the following tests.
2	C	Loud, clear output with strong input.	Defective: 35A5, LS200. Shorted: C202, C203. Open: T200, R204, R203.
3	D	Loud, clear output with weak input.	Defective: 14B6. Shorted: C201. Open: C201, R201, R202.
4	A	Loud, clear output with weak input.	Shorted: C200, C301D*. Open: C200, R200.
Listening Test: Distortion may be caused by shorted or leaky C200, C201.			

*This part, located in another section, may cause abnormal indication in this section.

© John F. Rider

PHILCO CORP. MODEL 49-902

Section 3—I-F, Detector, and A-V-C Circuits — TROUBLE SHOOTING

For the tests in this section, use an r-f signal generator, with modulated output, set at 455 kc. Connect the generator ground lead to B—, test point B; connect the output lead through a .1-mf. condenser to the test points indicated in the chart.

Set the volume control to maximum.

If the "NORMAL INDICATION" is obtained in step 1, proceed with the tests for Section 4 (r-f and converter circuits); if not, isolate and correct the trouble in this section.

To provide a complete i-f-amplifier check, test point A for this section is placed at the grid of the mixer in Section 4; therefore, the effectiveness of step 1 as a master check is dependent upon the condition of certain parts in the mixer circuit. These parts are listed below under "POSSIBLE CAUSE OF ABNORMAL INDICATION."

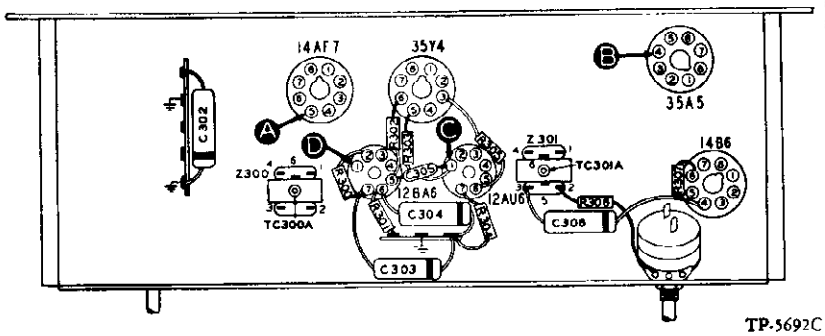

Figure 3. Bottom View, Showing Section 3 Test Points

STEP	TEST POINT	NORMAL INDICATION	POSSIBLE CAUSE OF ABNORMAL INDICATION
1	A	Loud, clear speaker output with weak generator input.	Trouble in this section. Isolate by the following tests.
2	C	Loud, clear output with strong input.	Defective: 12AU6. Shorted: C306, Z301, C305. Open: R303, R304, R305, R306, Z301. Misaligned: Z301.
3	D	Loud, clear output with moderate input.	Defective: 12BA6. Shorted: C304. Open: C305, R301, R302.
4	A	Loud, clear output with weak input.	Defective: 14AF7. Shorted: C408*, Z300. Open: R401*, R404*, Z300. Misaligned: Z300.

*This part, located in another section, may cause abnormal indication in this section.

Section 4—R-F and Converter Circuits — TROUBLE SHOOTING

For the tests in this section, with the exception of the oscillator test, use an r-f signal generator, with modulated output. Connect the generator ground lead to B—, test point B; connect the output lead through a .1-mf. condenser to the test points indicated in the chart.

Set the volume control to maximum. Set the tuning control and the signal-generator frequency as indicated in the chart.

If the "NORMAL INDICATION" is not obtained in step 1, isolate and correct the trouble in this section. If the trouble is not revealed by the tests for this section, check the alignment.

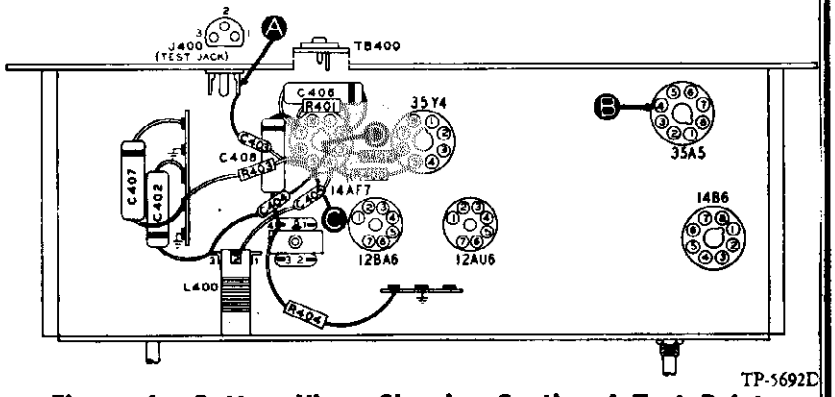

Figure 4. Bottom View, Showing Section 4 Test Points

STEP	TEST POINT	SIG. GEN. FREQ.	RADIO TUNING	NORMAL INDICATION	POSSIBLE CAUSE OF ABNORMAL INDICATION
1	A	1000 kc.	1000 kc.	Loud, clear speaker output with weak generator input.	Trouble in this section. Isolate by the following tests.
2	C	1000 kc.	1000 kc.	Loud, clear output with weak input.	Defective: 14AF7. Shorted: C406, C407, C408. Open: R401, R403, R404.
3	D (Osc. Test: see note on p. 4.)			−1.5v to −2v	Defective: 14AF7. Shorted: C400, C400B, C402, C404, C405, L400. Open: C402, C404, R400, R402, L400.
4	A	1000 kc.	1000 kc.	Loud, Clear output with weak input.	Shorted: C400, C400A. Open: LA400.

MODEL 49-902 PHILCO CORP.

REPLACEMENT PARTS LIST

Part numbers identified by an asterisk (*) are general replacement items. These numbers may not be identical with those on factory parts; also, the electrical values of some replacement items may differ from the values indicated in the schematic diagram and parts list. The values substituted in any case are so chosen that the operation of the radio will be either unchanged or improved. When ordering replacements, use only the "Service Part No."

SECTION 1

POWER SUPPLY

Reference Symbol	Description	Service Part No.
C100	Condenser, line by-pass, .04 mf.	45-3500-2*
C101	Condenser, electrolytic, 3-section	30-2575-27
C101A	Condenser, filter, 40 mf., 150v	Part of C101
C101B	Condenser, filter, 30 mf., 150v	Part of C101
C101C	Condenser, filter, 30 mf., 150v	Part of C101
I100	Pilot lamp	34-2068*
R100	Resistor, filter, 220 ohms	66-1225340*
R101	Resistor, filter, 1200 ohms	66-2124340*
R102	Resistor, isolating, 150,000 ohms	66-4153340*
S100	Switch, power on-off	Part of 45-5019†
W100	Line cord and plug assembly	L2163*

SECTION 2

AUDIO CIRUITS

Reference Symbol	Description	Service Part No.
C200	Condenser, d-c blocking, .01 mf.	61-0120*
C201	Condenser, d-c blocking, .01 mf.	61-0120*
C202	Condenser, parasitic suppressor, 220 mmf.	62-122001001*
C203	Condenser, tone compensation, .02 mf.	61-0108*
LS200	Loud-speaker, p-m	36-1625
R200	Volume control (with on-off switch), 500,000 ohms	45-5019*
R201	Resistor, grid return, 3.3 megohms	66-5333340*
R202	Resistor, plate load, 470,000 ohms	66-4473340*
R203	Resistor, grid return, 470,000 ohms	66-4473340*
R204	Resistor, cathode bias, 130 ohms	66-1133340*
T200	Transformer, output	32-8310-3

SECTION 3

I-F, DETECTOR, AND A-V-C CIRCUITS

Reference Symbol	Description	Service Part No.
C300A	Condenser, fixed, 1st i-f primary	Part of Z300
C300B	Condenser, fixed, 1st i-f secondary	Part of Z300
C301A	Condenser, fixed, 2nd i-f primary	Part of Z301
C301B	Condenser, fixed, 2nd i-f secondary	Part of Z301
C301C	Condenser, i-f filter	Part of Z301
C301D	Condenser, i-f filter	Part of Z301
C302	Condenser, i-f by-pass (inductively wound), .1 mf.	30-4644-1
C303	Condenser, cathode by-pass, .001 mf.	45-3500-5*
C304	Condenser, screen by-pass, .05 mf.	61-0122*
C305	Condenser, d-c blocking, 220 mmf.	62-122001001*
C306	Condenser, screen by-pass, .05 mf.	61-0122*
R300	Resistor, cathode bias, 220 ohms	66-1223340*
R301	Resistor, screen dropping, 47,000 ohms	66-3473340*
R302	Resistor, plate load, 15,000 ohms	66-3153340*
R303	Resistor, grid return, 150,000 ohms	66-4153340*
R304	Resistor, cathode bias, 120 ohms	66-1123340*
R305	Resistor, decoupling, 1000 ohms	66-2103340*
R306	Resistor, i-f filter, 47,000 ohms	66-3473340*
R307	Resistor, a-v-c filter, 1 megohm	66-5103340*
TC300A	Tuning core, 1st i-f primary	Part of Z300
TC300B	Tuning core, 1st i-f secondary	Part of Z300

†45-5019 Volume control with a-c switch.

SECTION 3 (Cont.)

Reference Symbol	Description	Service Part No.
TC301A	Tuning core, 2nd i-f primary	Part of Z301
TC301B	Tuning core, 2nd i-f secondary	Part of Z301
Z300	Transformer, 1st i-f	32-4258
Z301	Transformer, 2nd i-f	32-4240-3

SECTION 4

R-F AND CONVERTER CIRCUITS

Reference Symbol	Description	Service Part No.
C400	Condenser, tuning gang, 2-section	31-2727-1
C400A	Condenser, trimmer, aerial section	Part of C400
C400B	Condenser, trimmer, osc. section	Part of C400
C401	Condenser, isolating, .0015 mf.	45-3500-6*
C402	Condenser, isolating, .05 mf.	61-0122*
C403	Condenser, blocking, 220 mmf.	62-122001001*
C404	Condenser, d-c blocking, 220 mmf.	62-122001001*
C405	Condenser, osc. grid, 220 mmf.	62-122001001*
C406	Condenser, cathode by-pass, .05 mf.	61-0122*
C407	Condenser, a-v-c filter, .1 mf.	61-0113*
C408	Condenser, plate decoupling, .01 mf.	61-0120*
LA400	Loop aerial	32-4052-25
L400	Coil, osc.	45-7502*
R400	Resistor, grid return, 47,000 ohms	66-3473340*
R401	Resistor, cathode bias, 2200 ohms	66-2223340*
R402	Resistor, plate load, 10,000 ohms	66-3103340*
R403	Resistor, grid return, 2.2 megohms	66-5223340*
R404	Resistor, decoupling, 2200 ohms	66-2223340*

MISCELLANEOUS

Description	Service Part No.
Cabinet and Cabinet Parts	
Baffle-and-cloth assembly	40-7548
Baffle-assembly fastener (4)	1W56920FE7
Cabinet	10693A
Cabinet back	54-7492-1
Grille	54-4600
Grille fastener (7)	1W56913FE7
Stud, back mtg. (4)	W2235FA9
Window	54-4608
Window fastener (5)	56-6181FE7
Dial-Scale Hardware	
Cord, drive (25-ft. spool)	31-2695-33
Drive-cord spring	56-2617
Pointer	54-4617
Scale	54-5018
Tuning shaft	56-5688FA11
Tuning-shaft bushing	27-9437
Knob (2)	54-4527-8
Pilot-lamp assembly	76-1280
Speaker bracket	58-5690FA3
Socket, miniature (2)	27-8203
Socket, octal (4)	27-8138

Preliminary Checks

To avoid possible damage to the radio, the following preliminary checks should be made before it is turned on:

1. Inspect both the top and the bottom of the chassis. Make sure that all tubes are secure in the proper sockets, and look for any broken or shorted connections, burned resistors, or other obvious indications of trouble.

2. Measure the resistance between B+ (pin 7 of 35Y4 rectifier tube) and the B— bus, test point B. When the ohmmeter test leads are connected in the proper polarity, the highest resistance reading will be obtained. If the reading is lower than 1500 ohms, check condensers C101A, C101B, C101C, and C203 for leakage or shorts. The resistance value given is much lower than normal, and is not intended as a quality check of these condensers; the value given is the lowest at which the rectifier will operate safely while the voltage checks of Section 1 (power supply) are performed.

SPECIFICATIONS

CABINET	Plastic
CIRCUIT	6-tube superheterodyne
FREQUENCY RANGE	540—1620 kc.
AUDIO OUTPUT	1 watt
OPERATING VOLTAGE	105—125 volts, a.c. or d.c.
POWER CONSUMPTION	30 watts
AERIAL	Built-in loop; also connector for external aerial
INTERMEDIATE FREQUENCY	455 kc.
PHILCO TUBES (6)	14AF7, 12BA6, 12AU6, 14B6, 35A5, 35Y4

©John F. Rider

MODEL 49-902

ALIGNME

NOTE: The loop should b

RADIO CONTROLS—Set volume control to maximum. Set tuning control as indicated in chart.

SIGNAL GENERATOR—Use modulated output. Cor nect leads and set frequency as indicated in chart.

STEP	CONNECTION TO RADIO	DIAL SETTING	DIAL SETTING	SPECIAL INSTRUCTIONS	T
1	Ground lead to B—; output lead through .1-mf. condenser to external aerial terminal.	455 kc.	Tuning gang fully meshed	Adjust, in order given, for maximum output.	TC301E TC301A TC300E TC300A
2	Radiating loop. (See note below.)	1600 kc.	1600 kc.	Adjust for maximum.	
3	Radiating loop. (See note below.)	1500 kc.	1500 kc.	Adjust for maximum.	C

RADIATING LOOP: Make up a 6-to-8 turn, 6-inch-diameter loop, using insulated wire; connect to sig generator leads and place near radio loop.

Circuit Description

Philco Model 49-902 is a 6-tube table-model superheterodyne radio, providing reception in the standard broadcast band.

The loop aerial normally provides adequate signal pickup. If greater pickup is required, an external aerial may be connected.

The loop works into a 14AF7 converter. Condenser tuning is used. The two i-f stages employ two pentode tubes, a 12BA6 and a 12AU6. To obtain stability, resistance coupling is employed between the first and second i-f tubes. One diode (pin 5) of the 14B6 provides detection and a-v-c- voltage. The triode section of this tube functions as the first audio amplifier, and is resistance-coupled to the 35A5 output tube. The speaker is a permanent-magnet dynamic. The power supply employs a 35Y4 rectfiier, working into a resistance-capacitance filter system.

The 150,000-ohm resistor, R102, connected between B- and chassis, prevents hum which might otherwise occur under conditions of high humidity.

The i-f by-pass condenser, C302, is a specially designed, inductively wound condenser, which is series-resonant at the intermediate frequency, 455 kc., thereby functioning as a by-pass of exceptionally low impedance at this frequency.

Philco TROUBLE-SHOOTING

For rapid trouble shooting, the radio circ into four sections, with test points speci section; these sections and test points ar the schematic diagram. The trouble-shoot given for each section includes a simplif and a bottom view of the chassis showing of the test points and the components of

In each chart, the first step is a mas determining whether trouble exists in without going through the entire test pr

Failure to obtain the "NORMAL IN in any given step indicates trouble with under test.

After isolating the trouble to a single st is located by: first, testing the tube; seco tube electrode voltages; third, measuring tances; fourth, substituting condensers. T vealed should be corrected before testing

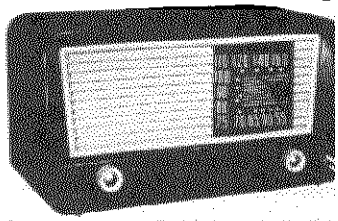

©John F. Rider

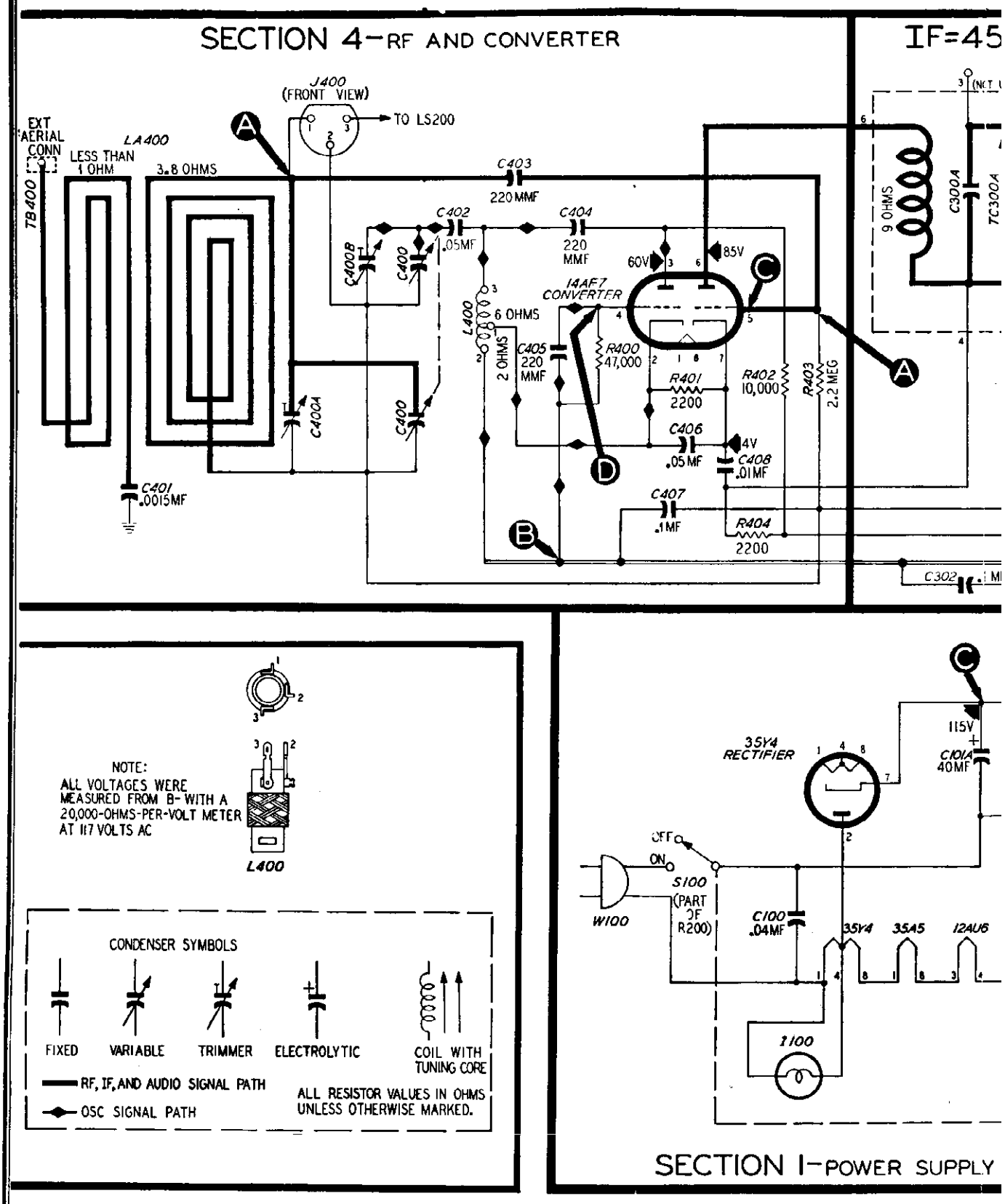

Figure 5. Philco Radio Model 49-902, Sectio

OSCILL

Connect the positive lead of a high-resistance voltmeter to B—, test point B; connect the prod end of the negative lead through a 100,000-ohm isolating resis of 14AF7), test-point D. Use a

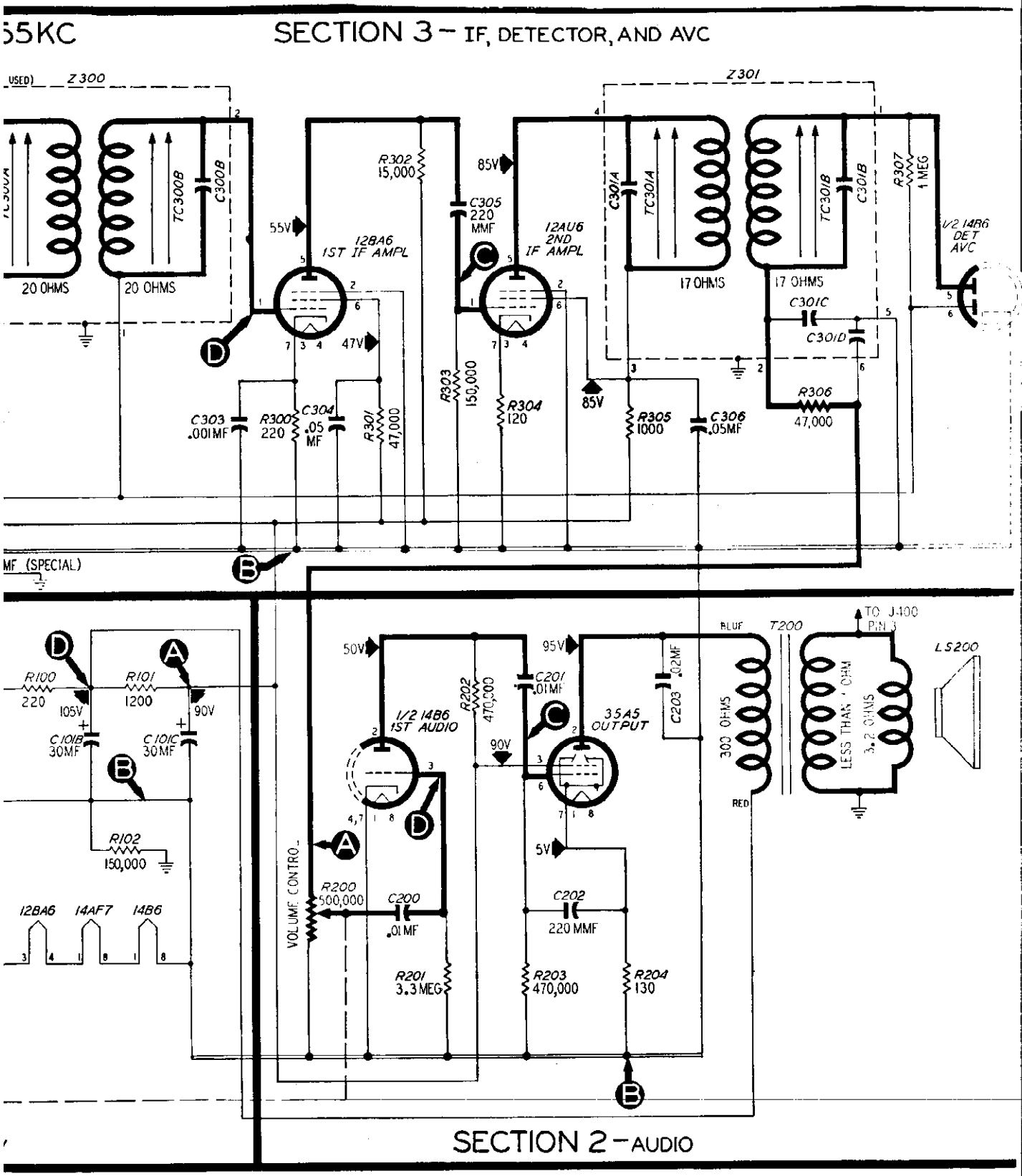

onalized Schematic Diagram, Showing Test Points

.ATOR TEST

istor to the oscillator grid (pin 4 a suitable meter range, such as 0—10 volts. Proper operation of the oscillator is indicated by negative voltage of approximately the value given in the chart (measured with 20,000-ohms-per-volt meter) throughout the tuning range.

T PROCEDURE

nnected to the radio during alignment.

OUTPUT METER—Connect across speaker voice-coil terminals (figure 6).

OUTPUT LEVEL——During alignment, adjust signal-generator output to hold output-meter reading below 1.25 volts.

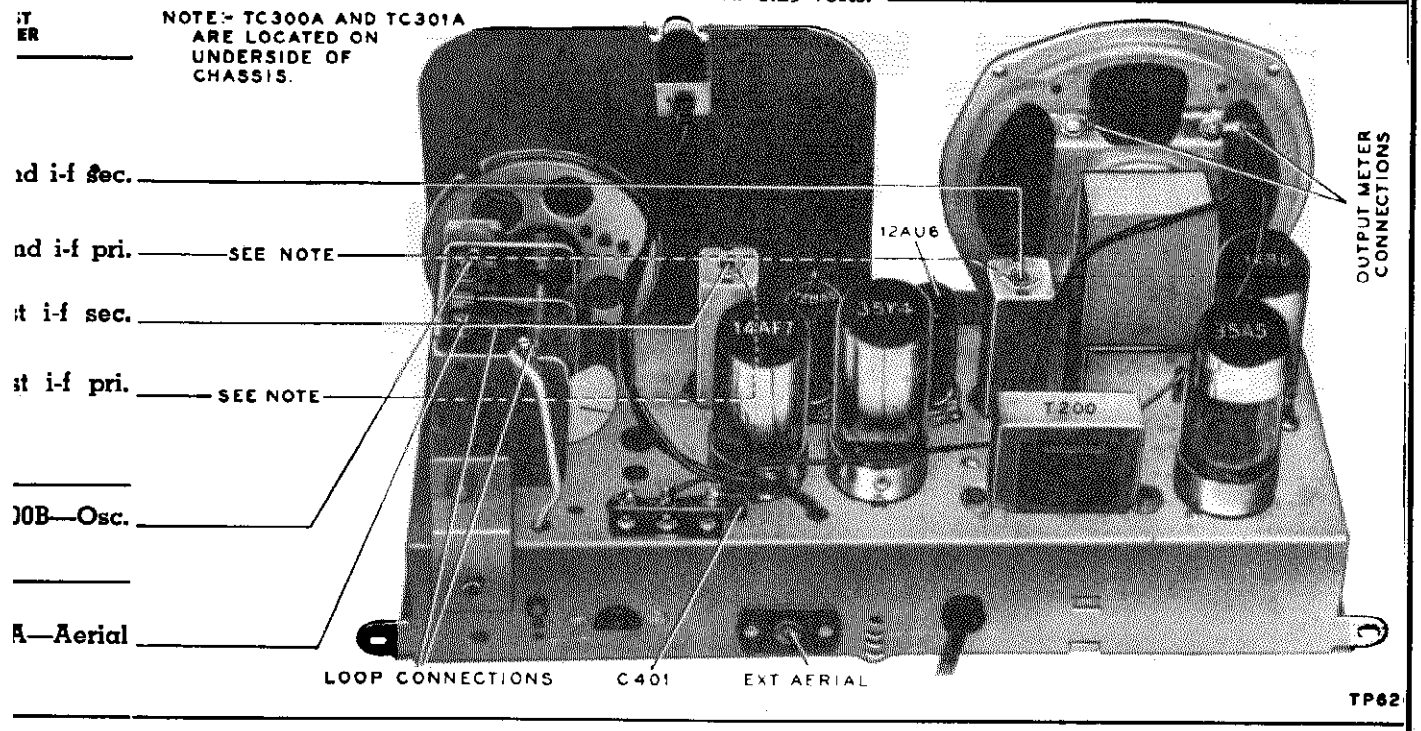

Figure 6. Top View of Chassis, Showing Trimmer Locations

cedure

s divided
for each
icated in
ırocedure
est chart
locations
t section.
heck for
section,
ure.
ATION"
ıe circuit

he defect
neasuring
uit resis-
ouble re-
her.

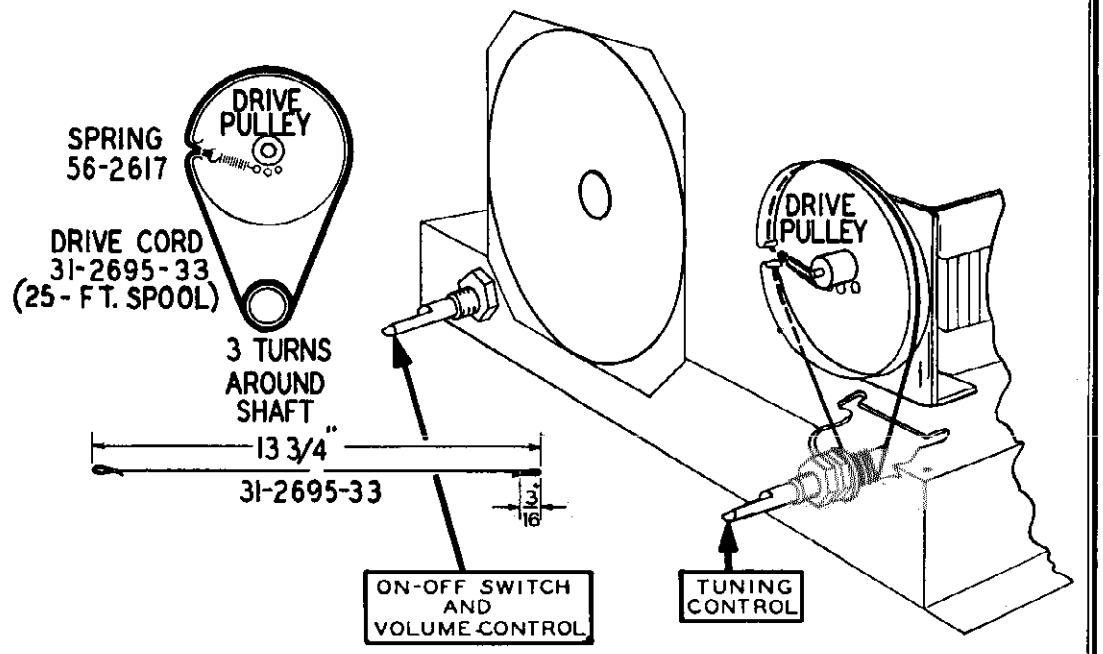

Figure 7. Drive-Cord-Installation Details

PHILCO CORP. MODEL 49-904

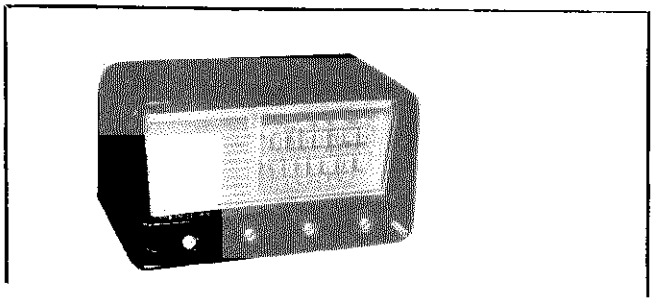

Circuit Description

Philco Model 49-904 is a six-tube, manually tuned superheterodyne radio, providing reception on the standard broadcast band, 540—1620 kc., and on the short-wave range between 5.8 mc. and 15.5 mc. A low-impedance loop within the cabinet normally provides adequate signal pickup. Where additional pickup is required, an external aerial may be used. Do not use a ground.

The converter, employing a type 14AF7 twin triode, provides high signal-to-noise ratio and high conversion efficiency. The oscillator section of the tuning-condenser gang is shaped for correct tracking on the short-wave band. An adjustable series tracking padder is used for tracking on the broadcast band.

The i-f circuit employs two tubes; a 12BA6 1st i-f amplifier is resistance-coupled to a 12AU6 2nd i-f amplifier. Both i-f transformers have permeability-tuned primary and secondary windings.

The diode section of the 14B6 provides detection and a-v-c voltage, the triode section functions as the first audio amplifier, which is resistance-coupled to the type 35A5 audio output tube. A tone control is connected across the plate circuit of the 14B6 triode section.

The d-c operating voltages are furnished by a 35Y4 half-wave rectifier, working into a resistance-capacitance filter system. A 150,000-ohm resistor is connected between the B– bus and the chassis, to prevent hum which might otherwise occur under conditions of high humidity.

C306 is a special condenser, inductively wound to act as a series-resonant circuit at the intermediate frequency (455 kc.). This condenser provides an exceptionally low-impedance i-f by-pass between B– and the chassis.

Philco TROUBLE-SHOOTING Procedure

For rapid trouble shooting, the radio circuit is divided into four sections, with test points specified for each section; these sections and test points are indicated in the schematic diagram. The trouble-shooting procedure given for each section includes a simplified test chart and a bottom view of the chassis showing the locations of the test points and the components of that section.

In each chart, the first step is a master check for determining whether trouble exists in that section, without going through the entire test procedure.

Failure to obtain the "NORMAL INDICATION" in any given step indicates trouble within the circuit under test.

After isolating the trouble to a single stage, the defect is located by: first, testing the tube; second, measuring tube electrode voltages; third, measuring circuit resistances; fourth, substituting condensers. The trouble revealed should be corrected before testing further.

Preliminary Checks

To avoid possible damage to the radio, the following preliminary checks should be made before it is turned on:

1. Inspect both the top and the bottom of the chassis. Make sure that all tubes are secure in the proper sockets, and look for any broken or shorted connections, burned resistors, or other obvious indications of trouble.

2. Measure the resistance between B+ (pin 7 of 35Y4 rectifier) and B–, test point B. When the ohmmeter test leads are connected in the proper polarity, the highest resistance reading will be obtained. If the reading is lower than 1500 ohms, check condensers C102, C101A, C101B, and C204 for leakage or shorts. The resistance value given is much lower than normal, and is not intended as a quality check of these condensers; the value given is the lowest at which the rectifier will operate safely while the voltage checks of Section 1 (power supply) are performed.

SPECIFICATIONS

CABINET	Plastic, brown
CIRCUIT	6-tube superheterodyne
FREQUENCY RANGES	
Broadcast	540—1620 kc.
Short Wave	5.8—15.5 mc.
AUDIO OUTPUT	1 watt
OPERATING VOLTAGE	105—120 volts, a.c. or d.c.
POWER CONSUMPTION	30 watts
AERIAL	Built-in loop; terminal also provided for external aerial
INTERMEDIATE FREQUENCY	455 kc.
PHILCO TUBES (6)	14AF7, 12BA6, 12AU6, 14B6, 35A5, 35Y4

TP-6153A

MODEL 49-904 PHILCO CORP.

Section 1—Power Supply

TROUBLE SHOOTING

For the tests in this section, use a d-c voltmeter. Connect the negative lead to B–, test point B; connect the positive lead to the test points indicated in the chart. The voltage readings given were taken with a 20-000-ohms-per-volt meter at a line voltage of 117 volts, a.c.

Turn on the power, and set the volume control to minimum. Set the tone control for minimum treble response (fully clockwise), and set the band switch to the broadcast position.

If the "NORMAL INDICATION" is obtained in step 1, proceed with the tests for Section 2 (audio circuits); if not, isolate and correct the trouble in this section.

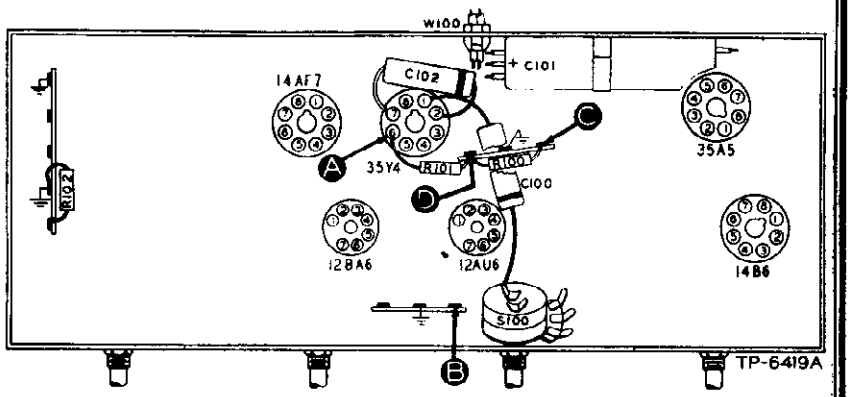

Figure 1. Bottom View, Showing Section 1 Test Points

STEP	TEST POINT	NORMAL INDICATION	ABNORMAL INDICATION	POSSIBLE CAUSE OF ABNORMAL INDICATION
1	A	85 volts		Trouble in this section. Isolate by the following tests.
2	C	115 volts	No voltage	Defective: 35Y4. Open: W100, S100. Shorted: C102, C101A.
			Low voltage	Defective: 35Y4. Leaky: C102, C101A. Shorted: C101B, C101C, C204*. Open: C101A.
			High voltage	Open: R100, R101.
3	D	105 volts	No voltage	Open: R100. Shorted: C101B.
			Low voltage	Leaky: C101B, C101C. Shorted: C204*, C101C.
			High voltage	Open: R101, T200*, R205*.
4	A	85 volts	No voltage	Open: R101. Shorted: C101C.
			Low voltage	Leaky: C101C. Shorted: C310*.
Listening Test: Abnormal hum may be caused by open or leaky C100, C101A, C101B, C101C.				

* This part, located in another section, may cause abnormal indication in this section.

Section 2—Audio Circuits

TROUBLE SHOOTING

For the tests in this section, use an audio-frequency signal generator. Connect the generator ground lead to B–, test point B; connect the output lead through a .1-mf. condenser to the test points indicated in the chart.

Set the volume control to maximum, and set the tone control for maximum treble response (fully counterclockwise).

If the "NORMAL INDICATION" is obtained in step 1, proceed with the tests for Section 3 (i-f, detector, and a-v-c circuits); if not, isolate and correct the trouble in this section.

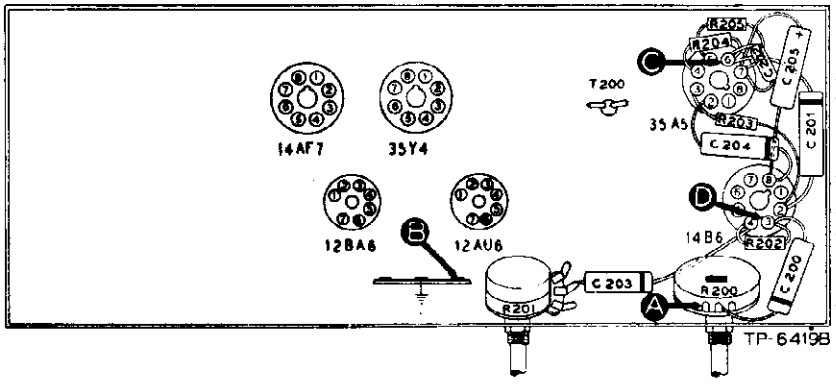

Figure 2. Bottom View, Showing Section 2 Test Points

STEP	TEST POINT	NORMAL INDICATION	POSSIBLE CAUSE OF ABNORMAL INDICATION
1	A	Loud, clear speaker output with moderate generator input.	Trouble in this section. Isolate by the following tests.
2	C	Clear output with strong input.	Defective: LS200, 35A5. Shorted: T200, C204, C201, C202, C205. Open: T200, R205, R204, C205. Leaky: C204, C201.
3	D	Same as step 1.	Defective: 14B6. Open: C201, R202, R203. Shorted: C203 (rotate tone control).
4	A	Same as step 1.	Defective: R200 (rotate). Open: C200. Shorted: C301D*.
Listening Test: Distortion may be caused by shorted or leaky C200 or C201.			

* This part, located in another section, may cause abnormal indication in this section.

© John F. Rider

PHILCO CORP. MODEL 49-904

Section 3—I-F, Detector, and A-v-c Circuits

TROUBLE SHOOTING

For the tests in this section, use an r-f signal generator, with modulated output, set at 455 kc. Connect the generator ground lead to B–, test point B; connect the output lead through a .1-mf. condenser to the test points indicated in the chart.

Set the volume control to maximum, and set the tone control for maximum treble response (fully counterclockwise). Set the band switch to the broadcast position, and rotate the tuning control until the tuning condenser is fully meshed.

If the "NORMAL INDICATION" is obtained in step 1, proceed with the tests for Section 4 (r-f and converter circuits); if not, isolate and correct the trouble in this section.

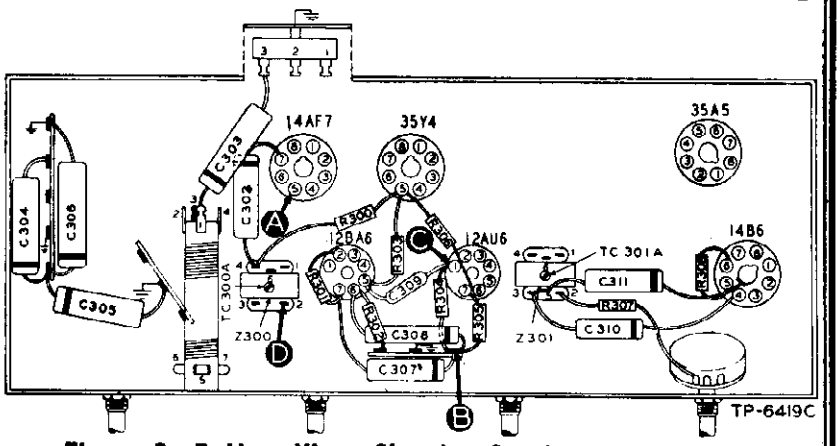

Figure 3. Bottom View, Showing Section 3 Test Points

To provide a complete i-f-amplifier check, test point A for this section is placed at the grid of the mixer in Section 4; therefore, the effectiveness of step 1 as a master check is dependent upon the condition of certain parts in the mixer circuit. These parts are listed below under "POSSIBLE CAUSE OF ABNORMAL INDICATION."

STEP	TEST POINT	NORMAL INDICATION	POSSIBLE CAUSE OF ABNORMAL INDICATION
1	A	Loud, clear speaker output with weak generator input.	Trouble in this section. Isolate by the following tests.
2	C	Loud, clear output with strong input.	Defective: 14B6, 12AU6. Open: R304, R305, R306, R307, Z301. Shorted: C309, C310, C301C, Z301. Misaligned: Z301.
3	D	Loud, clear output with moderate input.	Defective: 12BA6. Open: R301, R302, R303, C309, Z300. Shorted: C308, C309, Z300.
4	A	Loud, clear output with weak input.	Defective: 14AF7. Open: R401*, R403*, R300, Z300. Shorted: C409*, C302, Z300. Misaligned: Z300.

*** This part, located in another section, may cause abnormal indication in this section.**

Section 4—R-F and Converter Circuits

TROUBLE SHOOTING

For the tests in this section, with the exception of the oscillator test, use an r-f signal generator with modulated output. Connect the generator ground lead to B–, test point B; connect the output lead through a .1-mf. condenser to the test points indicated in the chart.

Set the volume control to maximum, and set the tone control for maximum treble response (fully counterclockwise). Set the band switch, the tuning control, and the signal-generator frequency as indicated in the chart.

If the "NORMAL INDICATION" is not obtained in step 1, isolate and correct the trouble in this section. If the trouble is not revealed by the tests for this section, check the alignment.

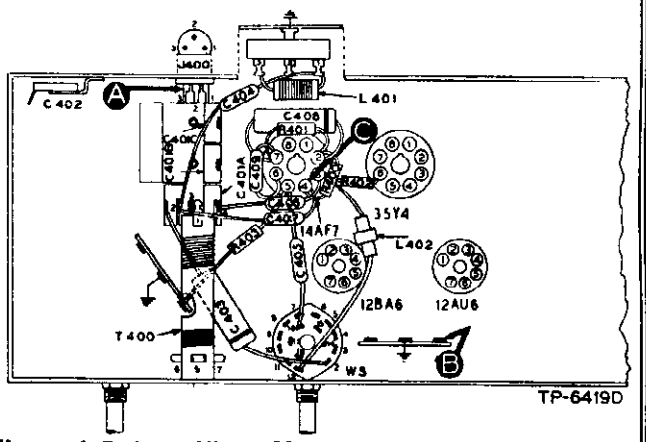

Figure 4. Bottom View, Showing Section 4 Test Points

BC CIRCUITS

STEP	TEST POINT	SIG. GEN. FREQ.	BAND SWITCH	RADIO TUNING	NORMAL INDICATION	POSSIBLE CAUSE OF ABNORMAL INDICATION
1	A	1000 kc.	BC	1000 kc.	Loud, clear speaker output with weak generator input.	Trouble in BC circuits. Isolate by steps 2 and 3.
2	C Osc. test; (see note on p. 5)		BC	Rotate through range.	–.8v to –1v	Defective: 14AF7. Open: C401A, C406, C407, R400, R402, T400, WS. Shorted: C406, C407, C401B, C400, T400, WS.
3	A	1000 kc.	BC	1000 kc.	Same as step 1.	Defective: 14AF7. Open: L400, LA400, WS, C405, R403, R401, C408. Shorted: C400A, C402, C400, L400, WS.

MODEL 49-904

PHILCO CORP.

REPLACEMENT PARTS LIST

NOTE: Part numbers identified by an asterisk (*) are general replacement items. These numbers may not be identical with those on factory parts; also, the electrical values of some replacement items may differ from the values indicated in the schematic diagram and parts list. The values substituted in any case are so chosen that the operation of the radio will be either unchanged or improved. When ordering replacements, use only the "Service Part No."

SECTION 1—POWER SUPPLY

Reference Symbol	Description	Service Part No.
C100	Condenser, by-pass, .04 mf	45-3500-2*
C101	Condenser, electrolytic, 3-section	30-2575-24
C101A:	Condenser, filter, 40 mf	Part of C101
C101B:	Condenser, filter, 30 mf	Part of C101
C101C:	Condenser, filter, 30 mf	Part of C101
C102	Condenser, by-pass, .04 mf	45-3500-2*
I100	Panel lamp	34-2068*
R100	Resistor, 1st B+ filter, 220 ohms	66-1224340*
R101	Resistor, 2nd B+ filter, 1200 ohms	66-2123340*
R102	Resistor, leakage, 150,000 ohms	66-4153340*
S100	Switch, a-c power	Part of R201
W100	Line-cord and plug	L2183*

SECTION 2—AUDIO CIRCUITS

C200	Condenser, d-c blocking, .01 mf	61-0121*
C201	Condenser, d-c blocking, .01 mf	61-0120*
C202	Condenser, parasitic suppressor, 220 mmf.	30-1224-20*
C203	Condenser, tone control, .006 mf	45-3500-7*
C204	Condenser, tone compensation, .02 mf	61-0108*
C205	Condenser, electrolytic, cathode by-pass, 25 mf.	45-3001*
LS200	Loud-speaker, PM	36-1625
R200	Volume control, .5 megohm	33-5539-46
R201	Tone control (including a-c switch), .5 megohm	33-5538-35
R202	Resistor, grid return, 3.3 megohms	66-5333340*
R203	Resistor, plate load, 470,000 ohms	66-4473340*
R204	Resistor, grid return, 470,000 ohms	66-4473340*
R205	Resistor, cathode bias, 130 ohms	66-1133340*
T200	Transformer, output	32-8310-5

SECTION 3—I-F, DETECTOR, AND A-V-C CIRCUITS

C300A	Condenser, fixed	Part of Z300
C300B	Condenser, fixed	Part of Z300
C301A	Condenser, fixed	Part of Z301
C301B	Condenser, fixed	Part of Z301
C301C	Condenser, i-f filter	Part of Z301
C301D	Condenser, i-f filter	Part of Z301
C302	Condenser, r-f by-pass, .05 mf	61-0122*
C303	Condenser, r-f by-pass, .01 mf	61-0120*
C304	Condenser, a-v-c filter, .1 mf	61-0113*
C305	Condenser, r-f by-pass, .01 mf	61-0120*
C306	Condenser (inductively wound), i-f by-pass, .1 mf	30-4644-1
C307	Condenser, cathode by-pass, .001 mf	45-3500-5*
C308	Condenser, screen by-pass, .05 mf	61-0122*
C309	Condenser, d-c blocking, 220 mmf	30-1224-20*
C310	Condenser, screen by-pass, .05 mf	61-0122*
C311	Condenser, r-f by-pass, .05 mf	61-0122*
R300	Resistor, plate decoupling, 2200 ohms	66-2223340*
R301	Resistor, cathode bias, 220 ohms	66-1223340*
R302	Resistor, screen dropping, 47,000 ohms	66-3473340*
R303	Resistor, plate load, 15,000 ohms	66-3153340*
R304	Resistor, grid return, 150,000 ohms	66-4153340*
R305	Resistor, cathode bias, 220 ohms	66-1223340*
R306	Resistor, plate and screen decoupling, 1000 ohms	66-2103340*
R307	Resistor, i-f filter, 47,000 ohms	66-3473340*

SECTION 3 (Cont.)

Reference Symbol	Description	Service Part No.
R308	Resistor, a-v-c load, 1 megohm	66-5103340*
TC300A	Tuning core, 1st i-f primary	Part of Z300
TC300B	Tuning core, 1st i-f secondary	Part of Z300
TC301A	Tuning core, 2nd i-f primary	Part of Z301
TC301B	Tuning core, 2nd i-f secondary	Part of Z301
Z300	Transformer, 1st i-f	32-4258
Z301	Transformer, 2nd i-f	32-4240-3

SECTION 4—R-F AND CONVERTER CIRCUITS

C400	Condenser, tuning, 2-gang	31-2727-4
C400A:	Condenser, trimmer, SW aerial	Part of C400
C401	Condenser strip, trimmer, 3-section	31-6477-2
C401A:	Condenser, series padder, BC osc.	Part of C401
C401B:	Condenser, trimmer, BC osc.	Part of C401
C401C:	Condenser, trimmer, SW osc.	Part of C401
C402	Condenser, trimmer, BC aerial	31-6474
C403	Condenser, isolating, .02 mf.	61-0108*
C404	Condenser, blocking, 10 mmf.	30-1224-26*
C405	Condenser, isolating, 100 mmf.	30-1225-2
C406	Condenser, d-c blocking, 220 mmf.	30-1224-20
C407	Condenser, d-c blocking, 220 mmf.	30-1224-20
C408	Condenser, cathode by-pass, .05 mf.	61-0122*
C409	Condenser, r-f by-pass, 100 mmf.	30-1225-2
J400	Jack, external aerial connector.	27-6126
L400	Coil, BC aerial	32-4033-8
L401	Coil, shunt, SW aerial.	32-3858
L402	Coil, choke, SW plate.	32-4143-4
LA400	Loop-aerial assembly	Part of Cabinet
R400	Resistor, grid return, 10,000 ohms	66-3103340*
R401	Resistor, cathode bias, 2200 ohms	66-2223340*
R402	Resistor, plate load, 10,000 ohms	66-3103340*
R403	Resistor, grid return, 2.2 megohms	66-5223340*
T400	Coils, BC and SW oscillator	32-4311
WS	Wafer (band) switch	42-1869

MISCELLANEOUS

Description	Service Part No.
Baffle, speaker	54-4585
Bracket, pointer support rivet assembly	76-4027
Bracket, speaker	56-5690FA3
Cabinet-and-loop assembly	76-4026
Cabinet back	54-7639
Cord, drive (25-ft. spool)	45-8750*
Fastener (7)	1W56913FA3
Grille (ornamental)	56-5694FCP
Knob, SW—BC	54-4527-7
Knob, tone—on-off	54-4527-5
Knob, tuning	54-4527-1
Knob, volume	54-4527-6
Pilot-lamp-socket assembly	76-1280
Pointer	76-3972
Scale, dial	54-5012
Shaft, tuning	56-5688FA11
Bushing, tuning shaft	27-9437
Socket, loktal	27-6177
Socket, miniature	27-6203
Spring, pointer drive	28-8953
Spring, tuning-condenser drive	56-2617
Stud (4)	W2235FA9
Stud, trimount (4)	W2235-1FA9

ALIGNMEN

DIAL—Calibration and pointer-index measurements are shown in figure 8. With tuning condenser fully meshed, set pointer to index mark.

OUTPUT METER—Connect to terminals indicated figure 7.

SIGNAL GENERATOR—Connect as indicated in cha Use modulated output.

STEP	SIGNAL GENERATOR		RADIO			ADJUST
	CONNECTION TO RADIO	DIAL SETTING	BAND SWITCH	DIAL SETTING	SPECIAL INSTRUCTIONS	
1	Ground lead to B–; output lead through .1-mf. condenser to tuning-condenser stator (aerial section).	455 kc.	BC	540 kc.	Adjust, in order given, for maximum output.	TC301B—2n TC301A—2n TC3008—1 TC300A—1
2	Radiating loop (see note below).	580 kc.	BC	580 kc.	Adjust for maximum.	C401A—BC (se
3	Same as step 2.	1600 kc.	BC	1600 kc.	Adjust for maximum.	C401B—BC (sl
4	Same as step 2.	15 mc.	SW	15 mc.	Adjust for maximum on first peak from loose position. Image should be heard with signal generator set at 14.1 mc.	C401C—SW
5	Same as step 2.	15 mc.	SW	15 mc.	Adjust for maximum from tight position.	C400A—SW
6	Same as step 2.	1500 kc.	BC	1500 kc.	Adjust for maximum.	C402—BC
7	Same as step 2.	580 kc.	BC	580 kc.	Adjust for maximum while rocking tuning control.	C401A—BC (se
8	Same as step 2.				Repeat steps 3 and 7 until no further improvement is noted, then repeat step 3.	

RADIATING LOOP: Make up a 6—8 turn, 6-inch-diameter loop from insulated wire; connect to signal-generator lea place near radio loop aerial. Make sure that loop aerial is connected to radio.

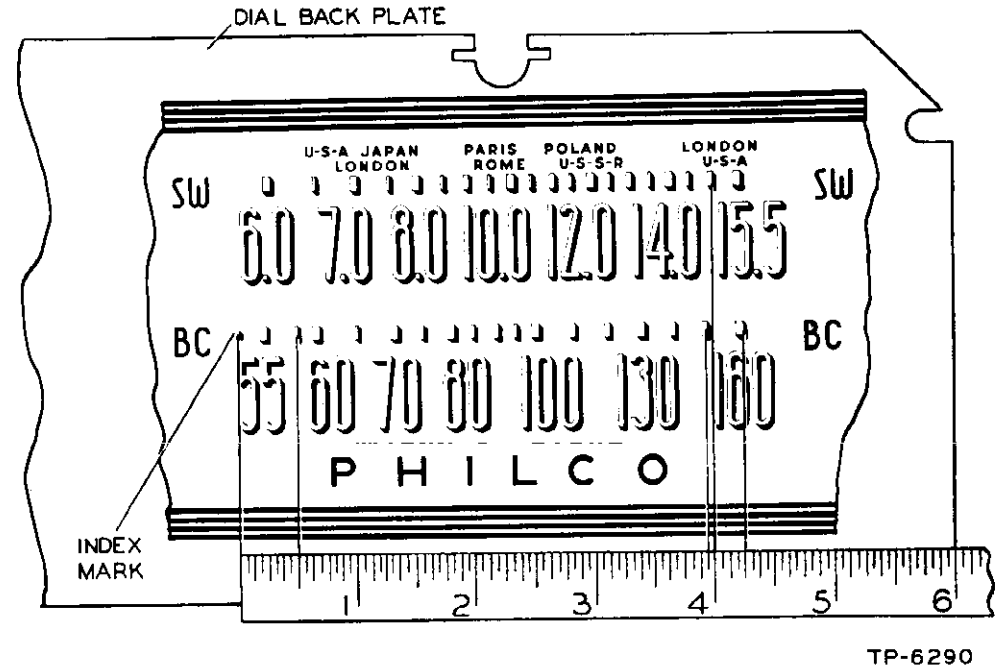

Figure 7. Calibration Measurements for Dial Backplate

©John F. Rider

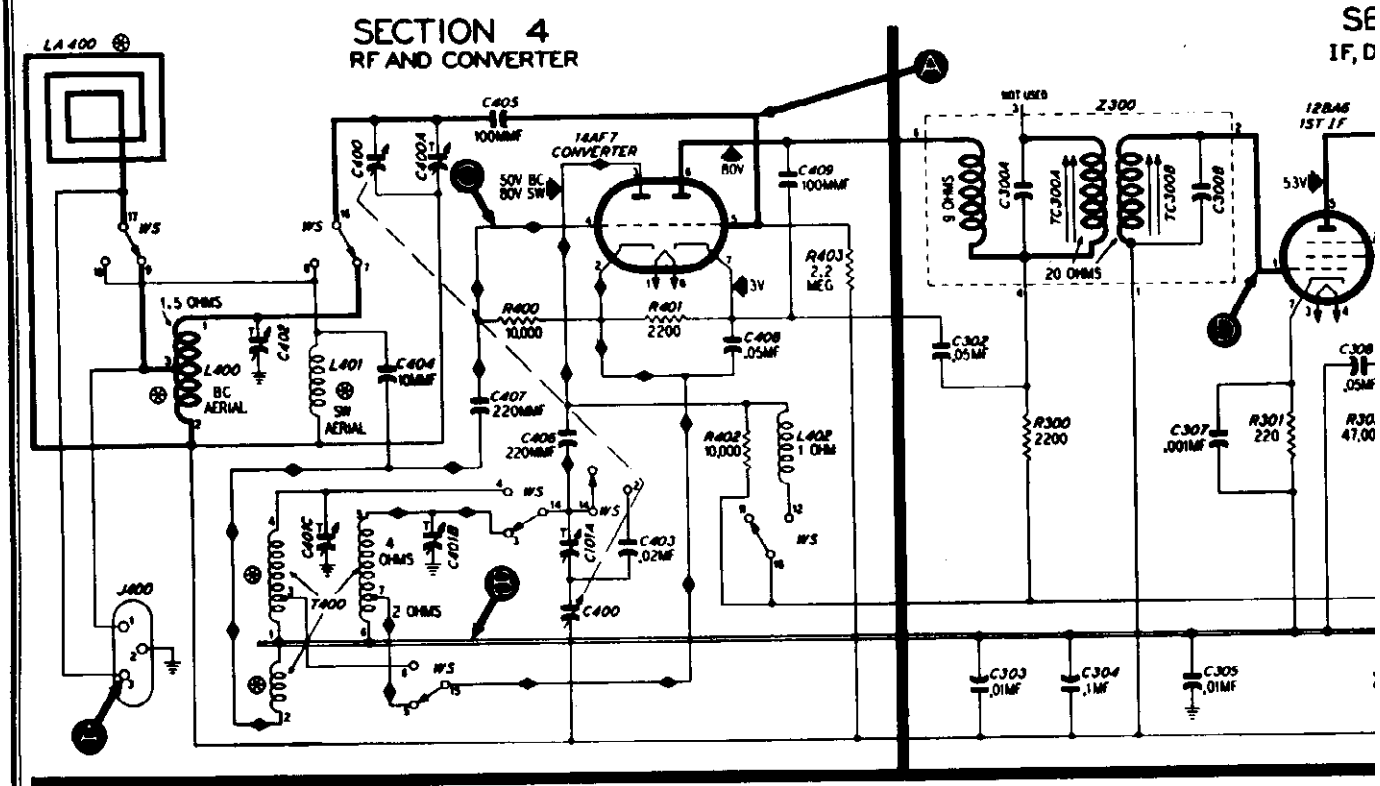

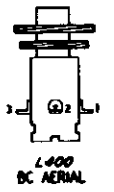

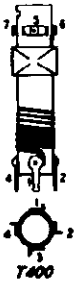

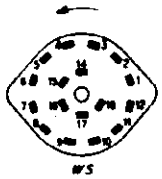

WAFER SWITCH SHOWN (IN BROADCAST POSITION) AS VIEWED WITH CHASSIS INVERTED.

NOTE:
ALL VOLTAGES WERE MEASURED FROM B-
A LINE VOLTAGE OF 117V AC WITH A 20,0
OHMS-PER-VOLT METER.

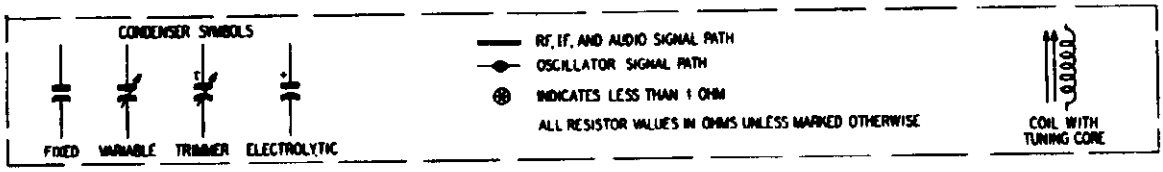

Figure 5. Philco Radio Model 49-904, Sectio

SW CIRCUITS

STEP	TEST POINT	SIG. GEN. FREQ.	BAND SWITCH	RADIO TUNING	NORMAL INDICATION	POSSIBLE CAUSE OF ABNORMAL INDICATION
4	A	15 mc.	SW	15 mc.	Same as step 1.	Trouble in SW circuits. Isolate by steps 5 and 6.
5	C Osc. test; (see note on p. 5)		SW	Rotate through range.	-.8v to -2v	Defective: 14AF7. Open: C403, L402, T400, WS. Shorted: C401C, T400, WS.

©John F. Rider

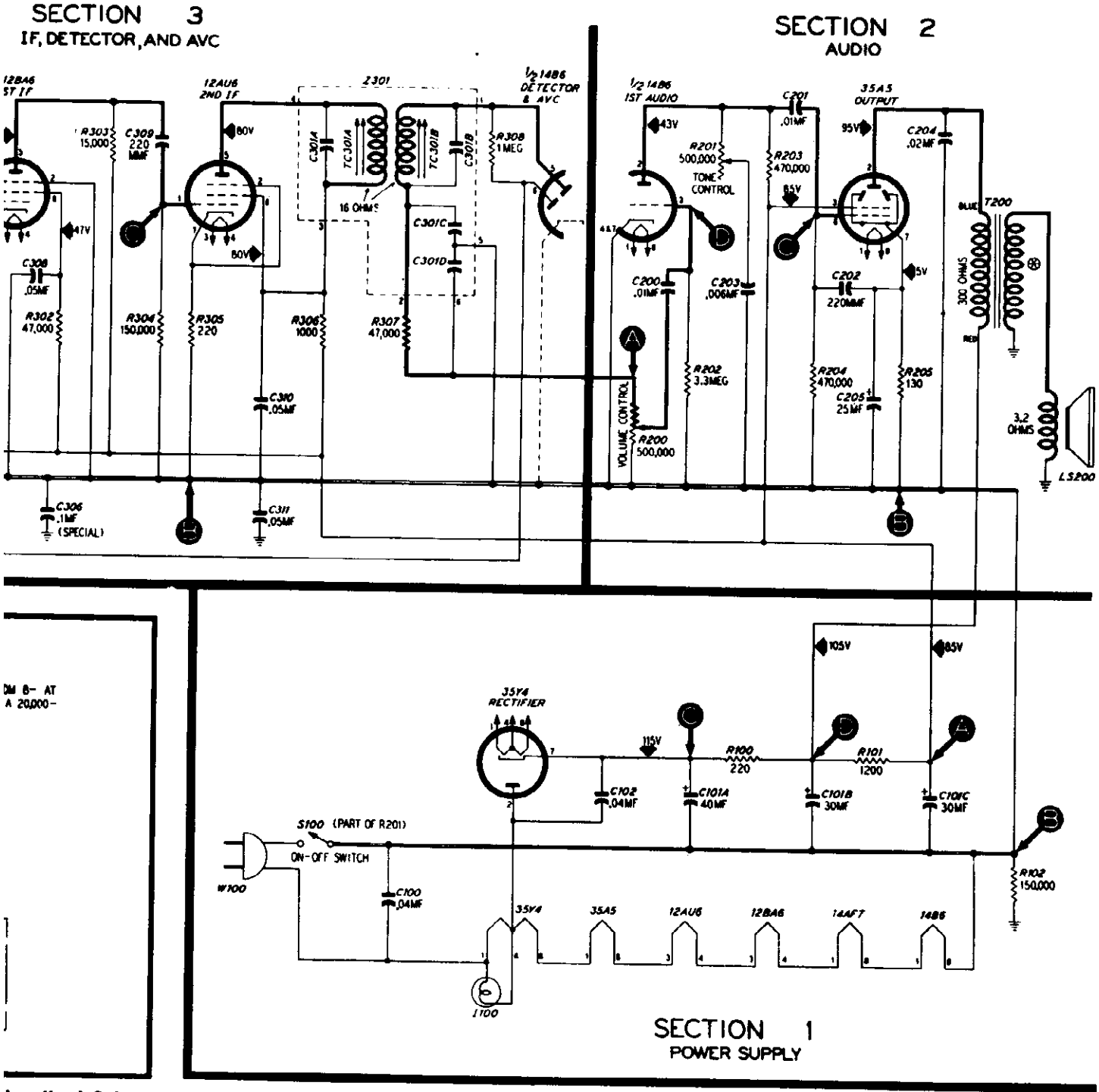

ionalized Schematic Diagram, Showing Test Points

TP-6419

SW CIRCUITS

STEP	TEST POINT	SIG. GEN. FREQ.	BAND SWITCH	RADIO TUNING	NORMAL INDICATION	POSSIBLE CAUSE OF ABNORMAL INDICATION
6	A	15 mc.	SW	15 mc.	Same as step 1.	Defective: 14AF7. Open: L401, C404, WS. Shorted: WS, L401.

OSCILLATOR TEST: Connect the positive lead of a high-resistance voltmeter to B–, test point B; connect the prod end of the negative lead through a 100,000-ohm isolating resistor to the oscillator grid (pin 4 of 14AF7), test point C. Use a suitable meter range, such as 0—10 volts. Proper operation of the oscillator is indicated by negative voltage, of approximately the value given in the chart (measured with 20,000-ohms-per-volt meter), throughout the tuning range.

CORP.

PROCEDURE

RADIO CONTROLS—Set volume control to maximum, and tone control fully counterclockwise (treble). Set band switch and tuning control as indicated in chart.

OUTPUT LEVEL—During alignment, adjust signal-generator output to hold output-meter indication below 1.25 volts.

NOTE:- TC300A AND TC301A ARE LOCATED ON UNDERSIDE OF CHASSIS.

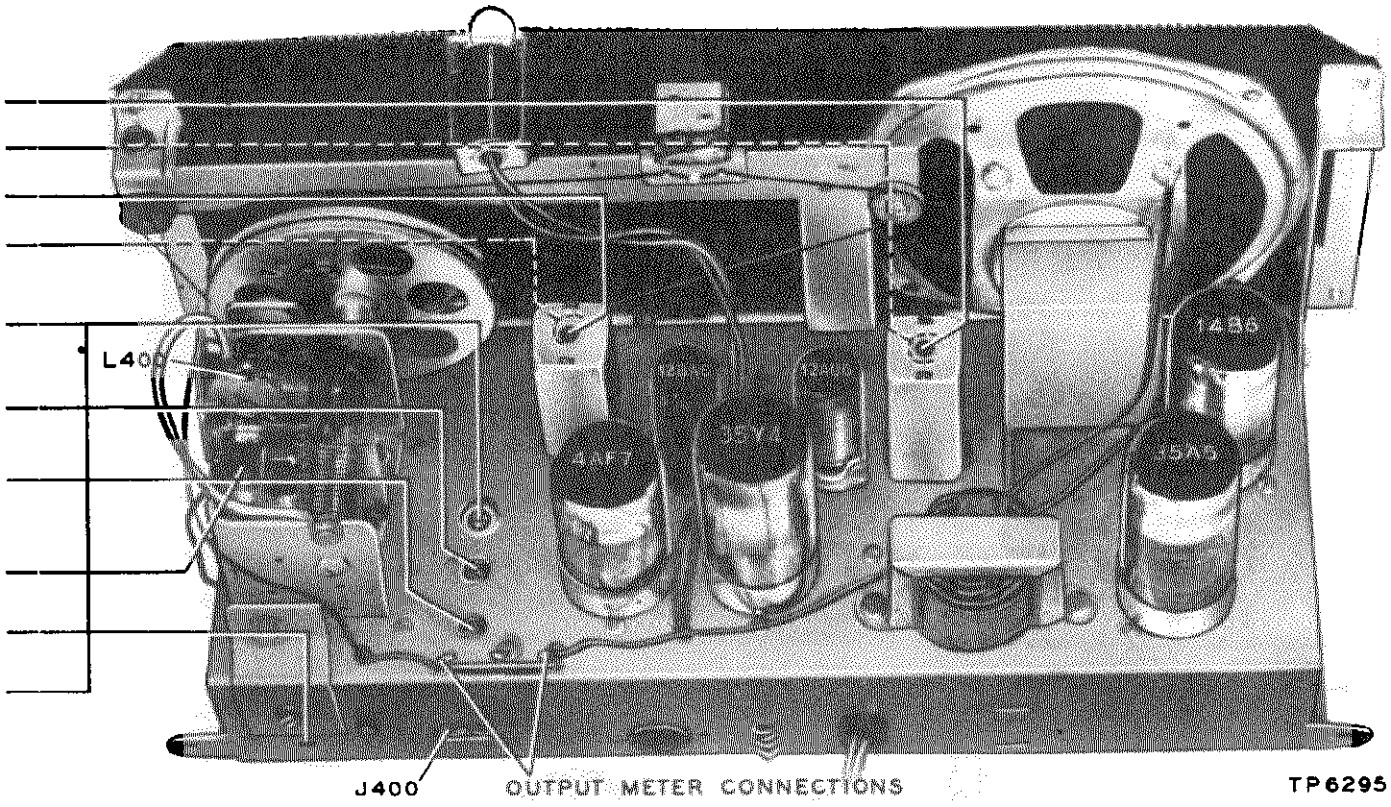

Figure 6. Top View, Showing Trimmer Locations

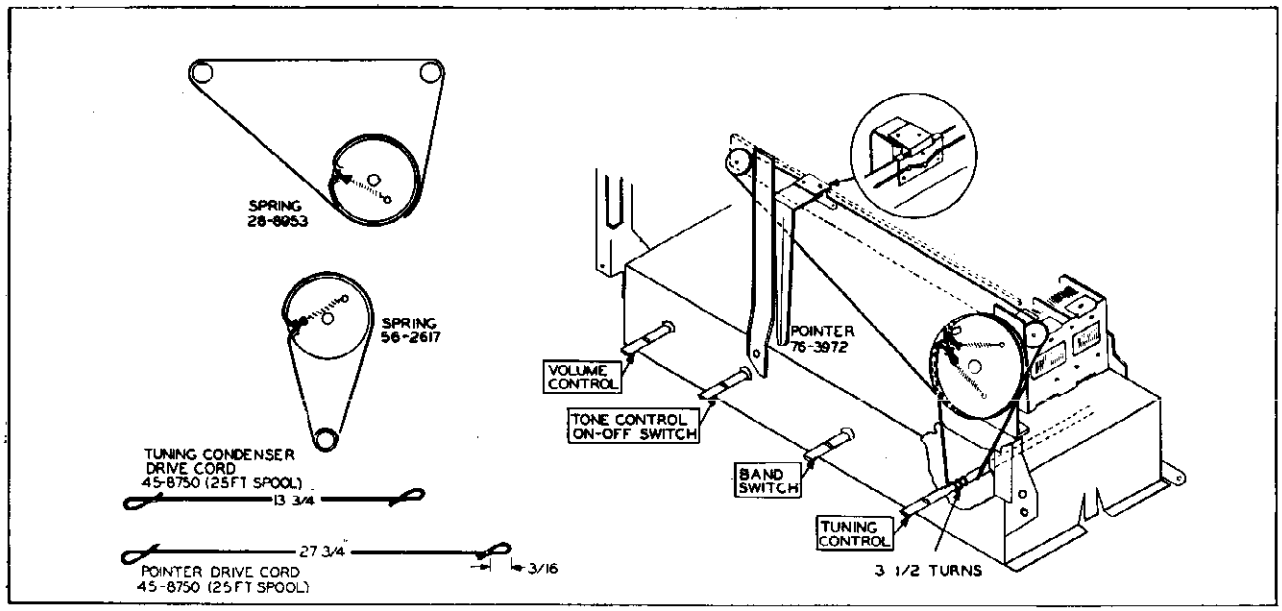

Figure 8. Drive-Cord Installation Details

PHILCO CORP. MODEL 49-1405

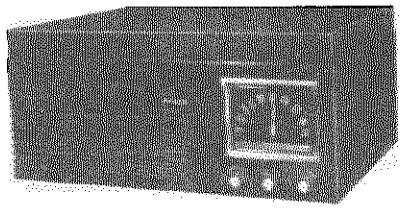

MODEL 49-1405

SPECIFICATIONS

CABINET	Wood, mahogany finish
RADIO CIRCUIT	Five-tube superheterodyne
FREQUENCY RANGE	540—1600 kc.
AUDIO OUTPUT	2 watts
OPERATING VOLTAGES	105—120 volts, 60 cycles, a.c.
POWER CONSUMPTION	
Radio only	35 watts
Radio-phonograph	50 watts
AERIAL	Built-in loop; terminal also provided for external aerial
INTERMEDIATE FREQUENCY	455 kc.
PHILCO TUBES (5)	12BE6, 12BA6, 6AQ6, 35L6GT, 50Y7GT
PHONOGRAPH	Philco Automatic Record Player Model M-9C (for service information see manual PR-1599)

Circuit Description

Philco Radio-Phonograph Model 49-1405 is a table-model 5-tube superheterodyne radio with a Model M-9C Automatic Record Changer. For service information on the record changer, refer to the Service Manual (PR-1599) for Model M-9C Automatic Record Changer.

Reception is provided on the standard broadcast band.

The built-in loop aerial normally provides adequate signal pickup; however, a terminal is provided for an external aerial, if additional pickup is required.

The loop works directly into a 12BE6 converter; no series padder is required for the oscillator, as the tuning-condenser plates are shaped for tracking.

The i-f stage employs a 12BA6, operating at 455 kc. Both transformers are permeability-tuned in both primary and secondary windings.

The diode section of a 6AQ6 provides detection and a-v-c voltage; the triode section is the 1st audio amplifier, and is resistance-coupled to a 35L6GT beam-power output amplifier, which works into a PM speaker.

The d-c operating voltages are supplied by a voltage-doubling circuit using a 50Y7GT rectifier and a resistance-capacitance filter.

The 120,000-ohm resistor, R103, is connected between B— and the chassis, to prevent hum due to condenser leakage under high-humidity conditions.

Philco TROUBLE-SHOOTING Procedure

For rapid trouble shooting, the radio circuit is divided into four sections, as follows:

Section 1—the power supply
Section 2—the audio circuits
Section 3—the i-f, detector, and a-v-c circuits
Section 4—the r-f and converter circuits

Test points are specified for each section, and are indicated in the sectionalized schematic diagram. The trouble-shooting procedure given for each section includes a simplified test chart and a bottom view of the chassis showing the locations of the test points and the components of that section.

In each chart, the first step is a master check for determining whether trouble exists in that section, without going through the entire chart.

Failure to obtain the "NORMAL INDICATION" in any given step indicates trouble within the circuit under test.

After isolating the trouble to a single stage, the defect is located by: first, testing the tube; second, measuring tube electrode voltages; third, measuring circuit resistances; fourth, substituting condensers. The trouble revealed should be corrected before testing further.

Preliminary Checks

To avoid possible damage to the radio, the following preliminary checks should be made before turning on the power:

1. Inspect both the top and the bottom of the chassis. Make sure that all tubes are secure in the proper sockets, and look for any broken or shorted connections, burned resistors, or other obvious indications of trouble.

2. Measure the resistance between B+ (pin 4 of the 50Y6GT) and B—, test point B. When the ohmmeter leads are connected in the proper polarity, the highest resistance reading will be obtained. If the reading is lower than 2000 ohms, check condenser C102A for leakage or a short. This resistance value, which is much lower than normal, does not represent a quality check of this condenser; it is the lowest value which will permit the rectifier to operate safely while the voltage checks of Section 1 (power supply) are performed.

©John F. Rider

MODEL 49-1405 PHILCO CORP.

Section 1—Power Supply

For the tests in this section, use a d-c voltmeter. Connect the negative lead to B—, test point B; connect the positive lead to the test points indicated in the chart. The voltage readings given were taken with a 20,000-ohms-per-volt meter at a line voltage of 117 volts, a.c.

TROUBLE SHOOTING

Turn on the power, and set the volume control to minimum.

If the "NORMAL INDICATION" is obtained in step 1, proceed with the tests for Section 2 (audio circuits); if not, isolate and correct the trouble in this section.

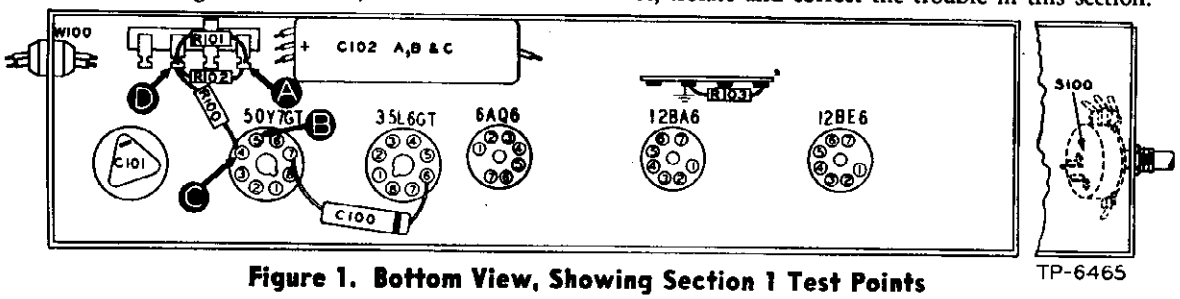

Figure 1. Bottom View, Showing Section 1 Test Points

STEP	TEST POINT	NORMAL INDICATION	ABNORMAL INDICATION	POSSIBLE CAUSE OF ABNORMAL INDICATION
1	A	120 volts		Trouble in this section. Isolate by the following tests.
2	C	212 volts	No voltage	Defective: 50Y7GT, T100. Shorted: C100, C101, C102A.
			Low voltage	Leaky: C100, C101, C102A.
			High voltage	Open: R100.
3	D	205 volts	No voltage	Defective: 50Y7GT. Shorted: C102B. Open: R100.
			Low voltage	Leaky: C102B.
			High voltage	Open: R101, R102, T200*.
4	A	120 volts	No voltage	Shorted: C102C. Open: R101 and R102 (in parallel).
			Low voltage	Leaky: C102C.

* This part, located in another section, may cause abnormal indication in this section.

Section 2—Audio Circuits

For the tests in this section, use an audio-frequency signal generator. Connect the generator ground lead to B—, test point B; connect the output lead through a .1-mf. condenser to the test points indicated in the chart.

TROUBLE SHOOTING

Set the radio volume control to maximum, and the radio-phono switch as indicated in the chart.

If the "NORMAL INDICATION" is obtained in step 1, proceed with the tests for Section 3 (i-f, detector, and a-v-c circuits); if not, isolate and correct the trouble in this section.

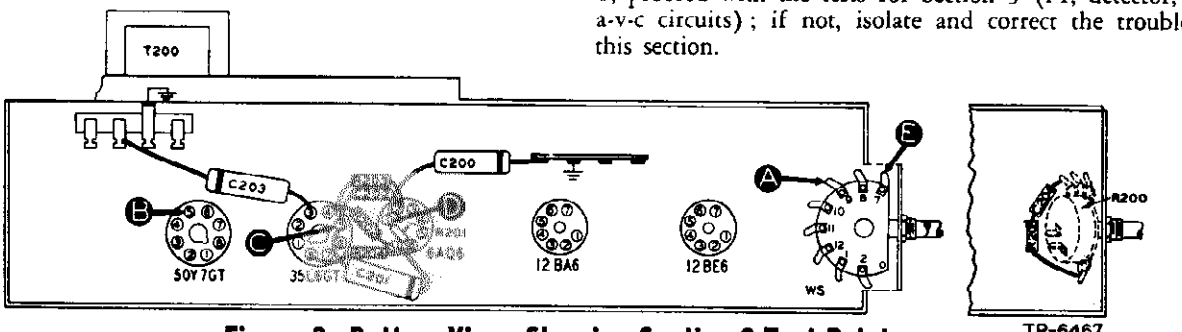

Figure 2. Bottom View, Showing Section 2 Test Points

STEP	TEST POINT	RADIO-PHONO SWITCH	NORMAL INDICATION	POSSIBLE CAUSE OF ABNORMAL INDICATION
1 (a)	A	Radio	Loud, clear speaker output with moderate generator input.	Trouble in this section. Isolate by the following tests.
1 (b)	E	Phono		
2	C	Radio	Clear output with strong input.	Defective: LS200, 35L6GT. Shorted: T200, C203, C201, C204, C202. Open: T200, R204, R205, R203. Leaky: C203.
3	D	Radio	Loud, clear output with moderate input.	Defective: 6AQ6. Shorted: C200. Open: C201, R202, R201. Leaky: C201.
4	A	Radio	Loud, clear output with moderate input.	Open: R200 (rotate), C200, WS. Shorted: WS.
5	E	Phono	Same as step 4.	Open or shorted: WS.

Listening Test: Distortion may be caused by leaky C201. Distortion on strong signals may be caused by shorted or leaky C200.

© John F. Rider

Section 3—I-F, Detector, and A-V-C Circuits

TROUBLE SHOOTING

For the tests in this section, use an r-f signal generator, with modulated output, set at 455 kc. Connect the generator ground lead to B—, test point B; connect the output lead through a .1-mf. condenser to the test points indicated in the chart.

Set the radio volume control to maximum, and the radio-phono switch to the radio position. Rotate the tuning control until the tuning condenser is fully meshed.

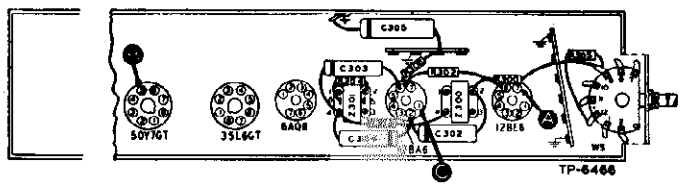

Figure 3. Bottom View, Showing Section 3 Test Points

If the "NORMAL INDICATION" is obtained in step 1, proceed with the tests for Section 4 (r-f and converter circuits); if not, isolate and correct the trouble in this section.

To provide a complete i-f amplifier check, test point A for this section is placed at the grid of the mixer in Section 4; therefore, the effectiveness of step 1 as a master check is dependent upon the condition of certain parts in the mixer circuit. These parts are listed below under "POSSIBLE CAUSE OF ABNORMAL INDICATION."

STEP	TEST POINT	NORMAL INDICATION	POSSIBLE CAUSE OF ABNORMAL INDICATION
1	A	Loud, clear speaker output with weak generator input.	Trouble in this section. Isolate by the following tests.
2	C	Loud, clear output with strong input.	Defective: 12BA6, 6AQ6. Shorted: C300B, C301A, C301B, C301C, C301D, C303, C304, WS, L300B, L301A, L301B. Open: R302, R303, R304, R305, L300B, L301A, L301B, R301, C301A, C301B. Leaky: C303, C304. Misaligned: Z301.
3	A	Loud, clear output with weak input.	Defective: 12BE6*. Shorted: C400A*, C400B*, C300A, L300A, L300B, C302. Open: L300A, R300, C300A, C300B. Misaligned: Z300.

* This part, located in another section, may cause abnormal indication in this section.

Section 4—R-F and Converter Circuits

TROUBLE SHOOTING

For the tests in this section, with the exception of the oscillator test, use an r-f signal generator with modulated output. Connect the generator ground lead to B—, test point B; connect the output lead through a .1-mf. condenser to the test points indicated in the chart.

Set the radio volume control to maximum, and the radio-phono switch to the radio position. Set the tuning control and signal-generator frequency as indicated in the chart.

If the "NORMAL INDICATION" is obtained in step 1, further tests should be unnecessary; if not, isolate and correct the trouble in this section. If the trouble is not revealed by the tests for this section, check the alignment.

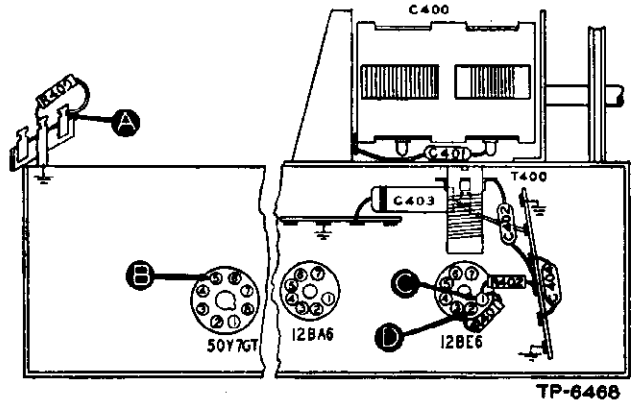

Figure 4. Bottom View, Showing Section 4 Test Points

STEP	TEST POINT	SIG. GEN. FREQ.	RADIO TUNING	NORMAL INDICATION	POSSIBLE CAUSE OF ABNORMAL INDICATION
1	A	1000 kc.	Tune to signal.	Loud, clear speaker output with weak generator input.	Trouble in this section. Isolate by the following tests.
2	C—D Osc. Test (see note below).		Rotate through range.	Negative	Defective: 12BE6. Shorted: C400, C400B, C402, C401, L400A, L400B. Open: C402, L400A, L400B, R401, R402.
3	A	1000 kc.	Tune to signal.	Same as step 1.	Shorted: LA400, C400, C400A. Open: LA400, C404.

OSCILLATOR TEST: Connect the positive lead of a high-resistance voltmeter to the oscillator cathode (pin 2 of 12BE6), test point D; connect the prod end of the negative lead through a 100,000-ohm isolating resistor to the oscillator grid (pin 1 of 12BE6), test point C. Use a suitable meter range, such as 0—10 volts. Proper operation of the oscillator is indicated by negative voltage within the range given in a chart (measured with a 20,000-ohms-per-volt meter) throughout the tuning range.

© John F. Rider

MODEL 49-1405 PHILCO CORP.

REPLACEMENT PARTS LIST

NOTE: Part numbers identified by an asterisk (*) indicates a general replacement item. The part numbers of these items may not be identical with those on factory parts; also, the electrical values of some replacement items may differ from the values given in the schematic diagram and parts list. The values substituted in any case are so chosen that the operation of the radio will be either unchanged or improved. When ordering replacements, use only the "Service Part No."

SECTION 1

POWER SUPPLY

Reference Symbol	Description	Service Part No.
C100	Condenser, line filter, .05 mf.	61-0107*
C101	Condenser, electrolytic, filter, 20 mf.	30-2568-22
C102	Condenser, electrolytic, 3-section	30-2575-26
C102A:	Condenser, filter, 40 mf. 250 V.	Part of C102
C102B:	Condenser, filter, 40 mf. 250 V.	Part of C102
C102C:	Condenser, filter, 20 mf. 150 V.	Part of C102
I100	Pilot lamp	34-2605
R100	Resistor, filter, 180 ohms	66-1184340*
R101	Resistor, filter, 10,000 ohms	66-3103340*
R102	Resistor, filter, 10,000 ohms	66-3103340*
R103	Resistor, isolating, 120,000 ohms	66-4123340*
S100	Switch, power on-off	Part of R200
W100	Line cord and plug	L2183*
WS-A	Switch-wafer section	Part of 42-1847-1†

SECTION 2

AUDIO CIRCUITS

C200	Condenser, d-c blocking, .01 mf.	61-0120*
C201	Condenser, d-c blocking, .01 mf.	61-0120*
C202	Condenser, r-f by-pass, 220 mmf.	66-122001001*
C203	Condenser, tone compensation, .004 mf.	30-4623*
C204	Condenser, tone compensation, .01 mf.	61-0120*
R200	Volume control (with power on-off witch), 2 megohms, tapped at 1 megohm.	33-5535-15
R201	Resistor, grid return, 10 megohms	66-6103340*
R202	Resistor, plate load, 220,000 ohms	66-4223340*
R203	Resistor, grid return, 470,000 ohms	66-4473340*
R204	Resistor, cathode bias, 180 ohms	66-1183340*
R205	Resistor, tone compensation, 47,000 ohms	66-3473340*
LS200	Loud-speaker, PM	36-1629
T200	Transformer, output	32-8242-2
WS-B	Switch-wafer section	Part of 42-1847-1†

† 42-1847-1 Wafer switch, single wafer, radio-phono (includes WS-A, WS-B, WS-C).

SECTION 3

I-F, DETECTOR, AND A-V-C CIRCUITS

C300A	Condenser, fixed, 1st i-f primary	Part of Z300
C300B	Condenser, fixed, 1st i-f secondary	Part of Z300
C301A	Condenser, fixed, 2nd i-f primary	Part of Z301
C301B	Condenser, fixed, 2nd i-f secondary	Part of Z301
C301C	Condenser, fixed, i-f filter	Part of Z301
C301D	Condenser, fixed, i-f filter	Part of Z301
C302	Condenser, a-v-c filter, .05 mf.	61-0122*
C303	Condenser, screen by-pass, .01 mf.	61-0120*
C304	Condenser, plate by-pass, .003 mf.	61-0109*
C305	Condenser, r-f by-pass, .1 mf.	61-0113*
R300	Resistor, a-v-c filter, 22,000 ohms	66-3223340*
R301	Resistor, a-v-c filter, 2.2 megohms	66-5223340*
R302	Resistor, screen dropping, 100,000 ohms	66-4103340*
R303	Resistor, plate dropping, 1000 ohms	66-2103340*
R304	Resistor, a-v-c filter, 47,000 ohms	66-3473340*

SECTION 3 (Cont.)

Reference Symbol	Description	Service Part No.
R305	Resistor, diode load, 470,000 ohms	66-4473340*
R306	Resistor, bias, 100 ohms	66-1103340*
TC300A	Tuning core, 1st i-f primary	Part of Z300
TC300B	Tuning core, 1st i-f secondary	Part of Z300
TC301A	Tuning core, 2nd i-f primary	Part of Z301
TC301B	Tuning core, 2nd i-f secondary	Part of Z301
WS-C	Switch-wafer section	Part of 42-1847-1†
Z300	Transformer, 1st i-f	32-4160
Z301	Transformer, 2nd i-f	32-4240

SECTION 4

R-F AND CONVERTER CIRCUITS

C400	Condenser, tuning gang	31-2727
C400A:	Condenser, trimmer, aerial	Part of C400
C400B:	Condenser, trimmer, oscillator	Part of C400
C401	Condenser, ceramic, 10 mmf.	30-1224-6
C402	Condenser, ceramic, 56 mmf.	60-00515307*
C403	Condenser, r-f by-pass, .03 mf.	45-3500-1*
C404	Condenser, aerial coupling, 5 mmf.	60-90505007*
LA400	Loop aerial	76-2127-9
R400	Resistor, leakage, 150,000 ohms	66-4153340*
R401	Resistor, grid return, 22,000 ohms	66-3223340*
R402	Resistor, parasitic suppressor, 33 ohms	66-0333340*
T400	Transformer, oscillator	32-4190-2

† 42-1847-1 Wafer switch, single wafer, radio-phono (includes WS-A, WS-B, WS-C).

MISCELLANEOUS

Description	Service Part No.
Cabinet and Cabinet Parts	
Bezel	56-5931
Cabinet	10727
Knob (3)	54-4527-9
Phonograph cover	45-6454
Window, acetate	54-4630
Dial Scale and Hardware	
Dial cord (25-ft. spool)	45-8750*
Pointer	56-5956FCP
Spring, pointer	56-6299
Scale	54-5022
Shaft assembly, drive	76-3731-1
Spring, drive cord	56-2617
Pilot-lamp-socket assembly	27-6233-1
Bracket-and-clip assembly	76-4164
Bracket	56-5928FA3
Clip	56-3545-6FA3
Bracket, rear	27-9508
Socket, octal	27-6174
Socket, miniature	27-6226
Wafer, condenser mounting	27-9508
Crystal pickup cartridge, P-30	35-2671-1
Needle for P-30 crystal	35-2670
Pickup cartridge and needle assembly	45-1609

John F. Rider

ALIGNMEI

DIAL—With tuning condenser fully meshed, set pointer to index mark at low-frequency end of dial, beyond "55".

RADIO CONTROLS—Set volume control to maxim and radio-phono switch to radio position.

OUTPUT METER—Connect to terminals indicated figure 6.

STEP	SIGNAL GENERATOR		RADIO		A
	CONNECTION TO RADIO	DIAL SETTING	DIAL SETTING	SPECIAL INSTRUCTIONS	
1	Through .1-mf. condenser to external-aerial lead. Make sure that radio loop aerial is connected to radio.	455 kc.	Tuning condenser fully meshed.	Adjust, in order given, for maximum output.	TC301B TC301A TC300 TC300
2	Radiating loop (see note below).	1600 kc.	1600 kc.	Adjust for maximum output.	
3	Same as step 2.	1500 kc.	1500 kc.	Adjust for maximum output.	C

RADIATING LOOP: Make up a 6—8-turn, 6-in-diameter loop, using insulated wire; connect to signal-generator leads near radio loop aerial.

SYMBOLIZATION

The components in the radio circuit are symbolized according to the types of parts and the sections of the radio in which the parts are located. The prefix letter of the symbol designates the type of part, as follows:

C—condenser	LS—loud-speaker	W—wire or cable
I—pilot lamp	R—resistor	WS—wafer switch
L—choke or coil	S—switch	Z—electrical assembly
LA—loop aerial	T—transformer	

The number of the symbol designates the section in which the part is located, as follows:

100-series components are in Section 1—the power supply
200-series components are in Section 2—the audio circuits
300-series components are in Section 3—the i-f, detector, and a-v-c circuits
400-series components are in Section 4—the r-f and converter circuits

©John F. Rider

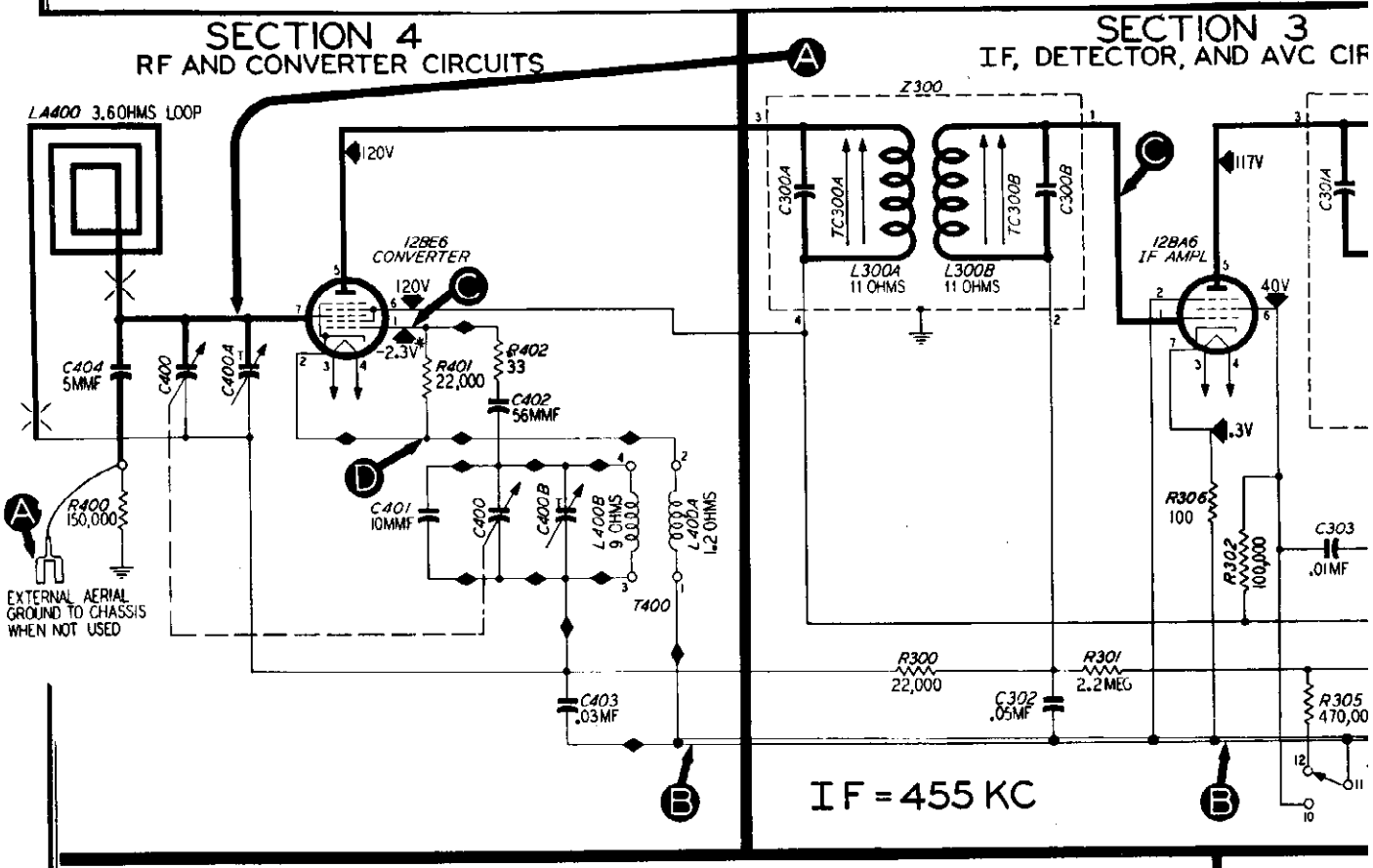

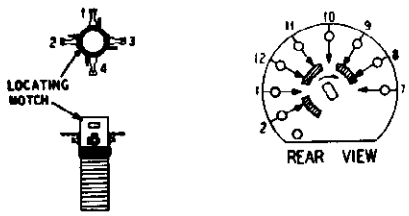

RADIO-PHONO SWITCH (WS) SHOWN IN RADIO POSITION

ALL VOLTAGES MEASURED FROM B- WITH A 20,000-OHMS-PER-VOLT VOLTMETER AT A LINE VOLTAGE OF 117 VAC

* VOLTAGE MEASURED WITH 100,000 OHM RESISTOR IN SERIES WITH NEG PROD

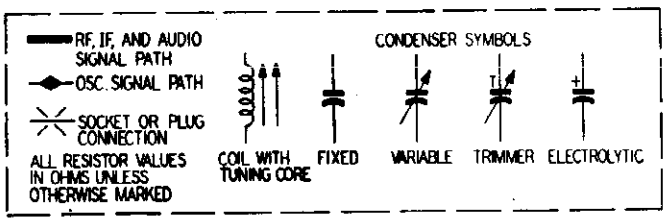

RECORD C
MODEL



Figure 5. Philco Model 49-1405, Sections

.CO CORP.

MODEL 49-1405

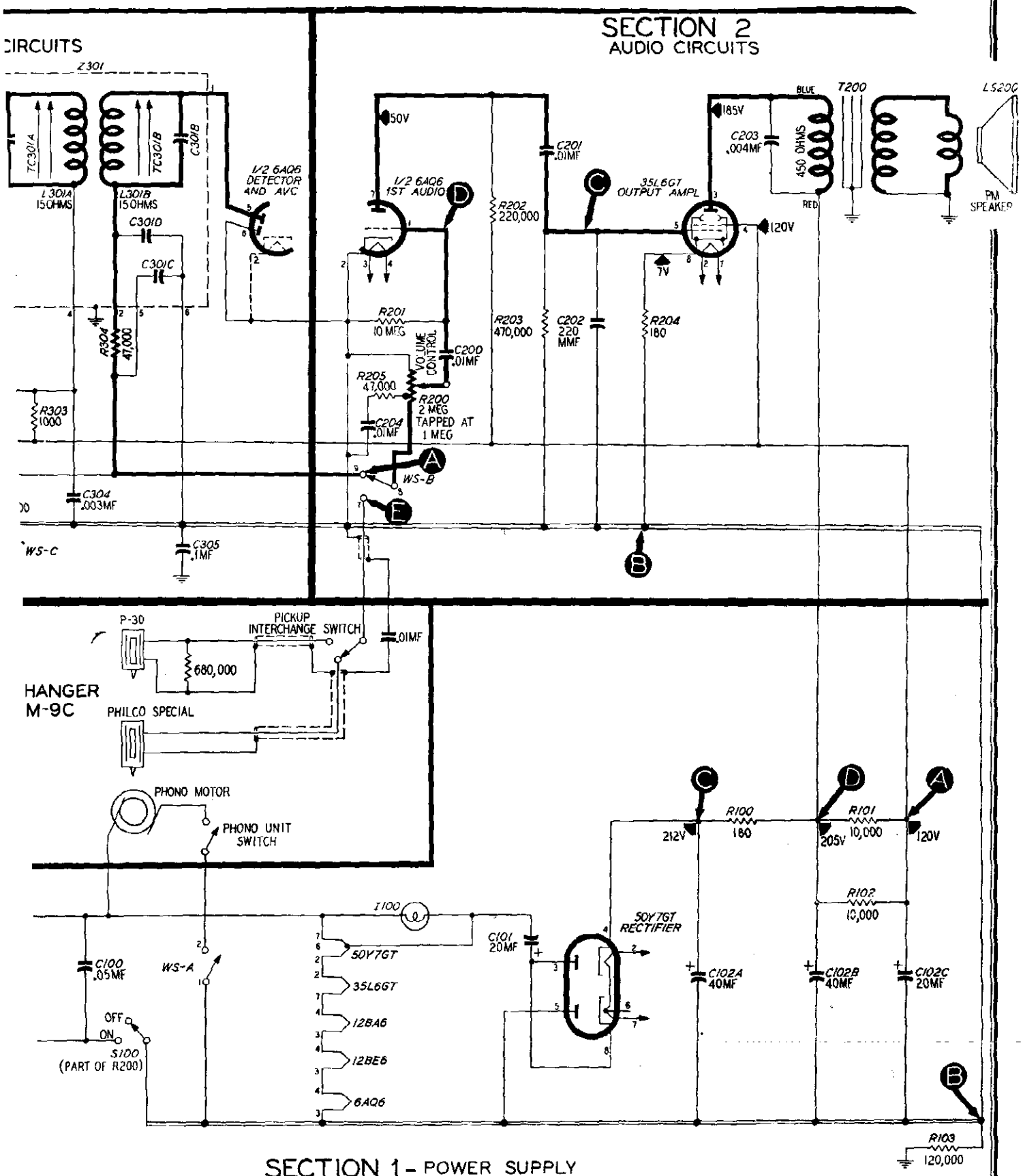

ed Schematic Diagram, Showing Test Points

PROCEDURE

SIGNAL GENERATOR—Connect ground lead to B—, test point B in figure 4, and connect output lead as indicated in chart. Use modulated output.

OUTPUT LEVEL—During alignment, adjust signal-generator output to hold output-meter indication below 1.25 volts.

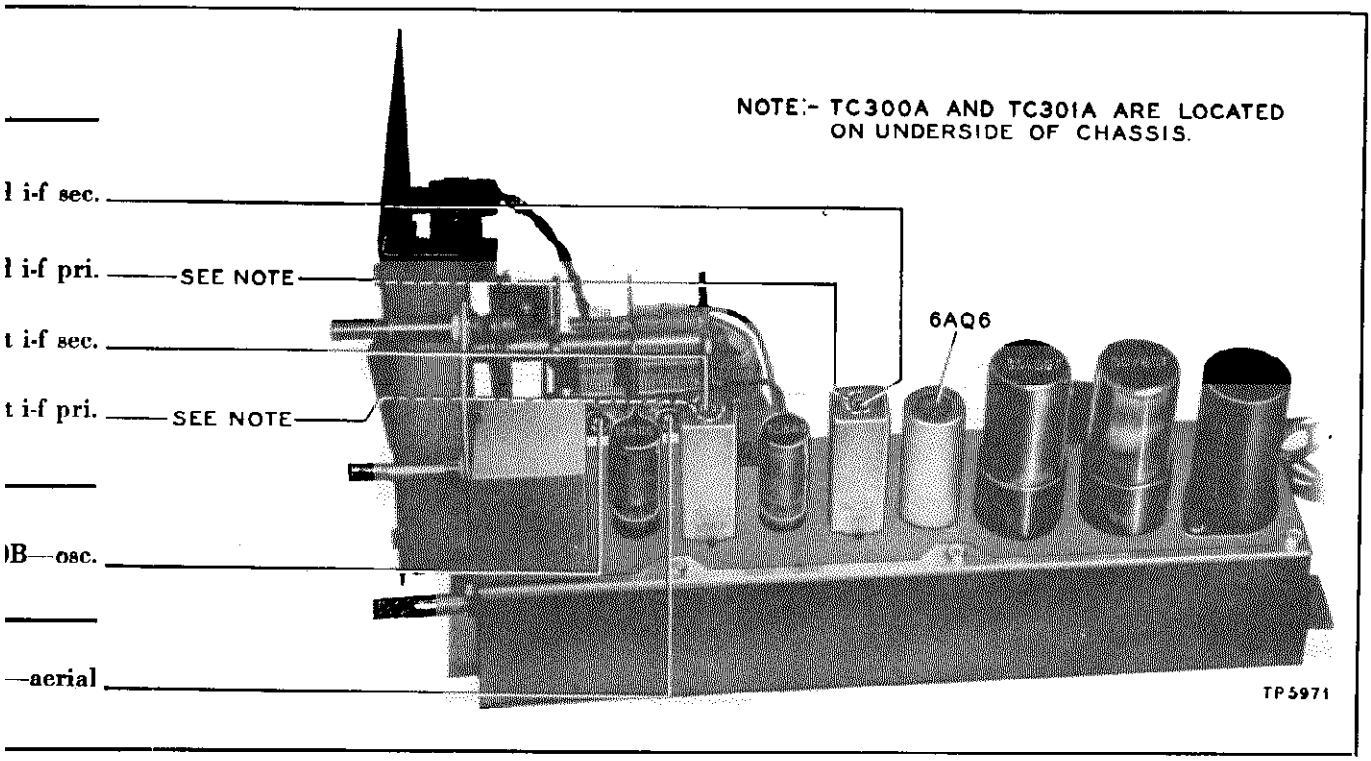

ıce

Figure 6. Top View, Showing Trimmer Locations

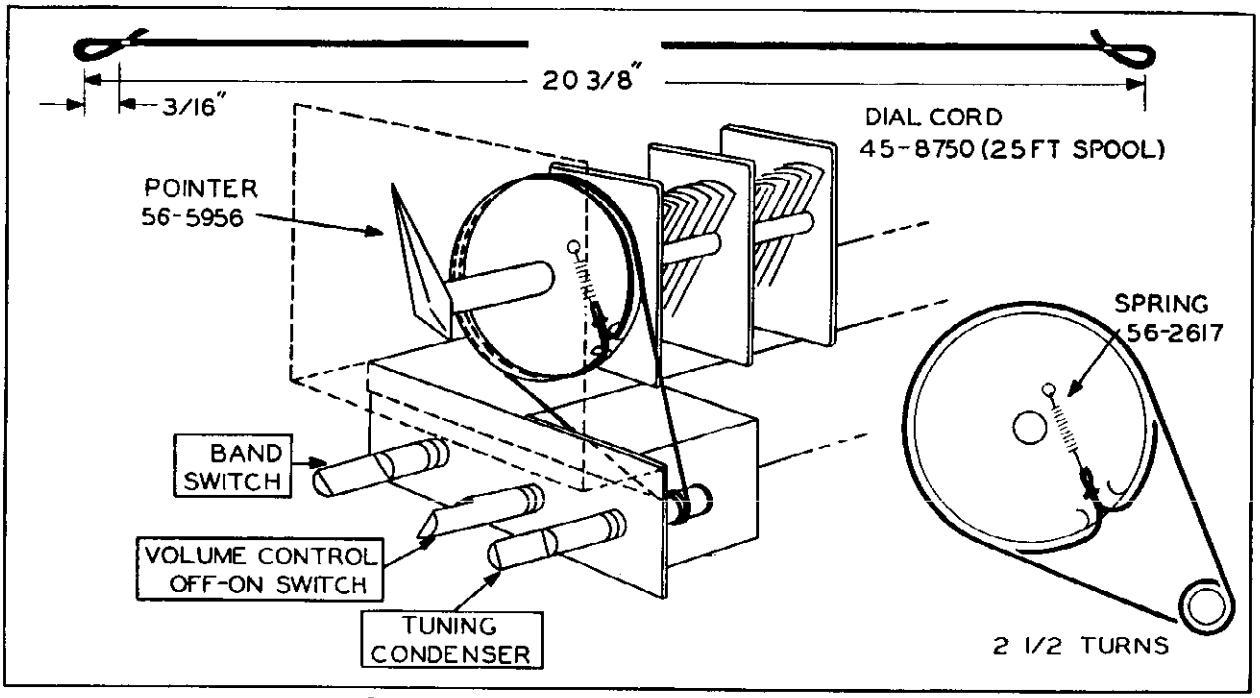

Figure 7. Drive-Cord Installation Details TP-6471

PHILHARMONIC RADIO CORP.

MODELS 248C
248CB

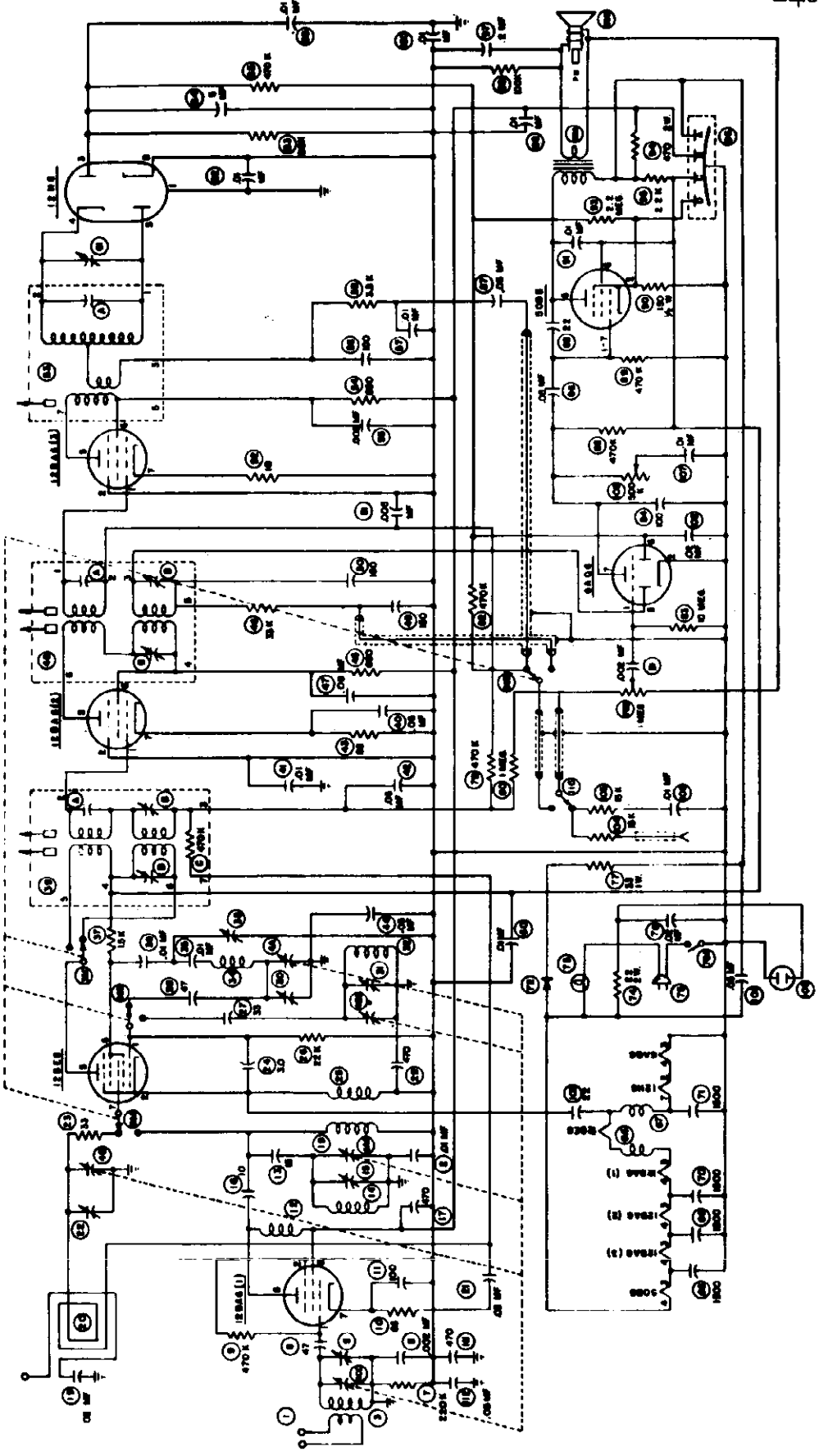

MODEL 300-C
MODEL 448C

PHILHARMONIC RADIO CORP.

MODEL 300-C

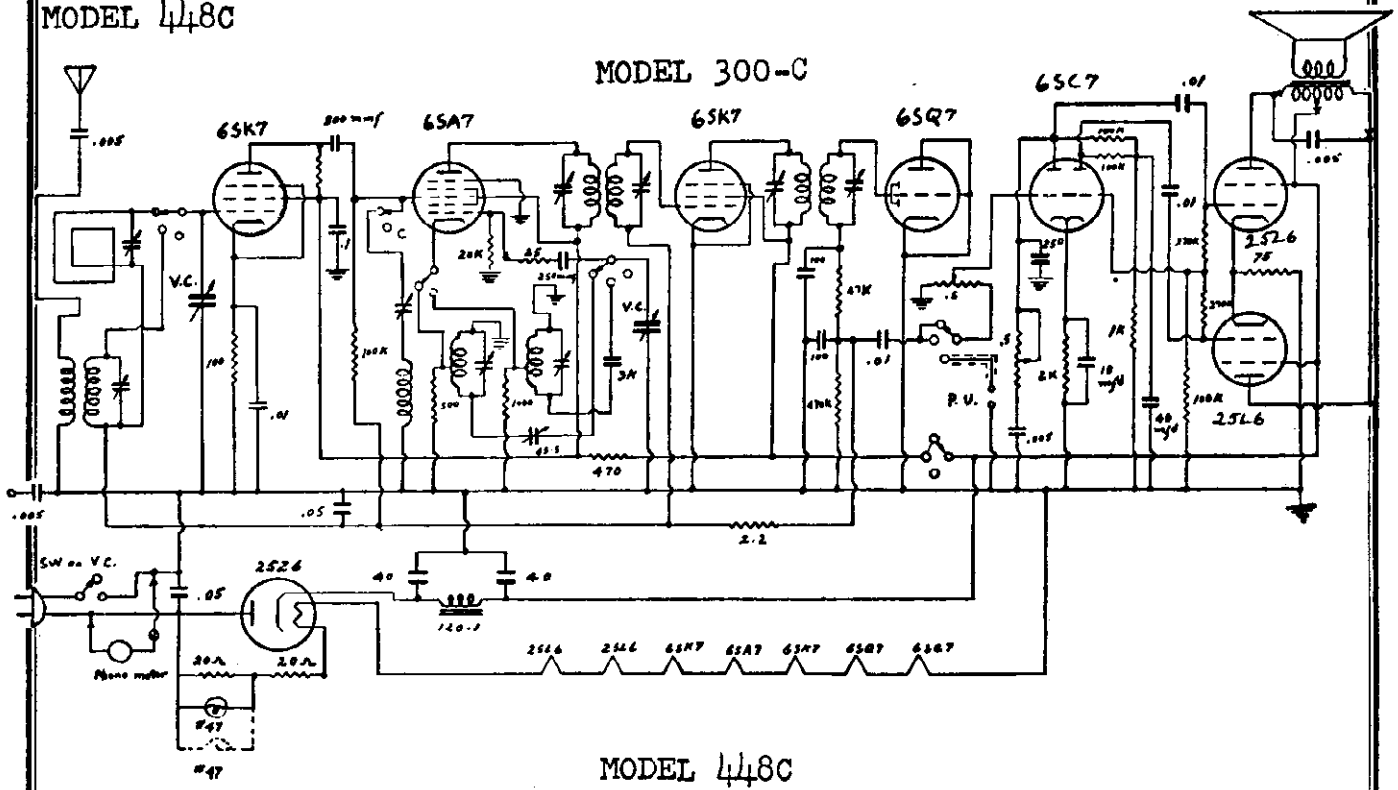

MODEL 448C

TYPE: Twelve-tube FM-AM superheterodyne.

FREQUENCY RANGES: FM, 88-108 Mc.
AM, 540-1600 Kc.

INTERMEDIATE FREQUENCIES: FM, 10.7 Mc. AM, 456 Kc.

POWER SOURCE: 105-125 volts, 60 cycles.

POWER CONSUMPTION:
Radio, 80 watts.
Radio and Phonograph, 102 watts.

INSTALLATION.

ANTENNAS.— For AM operation, the loop antenna attached to the rear of the chassis is generally the most satisfactory. However, terminals marked A and G are provided on the loop for the connection of an external antenna and ground, which may be used if desired.

For the reception of local FM stations, a folded-dipole antenna is provided in the cabinet. If reception of other than strictly local FM stations is desired, a good external FM antenna should be installed and connected with a 300-ohm balanced line to the input terminals on the rear of the chassis next to the phonograph input jack 124. The internal dipole must be disconnected when using the external antenna, and vice-versa.

POWER CONNECTIONS.— Connect the power cord to an alternating-current supply of 105-125 volts, 60 cycles. Be sure that the phonograph-motor cord is plugged into receptacle 121, the speaker plug 123 into receptacle 122, and the phonograph-pickup cord into phonograph jack 124.

CONTROLS.— The control knobs on the front panel perform the following functions. The numbers are from left to right.

1. Power switch and volume control.
2. Tone control. Clockwise rotation gives more high-frequency response.
3. Selector switch. Left position, AM radio; center, FM radio; right, phonograph.
4. Tuning control.

OPERATION.

RADIO.— Start the set by turning the volume control clockwise about one-third of the way.

Set the selector switch on AM or FM as desired.

Turn the tuning control until the pointer indicates the frequency of the desired station. When the station comes in, slowly rotate the knob back and forth and determine the exact center position, where the background noise disappears or is sharply reduced, and the signal comes in clearly with the greatest volume. This is the correct tuning position, and careful adjustment is required, especially on FM, if the full rich-tone capability of the receiver is to be realized. A strong FM station may also be received, with considerable distortion, at positions slightly above and below the correct center position. This condition is quite normal.

Adjust the tone control for the most pleasing operation.

PHONOGRAPH.— Set the selector switch on the right-hand position. Operate the record changer in accordance with the accompanying instructions.

©John F. Rider

PHILHARMONIC RADIO CORP.

MODEL 448

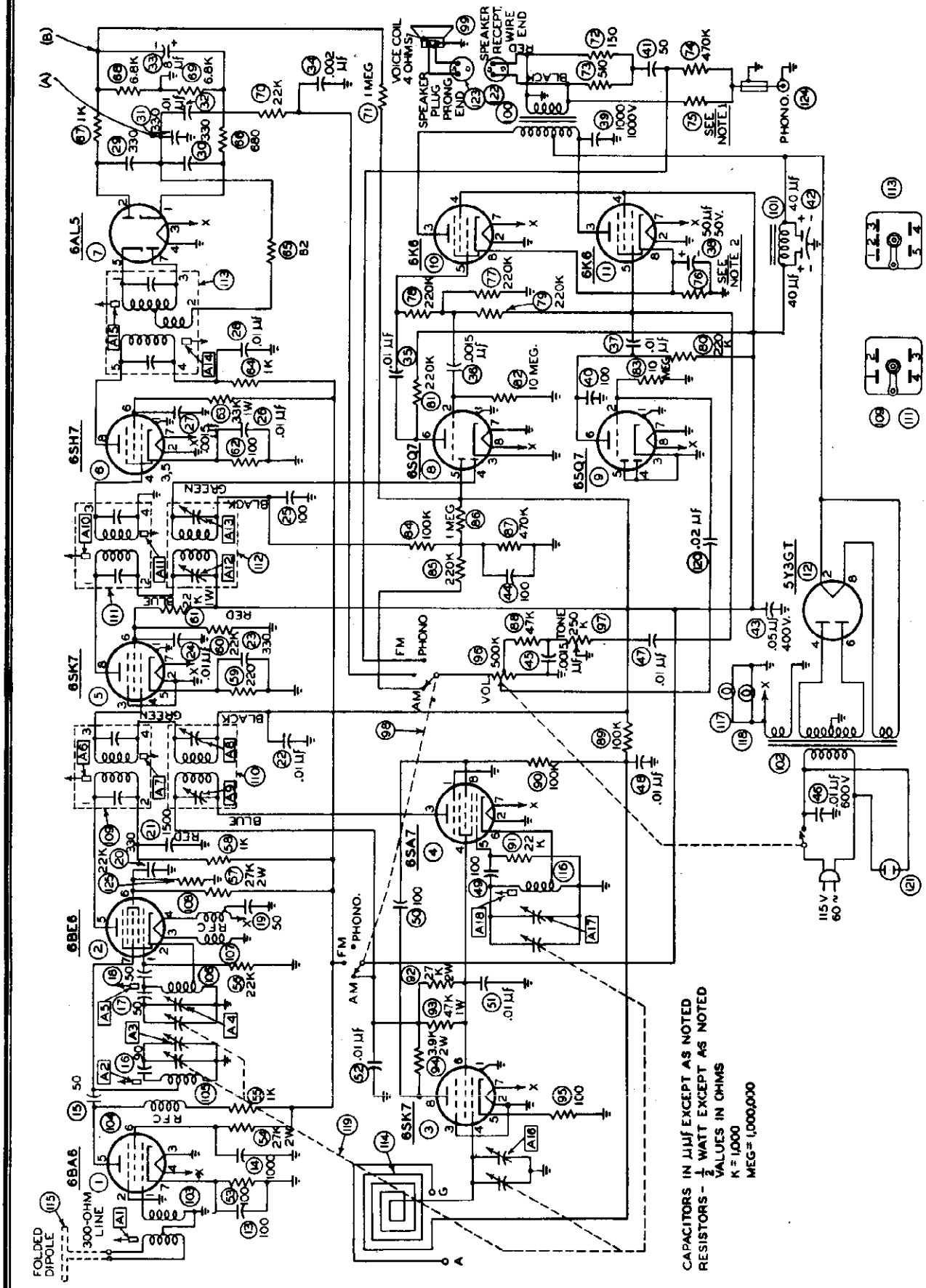

MODEL 448C

PHILHARMONIC RADIO CORP.

ALIGNMENT PROCEDURE
Read Carefully before Attempting Alignment

A-M ALIGNMENT

1. TUNING CAPACITOR fully meshed. Adjust dial pointer to reference dot at the low-frequency end of the scale.
2. VOLUME CONTROL maximum clockwise.
3. TONE CONTROL maximum clockwise.
4. SELECTOR SWITCH on AM (left-hand position).
5. SIGNAL GENERATOR.— Use standard A-M Signal Generator with approximately 30 per cent modulation at 400 cycles.
6. SIGNAL-GENERATOR COUPLING.-Low side grounded to chassis. High side connected through 0.01 mfd capacitor to coupling point.
7. LOOP COUPLING.— For loop coupling, use a Standard Signal Injection Loop according to specifications. If a standard loop is not available, make a loop with 5 or 6 turns of insulated wire, close-wound on a 3" to 4" diam form. Place the loop coaxially with and at least 10 inches back of the receiver loop. Connect to the signal generator through a resistor of from 100 to 400 ohms.
8. RECEIVER OUTPUT.

   (A) Use a d-c electronic voltmeter similar to the VoltOhmyst, low side to chassis, high side to AVC terminal of loop.
   (B) Use a rectifier-type a-c voltmeter or a standard output meter across the speaker voice coil.

	SIGNAL GENERATOR			RECEIVER	RECEIVER OUTPUT		ADJUST	REMARKS
	FREQ, KC	APPROX. SIGNAL LEVEL	COUPLE TO	DIAL SETTING	(A) AVC VOLTS INCREASE	(B) VOICE COIL, WATTS		
1.	455	800 uv	Pin 8, 6SA7	Near 600	-0.6	2.0	A-12, A-13, A-8, A-9	Adjust for maximum watts or AVC. Check for smooth round-top selectivity curve.
2.	1600	400 uv/m	Loop	1600 (Capacitor wide open)	-0.6	2.0	A-17, A-16	Adjust for maximum output.
3.	1400	400 uv/m	Loop	Near 1400	-0.6	2.0	A-16	Tune to signal and adjust A-16 for maximum output.
4.	600	400uv/m	Loop	Near 600	-0.6	2.0	A-18	Rock tuning control and simultaneously adjust A-18 for maximum output.
5.	Repeat steps 2, 3, and 4 in order until no further improvement can be made.							

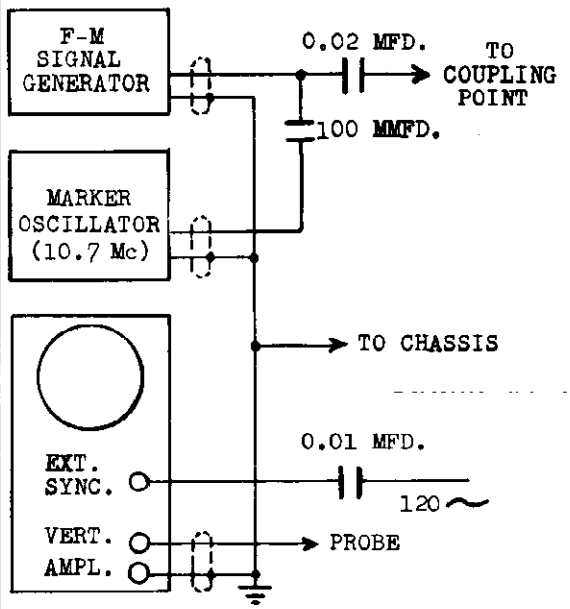

DIAGRAM I. F-M I-F ALIGNMENT.

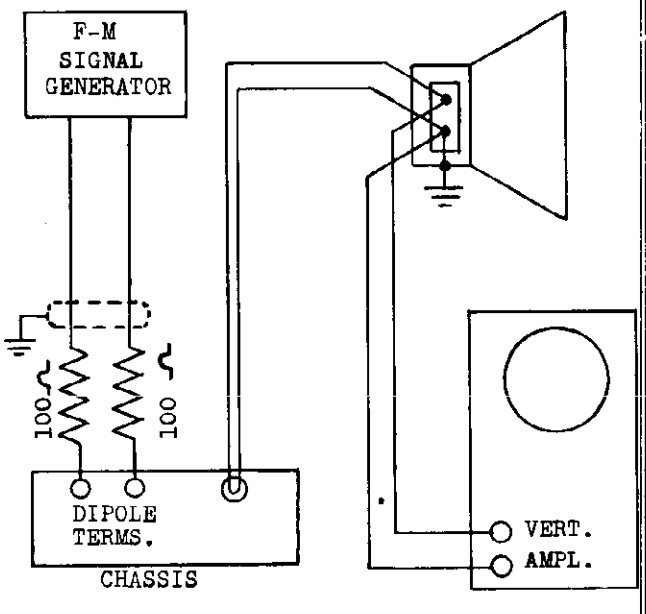

DIAGRAM II. F-M R-F ALIGNMENT.

©John F. Rider

PHILHARMONIC RADIO CORP. MODEL 448

F-M ALIGNMENT
Using Frequency-Modulated Signal Generator and Oscilloscope

ALIGNMENT OF I-F STAGES

GENERAL.— When the designated F-M signal from the signal generator is applied to the I-F amplifier or ratio detector, the output at point (A) viewed on an oscilloscope with a 60-cycle linear horizontal sweep is represented by pattern A. Pattern B shows the output at point (B) with the 8 mfd capacitor 33 disconnected. Patterns more useful for alignment purposes are obtained by operating the horizontal linear sweep of the scope at twice the modulation frequency or 120 cycles per second. This gives a double trace on each pattern, one trace representing the increasing-frequency half of the modulation cycle and the other representing decreasing frequencies, patterns I and V. When properly aligned, the two traces of pattern V coincide.

CENTER-FREQUENCY MARKER.— An additional requirement for proper alignment is that the signal generator must operate at the correct center frequency. The 10.7 Mc signal of the marker oscillator is used to check the center frequency. As the F-M signal sweeps its band, it produces a beat frequency with the marker signal, which decreases as the center point is approached and increases on the other side of center. These markers are shown properly centered in patterns II and VI. Because of the amplitude rejection of the ratio detector, it is difficult to determine the center point of the markers in pattern II, but they can readily be located by temporarily shorting terminals 1 and 2 or 2 and 3 of ratio-detector transformer 113. The resulting effect is shown in patterns III and IV. It is advisable to remove the marker signal when adjusting for coincidence of patterns or straightness of crossover lines, but checks should be made with the marker to make sure that the signal generator has not drifted from the correct center frequency. Pattern VII shows the effect when the signal generator is off center. The markers may be entirely separated or partially overlap. To correct this condition, readjust the center frequency of the signal generator until the markers come together and the combined marker length is a minimum, as in pattern VIII. Then realign to give pattern V or VI.

PROCEDURE

F-M SIGNAL GENERATOR, center frequency 10.7 Mc/sec, 225 Kc deviation, 450 Kc total sweep, at 60 cycles/sec. Use only enough output for satisfactory wave forms.

MARKER OSCILLATOR, 10.7 Mc/sec fixed, crystal-controlled or accurately calibrated. Use no more output than necessary. Excessive amplitude will distort the patterns.

COUPLING OF SIGNAL GENERATOR AND MARKER OSCILLATOR.— See Diagram I. Low side to chassis. Combined output through 0.002 mfd to coupling point.

OSCILLOSCOPE.— Vertical amplifier at maximum gain. Linear horizontal sweep synchronized at 120 cycles per second by ripple voltage from pin 2 of rectifier 5Y3GT of the receiver. Do not use internal Y-signal synchronization. This will result in off-center alignment.

SELECTOR SWITCH on FM (center position).

VOLUME AND TONE CONTROLS, maximum clockwise.

HOOKUP, as in Diagram I.

NOTE. Unless receiver is seriously misaligned, omit steps 1 and 2.

	SIGNAL GENERATOR		RADIO DIAL	OSCILLOSCOPE		ADJUST	REMARKS
	CENTER FREQ.	COUPLING POINT		VERTICAL INPUT	PATTERN NO.		
1	10.7 Mc	Pin 4 6SH7	Near 90 Mc. Tune off stations.	High side to point (A). Low side to chassis.	I, II III, IV	A-14 A-15 alternately	Adjust for maximum amplitude, symmetry, and straightness of crossover, as in patterns I and II. Verify position of center-frequency marker as in patterns III and IV.
2	10.7 Mc	Pin 7 6BE6	Near 90 Mc. Tune off stations.	High side to point (B). Low side to chassis.	V, VI	A-11 A-10 A-7 A-6 A-14	Disconnect 8 mfd capacitor 33 from point (B). Adjust for maximum amplitude, symmetry, and coincidence, as in pattern V, maintaining markers in center as in pattern VI.
3	10.7 Mc	Pin 7 6BE6	Near 90 Mc. Tune off stations.	High side to point (A). Low side to chassis.	I, II	A-6 A-7 A-10 A-11 A-14 A-15	Reconnect capacitor 33 to point (B). Recheck adjustments for maximum amplitude, symmetry and straightness of crossover, as in patterns I and II. Check marker positions as in patterns III, IV.

© John F. Rider

MODEL 448C

PHILHARMONIC RADIO CORP.

F-M ALIGNMENT (Continued)

Alignment of R-F Section

HOOKUP, as in Diagram II.

SELECTOR SWITCH on FM.

VOLUME AND TONE CONTROLS, maximum clockwise.

F-M SIGNAL GENERATOR, 50 Kc deviation, 100 Kc total sweep at any rate from 60 to 400 cycles per second.

OSCILLOSCOPE.— Adjust horizontal sweep to the modulation frequency of the signal generator and lock it into step with the internal (Y-signal) synchronizing control.

TUNING.— Patterns IX through XIII are wave forms that will show on the oscilloscope as the tuning control is tuned through the F-M signal. Pattern XI represents the correct tuning position; the pattern is a pure sine wave of greater amplitude than the side patterns.

Patterns IX and XIII represent the two side positions where the signal is also received, but distorted and with less amplitude.

CAUTION

When aligning, do not confuse the correct position, Pattern XI, with either side position, Patterns IX and XIII. When tuned correctly, a slight movement of the tuning control to either side will give the highly distorted double-frequency patterns X and XII.

	SIGNAL GENERATOR		RADIO DIAL	ADJUST	TO GIVE SCOPE PATTERN	REMARKS
	FREQ.	DEVIATION				
4	108 Mc	50 Kc	108 (Capacitor open)	A-4 (A-3 tight)	XI	Tighten A-3, then adjust A-4 to produce Pattern XI. If two positions of A-4 are found giving the same amplitude of Pattern XI, use the one of higher frequency (A-4 backed out).
5	87.8 Mc	50 Kc	Capacitor closed.	A-5 (A-3 tight)	XI	Adjust to produce Pattern XI. Repeat steps 4 and 5 until no further adjustment is necessary.
6	105 Mc	50 Kc	Near 105	A-3	XI	Rock tuning control and simultaneously adjust A-3 for maximum amplitude of Pattern XI.
7	90 Mc	50 Kc	Near 90	A-2	XI	Rock tuning control and simultaneously adjust A-2 for maximum amplitude of Pattern XI. Repeat steps 6 and 7 until there is no further improvement.
8	100 Mc	50 Kc	Near 100	A-1	XI	Tune to pattern XI. Adjust A-1 for maximum amplitude.

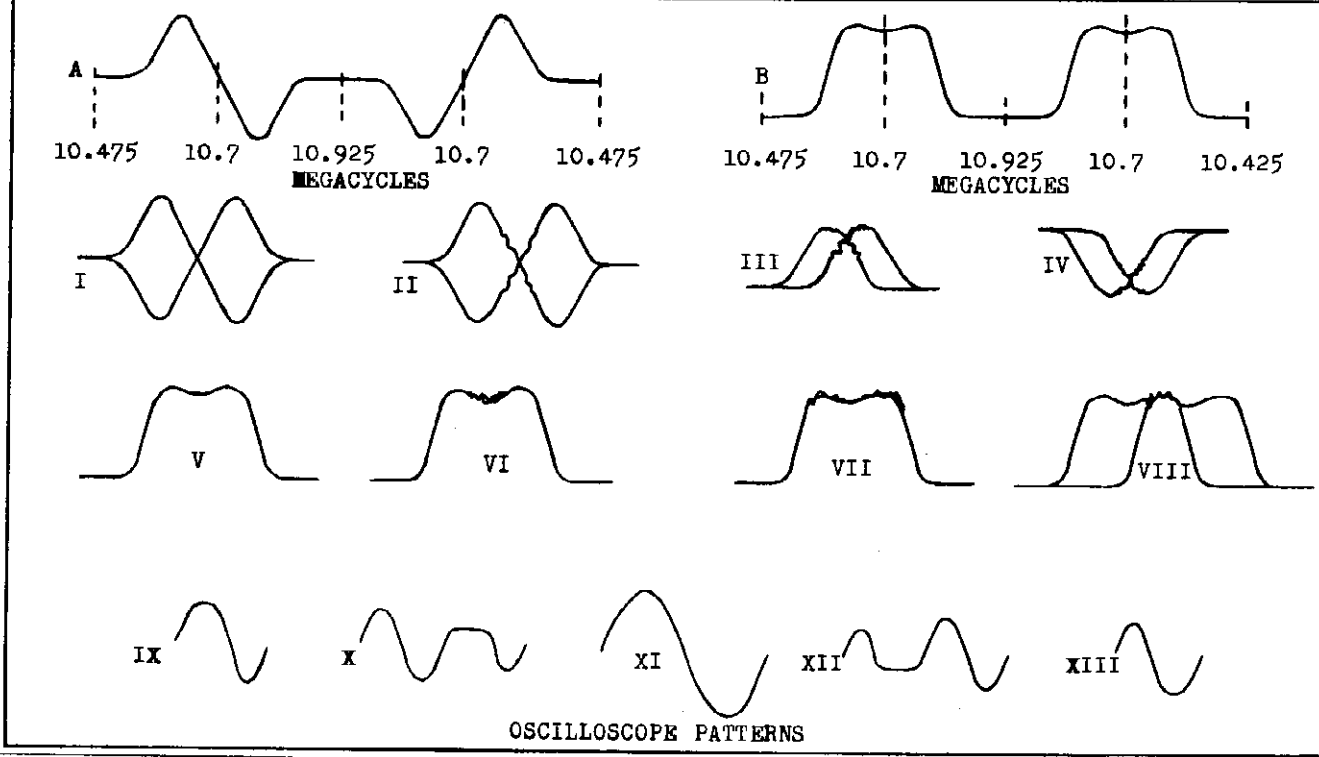

OSCILLOSCOPE PATTERNS

© John F. Rider

PHILHARMONIC RADIO CORP. MODEL 448

F-M ALIGNMENT. MILLER-RESISTOR METHOD

Using An Unmodulated Signal Generator and D-C Electronic Voltmeter.

GENERAL.— For this receiver, the Miller-resistor method, which takes its name from Dr. John M. Miller, is the most satisfactory of the alignment procedures which do not require the use of an F-M signal generator. With this method, resistance loading is applied to all the secondary circuits in the amplifier while the primary circuits are tuned to the desired center frequency. Then the primary circuits are loaded with the proper resistors while the secondary circuits are tuned.

The resistor across the primary reduces the Q of the transformer sufficiently to produce a single-peak response curve so that the secondary can be tuned to frequency. Its removal does not detune the secondary circuit appreciably. A similar effect is produced when the resistor is across the secondary, permitting accurate tuning of the primary. Small half-watt carbon resistors must be used with the shortest possible leads, to avoid over-all regeneration. Solder-tack the resistor across the transformer terminals.

SELECTOR SWITCH, on F-M (center position).

VOLUME AND TONE CONTROLS, maximum clockwise.

SIGNAL GENERATOR, unmodulated, accurately calibrated. Ranges 10 to 11 Mc and 87.5 to 108 Mc. Output adjustable from 100 to 100,000 microvolts. Connect low side to chassis, for steps 1-5.

OUTPUT INDICATOR.— D-C electronic voltmeter, preferably zero center, with input resistance of at least one megohm on low range, which should not exceed five volts full scale.

OUTPUT METER CONNECTIONS.— Probe to point (A), ratio-detector output, zero volts to chassis when correctly adjusted. Probe to point (B), F-M AVC source, reading the increase in negative voltage above the value obtained when no signal is applied. The reading with no signal is caused by the diode and amplifier-tube contact potentials, and will usually be about -0.5 to -0.7 volts.

	SIGNAL GENERATOR		RADIO DIAL.	VTVM TO POINT	MILLER RESISTORS		ADJUST	REMARKS
	FREQ. Mc	COUPLING	TUNE OFF STATIONS		OHMS	ACROSS		
1	10.7	0.002 mfd to pin 4 6SH7	Near 90 Mc	(B)	6800	1 and 3 of 113	A-14	Adjust for maximum deflection.
2	10.7	"	"	(A)	"	"	A-15	Adjust for zero deflection, between points of sharp polarity reversal. If approach to zero is slow with no reversal, turn A-15 in opposite direction.
3	10.7	0.002 mfd to pin 7 6BE6	"	(B)	6800 6800	3 and 4 of 111 3 and 4 of 109	A-10 A-6	Adjust for maximum deflection.
4	10.7	"	"	(B)	22000 22000	1 and 2 of 111 1 and 2 of 109	A-11 A-7	Adjust for maximum deflection.
5	10.7	"	"	(B)	None	--	--	Move input signal from 10 Mc through 11.5 Mc. Response curve should be flat-topped, symmetrical, and centered at 10.7 Mc. If not, repeat steps 1, 2, 3, 4 carefully.
6	108	See Remarks	108 Mc (Capacitor open)	(B)	None	--	A-4 (A-3 tight)	Signal generator across F-M dipole input terminals with 100-ohm 1/2-watt carbon resistor in each side. Tighten A-3, then adjust A-4 for maximum deflection. See note 1.
7	87.8	"	Near 88 Mc (Capacitor closed)	(B)	--	--	A-5	Adjust for maximum deflection. Repeat steps 6 and 7 until no change in adjustment is required.
8	105	"	Near 105 Mc	(B)	--	--	A-3	Rock tuning control and adjust A-3 for maximum deflection.
9	90	"	Near 90 Mc	(B)	--	--	A-2	Rock tuning control and adjust A-2 for maximum deflection. Repeat 8 and 9.
10	100	"	Near 100 Mc	(B)	--	--	A-1	Rock tuning control and adjust A-1 for maximum deflection.

NOTE 1. If two peaks are found, use position with A-4 backed out (higher frequency).

MODEL 448C

PHILHARMONIC RADIO CORP.

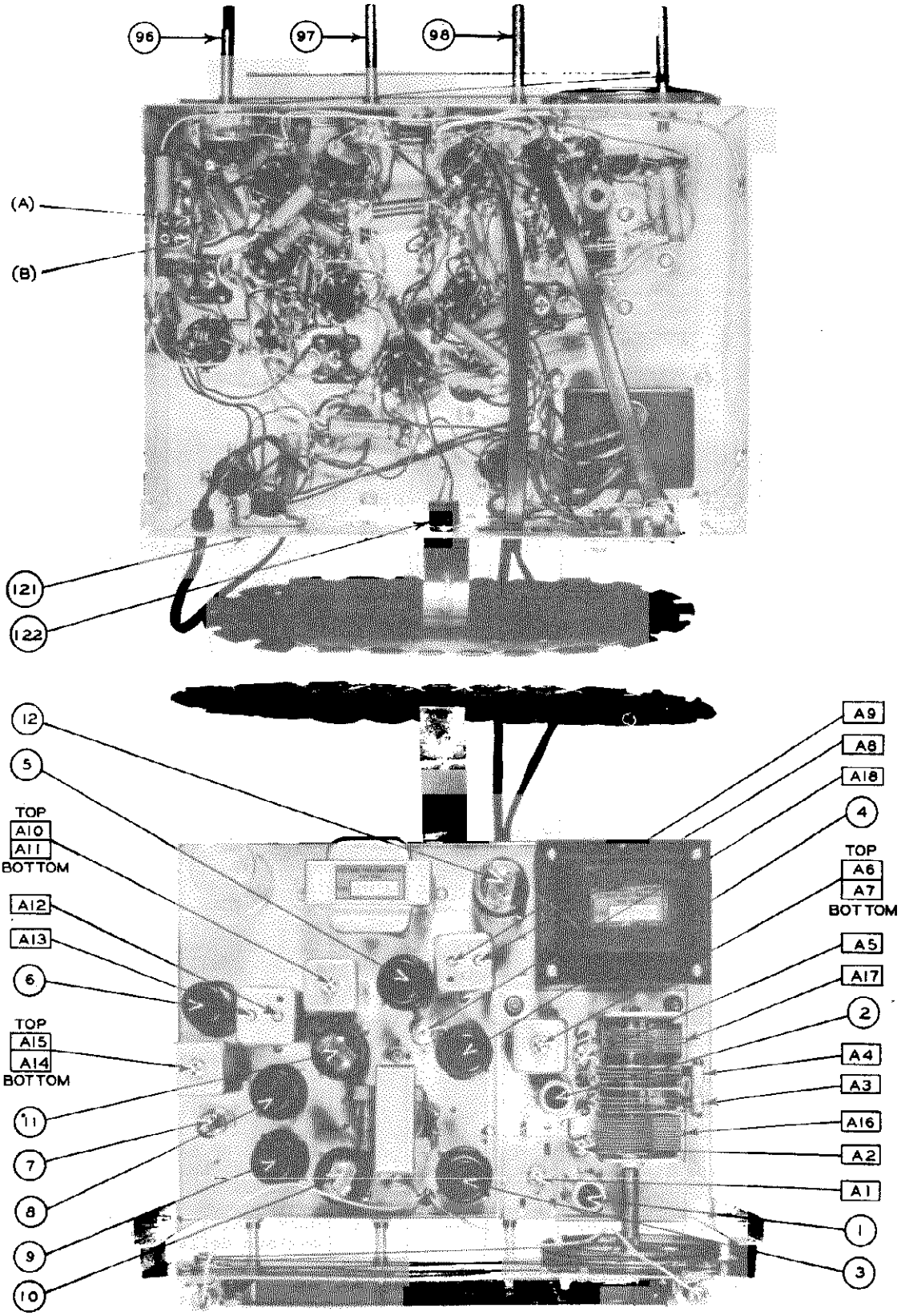

PHILHARMONIC RADIO CORP.

PARTS LIST

TUBES

No.	Type	Function
1	6BA6	R-F Amplifier (FM)
2	6BE6	Pentagrid Converter (FM)
3	6SK7	R-F Amplifier (AM)
4	6SA7	Pentagrid Converter (AM)
5	6SK7	First I-F Amplifier (AM-FM)
6	6SH7	Second I-F Amplifier (FM)
7	6AL5	Ratio Detector (FM)
8	6SQ7	Detector-Phase Inverter
9	6SQ7	First Audio Amplifier
10	6K6	Power Amplifier
11	6K6	Power Amplifier
12	5Y3GT	Full-Wave Rectifier

CAPACITORS

No.	Part	uf	uuf	Volts	
13	CD-1071-22		100	500	Mica
14	CD-1085-20		1000	300	Mica
15	CD-1254-2		50	500	Ceramic
16	CD-1107-100		90	500	Ceramic
17	CD-1106-110		50	500	Ceramic
18	CD-1254-2		50	500	Ceramic
19	CD-1254-2		50	500	Ceramic
20	CD-1259-40		330	350	Ceramic
21	CD-1259-49		1500	350	Ceramic
22	CD-1227-8	.01		400	Paper
23	CD-1259-40		330	350	Ceramic
24	CD-1227-8	.01		400	Paper
25	CD-1071-22		100	500	Mica
26	CD-1227-8	.01		400	Paper
27	CD-1227-2	.0015		400	Paper
28	CD-1227-8	.01		400	Paper
29	CD-1259-40		330	350	Ceramic
30	CD-1259-40		330	350	Ceramic
31	CD-1259-40		330	350	Ceramic
32	CD-1227-8	.01		400	Paper
33	CD-1252	8		100	Electr.
34	CD-1227-3	.002		400	Paper
35	CD-1227-8	.01		400	Paper
36	CD-1227-2	.0015		400	Paper
37	CD-1227-8	.01		400	Paper
38	CD-1246	50		50	Electr.
39	CD-1283		1000	1000	Mica
40	CD-1071-22		100	500	Mica
41	CD-1254-2		50	500	Mica
42	CD-1248	40-40		450	Electr.
43	CD-1227-13	.05		400	Paper
44	CD-1071-22		100	500	Mica
45	CD-1227-2	.0015		400	Paper
46	CD-1265-15	.01		600	Paper
47	CD-1227-8	.01		400	Paper
48	CD-1227-8	.01		400	Paper
49	CD-1071-22		100	500	Mica
50	CD-1071-22		100	500	Mica
51	CD-1227-8	.01		400	Paper
52	CD-1227-8	.01		400	Paper
120	CD-1227-10	.02		400	Paper

RESISTORS, FIXED. K = 1000.

No.	Part	Ohms	Watts
53	RE-1139-104	100	1/2
54	RE-1046-276	27K	2
55	RE-1139-105	1K	1/2
56	RE-1139-226	22K	1/2
57	RE-1046-276	27K	2
58	RE-1139-105	1K	1/2
59	RE-1147-224	220	1/2
60	RE-1139-226	22K	1/2
61	RE-1168-226	22K	1
62	RE-1139-104	100	1/2
63	RE-1168-336	33K	1

RESISTOR, FIXED. - Continued

No.	Part	Ohms	Watts
64	RE-1139-105	1K	1/2
65	RE-1062-823	82	1/2
66	RE-1130-684	680	1/2
67	RE-1139-105	1K	1/2
68	RE-1015-685	6.8K	1/2
69	RE-1015-685	6.8K	1/2
70	RE-1139-226	22K	1/2
71	RE-1139-108	1 meg.	1/2
72	RE-1139-154	150	1/2
73	RE-1139-514	510	1/2
74	RE-1166-477	470K	1/2
75*	See Note.	470K or 1.5 meg.	1/2
76*	See Note.	680. 2 w.or 470, 1w.	Note
77	RE-1139-227	220K	1/2
78	RE-1139-227	220K	1/2
79	RE-1139-227	220K	1/2
80	RE-1139-227	220K	1/2
81	RE-1139-227	220K	1/2
82	RE-1139-109	10 meg.	1/2
83	RE-1139-109	10 meg.	1/2
84	RE-1166-107	100K	1/2
85	RE-1139-227	220K	1/2
86	RE-1139-108	1 meg.	1/2
87	RE-1166-477	470K	1/2
88	RE-1166-476	47K	1/2
89	RE-1166-107	100K	1/2
90	RE-1166-107	100K	1/2
91	RE-1139-226	22K	1/2
92	RE-1046-276	27K	2
93	RE-1153-476	47K	1
94	RE-1046-395	3.9K	2
95	RE-1139-104	100	1/2

MISCELLANEOUS

No.	Part	Name
96	RE-1181	Volume Control and Switch, 500K
97	RE-1182	Tone Control, 250K
98	SW-1069	Switch, AM-FM-Phono
99	SK-1020	Speaker
100	TR-1075	Transformer, P.P. Output
101	CK-1040	Choke, Filter
102*	See Note.	
103	TR-1064	Transformer, Antenna (FM)
104	CK-1043	R-F Choke
105	CI-1057	R-F Coil (FM)
106	CI-1058	Oscillator Coil (FM)
107	CK-1043	R-F Choke
108	CK-1043	R-F Choke
109	TR-1065	Transformer, First I-F (FM)
110	TR-1052	Transformer, First I-F (AM)
111	TR-1065	Transformer, Second I-F (FM)
112	TR-1051	Transformer, Second I-F (AM)
113	TR-1066	Transformer, Ratio Detector (FM
114	AT-1019	Antenna, Loop (AM)
115	AS-3599	Antenna (FM), Folded Dipole
116	CI-1059	Oscillator Coil (AM)
117	LA-1014-32	Pilot Light, Mazda 47
118	LA-1014-32	Pilot Light, Mazda 47
119	CD-W7000	Capacitor, Variable Tuning
121	SO-1059	Phono-Motor AC Receptacle
122	SO-1069	Speaker Receptacle
123	PL-1068	Speaker Plug
124	CC-1113	Phono Input Jack

PHILLIPS PETROLEUM CO. MODEL 3-70A

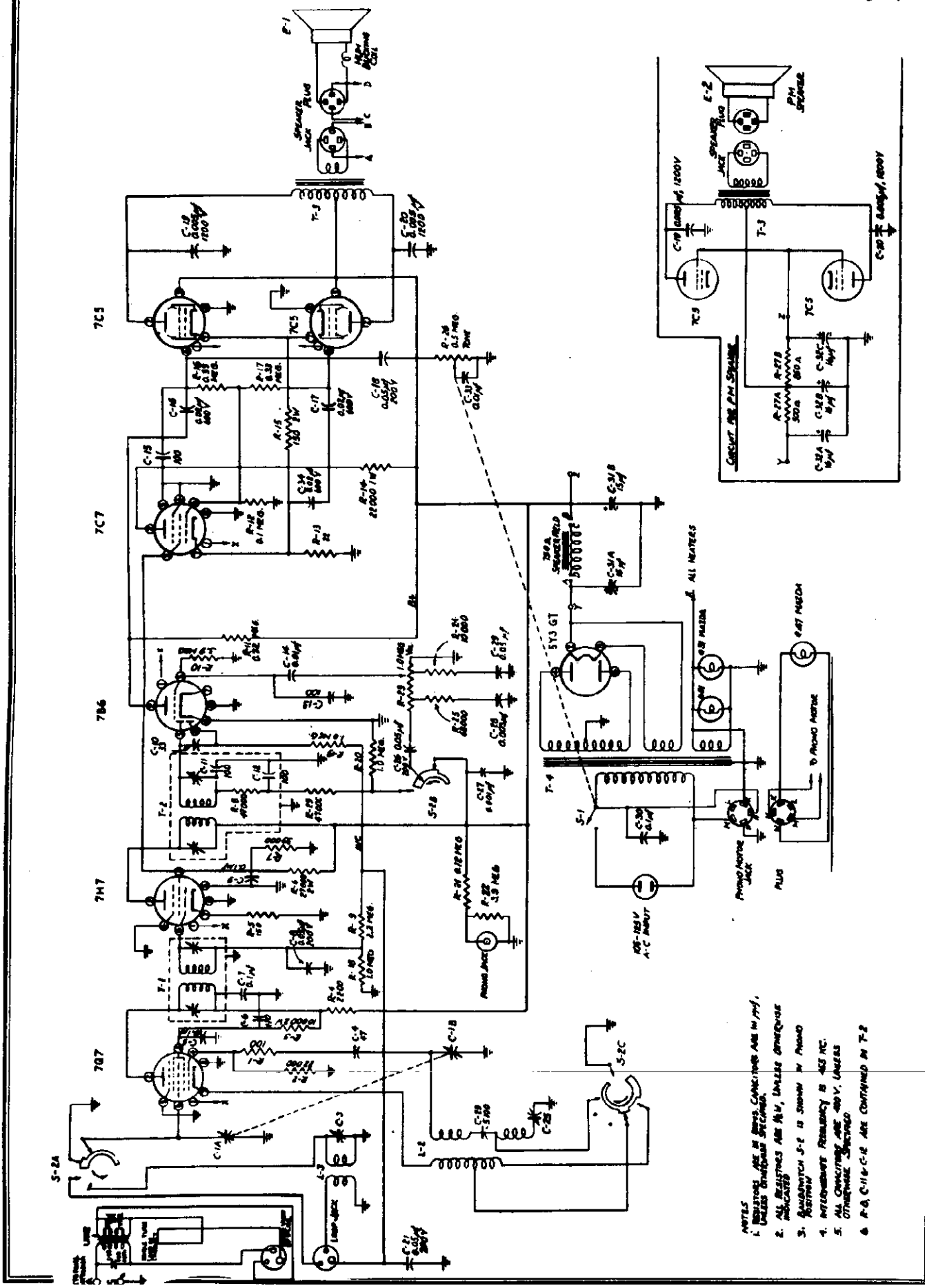

MODEL 3-70A PHILLIPS PETROLEUM CO.

Alignment: No attempt should be made to realign this receiver until it has been determined that a poor tube, or some local condition is not responsible for faulty reception. The Signal Generator may be connected through a 0.01 mf capacitor (used as a dummy antenna) to the lug on R. F. section (A) of tuning capacitor. Connect ground clip of generator directly to chassis. Align the I. F. trimmers to 455 K.C., using least possible input from the Signal Generator to avoid developing A.V.C. voltage which would make the tuning adjustments very broad. An output meter may be clipped across the voice coil lugs.

To align broadcast R. F. trimmers, remove the 0.01 mf capacitor and connect the Signal Generator leads to two or three turns of heavy wire, forming a self-supporting loop of about 7 or 8 inches diameter placed about a foot away from the receiver's loop antenna. Again, use the least possible input from the Signal Generator. With the tuning plates completely out of mesh and the pointer at the extreme right end of travel, adjust the broadcast oscillator trimmer, on the under side of the chassis, to 1650 K.C. With tuning capacitor fully meshed adjust the padder on the chassis deck to 535 K.C. Readjust both Signal Generator and tuning capacitor to 1550 K.C. and adjust the R. F. trimmer on the loop for maximum response.

To align the short wave band connect the Signal Generator through a 0.01 mf capacitor and a 400 ohm resistor in series (used as a dummy antenna) to the antenna connection on the loop antenna. With the tuning capacitor plates completely out of mesh, and pointer at the extreme right end of travel, adjust the short wave oscillator trimmer (on the under side of the chassis) to 18.25 magacycles. Readjust both Signal Generator and tuning capacitor to 16 megacycles and adjust short wave antenna coil trimmer for maximum response. With tuning capacitor fully meshed, the receiver should tune to 5.75 megacycles, however no adjustment is required at this point.

For checking purposes five marks are engraved on the front of the dial plate. These represent, in order, the pointer position with the capacitor plates fully meshed and the pointer settings for 600 kc, 8 mc, 16 mc, and 1550 kc.

Pushbuttons: To set pushbuttons remove pushbutton knobs. This will expose a set screw on the shaft of each pushbutton. Starting at one end push a pushbutton down and loosen its set screw. Set the bandswitch to the broadcast position. Hold the pushbutton down and tune the manual tuning control to the station to which the pushbutton is to be set. Still holding the pushbutton down tighten its set screw. The pushbutton may now be released and its knob replaced. It will now select the station to which it was set. The other pushbuttons may be set in a similar manner.

REPLACEMENT PARTS LIST

Circuit Symbol	Part Number	Item	Description
C-1 A & B	CV-9	Capacitor	Variable 2-gang, Push-button
C-2	CT1-1	Capacitor	Trimmer 1.5—15 MMF
C-3	CT1-2	Capacitor	Trimmer 2.2—40 MMF
C-22	CT1-2	Capacitor	Trimmer 2.2—40 MMF
C-23	CT1-2	Capacitor	Trimmer 2.2—40 MMF
C-25	CX2-1	Capacitor	Padder
E-1	EH-9	Speaker	10" Electrodynamic
E-2	EH-14	Speaker	10" P.M.
L-1	LL-9	Loop Antenna	
L-2	LO-4	Oscillator Coil Assembly	Broadcast & S.W. Osc. Coils
L-3	LR-4	S.W. Antenna Coil	
R-23	RP8-105	Potentiometer	1 Meg. with 2 taps, Volume Control
R-26	RP5-2	Potentiometer	0.5 Meg. with switch, Tone Control
R-27 A & B	RW3-1	Resistor	Wirewound 1350 Ohms 17 watt tapped at 500 Ohms
S-2 A, B & C	SR-9	Bandswitch	
T-1	TM2-4	Transformer	I. F. Input
T-2	TM2-5	Transformer	I. F. Output
T-3	TA-8	Transformer	Push-pull speaker output
T-4	TP-9	Transformer	Power

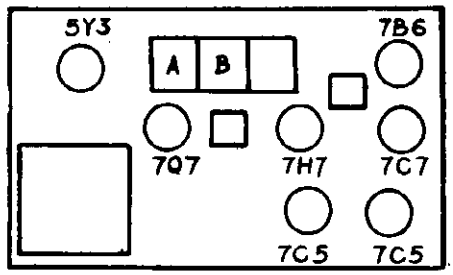

TUBE LOCATION

PILOT RADIO CORP.

MODELS G-508
G-509

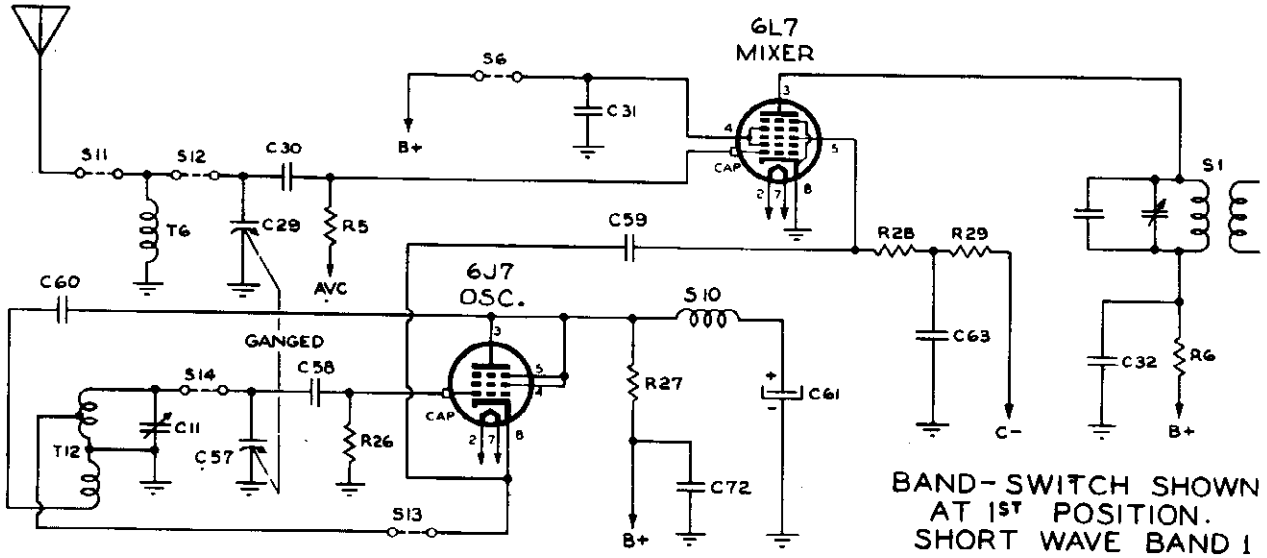

BAND-SWITCH SHOWN AT 1ST POSITION. SHORT WAVE BAND 1

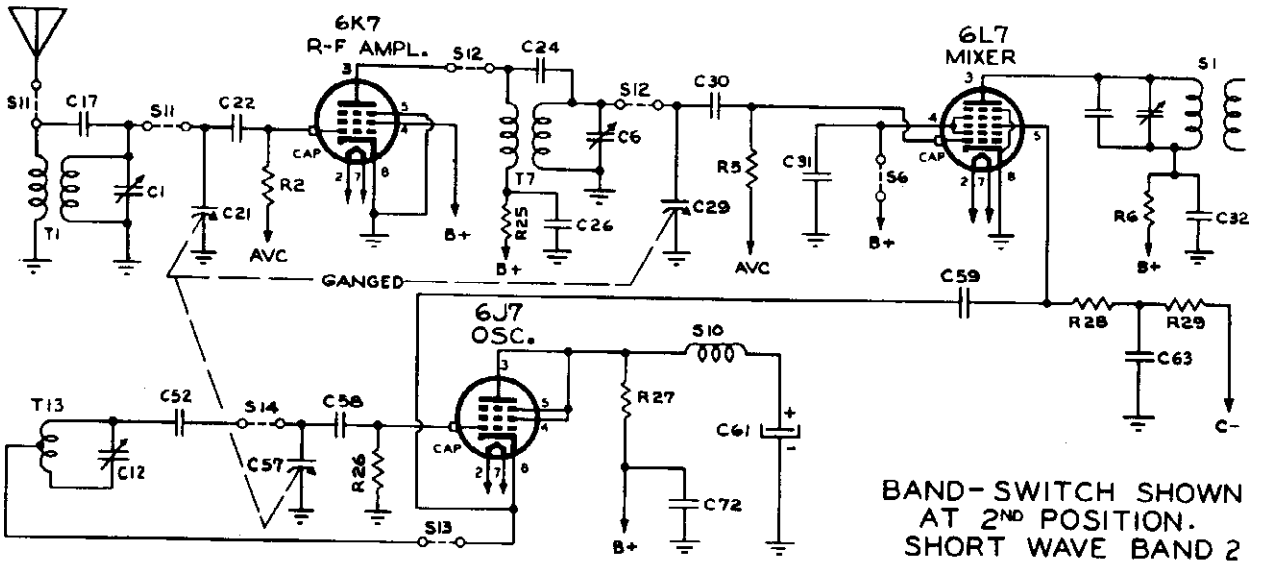

BAND-SWITCH SHOWN AT 2ND POSITION. SHORT WAVE BAND 2

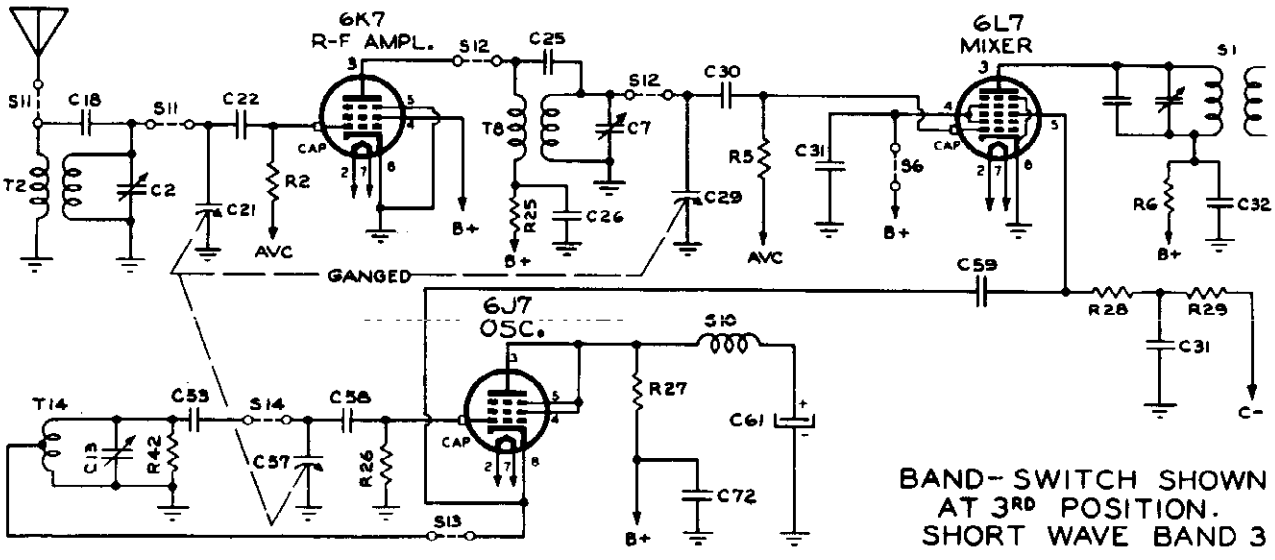

BAND-SWITCH SHOWN AT 3RD POSITION. SHORT WAVE BAND 3

©John F. Rider

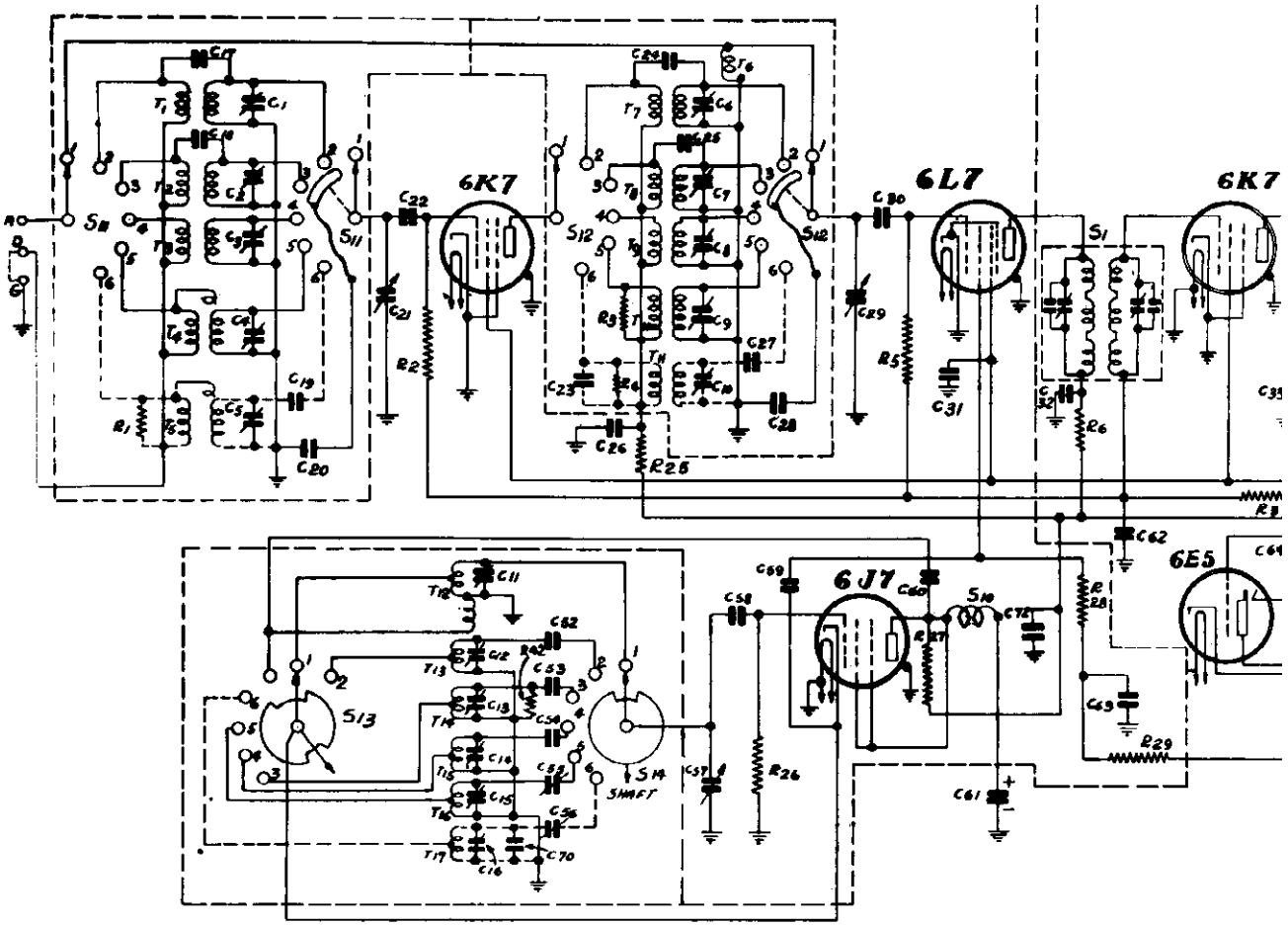

MISC. FOR G-508 - G-509		
S1	73071	1ST. I.F. TRANS. ASS'Y.
S2	73071	2ND I.F. TRANS. ASS'Y.
S3	73072-B	3RD I.F. TRANS. ASS'Y.
S4	79596	PWR. TRANS. ASST. UNIT 110-60~
S4	79630	PWR. TRANS. ASST. 220-240V. 25~
S5	40839	10" A.C. SPEAKER
S6	79179	PHONO JACK
S7	72198	HEADPHONE JACK
S8	79210	CRYSTAL SPKR. SWITCH ASS'Y.
S9		SWITCH ON R21
S10	79093	R.F. CHOKE
S11	79198 (6-508)	ANT. SEC. BAND SWITCH
S12		DET. SEC. BAND SWITCH
S13	79199 (6-509)	OSC. CATHODE SEC. BAND SWITCH
S14		OSC. GRID SEC. BAND SWITCH
S15	79359-B	BASS ACCENTUATOR SWITCH ASS'Y.
S16	78053-E	3 AMP FUSE
S-5	40845	12" SPEAKER
S-17	79158	3 H. 100 OHMS FILTER CHOKE

R.F. COILS FOR MODEL G-509		
T1	73074	ANT. COIL ASS'Y. FOR BAND 2
T2 T4	73077	ANT. COIL ASS'Y. FOR BANDS 3 & 5
T3 T5	73080	ANT. COIL ASS'Y. FOR BANDS 4 & 6
T6 T7	73075	DET. COIL ASS'Y. FOR BANDS 1 & 2
T8 T10	73078	DET. COIL ASS'Y. FOR BANDS 3 & 5
T9 T11	73081	DET. COIL ASS'Y. FOR BANDS 4 & 6
T12 T14	73076	OSC. COIL ASS'Y. FOR BANDS 1 & 2
T13 T15	73079	OSC. COIL ASS'Y. FOR BANDS 3 & 5
T16 T17	73082	OSC. COIL ASS'Y. FOR BANDS 4 & 6

R.F. COILS FOR MODEL G-608 SAME AS FOR G-609 EXCEPT FOR BAND 6 WICH DROPS OUT, COILS FOR BD 6 ARE		
T3	73083	ANT. COIL ASS'Y. FOR BAND 4
T9	73084	DET. COIL ASS'Y. FOR BAND 4
T15	73085	OSC. COIL ASS'Y. FOR BAND 4

CONDENSERS FOR MODEL G-508		
C1 C2 C3 C4 C5	72224	TRIMMER STRIP ASS'Y.
C6 C7 C8 C9	72226	TRIMMER STRIP ASS'Y.
C11 C12 C13 C14 C15	72227	TRIMMER STRIP ASS'Y.
C17 C24	27797-D	10 MMFD. MICA
C18 C26 C35 C36	27736-D	25 MMFD. MICA
C20 C28	22055-A	.01 MFD. 600 V. PAPER
C21 C29 C57	72146	10-450 MMFD. VAR. COND.
C22 C30	27701-D	250 MMFD. MICA
C26 C32 C33 C37 C44 C45	22055 AC	.02 MFD. 600 V. PAPER
C31	22055-Z	.02 MFD. 400 V. PAPER
C38 C38 C40	28016-D	100 MMFD. MICA
C39	28016-D	100 MMFD. MICA
C41	22055-T	.05 MFD. 200V PAPER
C42	22481	10 MFD. 25 V. TUBULAR ELEC.
C43	85028	4 MFD. 450 V. ELEC.
C61		4 MFD. 150 V. ELEC.
C63		8 MFD. 450 V. ELEC.
C66		8 MFD. 250 V. ELEC.
C45 C47	22055-AT	.002 MFD 200 V. PAPER
C46 C64 C62	22055-H	.02 MFD. 200 V. PAPER
C48	22055-W	.01 MFD 400 V. PAPER
C49 C51	22055-AA	.005 MFD 1600 V. PAPER
C52	28106-W	3250 MMFD. MICA
C53	27747-W	2670 MMFD. MICA
C54	27748-W	1900 MMFD. MICA
C55	71503-D	500-700 MMFD. PADDER
C58 C59	78503	.01-.05 MFD. (SHIELD)
C67	85080	50 MFD. 50 V. ELEC.
C43 C71	22055-M	.1 MFD. 600 V. PAPER
C59	27723-D	50 MMFD. MICA
C-72	22055-AB	.1 MFD. 600V. PAPER

CONDENSERS FOR MODEL G-50	
C1 C2 C3 C4 C5	72227
C6 C7 C8 C9 C10	72227
C11 C12 C13 C14 C15	79191
C19 C27	22055-A
C23	28105-D
C56 C55	71577-J
C70	27736-D

RESISTORS FOR MO	
R2 R5	78215
R3	13019
R6 R7 R10 R25	13028
R9 R35 R30 R32 R34	13001
R11	18131
R26	19144
R12 R14 R20 R33	18171
R13	79171

.OT RADIO CORP.

MODELS G-508, G-509

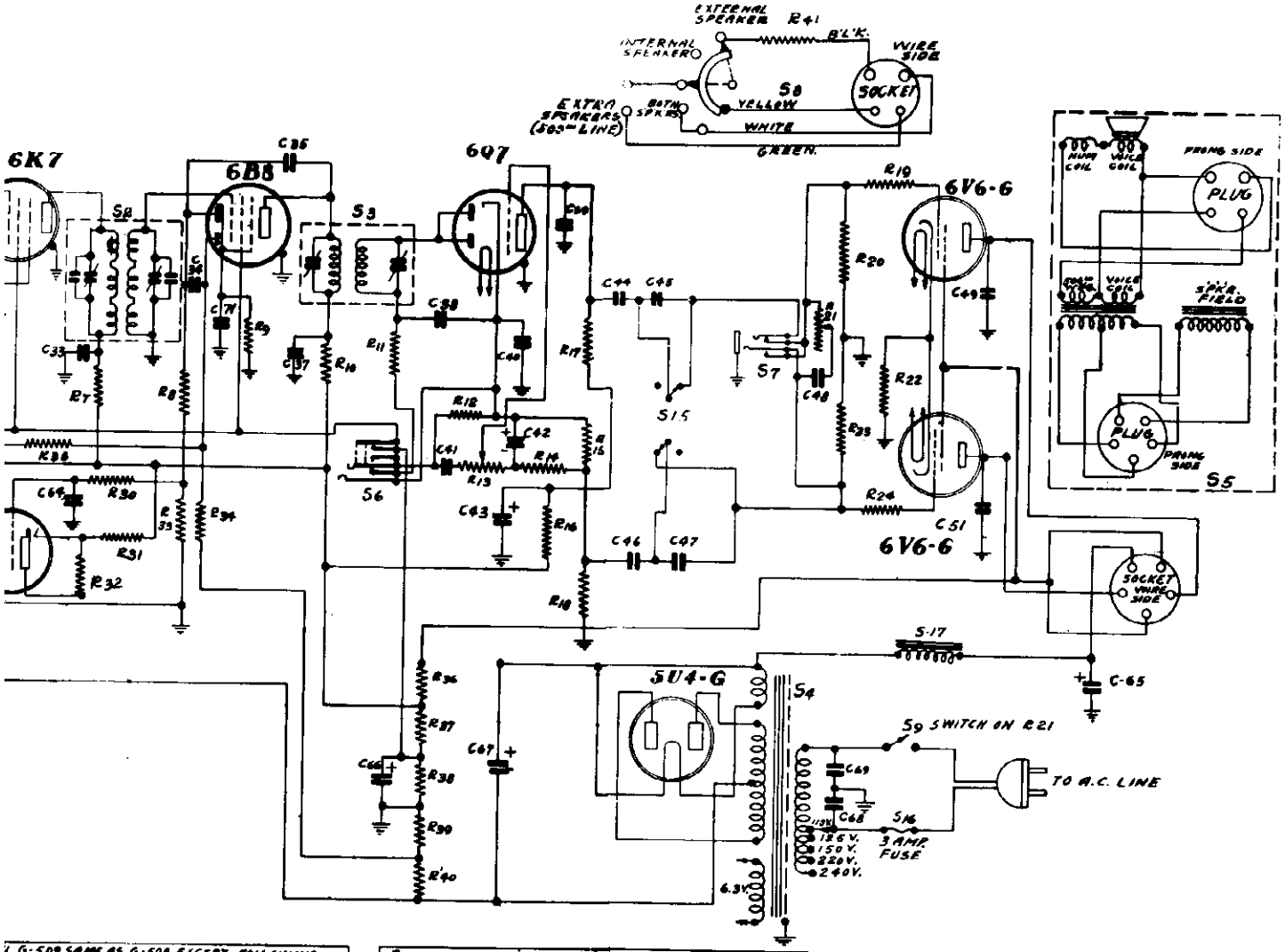

L G-509 SAME AS G-508 EXCEPT FOLLOWING	
2227	TRIMMER STRIP ASS'Y.
2227	TRIMMER STRIP ASS'Y.
9191	TRIMMER STRIP ASS'Y.
2855-A	.01 MFD. 600 V. PAPER
8105-D	150 MMFD. MICA
1577 J	30-175 & 250-500 MMFD. DUAL PADDER
7736-D	25 MMFD. MICA

E MODEL G-508	
213	500,000 OHMS 1/4 WATT I.R.C.
019	2,000 OHMS 1/4 WATT I.R.C.
028	1000 OHMS 1/4 WATT CARBON
1001	1 MEGOHM 1/4 WATT CARBON
131	650 OHMS 1/4 WATT CARBON
198	30,000 OHMS 1/4 WATT CARBON
171	250,000 OHMS 1/4 WATT CARBON
171	750,000 OHMS VOLUME CONTROL

R15	13195	2,500 OHMS 1/4 WATT CARBON
R16 R31	13094	20,000 OHMS 1/4 WATT CARBON
R17 R18 R11	13164	50,000 OHMS 1/4 WATT CARBON
R19 R24	13115	400 OHMS 1/4 WATT CARBON
R20	72207	50,000 OHMS 1/4 WATT I.R.C.
R27	72219	10,000 OHMS 1 WATT I.R.C.
R29	13116	12,000 OHMS 1/4 WATT CARBON
R36 R37 R38	83031	3,80 OHMS 3060 OHMS 2360 OHMS
R39 R40		14 OHMS 10 OHMS WIRE WOUND TAP DIVIDER
R41	83025	10 OHMS 20 WATTS WIRE WOUND
R21	79518	750,000 OHM TONE CONTROL & SWITCH
R22	85033	300 OHMS 3 WATTS WIRE WOUND
R42	13147	300,000 OHMS 1/4 WATT CARBON

RESISTORS FOR MODEL G-509 SAME AS G-508 EXCEPT FOLLOWING		
R4	72211	5,000 OHMS 1/4 WATT I.R.C.
R4	72216	2,400 OHMS 1/4 WATT I.R.C.

NOTE: ADDITIONAL WIRING FOR MODEL G-509 SHOWN IN DOTTED LINES.

INTERMEDIATE FREQUENCY-456 KC.

ALIGNING FREQUENCY

B.C.(B_5)	600 to 1500 KC.
B_1	69 MC.
B_2	23 MC.
B_3	11 MC.
B_4	4.3 MC.
L.W.(B_6)	150 KC. to 375 KC.

CLARI-SKEMATIX
Registered Trademark

MODELS G-508, G-509

PILOT RADIO CORP.

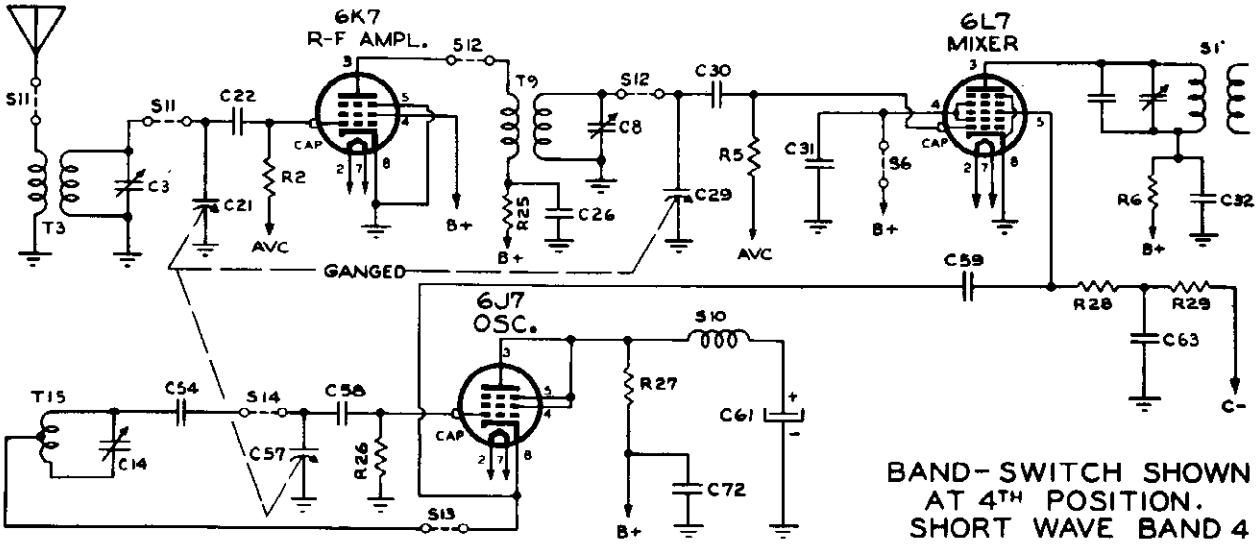

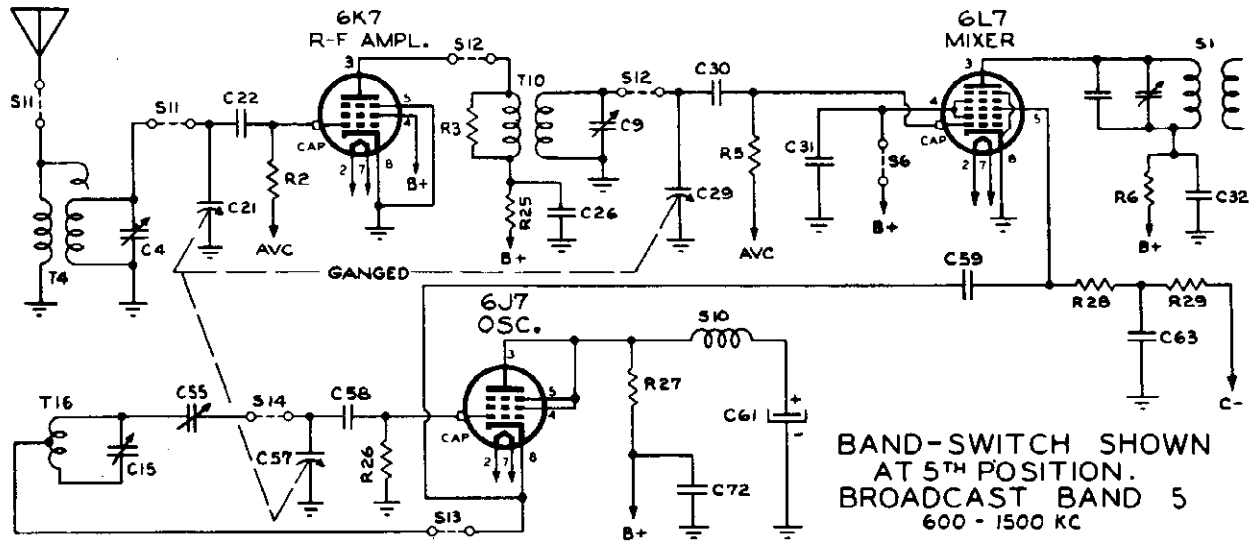

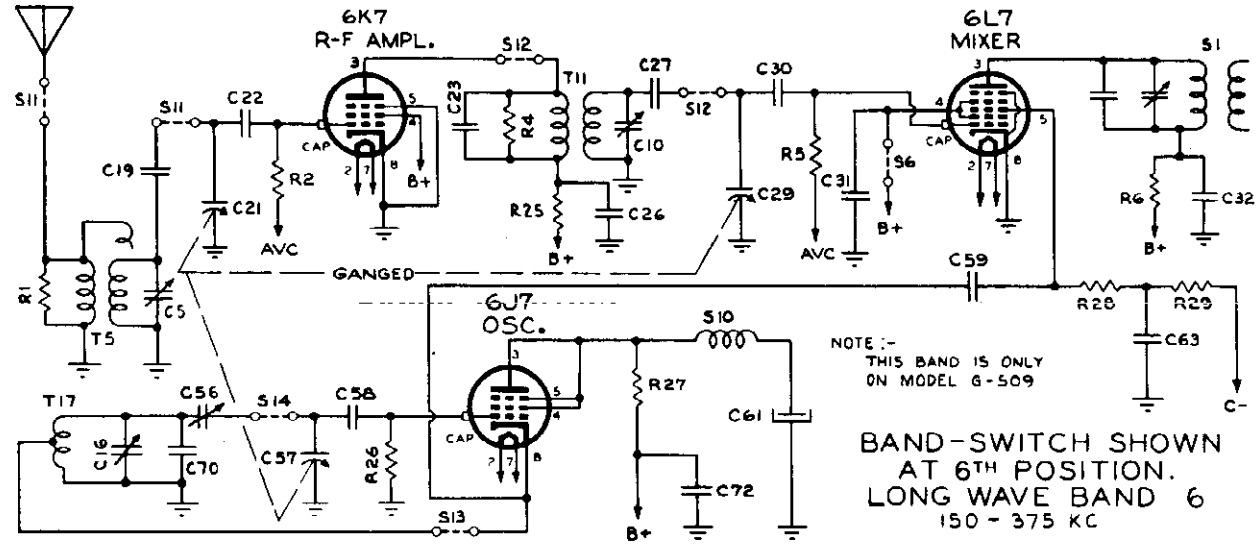

©John F. Rider

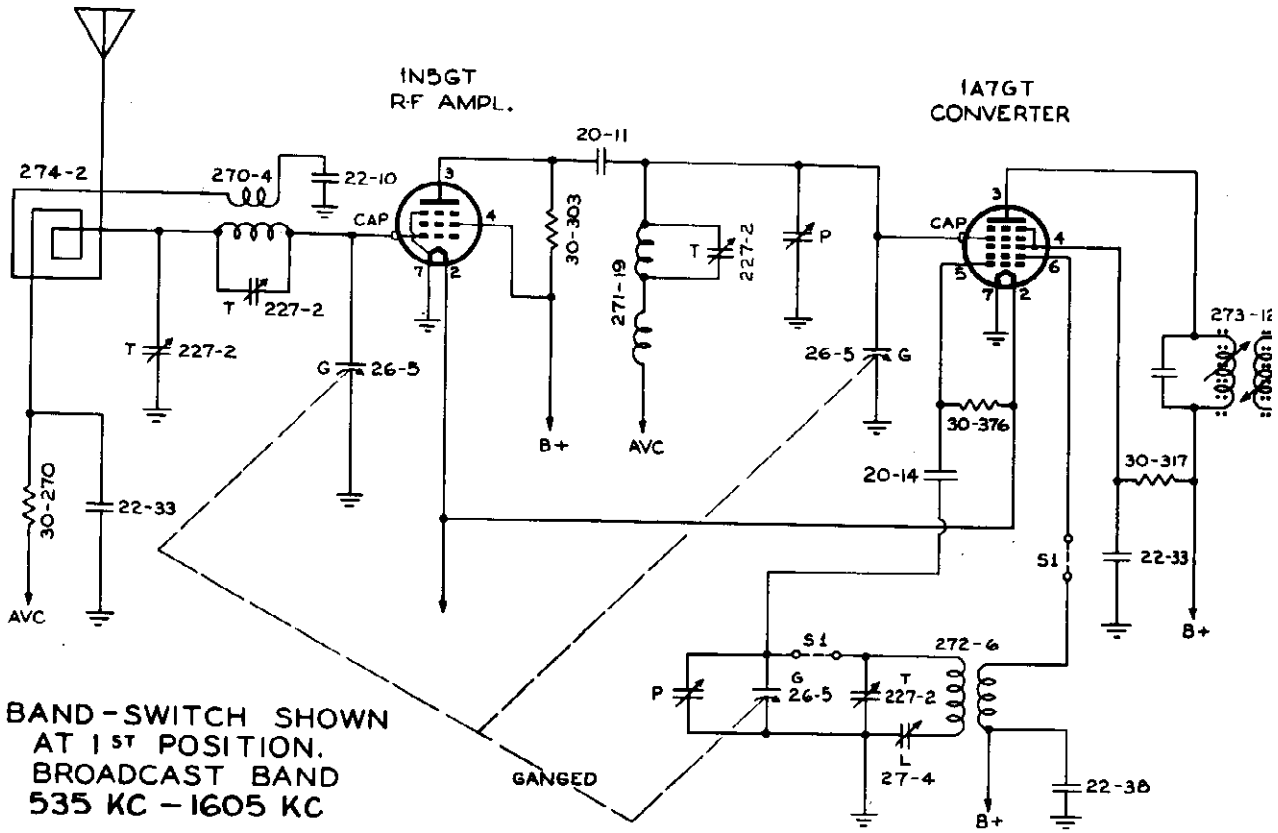

BAND-SWITCH SHOWN AT 1ST POSITION.
BROADCAST BAND
535 KC – 1605 KC

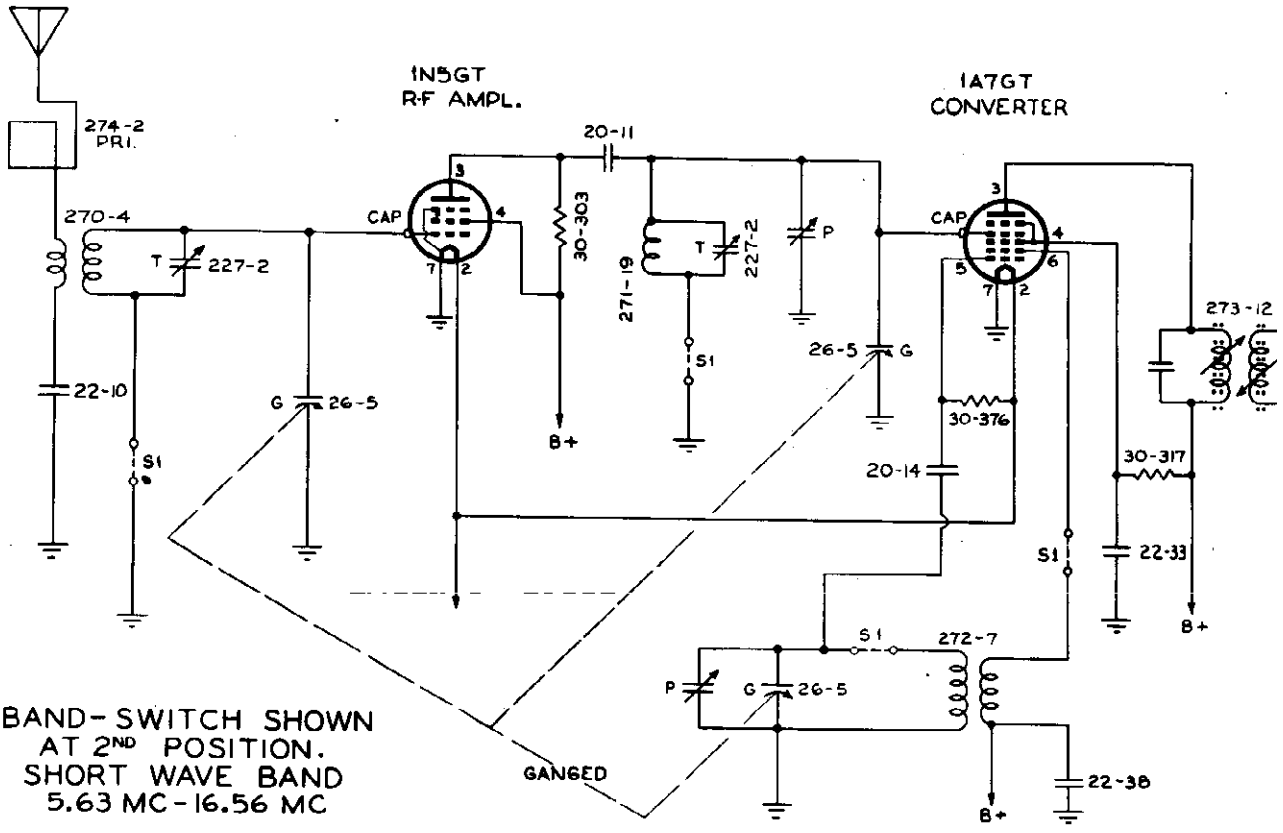

BAND-SWITCH SHOWN AT 2ND POSITION.
SHORT WAVE BAND
5.63 MC – 16.56 MC

©John F. Rider

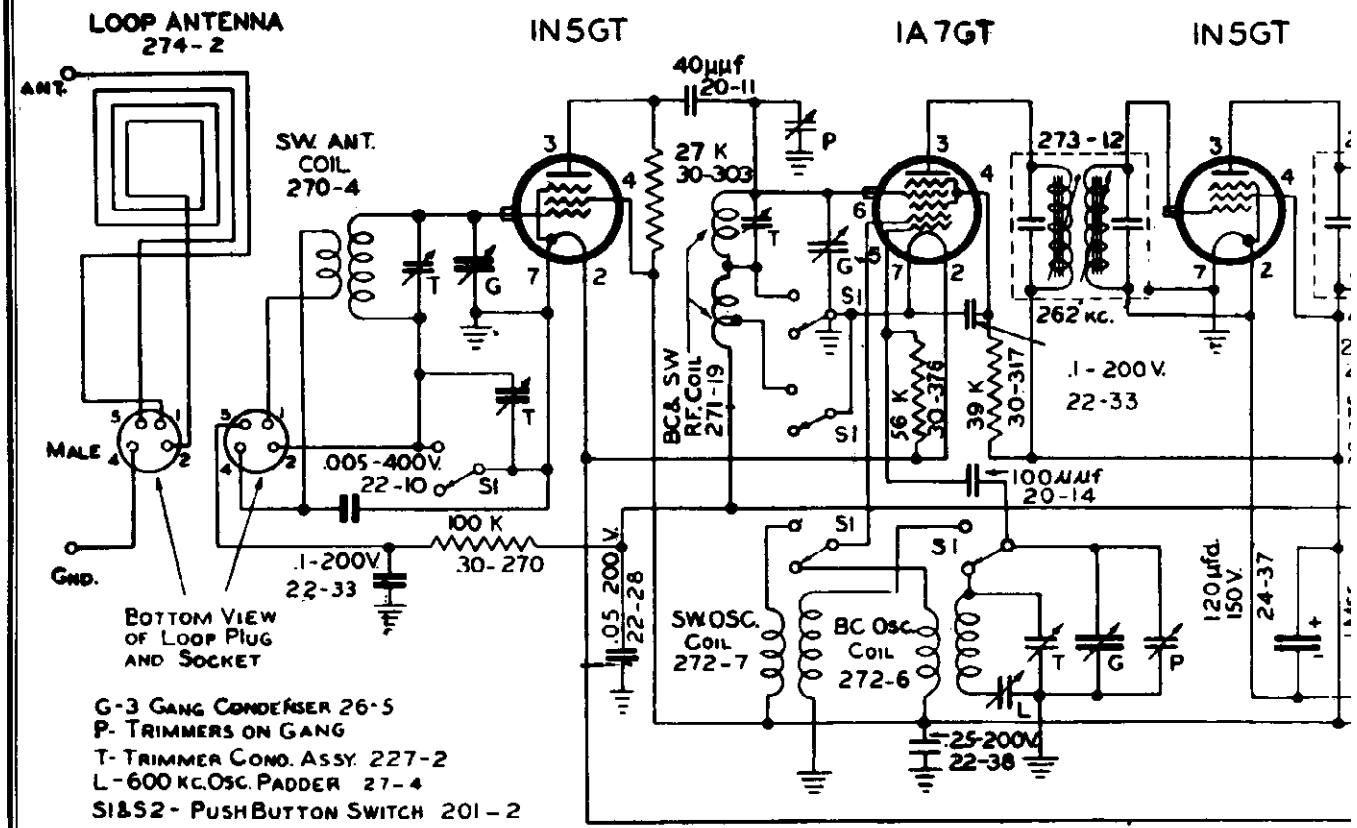

G-3 GANG CONDENSER 26-5
P- TRIMMERS ON GANG
T- TRIMMER COND. ASSY. 227-2
L-600 KC. OSC. PADDER 27-4
S1&S2 - PUSH BUTTON SWITCH 201-2
S1 SHOWN IN BC POSITION
S2 SHOWN IN AC-DC POSITION

ALL RESISTORS ARE 1/2 WATT UNLESS OTHERW

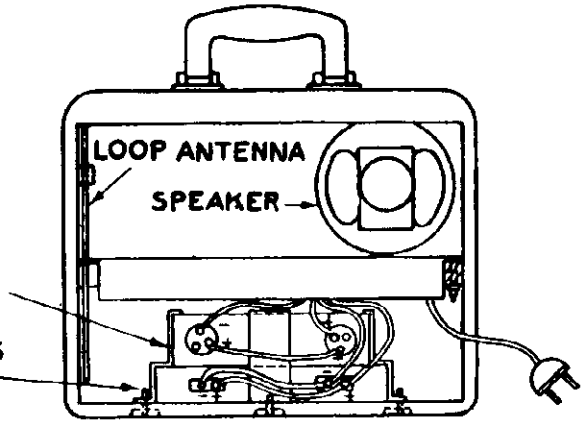

UPPER BATTERIES
2 "B" BATTERIES 45 VOLTS
EVEREADY NO. 482
OR EQUIVALENT
LOWER BATTERIES
2 "A" BATTERIES 4.5 VOLTS
EVEREADY NO. 746
OR EQUIVALENT

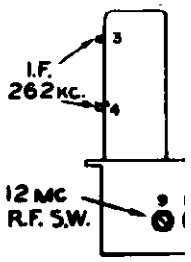

REAR VIEW OF CABINET SHOWING BATTERIES IN PLACE

FOR BATTERY OPERATION

Do not plug the electric cord into the light socket. Push the button marked BATT and the SW or BC button for Shortwave or Broadcast reception, respectively. Rotate the volume control clockwise well past the point where the red flag appears in the dial window. The receiver will become operative immediately.

In order to light the pilot bulb for the dial ON BATTERY OPERATION, the switch button on the lower left-hand ledge inside the front door must be pressed down. When the button is released the light is automatically switched off in order to prolong the life of the batteries.

To turn off the receiver it is necessary only to turn the left-hand knob to the left until the red indicator disappears, regardless of the position of the buttons.

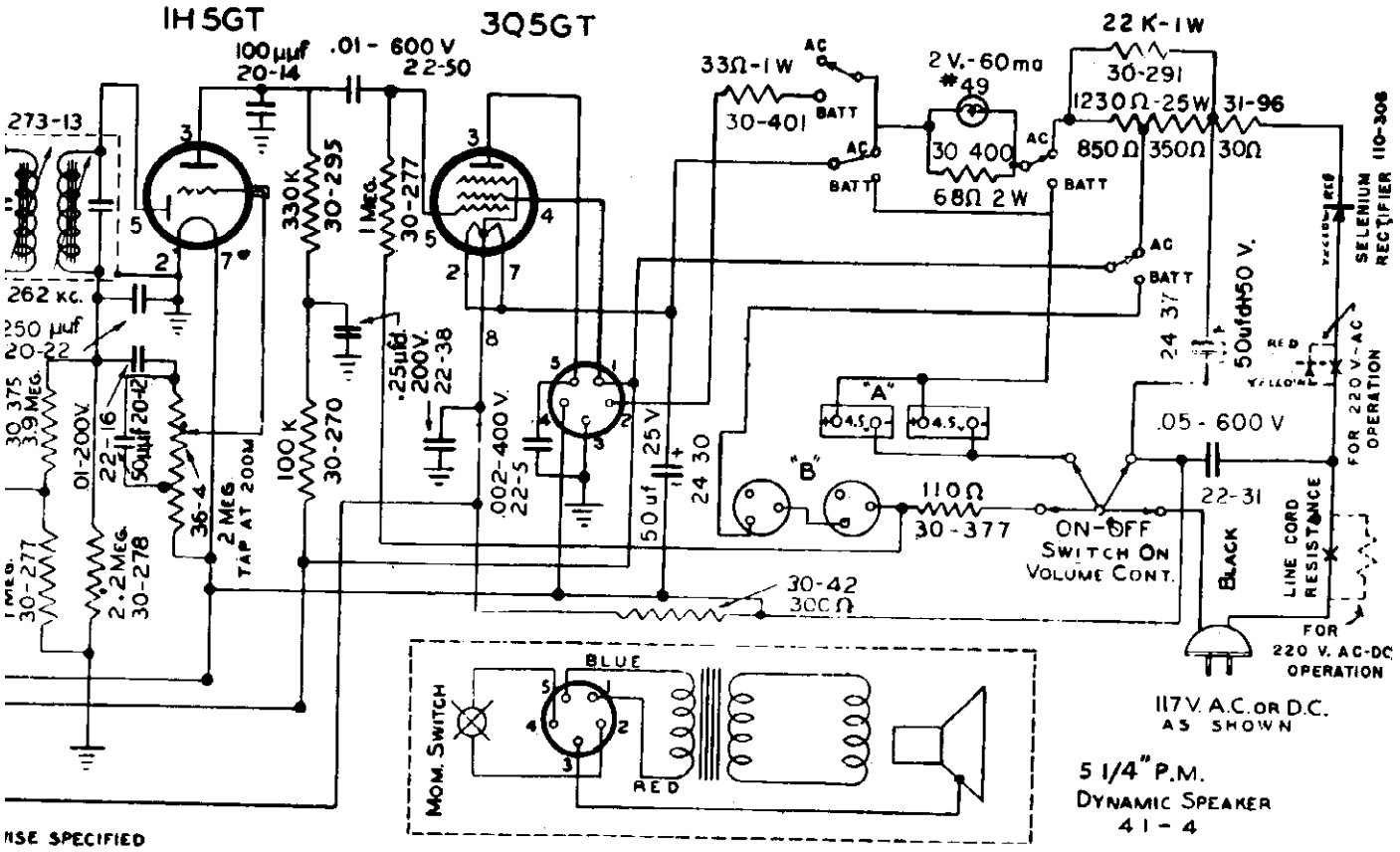

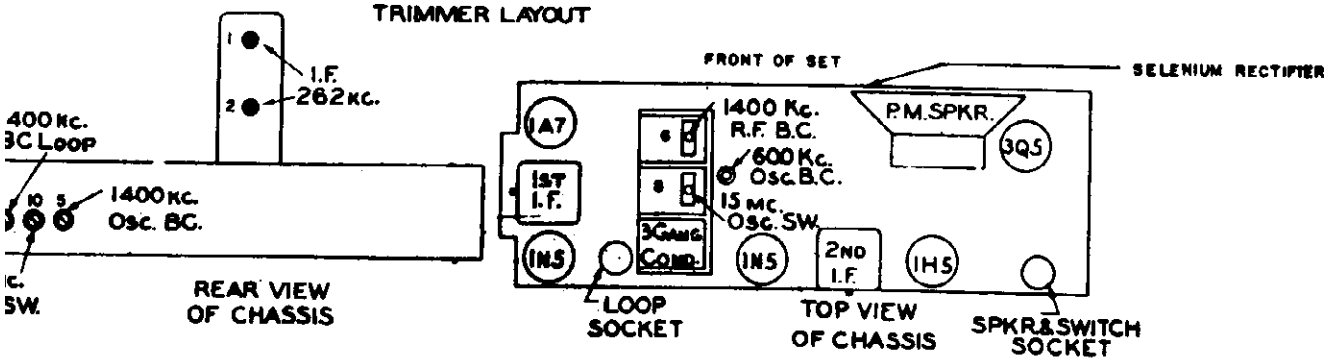

LINE	LINE CORD	CHARACTERISTICS
117 V. AC-DC	103-14	REGULAR WITHOUT RESISTANCE
220 V. DC	103-21	850Ω 25 W SERIES
220 V. AC	103-20	300Ω 40 W ADDITIONAL RECTIFIER IN SERIES.

ALIGNMENT CHART

STEP	CIRCUIT ALIGNED	RECEIVER		SIGNAL GENERATOR		DUMMY ANTENNA	ADJUSTMENTS (All maximum output)
		BAND SWITCH	DIAL POINTER	FREQUENCY	CONNECTION		
1	IF	BC	Low end of dial	262 Kc	Grid of 1A7GT conv.	0.1 mfd.	#1, 2, 3, 4
2	BC	BC	1400 KC	1400 KC	Antenna Post	200 mmfd. mica cap.	First #5 Then #6
3	BC	BC	600 KC	600 KC	Antenna Post	200 mmfd. mica cap.	#7
4	Repeat steps 2 and 3						
5	SW	SW	15 MC	15 MC	Antenna Post	400 ohm carbon resistor	#8
6	SW	SW	Tune in generator	12 MC	Antenna Post	400 ohm carbon resistor	First #9 Then #10
7	Repeat step 2, trimmer #5 only						
8	BC	BC	Tune in broadcast station near 1400 KC				#11

NOTE: Align step 1 to 7 with chassis out of cabinet, but loop plugged in. Step 8 must be taken with set properly placed in cabinet, and batteries and loop in the normal position.

Alignment should be attempted only if a low range A.C. meter, a signal generator, and insulated alignment tools are at your disposal. The A.C. meter is used as an output-meter. The signal generator must cover a frequency range from 450 kc to 16 mc.

It is essential that the signal generator be connected to the points indicated in the alignment chart through the proper dummy antenna.

A good connection between the groundpost of the signal generator and the chassis, is necessary. DO NOT connect chassis or generator to an external ground.

The output of the signal generator must always be kept at its lowest possible value. This is to prevent the automatic volume control of the receiver from interfering with accurate alignment.

During alignment, the line voltage feeding the receiver power supply should be kept at approximately 117 volts.

The locations of adjustment screws are indicated clearly on the schematic diagram. Alignment adjustments should be made only in the sequence given in the chart.

For all alignments, connect the outputmeter across the voice coil. With the volume control turned fully clockwise tune for a maximum reading.

MODELS 8B43, CHASSIS RADIO CORP. OF AMERICA MODELS 8B41, CHASSIS
RC-1069B; 8B46, CHASSIS RC-1069; 8B42 CHASSIS
RC-1069C RC-1069A

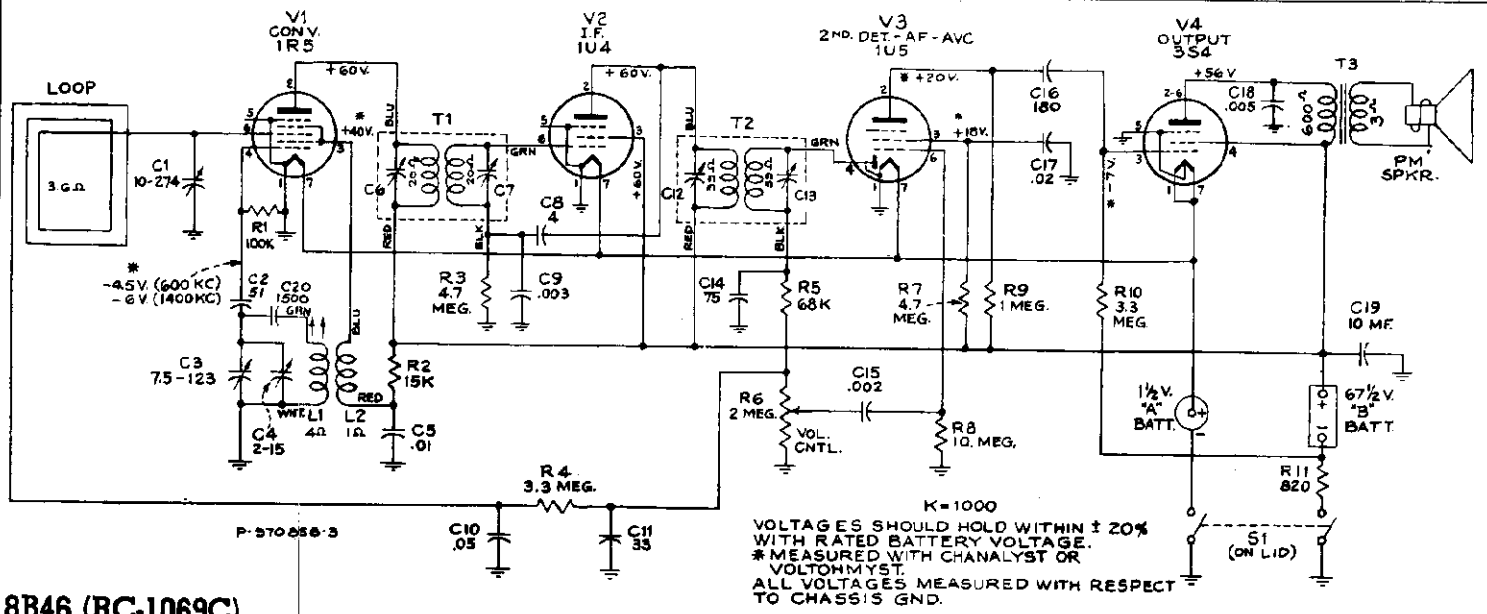

8B46 (RC-1069C)

Service Data:

The Service Data previously published for Models 8B41, 8B42 and 8B43 will apply to Model 8B46 except for color and the replacement parts listed below.

REPLACEMENT PARTS

CHASSIS ASSEMBLY

RC-1069C

Same as listed for RC-1069, RC-1069A, RC-1069B EXCEPT

74366 Fastener—Push fastener to hold loop, (2 required) for Model 8B46—tan
74363 Lid—Case top lid complete with lid support and hinges —less loop—Model 8B46—ivory
74365 Loop—Antenna loop complete with connectors—less lid —Model 8B46—ivory
74367 Nameplate—"RCA" nameplate for top lid—Model 8B46

SPEAKER ASSEMBLIES

Same as listed for Models 8B41, 8B42, 8B43

MISCELLANEOUS ASSEMBLIES

74368 Bottom—Case bottom—Model 8B46—ivory
70457 Catch—Spring catch assembly
74016 Center—Case center complete with spring catch
74369 Handle—Carrying handle—Model 8B46—tan
73970 Link—Handle link (2 required)
73943 Screw—#4-40 x 5/16" binder head screw to hold case center

Specifications

Tuning Range ..... 540-1600 kc
Intermediate Frequency ..... 455 kc

Tube Complement:
1. **RCA 1R5** ..... Converter
2. **RCA 1U4** ..... I.F. Amplifier
3. **RCA 1U5** ..... 2nd Det.-A.F. Amp.-A.V.C.
4. **RCA 3S4** ..... Output

Loudspeaker (92523-4W):
Size and type ..... 2" x 3" P.M.
Voice coil impedance ..... 11¾ ohms at 1000 cycles

Batteries Required:

Type of Battery	Current Consumption	Approx. Life (Intermittent Service)
"A"—1.5 volt RCA VS 036 or VS 001	0.25 amp.	7 to 10 hrs.
"B"—67.5 volts RCA VS 016	8.5 ma.	40 to 60 hrs.

Power Output:
Undistorted ..... 0.05 watt
Maximum ..... 0.10 watt

Dimensions (overall) ..... 6¼" x 4⅜" x 3⅜"
Weight (with batteries) ..... 3½ lbs.

8B41 ..... *Black*
8B42 ..... *Brown*
8B43 ..... *Red*

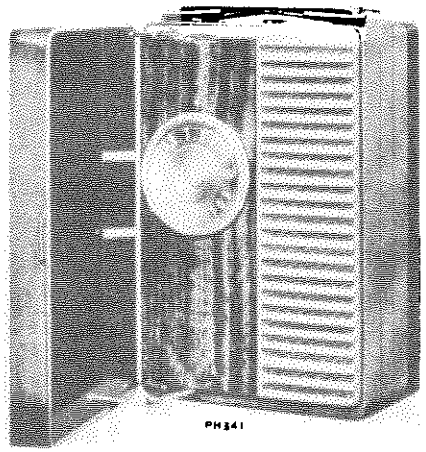

Model 8B46 (Ivory)

MODELS 8B41, CHASSIS RC-1069; 8B42 CHASSIS RC-1069A

RADIO CORP. OF AMERICA

Alignment Procedure

MODELS 8B43, CHASSIS RC-1069B; 8B46 CHASSIS RC-1069C

Output Meter.—Connect meter from top lug of TB5 (plate of 3S4) to ground. Turn volume control to maximum position.

Test-Oscillator.—For all alignment operations, connect the low side of the test-oscillator to the receiver chassis, and keep the oscillator output as low as possible to avoid a-v-c action.

Alignment Shield.—It is necessary to use a shield during oscillator alignment.

Fig. 3 shows the modifications necessary to convert the center strip portion of a case into a convenient shield to be used as a substitute for the regular case center strip during oscillator alignment.

If a substitute case is not available, a shield may be improvised using a sheet of aluminum (DO NOT USE STEEL) to approximate the shielding effect of the case on the 1R5 tube, tuning condenser and oscillator coil.

CRITICAL LEAD DRESS

1. Dress blue, green, and black leads of second I.F. transformer as direct as possible. If excess lead exists, dress down side of socket and flat against chassis to transformer opening.
2. Dress audio screen bypass capacitor (C17), and the lead to the volume control, up and underneath the shelf supporting the output transformer.
3. Dress audio coupling capacitor (C15), directly in front of C17, and against the side of the 1st I.F. transformer.
4. Wire in the three capacitors pyramided behind the speaker with enough space at the end of battery holder to allow holder to move when battery is replaced. Dress the ground leads of these capacitors to keep from shorting "+A" to chassis ground.
5. Observe the outside foil connections on all paper capacitors, also the polarity of the electrolytic capacitor, C19.
6. Keep blue and red leads of output transformer above the mounting shelf.
7. Dress leads to gang as far as possible from all metal parts.
8. Dress neutralization bypass capacitor, C9, as near metal chassis as possible.
9. Dress bypass C5 over bottom end of V2 (1U4), tube socket.
10. Dress neutralization capacitor, C8, as near metal chassis as possible.

Steps	Connect the high side of test osc. to—	Tune test-osc. to—	Turn radio dial to—	Adjust the following for max. peak output—
1	Connection lug of C1 located on rear of gang in series with .01 mf.	455 kc	Quiet point near 1,600 kc	C12, C13 2nd I-F trans.
2				C6, C7 1st I-F trans.
3		Repeat steps 1 and 2		
4	*Antenna coupling loop	1,400 kc	14 Rock gang	C4 (osc.) †
5		600 kc	60 Rock gang	L1 (osc.) †
6		Repeat steps 4 and 5		

* Steps 4 and 5 require a coupling loop from the signal generator to feed a signal into the receiver loop located in the lid. This loop should be loosely coupled to the receiver loop antenna so as not to disturb the receiver loop inductance.

† ALIGNMENT SHIELD MUST BE USED. (See text.)

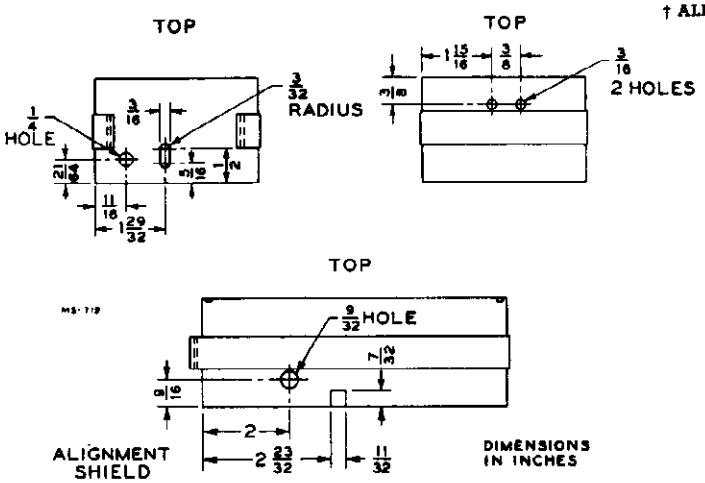

Alignment Shield

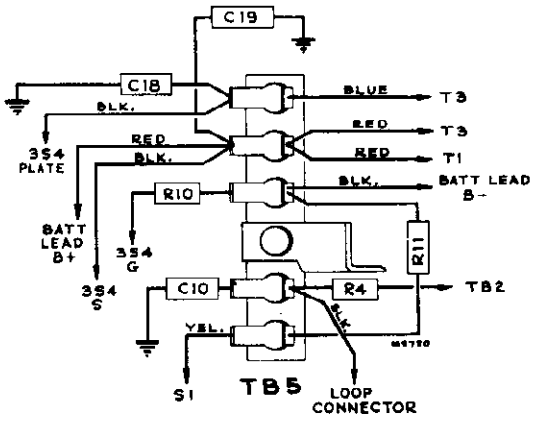

Terminal Board Wiring

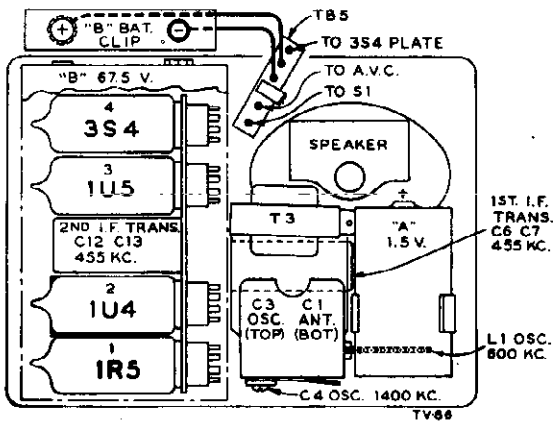

Tube and Trimmer Locations

A rubber band should be placed around each tube for cushioning.

MODELS 8B42 CHASSIS
RC-1069A; 8B43 CHASSIS
RC-1069B; 8B46 CHASSIS
RC-1069C

RADIO CORP. OF AMERICA

MODELS 8B41, CHASSIS
RC-1069

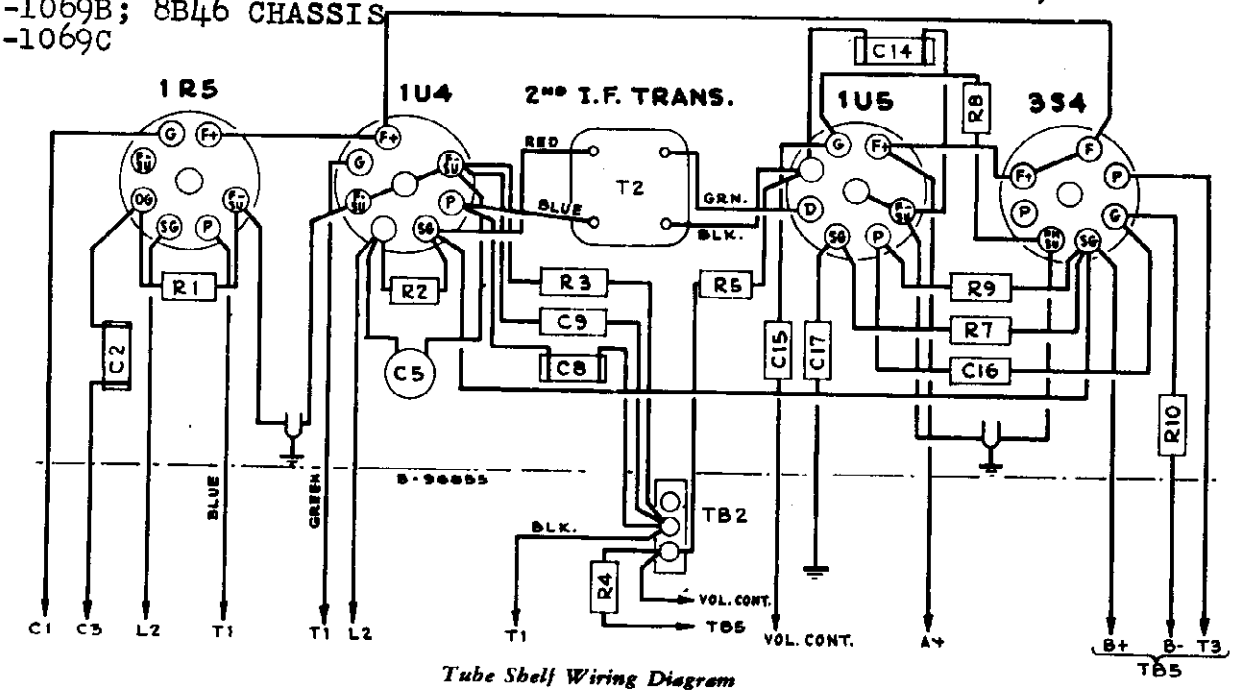

Tube Shelf Wiring Diagram

Replacement Parts

STOCK No.	DESCRIPTION
	CHASSIS ASSEMBLIES
	RC 1069—8B41, RC 1069A—8B42, RC 1069B—8B43
*73937	Baffle—Speaker baffle and grille cloth
70444	Board—Terminal board (5 contact)
70445	Board—Terminal board (1 contact)
*73947	Capacitor—Variable tuning capacitor (C1, C3, C4)
73153	Capacitor—Ceramic, 4 mmf. (C6)
*73962	Capacitor—Ceramic, 33 mmf. (C11)
73901	Capacitor—Ceramic, 51 mmf. (C2)
*73963	Capacitor—Ceramic, 75 mmf. (C14)
56653	Capacitor—Ceramic, 180 mmf. (C16)
*74093	Capacitor—Ceramic, 1500 mmf. (C20)
*73960	Capacitor—Ceramic, .01 mf. (C5)
72315	Capacitor—Tubular, .002 mf., 200 volts (C15)
*73961	Capacitor—Tubular, .003 mf., 200 volts (C9)
70606	Capacitor—Tubular, .005 mf., 400 volts (C18)
71928	Capacitor—Tubular, .02 mf., 200 volts (C17)
70615	Capacitor—Tubular, .05 mf., 400 volts (C10)
*73964	Capacitor—Electrolytic, 10 mf., 70 volts (C19)
70425	Clip—Spring clip for tuning knob
70443	Coil—Oscillator coil (L1, L2)
70452	Connector—Loop connectors (1 set) complete with eyelets
*73948	Control—Volume control (R6)
*73957	Fastener—Push fastener to hold loop (2 required) for Model 8B41—black
*73958	Fastener—Push fastener to hold loop (2 required) for Model 8B42—brown
*73959	Fastener—Push fastener to hold loop (2 required) for Model 8B43—red
70429	Grommet—Rubber grommet to mount tube support shelf (2 required)
*73950	Hinge—Lid hinge—L.H.—less mounting studs
*73951	Hinge—Lid hinge—R.H.—less mounting studs
72229	Holder—"A" battery holder
*73941	Insulator—Loop connector insulator
*73936	Knob—Calibrated tuning knob
*73946	Knob—Volume control knob
70708	Lead—"B" Battery lead complete
*73924	Lid—Case top lid complete with lid support and hinges —less loop—Model 8B41—black
*73925	Lid—Case top lid complete with lid support and hinges —less loop—Model 8B42—brown
*73926	Lid—Case top lid complete with lid support and hinges —less loop—Model 8B43—red
*73954	Loop—Antenna loop complete with connectors—less lid —Model 8B41—black
*73955	Loop—Antenna loop complete with connectors—less lid —Model 8B42—brown
*73956	Loop—Antenna loop complete with connectors—less lid —Model 8B43—red
*73949	Nameplate—"RCA" nameplate for top lid
*73940	Nut—Speed nut to lock screw clamping speaker to face panel
*73938	Panel—Chrome and mahogany face panel
	Resistor—Fixed, composition, 820 ohms ±10%, ½ watt (R11)
	Resistor—Fixed, composition, 15,000 ohms ±10%, ½ watt (R2)
	Resistor—Fixed, composition, 68,000 ohms ±20%, ½ watt (R5)
	Resistor—Fixed, composition, 100,000 ohms ±10%, ½ watt (R1)
	Resistor—Fixed, composition, 1 megohm ±20%, ½ watt (R9)
	Resistor—Fixed, composition, 3.3 megohms ±20%, ½ watt (R4, R10)
	Resistor—Fixed, composition, 4.7 megohms ±20%, ½ watt (R3, R7)
	Resistor—Fixed, composition, 10 megohms ±20%, ½ watt (R8)
*73944	Screw—#2-56 x 3/16" machine screw to hold lid hinges to face panel (2 required)
*73939	Screw—#4-40 x 5/16" binder head machine screw to clamp speaker to face panel
*73943	Screw—#4-40 x 3/16" binder head screw to fasten face panel to chassis (3 required)
70446	Screw—#6 x ¼" hex head self-tapping screw to mount battery holder
70436	Socket—Tube socket
70423	Spacer—Rubber shock spacer (cemented to case center strip)
*73942	Stud—Lid support stud (face panel end)
*73952	Stud—L.H. lid hinge mounting stud
*73953	Stud—R.H. lid hinge mounting stud
70451	Support—Lid support complete with lid end mounting stud
72230	Support—Tube support shelf less tube sockets and transformer
*73945	Switch—Power switch (S1)
70442	Transformer—First I.F. transformer (T1 [C6, C7])
70437	Transformer—Second I.F. transformer (T2 [C12, C13])
70440	Transformer—Output transformer (T3)
	SPEAKER ASSEMBLIES
	92523-4W
70428	Speaker—2" x 3" P.M. speaker complete with cone and voice coil
	MISCELLANEOUS
*73965	Bottom—Case bottom—Model 8B41—black
*73966	Bottom—Case bottom—Model 8B42—brown
*73967	Bottom—Case bottom—Model 8B43—red
70457	Catch—Spring catch assembly
*74016	Center—Case center complete with spring catch
*73968	Handle—Carrying handle—Model 8B41—black
*74022	Handle—Carrying handle—Model 8B42—brown
*73969	Handle—Carrying handle—Model 8B43—red
*73970	Link—Handle link (2 required)
73943	Screw—#4-40 x 3/16" binder head screw to hold case center

* This is the first time that this Stock No. has appeared in Service Data.

© John F. Rider

MODELS 8B41, CHASSIS RC-1069; 8B42 CHASSIS RC-1069A

RADIO CORP. OF AMERICA
Replacement of Component Parts

MODELS 8B43, CHASSIS RC-1069B; 8B46 CHASSIS RC-1069C

I. **To remove bottom cover:**
- a. Depress locking spring clip through hole in top of case.
- b. With spring clip depressed, pull cover carefully out and up off the retaining lugs in the bottom of the case center strip.

II. **To replace batteries:**
- a. Remove bottom cover.
- b. Remove, either or both, the "A" and "B" battery as may be necessary. The "B" battery snap fasteners can best be removed by inserting a screwdriver under the snap fastener strip and prying upward.

III. **To remove the case center strip:**
- a. Remove bottom cover.
- b. Remove one screw (A) on the inside at the handle end.
- c. Tilt case center strip and lift.

IV. **To replace tubes:**
- a. Remove bottom cover.
- b. Remove "B" battery.
- c. Remove case center strip.
- d. Remove and replace tubes as required.

V. **To remove face panel from chassis plate:**
- a. Remove dial knob (pull off).
- b. Remove bottom cover (I), batteries (II) and case center strip (III).
- c. Unsolder leads to loop connectors.
- d. Remove the four Phillips head screws (B) located at three corners and end close to 2nd I.F. transformer, which hold the chassis to face panel.
- e. The face panel may now be folded back into the case top lid.

VI. **To remove speaker:**
- a. Remove face panel (see item V).
- b. Unsolder voice coil leads.
- c. Remove two Phillips head screws (C) on chassis plate holding speaker.

VII. **To remove output transformer:**
- a. Remove speaker (see item VI).
- b. Unsolder transformer leads.
- c. Remove rivet (use bolt for replacement).
- d. Unsolder mounting lug.

VIII. **To remove chassis subassemblies from chassis plate:**
- a. Remove tubes (see item IV).
- b. Unsolder grounding strap (E) which connects tube shelf to chassis plate.
- c. Unsolder two wires which connect to speaker.
- d. Unsolder two wires attached to switch.
- e. Unsolder leads to loop connectors.
- f. Remove dial knob (pull off).
- g. Remove two screws (F) holding tube shelf to chassis plate.
- h. Remove nut (G) between I.F. transformers.
- i. Remove screw (G) beneath the negative terminal of "A" battery holder, and also screw (G) adjacent to volume control below "A" battery holder.

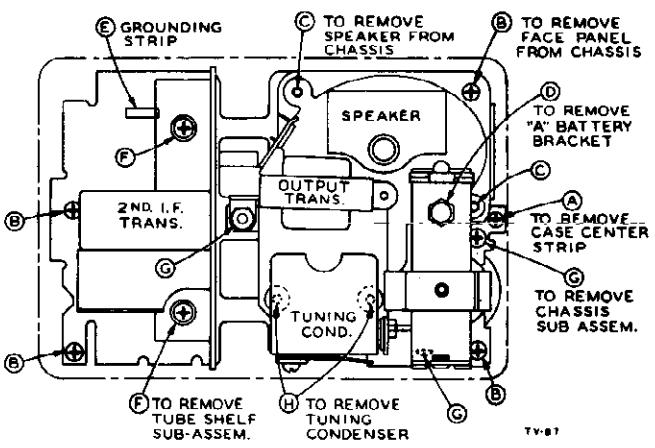

Chassis Disassembly

IX. **To remove volume control:**
- a. Remove chassis subassembly from chassis plate (see item VIII).
- b. Unsolder the two leads to the "A" battery holder.
- c. Lift up the "A" battery holder by removing the one screw (C) in its base. This holder has a hinge action and must be lifted up and back to remove.
- d. Unsolder volume control leads.
- e. Remove volume control knob (attached to shaft with set screw)
- f. Remove volume control assembly by bending back four lugs.

X. **To remove oscillator coil:**
- a. Same procedure and steps as covered in item VIII for removal of chassis subassembly plus the following.
- b. Unsolder oscillator coil leads.
- c. Remove coil by unsnapping spring mounting clips from angle bracket,

XI. **To remove tuning condenser:**
- a. Remove case center strip (III).
- b. Unsolder two leads and two ceramic capacitors (C2, C20) from tuning condenser.
- c. Remove tuning knob (pull off).
- d. Remove the two screws (H) (accessible through dial knob opening) which hold the tuning condenser to the chassis subassembly.

XII. **To remove 1st I-F transformer:**
- a. Remove chassis subassemblies (see item VIII).
- b. Unsolder four leads from 1st I-F transformer.
  1. Blue to screen of 1R5 tube.
  2. Green to grid of 1U4 tube.
  3. Red to B+ terminal of 5 lug terminal board TB5.
  4. Black to terminal board TB2.
- c. Unsolder and bend mounting lugs straight on the I-F transformer can.

XIII. **To remove 2nd I-F transformer:**
- a. Remove chassis subassemblies (see item VIII).
- b. Unsolder four leads from 2nd I-F transformer.
- c. Unsolder and bend mounting lugs straight on the I-F transformer can.

XIV. **To remove loop assembly:**
- a. Remove case center strip (see item III).
- b. Unsolder leads to loop connectors.
- c. Remove snap fasteners holding loop in cover.
- d. Carefully pry out on edge next to catch (opposite hinges).
- e. When reassembling press loop assembly into top lid on the side next to the connectors to cause the plastic projections on the loop assembly to engage in the detents in the top lid.

XV. **To remove switch:**
- a. Remove case center strip (III).
- b. Remove screw (I) which holds switch to chassis plate.
- c. Unsolder the two wires which connect to the switch.
- d. Unsolder switch from chassis plate.

XVI. **To adjust latching of top lid:**
- a. The hinges are attached to the face panel with Phillips head screws (one to each hinge). The mounting holes of the hinges are sufficiently large to permit adjustment of the hinges when the mounting screws are loosened. Tighten screws after adjustment.

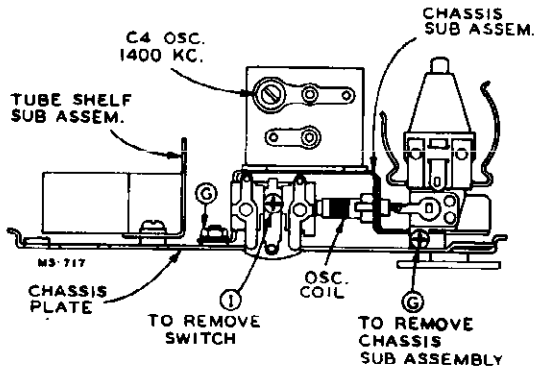

Chassis Disassembly

RADIO CORP. OF AMERICA

MODELS 8BX5, 8BX54, 8BX55, CHASSIS RC-1059A

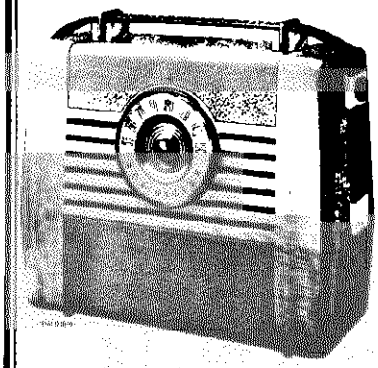

Model 8BX54

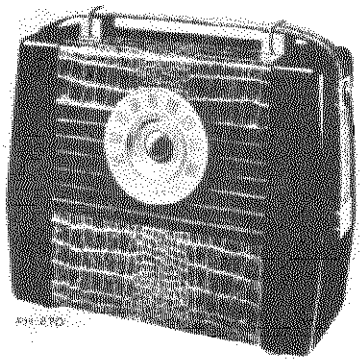

Model 8BX5

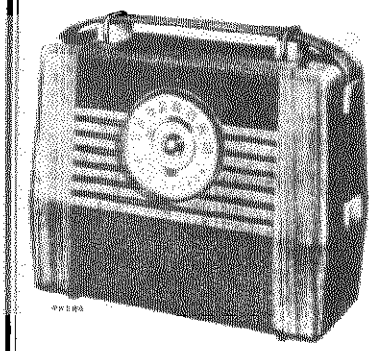

Model 8BX55

Specifications

Frequency Range .....540-1,600 kc

Intermediate Frequency .....455 kc

Power Supply Rating
110 to 125 volts, AC 50 or 60 cycles, or DC....18 watts

Batteries required.....One RCA Battery Pack VS050

Tube Complement
(1) RCA—1R5 .....Converter
(2) RCA—1T4 .....I. F.-Amplifier (1U4 in RC-1059A)
(3) RCA—1U5 .....2nd Det. AVC. & A.F.-Amplifier
(4) RCA—3V4 .....Power Output
(5) RCA—117Z3 .....Rectifier

Current Consumption
Battery Operation.....“A” 60 ma., “B” 10 ma.
(Average life of RCA VS050 Battery 100 hrs. intermittent service.)
Total Rect. Current (117 volt, 60 cycle).....60 ma.

Power Output (AC Operation)
Undistorted ..... .15 watt
Maximum ..... .25 watt
(Output is slightly lower on battery operation)

Loudspeaker .....4 in. P.M. 3.4 ohms at 400 cycles

Cabinet Dimensions
Height.....9½ in. Width.....11 in. Depth.....5 in.

Critical Lead Dress

1. Dress output plate bypass C20 capacitor against chassis
2. Dress output plate lead to output transformer against chassis.
3. Dress audio coupling capacitor C14 (volume control to grid of 1U5) away from chassis, away from audio limiting resistor R8 and to permit adjustment of second I.F. Transformer.
4. Dress all exposed leads away from each other, and away from chassis to prevent short circuits.
5. Dress all filament and ground leads against chassis.
6. Dress filament bypass capacitor C23 and accompanying compensating resistor R15 (volume control to IT4 [or 1U4] socket) against volume control.
7. Dress power line cord away from line-battery switch mechanism.
8. Dress all capacitors and wiring away from oscillator coil.
9. Dress 4 mmf. neutralizing capacitor C7 against A.V.C. bypass capacitor C8 (IT4 [or 1U4] filament to first I.F. trans.).

Alignment Procedure

Cathode Ray Alignment is the preferable method. Connections for the oscilloscope are shown on the schematic diagram.

Output Meter Alignment.—If this method is used, connect the meter across the voice coil and turn the receiver volume control to maximum.

Test Oscillator.—For all alignment operations, connect the low side of the test oscillator to the receiver chassis and keep the oscillator output as low as possible to avoid AVC action.

Battery operation of the receiver is preferable during alignment; on AC operation an isolation transformer (117v./117v.) may be necessary for the receiver if the test oscillator is also AC operated.

NOTE: Battery or substitute must be in place for ant. alignment (step 5).

Alignment Tabulation

Step	Connect high side of test oscillator to—	Test oscillator output—	Turn receiver dial to—	Adjust for maximum peak output
1	Disconnect loop—remove chassis—remove bottom plate, connect a 10,000 ohm resistor from C1 stator terminal to tuning condenser frame.			
2	Stator terminal of C1 thru .01 mf. capacitor	455 kc	55	*Top and bottom T2 (2nd. I-F trans.) *Top and bottom T1 (1st. I-F trans.)
3	Remove the 10,000 ohm resistor. Replace bottom cover and install chassis in cabinet. Re-connect loop.			
4	Short wire placed near receiver (for radiated signal)	1600 kc	160	†C5 (osc.)
5		1400 kc	140	†C2 (ant.)
6		600 kc	60	*L2 (osc.) while rocking gang
7		Repeat steps 4, 5 and 6		

NOTES:
*The magnetite cores of L2 and some T2 and T1 do not have visible adjusting screws. The cores have screw driver slots to permit adjustment (use non-metallic screwdriver)
†Adjustable thru hole in side of case which is accessible after unfastening one end of the carrying handle.

© John F. Rider

MODELS 8BX5, 8BX54, 8BX55, CHASSIS RC-1059A

RADIO CORP. OF AMERICA

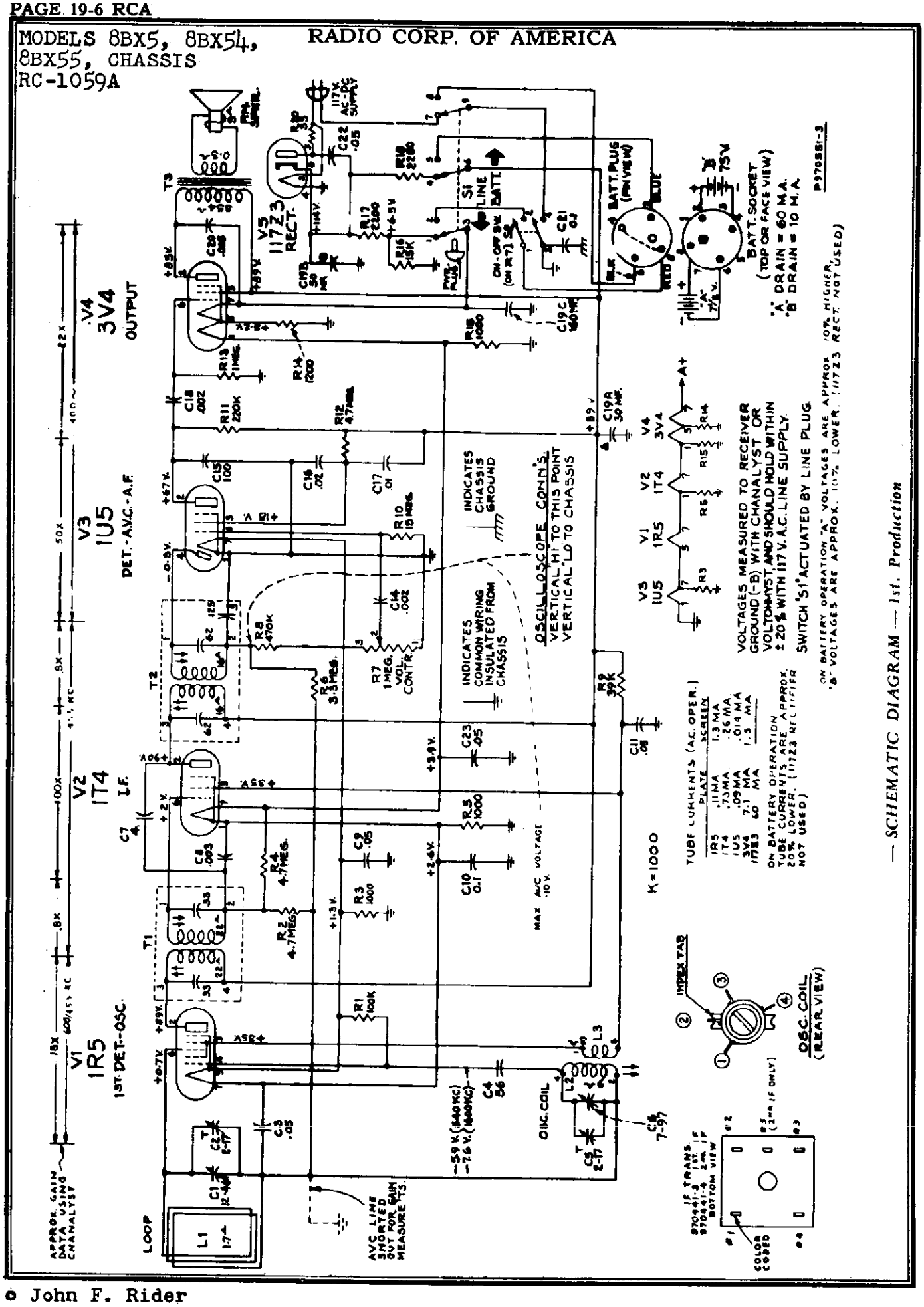

— *SCHEMATIC DIAGRAM — 1st. Production*

© John F. Rider

RADIO CORP. OF AMERICA — MODELS 8BX5, 8BX54, 8BX55, CHASSIS RC-1059A

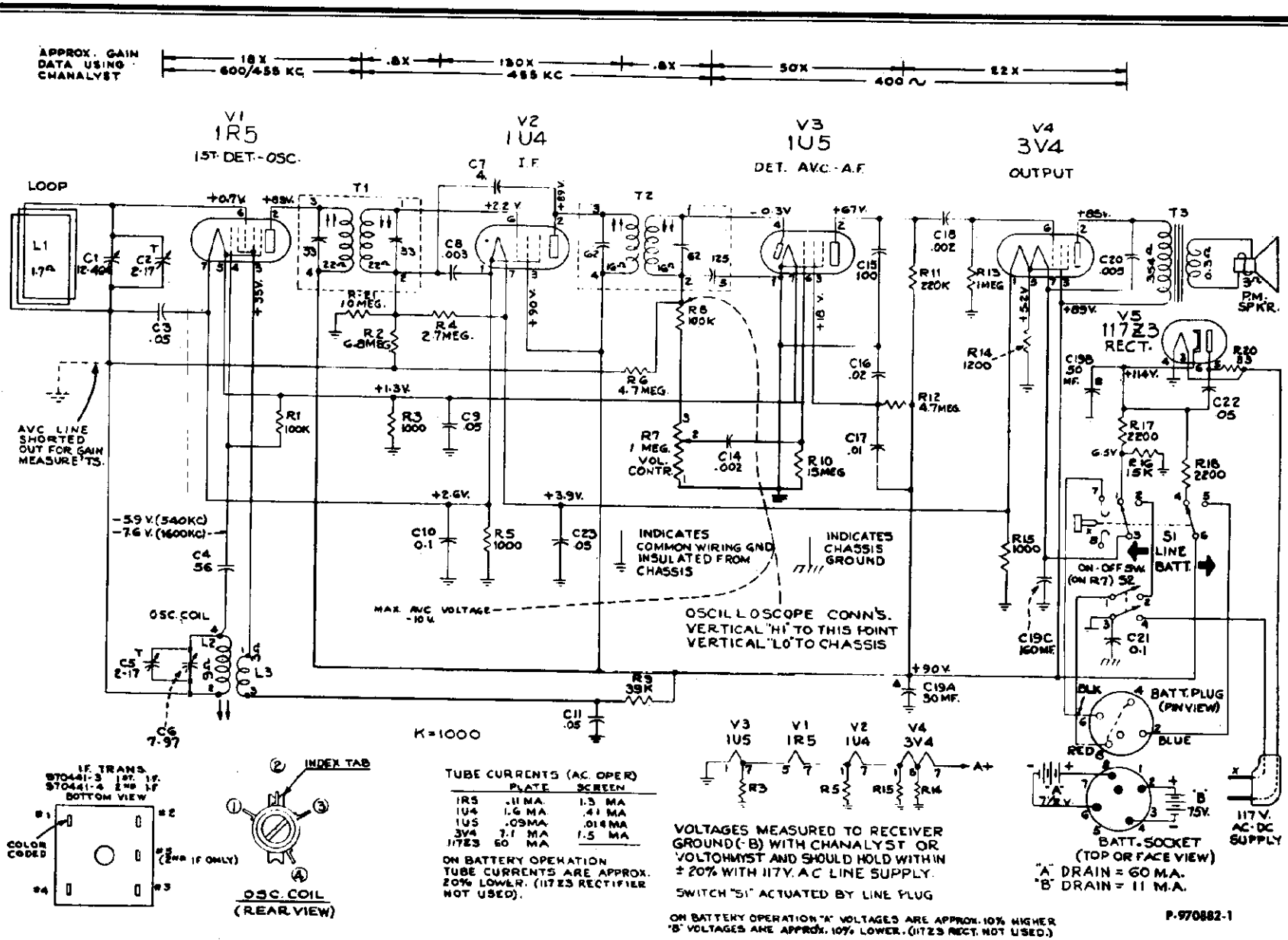

— SCHEMATIC DIAGRAM — 2nd. Production

MODELS 8BX5, 8BX54, 8BX55 — RADIO CORP. OF AMERICA — CHASSIS RC-1059, RC-1059A

To Remove Carrying Handle

1. Pull off the volume control knob.
2. Insert a small knife blade between one side of a spring clip and the cabinet as shown below, push upward on the slip shield to disengage the locking of the slip shield to the spring clip. Repeat this procedure on the other side of the spring clip. The slip shield may then be removed by pushing it upward thus disengaging it from the spring clip.
3. Repeat step 2 for each slip shield.
4. Remove the four screws (2 on each side) which hold the carrying handle to the case.

Caution: When re-assembling—make certain that the slip shield and the spring clip is assembled with their locks in the correct relation to each other.

To Remove Chassis

1. Pull off the volume control knob.
2. Close tuning condenser (dial at 55) to prevent possible damage to tuning condenser.
3. Remove dial knob by grasping both sides with the tips of the fingers of both hands and pull to the front —or—close the tuning condenser, open the back, reach in and push outward on the hub of the dial knob.

NOTE: When re-assembling—press inward on the back of the tuning condenser and on the front of the knob to properly seat the hub on the shaft.

4. Remove the two slip shields on the R.H. side of the cabinet (opposite the volume control) and unfasten the end of the carrying handle using the procedure described under, "To Remove Carrying Handle."
5. Unsolder the loop leads.
6. Remove the two screws holding the bottom edge of the speaker to the cabinet.
7. Remove the plug from the battery.
8. Remove the two screws at the top of the cabinet while supporting the chassis with one hand.

NOTE: When re-installing—replace speaker holding screws first but do not securely tighten until the two screws at the top of the cabinet have been tightened.

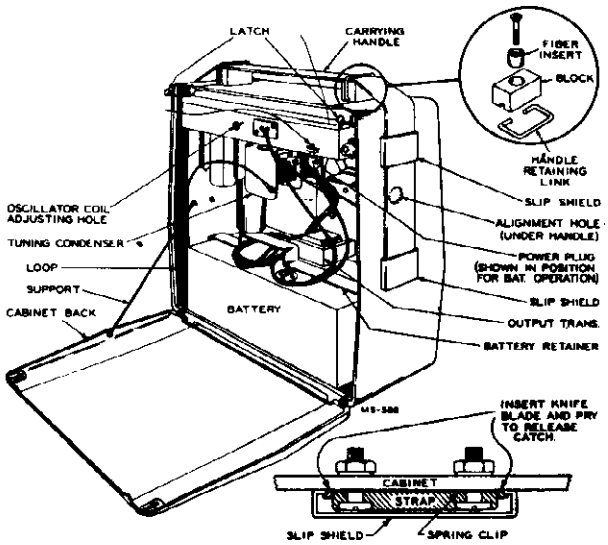

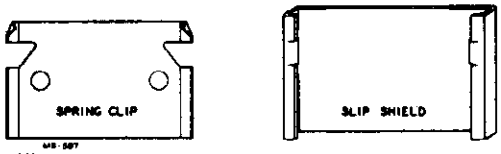

Cabinet Hinges

The cabinet hinges may be readily removed, they are secured to the cabinet and back by force fit. To remove back from cabinet—pull straight outward on both hinges at the same time.

Replacement Parts—1st. Production

STOCK No.	DESCRIPTION
	CHASSIS ASSEMBLIES RC 1059
73153	Capacitor—Ceramic, 4 mmf. (C7)
71924	Capacitor—Ceramic, 56 mmf. (C4)
73152	Capacitor—Ceramic, 100 mmf. (C15)
72315	Capacitor—Tubular, .002 mfd., 200 volts (C14, C18)
71921	Capacitor—Tubular, .003 mfd., 200 volts (C8)
72791	Capacitor—Tubular, .005 mfd., 400 volts (C20)
71923	Capacitor—Tubular, .01 mfd., 200 volts (C17)
71928	Capacitor—Tubular, .02 mfd., 200 volts (C16)
72596	Capacitor—Tubular, .05 mfd., 200 volts (C9, C23)
70615	Capacitor—Tubular, .05 mfd., 400 volts (C3, C11, C22)
54788	Capacitor—Tubular, 0.1 mfd., 200 volts (C10)
70617	Capacitor—Tubular, 0.1 mfd., 400 volts (C21)
73127	Capacitor—Electrolytic, comprising 1 section of 50 mfd., 150 volts; 1 section of 30 mfd., 150 volts and 1 section of 160 mfd., 25 volts (C19A, C19B, C19C)
73114	Coil—Oscillator coil complete with core and stud (L2, L3)
73126	Condenser—Variable tuning condenser (C1, C2, C5, C6)
73125	Control—Volume control and power switch (R7, S2)
73128	Cord—Power cord and plug (72" long)
73482	Insulator—Mounting insulator for tuning condenser
73275	Plug—5 prong male plug for battery cable
73237	Resistor—Wire wound, 33 ohms, 150 MA (R20)
	Resistor—Fixed composition, 1000 ohms, ±10%, ½ watt (R3, R5, R15)
	Resistor—Fixed composition, 1200 ohms, ±10%, ½ watt (R14)
73132	Resistor—Voltage divider, 2200 ohms, 7 watt (R17)
	Resistor—Fixed composition, 2200 ohms, ±10%, ½ watt (R18)
	Resistor—Fixed composition, 15,000 ohms, ±10%, ½ watt (R16)
	Resistor—Fixed composition, 39,000 ohms, ±10%, ½ watt (R9)
	Resistor—Fixed composition, 100,000 ohms, ±20%, ½ watt (R1)
	Resistor—Fixed composition, 220,000 ohms, ±20%, ½ watt (R11)
	Resistor—Fixed composition, 470,000 ohms, ±20%, ½ watt (R8)
	Resistor—Fixed composition, 1 megohm, ±20%, ½ watt (R13)
	Resistor—Fixed composition, 3.3 megohms, ±10%, ½ watt (R6)
	Resistor—Fixed composition, 4.7 megohms, ±10%, ½ watt (R2, R4)
	Resistor—Fixed composition, 4.7 megohms, ±20%, ½ watt (R12)
	Resistor—Fixed composition, 15 megohms, ±20%, ½ watt (R10)
73103	Shield—Tube shield for 1U5
73117	Socket—Tube socket
73133	Switch—"Line Battery" change switch T.P.D.T. (S1)
73129	Transformer—First I-F transformer (T1)
73130	Transformer—Second I-F transformer (T2)
71047	Transformer—Output transformer (T3)
73131	Washer—Insulating washer—extruded—to mount tuning condenser (3 required)
	SPEAKER ASSEMBLIES 92577-1
71059	Gasket—Speaker gasket (black tubing)
73123	Speaker—4" PM speaker complete with cone and voice coil
	MISCELLANEOUS
73134	Back—Cabinet back—less hinges—for Model 8BX5
73721	Back—Cabinet back—blonde—less hinges—for Model 8BX54
73723	Back—Cabinet back—walnut—less hinges—for Model 8BX55
73147	Ball—Metal ball with groove for back cover latch mechanism
73137	Block—Chassis mounting block (with groove for link)—less fiber insert (2 required)—fits on top of cabinet
73136	Button—Center button for dial knob
73142	Button—Station selector indicator button
Y1464	Case—Carrying case with loop—less hinges, latch mechanism, back cover and carrying handle—for Model 8BX5
Y2016	Case—Carrying case—blonde—with loop—less hinges, latch mechanism, back cover and carrying handle—for Model 8BX54
Y2017	Case—Carrying case—walnut—with loop—less hinges, latch mechanism, back cover and carrying handle—for Model 8BX55
73195	Clip—Spring clip for slip shield (3 required)
70425	Clip—Spring clip for volume control and power switch knob
73143	Handle—Carrying handle—for Model 8BX5
73724	Handle—Carrying handle—tan—for Model 8BX54
73725	Handle—Carrying handle—light brown—for Model 8BX55
73144	Hinge—Cabinet hinge (2 required)
73149	Insert—Fibre insert for chassis mounting block (2 required)
73135	Knob—Dial knob complete with center button and calibrations
73138	Knob—Volume control and power switch knob
73459	Link—Carrying handle retaining link (2 required)
73141	Loop—Antenna loop (L1)
73145	Nut—Hex nut with groove for back cover latch mechanism
73139	Shield—Slip shield for carrying strap—(bottom R. H. and L.H. and upper L. H.)
73140	Shield—Slip shield for carrying strap—with hole for volume control knob shaft (upper R. H.)
73146	Spring—Extension spring for back cover latch mechanism—R. H.
73148	Spring—Extension spring for back cover latch mechanism—L. H.
30900	Spring—Retaining spring for dial knob
73483	Support—Flexible drop support for back cover

RADIO CORP. OF AMERICA MODELS 8BX5, 8BX54, 8BX55, CHASSIS RC-1059, RC-1059A

Replacement Parts—2nd. Production

STOCK No.	DESCRIPTION
	CHASSIS ASSEMBLIES RC 1059A
73153	Capacitor—Ceramic, 4 mmf. (C7)
71924	Capacitor—Ceramic, 56 mmf. (C4)
73152	Capacitor—Ceramic, 100 mmf. (C15)
72315	Capacitor—Tubular, .002 mfd., 200 volts (C14, C18)
71921	Capacitor—Tubular, .003 mfd., 200 volts (C8)
72791	Capacitor—Tubular, .005 mfd., 400 volts (C20)
71923	Capacitor—Tubular, .01 mfd., 200 volts (C17)
71928	Capacitor—Tubular, .02 mfd., 200 volts (C16)
72596	Capacitor—Tubular, .05 mfd., 200 volts (C9, C23)
70615	Capacitor—Tubular, .05 mfd., 400 volts (C3, C11, C22)
*73784	Capacitor—Tubular, 0.1 mfd., 200 volts (C10)
70617	Capacitor—Tubular, 0.1 mfd., 400 volts (C21)
73127	Capacitor—Electrolytic, comprising 1 section of 50 mfd., 150 volts; 1 section of 30 mfd., 150 volts and 1 section of 160 mfd., 25 volts (C19A, C19B, C19C)
*73935	Clip—Mounting clip for I.F. transformers
73114	Coil—Oscillator coil complete with core and stud (L2, L3)
73126	Condenser—Variable tuning condenser (C1, C2, C5, C6)
73125	Control—Volume control and power switch (R7, S2)
70022	Cord—Power cord and plug
72283	Grommet—Rubber grommet for mounting tuning condenser (3 required)
73275	Plug—5 prong male plug for battery cable
73237	Resistor—Wire wound, 33 ohms, 150 MA (R20)
	Resistor—Fixed composition, 1000 ohms, ±10%, ½ watt (R3, R5, R15)
	Resistor—Fixed composition, 1200 ohms, ±10%, ½ watt (R14)
	Resistor—Fixed composition, 2200 ohms, ±10%, ½ watt (R18)
73132	Resistor—Voltage divider, 2200 ohms, 7 watts (R17)
	Resistor—Fixed composition, 15,000 ohms, ±10%, ½ watt (R16)
	Resistor—Fixed composition, 39,000 ohms, ±10%, ½ watt (R9)
	Resistor—Fixed composition, 100,000 ohms, ±20%, ½ watt (R1)
	Resistor—Fixed composition, 100,000 ohms, ±10%, ½ watt (R8)
	Resistor—Fixed composition, 220,000 ohms, ±20%, ½ watt (R11)
	Resistor—Fixed composition, 1 megohm, ±20%, ½ watt (R13)
	Resistor—Fixed composition, 2.7 megohms, ±10%, ½ watt (R4)
	Resistor—Fixed composition, 4.7 megohms, ±20%, ½ watt (R12)
	Resistor—Fixed composition, 4.7 megohms, ±10%, ½ watt (R6)
	Resistor—Fixed composition, 6.8 megohms, ±10%, ½ watt (R2)
	Resistor—Fixed composition, 10 megohms, ±10%, ½ watt (R21)
	Resistor—Fixed composition, 15 megohms, ±20%, ½ watt (R10)
73103	Shield—Shield for 1U5 tube
73117	Socket—Tube socket
71039	Switch—"Line-Battery" change switch (S1)
73129	Transformer—First I.F. transformer (T1)
73130	Transformer—Second I.F. transformer (T2)
71047	Transformer—Output transformer (T3)
	SPEAKER ASSEMBLY 92577-1
71059	Gasket—Speaker gasket (black tubing)
73123	Speaker—4" PM speaker complete with cone and voice coil
	MISCELLANEOUS
73134	Back—Cabinet back—less hinges—Model 8BX5
73721	Back—Cabinet back—less hinges—Model 8BX54
73723	Back—Cabinet back—less hinges—Model 8BX55
73147	Ball—Metal ball with groove for back cover latch mechanism
73137	Block—Chassis mounting block (with groove for link)—less fiber insert (2 required)—fits on top of cabinet
73136	Button—Center button for dial knob
73142	Button—Station selector indicator button
Y1464	Case—Carrying case complete with loop—less hinges, latch mechanism, back cover and carrying handle—Model 8BX5
Y2016	Case—Carrying case complete with loop—less hinges, back cover, latch mechanism and carrying handle
Y2017	Case—Carrying case complete with loop—less hinges, back cover, latch mechanism and carrying handle
70425	Clip—Spring clip for volume control and power switch knob
73195	Clip—Spring clip for slip shield (4 req'd)
73143	Handle—Carrying handle—Model 8BX5
73724	Handle—Carrying handle—Model 8BX54
73725	Handle—Carrying handle—Model 8BX55
*74180	Hinge—Cabinet hinge (2 required)
73149	Insert—Fibre insert for chassis mounting block (2 required)
73135	Knob—Dial knob complete with center button and calibrations
73138	Knob—Volume control and power switch knob
73459	Link—Carrying handle retaining link (2 required)
73141	Loop—Antenna loop (L1)
73145	Nut—Hex nut with groove for back cover latch mechanism
73139	Shield—Slip shield for carrying strap (bottom R.H. and L.H. and upper L.H.)
73140	Shield—Slip shield for carrying strap—with hole for volume control shaft (upper R.H.)
30900	Spring—Retaining spring for dial knob
73146	Spring—Extension spring for back cover latch mechanism—R.H.
73148	Spring—Extension spring for back cover latch mechanism—L.H.
73483	Support—Flexible drop support for back cover

* This is the first time that this Stock No. has appeared in Service Data.

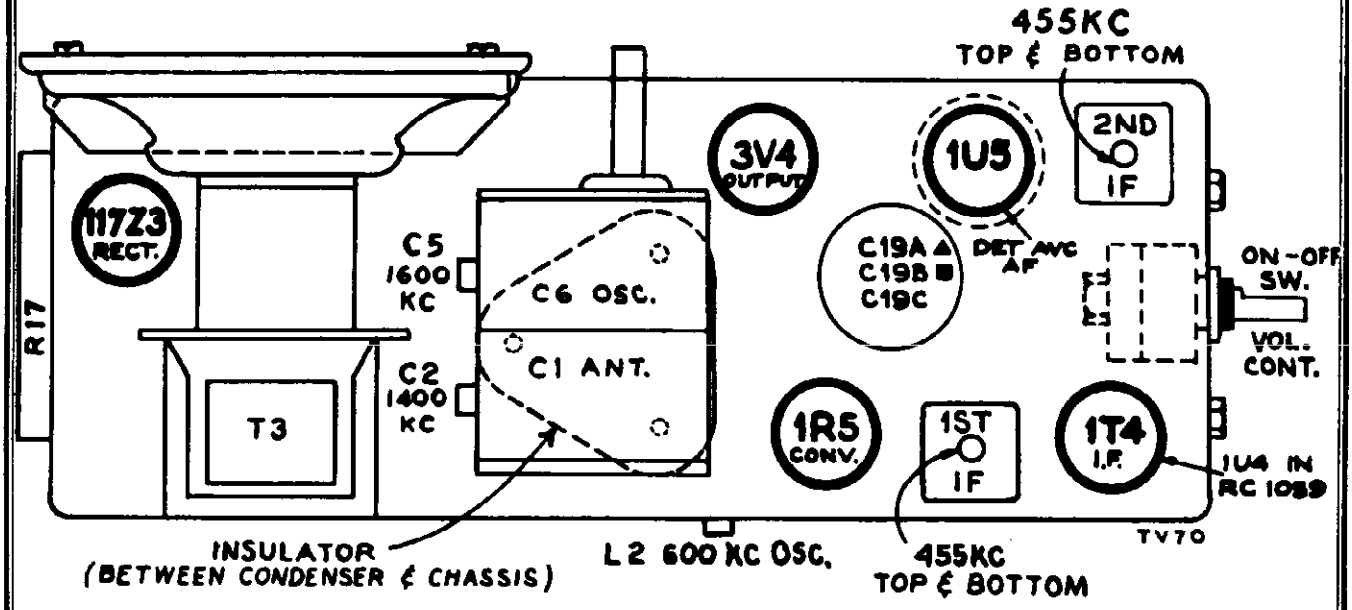

Tube and Trimmer Locations

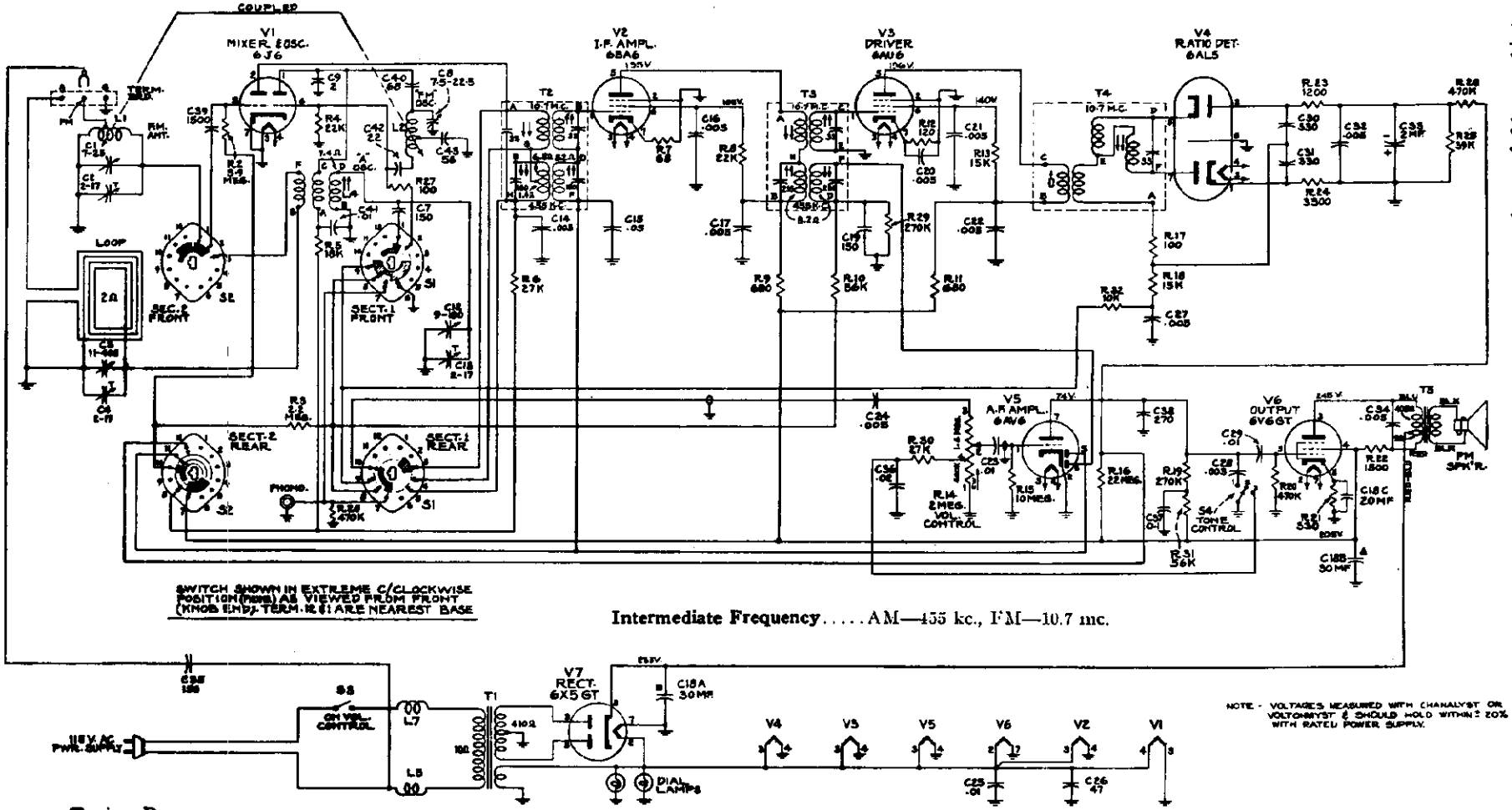

Intermediate Frequency..... AM—455 kc., FM—10.7 mc.

Tuning Ranges

Standard Broadcast (AM)..... 540-1,600 kc.
Frequency Modulation (FM) ..... 88-108 mc.

Tube Complement

(1) 6J6..... Mixer and Oscillator
(2) 6BA6..... I.F. Amplifier
(3) 6AU6 ..... Driver
(4) 6AL5 ..... Ratio Detector
(5) 6AV6..... AM Det.—AVC—A. F. Amp.
(6) 6V6GT..... Output
(7) 6X5GT..... Rectifier

Power Supply Rating..... 115 volts, 60 cycles, 50 watts

Loudspeaker

Type 92572-2..... 5 in. P.M.
Voice coil impedance at 400 cycles..... 3.2 ohms

Tuning Drive Ratio..... 7¼:1 (3¾ turns of knob)

Dial Lamps (2)..... Type No. 44, 6-8 volts, 0.25 amp.

Power Output

Maximum..... 3 watts
Undistorted ..... 2 watts

RADIO CORP. OF AMERICA

MODELS 8R71, 8R72, 8R74, 8R75, 8R76, CHASSIS RC-1060, RC-1060A

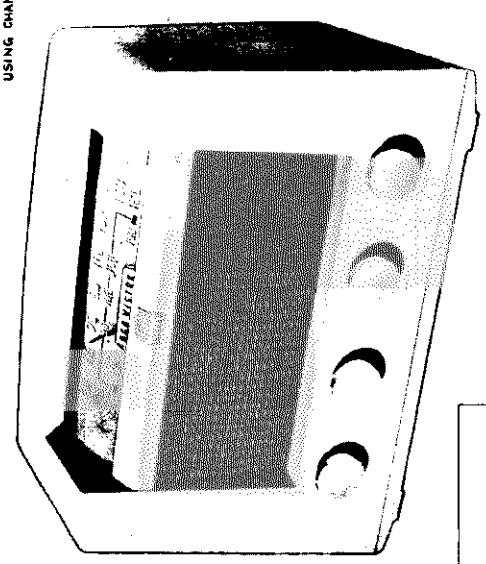

CLARI-SKEMATIX
Registered Trademark

MODELS 8R71, 8R72 RADIO CORP. OF AMERICA MODELS 8R74, 8R75, 8R76, CHASSIS RC-1060, RC-1060A

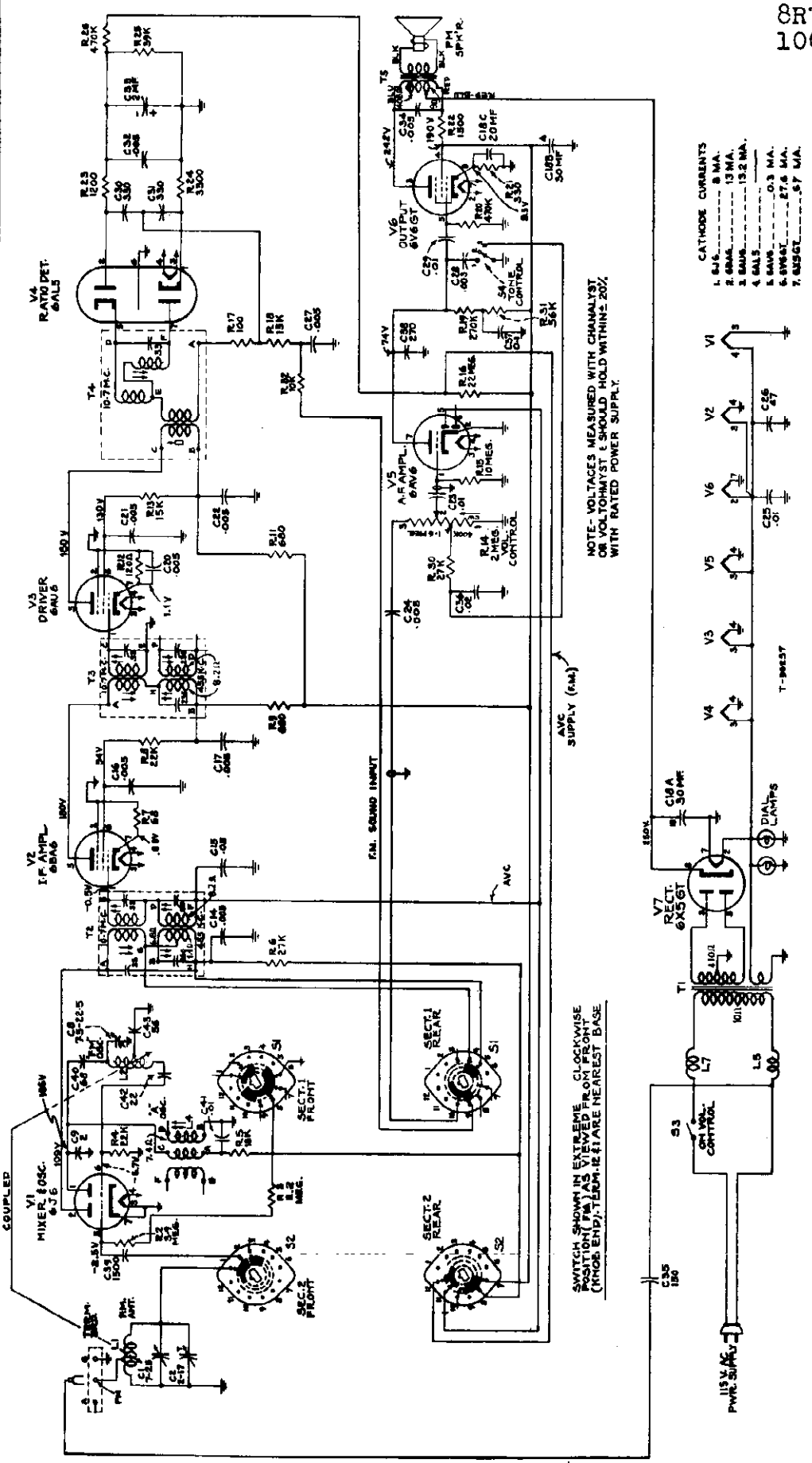

CLARI-SKEMATIX

Registered Trademark

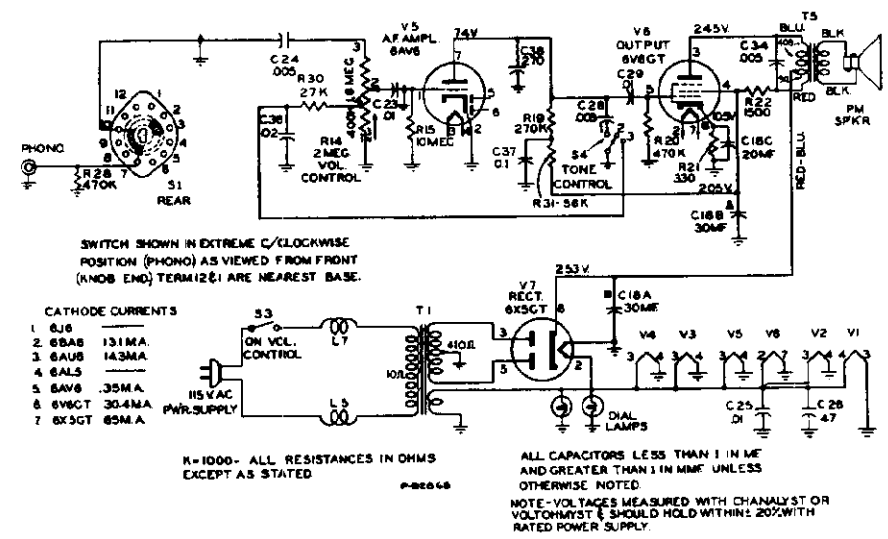

K=1000- ALL RESISTANCES IN OHMS EXCEPT AS STATED

ALL CAPACITORS LESS THAN 1 IN MF AND GREATER THAN 1 IN MMF UNLESS OTHERWISE NOTED.

NOTE-VOLTAGES MEASURED WITH CHANALYST OR VOLTOHMYST & SHOULD HOLD WITHIN± 20% WITH RATED POWER SUPPLY.

Simplified Schematic Diagram
"Phono" Position

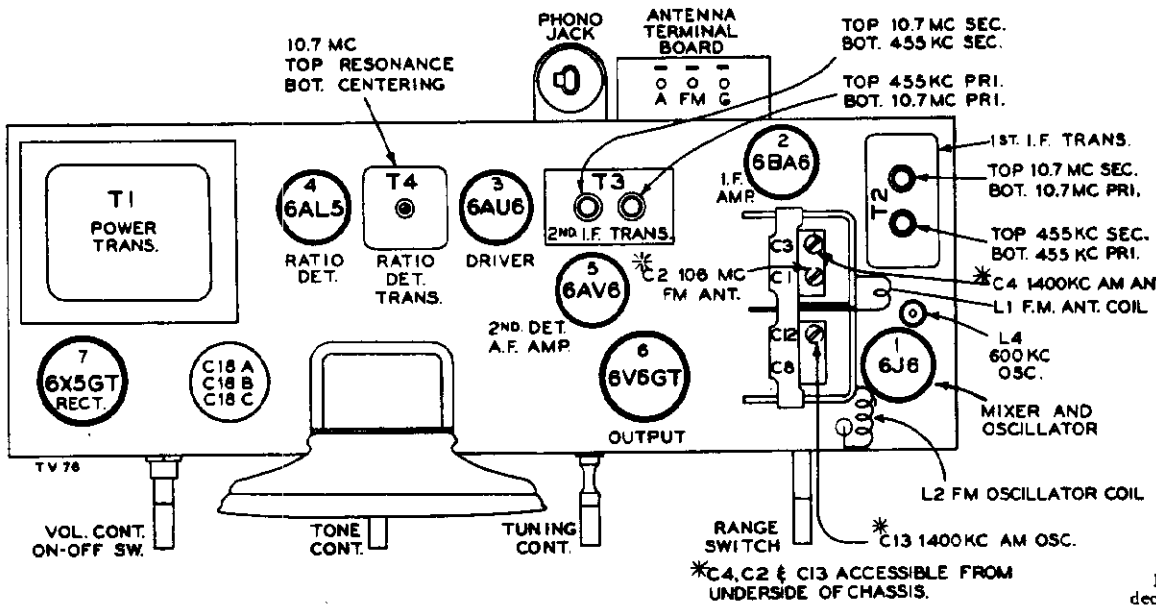

Tube and Trimmer Locations

VOLTAGE CHART

Tube	Type		Pin No.	"A"	"FM"	Phone
1	6J6	Plate Plate Grid Grid	1 2 6 5	106 94 -6.8 -3.0	106 109 -6.7 -2.5	—— —— —— -1.0
2	6BA6	Plate Screen Cathode Grid	5 6 7 1	185 110 0.75 -1.6	180 94 0.88 -0.5	195 105 0.94 -0.8
3	6AU6	Plate Screen Cathode	5 6 7	184 132 1.1	180 130 1.1	195 140 1.2
4	6AL5	——	—	——	——	——
5	6AV6	Plate Grid	7 1	74 -0.8	74 -0.8	76 -0.8
6	6V6GT	Plate Screen Cathode	3 4 8	243 193 9.7	242 190 9.5	245 205 10.5
7	6X5GT	Cathode	8	250	250	253

CATHODE CURRENTS (MA)

1	6J6		7	8.6	8	—
2	6BA6		7	12	13	13.1
3	6AU6		7	13.5	13.2	14.3
4	6AL5		1 & 2	——	——	——
5	6AV6		2	0.3	0.3	0.35
6	6V6GT		8	28.2	27.6	30.4
7	6X5GT		8	67	67	65

Voltages and currents measured with tuning condenser closed and no signal input should hold within ±20% with rated line voltage.

Note: Plate voltage removed from 6J6 mixer and oscillator tube during "Phono" operation.

Note: FM mixer and oscillator coils are adjustable by increasing or decreasing the spacing between turns. The position of the coils and location of the taps are critical (refer to "Critical Lead Dress").

MODELS 8R71, 8R72, 8R74, 8R75, 8R76 — RADIO CORP. OF AMERICA — CHASSIS RC-1060, RC-1060A

Alignment Procedure

CORRECT ALIGNMENT OF THE FM BAND REQUIRES THAT THE AM BAND BE ALIGNED FIRST

Alignment Indicators:

An RCA VoltOhmyst or equivalent meter is necessary for measuring developed d-c voltage during FM alignment. Connections are specified in the alignment tabulation. An output meter is also necessary to indicate minimum audio output during FM Ratio Detector alignment. Connect the output meter across the speaker voice coil.

The RCA VoltOhmyst can also be used as an AM alignment indicator, either to measure audio output or to measure a-v-c voltage.

When audio output is being measured the volume control should be turned to maximum.

Signal Generator:

For all alignment operations connect the low side of the signal generator to the receiver chassis. The output should be adjusted to provide accurate resonance indication at all times. If output measurement is used for AM alignment the output of the signal generator should be kept as low as possible to avoid a-v-c action.

The FM i-f alignment may be checked by means of an FM sweep generator and cathode ray oscilloscope. Connect the output from the sweep generator, which is set to 10.7 mc., to the mixer grid (6J6 Pin No. 5), low side to chassis. Disconnect the 2 mfd. capacitor C33 from the Ratio Detector circuit.

Connect the high side of the oscilloscope to the junction of R25 and R26, low side to chassis. Adjust the sweep generator and oscilloscope to obtain the response curve.

The Ratio Detector characteristic may be viewed by connecting the oscilloscope across the volume control R14. Capacitor C33 should be re-connected before checking the Ratio Detector characteristic.

CRITICAL LEAD DRESS

1. Keep leads of C7 short.
2. Dress R27 away from range switch and pin No. 5 of V1.
3. The ground lead of pin No. 2 of V2 and V3 should be down against chassis. Its length is critical.
4. The AVC lead from R26 to range switch should be dressed against chassis and on front apron side of the output transformer.
5. C43 should have short leads and the color code of the capacitor should go to the coil L4. The capacitor should be cemented down with polystyrene cement at the same time L2 is cemented.
6. The lead from the high side of the loop should be dressed away from tubes.
7. Lead from pin No. 2 of V1 to terminal "A" of 1st I. F. transformer should be dressed against the chassis.
8. Connect C40 directly between the gang condenser and pin No. 1 of V1.
9. Make all FM leads as short as possible.
10. Dress lead from pin No. 5 of V2 to terminal "A" of 2nd I. F. transformer down against chassis.
11. Dress resistor R15 near chassis base.
12. Dress all A. C. leads away from volume control.
13. The lead from "FM" terminal of antenna terminal board to L1 tap should be run around the outside of the 1st I. F. transformer and away from V2.
14. The taps on L1 and L2 are critical. L1 tap should be ¾ turn from the ground end. L2 tap should be 2½ turns from the gang condenser C8.
15. The lead from R32 to terminal No. 9 of S1 should be dressed away from the output transformer.
16. Dress C25 and C26 against the chassis with the shortest lead length possible.
17. The position of L1 and L2 is critical. L1 should be midway between V1 and the 1st I. F. transformer. The end of L2 should be approximately 9/16" from V1.

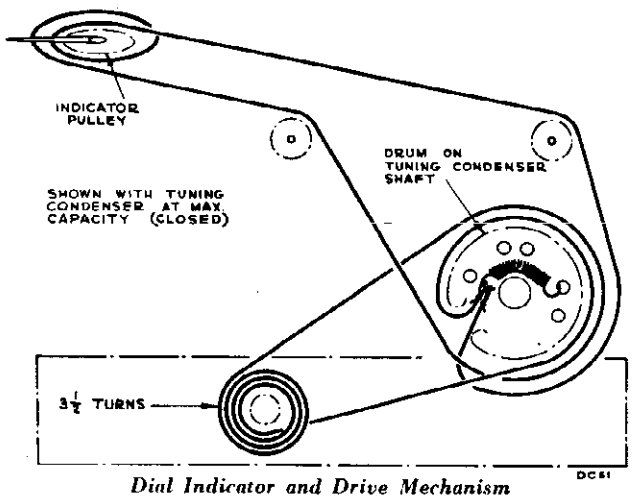

Dial Indicator and Drive Mechanism

AM Alignment

RANGE SWITCH IN BC POSITION

Steps	Connect high side of sig. gen. to—	Sig. gen. output	Turn radio dial to—	Adjust for peak output
1	C3 in series with .01 mfd.	455 kc.	Quiet point at low freq. end.	AM windings.† T3 bottom core (sec.). T3 top core (pri.).
2				AM windings.† T2 top core (sec.). T2 bottom core (pri.).
3	"A" terminal of terminal board at rear of chassis in series with 220 mmf.	1400 kc.	1400 kc.	C13 osc. C4 ant.
4		600 kc.	600 kc.	L4 osc. (Rock gang.)
5	Repeat Steps 3 and 4.			

† Use alternate loading.

Alternate loading involves the use of a 47,000 ohm resistor to load the AM plate winding while the AM grid winding of the SAME TRANSFORMER is being peaked. Then the grid winding is loaded with the resistor while the plate winding is peaked. Only one winding is loaded at any one time. Remove the 47,000 ohm resistor after T3 and T2 have been aligned.

Oscillator frequency is above signal frequency on both AM and FM.

FM Alignment

RANGE SWITCH IN FM POSITION — VOLUME CONTROL MAXIMUM

Steps	Connect high side of sig. gen. to—	Sig. gen. output	Turn radio dial to—	Adjust for peak output
1	Connect the d-c probe of a VoltOhmyst to the negative lead of the 2 mfd. capacitor C33 and the common lead to chassis. Turn gang condenser to max. capacity (fully meshed).			
2	Pin 1 of 6AU6 in series with .01 mfd.	10.7 mc. modulated 30% 400 cycles AM (Approx. .05 volt).	Max. capacity (fully meshed).	T4 top core for max. d-c voltage across C33. T4 bottom core for min. audio output.*
3	FM ant. term. in series with a 300 ohm resistor. (Remove ant. lead from "FM" term.)	10.7 mc. Adjust to provide 2 to 3 volts indication on VoltOhmyst during alignment.		FM windings.†† T3 top core (sec.). T3 bottom core (pri.).
4				FM windings.†† T2 top core (sec.). T2 bottom core (pri.).
5		106 mc.	106 mc.	L2 osc.** C2 ant. Set C2 at max. capacity while adjusting L2.
6		90 mc.	90 mc.	L1 ant.** (Rock gang.)
7	Repeat Steps 5 and 6 until further adjustment does not improve calibration.			

* Two or more points may be found which lower the audio output. At the correct point the minimum audio output is approached rapidly and is much lower than at any incorrect point.

†† Align T3 and T2 by means of alternate loading as explained under AM alignment. Use a 680 ohm resistor instead of a 47,000 ohm resistor and load the FM windings.

** L1 and L2 are adjustable by increasing or decreasing the spacing between turns.

CHASSIS RC-1060, RC-1060A — RADIO CORP. OF AMERICA — MODELS 8R71, 8R72 8R74, 8R75, 8R76

Circuit Description

The chassis used in these receivers have a 6J6 tube (V1) (twin triode), one section of which is used as mixer and the other section as oscillator. The FM antenna coil and the FM oscillator coil are placed in such position as to provide coupling between them. A section of the AM oscillator coil is connected in series with the mixer grid input when the range switch is in AM position.

Dual I-F transformers are used, each transformer containing both AM and FM windings. The I-F amplifier is V2 (6BA6).

The range switch has four functions:

(1) Selection of AM or FM ranges.

(2) Selection of AVC supply voltages to be applied to the controlled tubes. Simple AVC is applied to the grids of V1 and V2 on AM. Delayed AVC is used on FM and is applied only to the grid of V2.

(3) Controls application of B+ voltage to the plate circuits of V1 (disconnected for PHONO operation).

(4) Controls audio input to volume control.

The driver V3 (6AU6) and ratio detector V4 (6AL5) circuits are similar to those used in other RCA Victor AM-FM receivers.

The audio voltage controlled by the volume control is amplified by V5 (6AV6) and V6 (6V6GT).

The rectifier V7 is type 6X5GT.

Replacement Parts

Stock No.	DESCRIPTION
	CHASSIS ASSEMBLIES
	RC 1060—Models 8R71, 8R74, 8R75
	RC 1060A—Models 8R72, 8R76
*73369	Board—"Antenna - FM - Ground" board
*73866	Capacitor—Ceramic, 2 mmf. (C9)
33101	Capacitor—Ceramic, 22 mmf. (C42)
39042	Capacitor—Ceramic, 47 mmf. (C26)
*73867	Capacitor—Ceramic, 56 mmf. (C43)
33103	Capacitor—Ceramic, 68 mmf. (C40)
48125	Capacitor—Ceramic, 150 mmf. (C7, C19)
39632	Capacitor—Mica, 150 mmf. (C35)
47617	Capacitor—Ceramic, 270 mmf. (C38)
39640	Capacitor—Mica, 330 mmf. (C30, C31)
*73748	Capacitor—Ceramic, 1,500 mmf. (C39)
72573	Capacitor—Tubular, .003 mfd., 400 v. (C28)
71553	Capacitor—Tubular, .005 mfd., 400 v. (C14, C16, C17, C21, C22)
72791	Capacitor—Tubular, .005 mfd., 400 v. (C34)
71926	Capacitor—Tubular, .008 mfd., 200 v. (C20, C24, C27, C32)
71923	Capacitor—Tubular, .01 mfd., 200 v. (C23, C25)
71925	Capacitor—Tubular, .01 mfd., 400 v. (C29, C41)
71928	Capacitor—Tubular, .02 mfd., 200 v. (C36)
72596	Capacitor—Tubular, .05 mfd., 200 v. (C15)
70617	Capacitor—Tubular, 0.1 mfd., 400 v. (C37)
*73747	Capacitor—Electrolytic, 2 mfd., 50 v. (C33)
*73372	Capacitor—Electrolytic, comprising 1 section of 30 mfd., 350 volts, 1 section of 30 mfd., 300 volts and 1 section of 20 mfd., 25 volts (C18A, C18B, C18C)
*73916	Coil—FM oscillator coil—No. 16 tinned bus wire, 7 turns per inch, 4¾ turns R. H., 15/32" I. D. (L2)
*73918	Coil—FM antenna coil—No. 16 tinned bus wire, 8 turns per inch, 1¾ turns L. H., 15/32" I. D. (L1)
	Coil—Line choke coil—No. 18 gauge solid hook-up wire, 1/32" plastic insulation, 10 turns (close wind), ¼" I. D. (L5, L7)
*73744	Coil—AM oscillator coil complete with adjustable core and stud (L4)
*73375	Condenser—Variable tuning condenser (C1, C2, C3, C4, C8, C12, C13)
*73373	Control—Tone control (S4)
38404	Control—Volume control and power switch (R14, S3)
†72953	Cord—Drive cord (approx. 40" overall length required)
*73365	Dial—Dial scale
16058	Grommet—Rubber grommet for mounting R-F shelf (4 required)
*73366	Indicator—Station selector indicator
11891	Lamp—Dial lamp—Mazda 44
*73357	Loop—Antenna loop complete
*73364	Plate—Dial back plate complete with lamp bracket and drive cord pulleys for Models 8R71, 8R74 and 8R75
*73371	Plate—Dial back plate complete with lamp bracket and drive cord pulleys for Models 8R72 and 8R76
*73368	Pulley—Station selector indicator drive pulley and shaft
	Resistor—Fixed, composition, 68 ohms, ±10%, ½ watt (R7)
	Resistor—Fixed, composition, 100 ohms, ±10%, ½ watt (R17, R27)
	Resistor—Fixed, composition, 120 ohms, ±10%, ½ watt (R12)
	Resistor—Fixed, composition, 330 ohms, ±10%, ½ watt (R21)
	Resistor—Fixed, composition, 680 ohms, ±20%, ½ watt (R9, R11)
	Resistor—Fixed, composition, 1,200 ohms, ±5%, ½ watt (R23)
52436	Resistor—Wire wound, 1,500 ohms, 5 watt (R22)
	Resistor—Fixed, composition, 3,300 ohms, ±5%, ½ watt (R24)
	Resistor—Fixed, composition, 10,000 ohms, ±10%, ½ watt (R32)
	Resistor—Fixed, composition, 15,000 ohms, ±10%, ½ watt (R13, R18)
	Resistor—Fixed, composition, 18,000 ohms, ±10%, 1 watt (R5)
	Resistor—Fixed, composition, 22,000 ohms, ±20%, ½ watt (R4)
	Resistor—Fixed, composition, 22,000 ohms, ±10%, ½ watt (R6)
	Resistor—Fixed, composition, 27,000 ohms, ±10%, ½ watt (R6, R30)
	Resistor—Fixed, composition, 39,000 ohms, ±10%, ½ watt (R25)
	Resistor—Fixed, composition, 56,000 ohms, ±10%, ½ watt (R10, R31)
	Resistor—Fixed, composition, 270,000 ohms, ±10%, ½ watt (R19, R29)
	Resistor—Fixed, composition, 470,000 ohms, ±10%, ½ watt (R20, R26, R28)
	Resistor—Fixed, composition, 2.2 megohm, ±20%, ½ watt (R3)
	Resistor—Fixed, composition, 3.9 megohm, ±10%, ½ watt (R2)
	Resistor—Fixed, composition, 10 megohm, ±20%, ½ watt (R15)
	Resistor—Fixed, composition, 22 megohm, ±20%, ½ watt (R16)
*73370	Ring—Retaining ring for indicator pulley and shaft
*73367	Shaft—Tuning knob shaft
31364	Socket—Dial lamp socket
*73374	Socket—Phono input socket
72516	Socket—Tube socket, 7 prong, miniature
*73606	Socket—Tube socket, 7 prong, miniature, mica filled rubber
31251	Socket—Tube socket, octal
72540	Spring—Drive cord spring
*73377	Switch—Range switch (S1, S2)
70127	Transformer—Power transformer, 115 volt, 60 cycle (T1)
*73745	Transformer—First I. F. transformer, dual (T2)
*73363	Transformer—Second I. F. transformer, dual (T3)
*73743	Transformer—Ratio detector transformer (T4)
*73415	Transformer—Output transformer (T5)
33726	Washer—"C" washer for tuning knob shaft
71033	Washer—Insulating washer—extruded—for mounting output transformer (2 required)
71034	Washer—Insulating washer—flat—for mounting output transformer (2 required)
	SPEAKER ASSEMBLIES
	92572-2
72201	Speaker—5" P.M. speaker complete with cone and voice coil
	MISCELLANEOUS
*73380	Baffle—Speaker baffle board and grille cloth
*73381	Bottom—Bottom cover for cabinet
*Y1485	Cabinet—Maroon plastic cabinet for Model 8R71
*Y1486	Cabinet—Ivory plastic cabinet for Model 8R72
*Y2030	Cabinet—Mahogany plastic cabinet for Model 8R74
*Y2031	Cabinet—Walnut plastic cabinet for Model 8R75
*Y2032	Cabinet—Blonde plastic cabinet for Model 8R76
*73382	Clamp—Clamp for fastening baffle board (3 required)
*73384	Decal—Control panel decal
*73378	Knob—Control knob—maroon—for Models 8R71, 8R74 and 8R75
*73379	Knob—Control knob—ivory—for Model 8R72
*73742	Knob—Control knob—tan—for Model 8R76
72649	Motif—Decorative motif for cabinet
72765	Nut—Speed nut to fasten motif
14270	Spring—Retaining spring for knobs

*This is the first time that this Stock No. has appeared in Service Data.

†Stock No. 72953 is a reel containing 250 feet of cord.

© John F. Rider

MODEL 8V90, CHASSIS RC-616, RC-618A

RADIO CORP. OF AMERICA

MODEL 8V91, CHASSIS RC-616A, RC-616H

Model 8V91

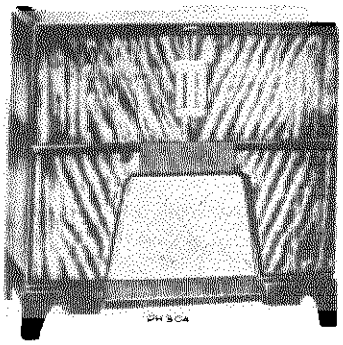

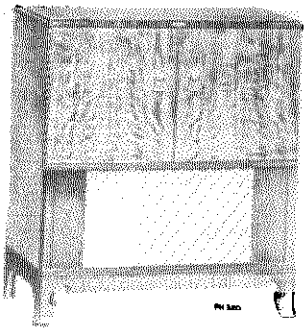

Model 8V90

Specifications

Tuning Ranges

Standard Broadcast (AM)..... 540-1,600 kc.
Frequency Modulation (FM)..... 88-108 mc.

Intermediate Frequencies...AM—455 kc., FM—10.7 mc.

Tube Complement

(1) 6J6..... Mixer and Oscillator
(2) 6BA6..... I. F. Amplifier
(3) 6AU6..... Driver
(4) 6AL5..... Ratio Detector
(5) 6AV6..... A. F. Amp.
(6) 6V6GT..... Output
(7) 6AV6.....AM Det—AVC—Ph. Inv.
(8) 6V6GT..... Output
(9) 6X5GT..... Rectifier

Tuning Drive Ratio..... 18:1 (9 turns of knob)

Record Changer (RP-178)

Record Capacity..... Twelve 10-in. or ten 12-in.
Turntable Speed..... 78 r.p.m.

Power Supply Rating..... 115 volts, 60 cycles, 90 watts

Circuit Description

The chassis used in these receivers have a 6J6 tube (V1) (twin triode), one section of which is used as mixer and the other section as oscillator. The FM antenna coil and the FM oscillator coil are placed in such position as to provide coupling between them. A section of the AM oscillator coil is connected in series with the mixer-grid input when the range switch is in AM position.

Dual I-F transformers are used, each transformer containing both AM and FM windings. The I-F amplifier is V2 (6BA6).

The range switch has four functions:

(1) Selection of tuning range.
(2) Selection of AVC supply voltages to be applied to the controlled tubes. Simple AVC is applied to the grids of V1 and V2 on AM. Delayed AVC is used on FM and is applied only to the grid of V2.
(3) Controls application of B+ voltage to V1, V2, V3.
(4) Controls audio input to volume control.

The driver V3 (6AU6) and ratio detector V4 (6AL5) circuits are similar to those used in other RCA Victor AM-FM receivers.

The audio system is conventional. It consists of V5 (6AV6 a.f. amp.), V7 (6AV6 ph. inv.), V6 and V8 (6V6GT p. p. output).

The rectifier is V9 (6X5GT).

Loudspeaker

Type 92579-2W (8V90 1st Prod.)..... 8-in. P.M
Type 92569-5W (8V90 2nd Prod.)..... 12 in. P.M.
Type 92569-1KX or 92569-5W (8V91)....12 in. P.M
Voice coil impedance—
92579-2W..... 3.2 ohms at 400 cycles
92569-1KX..... 2.2 ohms at 400 cycles
92569-5W..... 3.2 ohms at 400 cycles

Cabinet Dimensions

	Height	Width	Depth
Model 8V90	33¼ in.	31 1/16 in.	16⅜ in.
Model 8V91	34⅜ in.	36 7/16 in.	18 in.

Dial Lamps (2)..... Type No. 51, 6-8 volts, 0.2 amp.

Jewel Lamp..... Type No. 51, 6-8 volts, 0.2 amp.

Power Output

Maximum..... 7 watts
Undistorted..... 6 watts

Antennas:

These receivers have built-in antennas for standard broadcast (AM) and frequency modulation (FM) reception.

Under average conditions these antennas will provide satisfactory reception. However, provision is made for the use of external antennas if desired — connect as indicated below:

AM Antenna: Connect a single wire antenna to terminal "A" (used on Model 8V91 only).

FM Antenna: Remove the built-in FM antenna lead from the "FM" terminals of the terminal board. Connect the transmission line of an external FM dipole antenna to these two "FM" terminals.

Ground: Connect external ground to "G" terminal (used on Model 8V91 only). Under certain conditions the use of an external ground is detrimental to FM reception.

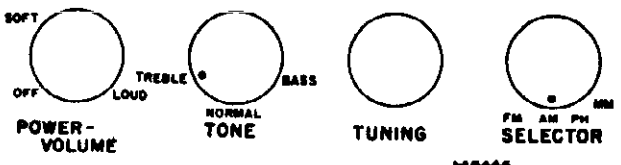

CONTROLS

©John F. Rider

MODEL 8V91, CHASSIS RC-616A, RC-616H

RADIO CORP. OF AMERICA

MODEL 8V90, CHASSIS RC-618, RC-618A

Alignment Procedure

CORRECT ALIGNMENT OF THE FM BAND REQUIRES THAT THE AM BAND BE ALIGNED FIRST

Alignment Indicators:

An RCA VoltOhmyst or equivalent meter is necessary for measuring developed d-c voltage during FM alignment. Connections are specified in the alignment tabulation. An output meter is also necessary to indicate minimum audio output during FM Ratio Detector alignment. Connect the output meter across the speaker voice coil.

The RCA VoltOhmyst can also be used as an AM alignment indicator, either to measure audio output or to measure a-v-c voltage.

When audio output is being measured the volume control should be turned to maximum.

Signal Generator:

For all alignment operations connect the low side of the signal generator to the receiver chassis. The output should be adjusted to provide accurate resonance indication at all times. If output measurement is used for AM alignment the output of the signal generator should be kept as low as possible to avoid a-v-c action.

The FM i-f alignment may be checked by means of an FM sweep generator and cathode ray oscilloscope. Connect the output from the sweep generator, which is set to 10.7 mc., to the mixer grid (6J6 Pin No. 5), low side to chassis. Disconnect the 2 mfd. capacitor C33 from the Ratio Detector circuit.

Connect the high side of the oscilloscope to the junction of R25 and R26, low side to chassis. Adjust the sweep generator and oscilloscope to obtain the response curve.

The Ratio Detector characteristic may be viewed by connecting the oscilloscope across the volume control R14. Capacitor C33 should be re-connected before checking the Ratio Detector characteristic.

CRITICAL LEAD DRESS

1. Keep leads of C7 short.
2. Dress R27 away from range switch and pin No. 5 of V1.
3. The ground lead of pin No. 2 of V2 and V3 should be down against chassis. Its length is critical.
4. The AVC lead from R26 to range switch should be dressed against chassis and away from 6AU6 driver tube socket.
5. C43 should have short leads and the color code of the capacitor should go to the coil L4. The capacitor should be cemented down with polystyrene cement at the same time L2 is cemented.
6. The lead from the high side of the loop should be dressed away from tubes.
7. Lead from pin No. 2 of V1 to terminal "A" of 1st I. F. transformer should be dressed against the chassis.
8. Connect C40 directly between the gang condenser and pin No. 1 of V1.
9. Make all FM leads as short as possible.
10. Dress lead from pin No. 5 of V2 to terminal "A" of 2nd I. F. transformer down against chassis.
11. Dress resistor R15 near chassis base.
12. Dress all A. C. leads away from volume control.
13. The lead from "FM" terminal of antenna terminal board to L1 tap should be dressed away from V2.
14. The taps on L1 and L2 are critical. L1 tap should be ⅛ turn from the ground end. L2 tap should be 2½ turns from the gang condenser C8.
15. Dress C25 and C26 against the chassis with the shortest lead length possible.
16. The position of L1 and L2 is critical. L1 should be midway between V1 and the 1st I. F. transformer. The end of L2 should be approximately 3/16" from V1.

Dial Indicator

With the tuning condenser fully meshed (closed) the indicator should be set to the reference mark on the dial back plate.

Refer to the dial scale reproductions on page 7.

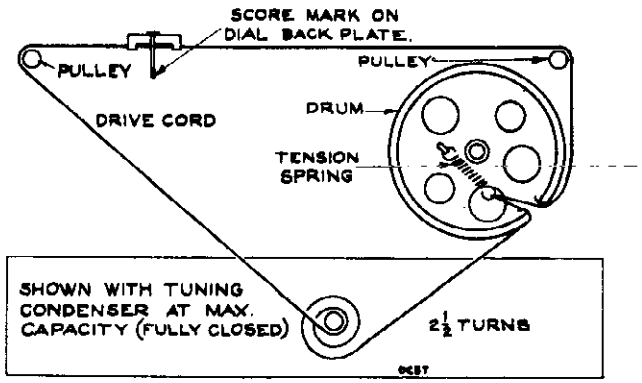

Dial Indicator and Drive Mechanism — Model 8V90

AM Alignment

RANGE SWITCH IN BC POSITION

Steps	Connect high side of sig. gen. to—	Sig. gen. output	Turn radio dial to—	Adjust for peak output
1	C3 in series with .01 mfd.	455 kc.	Quiet point at low freq. end.	AM windings.† T3 bottom core (sec.). T3 top core (pri.).
2				AM windings.† T2 top core (sec.). T2 bottom core (pri.).
3	* "A" terminal of terminal board at rear of chassis in series with 220 mmf.	1400 kc.	1400 kc.	C13 osc. C4 ant.
4		600 kc.	600 kc.	L4 osc. (Rock gang.)
5	Repeat Steps 3 and 4.			

† Use alternate loading.

Alternate loading involves the use of a 47,000 ohm resistor to load the AM plate winding while the AM grid winding of the SAME TRANSFORMER is being peaked. Then the grid winding is loaded with the resistor while the plate winding is peaked. Only one winding is loaded at any one time. Remove the 47,000 ohm resistor after T3 and T2 have been aligned.

Oscillator frequency is above signal frequency on both AM and FM.

* "A" terminal used on Model 8V91 only. Use radiated signal for Model 8V90.

FM Alignment

RANGE SWITCH IN FM POSITION — VOLUME CONTROL MAXIMUM

Steps	Connect high side of sig. gen. to—	Sig. gen. output	Turn radio dial to—	Adjust for peak output
1	Connect the d-c probe of a VoltOhmyst to the negative lead of the 2 mfd. capacitor C33 and the common lead to chassis. Turn gang condenser to max. capacity (fully meshed).			
2	Pin 1 of 6AU6 in series with .01 mfd.	10.7 mc. modulated 30% 400 cycles AM (Approx. .05 volt).	Max. capacity (fully meshed).	T4 top core for max. d-c voltage across C33. T4 bottom core for min. audio output.*
3	FM ant. term. in series with a 300 ohm resistor. (Remove ant. lead from "FM" term.)	10.7 mc. Adjust to provide 2 to 3 volts indication on VoltOhmyst during alignment.		FM windings.†† T3 top core (sec.). T3 bottom core (pri.).
4				FM windings.†† T2 top core (sec.). T2 bottom core (pri.).
5		106 mc.	106 mc.	L2 osc.** C2 ant. Set C2 at max. capacity while adjusting L2.
6		90 mc.	90 mc.	L1 ant.** (Rock gang.)
7	Repeat Steps 5 and 6 until further adjustment does not improve calibration.			

* Two or more points may be found which lower the audio output. At the correct point the minimum audio output is approached rapidly and is much lower than at any incorrect point.

†† Align T3 and T2 by means of alternate loading as explained under AM alignment. Use a 680 ohm resistor instead of a 47,000 ohm resistor and load the FM windings.

** L1 and L2 are adjustable by increasing or decreasing the spacing between turns.

MODEL 8V90, CHASSIS RC-618, RC-618A — RADIO CORP. OF AMERICA — MODEL 8V91, CHASSIS RC-616A, RC-616H

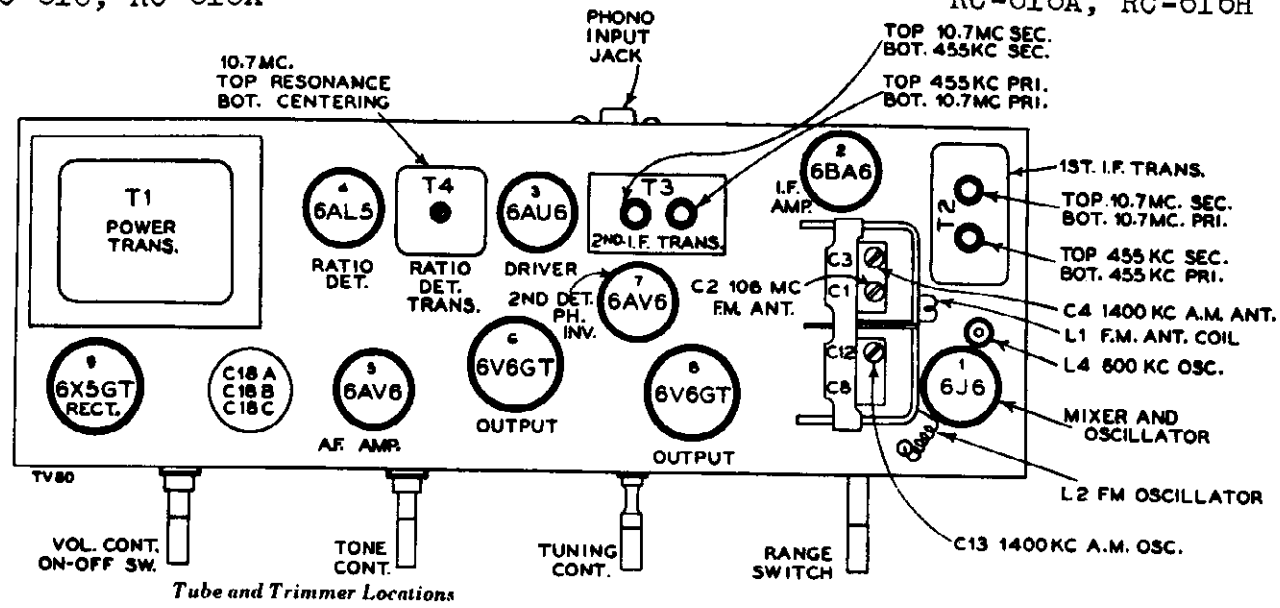

Tube and Trimmer Locations

Note: FM mixer and oscillator coils are adjustable by increasing or decreasing the spacing between turns. The position of the coils and location of the taps are critical (refer to "Critical Lead Dress").

SOCKET VOLTAGES

Voltages measured with Chanalyst or VoltOhmyst and should hold within ±20% with rated line voltage. Tuning condenser closed—no signal input.

Tube	Terminal		Voltage		
			Phono	A.M.	F.M.
(1) 6J6	Plate	1	—	102	98
	Grid	6	-0.4	-6.8	-6.0
	Plate	2	—	96	110
	Grid	5	-0.8	-2.7	-2.5
(2) 6BA6	Plate	5	—	196	192
	Screen	6	—	100	83
	Cathode	7	—	0.7	0.84
	Grid	1	-0.9	-1.3	-0.2
(3) 6AU6	Plate	5	—	190	185
	Screen	6	—	145	141
	Cathode	7	—	1.25	1.21
(4) 6AL5	———	—	—	—	—
(5) 6AV6	Plate	7	125	85	84
	Grid	1	-0.6	-0.6	-0.6
(6) 6V6GT	Plate	3	299	282	280
	Screen	4	295	220	217
	Cathode	8	21.4	15.5	15.4
(7) 6AV6	Plate	7	168	125	125
	Grid	1	-0.5	-0.5	-0.5
(8) 6V6GT	Plate	3	299	282	280
	Screen	4	295	220	217
	Cathode	8	21.4	15.5	15.4
(9) 6X5GT	Cathode	8	313	300	299

CATHODE CURRENTS (MA)

Tube	Terminal	Phono	A.M.	F.M.
(1) 6J6	7	—	8.2	8.7
(2) 6BA6	7	—	11.6	13.4
(3) 6AU6	7	—	10	9.7
(4) 6AL5	1 & 5	—	—	—
(5) 6AV6	2	0.75	0.5	0.5
(6) 6V6GT	8	25.1	19.1	18.5
(7) 6AV6	2	1.7	1.1	1.1
(8) 6V6GT	8	25.1	19	18.5
(9) 6X5GT	8	53	70	70.5

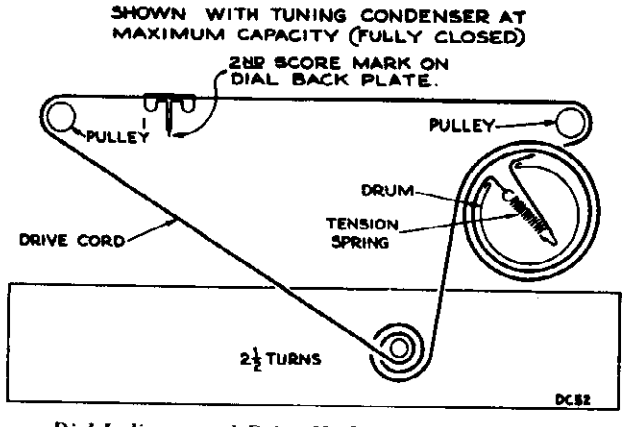

Dial Indicator and Drive Mechanism — Model 8V91

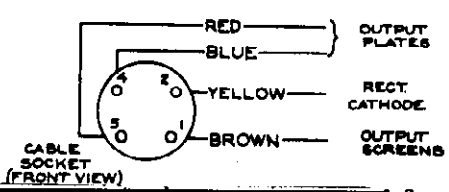

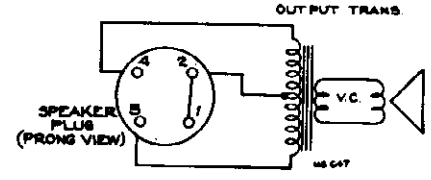

Speaker Connections

© John F. Rider

RADIO CORP. OF AMERICA

MODELS 8V90, CHASSIS RC-618, RC-618A; 8V91, CHASSIS RC-616A, RC-616H

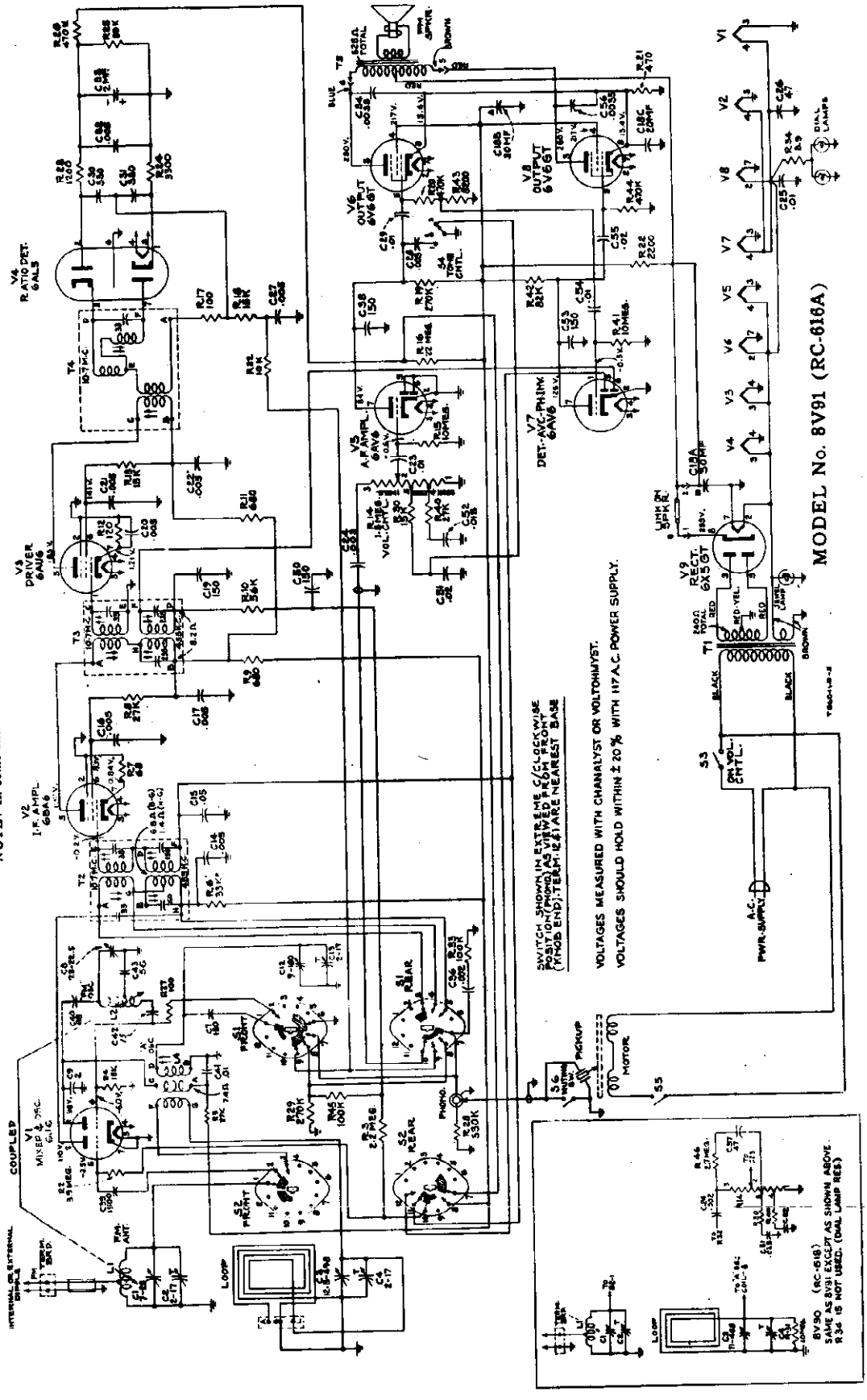

Complete Schematic Diagram

NOTE—2nd I.F. Transformer:
Some chassis may use 2nd I.F. trans. stamped 970435-5 (Stock No. 74019), the 455 k.c. windings have a d.c. resistance of 12 ohms each, the resonating capacitors are 150 mmf. instead of 235 mmf. They are interchangeable with transformers stamped 970435-2 (Stock No. 73863).

MODELS 8V90, CHASSIS RC-618, RC-618A; 8V91, CHASSIS RC-616A, RC-616H

RADIO CORP. OF AMERICA

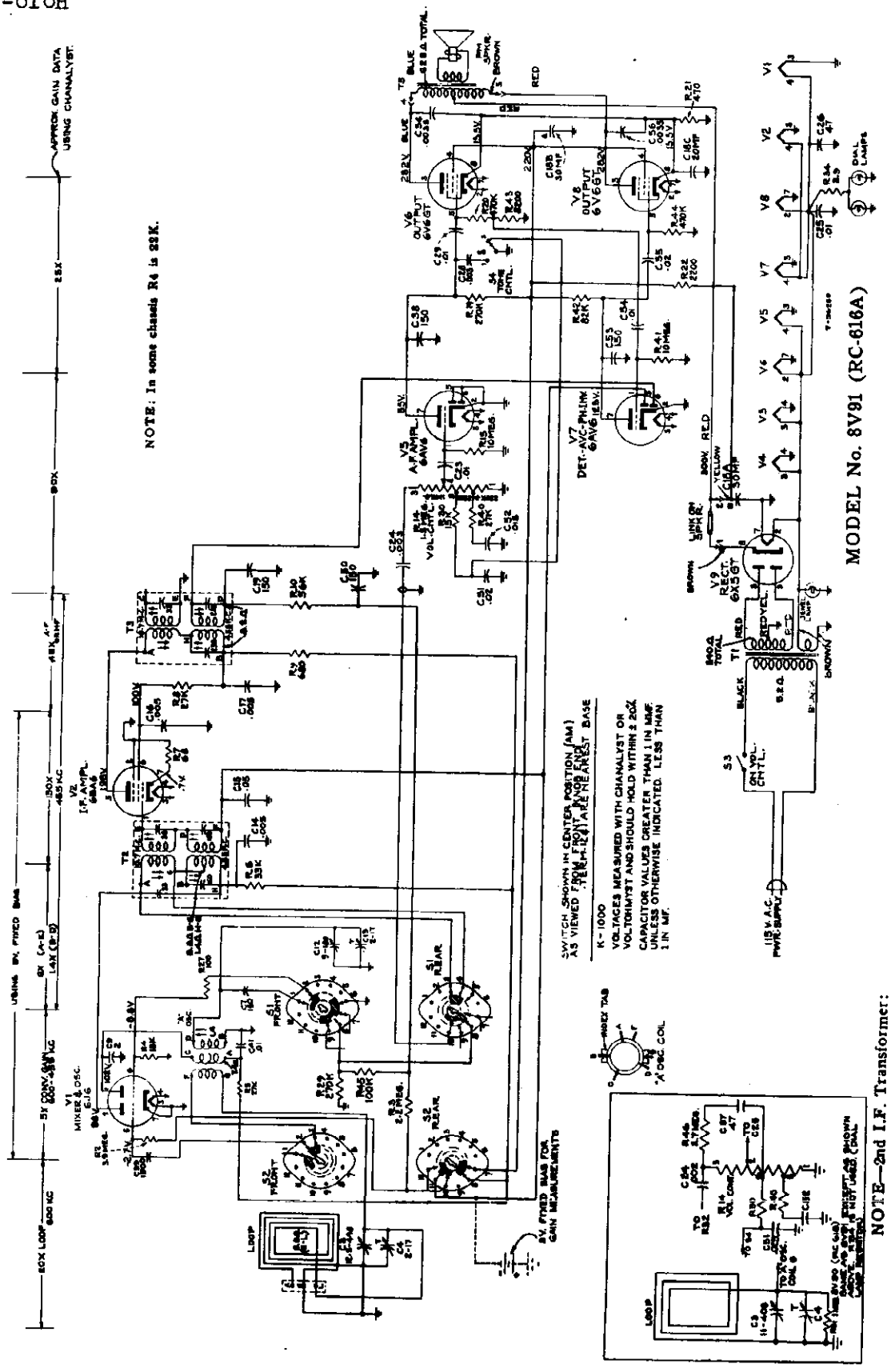

Simplified Schematic Diagram
"A" Band

RADIO CORP. OF AMERICA

MODELS 8V90, CHASSIS RC-618, RC-618A; 8V91, CHASSIS RC-616A, RC-616H

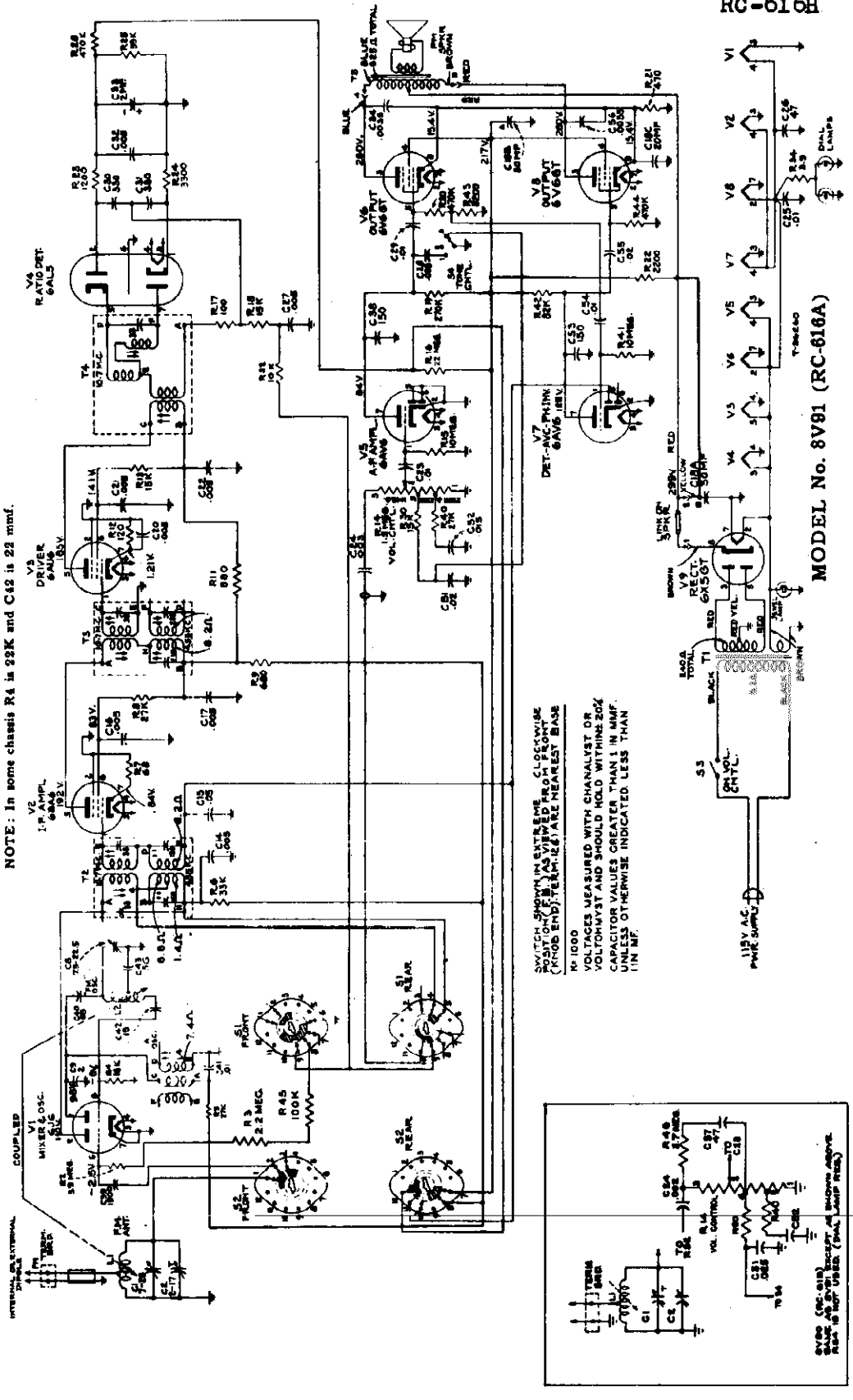

Simplified Schematic Diagram
"FM" Band

NOTE—2nd I.F. Transformer: .
Some chassis may use 2nd I.F. trans. stamped 970435-5 (Stock No. 74019), the 455 k.c. windings have a d.c. resistance of 12 ohms each, the resonating capacitors are 150 mmf. instead of 235 mmf. They are interchangeable with transformers stamped 970435-2 (Stock No. 73363).

MODELS 8V90, CHASSIS RC-618, RC-618A; 8V91, CHASSIS RC-616A, RC-616H

RADIO CORP. OF AMERICA

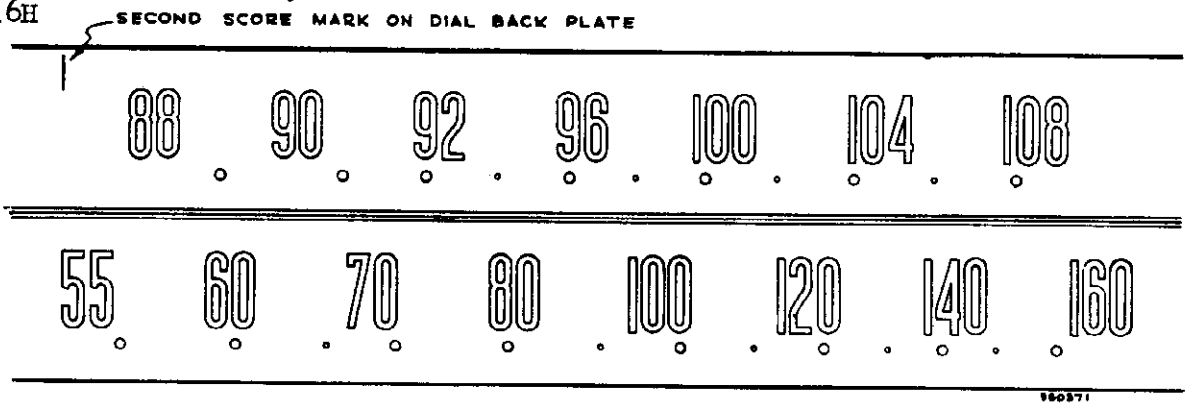

The dial scale drawing shown is a full size reproduction. It can be used as a reference in alignment procedure.

Dial Scale — Model 8V91

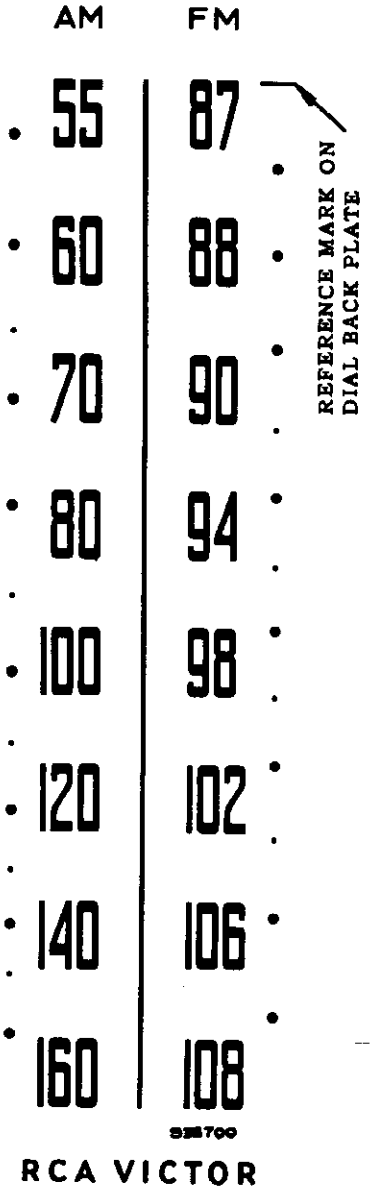

The dial scale drawing shown is a full size reproduction. It can be used as a reference in alignment procedure.

Dial Scale—Model 8V90

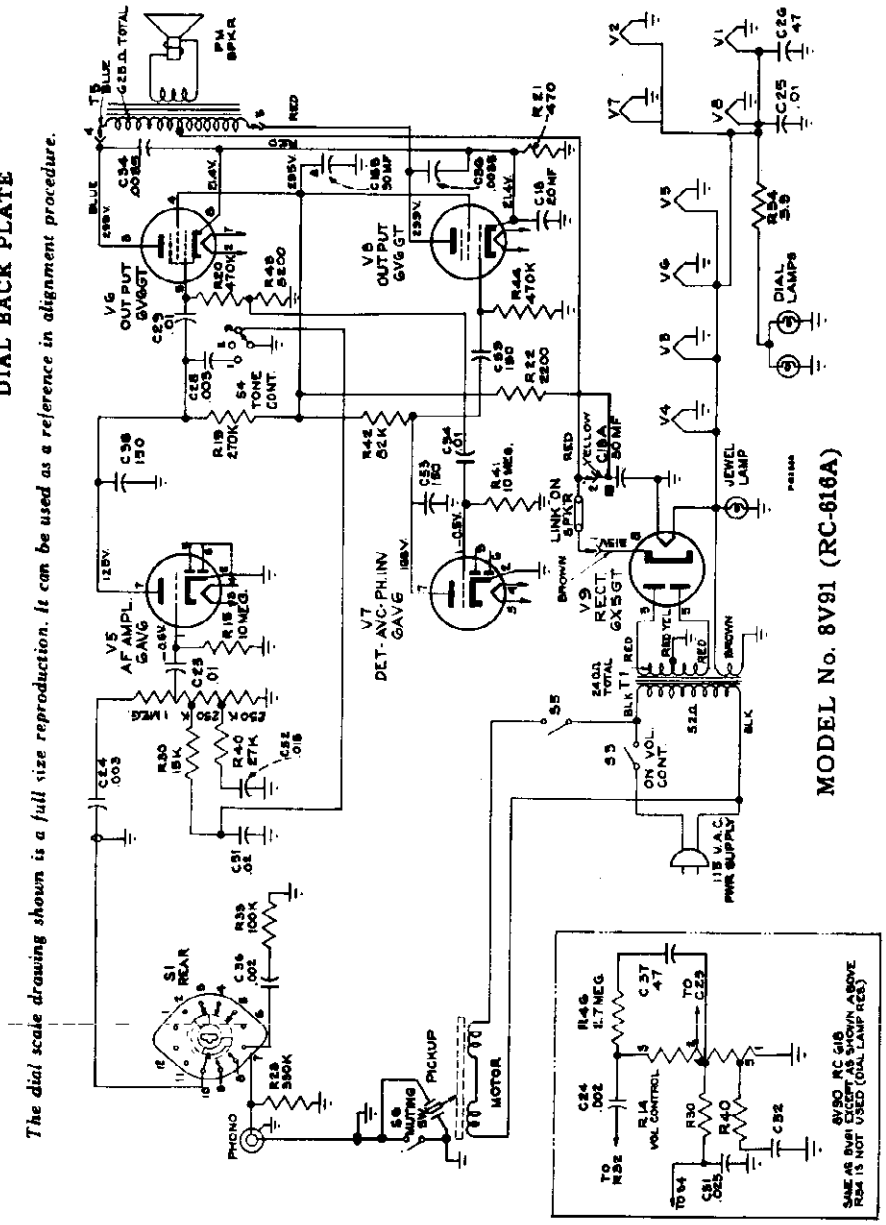

MODEL 8V91, CHASSIS RC-616A, RC-616H

RADIO CORP. OF AMERICA

MODEL 8V90, CHASSIS RC-618, RC-618A

Model 8V90 2nd Production Chassis No. RC-618A

1ST PRODUCTION RC-616A and RC-618	2ND PRODUCTION RC-616H and RC-618A
Three position selector switch (PHONO—AM-FM)	Four position selector switch (AUX.-PHONO—AM-FM)
AUX. input jack is not used	AUX. input jack is used
RC-618 only	RC-618A only
8-in. speaker (92579-2)	12-in. speaker (92569-5)
C37 and R46 are used	C37 and R46 are not used
C24 is .002 mfd	C24 is .003 mfd
C51 is .025 mfd	C51 is .02 mfd

Replacement Parts — 8V91 — 2nd Prod. Identical to those listed for 1st Prod.

Stock No.	EXCEPT DESCRIPTION
Add:	CHASSIS ASSEMBLIES (RC-616H)
*74173	Switch—Selector switch (S1, S2)
Delete:	
73609	Switch
Add:	MISCELLANEOUS
*74175	Decal—Control panel decal for mahogany or walnut instruments
*74176	Decal—Control panel decal for blonde instruments
Delete:	
73755 and 73756	Decals

Model 8V91 2nd Production Chassis No. RC-616H

Replacement Parts — 8V90 — 2nd Prod. Identical to those listed for 1st Prod.

EXCEPT

Stock No.	DESCRIPTION
Add:	CHASSIS ASSEMBLIES (RC-618A)
73659	Capacitor—Tubular, .003 mfd., 200 volts (C24)
71928	Capacitor—Tubular, .02 mfd., 200 volts (C51)
*74129	Switch—Selector switch (S1, S2)
Delete:	C24, C37, C51, R46, S1, S2
Add:	SPEAKER ASSEMBLIES
	92569-5W RL 103 B6
	As listed for Model 8V91
Delete:	SPEAKER ASSEMBLIES
	92579-2W RL 105 A1
Add:	MISCELLANEOUS
*74130	Decal—Control panel decal for mahogany finish or walnut instruments
*74131	Decal—Control panel decal for blonde instruments
Delete:	73904 and 73905 Decals.

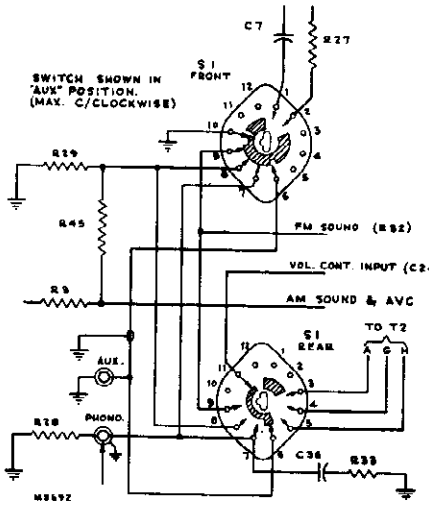

SWITCH WIRING RC-616H & RC-618A

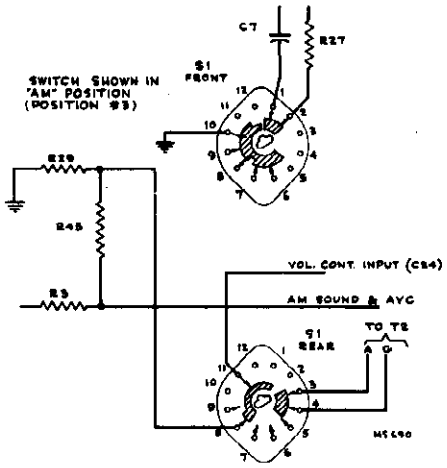

AM SIMPLIFIED SCHEMATIC

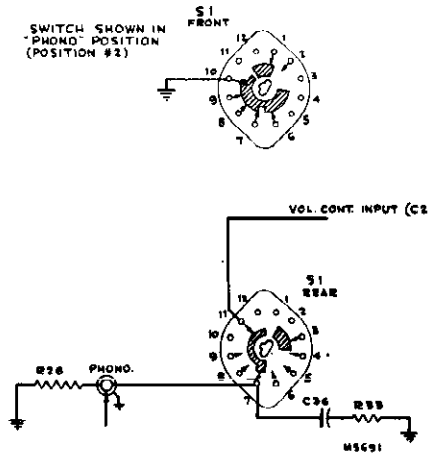

PHONO SIMPLIFIED SCHEMATIC

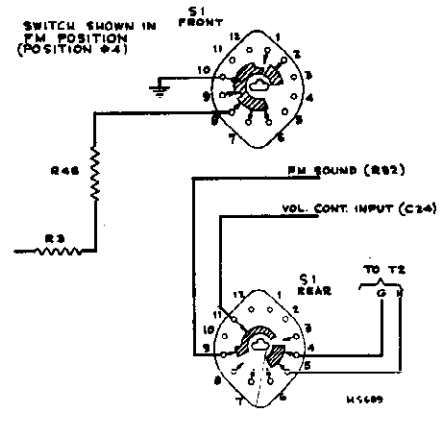

FM SIMPLIFIED SCHEMATIC

The schematic diagrams above show the selector switch (S1) used in RC-616H and RC-618A. The connections to S2 are identical in all chassis — note that position No. 2 (PHONO) of RC-616H and RC-618A corresponds to position No. 1 (PHONO) of RC-616A and RC-618. No connections are made through S2 when in AUX. position.

MODELS 8V90, CHASSIS RC-618, RC-618A; 8V91, CHASSIS RC-616A, RC-616H

RADIO CORP. OF AMERICA

NOTE:
In early RC 616A chassis C42 is 22 mmf., R4 is 22,000 ohms.

Replacement Parts—Model 8V90—First Prod.

Stock No.	DESCRIPTION
	CHASSIS ASSEMBLIES
	RC 618
*73893	Board—"FM" antenna board
*73889	Capacitor—Variable tuning capacitor (C1, C2, C3, C4, C8, C12, C13)
73866	Capacitor—Ceramic, 2 mmf. (C9)
31353	Capacitor—Ceramic, 15 mmf. (C42)
39042	Capacitor—Ceramic, 47 mmf. (C26, C37)
73867	Capacitor—Ceramic, 56 mmf. (C43)
33103	Capacitor—Ceramic, 68 mmf. (C40)
48125	Capacitor—Ceramic, 150 mmf. (C7, C19, C38, C50, C53)
39640	Capacitor—Mica, 330 mmf. (C30, C31)
73748	Capacitor—Ceramic, 1500 mmf. (C39)
73750	Capacitor—Tubular, .002 mfd., 200 volts (C24, C36)
72573	Capacitor—Tubular, .003 mfd., 400 volts (C28)
70646	Capacitor—Tubular, .0035 mfd., 1000 volts (C34, C56)
71926	Capacitor—Tubular, .005 mfd., 200 volts (C20, C27, C32)
71553	Capacitor—Tubular, .005 mfd., 400 volts (C14, C16, C17, C21, C22)
71923	Capacitor—Tubular, .01 mfd., 200 volts (C23, C25)
71925	Capacitor—Tubular, .01 mfd., 400 volts (C29, C41, C54)
72120	Capacitor—Tubular, .015 mfd., 200 volts (C52)
73638	Capacitor—Tubular, .02 mfd., 400 volts (C55)
70612	Capacitor—Tubular, .025 mfd., 400 volts (C51)
72596	Capacitor—Tubular, .05 mfd., 200 volts (C15)
73747	Capacitor—Electrolytic, 5 mfd., 50 volts (C33)
73372	Capacitor—Electrolytic, comprising 1 section of 30 mfd., 350 volts, 1 section of 30 mfd., 300 volts and 1 section of 20 mfd., 25 volts (C18A, C18B, C18C)
73918	Coil—Antenna coil—F.M. (No. 16 tinned bus wire, 8 turns per inch, 1¾ turns L. H.—.469 in. I. D.) (L1)
73916	Coil—Oscillator coil—F.M. (No. 16 tinned bus wire, 7 turns per inch, 4¾ turns R. H.—.469 in. I. D.) (L2)
73744	Coil—Oscillator coil—"A" band (L4)
70342	Control—Volume control and power switch (R14, S3)
†72953	Cord—Drive cord (approx. 48" overall length required)
70392	Cord—Power cord and plug
16058	Grommet—Rubber grommet to mount R.F. shelf (4 required)
72069	Grommet—Rubber grommet for rear mounting feet (2 required)
*73895	Indicator—Station selector indicator
*73892	Plate—Dial back plate complete with two (2) drive cord pulleys, less dial
30868	Plug—2 contact female plug for motor cable
5040	Plug—4 contact female plug for speaker cable
	Resistor—Fixed, composition, 68 ohms, ±10%, ½ watt (R7)
	Resistor—Fixed, composition, 100 ohms, ±10%, ½ watt (R17, R27)
	Resistor—Fixed, composition, 120 ohms, ±10%, ½ watt (R12)
	Resistor—Fixed, composition, 470 ohms, ±10%, 2 watts (R21)
	Resistor—Fixed, composition, 680 ohms, ±20% ½ watt (R9, R11)
	Resistor—Fixed, composition, 1200 ohms, ±5%, ½ watt (R23)
73637	Resistor—Wire wound, 2200 ohms, 5 watts (R22)
	Resistor—Fixed, composition, 3300 ohms, ±5%, ½ watt (R24)
	Resistor—Fixed, composition, 8200 ohms, ±10%, ½ watt (R43)
	Resistor—Fixed, composition, 10,000 ohms, ±10%, ½ watt (R32)
	Resistor—Fixed, composition, 15,000 ohms, ±10%, ½ watt (R13, R18, R30)
	Resistor—Fixed, composition, 18,000 ohms, ±10%, ½ watt (R4)
	Resistor—Fixed, composition, 27,000 ohms, ±10%, ½ watt (R8, R40)
	Resistor—Fixed, composition, 27,000 ohms, ±10%, 1 watt (R5)
	Resistor—Fixed, composition, 33,000 ohms, ±10%, ½ watt (R6)
	Resistor—Fixed, composition, 39,000 ohms, ±10%, ½ watt (R25)
	Resistor—Fixed, composition, 56,000 ohms, ±10%, 1 watt (R10)
	Resistor—Fixed, composition, 82,000 ohms, ±10%, ½ watt (R42)
	Resistor—Fixed, composition, 100,000 ohms, ±10%, ½ watt (R33, R45)
	Resistor—Fixed, composition, 270,000 ohms, ±10%, ½ watt (R19, R29)
	Resistor—Fixed, composition, 330,000 ohms, ±10%, ½ watt (R28)
	Resistor—Fixed, composition, 470,000 ohms, ±10%, ½ watt (R20, R26, R44)
	Resistor—Fixed, composition, 1 megohm, ±20%, ½ watt (R31)
	Resistor—Fixed, composition, 2.2 megohm, ±20%, ½ watt (R3)
	Resistor—Fixed, composition, 2.7 megohm, ±10%, ½ watt (R46)
	Resistor—Fixed, composition, 3.9 megohm, ±10%, ½ watt (R2)
	Resistor—Fixed, composition, 10 megohms, ±20%, ½ watt (R15, R41)
	Resistor—Fixed, composition, 22 megohms, ±20%, ½ watt (R16)
*73894	Shaft—Tuning knob shaft
31364	Socket—Dial lamp socket
35787	Socket—Phono input socket
73606	Socket—Tube socket, miniature, for tubes V1, V2 and V3
72516	Socket—Tube socket, miniature, for tubes V4, V5 and V7
31251	Socket—Tube socket, wafer, octal, for tubes V6, V8 and V9
31418	Spring—Drive cord spring
*73890	Switch—Selector switch (S1, S2)
*73891	Switch—Tone control switch (S4)
73601	Transformer—Power transformer, 115 volts, 60 cycle (T1)
73745	Transformer—First I.F. transformer—dual (T2)
74019	Transformer—Second I.F. transformer—dual (T3)
73743	Transformer—Ratio detector transformer (T4)
33726	Washer—"C" washer for tuning knob shaft
	SPEAKER ASSEMBLIES
	92579-2W
	RL 105A1
*74181	Cap—Dust cap
*73912	Cone—Cone and voice coil assembly
5039	Plug—4 prong male plug for speaker
*73911	Speaker—8" P.M. speaker complete with cone and voice coil—less output transformer and plug
73636	Transformer—Output transformer (T5)
	MISCELLANEOUS
72555	Antenna—F.M. antenna
71599	Bracket—Pilot lamp bracket
72437	Cable—Shielded pickup cable complete with pin plug
13103	Cap—Pilot lamp jewel
71892	Catch—Bullet catch and strike for doors
*73897	Clamp—Dial clamp (2 required)
X1894	Cloth—Grille cloth for blonde instruments
X1893	Cloth—Grille cloth for mahogany finish or walnut instruments
*73904	Decal—Control panel decal for mahogany finish or walnut instruments
*73905	Decal—Control panel decal for blonde instruments
71984	Decal—Trade mark decal (RCA Victor)
71966	Decal—Trade mark decal (Victrola)
*73898	Dial—Glass dial scale
11889	Grommet—Rubber grommet for front apron of chassis (2 required)
72856	Grommet—Rubber grommet for mounting record changer (3 required)
73903	Hinge—Phono compartment door or radio compartment door hinge (1 set)
71822	Hinge—Selector switch or tone control knob—maroon—for mahogany finish or walnut instruments
72824	Knob—Selector switch or tone control knob—brown—for blonde instruments
71821	Knob—Tuning or volume control knob—maroon—for mahogany finish or walnut instruments
72800	Knob—Tuning or volume control knob—brown—for blonde instruments
11765	Lamp—Dial lamp—Mazda 51
*73896	Loop—Antenna loop complete
73109	Nut—Tee nut for mounting record changer (3 required)
*73902	Pull—Phono compartment or radio compartment door pull
73110	Screw—¼-20 x 1¾ fillister head machine screw for mounting record changer (3 required)
30900	Spring—Retaining spring for knob
72936	Stop—Phono compartment or radio compartment door stop

*This is the first time that this Stock No. has appeared in Service Data.
†Stock No. 72953 is a reel containing 250 feet of cord.

Replacement Parts—Model 8V91—First Prod.

Stock No.	DESCRIPTION
	CHASSIS ASSEMBLIES RC 616A
73610	Board—Terminal board (F.M.-G) with link
73866	Capacitor—Ceramic, 2 mmf. (C9)
31353	Capacitor—Ceramic, 15 mmf. (C42)
39042	Capacitor—Ceramic, 47 mmf. (C26)
73867	Capacitor—Ceramic, 56 mmf. (C43)
33103	Capacitor—Ceramic, 68 mmf. (C40)
48125	Capacitor—Ceramic, 150 mmf. (C7, C19, C38, C50, C53)
39640	Capacitor—Mica, 330 mmf. (C30, C31)
73748	Capacitor—Ceramic, 1500 mmf. (C39)
*73750	Capacitor—Tubular, .002 mfd., 200 volts (C36)
70646	Capacitor—Tubular, .0035 mfd., 1000 v. (C34, C56)
73659	Capacitor—Tubular, .003 mfd., 200 volts (C24)
72573	Capacitor—Tubular, .003 mfd., 400 volts (C28)
71926	Capacitor—Tubular, .005 mfd., 200 volts (C20, C27, C32)
72791	Capacitor—Tubular, .005 mfd., 400 volts (C14, C16, C17, C21, C22)
72120	Capacitor—Tubular, .015 mfd., 200 volts (C52)
71923	Capacitor—Tubular, .01 mfd., 200 volts (C23, C25)
72627	Capacitor—Tubular, .01 mfd., 400 volts (C29, C41, C54)
71928	Capacitor—Tubular, .02 mfd., 200 volts (C51)
73638	Capacitor—Tubular, .02 mfd., 400 volts (C55)
72596	Capacitor—Tubular, .05 mfd., 200 volts (C15)
73747	Capacitor—Electrulytic, 2 mfd., 50 volts (C33)
73372	Capacitor—Electrolytic, comprising 1 section of 30 mfd., 350 volts, 1 section of 30 mfd., 300 volts and 1 section of 20 mfd., 25 volts (C18A, C18B, C18C)
73918	Coil—Antenna coil—F.M. (No. 16 tinned bus wire—8 turns per inch—1¾ turns L. H.—.469 in. I. D.) (L1)
73916	Coil—Oscillator coil—F.M. (No. 16 tinned bus wire—8 turns per inch—4¾ turns R. H.—.469 in. I. D.) (L2)
73744	Coil—Oscillator coil—"A" band (L4)
73607	Condenser—Variable tuning condenser (C1, C2, C3, C4, C8, C12, C13)
70342	Control—Volume control and power switch (R14, S3)
†72953	Cord—Drive cord (approx. 38" overall length required)
73690	Cord—Power cord and plug
72069	Grommet—Rubber grommet for rear mounting feet (2 required)
16058	Grommet—Rubber grommet to mount R-F shelf (4 required)
73710	Indicator—Station selector indicator
71607	Plate—Dial back plate
30868	Plug—2 contact female plug for motor cable
5040	Plug—4 contact female plug for speaker cable
70250	Resistor—Wire wound, 3.9 ohms, 1 watt (R34)
	Resistor—Fixed, composition, 68 ohms ± 10%, ½ watt (R7)
	Resistor—Fixed, composition, 100 ohms ± 10%, ½ watt (R17, R27)
	Resistor—Fixed, composition, 120 ohms ± 10%, ½ watt (R12)
	Resistor—Fixed, composition, 470 ohms ± 10%, 2 watt (R21)
	Resistor—Fixed, composition, 660 ohms ± 20%, ½ watt (R9, R11)
	Resistor—Fixed, composition, 1200 ohms ± 5%, ½ watt (R23)
73637	Resistor—Wire wound, 2200 ohms, 5 watts (R22)
	Resistor—Fixed, composition, 3300 ohms ± 5%, ½ watt (R24)
	Resistor—Fixed, composition, 8200 ohms ± 10%, ½ watt (R43)
	Resistor—Fixed, composition, 10,000 ohms ± 10%, ½ watt (R32)
	Resistor—Fixed, composition, 15,000 ohms ± 10%, ½ watt (R13, R18, R30)
	Resistor—Fixed, composition, 18,000 ohms ±10%, ½ watt (R4)
	Resistor—Fixed, composition, 27,000 ohms ± 10%, ½ watt (R8, R40)
	Resistor—Fixed, composition, 27,000 ohms ± 10%, 1 watt (R5)
	Resistor—Fixed, composition, 33,000 ohms ± 10%, ½ watt (R6)
	Resistor—Fixed, composition, 39,000 ohms ± 10%, ½ watt (R25)
	Resistor—Fixed, composition, 56,000 ohms ± 10%, ½ watt (R10)
	Resistor—Fixed, composition, 82,000 ohms ± 10%, ½ watt (R42)
	Resistor—Fixed, composition, 100,000 ohms ± 10%, ½ watt (R33, R45)
	Resistor—Fixed, composition, 270,000 ohms ± 10%, ½ watt (R19, R29)
	Resistor—Fixed, composition, 330,000 ohms ± 10%, ½ watt (R28)
	Resistor—Fixed, composition, 470,000 ohms ± 10%, ½ watt (R20, R26, R44)
	Resistor—Fixed, composition, 2.2 megohm ± 20%, ½ watt (R3)
	Resistor—Fixed, composition, 3.9 megohm ± 10%, ½ watt (R2)
	Resistor—Fixed, composition, 10 megohms ± 20%, ½ watt (R15, R41)
	Resistor—Fixed, composition, 22 megohms ± 20%, ½ watt (R16)
73605	Shaft—Tuning knob shaft
31364	Socket—Lamp socket
35787	Socket—Phono input socket
72516	Socket—Tube socket, miniature, for tubes V4, V5 and V7
73606	Socket—Tube socket, miniature, for tubes V1, V2 and V3
31251	Socket—Tube socket, octal, for tubes V6, V8 and V9
74305	Spring—Drive cord spring
73603	Support—Dial plate mounting support complete with pulley—R.H.
73604	Support—Dial plate mounting support complete with pulley—L.H.
*73609	Switch—Range switch (S1, S2)
73602	Switch—Tone control switch (S4)
73601	Transformer—Power transformer, 115 volts 60 cycle (T1)
73745	Transformer—First I-F transformer—dual (T2)
74019	Transformer—Second I-F transformer—dual (T3)
73743	Transformer—Ratio detector transformer (T4)
33726	Washer—"C" washer for tuning knob shaft
	SPEAKER ASSEMBLIES 92569-5W RL 103B5
13867	Cap—Dust cap
*73934	Cone—Cone complete with voice coil
5039	Plug—4 prong male plug for speaker
*73635	Speaker—12" P.M. speaker complete with cone and voice coil—less output transformer and plug
71145	Suspension—Metal cone suspension
*73636	Transformer—Output transformer (T5)
	SPEAKER ASSEMBLIES 92569-1KX
70574	Cone—Cone and voice coil assembly
5039	Plug—4 prong male plug for speaker
37899	Transformer—Output transformer
	NOTE: When replacing complete speaker, order RCA 73635 (92569-5W)
	MISCELLANEOUS
71864	Antenna—F.M. antenna
*73622	Back—Back cover for blonde instruments
*73621	Back—Back cover for mahogany or walnut instruments
71599	Bracket—Pilot lamp bracket
73626	Bumper—Rubber bumper for actuating link
72437	Cable—Shielded pickup cable complete with pin plug
13103	Cap—Pilot lamp jewel
73613	Carriage—Record changer mounting carriage complete with runners
71892	Catch—Bullet catch and strike for radio or phono compartment doors
71820	Check—Radio compartment door check
X1815	Cloth—Grille cloth for blonde instruments
X1814	Cloth—Grille cloth for mahogany instruments
X1816	Cloth—Grille cloth for walnut instruments
*73755	Decal—Control panel decal for mahogany or walnut instruments
*73756	Decal—Control panel decal for blonde instruments
71966	Decal—Trade mark decal (Victrola)
71910	Decal—Trade mark decal (RCA Victor)
73628	Dial—Glass dial scale
73627	Escutcheon—Dial escutcheon less dial
*73757	Grille—Metal grille
11889	Grommet—Rubber grommet for front apron of chassis
73614	Grommet—Rubber grommet to mount record changer (3 required)
16058	Grommet—Rubber grommet to mount speaker (3 required)
73751	Hinge—Radio or phono compartment door hinge (2 required for each door)
71945	Hinge—Record storage compartment door hinge (2 required for each door)
71822	Knob—Tone control or range switch knob—maroon—for mahogany or walnut instruments
72824	Knob—Tone control or range switch knob—brown—for blonde instruments
71821	Knob—Tuning or volume control knob—maroon—for mahogany or walnut instruments
72800	Knob—Tuning or volume control knob—brown—for blonde instruments
11765	Lamp—Dial lamp—Mazda 51
73616	Link—Actuating link assembly for record changer carriage—R.H.
73617	Link—Actuating link assembly for record changer carriage—L.H.
73611	Loop—Antenna loop complete
73109	Nut—Tee nut to mount record changer (3 required)
71819	Plate—Radio compartment door check mounting plate
31048	Plug—Pin plug for shielded pickup cable
30868	Plug—2 contact female plug for power cable
*73752	Pull—Door pull (2 required) for walnut instruments
*73753	Pull—Door pull (2 required) for mahogany or blonde instruments
73615	Screw—¼-20 x 1½" fillister head machine screw to mount record changer (3 required)
73618	Spring—Connecting spring between link and record changer carriage
71818	Spring—Radio compartment door check spring
30900	Spring—Retaining spring for knobs
73185	Stop—Carriage mechanism stop (2 required)
73612	Track—Carriage mechanism track complete with mounting plate (2 required)
71814	Washer—Rubber washer for radio compartment door check

*This is the first time that this Stock No. has appeared in Service Data.

†Stock No. 72953 is a reel containing 250 feet of cord.

MODELS 8X681, 8X682, RADIO CORP. OF AMERICA
CHASSIS RC-1061



8X681—(Maroon Plastic) *8X682—(Ivory Plastic)*

Specifications

Tuning Ranges

Standard Broadcast ("A" Band)..... 540-1600 kc
Short Wave ("C" Band)..... 9.4-12 mc

Intermediate Frequency..... 455 kc

Tube Complement

(1) RCA 12BA6..... R. F. Amplifier
(2) RCA 12BE6..... Converter
(3) RCA 12BA6..... I. F. Amplifier
(4) RCA 12AT6..... Det. - A.F. - A.V.C.
(5) RCA 35C5..... Output
(6) RCA 35W4..... Rectifier

Dial Lamp..... Type 47, 6.3 volts, 0.15 amp.

Power Supply Rating

115 volts, D.C. or 50 to 60 cycles, A.C. ..... 30 watts

Loudspeaker

Type 92572-5..... 5 in. P.M.
V. C. Impedance..... 3.2 ohms at 400 cycles

Power Output

Undistorted ..... 0.7 watts
Maximum..... 1.1 watts

Cabinet Dimensions

Height.... 8 in. Width.....12¾ in. Depth.....7½ in.

Tuning Drive Ratio..... 7½:1 (3¾ turns of knob)

NOTE: If reception is not obtained on DC, reverse plug in outlet receptacle. This may also reduce hum on AC operation.

To Remove Chassis from Cabinet

Remove the four screws at the corners of the bottom cover (accessible through holes in the cabinet base). Do not remove the hex head screws which hold the base to the bottom cover. The cabinet may now be lifted off the cabinet base.

Dial Positioning

If the speaker should be replaced, it will be necessary to readjust the speaker mounting bracket position so that the dial pan will fit against the cabinet when the chassis is re-installed in the cabinet.

Insulating Washers

The cabinet base is insulated from the chassis bottom cover. When servicing make certain that the insulating washers are in place and properly positioned.

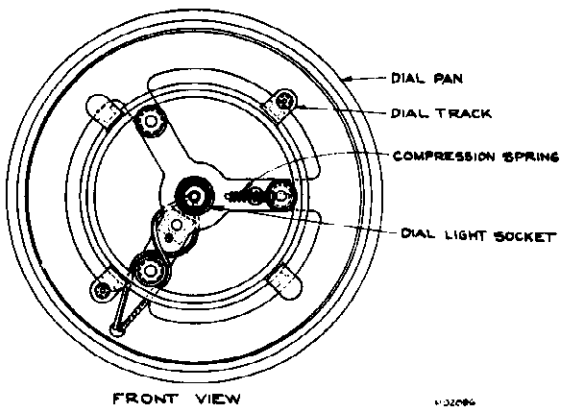

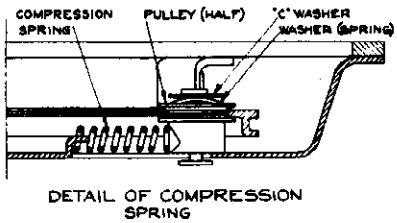

DETAIL OF COMPRESSION SPRING

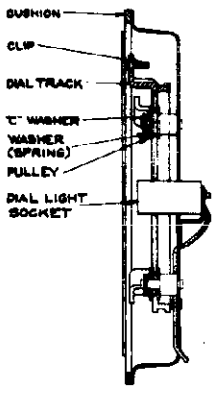

SIDE VIEW

NOTE: See page 4 regarding changes in late production pan and track assembly.

Dial Pan and Track Assembly

RADIO CORP. OF AMERICA

MODELS 8X681, 8X682,
CHASSIS RC-1061

Alignment Procedure

Test Oscillator.—Connect high side of test oscillator as shown in chart. Connect low side to chassis. Keep the output low to avoid A.V.C. action.

Note.—If the test oscillator is AC operated it may be necessary to use an isolation transformer (115v./115 v.) for the receiver during alignment, and the low side of the test oscillator connected to common wiring at pin No. 2 of 12AT6 socket—reverse line plug if hum is excessive.

Output Meter.—Connect meter across speaker voice coil. Turn volume control to maximum.

Dial Pointer Adjustment.—Rotate tuning condenser to maximum capacity position (plates fully meshed). Adjust dial to position indicated in drawing.

With the dial adjusted as described above mark the dial pan assembly with a pencil to provide a tuning indicator during alignment.

Steps	Connect the high side of the test-osc. to—	Tune test-osc. to—	Range switch	Turn radio dial to—	Adjust for max. output
1	Pin No. 1 of 12BA6 I.F. amp. tube in series with 0.1 mfd.	455 kc	"A"	Quiet point 1600 kc end of dial	Top and bottom T2 2nd I. F. trans.
2	Pin No. 7 of 12BE6 converter tube in series with 0.1 mfd.				Top and bottom T1 * 1st I. F. trans.
3	Antenna lead in series with 100 mmfd.	1600 kc	"A"	1600 kc	C14 "A" osc.
4		1400 kc		1400 kc	C2 "A" ant. C10 "A" R. F.
5		600 kc		600 kc	†L8 "A" osc. †L3 "A" R. F.
6	Repeat Steps 3, 4 and 5.				
7	Pin No. 7 of 12BE6 converter in series with 0.1 mfd. capacitor	11.8 mc	"C"	11.8 mc	**C16 "C" osc.
8		9.5 mc		9.5 mc	†L6 "C" osc.
9	Repeat Steps 7 and 8.				
10	Antenna lead in series with 50 mmfd.	11.8 mc	"C"	11.8 mc	**C3 "C" ant.
11		9.5 mc		9.5 mc	†L4 "C" ant.
12	Repeat Steps 10 and 11.				

*Do not readjust T2.
†Rock gang.
**If two peaks are found use minimum capacity peak on C16 (osc.) and maximum capacity peak on C3 (ant.).

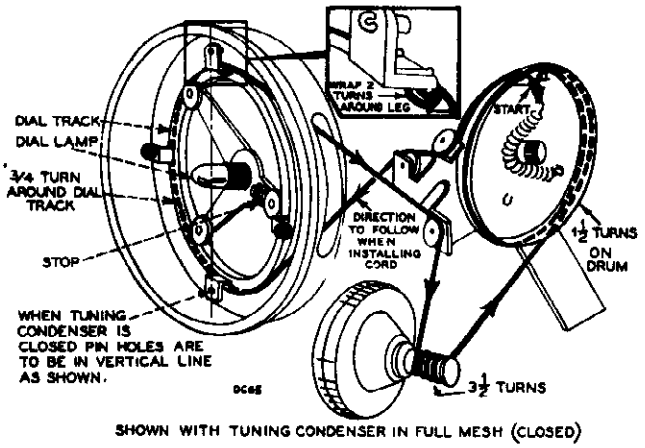

SHOWN WITH TUNING CONDENSER IN FULL MESH (CLOSED)

Dial-Indicator and Drive Mechanism

Lead Dress

1. Dress all heater leads down to chassis and as far as possible from all audio grid and plate wiring.
2. Dress power cord to side apron away from coupling capacitors.
3. Dress pilot lamp leads toward chassis bottom and away from audio coupling capacitor.
4. Dress all leads and components away from all coils.
5. Dress lead from range switch to phono socket against switch shield and chassis apron.
6. The antenna lead should be taped up when not in use.

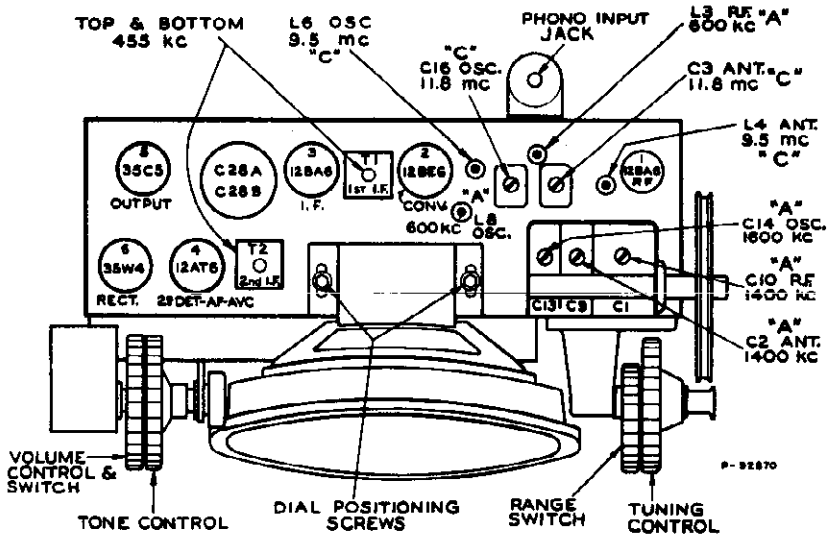

Tube and Trimmer Locations

Cathode Currents

	"A" Band	"C" Band
(1) 12BA6	4.1 ma	6.9 ma
(2) 12BE6	7.3 ma	7.2 ma
(3) 12BA6	6.7 ma	7.4 ma
(4) 12AT6	0.2 ma	0.2 ma
(5) 35C5	34.7 ma	33.5 ma
(6) 35W4	52 ma	53 ma

MODELS 8X681, 8X682, RADIO CORP. OF AMERICA
CHASSIS RC-1061

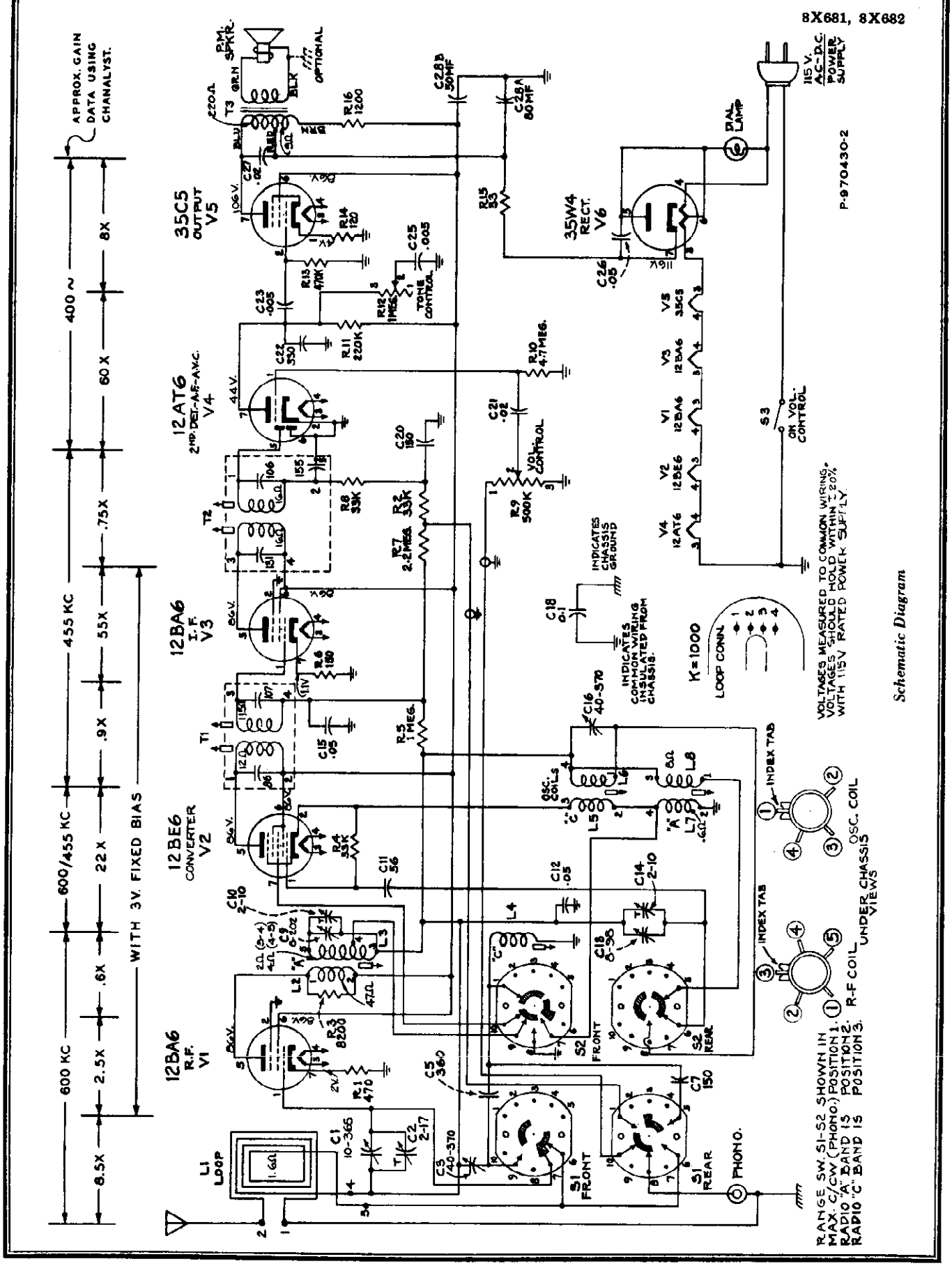

RADIO CORP. OF AMERICA

MODELS 8X681, 8X682,
CHASSIS RC-1061

Replacement Parts

Stock No.	DESCRIPTION
	CHASSIS ASSEMBLIES RC-1061
*73536	Arm—Range switch actuating arm and hub
71924	Capacitor—Ceramic, 56 mmf. (C11)
39632	Capacitor—Mica, 150 mmf. (C7, C20)
72571	Capacitor—Mica, 330 mmf. (C22)
64641	Capacitor—Mica, 360 mmf. (C5)
73075	Capacitor—Adjustable, 40-370 mmf. (C3, C16)
72791	Capacitor—Tubular, .005 mfd., 400 volts (C23, C25)
71928	Capacitor—Tubular, .02 mfd., 200 volts (C21)
70611	Capacitor—Tubular, .02 mfd., 400 volts (C27)
72596	Capacitor—Tubular, .05 mfd., 200 volts (C12, C15)
70615	Capacitor—Tubular, .05 mfd., 400 volts (C26)
70617	Capacitor—Tubular, 0.1 mfd., 400 volts (C18)
*73520	Capacitor—Electrolytic, comprising 1 section of 80 mfd., 150 volts and 1 section of 50 mfd., 150 volts (C28A, C28B)
*73526	Clip—Tubular clip for fastening dial—located on dial mounting track (2 required)
*73518	Coil—R-F coil—"A" band—complete with adjustable core and stud (L2, L3)
*73519	Coil—Antenna coil—"C" band—complete with adjustable core and stud (L4)
*73517	Coil—Oscillator coil—"C" band—complete with adjustable core and stud (L5, L6)
*73516	Coil—Oscillator coil—"A" band—complete with adjustable core and stud (L7, L8)
*73513	Condenser—Variable tuning condenser (C1, C2, C9, C10, C13, C14)
*73544	Control—Tone control (R12)
*73543	Control—Volume control and power switch (R9, S3)
†72913	Cord—Drive cord (approx. 48" overall length required)
28451	Cover—Insulating cover for electrolytic capacitor
*73522	Dial—Dial and screen assembly
72283	Grommet—Rubber grommet for mounting tuning condenser (3 required) or for mounting capacitor (C3, C16) and bracket (1 required)
33139	Grommet—Rubber grommet for range switch connecting rod (2 required)
*73538	Knob—Range switch knob (thumb wheel type)
*73541	Knob—Tone control knob (thumb wheel type)
*73537	Knob—Tuning knob (thumb wheel type)
*73542	Knob—Volume control and power switch knob (thumb wheel type)
*73512	Loop—Antenna loop complete (L1)
*73484	Pan—Dial pan and cushion—less track, pulleys and lamp socket
*73530	Pulley—Dial track drive pulley (2 required)
*73531	Pulley—Dial track idler pulley (2 half pulleys)
73237	Resistor—Wire wound, 33 ohms, 150 MA (R15)
	Resistor—Fixed, composition, 120 ohms ± 10%, ½ watt (R14)
	Resistor—Fixed, composition, 150 ohms ± 10%, ½ watt (R6)
	Resistor—Fixed, composition, 470 ohms ± 10%, ½ watt (R1)
	Resistor—Fixed, composition, 1200 ohms ± 10%, 1 watt (R16)
	Resistor—Fixed, composition, 8200 ohms ± 10%, ½ watt (R3)
	Resistor—Fixed, composition, 33,000 ohms ± 10%, ½ watt (R2, R4, R8)
	Resistor—Fixed, composition, 220,000 ohms ± 20%, ½ watt (R11)
	Resistor—Fixed, composition, 470,000 ohms ± 20%, ½ watt (R13)
	Resistor—Fixed, composition, 1 megohm ± 20%, ½ watt (R5)
	Resistor—Fixed, composition, 2.2 megohm ± 20%, ½ watt (R7)
	Resistor—Fixed, composition, 4.7 megohm ± 20%, ½ watt (R10)
*73539	Rod—Connecting rod between range switch knob and actuating arm
*73545	Screen—Dial screen only
*73534	Shaft—Range switch and tuning knobs mounting shaft
*73521	Shield—Tube shield
*73529	Socket—Dial lamp socket
73374	Socket—Phono input socket
36069	Socket—Tube socket—for tubes V1, V2, V3, V4
9914	Socket—Tube socket—for tubes V5, V6
*74038	Spring—Drive cord spring
*73527	Spring—Pressure spring for dial track idler pulley
*73528	Stud—Dial track idler pulley mounting stud
*73514	Support—Drive cord pulley support complete with three (3) pulleys
*73535	Switch—Selector switch (S1, S2)
*73525	Track—Die cast pulley track and dial mounting ring less fastener clip
73036	Transformer—First I-F transformer (T1)
73037	Transformer—Second I-F transformer (T2)
72296	Transformer—Output transformer (T3)
33726	Washer—"C" washer to hold pulleys
2917	Washer—"C" washer to hold range switch and tuning knobs shaft
*73524	Washer—Insulating washer for mounting chassis bottom cover to cabinet base (4 required)
*73533	Washer—Spring washer to prevent pulleys from rattling or to prevent rattle in range switch and tuning knobs shaft
*73540	Washer—Spring washer between tuning knob and mounting bracket
	SPEAKER ASSEMBLY 92572-5W
*74103	Speaker—5" P.M. speaker complete with cone and voice coil
	MISCELLANEOUS
*73515	Base—Metal base for cabinet—less chassis bottom cover or rubber feet
*73547	Button—Dial crystal button to diffuse dial lamp light
*Y2002	Cabinet—Maroon plastic cabinet only for Model 8X681—less emblem, bezel ring or metal base
*Y2003	Cabinet—Ivory plastic cabinet only for Model 8X682—less emblem, bezel ring or metal base
*73546	Crystal—Dial crystal
*73549	Emblem—"RCA-Victor" emblem
*73523	Foot—Rubber foot (4 required)
31480	Lamp—Dial lamp—Mazda 47
*73548	Ring—Bezel ring for dial crystal
*73971	Screen—Ventilating screen—black—for back of cabinet for Model 8X681
*73972	Screen—Ventilating screen—ivory—for back of cabinet for Model 8X682

†Stock No. 72953 is a spool containing 250 ft. of cord.

*This is the first time this Stock No. has appeared in service data.

APPLY TO YOUR RCA DISTRIBUTOR FOR PRICES OF REPLACEMENT PARTS

DIAL PAN AND TRACK ASSEMBLY

(Late Production)

In late production the dial pan and track assembly is changed as follows:

(1) The studs (fixed and idler) are shorter — 19/32" vs. 5/8" overall length.

(2) The two half pulleys are replaced by 1 full pulley (Stock No. 73530).

(3) Spring washers are not used.

The parts are interchangeable as follows:

(1) Original stud or original pan using 5/8" studs — USE SPRING WASHER — original idler stud (Stock No. 73528) is carried in stock.

(2) Short stud or new pan using 19/32" studs — OMIT SPRING WASHER—new pan (Stock No. 73484) is carried in stock.

(3) The two half pulleys may be replaced by one full pulley—both are carried in stock.

A stop is used to limit the movement of the idler stud, thus preventing the pulleys from jumping off the dial track due to rough handling during shipment. This stop may be either a speed nut and screw (A & B) or a plate taped to the idler arm (C & D).

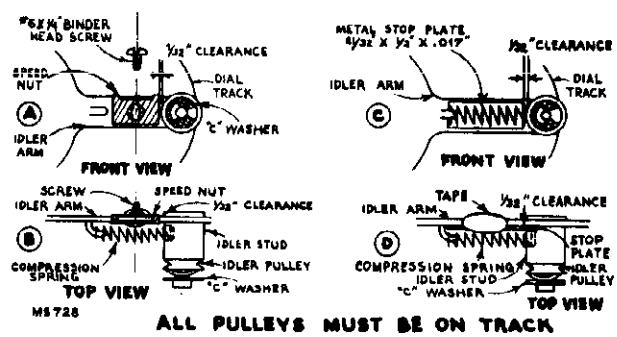

MS728

ALL PULLEYS MUST BE ON TRACK

MODELS 8X71, 8X72, RADIO CORP. OF AMERICA
CHASSIS RC-1070

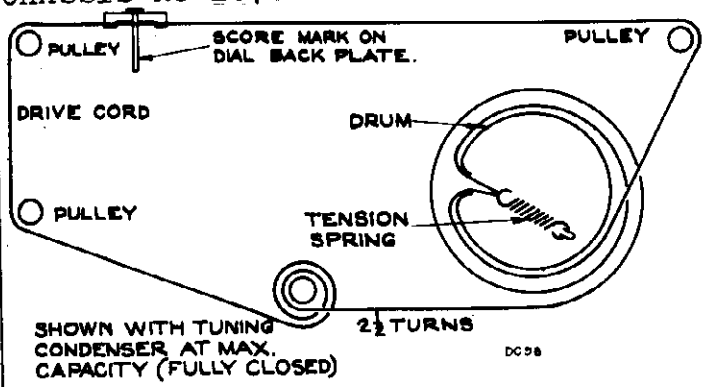

Dial Indicator and Drive Mechanism

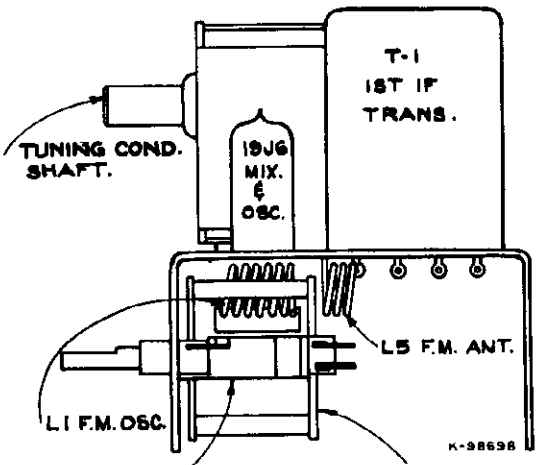

Ant. and Osc. Coil Locations (Side View)

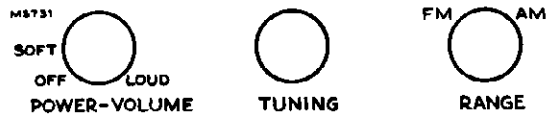

Controls

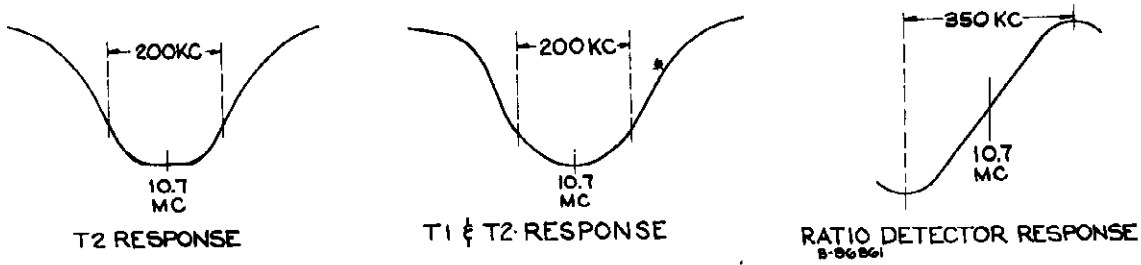

FM Response Curves

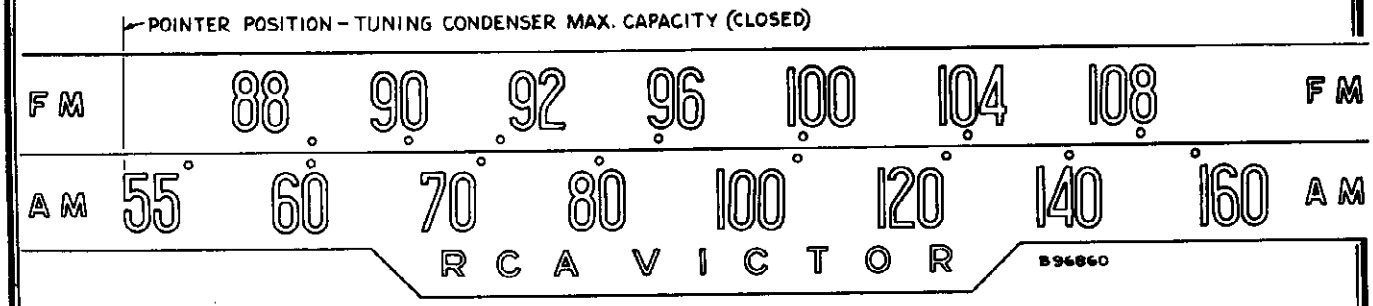

Dial Scale

The dial scale drawing shown is a full size reproduction. It can be used as a reference in alignment procedure.

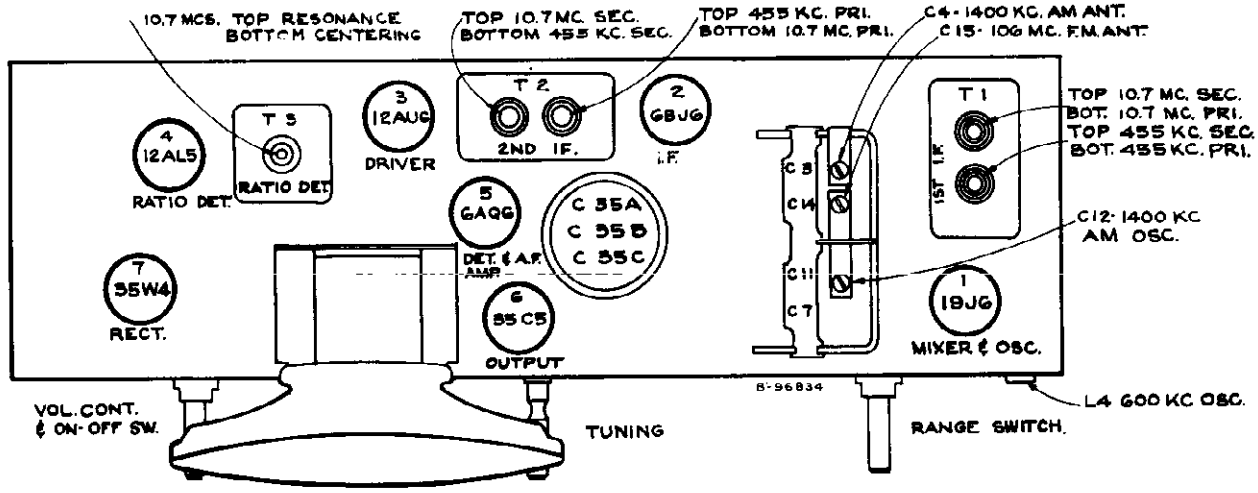

Tube and Trimmer Locations (Top View)

RADIO CORP. OF AMERICA

MODELS 8X71, 8X72
CHASSIS RC-1070

Alignment Procedure

CORRECT ALIGNMENT OF THE FM BAND REQUIRES THAT THE AM BAND BE ALIGNED FIRST

Output Indicators:

An RCA VoltOhmyst or equivalent mefer is necessary for measuring developed d-c voltage during FM alignment. Connections are specified in the alignment tabulation. An output meter is also necessary to indicate **minimum** audio output during FM Ratio Detector alignment. **Connect the output meter across the speaker voice coil.**

The RCA VoltOhmyst can also be used as an AM alignment indicator, either to measure audio output or to measure a-v-c voltage.

When audio output is being measured the volume control should be turned to maximum.

Signal Generator:

For all alignment operations except as stated in the tabulation connect the low side of the signal generator to the receiver chassis. The output should be adjusted to provide accurate resonance indication at all times. If output measurement is used for AM alignment the output of the signal generator should be kept as low as possible to avoid a-v-c action.

CAUTION:

The chassis is connected to one side of the power supply. On a.c. operation it is recommended that an isolation transformer (115 v./115 v.) be used for the receiver when servicing.

Oscilloscope Alignment:

The FM I. F. alignment may be checked using a sweep generator and an oscilloscope. Shunt terminals B and C of T3 with a 1,200 ohm resistor. Connect the high side of the oscilloscope to terminal C of T3 in series with a diode probe. Apply the output of the sweep generator (10.7 mc with ±250 kc. sweep) to pin No. 1 of V2 (6BJ6) in series with .01 mf. Low side of the oscilloscope and sweep generator to chassis. This will show the response of T2.

To check the combined response of T1 and T2; connect the sweep generator to the antenna terminal board—high side to No. 2 terminal in series with 300 ohms and low side to No. 1 terminal. Oscilloscope connections as previously connected.

To check the ratio detector response; connect the high side of the oscilloscope direct to terminal No. 8 of S1 rear, low side to chassis, apply the output of the sweep generator to pin No. 1 of V3 (12AU6) in series with .01 mf. Driver plate circuit connected for normal operation (1200 ohm resistor removed). **Note:** It is difficult to observe marker signals in this step—center frequency and sweep width should be previously observed.

Alignment Indicator:

The dial and dial back plate are not attached to the chassis. During alignment a substitute frequency indication must be used. We suggest attaching a paper clip to the dial drive cord so that its movement may be measured—refer to the "Dial Scale" illustration on page 5.

CRITICAL LEAD DRESS

1. All connections in the mixer-oscillator circuit are extremely critical both in regard to lead length and lead dress. Do not disturb unless necessary—make careful notation before servicing if it becomes necessary to disturb this wiring.
2. The ground lead from pin No. 2 of V3 (12AU6 Driver) is critical in length and must be dressed down against chassis.
3. Dress audio coupling capacitor C23 away from output transformer.
4. Dress diode filter unit away from alignment hole in T-2.
5. Dress grid lead of V3 (pin No. 1 of 12AU6) against chassis apron.
6. Dress plate lead of V1 (pin No. 2 of 19J6) against chassis.
7. Dress loop antenna leads so as to prevent contact with external antenna terminal board.
8. All ground connections to chassis should be restored to the original places of connection if disturbed.
9. Dress capacitor C13 down close to range switch so as to clear the projection on the bottom of the cabinet.
10. The FM ant. and osc. coils must be cemented to the coil support to prevent microphonic howl on FM. Amphenol No. 912 cement is recommended for this purpose. Amphenol No. 916 solvent is recommended as solvent if it becomes necessary to loosen the windings.

AM Alignment

RANGE SWITCH IN AM POSITION

Steps	Connect high side of sig. gen. to—	Sig. gen. output	Turn radio dial to—	Adjust for peak output
1	AM ant. section (C3) of tuning cond. in series with .01 mfd.	455 kc.	Quiet point at low freq. end.	AM windings.† T2 bottom core (sec.). T2 top core (pri.).
2				AM windings.† T1 top core (sec.). T1 bottom core (pri.).
3	Short wire placed near loop antenna for radiated signal.	1620 kc.	Extreme high frequency end.	C12 osc.
4		1400 kc.	1400 kc.	C4 ant.
5		600 kc.	600 kc.	L4 osc. (Rock gang.)
6	Repeat Steps 3, 4 and 5.			

† Use alternate loading.

Alternate loading involves the use of a 10,000 ohm resistor to load the AM plate winding while the AM grid winding of the SAME TRANSFORMER is being peaked. Then the grid winding is loaded with the resistor while the plate winding is peaked. Only one winding is loaded at any one time. Remove the 10,000 ohm resistor after T2 and T1 have been aligned.

Oscillator frequency is above signal frequency on both AM and FM.

FM Alignment

RANGE SWITCH IN FM POSITION — VOLUME CONTROL MAXIMUM

Steps	Connect high side of sig. gen. to—	Sig. gen. output	Turn radio dial to—	Adjust for peak output
1	Connect the d-c probe of a VoltOhmyst to the negative lead of the 2 mfd. capacitor C32 and the common lead to chassis. Adjust sig. gen. output to provide approx. —3 v. indication during alignment.			
2	Pin 1 of 12AU6 in series with .01 mfd.	10.7 mc. modulated 30% 400 cycles AM.	Max. capacity (fully meshed).	T3 top core for max. d-c voltage across C32. T3 bottom core for min. audio output.*
3	No. 2 ant. term in series with a 300 ohm resistor. Connect low side to No. 1 terminal. (Remove ant. lead from No. 2 term.)			FM windings.†† T2 top core (sec.). T2 bottom core (pri.).
4				FM windings.†† T1 top core (sec.). T1 bottom core (pri.).
5		106 mc.	106 mc.	L1 osc.** C15 ant.
6		90 mc.	90 mc.	L5 ant.** (Rock gang.)
7	Repeat Steps 5 and 6 until further adjustment does not improve calibration.			

* Two or more points may be found which lower the audio output. At the correct point the minimum audio output is approached rapidly and is much lower than at any incorrect point.

†† Align T2 and T1 by means of alternate loading as explained under AM alignment. Use a 680 ohm resistor instead of a 10,000 ohm resistor and load the FM windings.

** L1 and L5 are adjustable by increasing or decreasing the spacing between turns.

© John F. Rider

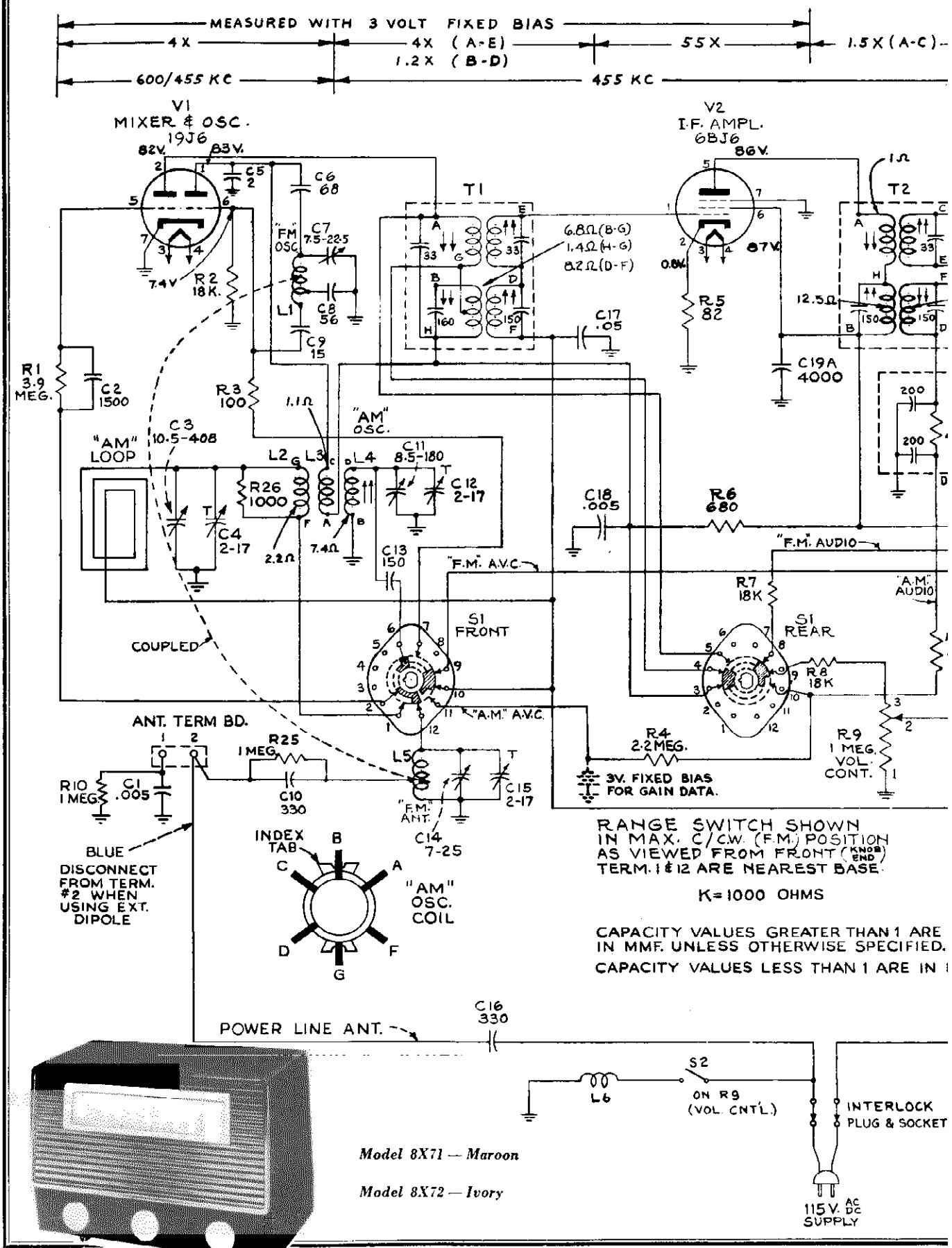

RANGE SWITCH SHOWN IN MAX. C/C.W. (F.M.) POSITION AS VIEWED FROM FRONT (KNOB END)
TERM. 1 & 12 ARE NEAREST BASE.

K = 1000 OHMS

CAPACITY VALUES GREATER THAN 1 ARE IN MMF. UNLESS OTHERWISE SPECIFIED.
CAPACITY VALUES LESS THAN 1 ARE IN

Model 8X71 — Maroon

Model 8X72 — Ivory

©John F. Rider

OF AMERICA

MODELS 8X71, 8X72,
CHASSIS RC-1070

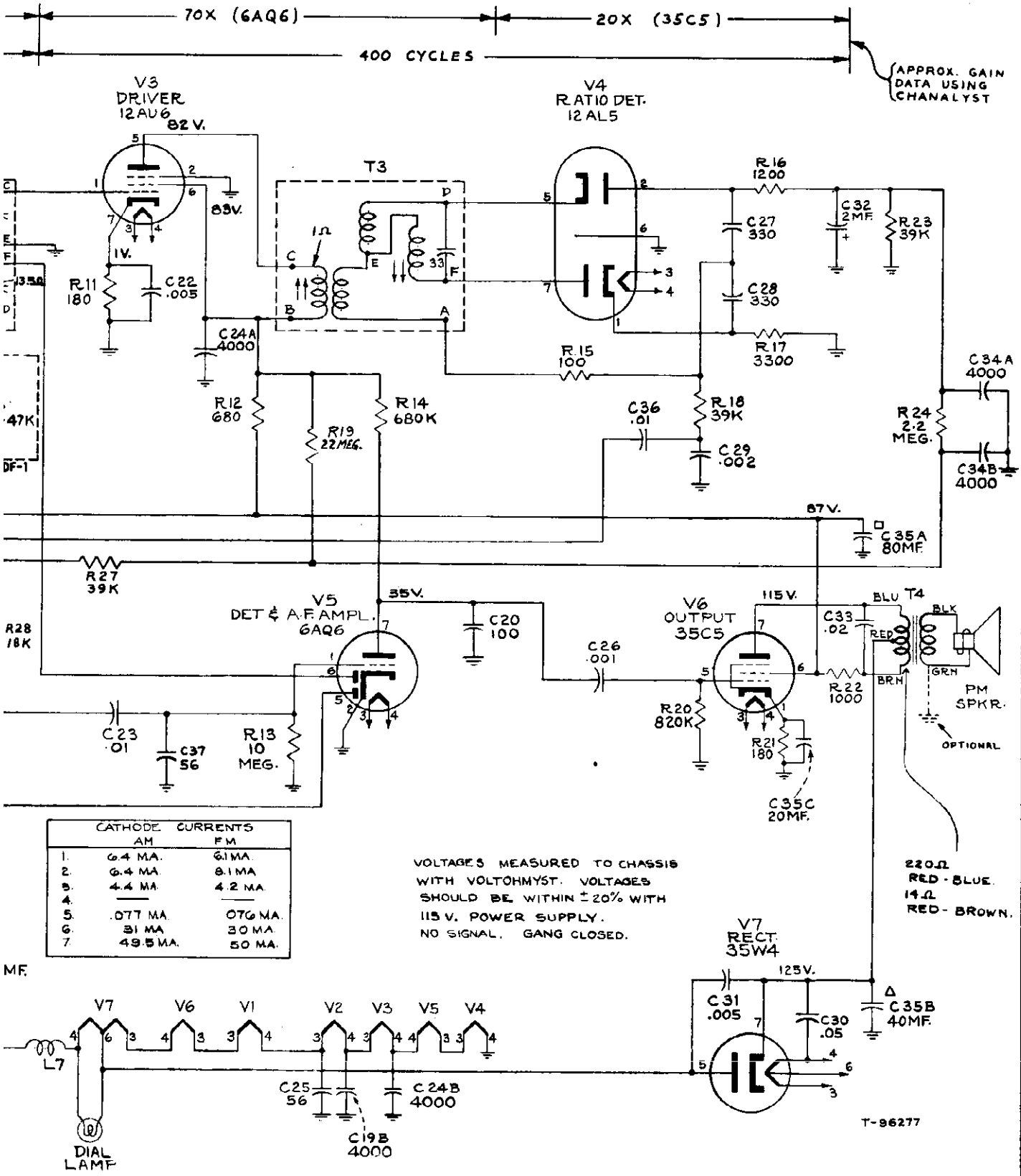

CATHODE CURRENTS	AM	FM
1.	6.4 MA.	6.1 MA.
2.	6.4 MA.	8.1 MA.
3.	4.4 MA.	4.2 MA.
4.	—	—
5.	.077 MA.	076 MA.
6.	31 MA.	30 MA.
7.	49.5 MA.	50 MA.

VOLTAGES MEASURED TO CHASSIS WITH VOLTOHMYST. VOLTAGES SHOULD BE WITHIN ±20% WITH 115 V. POWER SUPPLY. NO SIGNAL. GANG CLOSED.

©John F. Rider

Power Supply:

This instrument will operate on 115 volts d.c. or 50 to 60 cycles a.c.

If the receiver does not operate on d.c., reverse the power cord. On a.c., reversal of the cord may reduce hum or improve FM reception.

Antennas:

These receivers have built-in antennas for standard broadcast (AM) and frequency modulation (FM) reception.

Under average conditions these antennas will provide satisfactory reception however provision is made for the use of an external antenna for FM reception if desired.

To use external FM antenna:

1. Remove the wire from under the No. 2 terminal screw of the antenna terminal board. The bare end of this wire should be taped to prevent contact with the antenna terminal screws.
2. Connect the transmission line from an external FM dipole antenna to the No. 1 and No. 2 terminals of the antenna terminal board.

To use built-in FM antenna:

1. The wire extending thru the back of the cabinet must be connected to No. 2 terminal of the antenna terminal board.
2. The power cord should be fully extended and must not be coiled or hanked up.
3. Reversal of the line cord plug may improve reception.

DO NOT USE EXTERNAL GROUND.

CAUTION:

THE CHASSIS IS CONNECTED TO ONE SIDE OF THE POWER SUPPLY. Use caution to prevent contact with pipes, radiators, etc. when servicing with chassis removed from cabinet.

Specifications

Tuning Ranges

Standard Broadcast (AM) ..... 540-1,600 kc.
Frequency Modulation (FM) ..... 88-108 mc.

Intermediate Frequencies ..... AM—455 kc., FM—10.7 mc.

Tube Complement

(1) RCA 19J6 ..... Mixer and Oscillator
(2) RCA 6BJ6 ..... I. F. Amplifier
(3) RCA 12AU6 ..... Driver
(4) RCA 12AL5 ..... Ratio Detector
(5) RCA 6AQ6 ..... AM Det.—A. F. Amp.
(6) RCA 35C5 ..... Output
(7) RCA 35W4 ..... Rectifier

Dial Lamp ..... Type No. 47, 6-8 volts, 0.15 amp.

Loudspeaker

Type 92572-4W ..... 5 inch P.M.
Voice coil impedance ..... 3.2 ohms at 400 cycles

Tuning Drive Ratio ..... 11½:1 (5¾ turns of knob)

Replacement Parts

Stock No.	DESCRIPTION
	CHASSIS ASSEMBLIES RC 1070
*73973	Capacitor—Variable tuning capacitor (C3, C4, C7, C11, C12, C14, C15)
73866	Capacitor—Ceramic, 2 mmf. (C5)
31353	Capacitor—Ceramic, 15 mmf. (C9)
73867	Capacitor—Ceramic, 56 mmf. (C8)
73499	Capacitor—Ceramic, 56 mmf. (C25, C37)
33103	Capacitor—Ceramic, 68 mmf. (C6)
39628	Capacitor—Mica, 100 mmf. (C20)
48125	Capacitor—Ceramic, 150 mmf. (C13)
39640	Capacitor—Mica, 330 mmf. (C10, C16, C27, C28)
71501	Capacitor—Ceramic, 1,500 mmf. (C2)
*74009	Capacitor—Ceramic, .004 mf., dual (C19A, C19B) (C24A, C24B) (C34A, C34B)
73473	Capacitor—Ceramic, .005 mf. (C1, C18, C31)
73186	Capacitor—Tubular, .001 mf., 400 volts (C26)
73750	Capacitor—Tubular, .002 mf., 200 volts (C29)
71926	Capacitor—Tubular, .005 mf., 200 volts (C22)
71923	Capacitor—Tubular, .01 mf., 200 volts (C23, C36)
*74010	Capacitor—Tubular, .02 mf., 400 volts (C33)
70615	Capacitor—Tubular, .05 mf., 400 volts (C17, C30)
73747	Capacitor—Electrolytic, 2 mf., 50 volts (C32)
*73975	Capacitor—Electrolytic, comprising 1 section of 80 mf., 150 volts, 1 section of 40 mf., 150 volts, and 1 section of 20 mf., 25 volts (C35A, C35B, C35C)
*74012	Coil—Oscillator coil—F.M. (No. 16 tinned buss wire, 9 turns per inch, 4⅞ turns L.H. .469 I.D.) (L1)
73744	Coil—Oscillator coil—A.M. (L2, L3, L4)
*74013	Coil—Antenna coil—F.M. (No. 16 tinned buss wire, 7 turns per inch, 2¾ turns L.H. .375 I.D.) (L5)
	Coil—Line choke coil (No. 18 gauge solid wire, 1.32" plastic insulation, standard hook-up wire, 10 turns, close wind) (L6, L7)
38406	Control—Volume control and power switch (R9, S2)
†72953	Cord—Drive cord (approx. 50" overall length required)
*74011	Filter—Diode filter, consisting of two 200 mmf. capacitors and one 47,000 ohm resistor (DF1)
72283	Grommet—Rubber grommet to mount tuning capacitor (4 required)
*73981	Plug—Power input plug (2 prong male)
	Resistor—Fixed, composition, 82 ohms, ±10%, ½ watt (R5)
	Resistor—Fixed, composition, 100 ohms, ±20%, ½ watt (R3)
	Resistor—Fixed, composition, 100 ohms, ±5%, ½ watt (R15)
	Resistor—Fixed, composition, 180 ohms, ±10%, ½ watt (R11, R21)
	Resistor—Fixed, composition, 680 ohms, ±20%, ½ watt (R5, R12)
	Resistor—Fixed, composition, 680 ohms, ±10%, ½ watt (R14)
	Resistor—Fixed, composition, 820 ohms, ±10%, ½ watt (R20)
	Resistor—Fixed, composition, 1,000 ohms, ±10%, 1 watt (R22)
	Resistor—Fixed, composition, 1,000 ohms, ±20%, ½ watt (R26)
	Resistor—Fixed, composition, 1,200 ohms, ±5%, ½ watt (R16)
	Resistor—Fixed, composition, 3,300 ohms, ±5%, ½ watt (R17)
	Resistor—Fixed, composition, 18,000 ohms, ±10%, ½ watt (R2, R7, R8, R28)
	Resistor—Fixed, composition, 39,000 ohms, ±10%, ½ watt (R18, R27)
	Resistor—Fixed, composition, 39,000 ohms, ±5%, ½ watt (R23)
	Resistor—Fixed, composition, 1 megohm, ±20%, ½ watt (R10, R25)
	Resistor—Fixed, composition, 2.2 megohm, ±20%, ½ watt (R4, R24)
	Resistor—Fixed, composition, 3.9 megohm, ±10%, ½ watt (R1)
	Resistor—Fixed, composition, 10 megohms, ±20%, ½ watt (R13)
	Resistor—Fixed, composition, 22 megohms, ±20%, ½ watt (R19)
*73978	Shaft—Tuning knob shaft
*74014	Socket—Dial lamp socket
73117	Socket—Tube socket for V2, V3, V4, V5, V6, V7
*74179	Socket—Tube socket for V1
74038	Spring—Drive cord spring
*73979	Support—Dial drive cord pulley support complete with two (2) pulleys—L. H.
*73980	Support—Dial drive cord pulley support complete with pulley—R. H.
*73977	Switch—Range switch (S1)
73745	Transformer—First I.F. transformer—dual (T1)
*73974	Transformer—Second I.F. transformer—dual (T2)
73743	Transformer—Ratio detector transformer (T3)
*73976	Transformer—Output transformer (T4)
33726	Washer—"C" washer for tuning knob shaft
	SPEAKER ASSEMBLY 92572-4W
73900	Speaker—5" P.M. speaker complete with cone and voice coil
	MISCELLANEOUS
*73984	Back—Cabinet back—maroon—complete with loop, terminal boards, power socket and power cord for Model 8X71
*73985	Back—Cabinet back—ivory—complete with loop, terminal boards, power socket and power cord for Model 8X72
*73988	Bezel—Dial bezel less dial
*74104	Board—FM antenna terminal board
Y2051	Cabinet—Maroon plastic cabinet for Model 8X71
Y2052	Cabinet—Ivory plastic cabinet for Model 8X72
*73990	Dial—Polystyrene dial scale
*73991	Indicator—Station selector indicator
*73982	Knob—Control knob—brown—for Model 8X71
*73983	Knob—Control knob—ivory—for Model 8X72
31480	Lamp—Dial lamp—Mazda 47
*73986	Loop—Antenna loop (winding only)
72765	Nut—Speed nut for bezel and dial scale
*73989	Plate—Dial back plate
*73992	Retainer—Knob retainer (knob to cabinet)
*73987	Socket—2 contact power input socket (part of back cover and loop assembly)
14270	Spring—Retaining spring for knobs (knob to shaft)

*This is the first time that this Stock No. has appeared in Service Data.

Power Supply Rating

115 volts d.c. or 50 to 60 cycles a.c. ..... 30 watts

Power Output

Maximum ..... 1.65 watts
Undistorted ..... 1.0 watt

RADIO CORP. OF AMERICA

MODELS 9W101, 9W103, 9W105, CHASSIS RC-618B, RC-618C



Model 9W101

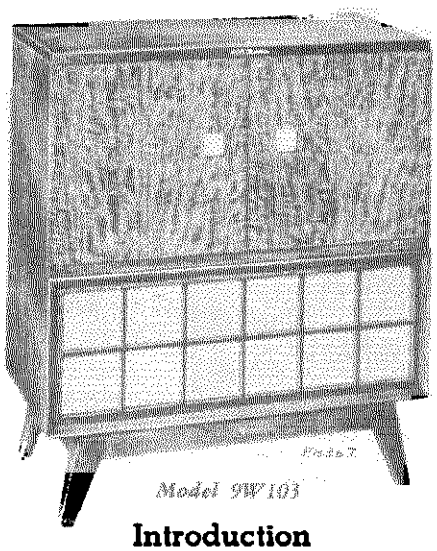

Model 9W103

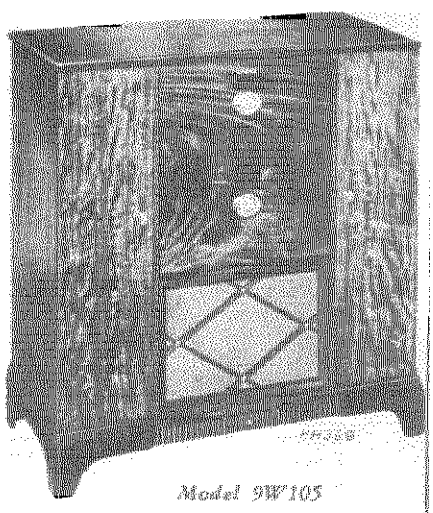

Model 9W105

Introduction

All three of these instruments have the new Model RP-168A-1 record changer designed for use with the new Victor seven-inch long playing records. Model 9W105 also has a Model RP-178 record changer for use with the conventional ten- and twelve-inch records.

An auxiliary phono input jack on the back of the chassis of Models 9W101 and 9W103 (input controlled by the selector switch) is provided to permit the use of an auxiliary record player if desired.

Antennas

These receivers have built-in antennas for standard broadcast (AM) and frequency modulation (FM) reception.

Provision is made for the use of an external antenna for FM reception if desired. To use external FM antenna—remove the built-in FM antenna lead from the "FM" terminals of the antenna terminal board Connect the transmission line of an external FM dipole antenna to these two "FM" terminals.

FOR RECORD CHANGER SERVICE INFORMATION REFER TO RP-168 SERIES SERVICE DATA AND RP-178 SERIES SERVICE DATA.

Specifications

Tuning Range

Standard Broadcast (AM) ..... 540-1600 kc.
Frequency Modulation (FM) ..... 88-108 mc.
Intermediate Frequencies ..... AM—455 kc., FM 10.7 mc.

Tube Complement

(1) RCA 6J6 ..... Mixer and Oscillator
(2) RCA 6BA6 ..... I-F Amplifier
(3) RCA 6AU6 ..... Driver
(4) RCA 6AL5 ..... Ratio Detector
(5) RCA 6AV6 ..... A-F Amplifier
(6) RCA 6V6GT ..... Output
(7) RCA 6AV6 ..... AM Det.—AVC—Ph. Inv.
(8) RCA 6V6GT ..... Output
(9) RCA 6X5GT ..... Rectifier
(10) RCA 6BF6 ..... Phono Pre-amplifier

Dial Lamps (2) ..... Type No. 51, 6-8 volts, 0.2 amp.
Jewel Lamp ..... Type No. 51, 6-8 volts, 0.2 amp.

Tuning Drive Ratio ..... 18:1 (9 turns of knob)

Power Supply Rating ..... 115 volts, 60 cycles, 90 watts

Loudspeaker (92569-5W)

Size and type ..... 12 in. PM
Voice coil impedance ..... 3.2 ohms at 400 cycles

Power Output

Undistorted 6 watts ..... Maximum 7 watts

Record Changer (RP-168A-1)
Used in all three models

Turntable speed ..... 45 r.p.m.
Record capacity ..... Eight 7 in.—long playing
Pickup ..... Crystal (medium output)

Record Changer (RP-178)
Used in Model 9W105 only

Turntable speed ..... 78 r.p.m.
Record capacity ..... Twelve 10 in or ten 12 in.
Pickup ..... Crystal (standard output)

Cabinet Dimensions	Height	Width	Depth
Model 9W101	34 in.	31⅞ in.	15 15/16 in.
Model 9W103	34 in.	30¼ in.	15¾ in.
Model 9W105	35 in.	34⅝ in.	16⅜ in.

Circuit Description

These instruments have a ten-tube (including rectifier) chassis which is very similar to those used in other RCA Victor radio-phonograph combinations designed for AM-FM reception.

The selector switch has five functions:

(1) Selection of tuning range.
(2) Selection and distribution of a.v.c. voltages.
(3) Application of B+ voltage to tubes V1, V2 and V3.
(4) Selection of audio input applied to the volume control.
(5) Application of a.c. power to the record changer motors.

A one-tube pre-amplifier (6BF6 tube No. V10) is used with the input from the RP-168A-1 record changer.

MODELS 9W101, 9W103, 9W105, CHASSIS RC-618B, RC-618C

RADIO CORP. OF AMERICA

Alignment Procedure

CORRECT ALIGNMENT OF THE FM BAND REQUIRES THAT THE AM BAND BE ALIGNED FIRST

Alignment Indicators:

An RCA VoltOhmyst or equivalent meter is necessary for measuring developed d-c voltage during FM alignment. Connections are specified in the alignment tabulation. An output meter is also necessary to indicate minimum audio output during FM Ratio Detector alignment. Connect the output meter across the speaker voice coil.

The RCA VoltOhmyst can also be used as an AM alignment indicator, either to measure audio output or to measure a-v-c voltage.

When audio output is being measured the volume control should be turned to maximum.

Signal Generator:

For all alignment operations connect the low side of the signal generator to the receiver chassis. The output should be adjusted to provide accurate resonance indication at all times. If output measurement is used for AM alignment the output of the signal generator should be kept as low as possible to avoid a-v-c action.

Oscilloscope Alignment:

The FM I-F alignment may be checked using a sweep generator and an oscilloscope. Shunt terminals B and C of T3 with a 1200 ohm resistor. Connect the high side of an oscilloscope to terminal C of T3 in series with a diode probe. Apply the output of the sweep generator (10.7 mc. with ±250 kc. sweep) to pin No. 1 of V2 (6BA6) in series with .01 mf. Low side of the oscilloscope and sweep generator to chassis. This will show the response of T2.

To check the combined response of T1 and T2; connect the sweep generator to the FM antenna terminals (remove FM antenna lead) in series with 300 ohms. **Note:** One FM terminal is grounded—it may be necessary to reverse the sweep generator connections. Oscilloscope connections remain as connected.

To check the ratio detector response; connect the high side of the oscilloscope direct to terminal No. 9 of S1, low side to chassis. Apply the output of the sweep generator to pin No. 1 of V3 (6AU6) in series with .01 mf. Driver plate circuit connected for normal operation (1200 ohm resistor removed). **Note:** It is difficult to observe marker signals in this step—center frequency and sweep width should be previously observed.

Response curves illustrated on page 5.

CRITICAL LEAD DRESS

1. Keep leads of C7 short.
2. Dress R27 away from range switch and pin No. 5 of V1.
3. The round lead of pin No. 2 of V2 and V3 should be down against chassis. Its length is critical.
4. The AVC lead from R26 to range switch should be dressed against chassis and away from 6AU6 driver tube socket.
5. C43 should have short leads and the color code of the capacitor should go to the coil L4. The capacitor should be cemented down with polystyrene cement at the same time L2 is cemented.
6. The lead from the high side of the loop should be dressed away from tubes.
7. Lead from pin No. 2 of V1 to terminal "A" of 1st I. F. transformer should be dressed against the chassis.
8. Connect C40 directly between the gang condenser and pin No. 1 of V1.
9. Make all FM leads as short as possible.
10. Dress lead from pin No. 5 of V2 to terminal "A" of 2nd I. F. transformer down against chassis.
11. Dress resistor R15 near chassis base.
12. Dress all A. C. leads away from volume control.
13. The lead from "FM" terminal of antenna terminal board to L1 tap should be dressed away from V2.
14. The taps on L1 and L2 are critical. L1 tap should be ¾ turn from the ground end. L2 tap should be 2½ turns from the gang condenser C8.
15. Dress C25 and C26 against the chassis with the shortest lead length possible.
16. The position of L1 and L2 is critical. L1 should be midway between V1 and the 1st I. F. transformer. The end of L2 should be approximately 3/16" from V1.
17. Capacitor C41 should be secured to the chassis apron with melted wax or cement.
18. FM oscillator coil L2 must be cemented to its support. Amphenol No. 912 cement is recommended for this purpose.

Dial Indicator

With the tuning condenser fully meshed (closed) the indicator should be set to the reference mark on the dial back plate.

Refer to the dial scale reproductions on page 8.

AM Alignment

RANGE SWITCH IN BC POSITION

Steps	Connect high side of sig. gen. to—	Sig. gen. output	Turn radio dial to—	Adjust for peak output
1	C9 in series with .01 mfd.	455 kc.	Quiet point at low freq. end.	AM windings.† T3 bottom core (sec.). T3 top core (pri.).
2				AM windings.† T2 top core (sec.). T2 bottom core (pri.).
3	Short wire placed near loop for radiated signal	1400 kc.	1400 kc.	C13 osc. C4 ant.
4		600 kc.	600 kc.	L4 osc. (Rock gang.)
5		Repeat Steps 3 and 4.		

† Use alternate loading.

Alternate loading involves the use of a 47,000 ohm resistor to load the AM plate winding while the AM grid winding of the SAME TRANSFORMER is being peaked. Then the grid winding is loaded with the resistor while the plate winding is peaked. Only one winding is loaded at any one time. Remove the 47,000 ohm resistor after T3 and T2 have been aligned.

Oscillator frequency is above signal frequency on both AM and FM.

FM Alignment

RANGE SWITCH IN FM POSITION—VOLUME CONTROL MAXIMUM

Steps	Connect high side of sig. gen. to—	Sig. gen. output	Turn radio dial to—	Adjust for peak output
1	Connect the d-c probe of a VoltOhmyst to the negative lead of the 2 mfd. capacitor C33 and the common lead to chassis. Turn gang condenser to max. capacity (fully meshed).			
2	Pin 1 of 6AU6 in series with .01 mfd.	10.7 mc. modulated 30% 400 cycles AM (Approx. .05 volt).	Max. capacity (fully meshed).	T4 top core for max. d-c voltage across C33. T4 bottom core for min. audio output. *
3	FM ant. term. in series with a 300 ohm resistor. (Remove ant. lead from "FM" term.)	10.7 mc. Adjust to provide 2 to 3 volts indication on VoltOhmyst during alignment.		FM windings.†† T3 top core (sec.). T3 bottom core (pri.).
4				FM windings.†† T2 top core (sec.). T2 bottom core (pri.).
5		106 mc.	106 mc.	L2 osc. * * C2 ant. Set C2 at max. capacity while adjusting L2.
6		90 mc.	90 mc.	L1 ant. * * (Rock gang.)
7	Repeat Steps 5 and 6 until further adjustment does not improve calibration.			

* Two or more points may be found which lower the audio output. At the correct point the minimum audio output is approached rapidly and is much lower than at any incorrect point.

†† Align T3 and T2 by means of alternate loading as explained under AM alignment. Use a 680 ohm resistor instead of a 47,000 ohm resistor and load the FM windings.

** L1 and L2 are adjustable by increasing or decreasing the spacing between turns.

RADIO CORP. OF AMERICA

MODELS 9W101, 9W103, 9W105, CHASSIS RC-618B, RC-618C

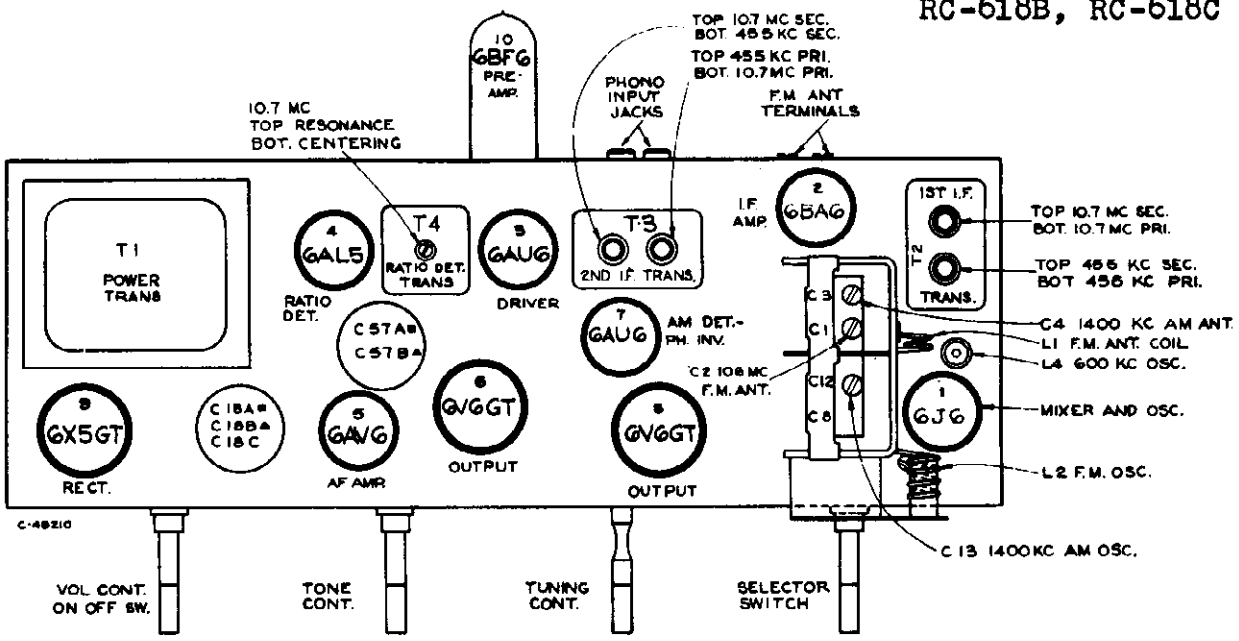

Tube and Trimmer Locations

Note: FM mixer and oscillator coils are adjustable by increasing or decreasing the spacing between turns. The position of the coils and location of the taps are critical (refer to "Critical Lead Dress").

Socket Voltages

Voltages measured with Chanalyst or VoltOhmyst and should hold within ±20% with rated line voltage. Tuning condenser closed—no signal input.

Tube	Terminal	Voltage		
		Phono	A.M.	F.M.
(1) 6J6	Plate 1	—	102	98
	Grid 6	-0.4	-6.8	-6.0
	Plate 2	—	96	110
	Grid 5	-0.8	-2.7	-2.5
(2) 6BA6	Plate 5	—	196	192
	Screen 6	—	100	83
	Cathode 7	—	0.7	0.84
	Grid 1	-0.9	-1.3	-0.2
(3) 6AU6	Plate 5	—	190	185
	Screen 6	—	145	141
	Cathode 7	—	1.25	1.21
(4) 6AL5	—— —	—	—	—
(5) 6AV6	Plate 7	125	85	84
	Grid 1	-0.6	-0.6	-0.6
(6) 6V6GT	Plate 3	299	282	280
	Screen 4	295	220	217
	Cathode 8	21.4	15.5	15.4
(7) 6AV6	Plate 7	168	125	125
	Grid 1	-0.5	-0.5	-0.5
(8) 6V6GT	Plate 3	299	282	280
	Screen 4	286	214	211
	Cathode 8	21.4	15.5	15.4
(9) 6X5GT	Cathode 8	313	300	299
(10) 6BF6	Plate 7	129	89	88
	Cathode 2	7.2	5.4	5.4

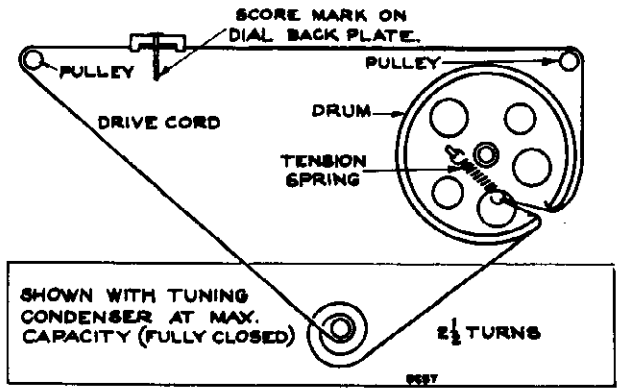

Dial Indicator and Drive Mechanism

Cathode Currents (MA)

Tube	Terminal	Phono	A.M.	F.M.
(1) 6J6	7	—	8.2	8.7
(2) 6BA6	7	—	11.6	13.4
(3) 6AU6	7	—	10	9.7
(4) 6AL5	1 & 5	—	—	—
(5) 6AV6	2	0.75	0.5	0.5
(6) 6V6GT	8	25.1	19.1	18.5
(7) 6AV6	2	1.7	1.1	1.1
(8) 6V6GT	8	24.1	18.5	18
(9) 6X5GT	8	54	70.5	71
(10) 6BF6	2	0.77	0.55	0.55

MODELS 9W101, 9W103, 9W105, CHASSIS RC-618B, RC-618C

RADIO CORP. OF AMERICA

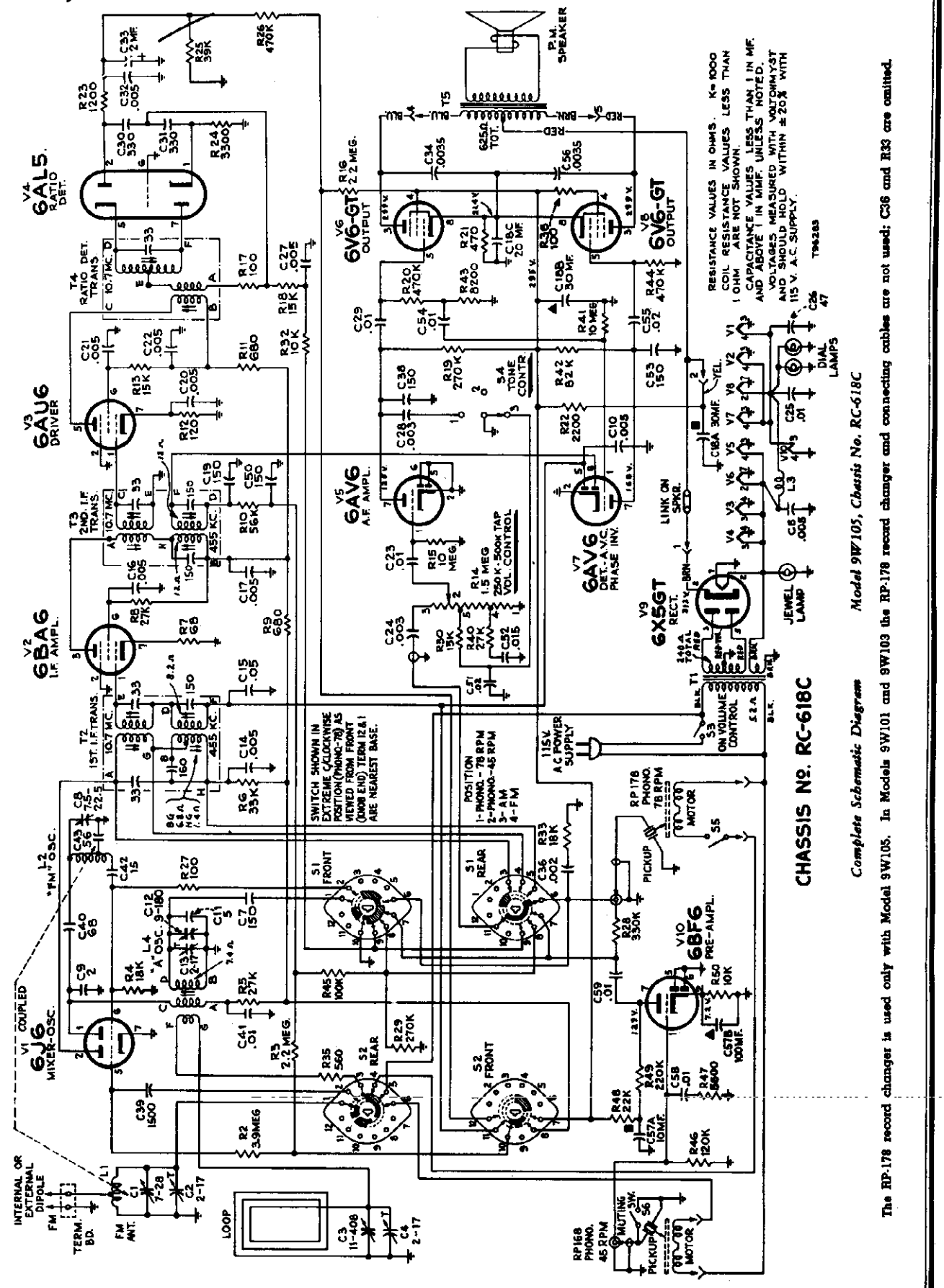

RADIO CORP. OF AMERICA

MODELS 9W101, 9W103, 9W105, CHASSIS RC-618B, RC-618C

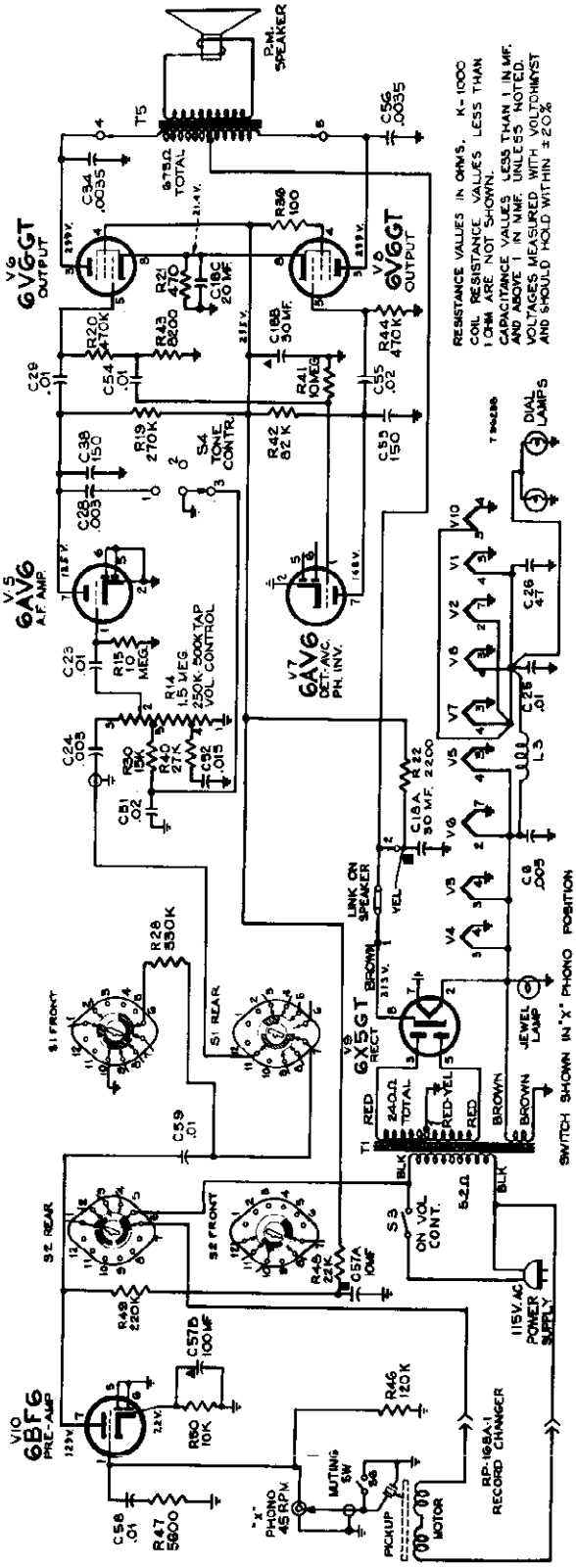

Simplified Schematic Diagram
"Aux." (9W101, 9W103) or "X PH" (9W105) Position

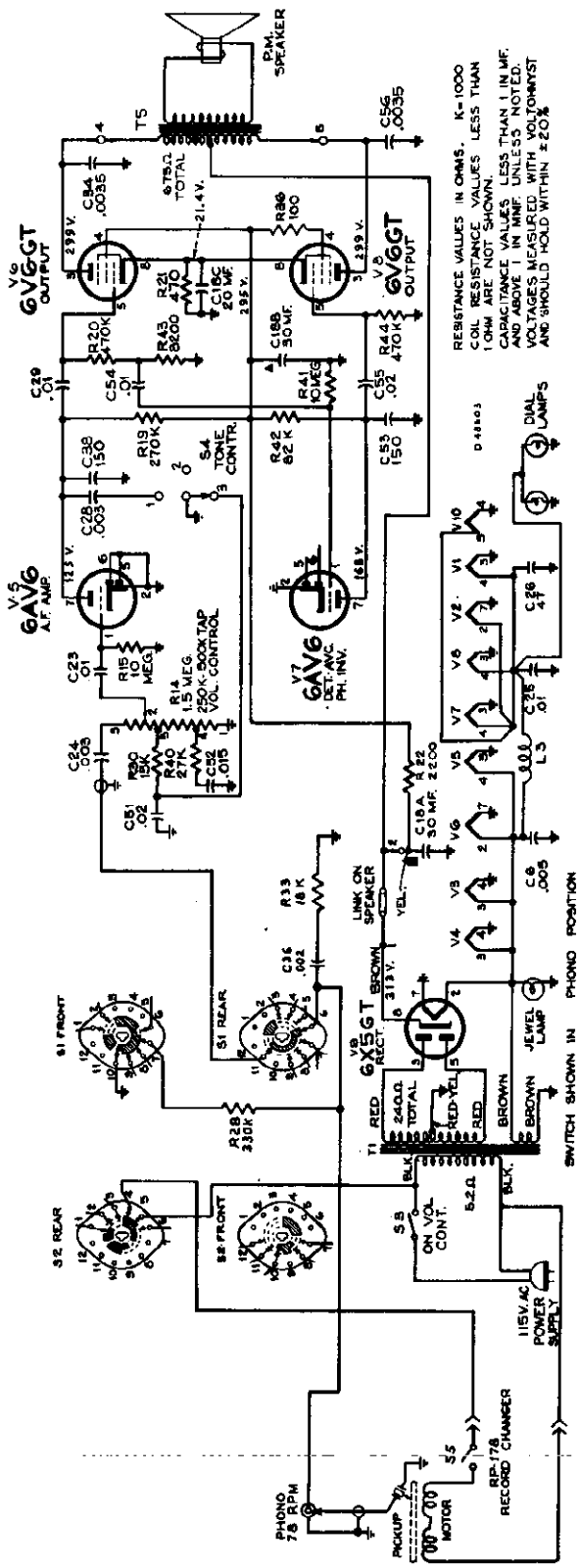

Simplified Schematic Diagram
"PH" Position

In Models 9W101 and 9W103 the RP-178 record changer and connecting cables are not used; C36 and R33 are omitted.

MODELS 9W101, 9W103,
9W105, CHASSIS
RC-618B, RC-618C

RADIO CORP. OF AMERICA

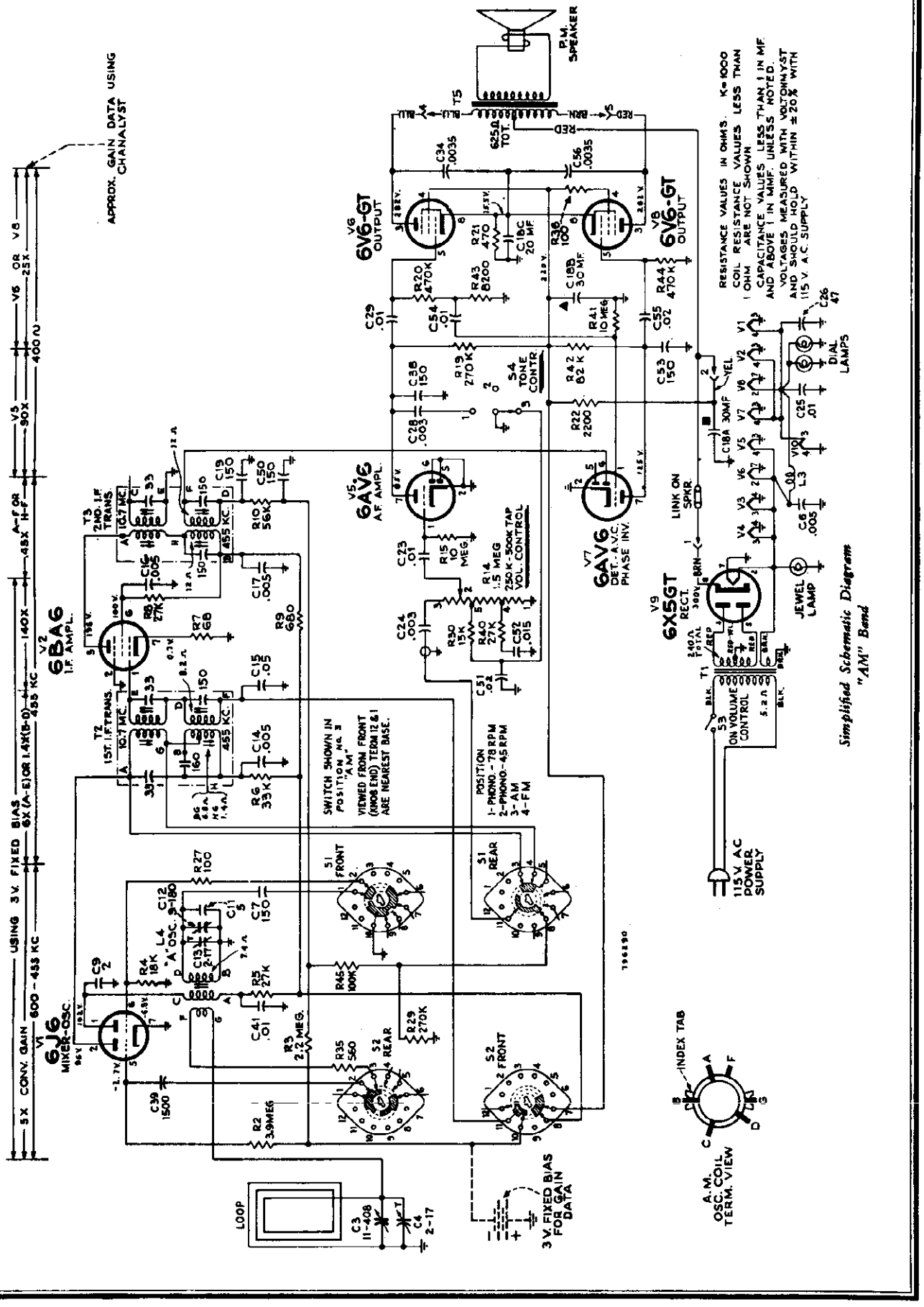

RADIO CORP. OF AMERICA

MODELS 9W101, 9W103, 9W105, CHASSIS RC-618B, RC-618C

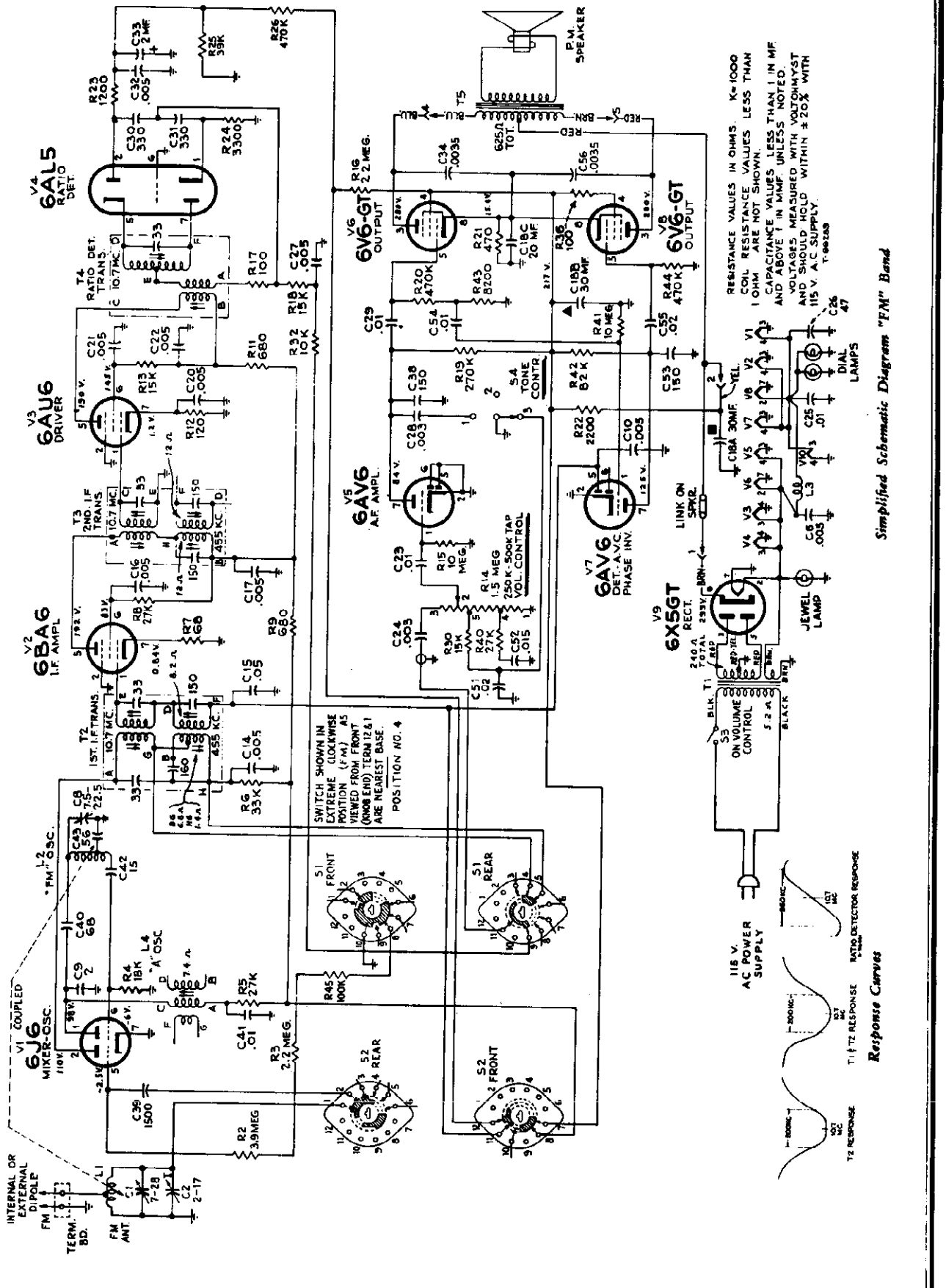

©John F. Rider

MODELS 9W101, 9W103, 9W105, CHASSIS RC-618B, RC-618C

RADIO CORP. OF AMERICA

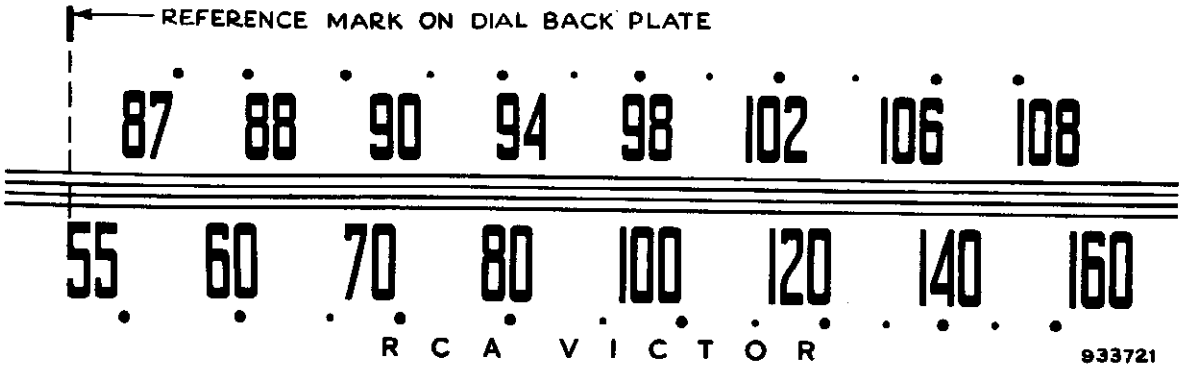

The dial scale drawing shown is a full size reproduction. It can be used as a reference in alignment procedure.

Dial Scale—Models 9W101 and 9W103

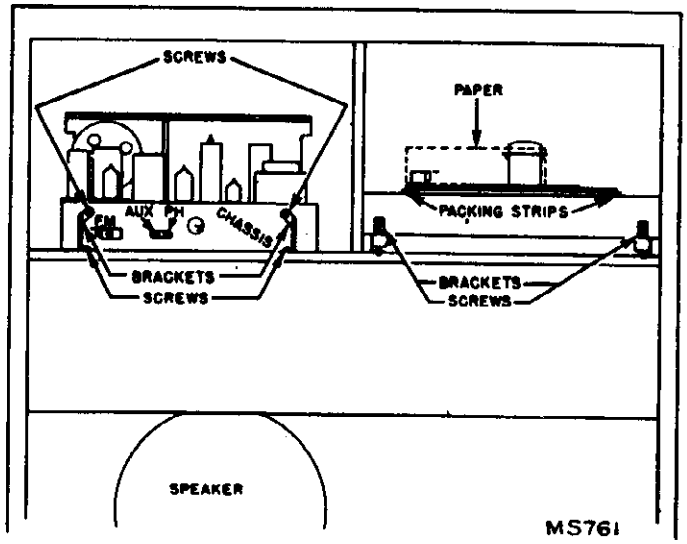

Back View—Models 9W101 and 9W103

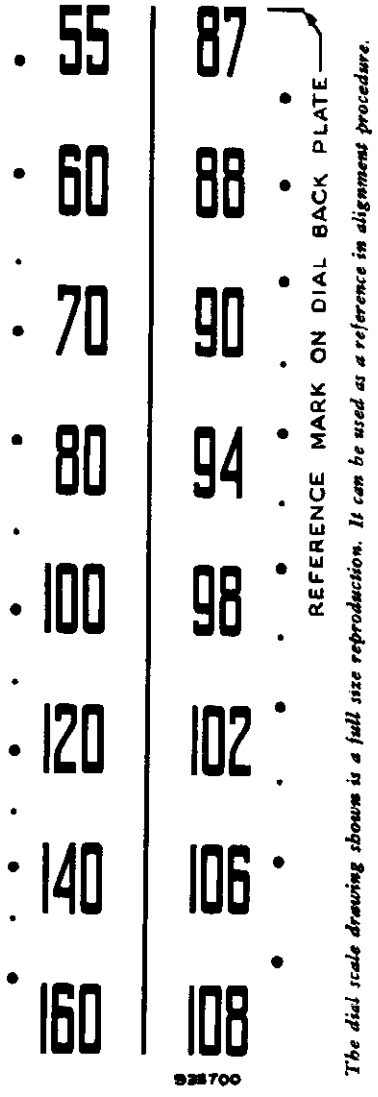

Dial Scale—Model 9W105

The dial scale drawing shown is a full size reproduction. It can be used as a reference in alignment procedure.

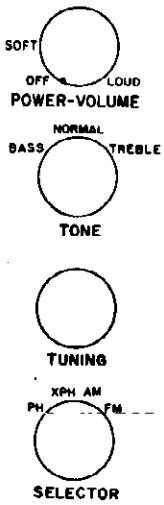

Controls—Model 9W105

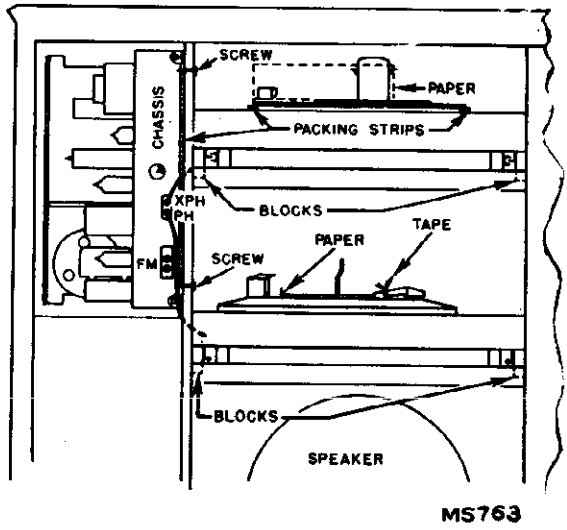

Back View—Model 9W105

©John F. Rider

MODELS 9W101, 9W103, 9W105, CHASSIS RC-618B, RC-618C

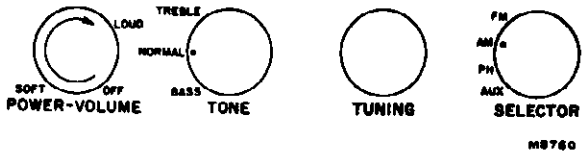

Controls—Models 9W101 and 9W103

SHIPPING SCREWS

The radio chassis of these instruments is secured to the cabinet with shipping screws (painted red) which, together with wood spacing strips, should be **REMOVED** at the time of installation.

The record changers are each mounted with three screws which should be **LOOSENED** at the time of installation.

On the RP-168A-1 record changer decorative caps cover the mounting screws, unscrew the caps for access to the screws.

REFER TO ILLUSTRATIONS ON PAGES 8 AND 9.

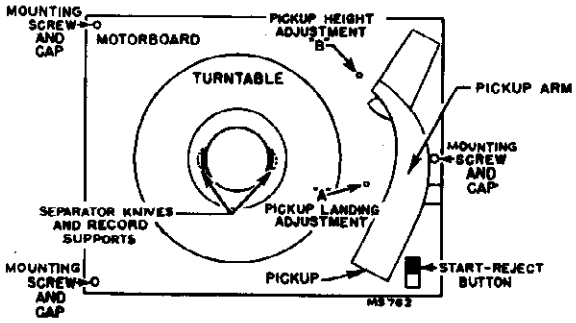

Top View—RP-168A-1 Record Changer

RP-168A-1 RECORD CHANGER

Pickup Landing Adjustment "A"

The pickup point should land half-way between the outer edge of the record and the first music groove.

If the pickup lands inside the starting grooves—turn screw "A" slightly clockwise. If pickup lands outside the starting grooves—turn screw "A" slightly counterclockwise.

Pickup Height Adjustment "B"

During cycle the pickup arm must rise high enough to clear a stack of eight records on the turntable, but not high enough to cause the top of the arm to touch records resting on the record supports.

If pickup does not clear a stack of eight records—turn screw "B" slightly clockwise. If pickup arm touches records on record supports—turn screw "B" slightly counterclockwise.

Record Separators

During service work the position of the star wheel on the underside of the record changer may be accidently shifted; this may cause the record separator knives to be extended when in the out of cycle position.

If the separator knives are thus extended—turn the power on so that the turntable is revolving, gently press fingers against the extended knives until they disappear inside the center post—DO THIS ONLY WHILE MECHANISM IS OUT OF CYCLE.

CARE OF SAPPHIRE

The sapphire point on the pickup is protected with a permanent metal guard. Lint may collect to clog the opening in the guard at the sapphire point and cause poor record reproduction. Occasional cleaning may be necessary: brush carefully with a small soft brush.

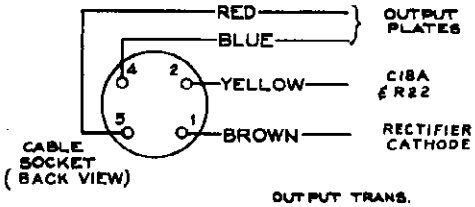

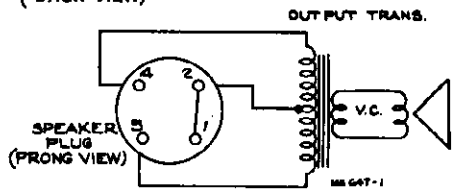

Speaker Connections.

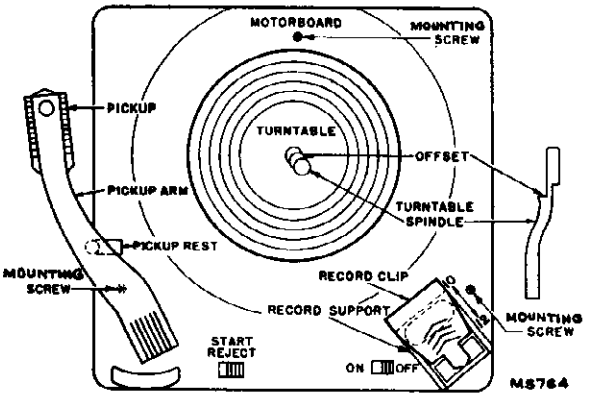

Top View—RP-178 Record Changer

Replacement Parts

STOCK No.	DESCRIPTION
	CHASSIS ASSEMBLIES RC 618B—9W101, 9W103 RC 618C—9W105
73893	Board—"F.M." antenna board
73889	Capacitor—Variable tuning capacitor (C1, C2, C3, C4, C9, C12, C13)
73886	Capacitor—Ceramic, 2 mmf. (C9)
93056	Capacitor—Ceramic, 5 mmf. (C11)
31353	Capacitor—Ceramic, 15 mmf. (C42)
39042	Capacitor—Ceramic, 47 mmf. (C26)
73887	Capacitor—Ceramic, 56 mmf. (C43)
33103	Capacitor—Ceramic, 68 mmf. (C40)
48125	Capacitor—Ceramic, 150 mmf. (C7, C19, C38, C50, C59)
39640	Capacitor—Mica, 330 mmf. (C30, C31)
73748	Capacitor—Ceramic, 1500 mmf. (C39)
73473	Capacitor—Ceramic, .005 mfd. (C6, C10)
73750	Capacitor—Tubular, .002 mfd., 200 volts (C38 for 9W105)
73859	Capacitor—Tubular, .003 mfd., 200 volts (C24)
72573	Capacitor—Tubular, .003 mfd., 400 volts (C28)
70646	Capacitor—Tubular, .0035 mfd., 1000 w. (C34, C56)
71926	Capacitor—Tubular, .005 mfd., 200 volts (C20, C27, C32)
71553	Capacitor—Tubular, .005 mfd., 400 volts (C14, C16, C17, C21, C22)
72120	Capacitor—Tubular, .015 mfd., 200 volts (C52)
71928	Capacitor—Tubular, .02 mfd., 200 volts (C51)
73838	Capacitor—Tubular, .02 mfd., 400 volts (C55)
71923	Capacitor—Tubular, .01 mfd., 200 volts (C23, C25)
73561	Capacitor—Tubular, .01 mfd., 400 volts (C58, C58)
71925	Capacitor—Tubular, .01 mfd., 400 volts (C29, C41, C54)
71551	Capacitor—Tubular, .05 mfd., 200 volts (C15)
73747	Capacitor—Electrolytic, 2 mfd., 50 volts (C33)
*74200	Capacitor—Electrolytic, comprising 1 section of 10 mfd., 300 volts and 1 section of 100 mfd., 10 volts (C57A, C57B)
73372	Capacitor—Electrolytic, comprising 1 section of 30 mfd., 350 volts, 1 section of 30 mfd., 300 volts and 1 section of 20 mfd., 250 volts (C18A, C18B, C18C)
73918	Coil—Antenna coil—F.M. (#16 tinned bus wire, 8 turns per inch, 1¾ turns L.H.—.469 I. D.) (L1)
73916	Coil—Oscillator coil—F.M. (#16 tinned bus wire, 7 turns per inch, 4¾ turns R.H.—.469 I. D.) (L2)

(Continued on following page)

MODELS 9W101, 9W103, 9W105, CHASSIS RC-618B, RC-618C

RADIO CORP. OF AMERICA

Replacement Parts (Continued)

STOCK No.	DESCRIPTION
71942	Coil—Filament choke coil (L3)
73744	Coil—Oscillator coil—A.M. (L4)
70342	Control—Volume control and power switch (R14, S3)
†72953	Cord—Drive cord (approx. 48" overall length required)
73690	*Cord—Power cord and plug*
18058	Grommet—Rubber grommet to mount R.F. shell
72069	Grommet—Rubber grommet for rear mounting feet (2 required)
73895	Indicator—Station selector indicator
30868	Plug—2 contact female plug for motor cables
5040	Plug—4 contact female plug for speaker cable
*74297	Plate—Dial back plate complete with two (2) drive cord pulleys less dial
	Resistor—Fixed, composition, 68 ohms ±10%, ½ watt (R7)
	Resistor—Fixed, composition, 100 ohms ±10%, ½ watt (R17, R27, R36)
	Resistor—Fixed, composition, 120 ohms ±10%, ½ watt (R12)
	Resistor—Fixed, composition, 470 ohms ±10%, 2 watts (R21)
	Resistor—Fixed, composition, 560 ohms ±10%, ½ watt (R35)
	Resistor—Fixed, composition, 680 ohms ±20%, ½ watt (R9, R11)
	Resistor—Fixed, composition, 1200 ohms ±5%, ½ watt (R23)
73637	Resistor—Wire wound, 2200 ohms, 5 watts (R22)
	Resistor—Fixed, composition, 3300 ohms ±5%, ½ watt (R24)
	Resistor—Fixed, composition, 5600 ohms ±10%, ½ watt (R47)
	Resistor—Fixed, composition, 8200 ohms ±10%, ½ watt (R49)
	Resistor—Fixed, composition, 10,000 ohms ±10%, ½ watt (R32, R50)
	Resistor—Fixed, composition, 15,000 ohms ±10%, ½ watt (R13, R18, R30)
	Resistor—Fixed, composition, 18,000 ohms ±10%, ½ watt (R4 for 9W101, 9W103 & 9W105) (R33 for 9W105)
	Resistor—Fixed, composition, 22,000 ohms ±10%, ½ watt (R48)
	Resistor—Fixed, composition, 27,000 ohms ±10%, ½ watt (R8, R40)
	Resistor—Fixed, composition, 27,000 ohms ±10%, 1 watt (R5)
	Resistor—Fixed, composition, 33,000 ohms ±10%, ½ watt (R6)
	Resistor—Fixed, composition, 39,000 ohms ±10%, ½ watt (R25)
	Resistor—Fixed, composition, 56,000 ohms ±10%, 1 watt (R10)
	Resistor—Fixed, composition, 82,000 ohms ±10%, ½ watt (R42)
	Resistor—Fixed, composition, 100,000 ohms ±10%, ½ watt (R45)
	Resistor—Fixed, composition, 120,000 ohms ±10%, ½ watt (R46)
	Resistor—Fixed, composition, 220,000 ohms ±10%, ½ watt (R49)
	Resistor—Fixed, composition, 270,000 ohms ±10%, ½ watt (R19, R29)
	Resistor—Fixed, composition, 330,000 ohms ±10%, ½ watt (R26)
	Resistor—Fixed, composition, 470,000 ohms ±10%, ½ watt (R20, R26, R44)
	Resistor—Fixed, composition, 2.2 meg. ±20%, ½ watt (R3)
	Resistor—Fixed, composition, 3.9 meg. ±10%, ½ watt (R2)
	Resistor—Fixed, composition, 10 megohms ±20%, ½ watt (R15, R41)
	Resistor—Fixed, composition, 22 megohms ±20%, ½ watt (R16)
73894	Shaft—Tuning knob shaft
31364	Socket—Dial or jewel lamp socket
33514	Socket—Phono input socket (double)
31251	Socket—Tube socket, wafer, octal
73606	Socket—Tube socket, miniature, for tubes V1, V2, V3, V4, V5, V7
73117	Socket—Tube socket, miniature, for 6BF6 tube
31418	*Spring—Drive cord spring*
74202	Support—Polystyrene support for F.M. osc. coil complete with mounting bracket
73891	Switch—Tone control switch (S4)
*74201	Switch—Selector switch (S1, S2)
73601	*Transformer*—Power transformer, 115 volt 60 cycle (T1)
73745	Transformer—First I.F. transformer—dual (T2)
74019	Transformer—Second I.F. transformer—dual (T3)
73743	Transformer—Ratio detector transformer (T4)
33726	Washer—"C" washer for tuning knob shaft
	SPEAKER ASSEMBLIES
	92569-5W
	RL 10385
13867	Cap—Dust cap
73934	Cone—Cone and voice coil assembly
31826	Plug—4 prong male plug for speaker
73635	Speaker—12" PM speaker complete with cone and voice coil less output *transformer and plug* (92569-5W)
71145	Suspension—Metal cone suspension
73636	Transformer—Output transformer (T5)

STOCK No.	DESCRIPTION
	MISCELLANEOUS
72555	Antenna—F.M. antenna
*74205	Bezel—Dial scale bezel less dial
74299	Bracket—Jewel lamp bracket for Model 9W105
71599	Bracket—Jewel lamp bracket for Models 9W101 and 9W103
*74288	Button—Rosette button (nail) for grille for Model 9W101
72437	Cable—Shielded pickup cable complete with pin plug (2 required) for Model 9W105
72583	Cable—Shielded pickup cable complete with pin plug for Models 9W101 and 9W103
13103	Cap—Jewel lamp cap
71892	Catch—Bullet catch and strike for doors
74298	Clamp—Dial clamp (2 required)
X1968	Cloth—Grille cloth for Model 9W101
X1973	Cloth—Grille cloth for Model 9W103
X1953	Cloth—Grille cloth for blonde instruments for Model 9W105
X1897	Cloth—Grille cloth for mahogany or walnut instruments for Model 9W105
74209	Cover—Mounting screw cover for RP168A record changer (3 required)
*74275	Decal—Control panel decal for limed oak instruments for Model 9W103
*74274	Decal—Control panel decal for mahogany or walnut instruments for Models 9W101 & 9W103
*74281	Decal—Control panel decal for blonde instruments for Model 9W105
*74280	Decal—Control panel decal for mahogany or walnut instruments for Model 9W105
71788	Decal—Trade mark decal (RCA Victor) for Model 9W101
74273	Decal—Trade mark decal (Victrola) for Models 9W101 and 9W103
71810	Decal—Trade mark decal (RCA Victor) for Model 9W105
71966	Decal—Trade mark decal (Victrola) for Model 9W105
*74203	Dial—Glass dial scale for Models 9W101 and 9W103
*74204	Dial—Glass dial scale for Model 9W105
73180	Emblem—"RCA Victor" emblem for Model 9W103
11689	*Grommet—Rubber grommet for front apron* chassis (2 required)
72856	Grommet—Rubber grommet for mounting RP178 record changer (3 required)
73903	Hinge—Cabinet door hinge (1 set)
72824	Knob—Tone control or selector switch knob—brown—for blonde or limed oak instruments
71822	Knob—Tone control or selector switch knob—maroon—for mahogany or walnut instruments
72800	Knob—Tuning or volume control knob—brown—for blonde or limed oak instruments
71821	Knob—Tuning or volume control knob—maroon—for mahogany or walnut instruments
11785	*Lamp—Dial or jewel lamp*—Mazda 51
*74300	Loop—Antenna loop complete for Model 9W105
73896	Loop—Antenna loop complete for Models 9W101 and 9W105
73109	Nut—Tee nut for mounting RP178 record changer (3 required)
74208	Nut—Tee nut for mounting RP-168A-1 record changer (3 required)
73771	Pull—Door pull for *record storage compartment door or* radio compartment door for Model 9W105
*74276	Pull—Door pull for Model 9W103
*74239	Pull—Door pull for Model 9W101
*74277	Pull—Record changers' drawer pull for Model 9W105
30868	Plug—2 contact female plug for motor cable
30870	Plug—2 prong male plug for motor cable
73184	Runner—Record changer motorboard runner—R.H.—for RP178 changer—Model 9W105
73183	Runner—Record changer motorboard runner—L.H.—for RP178 changer—Model 9W105
*74271	Runner—Record changer motorboard runner—R.H.—for RP168A-1 changer
*74272	Runner—Record changer motorboard runner—L.H.—for RP168A-1 changer
73110	Screw—#¼-20 x 1¾" fillister head screw for mounting RP178 record changer—Model 9W105
*74278	Screw—#8-30 x ¾" trimit head screw for record changers' drawer pull for Model 9W105
*74424	Screw—#8-32 x 1¾" special screw for mounting RP-168A-1 record changer (3 required)
*74269	Screw—#8-32 x ¾" trimit head screw for door pull (2 required) for Model 9W101
74113	Screw—#8-32 x 1" trimit head screw for door pull for Model 9W103
*74279	Screw—#8-32 x ⅞" trimit head screw for door pull for record storage compartment door and radio compartment door for Model 9W105
*74421	Spring—Conical spring for mounting RP-168A-1 record changer—upper—R.H. side (1 required)
*74422	Spring—Conical spring for mounting RP-168A-1 record changer—upper—L.H. side (2 required)
*74423	Spring—Conical spring for mounting RP-168A-1 record changer—lower (3 required)
30900	Spring—Retaining spring for knobs
72936	Stop—Door stop
73185	Stop—Metal stop for motorboard runners (2 required)
73182	Track—Record changer compartment track (for RP-168A-1 record changer) (2 required)

† Stock No. 72953 is a reel containing 250 feet of cord.

* This is the first time that this Stock No. has appeared in Service Data.

RADIO CORP. OF AMERICA

MODEL 75ZU, CHASSIS RC-1063A

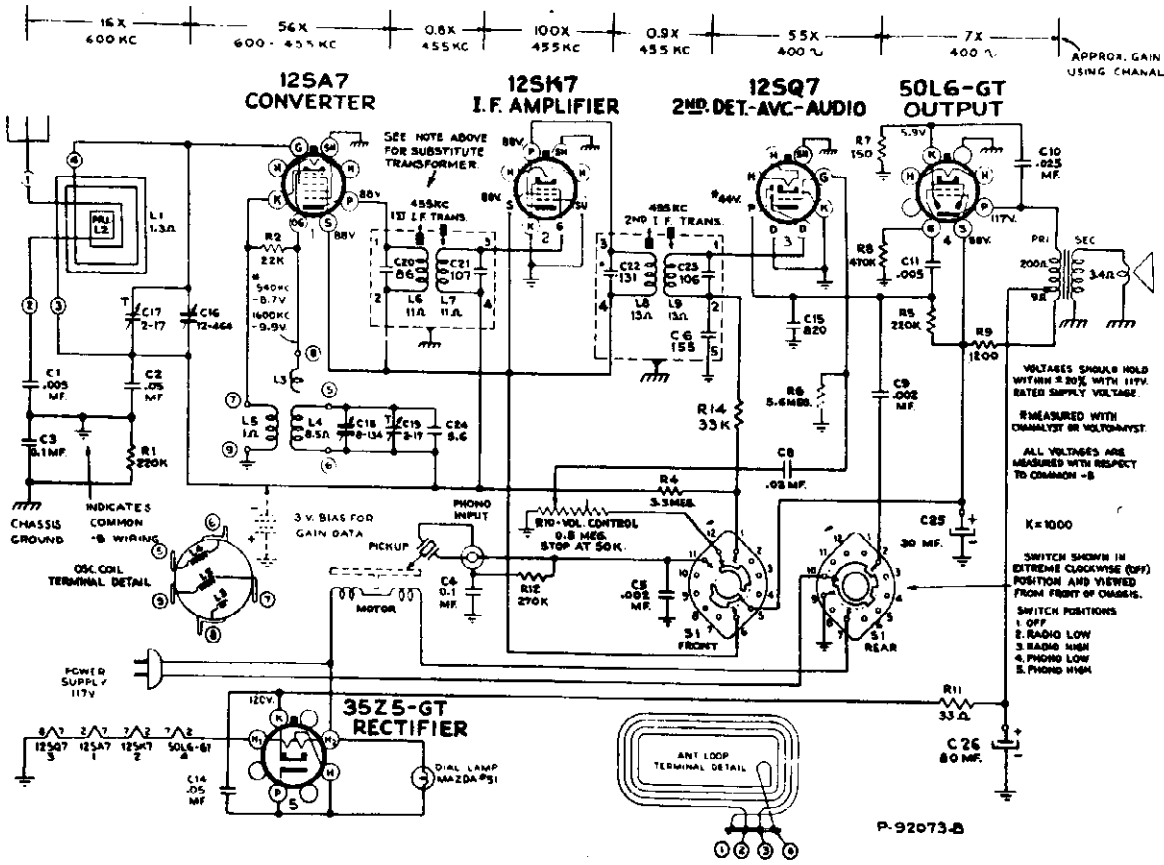

Replacement Parts

STOCK No.	DESCRIPTION
	CHASSIS ASSEMBLIES
	RC 1063A
70407	Button—Plug button to cover holes for i-f transformers adjustment
70997	Capacitor—Ceramic, 5.6 mmf. (C24)
39650	Capacitor—Mica, 820 mmf. (C15)
70601	Capacitor—Tubular, .002 mfd., 400 volts (C5, C9)
70606	Capacitor—Tubular, .005 mfd., 400 volts (C1, C11)
70612	Capacitor—Tubular .025 mfd. 400 volts (C10)
70611	Capacitor—Tubular .02 mfd. 400 volts (C8)
70615	Capacitor—Tubular .05 mfd. 400 volts (C2, C14)
70617	Capacitor—Tubular, 0.1 mfd., 400 volts (C3, C4)
72312	Capacitor—Electrolytic, comprising 1 section of 30 mfd., 150 volts, and 1 section of 80 mfd., 150 volts (C25, C26)
70403	Coil—Oscillator coil (L3, L4, L5)
*73056	Condenser—Variable tuning condenser and drive drum (C16, C17, C18, C19)
*73057	Control—Volume control (R10)
70392	Cord—Power cord and plug
72953	Cord—Drive cord (approx. 38" overall length required)
*73063	Dial—Dial scale
70397	Gear—Power, radio and phono switch gear
*73014	Gear—Volume control gear—less spring
72283	Grommet—Rubber grommet to mount tuning condenser (3 required)
*73059	Indicator—Station selector indicator
*73010	Loop—Antenna loop complete (L1, L2)
*73055	Plate—Dial back plate less dial
30868	Plug—2 contact female plug for motor cable
*73060	Pulley—Station selector indicator pulley
72313	Resistor—Wire wound, 33 ohms, ¼ watt (R11)
	Resistor—Fixed composition, 150 ohms, ±10%, ½ watt (R7)
	Resistor—Fixed composition, 1200 ohms ±10%, 1 watt (R9)
	Resistor—Fixed composition, 22,000 ohms ±20%, ½ watt (R2)
	Resistor—Fixed composition, 33,000 ohms ±20%, ½ watt (R14)
	Resistor—Fixed composition, 220,000 ohms ±20%, ½ watt (R1, R5)
	Resistor—Fixed composition, 470,000 ohms ±20%, ½ watt (R8)
	Resistor—Fixed composition, 3.3 megohms ±20%, ½ watt (R4)
	Resistor—Fixed composition, 5.6 megohms ±10%, ½ watt (R6)
*73058	Shaft—Tuning knob shaft
*73062	Socket—Lamp socket
35787	Socket—Phono input socket
37605	Socket—Tube socket
70390	Spring—Drive cord tension spring
*73061	Spring—Station selector indicator pulley retaining spring
70396	Spring—Volume control gear tension spring
70394	Switch—Power, radio and phono switch (S1)
73036	Transformer—First I.F. transformer (L6, L7, C20, C21)
73037	Transformer—Second I.F. transformer (L8, L9, C6, C22, C23)
72296	Transformer—Output transformer (T1)
33726	Washer—"C" washer for tuning knob shaft
	SPEAKER ASSEMBLIES
	922258-2
71058	Speaker—4" x 6" P.M. speaker complete with cone and voice coil
	MISCELLANEOUS
71105	Cable—Shielded pickup cable for use with RP-178 record changer
72437	Cable—Shielded pickup cable for use with 960276 record changer
*73077	Crystal—Vinylite dial crystal
X1661	Cloth—Grille cloth
*72894	Foot—Rubber foot (4 required)
*72856	Grommet—Rubber grommet to mount record changer (3 required for RP-178) (4 required for 960276)
72692	Hinge—Lid hinge
*73064	Knob—Power, radio and phono switch knob
*73065	Knob—Tuning knob
*73078	Knob—Volume control knob
11765	Lamp—Dial lamp
73109	Nut—T nut for mounting record changer (3 required for RP-178) (4 required for 960276)
73110	Screw—¼-20 x 1¾ fillister head machine screw for mounting RP-178 record changer (3 required)
73234	Screw—¼-20 x 1½ oval head machine screw for mounting 960276 record changer (4 required)
14270	Spring—Retaining spring for knobs
71824	Stud—Stud and screw to mount one lid hinge
*73067	Support—Lid support

* THIS IS THE FIRST TIME THIS STOCK NUMBER HAS APPEARED IN SERVICE DATA.

MODEL 752U,
CHASSIS RC-1063A

RADIO CORP. OF AMERICA

Alignment Procedure

CAUTION.—CLOSE TUNING CONDENSER PLATES COMPLETELY (C-C-W) BEFORE REMOVING CHASSIS FROM CABINET.

Take off both wooden strips on bottom of cabinet by removing wood screws before loosening chassis bolts.

CRITICAL LEAD DRESS.—

1. All heater wires should be dressed close to chassis.
2. Dress lead from switch to phono jack close to chassis and away from power cord.
3. Dress capacitor between 12SQ7 grid and terminal board away from chassis and away from other parts.
4. Dress lead from arm of volume control to terminal board against front apron and away from other leads.
5. In instrument assembly the lead from the rear section of gang to loop shall be dressed away from chassis and other wires to loop.

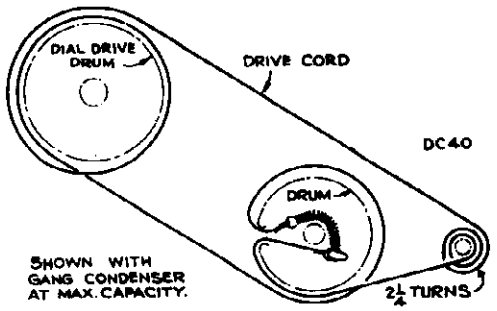

Test Oscillator.—Connect high side of test oscillator as shown in chart. Connect low side through a .01 mf. capacitor to common "—B." Keep the output signal as low as possible to avoid a.v.c. action.

Speaker and Dial Adjustment.—If the speaker should require replacement or if the position of the speaker mounting bracket is disturbed, reposition as follows:

Mount speaker on bracket, adjust bracket so that front edge of speaker extends ¾ inch in front of chassis base and tighten bracket screws.

Mount chassis on wood base with mounting screws loose, install in cabinet and push chassis forward until speaker contacts grille and then tighten chassis mounting screw. Adjust dial back plate mounting bracket so that the plate is parallel with cabinet.

The two wood buttons at the top of the dial back plate should be adjusted to provide the best illumination of the dial and pointer.

Output Meter.—Connect meter across speaker voice coil. Turn volume control clockwise to radio maximum high position (3) for alignment.

Dial Pointer Adjustment.—Rotate tuning condenser fully counter-clockwise (plates fully meshed). Adjust indicator pointer to position illustrated on front page.

Steps	Connect the high side of test-oscillator to—	Tune test-osc. to—	Turn radio dial to—	Adjust the following for max. peak output
1	I.F. grid, in series with .01 mfd.	455 kc	Quiet point 600 kc end of dial	L8 and L9 2nd I.F. transformer
2	1st Det. grid in series with .01 mfd.			L6 and L7 *1st I.F. transformer
NOTE.—ANTENNA LOOP AND RECORD CHANGER MUST BE IN CABINET FOR STEPS 3, 4 AND 5				
3	Antenna terminal in series with 220 mmfd.	1600 kc	160	C18 (osc.)
4	Radiated signal	1400 kc	Signal frequency	C17 (ant.)
5	Repeat steps 3 and 4.			

* Do not readjust L8 or L9 when test oscillator is connected to 1st Det.

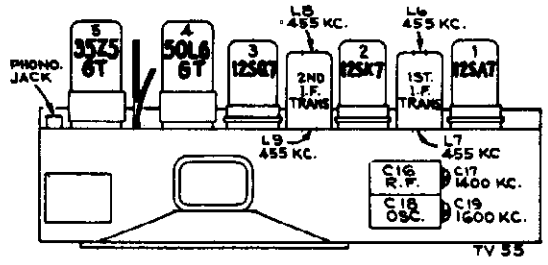

1st I.F. Trans. Substitution.—The first I.F. transformer may differ from that shown in the schematic diagram. Transformers stamped 970441-1 are as shown in the schematic. Transformers stamped 970441-5 are connected as follows: term. #4 to plate of 12SA7, term. #3 to B+, term. #1 to grid of 12SK7, term. #2 to A.V.C. The d-c resistance of each winding is 16 ohms. The primary capacitor C20 is 131 mmf., the secondary capacitor is 106 mmf.

Electrical and Mechanical Specifications

Frequency Range ..... 540-1,600 kc
Intermediate Frequency ..... 455 kc
Tube Complement
(1) RCA Radiotron 12SA7 ..... Converter
(2) RCA Radiotron 12SK7 ..... I-F Amplifier
(3) RCA Radiotron 12SQ7 ..... 2nd Det., A.V.C., and A-F Amplifier
(4) RCA Radiotron 50L6GT ..... Power Output
(5) RCA Radiotron 35Z5GT ..... Rectifier
Pilot Lamp ..... Mazda No. 51, 6-8 volts, 0.2 amp.
Power Output
Undistorted ..... 1.5 watts
Maximum ..... 2.4 watts
Loudspeaker
Type 922258-2 ..... "PM" 4 x 6 inch elliptical
V.C. Impedance ..... 3.4 ohms at 400 cycles
Power Supply Rating
105-125 volts, A-C, 60 cycles ..... 60 watts

IMPORTANT: Do not plug instrument into a d-c supply.

Access to dial lamp may be obtained by removing sloping panel in record changer compartment.

	Height	Width	Depth
Cabinet dimensions (inches)	10¼	17¼	19
Chassis overall (inches)	9	14	6¼
Chassis base (inches)	1⅝	14	3¾
Tuning Drive Ratio			11:1

Phonograph
Type ..... RP-178 or Type 960276-1
Record Capacity ..... Twelve 10-in., Ten 12-in.
Turntable Speed ..... 78 r.p.m.
Type Pickup ..... Crystal

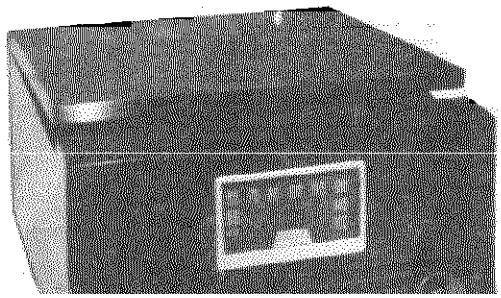

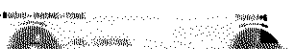

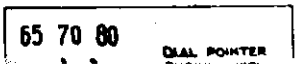

RADIO CORP. OF AMERICA

MODEL 77V1,
CHASSIS RC-615

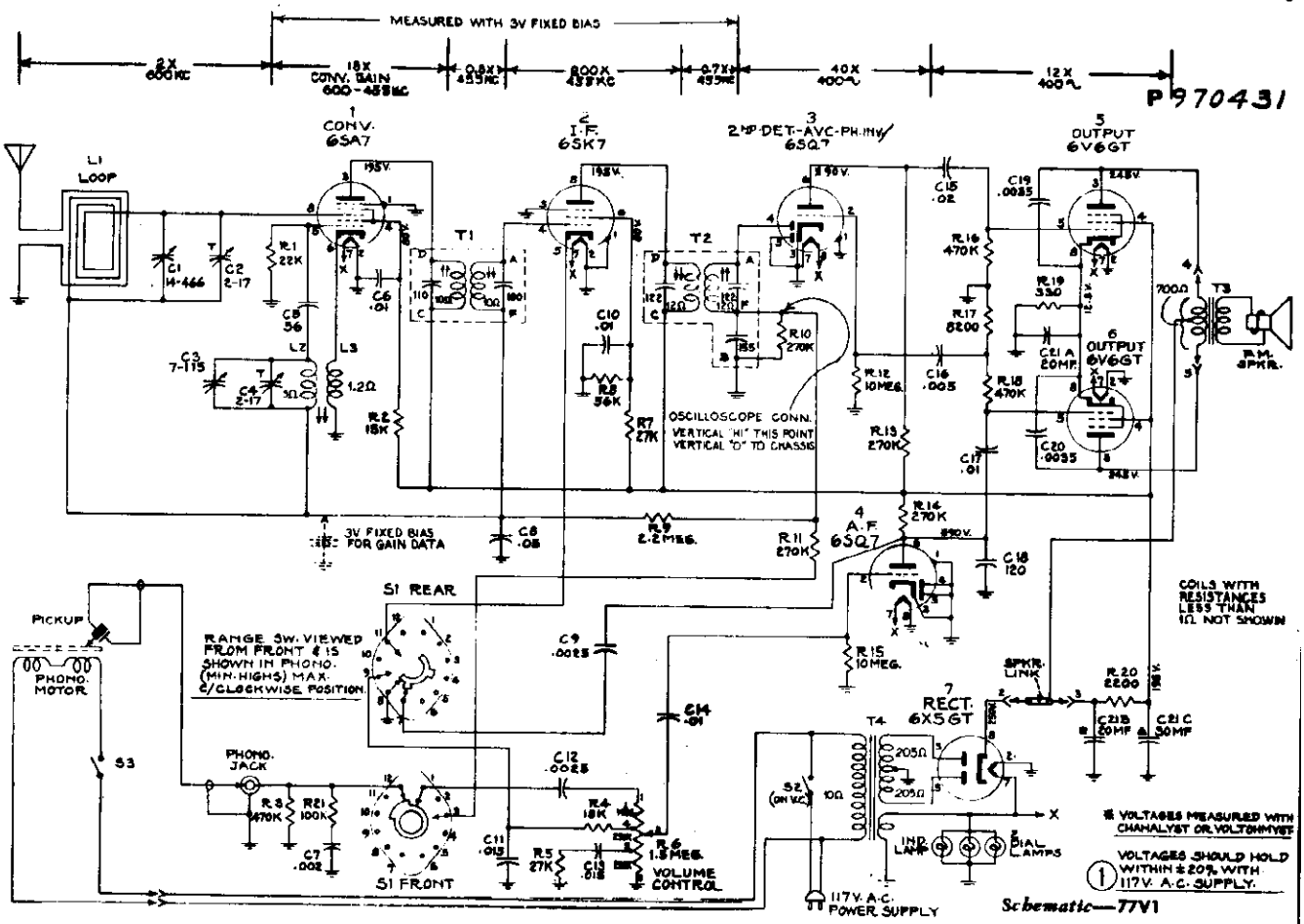

Schematic—77V1

Replacement Parts

STOCK No.	DESCRIPTION
	CHASSIS ASSEMBLIES RC 615
*70137	Bracket—Dial bracket—L.H.—complete with drive cord pulley
*70136	Bracket—Dial bracket—R.H.—complete with drive cord pulley
71924	Capacitor—Ceramic, 56 mmf. (C5)
71614	Capacitor—Ceramic, 120 mmf. (C18)
70602	Capacitor—Tubular, .0025 mfd., 400 volts (C9, C12)
70646	Capacitor—Tubular, .0035 mfd., 1000 volts (C19, C20)
70601	Capacitor—Tubular, .002 mfd., 400 volts (C7)
70606	Capacitor—Tubular, .005 mfd., 400 volts (C14, C16)
70572	Capacitor—Tubular, .015 mfd., 400 volts (C13)
70610	Capacitor—Tubular, .01 mfd., 400 volts (C6, C10, C17)
70611	Capacitor—Tubular, .02 mfd., 400 volts (C11, C15)
70615	Capacitor—Tubular, .05 mfd., 400 volts (C8)
71976	Capacitor—Electrolytic, comprising 1 section of 20 mfd., 450 volts; 1 section of 30 mfd., 350 volts; and 1 section of 20 mfd., 25 volts (C21A, C21B, C21C)
*70133	Coil—Oscillator coil (L2, L3)
*70139	Condenser—Variable tuning condenser (C1, C2, C3, C4)
70342	Control—Volume control and power switch (R6, S2)
72953	Cord—Drive cord (approx. 49" overall length)
70930	Grommet—Rubber grommet to mount variable condenser (3 required)
71608	Indicator—Station selector indicator
*70138	Plate—Dial back plate
30868	Plug—2 contact female plug for Motor cable
12493	Plug—5 contact female plug for speaker cable
72602	Pulley—Drive cord pulley
	Resistor—Fixed composition, 330 ohms, ±10%, 1 watt (R19)
	Resistor—Fixed composition, 2200 ohms, ±10%, 2 watts (R20)
	Resistor—Fixed composition, 8200 ohms, ±10%, ½ watt (R17)
	Resistor—Fixed composition, 15,000 ohms, ±10%, 2 watts (R2)
	Resistor—Fixed composition, 18,000 ohms, ±10%, ½ watt (R4)
	Resistor—Fixed composition, 22,000 ohms, ±10%, ½ watt (R1)
	Resistor—Fixed composition, 27,000 ohms, ±10%, ½ watt (R5, R7)
	Resistor—Fixed composition, 56,000 ohms, ±10%, ½ watt (R8)
	Resistor—Fixed composition, 100,000 ohms, ±10%, ½ watt (R21)
	Resistor—Fixed composition, 270,000 ohms, ±10%, ½ watt (R10, R11, R13, R14)
	Resistor—Fixed composition, 470,000 ohms, ±10%, ½ watt (R3, R16, R18)
	Resistor—Fixed composition, 2.2 megohms, ±20%, ½ watt (R9)
	Resistor—Fixed composition, 10 megohms, ±20%, ½ watt (R12, R15)

STOCK No.	DESCRIPTION
*70135	Shaft—Tuning knob shaft
31364	Socket—Lamp socket
35787	Socket—Phono input socket
31251	Socket—Tube socket
31418	Spring—Drive cord tension spring
*70134	Switch—Range switch (S1)
70128	Transformer—First I. F. transformer (T1)
70129	Transformer—Second I. F. transformer (T2)
70127	Transformer—Power transformer, 117 volt, 60 cycles (T4)
35969	Washer—"C" Washer for tuning shaft
	SPEAKER ASSEMBLIES 92569-1W RL 103-1
13867	Cap—Dust cap
36145	Cone—Cone and voice coil assembly
71560	Plug—5 prong male plug for speaker
71961	Speaker—12" P.M. speaker complete with cone and voice coil less output transformer and plug
71145	Suspension—Metal cone suspension
37899	Transformer—Output transformer (T3)
	NOTE: If stamping on speaker in instrument does not agree with above speaker number, order replacement parts by referring to model number of instrument, number stamped on speaker and full description of part required.
	MISCELLANEOUS
71599	Bracket—Lamp bracket
13103	Cap—Pilot lamp jewel
*70142	Clamp—Dial clamp (1 set)
X1668	Cloth—Grille cloth
*73084	Decal—Control panel decal
71966	Decal—Trade mark decal (Victrola)
71910	Decal—Trade mark decal (RCA-Victor)
*70141	Dial—Glass dial scale
71764	Hinge—Cabinet lid hinge
71822	Knob—Range switch knob
71821	Knob—Tuning or volume control knob
11765	Lamp—Dial or pilot lamp
*70140	Loop—Antenna loop complete (L1)
71815	Mounting—One set of hardware consisting of four (4) springs, two (2) "C" washers and two (2) rubber washers to mount record changer
30900	Spring—Retaining spring for knobs
*73080	Support—Cabinet lid support—L.H.
*73083	Support—Cabinet lid support—R.H.

© John F. Rider

MODEL 77V1,
CHASSIS RC-615

RADIO CORP. OF AMERICA

Alignment Procedure

Output Meter Alignment.—If this method is used, connect the meter across the voice coil, and turn the receiver volume control to maximum.

Test Oscillator.—For all alignment operations, connect the low side of the test-oscillator to the receiver chassis, and keep the oscillator output as low as possible to avoid a-v-c action.

Steps	Connect high side of test oscillator to—	Tune test oscillator to—	Turn radio dial to—	Adjust the following for maximum peak output
1	6SK7 grid in series with .01 mfd.	455 kc.	Broadcast Quiet Point at 550 kc. end of dial	Pri. and Sec. (2nd I-F Trans.)
2	6SA7 grid in series with .01 mfd.			Pri. and Sec. (1st I-F Trans.)
3	Primary lead on loop in series with 200 mmfd.	1,400 kc.	1,400 kc.	C4 (osc.) C2 (ant.)
4		600 kc.	600 kc.	L2 (osc.) Rock gang
5		Repeat steps 3 and 4		

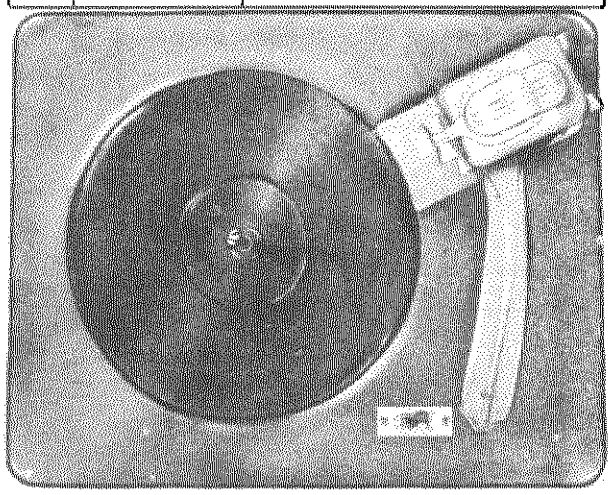

Automatic Record Changer

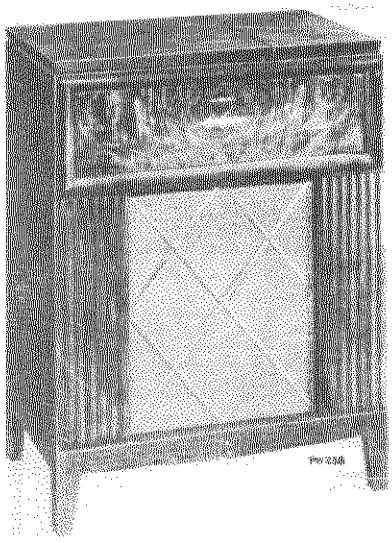

Model 77V1

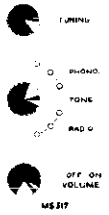

Controls

Circuit Description

The receiver is a seven tube superheterodyne employing push-pull power unit. AVC is applied to the converter and i-f tubes. The broadcast band utilizes a standard loop antenna.

Critical Lead Dress:

1. Dress speaker cable leads down next to chassis.
2. Dress output plate capacitors next to chassis.
3. Dress plate lead of output tube away from grid of audio amplifier.
4. Dress all a-c leads away from volume control down next to chassis.
5. Dress lead from top tap of volume control to range-tone switch along front apron of chassis.
6. Dress R12 and R15 down near chassis base.

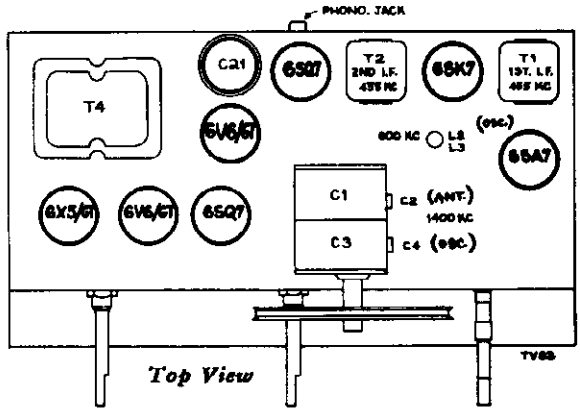

Top View

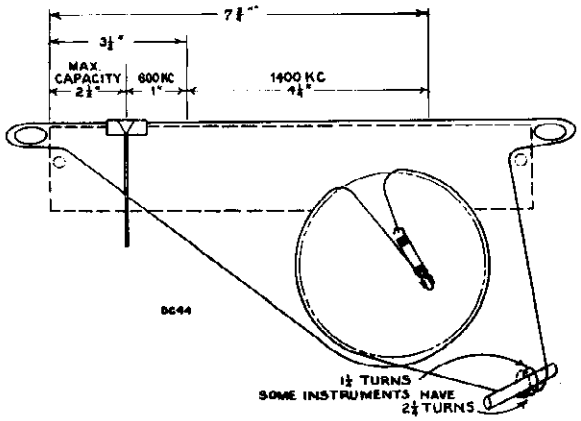

Dial Indicator and Drive Mechanism

Frequency Ranges
Standard Broadcast "A" ..... 540-1,600 kc

Intermediate Frequency ..... 455 kc

Tube Complement
(1) RCA-6SA7 ..... 1st Det., Oscillator
(2) RCA-6SK7 ..... I-F Amplifier
(3) RCA-6SQ7 ..... 2nd Det., A. V. C. and Phase Inverter
(4) RCA-6SQ7 ..... A-F Amplifier
(5) RCA-6V6GT ..... Power Output
(6) RCA-6V6GT ..... Power Output
(7) RCA-6X5GT ..... Rectifier

Power Supply Rating (including Phono Motor)
105-125 volts, 60 cycles ..... 95 watts

Pilot Lamps ..... (2) Mazda No. 51, 6-8 volts, 0.2 amp.

Compartment Lamp ..... (1) Mazda No. 51, 6-8 volts, 0.2 amp.

Loudspeaker
Electrodynamic 92569-1W
Size 12-inch
V. C. impedance at 400 cycles ..... 2.2 ohms

Power Output Rating
Undistorted ..... 5 watts
Maximum ..... 5.5 watts

Phonograph
Type ..... Automatic 960260-1
Record Capacity ..... Twelve 10-in., Ten 12-in.
Turntable ..... 78 r.p.m. type
Type Pickup ..... Crystal
Motor Power consumption (115 v., 60 cycles) ..... 30 watts

Tuning Drive Ratio 16:1

© John F. Rider

RADIO CORP. OF AMERICA

MODEL 77V2, CHASSIS RC-606C

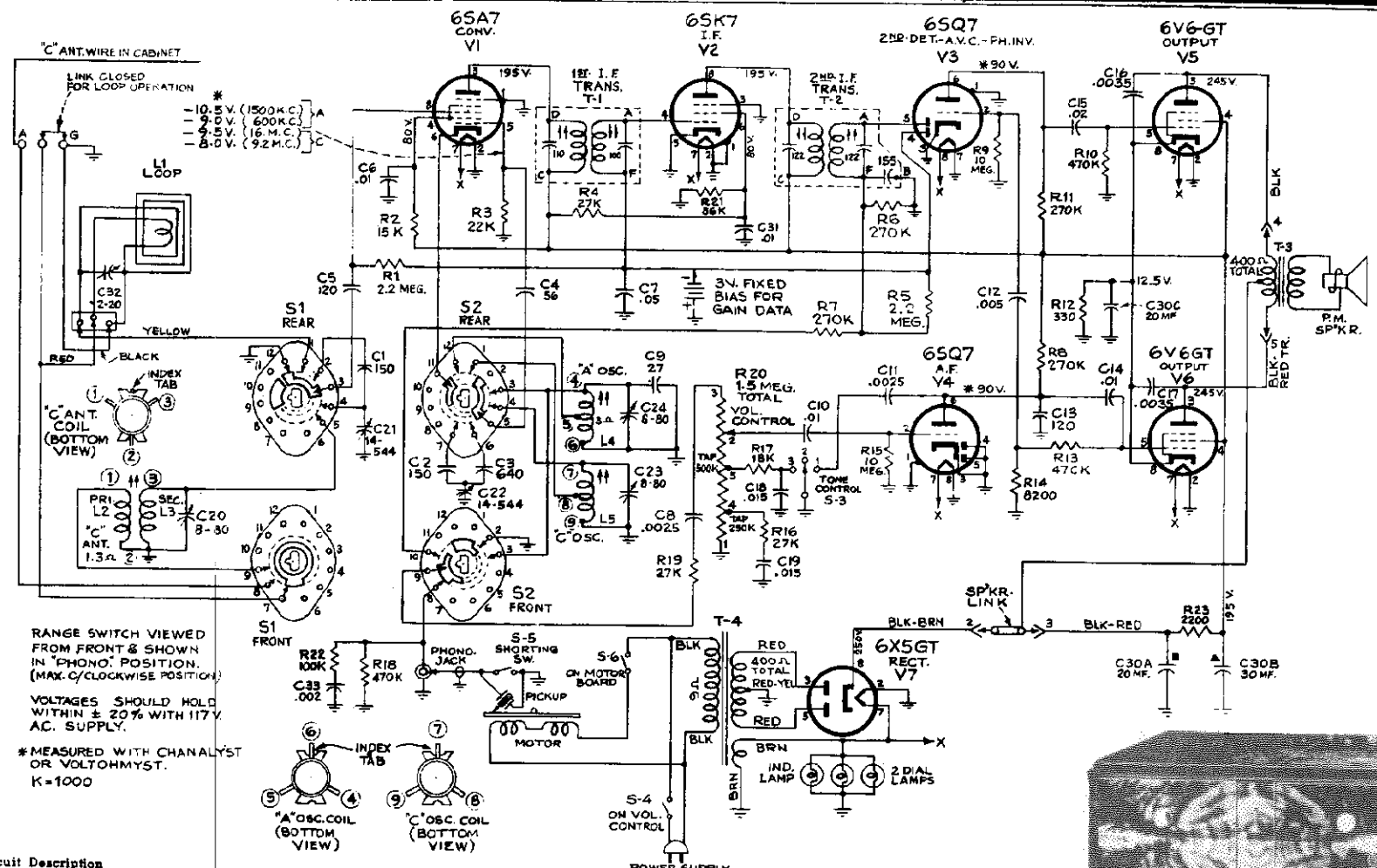

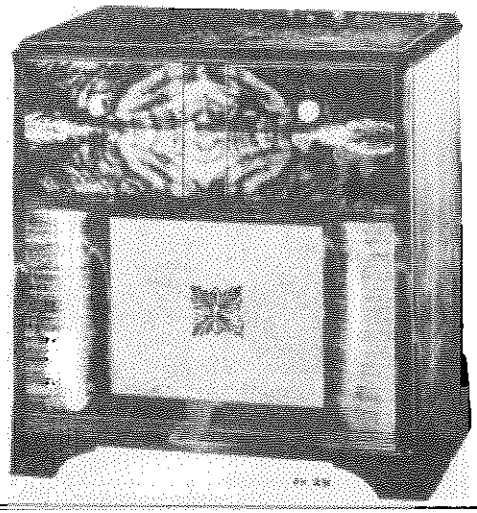

Circuit Description

The receiver is a **seven tube superheterodyne** employing push-pull power output. **AVC is applied to the converter and i-f tubes. The broadcast band utilizes a standard loop antenna, and the short wave antenna is a wire tacked in the cabinet.**

Frequency Ranges

Standard Broadcast "A"	540-1,600 kc
Short Wave "C"	9.2-16 mc
Intermediate Frequency	455 kc

Tube Complement

(1) RCA-6SA7	1st Det., Oscillator
(2) RCA-6SK7	I-F Amplifier
(3) RCA-6SQ7	2nd Det., A. V. C. and Phase Inverter
(4) RCA-6SQ7	A-F Amplifier
(5) RCA-6V6-GT	Power Output
(6) RCA-6V6-GT	Power Output
(7) RCA-6X5-GT	Rectifier

Power Supply Rating (Including Phono Motor)

105-125 volts, 60 cycles	85 watts
Pilot Lamps	(2) Mazda No. 51, 6-8 volts, 0.2 amp.
Compartment Lamp	(1) Mazda No. 55, 6-8 volts, 0.4 amp.

Loudspeaker

92569-1	12 in. P. M.
V. C. impedance at 400 cycles	2.2 ohms

Power Output Rating

Undistorted	5 watts
Maximum	5.5 watts

Record Changer

Type	960260-1
Record Capacity	Twelve 10-in., Ten 12-in.
Turntable Speed	78 r.p.m.
Type Pickup	Crystal

CLARI-SKEMATIX
Registered Trademark

MODEL 77V2, CHASSIS RC-606C

RADIO CORP. OF AMERICA

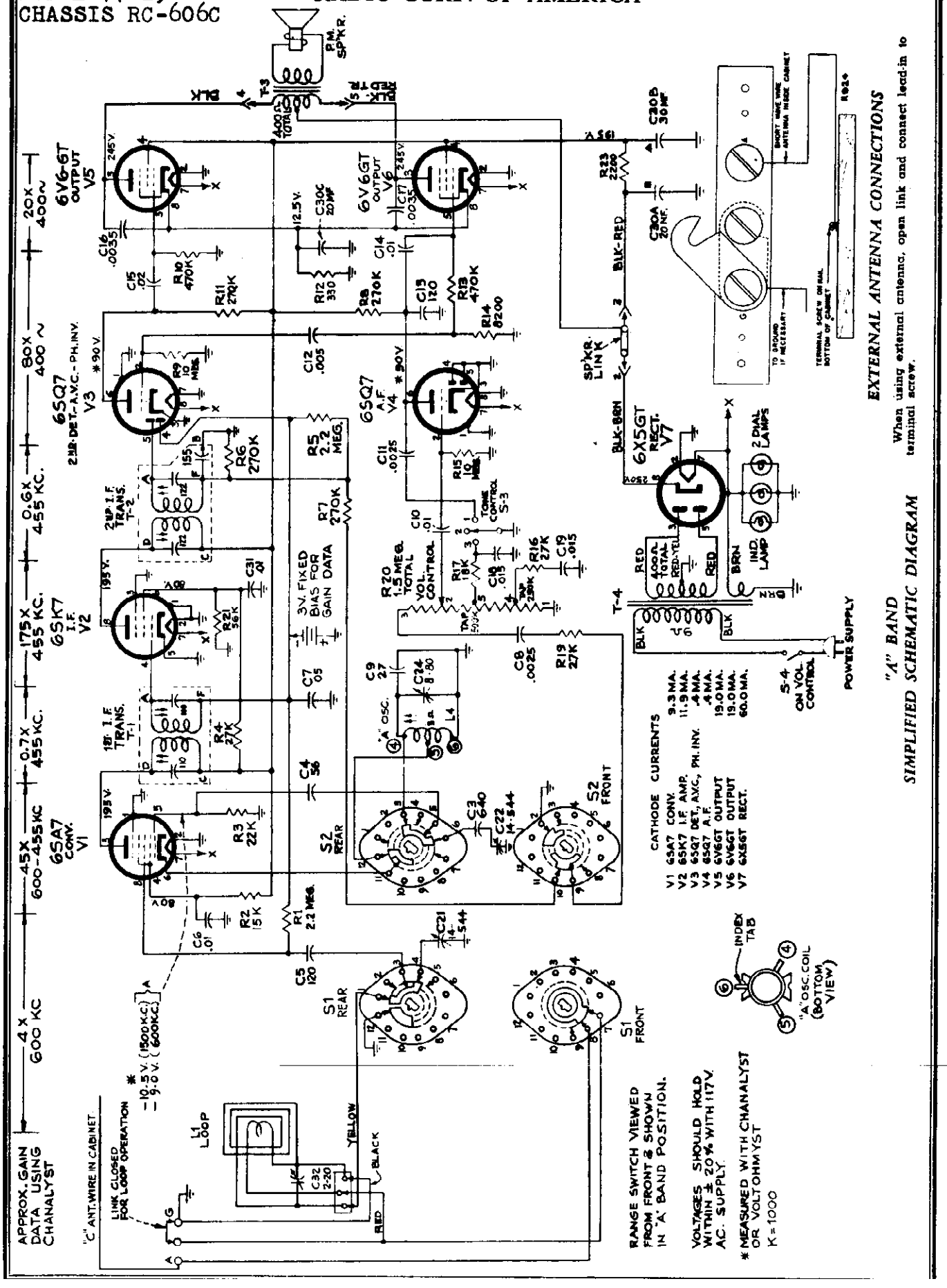

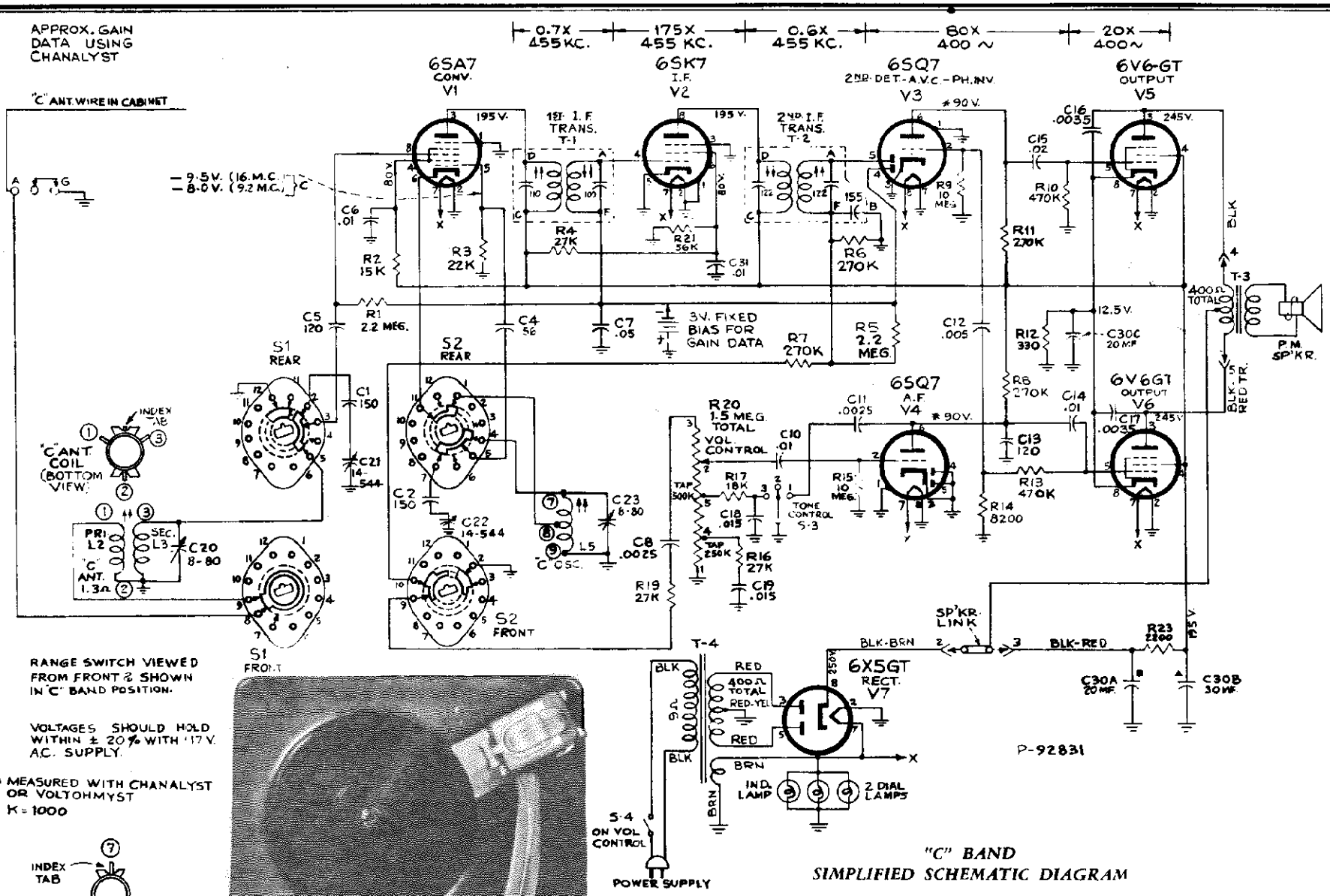

"C" BAND
SIMPLIFIED SCHEMATIC DIAGRAM

RECORD CHANGER--TOP VIEW

MODEL 77V2,
CHASSIS RC-606C

RADIO CORP. OF AMERICA

Alignment Procedure

Output Meter Alignment.—If this method is used, connect the meter across the voice coil, and turn the receiver volume control to maximum.

Test Oscillator.—For all alignment operations, connect the low side of the test-oscillator to the receiver chassis, and keep the oscillator output as low as possible to avoid a-v-c action

Calibration Scale.—The dial scale printed in this service note may be temporarily attached to the chassis for quick reference during alignment.

Using Printed Dial Scale.—

1. Cut out the printed dial scale, or make a tracing of the scale.
2. With gang at full mesh the pointer should be set to the second reference mark from the left hand end of the dial backing plate.
3. Place the printed dial scale or the tracing under the pointer so that the extreme left scale graduations coincide with the pointer. Use scotch tape to hold the dial scale in place.

Note. It is not recommended that the glass dial scale in the cabinet be removed as an alignment reference. This glass dial scale is fastened to the bezel with sheet metal lugs bent over the scale to hold it in place. Removing the glass dial scale will necessitate bending the lugs, resulting in their weakening and subsequent breakage.

"C" Band Reception.—For best reception on "C" band with an outside antenna, adjust the trimmer screw of C20 on the antenna coil. Turn screw carefully with an insulated screwdriver (RCA Stock No. 31031) while the receiver is tuned to a station in the 31-meter band. If returning to internal antenna at any time, close the link on the center terminal and readjust "C" band antenna trimmer C20 for best reception on 31-meter band.

For additional information, refer to booklet, "RCA Victor Receiver Alignment."

Steps	Connect high side of test oscillator to—	Tune test oscillator to—	Turn radio dial to—	Adjust the following for maximum peak output
1	6SK7 grid in series with .01 mfd.	455 kc.	Broadcast Quiet Point at 550 kc. end of dial	Top and bottom T-1 (2nd I-F Trans.)
2	6SA7 grid in series with .01 mfd.			Top and bottom T-2 (1st I-F Trans.)
3	Yellow lead on loop in series with 200 mmfd. (link closed)	1,400 kc.	Broadcast 1400 kc.	C24 (osc.)
4		600 kc.	Broadcast 600 kc.	L4 (osc.) Rock gang
5		Repeat steps 3 and 4.		
6	Antenna terminal in series with 47 mmfd.	15.2 mc.	Short Wave 15.2 mc.	C23 (osc.)* C20 (ant.)
7		9.5 mc.	Short Wave 9.5 mc.	L5 (osc.) L3 (ant.)
8		Repeat steps 6 and 7		
9	Install and connect chassis in cabinet with link closed. Tune in a radiated signal of 1400 kc. on broadcast band and peak C32 on loop.			

* Use minimum capacity peak if two can be obtained. Check for selection of correct peak by tuning the receiver to approximately 14.3 mc., where a weaker signal should be received.

Oscillator tracks 455 kc. above signal on both bands.

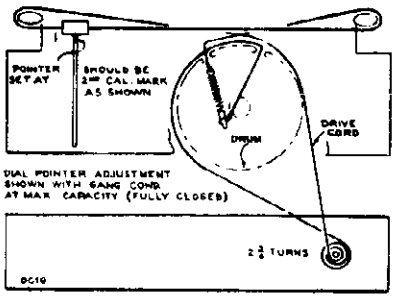

DIAL INDICATOR AND DRIVE MECHANISM

Critical Lead Dress:

1. Dress all A. C. leads away from volume control.
2. Dress lead from top tap of volume control to tone switch along front apron of chassis.
3. Dress R9 and R15 down near chassis base.

Note.—In order to remove the chassis from the cabinet, remove the knobs and the connecting cables, then unscrew the four slotted hex head screws from the two "L" brackets bolted to the rear of the chassis. The chassis may then be slid out toward the bottom rear of the cabinet. Do not remove the hinge screws or the two large nuts in the rear of the chassis. When replacing the chassis, make sure that the tapered pins on the front of the chassis fit into the holes on the metal runners attached to the cabinet door.

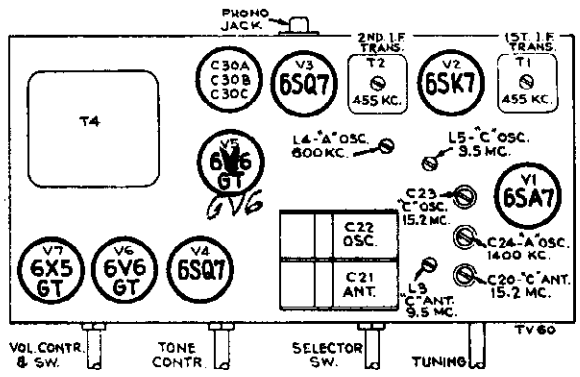

TOP VIEW

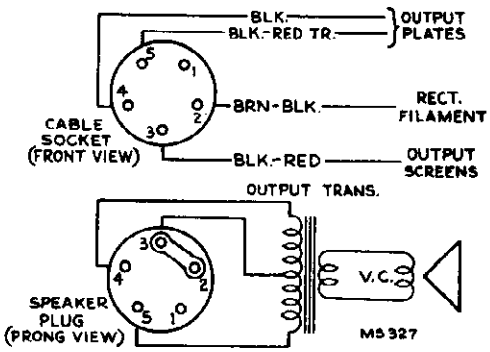

SPEAKER CONNECTIONS

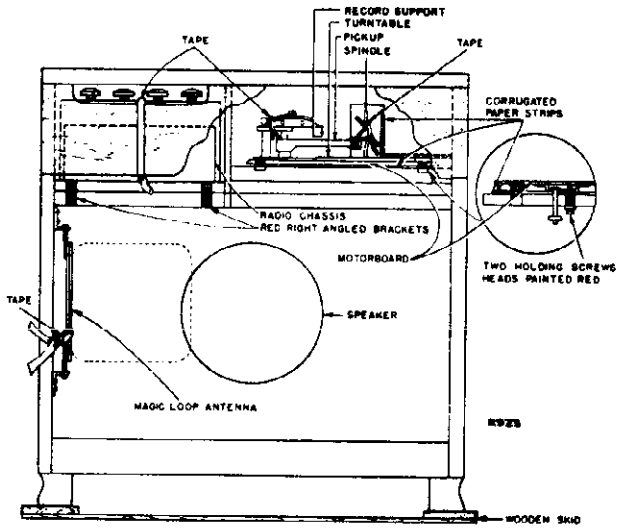

BACK VIEW

©John F. Rider

RADIO CORP. OF AMERICA

MODEL 77V2,
CHASSIS RC-606C

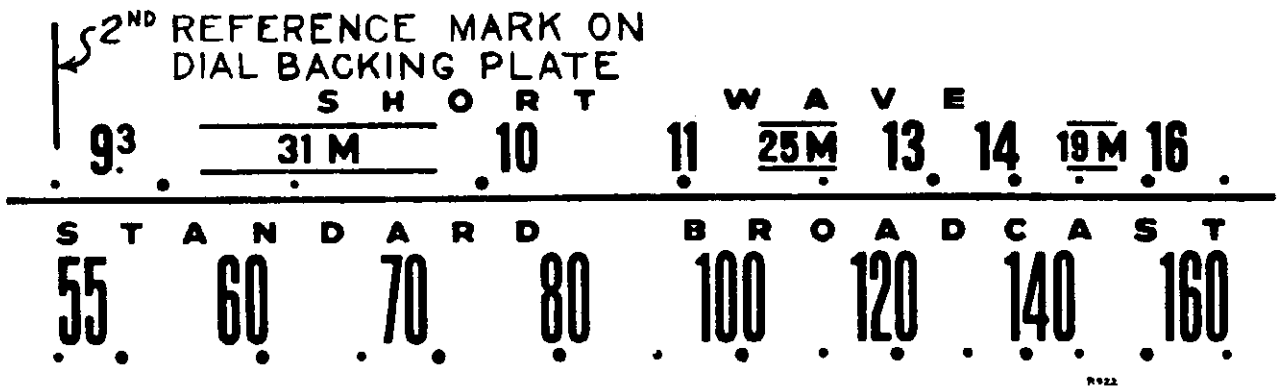

The dial scale drawing shown is a full size reproduction. It can be used as a reference in alignment procedure.

Replacement Parts

For Record Changer Parts refer to Service Data for Model 960260-1

STOCK No.	DESCRIPTION
	CHASSIS ASSEMBLIES (RC-606C)
71601	Board—"Ant. ground" board
71606	Bracket—Dial bracket with drive cord pulley (L. H.)
71605	Bracket—Dial bracket with drive cord pulley (R. H.)
71615	Capacitor—Ceramic, 27 mmf. (C9)
71924	Capacitor—Ceramic, 56 mmf. (C4)
71610	Capacitor—Mica trimmer, 3 sections 8-80 mmf. (C20, C23, C24)
71614	Capacitor—Ceramic, 120 mmf. (C5, C13)
39632	Capacitor—Silvered mica, 150 mmf. (C1, C2)
71613	Capacitor—Mica, 640 mmf. (C3)
70601	Capacitor—Tubular, .002 mfd., 400 volts (C33)
70602	Capacitor—Tubular, .0025 mfd., 400 volts (C8, C11)
70648	Capacitor—Tubular, .0035 mfd., 1000 volts (C16, C17)
70606	Capacitor—Tubular, .005 mfd., 400 volts (C12)
70610	Capacitor—Tubular, .01 mfd., 400 volts (C6, C10, C14, C31)
70572	Capacitor—Tubular, .015 mfd., 400 volts (C18, C19)
70611	Capacitor—Tubular, .02 mfd., 400 volts (C15)
70615	Capacitor—Tubular, .05 mfd., 400 volts (C7)
71976	Capacitor—Comprising 1 section 20 mfd. 450 volts, 1 section 30 mfd. 350 volts and 1 section 20 mfd. 25 volts (C30A, C30B, C30C)
71633	Coil—"A" band oscillator coil (L4)
71632	Coil—"C" band antenna coil (L2, L3)
71634	Coil—"C" band oscillator coil (L5)
71600	Condenser—Variable tuning condenser (C21, C22)
70342	Control—Volume control and power switch (R20, S4)
72953	Cord—Drive cord (approx. 45" overall length)
71609	Drum—Drive drum
72069	Grommet—Rubber grommet for rear mounting feet
70930	Grommet—Rubber grommet for mounting tuning condenser
71608	Indicator—Station selector indicator
71607	Plate—Dial back plate
38632	Plug—Pin plug for loop lead
12493	Plug—Speaker cable plug, 5 contact (female)
72802	Pulley—Drive cord pulley mounted on dial bracket
	Resistor—330 ohms, 1 watt (R12)
	Resistor—2,200 ohms, 2 watt (R23)
	Resistor—8,200 ohms, ½ watt (R14)
	Resistor—15,000 ohms, 2 watt (R2)
	Resistor—18,000 ohms, ½ watt (R17)
	Resistor—22,000 ohms, ½ watt (R3)
	Resistor—27,000 ohms, ½ watt (R4, R16, R19)
	Resistor—56,000 ohms, ½ watt (R21)
	Resistor—100,000 ohms, ½ watt (R22)
	Resistor—270,000 ohms, ½ watt (R6, R7, R8, R11)
	Resistor—470,000 ohms, ½ watt (R10, R13, R18)
	Resistor—2.2 megohms, ½ watt (R1, R5)
	Resistor—10 megohms, ½ watt (R9, R15)
71604	Shaft—Tuning shaft
35787	Socket—Input socket
30868	Socket—Motor cable socket, 2 contact (female)
31364	Socket—Pilot lamp socket
31251	Socket—Tube socket
31418	Spring—Indicator cord tension spring
71602	Switch—Range switch (S1, S2)
71603	Switch—Tone control switch (S3)

STOCK No.	DESCRIPTION
*70128	Transformer—First I-F transformer (T1)
*70129	Transformer—Second I-F transformer (T2)
*70127	Transformer—Power transformer, 117 volts, 60 cycles (T4)
35969	Washer—"C" washer for tuning shaft
	SPEAKER ASSEMBLIES 92569-1W—RL103-1
13867	Cap—Dust cap
36145	Cone—Cone and voice coil assembly
71560	Plug—5 prong male plug for speaker
71961	Speaker—12" PM speaker complete with cone and voice coil less output transformer and plug
71145	Suspension—Metal cone suspension
37899	Transformer—Output transformer (T3)
	NOTE: If stamping on speaker in instrument does not agree with above speaker number, order replacement parts by referring to model number of instrument, number stamped on speaker and full description of part required.
	MISCELLANEOUS
71819	Bracket—Door check mounting bracket
36461	Button—Plug button
38684	Capacitor—Mica trimmer, 2-20 mmf. (C32)
71820	Check—Radio compartment door check assembly less spring
X1638	Cloth—Grille cloth for walnut instruments
X1639	Cloth—Grille cloth for mahogany instruments
70547	Cover—Compartment lead cover
71769	Decal—Control function decal for walnut or mahogany instruments
71910	Decal—Trade mark decal (RCA Victor)
71966	Decal—Trade mark decal (Victrola)
71817	Dial—Glass dial scale
71816	Escutcheon—Dial scale escutcheon less dial
11889	Grommet—Rubber grommet to cushion chassis front apron (2 required)
72069	Grommet—Rubber grommet for mounting loop
71764	Hinge—Cabinet door hinge (2 required)
13103	Jewel—Pilot lamp cap
71822	Knob—Range switch or tone switch knob
71821	Knob—Volume control or tuning knob
5117	Lamp—Compartment lamp
11765	Lamp—Dial lamp
71813	Loop—Antenna loop complete (L1, C32)
71815	Mounting—One set of hardware to mount record changer—consisting of four springs, two spring washers and two rubber washers
*73187	Pull—Door pull
72324	Shade—Compartment lamp shade
36422	Socket—3 contact socket (female) for loop leads
71818	Spring—Door check spring
30900	Spring—Retaining spring for knobs
71765	Support—Cabinet lid support and hinge
71814	Washer—Rubber washer for door check

MODEL 96X5,
CHASSIS RC-490

RADIO CORP. OF AMERICA

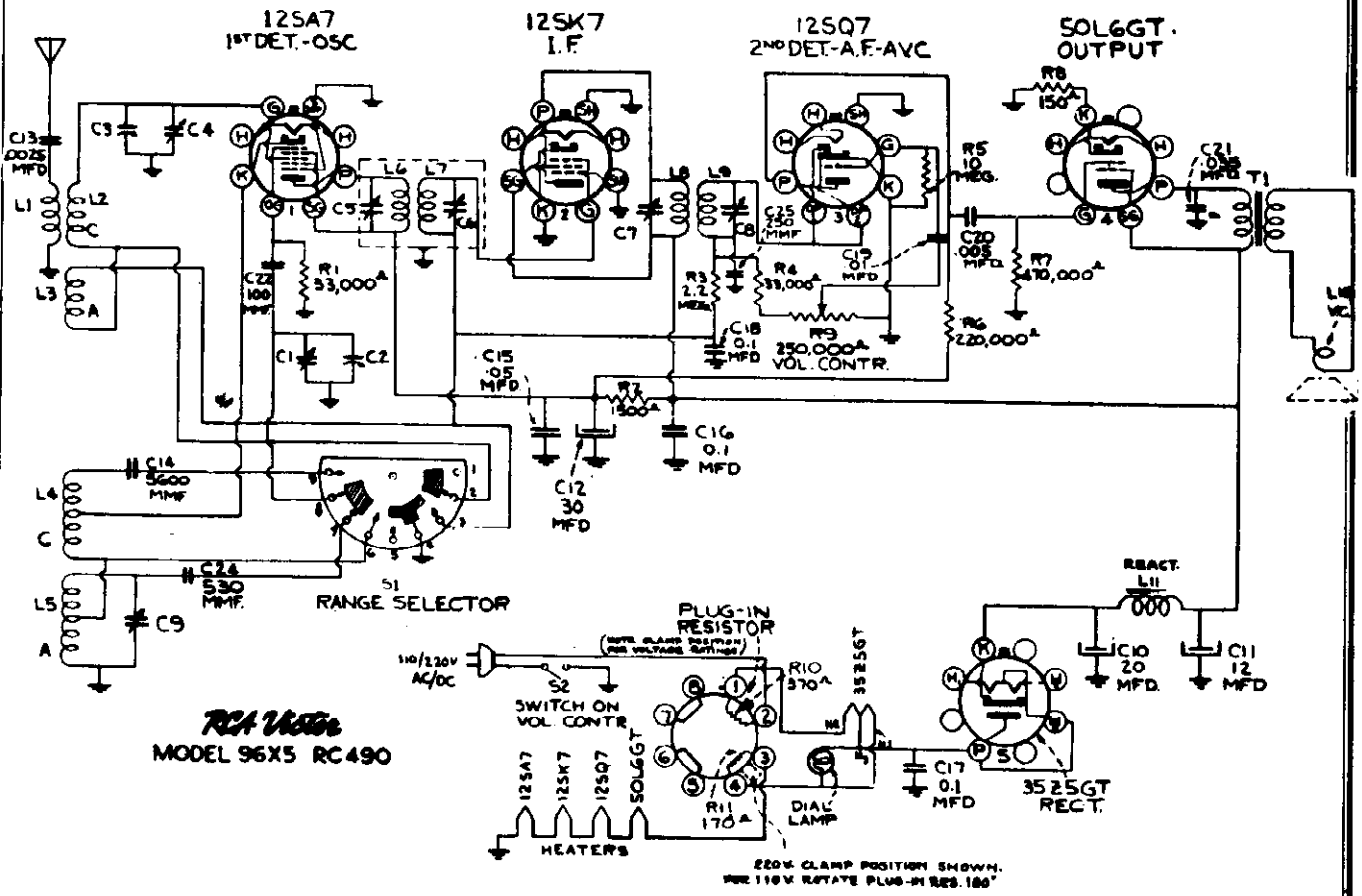

Replacement Parts

Insist on genuine factory-tested parts, which are readily identified and may be purchased from authorized dealers.

STOCK No.	DESCRIPTION
	CHASSIS ASSEMBLIES (RC-490)
34458	Ballast—Ballast resistor tube
34461	Capacitor—Electrolytic—comprising 1 section of 20 mfd. and 1 section of 12 mfd. (C10, C11)
31379	Capacitor—Trimmer — comprising 1 section of 3-30 mmfd. and 1 section of 2-15 mmfd.
12720	Capacitor—100 mmfd. (C22)
12488	Capacitor—270 mmfd. (C25)
32492	Capacitor—530 mmfd. (C24)
13895	Capacitor—5,600 mmfd. (C14)
34459	Capacitor—.0025 mfd. (C13)
33584	Capacitor—.005 mfd. (C20)
4937	Capacitor—.01 mfd. (C19)
5196	Capacitor—.035 mfd. (C21)
32787	Capacitor—.05 mfd. (C15)
4839	Capacitor—0.1 mfd. (C16, C17, C18)
34460	Capacitor—Electrolytic—comprising 1 section of 30 mfd. (C12)
31378	Coil—Antenna coil
34452	Coil—Oscillator coil
32536	Condenser—Variable tuning condenser
32545	Control—Volume control and power switch
32634	Cord—Indicator pointer drive cord
32266	Drum—Variable tuning condenser drive drum
32711	Indicator—Station selector pointer
11765	Lamp—Dial lamp
34497	Plate—Dial plate and pulleys assembled
32541	Pulley—Drive pulley
34458	Resistor—Ballast resistor tube

STOCK No.	DESCRIPTION
13428	Resistor—150 ohms, ½ watt (R8)
14499	Resistor—1,500 ohms, ½ watt (R2)
12454	Resistor—33,000 ohms, ½ watt (R1, R4)
12264	Resistor—220,000 ohms, ½ watt (R6)
12285	Resistor—470,000 ohms, ½ watt (R7)
12679	Resistor—2.2 megohm, ½ watt (R3)
13601	Resistor—10 megohm, ½ watt (R5)
4669	Screw—No. 8-32 square head set screw for drum, Stock No. 32266
31482	Screw—No. 8-32 square head set screw for pulley, Stock No. 32541
34454	Shaft—Tuning condenser drive shaft
31365	Socket—Dial lamp socket
31319	Socket—Tube socket
31418	Spring—Pointer drive cord spring
31615	Spring—Tuning condenser drive cord spring
34451	Switch—Range switch
34453	Transformer—First i-f transformer
32534	Transformer—Second i-f transformer
34458	Tube—Ballast resistor tube
2917	Washer—"C" washer for shaft, Stock No. 34454
34457	Washer—Spring washer for shaft, Stock No. 34454
	MISCELLANEOUS ASSEMBLIES
34483	Dial—Glass dial scale
31667	Escutcheon—Station selector escutcheon
31659	Knob—Tuning, range switch or volume control and power switch
31646	Spring—Retaining spring for knob, Stock No. 31659

©John F. Rider

RADIO CORP. OF AMERICA

MODEL 96X5,
CHASSIS RC-490

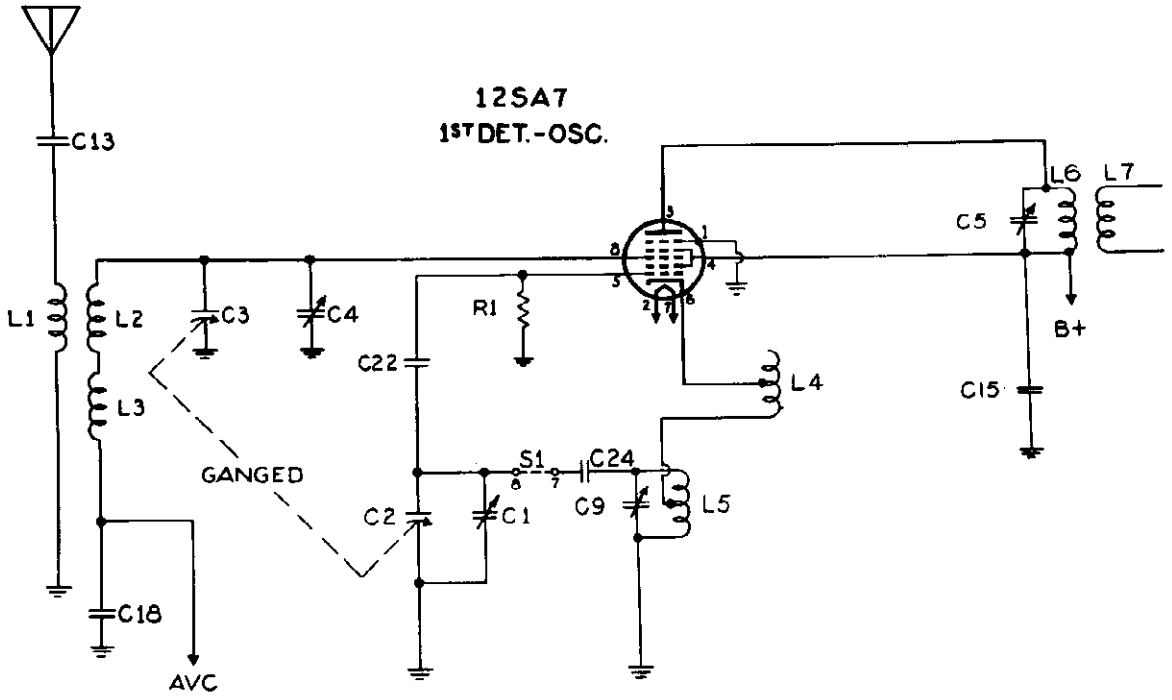

BAND-SWITCH SHOWN
AT 1ST POSITION.
BAND A

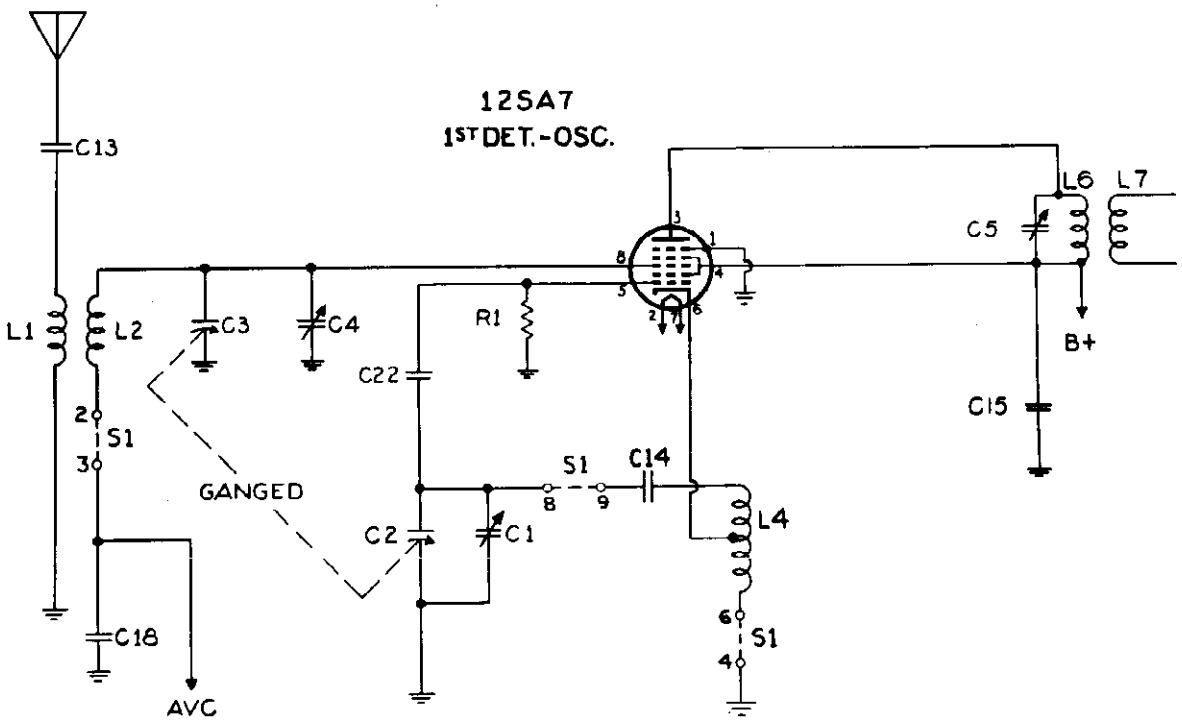

BAND-SWITCH SHOWN
AT 2ND POSITION.
BAND C

MODELS 610V, 610V2

RADIO CORP. OF AMERICA

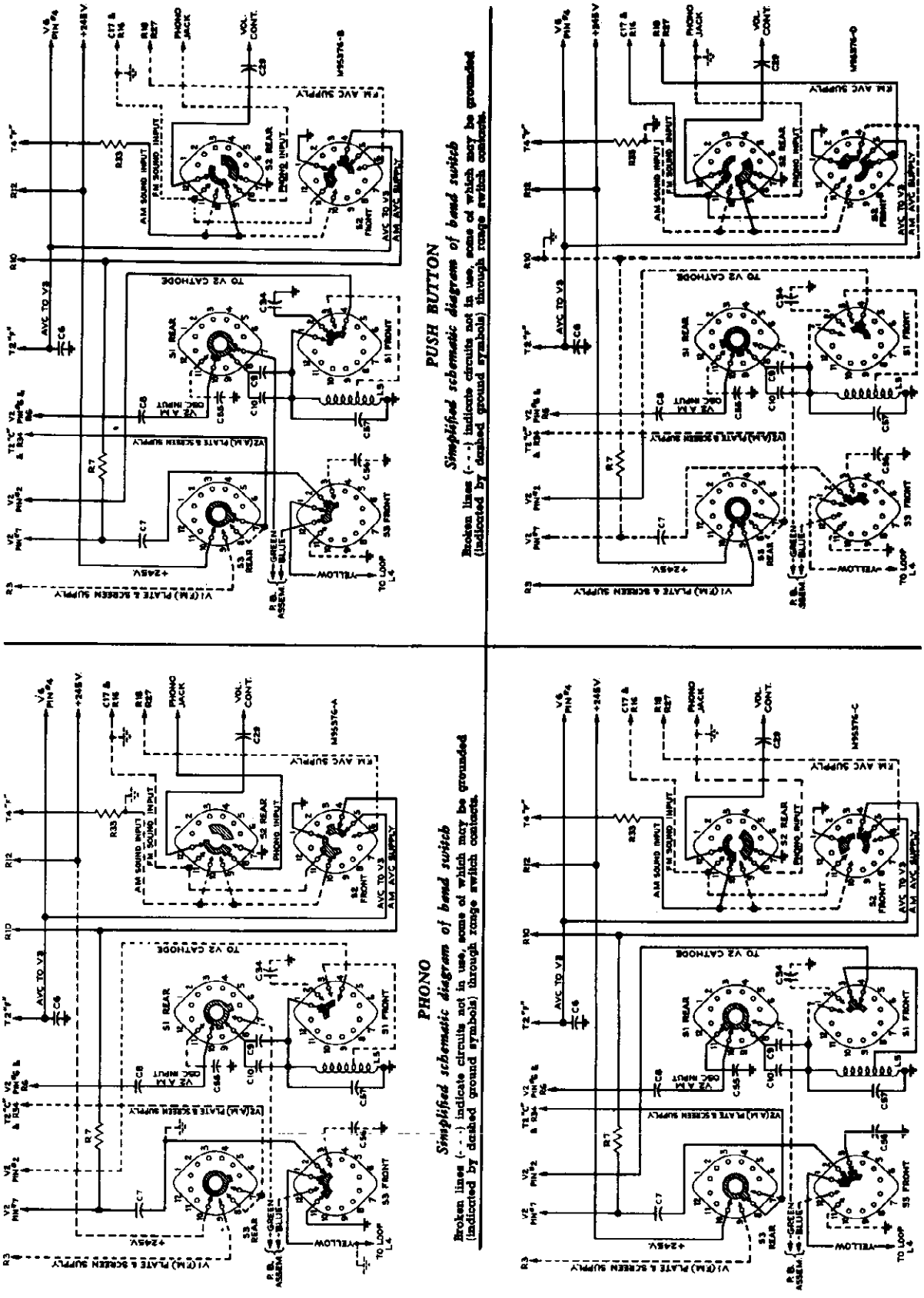

PUSH BUTTON

Simplified schematic diagram of band switch

Broken lines (- - -) indicate circuits not in use, some of which may be grounded (indicated by dashed ground symbols) through range switch contacts.

FM

Simplified schematic diagram of band switch

Broken lines (- - -) indicate circuits not in use, some of which may be grounded (indicated by dashed ground symbols) through range switch contacts.

PHONO

Simplified schematic diagram of band switch

Broken lines (- - -) indicate circuits not in use, some of which may be grounded (indicated by dashed ground symbols) through range switch contacts.

DIAL TUNING (BC)

Simplified schematic diagram of band switch

Broken lines (- - -) indicate circuits not in use, some of which may be grounded (indicated by dashed ground symbols) through range switch contacts.

RADIO CORP. OF AMERICA MODELS 610V1, CHASSIS RC-610C; 610V2, CHASSIS RC-610

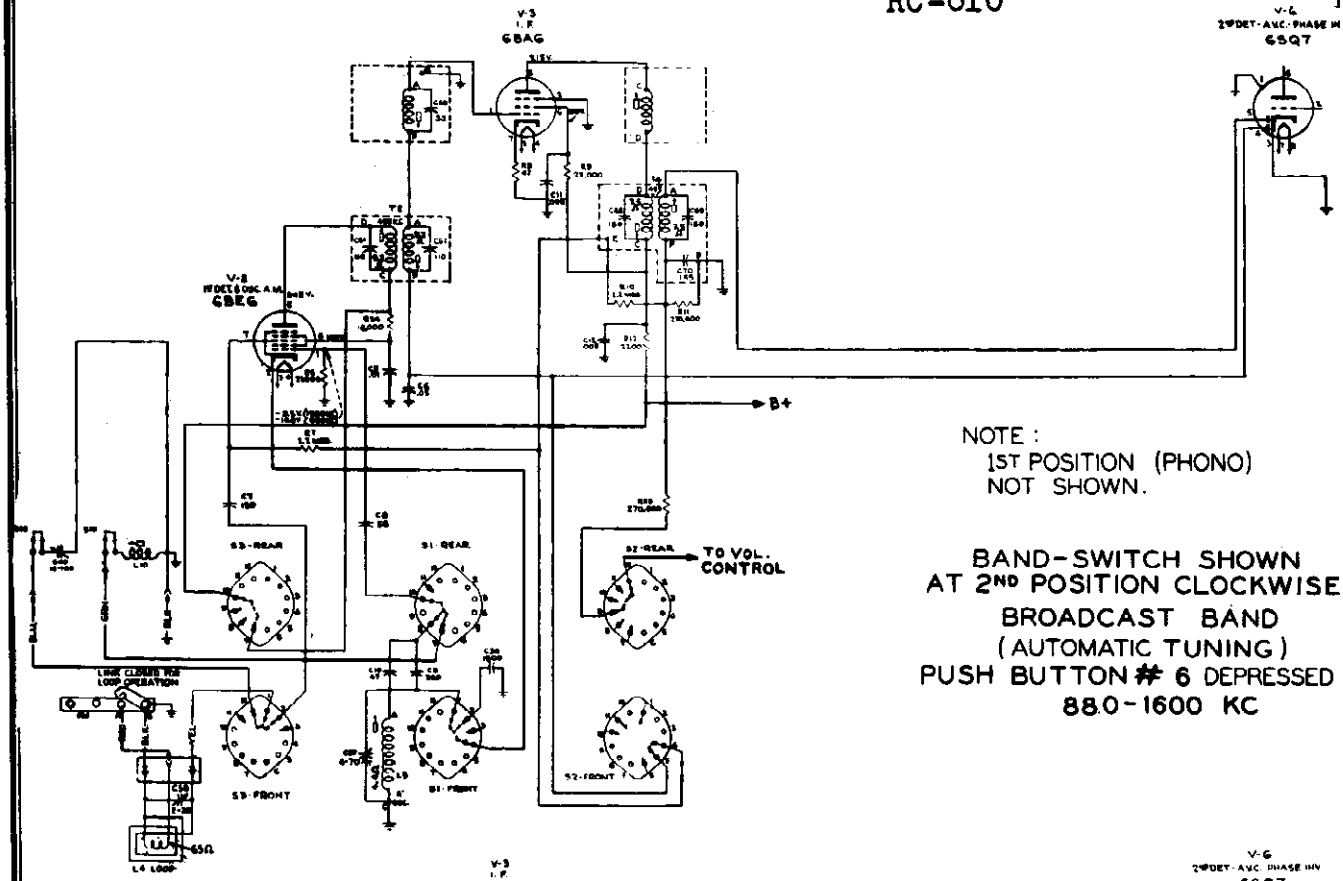

NOTE :
1ST POSITION (PHONO)
NOT SHOWN.

BAND-SWITCH SHOWN
AT 2ND POSITION CLOCKWISE
BROADCAST BAND
(AUTOMATIC TUNING)
PUSH BUTTON # 6 DEPRESSED
880-1600 KC

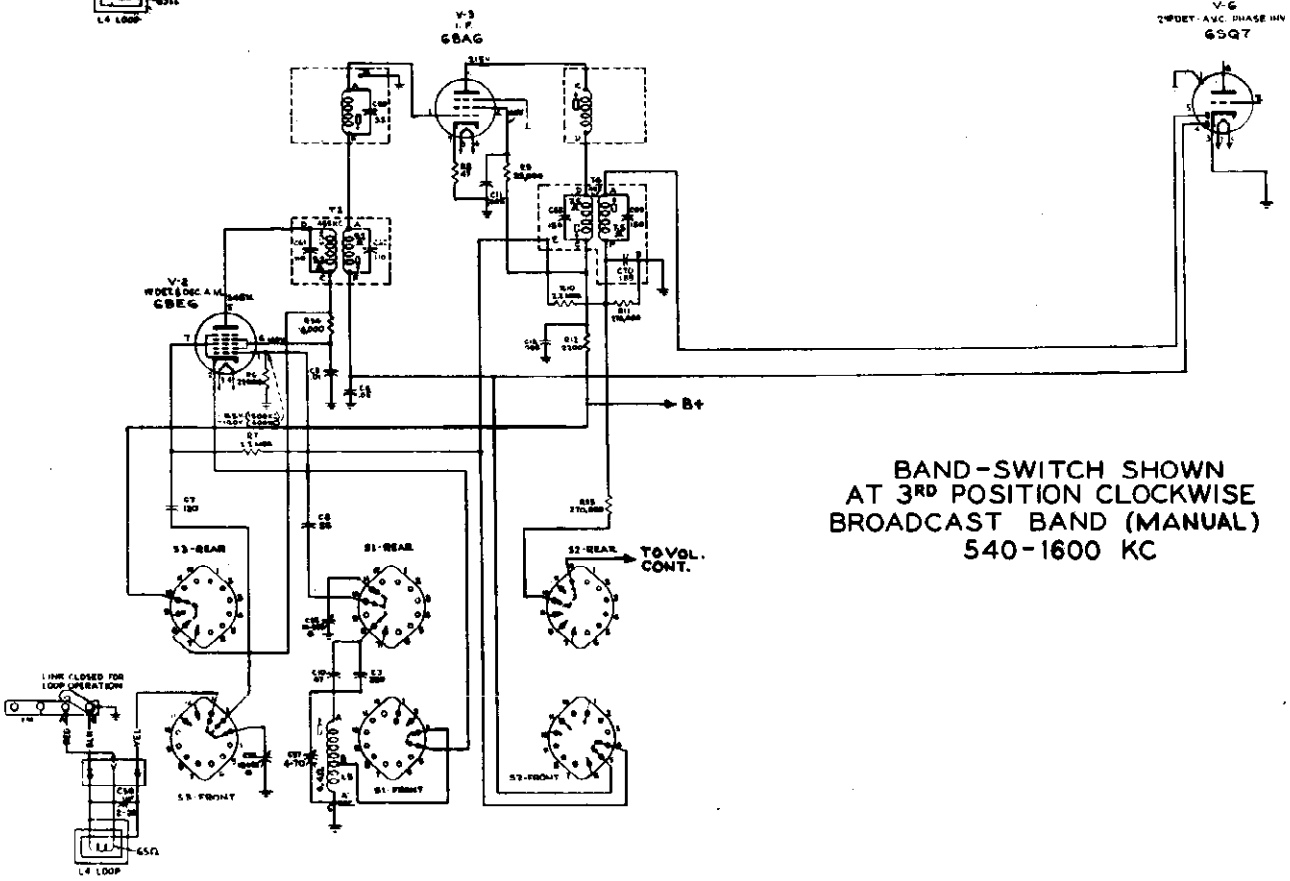

BAND-SWITCH SHOWN
AT 3RD POSITION CLOCKWISE
BROADCAST BAND (MANUAL)
540-1600 KC

© John F. Rider

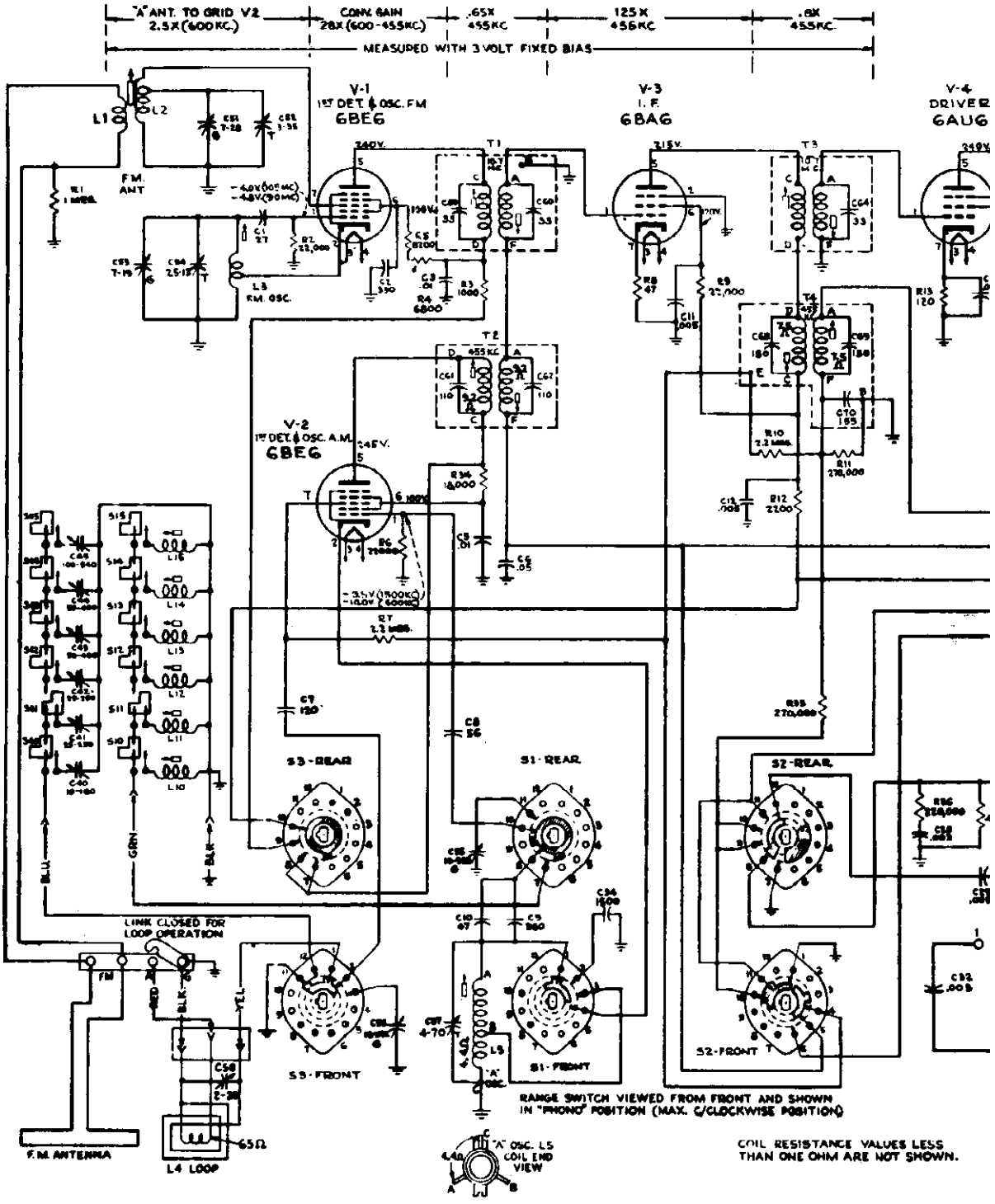

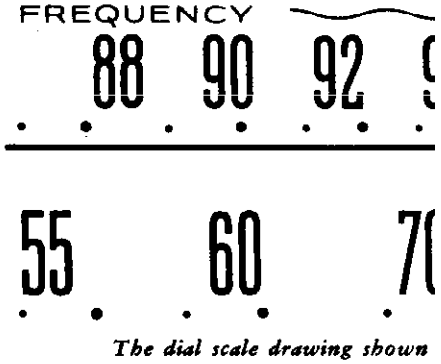

The dial scale drawing shown

Model 610V1 (RC-610C)

The schematic diagram of RC-610C chassis is similar to that shown above, the major difference being in the ratio detector circuit the schematic diagram of which is shown on page 3, in addition C59 of T1 (1st I.F. FM) is omitted, R13 is 68 ohms, R14 is 33,000 ohms, R18 is 1.5 megohms and C36 is .005 mfd.

©John F. Rider

MODELS 610V1, CHASSIS RC-610C;
610V2, CHASSIS RC-610

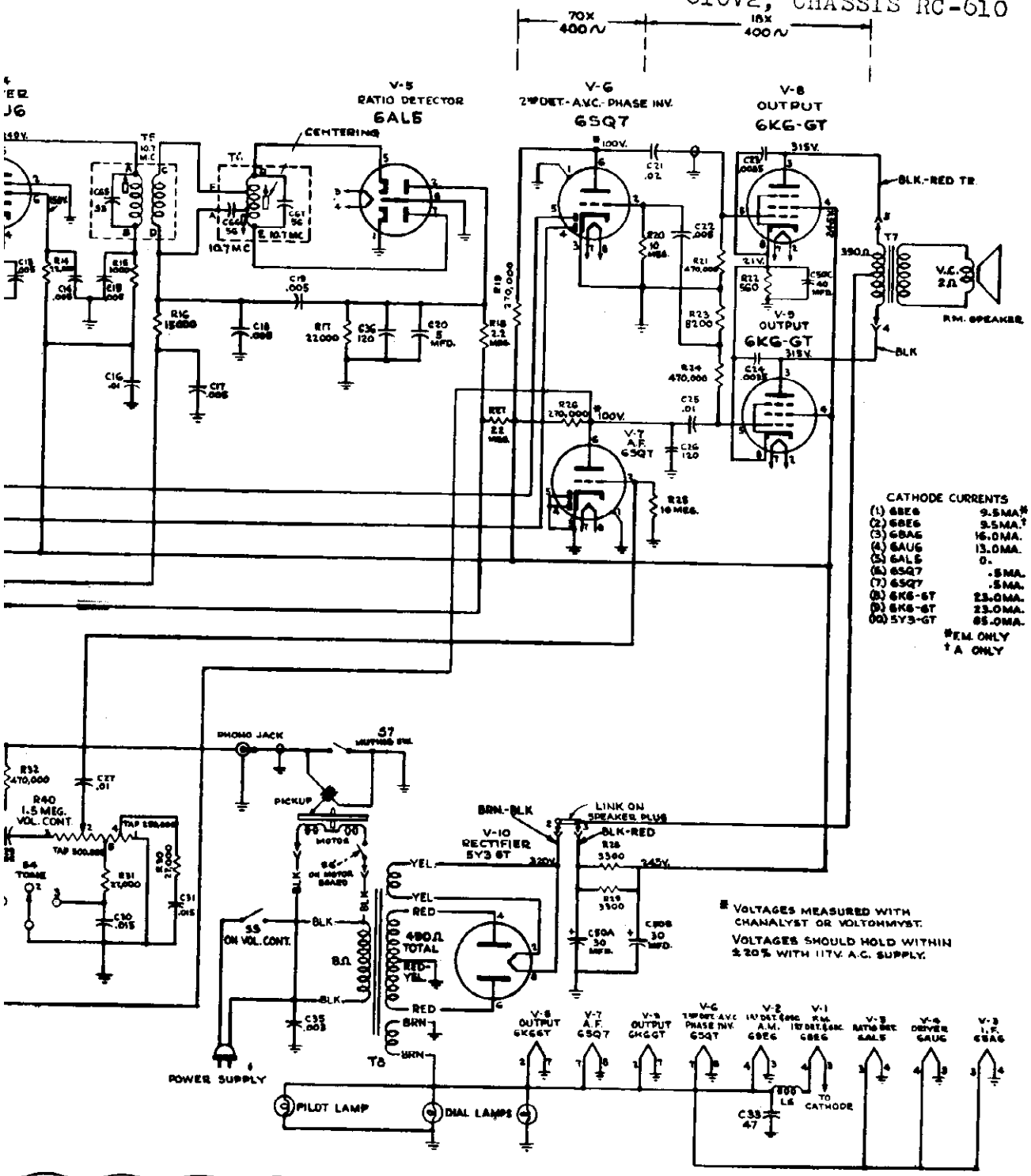

MODULATION

94 96 98 100 102 104 106 108

STANDARD

80 100 120 140 160

is a full size reproduction. It can be used as a reference in alignment procedure.

RECORD CHANGERS: Models 960001-5, 960001-6, RCD.CH. 15-1, C18-11

MODELS 610V1, CHASSIS RADIO CORP. OF AMERICA
RC-610C; 610V2, CHASSIS
RC-610

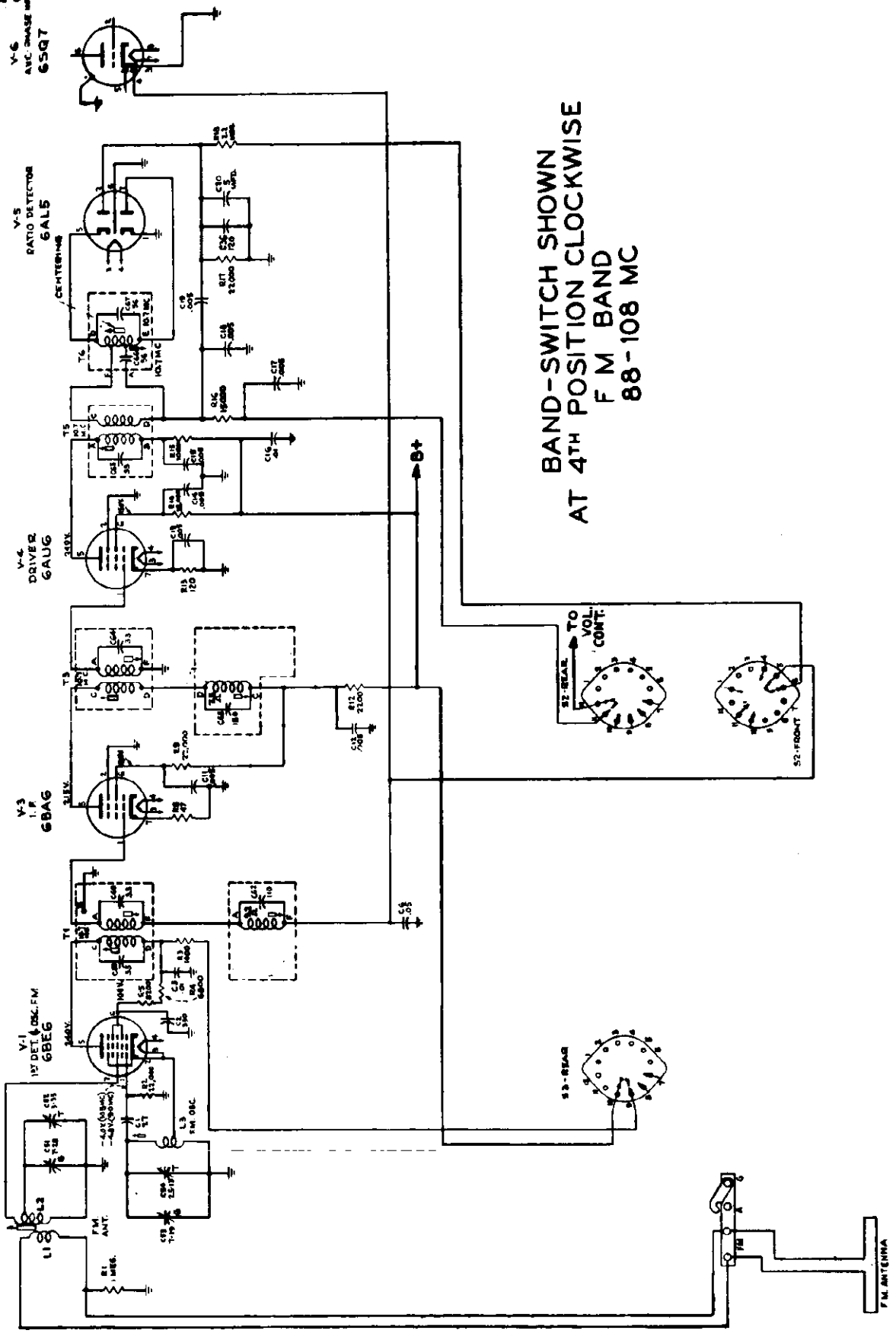

RADIO CORP. OF AMERICA MODELS 610V1, CHASSIS RC-610C; 610V2, CHASSIS RC-610

Electrical and Mechanical Specifications

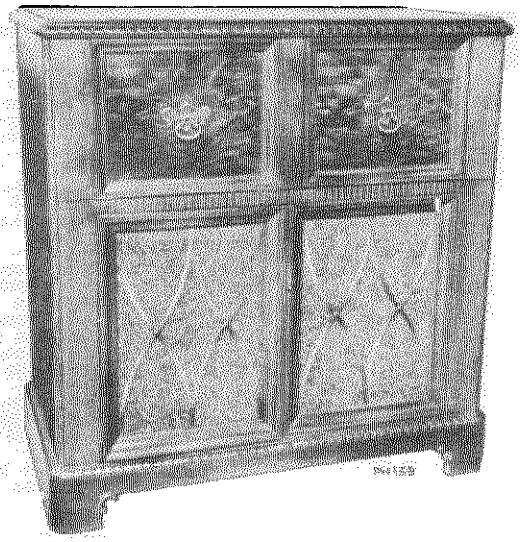

Model 610V1



Model 610V2

FREQUENCY RANGES

Standard Broadcast (BC)	540-1600 kc.
Frequency Modulation (FM)	88-108 mc.
Push Button Tuning (PB)	6 stations
1 Station	540-1030 kc.
2 Stations	610-1250 kc.
2 Stations	740-1430 kc.
1 Station	880-1600 kc.
Intermediate Frequency (AM)	455 kc.
Intermediate Frequency (FM)	10.7 mc.

TUBE COMPLEMENT

(1) RCA 6BE6	FM 1st Det.-Osc.
(2) RCA 6BE6	AM 1st Det.-Osc.
(3) RCA 6BA6	IF Amplifier
(4) RCA 6AU6	Driver
(5) RCA 6AL5	FM Ratio Detector
(6) RCA 6SQ7	AM 2nd Det.-AVC-Phase Inverter
(7) RCA 6SQ7	AF Amplifier
(8) RCA 6K6GT	Output
(9) RCA 6K6GT	Output
(10) RCA 5Y3GT	Rectifier

POWER OUTPUT

Undistorted	5 watts
Maximum	6.5 watts

LOUDSPEAKER

Type (92569-1)	12 inch PM
Voice Coil Impedance	2.2 ohms at 400 cycles

POWER SUPPLY RATING (including phono motor)

105-125 volts, 60 cycles ..... max. 116 watts

(This instrument can be converted to operate on 50 cycles.)

Pilot Lamps (3)	Mazda No. 51 6-8 volts 0.2 amp.
Tuning Drive Ratio	16.25:1

CABINET DIMENSIONS

	Height	Width	Depth
610V1	36"	35-1/16"	18"
610V2	36"	34-9/16"	17-5/8"

Antennas

Under conditions of normal field strength and interference, the RCA Victor antennas installed inside the cabinet will be effective for Frequency Modulation and Standard Broadcasts.

If reception is not satisfactory on one or both of the bands using the built-in cabinet antennas, one or two external antennas may be used. Connections are made to the antenna terminal board in the back of the cabinet. External antennas may be



MS328

erected indoors or outdoors and should be oriented in direction for requirements of best reception. RCA Television Antenna Stock No. 225 or 226 or the equivalent with 300 ohm transmission line is recommended for an FM external antenna. In this case, disconnect the two leads at the two terminals marked "FM" and attach the ends of the two lead wires from the RCA Television Antenna transmission line in their places. To replace the Standard Broadcast antenna, open the link across the terminals A-G and connect the lead-in from the antenna to terminal A. This antenna should consist of a wire 30 to 60 feet or so in length, mounted in a convenient location as high as possible. A ground connection to G should not be necessary but a flexible wire to a waterpipe or other good ground may be used.

Circuit Description

Models 610V1 and 610V2 have individual built-in antennas for FM and AM coupled to individual 1st Det.-Osc. tubes (6BE6 V1 and V2). The outputs of these two tubes are connected to separate IF transformers (T1 and T2) whose secondaries are in series and connected to the IF amplifier tube (6BA6 V3). The output of V3 is connected to separate IF transformers (T3 and T4) whose primaries are in series. The secondary of T3 (FM IF) is connected to the driver tube (6AU6 V4). The secondary of T4 (AM IF) is connected to the AM second detector (6SQ7 V6). The output of the driver tube (V4) is coupled thru the driver transformer (T5) and ratio detector transformer (T6) to the FM ratio detector tube (6AL5 V5). [In 610V1 the functions of both T5 and T6 are combined in one unit (T5).]

The audio outputs of the AM second detector and the FM ratio detector are connected thru a section of the range switch to the volume control input.

The B+ supply (+245 V) to the plates and screen grids of V1 and V2 is controlled thru a section of the range switch.

Simple AVC is used on AM and is applied to both the IF amplifier (V3) and the AM 1st detector (V2). Delayed AVC is used on FM and is applied only to the IF amplifier (V3). The AVC distribution is controlled thru a section of the range switch.

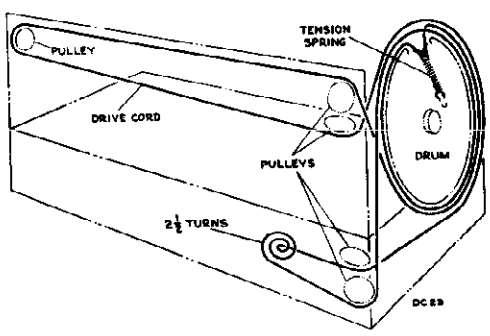

DIAL INDICATOR AND DRIVE MECHANISM

MODEL 610V1, CHASSIS RC-610C RADIO CORP. OF AMERICA MODEL 610V2, CHASSIS RC-610

Alignment Procedure

Alignment Indicators:

An RCA VoltOhmyst or equivalent meter is necessary for measuring developed d-c voltage during FM alignment. Connections are specified in the alignment tabulation below. An output meter is also necessary to indicate minimum audio output during FM Ratio Detector alignment. Connect the output meter across the speaker voice coil.

The RCA VoltOhmyst can also be used as an AM alignment indicator, either to measure audio output or to measure a-v-c voltage.

When audio output is being measured the volume control should be turned to maximum.

Signal Generator:

For all alignment operations, except FM IF-RF, connect the low side of the signal generator to the receiver chassis. The output should be adjusted to provide accurate resonance indication at all times. If output measurement is used for AM alignment the output of the signal generator should be kept as low as possible to avoid a-v-c action.

Calibration Scale.—The dial scale printed in this service note may be temporarily attached to the chassis for quick reference during alignment.

Using Printed Dial Scale.—

1. Cut out the printed dial scale, or, better still, make a tracing of the scale.
2. With gang at full mesh the pointer should be set to the first reference mark from the left hand end of the dial backing plate.
3. Place the printed dial scale or the tracing under the pointer so that the extreme left scale graduations coincide with the pointer. Use scotch tape to hold the dial scale in place.

Note.—It is not recommended that the glass dial scale in the cabinet be removed as a nalignment reference. This glass dial scale is fastened to the bezel with sheet metal lugs bent over the scale to hold it in place. Removing the glass dial scale will necessitate bending the lugs, resulting in their weakening and subsequent breakage.

610V1 (RC-610C) FM Ratio Detector Alignment

RANGE SWITCH IN FM POSITION—VOL. CONT. MAXIMUM

Steps	Connect high side of sig. gen. to—	Signal generator output	Adjustments and indications
1	Connect the d-c probe of a VoltOhmyst to the negative lead of the 5 mfd. capacitor, C20, the common lead of the VoltOhmyst to chassis.		
2	Pin 1 of driver tube 6AU6 in series with .01 mfd.	10.7 mc. modulated 30% 400 cycles AM (Approx. .1 volt)	Top core T5 for max. d-c across C20 (Approx. 4 volts) Bottom core T5 for minimum audio output
3	Repeat Step 2 until further adjustment does not improve alignment.		

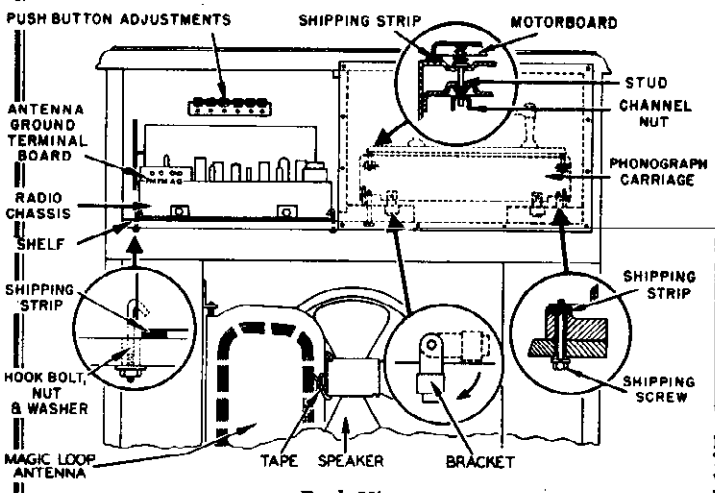

Back View

610V2 (RC-610) FM Ratio Detector Alignment

RANGE SWITCH IN FM POSITION—VOL. CONT. MAXIMUM

Steps	Connect high side of sig. gen. to—	Signal generator output	Adjustments and indications
1	Connect a 680 ohm resistor between pins 5 and 7 of the ratio detector tube 6AL5. Connect the d-c probe of a VoltOhmyst to the negative lead of the 5 mfd. capacitor, C20, the common lead of the VoltOhmyst to chassis.		
2	Pin 1 of driver tube 6AU6 in series with .01 mfd.	10.7 mc. modulated 30% 400 cycles AM (Approx. .25 volt)	Driver trans. T5, for max. d-c across C20 (Approx. 14.5 volts)
3	Disconnect the VoltOhmyst and the 680 ohm resistor from the 6AL5. Connect two 68,000 ohm resistors (within 1% of each other) in series across the 22,000 ohm resistor R17. Connect the common lead of the VoltOhmyst to the center point of the 68,000 ohm resistors and the d-c probe to terminal "A" of the ratio detector trans. T6. Use 30 volt scale of VoltOhmyst first, reducing to lower scale as required.		
4	Same as Step 2	Same as Step 2	†T6 bottom core for zero d-c balance. †T6 top core for min. audio output.
5	Reconnect VoltOhmyst as in Step 1, omitting 680 ohm resistor.		
6	Repeat Step 2.		
7	Remove ALL connections.		

† Near the correct core position the zero point is approached rapidly and continued adjustment causes the indicated polarity to reverse. A slow approach to the zero point is an indication of severe detuning, and the bottom core should be turned in the opposite direction.

The zero d-c balance and the minimum a-f output should occur at the same point. If such is not the case, the two cores should be adjusted until both occur with no further adjustment of either core. It may be advantageous to adjust both cores simultaneously, watching the VoltOhmyst, and an output meter, hooked across the voice coil for the point at which both zero d-c and minimum a-f output occur.

FM IF-RF Alignment

(FM Ratio Detector must be aligned first.)

RANGE SWITCH IN FM POSITION

Steps	Connect sig. gen.	Sig. gen. output	Turn radio dial to—	Adjustment for peak output
1	Connect the d-c probe of a VoltOhmyst to the negative lead of the 5 mfd. capacitor C20 and the common lead to chassis. Turn gang condenser to max. capacity (fully meshed).			
2	High side to one FM ant. term. in series with .01 mfd. Low side to the other FM ant. term.	10.7 mc 30% modulation, 400 cycles AM. Adjust to provide 2 to 3 volts indication on VoltOhmyst during alignment.	Max. capacity (fully meshed)	*Using alternate loading: T3 bottom core (sec.) T3 top core (pri.) T1 bottom core (sec.) T1 top core (pri.)
3	High side to one FM ant. term. in series with a 120 ohm resistor. Low side to the other FM ant. term in series with a 120 ohm resistor.	106 mc	106 mc	C54 osc. C52 ant.
4	Same as Step 3.	90 mc	90 mc	L3 osc. L2 ant.
5	Repeat Steps 3 and 4 until further adjustment does not improve calibration.			

* Alternate loading involves the use of a 680 ohm resistor to load the plate winding while the grid winding of the SAME TRANSFORMER is being peaked. Then the grid winding is loaded with the resistor while the plate winding is peaked. Only one winding is loaded at any one time. Remove the 680 ohm resistor after T3 and T1 have been aligned.

AM Alignment

(Correct alignment of the 455 kc. IF requires that the 10.7 mc. IF be aligned previously.)

RANGE SWITCH IN BC POSITION

Steps	Connect high side of sig. gen. to—	Sig. gen. output	Turn radio dial to—	Adjust for peak output
1	AM converter grid 6BE6 V-2 in series with .01 mfd.	455 kc	Quiet point at low freq. end.	*T4 top core (sec.) *T4 bottom core (pri.)
2				*T2 bottom core (sec.) *T2 top core (pri.)
3	"A" terminal of terminal board at rear of chassis in series with 200 mmf. (link open)	1400 kc	1400 kc	C57 osc. C58 ant. (loop)
4		600 kc	600 kc	L5 osc. (Rock gang)
5	Repeat Step 3.			
6	After chassis and loop have been installed in cabinet, adjust C58 for max. output on a weak station near 1400 kc.			

*Align T4 and T2 by means of alternate loading as explained under FM IF-RF alignment. Use a 47,000 ohm resistor instead of a 680 ohm resistor.

Oscillator frequency is above signal frequency on both AM and FM.

Push Button Adjustment

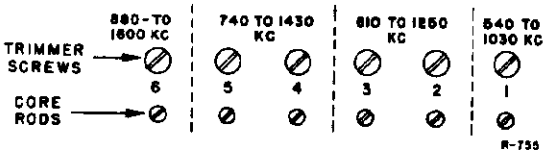

The push buttons connect to separate magnetite-core oscillator coils and separate loop circuit trimmers which must be adjusted for the desired stations. Use an insulated screwdriver or alignment tool such as RCA Stock No. 31031. Allow about five minutes warm-up period before making adjustments.

The procedure is as follows:

1. Make a list of the desired stations, arranged in order from low to high frequencies.
2. Turn the range switch to the broadcast position and manually tune in the first station on the list.
3. Turn range switch to push-button position and press in the left-hand button.
4. Adjust core rod No. 1 to receive the first station. To secure the best adjustment, rotate the loop for least pickup, and adjust core rod No. 1 for peak output.
5. Adjust trimmer screw No. 1 for peak output on the first station.
6. Proceed in the same manner to adjust for the remaining stations.
7. Repeat adjustments for best results.

On the 880 to 1,600 kc push-button, the higher frequency stations may be received with core rod No. 6 either in or out (oscillator frequency either 455 kc below or 455 kc above the station frequency). The adjustment with this core in its out position (oscillator frequency 455 kc above the station frequency) is the correct one.

NOTE: Clockwise adjustment of cores and trimmers tunes the circuits to lower frequencies.

Critical Lead Dress

1. Dress capacitor C1 near chassis base.
2. Dress lead from pin 5, V-1, to terminal C, of transformer T1, as near bottom of FM shelf as possible.
3. The lead from capacitor C23 to the high side of the volume control must be dressed next to chassis along front apron.
4. Dress resistor R20 near chassis base.
5. Dress all A.C. leads away from volume control.
6. Solder FM antenna coil primary leads to terminal board with as short a lead length as is practical.
7. Make all FM leads as short as possible.
8. The lead from pin 2, V-3, to chassis ground must be dressed as close to base and as near to the back apron as possible. This lead provides degeneration for the IF stage and neither its length nor the point at which it is grounded to the chassis should be changed.
9. Dress all leads away from the 3300 ohm resistors R28 and R29.

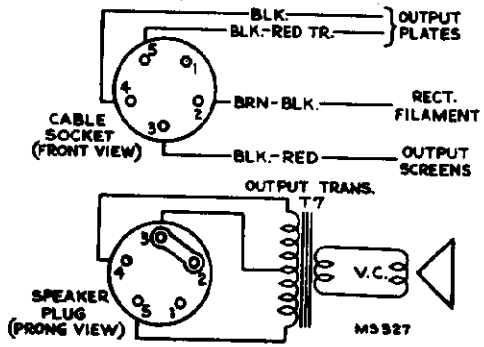

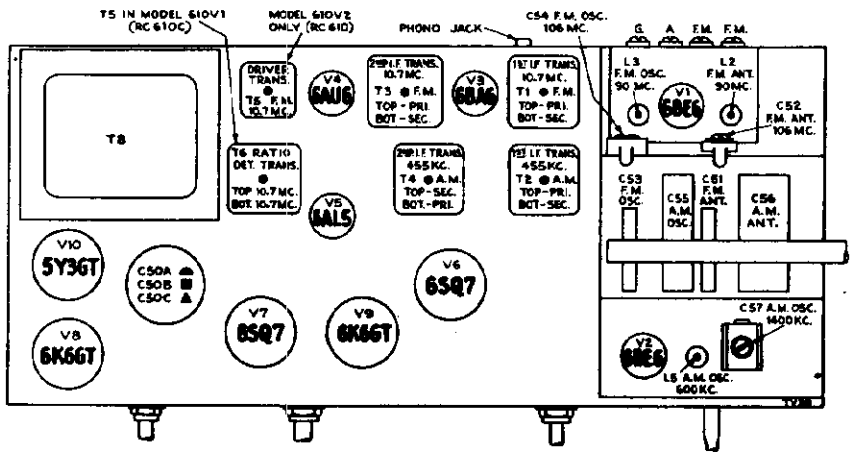

Top View Chassis

SPEAKER CONNECTIONS

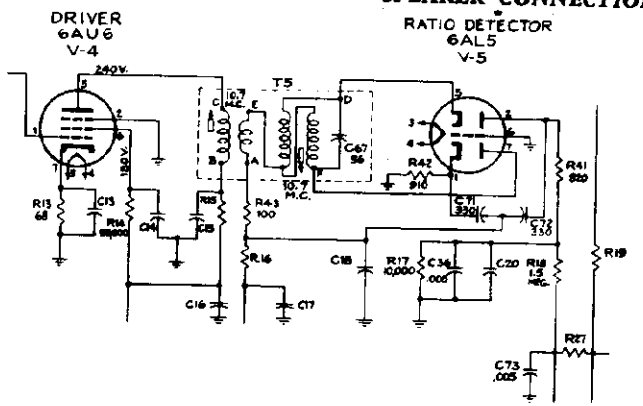

RATIO DETECTOR CIRCUIT 610V1 (RC-610C)

Schematic Diagram otherwise same as 610V2 (RC-610), except C58 of 1st I.F. Trans (FM) is omitted.

MODELS 610V1, CHASSIS RC-610C; 610V2, CHASSIS RC-610

RADIO CORP. OF AMERICA

Replacement Parts

STOCK No.	DESCRIPTION
	CHASSIS ASSEMBLIES RC-610
70258	Board—"FM-Antenna-Ground" board
72046	Capacitor—Mica trimmer, 2.5-13 mmf. (C54)
71808	Capacitor—Mica trimmer, 3-35 mmf. (C52)
72334	Capacitor—Mica trimmer, 4-70 mmf. (C53)
72570	Capacitor—Ceramic, 27 mmf. (C1)
39042	Capacitor—Ceramic, 47 mmf. (C10, C33)
71924	Capacitor—Ceramic, 56 mmf. (C8)
71614	Capacitor—Ceramic, 120 mmf. (C7, C26, C36)
72571	Capacitor—Mica, 330 mmf. (C2)
*72572	Capacitor—Mica, 360 mmf. (C9)
39656	Capacitor—Mica, 1500 mmf. (C34)
70646	Capacitor—Tubular, .0035 mfd., 1000 volts (C23, C24)
72573	Capacitor—Tubular, .003 mfd., 400 volts (C28, C32)
71087	Capacitor—Molded paper, .003 mfd., 1000 volts (C35)
72490	Capacitor—Tubular, .005 mfd., 200 volts (C17, C18, C19, C22, C29)
71553	Capacitor—Tubular, .005 mfd., 400 volts (C11, C12, C13, C14, C15)
72120	Capacitor—Tubular, .015 mfd., 200 volts (C30, C31)
71925	Capacitor—Tubular, .01 mfd., 400 volts (C3, C5, C16, C25, C27)
70611	Capacitor—Tubular, .02 mfd., 400 volts (C21)
71551	Capacitor—Tubular, .05 mfd., 200 volts (C6)
72121	Capacitor—Electrolytic, 5 mfd., 50 volts (C20)
*72052	Capacitor—Electrolytic, consisting of 1 section of 30 mfd., 450 volts, 1 section of 30 mfd., 350 volts and 1 section of 40 mfd., 25 volts (C50A, C50B, C50C)
72335	Coil—F.M. antenna coil (L1, L2)
72336	Coil—F.M. oscillator coil (L3)
72574	Coil—Filament choke coil (L6)
72333	Coil—Oscillator coil—"A" band (L5)
72059	Condenser—Variable tuning condenser less mounting bracket and trimmers (C51, C53, C55, C56)
70342	Control—Volume control and power switch (R40, S5)
34662	Cord—Drive cord (approx. 83" overall length) NOTE: Before assembling, stretch to full length.
71799	Grommet—Rubber grommet for mounting R.F. shelf (3 required)
72069	Grommet—Rubber grommet for rear mounting feet (2 required)
71606	Indicator—Station selector indicator
71607	Plate—Dial back plate less dial
30868	Plug—2 contact female plug for motor cable
12493	Plug—5 contact female plug for speaker cable
32641	Plug—3 prong male plug for selector cable or loop cable
36230	Pulley—Drive cord pulley
30732	Resistor—47 ohms, ½ watt (R9)
30189	Resistor—120 ohms, ½ watt (R13)
44632	Resistor—560 ohms, 2 watts (R22)
34766	Resistor—1000 ohms, ½ watt (R3, R15)
71991	Resistor—2200 ohms, 1 watt (R12)
19525	Resistor—3300 ohms, 2 watts (R28, R29)
38887	Resistor—6800 ohms, 1 watt (R4)
14250	Resistor—8200 ohms, ½ watt (R23)
38889	Resistor—8200 ohms, 1 watt (R5)
36714	Resistor 15,000 ohms, ½ watt (R16)
39158	Resistor—18,000 ohms, 2 watts (R34)
30492	Resistor—22,000 ohms, ½ watt (R2, R6, R14, R17)
71989	Resistor—22,000 ohms, 1 watt (R9)
30409	Resistor—27,000 ohms, ½ watt (R30, R31)
14583	Resistor—220,000 ohms, ½ watt (R36)
30651	Resistor—270,000 ohms, ½ watt (R11, R19, R26, R33)
30648	Resistor—470,000 ohms, ½ watt (R21, R24, R32)
30652	Resistor—1 megohm, ½ watt (R1)
30649	Resistor—2.2 megohms, ½ watt (R7, R10, R18)
30992	Resistor—10 megohms, ½ watt (R20, R25)
71917	Resistor—22 megohms, ½ watt (R27)
72055	Shaft—Tuning knob shaft
35787	Socket—Phono input socket
31364	Socket—Lamp socket
72516	Socket—Tube socket, miniature
31251	Socket—Tube socket, octal
31418	Spring—Tension spring for drive cord
*72056	Support—Dial support and pulley bracket complete with four pulleys—R.H.
*72057	Support—Dial support and pulley bracket complete with one pulley L.H.
*72054	Switch—Range switch (S1, S2, S3)
71603	Switch—Tone switch (S4)
72593	Transformer—First I.F. transformer—F.M. (T1, C59, C60)
71625	Transformer—First I.F. transformer—A.M. (T2, C61, C62)
72723	Transformer—Second I.F. transformer—F.M. (T3, C64)
71631	Transformer—Second I.F. transformer—A.M. (T4, C68, C69, C70)
71935	Transformer—Driver transformer (T5, C65)
71934	Transformer—Ratio detector transformer (T6, C66, C67)
71975	Transformer—Power transformer, 117 volts, 50/60 cycle (T8)
35969	Washer—"C" washer for tuning shaft
	CHASSIS ASSEMBLIES RC-610C
	Same as RC-610 except:
72571	Capacitor—Mica, 330 mmf. (C71, C72)
72490	Capacitor—Tubular, .005 mfd., 200 volts (C36, C73)
34763	Resistor—68 ohms, ½ watt (R13)
34765	Resistor—100 ohms, ½ watt (R43)
30158	Resistor—820 ohms, ½ watt (R41)
12531	Resistor—910 ohms, ½ watt (R42)
3078	Resistor—10,000 ohms, ½ watt (R17)
30685	Resistor—33,000 ohms, ½ watt (R14)
31449	Resistor—1.5 megohms, ½ watt (R18)

STOCK No.	DESCRIPTION
*72887	Transformer—1st I.F. transformer—F.M. (T1)
*72888	Transformer—2nd I.F. transformer—F.M. (T3)
*72889	Transformer—Ratio detector transformer (T5) Stock Nos. 71614—(120 mmf., C36), 72490 Capacitor, .005 mfd. (C19), 30189—(120 ohms, R13), 30492—(22,000 ohms, R14, R17), 30649—(2.2 meg., R18), 72593 Trans. (T1), 72723 Trans. (T3), 71935 Trans. (T5), 71934 Trans. (T6)—Not used in RC-610C.
	SPEAKER ASSEMBLIES 92589-1W—RL103-1
13867	Cap—Dust cap
36145	Cone—Cone and voice coil assembly
71580	Plug—5 prong male plug for speaker
71961	Speaker—12" PM speaker complete with cone and voice coil less output transformer and plug
71145	Suspension—Metal cone suspension
37899	Transformer—Output transformer (T7)
	MISCELLANEOUS
*72555	Antenna—Di-pole antenna
*72750	Back—Cabinet back for walnut instruments
*72751	Back—Cabinet back for mahogany instruments
*72907	Back—Cabinet back for blonde instruments
72146	Bezel—Push button bezel—walnut or mahogany instruments
*72906	Bezel—Push button bezel—blonde instruments
71599	Bracket—Pilot lamp bracket
70556	Bumper—Rubber bumper for tray—walnut or mahogany instruments
*72909	Bumper—Rubber bumper for tray—blonde instruments
*72144	Button—Push button
*72583	Cable—Shielded pickup cable complete with pin plug
13103	Cap—Pilot lamp cap
38684	Capacitor—Mica trimmer, 2-20 mmf. (C58)
36424	Capacitor—Mica trimmer, comprising 1 section of 10-160 mmf., 2 sections of 25-250 mmf., 2 sections of 50-400 mmf., and 1 section of 100-540 mmf. (C40, C41, C42, C43, C44, C45)
71892	Catch—Door catch
72157	Clip—Push button bezel spring clip
72050	Coil—P.B. oscillator coil—H.F. (L10, L11, L12)
72051	Coil—P.B. oscillator coil—L.F. (L13, L14, L15)
*72559	Decal—Control marker decal—walnut or mahogany instruments
*72910	Decal—Control marker decal—blonde instruments
71966	Decal—Trade mark decal (Victrola)
71984	Decal—Trade mark decal (RCA Victor)
*72882	Dial—Glass dial scale
*72513	Escutcheon—Dial escutcheon less dial
X1632	Grille—Grille cloth for walnut cabinet for Model 610V2
X1633	Grille—Grille cloth for mahogany cabinet for Model 610V2
X1649	Grille—Grille cloth for blonde cabinet for 610V2
X1643	Grille—Grille cloth for Model 610V1
*72808	Grille—Metal grille for Model 610V1
*72557	Grille—Metal grille for Model 610V2
72441	Guide—Carriage guide, R.H.—walnut or mahogany instruments
*72904	Guide—Carriage guide, R.H.—blonde instruments
72442	Guide—Carriage guide, L.H.—walnut or mahogany instruments
*72905	Guide—Carriage guide, L.H.—blonde instruments
39352	Hinge—Cabinet door hinge—walnut or mahogany instruments
*72911	Hinge—Cabinet door hinge—blonde instruments
71821	Knob—Control knob—walnut or mahogany instruments
72800	Knob—Control knob—blonde instruments
*72807	Knob—Record storage compartment door knob for Model 610V1
71890	Knob—Record storage compartment door knob for Model 610V2
11765	Lamp—Dial lamp—Mazda 51
70544	Loop—Antenna loop (L4, C58)
72563	Marker—Call letter marker
70546	Mounting—One set of hardware to mount record changer
30868	Plug—2 contact female plug for extension cable
30870	Plug—2 prong male plug for extension cable
31048	Plug—Pin plug for pickup cable
*72556	Pull—Door pull for record changer compartment or radio compartment door for Model 610V2
*72806	Pull—Door pull for record changer compartment or radio compartment door for Model 610V1
70551	Retainer—Tray roller retaining strip—L.H.
70552	Retainer—Tray roller retaining strip—R.H.
70554	Roller—Record changer tray roller (6 required)
36422	Socket—3 contact female socket for loop leads or for selector switch cable
72156	Spring—Push button bezel spring
34053	Spring—Push button retaining spring
30900	Spring—Retaining spring for knob
*72582	Stop—Mechanism tray stop
39360	Support—Drop support for record changer compartment door—walnut or mahogany instruments
*72912	Support—Drop support for record changer compartment door—blonde instruments
70545	Support—Loop support bracket (2 required)
*72512	Switch—Push button switch only (S10, S11, S12, S13, S14, S15, S40, S41, S42, S43, S44, S45)
70555	Tire—Rubber tire for record changer tray roller
70553	Tray—Record changer tray—walnut or mahogany instruments
*72909	Tray—Record changer tray—blonde instruments
2917	Washer—"C" washer to fasten rollers

©John F. Rider

RADIO CORP. OF AMERICA MODEL AC3689, CHASSIS RC-368, Nash

Electrical Specifications

TUBES AND FUNCTIONS

(1) RCA-6K7 ..... R-F Amplifier
(2) RCA-6A8 ..... First Detector—Oscillator
(3) RCA-6K7 ..... I-F Amplifier
(4) RCA-6R7-G ..... Second Det., A-F Amp., and A.V.C.
(5) RCA-6V6-G ..... Power Output
(6) RCA-6V6-G ..... Power Output
Dial Light ..... Mazda No. 51, 7.5 volts, 0.2 ampere

FREQUENCY RANGE ..... 550-1,500 kc

ALIGNMENT FREQUENCIES

260 kc ..... I-F Amplifier
600 kc ..... Osc.
1,400 kc ..... Osc., Det., Ant.

POWER SUPPLY RATING

Supply Voltage ..... 6.3 volts
Current Drain ..... 9 amperes
Fuse Protection ..... 15 amperes

POWER OUTPUT

Undistorted ..... 6 watts
Maximum ..... 8 watts

LOUDSPEAKER

Type ..... 8-inch Electrodynamic
Voice Coil Impedance ..... 3.5 ohms at 400 cycles

Operating Controls ..... Left, Manual tuning; Center, Six station push buttons; Right, Power switch—Volume control (small), Tone control (wing knob)

General Description

The Nash—RCA Model AC-3689 is a six-tube, deluxe, custom-built, superheterodyne automobile radio receiver consisting of three units. (1) The control unit containing the tuning mechanism and radio-frequency circuits; (2) the power unit containing the i-f, audio, and power-supply circuits: and (3) the loudspeaker. The i-f signal output of the first-detector — oscillator tube in the control unit is fed through a shielded cable to the power unit. The capacity of the shielded cable is such as to provide the correct shunt fixed capacity for the first i-f transformer primary, and alignment is made by magnetite cores in the i-f transformers.

Among the many features of this receiver are: Mechanical push button tuning for six stations; r-f amplifier stage; automatic volume control; magnetite core antenna, oscillator, and i-f transformers; ignition suppression filters in the antenna and power-supply circuits; push-pull beam power output stage; continuously variable high-frequency tone control; and an eight-inch, dust-proof electrodynamic loudspeaker.

Manual Tuning Mechanism

The manual tuning shaft is connected by a drive cord to the condenser drive-cord drum and the dial-scale pulley (located under dial scale). The "Drive-cord Hookup" shows the cord arrangement and number of turns around shafts. A three-position spring-tension adjustment is provided on the drive-cord drum to permit adjustment of the drive cord tension. Sufficient tension should be used to ensure freedom from backlash or cord slippage without causing excessive push button friction (spring stretched approximately 1/16 inch). The dial scale may be adjusted by loosening the dial nut and turning the scale until the extreme low-frequency end mark on the scale is aligned to the pointer in the escutcheon, or exactly in the center of the dial opening, while the gang condenser is in full-mesh position. See "Adjustments of push-button mechanism" for mechanical adjustments affecting both manual and push-button tuning.

Push-Button Tuning Mechanism

The push-button tuning mechanism is of the mechanical type wherein the movement of a push button actually turns the tuning condenser to any predetermined setting. The movement is actuated through a push arm, cam, rocker plate, and sector gear, which meshes with a scissor gear directly fastened to the tuning-condenser shaft. The scissor gear prevents backlash between the sector gear and tuning condenser. Since the sector gear is mounted directly on the rocker-plate shaft, the position of the rocker plate will accurately determine the position of the tuning condenser.

The cams, which determine the condenser stop position for each button, are mounted on the push arms and are locked in place by the push buttons and lock shoes, which press firmly against the cams when the push buttons are tightened. The push buttons should be tightened by hand and never forced with pliers or other tools.

RADIO CORP. OF AMERICA

MODEL AC3689,
CHASSIS RC-368,
Nash

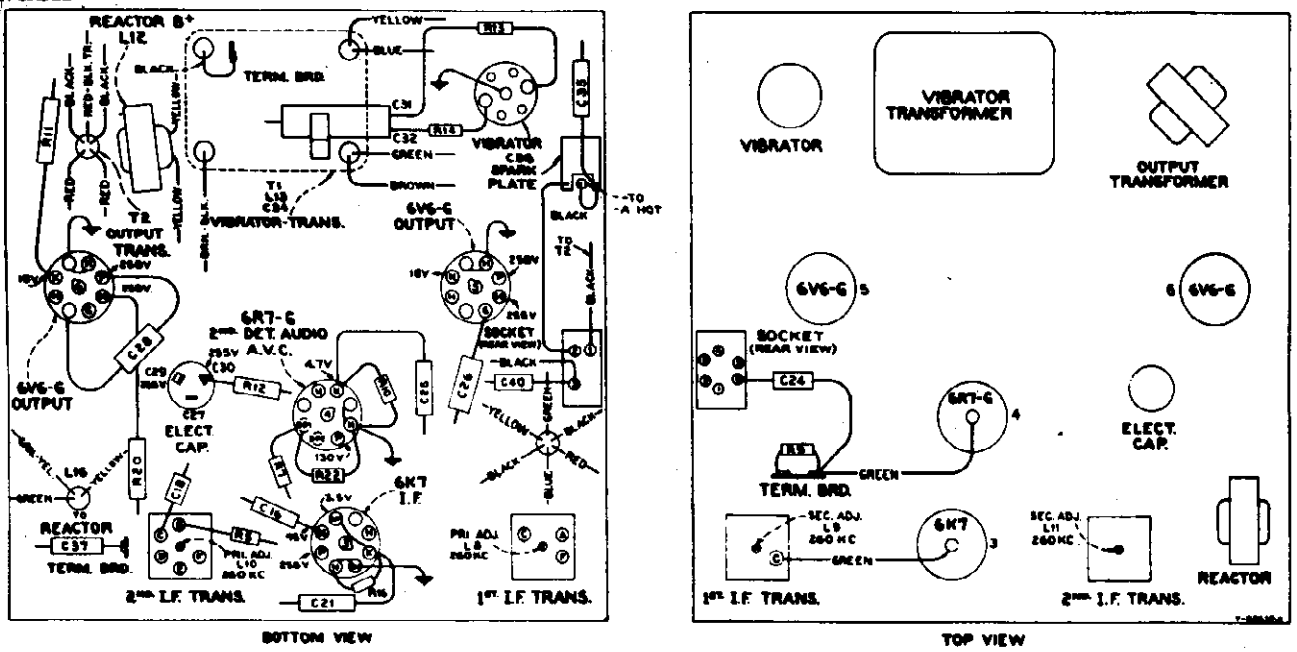

Power Unit Parts, Socket Voltages, and Trimmers

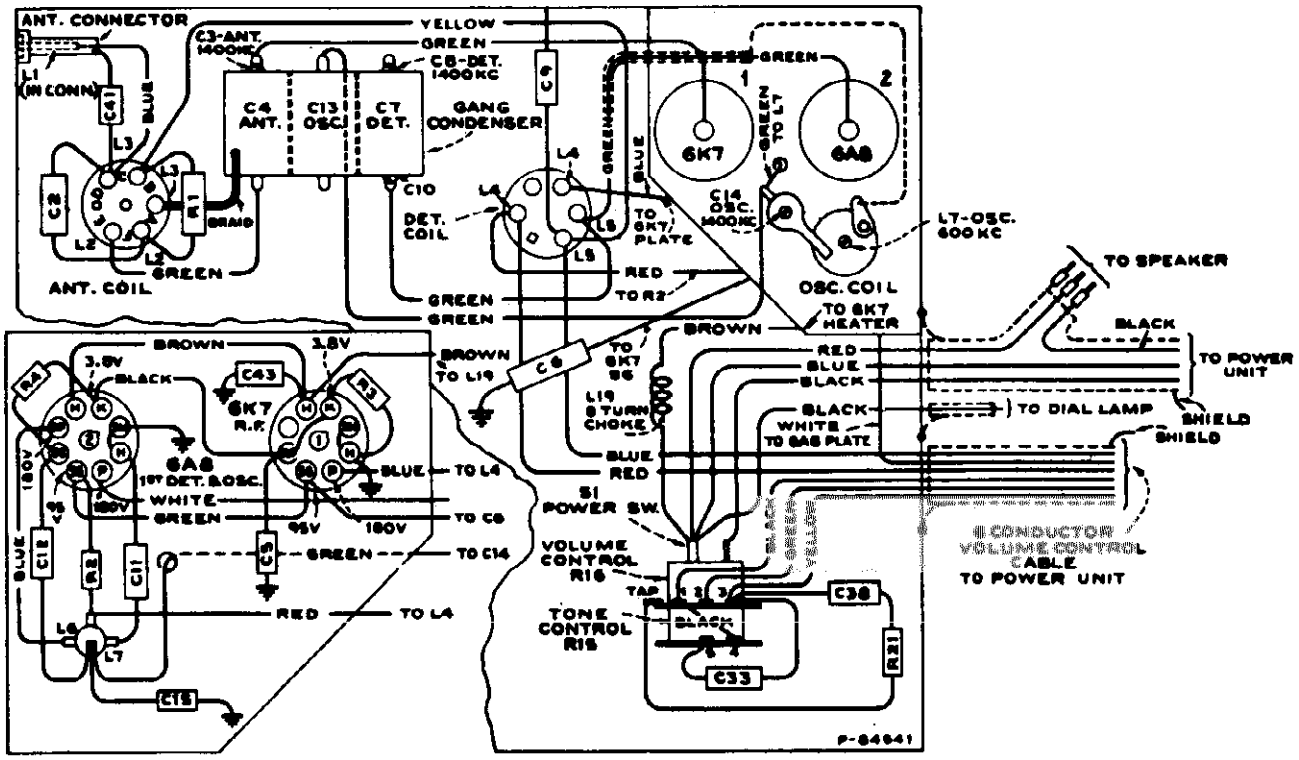

Control Unit Parts, Socket Voltages, and Trimmers

RADIO CORP. OF AMERICA

MODEL AC3689,
CHASSIS RC-368,
Nash

ALIGNMENT PROCEDURE

Test Oscillator.—For all alignment operations, connect the low side of the test oscillator to the receiver chassis, and keep the output signal as low as possible to avoid a-v-c action.

Output Meter.—Connect the output meter across the speaker voice-coil and turn the receiver volume control and tone control to maximum (fully clockwise).

Dial Calibration.—Rotate the gang condenser to its full-mesh (maximum-capacity) position and then adjust dial scale so that the last calibration mark at the low-frequency end of dial is aligned to the pointer in the escutcheon.

Note 1.—The control unit and power unit (forming a complete receiver) must be aligned together, as proper alignment of the first i-f transformer is dependent upon the capacity of the interconnecting cable.

* **Note 2.**—The total series capacity for steps 3 to 6 must be 60 mmfd. ±10%. This capacitor must be inserted at the antenna connector of the receiver. The lead from the test oscillator to the 60 mmfd. capacitor may be shielded if desired, but no shielding should be used between capacitor and antenna connector.

† **Note 3.**—Install top cover of control unit, leaving tube cover off for steps 3 to 6.

Note 4.—The negative terminal of battery connects to the "A" lead and the positive terminal to receiver case.

Steps	Connect the high side of test-osc. to—	Tune test-osc. to—	Turn radio dial to—	Adjust the following for max. peak output
1	6K7 I-F grid cap in series with .01 mfd.	260 kc	No Signal 550-750 kc	L10 and L11 (2nd I-F Trans.)
2	6A8 Det. grid cap in series with .01 mfd.	260 kc		L8 and L9 (1st I-F Trans.)
3†	*Ant. connector in series with 60 mmfd.	600 kc	600 kc	L7 (osc.)
4†	*Ant. connector in series with 60 mmfd.	1,400 kc	1,400 kc	C14 (osc.) C8 (det.) C3 (ant.)
5†	*Ant. connector in series with 60 mmfd.	600 kc	600 kc (rock)	L7 (osc.)
6†	*Ant. connector in series with 60 mmfd.	1,400 kc	1,400 kc	C14 (osc.) C8 (det.) C3 (ant.)

* See Note 2.
† See Note 3.

Precautionary Lead Dress

1. All ground leads and leads from C35 and C41 should be as short as possible.
2. Black lead from contact 4 on six-contact socket to terminal "D" on second I-F transformer should be dressed close to chassis and near case.
3. One lug of electrolytic capacitor can must be soldered to chassis.
4. Heater lead from 6K7 I-F to 6R7G should be dressed away from diode terminals.
5. Dress shielded lead from 3-contact socket to terminal board along edge of case, over C35, and away from vibrator socket.
6. Green lead from gang to 6K7 R-F grid must pass through shield clamps to rear of gang and dressed to rear of 6K7 R-F tube.
7. Dress green lead from center section of gang to C14 away from 6K7 R-F grid lead and in front of C9.
8. Dress heavy rubber covered lead from connector cable to 6A8 plate through hole between triangular chassis and case and away from oscillator coil.
9. Dress parts and leads under triangular chassis close to this chassis to prevent possibility of cutting through insulation paper.
10. Yellow lead from antenna to detector coil must be dressed over top of gang.
11. Leads to volume control must be dressed to front of control and away from "A" leads to power switch.
12. Dress all leads clear of gang rotor and push arms.

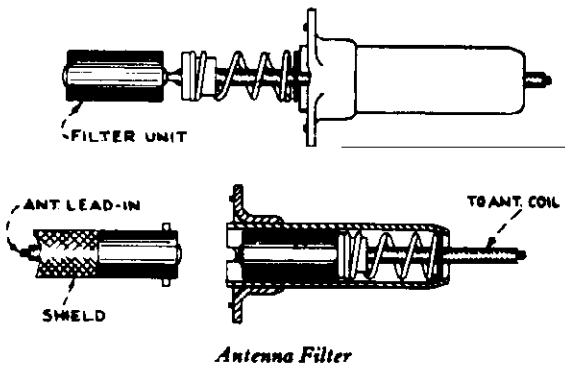

Antenna Filter

Loudspeaker

The loudspeaker cone may be centered in the usual manner with three celluloid or paper feelers after gently cutting away the front dust cover. A new cover should be cemented in place upon completion of the adjustment.

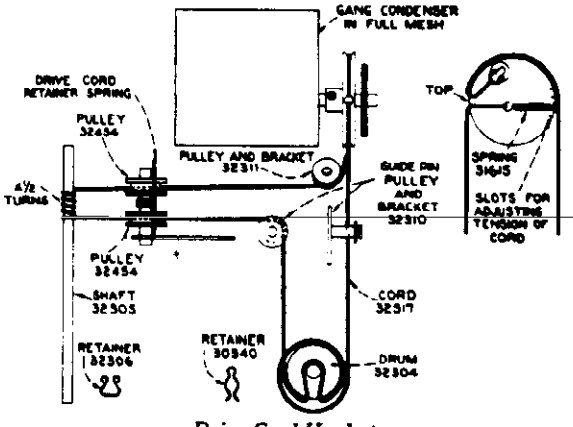

Drive Cord Hookup

MODEL AC3689,
CHASSIS RC-368,
Nash

RADIO CORP. OF AMERICA

Adjustments of Push-Button Mechanism

The mechanism should be so adjusted that when using either manual tuning or push-button tuning, it operates positively and without bind or backlash. The complete sequence of adjustments are outlined below, however, inspection will generally enable the particular trouble to be located and then only that adjustment and the ones which follow will be necessary without disturbing other adjustments found to be correct. Proceed as follows in the sequence given:

1. Remove dial scale. Loosen coupling set-screws, sector gear set-screws, gang-condenser mounting screws, and bearing-plate screws.
2. Place escutcheon in place and check for proper centering of push buttons in escutcheon. If push buttons are not properly centered, loosen the push-button-unit nuts (underneath) and adjust position of each unit until properly centered. Tighten mounting nuts. The coupling and sector gear must be on rocker-plate shafts but not tightened.
3. Align rocker plates with each other and tighten coupling screws. The position of the set-screws should be such that they definitely clear dial when gang is out of mesh and definitely clear pulley when gang is in full mesh.
4. Rotate rocker-plate shaft to obtain normal position of bearing plate and then tighten screws holding bearing plate.
5. Rotate gang condenser to full mesh, move free (inner) scissor gear one tooth from its free position and then mesh the sector gear with the scissor gear with two end teeth of the sector gear fully meshed. See photograph. Tighten condenser mounting screws. Slide sector gear along shaft until it is correctly aligned with the scissor gear, and with top of rocker plates 1/16 inch from frame tighten screws of sector gear.
6. Adjust mesh of scissor gear with sector gear by shifting gang condenser position. Adjust for minimum backlash without binding.
7. Adjust drive-cord drum on condenser shaft for correct alignment with drive cord, and so that the cord hole is at the top when gang is in full mesh.
8. Lubricate the push arms, rocker-plate shafts, and pulley shafts with light grease or heavy oil (sparingly) to provide free operation, being careful to keep lubricant off of drive cord.
9. With gang condenser fully meshed and drive cord properly installed, adjust dial scale so that the extreme low-frequency end calibration mark is aligned to the pointer in the escutcheon, or exactly in the center of the dial opening.

Adjusting Push Buttons for Stations

The six push buttons should be adjusted for six favorite stations after the receiver is installed and operating.

Any six standard broadcast stations may be chosen. The preferable arrangement is to adjust for stations in the order of frequency, from low to high. Proceed as follows:

1. Loosen the push buttons one-half turn.
2. Using the tuning control, accurately tune in the first station.
3. With station accurately tuned in, press the first push button fully in and then gently release so as not to jar mechanism.
4. Tighten the push button securely with fingers. Do not force with pliers.
5. Proceed in same manner to adjust the other five push buttons.

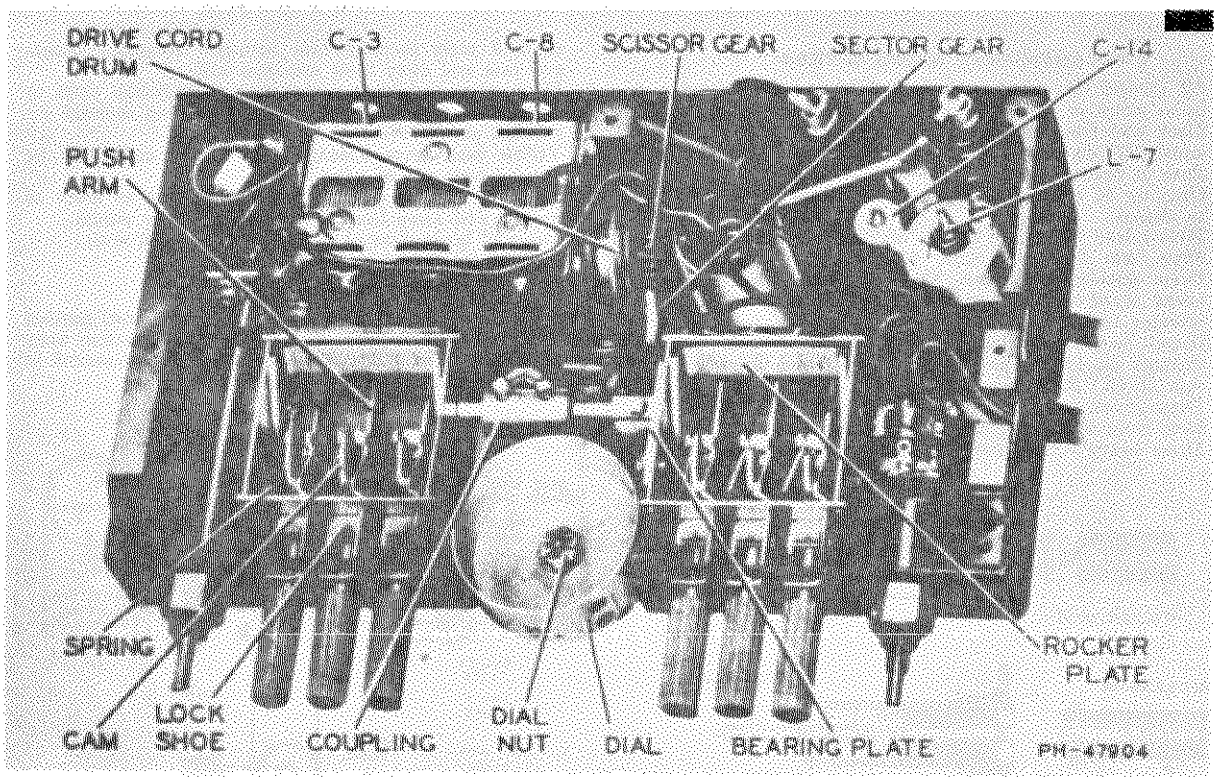

Photograph of Control Unit

RADIO CORP. OF AMERICA

MODEL AC3689,
CHASSIS RC-368,
Nash

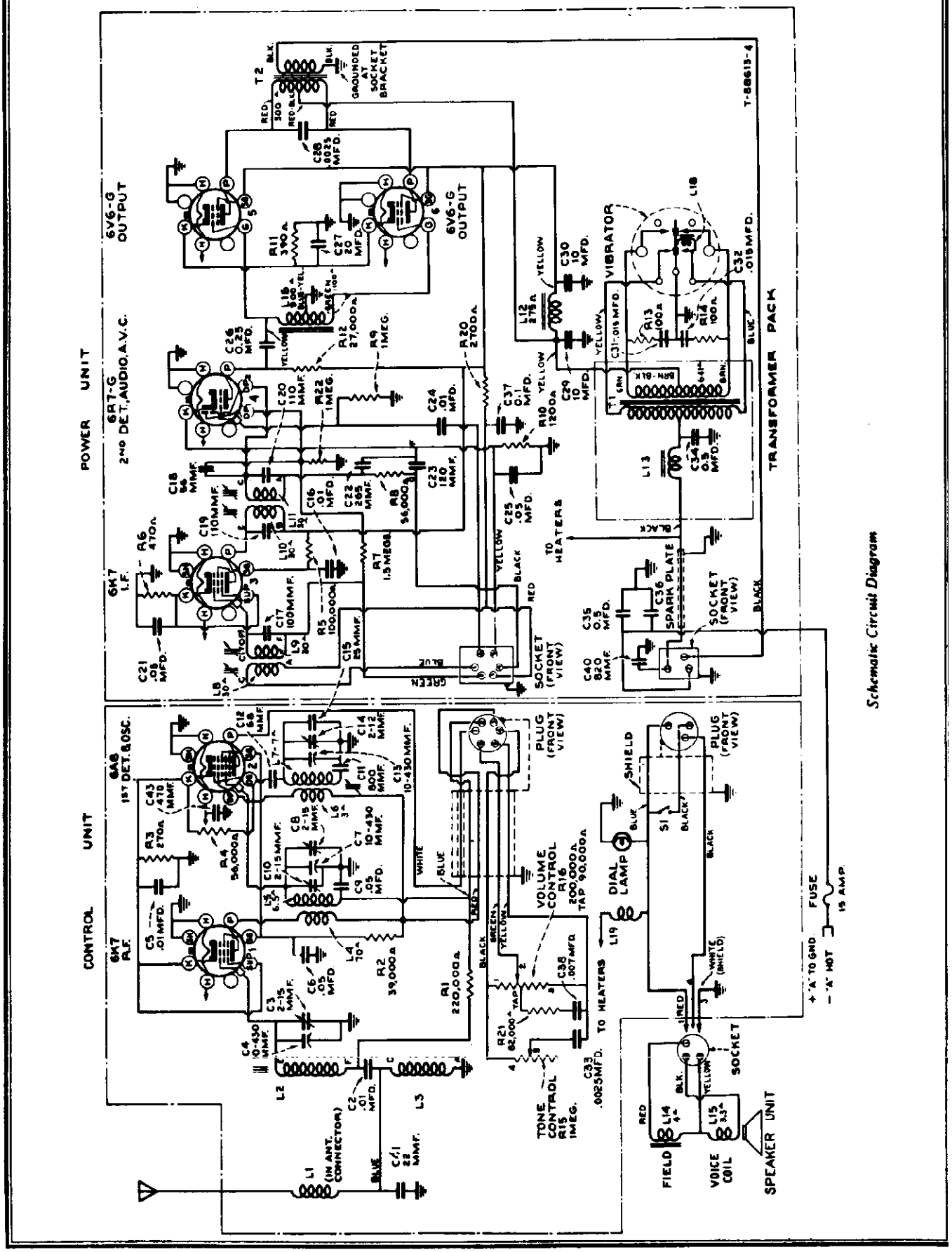

©John F. Rider

MODEL AC3689,
CHASSIS RC-368,
Nash

RADIO CORP. OF AMERICA

REPLACEMENT PARTS

STOCK No.	DESCRIPTION
	CONTROL UNIT ASSEMBLIES
32307	Bushing—Station selector knob shaft bushing
32876	Cable—3-conductor shielded speaker cable complete with male plug
32374	Cable—6-conductor shielded volume control cable complete with male plug
32300	Capacitor—Trimmer 2-15 mmfd. (C14)
14021	Capacitor—22 mmfd. (C41)
31707	Capacitor—25 mmfd. (C15)
13057	Capacitor—68 mmfd. (C12)
30433	Capacitor—470 mmfd. (C43)
32362	Capacitor—800 mmfd. (C11)
5148	Capacitor—.007 mfd., 500 volts (C38)
5107	Capacitor—.0025 mfd., 700 volts (C33)
14393	Capacitor—.01 mfd., 300 volts (C2, C5)
4858	Capacitor—.05 mfd., 400 volts (C6, C9)
32308	Case—Control unit case complete with all riveted and welded parts
31977	Coil—Antenna filter (L1)
32301	Coil—Antenna coil—less shield (L2, L3)
32297	Coil—Oscillator and shield (L6, L7)
31600	Coil—R-f coil—less shield (L4, L5)
32292	Condenser—3-gang variable tuning condenser complete with scissors gear, and drive cord drum (C3, C4, C7, C8, C10, C13)
32294	Control—Volume control, tone control, and power switch (R15, R16, S1)
32517	Cord—Dial drive cord
32291	Coupling—R.h. and l.h. tuning mechanisms coupling with screws
32304	Drum—Dial drive drum
32296	Dial—Dial scale and holder
32290	Gear—Tuning mechanism gear sector
11765	Lamp—Dial lamp—Mazda No. 51
32288	Mechanism—L.h. push button tuning mechanism less push buttons (short cam shaft)
32287	Mechanism—R.h. push button tuning mechanism less push buttons (long cam shaft)
32378	Pin—Contact pin for speaker cable
32377	Plug—3-contact male plug and shell for speaker and "A" lead cable
32375	Plug—6-contact male plug and shell for volume control cable
32311	Pulley—Drive cord intermediate pulley on bracket
32310	Pulley—Drive cord intermediate pulley and guide pin on bracket
32454	Pulley—Drive cord pulley on L.H.P.B. mechanism (11/16-in. dia.)
13454	Resistor—270 ohms, ½ watt (R3)
12266	Resistor—39,000 ohms, ½ watt (R2)
12286	Resistor—56,000 ohms, ½ watt (R4)
14023	Resistor—82,000 ohms, ½ watt (R21)
12264	Resistor—220,000 ohms, ½ watt (R1)
30340	Retainer—Retainer for drive cord pulley, Stock No. 32454, and dial Stock No. 32296
32306	Retainer—Retainer for station selector knob shaft, Stock No. 32305
13471	Ring—Retaining ring for antenna coil
5684	Ring—Retaining ring for r.f. coil
14350	Screw—No. 8-32 x 11/64-in. square head set screw for coupling, Stock No. 32291
31482	Screw—No. 8-32 x 5/16-in. square head set screw for gear sector, Stock No. 32290
31611	Screw—No. 8-32 x ¼-in. square head set screw for drive cord drum on condenser shaft
12252	Screw—No. 8 x ¼-in. S.T. screws for control case
32305	Shaft—Station selector knob shaft
32303	Shield—Antenna coil shield
3623	Shield—R.f. coil shield
32453	Socket—Dial lamp socket and lead
32299	Socket—Octal base tube socket
31615	Spring—Drive cord tension spring
30585	Spring—Push button arm tension spring
	DASH POWER UNIT ASSEMBLIES
12723	Capacitor—56 mmfd. (C18)
32239	Capacitor—110 mmfd. (C19, C20, C23)
32236	Capacitor—110 mmfd. (C17)
13618	Capacitor—265 mmfd. (C22)
12536	Capacitor—820 mmfd. (C40)
5107	Capacitor—.0025 mfd., 700 volts (C28)
14393	Capacitor—.01 mfd., 300 volts (C24)
4858	Capacitor—.01 mfd., 500 volts (C16)
32235	Capacitor—2-sections .015 mfd., 1,000 volts (C31, C32)
4586	Capacitor—.05 mfd., 400 volts (C21, C25)
4839	Capacitor—0.1 mfd., 400 volts (C37)
12484	Capacitor—0.25 mfd., 300 volts (C26)
12741	Capacitor—0.5 mfd., 150 volts (C35)
32240	Capacitor—Comprising 2-sections 10 mfd., 400 volts, and 1-section 20 mfd., 25 volts (C27, C29, C30)
32284	Case—Complete dash power unit case
4288	Connector—"A" lead male connector cap
4286	Ferrule—"A" lead connector ferrule and bushing
5066	Reactor—"B" filter reactor (L12)
30540	Resistor—100 ohms, ½ watt (R13, R14)
30547	Resistor—390 ohms, 2 watts (R11)
30546	Resistor—470 ohms, ½ watt (R6)
12267	Resistor—1,200 ohms, ½ watt (R10)
13204	Resistor—8,200 ohms, 2 watts (R20)
13477	Resistor—27,000 ohms, 1 watt (R12)
11282	Resistor—56,000 ohms, 1/10 watt (R8)
14560	Resistor—100,000 ohms, ½ watt (R5)
13730	Resistor—1 meg., ½ watt (R9, R22)
12201	Resistor—1.5 meg., ½ watt (R7)
5129	Ring—Tube shield ring
12252	Screw—No. 8 x ¼-in. S.T. screw for dash power unit case
32286	Shield—Tube shield comprising 2-halves and 1-ring
32245	Socket—3-contact socket and mounting plate for "A" lead and speaker cable
32244	Socket—6-contact socket and mounting plate for volume control cable
31251	Socket—Octal base tube socket
12241	Socket—6-contact vibrator socket
32236	Transformer—First i-f transformer (L8, L9, C17)
32237	Transformer—Second i-f transformer (L10, L11, C19, C20, C22, C23, R8)
32243	Transformer—Input transformer (L16)
32241	Transformer—Output transformer (T2)
32233	Transformer—Vibrator transformer (T1, L13, C34)
12236	Vibrator—(L13)
	SPEAKER ASSEMBLIES
32315	Cap—Cone center dust cap
32314	Coil—Speaker field coil (L14)
32313	Cone—8-in. speaker cone and voice coil (L15)
32312	Speaker—8-in. dynamic, complete
	MISCELLANEOUS ASSEMBLIES
12291	Body—Fuse holder body (female portion only)
32320	Button—Station selector push button and screw
9820	Cable—Antenna cable approx. 36-in. long, with connector
32438	Capacitor—Ignition coil capacitor
32439	Capacitor—Generator capacitor
4291	Clip—Ammeter clip
32321	Escutcheon—Control panel escutcheon less small dial escutcheon
32322	Escutcheon—Dial escutcheon (small)
4286	Ferrule—Center contact ferrule and bushing for fuse holder
5023	Fuse—15 amp.
4290	Insulator—Fuse holder insulating sleeve
32318	Knob—Dummy knob (1 required)
32316	Knob—Station selector or volume control knob
32319	Knob—Tone control wing knob
32323	Lead—Ammeter "A" lead and clip, complete with female section of fuse holder
13193	Nut—Control unit mounting nut
32317	Screw—No. 8-32 x 7/32-in. headless set screw for knob, Stock No. 32316
32324	Screw — Speaker mounting screws, spacers, washer, and nuts
4284	Spring—Tension spring for fuse holder
12448	Stud—Dash power unit mounting stud, nut, and washers
32437	Suppressor — Distributor suppressor (10,000 ohms)
4285	Washer—Insulating washer for fuse holder
13192	Washer—Felt washer for under control knobs

©John F. Rider

RADIO DISPLAYS CO.

MODEL Beer
Bottle Type

Sparkling Champaign Music, Metz Beer, Melody Beer, Red Top Beer, Imperial Beer, Hyde Park Beer, Gold Star Beer, Country Club Beer, Barbarossa Beer, Mitchell's Beer, Webster Coffee, Pepsi-Cola

TUBE COMPLEMENT

1—12BE6 Oscillator and Mixer tube.
1—12BA6 IF Amplifier tube.
1—50B5 Power Output tube.
1—35W4 Rectifier tube.
1—12AT6 Second Detector and First Audio tube.

ALIGNMENT PROCEDURE

The following equipment is necessary to properly align this chassis:

1. A signal generator which will provide an accurately calibrated signal at the frequencies listed.
2. An output meter.
3. A non-metallic screwdriver.
4. Dummy antenna: —.1 mfd., —10 mmf.

GENERATOR	CONNECTION AT RADIO	DUMMY ANTENNA	DIAL	TO TUNE TRIMMERS	REMARKS
IF 455 kc.	12BE6 Grid	.1 mfd.	HF end	IF trimmers C D E F	Tune to max.
535 kc.	12BE6 Grid	10 mmf.	LF end	Osc. trimmer B	Set limit of band
1400 kc.	12BE6 Grid	10 mmf.	1400 kc.	Ant. trimmer A	Tune to max.

SOCKET VOLTAGES

TUBE	POSITION	1	2	3	4	5	6	7	8
12BE6	Osc. and Mixer	0	37.5 AC	99	99	—4.2	0	24.5 AC	0
12BA6	IF Amplifier	0	24.5 AC	0	0	0	99	12.5 AC	99
12AT6	2nd Det.—1st Audio	0	0	0	0	0	16	12.5 AC	0
50B5	Power Output	0	85 AC	91.5	99	0	0	37.5 AC	5.9
35W4	Rectifier	0	117 AC	112 AC	0	112 AC	0	85 AC	112

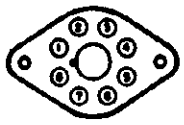

NOTE: All DC voltages measured with a 1000 ohm per volt meter from ON-OFF switch (—B) to socket contact indicated. All AC voltages are measured from ON-OFF switch (—B) to socket contact indicated.
All voltages are positive DC unless otherwise marked.
Volume control full on.
Line voltage 117 volts AC.

PARTS LIST

PART NO.	DESCRIPTION	PART NO.	DESCRIPTION
1C2	Loop antenna assembly.	15Y11	Two section electrolytic condenser.
18B6	Tuning gang condenser.	26Y3	Vol. control and switch 1 megohm
12Y4	1st I.F. transformer 456 kc.	20Y5	Oscillator coil.
12Y8	2nd I.F. transformer 456 kc.	45B6	4" PM dynamic speaker.

MODEL Beer
Bottle Type

RADIO DISPLAYS CO.

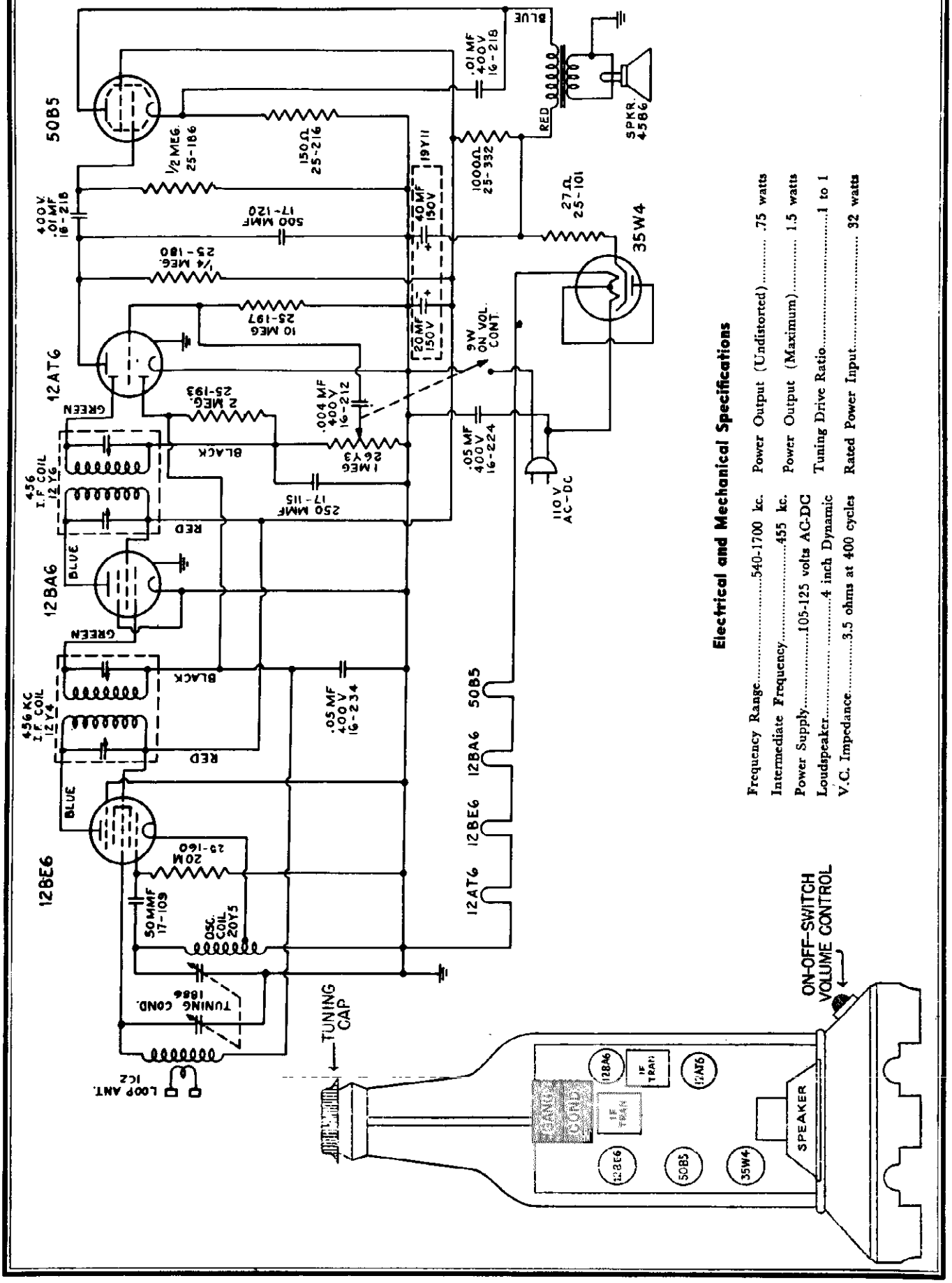

Electrical and Mechanical Specifications

Frequency Range	540-1700 kc.	Power Output (Undistorted)	.75 watts
Intermediate Frequency	455 kc.	Power Output (Maximum)	1.5 watts
Power Supply	105-125 volts AC-DC	Tuning Drive Ratio	1 to 1
Loudspeaker	4 inch Dynamic	Rated Power Input	32 watts
V.C. Impedance	3.5 ohms at 400 cycles		

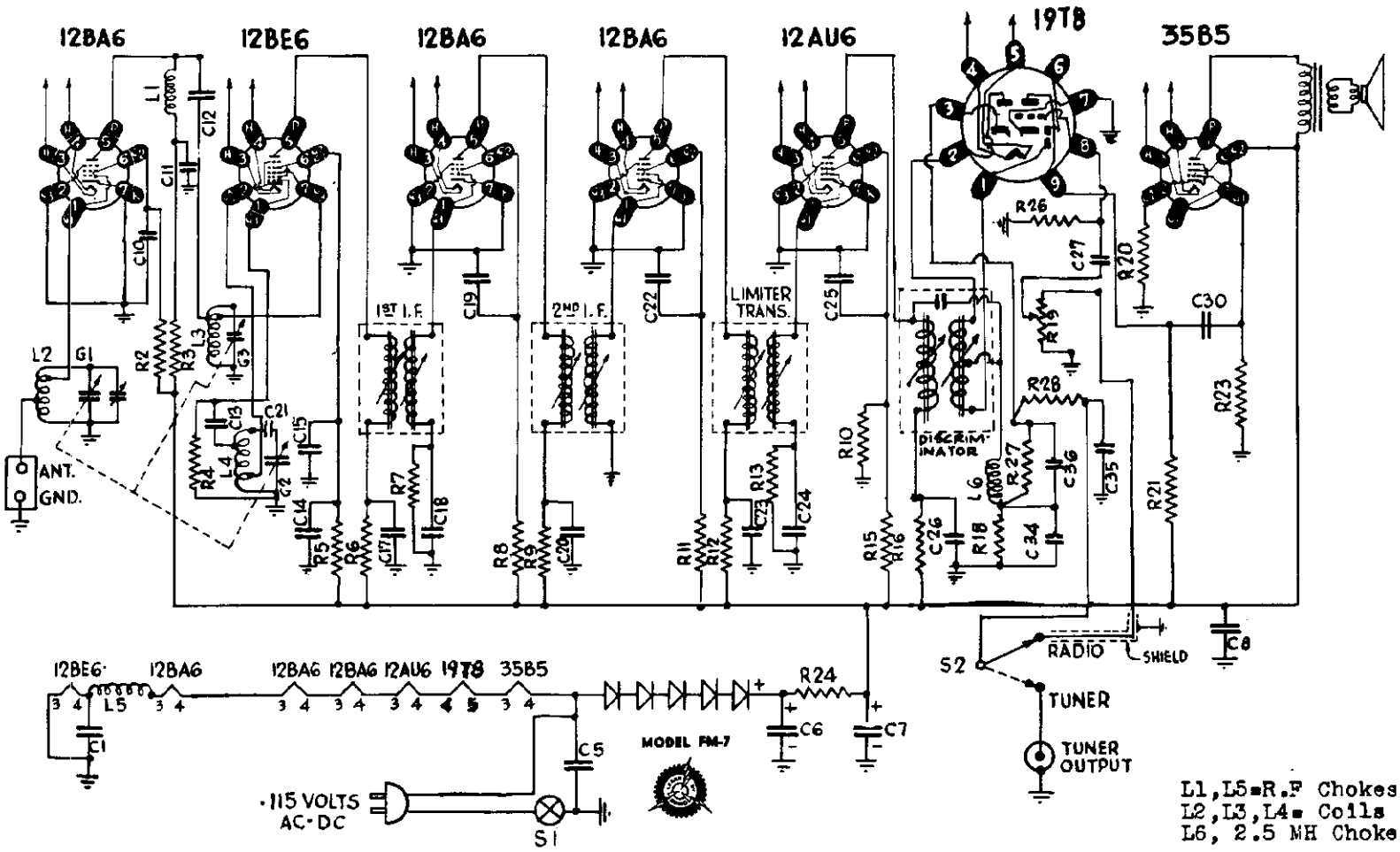

L1, L5 = R.F Chokes
L2, L3, L4 = Coils
L6, 2.5 MH Choke

R2-1000	R10-20 K	R19-500 K PoT.	C1-.02	C13-50 mmf#	C22-.001 mf
R3-430	R11-1000	R20-150	C5-.1	C14-1000 mmf*	C23-.001 mf
R4-20 K	R12-430	R21-240 K	C6, C7 } 50+30 @ 150V	C15-.02	C24-100 mmf
R5-1000	R13-100 K	R23-500 K	C8-.02	C17-.001	C25-.001 mf
R6-430	R15-47 K	R24-625 10 watt	C10-1000 mmf*	C18-1000mmf*	C26-.001 mf
R7-240 K	R16-47 K	R26-3 megs.	C11-1000 mmf*	C19-.001 mf	C27-.002
R8-1000	R18-100 K	R27-100 K	C12-50 mmf*	C20-.001	C30-.02
R9-430		R28-47 K		C21-100 mmf#	C34-50 mmf
					C35-.002
					C36-50mmf*

Note: Letter K denotes that the value before it is multiplied by 1000
Example: 20K=20,000

* Use ceramic condensers only
\# Already mounted

MODEL FM-7 RADIO KITS, INC.

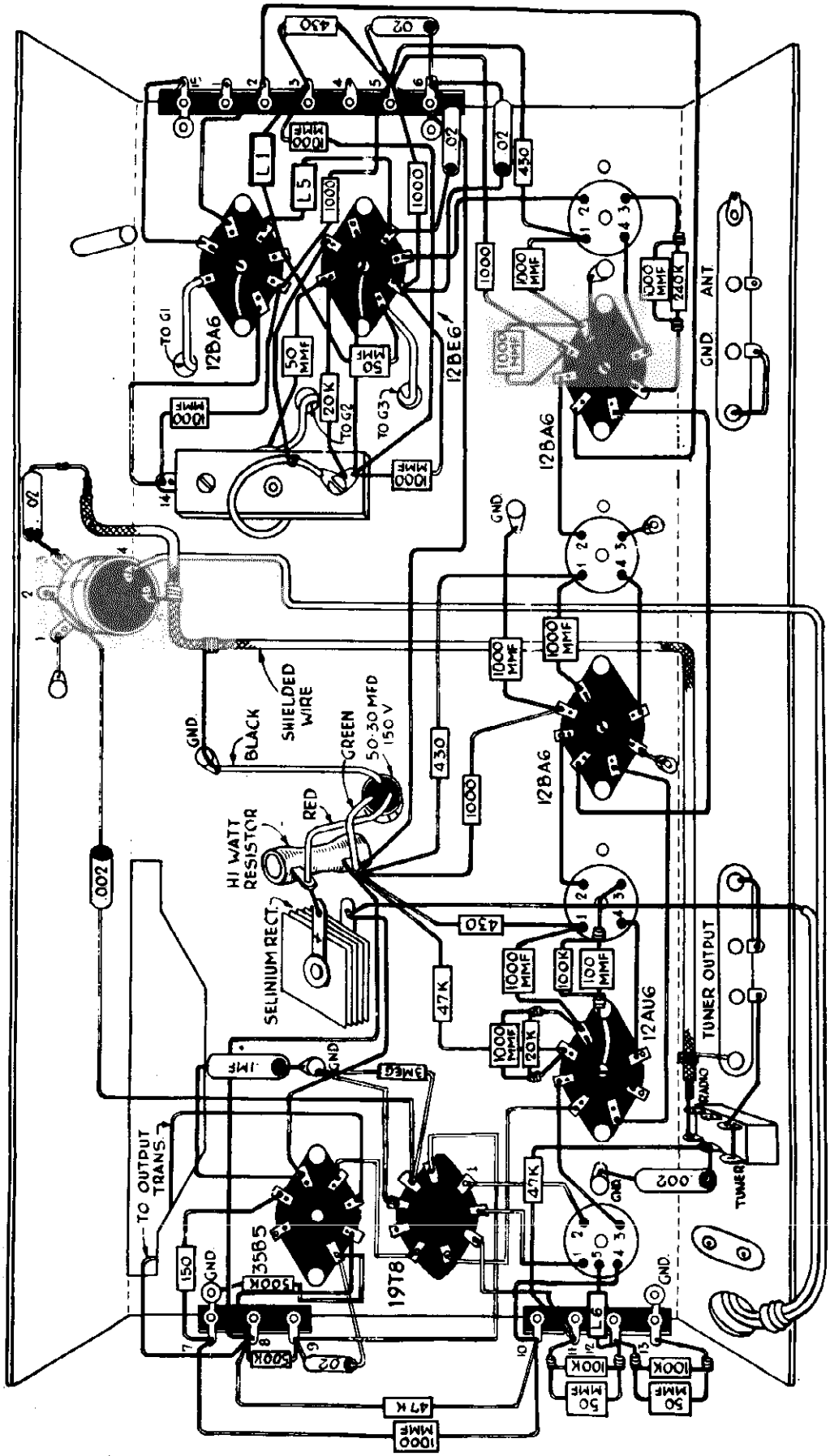

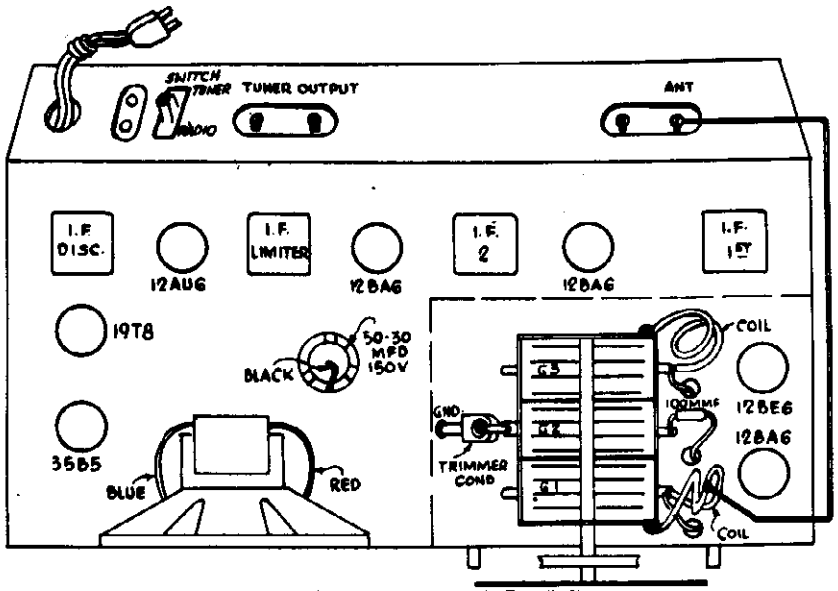

ALIGNMENT PROCEDURE FOR MODEL FM-7

Alignment Procedure without the Use of Instruments

The I.F. and discriminator transformers are pretracked at the factory and will require only to be peaked to compensate for the additional capacities that are introduced when the set is wired. A signal should be tuned in and each I.F. transformer starting from the limiter and working to the first I.F. should be aligned for maximum signal.

R.F. Alignment

Set the dial pointer to correspond with the station transmitting on the high-frequency end of the dial (make certain that the station desired to be received is transmitting at the time alignment is attempted). Adjust osicllator trimmer until the station to be received is tuned in at the proper dial setting. Adjust the spacing on the antenna coil for maximum response at the high-frequency end of the dial. A station is then tuned in at the low-frequency end of the band and the spacing of the R.F. coil is then adjusted for maximum response. Spacing of the coil is accomplished with the aid of an insulated fibre tool or a small wooden wedge.

Discriminator Alignment

The bottom slug of the discriminator coil should be adjusted for maximum output.

The top slug of discriminator should be adjusted for clear, undisturbed reception. This adjustment is critical and should be adjusted very slowly, until the proper point is reached. It will be noted as a clear spot between two distorted points one above and the other below resonance.

ALIGNMENT WITH THE USE OF INSTRUMENTS

If instruments are available they should be used for proper alignment. Insert a high sensitivity micro-ammeter in series with the limiter grid resistor at the grounded end (R-13). Set the signal generator at 10.7 mc. Apply this signal to the grid of the limiter and adjust I.F. to the maximum meter reading. The signal generator should be applied on the grid of each preceeding stage and the meter left in the limiter grid circuit and each I.F. adjusted for maximum response. Always reduce the input as the sensitivity increases. When the alignment is completed it should be rechecked by placing the signal generator on the grid of the 12BE6 and each transformer should be repeaked for maximum meter deflection. The I.Fs. are now aligned.

The R.F. Section

Apply a 106 mc signal to the antenna terminal. Adjust oscillator trimmer for maximum response on meter. Then adjust antenna coil spacing for maximum response. Reset the signal generator for 90 megacycles. Set dial to 90 megacycles. Adjust spacing of R.F. coil for maximum response. The R.F. alignment is now completed.

The Discriminator Alignment

Remove the meter from the limiter grid circuit and place a high-sensitivity volt meter in the order of 20,000 ohms per volt or a DC vacumm tube volt meter from R-18 to ground. Apply a 10.7 mc signal to grid of limiter tube. Adjust bottom slug on discriminator I.F. for maximum deflection. Then adjust top slug on the discriminator I.F. for zero (minimum deflection). This completes alignment of the receiver.

MODEL 3W10A

RADIO KITS, INC.

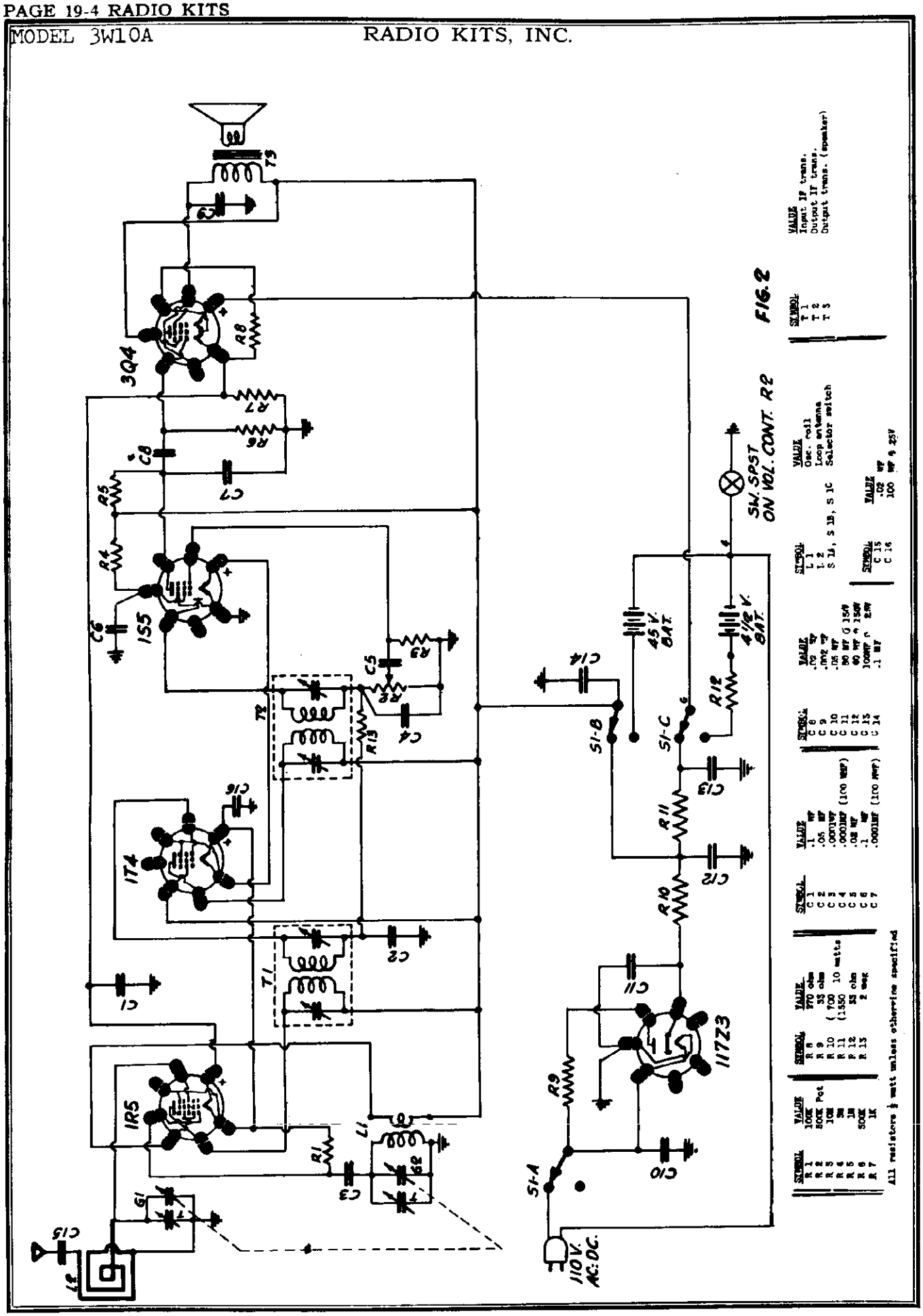

FIG. 2

©John F. Rider

RADIO KITS, INC. MODEL SW10A

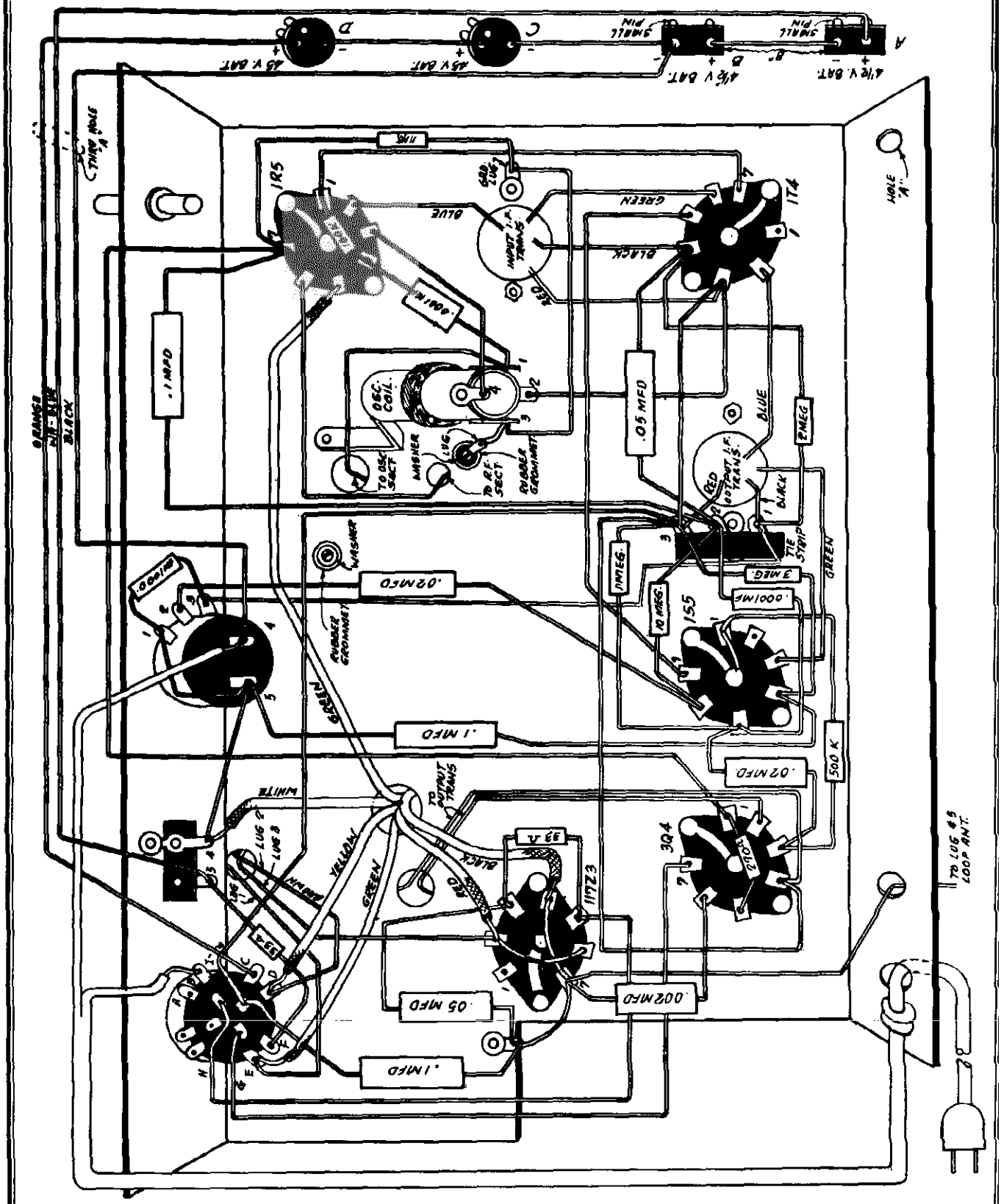

MODEL 3W10A RADIO KITS, INC.

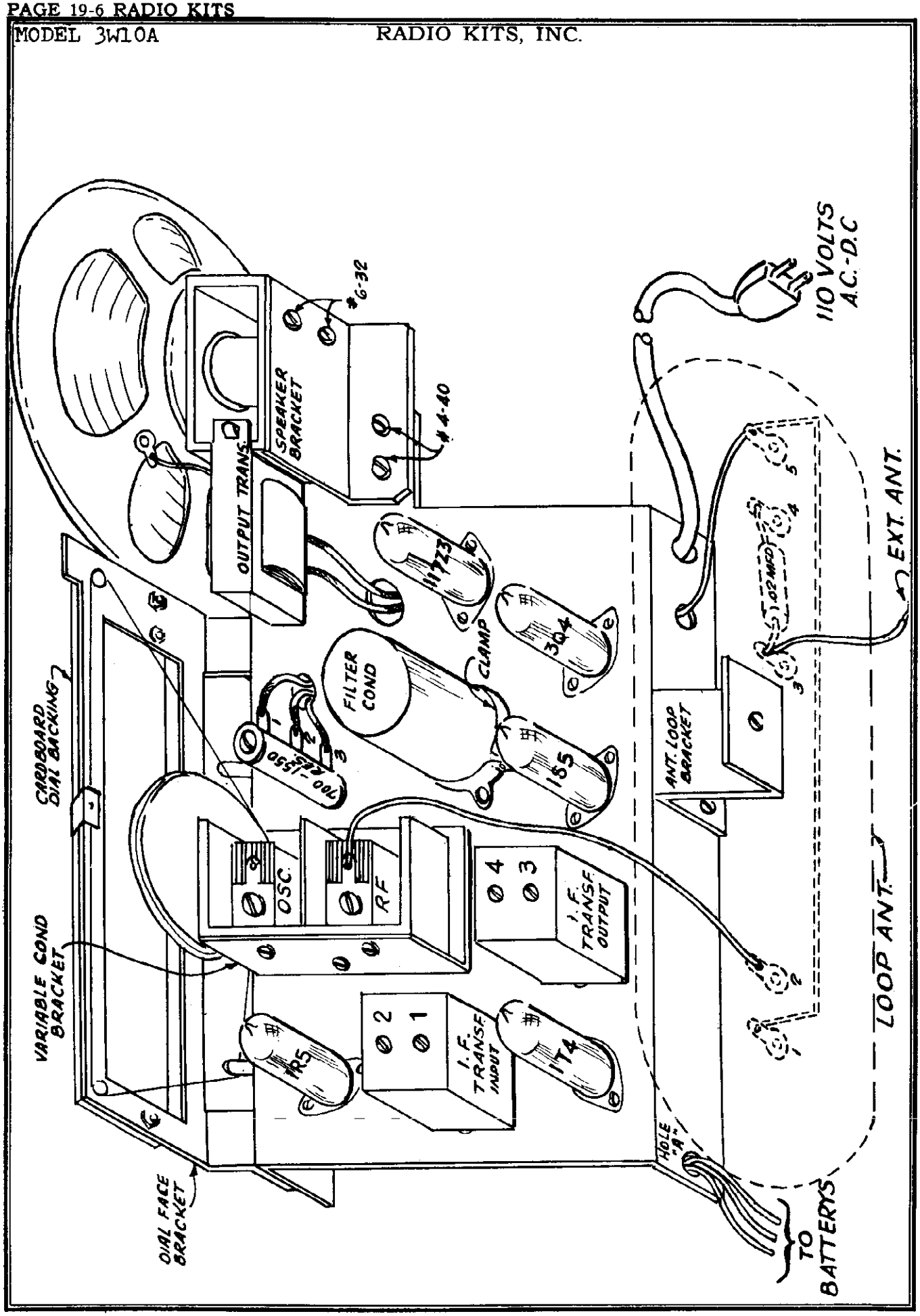

RADIO KITS, INC. MODEL 3W10A

SERVICING NOTES

All specifications and measurements based on 117 volts, 60 cycles, and all readings based on a 20,000 ohms per volt meter. All readings are taken with volume control (switch No. 2) in maximum clockwise position. Apply the lowest signallevel from the signal generator.
Output: 50 mw into a 3.2 ohm voice coil impedance.
Approximate reading 0.4 volt.

I.F. ALIGNMENT: With signal generator, set a 455 KC, apply signal through a .1 MFD condenser dummy to R.F. grid of convertor (1R5) or the stator of RF section of the variable condenser (condenser must be fully meshed). Peak I.F. trimmers 1,2,3,4, (top view diagram) to give maximum reading on output meter connected across voice coil. (Note: If for any possible reason the signal does not come through indicating the receiver is way out of alignment, apply the signal to the grid of the I.F. Amplifier (1T4) and tune signal in by trimmers 3,4 of second IF. transformer. Peak for maximum and once this stage is tuned, repeat above procedure).

R.F. ALIGNMENT: With signal generator, set at 1400 KC, apply signal through a dummy antenna (200 mmf condenser) to the antenna loop wire. Set dial of receiver to 1400 KC and peak trimmers 5 & 6 to give maximum reading of output meter. Then set signal generator at 600 KC and tune receiver to 600 KC mark on dial. This setting should fall on calibrated point.

Generator Connection	Dummy Ant.	Freq.	Adj. Trimmers	Output	Sensitivity uv.
Stator large section gang open	.1 MFD cond.	455 KC	1,2,3,4,	Max.	120
Antenna loop wire	200 mmf cond.	1400 KC	5 & 6	Max.	50
Antenna loop wire	200 mmf	600 KC	Variable plates	Max.	150
Battery Complement: 2—4½ Volt "A" Batteries Eveready No. 746 or equivalent 2—45 Volt "B" Batteries Eveready No. 482 or equivalent					

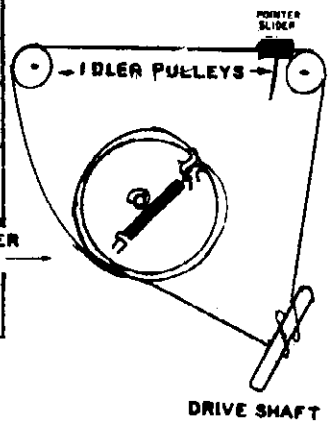

VOLTAGE MEASUREMENT

All reading in AC-DC position of power selector switch with 20,000 ohms per meter. Readings taken are referred to ground.

117Z3 PIN	AC	DC	RESISTANCE IN OHMS
1	117V	—	540
2	—	120V	2000
3	117V	—	500
4	—	--	---
5	117V	--	500
6	120V	—	2000
7	—	--	---

3Q4 PIN	DC	RESISTANCE IN OHMS
1	4.8V	50
2	86V	2000
3	—	500,000
4	88V	1500
5	6V	50
6	86V	2000
7	7.6V	70

1S5 PIN	DC	RESISTANCE IN OHMS
1	--	---
2	--	---
3	--	400,000
4	19V	3,000,000
5	7.8V	1,500,000
6	—	10,000,000
7	1.5V	260

1T4 PIN	DC	RESISTANCE IN OHMS
1	1.5V	260
2	88V	1500
3	88V	1500
4	—	---
5	1.5V	---
6	—	2,200,000
7	5V	45

1R5 PIN	DC	RESISTANCE IN OHMS
1	3.5V	45
2	88V	1500
3	88V	1500
4	--	85
5	1.6V	45
6	--	--
7	2.5V	50

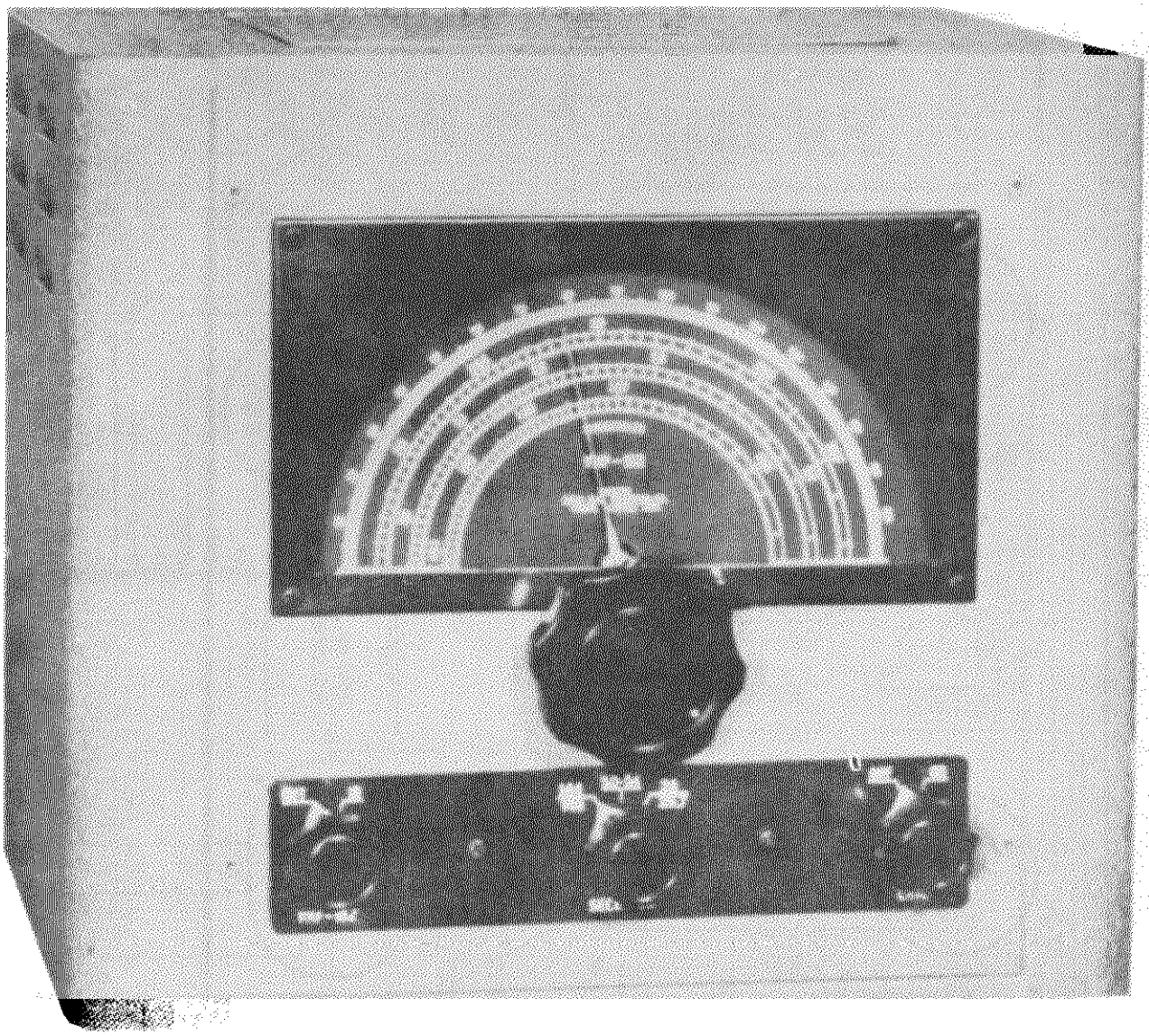

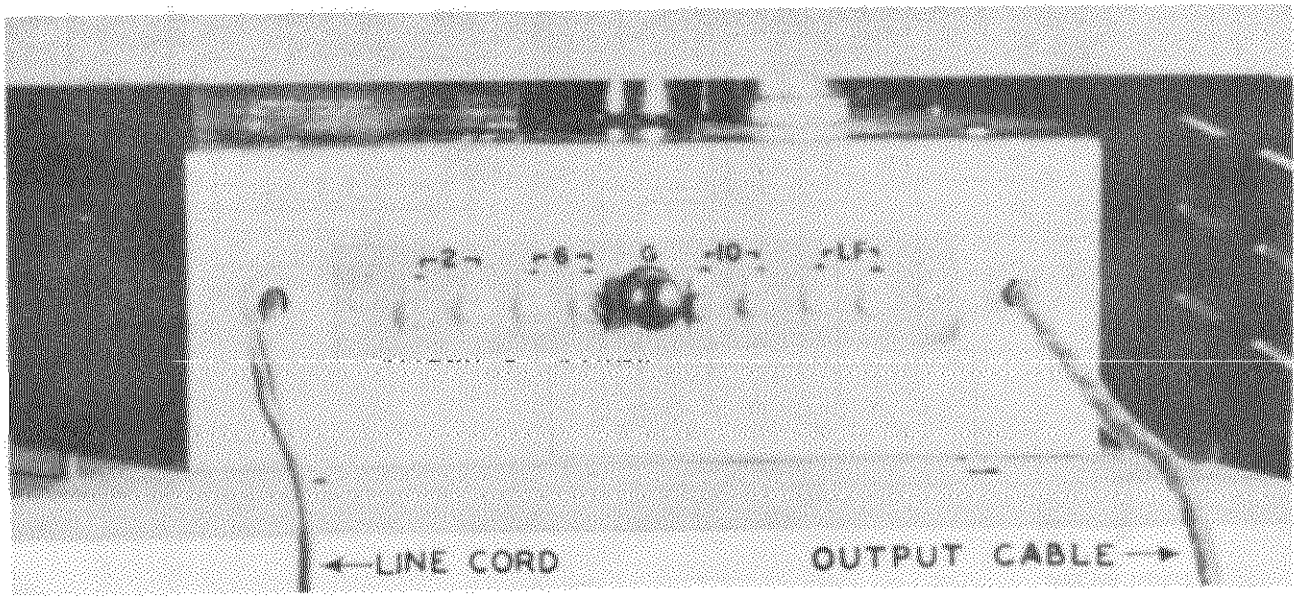

©John F. Rider

MODEL VHF-152 RADIO MFG. ENGINEERS INC.

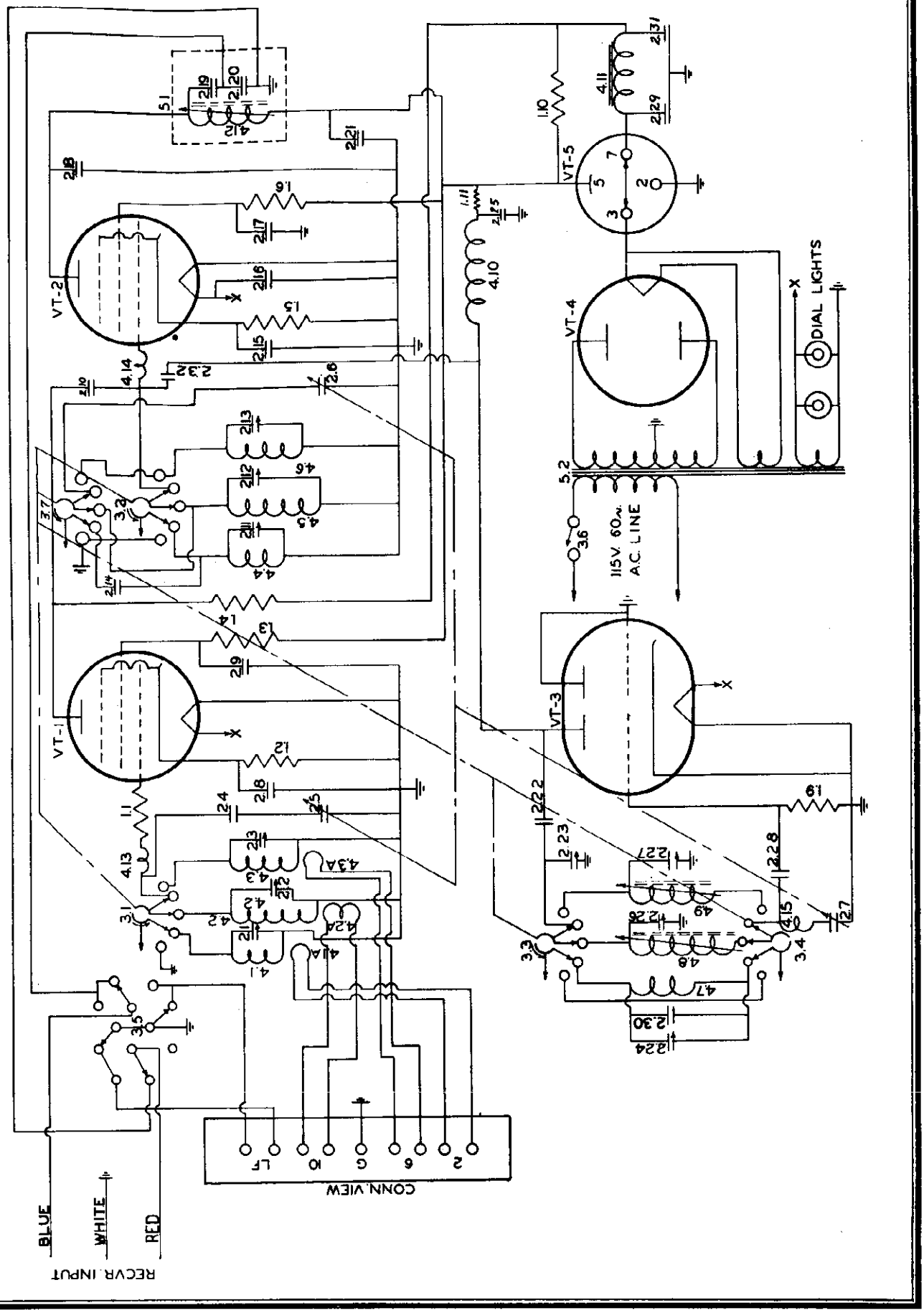

RADIO MFG. ENGINEERS INC. MODEL VHF-152

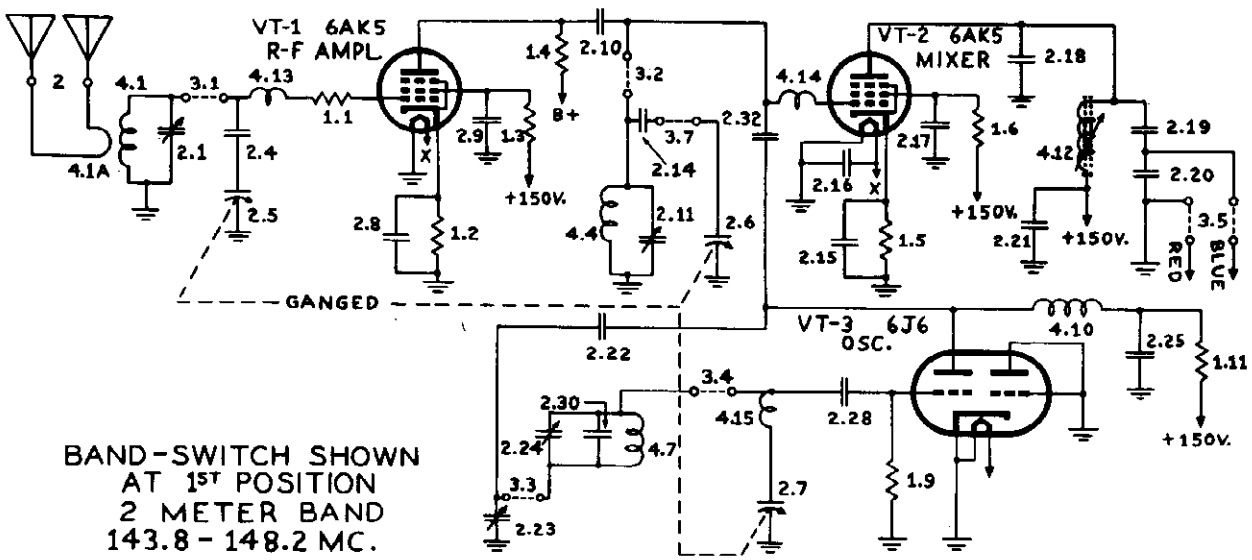

BAND-SWITCH SHOWN
AT 1ST POSITION
2 METER BAND
143.8 - 148.2 MC.

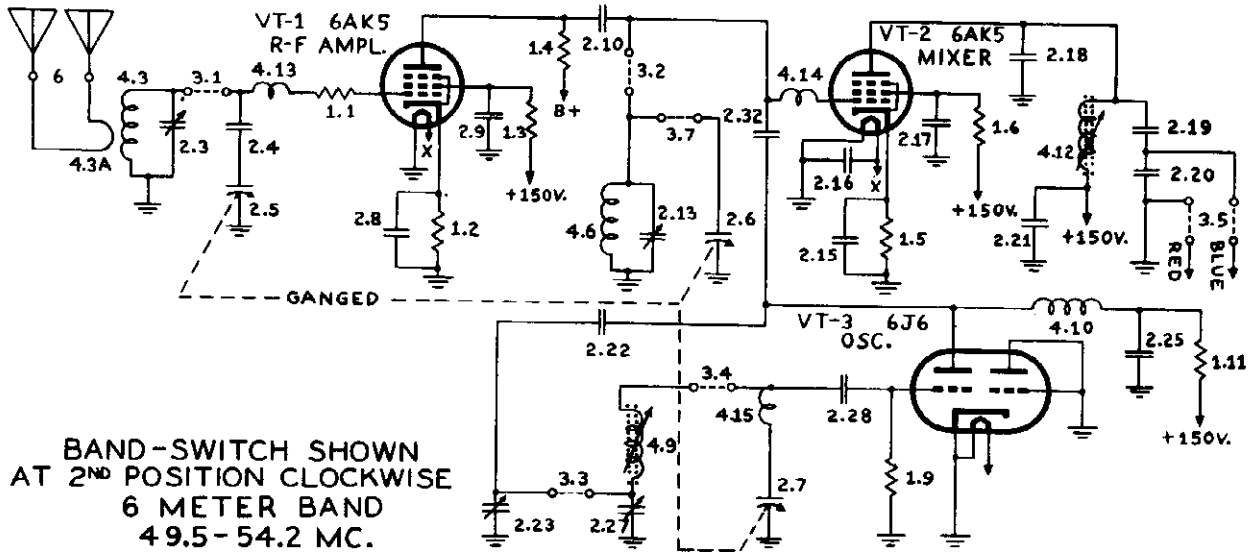

BAND-SWITCH SHOWN
AT 2ND POSITION CLOCKWISE
6 METER BAND
49.5 - 54.2 MC.

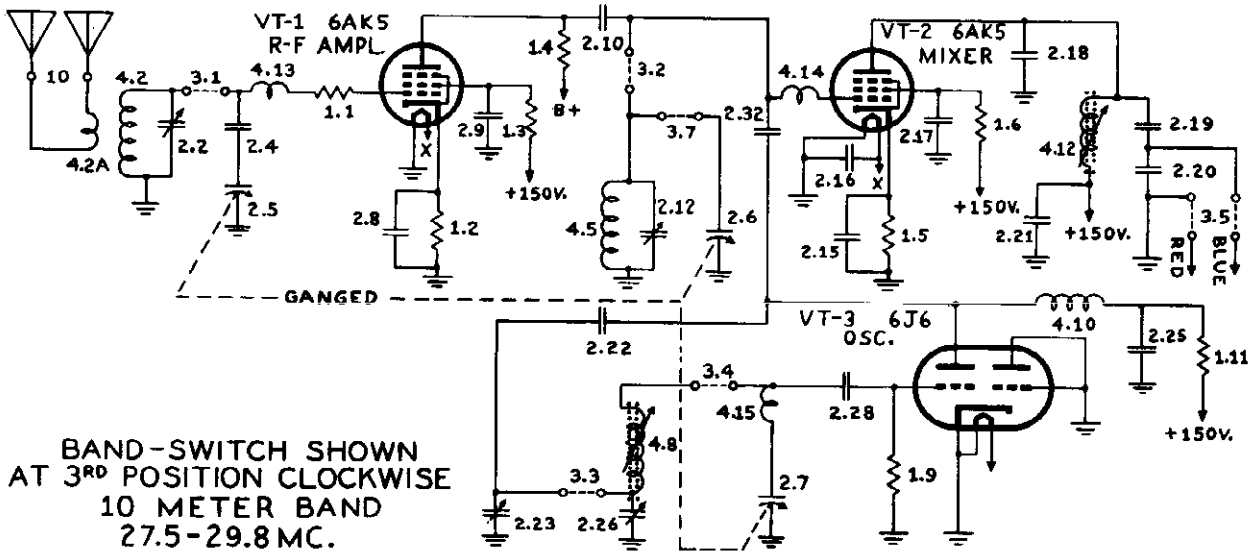

BAND-SWITCH SHOWN
AT 3RD POSITION CLOCKWISE
10 METER BAND
27.5 - 29.8 MC.

MODEL VHF-152 RADIO MFG. ENGINEERS INC.

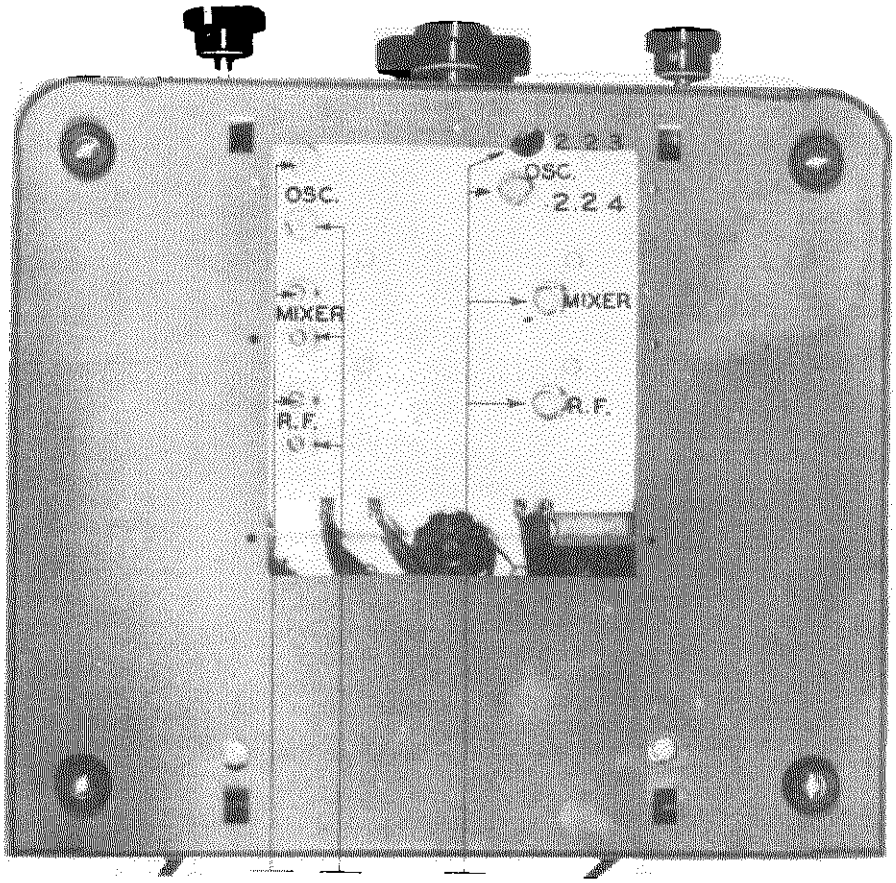

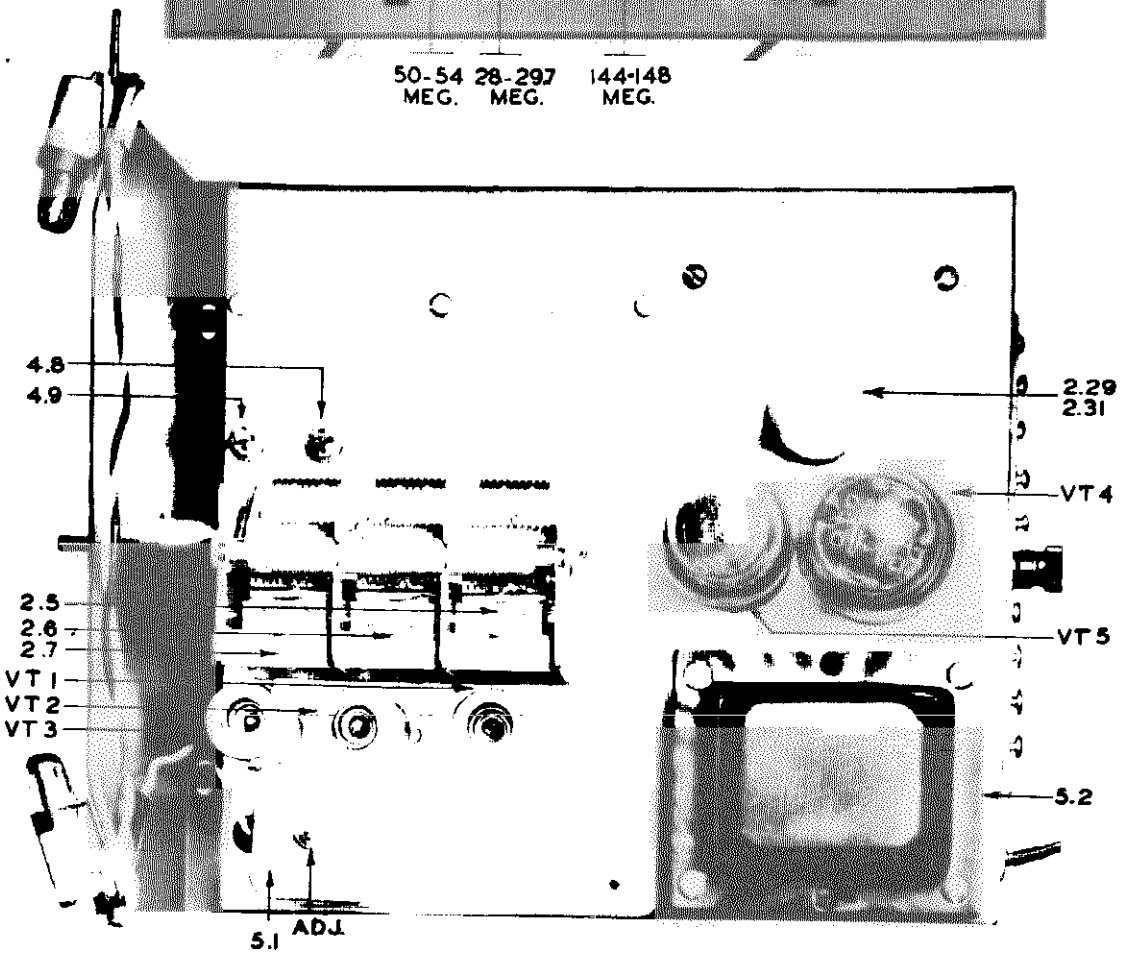

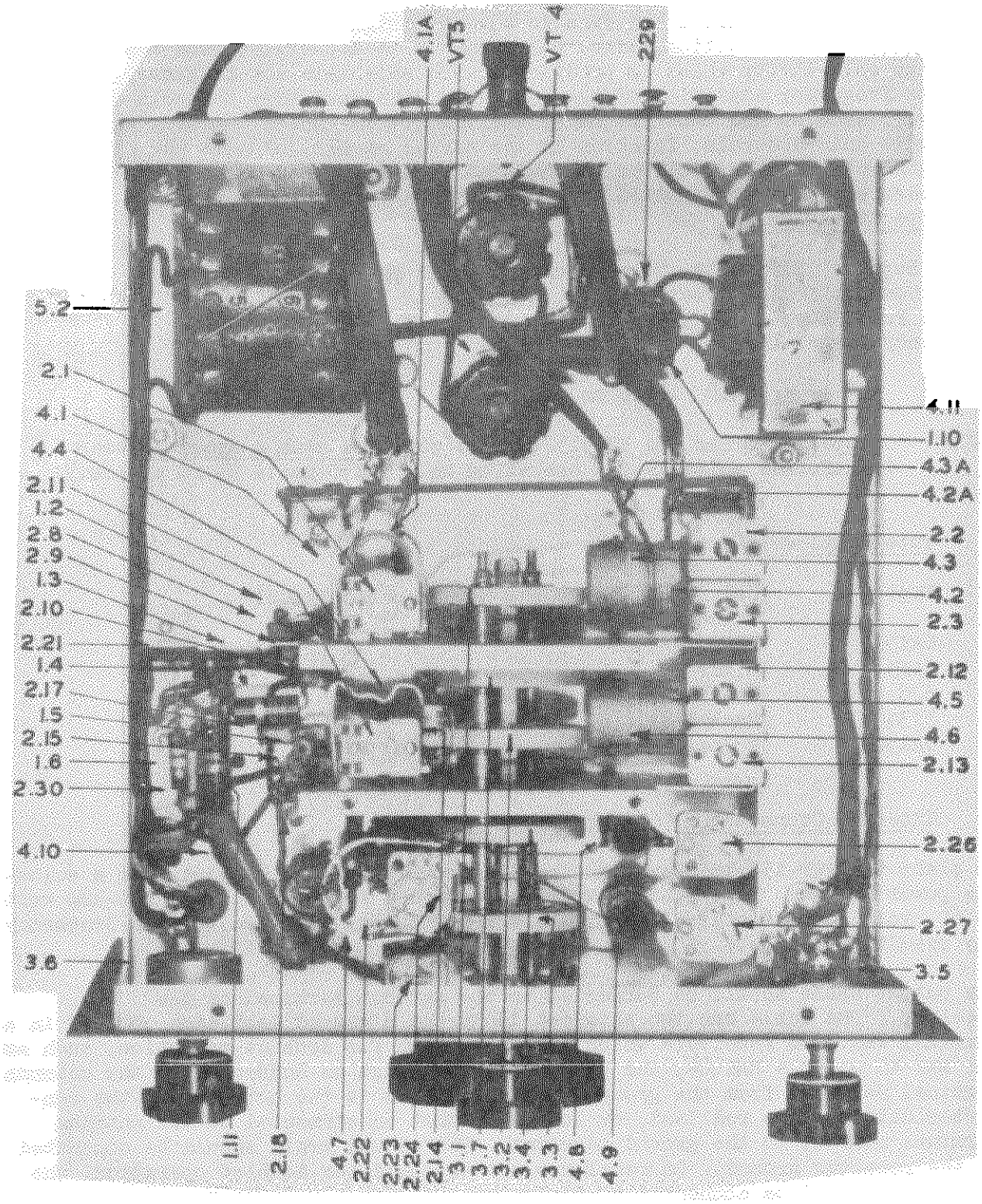
5.2
2.1
4.1
4.4
2.11
1.2
2.8
2.9
1.3
2.10
2.21
1.4
2.17
1.5
2.15
1.6
2.30
4.10
3.6
4.11
1.10
4.3A
4.2A
2.2
4.3
4.2
2.3
2.12
4.5
4.6
2.13
2.26
2.27
3.5

MODEL VHF-152 RADIO MFG. ENGINEERS INC.

The VHF-152 Frequency Converter has been designed for use with a conventional communication type receiver to extend its range to cover the 10, 6 and 2 meter amateur bands. The unit consists of an RF amplifier, a mixer, and a high frequency oscillator. The function of the unit is to convert the very high frequencies received by it to a new fixed frequency of 7 megacycles which is fed to the receiver and amplified and detected in the normal manner. This system of receiving may be described as a double heterodyne system. Its advantages are: high image rejection, since the image is 14 megacycles from the signal; and high selectivity which is provided by the selective low frequency intermediate frequency amplifier of the receiver. The auxiliary controls on the receiver, such as the beat frequency oscillator, the noise limiter, and RF and audio gain controls, function in the normal manner, as does the signal strength meter if the receiver is equipped with one. The RME-45 and RME-84 Receivers are admirably suited for use with the VHF-152 Converter.

Specifications

Power Supply: 115 volts, 50-60 cycles, single phase*
Power Consumption: 40 watts @ 115 volts
Output Frequency: 7 mc (7000 kc)
Frequency Range: 27.5 - 29.8 mc
49.5 - 54.2 mc
143.8 -148.2 mc

*NOTE: On special order the VHF-152 may be obtained with a special power transformer suitable for operation on 115-230 volts 25-60 cycles.

Tube Complement

	Type	Use	Schematic Symbol
1.	6AK5	RF Amplifier	V1
2.	6AK5	Mixer	V2
3.	6J6	Oscillator	V3
4.	5Y3G	Rectifier	V4
5.	VR150	Voltage Regulator	V5

External Connections

To place the VHF-152 in operation the line cord should be plugged into a suitable power source. The standard model is designed for operation on 100-120 volt 50-60 cycle AC line only. Use of the VHF-152 on any other voltage or frequency may result in damage.

The output cable should be connected to the antenna terminal of the receiver. The cable has two shielded leads and a ground lead each ending in a terminal lug. On receivers which have provision for doublet operation, such as the RME-45 and the RME-84, the blue coded lead must be connected to the antenna terminal farthest from the ground terminal. This is the hot side of the converter output. The red lead, or low side, must be connected to the antenna terminal nearest to the ground terminal. The ground braid should be connected to the receiver ground. On receivers not equipped for doublet operation, the blue lead should be connected to the antenna terminal and the red and ground (shield) leads should be connected to the receiver ground. This lead is coded white. Unless the above instructions are followed, the changeover switch will not operate properly.

If an RME DB-20 Preselector is used ahead of the receiver, the connections will be made as above except that the converter output cable connects in the same manner to the DB-20 antenna terminals instead of to the receiver.

Precautions

IMPORTANT - Attempted operation of the VHF-152 on any voltage or frequency than that for which it is designed will result in damage to the unit. The operator must be sure that the supply is correct before plugging in the converter.

Antennas

On frequencies of 30 megacycles and above, the use of a resonant antenna is mandatory. For this reason the VHF-152 is provided with separate antenna connection for each frequency band. On the terminal strip on the rear apron are four sets of two terminals each. These terminals are marked "2" for the 144-148 mc band: "6" for the 50-54 mc band, and "10" for the 28-29.7 mc band. The input impedance for each band has been designed to be 300 ohms so that the owner may make use of the 300 ohm twin lead line now available. The remaining set of two terminals marked "LF" are for connecting the low frequency antenna used with the receiver. This pair of terminals is connected through to the receiver when the antenna changeover switch is turned to "OUT".

Operation and Circuit Details

Introduction

The VHF 152 operates in conjunction with a communication type receiver tuned to approximately 7 mc. The accuracy of setting the receiver will effect the accuracy of calibration of the VHF-152 by the same amount. That is to say if the low frequency receiver is off 100 kilocycles, the calibration of the VHF-152 will also be off by 100 kilocycles. It should be noted that the operator is not bound to use the output frequency of exactly 7.0 mc. If interference is encountered he may move the receiver tuning slightly to a clear channel, realizing that the VHF-152 calibration will change by the same amount the low frequency receiver was moved. If it is necessary to move the receiver frequency so far that the calibration is affected, he may recalibrate by following instructions in Section IV. It is not recommended that the output frequency be moved more than 150 kc higher or lower than 7.0 mc because of tracking troubles that may be encountered. In the factory the I.F. is left aligned at 6950 kc.

In double heterodyne receiving systems spurious signals may be received which are harmonics of the receiver local oscillator. On the VHF-152 two such signals may be received. One signal will be heard at 29.8 mc, which is outside the 28-29.7 mc band. Another may be heard at 52.2 mc. If it is found that this spurious signal falls on a real signal which is desired, the spurious signal may be moved by changing the receiver tuning slightly.

Line Switch

The equipment is turned on by means of the line switch on the right hand side of the control panel.

Changeover Switch

On the left side of the control panel is the changeover switch. When this switch is turned to "IN", the output of the VHF-152 is fed to the receiver input terminals. At the same time the low frequency antenna terminals are

grounded to prevent 7 mc signals from feeding through the VHF-152 to the receiver. When the changeover switch is turned to "OUT" the output of the VHF-152 is grounded and the low frequency "LF" antenna terminals are connected through the receiver. Thus by turning the changeover switch to "OUT" the receiver functions normally.

Band Switch

In the center of the control panel is the band change switch. This switch has three positions marked: 144-148, 50-54, and 28-29.7, and is used to switch the VHF-152 to the desired range.

RF Stage Peaking

When the VHF-152 leaves the factory, the stages are peaked to maximum sensitivity. It may be found that some antennas may reflect a reactance into the RF stage that will detune it slightly. With the antenna for a certain band connected the RF padder for that band may be peaked up by listening to a signal. Figure IV shows the location of the RF padders for each band. To get at the padders it is necessary to remove the bottom cover plate.

IF Stage Peaking

The IF transformer on the VHF-152 is peaked at the factory at 6.95 mc. Different receivers connected to the output may change this tuning slightly. The owner should check the peaking of this transformer with the receiver connected. Peaking is accomplished by turning the screw on the top of the can. The screw should be adjusted for maximum gain as indicated by a received signal or maximum background noise if a signal is not available.
The owner may, if he has an accurate signal source available, recalibrate his converter as discussed in succeeding paragraphs. It should be born in mind that the calibration of the converter is affected by the setting of the companion receiver. Therefore, before attempting to recalibrate the converter, the calibration of the receiver should be checked.

The VHF-152 will drift somewhat during the first three minutes after being turned on and to a much less extent during the next ten or twenty minutes. It is recommended that no attempt be made to recalibrate or align the equipment until it has reached a stable temperature.

All calibrating and alignment should be done with the receiver connected and the changeover switch in the "IN" position.

If the receiver has a carrier level meter such as is on the RME-45, this meter is used as a tuning indicator when peaking the circuits. If the receiver is not equipped with a meter, it will be necessary to connect an audio output meter to the receiver for a tuning indicator. When using an audio output meter, it is necessary to remove the AVC from the receiver.

IF Coil Alignment

As pointed out. the VHF-152 is calibrated and aligned for an output frequency of 6.95 mc. The output tuning is controlled by the screw

on the top of the aluminum can on the top of the chassis. The tr may be peaked with a 6.95 mc signal fed into the mixer grid or with a signal tuned in on the converter. Connection to the mixer grid is most easily made on the stator of the center section of the tuning condenser. In either case, the transformer is adjusted to maximum sensitivity as indicated by the meter on the receiver.

Calibration

Calibration of the VHF-152 should not be attempted unless it is definitely established that the calibration is off.

Calibration is controlled by the oscillator padders. These padders are made accesible by removal of the cabinet bottom plate. Beneath this plate is a second aluminum plate in which are padder access holes. All calibrating and aligning should be done with this cover on.

High beat is used on all bands. That is to say, the oscillator is always 7 mc (approximately) above the received signal. As in the case of all super heterodyne receivers, if sufficient input is used each signal may be received at two points differing by twice the IF frequency. With a signal being received, the padder setting that gives the highest oscillator frequency is the proper setting.

The two low frequency ranges have iron core oscillator coils. The screws for adjusting the inductance of these coils is accessible on the top of the chassis. Unless the screws have been disturbed, adjustment should never be necessary.

RF Alignment

When the calibration is correct, the RF circuits should be aligned. Each of the R-F padders should be adjusted for maximum sensitivity as indicated by the meter on the receiver.

When using a signal generator in aligning the VHF-152 a 300 ohm resistor should be inserted between the signal generator and the antenna terminals in order that the low impedance of the signal generator will not swamp the RF circuit and cause a misalignment of this circuit. Best results will be obtained when the RF circuit is aligned with the antenna connected.

Voltage Charts

As an aid in trouble shooting on the VHF-152, the following chart of voltages at various points in the circuit is tabulated below. Voltage readings should be made with a voltmeter of at least 2000 ohms per volt resistance. Variation of ± 15% may be expected. All voltages are measured from the point indicated to ground.

Circuit	Volts
RF Plate	190
RF Screen	115
RF Cathode	1.9
Mixer Plate	150
Mixer Screen	121
Mixer Cathode	6.0
Osc. Plate	49
Osc. Grid*	-12.0 (10 meters), - 7.0 (6 Meters), - 3.0 (2 Meters)

* Note: With a 2.5 mh choke in series with the voltmeter lead.

MODEL VHF-152 RADIO MFG. ENGINEERS INC.

Parts List

No.	Component
1.1	20 ohm 1/2 watt ± 20% carbon
1.2	220 ohm 1/2 watt ± 10% carbon
1.3	15K ohm 1/2 watt ± 10% carbon
1.4	18K ohm 2 watt ± 10% carbon
1.5	2200 ohm 1/2 watt ± 5% carbon
1.6	250K 1/2 watt ± 10% carbon
1.9	4.7K ohm 1/2 watt ± 10% carbon
1.10	3.5K ohm 10 watt Brown Devil
1.11	18K ohm 2 watt ± 10%
2.1	30 Mmfd. - Mica Padder
2.2	20 Mmfd. - Mica Padder
2.3	20 Mmfd. - Mica Padder
2.4	25 Mmfd. - Ceramic ± 10% Neg.Coeff
2.5	Tuning Condenser, Rear Sec. (RF)
2.6	Tuning Condenser, Middle Sec.(Mixer)
2.7	Tuning Condenser, Front Sec. (Osc.)
2.8	1000 Mmfd. ± 20% 500 volt
2.9	1000 Mmfd. ± 20% 500 volt
2.10	100 Mmfd. Ceramic ± 10%
2.11	30 Mmfd. Mica Padder
2.12	20 Mmfd. Mica Padder
2.13	20 Mmfd. Mica Padder
2.14	15 Mmfd. Ceramic ± 5%
2.15	1000 Mmfd. ± 20% 500 volt
2.16	1000 Mmfd. ± 20% 500 volt
2.17	1000 Mmfd. ± 20% 500 volt
2.18	25 Mmfd. Ceramic ± 10% Neg. Coeff
*2.19	100 Mmfd. ± 5% 500 volt
2.20	1000 Mmfd. ± 20% 500 volt
2.21	.01 Mfd. Paper 600 volt
2.22	25 Mmfd. Ceramic ± 10% Neg. Coeff
2.23	3-13 Mmfd. Ceramic Padder, Neg. Coeff
2.24	3-13 Mmfd. Ceramic Padder, Neg. Coeff
2.25	1000 Mmfd. ± 10% 500 volt
2.26	3.13 Mmfd. Ceramic Padder, Neg. Coeff
2.27	3-13 Mmfd. Ceramic Padder, Neg. Coeff
2.28	25 Mmfd. Ceramic ± 10% Neg. Coeff
2.29	10 Mfd. Electrolytic 450 volt
2.30	20 Mmfd. Ceramic ± 5% Neg. Coeff
2.31	10 Mfd. Electrolytic 450 volt
2.32	1.5 Mmfd. ± .25 Mmfd.
3.1	R.F. Switch Section, Ceramic
3.2	Mixer Switch Section, Ceramic
3.3	Osc. Plate Switch Section, Ceramic
3.4	Osc. Grid Switch Section, Ceramic
3.5	Changeover Switch 4 pole, 2 position
3.6	A.C. Line Switch Single Pole Single Throw
3.7	Mixer Switch Section, Ceramic

No.	Component
4.1	2 Meter R.F. Coil
4.2	10 Meter R.F. Coil
4.3	6 Meter R.F. Coil
4.4	2 Meter Mixer Coil
4.5	10 Meter Mixer Coil
4.6	6 Meter Mixer Coil
4.7	2 Meter Osc. Coil
4.8	10 Meter Osc. Coil
4.9	6 Meter Osc. Coil
4.10	Osc. Plate Choke ± 10% 2.5 Microhenry
4.11	Power Supply Filter Choke
*4.12	7 mc I.F. Coil
4.13	R.F. Lead Inductance
4.14	Mixer Leader Inductance
4.15	Osc. Lead Inductance
5.1	7 mc I.F. Transformer
5.2	Power Transformer
VT-1	6AK5
VT-2	6AK5
VT-3	6J6G
VT-4	5Y3GT
VT-5	VR150-30

*In some units the coil 4.12 will be fixed in inductance and capacitor 2.19 will be 100 mmfd. - adjustable.

RADIO & TELEVISION INC.

MODELS D-1000, D-1100, T-9000, T-2200, T-2200X

TUBE COMPLEMENT

Type	Function
6AG5	FM RF Amplifier
6SB7Y	FM Converter
6SK7	FM 1st I.F. Amplifier
6SK7	FM 2nd I.F. Amplifier AM 1st I.F. Amplifier
6SK7	FM 3rd I.F. Amplifier
6U5	Tuning Indicator
6H6	Ratio Detector
6SK7	AM RF amplifier
6SA7	AM Converter
6SQ7	AM Detector and 1st Audio
6SN7	Audio Driver and phase Inverter
6K6GT	Push Pull Output
6K6GT	Push Pull Output
5Y3GT	Rectifier

ELECTRICAL SPECIFICATIONS

117 volt 60 cycle AC. operation. Power consumption 85 watts. Built in AM Loop and folded Dipole FM antenna. FM tuning range 88mc to 108mc. FM dial calibration in channel numbers and Frequency in megacycles. AM tuning range 540 KC to 1620 KC.

Speaker: 12" PM or two 6" x 9" oval PM Voice Coil Impedance 6 ohms. Power output 9 watts undistorted 12 watts maximum.

ON-OFF SWITCH AND VOLUME CONTROL

Rotate the knob on the extreme right clockwise to turn receiver on. Continued rotation to the right increases volume.

BAND SWITCH

The second knob from the left has 4 positions. Each function is marked on the instrument panel. AM extreme left, FM 2nd position from left, PH for Phono 3rd position from left and TV. for Television sound on extreme right.

TONE CONTROL

The knob on the extreme left consists of two independently variable controls. The larger section varies the high frequency response and the smaller controls bass.

TUNING AND TUNING INDICATOR

The second knob from the right tunes the receiver. In selecting stations tune for maximum closing of the tuning indicator on both AM and FM. The tuning indicator does not operate on Phono or TV.

ALIGNMENT

Before proceeding with alignment of set calibration point must be checked. This is the first line beyond 88 MC. Set Dial pointer to this line with tuning condenser fully meshed.

MODELS D-1000,
D-1100, T-9000,
T-2200, T-2200X

RADIO & TELEVISION INC.

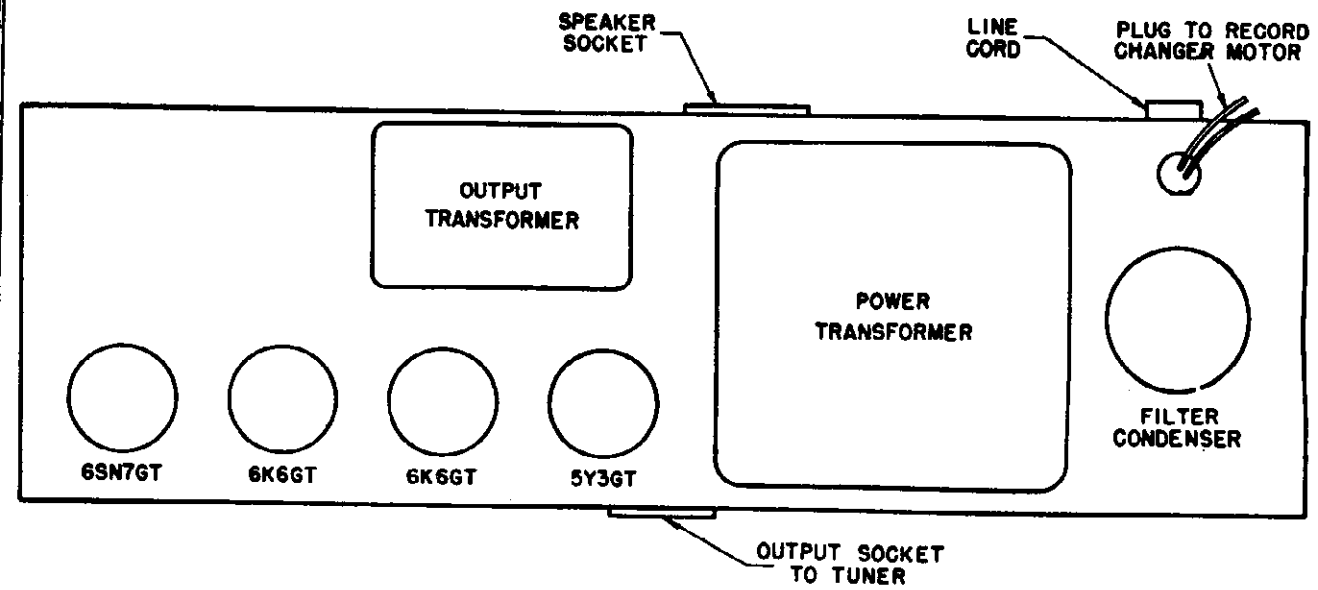

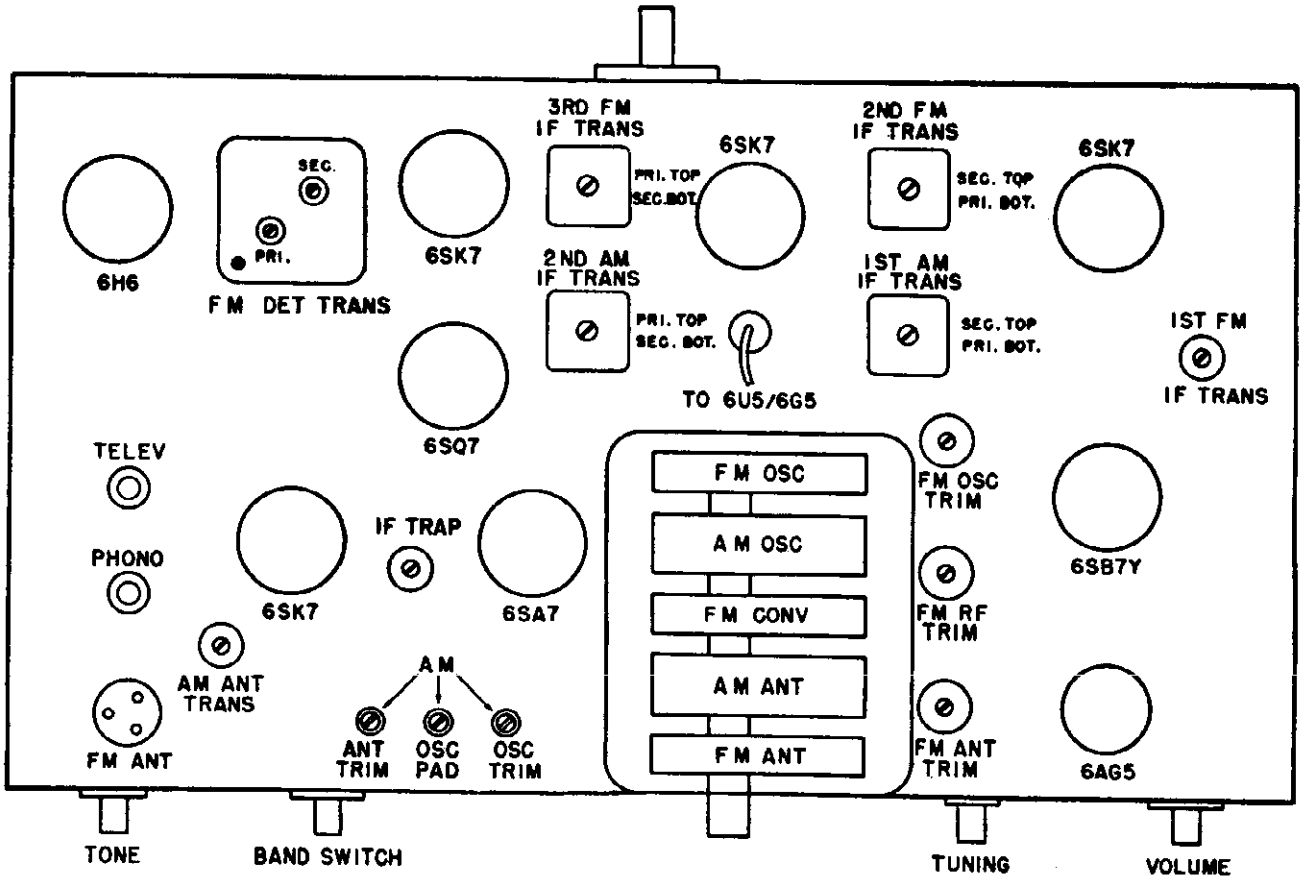

© John F. Rider

RADIO & TELEVISION INC.

MODELS D-1000, D-1100, T-9000, T-2200, T-2200X

K—1000
M—1,000,000

RESISTANCE READINGS (Ohms)

Symbol	Tube	Pin 1	Pin 2	Pin 3	Pin 4	Pin 5	Pin 6	Pin 7	Pin 8
1	6AG5	0	70	0	2	400K	400K	70	—
2	6SB7	0	0	400K	400K	20K	0	0	0
3	6SK7	0	0	180	150K	180	400K	0	400K
4	6SK7	0	0	0	650K	0	400K	0	400K
5	6SK7	0	0	180	150K	180	400K	0	400K-FM INF-AM
6	6SK7	0	0	0	2.5M	0	400K	0	400K-AM INF-FM
7	6SA7	0	0	400K-AM INF-FM	400K-AM INF-FM	20K	1.0	0	85K
8	6SQ7	0	10M	0	75K	75K	1M	0	0
9	6H6	0	0	130K	0	24K	—	0	130K
10	6U5	0	1.5M	700K	400K	0	0	—	—
11	6SN7	120K Tone Mx. 200K " Min.	500K	3.3K	42K	500K	3.3K	0	0
12	6K6GT	—	0	500K	400K	500K	—	0	410
13	6K6GT	—	0	500K	400K	540K	42K	0	410
14	5Y3GT	—	400K	—	120	—	120	400K	400K

VOLTAGE READINGS

Symbol	Tube		Pin 1	Pin 2	Pin 3	Pin 4	Pin 5	Pin 6	Pin 7	Pin 8
1	6AG5		OV.	0.7V DC	OV.	6.3V AC	85V DC	85V DC	0.7V DC	—
2	6SB7Y		OV.	6.3V AC	85V DC	85V DC	-6.0	OV.	OV.	OV.
3	6SK7		OV.	6.3V AC	OV.	OV.	OV.	85V DC	OV.	85V DC
4	6SK7	AM	OV.	OV.	OV.	OV.	OV.	110V DC	6.3V AC	107V DC
		FM	OV.	OV.	OV.	OV.	OV.	85V DC	6.3V AC	85V DC
5	6SK7		OV.	OV.	OV.	OV.	OV.	90V DC	6.3V AC	95V DC
6	6SK7		OV.	OV.	OV.	OV.	OV.	110V DC	6.3V AC	60V DC
7	6SA7		OV.	OV.	120V DC	85V	-12.0(VTVM)	OV.	6.3V AC	OV.
8	6SQ7		OV.	OV.	OV.	OV.	OV.	70V DC	OV.	6.3V AC
9	6H6		OV.	OV.	OV.	OV.	1.9V DC	—	6.3V AC	15V DC
10	6U5		6.3VAC	105V DC	OV.	130V DC	OV.	OV.	—	—
11	6SN7	AM	OV.	94V DC	2.0V DC	OV.	94V DC	2.0V DC	OV.	6.3V AC
		FM	OV.	82V DC	1.8V DC	OV.	82V DC	1.8V DC	OV.	6.3V AC
		PH.	OV.	135V DC	2.6V DC	OV.	133V DC	2.6V DC	OV.	6.3V AC
12-13	6K6GT	AM	NC	6.3V AC Bet. 2 & 7	318V DC	245V DC	OV.	NC	6.3V AC Bet. 2 & 7	18.5V DC
		FM	NC	"	305V DC	207V DC	OV.	NC	"	16.0V DC
		PH.	NC	"	340V DC	310V DC	OV.	NC	"	24.5V DC
14	5Y3GT	AM	NC	5.0V AC Bet. 2 & 7	NC	320V AC	NC	320V AC	5.0V AC Bet. 2 & 7	320V DC
		FM	NC	"	NC	320V AC	NC	320V AC	"	310V DC
		PH.	NC	"	NC	320V AC	NC	320V AC	"	340V DC

Line at 117 Volts AC. All DC Readings taken with 20,000 Ohms per Volt Meter unless otherwise indicated. AC Readings taken at 1000 Ohms per volt. Allow ± 10%.

MODELS D-1000, D-1100, T-9000, T-2200, T-2200X

RADIO & TELEVISION INC.

AM ALIGNMENT INSTRUCTION SHEET

Steps	Connect Generator	Set Generator at	Set Gang at	Adjust	To Obtain
1	Pin No. 4 6SK7 R.F Tube with .05 Mfd. Series Cond.	455 Kc	Quiet point	1st and 2nd I.F. Pri. & Sec.	Max. output
2	"	"	"	Wave trap	Min. output
3	"	1500 Kc	1500 Kc	BC OSC trimmer	Max. output
4	"	600 Kc	600 Kc	OSC. padder	"
5	"	1500 Kc	1500 Kc	BC. OSC. trimmer	"
6	Use Coupling Coil between Generator and Loop	600 Kc	600 Kc	Ant. Loading Coil	"
7	"	1500 Kc	1500 Kc	Ant. Trimmer	"

Set Band switch to AM.
Set Tone control to maximum left.
Set Volume control to maximum right.
Place AM loop in same relative position as in cabinet.
Keep output of signal generator low to prevent AVC Action.
Use output meter across voice coil.

FM ALIGNMENT INSTRUCTION SHEET

Steps	Connect Generator	Set Generator at	Set Gang at	Adjust	To Obtain
1	Pin No. 8 6SB7Y	10.7 MC	Hi. Freq. Stop	Ratio Det. Primary (Red Dot)	Max. output from point P to Gnd.
2	"	"	"	3rd IF Pri. & Sec.	"
3	"	"	"	2nd IF Pri. & Sec.	"
4	"	"	"	1st IF	"
5	"	"	"	Ratio Det. Sec.	Zero Balance on VTVM from C to A
6	Clip on to FM Dipole	108 MC	108 MC	Osc. Trimmer	Max output from point B to Gnd.
7	"	88 MC	88 MC	Osc Coil*	"
8	"	103 MC	103 MC	RF Trimmer	"
9	"	103 MC	103 MC	Ant. Trimmer	"

Set Band Switch to FM
See Circuit Diagram for VTVM Connections.
For Steps 1 through 5 use .01 Mfd. condenser in Series with High side of generator.
Use V.T.V.M for output Indication
*This adjustment is made by pushing turns together or pulling apart. Use insulated tool.

RADIO & TELEVISION INC.

MODELS D-1000,
D-1100, T-9000,
T-2200, T-2200X

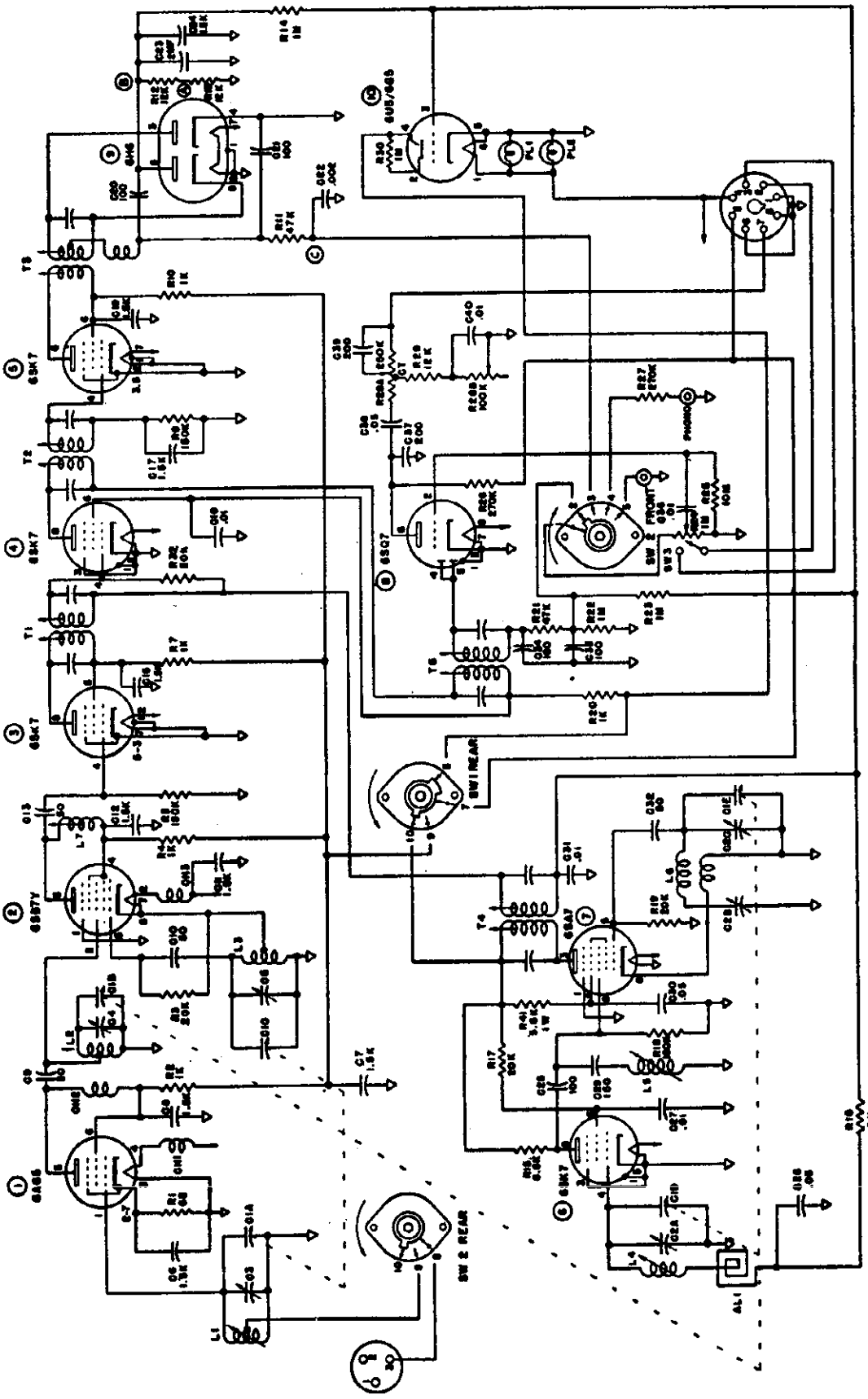

MODELS D-1000,
D-1100, T-9000,
T-2200, T-2200X

RADIO & TELEVISION INC.

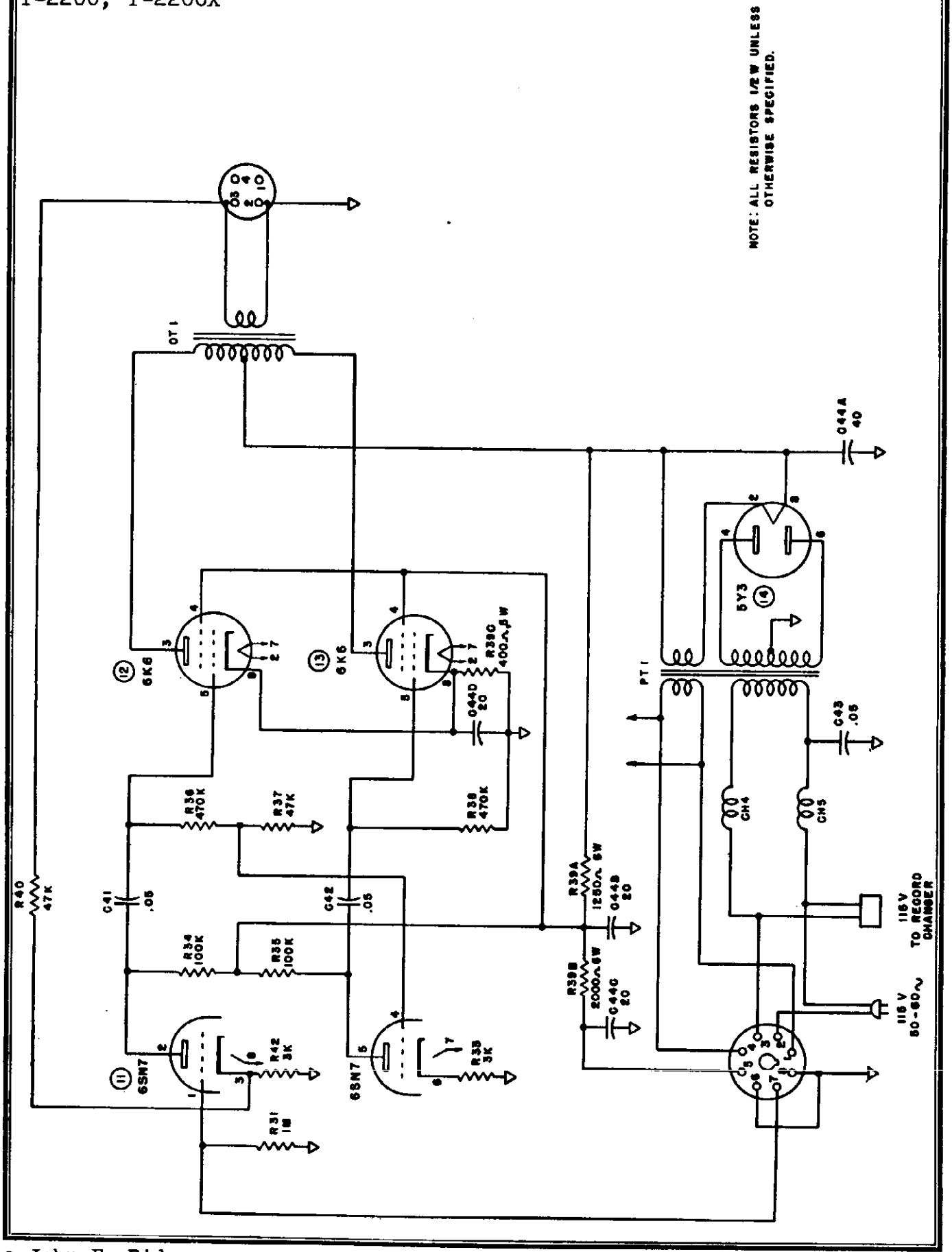

© John F. Rider

RADIO & TELEVISION INC.

MODELS D-1000, D-1100, T-9000, T-2200, T-2200X

PARTS LIST

Symbol	Part No.	DESCRIPTION	Symbol	Part No.	DESCRIPTION
C1A-B-C-D-E	CV106	AM-FM Tuning Condenser	R11-40-21-37	RS473B	47K ½ W. ±10%
C2A-B-C	CT107	3 Section Trimmer Assembly	R12-13-29	RS123B	12K ½ W. ±10%
			R14-22-23-30-31	RS105B	1 Meg. ½ W. ±10%
C3	CT174	FM RF Trimmer 1-8 Mmfd.	R15	RS682B	6.8K ½ W. ±10%
C4	CT174	FM Mixer Trimmer 1-8 Mmfd.	R16	RS225B	2.2 Meg. ½ W. ±10%
			R24	VC150	1 Meg. Volume Control and Switch
C5	CT175	FM Oscillator Trimmer 1-12 Mmfd.	R25	RS106B	10 Meg. ½ W. ±10%
C6-7-8-11-12-15-17-19-24	CC144	1500 Mmfd. Ceramic ±20%	R26-27	RS274B	270K ½ W. ±10%
			R28A-B	VC151	Dual Tone Control
			R33-42	RS322B	3000 ½ W. ±10%
C9-10-13-32	CC141	51 Mmfd. Ceramic ±20%	R34-35	RS104B	100K ½ W. ±10%
			R36-38	RS474B	470K ½ W. ±10%
C16-27	CP102	.01 Mfd. 400 V.	R39A-B-C	RD123	Voltage Divider and Bias Res.
C20-21-28-34-35	CC142	100 Mmfd. Ceramic ±20%	R41	RS562	5.6K 1 W. ±10%
C22	CC145	200 Mmfd. Ceramic ±20%	L1	FM221	FM Antenna Coil
			L2	FM221	FM RF Coil
C23	CE101	2 Mfd. Electrolytic 25 V	L3	FM222	FM Osc. Coil
C26-31-43	CP105	.05 Mfd. 200 V.	L4	AN183	AM Ant. Coil
C29	CC178	150 Mmfd. Ceramic	L5	TR184	AM IF Trap
C30-38-41-42	CP104	.05 Mfd. 400 V.	L6	OS182	AM Osc. Coil
			CH1-2-3-4-5	LC181	Choke
C36-40	CP103	.01 Mfd. 200 V.	AL1	AL236	AM Loop
C37-39		200 Mmfd. Ceramic ±20%	L7	IF180	FM 1st I.F.T.
			T1	KT161	FM 2nd I.F.T.
C44A-B-C-D	CE100	Electrolytic Cond. 40 20-20 Mfd. 450 V. 20 Mfd. 25 V.	T2	KT162	FM 3rd I.F.T.
			T3	RD168	FM Ratio Detector
			T4	KT163	AM 1st I.F.T.
R1	RS68B	68 ½ W. ±10%	T5	KT164	AM 2nd I.F.T.
R2-4-7-10-20	RS102B	1000 ½ W. ±10%	SW1-2	SW124	Band Switch
			PT1	PT119	Power Transformer
R3-17-19-32	RS203B	20K ½ W. ±10%	OT1	OT120	Output Transformer
R5-8-18	RS151B	150K ½ W. ±10%	PL1-2	PL147	No. 47 Pilot Light

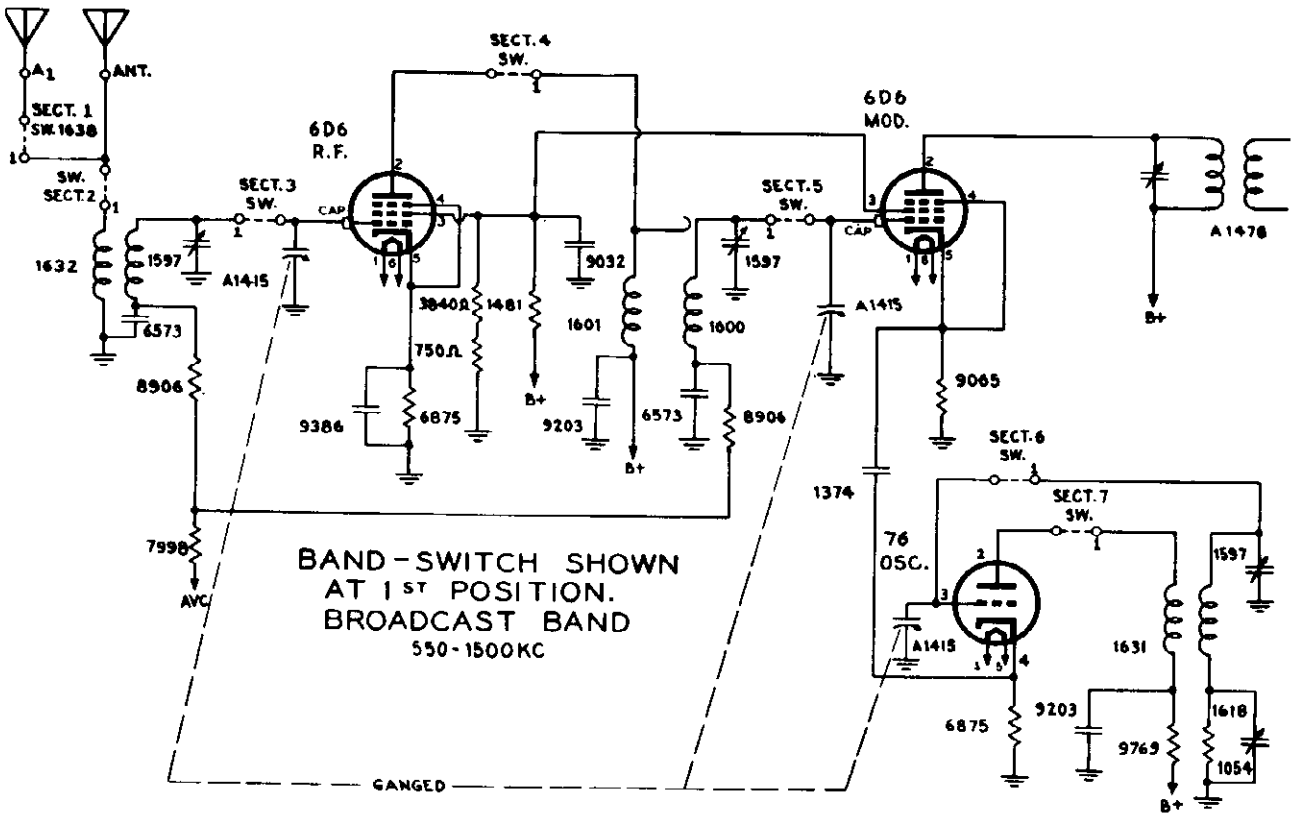
A1
ANT.
SECT. 1 SW. 1638
SW. SECT. 2
SECT. 3 SW.
SECT. 4 SW.
SECT. 5 SW.
SECT. 6 SW.
SECT. 7 SW.
6D6 R.F.
6D6 MOD.
76 OSC.
CAP
1632
1597
A1415
6573
8906
7998
AVC
3840Ω
1481
750Ω
9386
6875
9032
1601
9203
6573
8906
1600
1597
A1415
A1478
B+
9065
1374
1631
1597
1618
1054
9203
6875
9769
GANGED
BAND-SWITCH SHOWN AT 1ST POSITION. BROADCAST BAND 550-1500KC

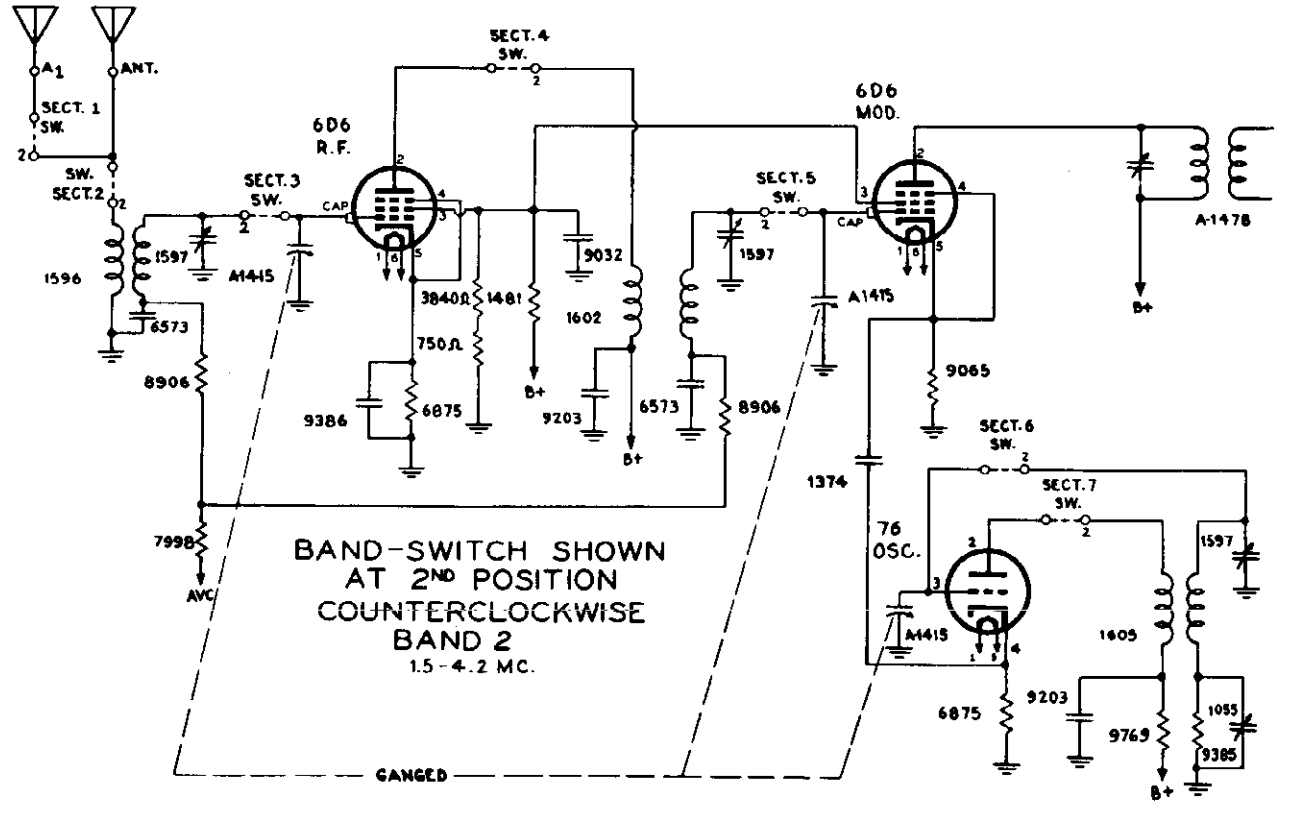
A1
ANT.
SECT. 1 SW.
SW. SECT. 2
SECT. 3 SW.
SECT. 4 SW.
SECT. 5 SW.
SECT. 6 SW.
SECT. 7 SW.
6D6 R.F.
6D6 MOD.
76 OSC.
CAP
1596
1597
A1415
6573
8906
7998
AVC
3840Ω
1481
750Ω
9386
6875
9032
1602
9203
6573
8906
1597
A1415
A-1478
B+
9065
1374
1605
1597
1055
9385
9203
6875
9769
GANGED
BAND-SWITCH SHOWN AT 2ND POSITION COUNTERCLOCKWISE BAND 2 1.5-4.2 MC.

© John F. Rider

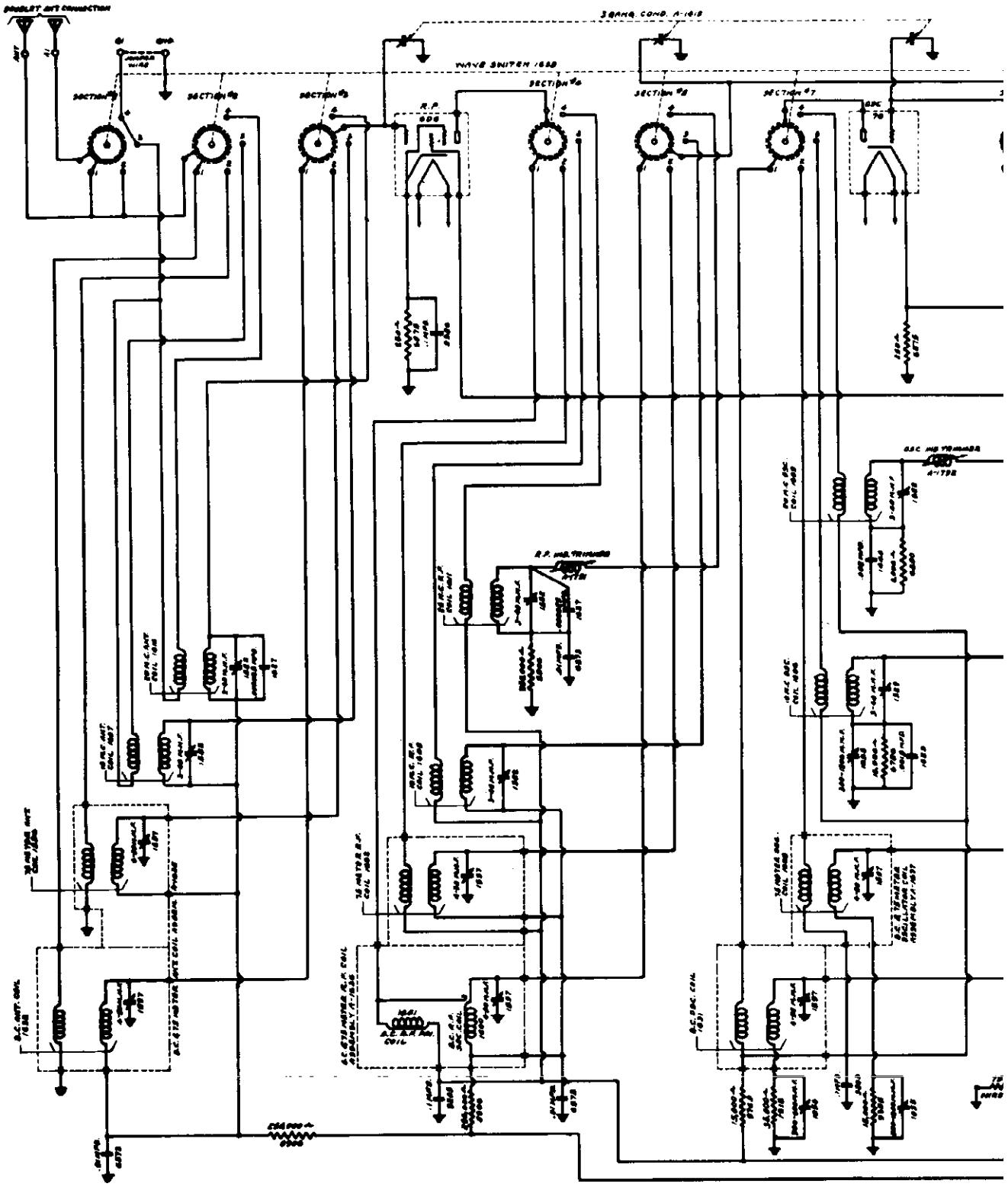

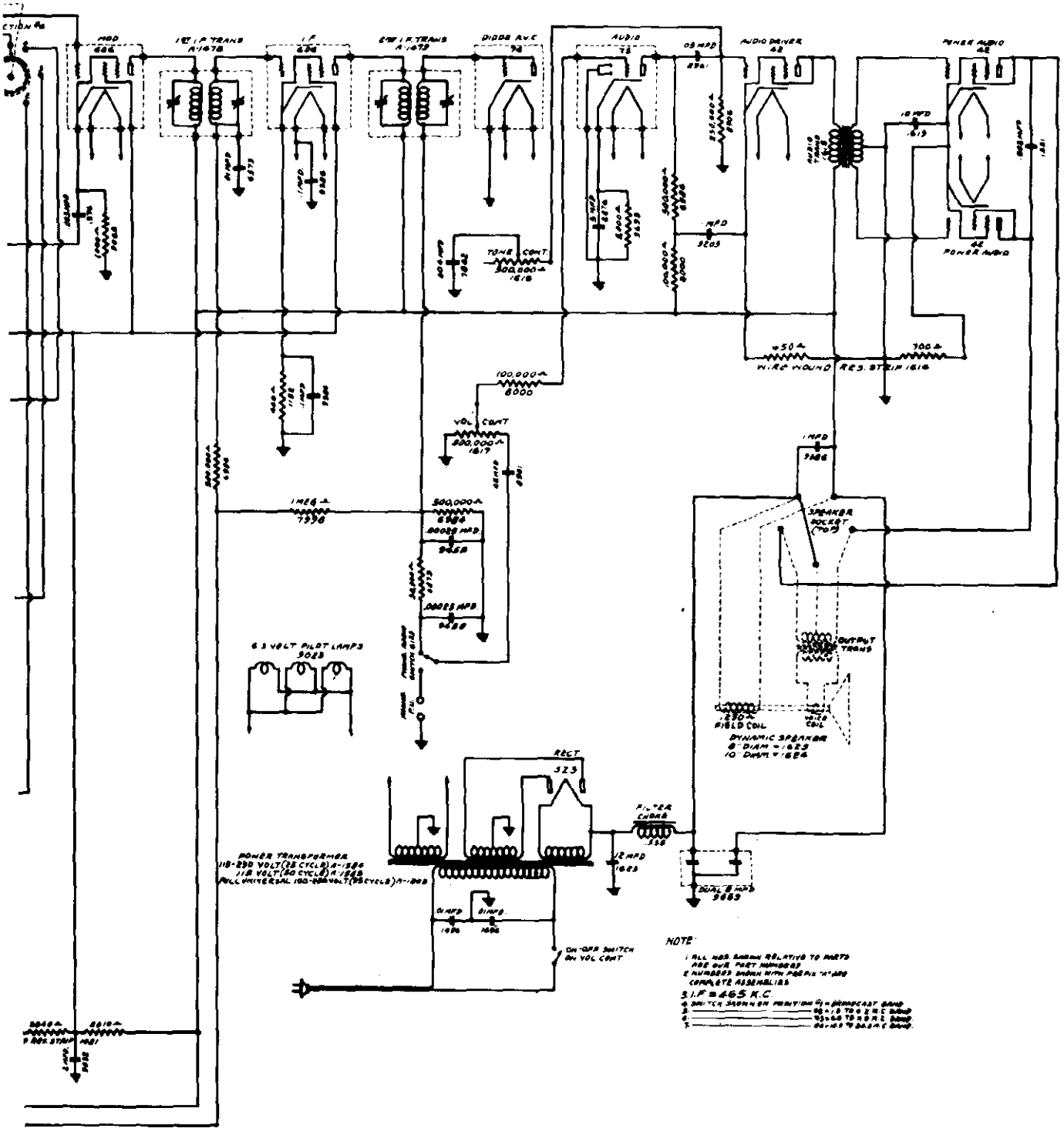
MIX
1ST I.F. TRANS
I.F.
2ND I.F. TRANS
DIODE A.V.C.
AUDIO
AUDIO DRIVER
POWER AUDIO
TONE CONT
VOL CONT
100,000Ω
6000
500,000Ω
1619
1MEG Ω
7998
500,000Ω
6906
DIODE MFD
DIODE MFD
6.3 VOLT PILOT LAMPS
6023
SPEAKER
OUTPUT TRANS
FIELD COIL
DYNAMIC SPEAKER
RECT
523
FILTER CHOKE
350
POWER TRANSFORMER
NOTE
I.F. = 465 K.C.

CLARI-SKEMATIX
Registered Trademark

MODEL F-62

RADIO WIRE TELEVISION

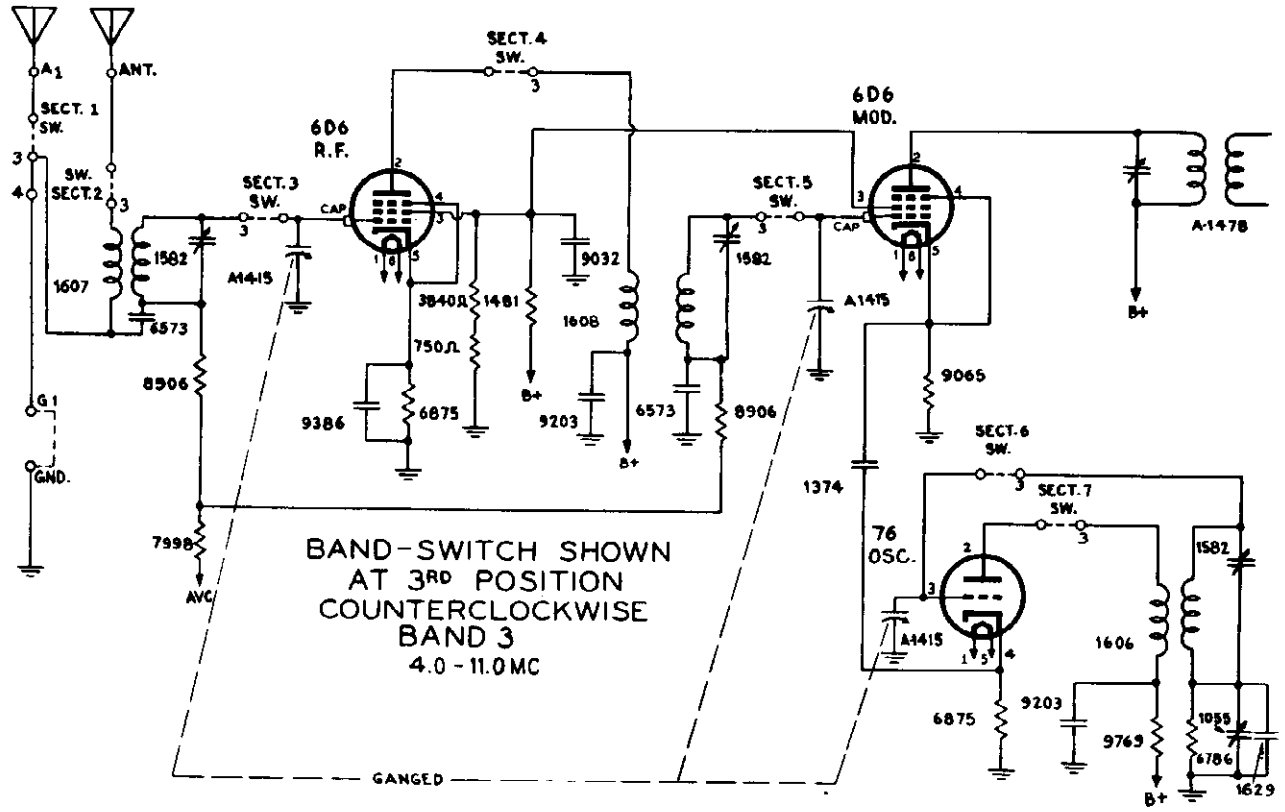

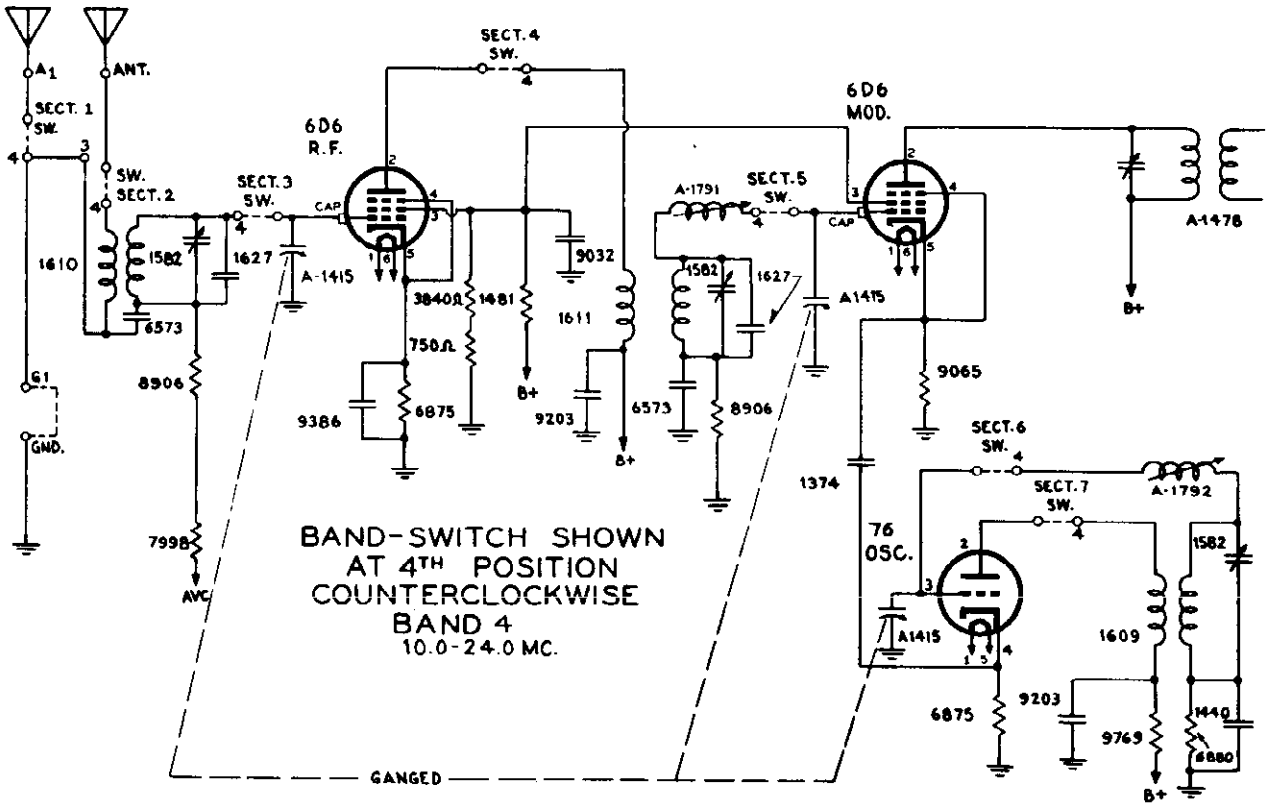

© John F. Rider

RADIO WIRE TELEVISION MODEL F-62

ALIGNMENT PROCEDURE: Realignment of this receiver should never be necessary unless one of the oscillator, antenna, or RF coils has been replaced, and then only the frequency band in which that coil is used will require realignment. Lack of sensitivity, selectivity, and poor tone quality may be due to any one or a combination of causes such as weak or defective tubes or speaker, inadequate or excessively long antenna, open or grounded bias resistor, bypass condenser, etc. Under no circumstances should realignment be attempted until all other possible sources have been first throughly investigated and have been definitely proven not to be the cause. If an IF tube is replaced it is advisable to realign the IF amplifier, particularly if the replacement tube is one of a different manufacture than the one in the receiver. IT IS IMPERATIVE THAT AN ACCURATELY CALIBRATED OSCILLATOR BE USED WITH SOME TYPE OF OUTPUT MEASURING DEVICE.

INTERMEDIATE ALIGNMENT:

1. Connect the high side of the oscillator output to the control grid of the 6D6 modulator tube. Leave the grid cap disconnected and connect a 1 meg ohm resistor from the modulator grid to the chassis base. Connect the ground side of the oscillator to the receiver ground post.

2. Set the test oscillator frequency to 465 kilocycles (this must be accurate).

3. Align the first intermediate transformer by turning one of the trimmer screws accessible through the holes in the top of the coil shield up and down (increasing and decreasing capacity) until maximum reading is obtained on the output meter, after which adjust the other trimmer screw of the same transformer for maximum sensitivity.

4. Adjust the other intermediate transformer in the same manner.

TO ALIGN THE VARIABLE CONDENSER: It is important when aligning the gang condensers, padder condensers, and trimmer condensers to follow the procedure carefully, otherwise the receiver will be insensitive and the dial calibration will be incorrect. The trimmer and padder condensers will be referred to by number as indicated on the diagram which shows their relative locations.

1. Connect the high output side of the test oscillator through a .00025 Mfd. condenser to the set antenna post, and the ground to the set ground.

2. Place the band selector switch for operation on the 10 to 22 megacycle band, tune the receiver dial to EXACTLY 20 MEGACYCLES and set the test oscillator frequency to EXACTLY 20 MEGACYCLES. THEN TUNE IN THE 20 MEGACYCLE SIGNAL TO MAXIMUM OUTPUT BY ADJUSTING TRIMMER NO. 13. Next, rock the gang condenser slightly to the right and left and adjust trimmers No. 15 and 17 for maximum 20 megacycle signal sensitivity. CARE MUST BE TAKEN SO THAT THE FUNDAMENTAL PEAK AND NOT THE IMAGE PEAK IS USED FOR ALIGNING THE RECEIVER AT 20 MEGACYCLES. When making trimmer No. 13 adjustment always back off the trimmer to minimum capacity and then screw down the trimmer (add capacity) until the first peak, which is the fundamental and the one you are to use, is tuned in. If the trimmer is screwed down beyond the point where this first peak is received, the incorrect image peak will be tuned in. After completing adjustment of trimmers No. 13, 15, and 17 always check to see if the proper peak has been used. To do this leave the test oscillator freouency at 20 megacycles, increase the output of the test oscillator, and tune the receiver dial to approximately 19 megacycles. Vary the receiver dial slightly to the right and left of 19 megacycles and if the fundamental peak was used in aligning at 20 megacycles, the test oscillator signal will be heard at approximately 19 megacycles on the set dial. If it is not possible to receive the signal at approximately 19 megacycles, then the fundamental peak was not used and the 20 megacycle adjustment of trimmers No. 13, 15, and 17 must be gone over and properly adjusted.

3. Leave the band selector switch for operation on the 10 to 22 megacycle band, tune the receiver to 11 megacycles on the dial, and set the test oscillator frequency to approximately 11 megacycles. Then while rocking the gang condenser slightly to the right and left adjust inductance trimmers No. 14 and 16 for maximum sensitivity.

4. Recheck 20 megacycle adjustment of trimmers No. 13, 15, and 17.

5. Place the band selector switch for operation on the 4 to 10 megacycle band and set the receiver dial and the test oscillator frequency to exactly 9 megacycles. When adjusting trimmer No. 10 two peaks, the fundamental and the image peak, will be noticed. CARE MUST BE TAKEN SO THAT THE FUNDAMENTAL PEAK AND NOT THE IMAGE PEAK IS USED FOR ALIGNING THE RECEIVER AT 9 MEGACYCLES. First back off trimmer No. 10 to minimum capacity, next screw down the trimmer (add capacity) until the first peak, which is the fundamental and the one you are to use, is tuned in. When the first peak has been located adjust trimmer No. 10 TO BRING IN THE 9 MEGACYCLE SIGNAL TO MAXIMUM OUTPUT. Next adjust trimmers No. 11 and 12 for maximum 9 megacycle sensitivity. After completing adjustment of trimmers No. 10, 11, and 12 always check to see if the proper peak has been used. To do this leave the test oscillator frequency at 9 megacycles and increase the test oscillator output. Vary the receiver dial slightly to the right and left of 8 megacycles, and if the fundamental peak of trimmer No. 10 was used in aligning at 9 megacycles the test oscillator signal will be heard at approximately 8 megacycles on the receiver dial. If it is not possible to receive the signal, then the fundamental peak was not used and the 9 megacycle adjustment of trimmers No. 10, 11, and 12 must be gone over and properly adjusted.

6. Leave the band selector switch for operation on the 4 to 10 megacycle band and tune the receiver and set the test oscillator frequency to approximately 4.2 megacycles. Then while rocking the gang condenser slightly to the right and left, adjust padder No. 7 for maximum sensitivity.

7. Place the band selector switch for operation on the 1.5 to 4 megacycle band and tune the receiver dial and set the test oscillator frequency to EXACTLY 3.8 MEGACYCLES. THEN BRING IN THE 3.8 MEGACYCLE SIGNAL TO MAXIMUM OUTPUT BY ADJUSTING TRIMMER NO. 1, after which adjust trimmers No. 2 and 3 for maximum sensitivity.

8. With the band selector switch in the same position (1.5 to 4 megacycle band) tune the receiver dial and set the test oscillator freouency to approximately 1.6 megacycles. Then while rocking the gang condenser slightly to the right and left adjust padder condenser No. 8 for maximum 1.6 megacycle signal sensitivity.

9. Adjust the band selector switch for operation on the 1500 to 550 kilocycle band and tune the receiver dial and set the test oscillator frequency to EXACTLY 1400 KILOCYCLES. THEN BRING IN THE 1400 KILOCYCLE SIGNAL TO MAXIMUM OUTPUT BY ADJUSTING TRIMMER NO. 4, AFTER WHICH ADJUST TRIMMERS NO. 5 and 6 FOR MAXIMUM SENSITIVITY.

10. Leave the band selector switch for operation on the 1500 to 550 kilocycle band and tune the receiver dial and set the test oscillator frequency to approximately 600 kilocycles. Next, while rocking the gang condenser slightly to the right and left adjust padder condenser No. 9 for maximum sensitivity.

MODEL F-62 RADIO WIRE TELEVISION

Alignment of all bands will rarely be necessary. If a coil on any one of the bands should become defective and replacement is necessary, then only the band in which the coil was replaced will require realignment. Wherever complete realignment has been made it is recommended that all of the adjustments be gone over again. Generally it will be found that improved results can be obtained if this is done. Assuming that all tubes and component parts of the set are okeh, then extreme inaccuracies in the dial calibration, low sensitivity, and poor selectivity are indications that the alignment procedure has not been followed. Should these conditions be apparent proceed to realign and carefully follow each step in the order given.

VOLTAGE TABLE

Line Voltage : 115 Volume Control : Full on Wave Band : Broadcast

TUBE		FILAMENT	PLATE	SCREEN	CATHODE
6D6	Radio Frequency	6.2	250	94	2.2
76	Oscillator	6.2	115		2.2
6D6	Modulator	6.2	250	94	4.5
6D6	Intermediate Frequency	6.2	250	94	2.2
76	Second Detector & AVC	6.2			
75	Audio	6.2	55*		1
42	Audio Driver	6.2	225		16
42	Output	6.2	330		28
42	Output	6.2	330		28
523	Rectifier	4.8		118 M. A. Total Drain	

* Triode Plate comparative voltage only.
Read all voltages from socket to chassis with 1000 ohm per volt voltmeter.

PART NUMBER		PART NUMBER	
1635	BC & 1.5-4.2 M.C. Band Antenna Coil Assembly	1054	Padding Condenser
1636	BC & 1.5-4.2 M.C. Band RF Coil Assembly	1055	Padding Condenser
1637	BC & 1.5-4.2 M.C. Band Oscillator Coil Assembly	1791	Oscillator Inductance Trimmer
1607	4-10 M.C. Band Antenna Coil	1792	RF Inductance Trimmer
1608	4-10 M.C. Band RF Coil	1440	.002 Mfd. Mica Condenser
1606	4-10 M.C. Band Oscillator Coil	1629	.0015 Mfd. Moulded Condenser
1610	10-24 M.C. Band Antenna Coil	9458	.00025 Mfd. Moulded Condenser
1611	10-24 M.C. Band RF Coil	1374	.003 Mfd. Moulded Condenser
1609	10-24 M.C. Band Oscillator Coil	6573	.01 Mfd. 200 Volt Condenser
1478	First IF Transformer	1496	.01 Mfd. 600 Volt Condenser
1479	Second IF Transformer	1551	.002 Mfd. 600 Volt Condenser
1638	Wave Switch	6961	.05 Mfd. 400 Volt Condenser
1415	Three Gang Condenser	9386	.1 Mfd. 200 Volt Condenser
1584	25 Cycle Power Transformer (230-115V)	9203	.1 Mfd. 400 Volt Condenser
1585	50-60 Cycle Power Transformer (115V)	7862	.004 Mfd. 400 Volt Condenser
1535	Filter Choke	6875	250 Ohm 1/3 Watt Resistor
1619	10 Mfd. Electrolytic Condenser	6879	50,000 Ohm 1/3 Watt Resistor
1623	12 Mfd. Wet Electrolytic Condenser	6786	10,000 Ohm 1/3 Watt Resistor
8076	5 Mfd. Electrolytic Condenser	9065	1,000 Ohm 1/3 Watt Resistor
9659	Dry Electrolytic Condenser Dual 8 Mfd.	6984	500 Ohm 1/3 Watt Resistor
1615	Audio Transformer	1152	400 Ohm 1/3 Watt Resistor
1616	Tone Control with S.P.S.T. Switch	7998	1 Meg Ohm 1/3 Watt Resistor
1617	Volume Control	9693	5,000 Ohm 1/3 Watt Resistor
1481	Vitreous Enameled Resistor	8000	100,000 Ohm 1/3 Watt Resistor
1614	Vitreous Enameled Resistor	6918	35,000 Ohm 1/3 Watt Resistor
6576	Phonograph Jacks	9385	15,000 Ohm 1/3 Watt Resistor
6123	Radio-Phonograph Switch	9769	15,000 Ohm 1/2 Watt Resistor
1582	Trimmer Condenser	1420	Antenna and Ground Strip
		1565	7/8" Octagon Knob
		1566	1 1/8" Octagon Knob

#1 - 1.5-4 MC. OSC. TR. #5 - 550-1500 KC. R.F. TR. #9 - 550-1500 KC. OSC. PA. #13 - 10-22 MC. OSC. TR.
#2 - 1.5-4 MC. R.F. TR. #6 - 550-1500 KC. ANT. TR. #10 - 4-10 MC. OSC. TR. #14 - 10-22 MC. OSC. INDUCT. TR.
#3 - 1.5-4 MC. ANT. TR. #7 - 4-10 MC. OSC. PA. #11 - 4-10 MC. R.F. TR. #15 - 10-22 MC. R.F. TR.
#4 - 550-1500 KC. OSC. TR. #8 - 1.5-4 MC. OSC. PA. #12 - 4-10 MC. ANT. TR. #16 - 10-22 MC. R.F. INDUCT. TR.
TR. = TRIMMER PA. = PADDER #17 - 10-22 MC. ANT. TR.

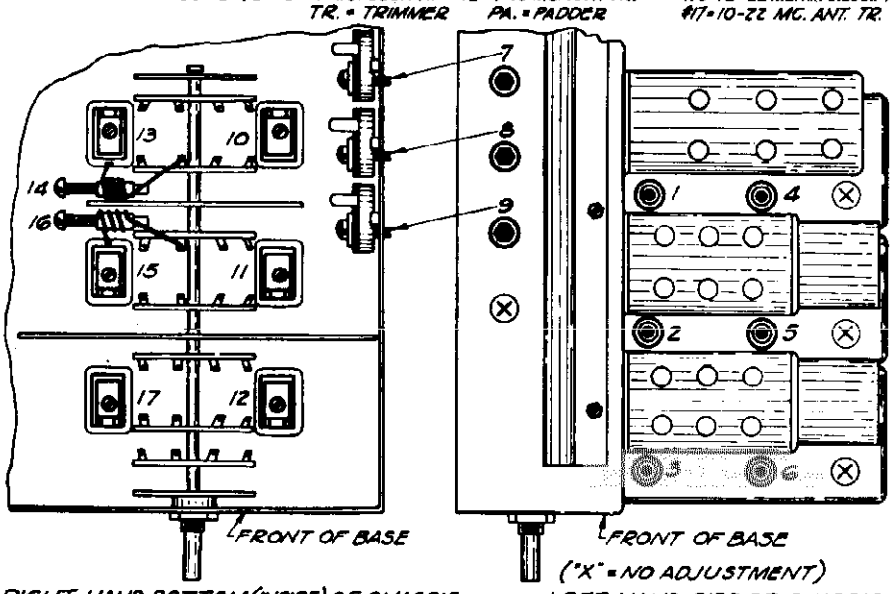

RIGHT HAND BOTTOM (INSIDE) OF CHASSIS LEFT HAND SIDE OF CHASSIS

VIEWS SHOWING LOCATION OF PADDERS & TRIMMERS

RADIO WIRE TELEVISION

MODEL JL-6

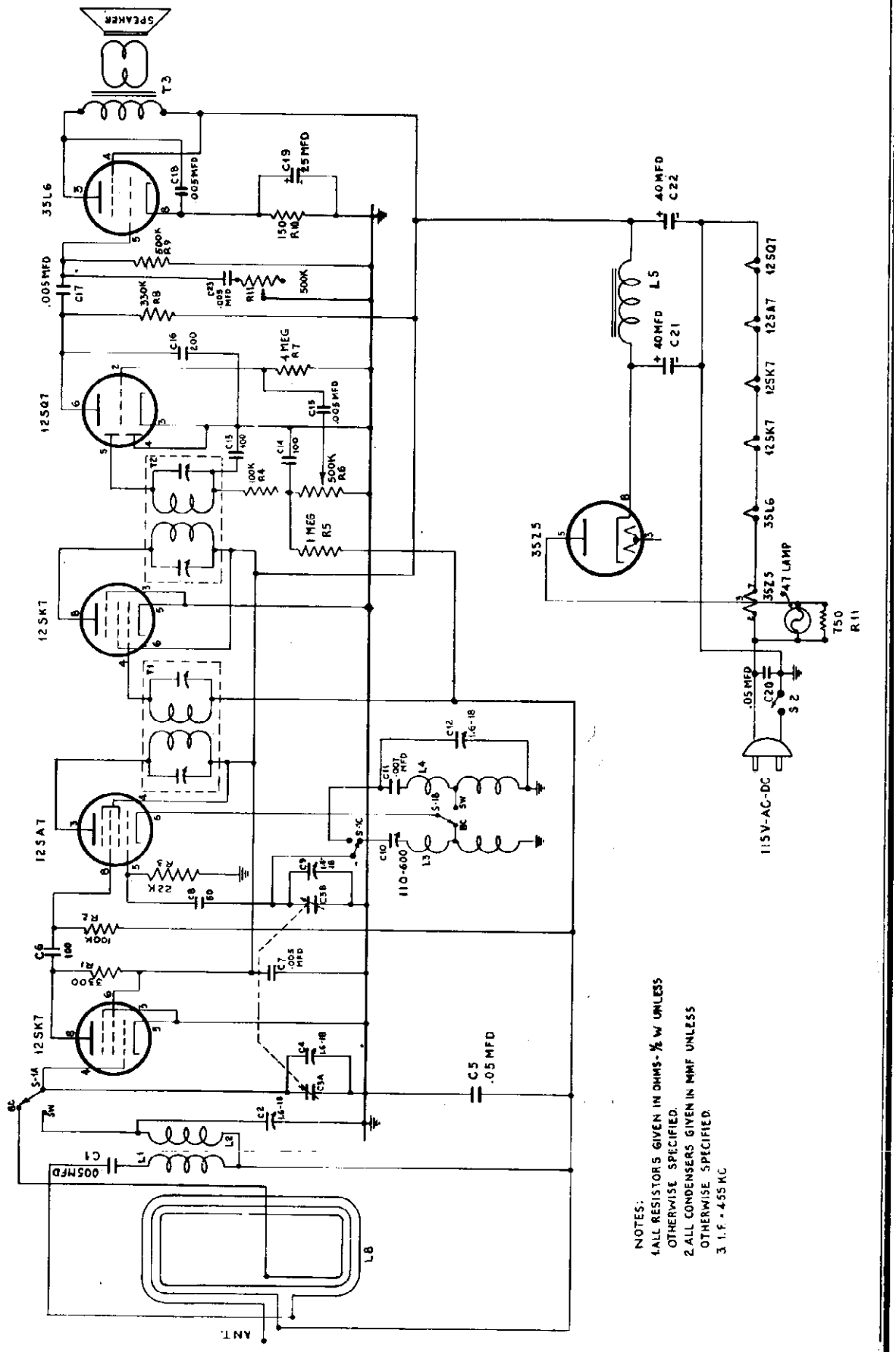

NOTES:
1. ALL RESISTORS GIVEN IN OHMS - ½ W UNLESS OTHERWISE SPECIFIED.
2. ALL CONDENSERS GIVEN IN MMF UNLESS OTHERWISE SPECIFIED.
3. I.F. - 455 KC

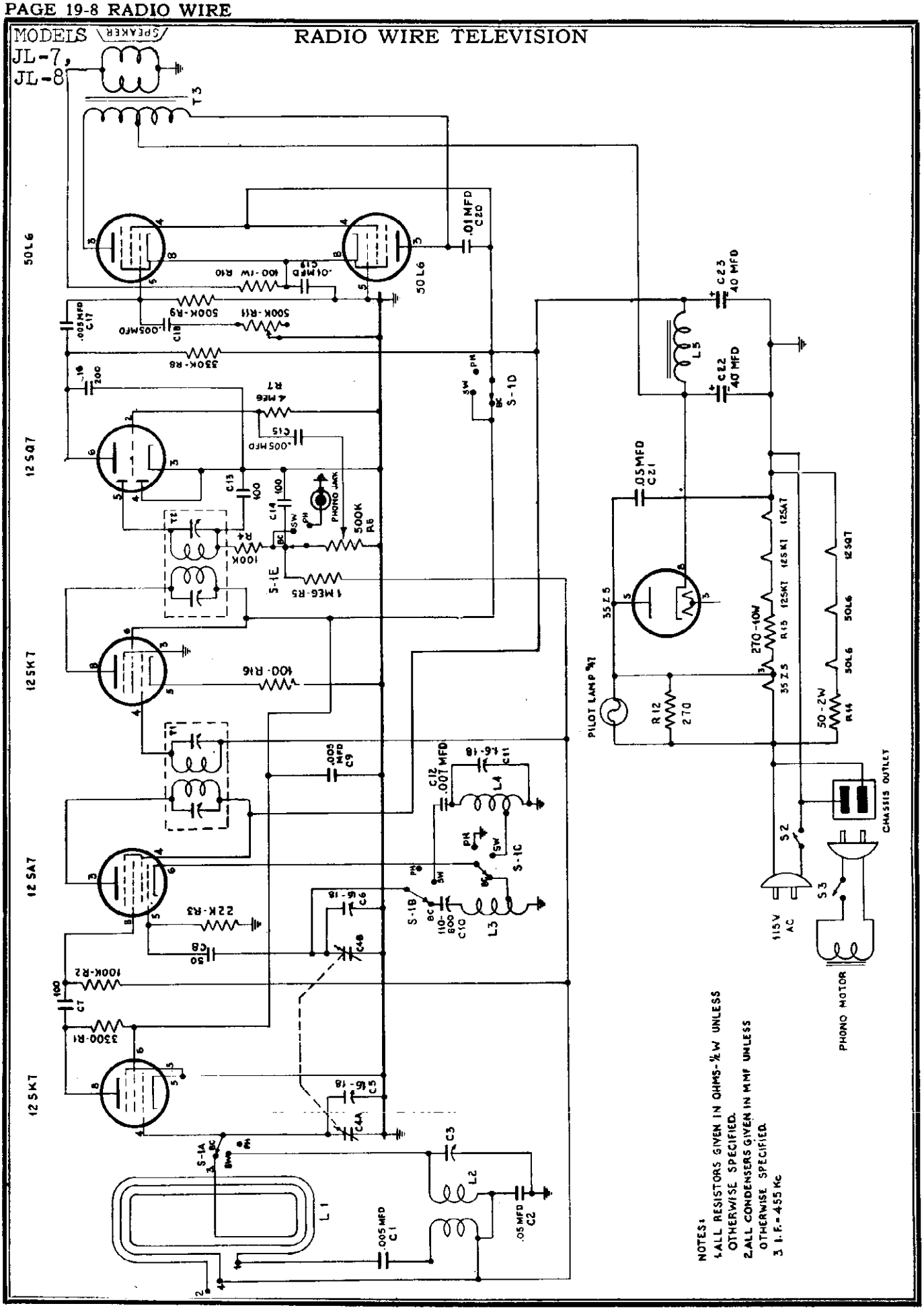
MODELS
JL-7,
JL-8
SPEAKER
RADIO WIRE TELEVISION
T3
50L6
50L6
12SQ7
12SK7
12SA7
12SK7
.01 MFD C20
100-1W R10
.01MFD C19
500K-R11
500K-R9
.005MFD C18
.005MFD C17
330K-R8
.1 200
4 MEG R7
.005MFD C15
C13 100
C14 100
PHONO JACK
500K R6
100K R4
1 MEG-R5
S-1E
100-R16
.005 MFD C9
.007 MFD C12
.01 MFD C11
L4
S-1C
S-1B
110-800 C10
L3
.01 MFD C6
C4B
22K-R3
.05 MFD C8
100K-R2
100 C7
3300-R1
.01 MFD C5
C4A
S-1A
L1
L2
C3
.005 MFD C1
.05 MFD C2
.05MFD C21
35Z5
PILOT LAMP
R12 270
270-10W R15
50-2W R14
125AT
125K1
125KT
125QT
50L6
35Z5
C23 40 MFD
C22 40 MFD
L5
S-1D
S2
S3
115V AC
CHASSIS OUTLET
PHONO MOTOR
NOTES:
1. ALL RESISTORS GIVEN IN OHMS-½ W UNLESS OTHERWISE SPECIFIED.
2. ALL CONDENSERS GIVEN IN MMF UNLESS OTHERWISE SPECIFIED.
3. I.F.=455 Kc

© John F. Rider

RADIO WIRE TELEVISION

MODEL JS-1

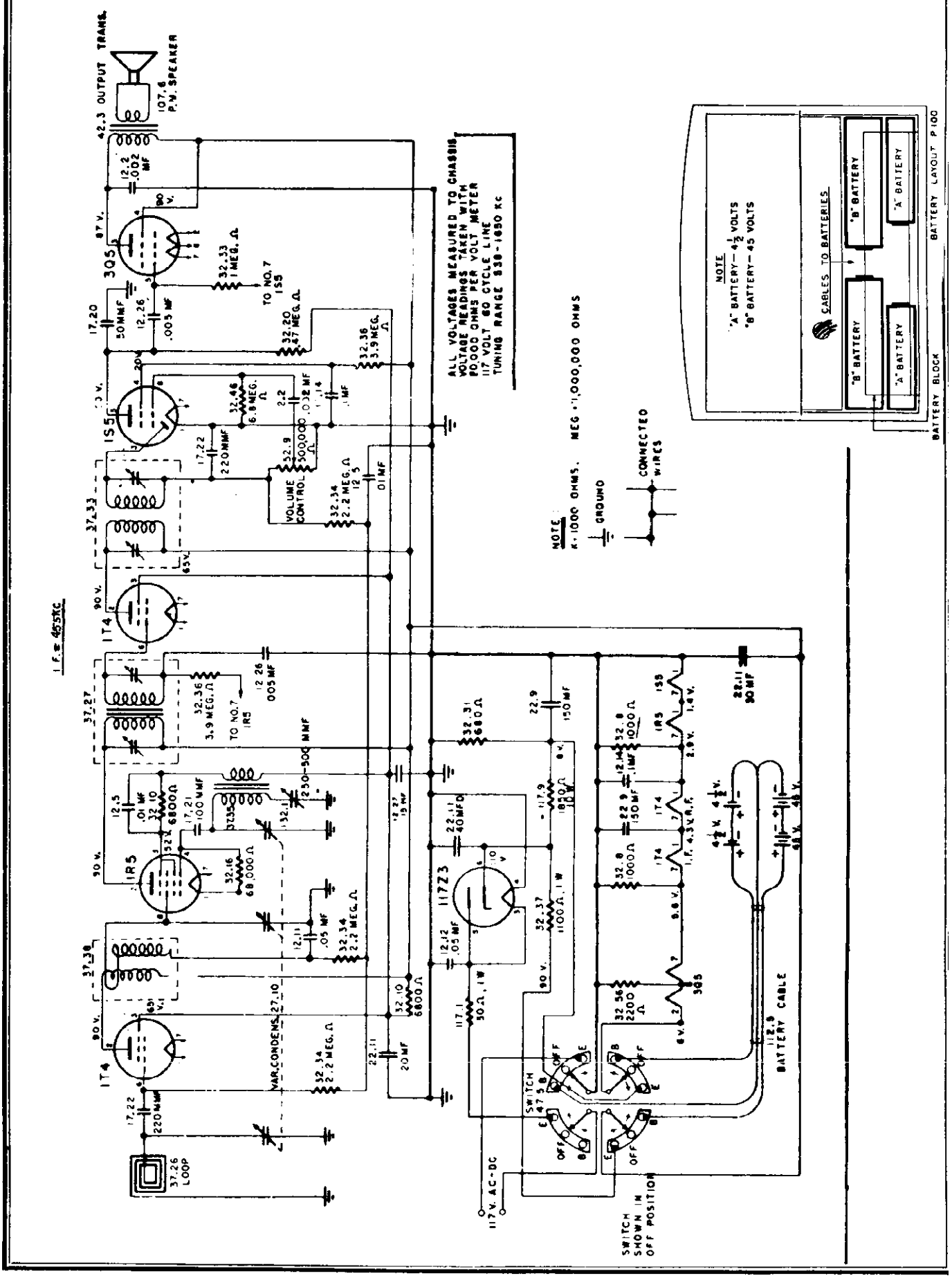

ALIGNMENT PROCEDURE

No attempt should be made to realign the various circuits until all other causes have been checked, unless the condition is so obvious as to indicate that realignment is necessary. Then proceed as follows:

Volume Control full on.

Low range A.C. meter connected across voice coil to indicate output.

Keep signal generator attenuated so as to maintain ½ scale reading on output meter.

Make certain that dial pointer is exactly on index line (top left side of dial plate) when variable condenser is fully meshed.

REMOVE CHASSIS BOTTOM PLATE

	RECEIVER DIAL AT:	SIGNAL GENERATOR	DUMMY ANTENNA	CONNECT SIGNAL GENERATOR TO:	REFER TO CHASSIS LAYOUT FOR LOCATION OF TRIMMERS
1	Fully closed	Exactly 456 KC	.1 MF	Common Ground and Control Grid 1R5 top front section var. cond.	Adjust for maximum output T1, T2, T3, and T4.
2	Fully closed	Approx. 538 KC	.1 MF	Control Grid 1T4 top rear section var. condenser	Adjust for maximum output T8
3	Fully open	Exactly 1650 KC	.1 MF	Control Grid 1T4 top rear section var. cond.	Adjust for maximum output T5
REPEAT OPERATIONS 2 and 3.					
4	Approx. 1500 KC	Approx. 1500 KC	.1 MF	Control Grid 1T4 same as No. 3	Adjust for maximum output T6
The next two operations are performed with the bottom plate on and the chassis in the cabinet — with lid closed					
5	Approx. 1500 KC	Approx. 1500 KC	.1 MF	Radiating Loop 20" from Receiver	Adjust T7 for maximum output
6	Approx. 600 KC	Approx. 600 KC		Radiating Loop 20" from Receiver	Adjust T8 for maximum while rocking variable condenser

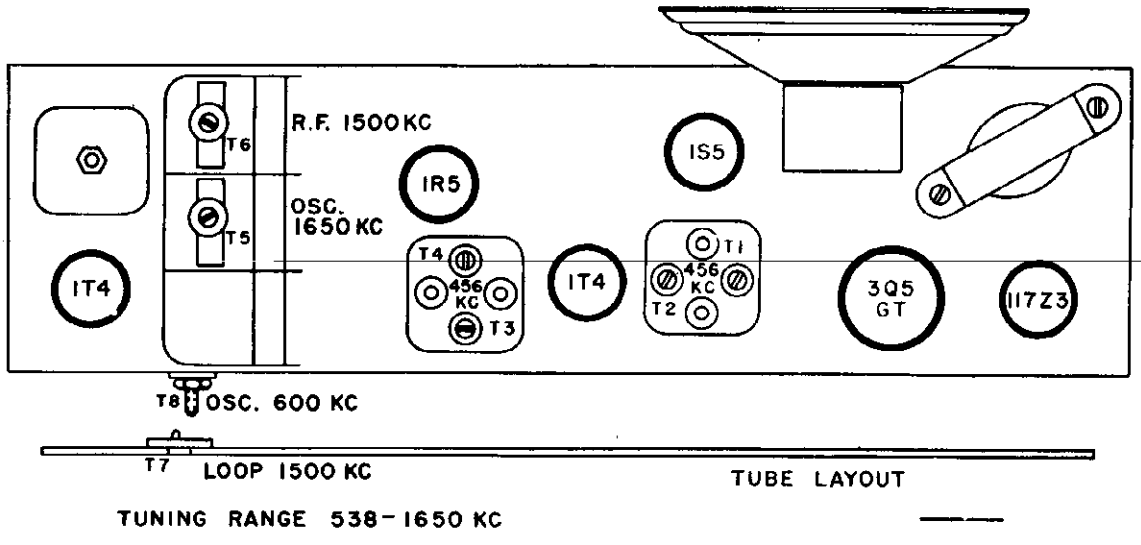

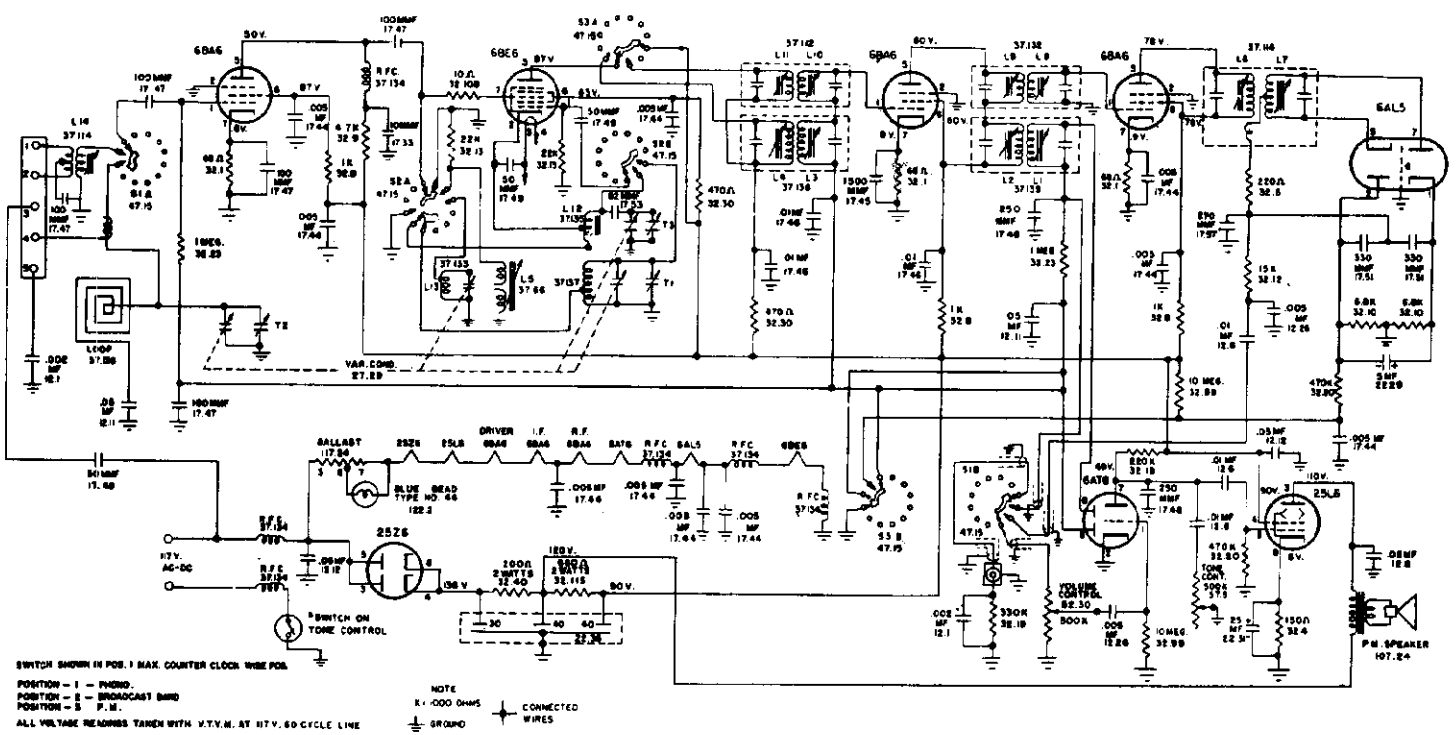

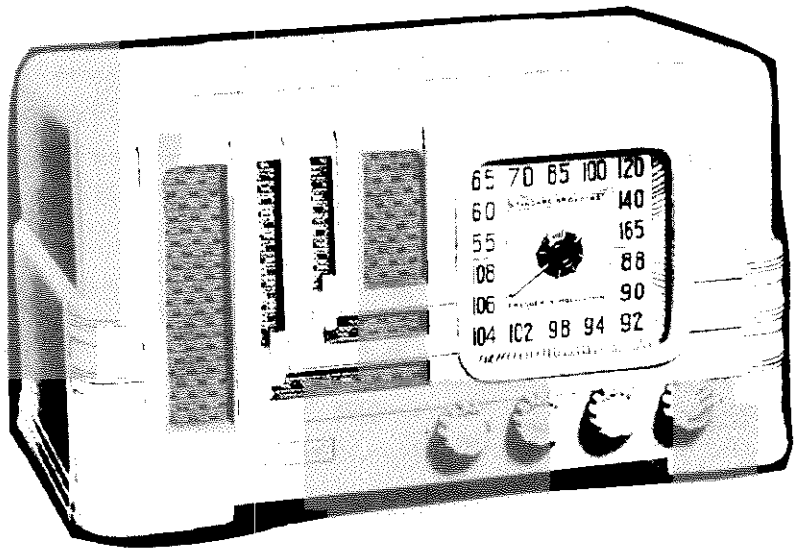

The receiver is designed to operate on 105-125 volts, 40 to 60 cycles, alternating current (AC) or 105-125 volts direct current (DC). The power consumption is 60 watts.

The tuning range on FM is from 87 MC to 109 MC, covering all FM stations from channels 200 to 300. The tuning range for standard broadcast is from 530 to 1680 kilocycles covering the full broadcast range and high fidelity stations with sufficient overlap at both ends of the dial.

MODELS JS-115, JS-319

RADIO WIRE TELEVISION

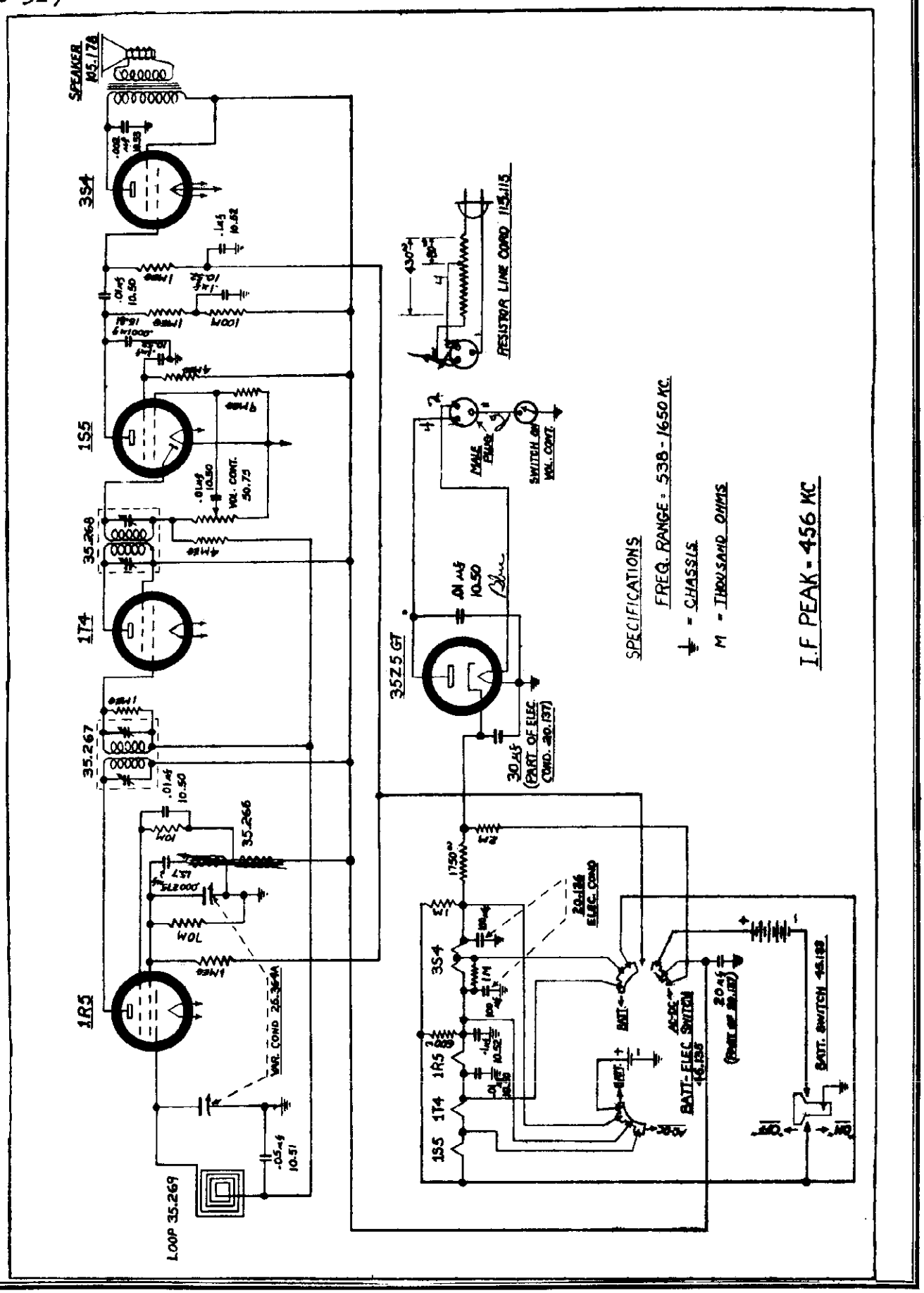

Turn receiver on and wait for tubes to reach operating heat. Adjust Wave Band Switch to desired Wave Band. LEFT for Short Wave; CENTER for Standard Broadcast; and RIGHT connects terminals for phonograph record player in the circuit. The UPPER HALF of the Dial Scale covers the Broadcast Band. The LOWER HALF covers the Short Wave Band. Turn the Vernier Tuning Knob until the desired station (see dial pointer), is heard. Adjust Volume to a satisfactory level after making certain that the station is tuned correctly. Tuning on Short Wave is more critical. Use more care lest worthwhile stations be passed over unnoticed.

A Phonograph Record Player can be attached to the terminals marked "PHONO" in rear of chassis.

One 6 Volt 250 M. A. lamp is used for dial illumination. Use similar type for replacement.

WARNING: Check power line for voltage nad frequency (cycles) to make certain they are the same as specified on label located at rear of the receiver chassis before inserting the receiver power line in electric outlet.

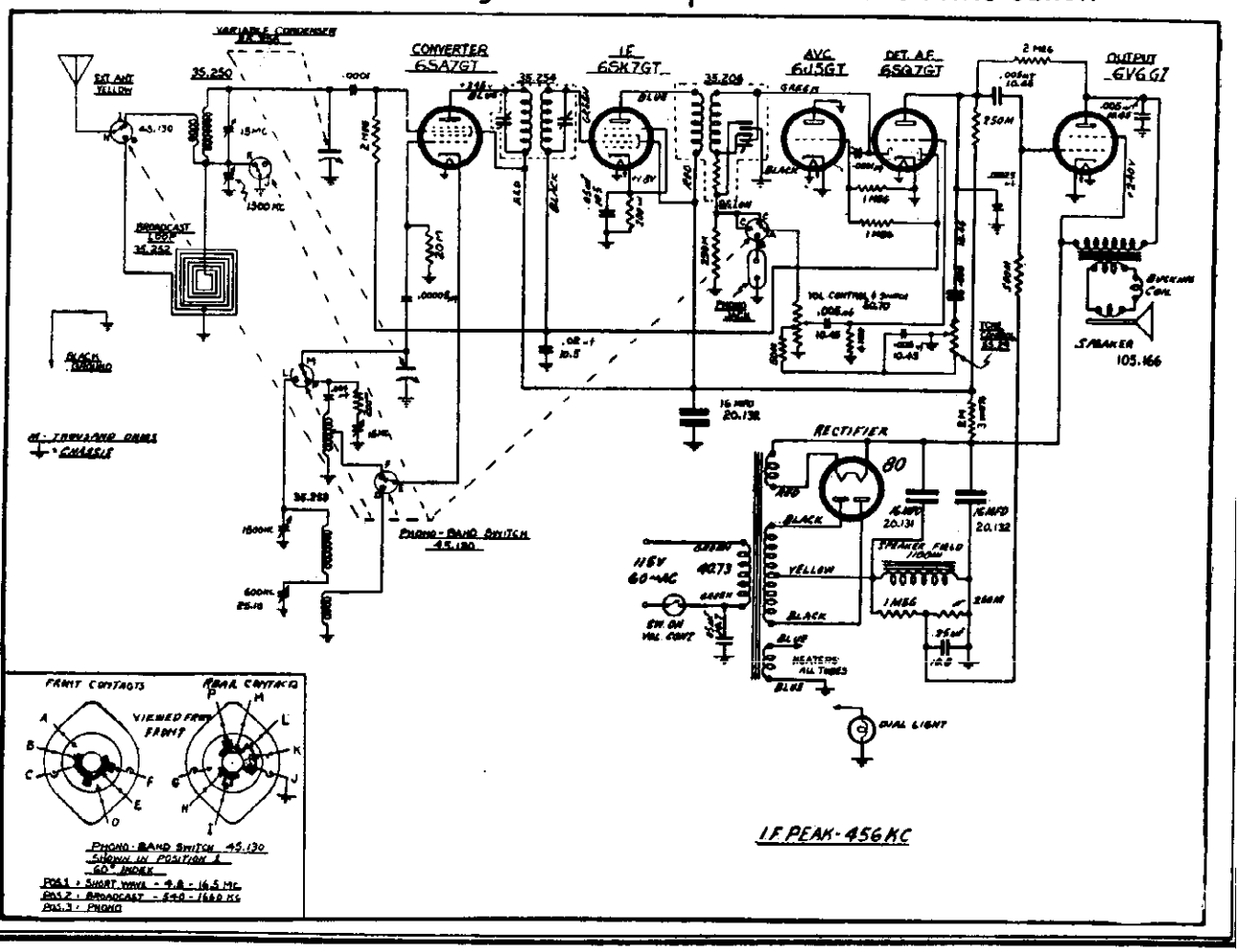

MODEL JS-135A RADIO WIRE TELEVISION

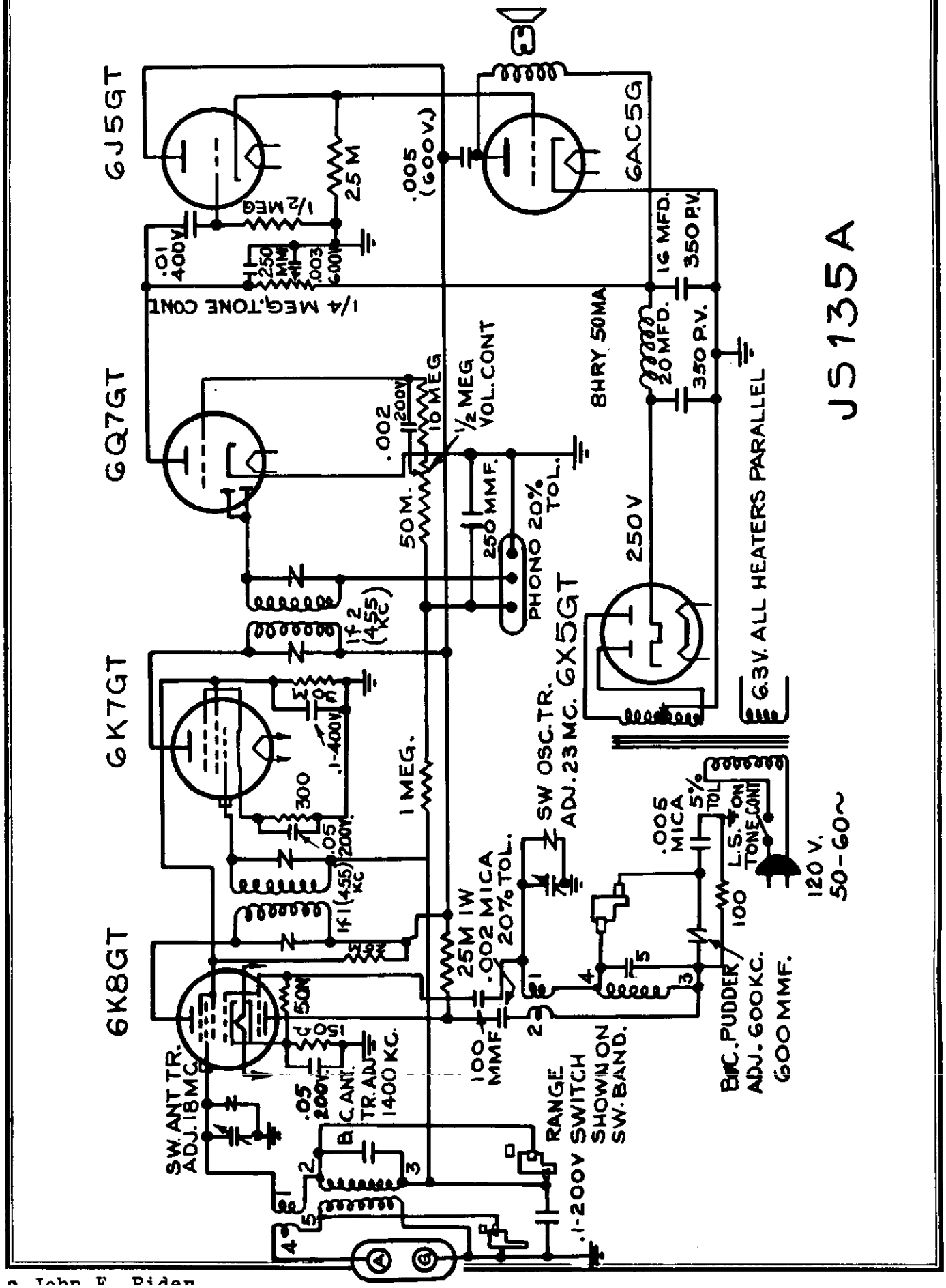

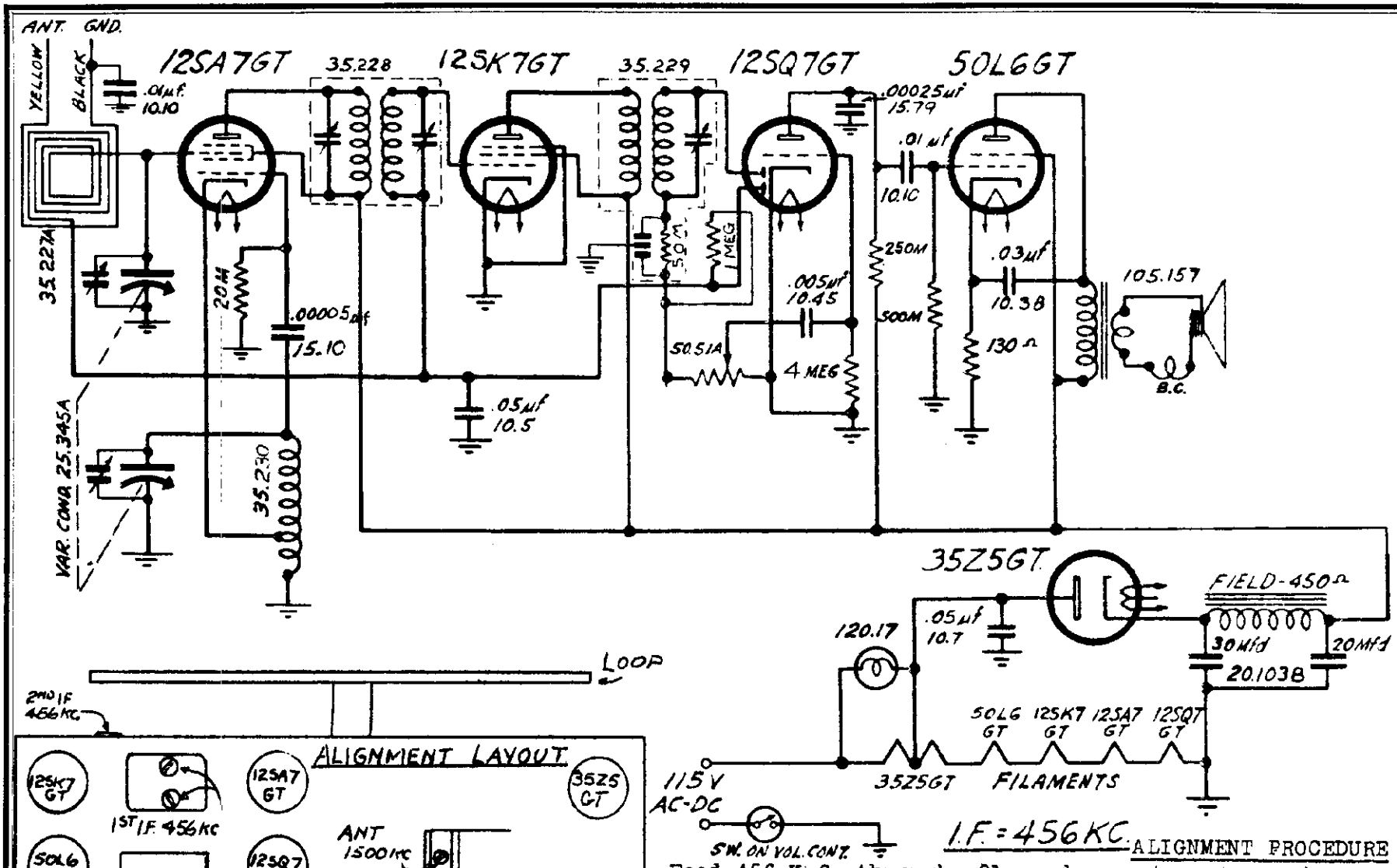

I.F. = 456 KC. ALIGNMENT PROCEDURE

Feed 456 K.C. through .01 condenser to antenna (rear section of variable condenser. Adjust I.F. trimmers for maximum output.

R.F. -

Set variable condenser to 1500 K.C. Feed 1500 K.C. signal through 100 mmf. condenser to antenna lead (rear of loop). Adjust ant. and osc. trimmers for maximum output. Check sensitivity at 600 K.C. Bend rotor plates if necessary to insure proper tracking.

MODELS JS-173, JS-184, JS-185

RADIO WIRE TELEVISION

WARNING: Check power line for voltage and frequency (cycles) to make certain they are the same as specified on label located at rear of the receiver chassis before inserting the receiver power line in electric outlet.

These Receivers must be operated on 60 Cycles, 120 Volt current. Any other type Voltage, if used will result in damage to the receiver.

SHORT WAVE RECEPTION: An external Antenna is absolutely necessary for good reception on either of the Short Wave Bands. This antenna may consist of a short wire strung indoors or preferably a good OUTSIDE ANTENNA.

In installing an antenna to be used with a sensitive short wave receiver every precaution should be observed to keep interfering noises at a minimum. The lead-in and antenna proper should be located as far as possible from any potential source of interference, such as electric signs, elevators, trolley wires, motors, power lines, etc. The antenna should also be as remote as possible from pick up from the ignition systems of passing automobiles. For connection to the antenna, a yellow wire is brought out through the rear of the receiver. Insert the power line plug in the electric outlet and turn the "ON-OFF" switch and Volume Control knob to the right. A few seconds will be required for the tubes to reach operating temperature.

DIAL LAMP: Thse models use one 6-8 Volt, 150 M. A. Lamp. Use similar lamps when replacing or damage will result.

CAUTION: When pilot lamp burns out, replace at once.

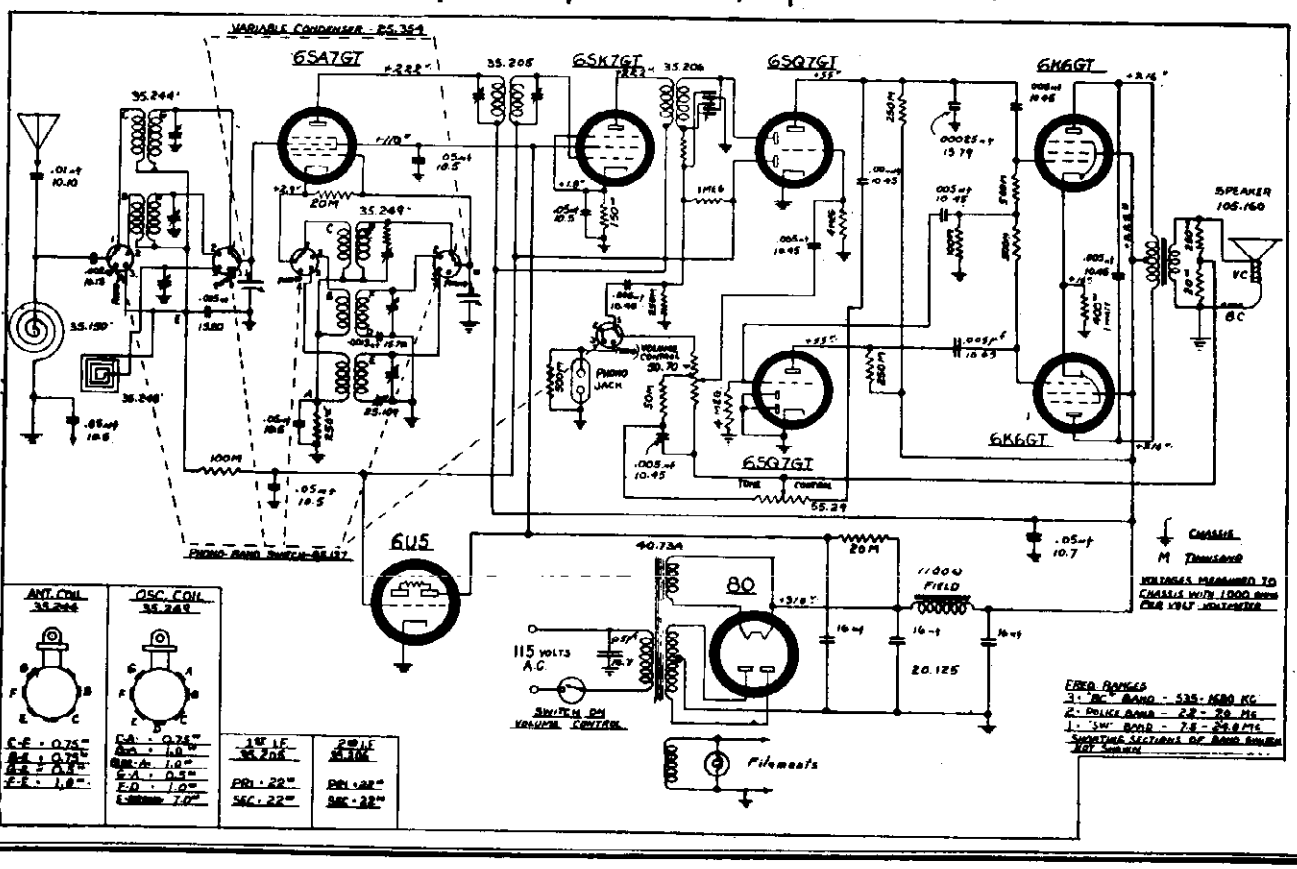

©John F. Rider

RADIO WIRE TELEVISION

MODEL JS-174

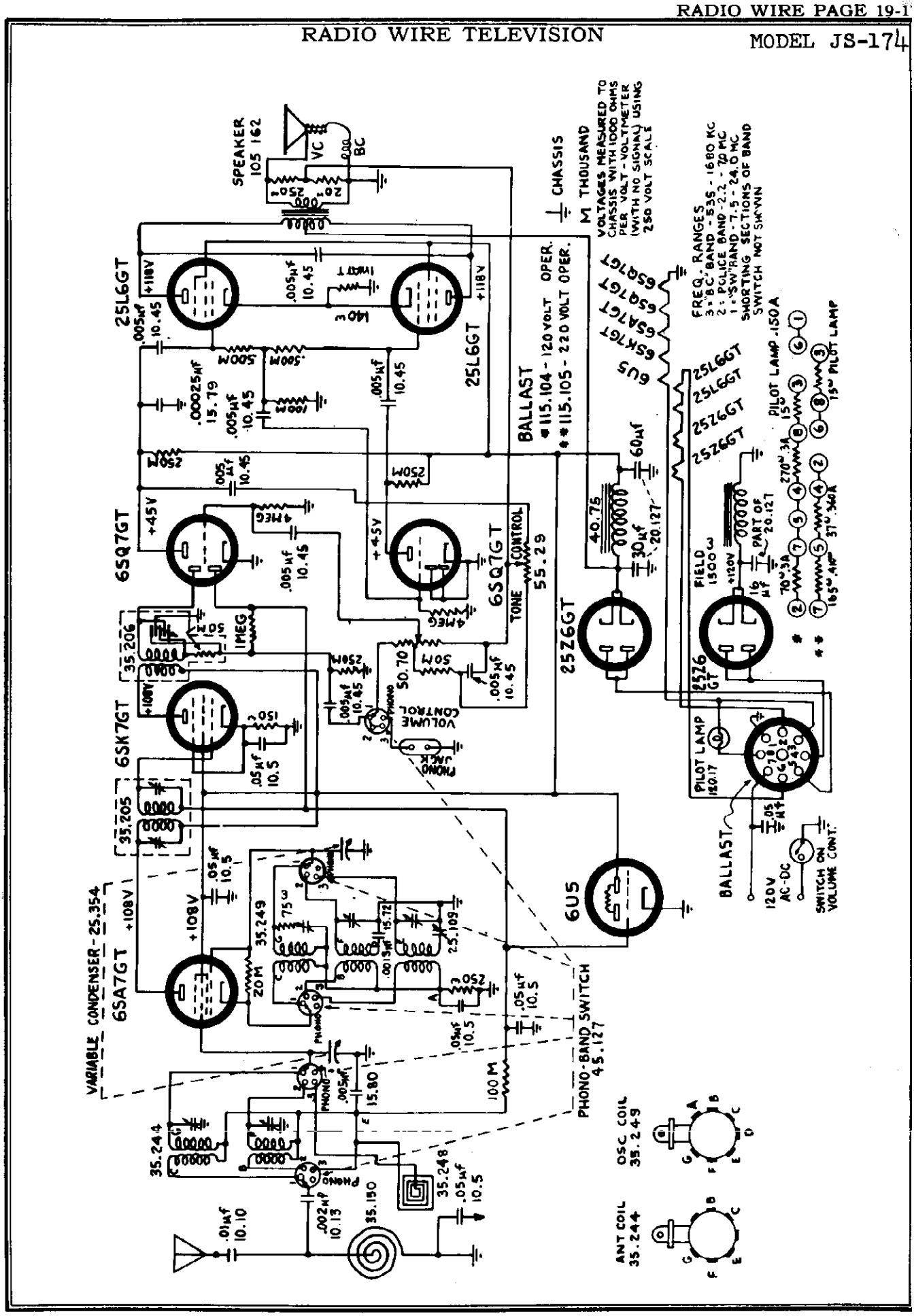

©John F. Rider

MODEL JS-176

RADIO WIRE TELEVISION

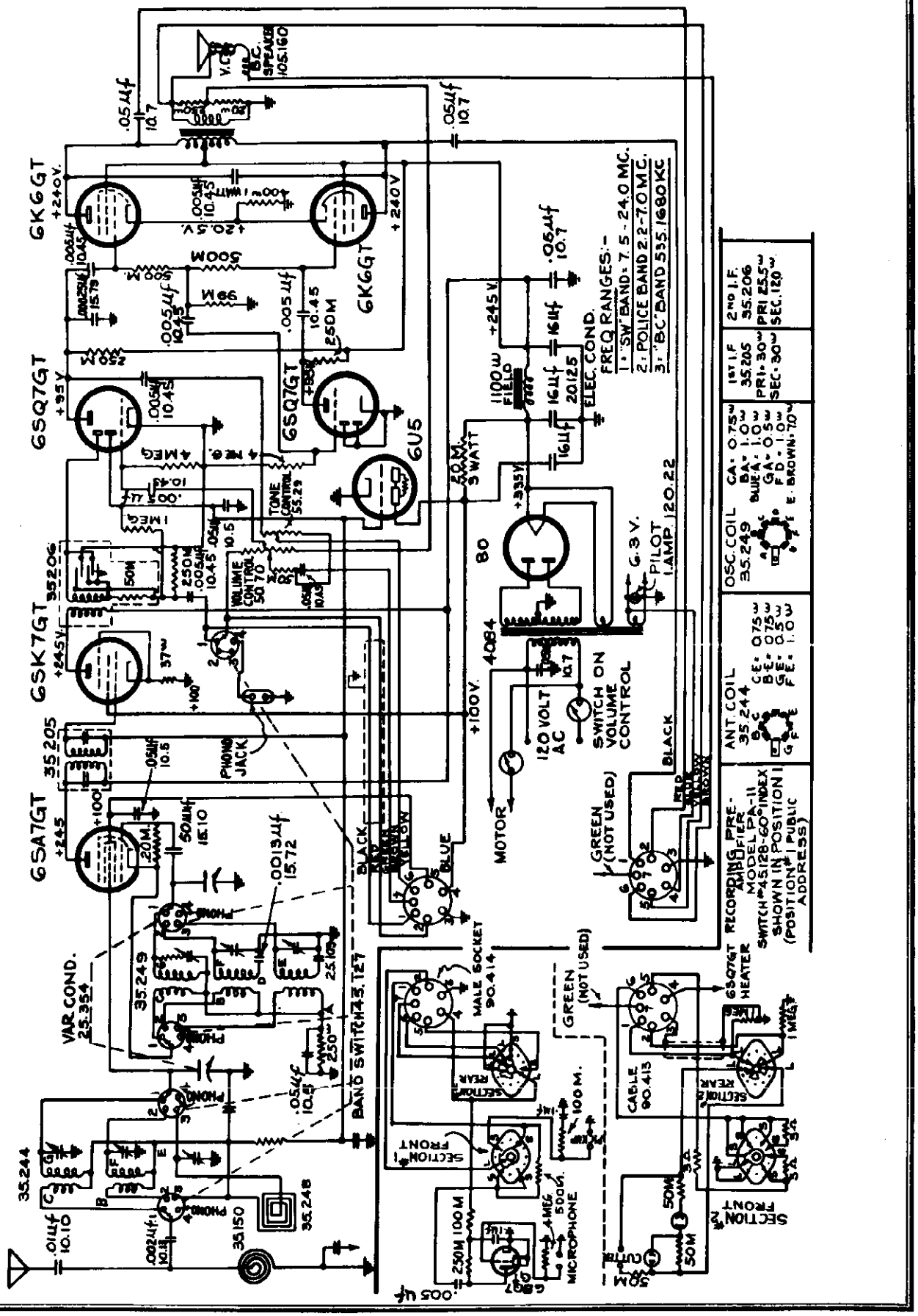

This receiver is equipped for FM (Frequency Modulation); Television and Phonograph Units.

Located on the rear of the chassis is a two pin JACK provided for this purpose. The Band Switch must be in the left position when operating.

If receiver hums slightly reverse the Power Cord Plug.

TUBE COMPLEMENT: A tube layout chart at the rear of the receiver indicates the type of tubes employed, as well as their location on the receiver chassis. When replacing these tubes replace only with tubes having identical type numbers.

When operating the receiver in a steel re-enforced building or other shielded locations, an outside antenna is recommended. This may be connected to the terminal on the loop marked "AERIAL". A ground may also be connected to the terminal marked "GROUND".

WARNING: Check power line for voltage and frequency (cycles) to make certain they are the same as specified on label located at rear of the receiver chassis, before inserting the power line in electric outlet.

This Receiver is equipped with a ROTATING LOOP ANTENNA. By rotating the Loop Control from left to right or vice versa, reception may be greatly improved. A correct position of the LOOP ANTENNA will result in noise-free reception.

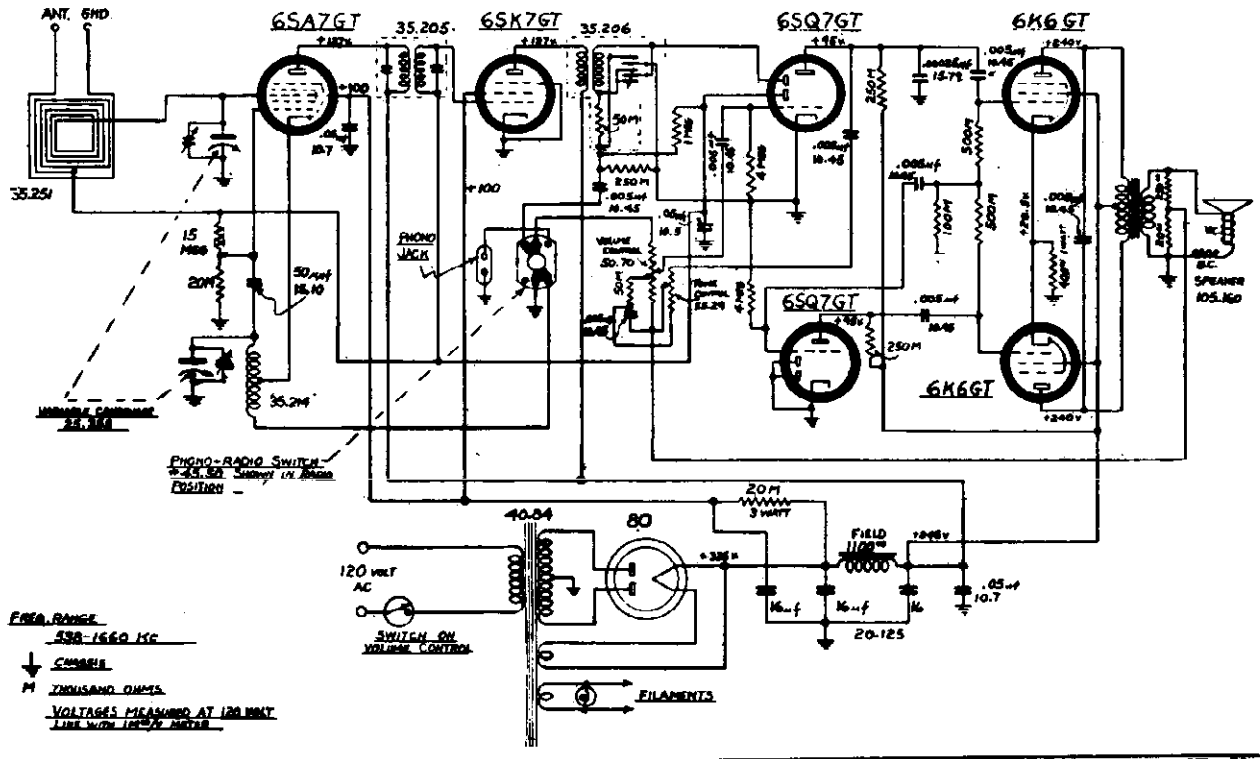

MODELS JS-186, JS-187

RADIO WIRE TELEVISION

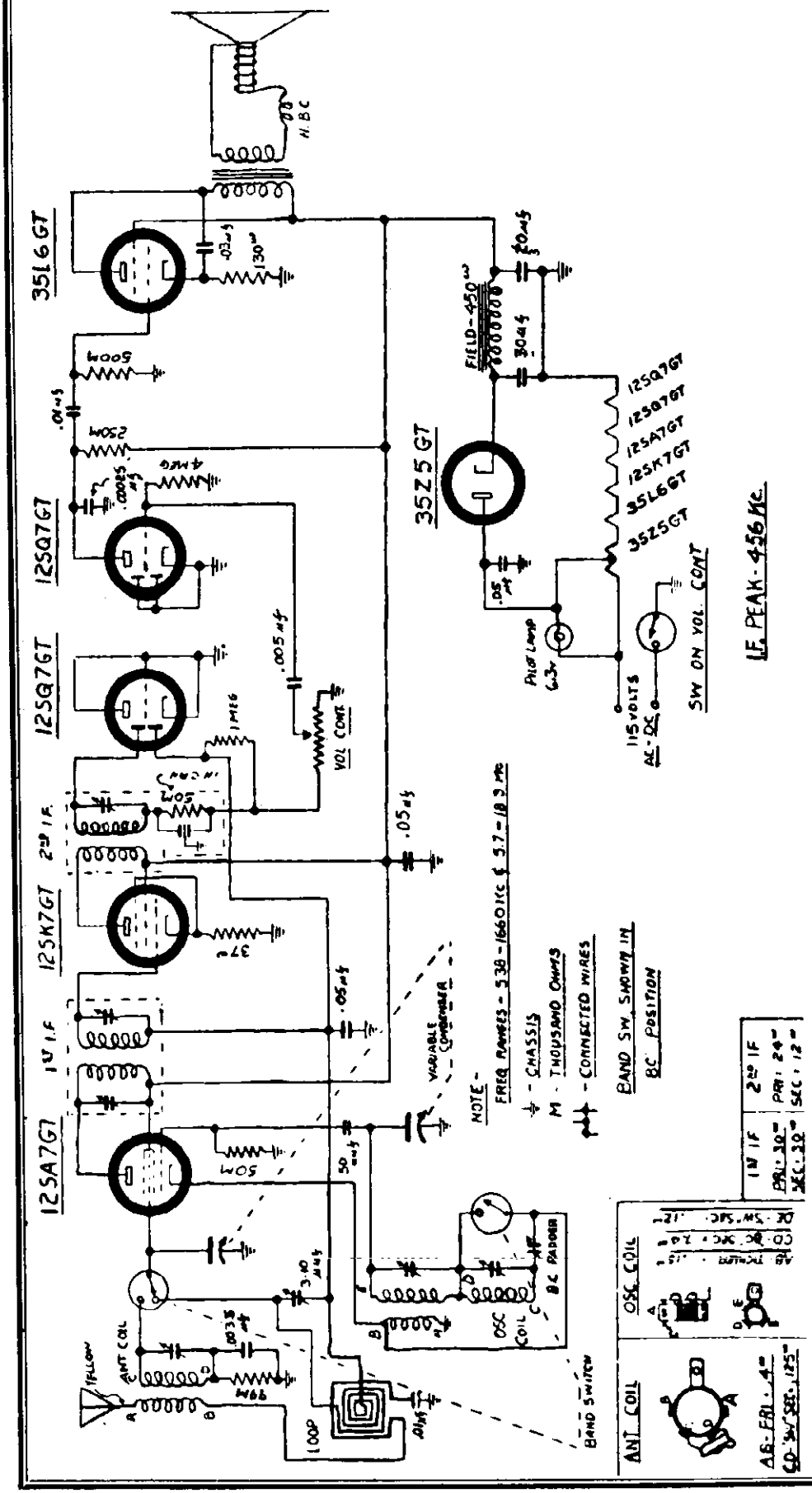

This 6 Tube Superheterodyne is designed to operate on 115 volts, 40 to 60 cycles, alternating current (AC) or 115 volts direct current (DC).

The Tuning Ranges, 533 to 1660 kilocycles (KC) and 5.7 to 18.3 megacycles (MC), cover all the major Domestic and Foreign Short Wave Broadcast, Police, Aircraft and Amateur Bands.

One 6-8 volt 150 M.A. lamp is used to illuminate the dial. Similar lamp should be used for replacement or damage may result.

© John F. Rider

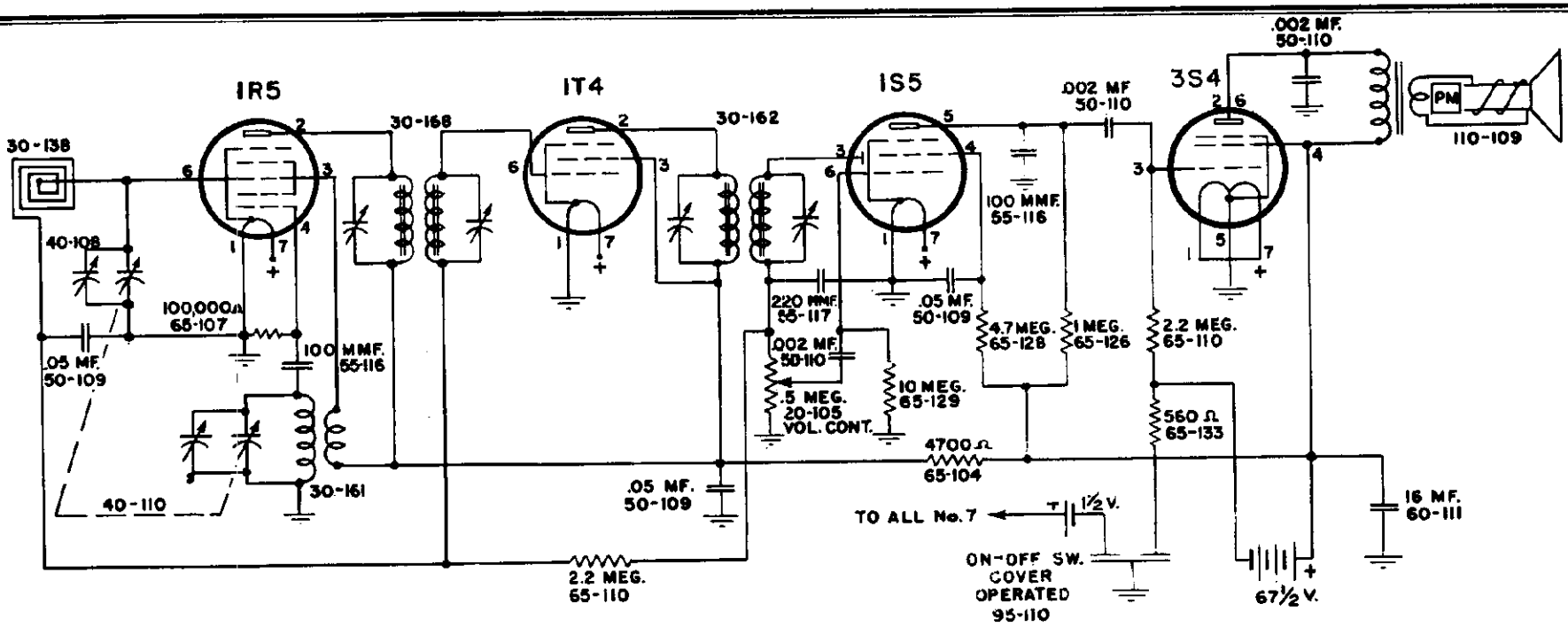

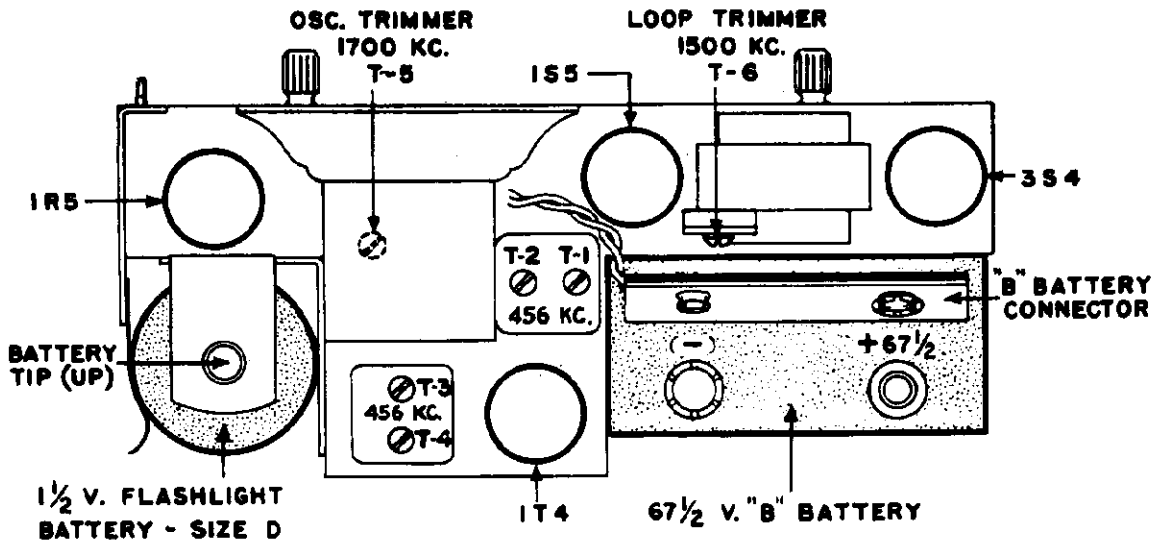

TUBE AND BATTERY LAYOUT

REGAL ELECTRONICS CORP.

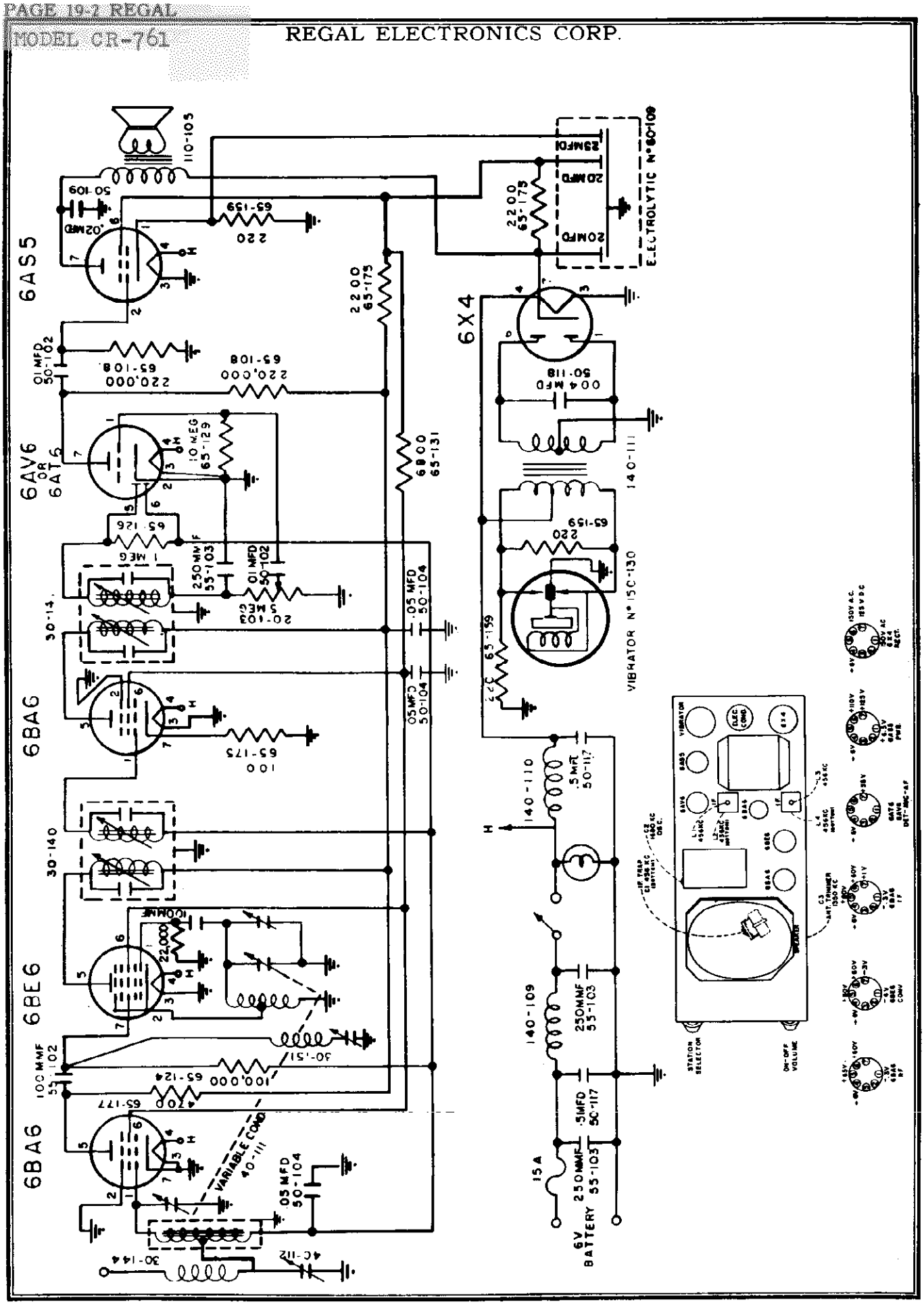

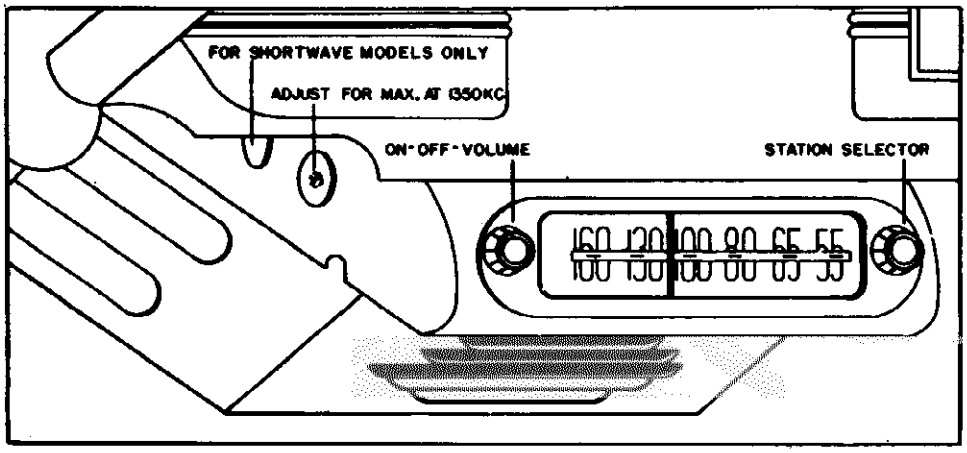

FIGURE 1. RADIO IN POSITION

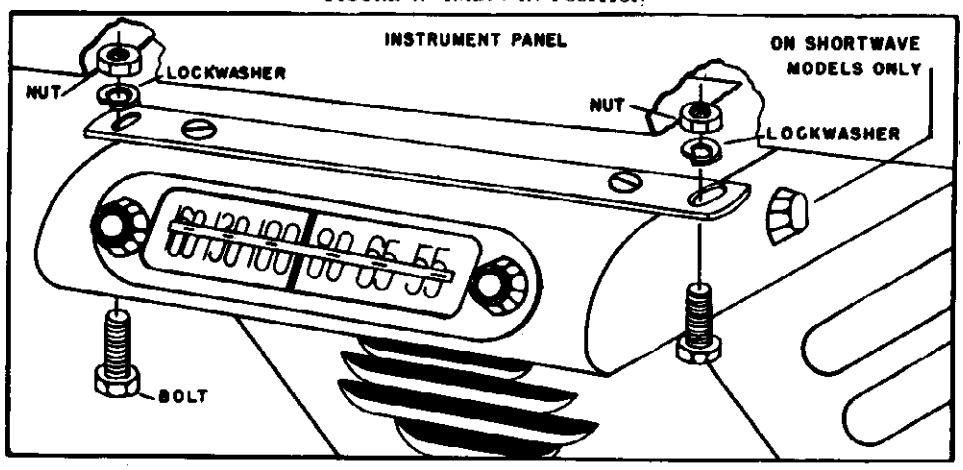

FIGURE 2. FRONT VIEW OF RADIO INSTALLATION

INSTALLATION

This radio is designed to operate at maximum efficiency when used with any good make auto-radio aerial. Install the aerial before proceeding with the installation of the radio. The aerial lead and complete installation instructions are packed with each aerial. The location of the aerial will determine the length of the aerial lead required to reach the radio. The shortest possible aerial lead should be used.

RADIO INSTALLATION: Determine the best possible location for the radio along the lower edge of the instrument panel. Using the front mounting strap as a template, mark and drill two 1/4" holes in the instrument-panel flange.

Fasten the strap to the top of the radio housing with two screws; then attach the fire-wall mounting strap to the stud on the back of the radio. Hold the radio in place, and bend the fire-wall strap to fit the fire wall. Mark and center-punch the location for the mounting-bolt hole on the fire-wall, and drill a 3/8" hole. Before drilling the hole, make certain that there are no obstructions such as ignition coil, battery, etc. on the motor side of the fire wall. Fasten the front mounting strap to the flange of the instrument panel (see figure 2), and bolt the fire-wall mounting strap securely to the fire wall (see figure 3).

CONNECTIONS: Plug the aerial lead into the connector on the radio. Place the fuse in the fuse housing on the "A" lead, and connect the fuse end of the "A" lead to the short lead on the back of the radio. Connect the other end of the "A" lead to the ignition switch or ammeter stud.

ANTENNA COMPENSATOR: An adjustment (see figure 1), reached through a hole on the upper-left side of the radio, near the front, is used to balance the radio to the aerial. With the radio turned on and the aerial fully extended, tune in a weak signal between 1200 kc and 1400 kc on the dial. With the volume control set just high enough to make the program audible, set the trimmer adjustment to obtain maximum signal strength. A small screwdriver is required for this adjustment.
Radio is now ready for operation.

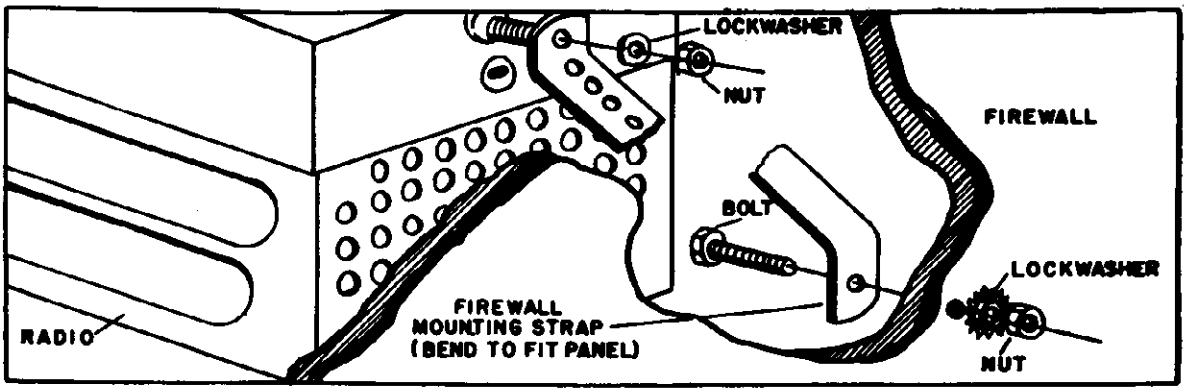

FIGURE 3. REAR VIEW OF RADIO INSTALLATION

ELIMINATION OF INTERFERENCE FROM CAR ELECTRICAL SYSTEM

Remove the coil-to-distributor high-tension lead from the distributor. Cut the lead two inches from the end, and screw the distributor resistor into the coil lead (see figure 4). Then screw the short length into the resistor, and plug the cable into the distributor cap. Two noise-filter condensers are furnished. One condenser must be connected to the output terminal of the generator (never to the field terminal), and the other to the battery side of the ignition coil. The generator-condenser bracket should be fastened to the generator housing, under the screw that holds the field (see figure 5), while the coil-condenser bracket should be fastened under the coil mounting bolts.

In some particularly stubborn cases of motor interference, one or more of the following procedures may be necessary:

A condenser can often be used to advantage on the electrically operated oil gauge or gas gauge. Connect the condenser lead to the terminal of the gauge, and bolt the condenser case securely to the frame or some other grounded part of the car.

Bonding the steering column to the fire wall with a short braid may also be effective. Clean the paint from the steering column at the fire wall where the column enters the motor compartment, and solder on a short piece of braid. Ground the end of the braid to the fire wall.

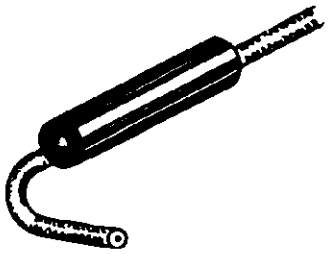

FIGURE 4. DISTRIBUTOR RESISTOR

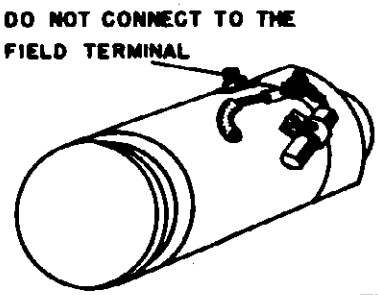

FIGURE 5. GENERATOR CONDENSER

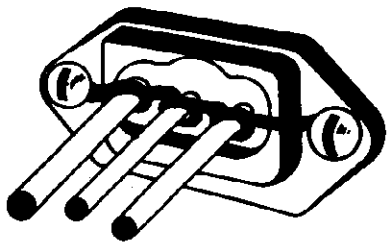

FIGURE 6. BONDING OF FIRE-WALL TUBES

In some cases it may be necessary to ground the tubes and rods coming through the fire wall in order to reduce the interference. Clean them with emery cloth and spot-solder the braid, fastening the end under a convenient screw (see figure 6).

In some cases it may be necessary to connect an additional condenser to the ammeter or to the ignition switch.

It may be necessary to use a condenser on the voltage regulator. The condenser case should be mounted under one of the voltage-regulator mounting screws, or at some other convenient location, and connected to the battery terminal of the voltage regulator.

Interference from electric clocks can be eliminated by connecting a condenser to the ammeter terminal. The case of the condenser must be securely grounded.

If tire-static interference is noted in a particular installation, static collector springs should be obtained and installed in the front wheels of the car.

REGAL ELECTRONICS CORP.

MODEL L-43

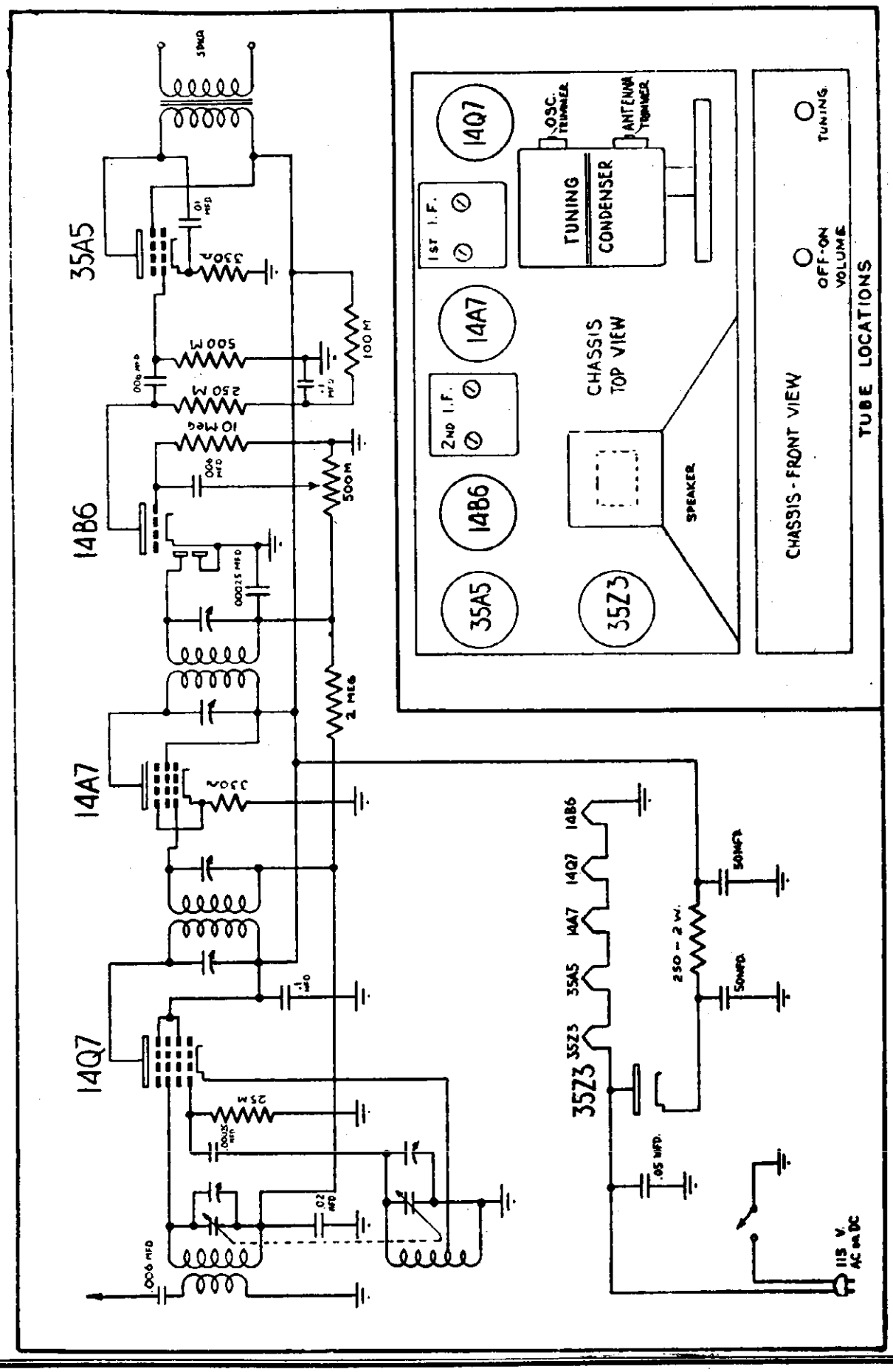

MODEL 78

REGAL ELECTRONICS CORP.

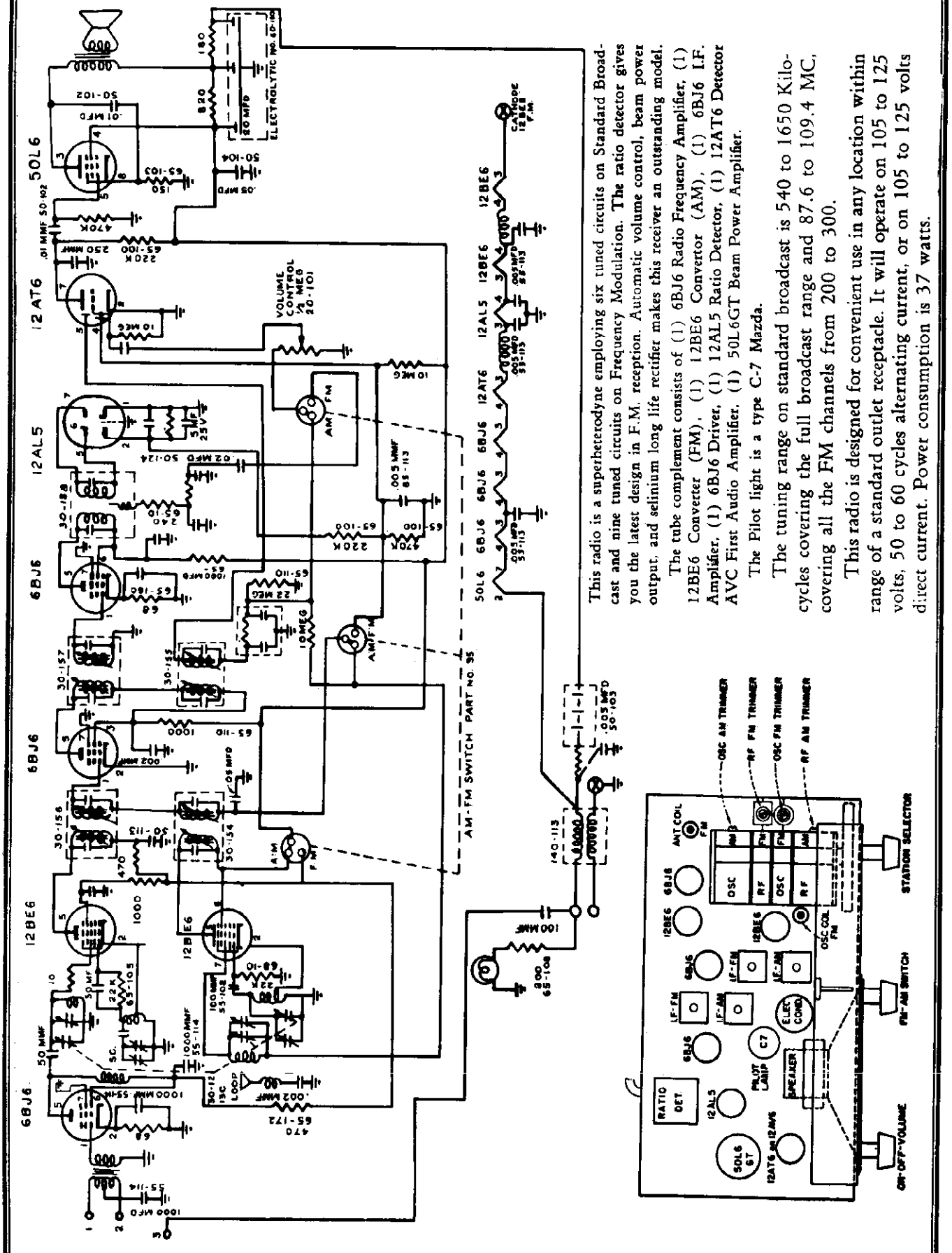

This radio is a superheterodyne employing six tuned circuits on Standard Broadcast and nine tuned circuits on Frequency Modulation. The ratio detector gives you the latest design in F.M. reception. Automatic volume control, beam power output, and selinium long life rectifier makes this receiver an outstanding model.

The tube complement consists of (1) 6BJ6 Radio Frequency Amplifier, (1) 12BE6 Converter (FM), (1) 12BE6 Convertor (AM), (1) 6BJ6 I.F. Amplifier, (1) 6BJ6 Driver, (1) 12AL5 Ratio Detector, (1) 12AT6 Detector AVC First Audio Amplifier, (1) 50L6GT Beam Power Amplifier.

The Pilot light is a type C-7 Mazda.

The tuning range on standard broadcast is 540 to 1650 Kilocycles covering the full broadcast range and 87.6 to 109.4 MC, covering all the FM channels from 200 to 300.

This radio is designed for convenient use in any location within range of a standard outlet receptacle. It will operate on 105 to 125 volts, 50 to 60 cycles alternating current, or on 105 to 125 volts direct current. Power consumption is 37 watts.

REGAL ELECTRONICS CORP. MODEL 205

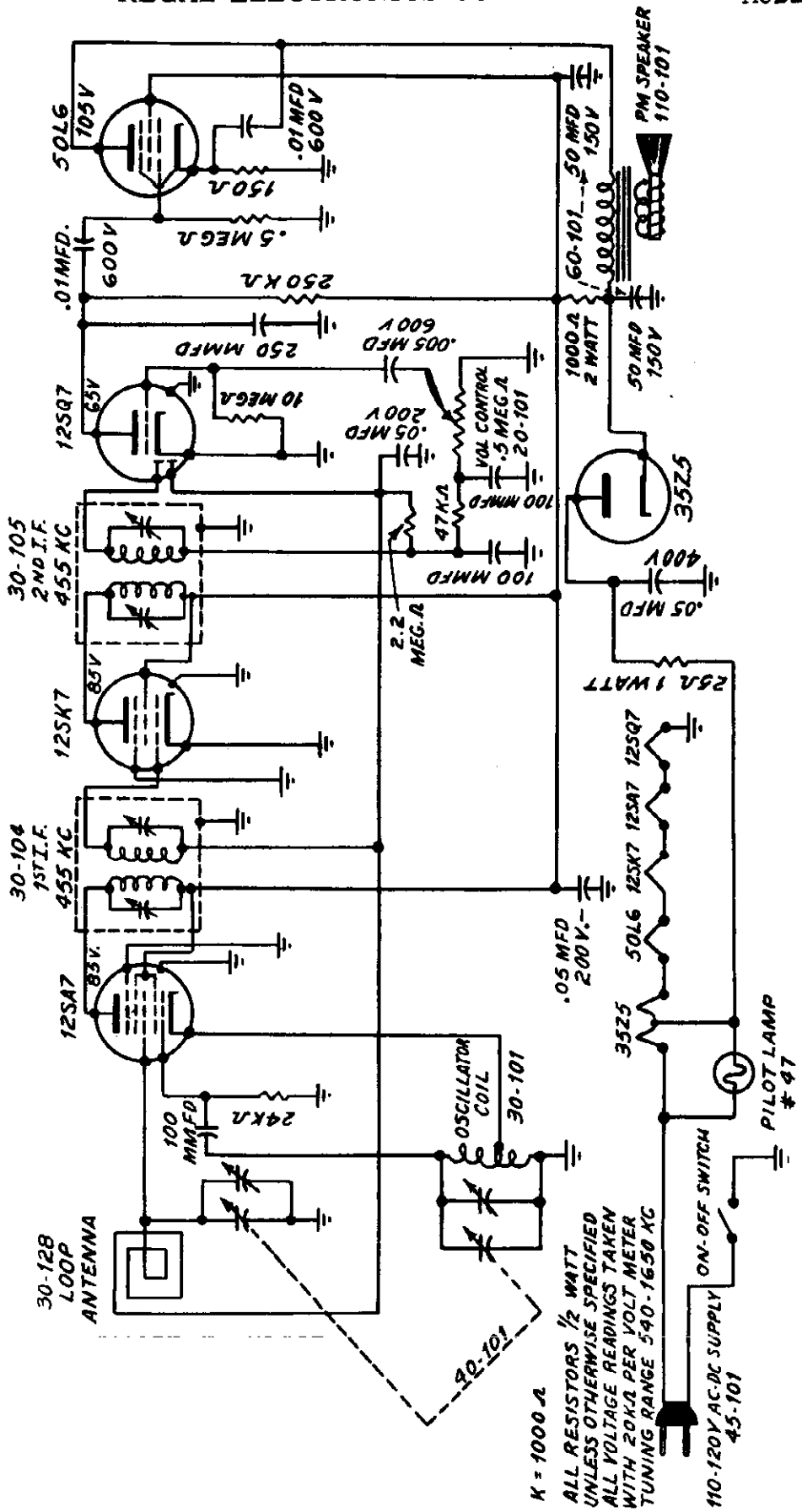

©John F. Rider

MODEL 1107 REGAL ELECTRONICS CORP.

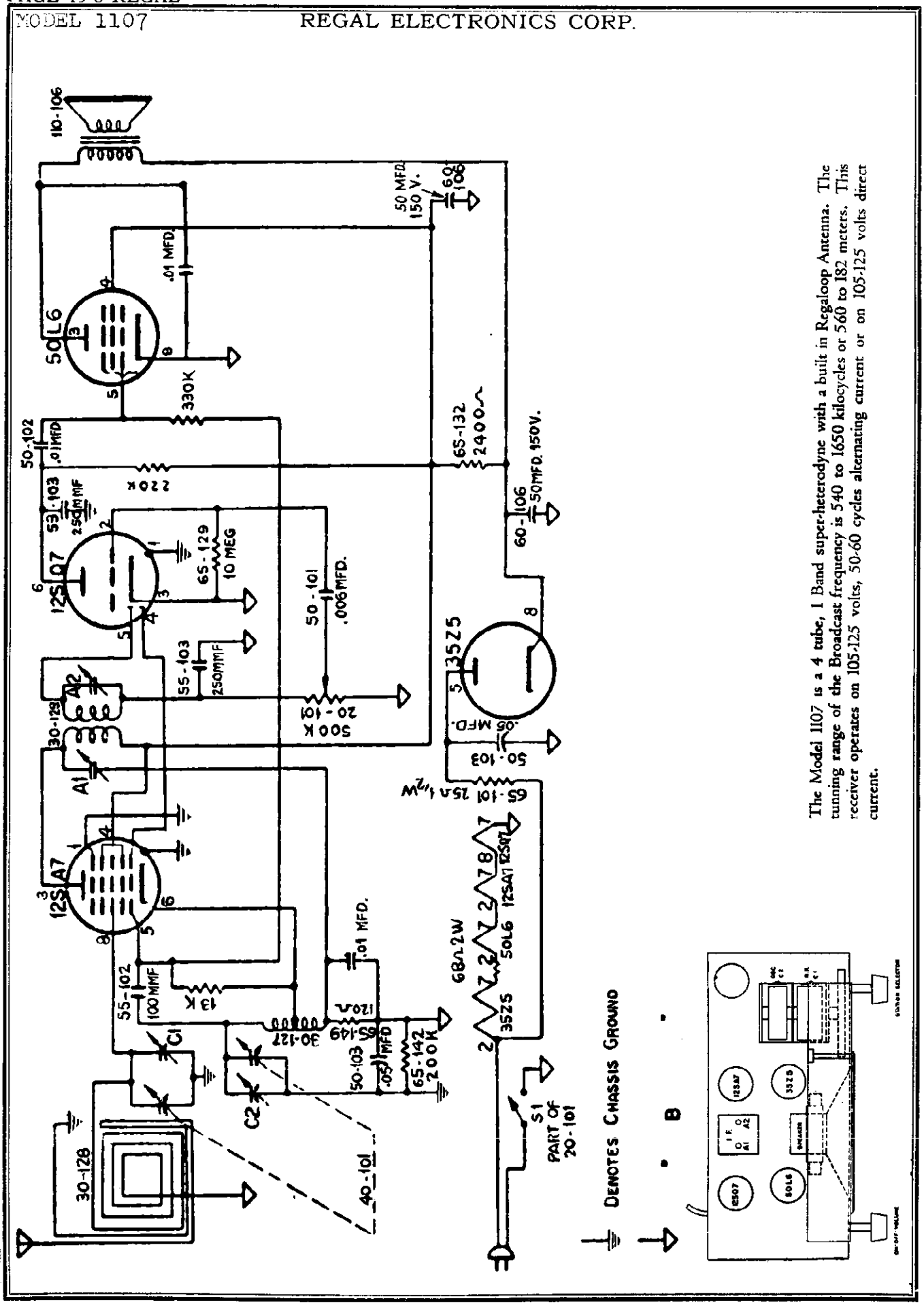

The Model 1107 is a 4 tube, 1 Band super-heterodyne with a built in Regaloop Antenna. The tunning range of the Broadcast frequency is 540 to 1650 kilocycles or 560 to 182 meters. This receiver operates on 105-125 volts, 50-60 cycles alternating current or on 105-125 volts direct current.

©John F. Rider

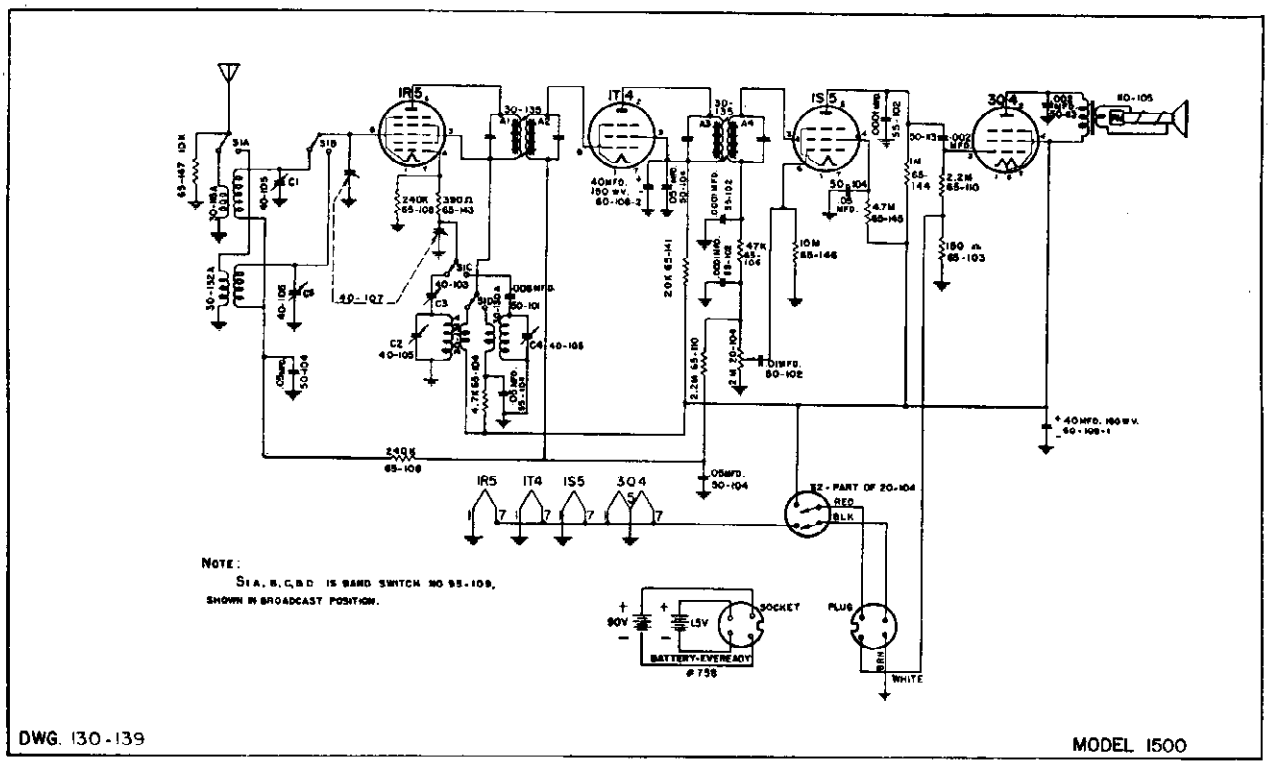

THE MODEL 1500 is a 4-tube battery-operated superheterodyne farm radio receiver with two tuning ranges for reception of standard broadcast and short-wave stations. The tuning range of the broadcast frequency is 540 to 1650 kilocycles, or 560 to 182 meters. The short wave frequency is 5.8 to 18.3 in megacycles, or 16 to 49 meters, which include the following 16, 19, 25, 31, 39 and 49 meter bands.

This radio is designed to operate from an Eveready #758 battery pack. This unit has a 90 volt "B" supply and a 1½ volt "A" supply, and is connected to the receiver by means of a 6-foot flexible battery cable and plug.

ELECTRICAL SPECIFICATIONS

THE CIRCUIT OF 1500 is a superheterodyne employing eight tuned circuits for maximum sensitivity and selectivity, with Automatic Volume Control (AVC) and a beam power output system. The tube complement consists of (1) 3Q4 power amplifier, (1) 1S5 Detector, AVC and first audio amplifier, (1) 1T4 IF amplifier, and (1) 1R5 converter.

If your set does not work check your tubes. Make sure each tube is in its socket.

MODEL 1500 REGAL ELECTRONICS CORP.

ALIGNMENT INSTRUCTIONS

SET VOLUME CONTROL AT MAXIMUM VOLUME AND OUTPUT FROM SIGNAL GENERATOR NO HIGHER THAN IS NECESSARY TO OBTAIN OUTPUT READING.

TUNING RANGE

BROADCAST :- 540 - 1650 KC. SHORTWAVE :- 5.8 - 18.3 MC.

DUMMY ANTENNA	SIGNAL GENERATOR COUPLING	BAND SWITCH POSITION	SIGNAL GEN'R FREQUENCY	RADIO DIAL SETTING	OUTPUT METER	ADJUST	REMARKS
.1 MFD	R.F. SECTION OF VARIABLE CONDENSER	B C	455 KC.	1650 KC.	ACROSS VOICE COIL	A1, A2, A3, A4.	ADJUST FOR MAXIMUM
200 MMFD.	ANTENNA LEAD	B C	1650 KC.	1650 KC.	" "	C 2	" " "
200 MMFD.	" "	B C	1500 KC.	1500 KC.	" "	C 1	" " "
200 MMFD.	" "	B C	600 KC.	600 KC.	" "	C 3	ROCK GANG & ADJUST FOR MAXIMUM OUTPUT. RECHECK C1 & C2 ADJUSTMENTS AS GIVEN
400 Ω	" "	S W	18.3 MC.	18.3 MC.	" "	C 4	ADJUST FOR MAXIMUM.
400 Ω	" "	S W	17 MC.	17 MC.	" "	C 5	ROCK GANG & ADJUST FOR MAXIMUM OUTPUT.

IF TWO PEAKS CAN BE OBTAINED, USE ONE WITH TRIMMER SCREW FURTHER OUT.

DWG. NO. 130-142 MODEL 1500

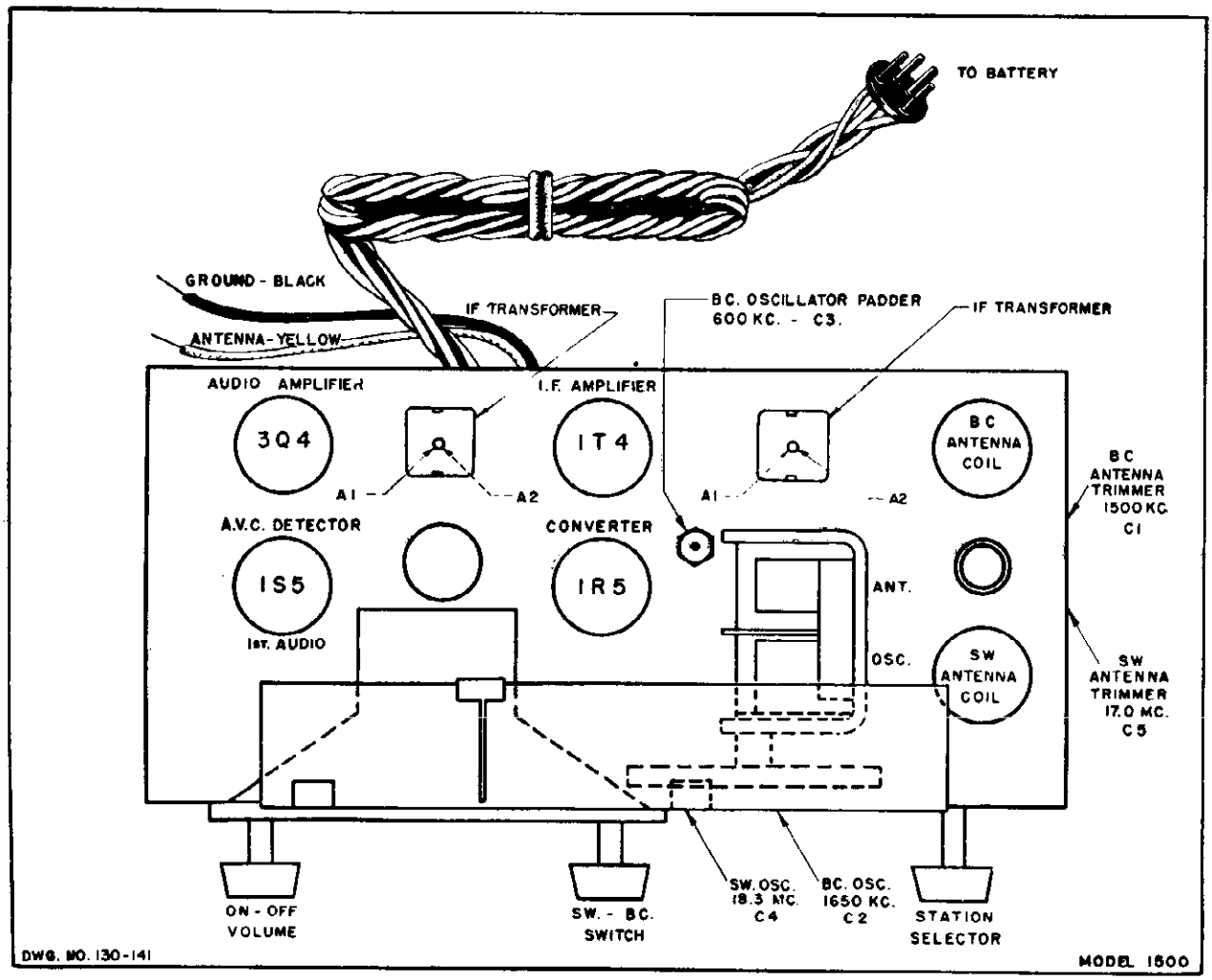

DWG. NO. 130-141 MODEL 1500

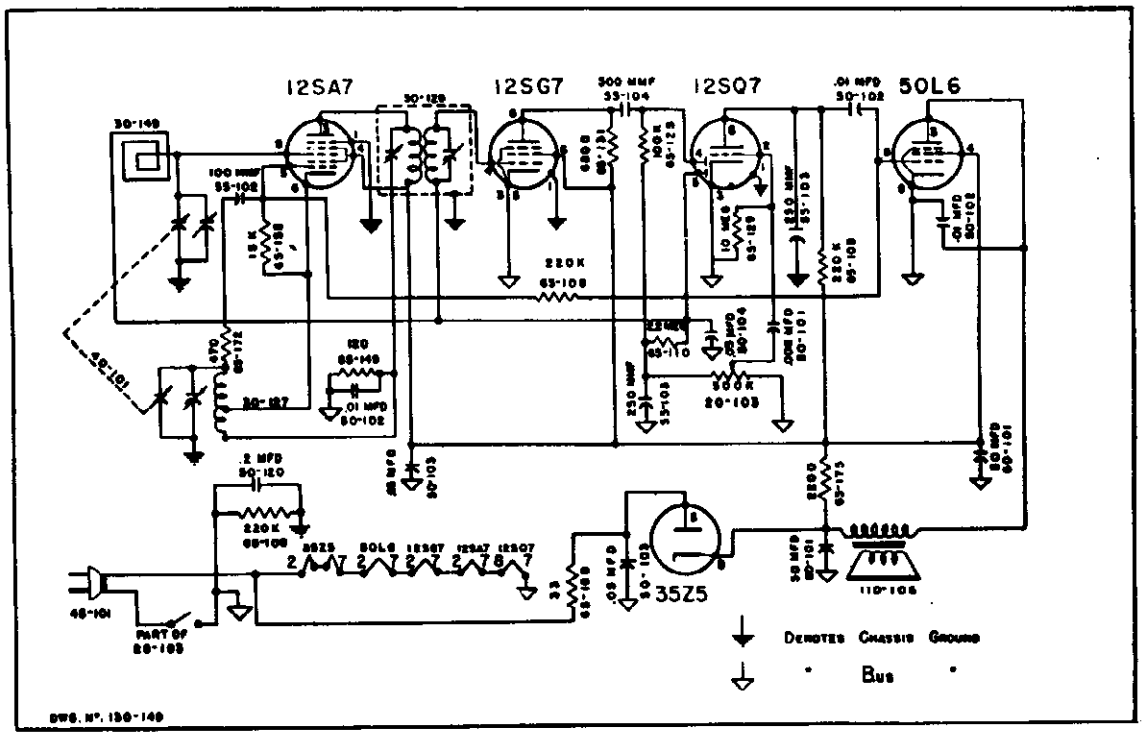

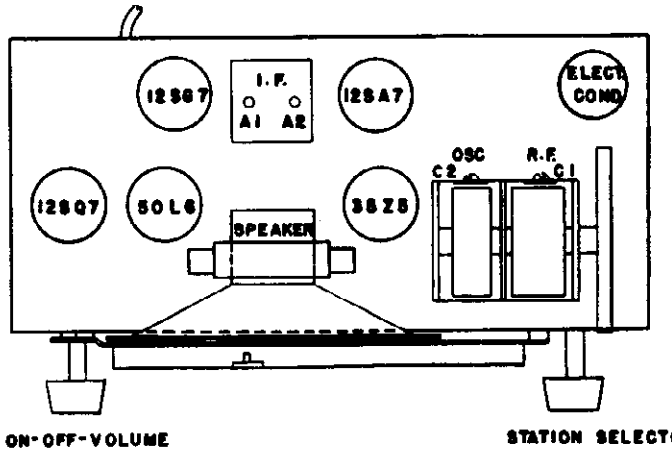

This Model is a 5 tube, 1 Band super-heterodyne with a built in Regaloop Antenna. The tuning range of the Broadcast Band is 540 to 1650 kilocycles or 560 to 182 meters. This receiver operates on 105-125 volts, 50-60 cycles alternating current or on 105-125 volts direct current.

Antenna

The loop Antenna in this receiver will give good reception under normal conditions. It is directional and the best position may be obtained by slowly rotating the receiver in different directions until the signal volume is at its strongest. For better results on weak signals connect a good outside Antenna. A connection is provided at the rear of the receiver for connecting an outdoor Antenna.

ELECTRICAL SPECIFICATIONS

Super-heterodyne with Beam Power out-put system. TUBES: 1-12SA7, 1-12SG7, 1-12SQ7, 1-50L6, 1-35Z5.

REMLER COMPANY LTD.

MODEL 6000,
Scottie

110 - 120 VOLTS A.C.D.C. 35 WATTS

© John F. Rider

MODELS 7110, 7120

REMLER COMPANY LTD.

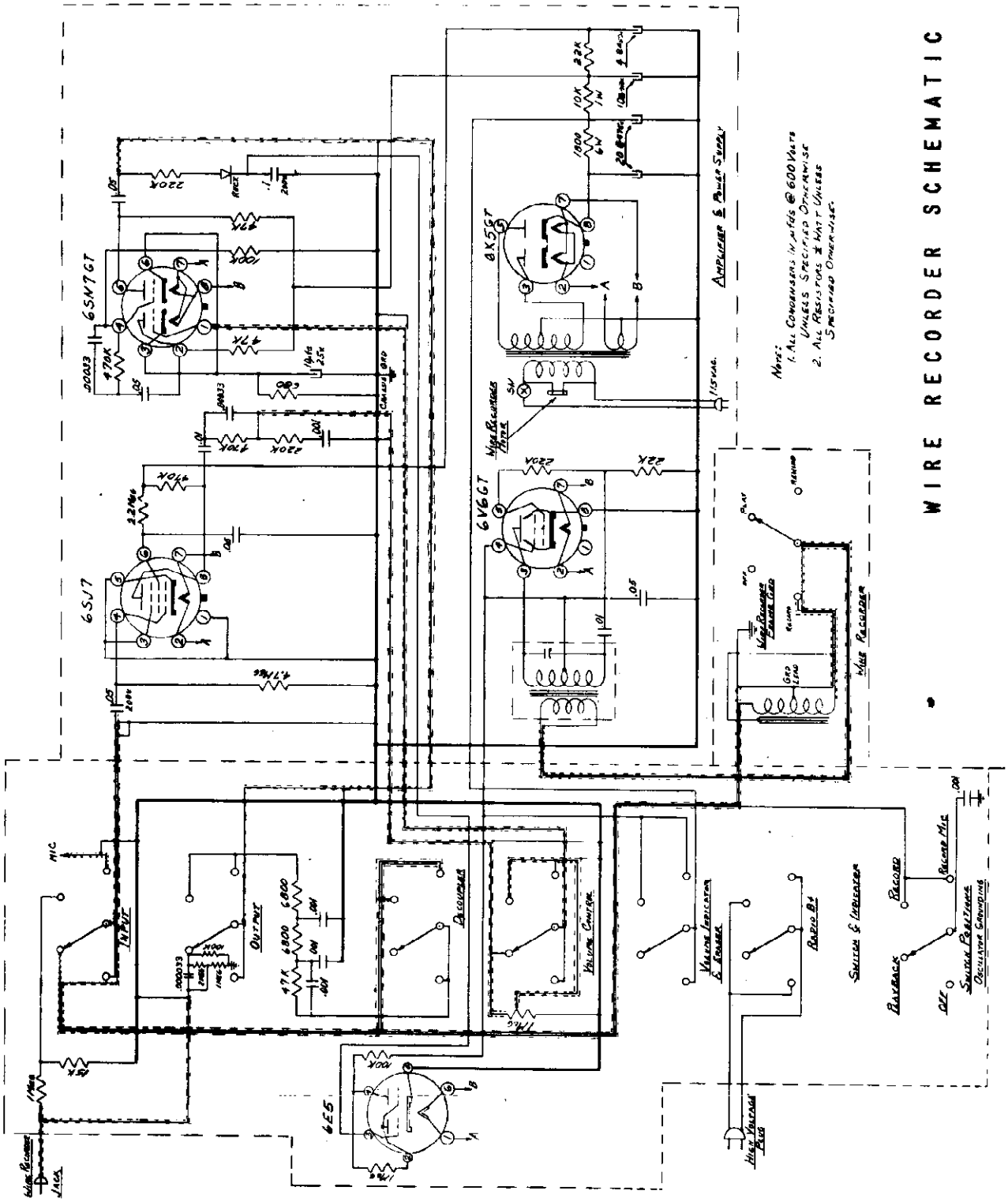

REMLER COMPANY LTD. MODELS 711 7120

OPERATION OF WIRE RECORDER

MODEL 7120

TO INSTALL WIRE:

1. Remove rubber band from spool and press spool onto spindle so that the wire will reel off from the front side of the spool.

2. Hold top of spool with fingertips to prevent unwinding and draw out the celluloid leader past recording head and into channel of turntable.

3. While holding the leader against inner edge of the channel, rotate the turntable by hand until two complete turns of wire are in the channel. See that the wire threads into the recording head. The full length of the leader must be pressed against the inner surface of the channel or speed variations will result.

4. The Model 7120 comes equipped with a quarter hour spool of recording wire. Standard spools of wire are available in quarter hour, half hour and one hour lengths, any of which will fit the wire recorder.

TO SPLICE BROKEN WIRE:

1. Use several inches of the two ends of the wire and tie a common square knot. Draw knot tight and trim ends close.

TO RECORD RADIO PROGRAMS OR PHONOGRAPH RECORDS ON WIRE:

1. Turn radio selector switch to desired position.

2. Turn wire recorder selector switch at left of tuning eye to RECORD.

3. The Magic Eye indicates the volume of the sound being recorded. It will normally flicker as the sound varies in intensity. Turn the recorder VOLUME control until the eye just barely closes but never overlaps. Too much overlapping of the indicator eye may cause distortion or recording at a high level that can not be erased. If the eye is not brought to the closing point, the recorded level may be so low as to allow wire noise to be heard on the playback.

4. Turn motor switch at right hand back corner to RECORD. The small button next to the switch must be depressed when switching to RECORD position.

5. Whatever sound is heard from the loudspeaker is now being recorded. The radio volume and tone controls may be set in any position while recording as they do not affect the program being recorded.

TO RECORD FROM MICROPHONE:

1. Turn recorder selector to MIC.

2. Adjust VOLUME control as in para. 3 above, while speaking into microphone.

3. Turn motor switch to RECORD.

4. Speak in a normal tone of voice, holding the microphone about four inches from the lips.

5. None of the radio controls have any effect while recording from the microphone, except that the power switch must be turned ON.

©John F. Rider

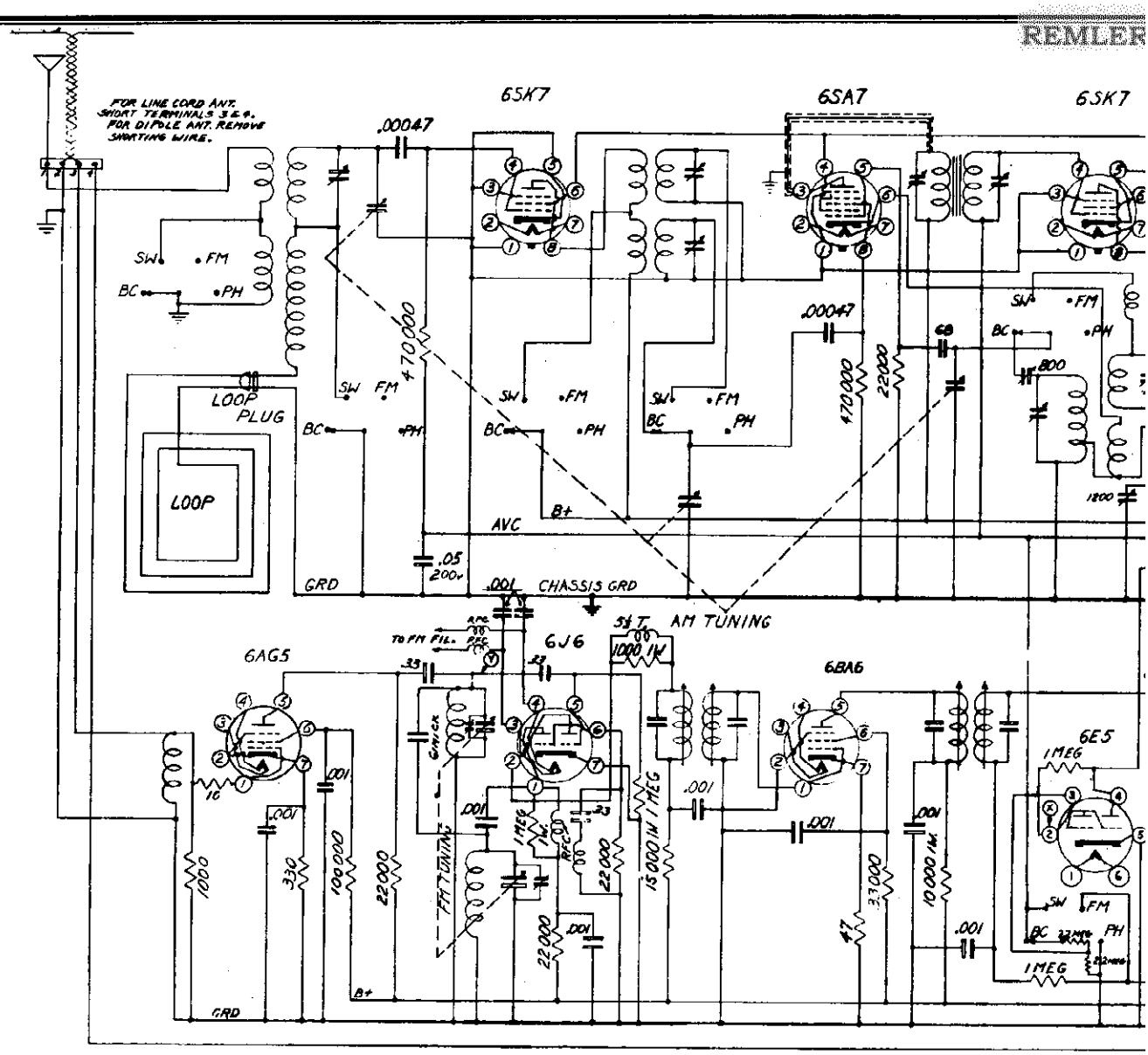

MODEL 7110 - 7120 ALIGNMENT INSTRUCTIONS

Tuning range. Broadcast 540kc-1700kc, Shortwave 5.8mc-18mc, FM 88mc to 108mc.

Keep volume control at comfortable listening level, and output from signal generator as higher than necessary to obtain output reading. It is absolutely necessary that an insulated alignment tool be used for all adjustments. The broadcast band antenna loop should remain connected. Connecting link should be open between antenna terminals 3 and 4 on rear of chassis when aligning, but closed when tuning FM stations. Use dial scale provided with these instructions, centered on receiver dial plate. Receiver and signal generator must be turned on at least 10 minutes prior to commencing alignment.

DUMMY ANT.	SIG. GEN. COUPLING	SIG. GEN. FREQ.	RADIO DIAL SETTING	OUTPUT METER	ADJUST	REMARKS
BROADCAST BAND (Bandswitch on BC)						
.1 mfd	To pin #8 on 6BA7 and ground	540kc	Between stations on high freq. end of band	DC VTVM neg. on point "X" (Lead from grid of 6E5)	G, H, I, J	Aligns I.F. for both broadcast or shortwave bands.
.1 mfd	To Ant.term. strip, screw No. 1	1500kc	1500kc	Same as Above	Turn L until Sig.is heard, then peak H on VTVM.	
.1 mfd	Same as Above	600kc	600kc	Same as Above	Turn G until Sig.is heard.	Repeat preceding step and this step, until neither L nor G requires further adjustments for peak on VTVM.
SHORTWAVE BAND (Bandswitch on SW)						
.1 mfd	To Ant.term. strip,screw No.1. Link open	18mc	18mc	DC VTVM neg. on point "X" (Lead from grid of 6E5)	Turn E until Sig.is heard, then peak M and Q on VTVM	
.1 mfd	Same as Above	6mc	6mc	Same as Above	Turn P until Sig.is heard.	Repeat preceding step and this step, until neither E nor P requires further adjustments for peak on VTVM.
FM Band (Bandswitch on FM)						
.1 mfd	To pin 1 on 2nd 6BA6 and ground	10.7mc. Less than 30 % AM	Between stations at approx. 100mc	DC VTVM neg. on AVC bus (Point "W")	Adjust E for Max.Neg.Volt.	NOTE: All I.F. alignment must be done without moving the signal generator setting from the 10.7mc point. If it becomes necessary to move the signal generator setting during the process of I.F. alignment, ALL I.F.'s must be realigned when the generator is reset to 10.7mc.
.1 mfd	To pin 1 on 1st 6BA6 and ground	Same as Above	Same as Above	Same as Above	Adjust B and C for Max. Neg. Voltage.	
.1 mfd	Same as Above	Same as Above	Same as Above	DC VTVM neg on PC "Z". Pin on ground	Adjust F until VTVM reads zero	Signal generator output must be low enough so that AVC volts will be less than 1v. when setting F for zero.
.1 mfd	Point Y	Same as Above	Same as Above	DC VTVM neg. on AVC bus (Point "W")	Adjust B and A for Max. Neg. Voltage.	Repeat preceding 3 steps and this step; after 1st adjustments at this step.
.1 mfd	Ant. term. strip,term. #3 link open	100mc Less than 30 % AM	100mc	Same as Above	Peak A and B	After completing following step, return to this step and check for accuracy of dial calibration by using input from station of known frequency instead of the 100mc from signal generator.
Remove dummy ant. and connect link betw. ant. term. Pts. 3 and 4	None	None	Tune in any FM station near center of dial, if possible	See Remarks Column	See Remarks Column	Station must be tuned in for maximum AVC neg. voltage by using VTVM on Point "W". After station is tuned in, move VTVM connection to point "Z" and readjust "F" until meter needle excursions are symmetrical about the zero point.

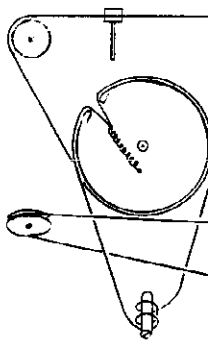

DIAL

©John F. Rider

LER COMPANY LTD.

MODELS 7110, 7120

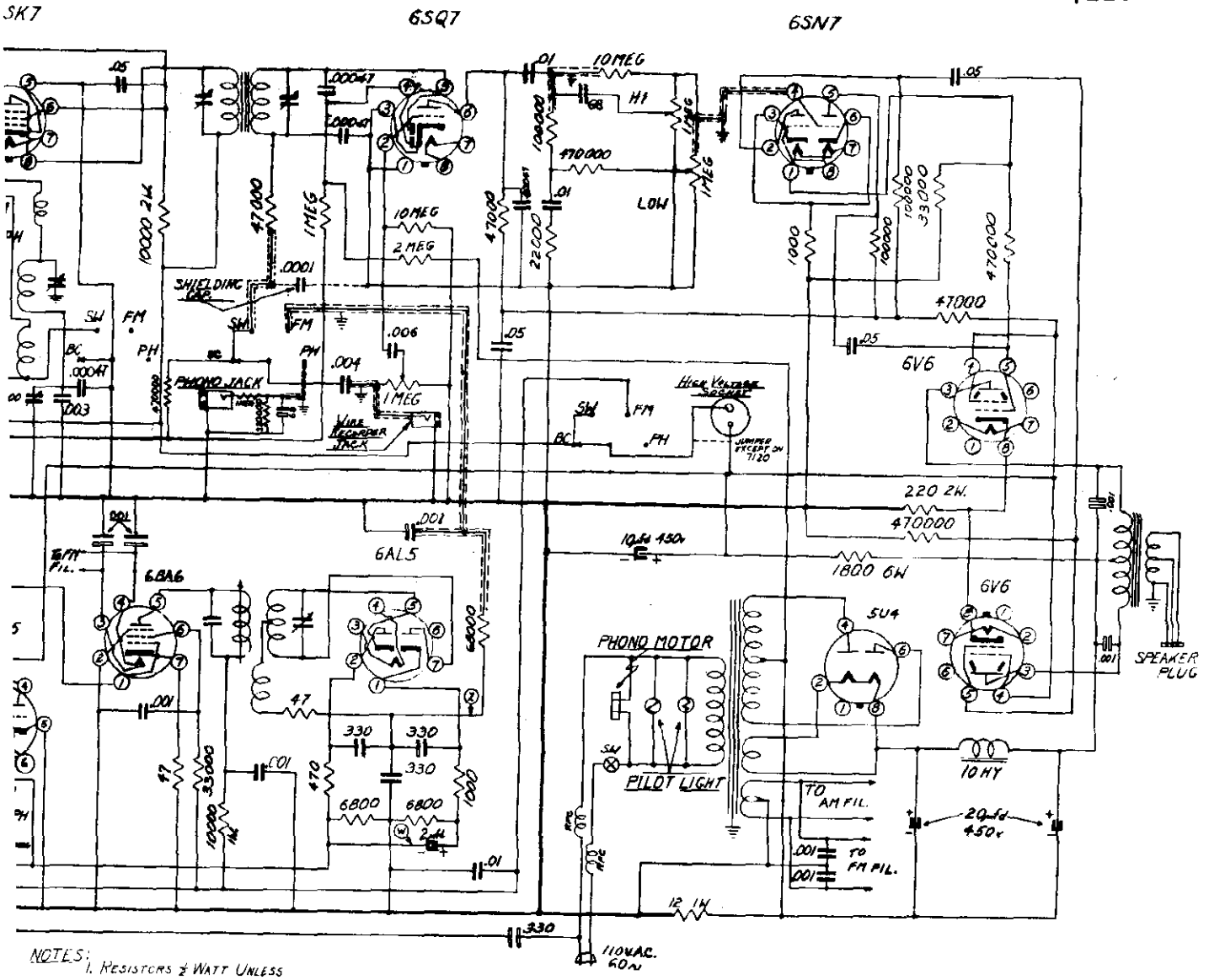

NOTES:
1. RESISTORS ½ WATT UNLESS SPECIFIED OTHERWISE.
2. CONDENSERS 600V. UNLESS SPECIFIED OTHERWISE.
3. CONDENSERS HAVING VALUES OF 33, 68 & 330 ARE IN μμFD. ALL OTHERS ARE IN μFD.

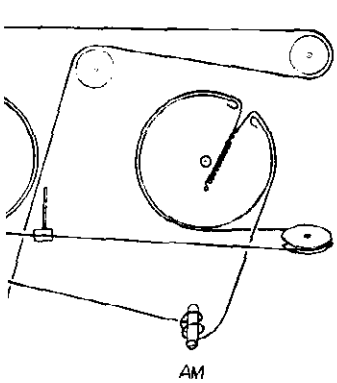

AM

AL CORD DRIVE

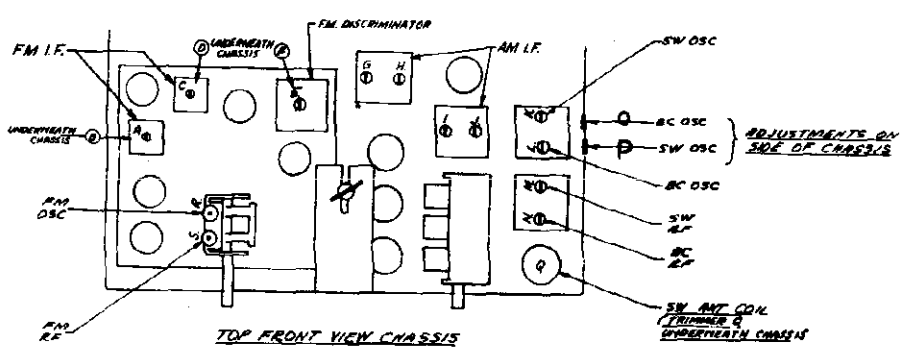

TOP FRONT VIEW CHASSIS

MODELS 7110, 7120

REMLER COMPANY LTD.

REWINDING AND PLAYBACK:

Before the recording can be played back, the wire must first be rewound to the start of the program. This rewinding is accomplished at a speed of about five times the recording and playback speed.

1. Turn the recorder selector switch to PLAYBACK.

2. Turn the radio volume control to the extreme counter clock-wise position.

3. Turn the motor switch to REWIND.

4. The radio volume control can now be adjusted until the chattering sound is at the desired volume. This sound is the program that has just been recorded running in the reverse direction. After some experience, this sound may be used to judge when the recorded program has been rewound.

5. When the wire has been rewound to the desired point, turn the motor switch to PLAY.

6. The program that has been recorded will now be heard on the radio speaker. The volume and tone may be adjusted with the radio tone and volume controls. The recorder volume control has no effect during the playback.

7. To stop playback at any time, turn motor switch to OFF.

8. If wire is completely wound off of either the spool or turntable, the motor will automatically shut off. In this case, turn the motor switch to OFF, rethread the wire and press reset button to reconnect motor.

9. If a spool of wire is to be stored, REWIND entire length of wire as above and remove spool. Place a rubber band around spool to retain wire.

10. When not using the wire recorder, turn motor switch and recorder selector switch to OFF. Never turn radio power switch or recorder selector switch to OFF until motor switch is turned to OFF and turntable has stopped revolving. If this procedure of first turning the motor switch to OFF position is not followed, the wire is likely to unwind from one spool and not wind onto the other spool, thus causing it to become tangled.

ERASING RECORDED MATERIAL:

The recording may be played and replayed as often as desired without affecting the performance of the record. If it is desired to use the same spool of wire over again, simply REWIND and RECORD right over the old program. The wire will automatically be cleared of previously recorded material at the same time the new recording is being made. If it is desired to erase the program on the wire without recording a new one, the following procedure should be used.

1. Rewind wire to the point at which erasing is to start.

2. Turn recorder selector switch to RECORD.

3. Turn recorder volume control to extreme counter clock-wise position.

4. Turn motor switch to RECORD.

5. Turn motor switch to OFF after desired amount of wire has been erased.

The Models 7110 and 7120 are designed for operation on 115 volt, 60 cycle house current only.

Model 500 Radio-Phonograph is a console combination designed for operation on the AM and the FM broadcast bands and for record reproduction with standard 78 rpm and LP 33 1/3 rpm records. The radio receiver is comprised of two units; a tuner for AM and FM with all controls, and a power unit containing the transformer and rectifying circuits as well as the final audio amplifying circuits. The record player will operat with intermixed 10 and 12 inch records on 78 rpm and will play the new LP, or 33 1/3 rpm records singly using a special pickup provided. A 12 inch diameter, permanent magnet, dynamic speaker is used in a special acoustic compartment. The record changer compartment is lined with sound absorbing material to prevent undesirable acoustic resonances.

INSTALLATION

The Model 500 is shipped with the tuner (Figure 1) and the loudspeaker installed in the cabinet. The power amplifier (Figure 2) and the record changer are shipped in individual cartons.

To install the power amplifier it is necessary only to remove the unit from its packing carton, and place it in the compartment at the left of the speaker housing, as viewed from the rear of the cabinet. Install the unit with connecting sockets outward, that is, with the power transformer on the inside. Fasten the unit to the cabinet floor with the wood screws provided.

To install the record changer remove from packing carton, pull phono drawer fully forward, and set changer on the mounting board making sure that the spring mounts on the changer fit securely in the counterbored holes provided in the mounting panel. While doing this feed the a.c. cord and the pickup cord through the mounting board, making sure that they both clear moving parts of the mechanism. Now remove the board covering the back of the phono compartment. Dress the a.c. cord and the pickup lead in the clear under the mechanism. Fasten the a.c. cord at the right of the phono drawer, viewed from the rear of the cabinet. Then feed the a.c. cord through the right hand hole (the larger one) of the back board and the pickup lead through the left hand hole, and replace phono board. Insert the pickup plug in the socket labeled "PH" at the right rear of the tuner. Insert the a.c. cord of the phono in the a.c. receptacle of the power unit, dressing the cord so that it moves freely when the phono drawer is moved out and in.

Connect the tuner to the power amplifier by means of the outlets provided. The power pack a.c. cord should be plugged into the tuner receptacle labeled "Amplifier" (Figure 3).

NOTE: Do not use the tuner receptacle labeled "Phono" for a.c. supply to the record player. As described above, use the outlet in the power amplifier as this provides better dressing of the record player a.c. cord.

MODEL 500 SCOTT RADIO LABS., INC.

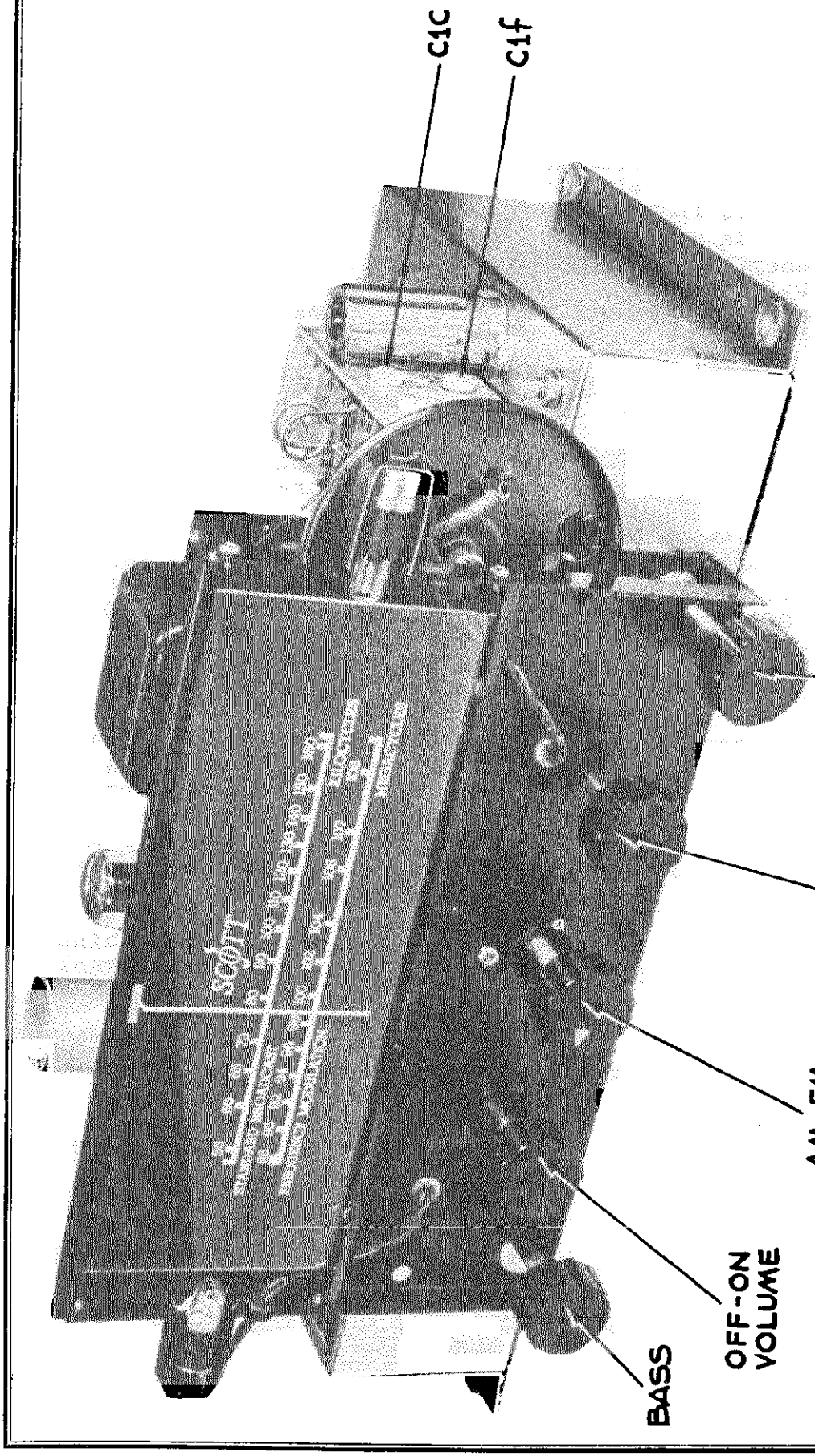

Figure 1 Tuner - Front View

©John F. Rider

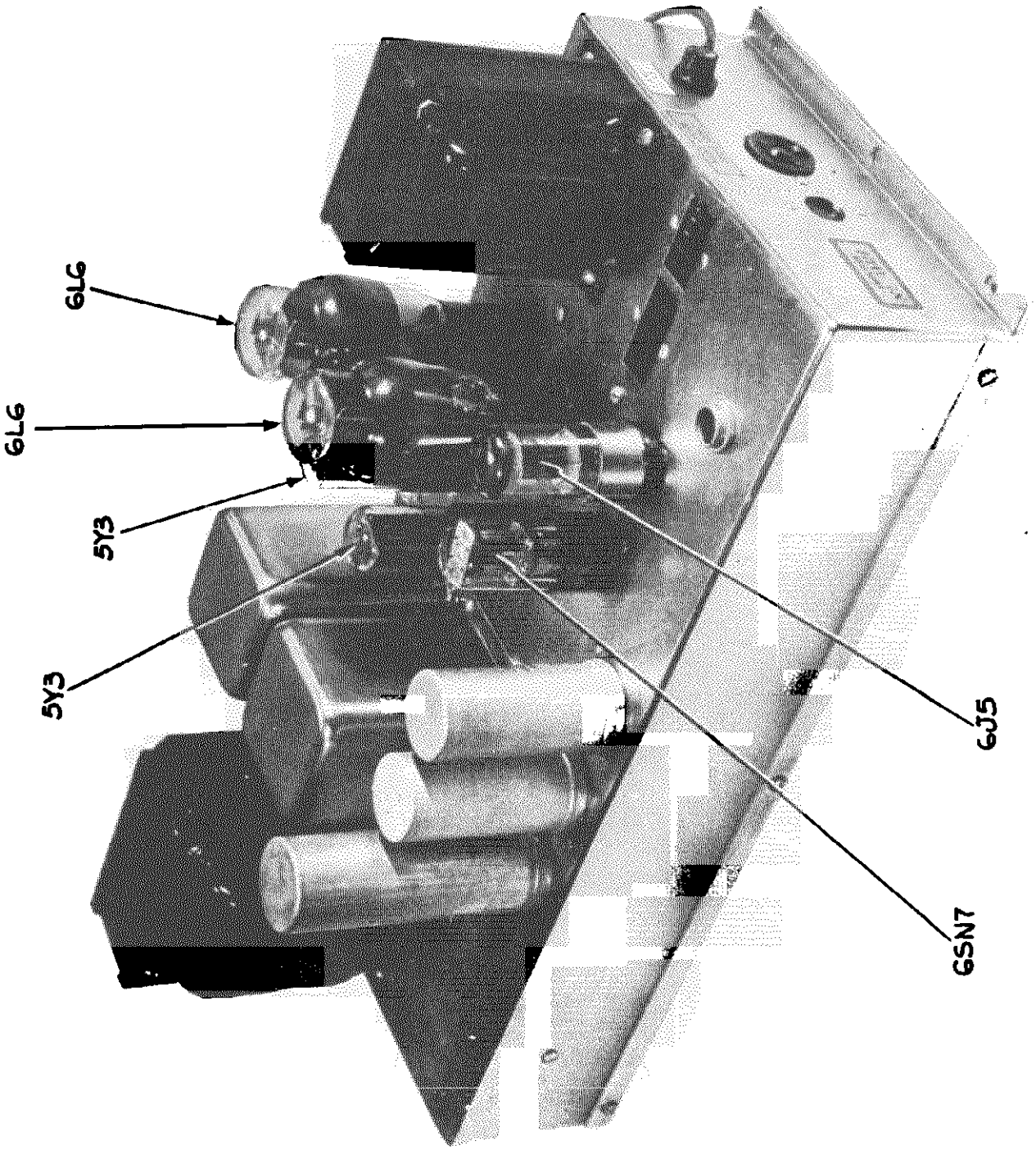

Figure 2 Amplifier - Top View

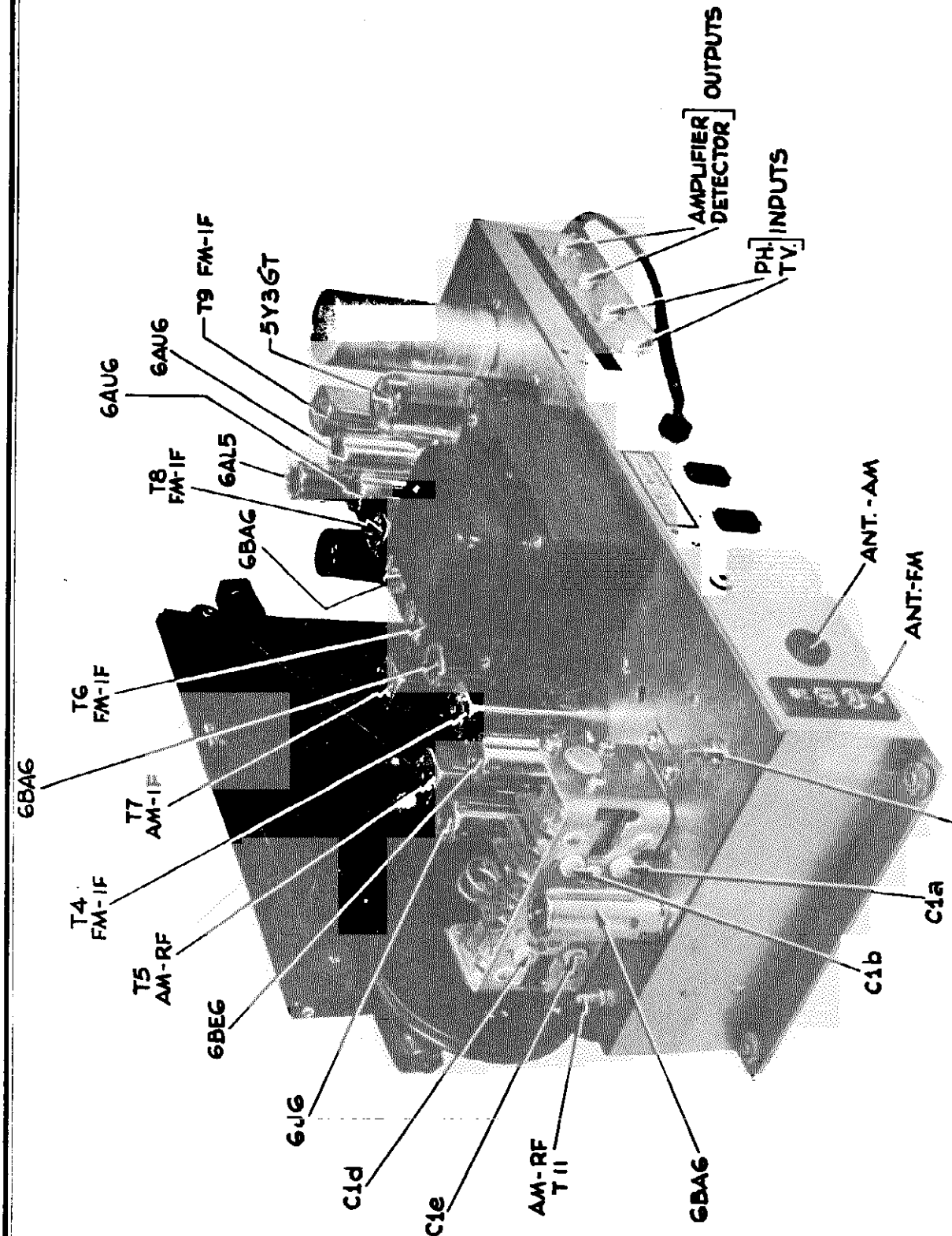

Figure 3 Tuner - Rear View

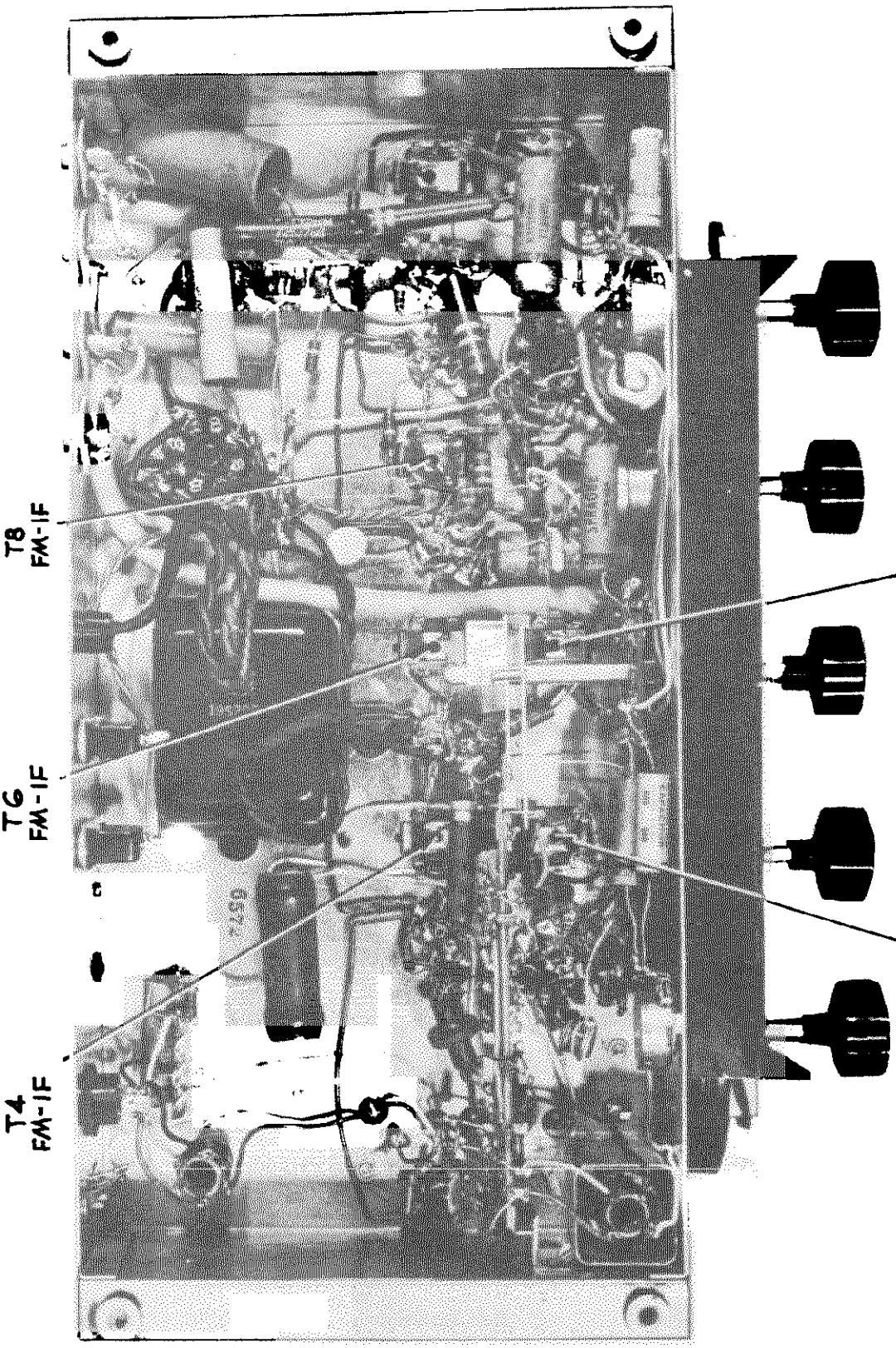

Figure 4 Tuner - Bottom View

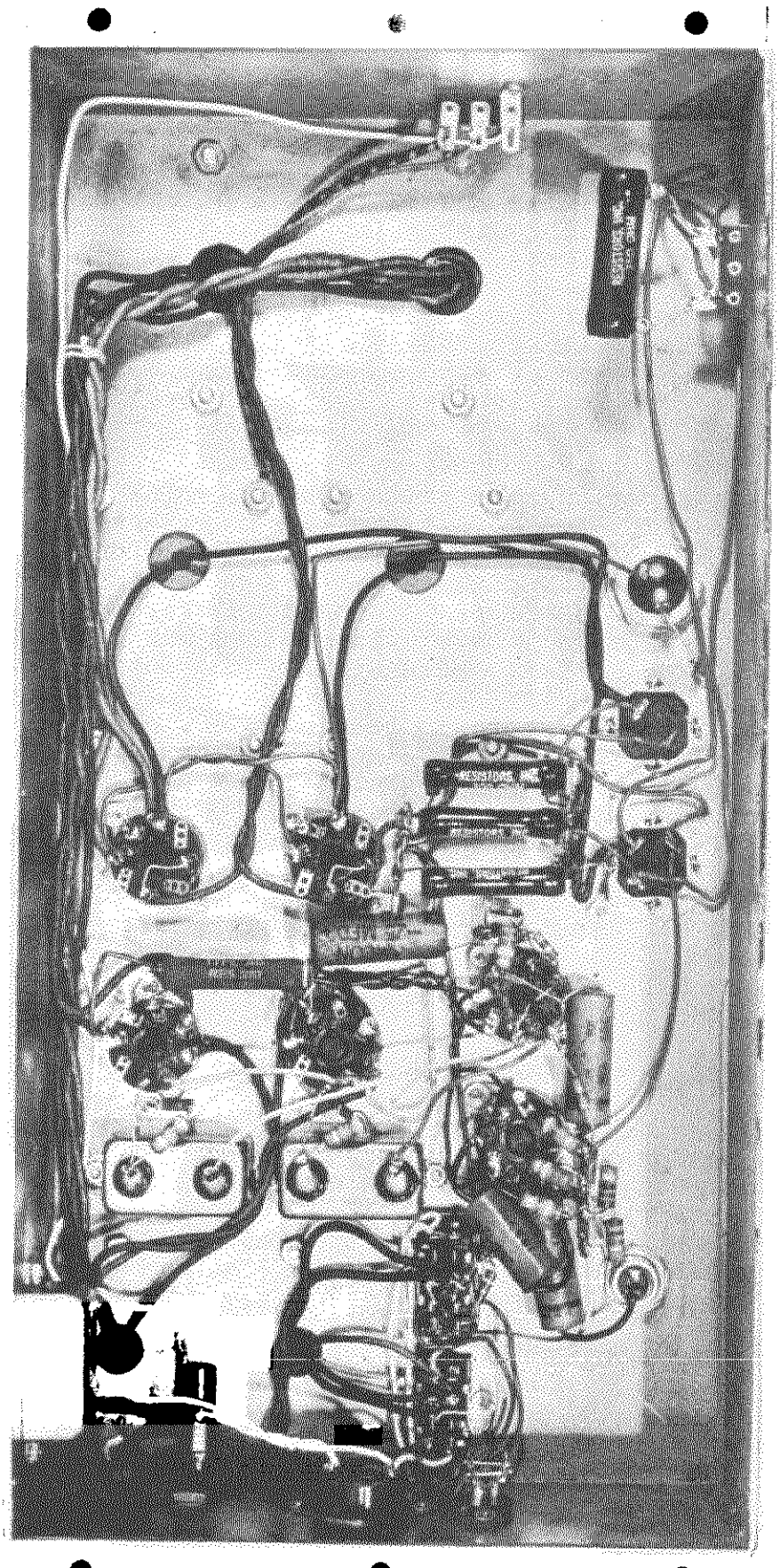

Figure 5 Amplifier - Bottom View

SERVICE ADJUSTMENT

Alignment Procedure

Check position of pointer on the dial scale. When the condenser gang is completely meshed the pointer should be at the last reference mark on the low frequency end of the dial - just beyond 55. The volume control should be fully to the right. The output of the signal generator should be adjusted only high enough to obtain an output reading. Do not use a metallic blade screwdriver for adjusting the IF transformers. Use an insulated blade which will accurately fit the slot in the iron cores. Care should be taken as it is easy to damage the cores with a poorly fitting screwdriver. To align see Figures 1, 3 and 4 and proceed as follows:

1. Connect the signal generator to pin #7 (grid) of the 6BE6 through a .1 mf capacitor and adjust the signal generator to 455 kc. Modulate at 400 cps. Set band switch to AM position, that is, fully to the left. Set the dial to a point of no interference from local broadcasting stations. Connect an a.c. voltmeter across the audio output (speaker) terminals, and adjust T7 and T5, both top and bottom, for maximum deflection of the output meter.

2. Connect the signal generator to pin #2 of loop socket through a 220 mmf condenser. Adjust signal generator to 1500 kc and modulate at 400 cps. Keep band switch in AM position, that is, fully to the left. Set the tuner dial to 1500 kc and adjust C1A, C1E and C1F for maximum deflection of audio output meter.

3. Set signal generator to 600 kc, adjust tuner dial for maximum response and then tune T1 and T11 for maximum deflection of audio output meter.

4. Return signal generator to 1500 kc and repeat operation #2.

5. Return signal generator to 600 kc and repeat operation #3.

6. Connect signal generator to pin #7 of the 6BE6 through a .01 mf coupling condenser. Set generator frequency to 10.7 mc without modulation. Set the band switch one step to the right and put the dial at a point of no interference from local FM stations. Connect audio voltmeter to output of diode filter F1 on lower side of IF transformer T6. Adjust T8, T6 and T4 (top and bottom) for maximum output deflection.

7. Transfer output voltmeter to output of FM discriminator (across C25) and adjust T9 for zero deflection. Be sure that voltmeter goes first plus and then minus (reverse voltmeter terminals) and set finally at zero.

8. Connect signal generator through a 300 ohm carbon resistor to FM antenna post and set to 104 mc modulated (FM) 400 cps. Connect audio voltmeter across output terminals. Adjust C1D, C1C, C1B and the bottom of T9 for maximum deflection of audio output voltmeter. This completes the alignment.

Dial Cord Drive

The correct method of installing the cord of the dial drive is given in Figure 6.

Voltage Readings

The voltage appearing on all sockets is given in Table I. Measurements are taken on the tuner in both AM and FM settings.

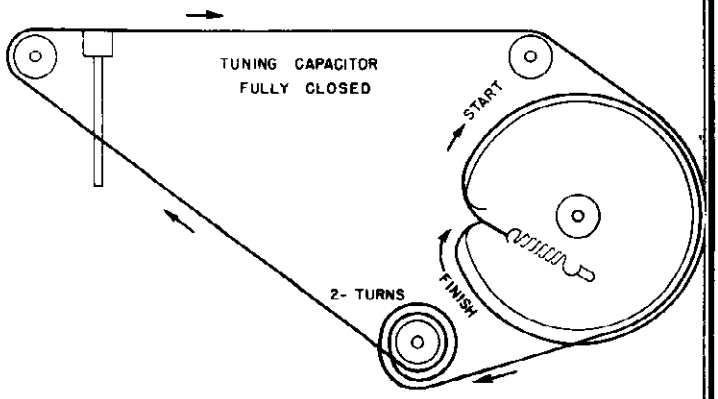

Figure 6 Dial Drive Cord Installation

RECORD CHANGER OPERATION

The Scott Special two speed record changer (standard 78 rpm and long playing 33 1/3 rpm) will operate only on a 105-125 volt 60 cycle power supply.

For reproduction of standard 78 rpm records the record changer is put in operation as follows:

1. Set control on the radio receiver to "PH" position. This is the knob directly to the left of the large tuning knob.
2. Make sure the LP tone arm is firmly in its rest bracket.
3. With the record changer selector control set at "A" (automatic) position, turn back the record stabilizing weight on the record shelf, then load 10 or 12 inch records (or a mixed stack if you desire). Loading should not exceed a 1 1/8 inch stack of records. Now turn the record stabilizing weight over onto the top record.
4. Set the speed control to the 78 rpm position.
5. Press the "ON" button and the record changer will operate. (The changer will shut off automatically after playing the last record.)
6. Adjust the volume control on the radio receiver for the desired output level and the bass and treble controls for desired tone quality.
7. If it is desired to reject a record that is playing, press the "ON" button all the way down and release it.
8. To play records one at a time set the selector control to the "M" position; place the record on the turntable and depress the "ON" button. At the conclusion of the record the changer must be turned off manually by depressing the "OFF" button.

9. The record changer may be stopped at any time while the record is being played, by pressing the "OFF" button. The pickup arm may be picked up off the record and returned to the "OFF" position.

NOTE: At all times when the phono player is not in operation be sure that the speed control is set to the center, or neutral position.

For reproduction of LP (long playing), 33 1/3 rpm records the record changer is put into operation as follows:

1. Remove any records that may happen to be on the turntable.
2. Remove center spindle, place LP record on turntable, center record carefully on turntable and replace spindle.
3. Turn speed control to the 33 1/3 position.
4. Set the selector control to "M" (manual) position.
5. Depress the "ON" button.
6. Remove LP tone arm from its rest bracket and carefully place it in the starting groove of the record.
7. On completion of the record carefully lift tone arm from record and place on rest bracket. Actuate "OFF" button by lifting the standard tone arm and replace, pressing down at the same time in order to operate the switch.

NOTE: When phono player is not in operation be sure that speed control is set at the center, or neutral position.

IMPORTANT: The LP record is fragile and the following precautions should be taken.

1. Handle gently to prevent scratching the soft record surface.
2. When placing pickup on record or removing pickup from record be careful not to damage record grooves by rough usage.
3. Always replace record in its envelope when not in use to prevent dust accumulations on the record surface or physical damage.
4. Keep records at normal room temperature.
5. Be sure that operating instructions are followed carefully. If, by incorrect procedure, the standard 78 rpm pickup should operate, and come to rest on an LP record, the record will be permanently damaged.
6. The LP tone arm should never be used on standard records or on a home recording. This use will seriously damage the pickup needle.

TUBE COMPLEMENT

The tube complement of the Series 500 Radio-Phonograph is as follows:

Symbol	Type	Application	Symbol	Type	Application
V1	6BA6	RF Amplifier	V8	6AL5	2nd Detector, FM
V2	6BE6	Converter AM & FM	V9	6SJ7	Audio Amplifier
V3	6J6	Oscillator, Reactance Mod.	V10	5Y3G	Rectifier
			V11	6J5	Audio Amplifier
V4	6BA6	IF Amplifier	V12	6SN7	Inverter, Driver
V5	6BA6	IF Amplifier, FM & 2nd Detector AM	V13	6L6G	Power Amplifier
			V14	6L6G	Power Amplifier
V6	6AU6	1st Limiter, FM	V15	5Y3G	Rectifier
V7	6AU6	2nd Limiter, FM	V16	5Y3G	Rectifier

FUSE REPLACEMENT

A fuse is provided in the power supply chassis for protection of the electrical circuits against overload. If the fuse blows replace it with a 3 ampere fuse. If the overload was momentary the replacement fuse will put the equipment back in working order. However, if the replacement fuse blows immediately, DO NOT replace it with a fuse of higher rating. The receiver must be checked to find and correct the cause of the overload.

TELEVISION SOUND RECEPTION

Used in conjunction with the Scott Model 6T11 Television Receiver, the high power, high quality audio and acoustic system of the Series 500 may be used in the reproduction of television sound. For this purpose a special audio cable is used to connect the audio output terminal on the 6T11 Television Receiver to the audio input terminal of the Series 500. The switch position "TV" on the Series 500 will make the audio system available for this service.

©John F. Rider

Table I Voltage Readings

Symbol Desig.	Tube	Description	Pin 1	Pin 2	Pin 3	Pin 4	Pin 5	Pin 6	Pin 7	Pin 8
					TUNER					
V1	6BA6	RF Amp.	0	0	0	6.6ac	+172 +200	+100 +103	+0.7 +0.9	-
V2	6BE6	Mixer	-6.8 -5.2	0	0	6.6ac	+185 +200	+103 +118	-0.7 -0.6	-
V3	6J6	Oscillator	+162 +190	0	0	6.6ac	+0.3 +0.3	-5.8 -1.1	+2.7 +4.5	-
V4	6BA6	1st IF	-0.7 -0.1	0	0	6.6ac	+230 +240	+112 +110	+1.0 +1.1	-
V5	6BA6	2nd IF	-0.9 -0.2	0	0	6.6ac	-0.9 +232	-.85 +100	0 +0.9	-
V6	6AU6	Lim. 1st	-.36 -.36	0	0	6.6ac	+ 25 + 25	+ 59 + 62	0	-
V7	6AU6	Lim. 2nd	-.4 -.4	0	0	6.6ac	+230 +240	+ 90 + 95	0	-
V8	6AL5	Discrim.	0	-.50 -3.5	6.6ac	0	+ .10 -.60	0	-.60 -36	-
V9	6SJ7	Audio	0	6.6ac	+1.4 +1.6	0	+1.4 +1.6	+52 +60	0	+55 +64
V10	5Y3G	Rectifier	-	+285 +295	-	300ac 300ac	-	300ac 300ac	-	+285 +295
					POWER AMPLIFIER					
V11	6J5	Amplifier	0	6.2ac	+160	-	0	-	0	+6.7
V12	6SN7	Inv.,Driver	+54	+215	+ 65	+ 54	+ 215	+ 65	6.2ac	0
V13	6L6	Amp. Audio	0	0	+360	+ 275	0	-	6.2ac	+21
V14	6L6	Amp. Audio	0	0	+360	+ 275	0	-	6.2ac	+21
V15	5Y3G	Rectifier	0	+400	-	380ac	-	380ac	-	+400
V16	5Y3G	Rectifier	0	+400	-	380ac	-	380ac	-	+400

Line Voltage - 117 V
Dial set at low frequency end of range.
In the tuner readings where two figures are given the top one is the AM voltage reading and the bottom figure the FM voltage reading.

Table II Parts List By Symbol Designation

Symbol Desig.	Function	Description	Part No.
C1	V1 AVC filter	Capacitor, paper, .05 MF 400 V	15L3466
C2	V1 cathode bypass	Capacitor, ceramic, 47 MMF 500 V	15G2830
C3	V1 screen bypass	Capacitor, ceramic, 5000 MMF 400 V	15L3462
C4	V1 plate filter	Capacitor, ceramic, 5000 MMF 400 V	15L3462
C5	V1 plate to V3 grid coupling	Capacitor, ceramic, 15 MMF 500 V	15E1268
C6	V3 grid coupling FM	Capacitor, ceramic, 15 MMF 500 V	15E1268
C7	V3 oscillator grid coupling	Capacitor, ceramic, 47 MMF 500 V	15G2830
C8	V2 AFC plate decoupling	Capacitor, ceramic, 5000 MMF 400 V	15L3462
C9	V2 oscillator plate coupling	Capacitor, ceramic, 470 MMF 500 V	15P3938
C10	BC band oscillator plate decoupling	Capacitor, ceramic, 47 MMF 500 V	15G2830
C11	V2 oscillator grid coupling	Capacitor, ceramic, 47 MMF 500 V	15G2830
C12	V2 oscillator cathode bypass	Capacitor, ceramic, 5000 MMF 400 V	15L3462
C13	V2 AFC plate coupling	Capacitor, ceramic, 22 MMF 500 V	15P3939
C14	V2 AFC grid RF bypass	Capacitor, ceramic, 100 MMF 500 V	15E1269
C15	V2 AFC grid audio bypass	Capacitor, paper, .1 MF 600 V	15H2706
C16	RF section +B bypass	Capacitor, ceramic, 5000 MMF 400 V	15L3462
C17	V3 mixer screen bypass	Capacitor, ceramic, 5000 MMF 400 V	15L3462
C18	V3 plate decoupling	Capacitor, ceramic, 5000 MMF 400 V	15L3462
C19	1st FM-IF coil primary tuning	Capacitor, ceramic, 33 MMF 500 V	15P3940
C20	1st AM-IF coil primary tuning	Capacitor, ceramic, 130 MMF 500 V	15P3941
C21	1st FM-IF coil secondary tuning	Capacitor, ceramic, 33 MMF 500 V	15P3940
C22	1st AM-IF coil secondary tuning	Capacitor, ceramic, 105 MMF 500 V	15P3942
C23	RF and mixer AVC bypass	Capacitor, paper, .02 MF 600 V	15E1001
C24	V4 heater bypass	Capacitor, ceramic, 5000 MMF 400 V	15L3462
C25	V4 screen bypass	Capacitor, ceramic, 5000 MMF 400 V	15L3462
C26	V4 plate decoupling	Capacitor, ceramic, 5000 MMF 400 V	15L3462

©John F. Rider

Table II Parts List By Symbol Designation

Symbol Desig.	Function	Description	Part No.
C27	2nd FM-IF coil primary tuning	Capacitor, ceramic, 33 MMF 500 V	15P3940
C28	2nd AM-IF coil primary tuning	Capacitor, ceramic, 130 MMF 500 V	15P3941
C29	2nd FM-IF coil secondary tuning	Capacitor, ceramic, 33 MMF 500 V	15P3940
C30	2nd AM-IF coil secondary tuning	Capacitor, ceramic, 105 MMF 500 V	15P3942
C31	AM audio series resistor bypass	Capacitor, ceramic, 2 x 150 MMF 400 V. See F1	
C32A B C	V5 cathode bypass V5 screen bypass V5 plate decoupling	Capacitor, ceramic 3 x 5000 MMF 400 V	15P3944
C33	3rd FM-IF coil primary tuning	Capacitor, ceramic, 33 MMF 500 V	15P3940
C34	3rd FM-IF coil secondary tuning	Capacitor, ceramic, 33 MMF 500 V	15P3940
C35	1st FM limiter grid decoupling	Capacitor, ceramic, 47 MMF 500 V	15G2830
C36	V6 2nd FM limiter screen bypass	Capacitor, ceramic, 5000 MMF 400 V	15L3462
C37	V6 plate and screen decoupling	Capacitor, ceramic, 5000 MMF 400 V	15L3462
C38	V6 plate to V7 grid coupling	Capacitor, ceramic, 22 MMF 500 V	15P3939
C39	V7 2nd FM limiter screen bypass	Capacitor, ceramic, 5000 MMF 400 V	15L3462
C40	V7 plate decoupling	Capacitor, ceramic, 5000 MMF 400 V	15L3462
C41	FM discriminator coil primary tuning	Capacitor, ceramic, 33 MMF 500 V	15P3940
C42	FM discriminator coil coupling	Capacitor, ceramic, 33 MMF 500 V	15P3940
C43	FM discriminator coil secondary tuning	Capacitor, ceramic, 33 MMF 500 V	15P3940
C44	FM discriminator output bypass	Capacitor, ceramic, 100 MMF 500 V	15E1269
C45	FM de-emphasis network	Capacitor, ceramic, 1500 MMF 350 V	15L3459
C46	Bass control circuit	Capacitor, paper, 5000 MMF 600 V	15E1002
C47	Bass control circuit	Capacitor, paper, .02 MF 600 V	15E1001
C48	Treble control series	Capacitor, paper, 5000 MMF 600 V	15E1002
C49	Treble control series	Capacitor, paper, .01 MF 400 V	15L3474
C50	V9 1st audio plate coupling	Capacitor, paper, .1 MF 400 V	15E1848
C51	V9 1st audio screen bypass	Capacitor, paper, .25 MF 200 V	15L3469
C52	V9 1st audio cathode bypass	Capacitor, electrolytic, 25 MF 50 V	15B638

Table II Parts List By Symbol Designation

Symbol Desig.	Function	Description	Part No.
C53	V9 plate decoupling	Capacitor, electrolytic, 10 MF 300 V	15P3945
C54A	+B filter	Capacitor, electrolytic, 40 MF 400 V	15P3946
B	+B filter	40 MF 400 V	
C	+B filter	20 MF 300 V	
C55	AC line bypass tuner chassis	Capacitor, paper, .01 MF 600 V	15E1050
C56	AC line bypass audio chassis	Capacitor, paper, 2 x .05 MF 600 V	15A11
C57	+B filter 6L6 plate supply	Capacitor, paper, 4 MF 600 V	15B481
C58	+B filter 6L6 plate supply	Capacitor, electrolytic, 2 x 30 MF 450 V	15A17
C59A	+B filter audio plate supply	Capacitor, electrolytic, 30 MF 450 V	15K3010
B	+B filter audio plate supply	30 MF 450 V	
C	+B filter audio plate supply	30 MF 450 V	
C60	Audio input coupling	Capacitor, paper, .05 MF 600 V	15E1041
C61	V13 cathode bypass	Capacitor, electrolytic, 25 MF 25 V	15B795
C62	V13 plate to V14 grid coupling	Capacitor, paper, .05 MF 600 V	15E1041
C63	V14 plate to V15 grid coupling	Capacitor, paper, .25 MF 600 V	15A14
C64	V14 plate to V16 grid coupling	Capacitor, paper, .25 MF 600 V	15A14
C65	V-15-V16 cathode bypass	Capacitor, electrolytic, 25 MF 50 V	15B638
C66	Audio input coupling	Capacitor, paper, .05 MF 400 V	15L3466
F1	AM diode filter	Filter, consists of 47 K ohm resistor bypassed with 2 150 MMF capacitors on ceramic form	2P3943
I1	Dial lamp	Lamp, 6-8 volts .25 A #44 blue bead	49E1091
I2	Dial lamp	Lamp, 6-8 volts .25 A #44 blue bead	49E1091
L1	AM band antenna coil	RF coil	20P3947
L2	FM band antenna coil	RF coil	20P3948
L3	V1 plate choke	RF choke, 3.5 uh	17P3949
L4	AM Band RF coil	RF coil	20P3950

©John F. Rider

Table II Parts List By Symbol Designation

Symbol Desig.	Function	Description	Part No.
L5	FM band RF coil	RF coil	20P3951
L6	Oscillator + B RF choke	RF choke, 3.5 uh	17P3949
L7	FM band oscillator coil	RF coil	20P3952
L8	AM band oscillator coil	RF coil	20P3953
L9	+B filter 6L6 plate supply	LF choke	17B492
L10	+B filter audio plate supply	LF choke	17B492
L11	FM folded dipole antenna	Antenna	1P3954
L12	AM loop antenna	Antenna	1P3955
R1	V1 cathode bias	Resistor, 68 ohm 10% ½ W	70E1195
R2	V1 grid return	Resistor, 1 meg 20% ½ W	70A63
R3	V1 screen filter	Resistor, 22 K ohm 10% ½ W	70H2708
R4	V1 plate filter	Resistor, 1000 ohm 10% ½ W	70A47
R5	V2 oscillator plate filter	Resistor, 2200 ohm 10% ½ W	70K3023
R6	V2 oscillator grid series	Resistor, 6.8 ohm 10% ½ W	70P3956
R7	BC band oscillator coil damping	Resistor, 220 ohm 10% ½ W	70K1289
R8	V2 oscillator grid return	Resistor, 22 K ohm 10% ½ W	70H2708
R9	V2 cathode bias	Resistor, 220 ohm 10% ½ W	70E1289
R10	V2 AFC plate filter	Resistor, 6800 ohm 10% 1 W	70P3957
R11	V2 AFC grid series	Resistor, 220 ohm 10% ½ W	70E1289
R12	V2 AFC grid filter	Resistor, .1 meg 10% ½ W	70A58
R13	V2 AFC grid filter	Resistor, .47 meg 10% ½ W	70A61
R14	+B bleeder in Am position	Resistor, 5000 ohm 10% 10 W	70D2919
R15	V3 FM grid leak	Resistor, 47 K ohm 10% ½ W	70A54
R16	V3 oscillator grid return	Resistor, 22 K ohm 10% ½ W	70H2708
R17	V3 screen filter	Resistor, 10 K ohm 10% 2 W	70P3958
R18	1st FM-IF primary +B filter	Resistor, 1000 ohm 10% ½ W	70A47
R19	AVC filter RF & mixer & 1st IF amplifier	Resistor, 2.2 meg 20% ½ W	70A64
R20	V4 cathode bias	Resistor, 68 ohm 10% ½ W	70E1195
R21	V4 screen filter	Resistor, 33 K ohm 10% 1 W	70A67
R22	V4 plate filter	Resistor, 1000 ohm 10% ½ W	70A47
R23	AM 2nd det. audio filter	Resistor, 47 K ohm See F1	
R24	AM 2nd det. audio load	Resistor, .47 meg 10% ½ W	70A61
R25	V5 cathode bias	Resistor, 68 ohm 10% ½ W	70E1195
R26	V5 screen filter	Resistor, 33 K ohm 10% 1 W	70A67
R27	V5 plate filter	Resistor, 1000 ohm 10% ½ W	70A47
R28	V6 grid return	Resistor, .1 meg 10% ½ W	70A58
R29	AVC filter 1st FM limiter	Resistor, 2.2 meg 20% ½ W	70A64
R30	V6 plate load	Resistor, 10 K ohm 10% ½ W	70A419
R31	V6 screen bleeder	Resistor, 22 K ohm 10% ½ W	70H2708
R32	V6 screen & plate filter	Resistor, 22 K ohm 10% 2 W	70P3959
R33	V7 grid return	Resistor, .15 meg 10% ½ W	70E1214
R34	V7 screen bleeder	Resistor, 22 K ohm 10% ½ W	70H2708
R35	V7 screen filter	Resistor, 22 K ohm 10% 2 W	70P3959
R36	V7 plate filter	Resistor, 1000 ohm 10% ½ W	70A47

Table II Parts List By Symbol Designation

Symbol Desig.	Function	Description	Part No.
R37	FM discriminator audio load	Resistor, .1 meg 10% ½ W	70A58
R38	FM discriminator audio load	Resistor, .1 meg 10% ½ W	70A58
R39	FM audio de-emphasis	Resistor, 47 K ohm 10% ½ W	70A54
R40	Audio output load	Resistor, .1 meg 10% ½ W	70A58
R41	Bass control limiting	Resistor, 22 K ohm 10% ½ W	70H2708
R42	Bass control	Potentiometer, .5 meg ¼ W	70P3960
R43	Bass control series	Resistor, 47 K ohm 10% ½ W	70A54
R44	Treble control	Potentiometer, .5 meg ¼ W	70P3961
R45	V9 screen filter	Resistor, .15 meg 10% ½ W	70E1214
R46	V9 cathode bias	Resistor, 560 ohm 10% ½ W	70A46
R47	Volume control	Potentiometer, .5 meg ¼ W	70P3962
R48	V9 plate load	Resistor, 47 K ohm 10% ½ W	70A54
R49	+B supply filter tuner chassis	Resistor, 22 K ohm 10% 1 W	70P3963
R50	+B supply filter tuner chassis	Resistor, 700 ohm 10% 10 W	70P3964
R51	+B supply filter tuner chassis	Resistor, 500 ohm 10% 10 W	70E1236
R52	Heater supply center tap	Resistor, 270 ohm 10% ½ W	70E1197
R53	Heater supply center tap	Resistor, 270 ohm 10% ½ W	70E1197
R54	+B filter 6L6 plate supply	Resistor, 300 ohm 10% 10 W	70B682
R55	+B filter audio supply	Resistor, 2000 ohm 10% 10 W	70K3136
R56	+B filter	Resistor, 750 ohm 10% 20 W	70B990
R57	+B bleeder	Resistor, 10 K ohm 10% 10 W	70B660
R58	V13 grid return	Resistor, .22 meg 10% ½ W	70A59
R59	Feedback circuit series	Resistor, 560 ohm 10% ½ W	70A46
R60	V13 cathode series	Resistor, 2400 ohm 10% ½ W	70A49
R61	V13 cathode load	Resistor, 56 ohm 10% ½ W	70A43
R62	V13 plate load	Resistor, 47 K ohm 10% ½ W	70A54
R63	V14 grid return	Resistor, .22 meg 10% ½ W	70A59
R64	V14 cathode series	Resistor, 680 ohm 10% ½ W	70E1077
R65	V14 cathode load	Resistor, 6800 ohm 10% ½ W	70D2770
R66	V14 plate load	Resistor, 7500 ohm 10% ½ W	70E1074
R67	V15 grid return	Resistor, 47 K ohm 10% ½ W	70A54
R68	V15-V16 cathode bias	Resistor, 210 ohm 10% 10 W	70D2769
R69	V16 grid return	Resistor, 47 K ohm 10% ½ W	70A54
SW1	AM-FM switch	Switch, slide, 5 P. D.T.	89P3965
SW2	AM-FM-PH-TV switch	Switch, rotary, 2 P. 4 T.	89P3966
T1	1st FM-IF transformer	Transformer, IF, 10.7 mc	91P3967
T2	2nd FM-IF transformer	Transformer, IF, 10.7 mc	91P3968
T3	3rd FM-IF transformer	Transformer, IF, 10.7 mc	91P3969
T4	FM discriminator transformer	Transformer, IF, 10.7 mc	91P3970
T5	Power transformer - tuner chassis	Transformer, power	91P3971

© John F. Rider

©John F. Rider

Table II Parts List By Symbol Designation

Symbol Desig.	Function	Description	Part No.
T6	Power transformer - audio chassis	Transformer, power	91K3043
T7	Audio output transformer	Transformer, output	91C2699
T8	1st AM-IF transformer	Transformer, IF, 455 kc	91P3972
T9	2nd AM-IF transformer	Transformer, IF, 455 kc	91P3973
V1	RF amplifier	Tube, 6BA6	92G2871
V2	HF oscillator & AFC	Tube, 6J6	92G3199
V3	Mixer	Tube, 6BE6	92P3728
V4	1st IF amplifier AM & FM	Tube, 6BA6	92G2871
V5	AM 2nd det. & 2nd FM-IF amplifier	Tube, 6BA6	92G2871
V6	1st FM limiter	Tube, 6AU6	92C2659
V7	2nd FM limiter	Tube, 6AU6	92C2659
V8	FM discriminator	Tube, 6AL5	92G2870
V9	1st audio amplifier	Tube, 6SJ7	92A236
V10	Rectifier for tuner chassis	Tube, 5Y3G	92B480
V11	Rectifier for audio chassis	Tube, 5Y3G	92B480
V12	Rectifier for audio chassis	Tube, 5Y3G	92B480
V13	2nd audio amplifier	Tube, 6J5	92A228
V14	Phase inverter	Tube, 6SN7	92A230
V15	Audio output amplifier	Tube, 6L6G	92A233
V16	Audio output amplifier	Tube, 6L6G	92A233

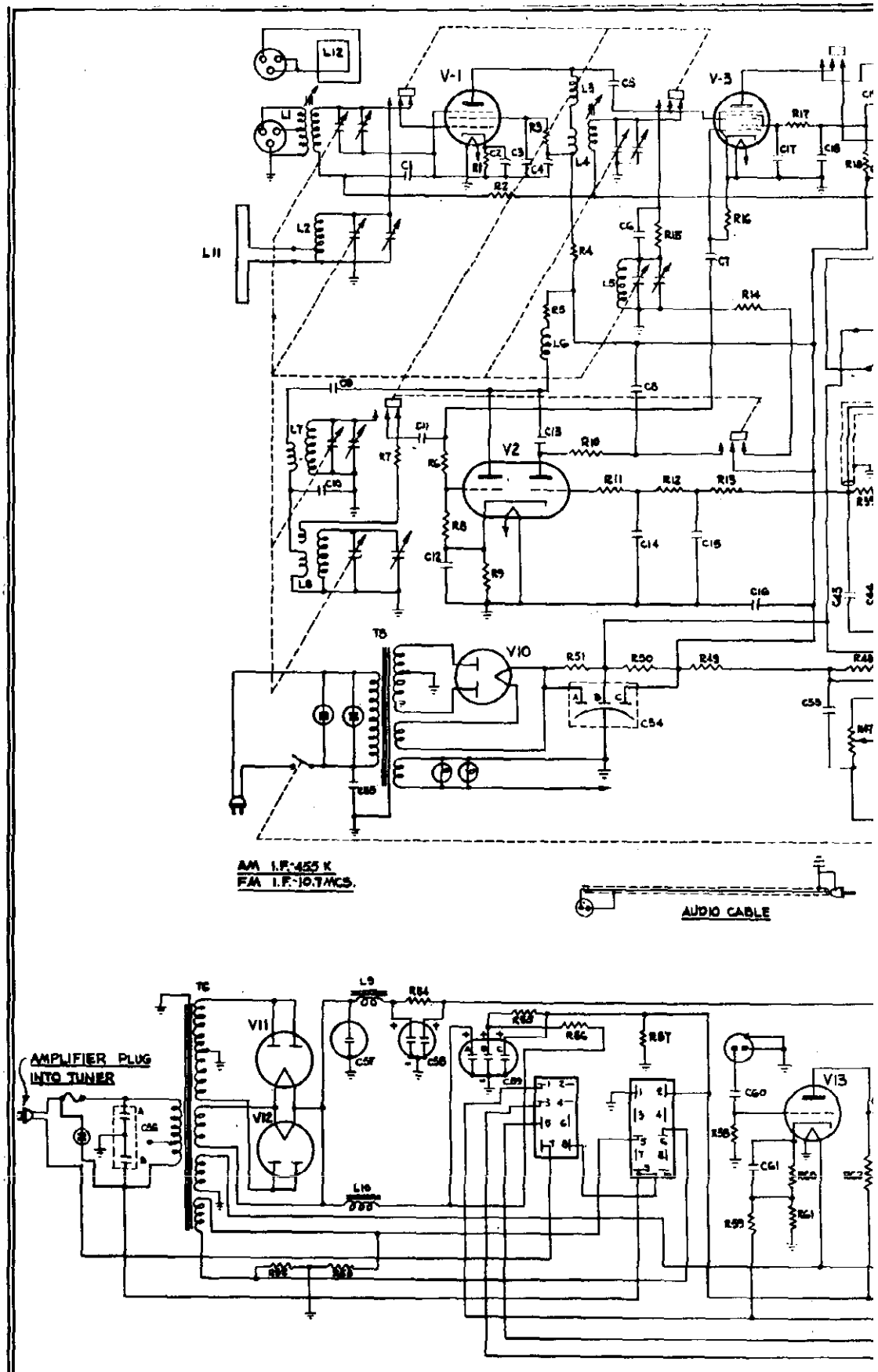
V-1
V-2
V-3
V10
V11
V12
V13
L11
L12
T5
T6
AM I.F.-455 K
FM I.F.-10.7MCS.
AUDIO CABLE
AMPLIFIER PLUG
INTO TUNER

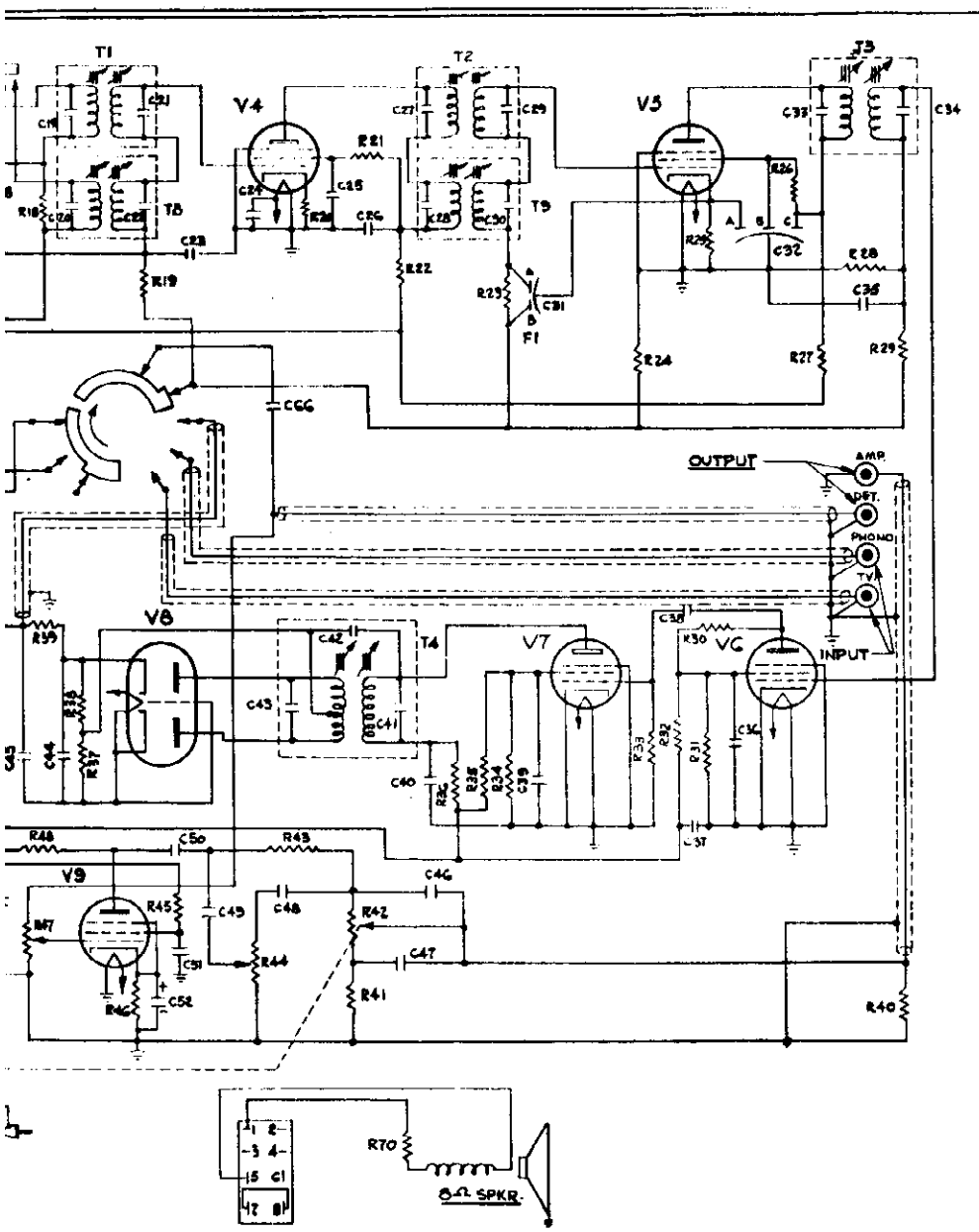

CAPACITORS

C1-.05 MF	C34-33
C2-47	C35-47
C3-.005 MF	C36-.005 MF
C4-.005 MF	C37-.005 MF
C5-15	C38-22
C6-15	C39-.005 MF
C7-47	C40-.005
C8-.005 MF	C41-33
C9-470	C42-33
C10-47	C43-33
C11-47	C44-100
C12-.005 MF	C45-1500
C13-22	C46-.005 MF
C14-100	C47-.02 MF
C15-.1	C48-.005 MF
C16-.005 MF	C49-.01 MF
C17-.005 MF	C50-.1 MF
C18-.005 MF	C51-.25 MF
C19-33	C52-25 MF
C20-130	C53-10 MF
C21-33	C54-40/40/20 MF
C22-105	C55-.01 MF
C23-.02 MF	C56-2 X .05 MF
C24-.005 MF	C57-4 MF
C25-.005 MF	C58-2 X 30 MF
C26-.005 MF	C59-3 X 30 MF
C27-33	CG0-.05 MF
C28-130	CG1-25MF
C29-33	CG2-.05 MF
C30-105	CG3-.25 MF
C31-2 X 150	CG4-.25 MF
C32-3 X .003MF	CG5-.25 MF
C33-33	CGG-.05 MF

RESISTORS

R1-68	R36-1000
R2-1M	R37-.1 M
R3-22 K	R38-.1 M
R4-1000	R39-47 K
R5-2200	R40-.1 M
R6-6800	R41-22 K
R7-2200	R42-.5 M
R8-22 K	R43-47 K
R9-220	R44-.5 M
R10-6800 1W.	R45-.15M
R11-220	R46-560
R12-.1 M	R47-.5 M
R13-.47 M	R48-47 K
R14-5000-10W.	R49-22 K-1W
R15-47 K	R50-700-10W
R16-22 K	R51-500-10W
R17-10K-2W.	R52-270
R18-1000	R53-270
R19-2.2 M	R54-300-10W
R20-68	R55-2000-10W
R21-3K-1W.	R56-750-20W
R22-1000	R57-10K-10W
R23-47K	R58-.22 M
R24-.47 M	R59-560
R25-68	R60-2400
R26-33K-1W.	R61-56
R27-1000	R62-47 K
R28-.1 M	R63-.22 M
R29-2.2 M	R64-680
R30-10 K	R65-6800
R31-22 K	R66-7500
R32-22K-2W.	R67-47 K
R33-.15 M.	R68-210-10W
R34-22 K	R69-47 K.
R35-22K-2W.	R70-8-10W.

NOTE: CAPACITORS ARE IN mmf -
RESISTORS ARE IN Ohms
UNLESS INDICATED OTHERWISE.

K = 1000.
M = MEGOHMS.

SEARS, ROEBUCK & CO.

MODEL 6050, CHASSIS 132.825, 132.825-1, 132.825-2, 132.825-3, 132.825-4

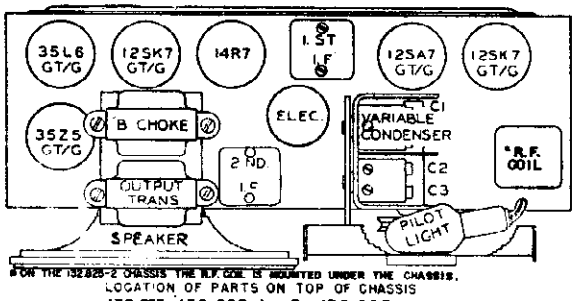

* ON THE 132.825-2 CHASSIS THE R.F. COIL IS MOUNTED UNDER THE CHASSIS.

LOCATION OF PARTS ON TOP OF CHASSIS
132.825, 132.825-1, & 132.825-2

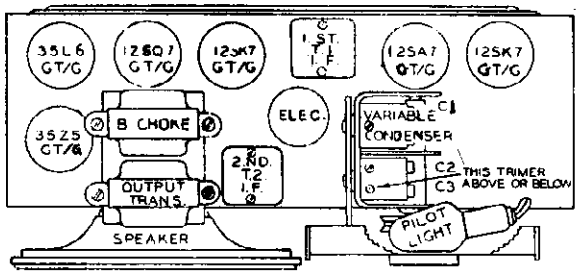

LOCATION OF PARTS ON TOP OF CHASSIS
132.825-3 & 132.825-4

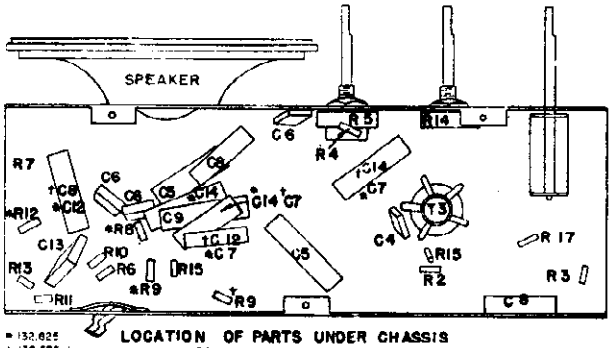

* 132.825
† 132.825-1

LOCATION OF PARTS UNDER CHASSIS
132.825 AND 132.825-1

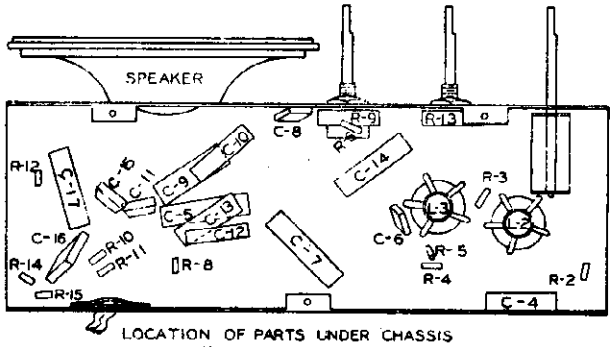

LOCATION OF PARTS UNDER CHASSIS
132.825-2

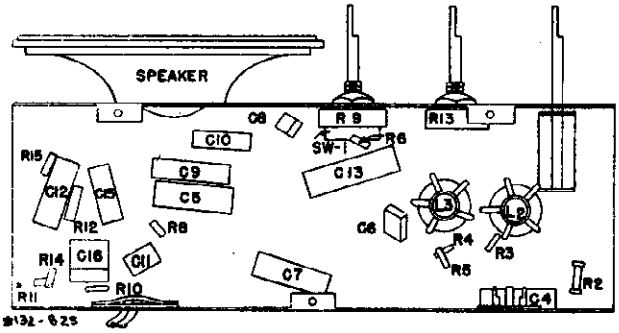

* 132-825

LOCATION OF PARTS UNDDER CHASSIS
132.825-3 AND 132.825-4

SCHEMATIC CIRCUIT DIAGRAM

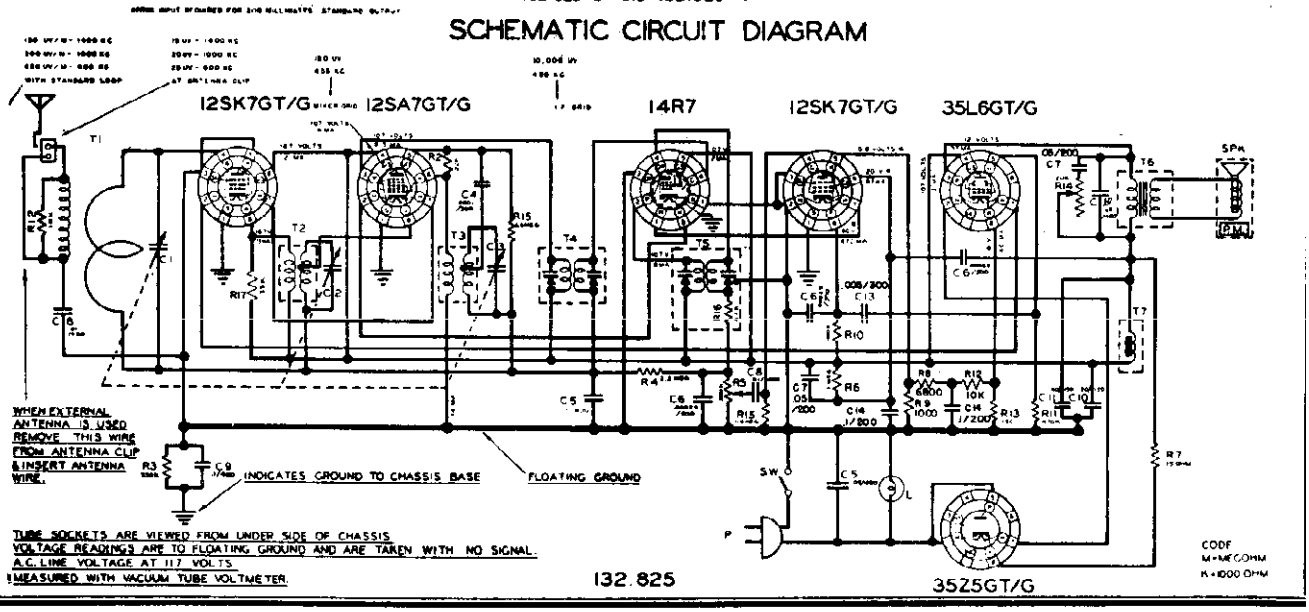

TUBE SOCKETS ARE VIEWED FROM UNDER SIDE OF CHASSIS
VOLTAGE READINGS ARE TO FLOATING GROUND AND ARE TAKEN WITH NO SIGNAL.
A.C. LINE VOLTAGE AT 117 VOLTS.
‡ MEASURED WITH VACUUM TUBE VOLTMETER.

132.825

CODE
M = MEGOHM
K = 1000 OHM

MODEL 6050, CHASSIS 132.825, 132.825-1, 132.825-2, 132.825-3, 132.825-4

SEARS, ROEBUCK & CO.

SCHEMATIC CIRCUIT DIAGRAM

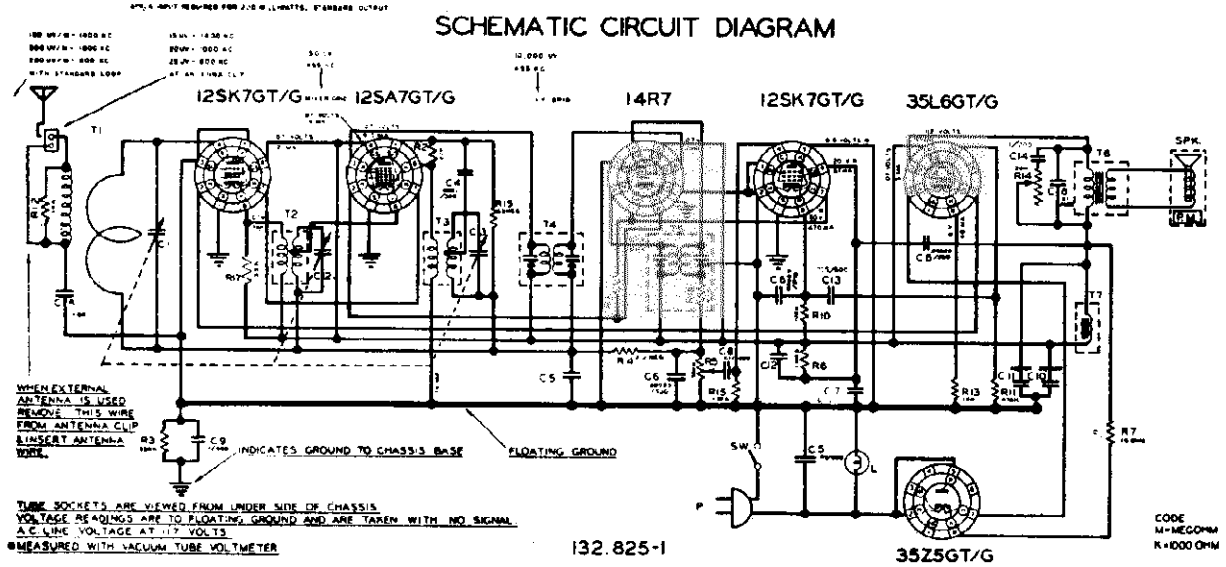

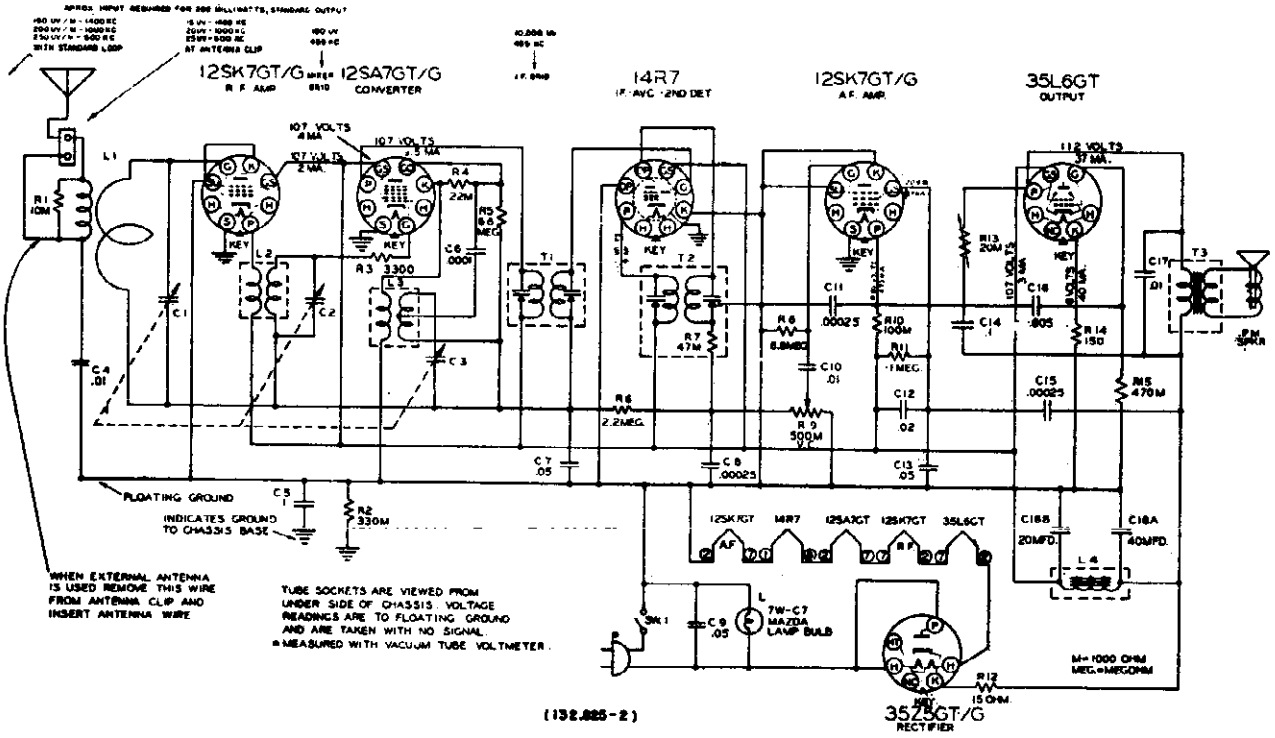

©John F. Rider

SEARS, ROEBUCK & CO.

MODEL 6050, CHASSIS 132.825, 132.825-1, 132.825-2, 132.825-3, 132.825-4

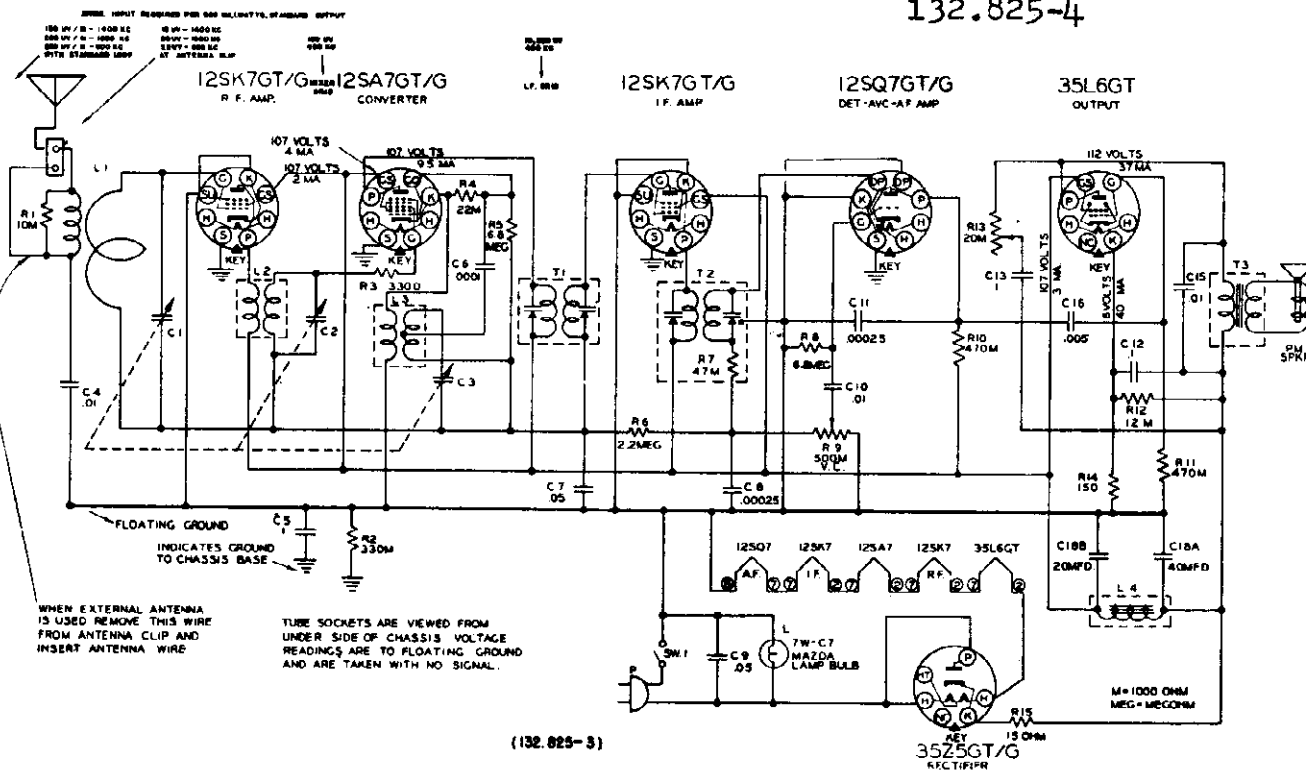

(132.825-3)

SERVICE NOTE: The a-c hum can often be greatly reduced on these chassis by replacing C12 with a 0.03-μf, 400-V capacitor. Sometimes the hum can be further reduced by replacing R12 with a 15,000-ohm, 1-watt resistor.

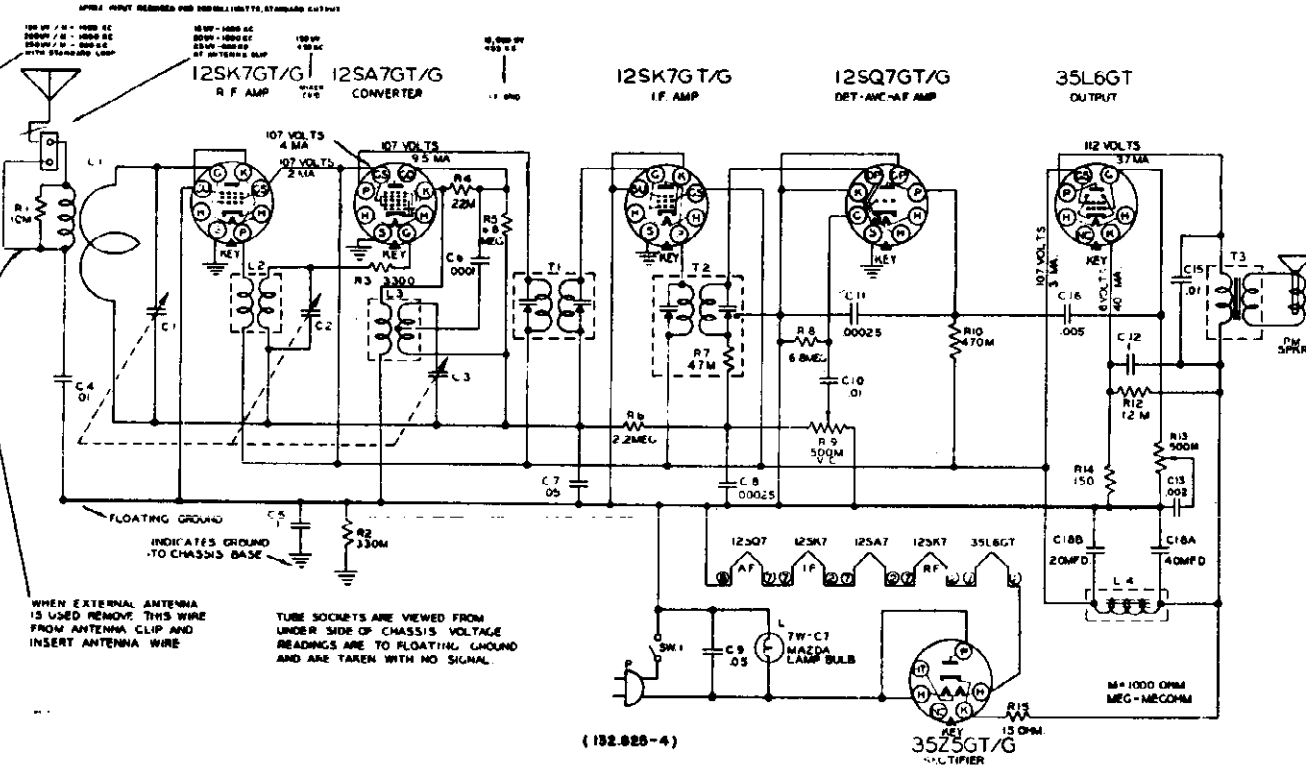

(132.825-4)

MODEL 6050, CHASSIS 132.825, 132.825-1, 132.825-2, 132.825-3, 132.825-4

SEARS, ROEBUCK & CO.

SPECIFICATIONS

Power Supply -- 105-125 Volts AC-DC, 45 Watts Tuning Range Broadcast Band 540-1600 Kc
Power Output
Undistorted .8 Watts, maximum - 2.5 Watts
Speaker
Voice Coil Impedance 3.2 Ohms

CHASSIS DIFFERENCES

Note: On a few of the 132.825 chassis, a 470 ohm resistor was placed across the heater of the 14R7 tube to equalize the warm up period of the tubes. This is not shown on the Circuit Diagram.

132.825-1

Addition of Suffix Number - I to Chassis Identification Number 132.825 covers the following changes from the 132.825 chassis.

1. Removal of the bass boost circuit to reduce hum.
2. Change in tone control circuit.
3. Circuit changes as follows: Tone control condenser C14, .1 mfd. 200V was C7, .05 mfd., 200v; C8, .01 mfd. 400V fixed tone condenser in output circuit was C12, .02 mfd. 400v; C13, .005 mfd., 600V was .005 mfd., 300V; R9, 470 ohm 1/4 watt resistor added to 14R7 tube socket between heater lugs; C12, .02 mfd., 400V was C7, .05 mfd., 200v, on 12SK7 screen grid to floating ground. C14, .1 mfd., 200V condenser; R8, 6800 ohm 1/4 watt resistor, R9 1,000 ohm 1/4 watt resistor and R12, 10,000 ohm 1/4 watt resistor deleted from cathode circuit of 12 SK7 and 35L6 tubes.
4. Revision of parts price list; schematic diagram; and parts layout.

132.825-2

Addition of Suffix Number 2 to Chassis Identification Number 132.825 covers the following changes from the 132.825-1 chassis.

1. RF coil N18598 is replaced by RF coil N19860.
2. The RF coil location is changed from the top of chassis to under chassis.
3. 470 ohm resistor deleted from 14R7 tube heater circuit.
4. The schematic diagram is redrawn with rearrangement of schematic location symbols in consecutive order from left to right without duplication.
5. Rearrangement of schematic location symbols on parts list and parts location drawings to correspond with schematic diagram.

132.825-3

Addition of Suffix Number - 3 to Chassis Identification Number 132.825 covers the following changes from the 132.825-2 chassis.

1. Addition of 12SQ7 tube and deletion of 14R7 tube.
2. Addition of hum bucking circuit in output stage (C12 & R12) from B+ to cathode of 35L6 tube, to replace the hum bucking circuit used in the 12SK7 screen grid circuit. Resistor R11, 1 megohm, 1/4 watt; and condensers C13, .05 mfd., C12 .02 mfd., and C15 .00025 mfd. deleted.
3. Resistor R10, in the plate circuit of the first audio tube changed from 100,000 ohms to 470,000 ohms.
4. Revision of parts price list; schematic diagram and parts and tube layouts.

Note: All schematic diagrams on the instruction sheets and chassis stickers supplied with radios bearing the chassis number 132.825-3 are incorrect. They show the secondary of the second IF transformer connected to the grid of the 12SQ7 tube, and both diodes of the tube connected to floating ground. The schematic diagram on this RL has been corrected.

132.825-4

Addition of Suffix Number - 4 to the Chassis Identification Number 132.825, covers the following changes from the 132.825-3 chassis.

1. Tone control changes from plate circuit to grid circuit of output tube.
2. Resistor R13, 500,000 ohms, part #N19967 was 20,000 ohms, N19530. Resistor R11, 470,000 ohms 1/4 watt deleted; condenser C13, .002 mfd. 600V was .1 mfd. 200V.
3. Revision of parts price list, and schematic diagram.

©John F. Rider

SEARS, ROEBUCK & CO. MODEL 6050, CHASSIS 132.825,-1,-2,-3,-4

PARTS LIST
132.825 & 132.825-1

Schematic Location	Part No.	Description
R2		Resistor, 22,000 ohm, ½ watt
R3		Resistor, 330,000 ohm, ½ watt
R4		Resistor, 2.2 megohms, ½ watt
R5	N19529	Resistor, 500,000 ohm, vol. cont. & sw.
R6		Resistor, 1 megohm, ½ watt
R7		Resistor, 15 ohm, ½ watt
R8		Resistor, 6800 ohm, ½ watt (132.825)
R9		Resistor, 1000 ohm, ½ watt (132.825)
R9		Resistor, 470 ohm, ½ watt (132.825-1)
R10		Resistor, 100,000 ohm, ½ watt
R11		Resistor, 470,000 ohm, ½ watt
R12		Resistor, 10,000 ohm, ½ watt (132.825)
R13		Resistor, 150 ohm, ½ watt
R14	N19530	Resistor, 20,000, tone control
R15		Resistor, 6.8 megohm, ½ watt
R16		Resistor, 47,000 ohm, ½ watt
R17		Resistor, 33,000 ohm, ½ watt
C1,2,3	N18564	Condenser, variable
C4		Condenser, .0001 mfd., 500 volt, mica
C5		Condenser, .05 mfd., 400 volt
C6		Condenser, .00025 mfd., 500 volt, mica
C7		Condenser, .05 mfd., 200 volt
C8		Condenser, .01 mfd., 400 volt
C9		Condenser, .1 mfd., 400 volt
C10,11	N19239	Condenser, Elect. 20-40 mfd., 150 volt
C12		Condenser, .02 mfd., 400 volt

Schematic Location	Part No.	Description
C13		Condenser, .005 mfd., 600 volt (132.825-1)
C13		Condenser, .005 mfd., 300 volt (132.825)
C14		Condenser, .1 mfd., 200 volt
	N19516	Cabinet back with Antenna Loop Assy.
T2	N18598	Coil, R. F.
T3	N18580	Coil, Oscillator
T4	N18581	Transformer, 1st I. F.
T5	N18578	Transformer, 2nd I. F.
T6	N18582	Transformer, Output
T7	N18583	Choke, Iron Core "B"
Spk.	N18550	Speaker, 5½ in. P.M.less Output Trans & Choke
P	N20064	Line Cord with Plug
L		Lamp, Dial, Mazda 7WC7 117V
	N19463	Knob, walnut, volume
	N19469	Knob, walnut, tuning
	N19466	Knob, walnut, tone
	N19533	Scale, Dial
	N19512	Escutcheon, dial with crystal
	N19226	Pointer, Dial
	N19523	Instruction Sheet (132.825)
	N19523-1	Instruction Sheet (132.825-1)
	N19398	Tuning Shaft
	N19132	Cord, Dial Drive
	N19234	Socket, Antenna
	N19134	Socket, Dial Light with leads

132.825-2, 132.825-3, & 132.825-4

Schematic Location	Part No.	Description
R1		Resistor, 10,000 ohm, ½ watt
R2		Resistor, 330,000 ohm, ½ watt
R3		Resistor, 3,300 ohm, ½ watt
R4		Resistor, 22,000 ohm, ½ watt
R5-R8		Resistor, 4.8 megohm, ½ watt
R6		Resistor, 2.2 megohm, ½ watt
R7		Resistor, 47,000 ohm, ½ watt
R9	N19529	Resistor, 500,000 ohm volume cont. & sw.
R10		Resistor, 470,000 ohm, ½ watt (132.825-3 & -4)
R10		Resistor, 100,000 ohm, ½ watt (132.825-2)
R11		Resistor, 1 megohm, ½ watt (132.825-2)
R11		Resistor, 470,000 ohm, ½ watt (132.825-3)
R12		Resistor, 12,000 ohm, 1 watt (132.825-3 & -4)
R12		Resistor, 15 ohm, ½ watt (132.825-2)
R13	N19530	Resistor, 20,000 ohm tone control (132.825-2 & -3)
R13	N19967	Resistor, 500,000 ohm tone control (132.825-4)
R14		Resistor, 150 ohm, ½ watt
R15		Resistor, 470,000 ohm, ½ watt (132.825-2)
R15		Resistor, 15 ohm, ½ watt (132.825-3 &-4)
C1,2,3	N18564	Condenser, Variable
C4-C10		Condenser, .01 mfd., 400 volt
C5		Condenser, .1 mfd., 400 volt
C6		Condenser., .0001 mfd., 500 volt Mica
C7-C9		Condenser, .05 mfd., 400 volt
C8-C11		Condenser, .00025 mfd., 500 volt Mica
C12		Condenser, .02 mfd., 200 volt (132.825-2)
C12		Condenser, .1 mfd., 400 volt (132.825-3 & -4)
C13		Condenser, .05 mfd., 200 volt (132.825-2)
C13		Condenser, .1 mfd., 200 volt (132.825-3)
C13		Condenser, .002 mfd., 600 volt (132.825-4)
C14		Condenser, .1 mfd., 200 volt (132.825-2)

Schematic Location	Part No.	Description
C15		Condenser, .00025 mfd., 500 volt Mica (132.825-2)
C15		Condenser, .01 mfd., 400 volt (132.825-3 & -4)
C16		Condenser, .005 mfd., 600 volt Mica
C17		Condenser, .01 mfd., 400 volt (132.825-2)
C18a-18B	N19239	Condenser, Elect., 20-40 mfd., 150 volt
L1	N19515	Cabinet back with Antenna Loop Assy.
L2	N19860	Coil, R. F.
L3	N18580	Coil, Oscillator
L4	N18583	Choke, Iron Core "B"
T1	N21009	Transformer, First I. F. (132.825-3 & -4)
T1	N18581	Transformer, First I. F. (132.825-2)
T2	N18578	Transformer, Second I. F.
T3	N18582	Transformer, Output
Spkr.	N18550	Speaker, 5½" P.M.less Output Trans and Choke
P	N20064	Line Cord with Plug
L		Dial Light, Mazda 7W, C7-117 volt
	N19463	Knob, Volume
	N19466	Knob, Tone
	N19469	Knob, Tuning
	N19533	Scale, Dial
	N19512	Escutcheon, Dial with Crystal
	N19226	Pointer, Dial
	N19398	Shaft, Tuning
	N19132	Cord, Dial Drive
	N19234	Socket, Antenna
	N19134	Socket, Ass'y., Dial Light with Leads
	N19295	Spring, Dial Cord
	N19523-2	Instruction Sheet (132.825-2)
	N19523-3	Instruction Sheet (132.825-3)
	N19523-4	Instruction Sheet (132.825-4)

ALIGNMENT PROCEDURE

PRELIMINARY:

Output meter connection..... Across Speaker Voice Coil
Output meter reading to indicate 200 mw (Standard output)..... .8 Volts
Dummy antenna value used in series with generator output..... See Chart Below
Connection of generator output lead..... See Chart Below
Connection of generator ground lead..... Floating Ground
Generator modulation..... 30% 400 Cycles
Position of volume control..... Fully clockwise
Position of tone control..... Treble
Position of dial pointer with variable fully closed..... Horizontal

POSITION OF VARIABLE	FREQUENCY OF GENERATOR	DUMMY ANTENNA	GENERATOR OUTPUT CONNECTION	TRIMMERS ADJUSTED IN ORDER SHOWN FOR MAX. OUTPUT	FUNCTION OF TRIMMER
Open	455	.05 mfd.	12SA7 Grid (or Stator of C-2)	Top of 2nd & 1st IF Trans.	IF
1400	1400	.0002 mfd.	Antenna Clip (with black wire removed)	C-3; C-2; & C-1 Trimmers located on variable condenser	Oscillator Mixer RF

IMPORTANT ALIGNMENT NOTES:

1. Place set loop in the same position and at the same distance with respect to the back of the chassis as it would be when the set is mounted in the cabinet, during alignment of the RF stage.
2. If a standard test loop is used with the Signal Generator for alignment of the receiver, the black wire will be left in the antenna clip.
3. The alignment procedure should be repeated in the original order for greatest accuracy. Always keep the output from the signal generator at its lowest possible value to make the A.V.C. action of the receiver ineffective.

MODEL 6052, CHASSIS 110.452; 6052A, CHASSIS 110.452-1

SEARS, ROEBUCK & CO.

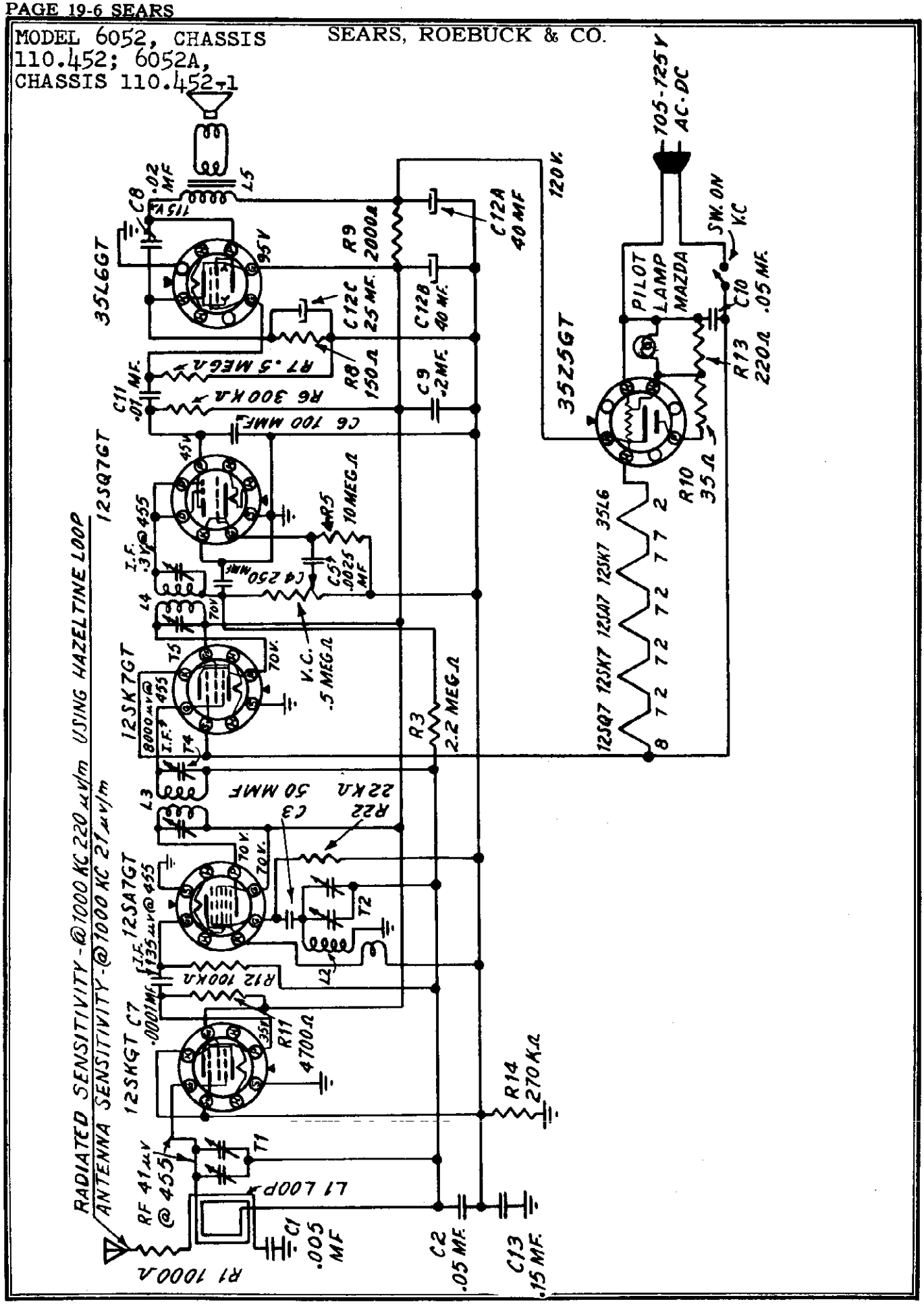

©John F. Rider

SEARS, ROEBUCK & CO.

MODEL 6052, CHASSIS 110.452; 6052A, CHASSIS 110.452-1

ALIGNMENT PROCEDURE

PRELIMINARY

OUTPUT METER CONNECTION . . . . . ACROSS LOUD SPEAKER VOICE COIL
METER READING FOR 1/2 WATT OUTPUT . . . . . 1.26 VOLTS
CONNECTION OF GENERATOR GROUND. . . . . FLOATING GROUND
GENERATOR MODULATION. . . . . APP. 30%. 400 CYCLES
POSITION OF VOLUME CONTROL. . . . . FULLY CLOCKWISE
POSITION OF DIAL POINTER WITH VARIABLE CONDENSER FULLY CLOSED . . . . . LAST LINE ON LEFT HAND SIDE OF SCALE

POSITION OF DIAL POINTER	GENERATOR FREQUENCY	GENERATOR CONNECTION	DUMMY ANTENNA	TRIMMERS ADJUSTED	FUNCTION
1000 KC	455 KC	R. F. GRID OF 12SA7	.2 MFD	T3. T4. T5. T6	I.F.
1500 KC	1500 KC	STANDARD RADIATING LOOP	.0002 MFD	T2. T1	OSC., R. F.
600 KC	600 KC	STANDARD RADIATING LOOP	.00020 MFD	CHECK POINT	*

It is advisable to repeat the entire alignment procedure in the original order to insure greater accuracy.

Always keep the output from the test oscillator at its lowest possible value. As the sensitivity is increased by alignment, the generator output should be reduced correspondingly.

Approximately 90 microvolts per meter input using standard Hazeltine alignment loop 24" from set for 1/2 watt output.

*Check the sensitivity at 600 KC, if weak, adjust antenna section plates for maximum output at 600 KC. Tracking is accomplished by adjusting plates of rotor.

Approximate stage by stage sensitivities are: R. F. Grid - 455 KC - 95 UV
R. F. Grid - 1000 KC - 150 UV, Antenna - 1500 KC - 40 UV, 600 KC - 60 UV

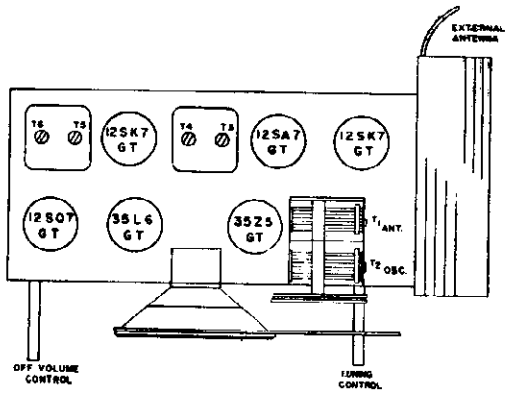

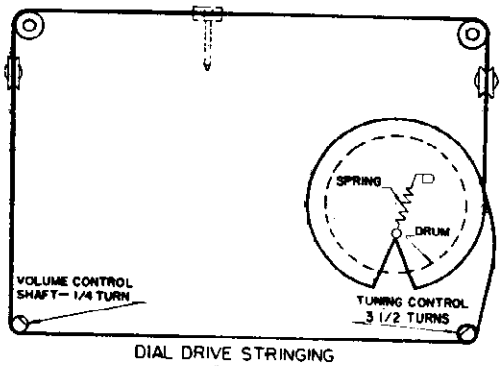

DIAL DRIVE STRINGING DIAGRAM

PARTS LIST

SCH. LOC.	PART NO.	DESCRIPTION
	A62163C	BACK COVER
L1	A28147	COIL-LOOP
L2	A28160	COIL-OSCILLATOR
C1		CONDENSER, .005 MFD 400 VOLT
C2		CONDENSER, .05 MFD 200 VOLT
C3		CONDENSER, .00005 MFD MICA
C4		CONDENSER, .00025 MFD MICA
C5		CONDENSER, .002 MFD 400 VOLT
C6, C7		CONDENSER, .0001 MFD MICA
C8		CONDENSER, .02 MFD 400 VOLT
C9		CONDENSER, .2 MFD 400 VOLT
C10		CONDENSER, .05 MFD 400 VOLT
C11		CONDENSER, .01 MFD 400 VOLT
C12	A20680	CONDENSER, ELECTROLYTIC 40-40 MFD X 150VOLT 25 MFD X 25 VOLT
C13		CONDENSER, .15 MFD 400 VOLT
	A2463	CONTROL, VOLUME WITH SWITCH (S.P.S.T.).5 MEGOHM
	A5559	CORD, LINE
	A4640	SHAFT ASSEMBLY, DIAL DRIVE
	A1851	DIAL LAMP SOCKET
	A4137	DIAL POINTER
	A4574	DIAL POINTER DRIVE CORD

SCH. LOC.	PART NO.	DESCRIPTION
	A-4137	DIAL POINTER DRIVE SPRING
	A40112	DIAL SCALE (GLASS)
	A39125	KNOB, OFF-VOLUME
	A39126	KNOB, TUNING
	A59259	LEAFLET, INSTRUCTION
R1		RESISTOR, 1000 OHMS 1/4 WATT
R2		RESISTOR, 22,000 OHMS 1/4 WATT
R3		RESISTOR, 2.2 MEGOHMS 1/4 WATT
R5		RESISTOR, 10 MEGOHMS 1/4 WATT
R6		RESISTOR, 300,000 OHMS 1/4 WATT
R7		RESISTOR, .5 MEGOHMS 1/4 WATT
R8		RESISTOR, 150 OHMS 1/2 WATT
R9		RESISTOR, 2000 OHMS 2 WATT
R10		RESISTOR, 35 OHMS 1/4 WATT
R11		RESISTOR, 4700 OHMS 1/4 WATT
R12		RESISTOR, 100,000 OHMS 1/4 WATT
R13		RESISTOR, 220 OHMS 1/2 WATT
R14		RESISTOR, 270,000 OHMS 1/4 WATT
	A5871	SPEAKER, 5" P. M.
L5	A1330	TRANSFORMER, OUTPUT
L3	A3329	TRANSFORMER, I.F. INPUT
L4	A3529	TRANSFORMER, I.F. OUTPUT
	A1652	VARIABLE CONDENSER

POWER SUPPLY -- 105-125 VOLTS AC-DC. 40 WATTS
POWER OUTPUT --
UNDISTORTED . 6 WATTS, MAXIMUM 1.7 WATTS

TUNING RANGE BROADCAST BAND 535-1740 KC

SPEAKER VOICE COIL IMPEDANCE 3.2 OHMS

MODEL 6071, CHASSIS 132.826, 132.826-1

SEARS, ROEBUCK & CO.

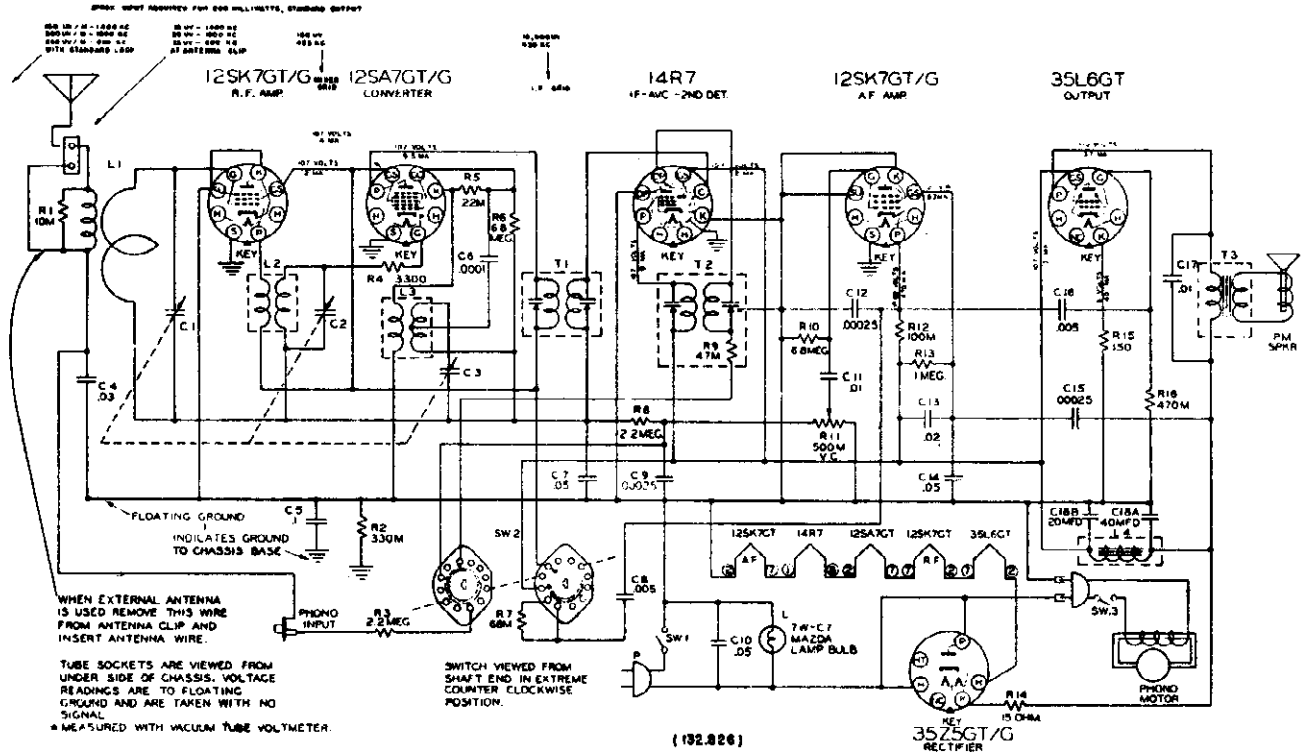

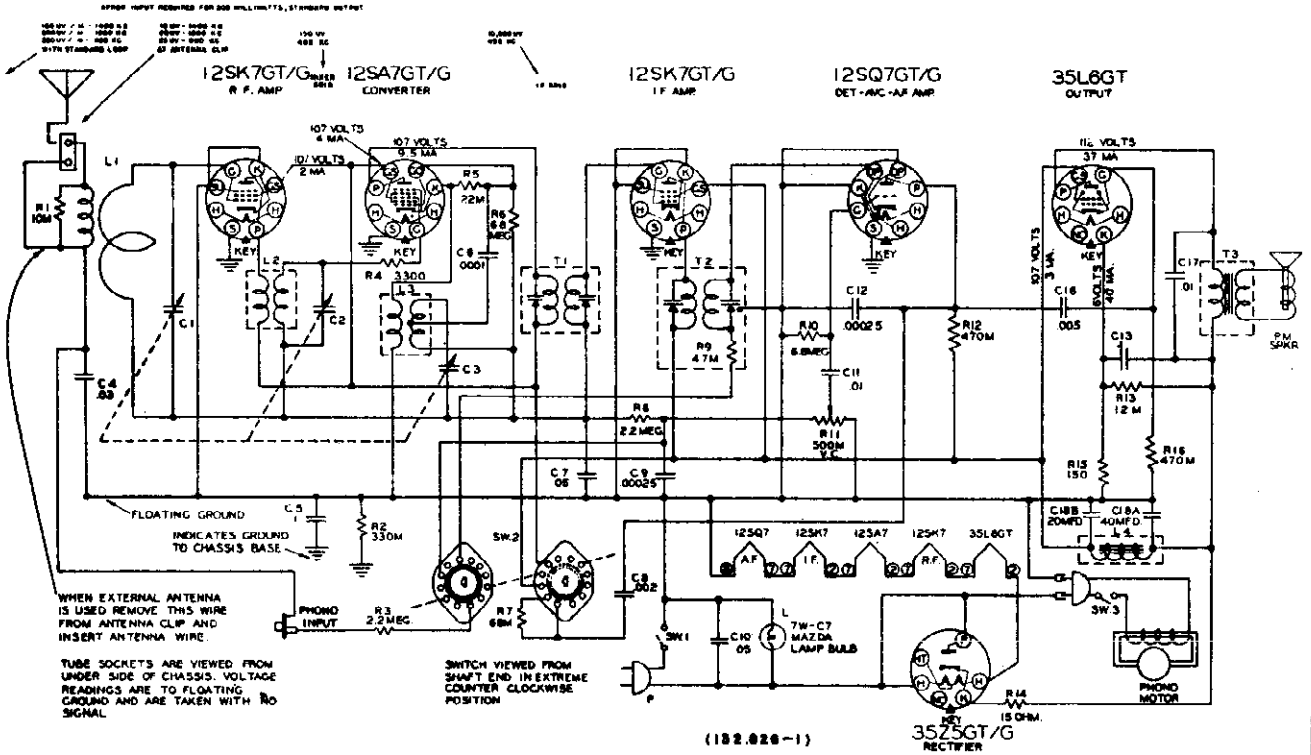

SERVICE NOTE: The a-c hum can often be greatly reduced on this chassis by replacing C13 with a 0.03-μf, 400-V capacitor. Sometimes the hum can be further reduced by replacing R13 with a 15,000-ohm, 1-watt resistor.

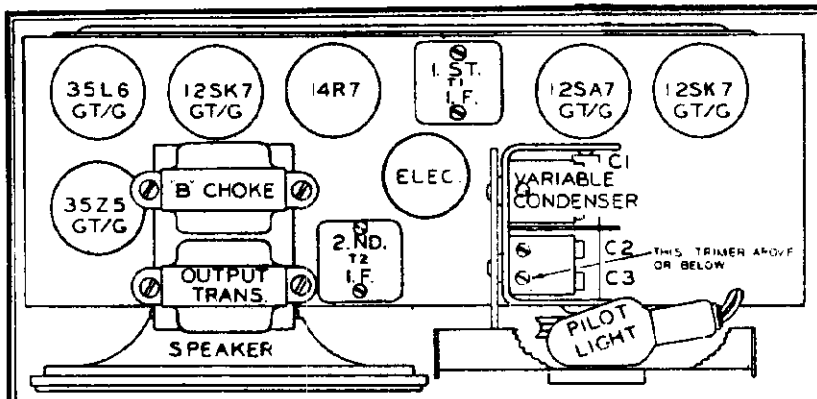

LOCATION OF PARTS ON TOP OF CHASSIS
132.826

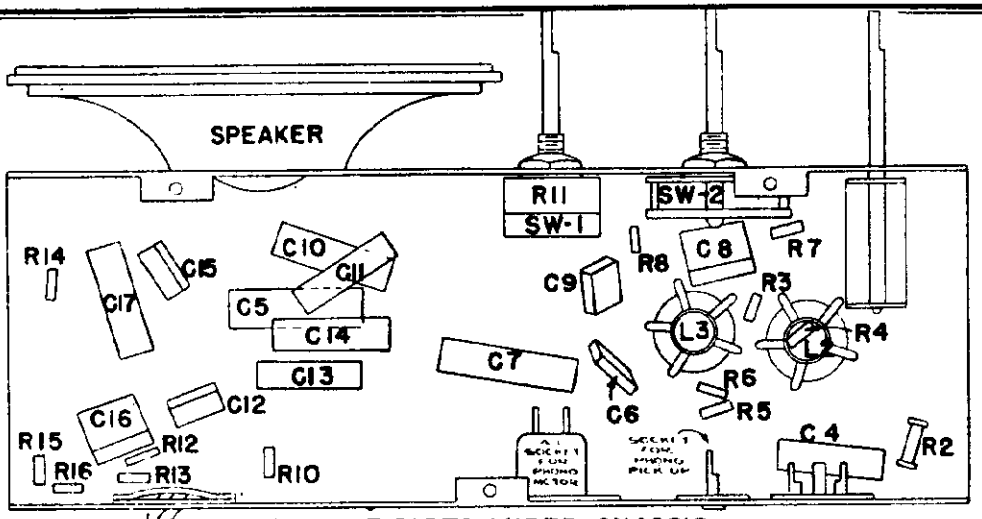

LOCATION OF PARTS UNDER CHASSIS
132.826

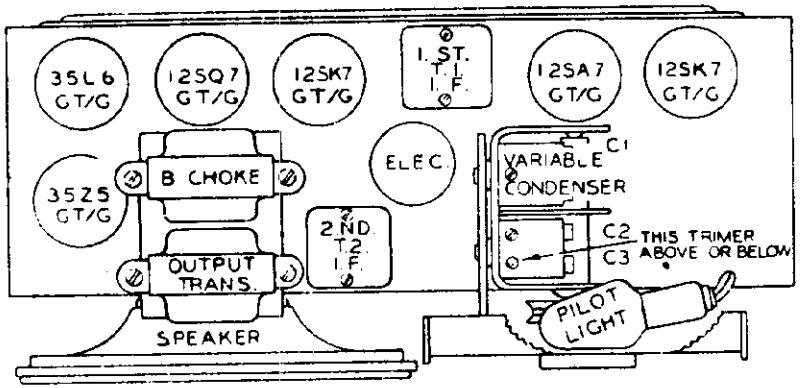

LOCATION OF PARTS ON TOP OF CHASSIS
132.826-1

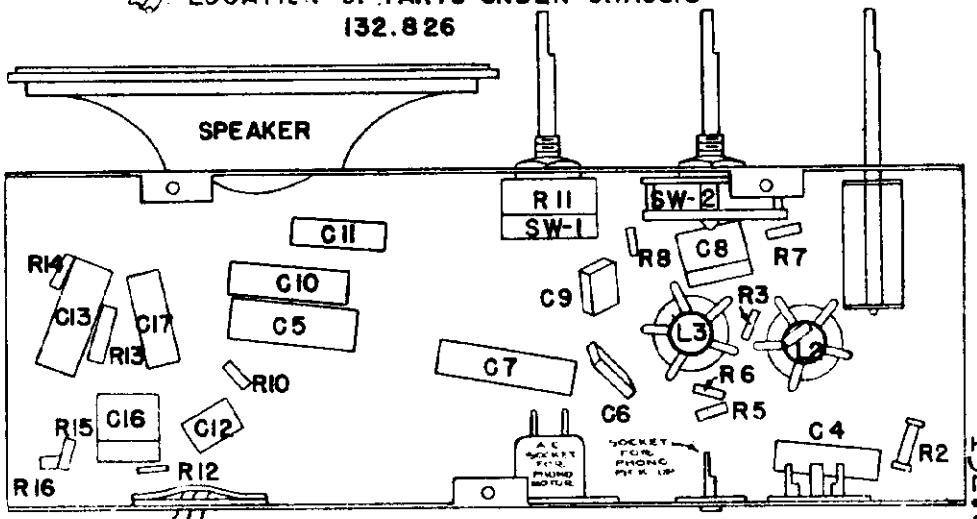

LOCATION OF PARTS UNDER CHASSIS
132.826-1

CHASSIS DIFFERENCES

Addition of Suffix Number "1" to Chassis Identification Number 132.826, covers the following changes:

1. Addition of 12SQ7GT/G tube, deletion of 14R7 tube, addition of hum bucking circuit in output circuit to replace the one previously used in the screen circuit of the 12SK7 AF Amp. tube. Change 1st IF coil to increase sensitivity.
2. R12 - 470-M was 100M; R13 - 12M was 1 meg; C8 - .002 uf. was .005 uf; C13 - .1 mfd 400 V was .02 mfd 200 V; C14 & C15 deleted; T1, 1st IF coil, N21009 was N18581.
3. Revision of Parts List Prices, Schematic Diagram, Parts & Tube Layout Drawings.

MODEL 6071, CHASSIS 132.826, 132.826-1

SEARS, ROEBUCK & CO.

SPECIFICATIONS

Power Supply -- 105-125 volts AC, 65 watts
Power Output
Undistorted .8 watts, maximum - 2.5 watts
Tuning Range Broadcast Band 540-1600 Kc
Speaker
Voice Coil Impedance 3.2 Ohms

ALIGNMENT PROCEDURE

PRELIMINARY:

Output meter connection .....Across Speaker Voice Coil
Output meter reading to indicate 200 mw (Standard Output)..... .8 Volts
Dummy antenna value used in series with generator output ..... See Chart Below
Connection of generator output lead..... See Chart Below
Connection of generator ground lead..... Floating Ground
Generator modulation..... 30% 400 Cycles
Position of volume control..... Fully Clockwise
Position of tone control..... Treble
rosition of dial pointer with variable fully closed..... Horizontal

POSITION OF VARIABLE	FREQUENCY OF GENERATOR	DUMMY ANTENNA	GENERATOR OUTPUT CONNECTION	TRIMMERS ADJUSTED IN ORDER SHOWN FOR MAX. OUTPUT	FUNCTION OF TRIMMER
Open	455	.05 mfd.	12SA7 Grid (or Stator of C-2)	Top of 2nd & 1st IF Trans.	IF
1400	1400	.0002 mfd.	Antenna Clip (with black wire removed)	C-3; C-2; & C-1 Trimmers located on Variable Condenser	Oscillator Mixer RF

IMPORTANT ALIGNMENT NOTES:

1. Place set loop in the same position and at the same distance with respect to the back of the chassis as it would be when the set is mounted in the cabinet, during alignment of the RF stage.
2. If a standard test loop is used with the Signal Generator for alignment of the receiver, the black wire will be left in the antenna clip.
3. The alignment procedure should be repeated in the original order for greatest accuracy. Always keep the output from the signal generator at its lowest possible value to make the A. V. C. action of the receiver ineffective.

PARTS LIST

Schematic Location	Part No.	Description
R1		Resistor, 10,000 ohm, ½ watt
R2		Resistor, 330,000 ohm, ½ watt
R3-R8		Resistor, 2.2 megohm, ½ watt
R4		Resistor, 3300 ohm, ½ watt
R5		Resistor, 22,000 ohm, ½ watt
R6-R10		Resistor, 6.8 megohm, ½ watt
R7		Resistor, 68,000 ohm, ½ watt
R9		Resistor, 47,000 ohm, ½ watt
R11.	N19529	Resistor, 500,000 ohm, Vol. Cont. & Sw.
R12-R16		Resistor, 470,000 ohm, ½ watt
R13		Resistor, 1 megohm, ½ watt (132.826)
R13		Resistor, 12,000 ohm, 1 watt (132.826-1)
R14		Resistor, 15 ohm, ½ watt
R15		Resistor, 150 ohm, ½ watt
C1-C2-C3	N18564	Condenser, Variable, 3 gang
C4		Condenser, .03 mfd., 400 volt
C5		Condenser, .1 mfd., 400 volt
C6		Condenser, .0001 mfd., 500 volt, Mica
C7-C10		Condenser, .05 mfd., 400 volt
C8		Condenser, .005 mfd. 600 volt (132.826)
C8		Condenser, .002 mfd., 600 volt (132.826-1)
C9-C12		Condenser, .00025 mfd., 500 volt, mica
C11-C17		Condenser, .01 mfd., 400 volt
C13		Condenser, .02 mfd. 200 volt (132.826)
C13		Condenser, .1 mfd., 400 volt (132.826-1)
C14		Condenser, .05 mfd., 200 volt (132.826)
C15		Condenser, .00025 mfd., 500v.Mica (132.826)
C16		Condenser, .005 mfd., 600 volt
C18A-C18B	N19239	Condenser, Electrolytic, 40-20 mfd,150volt
L1	N19558	Cabinet Back with Ant. Loop Assy.
L2	N19860	Coil, R. F.
L3	N18580	Coil, Oscillator
L4	N18583	Choke, Iron Core "B"

Schematic Location	Part No.	Description
T1	N18581	Transformer, First I. F.
T1	N21009	Transformer, First I. F.
T2	N18578	Transformer, Second, I. F.
T3	N18582	Transformer, Output
Spkr.	N18550	Speaker, 5½"P.M.less Output Trans & Choke
P	N20064	4ine Cord with Plug
L		Dial Light, Mazda 7 W, C7, 117 volt
SW-2	N19546	Switch, Phono-Radio-Tone
SW-3	N19545	Switch, Phono-Motor
	N19395	Shaft, Tuning
	N19533	Scale, Dial
	N19226	Pointer, Dial
	N19132	Cord, Dial Drive
	N19295	Spring, Dial Cord
	N19234	Socket, Antenna
	N19134	Socket Assy., Dial Light with Leads
	N19551	Socket, AC, for Phono-Motor
	N19552	Socket, for Phono Input
	N19512	Escutcheon, Dial with Crystal
	N19475	Motor, Phono with 9" Turntable
	N19908	Turntable only for Phono-Motor 9"
	N19477	Pickup arm with cartridge
	N19907	Pickup cartridge only, Shure No. P93B
	N19569	Escutcheon, Phono-Motor Switch
	N19555	Rest, Pickup-Arm
	N19463	Knob, Volume
	N19469	Knob, Tuning
	N19470	Knob, Tone-Phono-Radio
	N19554	Plug, Phono Input
	N19556	Plug, AC, Phono-Motor
	N19397	Instruction Sheet (132.826)
	N19397-1	Instruction Sheet (132.826-1)

SEARS, ROEBUCK & CO. MODELS 6106, CHASSIS 101.662-2E; 6111, CHASSIS 101.662-3C

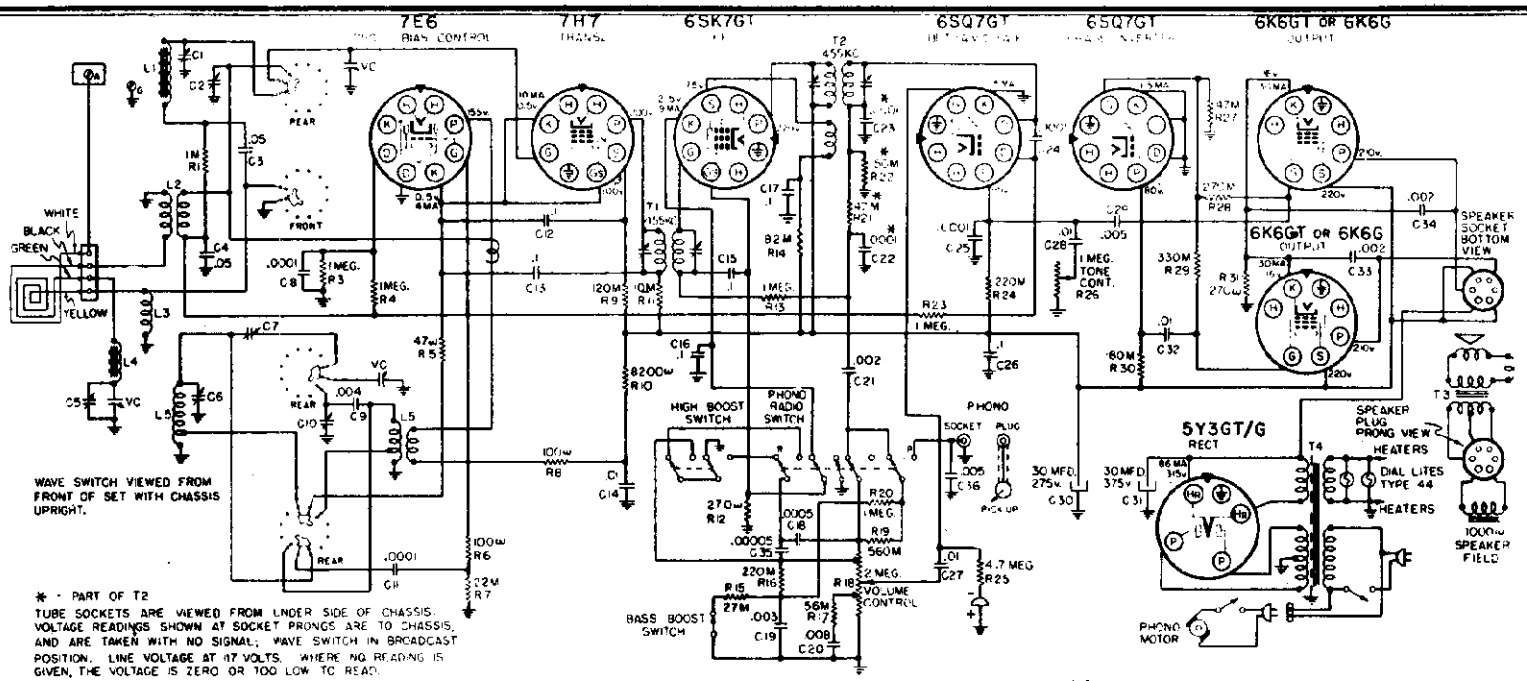

SCHEMATIC DIAGRAM 101.662-2E & 101.662-3C

PARTS LIST

SCHEMATIC LOCATION	PART NUMBER	DESCRIPTION	SCHEMATIC LOCATION
	R17998	Board - Antenna	
	R45512	Board - Terminal - Loop	
	R57205	Button - Push (High Boost, Bass Boost, Phono-Tel. - Freq. Mod.)	
	R57204	Button - Push Stations	
C30,C31	R45829	Capacitor - Electrolytic, 30 Mfd. 275 V. - 30 Mfd. 375 V.	R3,R4,R13, R20,R23
C1,C2,C5, C6,C7,C10	R47199	Capacitor - Trimmer - 6 Gang	R25
C15,C16		Capacitor - .1 Mfd. 200 V.	R1
C17,C26		Capacitor - .1 Mfd. 400 V.	R11
C14,C28		Capacitor - .01 Mfd. 400 V.	R7
C29,C32		Capacitor - .01 Mfd. 600 V.	R15
C3,C4		Capacitor - .05 Mfd. 200 V.	R22
C21,C33,C34		Capacitor - .002 Mfd. 600 V.	R19
C19		Capacitor - .003 Mfd. 400 V.	R14
C23,C35		Capacitor - .005 Mfd. 400 V.	R9
C20		Capacitor - .008 Mfd. 400 V.	R10
C9		Capacitor - .004 Mfd. Mica	R16,R24
C8,C11, C24,C25		Capacitor - .0001 Mfd. Mica	R28
C18		Capacitor - .0005 Mfd. Mica	R29
C35		Capacitor - .00005 Mfd. Mica	R19
	R17915	Coil - Bias	R6
	R57203	Clip - Pilot Light	R8,R8
L4	R47193	Coil - Antenna, Loop Loading	R12
L5	R47192	Coil - RC. & S. W. Oscillator	R31
L3	R47194	Coil - BC., Translator	R10
L1	R57189	Coil - Preselector Coupling	
L2	R47195	Coil - S. W. Antenna	
R26	R47235	Control - On-Off & Tone - 1 Megohm	
R18	R47240	Control - Volume - 2 Megohm	
	R18395	Cord - Line (Power)	
	R42571	Cover - Push Button Tabs - Celluloid	
	R57206	Dial - Station (101.662-2E)	
	R57233	Dial - Station (101.662-3C)	
	R57231	Escutcheon - Dial	
	R49940	Knob - On-Off & Tone (101.662-3C)	
	R61119	Knob - On-Off & Tone (101.662-2E)	*3
	R59939	Knob - Tuning (101.662-3C)	
	R61121	Knob - Tuning (101.662-2E)	*4
	R49941	Knob - Volume (101.662-3C)	
	R61120	Knob - Volume (101.662-2E)	
	R49943	Knob - Wave Switch (101.662-3C)	
	R61122	Knob - Wave Switch (101.662-2E)	
		Lamp - Dial, Mazda Type #44	
	R59054	Leaflet - Instruction (101.662-3C)	*1
	R54572	Leaflet - Instruction (101.662-2E)	*2
	R57216	Loop - Complete (101.662-2E)	*4
	R57196	Loop - Complete (101.662-3C)	VC

PART NUMBER	DESCRIPTION
R18112	Mounting - Bias Cell
R16039	Pin - Loop Lead
R57207	Pointer - Dial
R18477	Pulley - Wood, Large
R43416	Pulley - Wood, Small
	Resistor - 1 Megohm 1/3 Watt
	Resistor - 4.2 Megohm 1/3 Watt
	Resistor - 1,000 Ohm 1/3 Watt
	Resistor - 10,000 Ohm 1/3 Watt
	Resistor - 22,000 Ohm 1/3 Watt
	Resistor - 27,000 Ohm 1/3 Watt
	Resistor - 47,000 Ohm 1/3 Watt
	Resistor - 56,000 Ohm 1/3 Watt
	Resistor - 82,000 Ohm 1/3 Watt
	Resistor - 120,000 Ohm 1/3 Watt
	Resistor - 180,000 Ohm 1/3 Watt
	Resistor - 220,000 Ohm 1/3 Watt
	Resistor - 270,000 Ohm 1/3 Watt
	Resistor - 330,000 Ohm 1/3 Watt
	Resistor - 560,000 Ohm 1/3 Watt
	Resistor - 47 Ohm 1/3 Watt
	Resistor - 100 Ohm 1/3 Watt
	Resistor - 270 Ohm 1/3 Watt
	Resistor - 270 Ohm 2 Watt
	Resistor - 8,200 Ohm 1 Watt
R47262A	Shaft - Dial Drive Assy.
R44897	Socket - Phono - Tel. - Freq. Mod.
R16958	Socket - Rectifier
R17983	Socket - Speaker
R17987	Socket - Tube - Octal
R44145	Socket - 2 Prong - AC Rec. Chgr.
R45956	Socket - Tube - 8 Prong Lock-In
	WHEN ORDERING SPEAKER PARTS ALWAYS GIVE THE PART NUMBER OF THE SPEAKER
R57221	Speaker - 10" Dynamic
R52989	Cone and Voice Coil
R45838	Field Coil
R45837	Output Transformer
R18251	Spring - Dial Drive Tension
R45844	Switch - Tone & Phono - Tel.-Freq. Mod.
R47191	Switch - Wave
R45995	Tab - Bass Boost
R45994	Tab - High Boost
R45996	Tab - Phono - Tel. - Freq. Mod.
R42879	Tab - Call Letter Sheets
R45305	Transformer - #1 - I. F.
R45306	Transformer - #2 - I. F.
R45953	Transformer - Power - 60 Cycle
R47259	Tuner - Push Button with Variable Cap.

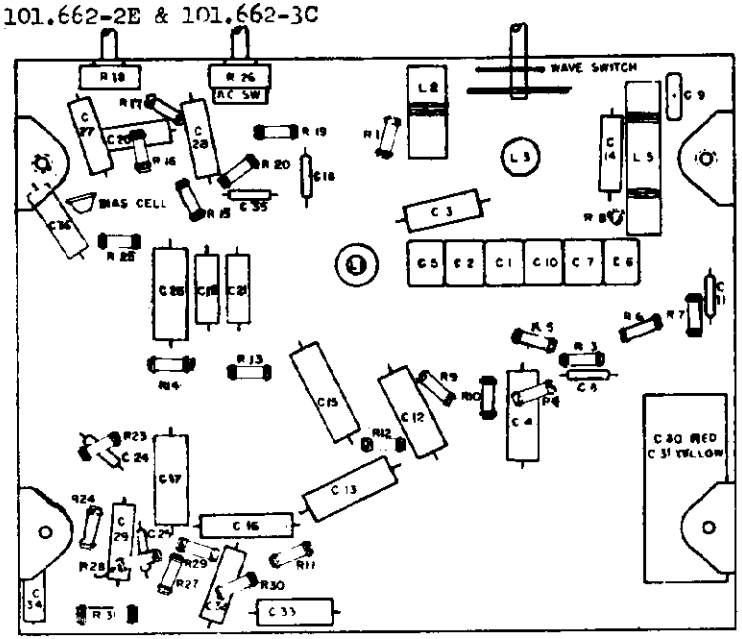

LOCATION OF PARTS UNDER CHASSIS

MODELS 6106A, CHASSIS 101.662-4E; 6111A, CHASSIS 101.662-5F

SEARS, ROEBUCK & CO.

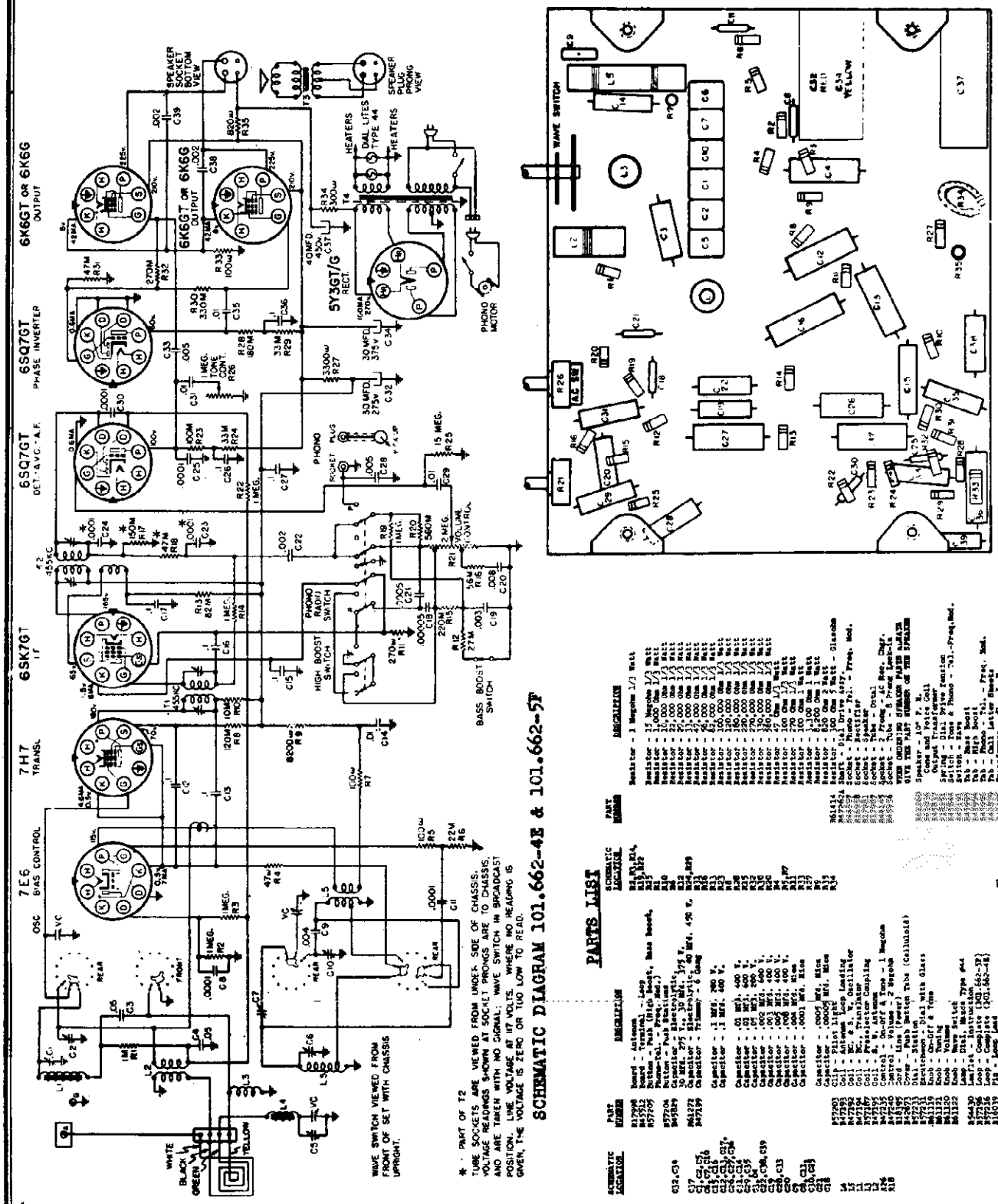

SCHEMATIC DIAGRAM 101.662-4E & 101.662-5F

LOCATION OF PARTS UNDER CHASSIS

PARTS LIST

SEARS, ROEBUCK & CO.

MODELS 6106, CHASSIS 101.662-2E; 6106A, CHASSIS 101.662-4E; 6111, CHASSIS 101.662-3C; 6111A, CHASSIS 101.662-5F

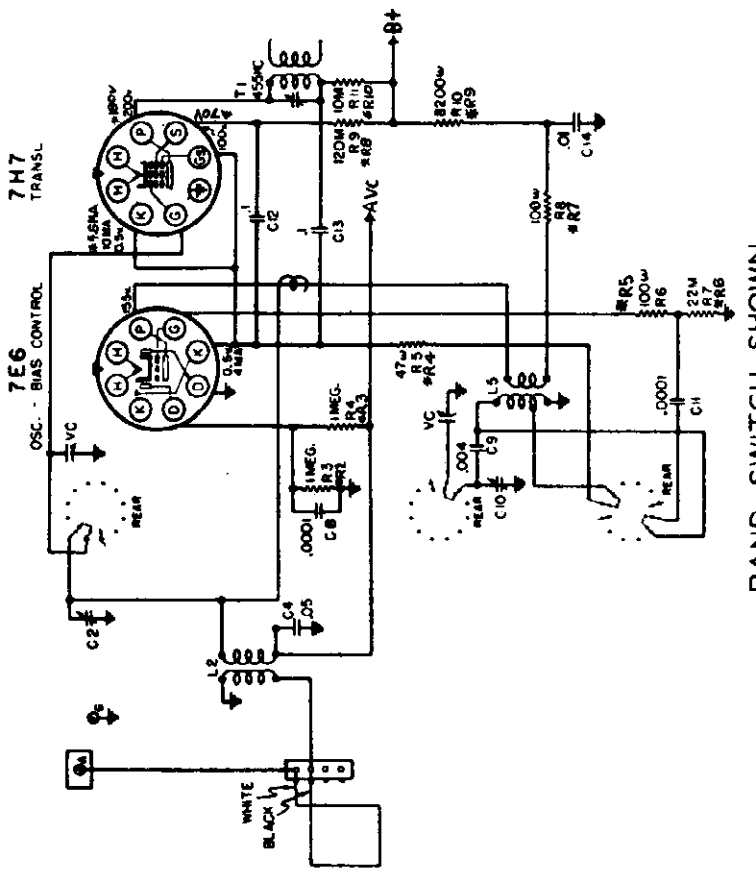

BAND-SWITCH SHOWN AT 2ND POSITION CLOCKWISE.
SHORT WAVE BAND
6 - 18 MC

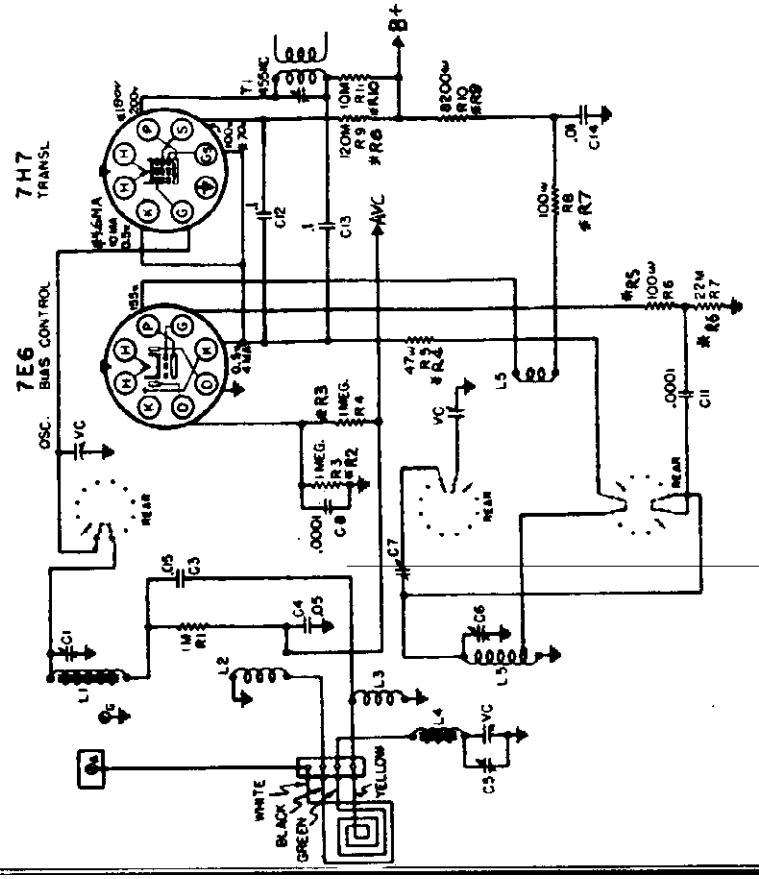

BAND-SWITCH SHOWN AT 1ST POSITION.
BROADCAST BAND
540 - 1700 KC

NOTE:-
ALL ITEMS MARKED WITH AN * APPLY ONLY TO MODELS 6106A & 6111A

MODELS 6106, CHASSIS 101.662-2E; 6106A, CHASSIS 101.662-4E

SEARS, ROEBUCK & CO.

MODELS 6111, CHASSIS 101.662-3C; 6111A, CHASSIS 101.662-5F

ALIGNMENT PROCEDURE

Preliminary:

Output Meter Connection.....Across Loud Speaker Voice Coil
Output Meter Reading to Indicate 50 Milliwatts (Standard Output).....1.2 Volts
Generator Ground Lead Connection.....Receiver Chassis
Dummy Antenna Value to be in Series with Generator Output.....See Chart Below
Connection of Generator Output Lead.....See Chart Below
Generator Modulation.....30%, 400 Cycles
Position of Volume Control.....Fully on
Position of Tone Control.....Treble
Position of Pointer with Tuner Fully Closed.....Last Line Below 540 Calibration Mark

WAVE BAND SWITCH POSITION	POSITION OF TUNER	GENERATOR FREQUENCY	DUMMY ANTENNA	GENERATOR CONNECTION	ADJUSTMENTS (IN ORDER SHOWN)	TRIMMER FUNCTION
BC	Closed	455 KC	.1 Mfd.	7H7 Transl. Grid	T2, T1	I. F.
BC	Open	1750 KC	.0002 Mfd.	Ant. Terminal	C6	Oscillator
BC	1410	1410 KC	.0002 Mfd.	Ant. Terminal	C5, C1	Ant.,Transl.
BC	600 (rock)	600 KC	.0002 Mfd.	Ant. Terminal	C7	Padder
SW	Open	18.3 MC	400 Ohms	Ant. Terminal	C10	Oscillator
SW	15 (rock)	15 MC	400 Ohms	Ant. Terminal	C2	Transl.

IMPORTANT ALIGNMENT NOTES

The Alignment must be done in the order given.

The Alignment Procedure should be repeated step by step in the original order for greatest accuracy.

Always keep the output power from the generator at its lowest possible value to prevent the AVC of the receiver from interfering with accurate alignment.

During alignment of the BC Band Padder and the SW Band Translator Trimmers, the Tuner should be rocked through resonance to assure alignment.

Power Output — Undistorted 3.6 Watts — Maximum 6.5 Watts

SPECIFICATIONS

Power Supply:
All models available.....117 Volts 60 Cycles AC 100 Watts

Frequency Range:
Broadcast.....540-1700 KC
Short Wave.....6-18 MC

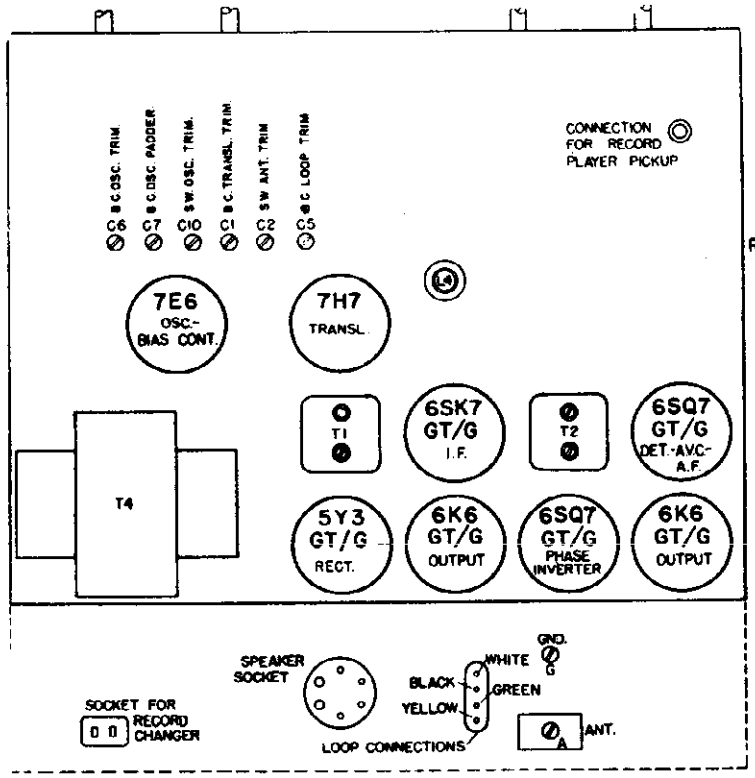

LOCATION OF PARTS ON TOP OF CHASSIS

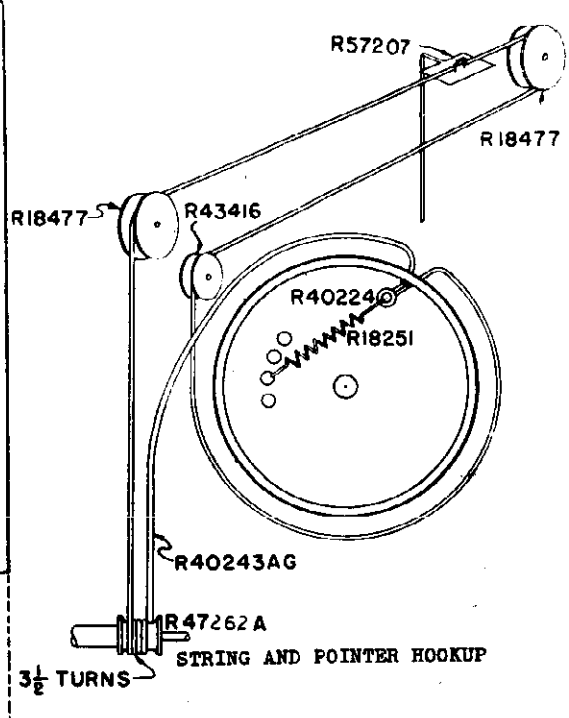

STRING AND POINTER HOOKUP

SEARS, ROEBUCK & CO. MODEL 6285, CHASSIS 101.666A, 101.666-1B

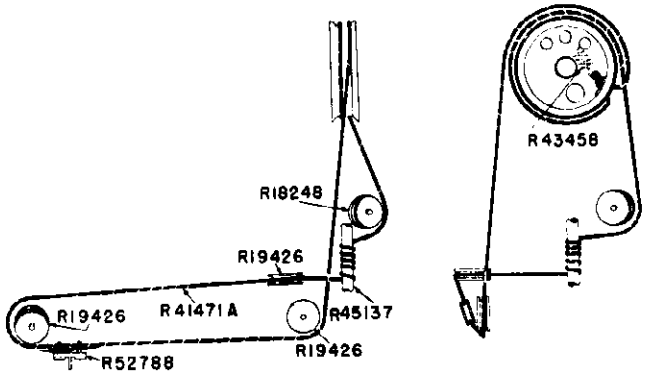

STRING AND POINTER HOOKUP

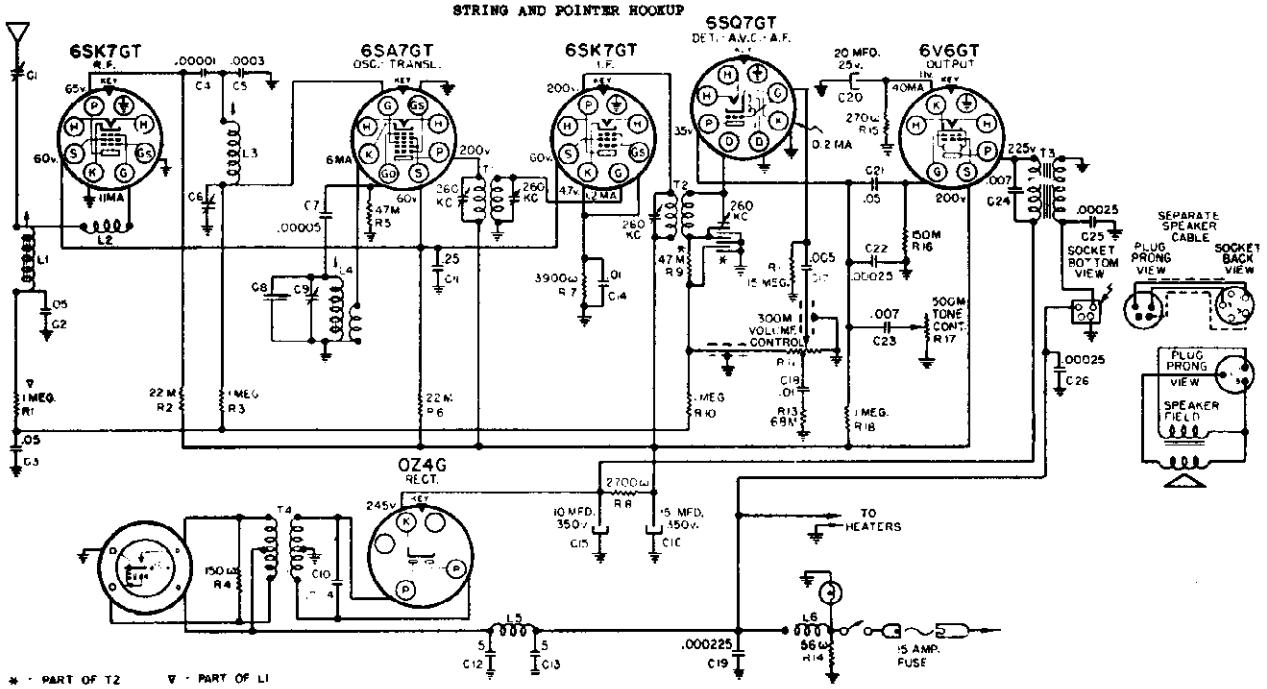

* - PART OF T2 ∇ - PART OF L1

TUBE SOCKETS ARE VIEWED FROM UNDER SIDE OF CHASSIS. VOLTAGE READINGS SHOWN AT SOCKET PRONGS ARE TO CHASSIS, AND ARE TAKEN WITH NO SIGNAL WHERE NO READING IS GIVEN, THE VOLTAGE IS ZERO OR TOO LOW TO READ.

"A" BATTERY - 6. VOLTS CURRENT DRAIN - 6.5 AMPERES

SCHEMATIC DIAGRAM 101.666A

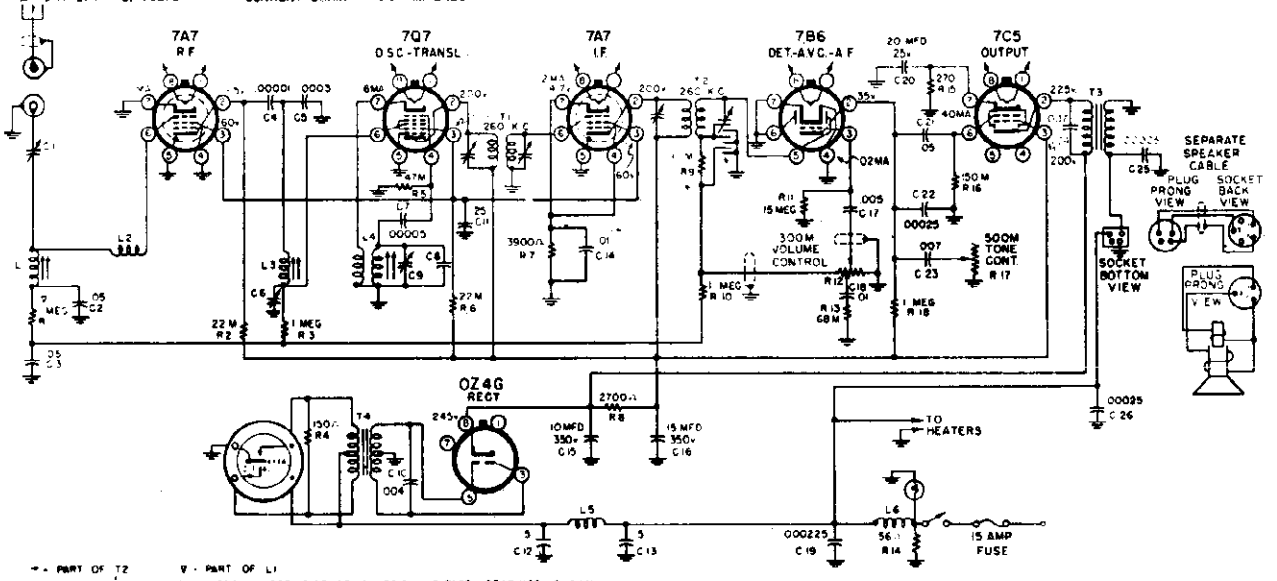

* - PART OF T2 ∇ - PART OF L1

TUBE SOCKETS ARE VIEWED FROM UNDER SIDE OF CHASSIS VOLTAGE READINGS SHOWN AT SOCKET PRONGS ARE TO CHASSIS, AND ARE TAKEN WITH NO SIGNAL WHERE NO READING IS GIVEN, THE VOLTAGE IS ZERO OR TOO LOW TO READ

"A" BATTERY - 6 VOLTS CURRENT DRAIN - 6.5 AMPERES

SCHEMATIC DIAGRAM 101.666-1B

MODEL 6285, CHASSIS 101.666A, 101.666-1B

SEARS, ROEBUCK & CO.

ALIGNMENT PROCEDURE

PRELIMINARY:

Output Meter Connection.....Across Loud Speaker Voice Coil
Output Meter Reading to Indicate Standard Output of 1.0 Watt.....1.78 Volt
Connection of Signal Generator Ground Lead.....Receiver Chassis
Connection of Signal Generator Output Lead.....See Chart Below
Dummy Antenna Value to be in Series with Generator Output.....See Chart Below
Position of Volume Control.....Fully On
Position of Tone Control.....Treble

POSITION OF TUNER	GENERATOR FREQUENCY	DUMMY ANTENNA	GENERATOR CONNECTION	TRIMMER ADJUSTMENTS IN ORDER SHOWN	TRIMMER FUNCTION
Closed	260 KC	0.1 Mfd.	Translator Grid	T2,T1	I.F.
Fully Open	1610 KC	.00005 Mfd.	Ant. Connection	C9,C6,C1	Osc.,RF., Ant.
1410 KC	1410 KC	.00005 Mfd.	Ant. Connection	L4,L3,L1	Osc.,RF., Ant.

IMPORTANT ALIGNMENT NOTES

Always keep the output power from the generator at its lowest possible value to prevent the AVC of the receiver from interfering with accurate alignment.

The Alignment Procedure should be repeated in the original order, step by step to insure greater accuracy.

SPECIFICATIONS

Power Supply:
All models available.....6 Volt DC; 6.5 Amperes

Frequency Range:
Standard Broadcast.....540-1600 KC

Power Output:
Undistorted.....3.5 Watts
Maximum.....5 Watts

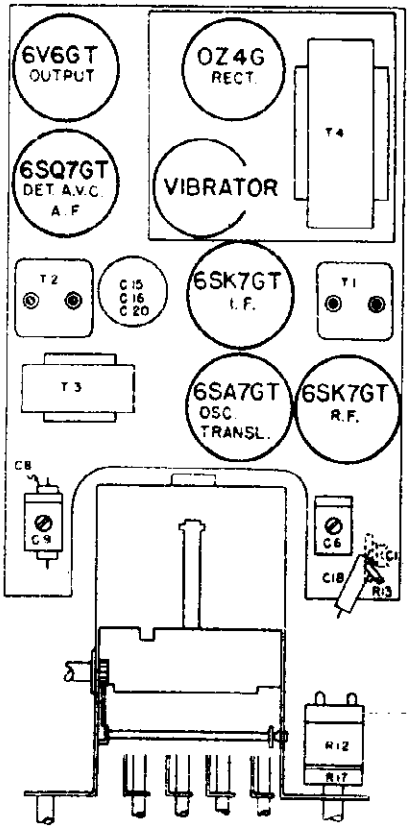

LOCATION OF PARTS
BOTTOM COVER REMOVED
101.666A

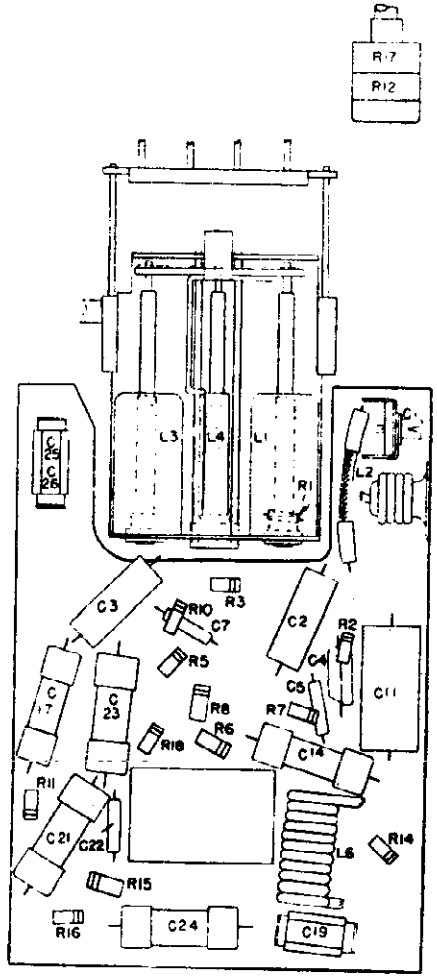

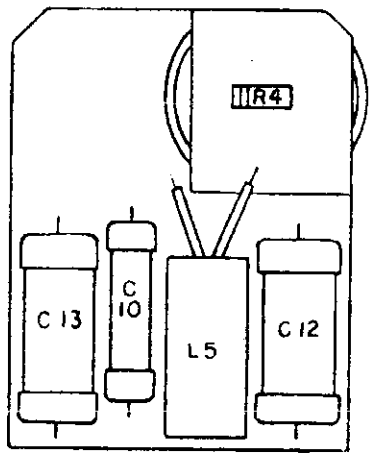

LOCATION OF PARTS
UNDER POWER SUPPLY
101.666A-1B

LOCATION OF PARTS UNDER CHASSIS 101.666A

SEARS, ROEBUCK & CO. MODEL 6285, CHASSIS 101.666A, 101.666-1B

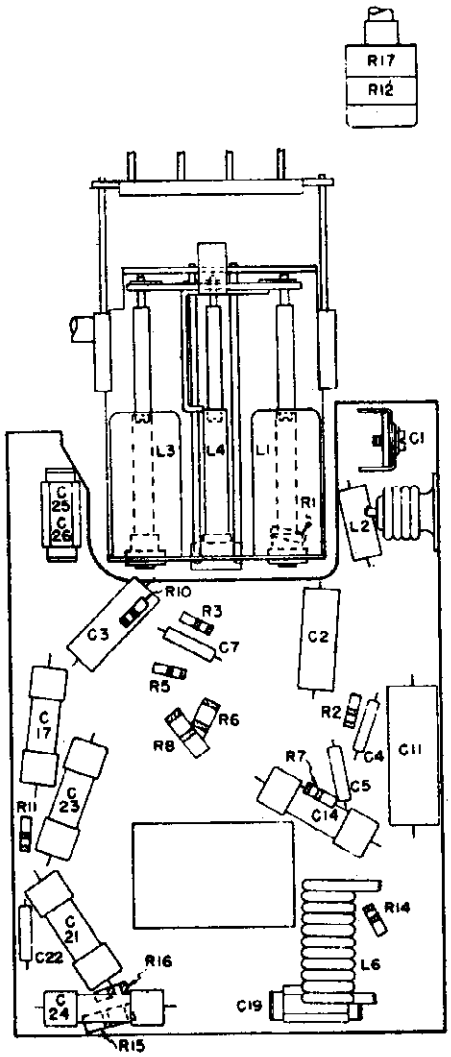

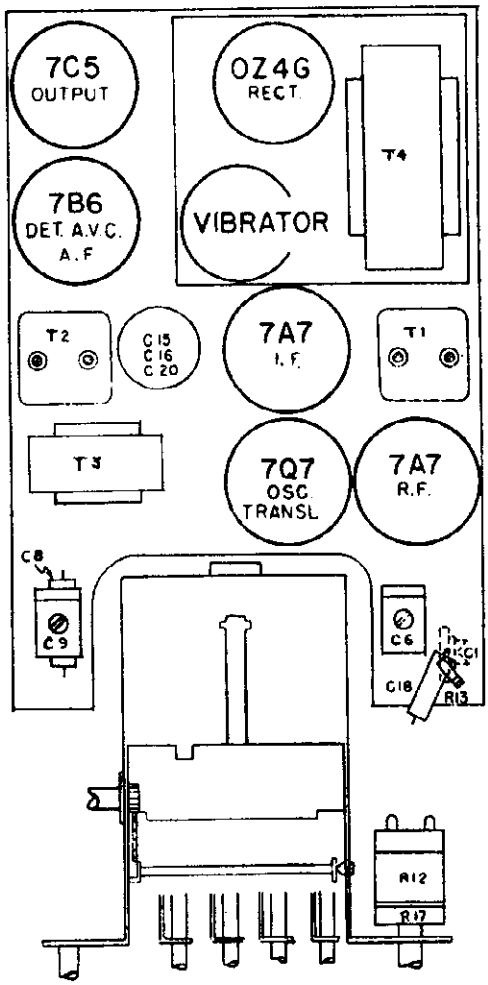

LOCATION OF PARTS
BOTTOM COVER REMOVED
101.666-1B

LOCATION OF PARTS UNDER CHASSIS 101.666-1B

PARTS LIST

SCHEMATIC LOCATION	PART NUMBER	DESCRIPTION
	R43848	Bolt - 5/8-24 x 3/4" Rec. Front Mtg. Brkt.
	R41483	Bolt - 5/16-24 x 8" Rec. Rear Mtg. Brkt.
	R45265	Bolt - Carriage - 10-24 x 3/4 Speaker Mtg.Brkt.
	R45817	Bracket - Speaker Mtg. - Lower
	R45888	Bracket - Speaker Mtg. - Upper
	R52800	Bracket - Rec. Mtg. - Front L.H. (101.666A-1B)
	R52801	Bracket - Rec. Mtg. - Front R.H. (101.666A-1B)
	R43870A	Bracket Assembly - Rear Mtg.
	R16149	Capacitor - Ammeter
	R16150	Capacitor - Generator
C15,C16,C20	R45187	Capacitor - Electrolytic - 10 Mfd. 350 V., 15 Mfd. 350 V., 20 Mfd. 25 V.
C1	R43795	Capacitor - Trimmer - Antenna
C6	R43694	Capacitor - Trimmer - (101.666A-1B)
C9	R45818	Capacitor - Trimmer - Oscillator
C18,C19		Capacitor - .5 Mfd. 100 V.
C11		Capacitor - .25 Mfd. 200 V.
C2,C3,C21		Capacitor - .05 Mfd. 200 V.
C14		Capacitor - .01 Mfd. 400 V.
C16		Capacitor - .01 Mfd. 100 V.
C23,C24		Capacitor - .007 Mfd. 600 V.
C17		Capacitor - .005 Mfd. 200 V.
C10		Capacitor - .004 Mfd. 1500 V.
C5		Capacitor - .0003 Mfd. Mica
C22		Capacitor - .00025 Mfd. Mica
C12		Capacitor - .000225 Mfd. Mica
C8	R48851	Capacitor - .000165 Mfd. Temp. Compensating
C25,C26		Capacitor - .00025 Mfd. Dual - Mica
C7		Capacitor - .00005 Mfd. Mica
C4		Capacitor - .00001 Mfd. Mica
	R52802	Case - Speaker (101.666A-1B)
	R9741	Clip - Ammeter
	R45271	Clip - Dial Lamp Socket
L2	R48820	Coil - Antenna Choke (101.666A-1B)
L5	R9041B	Coil - Ham Choke (101.666A-1B)
L6	R52800M	Coil - Spark Choke (101.666A-1B)
L1,L3,L4	R45217	Coils - Perm. Unit - Less Tuner (101.666A-1B)
L1,L3,L4	R52790	Coils & Tuner Assembly (101.666A)
L1,L3,L4	R51575	Coils & Tuner Assembly (101.666-1B)
R18,R17	R45139	Control - On-Off - Volume & Tone
	R41471	Cord - Dial Drive - 40"
	R52792	Dial - Station (101.666A-1B)
	R52827	Escutcheon - (101.666A-1B)
		Fuse - (Type 3 AG - 15 Amp - 65 V.)
	R19418	Knob - Tone
	R19485	Knob - Dummy
	R52793	Knob - Tuning (101.666A-1B)
		Lamp - Dial - Mazda Type #44
	R9578AA	Lead - "A" Connector Assembly
	R52808	Leaflet - Instruction (101.666A)
	R54487	Leaflet - Instruction (101.666-1B)
	R45882	Nut - Wing 10-24
	R43969	Nut - Wing 6-32
	R52786	Pointer - Dial (101.666A-1B)
	R19426	Pulley - Wood
	R43423	Pulley - Wood
	R52785	Push Button (101.666A-1B)
R14		Resistor - 95 Ohm - 1/3 Watt
R4		Resistor - 150 Ohm - 1 Watt
R15		Resistor - 270 Ohm - 1 Watt
R6		Resistor - 2,700 Ohm - 1 Watt
R7		Resistor - 3,900 Ohm - 1/3 Watt
R9		Resistor - 22,000 Ohm - 1 Watt
R5		Resistor - 22,000 Ohm - 1/3 Watt
R8		Resistor - 47,000 Ohm - 1/3 Watt
R13		Resistor - 68,000 Ohm - 1/3 Watt
R16		Resistor - 150,000 Ohm - 1/3 Watt
R1,R3,R10,R18		Resistor - 1 Megohm - 1/3 Watt
R11		Resistor - 15 Megohm - 1/3 Watt
	R43407	Ring - Rubber - Power Supply Case
	R41215	Ring - Rubber - Vibrator
	R45136	Shaft - Front Drive
	R45137A	Shaft - Rear Drive
	R43701	Socket - Rectifier
	R17627	Socket - Speaker
	R41542	Socket - Tube - 5 Prong Octal (101.666A)
	R42477	Socket - Tube - 6 Prong Lock-in (101.666-1B)
	R41111	Socket - Vibrator
	R51306	Speaker - 7" P.M. (101.666A-1B)
	R43458	Spring - Dial Cord
	R42274	Suppressor - Distributor
T1	R45166	Transformer - I.F. #1
T2	R45169	Transformer - I.F. #2
T4	R45182	Transformer - Power
T5	R45166	Transformer - Output (101.666A)
T3	R45517	Transformer - Output (101.666-1B)
	R52894	Tube - Station Call Letter (101.666A-1B)
	R52787	Tuner - Push Button - Less Coils (101.666A)
	R51574	Tuner - Push Button - Less Coils (101.666-1B)
	R45190	Vibrator

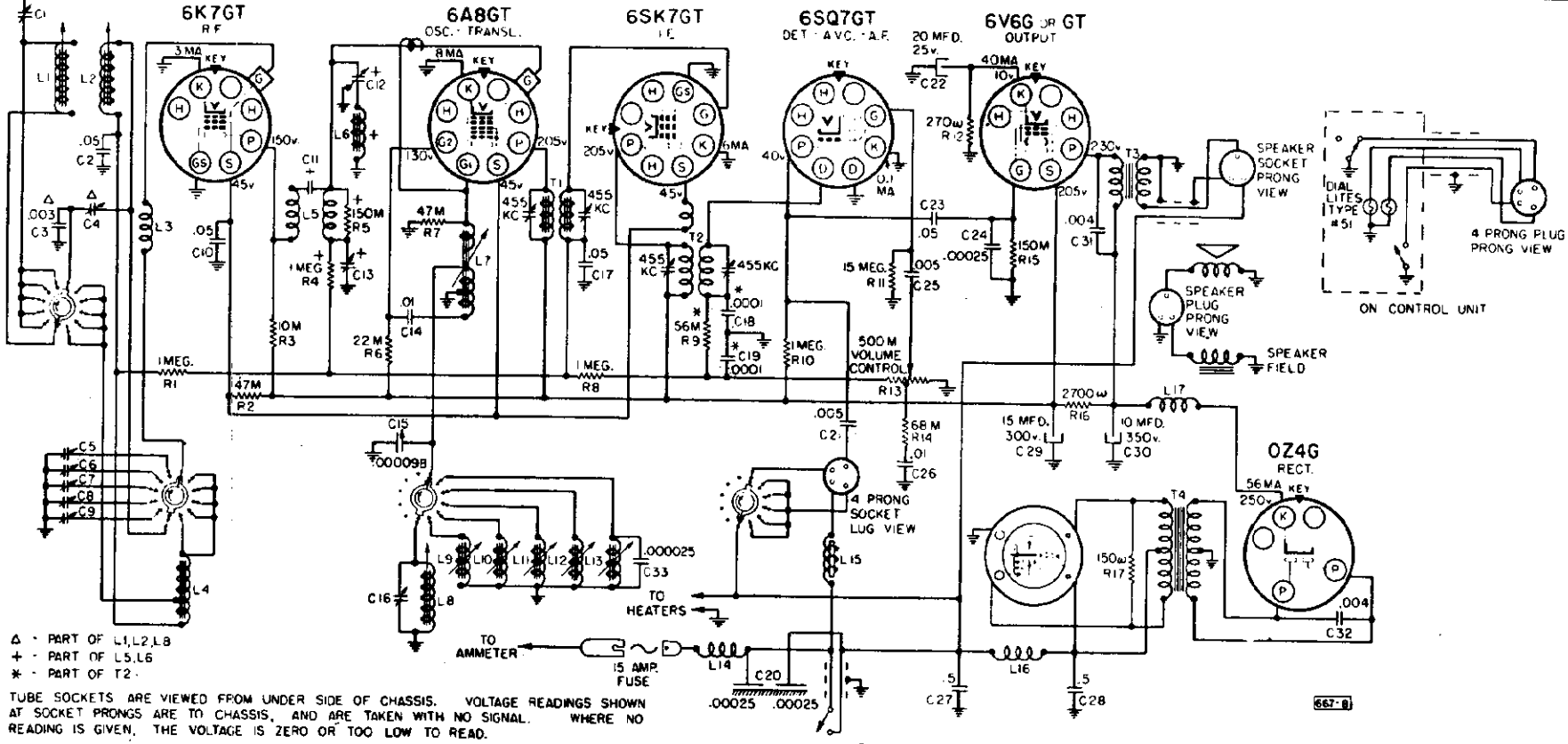

TUBE SOCKETS ARE VIEWED FROM UNDER SIDE OF CHASSIS. VOLTAGE READINGS SHOWN AT SOCKET PRONGS ARE TO CHASSIS, AND ARE TAKEN WITH NO SIGNAL. WHERE NO READING IS GIVEN, THE VOLTAGE IS ZERO OR TOO LOW TO READ.

"A" BATTERY - 6. VOLTS CURRENT DRAIN - 7.2 AMPERES

667-8

SCHEMATIC DIAGRAM FOR 101.667B

PARTS LIST

SCHEMATIC LOCATION	PART NUMBER	DESCRIPTION
	R45265	Bolt - Carriage - 10-24 x 3/4"
	R45228	Bracket - Upper Speaker Mtg.
	R45817	Bracket - Lower Speaker Mtg.
	R42306	Cable - Flex. Dr. - Volume Control
	R42373	Cable - Flex. Dr. - Volume Control - Extra Length - 33"
	R42307	Cable - Flex. Dr. - Tuning Control
	R42374	Cable - Flex. Dr. - Tuning Control - Extra Length - 32"
	R45020	Cable - Speaker
	R18150	Clip - Grid
	R9741	Clip - Ammeter
L4	R45118	Coil - Antenna
L3	R48820	Coil - Antenna Choke
R4,R5,L5,L6 C11,C12,C13	R45206	Coil - Untuned R.F.
L7	R47294	Coil - Oscillator
C8,C6,C7,C8, C9,I9,L10,L11 L12,L13	R45097	Coils - Perm. & Capacitor Assembly
C3,C4,C16 L1,L2,L8	R45017	Coil - Ant. - Osc., Manual Tuning
L16	R90446	Coil - Hash Choke
L17	R5114CM	Coil - Hash Choke
	R16149	Capacitor - Ammeter
	R16150	Capacitor - Generator
C22,C29,C30	R42243	Capacitor - Electrolytic - 20 Mfd. 25 V., 15 Mfd. 300 V., 10 Mfd. 350 V.
C1		
C27,C28		
C2,C10,C17, C23		
C14		
C26		
C21		
C25		
C31		
C32		
C24		
C15		
C20		
R15		
R45237	Capacitor - Trimmer	
	Capacitor - .5 Mfd. 100 V.	
	Capacitor - .05 Mfd. 200 V.	
	Capacitor - .01 Mfd. 400 V.	R17
	Capacitor - .01 Mfd. 100 V.	R18
	Capacitor - .005 Mfd. 400 V.	R16
	Capacitor - .005 Mfd. 400 V.	R3
	Capacitor - .004 Mfd. 600 V.	R6
	Capacitor - .004 Mfd. 1500 V.	R7
	Capacitor - .00025 Mfd. Mica	R2
R47295	Capacitor - .000098 Mfd. - Temp. Compensator	R14
	Capacitor - .00025 Mica - Dual	R15
R42244	Control - On-Off & Volume	R1,R8,R10
R42490	Control - Push Button Unit	R11
R42491	Cable & Plug Assembly	
R48498	Switch - Tone	
R42493	Switch - Station Selector	
	Lamp - Dial, Mazda Type #51	
R42847	Drum - Call Letter	
R42848	Stud - Call Letter Drum	
R42849	Socket - Lamp	
R42701	Tabs - Numeral	
R45831	Control - Manual Tuning	
R40079	Control - Manual Volume	
R52815	Envelope - Instruction (With All Contents)	T1
R10292	Fuse - 15 Amp. - 25 Volt	T2
R52812	Grille - Case & Screen Assembly	T4
R16436	Insulator - Fuse	T3
R54504	Leaflet - Instruction	
R45321	Nut - Wing - 1/4-20	
R45288	Nut - Wing - #10-24	
R45205A	Relay & Switch Assembly	
	Resistor - 150 Ohm - 1 Watt	
	Resistor - 270 Ohm - 1 Watt	
	Resistor - 2700 Ohm - 1 Watt	
	Resistor - 10,000 Ohm - 1/3 Watt	
	Resistor - 22,000 Ohm - 1/2 Watt	
	Resistor - 47,000 Ohm - 1/2 Watt	
	Resistor - 47,000 Ohm - 1 Watt	
	Resistor - 68,000 Ohm - 1/3 Watt	
	Resistor - 150,000 Ohm - 1/3 Watt	
	Resistor - 1 Megohm - 1/3 Watt	
	Resistor - 15 Megohms - 1/3 Watt	
R45226	Screen - Speaker	
R20539	Socket - Rectifier	
R42284	Socket - Control Plug	
R18860	Socket - Tube - 8 Prong Octal	
R19321	Socket - Vibrator	
R45016	Speaker - 7" Dynamic	
R61409	Speaker - 7" P.M.	
R19157	Strap - Ground	
R11534	Stud - Case Mounting	
R43954	Stud - Speaker Mounting	
R42274	Suppressor - Distributor	
R45018	Transformer - I.F. #1	
R45019	Transformer - I.F. #2	
R45100	Transformer - Power	
R45079	Transformer - Output	
R45160	Vibrator	

SEARS, ROEBUCK & CO.

MODEL 6290,
CHASSIS 101.667

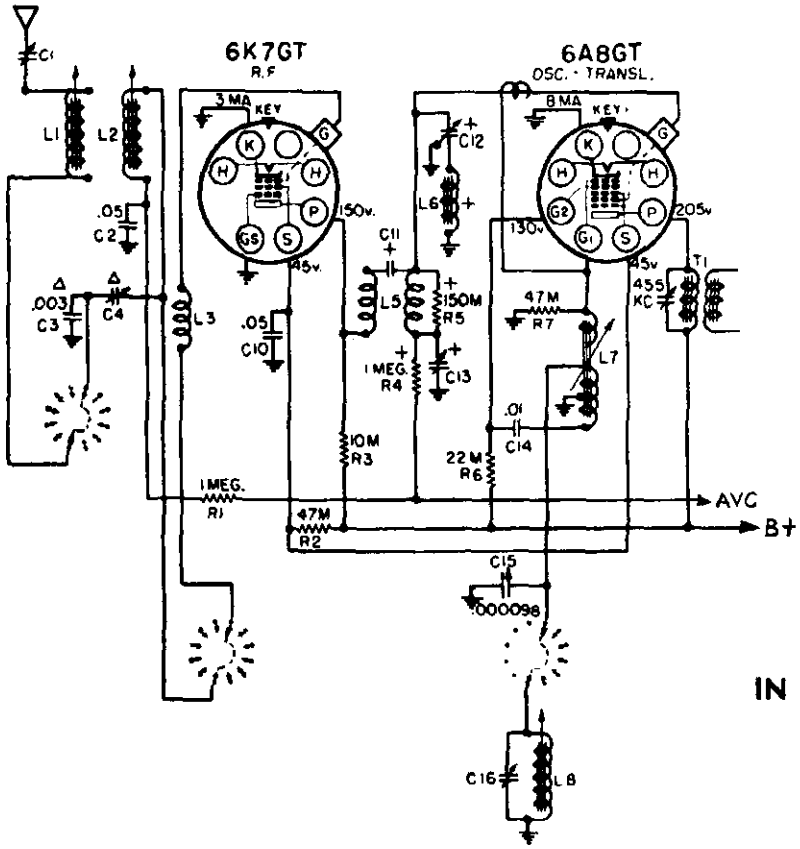

SWITCH SHOWN
IN BROADCAST POSITION.
MANUAL TUNING

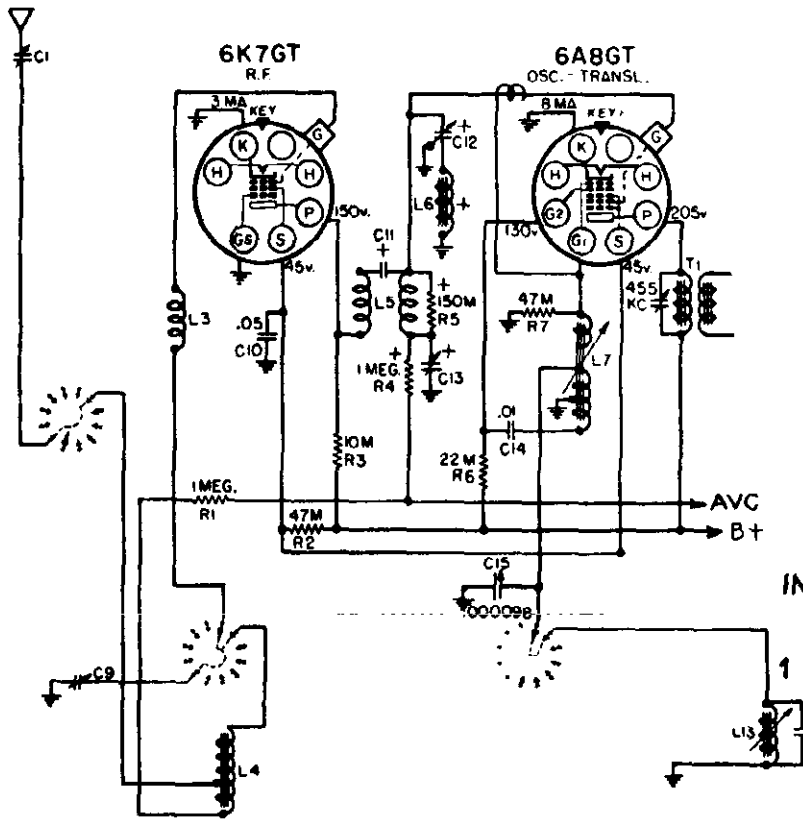

SWITCH SHOWN
IN BROADCAST POSITION
AUTOMATIC TUNING
1 PUSH BUTTON DEPRESSED

© John F. Rider

MODEL 6290,
CHASSIS 101.667B

SEARS, ROEBUCK & CO.

GENERAL INFORMATION AND SERVICE HINTS

MATCHING THE ANTENNA:

Before proceeding with this adjustment the receiver should be left on for about 15 minutes to warm up.

An adjusting screw, accessible to a screw driver through a hole in the bottom cover of the case, is provided to match the receiver to the car antenna. With the receiver adjusted for "DIAL" tuning, use the Station Selector knob to tune in a very weak station at about 1400 kilocycles, with the volume control fully on. Then turn the adjusting screw to the point affecting maximum volume.

THE PUSH BUTTON TUNING MECHANISM:

Preselection of push button tuned stations is accomplished by settings of the iron cores in the oscillator coils and settings of the trimmer condensers across the antenna coil. The proper coils are selected by a switch which is rotated one step at a time by means of a solenoid, controlled by the tuning push button. Pushing the button also mechanically rotates the station call letter drum.

Each button can be set only to a station within a certain frequency range as follows:

STATION	FREQUENCY RANGE
#1	535 to 920 Kc
#2	630 to 1070 Kc
#3	690 to 1170 Kc
#4	850 to 1450 Kc
#5	950 to 1610 Kc

To set up the mechanism, insert the call letter tabs in their proper frequency order in the call letter drum. The drum is accessible by removing the snap-in button at the top of the push button unit before mounting the unit. One of the positions is for manual tuning. When this position is reached, the manual tuning dial will become illuminated and the receiver can be tuned manually.

Stations are set up by removing the front grille of the receiver, exposing the station tuning screws. The adjusting screws are labeled. The Osc. screw must be adjusted first; then the ANT. screw. Then repeat the two adjustments.

TO SYNCHRONIZE THE MECHANISM, PUSH THE TUNING BUTTON UNTIL THE MANUAL TUNING DIAL BECOMES ILLUMINATED. REMOVE THE PUSH BUTTON CABLE FROM ITS SOCKET IN THE SIDE OF THE RECEIVER CASE AND THEN PUSH THE BUTTON UNTIL THE "DIAL" TAB COMES INTO VIEW. THEN REINSERT THE CABLE PLUG.

Under certain conditions the mechanism may fall out of synchronism if the button is not pushed all the way in and completely released when operating it. The user should be instructed accordingly.

ALIGNMENT PROCEDURE

PRELIMINARY:

Output Meter Connection.....Across Loud Speaker Voice Coil
Output Meter Reading to Indicate Standard Output of 1.0 Watt.....1.78 Volt
Connection of Signal Generator Ground Lead.....Receiver Chassis
Connection of Signal Generator Output Lead.....See Chart Below
Dummy Antenna Value to be in Series with Generator Output.....See Chart Below
Position of Volume Control.....Fully On
Position of Tone Control.....Treble

POSITION OF TUNER	GENERATOR FREQUENCY	DUMMY ANTENNA	GENERATOR CONNECTION	TRIMMER ADJUSTMENTS IN ORDER SHOWN	TRIMMER FUNCTION
Closed	455 KC	0.1 Mfd.	Translator Grid	T2, T1	I.F.
Closed	455 KC	0.1 Mfd.	R. F. Grid	C12	I.F. Trap
1610 KC	1610 KC	.00005 Mfd.	Ant. Connection	C16, C4, C1	Osc., R.F., Ant.
1610 KC	2520 KC	.00005 Mfd.	Antenna	C13	Image Trap
1410 KC	1410 KC	.00005 Mfd.	Antenna	L8, L2, L1	Osc., R.F., Ant.
600 KC	600 KC	.00005 Mfd.	Antenna	L7	Osc. Padder

©John F. Rider

SEARS, ROEBUCK & CO.

MODEL 6290,
CHASSIS 101.667B

IMPORTANT ALIGNMENT NOTES

Always keep the output power from the generator at its lowest possible value to prevent the AVC of the receiver from interfering with accurate alignment.

The Alignment Procedure should be repeated in the original order, step by step to insure greater accuracy.

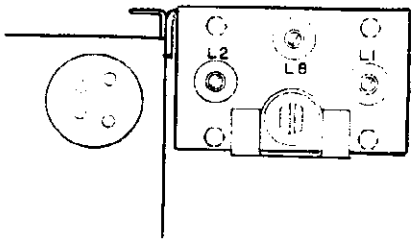

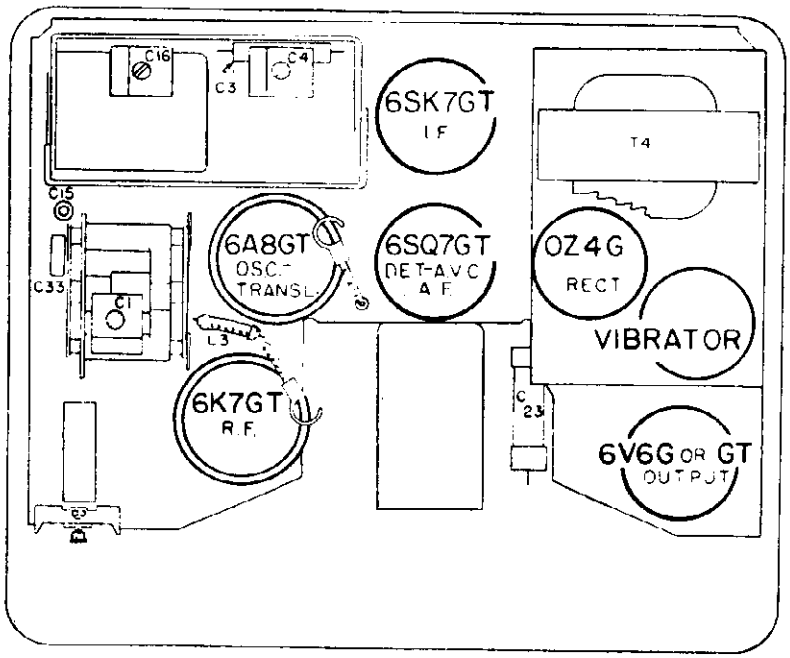

LOCATION OF PARTS - BOTTOM COVER REMOVED

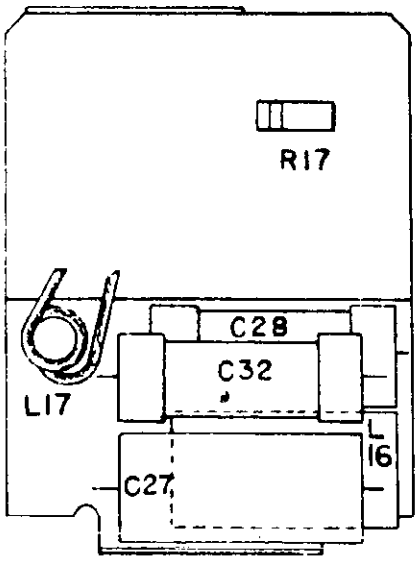

PARTS UNDER POWER SUPPLY

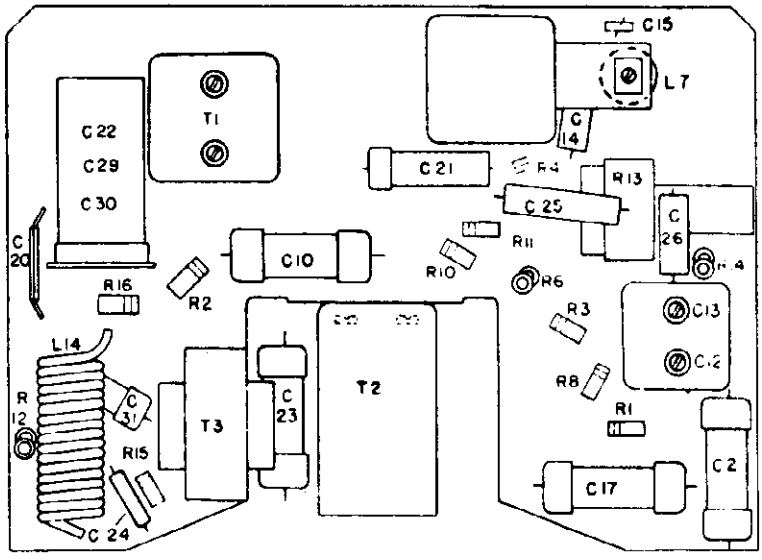

LOCATION OF PARTS - TOP COVER REMOVED

SPECIFICATIONS

Power Supply:
All models available.....6 Volt DC; 6.9 Amperes

Frequency Range:
Standard Broadcast.....540-1600 KC

Power Output:
Undistorted.....3.75 Watts
Maximum.....5.65 Watts

MODEL 6290,
CHASSIS 101.667-1B

SEARS, ROEBUCK & CO.

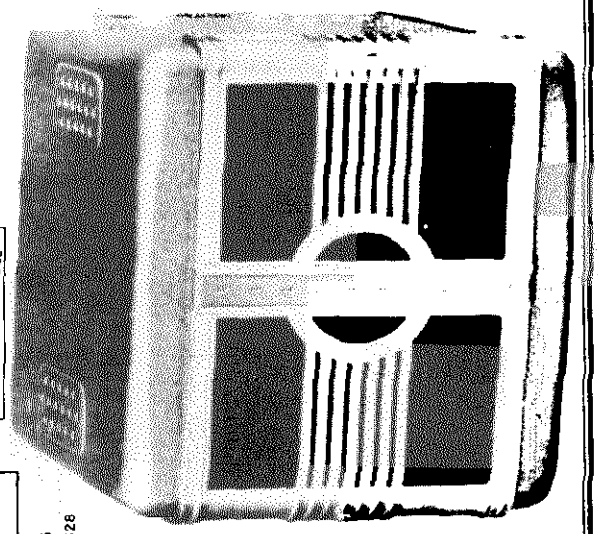

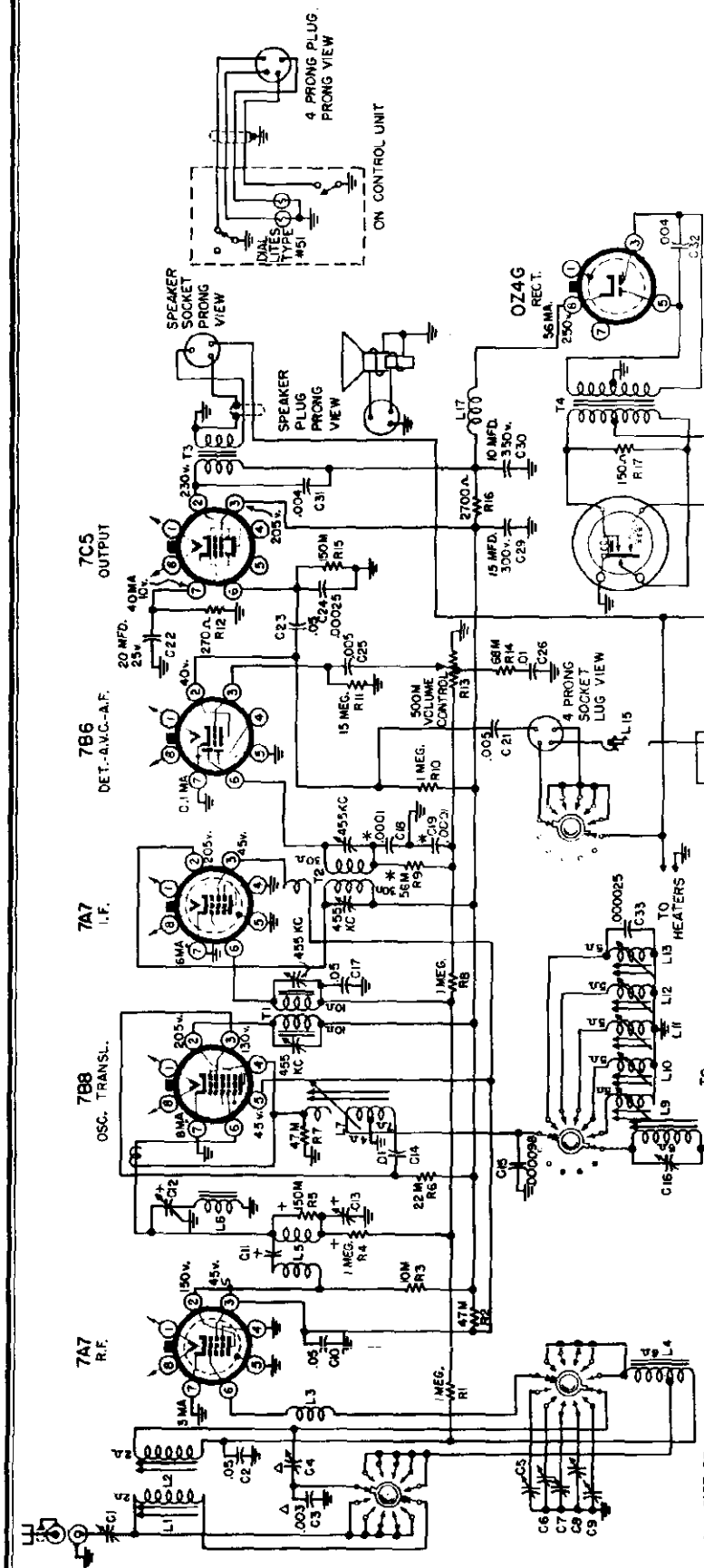

POWER SUPPLY

All models rated at 6 Volts DC; 6.9 Amperes.

TUNING

Manual and 5 electrical push buttons.

FREQUENCY RANGE

540 - 1600 Kc.

ANTENNA CAPACITY

50 - 90 mmfd.

SEARS, ROEBUCK & CO. MODEL 6290, CHASSIS 101.667-1

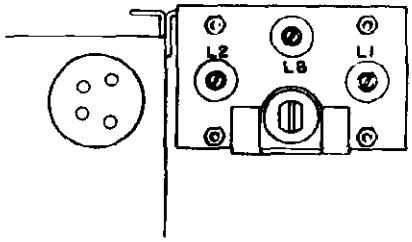

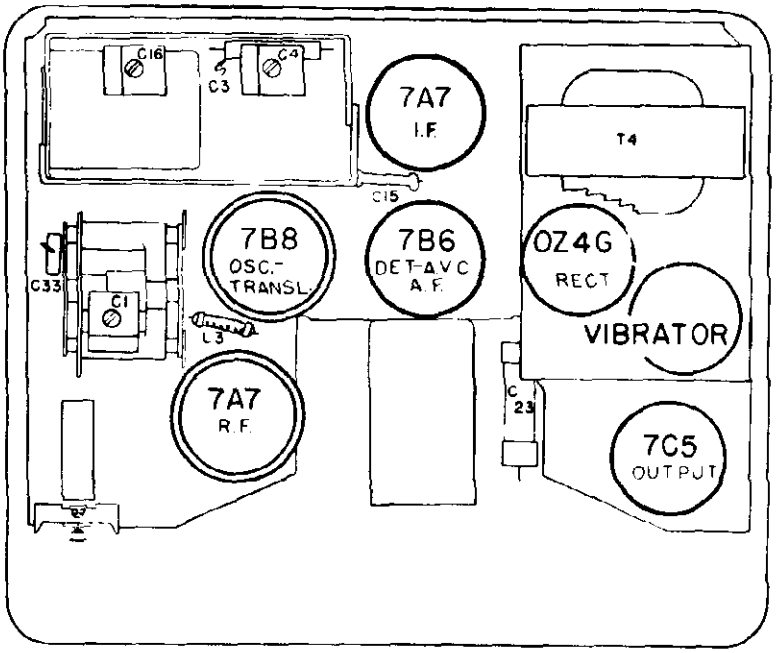

LOCATION OF PARTS - BOTTOM COVER REMOVED

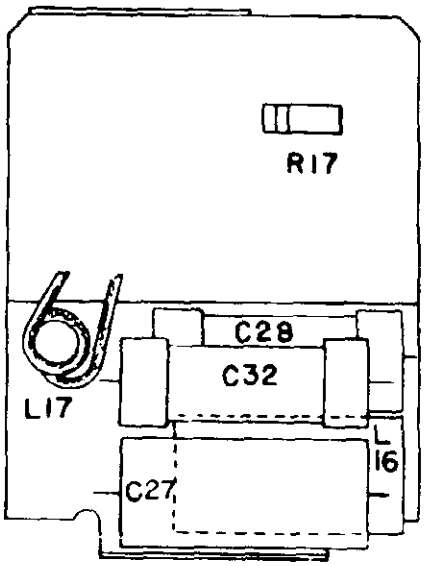

LOCATION OF PARTS
UNDER POWER SUPPLY

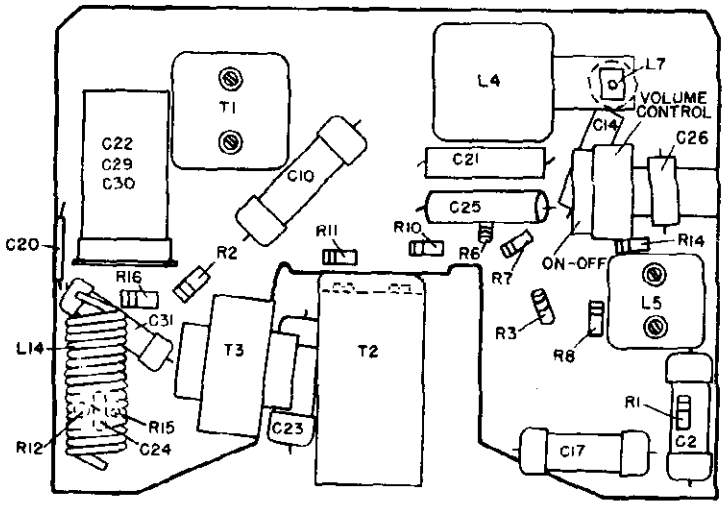

LOCATION OF PARTS - TOP COVER REMOVED

MATCHING THE ANTENNA:

Before proceeding with this adjustment the receiver should be left on for about 15 minutes to warm up.

An adjusting screw, accessible with a screw driver through the hole in the bottom cover of the case, is provided to match the receiver to the car antenna. With the receiver adjusted for "DIAL" tuning, use the Station Selector knob to tune in a very weak station at about 1400 kilocycles, with the volume control fully on. Then turn the adjusting screw to the point affecting maximum volume.

MODEL 6290,
CHASSIS 101.667-1B

SEARS, ROEBUCK & CO.

ALIGNMENT PROCEDURE

PRELIMINARY

Output Meter Connection . . . . . Across Loud Speaker Voice Coil
Output Meter Reading to Indicate Standard Output of 1.0 Watt . . . . . 1.78 Volt
Connection of Signal Generator Ground Lead . . . . . Receiver Chassis
Connection of Signal Generator Output Lead . . . . . See Chart Below
Dummy Antenna Value to be in Series with Generator Output . . . . . See Chart Below
Position of Volume Control . . . . . Fully On
Position of Tone Control . . . . . Treble

POSITION OF TUNER	GENERATOR FREQUENCY	DUMMY ANTENNA	GENERATOR CONNECTION	TRIMMER ADJUSTMENTS IN ORDER SHOWN	TRIMMER FUNCTION
Closed	455 KC	0.1 Mfd.	Translator Grid	T2, T1	I.F.
Closed	455 KC	0.1 Mfd.	R. F. Grid	C12 *	I.F. Trap
1610 KC	1610 KC	.00005 Mfd.	Antenna	C16, C4, C1	Osc.,R.F., Ant.
1610 KC	2520 KC	.00005 Mfd.	Antenna	C13 *	Image Trap
1410 KC	1410 KC	.00005 Mfd.	Antenna	L8, L2, L1	Osc.,R.F., Ant.
600 KC	600 KC	.00005 Mfd.	Antenna	L7	Osc. Padder

IMPORTANT ALIGNMENT NOTES

Always keep the output power from the generator at its lowest possible value to prevent the AVC of the receiver from interfering with accurate alignment.

The alignment procedure should be repeated in the original order, step by step to insure greater accuracy.

* The signal generator should be adjusted for high output and the trimmer should be adjusted for minimum response.

THE PUSH BUTTON TUNING MECHANISM:

Preselection of push button tuned stations is accomplished by settings of the iron cores in the oscillator coils and settings of the trimmer condensers across the antenna coil. The proper coils are selected by a switch which is rotated one step at a time by means of a solenoid, controlled by the tuning push button. Pushing the button also mechanically rotates the station call letter drum.

Each button can be set to a station within a certain frequency range as follows:

STATION	FREQUENCY RANGE
#1	535 to 920 Kc
#2	630 to 1070 Kc
#3	690 to 1170 Kc
#4	850 to 1450 Kc
#5	950 to 1610 Kc

To set up the mechanism, insert the call letter tabs in their proper frequency order in the call letter drum. The drum is accessible by removing the snap-in button at the top of the push button unit before mounting the unit. One of the positions is for manual tuning. When this position is reached, the manual tuning dial will become illuminated and the receiver can be tuned manually.

Stations are set up by removing the front grille of the receiver, exposing the station tuning screws. The adjusting screws are labeled. The Osc. screw must be adjusted first; then the ANT. screw. Then repeat the two adjustments.

TO SYNCHRONIZE THE MECHANISM, PUSH THE TUNING BUTTON UNTIL THE MANUAL TUNING DIAL BECOMES ILLUMINATED. REMOVE THE PUSH BUTTON CABLE FROM ITS SOCKET IN THE SIDE OF THE RECEIVER CASE AND THEN PUSH THE BUTTON UNTIL THE "DIAL" TAB COMES INTO VIEW. THEN REINSERT THE CABLE PLUG.

Under certain conditions the mechanism may fall out of synchronism if the button is not pushed all the way in and completely released when operating it. The user should be instructed accordingly.

SCHEMATIC LOCATION	PART NUMBER	DESCRIPTION
	R42490	Control - Push Button Unit
	R42491	Cable & Plug Assembly (Part of R42490)
	R42492	Switch - Tone (Part of R42490)
	R45221	Control - Manual Tuning
	R40079	Control - Manual Volume
	R42847	Drum - Call Letter
	R10292	Fuse - 15 Amp. - 25 V.
	R52812	Grille - Case & Screen Assembly
		Lamp - Dial - Mazda, Type #51
	R64093	Leaflet - Instruction
	R45321	Nut - Wing - 1/4-20
	R45282	Nut - Wing - #10-24
	R45205	Relay & Switch Assembly
R17		Resistor - 150 Ohm - 1 W.
R12		Resistor - 270 Ohm - 1 W.
R16		Resistor - 2700 Ohm - 1 W.
R3		Resistor - 10,000 Ohm - 1/2 W.
R6		Resistor - 22,000 Ohm - 1/2 W.
R7		Resistor - 47,000 Ohm - 1/2 W.
R2		Resistor - 47,000 Ohm - 1 W.
R14		Resistor - 68,000 Ohm - 1/2 W.
R15		Resistor - 150,000 Ohm - 1/2 W.
R1,R8,R10		Resistor - 1 Megohm - 1/2 W.
R11		Resistor - 15 Megohm - 1/2 W.
	R45226	Screen - Speaker
	R42849	Socket - Lamp
	R20539	Socket - Rectifier
	R42224	Socket - Control Plug
	R62871	Socket - 8 Prong Lock-in
	R19321	Socket - Vibrator
	R57193	Shield - Tube
	R61409	Speaker - 7" P.M.
	R19157	Strap - Ground
	R11534	Stud - Speaker Mounting
	R42274	Suppressor - Distributor
	R42493	Switch - Station Selector
T1	R62516	Transformer - I.F. #1
T2	R45019	Transformer - I.F. #2
T4	R45100	Transformer - Power
T3	R45079	Transformer - Output
	R45160	Vibrator
	R45265	Bolt - Carriage #10-24 x 3/4"
	R45228	Bracket - Upper Speaker Mtg.
	R45817	Bracket - Lower Speaker Mtg.
	R42306	Cable - Flex. Dr. - Volume Control
	R42373	Cable - Flex. Dr. - Volume Control - Extra Length
	R42307	Cable - Flex. Dr. - Tuning Control
	R42374	Cable - Flex. Dr. - Tuning Control - Extra Length
	R45020	Cable - Speaker
L14	R5220A	Coil - Spark Choke
	R9741	Clip - Ammeter
L4	R45112	Coil - Antenna
L4	R48820	Coil - Antenna Choke
R4,R5,L5,L6, C11,C12,C13	R62517	Coil - Untuned R. F.
L7	R47294	Coil - Oscillator
C5,C6,C7,C8, C9,L9,L10,L11, L12,L13	R45097	Coils - Perm. & Capacitor Assy.
C3,C4,C16, L1,L2,L8	R45017	Coil - Antenna - Oscillator, Manual Tuning
L16	R9044G	Coil - Hash Choke
L17	R5114CM	Coil - Hash Choke
	R16149	Capacitor - Ammeter
	R16150	Capacitor - Generator
C22,C29,C30	R42243	Capacitor - Electrolytic - 20 Mfd. 25 V. 15 Mfd. 300 V., 10 Mfd. 350 V.
C1	R45237	Capacitor - Trimmer
C27,C28		Capacitor - .5 Mfd. 100 V.
C2,C10,C17,C23		Capacitor - .05 Mfd. 600 V.
C14,C26		Capacitor - .01 Mfd. 600 V.
C21,C25		Capacitor - .005 Mfd. 600 V.
C31		Capacitor - .004 Mfd. 600 V.
C32		Capacitor - .004 Mfd. 1500 V.
C24		Capacitor - .00025 Mfd. Mica
C15	R47295	Capacitor - .000098 Mfd. - Temp. Compensator
C20	R43696	Capacitor - .00025 Mfd. Mica - Dual
R13	R42244	Control - On-Off & Volume

MODEL 8010,
CHASSIS 132.840

SEARS, ROEBUCK & CO.

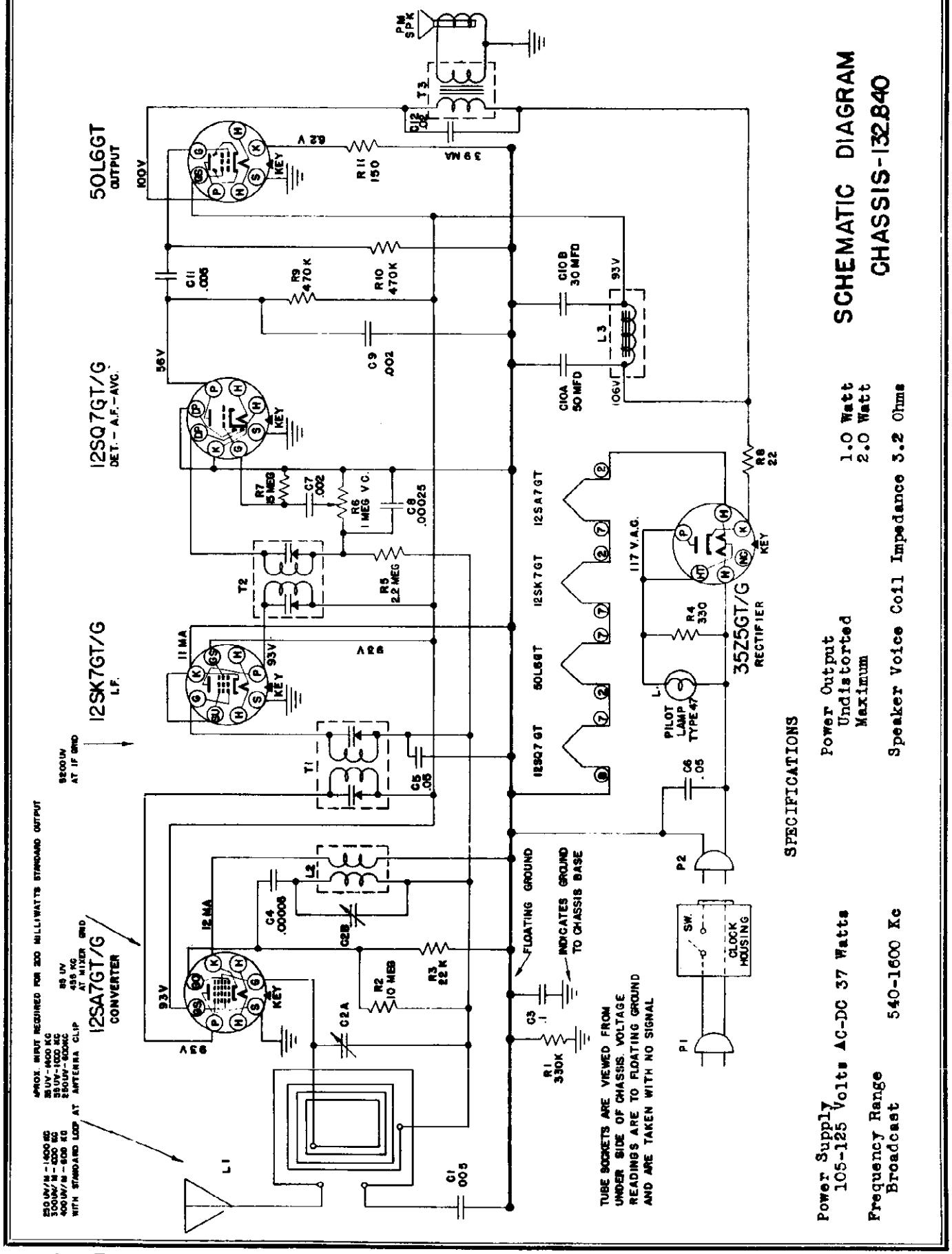

© John F. Rider

SEARS, ROEBUCK & CO.

MODEL 8010,
CHASSIS 132.840

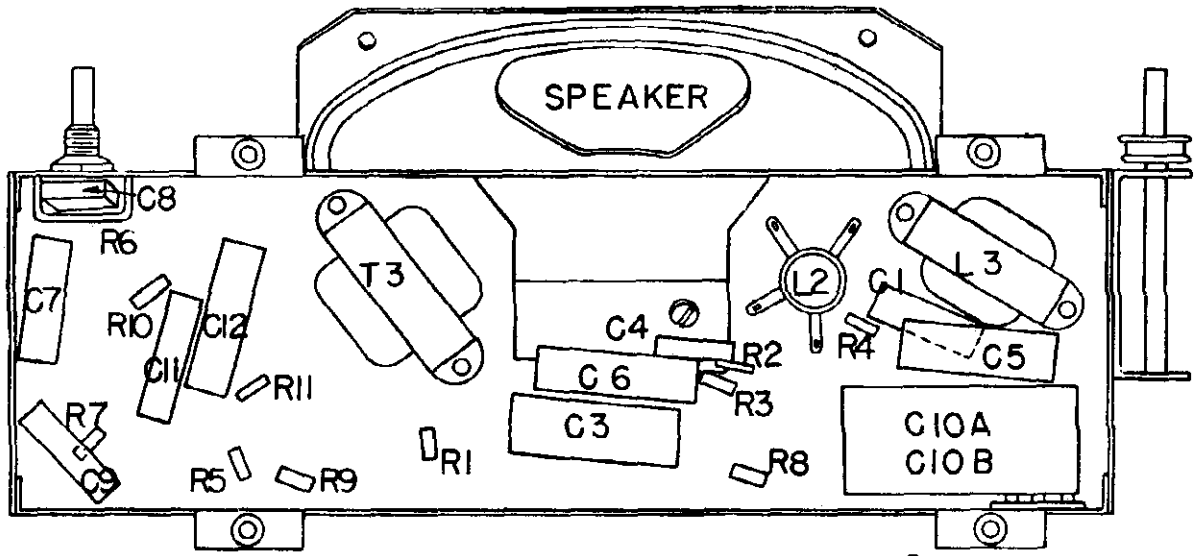

LOCATION OF PARTS UNDER CHASSIS

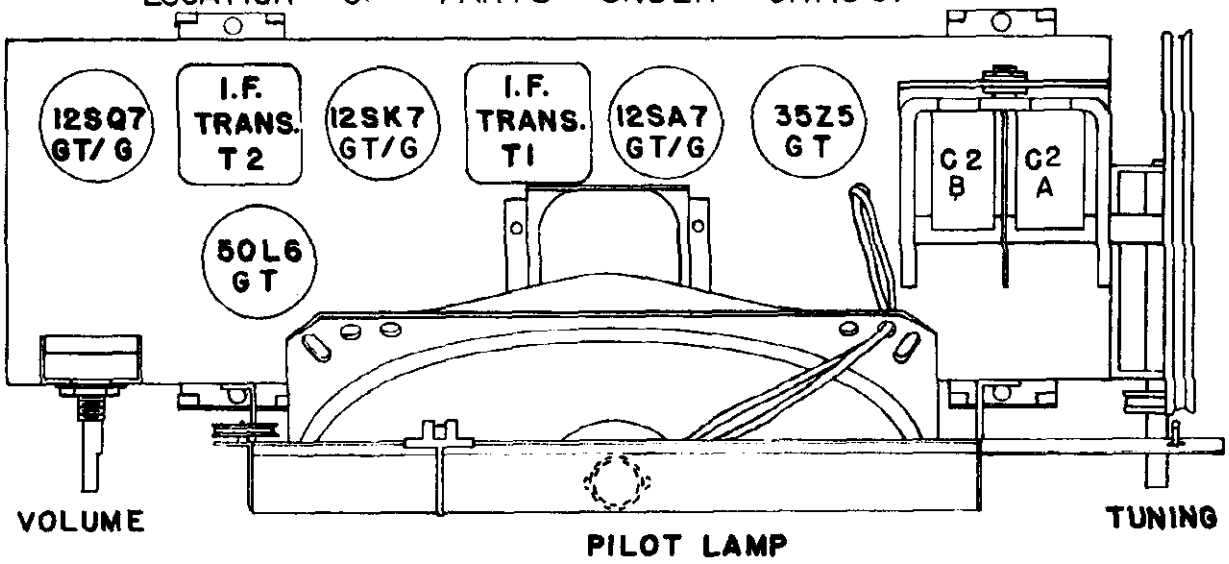

PILOT LAMP

TUBE LAYOUT OUTLINE

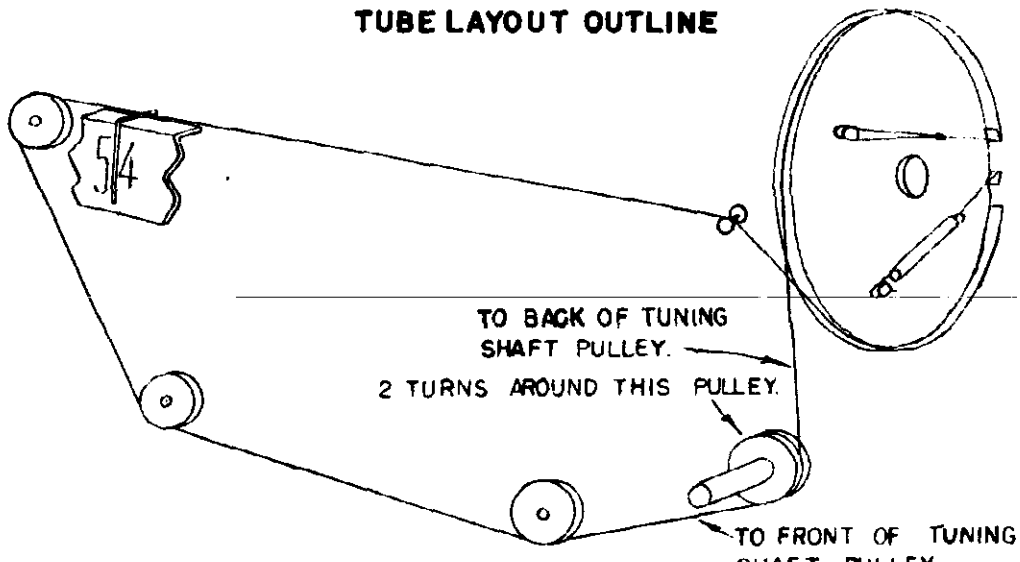

DIAL STRINGING ARRANGMENT

MODEL 8010,
CHASSIS 132.840

SEARS, ROEBUCK & CO.

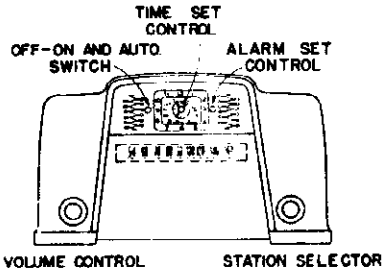

ALIGNMENT PROCEDURE

PRELIMINARY:

Output meter connection ..... Across Speaker Voice Coil
Output meter reading to indicate 200 MW (Standard output) ..... .8 Volt
Generator modulation ..... 30 % 400 Cycles
Position of volume control ..... Fully Clockwise
Dial pointer position with variable condenser closed ..... Last Mark on Dial

POSITION OF VARIABLE	GENERATOR FREQUENCY	DUMMY ANTENNA	GENERATOR CONNECTION (HIGH SIDE)	GENERATOR CONNECTION GND. LEAD	ADJUST TRIMMERS ORDER SHOWN	TRIMMER FUNCTION
Open	455 KC	.05 Mfd.	Mixer Grid	Fltg. Gnd.	T2-T1	IF
1400 KC	1400 KC	50 Mmf.	*Ant. Lead	Fltg. Gnd.	C2B	Oscillator
1400 KC	1400 KC	50 Mmf.	*Ant. Lead	Fltg. Gnd.	C2A	Antenna
600 KC	600 KC	50 Mmf.	*Ant. Lead	Fltg. Gnd.	**Check Point	Antenna

IMPORTANT ALIGNMENT NOTES

* Connect generator lead to green wire on loop antenna or a test loop may be used on the generator placed a short distance from the set loop.
**Check sensitivity at 600 KC. If low, adjust antenna section plates of variable for maximum output at 600 KC.
The alignment procedure should be repeated in the original order for greatest accuracy. Always keep the output from the signal generator at its lowest possible value to make the A. V. C. action of the receiver ineffective.

PARTS LIST

Schematic Location	Part No.	Description
L1	N21297	Antenna Loop Assembly
	N21092	Cabinet, Less Front Trim Assy.
	N21282	Trim Assembly, Cabinet Front
	N21245	Choke Filter.
*See note below	N21285	Clock, less knobs, cord & metal hang.
	N21693	Knob, Clock, Off-On-Auto
	N21694	Knob, Clock, Alarm Set
	N21695	Knob, Clock Time Set
L2	N19554	Coil, Oscillator
C1, 11		Condenser, .005 mfd, 400V
C2A,2B	N21305	Condenser, Variable
C3		Condenser, .1 mfd, 400V
C4		Condenser, .00005 mfd, 500V, Mica
C5		Condenser, .05 mfd, 200V
C6		Condenser, .05 mfd, 400V
C7		Condenser, .002 mfd, 400V
C8		Condenser, .00025 mfd, 500V, Mica
C9		Condenser, .0005 mfd, 500V, Mica
C10A,10B	N21253	Condenser, Electrolytic, 50-50 mfd, 150V
C12		Condenser, .02 mfd, 400V
R6	N21304	Control, Volume, 1 megohm
	N21305	Cord, Power, Chassis to Clock (11")
	N20138-11	Cord, Power, Clock (6')

M.U. Code	Schematic Location	Part No.	Description
		N19132	Cord, Dial Drive
		N21274	Insulator, Chassis
AC		N21804-2	Knob, Control, Volume or Tuning
AD			Lamp, Dial, Wazda No. 47
		N21276	Leaflet, Instruction
BS		N21295	Pointer, Dial
	R1		Resistor, 330,000 ohms, 1/4 W
	R2		Resistor, 10 megohms, 1/4 W
	R3		Resistor, 22,000 ohms, 1/4 W
	R4		Resistor, 330 ohms, 1/4 W
AAG	R5		Resistor, 2.2 megohm, 1/4 W
	R7		Resistor, 1o megohm, 1/4 W
	R8		Resistor, 22 ohms, 1/4 W
	R9, R10		Resistor, 470,000 ohms, 1/4 W
	R11		Resistor, 150 ohms, 1/4 W
		N21290	Scale, Dial
		N21291	Shaft, Tuning with Pulley
		N19254	Socket, Antenna Loop
		N21296	Socket, Dial Light, with Leads
		N21302	Speaker, 4" x 6" P. M.
		N20148	Spring, Dial Cord
		N21424	Transformer, 1st I. F.
		N21425	Transformer, 2nd I. F.
		N21247	Transformer, Output

* Repair parts for this clock are not available.

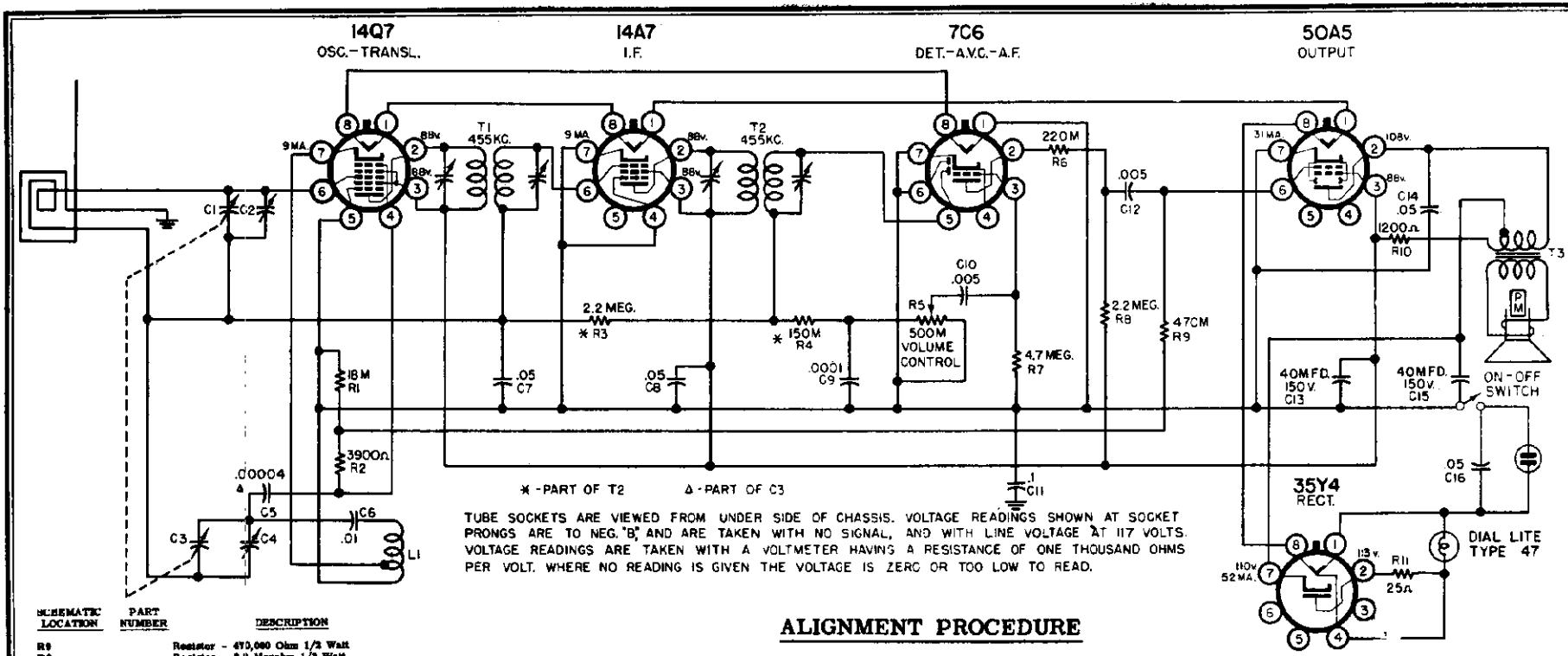

TUBE SOCKETS ARE VIEWED FROM UNDER SIDE OF CHASSIS. VOLTAGE READINGS SHOWN AT SOCKET PRONGS ARE TO NEG. "B" AND ARE TAKEN WITH NO SIGNAL, AND WITH LINE VOLTAGE AT 117 VOLTS. VOLTAGE READINGS ARE TAKEN WITH A VOLTMETER HAVING A RESISTANCE OF ONE THOUSAND OHMS PER VOLT. WHERE NO READING IS GIVEN THE VOLTAGE IS ZERO OR TOO LOW TO READ.

SCHEMATIC LOCATION	PART NUMBER	DESCRIPTION
R9		Resistor - 470,000 Ohm 1/2 Watt
R6		Resistor - 2.2 Megohm 1/2 Watt
R7		Resistor - 4.7 Megohm 1/2 Watt
R10		Resistor - 1200 Ohm 1 Watt
R11		Resistor - Glaseohm 25 Ohm 1 Watt
	R64762	Shaft - Tuning
	R45992	Shield - Pilot Lamp
	R57193	Shield - Tube
	R57049	Socket - Tube - 8 Prong Lock-In
	R64765	Socket - Pilot Lamp
	R64764	Speaker - 5 1/2" P.M.
	R62669	Cone & Voice Coil
	R64765	Transformer - Output
	R45455	Spring - Dial Cord Tension
	R41472	Cord - Dial Drive (35') (per foot)
	R64772	Transformer - I.F. #1
	R64773	Transformer - I.F. #2
	R40961	Washer - Drive Shaft Retaining
	R62206	Washer - Mica - Coupling Capacitor
	R62214	Washer - Fiat - Coupling Capacitor
	R15496	Washer - Fiat - Chassis Mounting

SCHEMATIC LOCATION	PART NUMBER	DESCRIPTION
	*64761	Background - Dial
C7,C8,C14,C16		Capacitor - .05 mfd. 600 Volt
C11		Capacitor - .1 mfd. 600 Volt
C6		Capacitor - .01 mfd. 600 Volt
C10,C12		Capacitor - .005 mfd. 600 Volt
C1,C2	R64763	Capacitor - Variable Tuning
C13,C15	R64754	Capacitor - Electrolytic - 40x40 mfd. 150 Volt
C9	R64912	Capacitor - Ceramic - 100 mmfd.
L1	R64758	Coil - Oscillator
	R64780	Control - On-Off & Volume
	R64787	Cord - Line
	R65185	Cover - Cabinet Back
	R64770	Dial - Station
	R62712	Knob - Tuning
	R62713	Knob - On-Off & Volume
		Lamp - Mazda Type 47
	R64773	Leaflet - Instruction
	R65148	Loop - Antenna Assembly
	R64761	Pointer - Dial
R3		Resistor - 3900 Ohm 1/2 Watt
R1		Resistor - 18,000 Ohm 1/2 Watt
R6		Resistor - 220,000 Ohm 1/2 Watt

ALIGNMENT PROCEDURE

PRELIMINARY

Output Meter reading to indicate 0.05 Watt across voice coil . . . . . 0.4 Volt
Generator ground lead connection . . . . . I.F. alignment-negative "B" lead
. . . . . R.F. alignment-Receiver chassis
Generator Modulation . . . . . 30%, 400 cycles
Position of Volume Control . . . . . Fully on
Position of pointer with tuner fully closed . . . . . Last line to left of 540 Kc. calibration mark on escutcheon or light brown mark about 1 inch from the left hand end on the lower edge of dial background.

Frequency Range:
Broadcast . . . . . 540-1600 KC

Power Output
Undistorted . . . . . 1.0 Watt
Maximum . . . . . 1.5 Watts

Power Supply:
All models available . . . . . 117 Volts DC, 25-60 Cycles AC, 30 Watts

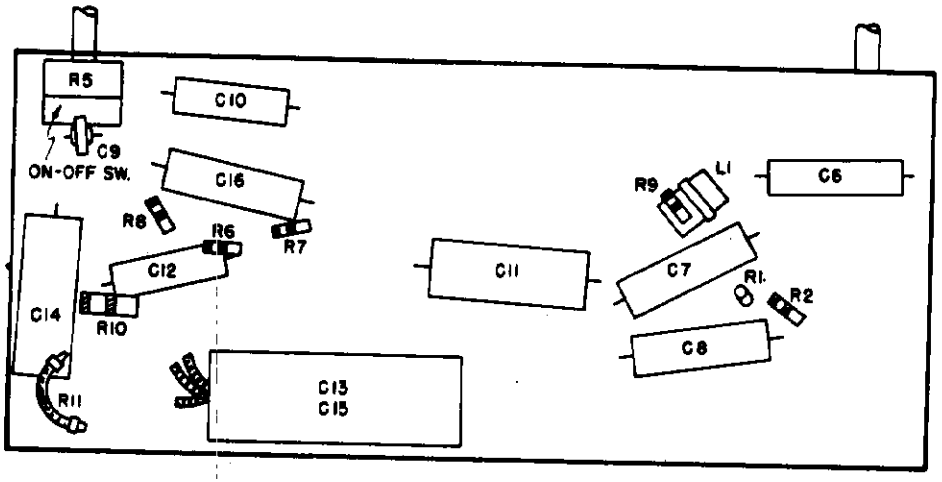

LOCATION OF PARTS UNDER CHASSIS

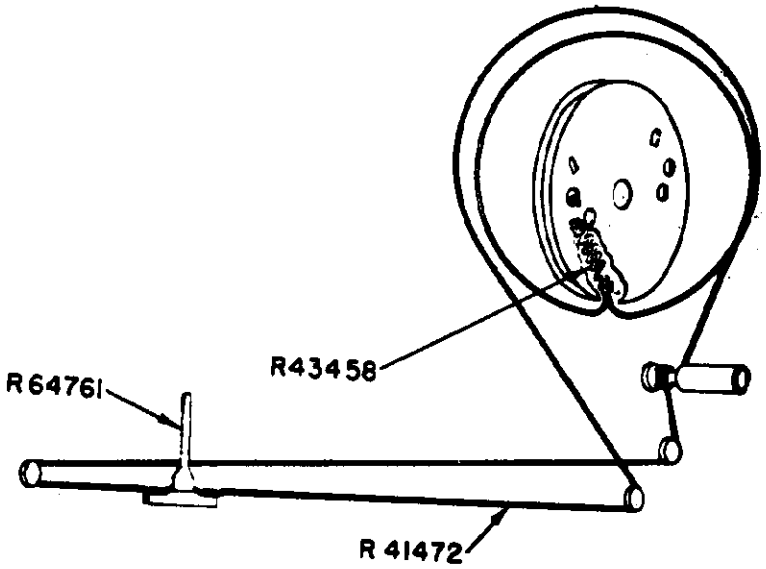

STRING AND POINTER HOOKUP

POSITION OF TUNER	GENERATOR FREQUENCY	DUMMY ANTENNA	GENERATOR CONNECTION	TRIMMERS (ADJ. IN ORDER SHOWN)	TRIMMER FUNCTION
Closed	455 Kc.	0.1 mfd.	Transl.-Grid	T2 & T1	I.F.
Fully Open	1650 Kc.	.0002 mfd.	Ant.	C4	Osc.
See Note Below	1410 Kc.	.0002 mfd.	Ant.	C2	Ant.

IMPORTANT ALIGNMENT NOTES

NOTE: It is recommended that an isolation transformer be connected between the radio chassis and the line before aligning receiver on A.C.

The 1410 Kc. calibration point is a light brown mark about 2 inches from the right-hand end on the lower edge of the dial background.

The Alignment must be done in the order given.

The entire Alignment Procedure should be repeated step by step in the original order for greatest accuracy.

Always keep the output from the generator at its lowest possible value to prevent the AVC of the receiver from interfering with accurate alignment.

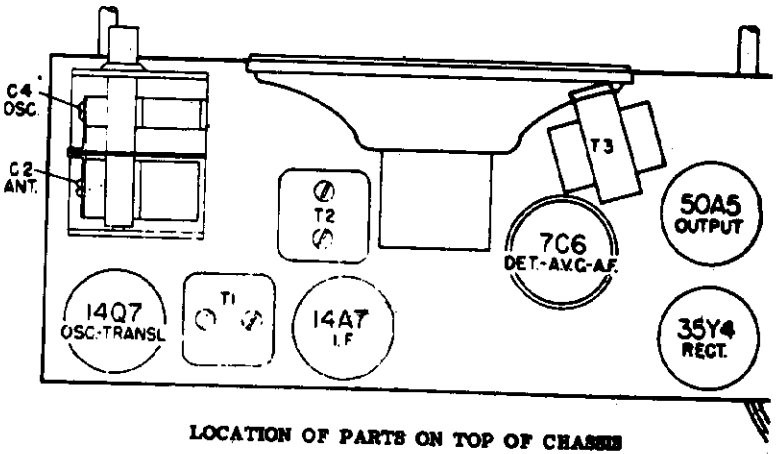

LOCATION OF PARTS ON TOP OF CHASSIS

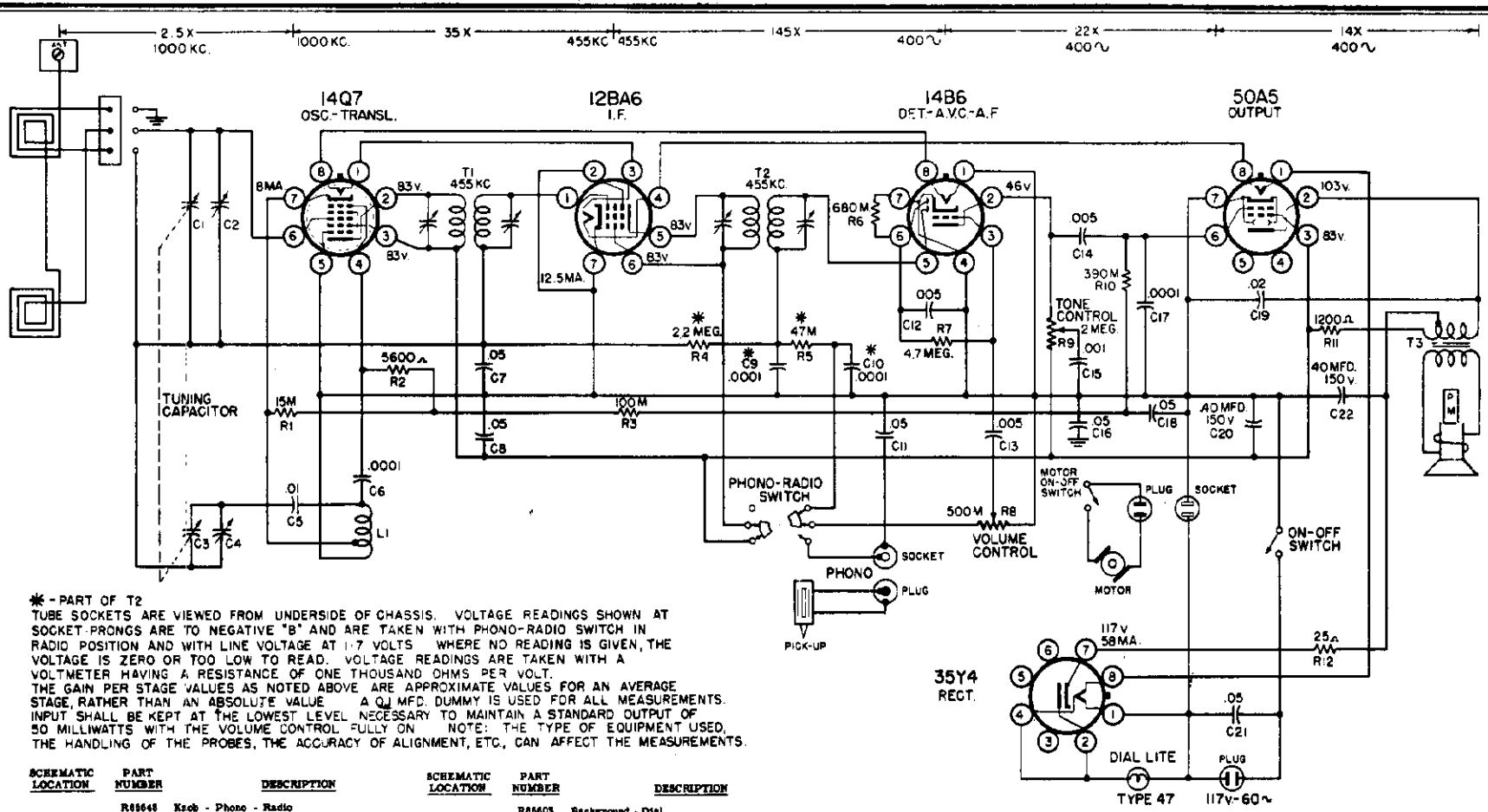

✱ - PART OF T2

TUBE SOCKETS ARE VIEWED FROM UNDERSIDE OF CHASSIS. VOLTAGE READINGS SHOWN AT SOCKET PRONGS ARE TO NEGATIVE "B" AND ARE TAKEN WITH PHONO-RADIO SWITCH IN RADIO POSITION AND WITH LINE VOLTAGE AT 117 VOLTS. WHERE NO READING IS GIVEN, THE VOLTAGE IS ZERO OR TOO LOW TO READ. VOLTAGE READINGS ARE TAKEN WITH A VOLTMETER HAVING A RESISTANCE OF ONE THOUSAND OHMS PER VOLT.

THE GAIN PER STAGE VALUES AS NOTED ABOVE ARE APPROXIMATE VALUES FOR AN AVERAGE STAGE, RATHER THAN AN ABSOLUTE VALUE. A .01 MFD. DUMMY IS USED FOR ALL MEASUREMENTS. INPUT SHALL BE KEPT AT THE LOWEST LEVEL NECESSARY TO MAINTAIN A STANDARD OUTPUT OF 50 MILLIWATTS WITH THE VOLUME CONTROL FULLY ON. NOTE: THE TYPE OF EQUIPMENT USED, THE HANDLING OF THE PROBES, THE ACCURACY OF ALIGNMENT, ETC., CAN AFFECT THE MEASUREMENTS.

SCHEMATIC LOCATION	PART NUMBER	DESCRIPTION
	R85648	Knob - Phono - Radio
	R85647	Knob - Tone
	R85646	Knob - Tuning
		Lamp - Mazda - #47
	R85644	Loop & Board Assy.
	R85602	Printer - Dial
R2	XY35621	Resistor - 5,500 ohm - 1/2 W.
R1	XY31531	Resistor - 15,000 ohm - 1/2 W.
R3	XY31041	Resistor - 100,000 ohm - 1/2 W.
R10	XY33941	Resistor - 390,000 ohm - 1/2 W.
R6	XY36842	Resistor - 680,000 ohm - 1/2 W.
R7	XY34752	Resistor - 4.7 megohm - 1/2 W.
R11	XY31221	Resistor - 1,200 ohm - 1 W.
R12	R40232	Resistor - 25 ohm - 1 W. - Ohmohm
	R85611	Shaft - Tuning
	R44897	Socket - Phono Input
	R85626	Socket - Pilot Lamp
	R44145	Socket - AC to Changer
	R51049	Socket - Tube - 8 Prong - Lock-in
	R66237	Socket - Tube - Miniature
	R85554	Speaker - 5" x 7" P.M.
	R85643	Cone & Voice Coil
T3	R85644	Output Transformer
	R43468	Spring - Tension - Drive String Assy.
	R85623	Switch - Phono - Radio
T1	R85606	Transformer - #1 I.F.
T2	R85607	Transformer - #2 I.F.

SCHEMATIC LOCATION	PART NUMBER	DESCRIPTION
	R85603	Background - Dial
	R85618	Baffle - Grille Assy.
	R85538	Button - Snap
	R85637	Cabinet - Bottom Section
	R85638	Cover
	R85640	Bumper - Lid
	R85639	Hinge
	R85640	Support - Cover
C13,C13,C14		Capacitor - .005 Mfd. - 600 V.
C15		Capacitor - .001 Mfd. - 600 V.
C7,C8,C11, C12,C16,C21		Capacitor - .05 Mfd. - 600 V.
C19		Capacitor - .02 Mfd. - 600 V.
C9		Capacitor - .01 Mfd. - 600 V.
C6,C17		Capacitor - Ceramic - 100 Mmfd.
	R85609	Capacitor - Electrolytic 80 Mfd. - 150 V. 80 Mfd. - 150 V.
C20	R85630	Capacitor - Variable - 2 Gang
C22	R51839	Capacitor - Trimmer - Single
C1,C2	R85608	Coil - Oscillator
C2	R85632	Control - On-Off & Volume
L1	R85631	Control - Tone
R8	R41671	Cord - Dial Drive - 47"
	R85634	Cord - Line
	R85624	Dial - Station - Lucite
	R85615	Drum & Bushing Assy.
	R85643	Foot - Mounting - Rubber
	R85620	Grille - Metal
	R85649	Knob - On-Off & Volume

Frequency Range

Broadcast . . . . . 540-1600 Kc.

Power Output

Undistorted . . . . . 1.5 Watts

Maximum . . . . . 2.5 Watts

MODEL 8080,
CHASSIS 101.852

SEARS, ROEBUCK & CO.

PRELIMINARY:

ALIGNMENT PROCEDURE

Output meter reading to indicate 0.05 Watt across voice coil . . . . . 0.4 Volt
Generator ground lead connection . . . . . I.F. alignment - negative "B" lead
. . . . . R.F. alignment - receiver chassis
Generator modulation . . . . . 30%, 400 cycles
Position of volume control . . . . . Fully on
Position of tone control . . . . . Treble
Position of pointer with tuner fully closed . . . . . Last line to the left of 540 kc. calibration mark

POSITION OF TUNER	GENERATOR FREQUENCY	DUMMY ANTENNA	GENERATOR CONNECTION	TRIMMER ADJUSTMENTS (IN ORDER SHOWN)	TRIMMER FUNCTION
Closed	455 Kc.	0.1 mfd.	Transl.-Grid	T2 & T1	I.F.
1600 Kc.	1600 Kc.	50 mmfd.	Hazeltine Loop	C4	Osc.
1400 Kc.	1400 Kc.	50 mmfd.	Hazeltine Loop	C2	Ant.

IMPORTANT ALIGNMENT NOTES:

NOTE: It is recommended that an isolation transformer be connected between the radio chassis and the line before aligning receiver on A.C.

The alignment must be done in the order given.

The entire alignment procedure should be repeated step by step in the original order for greatest accuracy.

Always keep the output power from the generator at its lowest possible value to prevent the AVC of the receiver from interfering with accurate alignment.

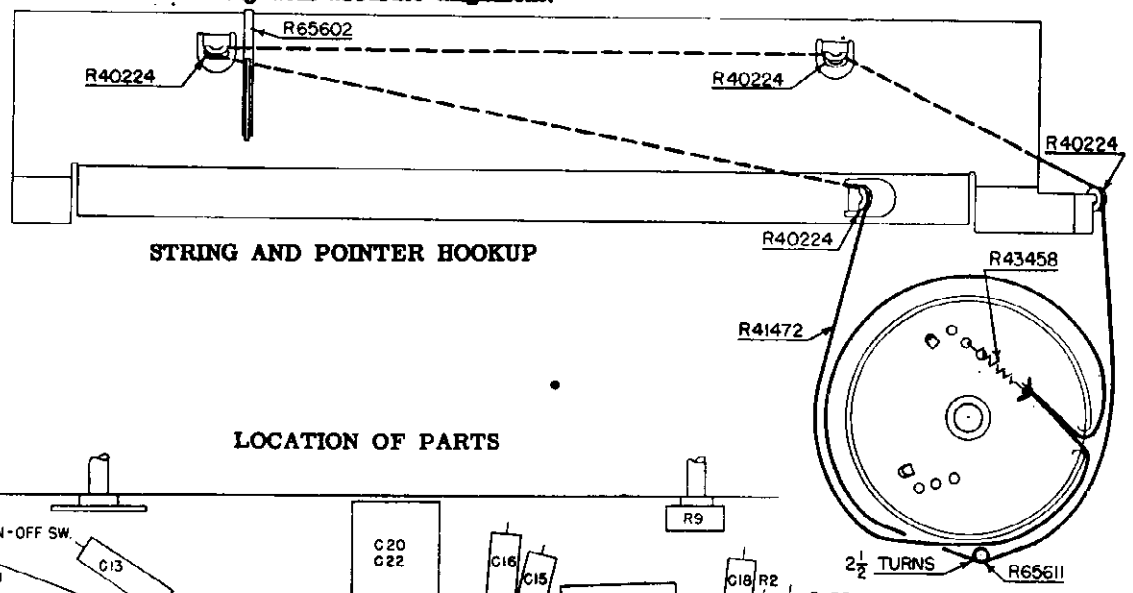

STRING AND POINTER HOOKUP

LOCATION OF PARTS

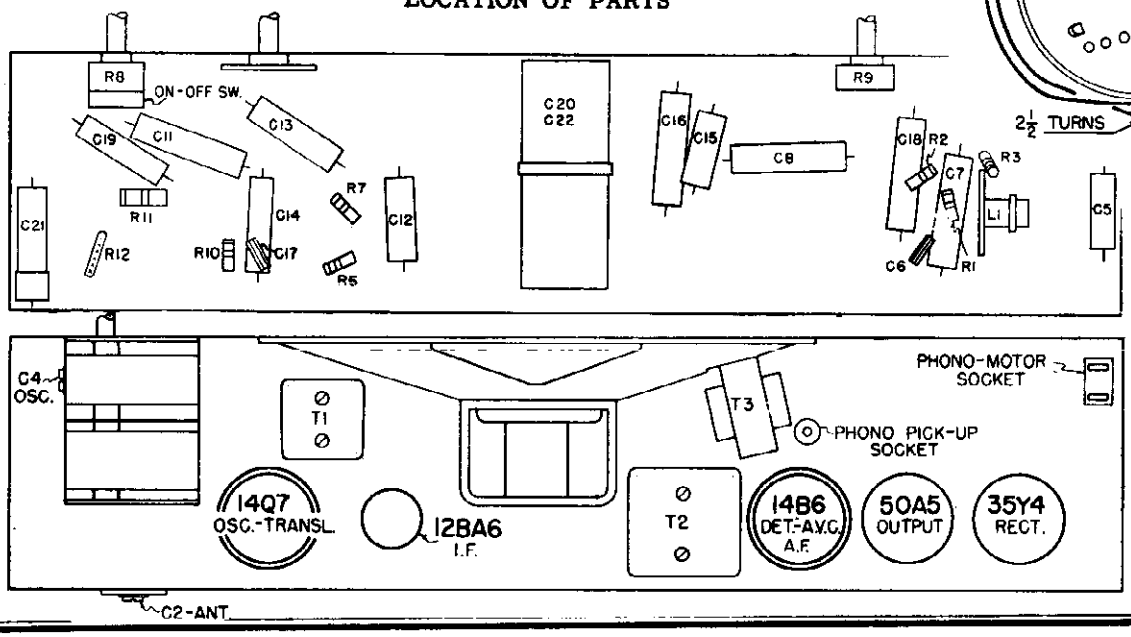

© John F. Rider

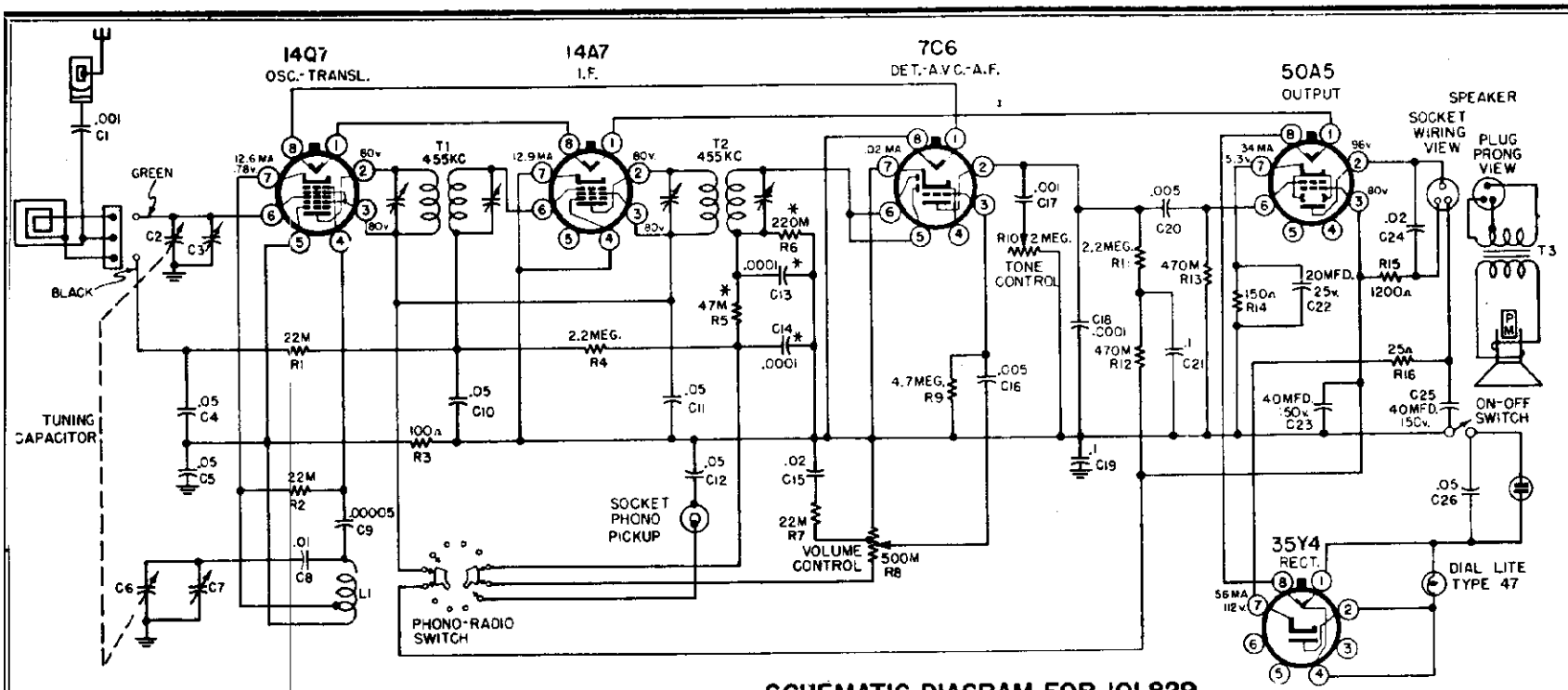

SCHEMATIC DIAGRAM FOR 101.829

* - PART OF T2

TUBE SOCKETS ARE VIEWED FROM UNDER SIDE OF CHASSIS. VOLTAGE READINGS SHOWN AT SOCKET PRONGS ARE TO NEG."B", AND ARE TAKEN WITH NO SIGNAL, WITH PHONO-RADIO SWITCH IN RADIO POSITION, AND WITH LINE VOLTAGE AT 117 VOLTS. VOLTAGE READINGS ARE TAKEN WITH A VOLTMETER HAVING A RESISTANCE OF ONE THOUSAND OHMS PER VOLT. WHERE NO READING IS GIVEN THE VOLTAGE IS ZERO OR TOO LOW TO READ.

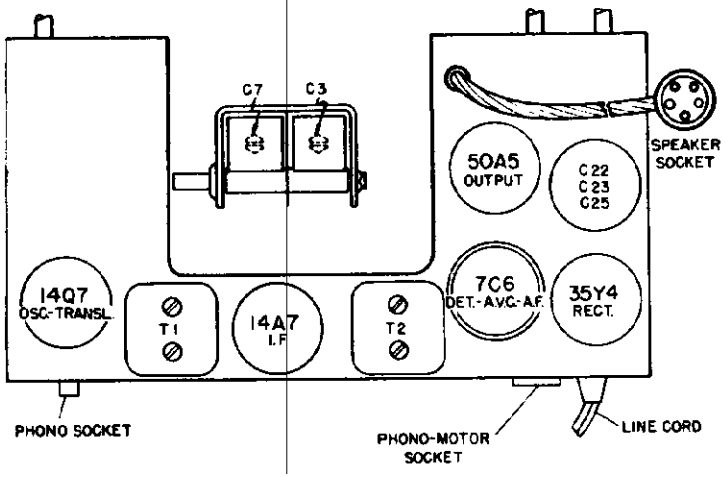

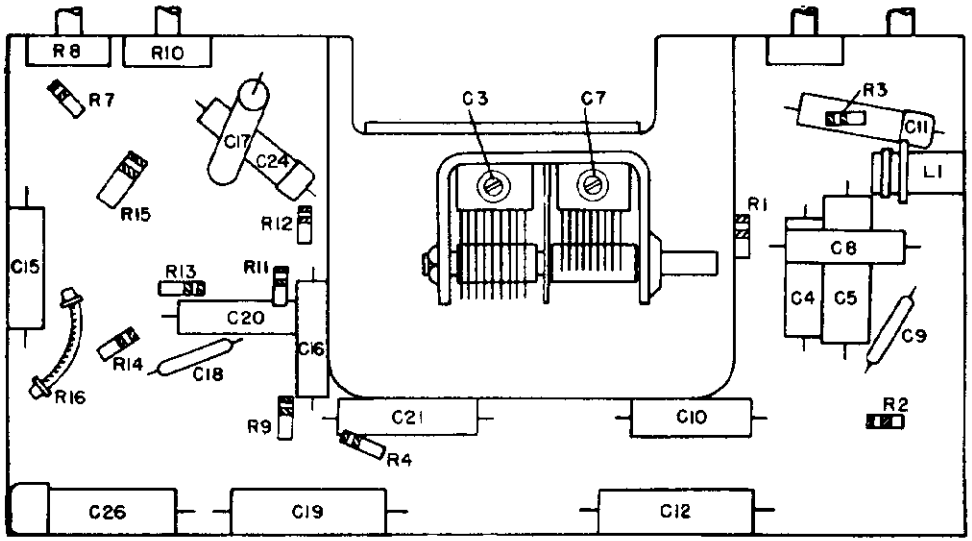

LOCATION OF PARTS UNDER CHASSIS

SEARS, ROEBUCK & CO. MODEL 8100, CHASSIS 101.829

© John F Rider

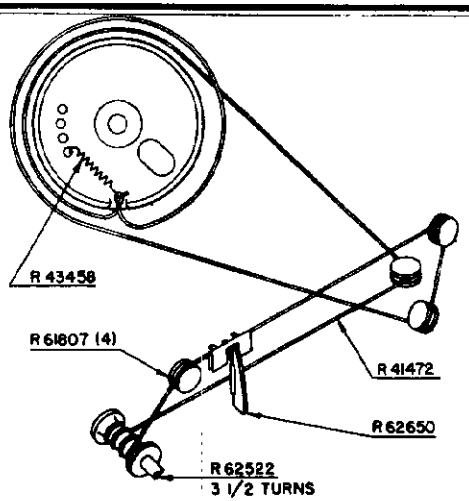

STRING AND POINTER HOOKUP

Power Supply:
All models available...117 Volts 60 Cycle AC

Frequency Range: 30 Watts
Broadcast.....540-1600 KC

Power Output:
Undistorted.....1.0 Watt
Maximum.....1.5 Watts

SCHEMATIC LOCATION	PART NUMBER	DESCRIPTION
	R62379	Background - Dial
	R60985	Board Assembly - Loop Antenna
	R13961	Button - Snap
C19,C21		Capacitor - 0.1 Mfd. 400 Volt
C8		Capacitor - .01 Mfd. 600 Volt
C15,C24		Capacitor - .02 Mfd. 600 Volt
C4,C5,C10, C11,C12,C26		Capacitor - .05 Mfd. 600 Volt
C1,C17		Capacitor - .001 Mfd. 600 Volt
C16,C20		Capacitor - .005 Mfd. 600 Volt
C9		Capacitor - Mica - 50 Mmfd.
C18		Capacitor - Mica - 100 Mmfd.
C22,C23,C25	R60416	Capacitor - Electrolytic - 20 Mfd. 25 Volt, 40 Mfd. 150 Volt, 40 Mfd. 150 Volt
C2,C6	R61100	Capacitor - Variable - 2 Gang
L1	R61107	Coil - Oscillator
R10	R62529	Control - On-Off & Tone
R8	R62612	Control - Volume
	R41472	Cord - Dial Drive - 42"
	R16706	Cord - Line
		Dial Lamp #47

ALIGNMENT PROCEDURE

PRELIMINARY:

Output meter reading to indicate 0.05 Watt across voice coil.....0.4 Volt

Generator ground lead connection.....I.F. alignment-negative "B" lead
.....Ant. alignment-Receiver chassis

Generator modulation.....30%, 400 cycles

Position of volume control.....Fully on

Position of tone control.....HI

Position of pointer with tuner fully closed..Last line beneath the 540 Kc. calibration mark on the dial or the "START" of calibration mark on the bottom of the dial background mounting plate.

POSITION OF TUNER	GENERATOR FREQUENCY	DUMMY ANTENNA	GENERATOR CONNECTION	TRIMMER ADJUSTMENTS (IN ORDER SHOWN)	TRIMMER FUNCTION
Closed	455 Kc.	0.1 mfd.	Transl.-Grid	T2 - T1	I. F.
Fully open	1650 Kc.	.0002 mfd.	Antenna	C7	Oscillator
See note below	1400 Kc.	.0002 mfd.	Antenna	C3	Translator

IMPORTANT ALIGNMENT NOTES:

NOTE: The dial pointer shall be positioned at the 1400 Kc. calibration mark on the bottom of the dial background mounting plate.

The alignment must be done in the order given.

The entire alignment procedure should be repeated step by step in the original order for greatest accuracy.

Always keep the output from the generator at its lowest possible value to prevent the AVC of the receiver from interfering with accurate alignment.

	R62678	Escutcheon & Dial Assembly		R62906	Rest - Pickup Arm
	R62534	Knob - On-Off & Tone		R62522	Shaft - Tuning
	R62535	Knob - Phono - Radio		R44145	Socket - A. C. Phono Motor
	R62712	Knob - Tuning		R44897	Socket - Phono Connector - 1 Prong
	R62531	Knob - Volume		R60515	Socket - Pilot Lamp
	R64013	Leaflet - Instruction		R60693	Socket - Speaker Cable
	R49789	Motor - Phono - 117 Volt, 60 Cycle (Less Turntable) - Alliance		R57049	Socket - Tube - 8 Prong Lock-In
	R49662	Idler Wheel - Phono Motor			WHEN ORDERING SPEAKER PARTS ALWAYS GIVE THE PART NUMBER ON THE SPEAKER
	R49663	Turntable - 9" (only)		R62636	Speaker - 6" P. M.
	R57311	Spring - 50 Cycle Conversion		R62601	Cone & Voice Coil
	R57692	Pickup Arm (Less Crystal Cartridge)	T3	R62602	Output Transformer
	R58826	Crystal Cartridge (Astatic - L-70)		R49743	Plug (Speaker)
	R57272	Plug - Phono Connector - 1 Prong		R62854	Spring - Automatic Shut Off Switch Latch
	R62650	Pointer & Slide Assembly		R43458	Spring - Dial Drive Cord Tension
	R61807	Pulley - Metal		R57457	Spring - Pickup Arm
	R3	Resistor - 100 Ohm - 1/3 Watt		R61915	Switch - Automatic Shut Off
	R14	Resistor - 150 Ohm - 1/3 Watt		R62657	Switch - Phono-Radio
	R1,R2,R7	Resistor - 22,000 Ohm - 1/3 Watt	T1	R62513	Transformer - I. F. #1
	R12,R13	Resistor - 470,000 Ohm - 1/3 Watt	T2	R60418	Transformer - I. F. #2
	R4,R11	Resistor - 2.2 Megohm - 1/3 Watt		R60480	Wafer - Electrolytic Mounting
	R9	Resistor - 4.7 Megohm - 1/3 Watt			
	R15	Resistor - 1200 Ohm - 1 Watt			
	R16	Resistor - Glasohm - 25 Ohm - 1 Watt			

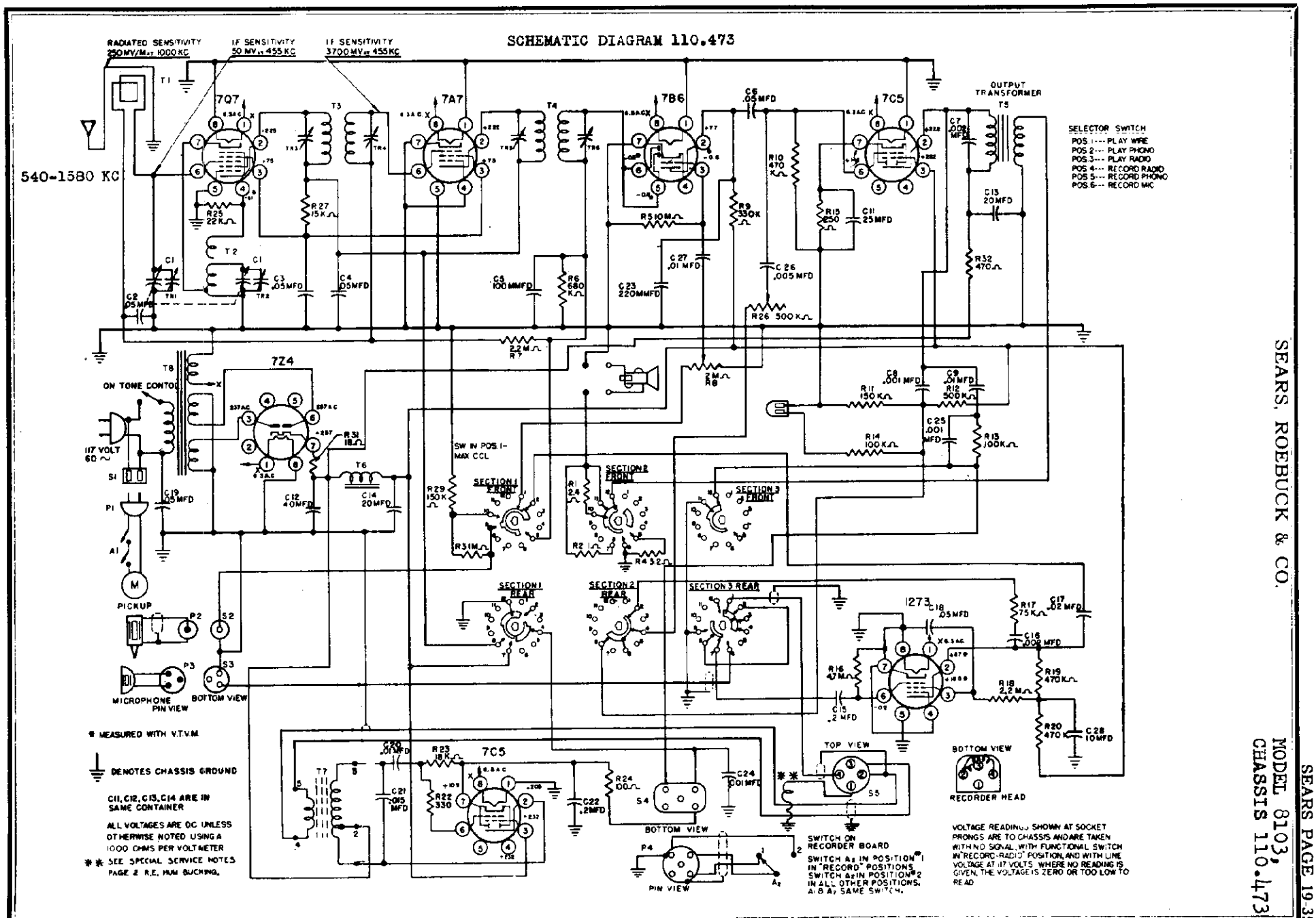
SCHEMATIC DIAGRAM 110.473
RADIATED SENSITIVITY 250 MV/M AT 1000 KC
IF SENSITIVITY 50 MV AT 455 KC
IF SENSITIVITY 3700 MV AT 455 KC
540-1580 KC
7Q7
7A7
7B6
7C5
7Z4
OUTPUT TRANSFORMER
SELECTOR SWITCH
POS. 1--- PLAY WIRE
POS 2--- PLAY PHONO
POS.3--- PLAY RADIO
POS 4--- RECORD RADIO
POS 5--- RECORD PHONO
POS.6--- RECORD MIC
ON TONE CONTOL
117 VOLT 60 ~
PICKUP
MICROPHONE PIN VIEW
BOTTOM VIEW
SW IN POS.1- MAX CCL
SECTION 1 FRONT
SECTION 2 FRONT
SECTION 3 FRONT
SECTION 1 REAR
SECTION 2 REAR
SECTION 3 REAR
1273
TOP VIEW
BOTTOM VIEW
RECORDER HEAD
PIN VIEW
SWITCH ON RECORDER BOARD
SWITCH A2 IN POSITION "1" IN "RECORD" POSITIONS. SWITCH A2 IN POSITION "2" IN ALL OTHER POSITIONS. A1 & A2 SAME SWITCH.
* MEASURED WITH V.T.V.M.
DENOTES CHASSIS GROUND
C11, C12, C13, C14 ARE IN SAME CONTAINER
ALL VOLTAGES ARE DC UNLESS OTHERWISE NOTED USING A 1000 OHMS PER VOLT METER
** SEE SPECIAL SERVICE NOTES PAGE 2 R.F. HUM BUCKING.
VOLTAGE READINGS SHOWN AT SOCKET PRONGS ARE TO CHASSIS AND ARE TAKEN WITH NO SIGNAL, WITH FUNCTIONAL SWITCH IN "RECORD-RADIO" POSITION, AND WITH LINE VOLTAGE AT 117 VOLTS. WHERE NO READING IS GIVEN, THE VOLTAGE IS ZERO OR TOO LOW TO READ

MODEL 8103,
CHASSIS 110.473

SEARS, ROEBUCK & CO.

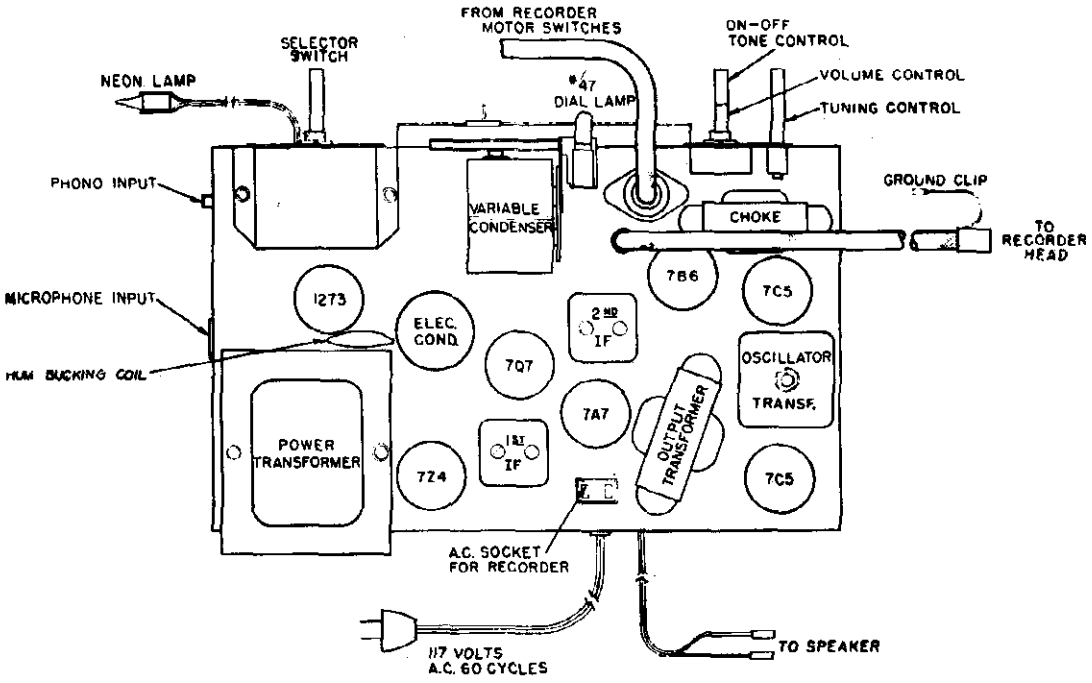

TUBE LOCATION

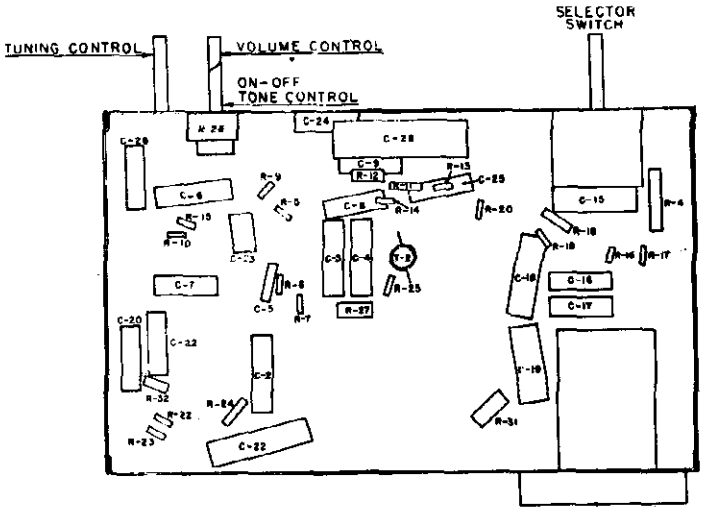

LOCATIONS OF PARTS UNDER CHASSIS

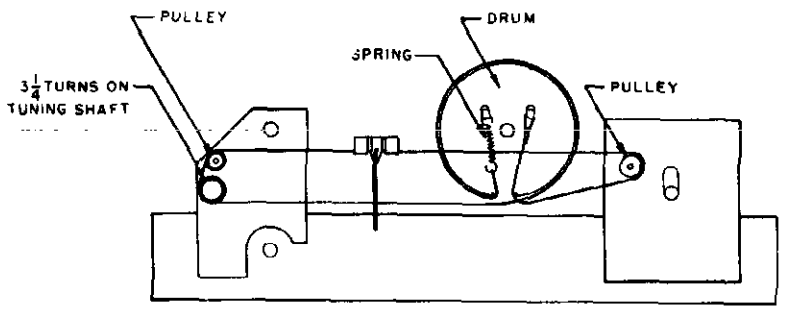

DIAL STRINGING DIAGRAM

SEARS, ROEBUCK & CO.

MODEL 8103,
CHASSIS 110.473

ALIGNMENT PROCEDURE

Output Meter Connection.....Across Loud Speaker Voice Coil
Output Meter Reading to Indicate 500 Milliwatts.....1.25 Volts
Dummy Antenna Value to be in Series with Generator Output.....See Chart Below
Connection of Generator Output Lead.....See Chart Below
Connection of Generator Ground Lead.....I. F. Alignment B - Bus
Generator Modulation.....30% at 400 cycles
Position of Volume Control.....Fully Clockwise
Position of Tone Control.....Counter Clockwise (HI)
Position of Dial Pointer with Variable Fully Closed.On Mark Below 540 KC Calibration
Position of Master Control Switch....."Play Radio"

POSITION OF VARIABLE	GENERATOR FREQUENCY	DUMMY ANTENNA	GENERATOR CONNECTION	ADJUSTMENTS (IN ORDER SHOWN)	FUNCTION
Closed	455	0.1 Mfd.	Grid 7Q7	TR3 TR4 TR5 TR6	I.F.
1500 KC	1500 KC	***	***See Below	TR2	Osc.
1500 KC	1500 KC	***	***See Below	TR1	Trans.
600 KC	600 KC	***	***See Below	(Check-Point)	Check Point

*** Run a wire from the output terminal of generator near the receiver. No connection is made between the signal generator and the receiver.

IMPORTANT ALIGNMENT NOTES

The alignment procedure should be repeated stage by stage, in the original order for greatest accuracy. Always keep the output from the test oscillator at its lowest possible value to make the AVC action of the Receiver ineffective.

Power Output Undistorted....2.25 Watts Maximum....6 Watts

SCHEMATIC LOCATION	PART NUMBER	DESCRIPTION
R3		Resistor - 1 meg ohm 1/4 Watt
R4		Resistor - 3.2 ohm 1 Watt Wirewound
R5		Resistor - 10 meg ohms 1/4 Watt
R6		Resistor - 680,000 ohms 1/4 Watt
R7		Resistor - 2.2 meg ohms 1/4 Watt
R9		Resistor - 330,000 ohms 1/4 Watt
R10		Resistor - 470,000 ohms 1/4 Watt
R11		Resistor - 150,000 ohms 1/4 Watt
R12		Resistor - 500,000 ohms 1/4 Watt
R13		Resistor - 100,000 ohms 1/4 Watt
R14		Resistor - 100,000 ohms 1/4 Watt
R15		Resistor - 250,000 ohms 1/2 Watt
R16		Resistor - 4.7 meg ohms 1/4 Watt
R17		Resistor - 75,000 ohms 1/4 Watt
R18		Resistor - 2.2 meg ohms 1/4 Watt
R19		Resistor - 470,000 ohms 1/4 Watt
R20		Resistor - 470,000 ohms 1/4 Watt
R22		Resistor - 330,000 ohms 1/4 Watt
R23		Resistor - 18,000 ohms 1/4 Watt
R24		Resistor - 100 ohms 1/4 Watt
R25		Resistor - 22,000 ohms 1/4 Watt

SCHEMATIC LOCATION	PART NUMBER	DESCRIPTION
R27		Resistor - 15,000 ohms 2 Watt
R29		Resistor - 150,000 ohms 1/4 Watt
R31		Resistor - 18 ohms, 2 Watt
R32		Resistor - 150,000 ohms 1/4 Watt
	A18145	Socket, AC
	A18144	Socket, Dial Light
	A54374	Socket, (for cable from recorder switch)
	A18101	Socket, Microphone
	A18104	Socket, Phono
	A59103	Speaker - 10" (P.M.)
	A54335	Spring - Dial Cord
	A3791	Switch - Tone - 6 Position
T3	A3371	Transformer - 1st I.F.
T4	A3655	Transformer - 2nd I.F.
T5	A1339	Transformer - Output
T6	A18176	Transformer - Bias Oscillator
T8	A1791	Transformer - Power

SCHEMATIC LOCATION	PART NUMBER	DESCRIPTION
R26	A2486	Control - Tone, with switch
R8	A2485	Control - Volume
	A54373	Cord - Dial Drive (per yard)
	A5599	Cord - Line 8 feet long
	A40131	Dial
	A4448	Escutcheon (Dial Crystal)
	A31978	Knob - Master Selector Switch
	A39171	Knob - Tone, Off-On
	A39169	Knob - Tuning
	A39170	Knob - Volume-Control
	A4926	Lamp - Neon Light Ass'y
		Lamp - Pilot Light #47
	A59396	Leaflet - Instruction
	A54372	Lens - Neon Light
T1	A28205	Loop Antenna Assy
	A8610	Microphone - Cord, Plug & Stand
	A4146	Pointer - Dial
R1		Resistor - 2.4 ohms 1/2 Watt
R2		Resistor - 1.0 ohms 1/2 Watt

SCHEMATIC LOCATION	PART NUMBER	DESCRIPTION
	A5594	Cable - Recorder Head
C1	A1695	Capacitor - Variable
C2		Capacitor - .05 mfd 200 V
C3 C4 C14 C16		Capacitor - .05 mfd 400 V
C5		Capacitor - 100 mmfd Mica or Ceramic
C7 C15		Capacitor - .002 mfd 400 V
C6 C24 C25		Capacitor - .001 mfd 400 V
C8 C20 C27		Capacitor - .01 mfd 400 V
C11 C12 C13 C14	A20114	Capacitor - Electrolytic 25 mfd 80 V 40 mfd 300 V 20 mfd 300 V
C15		Capacitor - .2 mfd 200 V
C17		Capacitor - .02 mfd 400 V
C19		Capacitor - .05 mfd Oil (metal case) 400 V
C21		Capacitor - .015 mfd 600 V
C22		Capacitor - .2 mfd 400 V
C23		Capacitor - 220 mmfd Mica or Ceramic
C26		Capacitor - .005 mfd 400 V
C28	A20117	Capacitor - Electrolytic 10 mfd 400 V
T7	A3368	Choke - Filter
T2	A28184	Coil - Oscillator B.C.

MODELS 8105, 8105A, 8106, 8106A, CHASSIS 101.833, 101.833-1A

SEARS, ROEBUCK & CO.

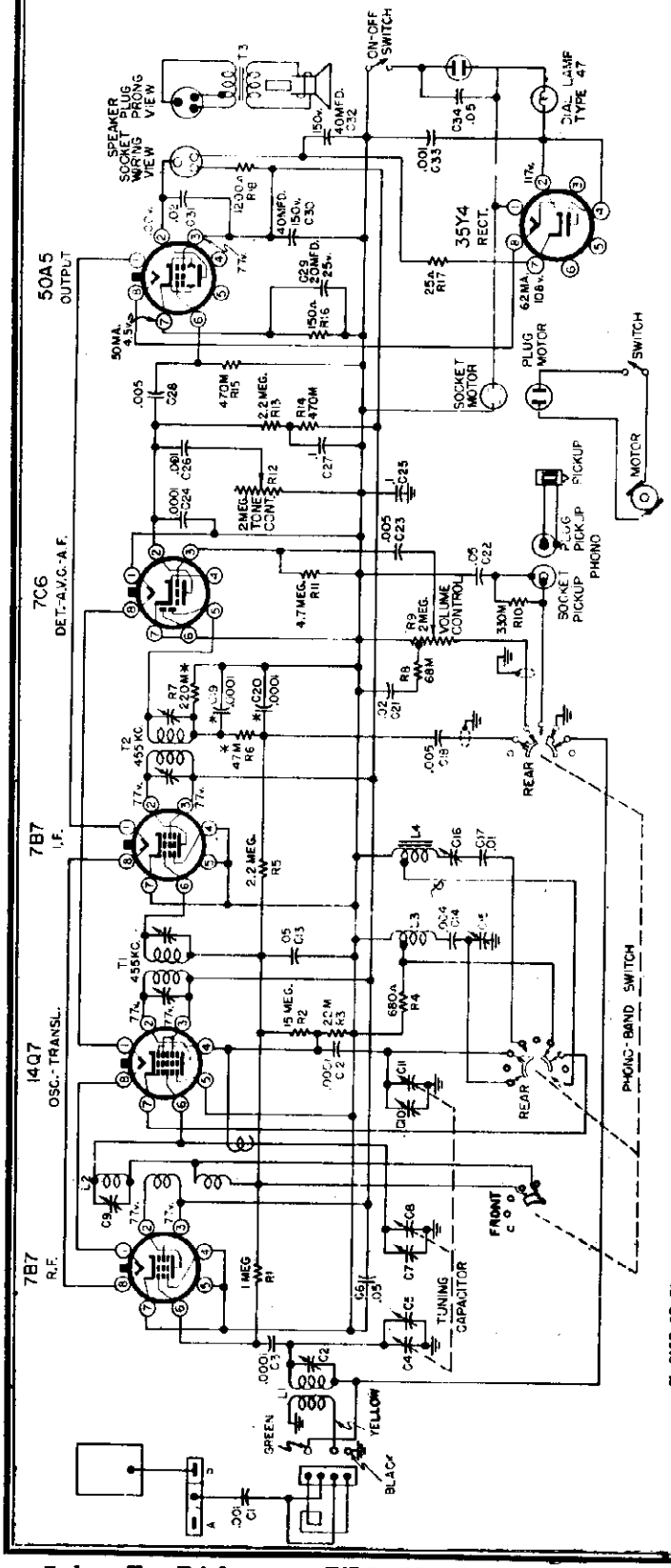

*-PART OF T2

TUBE SOCKETS ARE VIEWED FROM UNDER SIDE OF CHASSIS. VOLTAGE READINGS SHOWN IN SOCKET PRONGS ARE TO NEGATIVE "B" AND ARE TAKEN WITH NO SIGNAL, PHONO-BAND SWITCH IN BC. POSITION, AND WITH LINE VOLTAGE AT 117 VOLTS. VOLTAGES SHOWN ARE TAKEN WITH A VOLTMETER HAVING A RESISTANCE OF ONE THOUSAND OHMS PER VOLT. WHERE NO READING IS GIVEN, THE VOLTAGE IS ZERO OR TOO LOW TO READ. PHONO-BAND SWITCH IS SHOWN IN EXTREME COUNTER-CLOCKWISE (S.W.) POSITION (VIEWED FROM SHAFT END) AND ROTATES CLOCKWISE FROM SW TO BC TO PHONO. SECTIONS MARKED "REAR" ARE TRANSPARENT VIEWS.

Six Tube Superheterodyne Receiver with Push Button Tuning and Automatic Record Changer

Chassis 101.833-1A same as 101,833 except those parts
R63021 Speaker - 10" P. M.
R65588 Transformer - Output

Power Output

Undistorted 1.1 Watts

Maximum 1.9 Watts

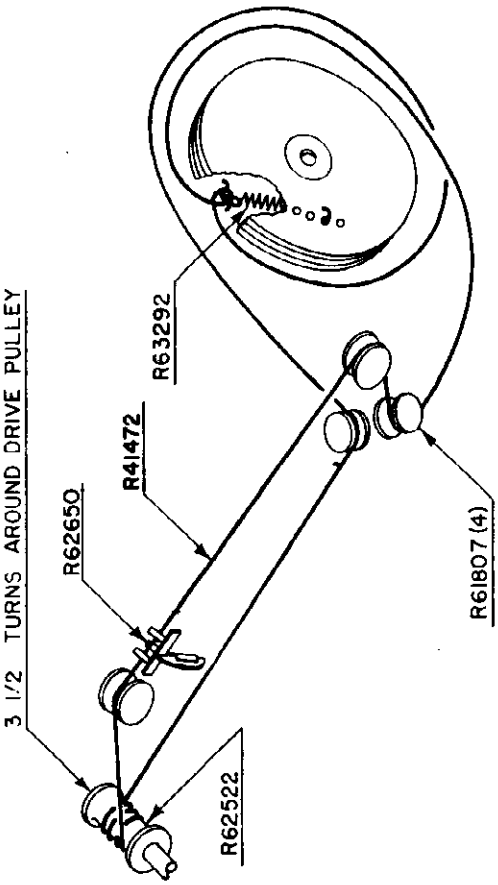

SEARS, ROEBUCK & CO. MODELS 8105, 8105A, 8106, 8106A, CHASSIS 101.833, 101.833-1A

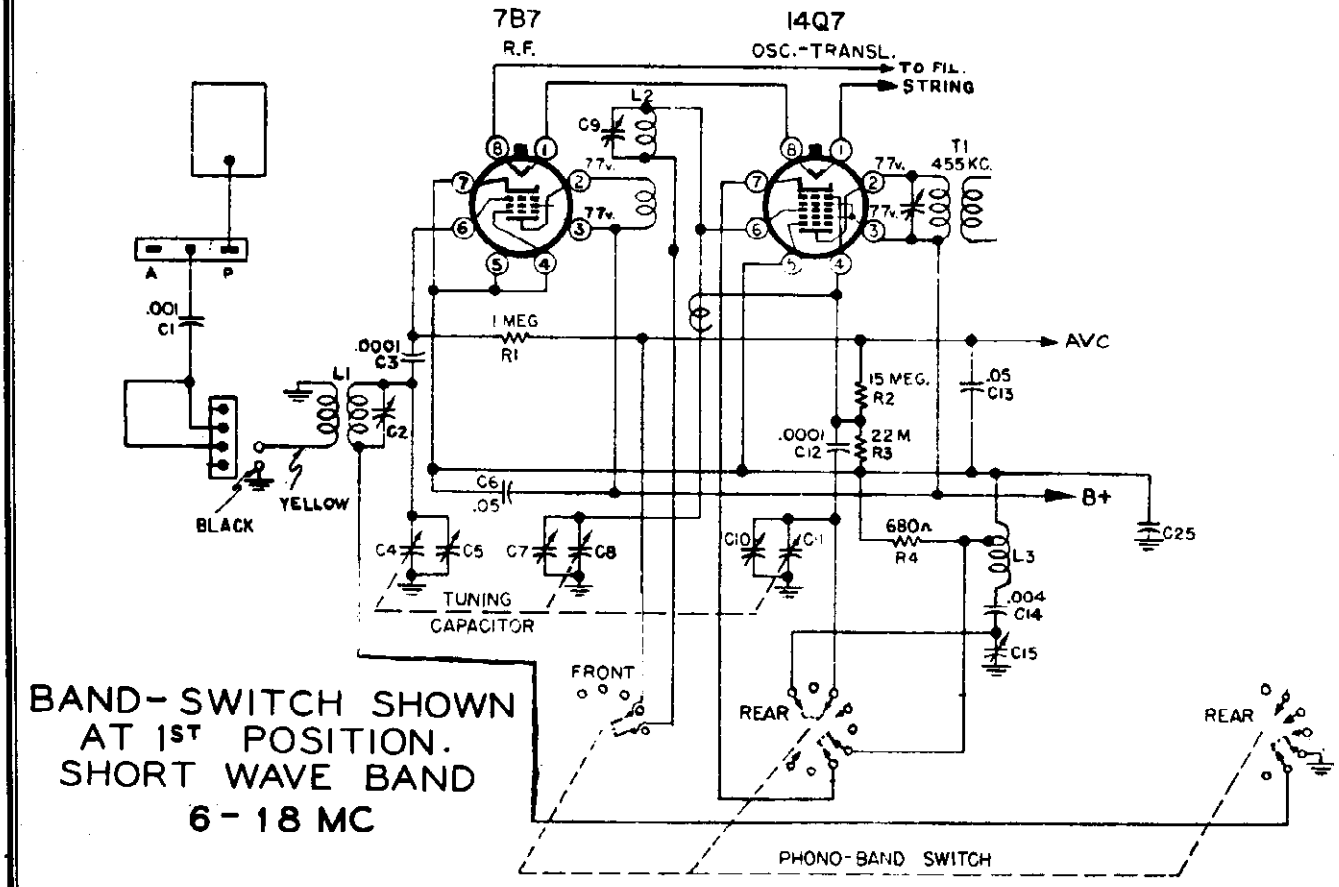

BAND-SWITCH SHOWN AT 1ST POSITION. SHORT WAVE BAND 6-18 MC

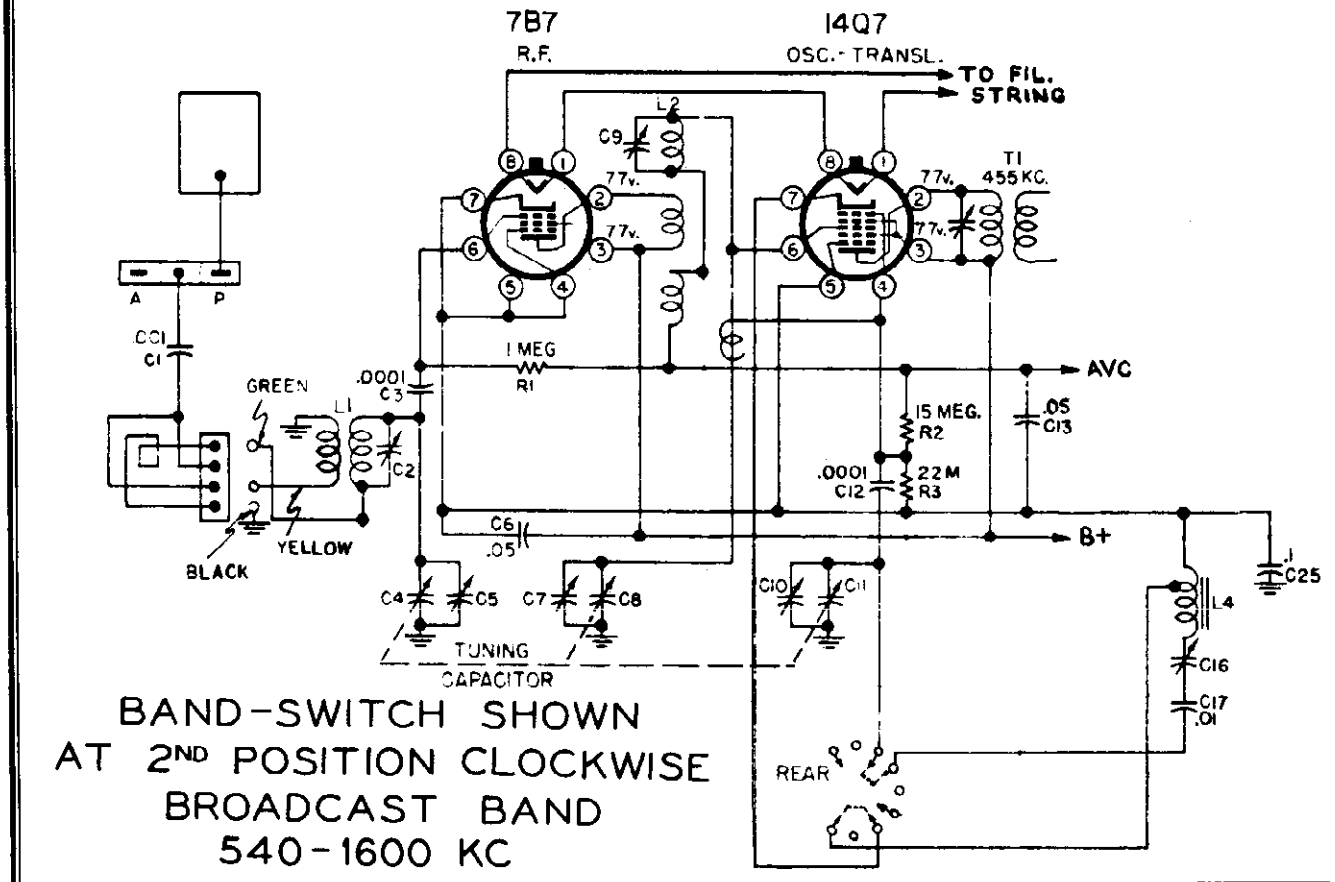

BAND-SWITCH SHOWN AT 2ND POSITION CLOCKWISE BROADCAST BAND 540-1600 KC

MODELS 8105, 8105A, 8106, 8106A, CHASSIS 101.833, 101.833-1A

SEARS, ROEBUCK & CO.

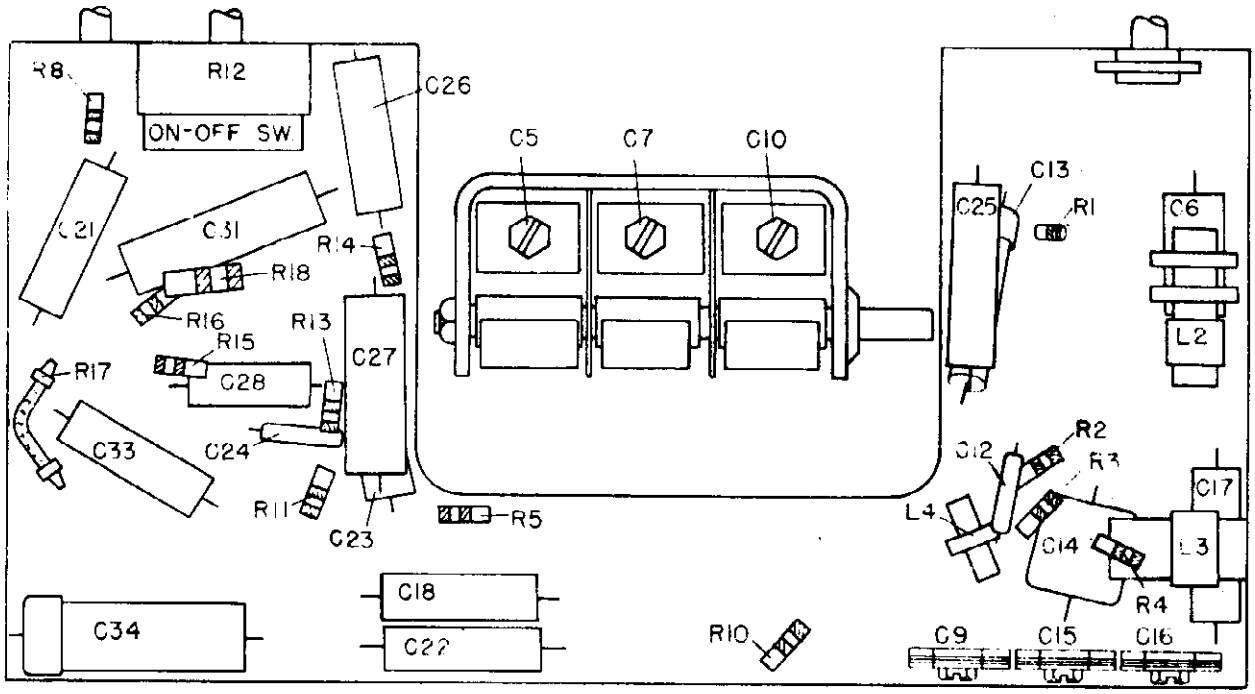

LOCATION OF PARTS UNDER CHASSIS

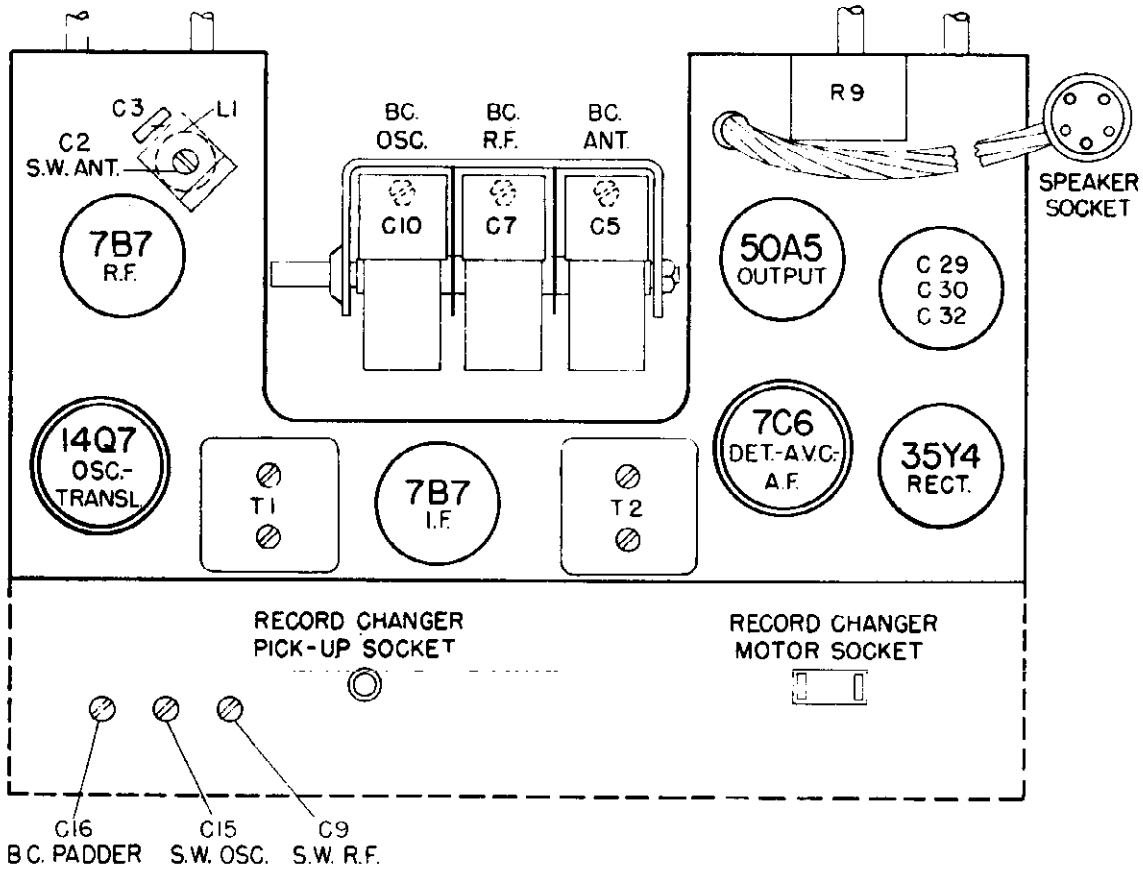

LOCATION OF PARTS ON TOP AND BACK OF CHASSIS

©John F. Rider

SEARS, ROEBUCK & CO. MODELS 8105, 8105A, 8106, 8106A, CHASSIS 101.833, 101.833-1A

REPAIR PARTS LIST

SCHEMATIC LOCATION	PART NUMBER	DESCRIPTION	MC CODE
	R42379	Background - Dial	
	R25458	Button - Push	
	R13961	Button - Snap	
C25,C27		Capacitor - .1 Mfd. 200 Volt	
C17		Capacitor - .01 Mfd. 600 Volt	
C21,C31		Capacitor - .05 Mfd. 600 Volt	
C6,C13,C28,C34		Capacitor - .05 Mfd. 600 Volt	
C1,C23,C26		Capacitor - .001 Mfd. 600 Volt	
C18,C29,C22		Capacitor - .005 Mfd. 600 Volt	
C14		Capacitor - Mica - .004 Mfd.	
C3,C12,C24		Capacitor - Mica - 100 MMfd.	
C20,C30,C32	R60416	Capacitor - Electrolytic - 40 Mfd. 160 Volt, 20 Mfd. 25 Volt, 40 Mfd. 150 V.	
C9,C10,C16	R25551	Capacitor - Trimmer - 3 Gang	
C4,C8,C11	R41500	Capacitor - Variable - 3 Gang	A0
L2	R41536	Coil - R. F. - BC & SW	
L4	R41537	Coil - Oscillator - BC	
L1	R41538	Coil - Antenna - SW	
L3	R42512	Coil - Oscillator - SW	
	R40639	Connector - Loop Terminal	
R9	R25588	Control - Volume	
R12	R25589	Control - On-Off & Tone	
	R19706	Cord - Line	
	R41478	Cord - Dial Drive	
	R25583	Cover - Tab	
	R60461	Drum & Pinion Assembly	
	R25389	Escutcheon & Dial Assembly	A5
	R25397	Dial - Station - Easily Escutcheon (Without Dial)	
	R25388		
	R60459	Gear & Hub Assembly	
	R62516	Key - Plunger	
	R25531	Knob - Volume	
	R25534	Knob - On-Off & Tone	
	R25537	Knob - BC, SW & Phono	
	R25718	Knob - Tuning	
		Lamp - Mazda Type #47	
	R44088	Leaflet - Instruction	
	R25586	Lever, Arm & Link Assembly	
	R41538	Loop & Board Assembly	

SCHEMATIC LOCATION	PART NUMBER	DESCRIPTION	MC CODE
	R25507	Plunger & Yoke Assembly	
	R25590	Pointer & Slide Assembly	
	R21807	Pulley - Metal	
R16		Resistor - 150 Ohm - 1/3 Watt	
R4		Resistor - 180 Ohm - 1/3 Watt	
R3		Resistor - 22,000 Ohm - 1/3 Watt	
R9		Resistor - 68,000 Ohm - 1/3 Watt	
R10		Resistor - 330,000 Ohm - 1/3 Watt	
R14,R15		Resistor - 470,000 Ohm - 1/3 Watt	
R1		Resistor - 1 Megohm - 1/3 Watt	
R5,R13		Resistor - 2.2 Megohm - 1/3 Watt	
R11		Resistor - 4.7 Megohm - 1/3 Watt	
R2		Resistor - 15 Megohm - 1/3 Watt	
R18		Resistor - 1200 Ohm - 1 Watt	
R17	R40238	Resistor - Rheohm - 35 Ohm - 1 Watt	
	R25305	Rocker - Bar & Plate Assembly	
	R27193	Shield - Tube	
	R44145	Socket - 2 Prong - Female A.C.	
	R44887	Socket - 1 Prong - Phono	
	R27049	Socket - Tube 8 Prong Lock-In	
	R20513	Socket - Pilot Lamp	
	R60639	Socket - Speaker Cable	
		WHEN ORDERING SPEAKER PARTS ALWAYS GIVE THE PART NUMBER ON THE SPEAKER	
	R61038	Speaker - 8" P. M.	B5
	R61037	Cone & Voice Coil	
T3	R61036	Output Transformer	
	R60427	Spring - Extension - Tuner Assembly	
	R60437	Spring - Compression - Tuner Assembly	
	R60577	Spring - Dial Drive	
	R25582	Switch - Wave	
	R25522	Tuning Shaft Assembly	
T1	R60417	Transformer - I. F. #1	
T2	R60418	Transformer - I. F. #2	
	R60460	Wafer - Electrolytic Capacitor Mounting	
	R25564	Wafer - Rear - Wave Switch	
	R25523	Washer - Spring - Lever, Arm & Link Assy.	
	R60642	Washer - Insulating - Phono Socket	

SPECIFICATIONS

Power Supply:
All models available.....117 Volts 60 Cycles AC 60 Watts

Frequency Range:
Broadcast.....540-1600 KC
Short Wave.....6-18 MC

ALIGNMENT PROCEDURE

PRELIMINARY:

Output meter reading to indicate 0.05 Watt across voice coil.....0.4 Volt
Generator ground lead connection.....I.F. alignment-negative "B" lead
.....R.F. alignment-Receiver chassis
Generator Modulation.....30%, 400 cycles
Position of volume control.....Fully on
Position of tone control.....Treble
Position of pointer with tuner fully closed.....Last line to left of 540 calibration mark on the dial scale or first light brown mark from the left-hand end on the upper edge of the dial background.

WAVE SWITCH POSITION	POSITION OF TUNER	FREQUENCY GENERATOR	DUMMY ANTENNA	GENERATOR CONNECTION	TRIMMERS (ADJ. IN ORDER SHOWN)	TRIMMER FUNCTION
BC	Closed	455 Kc.	0.1 mfd.	Transl.-Grid	T2 & T1	I.F.
BC	Fully open	1650 Kc.	200 mmfd.	Antenna	C10	Osc.
BC	See Note 1	1400 Kc.	200 mmfd.	Antenna	C7	Transl.
BC	See Note 1	1400 Kc.	200 mmfd.	Antenna	C5	Ant.
BC	See Note 2	600 Kc. (Rock)	200 mmfd.	Antenna	C16	Padder
SW	16.5 Mc.	16.5 Mc.	400 ohms	Antenna	C15	Osc.
SW	See Note 1	14 Mc. (Rock)	400 ohms	Antenna	C9	Transl.
SW	See Note 1	14 Mc. (Rock)	400 ohms	Antenna	C2	Ant.

IMPORTANT ALIGNMENT NOTES:

NOTE 1: The 1400 Kc. & 14 Mc. calibration point is the second light brown mark from the right-hand end on the upper edge of the dial background.

NOTE 2: The 600 Kc. calibration point is the third light brown mark from the left-hand edge of the dial background.

The Alignment must be done in the order given.

The entire Alignment Procedure should be repeated step by step in the original order for greatest accuracy.

Always keep the output from the generator at its lowest possible value to prevent the AVC receiver from interfering with accurate alignment.

During alignment of the "BC" Band Padder and the "SW" Band R.F. and Antenna Trimmers, the tuner should be rocked through resonance to assure alignment.

©John F. Rider

MODEL 8230,
CHASSIS 101.835

SEARS, ROEBUCK & CO.

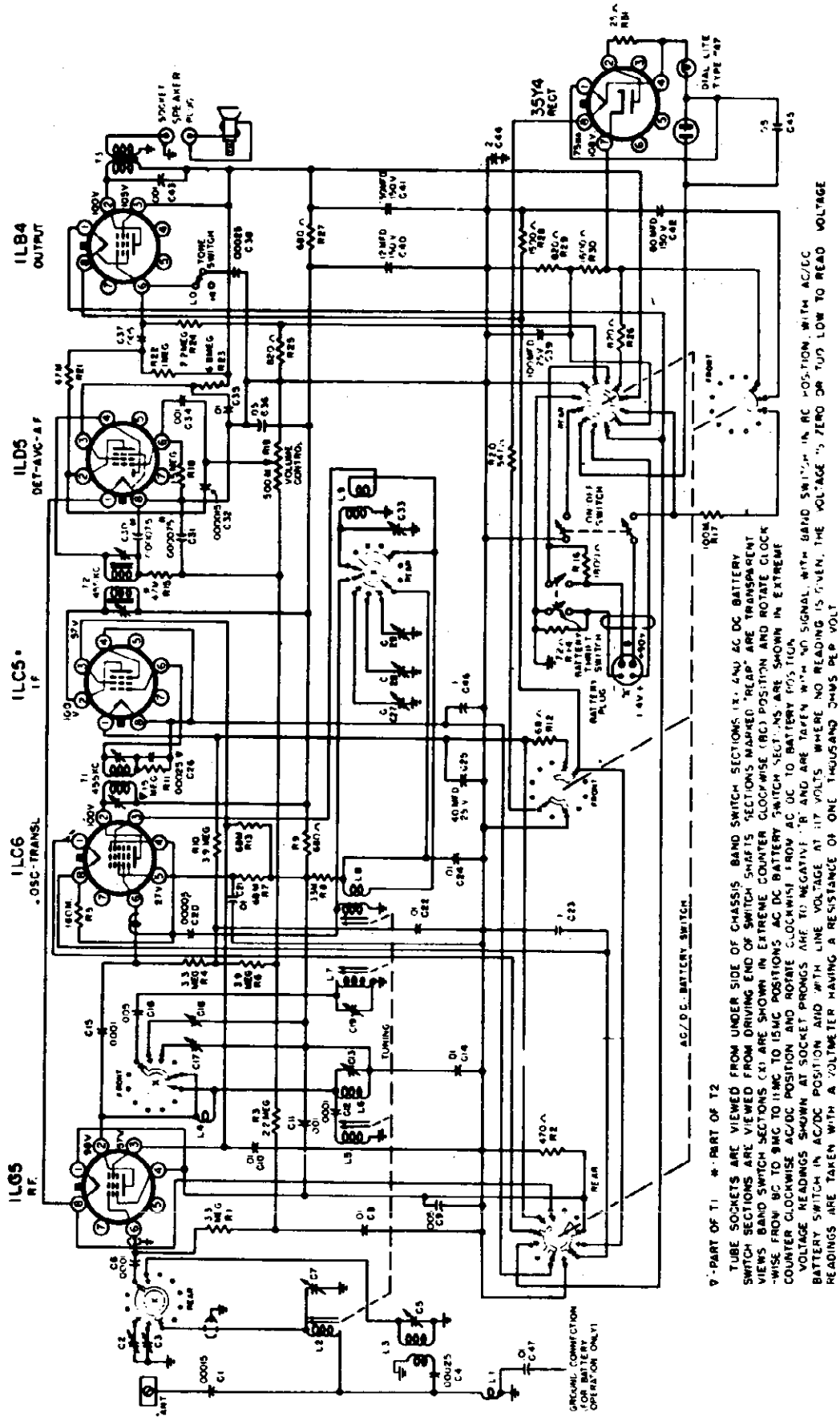

9-PART OF T1 ✱-PART OF T2

TUBE SOCKETS ARE VIEWED FROM UNDER SIDE OF CHASSIS. BAND SWITCH SECTIONS IN "AM" AC DC BATTERY SWITCH SECTIONS ARE VIEWED FROM DRIVING END OF SWITCH SHAFTS. SECTIONS MARKED "REAR" ARE TRANSPARENT VIEWS. BAND SWITCH SECTIONS (X) ARE SHOWN IN EXTREME COUNTER CLOCKWISE (AC) POSITION AND ROTATE CLOCKWISE COUNTER CLOCKWISE FROM BC TO 9MC TO 11MC TO 15MC POSITIONS. AC DC BATTERY SWITCH SECTIONS ARE SHOWN IN EXTREME COUNTER CLOCKWISE AC/DC POSITION AND ROTATE CLOCKWISE FROM AC DC TO BATTERY POSITION.

VOLTAGE READINGS SHOWN AT SOCKET PRONGS ARE TO NEGATIVE "B" AND ARE TAKEN WITH NO SIGNAL, WITH BAND SWITCH IN AC POSITION, WITH AC/DC BATTERY SWITCH IN AC/DC POSITION AND WITH LINE VOLTAGE AT 117 VOLTS. WHERE NO READING IS GIVEN, THE VOLTAGE IS ZERO OR TOO LOW TO READ VOLTAGE READINGS ARE TAKEN WITH A VOLTMETER HAVING A RESISTANCE OF ONE THOUSAND OHMS PER VOLT

SEARS, ROEBUCK & CO.

MODEL 8230,
CHASSIS 101.835

PRELIMINARY:

ALIGNMENT PROCEDURE

Output meter reading to indicate 0.05 watt across voice coil.....0.4 volt
Generator ground lead connection.....I.F. alignment-negative "B" lead
.....Ant. alignment-receiver chassis
Generator modulation.....30%, 400 cycles
Position of volume control.....Fully on
Position of tone control.....Treble
Position of pointer with tuner fully closed..Last line to left of 540 calibration mark on the dial scale.

WAVEBAND SWITCH POSITION	POSITION OF TUNER	GENERATOR FREQUENCY	DUMMY ANTENNA	GENERATOR CONNECTION	TRIMMER ADJUSTMENTS (IN ORDER SHOWN)	TRIMMER FUNCTION
BC	Closed	455 Kc.	0.1 mfd.	Transl.-Grid	T2 & T1	I. F.
BC	See Note	1725 Kc.	75 mmfd.	Antenna	C29	Oscillator
BC	See Note	1725 Kc.	75 mmfd.	Antenna	C7 & C19	Ant., Transl.
BC	See Note	1500 Kc.	75 mmfd.	Antenna	L8	Oscillator
BC	See Note	1500 Kc.	75 mmfd.	Antenna	L2 & L7	Ant., Transl.
C	See Note	15.2 Mc.	400 ohms	Antenna	C33	Oscillator
C	See Note	15.2 Mc.	400 ohms	Antenna	C5 & C13	Ant., Transl.
B	See Note	11.8 Mc.	400 ohms	Antenna	C27	Oscillator
B	See Note	11.8 Mc.	400 ohms	Antenna	C2 & C17	Ant., Transl.
A	See Note	9.6 Mc.	400 ohms	Antenna	C28	Oscillator
A	See Note	9.6 Mc.	400 ohms	Antenna	C3 & C18	Ant., Transl.

IMPORTANT ALIGNMENT NOTES·

NOTE: Before alignment of receiver, remove the dial background. The tuner should be positioned at the frequency noted under "GENERATOR FREQUENCY" on the above chart. These frequencies are noted on the dial background mounting plate. "START," shall be considered the position of the tuner fully closed and "FINISH," the position of the tuner at 1725 Kc.

During the alignment of the antenna and translator trimmers on the shortwave spreadbands the tuner should be rocked through resonance to assure alignment.

The alignment must be done in the order given.

The entire alignment procedure should be repeated step by step in the original order for greatest accuracy.

Always keep the output power from the generator at its lowest possible value to prevent the AVC action of the receiver from interfering with accurate alignment.

Before attempting shortwave alignment, the L5 core should be adjusted to a dimension of approximately 1-21/32" from the top of core to the top turn of the winding. This should be done with the tuner in the 1725 Kc. position.

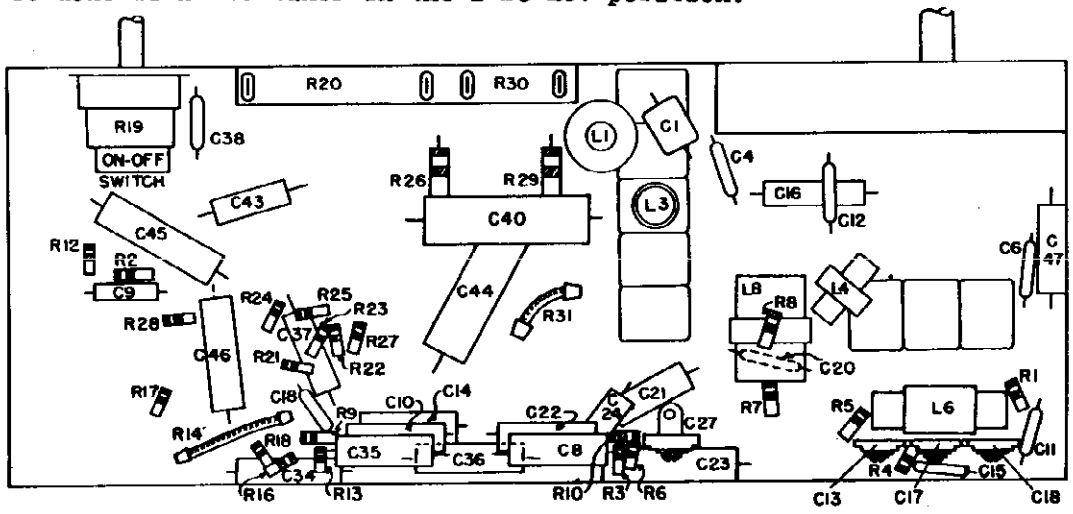

MODEL 8230,
CHASSIS 101.835

SEARS, ROEBUCK & CO.

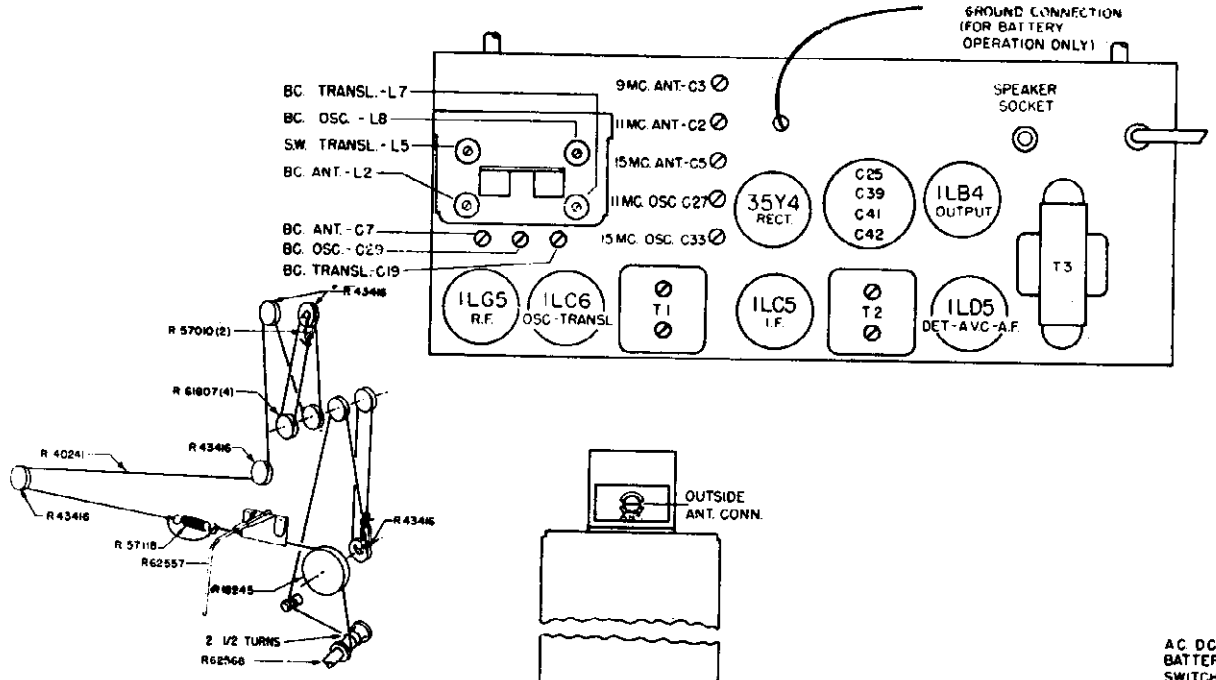

STRING AND POINTER HOOKUP

LOCATION OF PARTS ON TOP & BACK OF CHASSIS

SCHEMATIC LOCATION	PART NUMBER	DESCRIPTION
	R57045	Antenna Kit
	R62558	Background - Dial
	R57021	Bushing - Shaft
	R61846	Button - Snap
C23,C46		Capacitor - .1 Mfd. 600 Volt
C44		Capacitor - .2 Mfd. 600 Volt
C8,C10,C14,C21, C22,C24,C35,C47		Capacitor - .01 Mfd. 600 Volt
C36,C45		Capacitor - .05 Mfd. 600 Volt
C31,C43		Capacitor - .001 Mfd. 600 Volt
C16,C37		Capacitor - .005 Mfd. 600 Volt
C32		Capacitor - Mica - 15 Mmfd.
C20		Capacitor - Mica - 50 Mmfd.
C6,C12,C15		Capacitor - Mica - 100 Mmfd.
C1		Capacitor - Mica - 150 Mmfd.
C38		Capacitor - Mica - 250 Mmfd.
C11		Capacitor - Mica - 1000 Mmfd.
C4		Capacitor - Silver Mica - 250 Mmfd.
C9		Capacitor - Mica - 5000 Mmfd.
C28	R57080	Capacitor - Trimmer - Single
C7,C19,C29	R57081	Capacitor - Trimmer - 3 Gang
C13,C17,C18	R57020	Capacitor - Trimmer - 3 Gang
C2,C3,C5,C27, C33	R57082	Capacitor - Trimmer - 5 Gang
C40	R61840	Capacitor - Dry Electrolytic - 12 Mfd. 150 Volt
C25,C39,C41. C42	R60803	Capacitor - Electrolytic - 40 Mfd. 25 Volt 100 Mfd. 25 V., 30 Mfd. 150 V., 80 Mfd. 150 V.
L3	R45074	Coil - Antenna - S. W. Shunt
L6	R45077	Coil - R.F. - S.W. Shunt
L1	R45255	Coil - Choke
L9	R57078	Coil - Oscillator - S.W. Shunt
R19	R62577	Control - On-Off, Volume & Tone
	R17166	Cord - Line
	R40241	Cord - Dial Drive (48")
	R62586	Dial - Station
	R62559	Escutcheon
	R62540	Knob - On-Off & Volume
	R62541	Knob - Tone
	R62542	Knob - Tuning
	R62543	Knob - Wave Switch
	R20963	Lamp - Mazda Type #47
	R64090	Leaflet - Instruction
	R40457	Plug - 4 Prong - Battery Cable
	R62557	Pointer - Dial
	R18245	Pulley - Wood - 1 1/16" O.D.
	R43416	Pulley - Wood - 17/32" O.D.
	R61807	Pulley - Metal
R12		Resistor - 68 Ohm - 1/2 Watt
R2		Resistor - 470 Ohm - 1/2 Watt
R9,R27		Resistor - 680 Ohm - 1/2 Watt
R25,R26		Resistor - 820 Ohm - 1/2 Watt
R28		Resistor - 1500 Ohm - 1/2 Watt
R16		Resistor - 1800 Ohm - 1/2 Watt
R8		Resistor - 33,000 Ohm - 1/2 Watt
R21		Resistor - 47,000 Ohm - 1/2 Watt
R7,R13		Resistor - 68,000 Ohm - 1/2 Watt
R17		Resistor - 100,000 Ohm - 1/2 Watt
R5		Resistor - 180,000 Ohm - 1/2 Watt
R22		Resistor - 1 Megohm - 1/2 Watt
R3, R24		Resistor - 2.2 Megohm - 1/2 Watt
R1, R4		Resistor - 3.3 Megohm - 1/2 Watt
R6,R10		Resistor - 3.9 Megohm - 1/2 Watt
R23		Resistor - 6.8 Megohm - 1/2 Watt
R18		Resistor - 15 Megohm - 1/2 Watt
R29		Resistor - 820 Megohm - 1 Watt
R31	R40232	Resistor - Glasohm - 25 Ohm - 1 Watt
R14	R45254	Resistor - Flexohm - .72 Ohm - 1/2 Watt
R20,R30	R61838	Resistor - Wire Wound - 2 Section
	R62592	Screw - #2 x 5/8 - Escutcheon & Dial Mounting
	R62640	Screw - #2 x 3/8 - Escutcheon & Dial Mounting
	R62568	Shaft & Link Assembly
	R44897	Socket - 1 Prong - Speaker Connector
	R57040	Socket - Pilot Lamp
	R57049	Socket - Tube - 8 Prong Lock-In
		WHEN ORDERING SPEAKER PARTS ALWAYS GIVE THE PART NUMBER ON THE SPEAKER
	R57061	Speaker - 5 1/4" P.M.
	R57272	Plug
	R57118	Spring - Extension
	R57038	Switch - Slide Type - D.P.S.T.
	R61828	Switch - AC - DC - Battery
	R57064	Switch - Wave
T1	R57120	Transformer - I.F. #1
T2	R62571	Transformer - I.F. #2
T3	R62853	Transformer - Output
	R62724	Tuner - Permability Unit
L2	R63128	Coil - Antenna
L8	R63129	Coil - Oscillator
L7	R63130	Coil - R.F.
L5	R63131	Coil - S.W. Shunt
	R61819	Core Slide Bracket Assembly
	R62811	Core - Iron
	R45087	Cover
	R13335	Washer - "C" - Shaft & Link Assembly Retaining
	R61815	Washer - Metal Pulley Retaining
	R15496	Washer - Flat - Chassis Mounting
	R62587	Washer - Felt (behind knob)

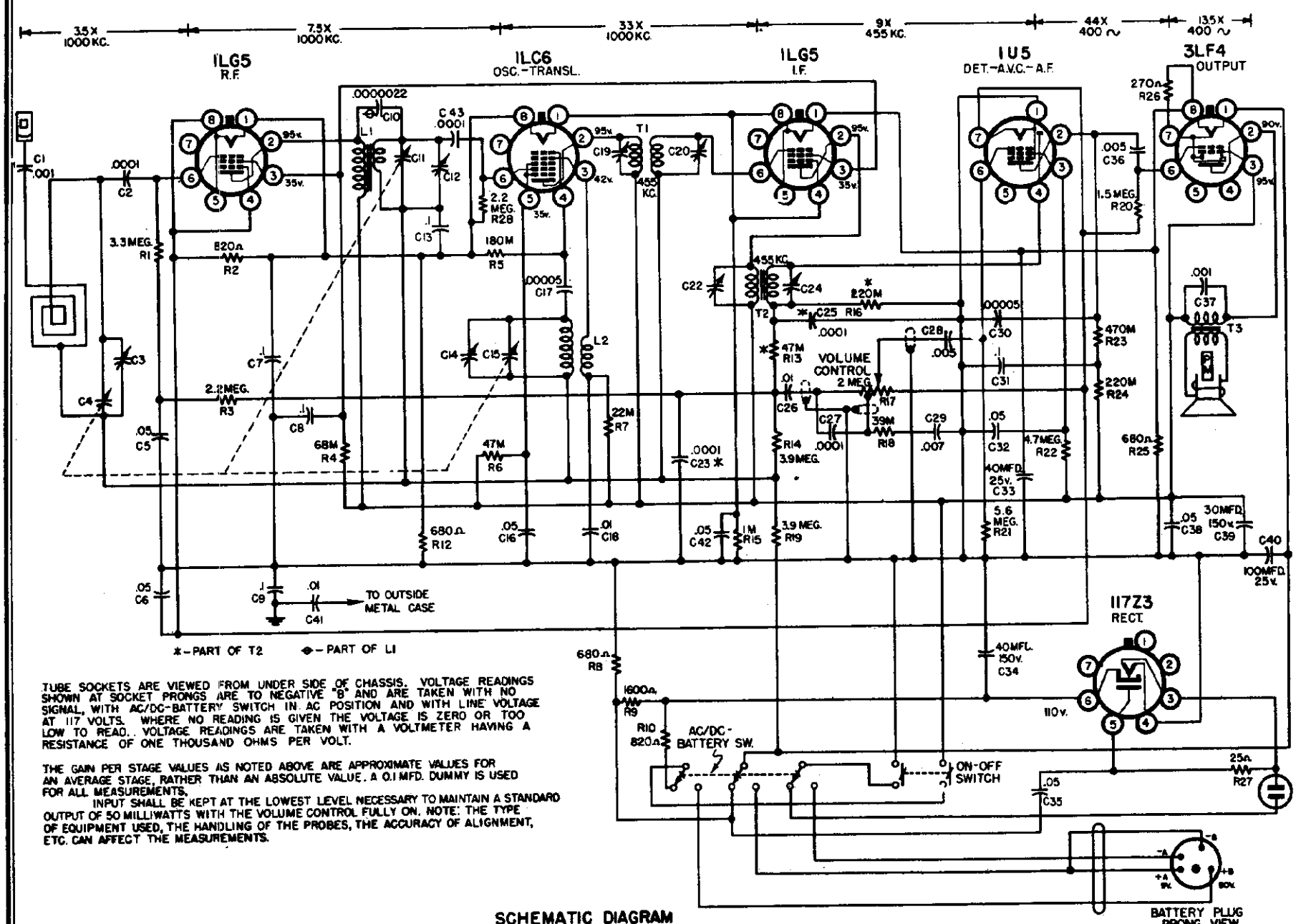

*-PART OF T2 ◆-PART OF L1

TUBE SOCKETS ARE VIEWED FROM UNDER SIDE OF CHASSIS. VOLTAGE READINGS SHOWN AT SOCKET PRONGS ARE TO NEGATIVE "B" AND ARE TAKEN WITH NO SIGNAL, WITH AC/DC-BATTERY SWITCH IN AC POSITION AND WITH LINE VOLTAGE AT 117 VOLTS. WHERE NO READING IS GIVEN THE VOLTAGE IS ZERO OR TOO LOW TO READ. VOLTAGE READINGS ARE TAKEN WITH A VOLTMETER HAVING A RESISTANCE OF ONE THOUSAND OHMS PER VOLT.

THE GAIN PER STAGE VALUES AS NOTED ABOVE ARE APPROXIMATE VALUES FOR AN AVERAGE STAGE, RATHER THAN AN ABSOLUTE VALUE. A 0.1 MFD. DUMMY IS USED FOR ALL MEASUREMENTS.

INPUT SHALL BE KEPT AT THE LOWEST LEVEL NECESSARY TO MAINTAIN A STANDARD OUTPUT OF 50 MILLIWATTS WITH THE VOLUME CONTROL FULLY ON. NOTE: THE TYPE OF EQUIPMENT USED, THE HANDLING OF THE PROBES, THE ACCURACY OF ALIGNMENT, ETC. CAN AFFECT THE MEASUREMENTS.

SCHEMATIC DIAGRAM

MODELS 8270, 8270A,
CHASSIS 101.822,
101.822A

SEARS, ROEBUCK & CO.

SPECIFICATIONS

Power Supply:
All Models available..... 117 Volts DC, 25-60 Cycle AC, 20 Watts or Catalog No. 6404 Battery Pack

Power Output:
Undistorted..... .25 Watts
Maximum..... .45 Watts

Frequency Range:
Broadcast..... 540-1600 KC

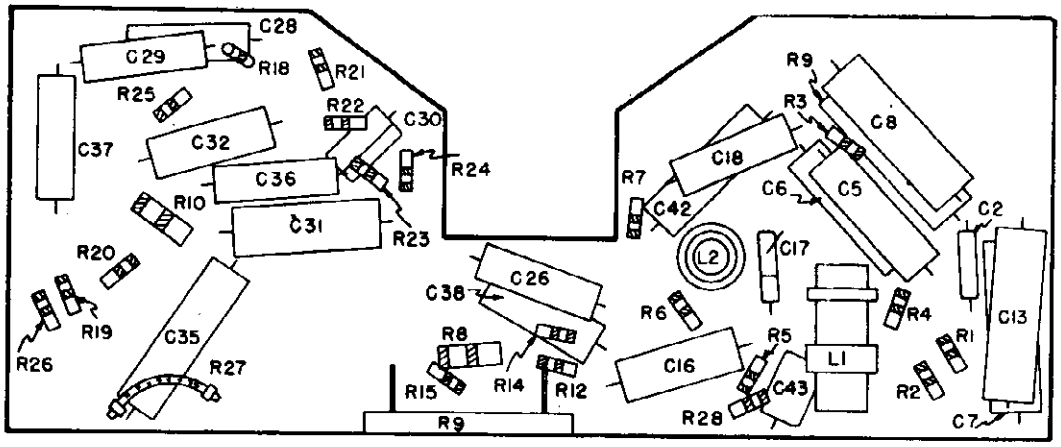

LOCATION OF PARTS UNDER CHASSIS

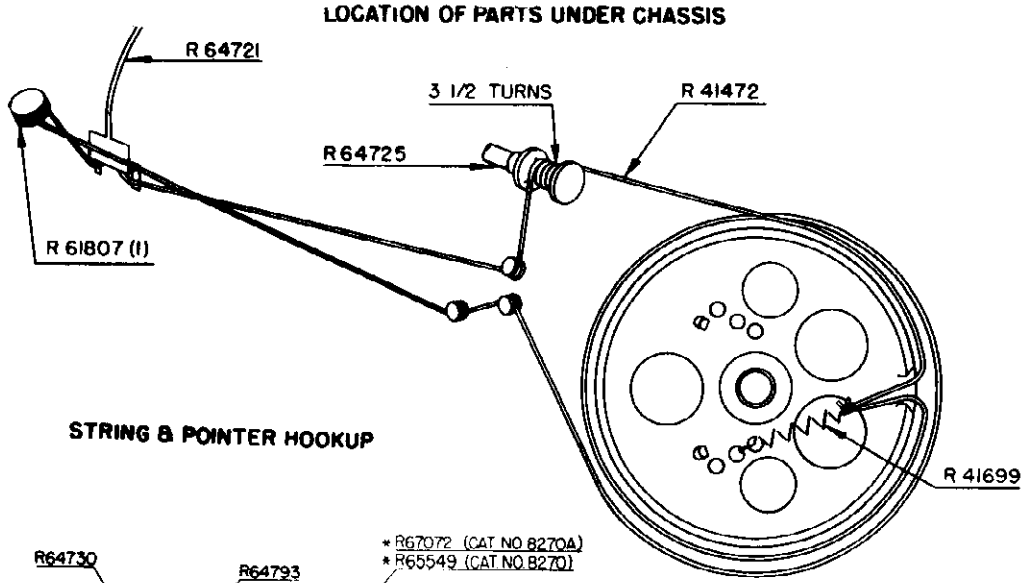

STRING & POINTER HOOKUP

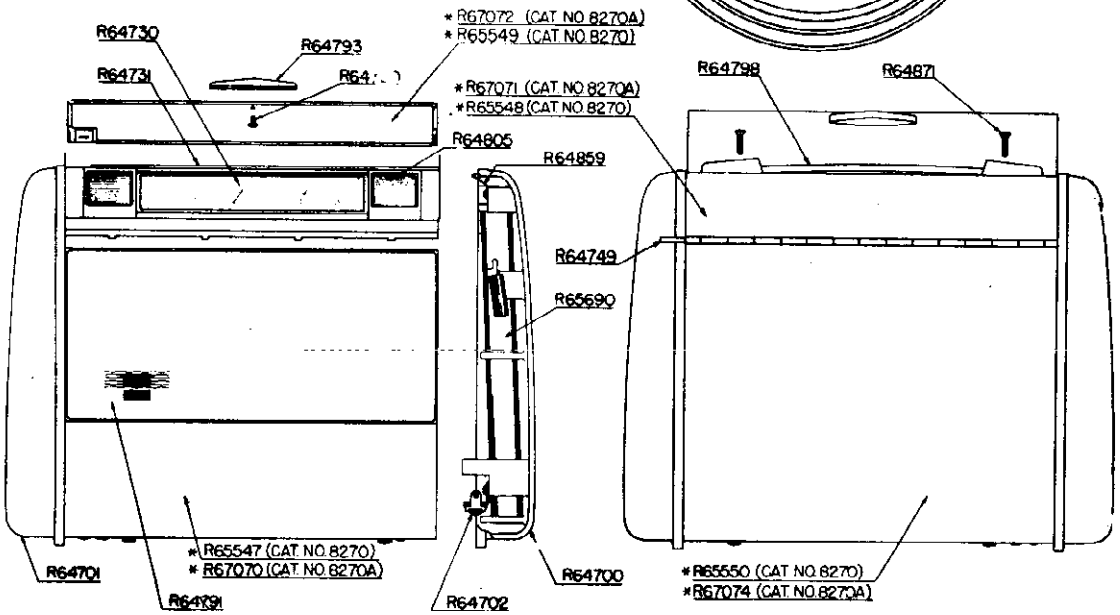

©John F. Rider

SEARS, ROEBUCK & CO.

MODELS 8270, 8270A,
CHASSIS 101.822,
101.822A

ALIGNMENT PROCEDURE

PRELIMINARY:

Output meter reading to indicate 0.05 Watt across voice coil ..... 0.4 Volt
Generator ground lead connection ..... To B- through 0.1 mfd. capacitor
Generator modulation ..... 30%, 400 cycles
Position of volume control ..... Fully on
Position of pointer with tuner fully closed ..... The second line to the left of the 540 Kc. calibration mark.

POSITION OF TUNER	GENERATOR FREQUENCY	DUMMY ANTENNA	GENERATOR CONNECTION	ADJUSTMENTS (IN ORDER SHOWN)	FUNCTION
Closed	455 Kc.	0.1 mfd.	Trans-Grid	T2 & T1	I.F.
1400 Kc.	1400 Kc.	50 mmfd.	Hazeltine Loop	C14	Oscillator
1400 Kc.	1400 Kc.	50 mmfd.	Hazeltine Loop	C12	R.F.
1400 Kc.	1400 Kc.	50 mmfd.	Hazeltine Loop	* C3	Antenna

IMPORTANT ALIGNMENT NOTES:

NOTE: It is recommended that an isolation transformer be connected between the radio chassis and the line before aligning the receiver on AC.

The alignment must be done in the order given.

Always keep the output power from the generator at its lowest possible value to prevent the AVC of the receiver from interfering with accurate alignment.

***Located on Loop and Case End Assembly**

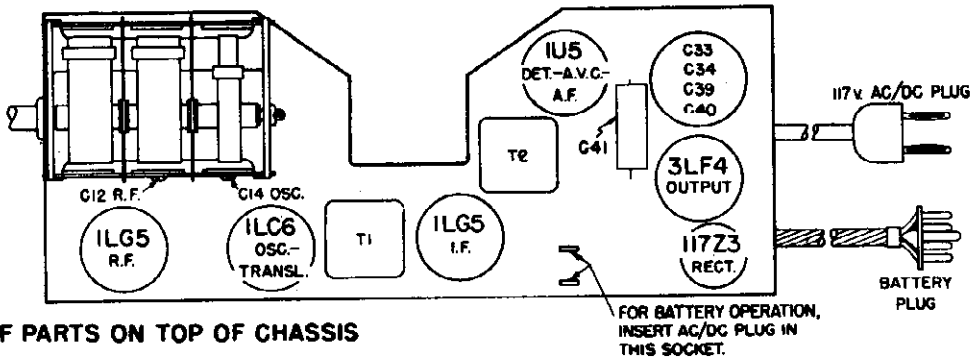

LOCATION OF PARTS ON TOP OF CHASSIS

PARTS LIST

SCHEMATIC LOCATION	PART NUMBER	DESCRIPTION	MU CODE
	564708	Capacitor - Trimmer - Loop & End Case Assy.	
C7,C8,C9,		Capacitor - .1 mfd. 600 Volt	
C10,C31			
C11,C30,C41		Capacitor - .01 mfd. 600 Volt	
C5,C6,C16,C36,		Capacitor - .05 mfd. 600 Volt	
C38,C32,C42			
C2,C37,C40		Capacitor - Mica - 100 mmfd.	
C17,C35		Capacitor - Mica - 50 mmfd.	
C1,C27		Capacitor - .001 mfd. 600 Volt	
C28,C26		Capacitor - .006 mfd. 600 Volt	
C29		Capacitor - .007 mfd. 600 Volt	
C34,C39,C40,	564702	Capacitor - Electrolytic - 40 mfd. 25 Volt,	
C33		100 mfd. 25 Volt, 30 mfd. 150 Volt, 40 mfd. 100 Volt	
C4,C11,C15	564715	Capacitor - 3 Gang Variable	AS
	* 565660	Case Assembly - Rear Cst. #8270-Leatherette	AAO
	* 567971	Case Assembly - Rear Cst. #8270A-Painted	
	* 567970	Case Assembly - Front Cst. #8270A-Painted	
	* 565647	Case Assembly - Front Cst. #8270-Leatherette	AAO
	* 565648	Case Assembly - Top Cst. #8270-Leatherette	
	* 567971	Case Assembly - Top Cst. #8270A-Painted	
	564700	Case - End - R.H.	
	564701	Case - End - L.H.	
	564720	Cover - Dial Celluloid	
	* 565645	Cover Assembly-Escutcheon Cst. #8270-Leatherette	
	* 567973	Cover Assembly-Escutcheon Cst. #8270A-Painted	
	564788	Clip - Coil Mounting	
L1	564706	Coil - R.F.	
L2	564708	Coil - Oscillator	
R17	564704	Control - On-Off & Volume	
	564711	Cord - Line	
	561492	Cord - Dial Drive (54")	
	564732	Dial - Station	
	564731	Escutcheon	
	564781	Grille	AS
	564798	Handle - Escutcheon Cover	
	564287	Leaflet - Instruction	
	565899	Loop - Antenna	
	564686	Knob - On-Off or Tuning	
	564749	Pin - Hinge	
	564697	Plug - Battery Cable	
	564721	Pointer - Dial	
	561897	Pulley - Metal	

SCHEMATIC LOCATION	PART NUMBER	DESCRIPTION	MU CODE
R26		Resistor - 270 ohm 1/2 Watt	
R13,R3,R29		Resistor - 680 ohm 1/2 Watt	
R10		Resistor - 820 ohm 1/2 Watt	
R18		Resistor - 1000 ohm 1/2 Watt	
		Resistor - 22,000 ohm 1/2 Watt	
R16		Resistor - 39,000 ohm 1/2 Watt	
R6		Resistor - 47,000 ohm 1/2 Watt	
R4		Resistor - 68,000 ohm 1/2 Watt	
R5		Resistor - 100,000 ohm 1/2 Watt	
R7,R24		Resistor - 330,000 Ohm 1/2 Watt	
R25		Resistor - 470,000 ohm 1/2 Watt	
R20		Resistor - 1.5 megohm 1/2 Watt	
R2,R28		Resistor - 2.2 megohm 1/2 Watt	
R1		Resistor - 3.3 megohm 1/2 Watt	
R12,R14		Resistor - 3.9 megohm 1/2 Watt	
R22		Resistor - 4.7 megohm 1/2 Watt	
R21		Resistor - 5.6 megohm 1/2 Watt	
R8		Resistor - 220 Ohm 1 Watt	
R27	R565212	Resistor - Gilfillan - 20 ohm 1 Watt	
R9	564711	Resistor - 1000 ohm - 6 Watt	
	X17948	Socket - Tube - 5 Prong Lock-in	
	565115	Socket - Tube - Miniature	
	X565848	Socket - Miniature Tube (117Z3 Tube)	
		WHEN ORDERING SPEAKER PARTS ALWAYS GIVE THE PART NUMBER ON THE SPEAKER	
	565137	Speaker - 5 1/4" P.M.	AO
	565919	Cone & Voice Coil	
T3	564794	Transformer - Output	
	R41690	Spring - Dial Drive	
	565813	Switch - A.C. - Battery	
	564726	Shaft Assembly - Tuning	
	X64790	Screw - Escutcheon - Cover Assembly	
	564691	Screw - Carrying Strap Mounting	
	565888	Spring Assembly - Loop & Case End Assembly	
	564798	Strap - Carrying	
T1	564797	Transformer - I.F. #1	
T2	564796	Transformer - I.F. #2	
	561520	Washer - Electrolytic Capacitor Mounting	
	515490	Washer - Flat - Chassis Assembly Mounting	
	565819	Washer - Metal Pulley Retaining	
	564744	Washer - Insulating - Pointer Drive Assembly Mtg.	

MODEL 9054,
CHASSIS 101.849

SEARS, ROEBUCK & CO.

SPECIFICATIONS

Power Supply:
All models available . . . . . 110-125-145-200-245 Volts 40 to 60 Cycle AC - 50 Watts

Frequency Range

Band "A" . . . . . 540-1600 Kc.	**Power Output:**	**Band "D" . . . . . 10.0-15.6 Mc.**	
Band "B" . . . . . 1.65-4.8 Mc.	**Undistorted . . . . . 3.0 Watts**	**Band "E" . . . . . 15.8-22.1 Mc.**	
Band "C" . . . . . 4.8-10.0 Mc.	**Maximum . . . . . 4.0 Watts**		

SCHEMATIC DIAGRAM FOR YOUR RADIO

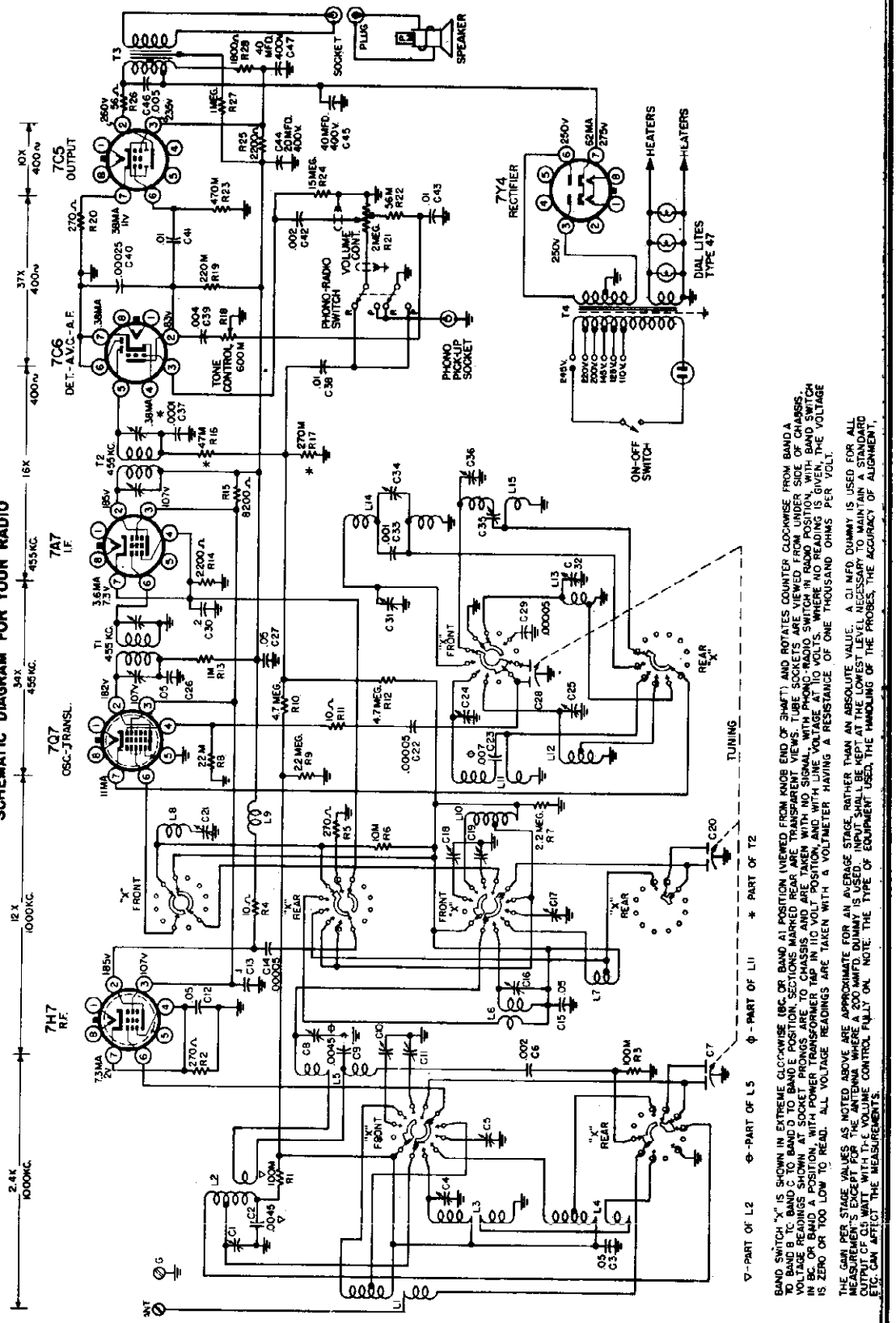

BAND SWITCH "X" IS SHOWN IN EXTREME CLOCKWISE (BC OR BAND A) POSITION (VIEWED FROM KNOB END OF SHAFT) AND ROTATES COUNTER CLOCKWISE FROM BAND A TO BAND B TO BAND C TO BAND D TO BAND E POSITION. SECTIONS MARKED REAR ARE TRANSPARENT VIEWS. TUBE SOCKETS ARE VIEWED FROM UNDER SIDE OF CHASSIS. VOLTAGE READINGS SHOWN AT SOCKET PRONGS ARE TAKEN WITH NO SIGNAL WITH LINE VOLTAGE AT 110 VOLTS, WHERE NO READING IS GIVEN, THE VOLTAGE IS ZERO OR TOO LOW TO READ. ALL VOLTAGE READINGS ARE TAKEN WITH A VOLTMETER HAVING A RESISTANCE OF ONE THOUSAND OHMS PER VOLT.

THE GAIN PER STAGE VALUES AS NOTED ABOVE ARE APPROXIMATE FOR AN AVERAGE STAGE, RATHER THAN AN ABSOLUTE VALUE. A .01 MFD. DUMMY IS USED FOR ALL MEASUREMENTS EXCEPT FOR THE ANTENNA WHERE A 200 MMFD. DUMMY IS USED. INPUT SHALL BE KEPT AT THE LOWEST LEVEL NECESSARY TO MAINTAIN A STANDARD OUTPUT OF .05 WATT WITH THE VOLUME CONTROL FULLY ON. NOTE: THE TYPE OF EQUIPMENT USED, THE HANDLING OF THE PROBES, THE ACCURACY OF ALIGNMENT, ETC. CAN AFFECT THE MEASUREMENTS.

▽-PART OF L2 ⊕-PART OF L5 ϕ-PART OF L1 * PART OF T2

©John F. Rider

ALIGNMENT PROCEDURE

PRELIMINARY:

Output meter reading to indicate 0.5 watt across voice coil . . . . . 1.26 volt
Generator ground lead connection . . . . . To receiver chassis
Generator modulation . . . . . 30%, 400 cycles
Position of volume control . . . . . Fully on
Position of tone control . . . . . Treble
Position of pointer with tuner fully closed . . . . . Last line below 540 Kc. calibration mark on dial scale "A"

WAVE BAND SWITCH POS.	POSITION OF TUNER	GENERATOR FREQUENCY	DUMMY ANTENNA	GENERATOR CONNECTION	TRIMMER ADJUSTMENTS (IN ORDER SHOWN)	TRIMMER FUNCTION
Band B	Closed	455 Kc.	0.1 mfd.	Transl.-Grid	T2 - T1	I.F.
Band A	Closed	See Note	200 mmfd.	Ant.	C21	I.F. Trap
Band A	1410 Kc.	1410 Kc.	200 mmfd.	Ant.	C36	Osc.
Band A	1410 Kc.	1410 Kc.	200 mmfd.	Ant.	C8	Transl.
Band A	1410 Kc.	1410 Kc.	200 mmfd.	Ant.	C1	Ant.
Band A	600 Kc.	600 Kc.	200 mmfd.	Ant.	C35	Osc. Pad.
Band B	4.2 Mc.	4.2 Mc.	400 ohms	Ant.	C31	Osc.
Band B	4.2 Mc.	4.2 Mc.	400 ohms	Ant.	C16	Transl.
Band B	4.2 Mc.	4.2 Mc.	400 ohms	Ant.	C4	Ant.
Band B	1800 Kc.	1800 Kc.	400 ohms	Ant.	C34	Osc. Pad.
Band C	9.6 Mc.	9.6 Mc.	400 ohms	Ant.	C24	Osc.
Band C	9.6 Mc.	9.6 Mc.	400 ohms	Ant.	C19	Transl.
Band C	9.6 Mc.	9.6 Mc.	400 ohms	Ant.	C11	Ant.
Band E	21.6 Mc.	21.6 Mc.	400 ohms	Ant.	C32	Osc.
Band E	21.6 Mc.	21.6 Mc.	400 ohms	Ant.	C18	Transl.
Band E	21.6 Mc.	21.6 Mc.	400 ohms	Ant.	C10	Ant.
Band D	15.2 Mc.	15.2 Mc.	400 ohms	Ant.	C25	Osc.
Band D	15.2 Mc.	15.2 Mc.	400 ohms	Ant.	C17	Transl.
Band D	15.2 Mc.	15.2 Mc.	400 ohms	Ant.	C5	Ant.

IMPORTANT ALIGNMENT NOTES:

NOTE: The signal generator frequency shall be adjusted for highest response near 455 Kc. for alignment of the I.F. trap.

Band E oscillator operates below the signal frequency. The setting of the oscillator trimmer occurs at the first peak out from tight for the fundamental. All other bands have the oscillator operating above the signal frequency and are to be aligned in the normal manner.

During the alignment of the oscillator padder on bands A and B the tuner should be rocked through resonance to assure alignment.

The alignment must be done in the order given.

The entire alignment procedure should be repeated step by step in the original order for greatest accuracy.

Always keep the output power from the generator at its lowest possible value to prevent the AVC action of the receiver from interfering with accurate alignment.

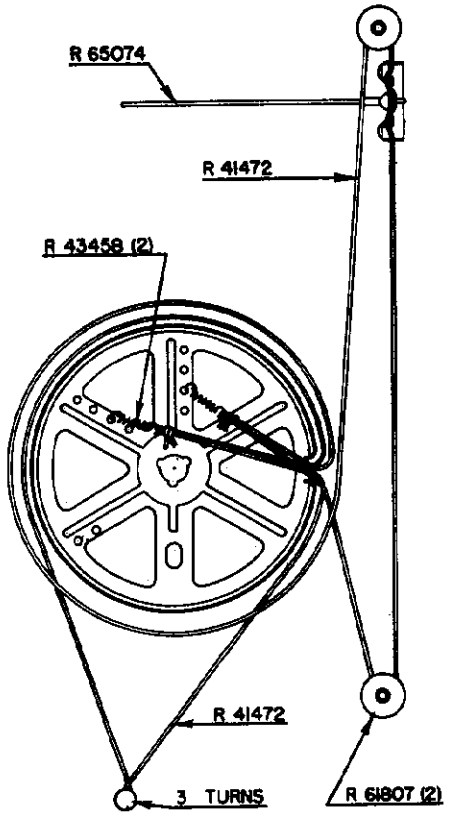

STRING AND POINTER HOOKUP

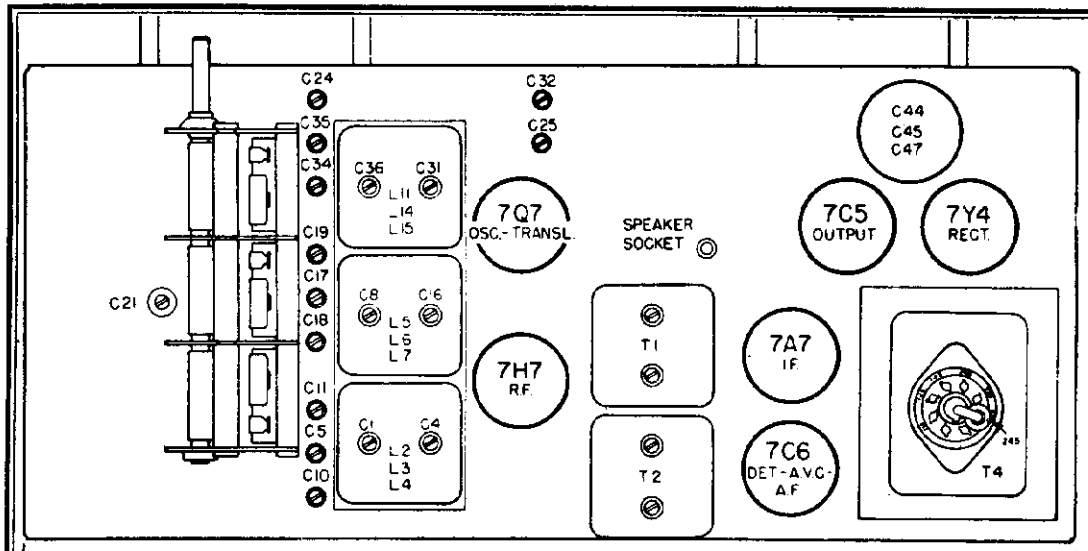

LOCATION OF PARTS ON TOP OF CHASSIS

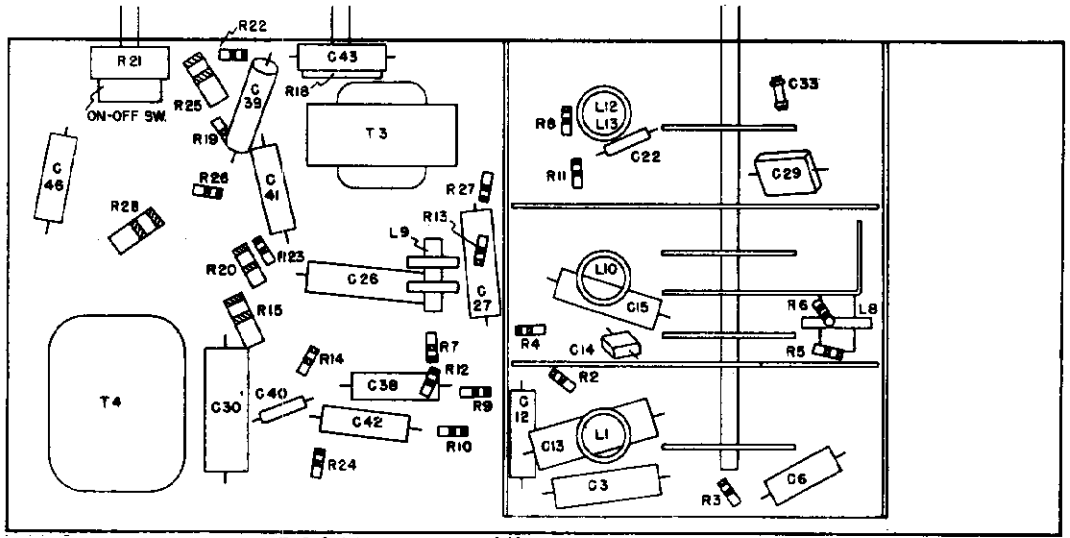

LOCATION OF PARTS UNDER CHASSIS

REPAIR PARTS LIST

SCHEMATIC LOCATION	PART NUMBER	DESCRIPTION	MU CODE
	R65099	Background - Dial	
	R61846	Button - Snap	
C46		Capacitor - .005 mfd. - 600 V.	
C39		Capacitor - .004 mfd. - 600 V.	
C6,C42		Capacitor - .002 mfd. - 600 V.	
C5,C12,C15, C26,C27		Capacitor - .05 mfd. - 600 V.	
C38,C41,C43		Capacitor - .01 mfd. - 600 V.	
C30		Capacitor - 0.2 mfd. - 600 V.	
C13		Capacitor - 0.1 mfd. - 400 V.	
C22		Capacitor - Mica - 50 mmfd.	
C40		Capacitor - Mica - 250 mmfd.	
C33		Capacitor - Mica - 1000 mmfd.	
C14		Capacitor - Silver Mica - 50 mmfd.	
C25,C32	R45705	Capacitor - Trimmer - 2 Gang	
C9,C10,C11,	R45703	Capacitor - Trimmer - 3 Gang	
C17,C18,C19	R45703	Capacitor - Trimmer - 3 Gang	
C24,C34,C35	R50519	Capacitor - Trimmer - 3 Gang	
C7,C30,C28	R65071	Capacitor - Variable - 3 Gang	B5
C29	R48109	Capacitor - Compensating	
C21	R50518	Capacitor - I.F. Trap Trimmer	
	R65075	Capacitor - Electrolytic	AAD
C44		20 mfd. - 400 V.	
C45		40 mfd. - 400 V.	
C47		40 mfd. - 400 V.	
L1	R65077	Coil - Antenna - Bands D and E	
L2,L3,L4	R65085	Coil - Antenna - Bands A, B, and C	AO
L5	R65089	Coil - I.F. Trap Choke	
L12,L13	R65078	Coil - Oscillator - Bands D and E	
L11,L14,L15	R65084	Coil - Oscillator - Bands A, B, and C	A5
L9	R65090	Coil - Plate Choke	
L5,L6,L7	R65086	Coil - Translator - Bands A, B, and C	A5
L10	R65088	Coil - Translator - Bands D and E	
R21	R65073	Control - On-Off and Volume	
R18	R65072	Control - Tone	
	R41472	Cord - Band Indicator - 9" Dial Drive - 37" Pointer Drive - 23"	
	R65233	Cord - Line	
	R65270	Cover - Back - Cabinet	
	R65187	Cover - Transformer Tap Socket	
	R65240	Dial - Station - Glass	
	R65069	Disc - Band Indicator - Assy.	
	R65098	Escutcheon - Dial	
	R65257	Knob - Band	
	R65256	Knob - On-Off and Volume	
	R65255	Knob - Tone	
	R62933	Knob - Tuning	
		Lamp - Dial - Type #47	
	R65074	Pointer - Dial	
	R61807	Pulley - Metal - Dial	
R4,R11		Resistor - 10 ohm - 1/2 W.	
R26		Resistor - 56 ohm - 1/2 W.	
R2,R5		Resistor - 270 ohm - 1/2 W.	
R13		Resistor - 1,000 ohm - 1/2 W.	
R14		Resistor - 2,000 ohm - 1/2 W.	
R6		Resistor - 10,000 ohm - 1/2 W.	
R8		Resistor - 22,000 ohm - 1/2 W.	
R22		Resistor - 56,000 ohm - 1/2 W.	
R3		Resistor - 100,000 ohm - 1/2 W.	
R10		Resistor - 220,000 ohm - 1/2 W.	
R23		Resistor - 470,000 ohm - 1/2 W.	
R27		Resistor - 1 megohm - 1/2 W.	
R7,R9		Resistor - 2.2 megohm - 1/2 W.	
R10,R12		Resistor - 4.7 megohm - 1/2 W.	
R24		Resistor - 10.0 megohm - 1/2 W.	
R30		Resistor - 270 ohm - 1 W.	
R28		Resistor - 1,800 ohm - 2 W.	
R25		Resistor - 2,200 ohm - 2 W.	
R15		Resistor - 6,200 ohm - 2 W.	
	R65063	Shaft - Tuning	
	R44897	Socket - Phono and Speaker	
	R57040	Socket - Tube - 6 Prong Lock-in	
	R61013	Socket - Tube - 6 Prong Lock-in (Molded) - 7Z4	
	R60997	Socket - Tube - 6 Prong Lock-in (Molded) - 7B7 & 7Q	
	R65264	Socket - Band Indicator - Pilot Lamp	
	R65261	Socket - Pilot Lamp Assy. - (Dual)	
		WHEN ORDERING SPEAKER PARTS, ALWAYS GIVE THE PART NUMBER APPEARING ON THE SPEAKER	
	R65280	Speaker - 8" P.M.	
	R59603	Cone & Voice Coil	
	R57272	Plug	
	R43600	Switch - D.P.D.T. - Phono - Radio	
T1	R65079	Transformer - I.F. #1	
T2	R65080	Transformer - I.F. #2	
T3	R65087	Transformer - Output	
T4	R65058	Transformer - Power 50-60 cycle	

SEARS, ROEBUCK & CO.

MODEL 9260,
CHASSIS 101.850

Five Tube AC-DC Superheterodyne Portable Receiver

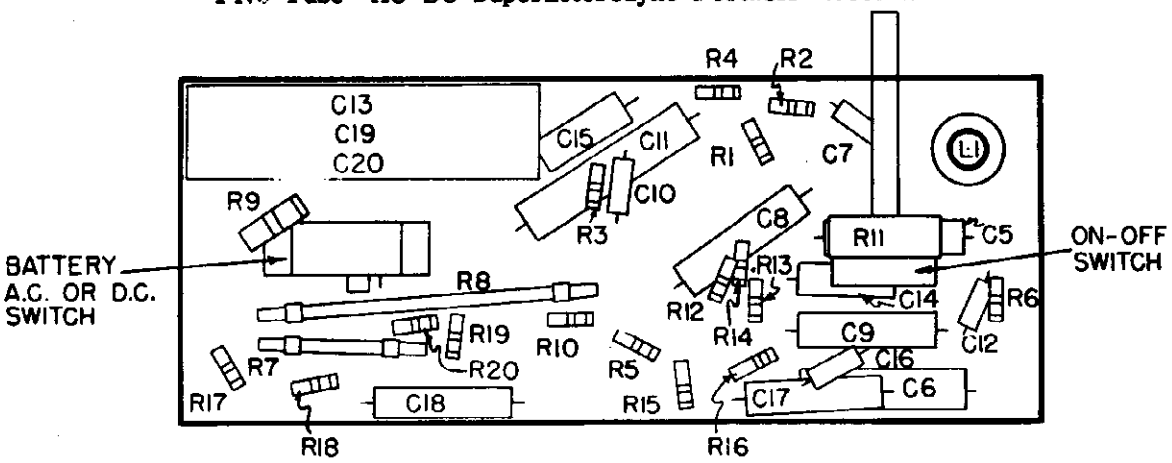

LOCATION OF PARTS UNDER CHASSIS

PARTS LIST

SCHEMATIC LOCATION	PART NUMBER	DESCRIPTION
	R65308	Cover - Cabinet
	R65318	Clip - Tubular
	R65891	Cabinet (Body)
	R58810	Clip (Cover Retaining)
	R65316	Clip (Handle)
	R65586	Grille (Front)
	R65317	Handle (Carrying)
	R65319	Lens (Antenna)
	R65297	Cable - Battery (With Plug)
	R67010	Plug - Battery
C18		Capacitor - .005 mfd. - 600 Volt
C14,C15		Capacitor - .001 mfd. - 600 Volt
C11		Capacitor - .05 mfd. - 600 Volt
C6		Capacitor - .05 mfd. - 200 Volt
C5,C9	R30720	Capacitor - .05 mfd. - 100 Volt
C8,C19	R4402*	Capacitor - .01 mfd. - 600 Volt
C7,C12	R65333	Capacitor - Ceramic - 90 mmfd.
C16	R65293	Capacitor - Ceramic - 100 mmfd.
C2,C3	R65307	Capacitor - Variable - 3 Gang
C13,C19,C20	R65306	Capacitor - Electrolytic 40 mfd. - 150 Volt 40 mfd. - 150 Volt 120 mfd. - 200 Volt
	R65315	Clip - Chassis Mounting
L1	R65322	Coil - Oscillator
R11	R65309	Control - On-Off & Volume
	R65310	Cord - Line
	R65304	Cover - Bottom of Chassis
	R64707	Insulator - Line Cord Mounting
	R65340	Knob - On-Off & Volume
	R65340	Knob - Tuning
	R65375	Pointer - Dial Assy.

SCHEMATIC LOCATION	PART NUMBER	DESCRIPTION
R1		Resistor - 470 ohm - 1/2 Watt
R13,R14		Resistor - 560 ohm - 1/2 Watt
R20		Resistor - 1,200 ohm - 1/2 Watt
R5		Resistor - 8,200 ohm - 1/2 Watt
R2		Resistor - 82,000 ohm - 1/2 Watt
R19		Resistor - 470,000 ohm - 1/2 Watt
R16		Resistor - 680,000 ohm - 1/2 Watt
R17		Resistor - 1 megohm - 1/2 Watt
R4		Resistor - 1.8 megohm - 1/2 Watt
R8		Resistor - 3.3 megohm - 1/2 Watt
R15,R18		Resistor - 4.7 megohm - 1/2 Watt
R12		Resistor - 10 megohm - 1/2 Watt
R9		Resistor - 1,500 ohm - 1 Watt
R10		Resistor - 3,300 ohm - 1 Watt
R7	R61219	Resistor - Glaschem - 100 ohm - 1 Watt
R3	R60810	Resistor - Glaschem - 1,000 ohm - 5 Watt
R3, C10	R65338	Resistor-Capacitor Combination - 4.7 megohm - 300 mmfd.
	R67049	Socket - Tube - 6 Prong Lock-in
	R65193	Socket - Tube - Miniature
	R65333	Socket - Tube - Miniature (with Ground Term.)
		WHEN ORDERING SPEAKER PARTS, ALWAYS GIVE THE PART NUMBER APPEARING ON THE SPEAKER
	R65311	Speaker - 3 1/2" P.M.
	R60BM	Cone & Voice Coil
	R65313	Switch - T.P.D.T. - AC-DC & Battery
T1	R65329	Transformer - I.F. #1
T2	R65331	Transformer - I.F. #2
T3	R65312	Transformer - Output

SCHEMATIC DIAGRAM FOR YOUR RADIO

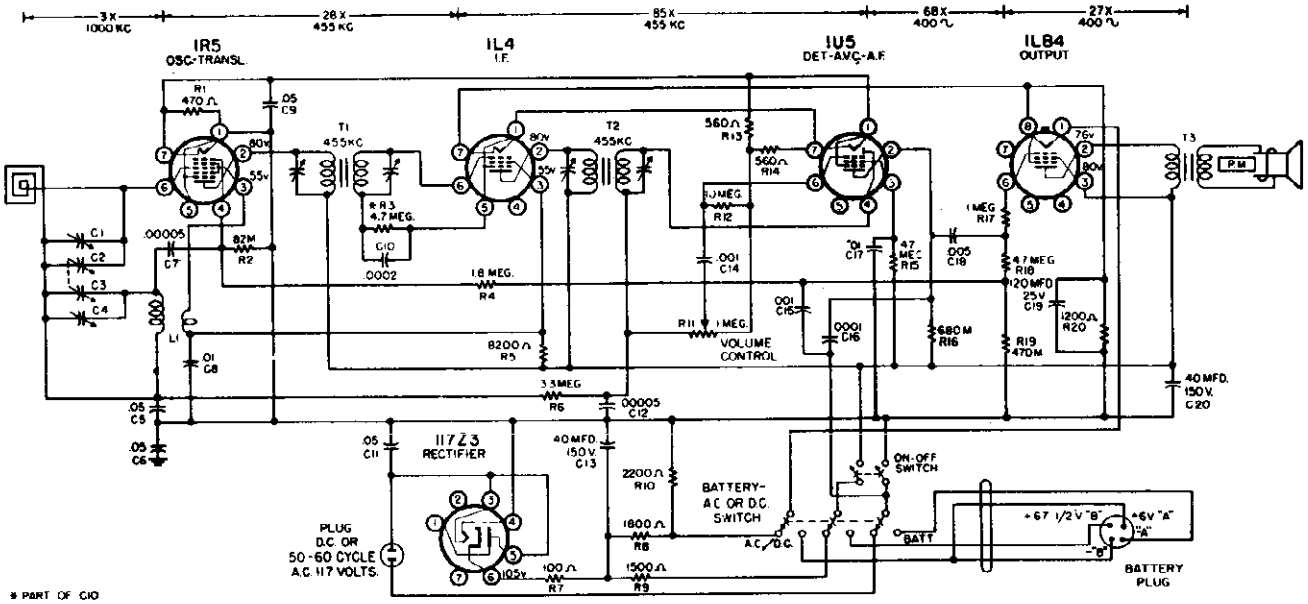

* PART OF C10

TUBE SOCKETS ARE VIEWED FROM UNDER SIDE OF CHASSIS. VOLTAGE READINGS SHOWN AT SOCKET PRONGS ARE TO NEG. "B" AND ARE TAKEN WITH NO SIGNAL, AND WITH LINE VOLTAGE AT 117 VOLTS A.C. WHERE NO READING IS GIVEN THE VOLTAGE IS ZERO OR TOO LOW TO READ.
THE GAIN PER STAGE VALUES AS NOTED ABOVE ARE APPROXIMATE VALUES FOR AN AVERAGE STAGE, RATHER THAN AN ABSOLUTE VALUE. A .01MFD. DUMMY IS USED FOR ALL MEASUREMENTS EXCEPT THE 1000KC WHERE A STANDARD RADIATING LOOP IS USED. INPUT SHALL BE KEPT AT THE LOWEST LEVEL NECESSARY TO MAINTAIN A STANDARD OUTPUT OF 50 MILLIWATTS WITH THE VOLUME CONTROL FULLY ON. NOTE: THE TYPE OF EQUIPMENT USED, THE HANDLING OF THE PROBES, THE ACCURACY OF ALIGNMENT, ETC., CAN AFFECT THE MEASUREMENTS

MODEL 9260,
CHASSIS 101.850

SEARS, ROEBUCK & CO.

SPECIFICATIONS

Power Supply
All models available . . . . . 117 Volt, 50-60 Cycles AC or DC, 15 Watts

Frequency Range
Broadcast . . . . . 540-1600 KC

Power Output
Undistorted . . . . . .05 Watt
Maximum . . . . . 0.1 Watt

ALIGNMENT PROCEDURE

PRELIMINARY:

Output meter reading to indicate 0.05 Watt across voice coil. . . . . 0.4 Volts
Generator ground lead connection . . . . . .To B—through 0.1 mfd. capacitor (I.F. Alignment)
Generator modulation . . . . . 30%, 400 cycles
Position of volume control . . . . . Fully on
Position of pointer with tuner fully closed . . . . . Below the 540 kc. calibration mark

POSITION OF TUNER	GENERATOR FREQUENCY	DUMMY ANTENNA	GENERATOR CONNECTION	ADJUSTMENTS (IN ORDER SHOWN)	FUNCTION
Closed	455 Kc.	0.1 mfd.	Transl.-Grid	T2 & T1	I.F.
*1400 Kc.	1400 Kc.	200 mmfd.	Hazeltine Loop	C4	Oscillator
*1400 Kc.	1400 Kc.	200 mmfd.	Hazeltine Loop	C1	Antenna

IMPORTANT ALIGNMENT NOTES:

NOTE: It is recommended that an isolation transformer be connected between the radio chassis and the line before aligning the receiver on A.C.

The alignment must be done in the order given.

Always keep the output power from the generator at its lowest possible value to prevent the AVC of the receiver from interfering with accurate alignment.

***Always make these trimmer adjustments with the loop in approximately the same position, with respect to the chassis, as it is when the chassis and loop are mounted in the case.**

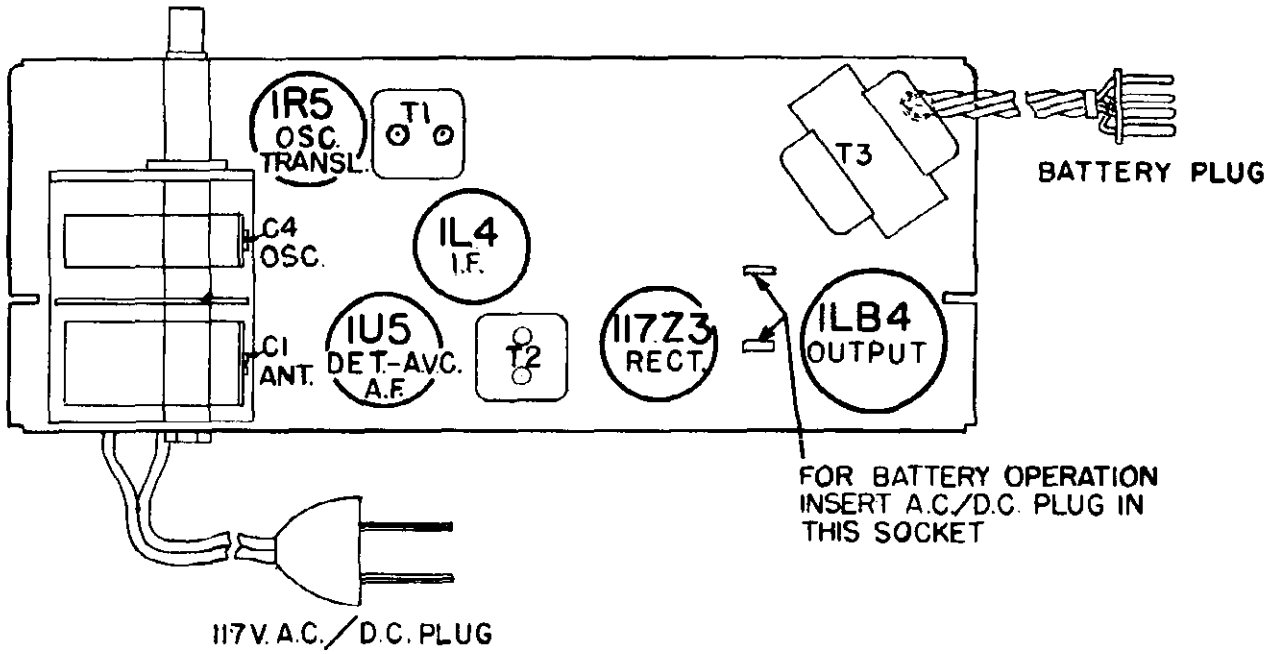

LOCATION OF PARTS ON TOP OF CHASSIS

SENTINEL RADIO CORP.

MODEL 296-B,
296-M

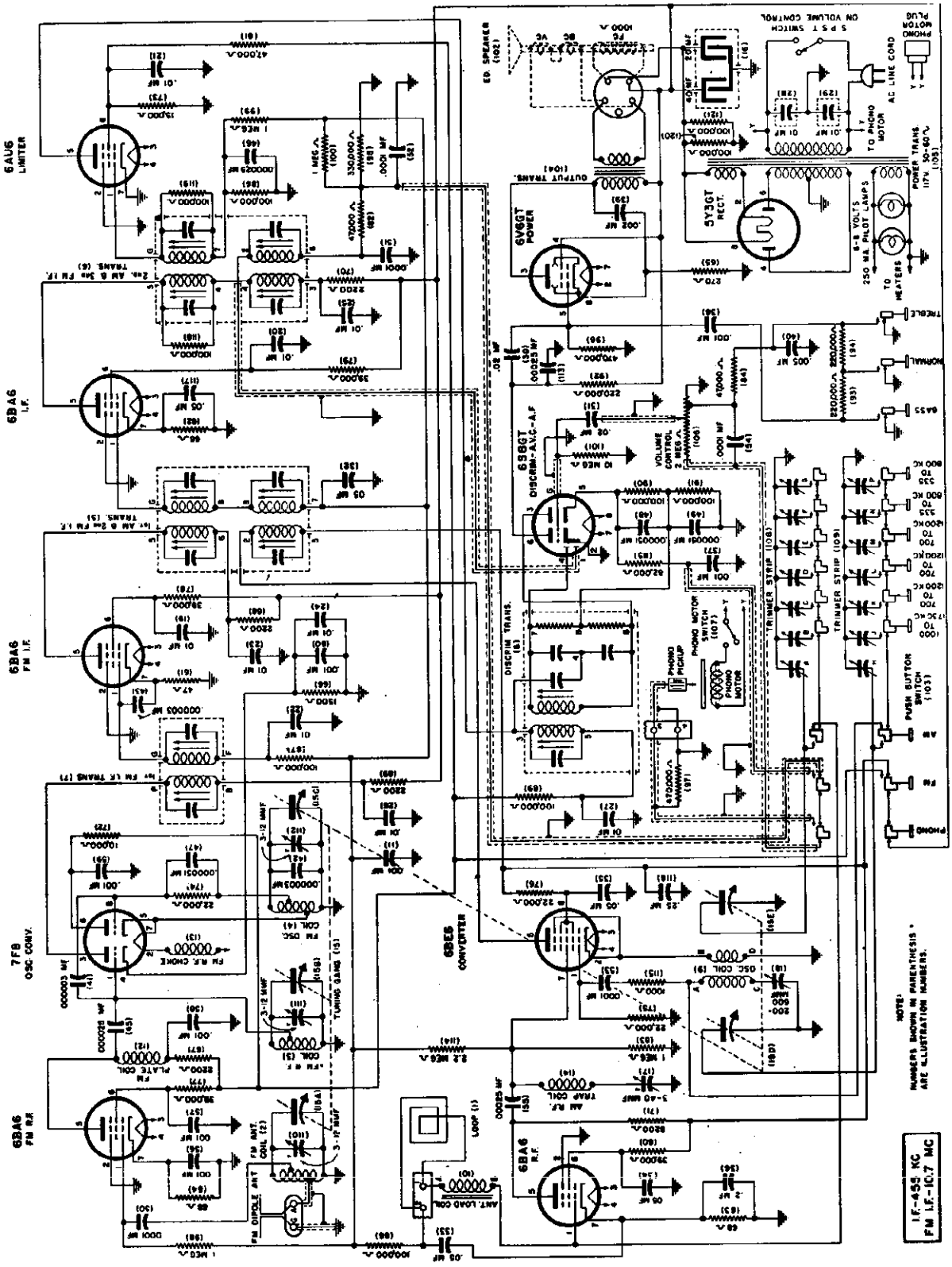

CLARI-SKEMATIX
Registered Trademark

MODEL 296-B,
296-M

SENTINEL RADIO CORP.

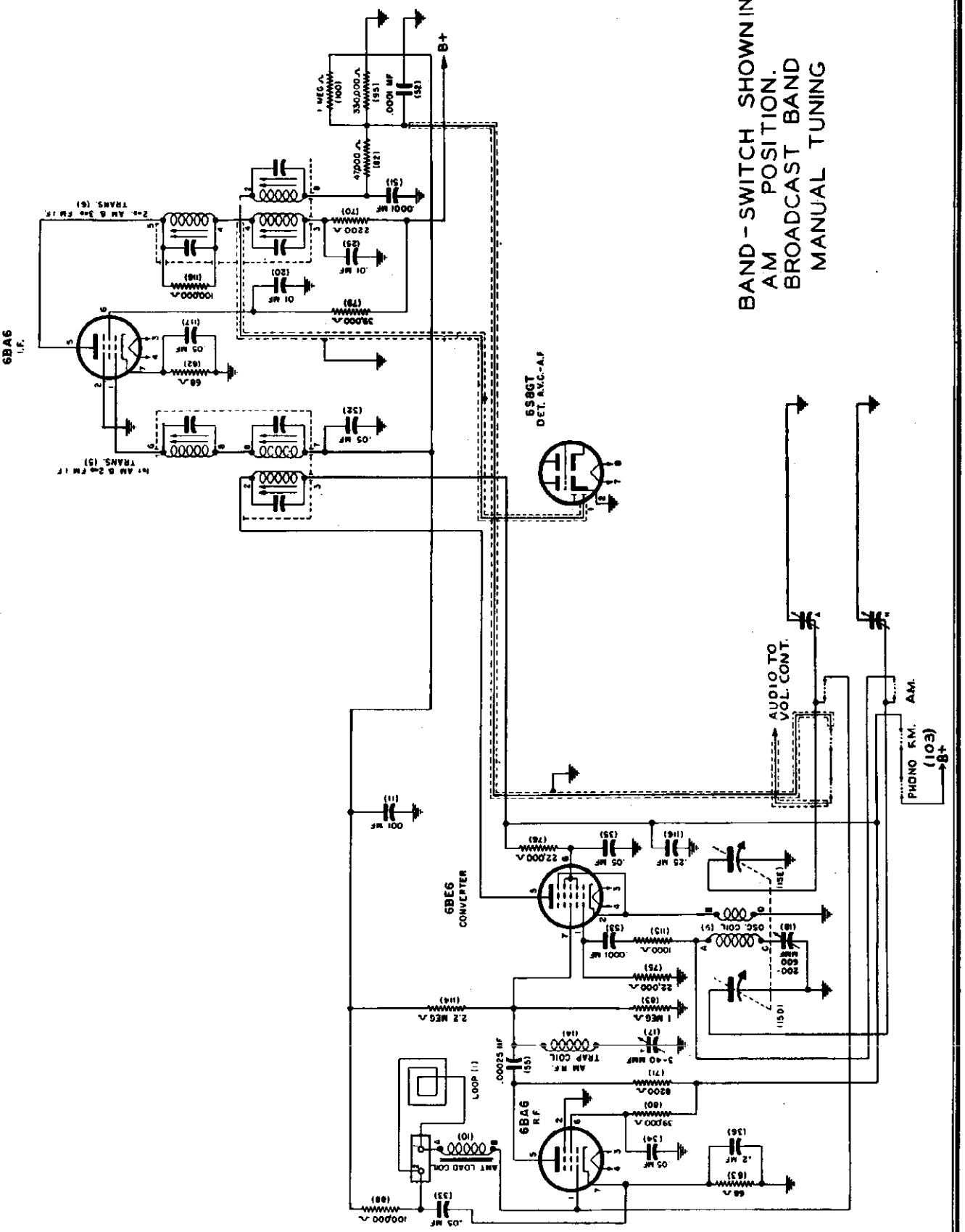

SENTINEL RADIO CORP.

MODEL 296-B, 296-M

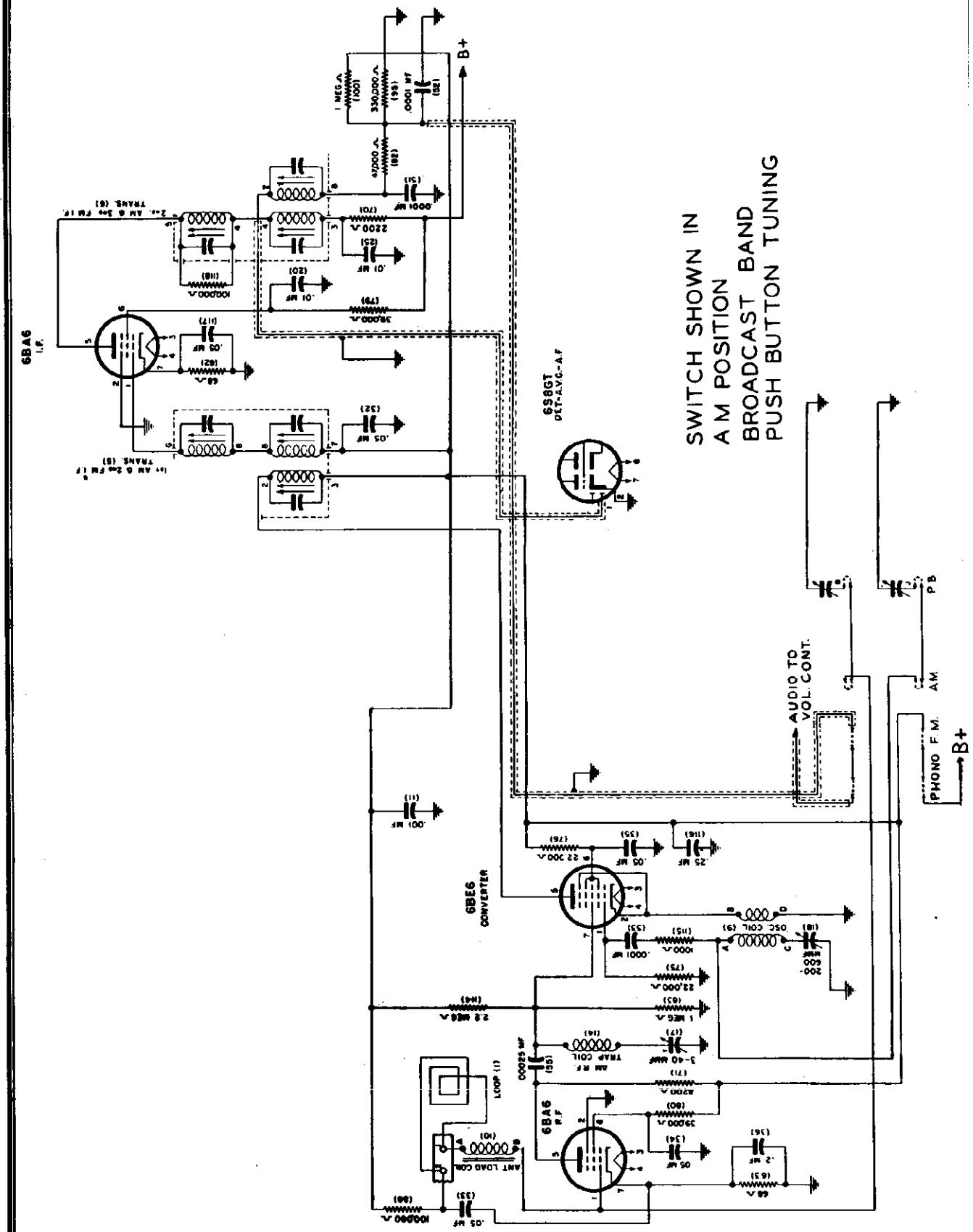

CLARI-SKEMATIX
Registered Trademark

MODEL 296-B,
296-M

SENTINEL RADIO CORP.

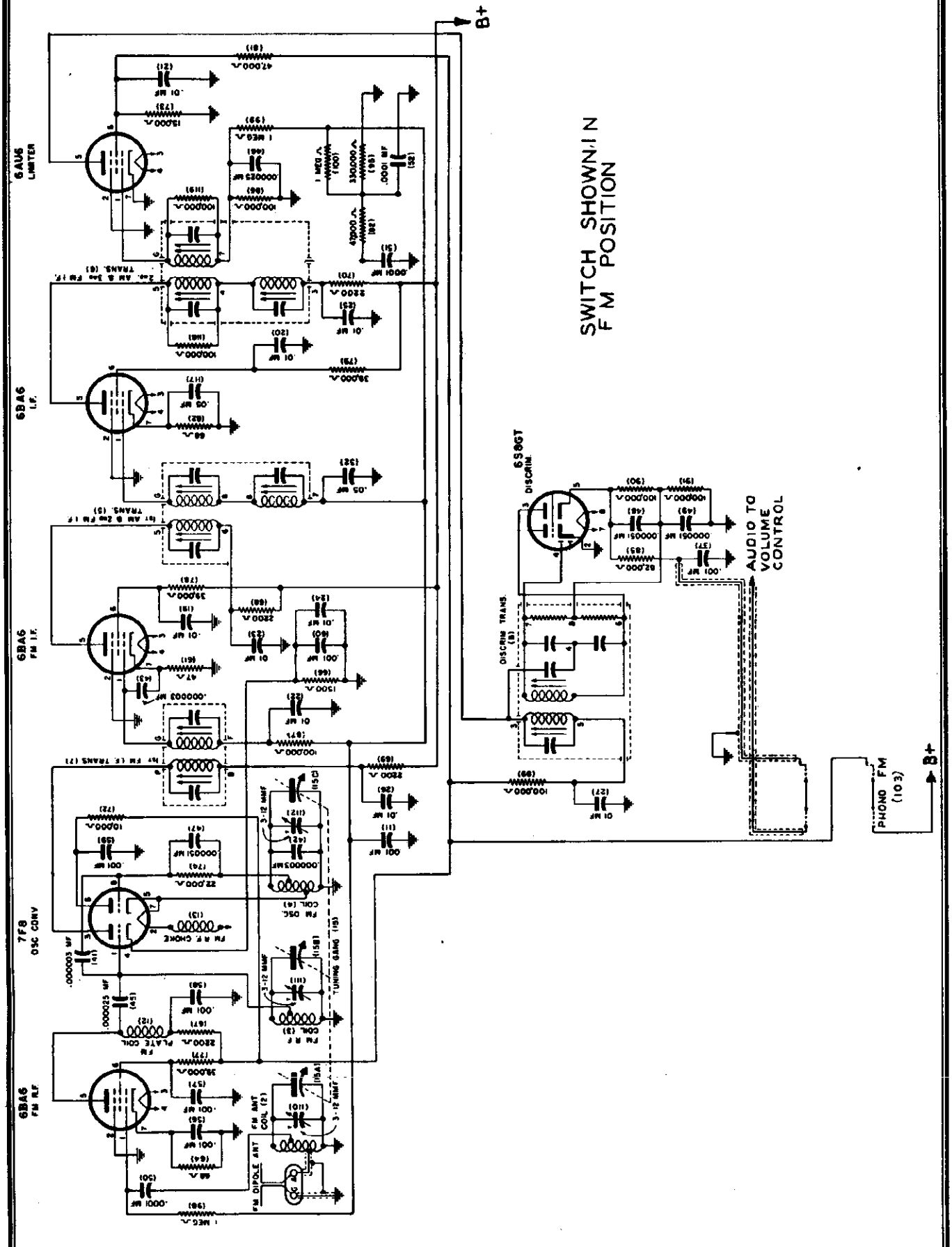

© John F. Rider

FM ALIGNMENT

Instructions for Alignment of the Frequency Modulation I. F. Transformers, Discriminator, Oscillator, R. F. and Antenna Circuits, with AM equipment generally available to the service man.

The equipment necessary for this procedure consists of the following:

D.C. Vacuum Tube Voltmeter of the Volt-Ohmyst Type. An AM Signal Generator that will supply:

(1) A 10.7 M.C. Signal for I F. alignment.

(2) A 105 M.C. and 109 M.C. Signal—a Signal Generator that only goes up to 30 M.C. but which has sufficient fourth harmonics present in the carrier could be used for this purpose.

THE GENERATOR USED NEED NOT BE FREQUENCY MODULATED.

IT IS ALWAYS DESIRABLE TO ALIGN THE "AM" I. F. TRANSFORMERS BEFORE MAKING ANY OF THE "FM" I. F. ADJUSTMENTS, and to RECHECK "AM" I. F. TRIMMERS AFTER COMPLETING "FM" I. F. ADJUSTMENTS.

BE SURE TO MAKE THE "FM" ADJUSTMENTS IN THE ORDER GIVEN BELOW.

(1) PROCEDURE FOR ALIGNMENT OF FM DISCRIMINATOR TRANSFORMER:

(A) Connect the Voltmeter from Pin No. 5 of the 6S8GT tube to chassis.

(B) With a .002 Mfd. Isolation Condenser in series with hot Signal Generator lead, connect generator from Pin No. 1 of the 6AU6 Limiter tube to chassis.

(C) Set Signal Generator to EXACTLY 10.7 M. C.

(D) Adjust 10.7 M. C. Discriminator Primary Trimmer for MAXIMUM reading on Voltmeter.

(E) Leave Signal Generator set at 10.7 M. C. and modulate with a 400 cycle note.

(F) Adjust 10.7 M. C. Secondary Discriminator Trimmer for MINIMUM 400 CYCLE RESPONSE IN THE SPEAKER. IMPORTANT: The reading on the Voltmeter should be ZERO. MINIMUM AUDIO RESPONSE WILL BE RATHER CRITICAL IN ADJUSTMENT.

(G) To check adjustment, swing Signal Generator to one side of 10.7 M. C. until MAXIMUM reading is obtained on Voltmeter and NOTE FREQUENCY and VOLTAGE READING. Then swing Signal Generator to the opposite side of 10.7 M. C. until MAXIMUM reading is obtained on Voltmeter and AGAIN NOTE VOLTAGE AND FREQUENCY READINGS. The two Voltmeter readings should be similar within 3 DB. and the two Signal Frequency readings should be a reasonably equal distance from 10.7 M. C. The difference in K.C. between the center frequency and one side should not exceed the difference between the center frequency and the other side by more than 50 K. C.

NOTE: If reliable FM Generator is available at 10.7 M.C., the procedure outlined in Paragraph (G) will be simplified by aligning to the proper pattern on an Oscilloscope. 100 K. C. deviation should be used.

CAUTION: Care should be taken to align the I. F. stages at the EXACT same center frequency as the Discriminator Coil. Switching from FM to AM on some generators may shift the carrier frequency somewhat.

(2) PROCEDURE FOR ALIGNMENT OF "FM" I. F. TRANSFORMERS:

(A) Connect the Voltmeter from the junction of the two 1 Megohm Resistors, (Illus. 99 and 100) to chassis.

(B) Connect Signal Generator to Input Grid (Pin No. 1) of 7F8 Converter tube.

(C) Set Signal Generator to EXACTLY 10.7 M. C.—if possible, mark the position where this occurs right on the Generator's calibrated dial because this becomes a reference point in checking for proper FM I. F. alignment.

(D) Adjust each of the 1st, 2nd and 3rd FM I. F. Transformers' 10.7 M. C. trimmers for MAXIMUM reading on Voltmeter. KEEP OUTPUT OF SIGNAL GENERATOR SO THAT A READING OF APPROXIMATELY 2 to 4 VOLTS IS OBTAINED ON THE VOLTMETER.

(E) After all the above FM I. F. Transformer Trimmer adjustments have been correctly completed, MAKE A NOTE OF THE READING ON THE VOLTMETER.

(F) Next, detune the signal generator to a slightly HIGHER frequency (higher than the 10.7 reference frequency), until the Voltmeter reads ONE-HALF of the figure noted in (E) above, and MAKE A NOTE OF THE GENERATOR FREQUENCY AT WHICH THIS OCCURS.

(G) Now, detune the signal generator to a LOWER frequency (lower than the 10.7 reference frequency), until the Voltmeter again reads ONE-HALF the original figure noted in (E), and AGAIN NOTE THE GENERATOR FREQUENCY AT WHICH THIS OCCURS.

The difference between the two above frequencies obtained in (F) and (G), the one lower than 10.7 M. C. reference point and the one higher, is the "Half-amplitude" Band width of the FM-I. F. system. These two frequencies (F) and (G), should be somewhat uniformly spaced on either side of the 10.7 M. C. (C) reference frequency. A SLIGHT DIFFERENCE IS NOT SERIOUS. Only when one is more than twice as far as the other from the 10.7 M. C. reference frequency, or when there is a double peak, is the discrepancy serious. Assuming the FM I. F. Transformers have been properly adjusted, a double peak, or extremely one-sided "half-amplitude" band width, is usually caused by regeneration or a defective FM I. F. Transformer.

(3) PROCEDURE FOR THE ALIGNMENT OF THE "FM" ANTENNA, R.F., AND OSCILLATOR CIRCUITS:

(A) Leave Voltmeter connected as it was for FM I. F. Alignment.

(B) Connect the hot Signal Generator lead through a 300 Ohm Resistor to the FM Antenna Post, marked "ANT" on back of chassis, and the other lead to the post marked "GND".

(C) Set Signal Generator so that it will deliver a modulated 108 M. C. signal. If the generator available is not de-

signed to deliver a 108 M. C. signal, use a generator covering at least to 30 M. C. and set this generator frequency to 27 M. C.—the fourth harmonic of which will be 108 M. C.

(D) Set Receiver Dial Pointer to EXACTLY 108 M. C.

(E) Adjust 108 M. C. Oscillator Trimmer for MAXIMUM reading on Voltmeter or MAXIMUM signal heard in speaker.

(F) Next, tune the receiver to 104 M. C.

(G) Set Signal Generator to deliver a 104 M. C. modulated signal.

(H) Adjust 104 M. C. Antenna and R. F. Trimmers for MAXIMUM reading on Voltmeter or MAXIMUM signal heard in speaker.

Because it is somewhat helpful to hear the signal, an AM modulation on the 108 M. C. and 104 M. C. signal frequencies may be used for alignment of the FM Oscillator, R. F. and Antenna circuits. With modulated or unmodulated signal, ALWAYS ADJUST FOR MAXIMUM READING ON VOLTMETER. (ADJUSTMENT OF "FM" GANG CONDENSER PLATES AT 98 M.C. AND 90 M. C. MAY BE NECESSARY TO INSURE PROPER TRACKING.)

A FREQUENCY MODULATED SIGNAL GENERATOR may be used instead of an AM signal generator. When a Frequency Modulated Signal Generator is used, it is recommended that an unmodulated carrier be used for all of the above adjustments EXCEPT alignment of the Discriminator Secondary Trimmer. Use a Frequency Modulated signal (100 K.C. deviation) and align Discriminator Secondary for proper pattern on an Oscilloscope.

AM ALIGNMENT PROCEDURE

Be sure to follow procedure carefully and in the order given—otherwise the receiver will be insensitive and the dial calibration incorrect. For alignment procedure read tabulations from left to right. Make the adjustment marked (1) first, (2) next.

Before starting alignment:

(A) Check tuning dial adjustment by turning gang condenser until plates reach maximum capacity stop (completely in mesh) at which point the dial pointer must be exactly even with the last line at the low frequency end of the AM dial calibration. If dial pointer does not point exactly to last line move to correct position.

(B) Use an accurately calibrated test oscillator with some type of output measuring device.

(C) WHEN ADJUSTING THE 1730 KC OSCILLATOR TRIMMER, THE 455 KC TRIMMER, remove chassis from cabinet and disconnect the loop connection wires from the set. Attach a 1 megohm resistor across these connections and feed output of test oscillator across the 1 megohm resistor.

(D) THE 1400 KC LOOP ANTENNA TRIMMER and 600 KC PADDER should be adjusted only after all other adjustments have been made and with the set mounted in the cabinet, and the loop in position. When aligning the 1400 KC Antenna Trimmer and 600 KC Padder, couple test oscillator to receiver loop by: (1) make loop consisting of five to ten turns of No. 20 to No. 30 size wire, wound on a 2" or 3" form; (2) connect this loop across output of test oscillator; (3) place test oscillator loop near radio loop. BE SURE THAT NEITHER LOOP MOVES WHILE ALIGNING.

Steps	Place band switch for operation on:	Set receiver dial to:	TEST OSCILLATOR			Refer to parts layout diagram for location of trimmers mentioned below:
			Adjust test oscillator frequency to:	Use dummy antenna in series with output of test oscillator consisting of:	Attach output of test oscillator to:	
1	AM Band position	Any point where no interfering signal is received	Exactly 455 K. C.	0.2 Mfd. Condenser	High side to AM-Osc. stator plates of tuning condenser (15D). Low side to frame of condenser through .01 Mfd. condenser.	Adjust each of the 2nd 455 K. C. AM I. F. transformer trimmers for maximum output, then adjust each of the 1st 455 K. C. I. F. transformer trimmers for maximum output.
2	AM Band position	Rotate gang condenser to maximum capacity	Exactly 455 K. C.	.00025 Condenser	See Paragraph (C) above.	Adjust 455 K. C. trap trimmer for MINIMUM 455 K. C. Signal.
		Exactly 1730 K. C.	Exactly 1730 K. C.			Adjust 1730 K. C. oscillator trimmer for maximum output.
		Approx. 1400 K. C.	Approx. 1400 K. C.	See Paragraph (D) above.		Adjust 1400 K. C. AM Ant. trimmer for maximum output.
		Approx. 600 K. C.	Approx. 600 K. C.			While rocking gang condenser, adjust 600 K. C. oscillator padder for maximum output.

SENTINEL RADIO CORP.

MODEL 296-B,
296-M

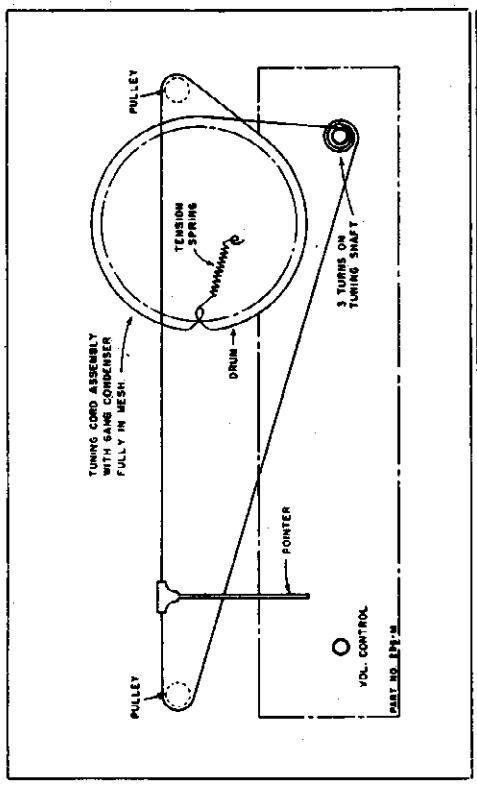

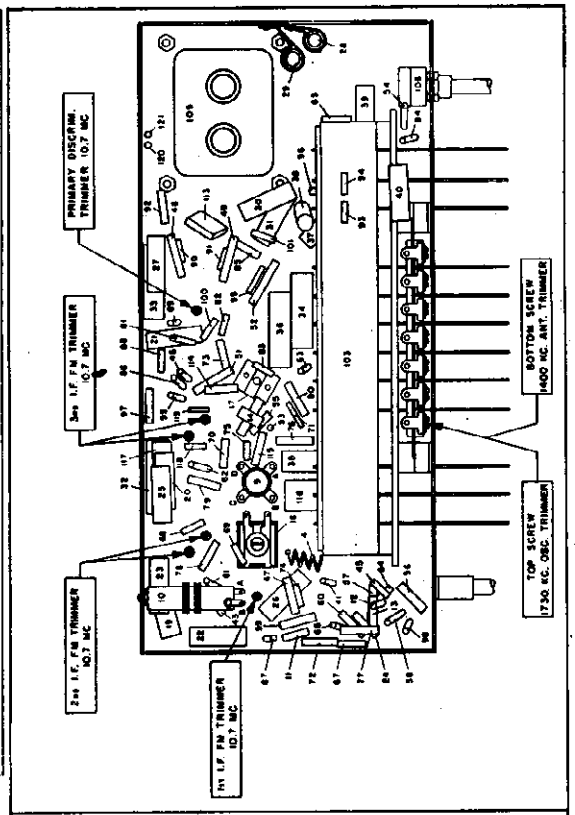

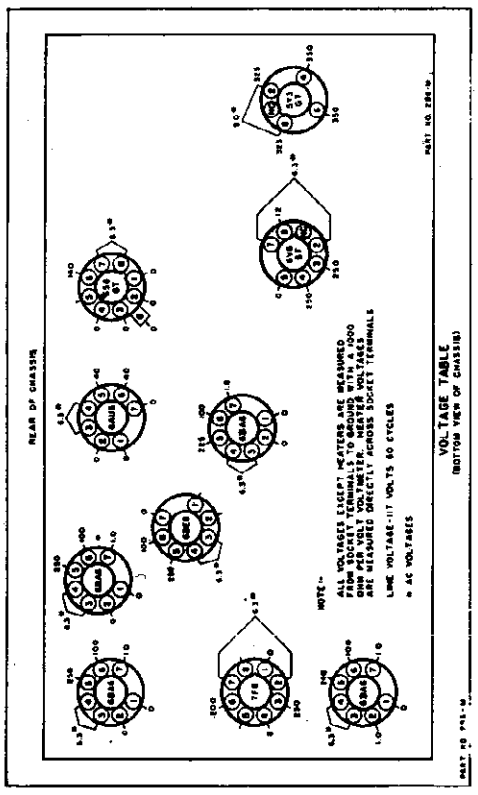

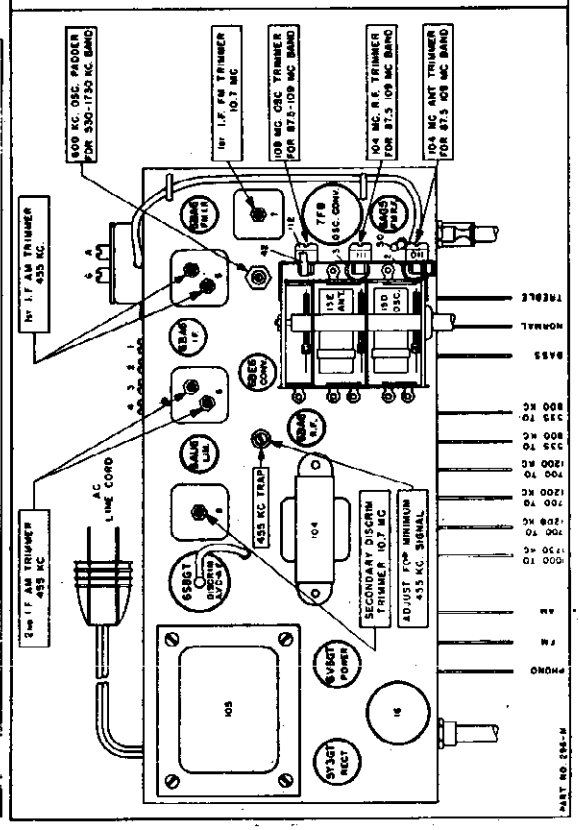

PARTS LIST

Illus. No.	Part No.	Part Name	Description
1	20E235	Antenna	Loop
2	2E48	Coil	FM Antenna
3	2E49	Coil	FM R.F.
4	2E50	Coil	FM Osc.
5	20E216	Coil	1st AM & 2nd FM I.F. Trans.
6	20E217	Coil	2nd AM & 3rd FM I.F. Trans.
7	20E218	Coil	1st FM I.F. Trans.
8	20E219	Coil	Discriminator
9	20E221	Coil	Oscillator
10	20E222	Coil	Ant. Loading
11	23E2012	Condenser	Fixed Ceramic, .001 Mfd.
12	2E52	Coil	FM Plate
13	2E47	Coil	FM R.F. Choke
14	2E19	Coil	455 KC Trap
15	24E27	Condenser	Tuning Gang
16	25E20	Condenser	Elect. Dry 20-40 Mfd. 400 V.
17	24E3	Condenser	Trimmer, 3-40 MMF.
18	24E16	Condenser	Padder, 200-600 MMF.
19	23E411	Condenser	Fixed Paper, .01 Mfd. 400 V.
20	23E411	Condenser	Fixed Paper, .01 Mfd. 400 V.
21	23E411	Condenser	Fixed Paper, .01 Mfd. 400 V.
22	23E411	Condenser	Fixed Paper, .01 Mfd. 400 V.
23	23E411	Condenser	Fixed Paper, .01 Mfd. 400 V.
24	23E2004-5	Condenser	Fixed Paper, .01 Mfd. 150 V.
25	23E411	Condenser	Fixed Paper, .01 Mfd. 400 V.
26	23E411	Condenser	Fixed Paper, .01 Mfd. 400 V.
27	23E411	Condenser	Fixed Paper, .01 Mfd. 400 V.
28	23E250	Condenser	.01 Mfd. 220 V. Metal Container.
29	23E250	Condenser	.01 Mfd. 220 V. Metal Container.
30	23E413	Condenser	Fixed Paper, .02 Mfd. 400 V.
31	23E213	Condenser	Fixed Paper, .02 Mfd. 200 V.
32	23E2014-8	Condenser	Fixed Paper, .05 Mfd. 200 V.
33	23E416	Condenser	Fixed Paper, .05 Mfd. 400 V.
34	23E416	Condenser	Fixed Paper, .05 Mfd. 400 V.
35	23E416	Condenser	Fixed Paper, .05 Mfd. 400 V.
36	23E2014-10	Condenser	Fixed Paper, .2 Mfd. 200 V.
37	23E204	Condenser	Fixed Paper, .001 Mfd. 200 V.
38	23E204	Condenser	Fixed Paper, .001 Mfd. 200 V.
39	23E605	Condenser	Fixed Paper, .002 Mfd. 600 V.
40	23E208	Condenser	Fixed Paper, .005 Mfd. 200 V.
41	23E20	Condenser	Fixed Ceramic, .000003 Mfd. 500 V.
42	23E20	Condenser	Fixed Ceramic, .000003 Mfd. 500 V.
43	23E13	Condenser	Fixed Ceramic, .000003 Mfd. 500 V.
45	23E8	Condenser	Fixed Ceramic, .000025 Mfd. 500 V.
46	23E8	Condenser	Fixed Ceramic, .000025 Mfd. 500 V.
47	23E2	Condenser	Fixed Ceramic, .000051 Mfd. 500 V.
48	23E2	Condenser	Fixed Ceramic, .000051 Mfd. 500 V.
49	23E2	Condenser	Fixed Ceramic, .000051 Mfd. 500 V.
50	23E10	Condenser	Fixed Ceramic, .0001 Mfd. 500 V.
51	23E11	Condenser	Fixed Ceramic, .0001 Mfd. 500 V.
52	23E11	Condenser	Fixed Ceramic, .0001 Mfd. 500 V.
53	23E11	Condenser	Fixed Ceramic, .0001 Mfd. 500 V.
54	23E11	Condenser	Fixed Ceramic, .0001 Mfd. 500 V.
55	23E42	Condenser	Fixed Mica, .00025 Mfd.
56	23E2012	Condenser	Fixed Ceramic, .001 Mfd. 500 V.
57	23E2012	Condenser	Fixed Ceramic, .001 Mfd. 500 V.
58	23E2012	Condenser	Fixed Ceramic, .001 Mfd. 500 V.
59	23E2012	Condenser	Fixed Ceramic, .001 Mfd. 500 V.
60	23E2012	Condenser	Fixed Ceramic, .001 Mfd. 500 V.
61	27E470-2	Resistor	Carbon, 47 Ohm 1/2 Watt.
62	27E680-2	Resistor	Carbon, 68 Ohm 1/2 Watt.
63	27E680-2	Resistor	Carbon, 68 Ohm 1/2 Watt.
64	27E680-2	Resistor	Carbon, 68 Ohm 1/2 Watt.
65	27E271-3	Resistor	Carbon, 270 Ohm 1 Watt.
66	27E152-2	Resistor	Carbon, 1,500 Ohm 1/2 Watt.
67	27E222-2	Resistor	Carbon, 2,200 Ohm 1/2 Watt.
68	27E222-2	Resistor	Carbon, 2,200 Ohm 1/2 Watt.
69	27E222-2	Resistor	Carbon, 2,200 Ohm 1/2 Watt.
70	27E222-2	Resistor	Carbon, 2,200 Ohm 1/2 Watt.
71	27E822-3	Resistor	Carbon, 8,200 Ohm 1 Watt.
72	27E103-3	Resistor	Carbon, 10,000 Ohm 1 Watt.
73	27E153-2	Resistor	Carbon, 15,000 Ohm 1/2 Watt.
74	27E223-2	Resistor	Carbon, 22,000 Ohm 1/2 Watt.
75	27E223-2	Resistor	Carbon, 22,000 Ohm 1/2 Watt.
76	27E223-5	Resistor	Carbon, 22,000 Ohm 2 Watt.
77	27E393-2	Resistor	Carbon, 39,000 Ohm 1/2 Watt.
78	27E393-2	Resistor	Carbon, 39,000 Ohm 1/2 Watt.
79	27E393-2	Resistor	Carbon, 39,000 Ohm 1/2 Watt.
80	27E393-2	Resistor	Carbon, 39,000 Ohm 1/2 Watt.
81	27E473-3	Resistor	Carbon, 47,000 Ohm 1 Watt.
82	27E473-2	Resistor	Carbon, 47,000 Ohm 1/2 Watt.
83	27E105-2	Resistor	Carbon, 1 Meg Ohm 1/2 Watt.
84	27E473-2	Resistor	Carbon, 47,000 Ohm 1/2 Watt.
85	27E823-2	Resistor	Carbon, 82,000 Ohm 1/2 Watt.
86	27E104-2	Resistor	Carbon, 100,000 Ohm 1/2 Watt.
87	27E104-2	Resistor	Carbon, 100,000 Ohm 1/2 Watt.
88	27E104-2	Resistor	Carbon, 100,000 Ohm 1/2 Watt.
89	27E104-2	Resistor	Carbon, 100,000 Ohm 1/2 Watt.
90	27E104-2	Resistor	Carbon, 100,000 Ohm 1/2 Watt.
91	27E104-2	Resistor	Carbon, 100,000 Ohm 1/2 Watt.
92	27E224-2	Resistor	Carbon, 220,000 Ohm 1/2 Watt.
93	27E224-2	Resistor	Carbon, 220,000 Ohm 1/2 Watt.
94	27E224-2	Resistor	Carbon, 220,000 Ohm 1/2 Watt.
95	27E334-2	Resistor	Carbon, 330,000 Ohm 1/2 Watt.
96	27E474-2	Resistor	Carbon, 470,000 Ohm 1/2 Watt.
97	27E474-2	Resistor	Carbon, 470,000 Ohm 1/2 Watt.
98	27E105-2	Resistor	Carbon, 1 Meg Ohm 1/2 Watt.
99	27E105-2	Resistor	Carbon, 1 Meg Ohm 1/2 Watt.
100	27E105-2	Resistor	Carbon, 1 Meg Ohm 1/2 Watt.
101	27E106-2	Resistor	Carbon, 10 Meg Ohm 1/2 Watt.
102	1E24	Speaker	12" E.D.
103	29E14	Switch	Push Button
104	22E18	Transformer	Output
105	22E19	Transformer	Power
106	28E21	Volume Control	With S.P.S.T. Switch.
107	11X052	Switch	Phono Motor Assembly (On Motor Panel).
108	24E25	Capacitor	Trimmer Strip (7 Section)
109	24E26	Capacitor	Trimmer Strip (7 Section)
110	24E28	Capacitor	Trimmer (3-12 MMF)
111	24E28	Capacitor	Trimmer (3-12 MMF)
112	24E28	Capacitor	Trimmer (3-12 MMF)
113	23E42	Condenser	Fixed Mica .00025 Mfd.
114	27E225-2	Resistor	Carbon, 2.2 Meg Ohm 1/2 Watt.
115	27E102-2	Resistor	Carbon, 1000 Ohm 1/2 Watt.
116	23E422	Capacitor	Fixed Paper, .25 Mfd. 400 V.
117	23E416	Capacitor	Fixed Paper, .05 Mfd. 400 V.
118	27E104	Resistor	Carbon, 100,000 Ohm 1/3 Watt.
119	27E104	Resistor	Carbon, 100,000 Ohm 1/3 Watt.
120	27E104-5	Resistor	Carbon, 100,000 Ohm 2 Watt.
121	27E104-5	Resistor	Carbon, 100,000 Ohm 2 Watt.

MISCELLANEOUS PARTS

Part No.	Part Name	Description
64E9	Antenna	FM Di Pole
7E116	Back	For Cabinet
53E128	Call Letters	Complete Set Station Call Letter Sheets.
53E129	Call Letters	"AM-FM," "Phono," "High," "Med.," "Bass" on Sheet.
36E29	Dial Scale	Calibrated Scale
20E270-6	Dial Shaft Assem.	Drive Shaft Assembly.
20E253-10	Dial Cord	Drive Cord
65E2	Dial Spring	Tension Spring for Dial Cord.
20E174-4	Dial Pointer	Dial Indicator
48E3	Dial Escutcheon	Fits around Dial Scale and Push Buttons for 296M.
48E3-2	Dial Escutcheon	Fits around Dial Scale and Push Buttons for 296B.
40E2	Dial Light	6-8 Volt .250 Amp. Mazda Type No. 44
37E27-12	Knob	Marked "Tuning" for Model 296M
37E27-14	Knob	Marked "Off-On-Vol." for Model 296M
37E27-34	Knob	Marked "Tuning" for Model 296B
37E27-35	Knob	Marked "Off-On-Vol." for Model 296B
37E46	Knob	Push Button
17E21-2	Plug	2 Prong for Phono-Motor
18E4-2	Post	4 Post Binding
18E4-3	Post	2 Post Binding
7E111	Slide Rail	For Record Changer
17E27	Socket	For Pilot Light
20E184	Socket	2 Contact, Female, for Phono Motor

©John F. Rider

SENTINEL RADIO CORP.

MODELS 313I, 313W,
1U-313I, 1U-313W

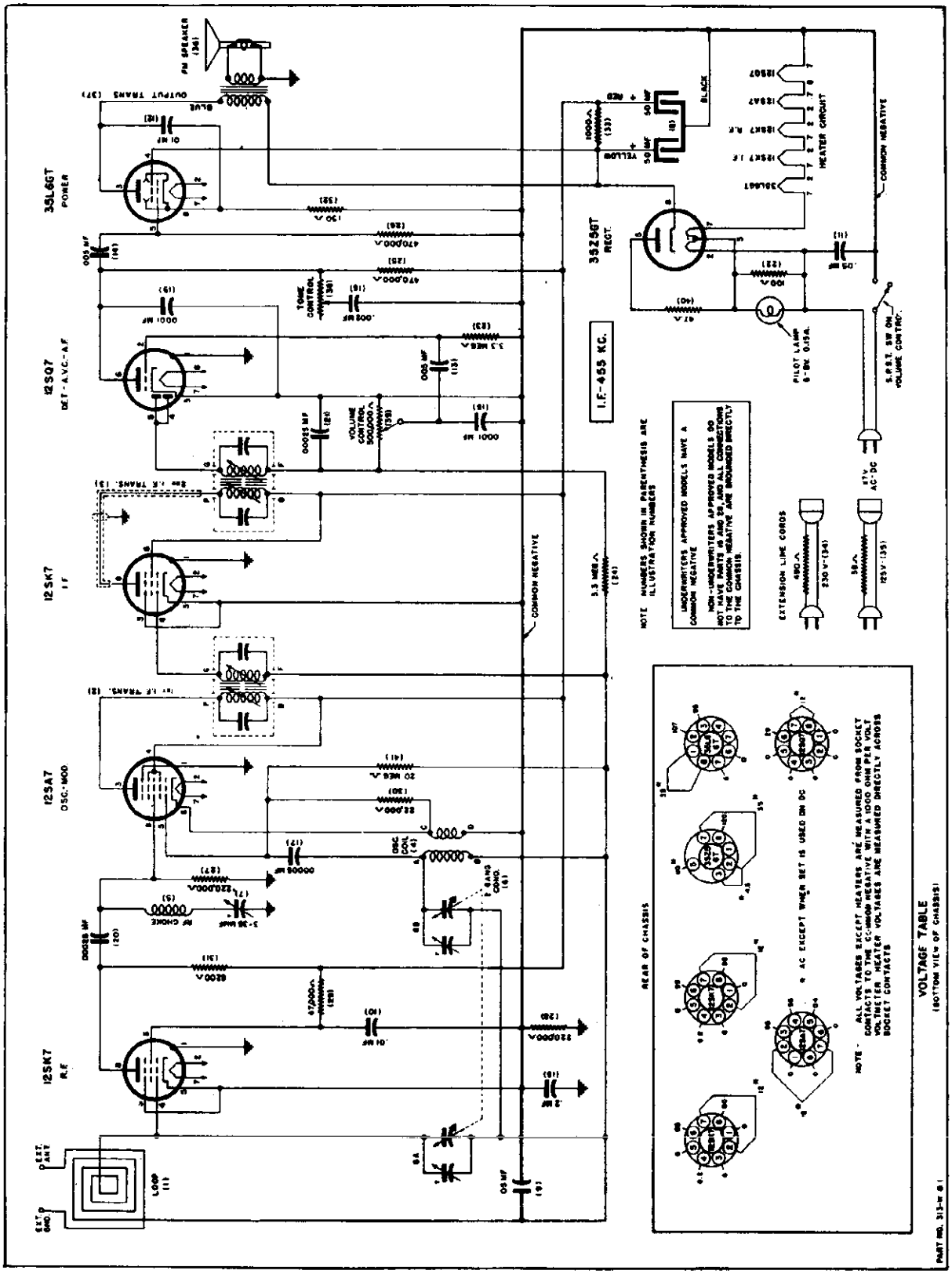

ALIGNMENT PROCEDURE

For alignment procedure read tabulations from left to right, and make the adjustment marked (1) first, (2) next, (3) third.
IMPORTANT: BEFORE ALIGNING, PLACE LOOP ANTENNA IN THE SAME POSITION IT WILL BE IN WHEN THE SET IS IN THE CABINET. BE SURE THAT IT DOES NOT MOVE WHILE ALIGNING.

When adjusting 1650 kilocycle oscillator trimmer, 455 K.C. R.F. trimmer and 1400 kilocycle antenna trimmer, connect test oscillator to loop external antenna and ground connections with a .0002 Mfd. capacitor in series with antenna lead.

Steps	Set receiver dial to:	TEST OSCILLATOR			Refer to parts layout diagram for location of trimmers mentioned below:
		Adjust test oscillator frequency to:	Use dummy antenna in series with output of test oscillator consisting of:	Attach output of test oscillator to:	
	Any point where no interfering signal is received	Exactly 455 K. C.	0.2 Mfd. Condenser	High side to grid of 12SA7 tube. Low side to chassis. (To Common Negative in 1U-313 Models.)	Adjust each of the 2nd I.F. transformer trimmer adjustment screws for maximum output, then adjust each of the 1st I.F. transformer trimmer adjustment screws for maximum output.
1	Rotate gang condenser to maximum capacity	Exactly 455 K. C.	.0002 Mfd. Condenser	To loop external antenna and ground connections	Adjust R. F. coil trimmer for minimum 455 K. C. signal.
2	Rotate gang condenser to minimum capacity	Exactly 1650 K. C.	.0002 Mfd. Condenser	To loop external antenna and ground connections	Adjust 1650 K. C. oscillator trimmer for maximum output.
3	Approximately 1400 K. C.	Approx. 1400 K. C.	.0002 Mfd. Condenser	To loop external antenna and ground connections	Adjust 1400 K. C. antenna trimmer for maximum output.

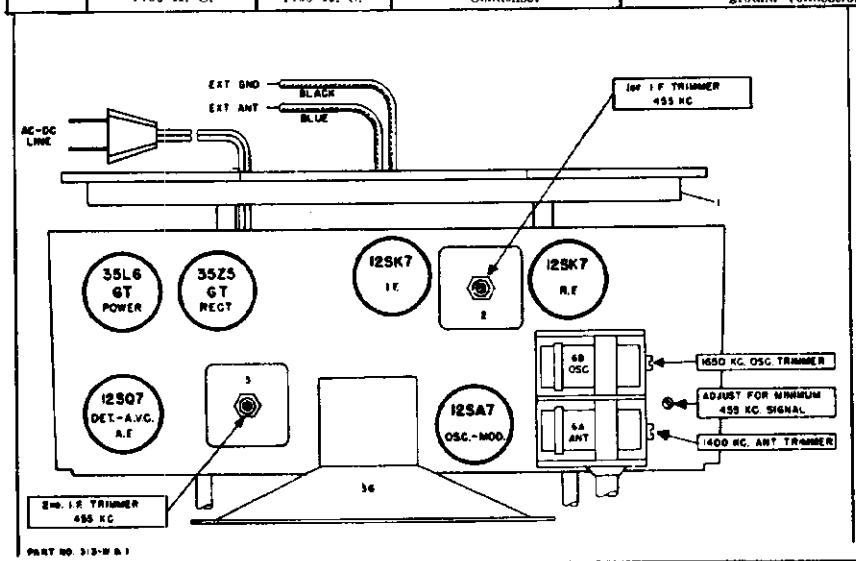

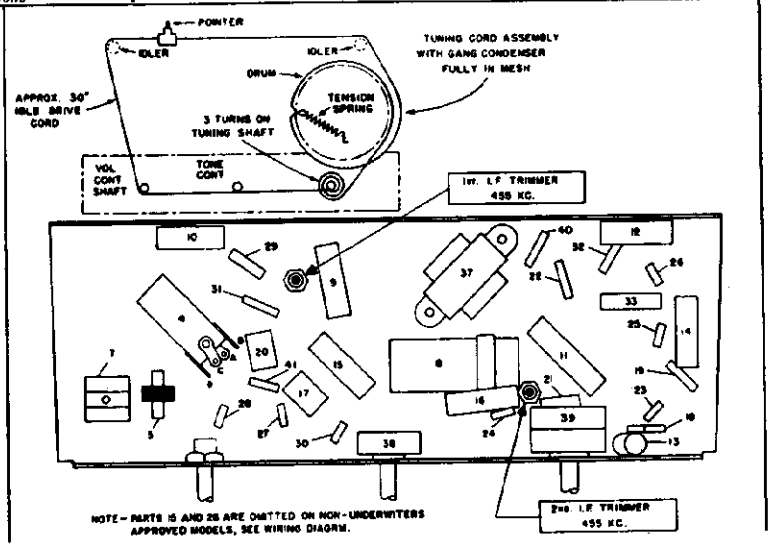

©John F. Rider

PARTS LIST

Illus. No.	Part No.	Part Name	Description
1	7E149	Antenna	Loop & Cabinet Back
	or		
1	7E150	Antenna	Loop & Cabinet Back
2	20E261	Coil	1st I. F. Transformer
	or		
2	20E307	Coil	1st I. F. Transformer
3	20E261-2	Coil	2nd I. F. Transformer
	or		
3	20E307-2	Coil	2nd I. F. Transformer
4	20E64	Coil	Oscillator
5	2E19	Coil	R. F. Choke
6	24E8	Condenser	Tuning, 2 Gang
7	24E3	Condenser	Trimmer (3-35 MMF)
8	25E6	Condenser	Tubular, Dry Elect. 50-50 Mfd. 150 V.
9	23E216	Condenser	Tubular, .05 Mfd. 200 V.
10	23E211	Condenser	Tubular, .01 Mfd. 200 V.
11	23E416	Condenser	Tubular, .05 Mfd. 400 V.
12	23E411	Condenser	Tubular, .01 Mfd. 400 V.
13	23E408	Condenser	Tubular, .005 Mfd. 400 V.
14	23E408	Condenser	Tubular, .005 Mfd. 400 V.
15	23E421	Condenser	Tubular, .2 Mfd. 400 V. (1U-313 Models Only)
16	23E405	Condenser	Tubular, .002 Mfd. 400 V.
17	23E37	Condenser	Mica, .00005 Mfd.
18	23E39	Condenser	Mica, .0001 Mfd.
19	23E39	Condenser	Mica, .0001 Mfd.
20	23E42	Condenser	Mica, .00025 Mfd.
21	23E42	Condenser	Mica, .00025 Mfd.
22	27E101-2	Resistor	Carbon, 100 Ohm 1/2 Watt
23	27E335	Resistor	Carbon, 3.3 Meg Ohm 1/3 Watt
24	27E335	Resistor	Carbon, 3.3 Meg Ohm 1/3 Watt
25	27E474	Resistor	Carbon, 470,000 Ohm 1/3 Watt
26	27E474	Resistor	Carbon, 470,000 Ohm 1/3 Watt
27	27E224	Resistor	Carbon, 220,000 Ohm 1/3 Watt
28	27E224	Resistor	Carbon, 220,000 Ohm 1/3 Watt (1U-313 Models Only)
29	27E473	Resistor	Carbon, 47,000 Ohm 1/3 Watt
30	27E223	Resistor	Carbon, 22,000 Ohm 1/3 Watt
31	27E822	Resistor	Carbon, 8,200 Ohm 1/3 Watt
32	27E151	Resistor	Carbon, 150 Ohm 1/3 Watt
33	27E102-3	Resistor	Carbon, 1,000 Ohm 1 Watt
36	1E1	Speaker	4" x 6" Elliptical P.M.
37	22E8	Transformer	Output
38	28E8	Tone Control	
39	28E7	Volume Control	500,000 Ohm with S.P.S.T. Switch
40	27E470-2	Resistor	Carbon, 47 Ohm 1/2 Watt
41	27E206	Resistor	Carbon, 20 Megohm 1/3 Watt

MISCELLANEOUS PARTS

Part No.	Part Name	Description
40E1	Bulb	6-8 Volt, .150 Amp. Type 47
7E149	Cabinet Back	With Loop Antenna
or		
7E150	Cabinet Back	With Loop Antenna
7E46-1	Cabinet	Walnut Plastic
7E46-2	Cabinet	Ivory Plastic
65E2	Dial Cord Spring	Tension Spring
20E253-18	Dial Cord	30" of 18 lb. Drive Cord
20E270-5	Dial Shaft Assem.	Drive Shaft Assembly
20E65	Dial Back Plate	Backplate Assembly, less scale
36E36	Dial Scale	Calibrated Glass Scale
35E23	Dial Pointer	Dial Indicator
37E27-11	Knob	For Walnut Cabinet
37E27-15	Knob	For Ivory Cabinet
17E22	Socket	Dial Light Socket Assembly
10E42	Studs	Trimount for Mounting Back to Cabinet.. 1.20

VOLTAGE RATING

THIS RADIO IS DESIGNED FOR USE ON EITHER:

110-120 VOLTS 50-60 CYCLES ALTERNATING CURRENT (AC)

OR

110-120 VOLTS DIRECT CURRENT (DC)

MODELS 314E, 314I, 314W, 1U-314E, 1U-314I, 1U-314W

SENTINEL RADIO CORP.

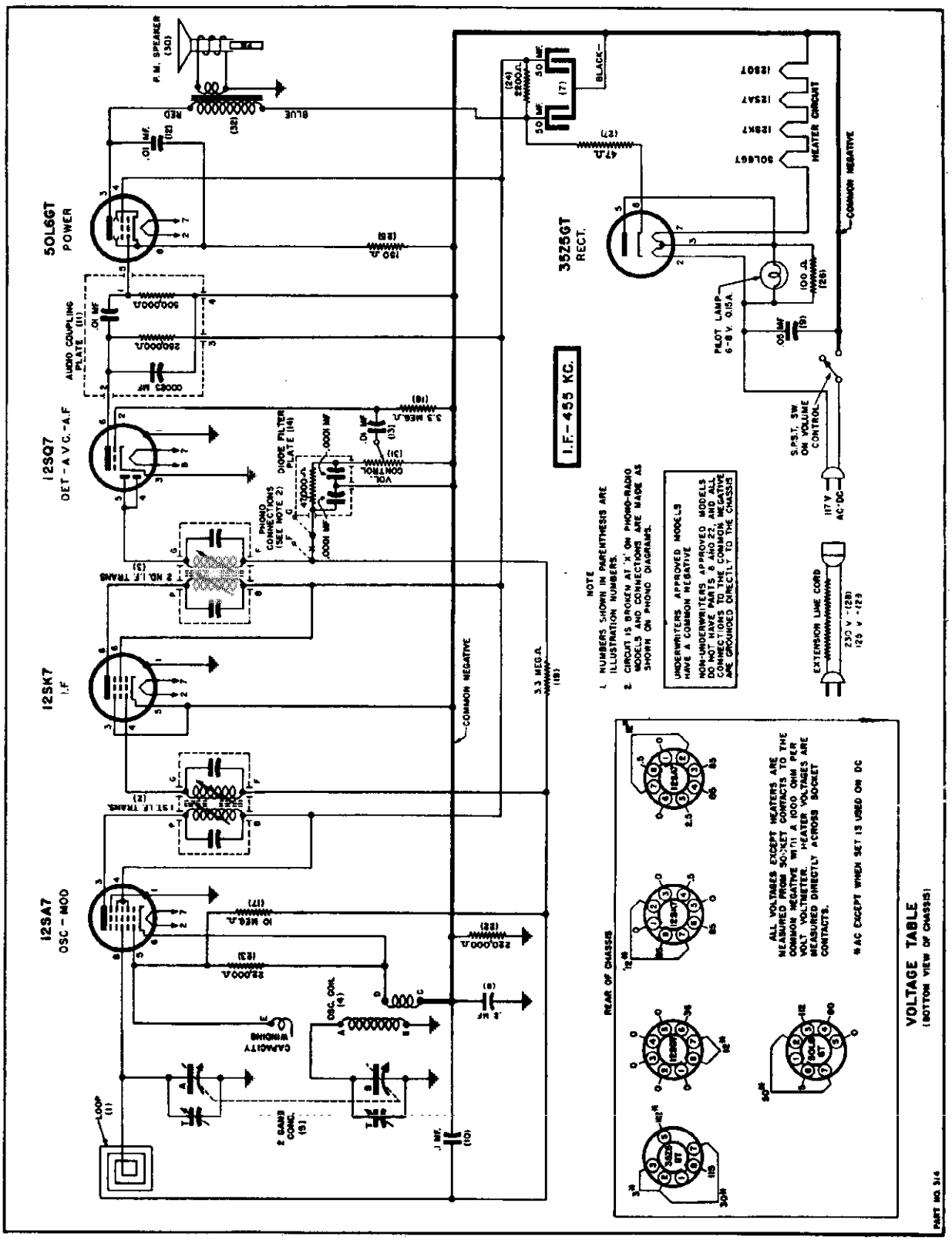

©John F. Rider

MODELS 314E, 314I, 314W, 1U-314E, 1U-314I, 1U-314W

ALIGNMENT PROCEDURE

For alignment procedure read tabulations from left to right, and make the adjustment marked (1) first, (2) next, (3) third.

Before starting alignment:

(a) Check tuning dial adjustment by tuning gang condenser until plates touch maximum capacity stop (completely in mesh) at which point the dial needle must be exactly even with the last line at the low frequency end of the dial calibration. If dial needle does not point exactly to last line move to correct position.

(b) Use an accurately calibrated test oscillator with some type of output measuring device.

(c) PLACE LOOP ANTENNA IN THE SAME POSITION IT WILL BE IN WHEN THE SET IS IN THE CABINET. Couple test oscillator to receiver loop by: (1) make loop consisting of five to ten turns of No. 20 to No. 30 size wire, wound on a 2" or 3" form; (2) connect this loop across output of test oscillator; (3) place test oscillator loop near radio loop. BE SURE THAT NEITHER LOOP MOVES WHILE ALIGNING.

Steps	Set receiver dial to:	TEST OSCILLATOR: Adjust test oscillator frequency to:	TEST OSCILLATOR: Use dummy antenna in series with output of test oscillator consisting of:	TEST OSCILLATOR: Attach output of test oscillator to:	Refer to parts layout diagram for location of trimmers mentioned below:
1	Any point where no interfering signal is received.	455 K. C.	.02 MFD. condenser	High side to rear stator plates of tuning condenser. Low side to frame of condenser through a .02 Mfd. blocking condenser.	Adjust each of the second I. F. transformer trimmers for maximum output—then adjust each of the first I. F. trimmers for maximum output.
2	Exactly 1650 K. C.	Exactly 1650 K. C.	.00025 MFD. condenser	See Paragraph (c) Above	Adjust 1650 K. C. oscillator trimmer for maximum output.
3	Approx. 1400 K. C.	Exactly 1400 K. C.	.00025 MFD. condenser	See Paragraph (c) Above	While rocking gang condenser adjust 1400 K. C. antenna trimmer for maximum output.

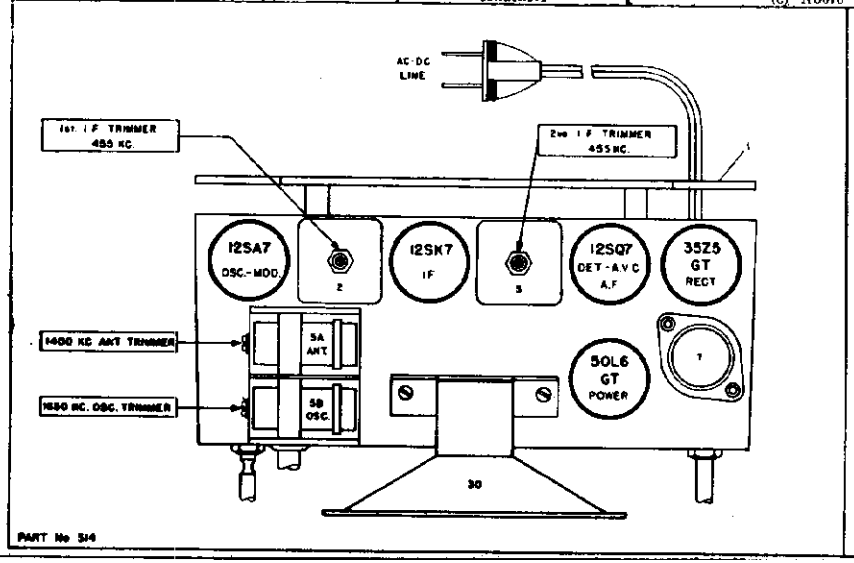

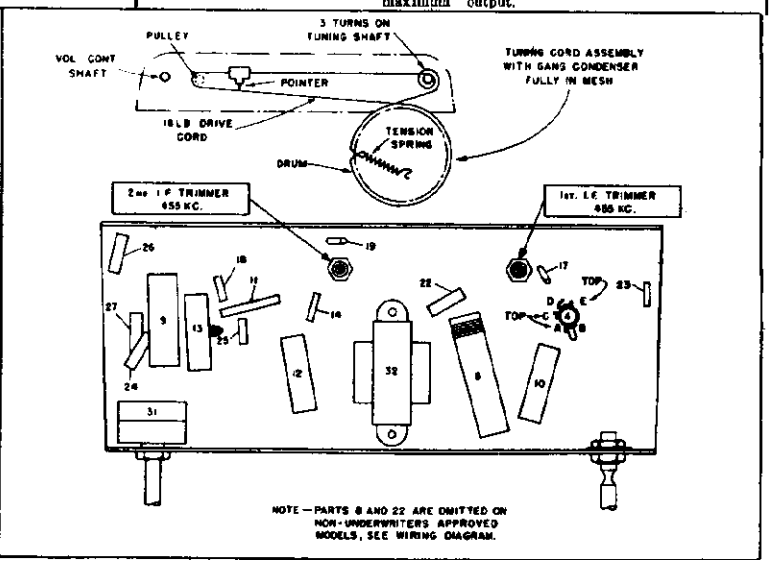

PARTS LIST

Ill. No.	Part No.	Part Name	Description
1	20E322	Antenna	Loop and Back
	or		
1	20E323	Antenna	Loop and Back
2	20E307	Coil	1st I.F. Transformer
	or		
2	20E261	Coil	1st I.F. Transformer
3	20E307-2	Coil	2nd I.F. Transformer
	or		
3	20E261-2	Coil	2nd I.F. Transformer
4	20E162	Coil	Oscillator
	or		
4	20E346	Coil	Oscillator (1U-314 Models Only)
5	24E2	Condenser	Tuning, 2 Gang
7	25E27	Condenser	Dry Elect. 50-50 Mfd. 150 V.
8	23E421	Condenser	Tubular, .2 Mfd. 400 V. (1U-314 Models Only)
9	23E416	Condenser	Tubular, .05 Mfd. 400 V.
10	23E218	Condenser	Tubular, .1 Mfd. 200 V.
11	23E2023	Condenser	Audio Coupling Plate
12	23E211	Condenser	Tubular, .01 Mfd. 200 V.
13	23E211	Condenser	Tubular, .01 Mfd. 200 V.
14	23E2022	Condenser	Diode Filter Plate
17	27E106	Resistor	Carbon, 10 Meg Ohm 1/3 Watt
18	27E335	Resistor	Carbon, 3.3 Meg Ohm 1/3 Watt
19	27E335	Resistor	Carbon, 3.3 Meg Ohm 1/3 Watt
22	27E224	Resistor	Carbon, 220,000 Ohm 1/3 Watt (1U-314 Models Only)
23	27E223	Resistor	Carbon, 22,000 Ohm 1/3 Watt
24	27E222-3	Resistor	Carbon, 2,200 Ohm 1 Watt
25	27E151	Resistor	Carbon, 150 Ohm 1/3 Watt
26	27E101	Resistor	Carbon, 100 Ohm 1/3 Watt
27	27E470-2	Resistor	Carbon, 47 Ohm 1/2 Watt
30	1E9	Speaker	5" P.M.
31	28E1	Volume Control	500,000 Ohm with S.P.S.T. Switch
32	22E2	Transformer	Output Transformer

MISCELLANEOUS PARTS

Part No.	Part Name	Description
7E31-1	Cabinet	Walnut Plastic
7E31-2	Cabinet	Ivory Plastic
7E31-3	Cabinet	Black Plastic
20E322	Cabinet Back	With Antenna Loop
or		
20E323	Cabinet Back	With Antenna Loop
41E1	Cord	6 ft. Rubber Line Cord
20E318	Dial Plate Assem.	Dial Back Plate Assembly
20E253-17	Dial Cord	30" of 18 lb. Drive Cord
9E2	Dial Crystal	Acetate Crystal
36E35	Dial Scale	Calibrated Scale
20E270-3	Dial Shaft Assem.	Drive Shaft Assembly
35E22	Dial Pointer	Dial Indicator
65E2	Dial Spring	Tension Spring for Drive Cord
37E17-1	Knob	For Walnut Cabinet
37E17-3	Knob	For Ivory Cabinet
37E17-4	Knob	For Black Cabinet
20E43	Pilot Lamp Socket	Pilot Lamp Socket Assembly
40E1	Pilot Lamp	6-8 Volt .150 Amp. Type 47 Lamp

VOLTAGE RATING

THIS RADIO IS DESIGNED FOR USE ON EITHER:

110-120 VOLTS 50-60 CYCLES ALTERNATING CURRENT (AC)

OR

110-120 VOLTS DIRECT CURRENT (DC)

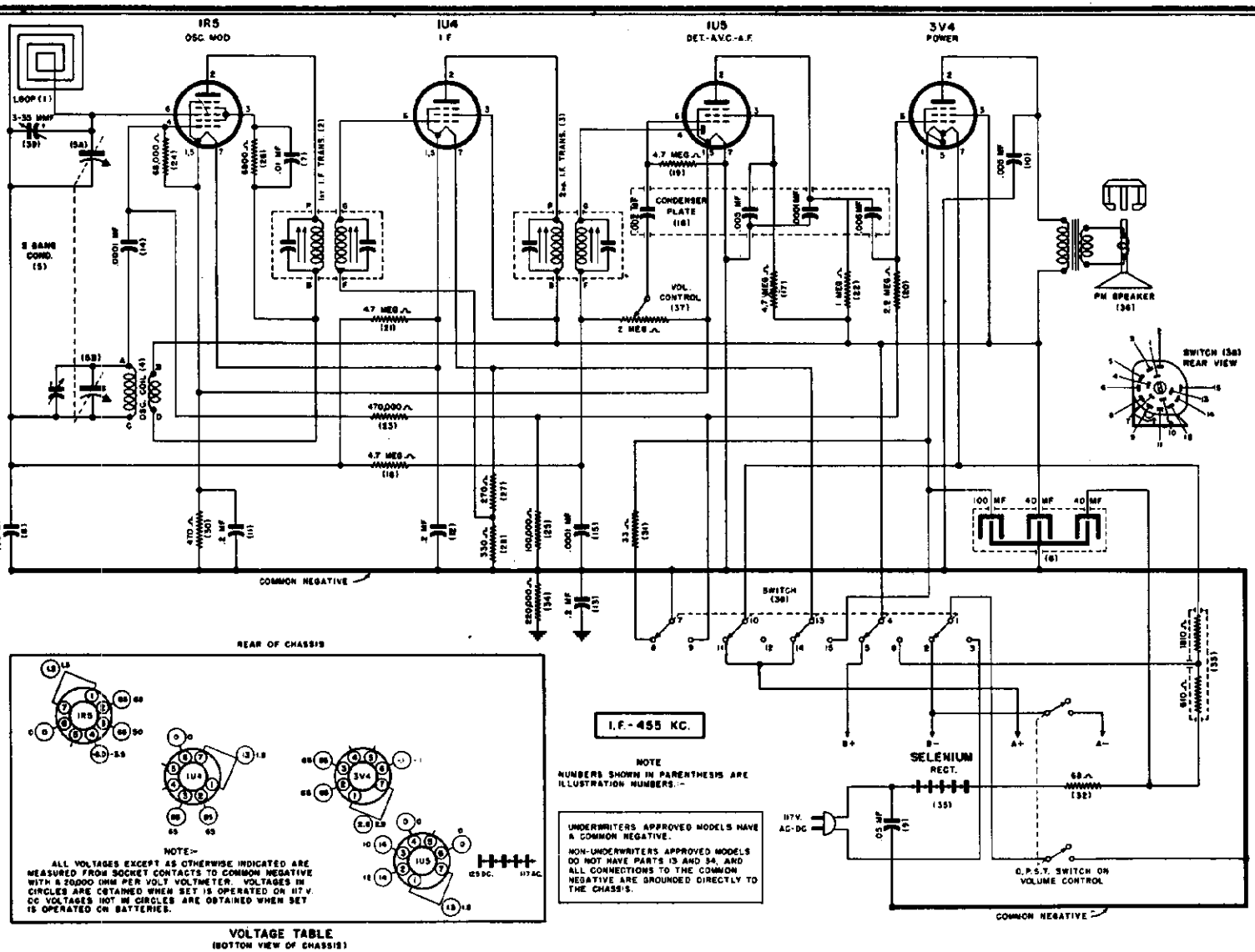

VOLTAGE TABLE
(BOTTOM VIEW OF CHASSIS)

POWER SUPPLY

THIS RADIO CAN BE OPERATED ON EITHER:

110 to 120 VOLTS DIRECT CURRENT
OR
110 to 120 VOLTS, 50 to 60 CYCLE, ALTERNATING CURRENT
OR
BATTERIES—WITH ONE 4½ VOLT "A" and ONE 67½ VOLT "B"

INSTALLATION OF REQUIRED BATTERIES

Diagram shows proper location and connections of the following required types of batteries:

One 4½ Volt "A" Battery, such as SENTINEL Type A38, or Ray-O-Vac P83A or Eveready No. 736A, etc.

One 67½ Volt "B" Battery, such as SENTINEL Type B7634, or Ray-O-Vac 4367 or Eveready No. 467, etc.

NOTE: A 90 Volt "B" Battery, such as Eveready Type No. 490B, may be used in place of the 67½ Volt "B" Battery. The use of a 90 Volt "B" Battery will provide somewhat increased sensitivity and more power output, but this battery will not last quite as long as the 67½ Volt "B" Battery.

ALIGNMENT PROCEDURE

Be sure to follow procedure carefully and in the order given—otherwise the receiver will be insensitive and the dial calibration incorrect. For alignment procedure, read tabulations from left to right. Make the adjustment marked (1) first, (2) next, (3) third.

IF RADIO HAS METAL PLATE ON BOTTOM OF CHASSIS BE SURE TO HAVE PLATE MOUNTED ON CHASSIS WHEN ALIGNING SET.

Before starting alignment:

(A) Check tuning dial adjustment by tuning gang condenser until plates touch maximum capacity stop (completely in mesh) at which point the dial indicator must be exactly even with the outside edge of the first 5 in the 55 calibration number at the low frequency end of the dial scale. If dial indicator does not point exactly to the outside edge, move pointer to correct position.

(B) Use an accurately calibrated test oscillator with some type of output measuring device.

(C) WHEN ADJUSTING THE 1730 KC OSCILLATOR TRIMMER, remove chassis from cabinet and disconnect the loop connection wires from the loop terminal strip. Attach a 1 megohm resistor across these connections and feed output of test oscillator across the 1 megohm resistor.

(D) THE 1400 KC LOOP ANTENNA TRIMMER should be adjusted only after all other adjustments have been made and with the set mounted in the cabinet. When aligning the 1400 KC Antenna Trimmer, couple test oscillator to receiver loop by: (1) make loop consisting of five to ten turns of No. 20 to No. 30 size wire, wound on a 2″ or 3″ form; (2) connect this loop across output of test oscillator; (3) place test oscillator loop near radio loop. BE SURE THAT NEITHER LOOP MOVES WHILE ALIGNING.

Steps	Set receiver dial to:	TEST OSCILLATOR: Adjust test oscillator frequency to:	TEST OSCILLATOR: Use dummy antenna in series with output of test oscillator consisting of:	TEST OSCILLATOR: Attach output of test oscillator to	Refer to parts layout diagram for location of trimmers mentioned below:
1	Any point where no interfering signal is received	Exactly 455 K. C.	0.2 Mfd. Condenser	High side to grid of 1R5 tube. Low side to chassis.	Adjust each of the 2nd I.F. transformer trimmer adjustment screws for maximum output, then adjust each of the 1st I.F. transformer trimmer adjustment screws for maximum output.
2	Rotate gang condenser to minimum capacity	Exactly 1730 K. C.	See paragraph (C) above	See paragraph (C) above	Adjust 1730 K. C. oscillator trimmer for maximum output.
3	Approximately 1400 K. C.	Approx. 1400 K. C.	See paragraph (D) above	See paragraph (D) above	Adjust 1400 K. C. antenna trimmer for maximum output.

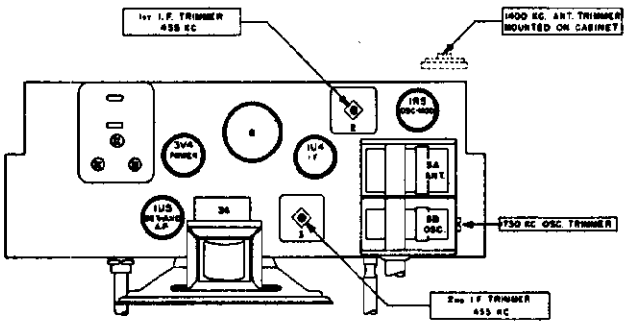

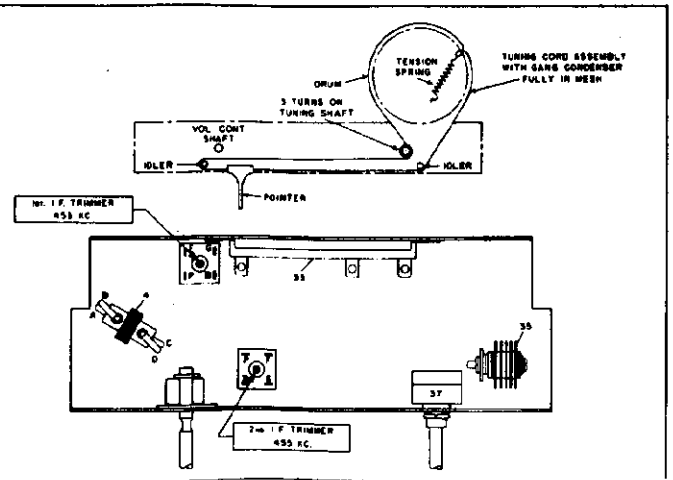

SENTINEL RADIO CORP.

MODELS 316PM, 316PT, 1U-316PM, 1U-316PT

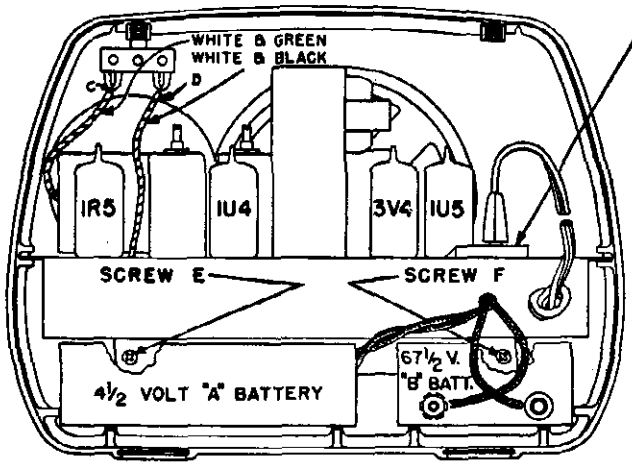

FOR BATTERY OPERATION THE AC LINE CORD PLUG MUST BE FIRMLY INSERTED INTO THIS RECEPTACLE.

TO REMOVE CHASSIS FROM CABINET:
1. REMOVE BATTERIES.
2. UNSOLDER ANTENNA WIRES C & D.
3. REMOVE SCREWS E & F.

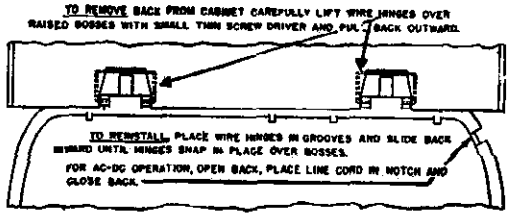

PARTS LIST

Illus. No.	Part No.	Part Name	Description
1	64E18	Antenna	Loop
2	20E337	Coil	1st I.F. Transformer
3	20E337	Coil	2nd I.F. Transformer
4	20E338	Coil	Oscillator
5	20E339	Condenser	Tuning, Two Gang
6	25E28	Condenser	Dry Electrolytic, 40-40 Mfd. 150 V. & 100 Mfd. 10 V.
OR			
6	25E29	Condenser	Dry Electrolytic, 40-40 Mfd. 150 V. & 100 Mfd. 10 V. (Used in 1U-316P Only)
7	23E211	Condenser	Tubular, .01 Mfd. 200 V.
8	23E216	Condenser	Tubular, .05 Mfd. 200 V.
9	23E416	Condenser	Tubular, .05 Mfd. 400 V.
10	23E408	Condenser	Tubular, .005 Mfd. 400 V.
11	23E220	Condenser	Tubular, .2 Mfd. 200 V.
12	23E220	Condenser	Tubular, .2 Mfd. 200 V.
13	20E407	Choke	R. F. (Used in 1U-316P Only)
14	23E24	Condenser	Ceramic, .0001 Mfd.
15	23E24	Condenser	Ceramic, .0001 Mfd.
16	23E2024	Condenser	Ceramic Condenser Plate
17	27E475	Resistor	Carbon, 4.7 Megohm, 1/3 W.
18	27E475	Resistor	Carbon, 4.7 Megohm, 1/3 W.
19	27E475	Resistor	Carbon, 4.7 Megohm, 1/3 W.
20	27E225	Resistor	Carbon, 2.2 Megohm, 1/3 W.
21	27E475	Resistor	Carbon, 4.7 Megohm, 1/3 W.
22	27E105	Resistor	Carbon, 1 Megohm, 1/3 W.
23	27E474	Resistor	Carbon, 470,000 Ohm, 1/3 W.
24	27E683	Resistor	Carbon, 68,000 Ohm, 1/3 W.
25	27E104	Resistor	Carbon, 100,000 Ohm, 1/3 W.
26	27E682	Resistor	Carbon, 6,800 Ohm, 1/3 W.
27	27E271	Resistor	Carbon, 270 Ohm, 1/3 W.
28	27E331	Resistor	Carbon, 330 Ohm, 1/3 W.
30	27E471	Resistor	Carbon, 470 Ohm, 1/3 W.
31	27E330-2	Resistor	Carbon, 33 Ohm, 1/2 W.
32	27E680-3	Resistor	Carbon, 68 Ohm, 1 W.
33	27E1005	Resistor	Wire Wound, 1810 and 610 Ohms, 8 W.
35	57E1-4	Rectifier	Selenium
36	1E29	Speaker	4" P.M.
37	28E30	Volume Control	With D.P.S.T. Switch, 2 Megohm
38	29E20	Switch	Spring Return Type
39	24E33	Condenser	Trimmer 3-35 MMF. Working Range

HARDWARE

Part No.	Part Name	Description
13E103-9	Clip	Holds Back to Cabinet
82E35-F10	Screw	6-20x1/4—Holds 13E103-9 Clip to Cabt.
82E37-F10	Screw	6-20x3/8—For Mounting Chassis
10E43	Stud	Trimount, for Mounting Speaker Baffle to Cabinet
35E8-8	Dial Pointer	Dial Indicator
20E249	Batt. Connector B—	Battery Connector Assembly.
20E249-2	Batt. Connector B+	Battery Connector Assembly.
20E340	"A" Batt. Cable	"A" Battery Cable with Plug
55E21-1	Handle Bracket	Bracket for Mounting Handle
52E31	Handle Cover	Plastic Cover
55E39	Handle Strap	Clock Spring Steel
65E27	Hinge	Spring Hinge for Cabinet Back
37E17-5	Knob	Maroon
37E17-6	Knob	Tan
41E12	Line Cord	Line Cord and Plug

MISCELLANEOUS PARTS

Part No.	Part Name	Description
20E343	Cabinet	Complete Cabt. Assembly with Handle, Baffle, Loop and Cabt. Back, Maroon
20E343-2	Cabinet	Complete Cabt. Assembly with Handle, Baffle, Loop and Cabt. Back, Tan
20E344	Cabinet, less Back	Cabinet Assembly, less Back, but with Handle, Baffle and Loop, Maroon
20E344-2	Cabinet, less Back	Cabinet Assembly, less Back, but with Handle, Baffle and Loop, Tan
7E165-4	Cabinet Back	Back for Cabinet with 65E27 Spring Hinge Maroon
17E3-2	Plug	"A" Battery Plug
20E345	Speaker Baffle	Baffle Assembly with Grille Cloth, Tan
20E345-2	Speaker Baffle	Baffle Assembly with Grille Cloth, Maroon
7E165-8	Cabinet Back	Back for Cabinet with 65E27 Spring Tan
20E253-19	Dial Cord	Dial Drive Cord
65E2	Dial Spring	Dial Cord Tension Spring
20E348	Dial Shaft	Drive Shaft Assembly

MODELS 319PM, 319PT

SENTINEL RADIO CORP.

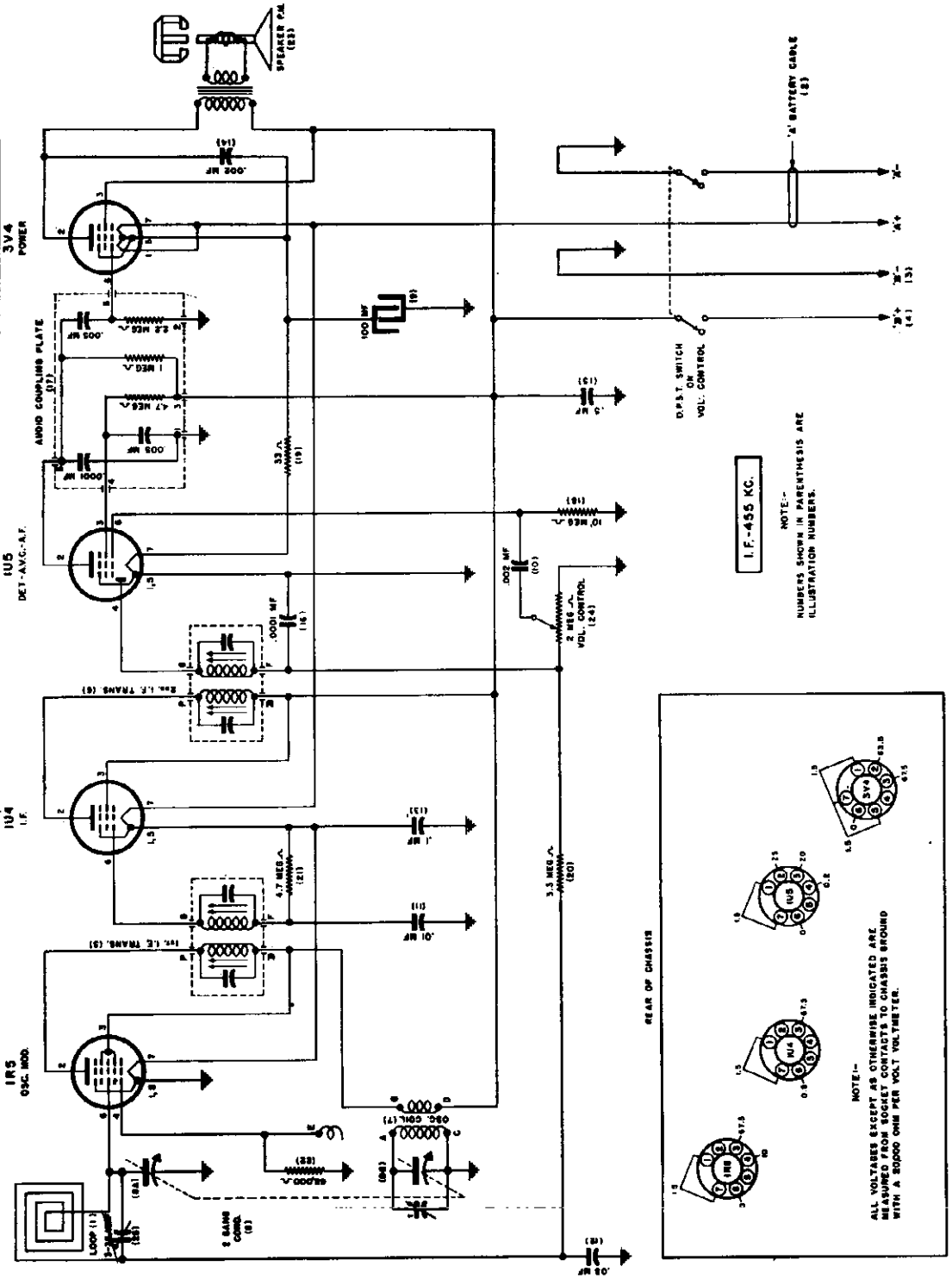

INSTALLATION OF REQUIRED BATTERIES

Diagram shows proper location and connections of the following required types of batteries:

One 4½ Volt "A" Battery, such as SENTINEL Type A38, or Ray-O-Vac P83A or Eveready No. 746, etc.

One 67½ Volt "B" Battery, such as SENTINEL Type B7634, or Ray-O-Vac 4367 or Eveready No. 467, etc.

©John F. Rider

© John F. Rider

ALIGNMENT PROCEDURE

Be sure to follow procedure carefully and in the order given—otherwise the receiver will be insensitive and the dial calibration incorrect. For alignment procedure, read tabulations from left to right. Make the adjustment marked (1) first, (2) next, (3) third.

Before starting alignment:

(A) Check tuning dial adjustment by tuning gang condenser until plates touch maximum capacity stop (completely in mesh) at which point the dial indicator must be exactly even with the outside edge of the first 5 in the 55 calibration number at the low frequency end of the dial scale. If dial indicator does not point exactly to the outside edge, move pointer to correct position.

(B) Use an accurately calibrated test oscillator with some type of output measuring device.

(C) WHEN ADJUSTING THE 1730 KC OSCILLATOR TRIMMER, remove chassis from cabinet and disconnect the loop connection wires from the loop. Attach a 1 megohm resistor across these connections and feed output of test oscillator across the 1 megohm resistor.

(D) THE 1400 KC LOOP ANTENNA TRIMMER should be adjusted only after all other adjustments have been made and with the set mounted in the cabinet. When aligning the 1400 KC Antenna Trimmer, couple test oscillator to receiver loop by: (1) make loop consisting of five to ten turns of No. 20 to No. 30 size wire, wound on a 2" or 3" form; (2) connect this loop across output of test oscillator; (3) place test oscillator loop near radio loop. BE SURE THAT NEITHER LOOP MOVES WHILE ALIGNING.

Steps	Set receiver dial to:	TEST OSCILLATOR			Refer to parts layout diagram for location of trimmers mentioned below:
		Adjust test oscillator frequency to:	Use dummy antenna in series with output of test oscillator consisting of:	Attach output of test oscillator to	
1	Any point where no interfering signal is received	Exactly 455 K. C.	0.2 Mfd. Condenser	High side to grid of 1R5 tube. Low side to chassis.	Adjust each of the 2nd I.F. transformer trimmer adjustment screws for maximum output, then adjust each of the 1st I.F. transformer trimmer adjustment screws for maximum output.
2	Rotate gang condenser to minimum capacity	Exactly 1730 K. C.	See paragraph (C) above	See paragraph (C) above	Adjust 1730 K. C. oscillator trimmer for maximum output.
3	Approximately 1400 K. C.	Approx. 1400 K. C.	See paragraph (D) above	See paragraph (D) above	Adjust 1400 K. C. antenna trimmer for maximum output.

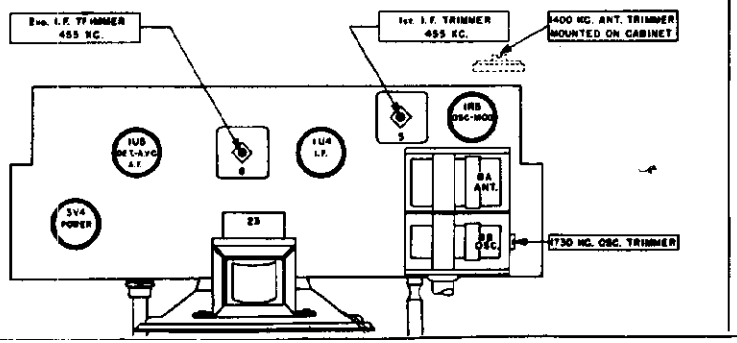

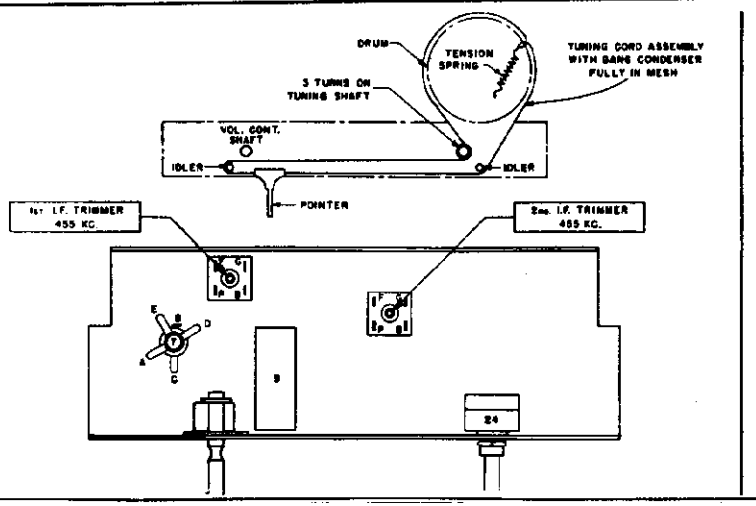

PARTS LIST

Illus. No.	Part No.	Part Name	Description
1	64E19	Antenna	Loop
2	20E340	Cable	"A" Battery
3	20E249	Cable	"B"— Battery
4	20E249-2	Cable	"B"+ Battery
5	20E337	Coil	1st I. F. Transformer
6	20E337	Coil	2nd I. F. Transformer
7	20E356	Coil	Oscillator
8	24E44	Condenser	Tuning, Two Gang
9	25E12	Condenser	Dry Electrolytic, 100 Mfd. 25 V.
10	23E205	Condenser	Tubular, .002 Mfd. 200 V.
11	23E211	Condenser	Tubular, .01 Mfd. 200 V.
12	23E216	Condenser	Tubular, .05 Mfd. 200 V.
13	23E218	Condenser	Tubular, .1 Mfd. 200 V.
14	23E405	Condenser	Tubular, .002 Mfd. 400 V.
15	23E224	Condenser	Tubular, .5 Mfd. 200 V.
16	23E24	Condenser	Fixed Ceramic, .0001 Mfd.
17	23E2023-2	Condenser	Ceramic Coupling Plate
18	27E106	Resistor	Carbon, 10 Megohm, 1/3 W.
19	27E330-2	Resistor	Carbon, 33 Ohm, 1/2 W.
20	27E335	Resistor	Carbon, 3.3 Megohm, 1/3 W.
21	27E475	Resistor	Carbon, 4.7 Megohm, 1/3 W.
22	27E683	Resistor	Carbon, 68,000 Ohm, 1/3 W.
23	1E29	Speaker	4" P.M.
24	28E30	Volume Control	2 Megohm, with D.P.S.T. Switch
25	24E33	Condenser	Trimmer, 3-35 MMF.

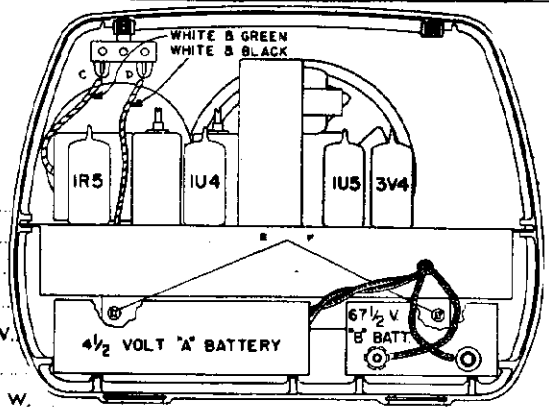

IMPORTANT: When ordering complete cabinet, cabinet less back, handle, cabinet back, or knobs, be sure to mention required color in addition to proper part number.

MISCELLANEOUS PARTS

*	Part No.	Part Name	Description
	20E384	Cabinet	Complete Cabt. Assembly with Handle, Baffle, Loop and Cabt. Back, Maroon
	20E384-2	Cabinet	Complete Cabt. Assembly with Handle, Baffle, Loop and Cabt. Back, Tan
	20E385	Cabinet, less Back	Cabinet Assembly, less Back, but with Handle, Baffle and Loop, Maroon
	20E385-2	Cabinet, less Back	Cabinet Assembly, less Back, but with Handle, Baffle and Loop, Tan
	7E165-4	Cabinet Back	Back for Cabinet with 65E27 Spring Hinge, Maroon
	7E165-8	Cabinet Back	Back for Cabinet with 65E27 Spring Hinge, Tan
	20E253-19	Dial Cord	Dial Drive Cord
	65E2	Dial Spring	Dial Cord Tension Spring

Part No.	Part Name	Description
20E348	Dial Shaft	Drive Shaft Assembly
35E8-8	Dial Pointer	Dial Indicator
20E249	Batt. Connector	B— Battery Connector Assembly
20E249-2	Batt. Connector	B+ Battery Connector Assembly
20E340	"A" Batt. Cable	"A" Battery Cable with Plug
55E21-1	Handle Bracket	Bracket for Mounting Handle
52E31	Handle Cover	Plastic Cover
55E39	Handle Strap	Clock Spring Steel
65E27	Hinge	Spring Hinge for Cabinet Back
37E17-5	Knob	Maroon
37E17-6	Knob	Tan
17E3-2	Plug	"A" Battery Plug
20E345	Speaker Baffle	Baffle Assembly with Grille Cloth

TO REMOVE CHASSIS FROM CABINET:
1. REMOVE BATTERIES
2. UNSOLDER ANTENNA WIRES C & D.
3. REMOVE SCREWS E & F.

HARDWARE

Part No.	Part Name	Description
13E103-9	Clip	Holds Back to Cabinet
82E35-F10	Screw	6-20x1/4—Holds 13E103-9 Clip to Cabt
82E37-F10	Screw	6-20x3/8—For Mounting Chassis

Part No.	Part Name	Description
10E43	Stud	Trimount, for Mounting Speaker Baffle to Cabinet

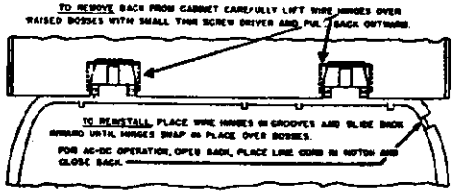

SENTINEL RADIO CORP.

MODELS 330-I, 330-R
330-W, 1U-330-I,
1U-330-R, 1U-330-W

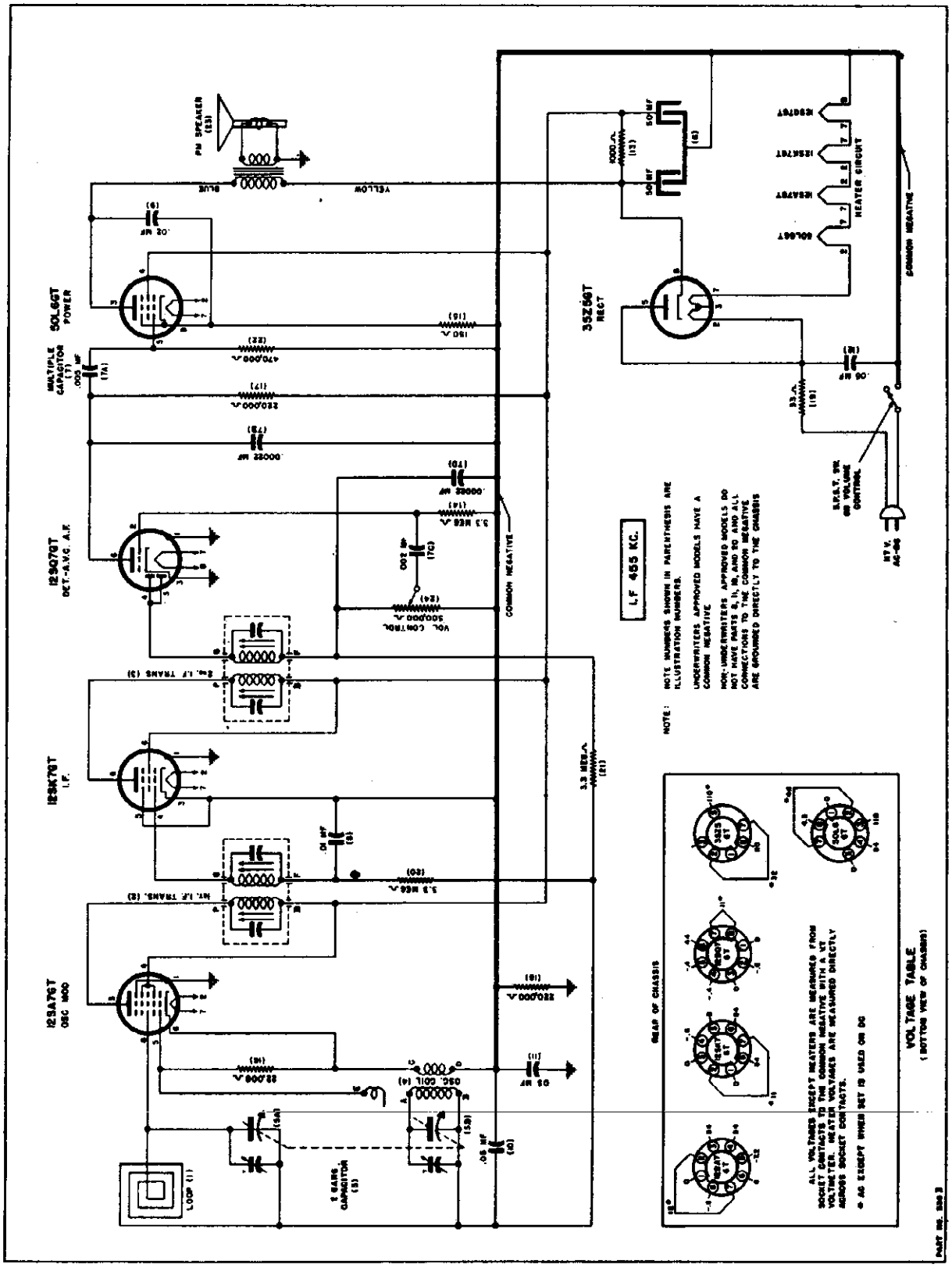

ALIGNMENT PROCEDURE

For alignment procedure read tabulations from left to right, and make the adjustment marked (1) first, (2) next, (3) third.

Be sure to:

(A) Use an accurately calibrated test oscillator with some type of output measuring device.

(B) WHEN ADJUSTING THE 1620 KC OSCILLATOR TRIMMER AND THE 1400 KC ANTENNA TRIMMER, remove chassis from cabinet and leave the loop attached to the chassis with the two plastic screws. Couple test oscillator. to receiver loop by: (1) make loop consisting of five to ten turns of No. 20 to No. 30 size wire, wound on a 2" or 3" form; (2) connect this loop across output of test oscillator; (3) place test oscillator loop near radio loop. BE SURE THAT NEITHER LOOP MOVES WHILE ALIGNING.

Steps	Set receiver dial to:	TEST OSCILLATOR			Refer to parts layout diagram for location of trimmers mentioned below:
		Adjust test oscillator frequency to:	Use dummy antenna in series with output of test oscillator consisting of:	Attach output of test oscillator to:	
1	Any point where no interfering signal is received.	455 K. C.	.02 MFD. condenser	High side to rear stator plates of tuning condenser. Low side to frame of condenser through a .02 Mfd. blocking condenser.	Adjust each of the second I.F. transformer trimmers for maximum output—then adjust each of the first I.F. trimmers for maximum output.
2	Exactly 1620 K. C.	Exactly 1620 K. C.	See paragraph (B) above	See paragraph (B) above	Adjust 1620 K. C. oscillator trimmer for maximum output.
3	Approx. 1400 K. C.	Approx. 1400 K. C.	See paragraph (B) above	See paragraph (B) above	Adjust 1400 K. C. antenna trimmer for maximum output.

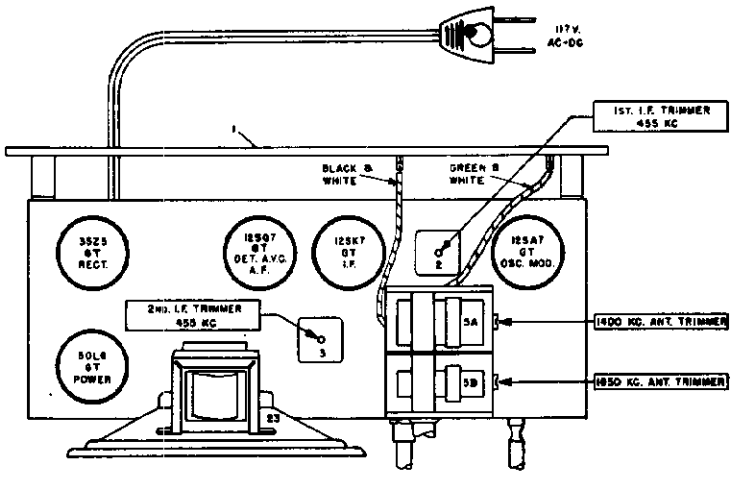

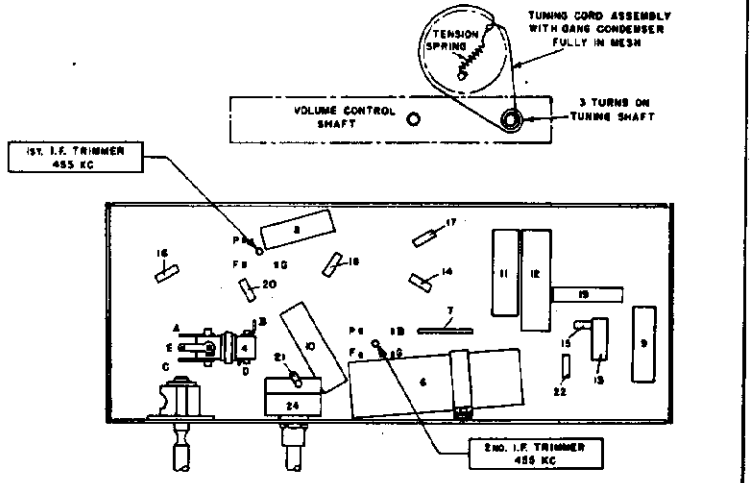

VOLTAGE RATING

THIS RADIO IS DESIGNED FOR USE ON EITHER:
110-120 VOLTS 50-60 CYCLES ALTERNATING CURRENT (AC)
OR
110-120 VOLTS DIRECT CURRENT (DC)

TO SERVICE TUBES, it is necessary to remove the cabinet back by gently pulling out the two trimount studs and removing the two plastic screws, used to hold the back to the cabinet, and detaching the two leads from the loop.

Before remounting the back on the cabinet, be sure to properly re-connect these two leads. The green-white wire must be attached to the terminal which is marked with the word "GREEN" close to it.

PARTS LIST

Illus. No.	Part No.	Part Name	Description
1	20E446	Antenna	Loop and back
2	20E445	Coil	1st I.F. Transformer
	OR		
2	20E445-2	Coil	1st I.F. Transformer
3	20E445	Coil	2nd I.F. Transformer
	OR		
3	20E445-2	Coil	2nd I.F. Transformer
4	20E444	Coil	Oscillator
5	-24E48	Capacitor	Variable, 2 Gang
6	25E24	Capacitor	Dry Elect., 50-50 Mfd. 150 Volt
7	23E2024-2	Capacitor	Multiple Capacitor Plate
8	23E411	Capacitor	Fixed Paper, .01 Mfd. 400 V. (Used in 1U330 only)
9	23E413	Capacitor	Fixed Paper, .02 Mfd. 400 V.
10	23E416	Capacitor	Fixed Paper, .05 Mfd. 400 V.
11	23E416	Capacitor	Fixed Paper, .05 Mfd. 400 V. (Used in 1U330 only)
12	23E416	Capacitor	Fixed Paper, .05 Mfd. 400 V.
13	27E102-3	Resistor	Carbon, 1000 Ohm, 1 Watt
14	27E335	Resistor	Carbon, 3.3 Megohm, 1/3 Watt
15	27E151	Resistor	Carbon, 150 Ohm, 1/3 Watt
16	27E223	Resistor	Carbon, 22,000 Ohm, 1/3 Watt
17	27E224	Resistor	Carbon, 220,000 Ohm, 1/3 Watt
18	27E224	Resistor	Carbon, 220,000 Ohm, 1/3 Watt (Used in 1U330 only)
19	27E330-5	Resistor	Carbon, 33 Ohm, 2 Watt
20	27E335	Resistor	Carbon, 3.3 Megohm, 1/3 Watt (Used in 1U330 only)
21	27E335	Resistor	Carbon, 3.3 Megohm, 1/3 Watt
22	27E474	Resistor	Carbon, 470,000 Ohm, 1/3 Watt
23	1E35	Speaker	5" P.M.
24	28E4	Vol. Control	500,000 Ohm

MISCELLANEOUS

Part No.	Part Name	Description
7E188-2	Cabinet	Walnut Plastic
7E188-9	Cabinet	Ivory Plastic
41E13	Cord	5 Ft. Rubber Line Cord
20E253-22	Dial Cord	Dial Drive Cord Assembly
20E348-5	Dial Shaft Assembly	Dial Drive Shaft with Bracket
35E21-2	Dial Pointer	Dial Indicator
65E2	Dial Spring	Tension Spring for Dial Cord
37E21-7	Knob	For Walnut Cabinet
37E27-36	Knob	For Ivory Cabinet
10E42	Stud	Trimount Stud for Loop & Back
82E2002-2	Screw	Plastic Screw

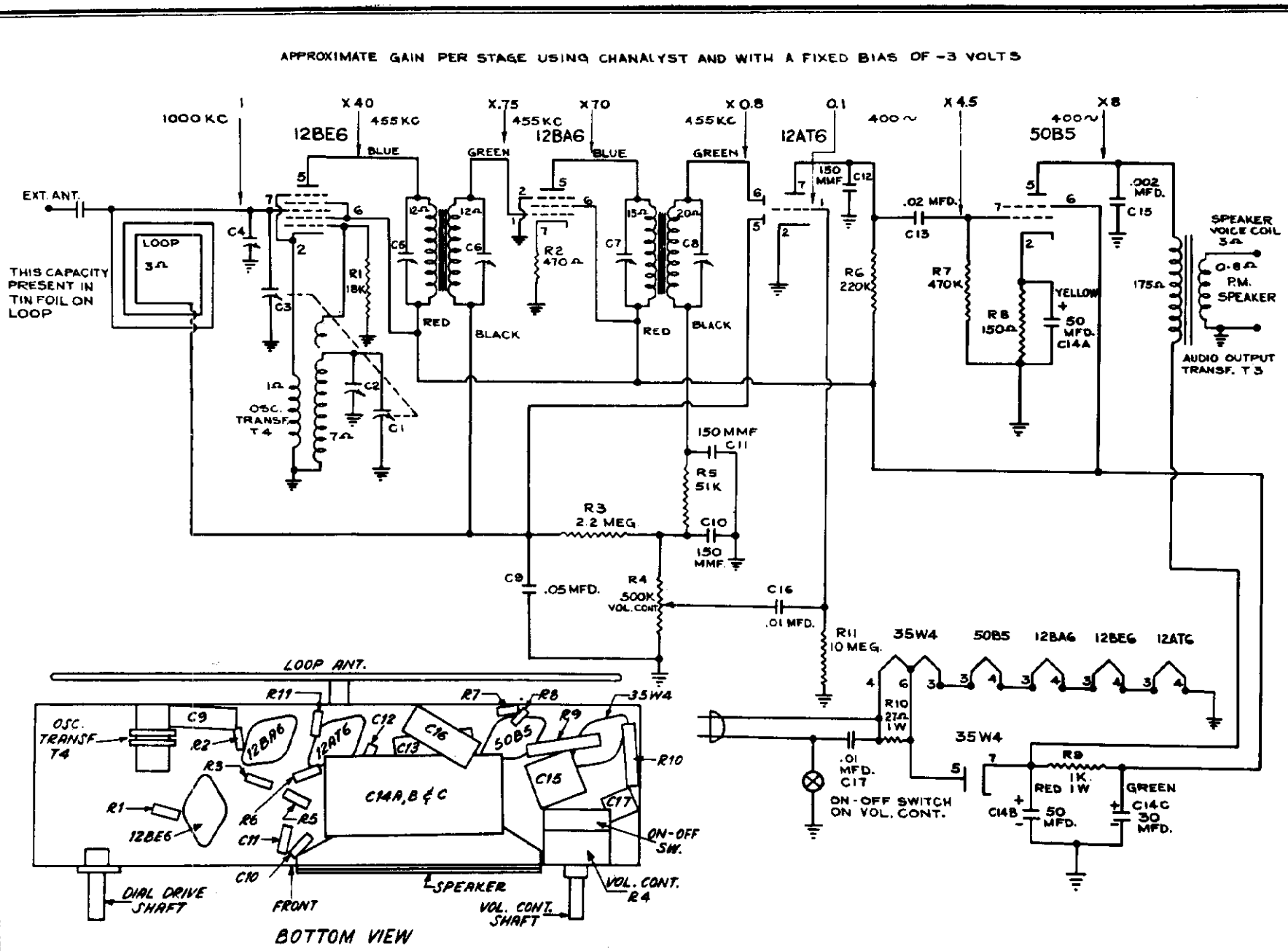

SIGNAL ELECTRONIC & MFG. CO.

SIGNAL PAGE 19-1
MODEL 241

TUBE	PIN	VTVM	1,000 OHM/V	RESISTANCE
12BE6	1	-6.5	-3.5	18K
conv.	2	0	0	1 ohm
	3	A.C.	A.C.	30 ohm
	4	A.C.	A.C.	16 ohm
	5	100	100	over 500K
	6	100	100	over 500K
	7	-0.6	-0.2	2.5 megs.
12BA6	1	-0.6	-0.2	2.5 megs.
I.F. AMPL.	2	GND.	GND.	GND.
	3	A.C.	A.C.	40 ohm
	4	A.C.	A.C.	30 ohm
	5	100	100	over 500K
	6	100	100	over 500K
	7	2.5	2.5	470 ohm
12AT6	1	-0.8	-0.3	10 megs.
DET. A.V.C.	2	GND.	GND.	GND.
1st audio AMPL.	3	A.C.	A.C.	16 ohm
	4	GND.	GND.	GND.
	5	-0.7	-0.2	2.5 megs.
	6	-0.6	-0.1	550K
	7	50	30	over 500K
50B5	1	0	0	470K
audio output	2	0	0	150 ohm
	3	A.C.	A.C.	90 ohm
	4	A.C.	A.C.	40 ohm
	5	115	115	over 500K
	6	100	100	over 500K
	7	0	0	470K
35W4	1	—	—	—
rectifier	2	—	—	—
	3	A.C.	A.C.	90 ohm
	4	A.C.	A.C.	120 ohm
	5	A.C.	A.C.	115 ohm
	6	A.C.	A.C.	115 ohm
	7	120	120	over 500K

ALL VOLTAGE AND RESISTANCE MEASUREMENTS MADE WITH RESPECT TO CHASSIS GROUND. AND WITH A LINE VOLTAGE OF 116 V.A.C.

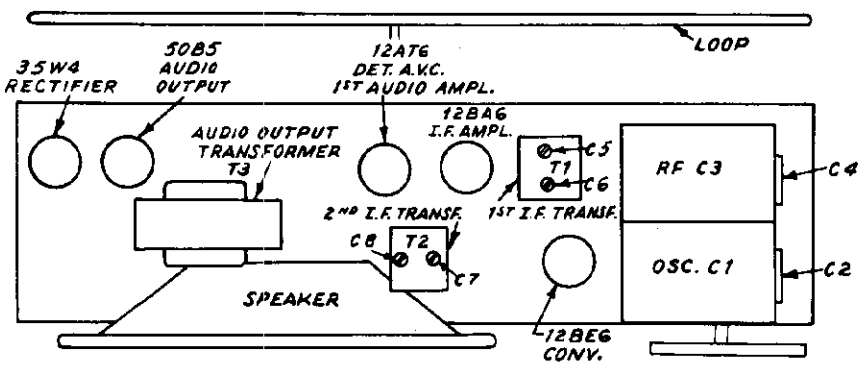

TOP VIEW PARTS & TUBE LOCATIONS

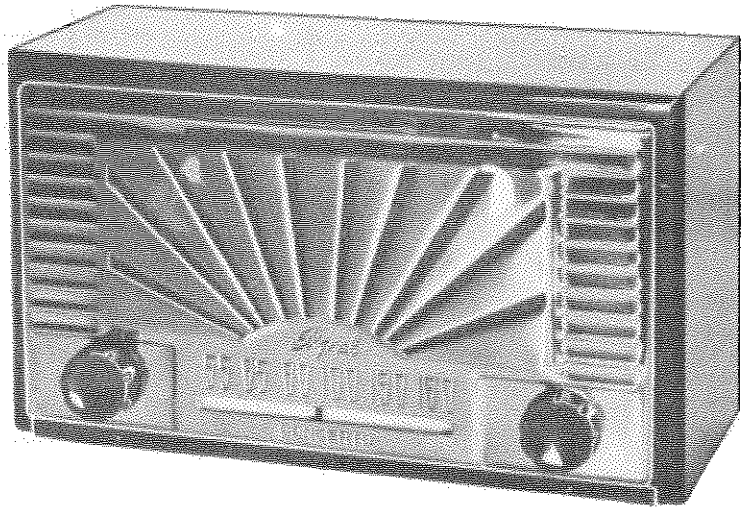

ALIGNMENT PROCEDURE

With the receiver in the cabinet, set the dial pointer to 1500 kc and make a light pencil mark on the dial backing plate. Repeat the procedure for 1400 kc. This mark can be easily erased after alignment.

Remove the receiver from the cabinet and connect output meter across voice coil.

Connect the signal generation to the standard Hazeltine Loop Model 1150 and couple it loosely to the receiver loop. Set the volume control at maximum, and fully mesh the tuning capacitor.

The output of the signal generator should be just sufficient to give a readable deflection on the output meter.

Set the signal generator to 455 kc and adjust i-f trimmers for maximum output in the following order: C8, C7, C5, C6. Repeat sequence if trimmers were badly maladjusted.

Set the signal generator and receiver to 1500 kc and adjust the oscillator trimmer C2 for maximum output.

Set the signal generator and receiver to 1400 kc and adjust the antenna trimmer C4 for maximum output.

Set the signal generator and receiver to 1500 kc and readjust oscillator trimmer C2 for maximum output.

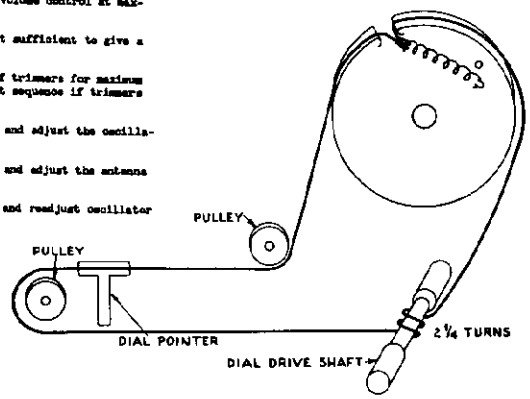

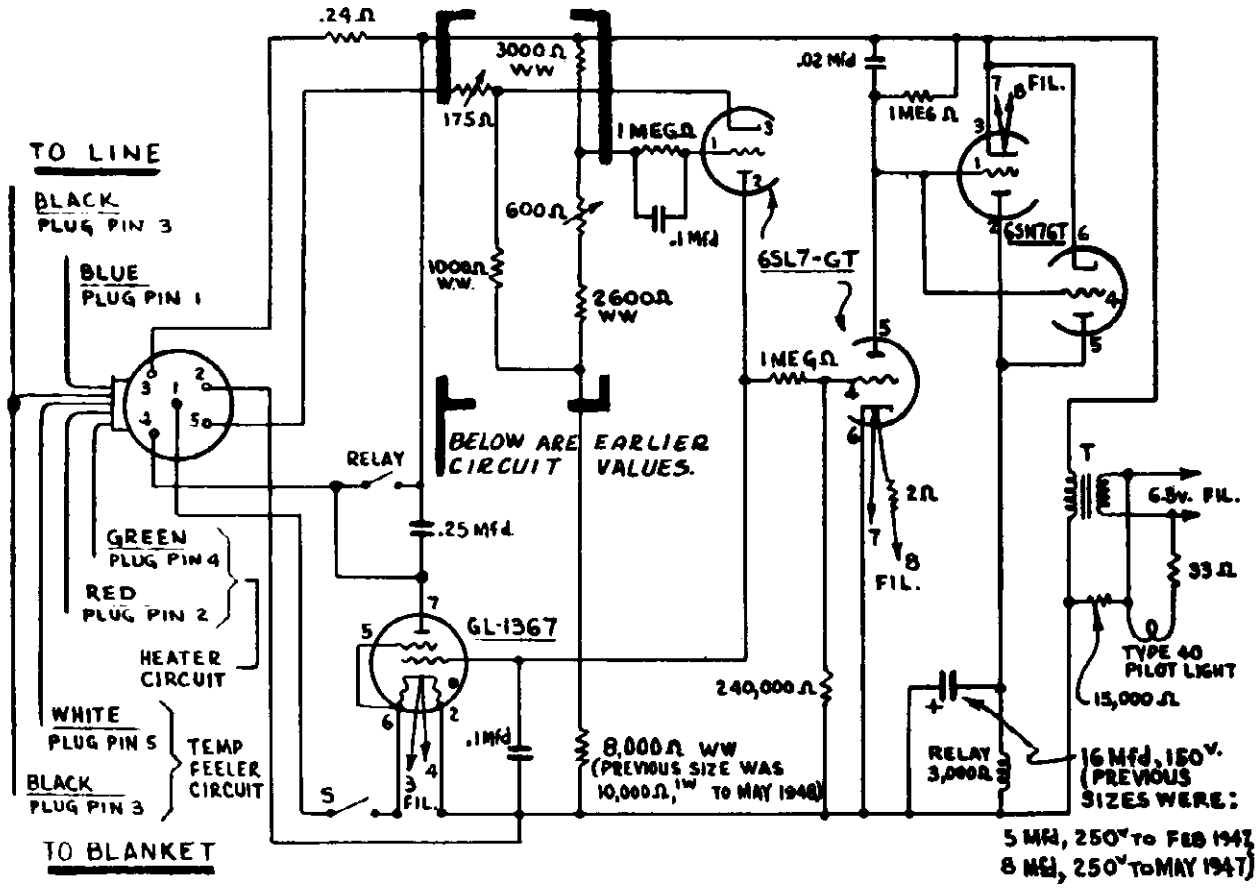

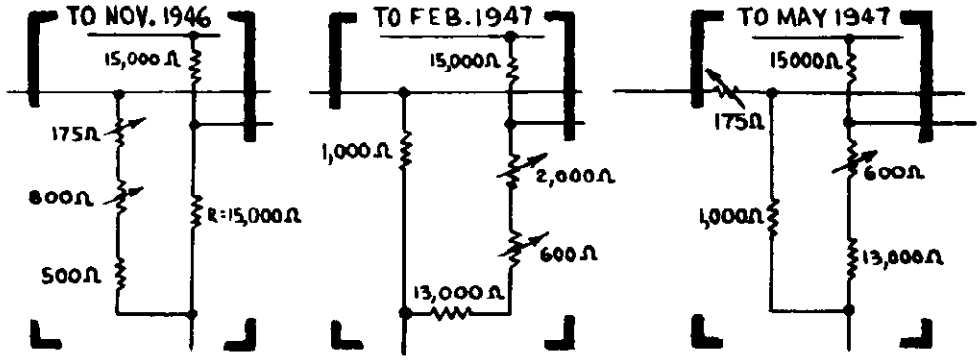

NOTE: FACTORY ADJUSTMENT OF 600Ω; WITH MAXIMUM TEMPERATURE SETTING OF DIAL CONTROL IS JUST "OFF" (LEADS RED AND GREEN), WHEN 1317Ω IS CONNECTED BETWEEN LEADS BLACK AND WHITE.

CONTROL UNIT

MODELS AB-1, AC-2

SIMMONS CO.

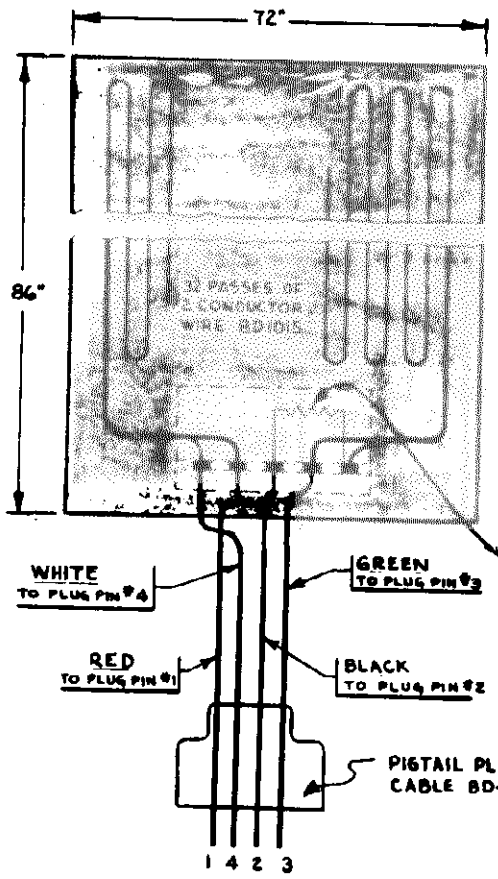

RESISTANCE-VS.-TEMPERATURE		
°F	HEATER (COPPER CIRCUIT) PINS 1-3	ALLOY CIRCUIT PINS 2-4
60	57.0 Ω	1164 Ω
65	57.6	1180
70	58.1	1197
75	58.8	1213
80	59.4	1230
85	60.0	1246
90	60.7	1263
95	61.3	1280

LEAKAGE RESISTANCE PINS 1-4 OR 2-3, 1 MEG. MIN.

RESIST. = ½ WATT WIRE WOUND PADDER 0-120 Ω.

BLANKET CIRCUIT AB-1

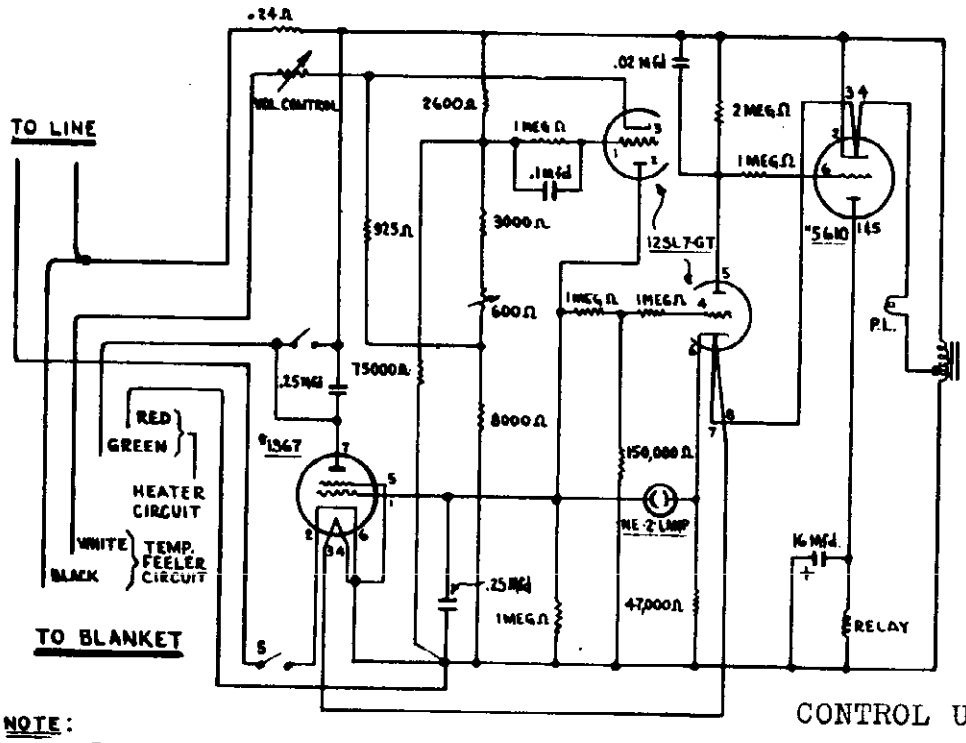

CONTROL UNIT AC-2

NOTE:

FACTORY ADJUSTMENT OF 600 Ω: WITH MAXIMUM TEMPERATURE SETTING OF DIAL CONTROL IS JUST "OFF" (LEADS GREEN AND RED) WHEN 1360 Ω IS CONNECTED BETWEEN LEADS BLACK AND WHITE.

SONORA RADIO & TELEV. CORP. MODEL EA-33

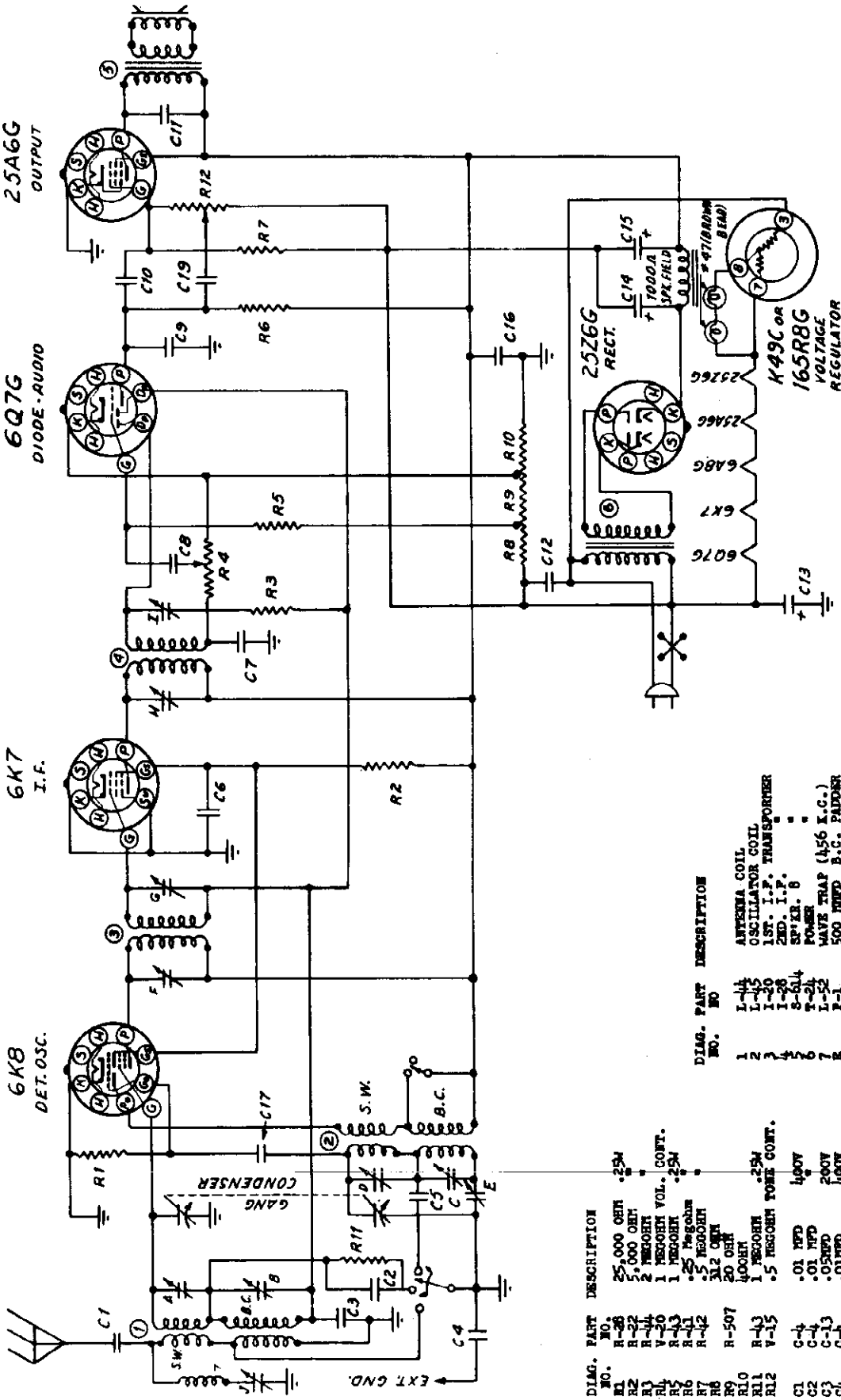

DIAG. NO.	PART NO.	DESCRIPTION
1	L-44	ANTENNA COIL
2	L-45	OSCILLATOR COIL
3	I-20	1ST. I.F. TRANSFORMER
4	I-28	2ND. I.F. " "
5	S-614	SP'KR. " "
6	T-24	POWER " "
7	L-52	WAVE TRAP (456 K.C.)
8	P-1	500 MMFD B.C. PADDER
	G-20	2 GANG VARIABLE COND.
	X-17	BAND SWITCH
C19	C-27	.006MFD 800V

REVISIONS
7-18-38 B,C, R11 MOVED. R1 WAS 50,000
C5 WAS 4,000, C11 WAS 50, G20 WAS G17
X-17 WAS X-13, C18 REMOVED. SWITCH
ACROSS B.C. OSC. PRIMARY ADDED

DIAG. NO.	PART NO.	DESCRIPTION
R1	R-88	25,000 OHM .25W
R2	R-22	5,000 OHM " "
R3	R-44	2 MEGOHM " "
R4	V-20	1 MEGOHM VOL. CONT.
R5	R-41	1 MEGOHM .25W
R6	R-12	.25 Megohm " "
R7		.5 MEGOHM " "
R8	R-507	312 OHM .25W
R9		20 OHM " "
R10		4,000 OHM " "
R11	R-13	1 MEGOHM .25W
R12	V-15	.5 MEGOHM TONE CONT.
C1	C-7	.01 MFD 400V
C2	C-7	.01 MFD 400V
C3	C-13	.05MFD 200V
C4	C-4	.01MFD 400V
C5	C-106	2,500MMFD ±2%
C6	C-1	.1 MFD 200V
C7	C-111	250 MMFD ±2% 400V
C8	C-7	.01MFD 400V
C9	C-111	250MMFD ±2%
C10	C-7	.01MFD 400V
C11	C-104	.02MFD 600V
C12	C-14	.05MFD 400V
C13		20MFD 25V
C14	C-238	10MFD 350V
C15		10MFD 250V
C16	C-2	1MFD 400V
C17	C-110	100MMFD ±2%

CLARI-SKEMATIX
Registered Trademark

MODEL EA-33 SONORA RADIO & TELEV. CORP.

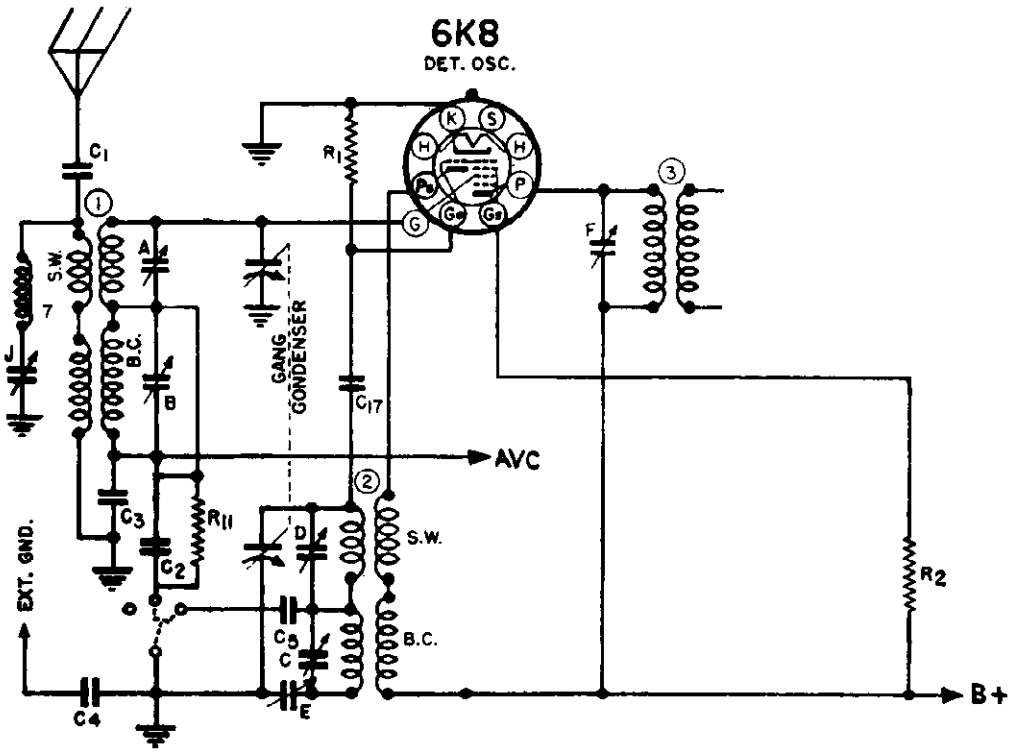

BAND-SWITCH SHOWN
AT 1ST POSITION.
BROADCAST BAND

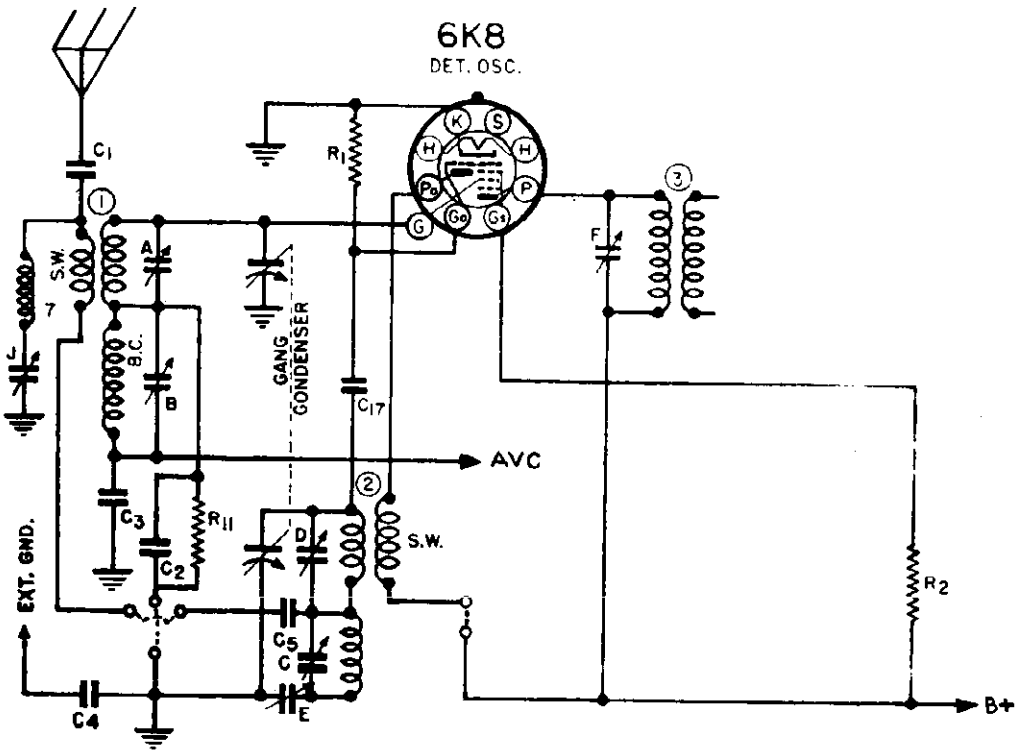

BAND-SWITCH SHOWN
AT 2ND POSITION
SHORT WAVE BAND

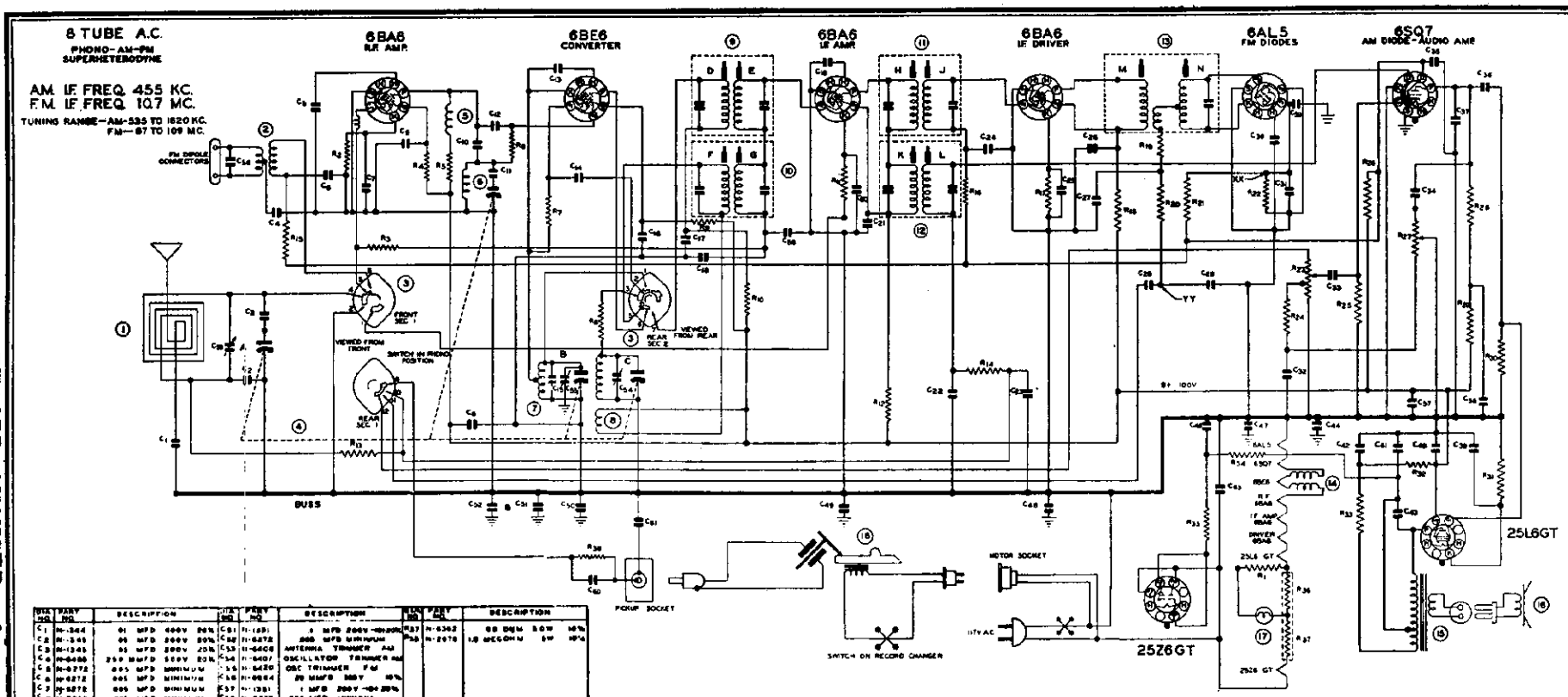

SYM. NO.	PART NO.	DESCRIPTION
C1	N-1344	.01 MFD 400V 20%
C2	N-1345	.05 MFD 200V 20%
C3	N-1345	.05 MFD 200V 20%
C4	N-6488	250 MMFD 500V 20%
C5	N-8272	.005 MFD MINIMUM
C6	N-8272	.005 MFD MINIMUM
C7	N-8272	.005 MFD MINIMUM
C8	N-8272	.005 MFD MINIMUM
C9	N-8272	.005 MFD MINIMUM
C10	N-6385	50 MMFD 500V 10%
C11	N-6484	75 MMFD 500V 5%
C12	N-6415	100 MMFD 500V 10%
C13	N-6483	250 MMFD 500V 20%
C14	N-6385	50 MMFD 500V 10%
C15	N-6483	43 MMFD 500V 20%
C16	N-8272	.005 MFD MINIMUM
C17	N-8272	.005 MFD MINIMUM
C18	N-1345	.05 MFD 200V 20%
C19	N-8272	.005 MFD MINIMUM
C20	N-8272	.005 MFD MINIMUM
C21	N-8272	.005 MFD MINIMUM
C22	N-6385	50 MMFD 500V 20%
C23	N-6385	50 MMFD 500V 20%
C24	N-8272	.005 MFD MINIMUM
C25	N-8272	.005 MFD MINIMUM
C26	N-8272	.005 MFD MINIMUM
C27	N-8467	130 MMFD 500V 5%
C28	N-1374	.02 MFD 400V 20%
C29	N-8271	.002 MFD 600V +50-100%
C30	N-8272	.005 MFD MINIMUM
C31	N-8376	4 MFD 50V ELECTROLYTIC
C32	N-1344	.01 MFD 400V 20%
C33	N-6484	.005 MFD 600V +50-100%
C34	N-6484	.005 MFD 600V +50-100%
C35	N-6483	250 MMFD 500V 20%
C36	N-1344	.01 MFD 400V 20%
C37	N-6483	250 MMFD 500V 20%
C38	N-1381	1 MFD 200V +50-10%
C39	N-8313	30 MFD 25V 30 MFD 150V 30 MFD 150V ELECTROLYTIC
C40		25 MFD 150V
C41	N-1344	.01 MFD 400V 20%
C42	N-8272	.005 MFD MINIMUM
C43	N-1345	.05 MFD 400V 20%
C44	N-8262	.02 MFD 150V ELEC.
C45	N-6488	.01 MFD MINIMUM
C46	N-8272	.005 MFD MINIMUM
C47	N-6488	.01 MFD MINIMUM
C48	N-8272	.005 MFD MINIMUM
C49	N-1381	1 MFD 200V +50-10%
C50	N-6415	100 MMFD 500V 10%
C51	N-1437	.05 MFD 200V 10%
C52	N-8272	.005 MFD MINIMUM
C53	N-6406	ANTENNA TRIMMER 440
C54	N-6407	OSCILLATOR TRIMMER 440
C55	N-6420	OSC TRIMMER FM
C56	N-6414	25 MMFD 350V 10%
C57	N-1381	1 MFD 200V +50-20%
C58	N-8272	.005 MFD MINIMUM
C59	N-6488	250 MMFD 500V 20%
C60	N-6415	100 MMFD 500V 10%
C61	N-1437	.05 MFD 200V 10%
R1	N-8321	REGULATING RESISTOR
R2	N-6488	50 OHM 5W 10%
R3	N-8277	2.2 MEGOHM 5W 20%
R4	N-6486	2,200 OHM 5W 10%
R5	N-6279	820 OHM 5W 10%
R6	N-6485	10,000 OHM 5W 20%
R7	N-6488	22,000 OHM 5W 20%
R8	N-9083	10 OHM 5W 10%
R9	N-1804	1,000 OHM 5W 20%
R10	N-1804	1,000 OHM 5W 20%
R11	N-6485	50 OHM 5W 10%
R12	N-6411	470 OHM 5W 20%
R13	N-1282	1.0 MEGOHM 5W 20%
R14	N-6483	47,000 OHM 5W 20%
R15	N-6328	220,000 OHM 5W 20%
R16	N-6325	220,000 OHM 5W 20%
R17	N-6483	50 OHM 5W 10%
R18	N-6311	470 OHM 5W 20%
R19	N-6483	50 OHM 5W 10%
R20	N-6483	47,000 OHM 5W 20%
R21	N-8273	150,000 OHM 5W 10%
R22	N-6279	33,000 OHM 5W 5%
R23	N-6254	2 MEGOHM VOLUME CONT.
R24	N-6431	27,000 OHM 5W 10%
R25	N-6428	0.5 MEGOHM 5W 20%
R26	N-6490	1.0 MEGOHM 5W 10%
R27	N-8273	3 MEGOHM TONE CONTROL
R28	N-6429	220,000 OHM 5W 20%
R29	N-5833	68,000 OHM 5W 10%
R30	N-6427	470,000 OHM 5W 10%
R31	N-3683	150 OHM 5W 10%
R32	N-1618	100 OHM 5W 10%
R33	N-8263	150 OHM 5W 10%
R34	N-8278	68 OHM 5W 10%
R35	N-1803	12 OHM 5W 10%
R36	N-8252	100 OHM 17W
R37	N-8262	68 OHM 5W 10%
R38	N-2678	1.0 MEGOHM 5W 10%
	N-8324	ANTENNA LOOP COIL
	N-8321	ANTENNA COIL FM
	N-8430	PHONO-AM-FM SWITCH
	N-8275	2 GANG CAPACITOR
	N-8323	R.F. CHOKE COIL
	N-8322	R.F. COIL FM
	N-8320	OSC. COIL FM
	N-8340	OSC. COIL AM
	N-8360	1ST I.F. COIL FM
	N-8364	1ST I.F. COIL AM
	N-8345	2ND I.F. COIL FM
	N-8343	2ND I.F. COIL AM
	N-8361	DISCRIMINATOR COIL
	N-8380	FILAMENT CHOKE COIL
	N-8335	OUTPUT TRANSFORMER
	N-8440	6" P.M. SPEAKER
	N-1107	DIAL LAMP NO. 47
	N-8151	RECORD CHANGER

CHASSIS LAYOUT AND TUBE POSITIONS

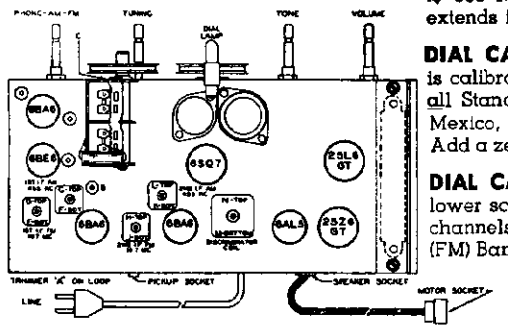

This receiver is designed to operate over two tuning ranges; the broadcast band which extends from 535 to 1620 Kilocycles (KC) (185 to 560 Meters), and the Frequency Modulation (FM) Band which extends from 87 to 109 Megacycles (MC).

DIAL CALIBRATION. (Standard Broadcast Band.) The upper scale is calibrated from 55 to 160 (Standard Broadcast). This band covers all Standard Broadcast frequencies of the United States, Canada, Mexico, Cuba, and many Central and South American Countries. Add a zero to figures on the scale to obtain kilocycles.

DIAL CALIBRATION. (Frequency Modulation Band.) The entire lower scale is calibrated from 88 to 108 Megacycles (201 to 300 FM channels) which covers the entire popular Frequency Modulation (FM) Band.

RECORD CHANGER: Crescent Model C-250, RCD.CH.18-

MODEL WKRU-254 SONORA RADIO & TELEV. CORP.

SERVICE DATA

Lack of sensitivity and poor tone quality may be due to any one or a combination of causes, such as weak or defective tubes or speaker, open or grounded resistors, or bypass condensers. Never attempt to realign the set until all other possible sources of trouble have been first thoroughly investigated and definitely proved not to be the cause. It will be necessary to follow the procedure outlined below and to use recommended equipment for satisfactory results.

BROADCAST ALIGNMENT PROCEDURE

EQUIPMENT REQUIRED: Modulated Test Oscillator that will cover the frequencies of 1455, 600, 1400 and 1620 KC, also an Output Meter to connect across the primary or secondary of the output transformer.

I. F. ALIGNMENT: Put switch in the broadcast position and connect the test oscillator to the converter grid through a .05 condenser. The ground lead of the test oscillator should be connected to the buss of the receiver. Adjust the four I. F. trimmers (F, G, L and K) for maximum reading on the output meter. Always use the peak on the slug which is obtained when screw is out of the can the greatest distance.

R. F. ALIGNMENT: Connect the test oscillator to the antenna lead on the loop through a 100 mmf. condenser. The Loop and Chassis must occupy the same relative positions on the bench as they do in the cabinet. Care should be taken to have no iron or other metal near the loop. Do not make this set-up on a metal bench. Set the gang condenser to the maximum high frequency position and the test oscillator to 1620 KC. Adjust Trimmer "C" to the maximum output. Set test oscillator to 1400 KC and tune in signal with the gang condenser and adjust Trimmer "A" to maximum response. Set test oscillator to 600 KC and tune in signal with gang condenser. Check for damage to gang condenser or coils.

F. M. ALIGNMENT PROCEDURE

EQUIPMENT REQUIRED: F. M. Generator with frequencies of 90, 98, 106, and 109 megacycles, and generator without any modulation which covers 10.7 megacycles, also a zero center microammeter, and a DC Vacuum Tube Voltmeter (An oscilloscope and variable frequency audio oscillator can be used for better results. This method of alignment is described in the last paragraph).

DISCRIMINATOR ALIGNMENT: Connect DC Vacuum Tube Voltmeter between the buss and point "XX" on circuit diagram. Point "XX" is negative potential on the vacuum tube voltmeter. Isolate point "XX" and buss connections to vacuum tube voltmeter with chokes made by wrapping approximately 20 turns of hookup wire around a pencil. This is illustrated in Figure 1. Connect two 100,000 ohm resistors in series. (These resistors must match to 5%.) Connect them from point "XX" to buss. Between junction of 100,000 ohm resistors and the point "YY" connect Zero Center Meter, which is also isolated by the choke described above. These connections are illustrated in Figure 1. Connect test oscillator which is adjusted to 10.7 megacycles to grid of IF Driver through a 250 mmf condenser. Adjust slug "M" to maximum on the vacuum tube voltmeter. Reduce test oscillator to keep vacuum tube voltmeter to around 5 volts. Adjust slug "N" to bring zero center meter to zero point. Slug "N" should never be touched after this alignment.

PRELIMINARY I. F. ALIGNMENT: Connect test oscillator to the converter grid through a 250 mmf. mica condenser. Adjust slugs D, E, H and J to maximum output on the vacuum tube voltmeter. In making these adjustments reduce the generator input to keep the vacuum tube voltmeter at approximately 5 volts when making this adjustment. Always use the peak on the slug which is obtained when the screw is out of the can the greatest distance.

FINAL I. F. ALIGNMENT: Set the test oscillator to 109MC without frequency modulation and connect it to converter grid. Adjust trimmer "B" for approximate maximum output on the vacuum tube voltmeter and zero center for exact centering. Adjust test oscillator to approximately 25 KC deviation, carefully adjust trimmers D, E, H, J and M for maximum on vacuum tube voltmeter. It may be necessary to shift the frequency of the oscillator slightly to hold the zero center meter on center. In making this adjustment turn up volume control slightly to obtain an audio signal out of the speaker. If this signal is free of distortion, increase the deviation to approximately 75 KC and repeat the above alignment. If this is done carefully there will be no distortion in the speaker with this deviation. If distortion is obtained in the speaker with this deviation, it will be necessary to carefully repeat the I. F. alignment.

R. F. ALIGNMENT: Move the signal generator to the FM antenna terminals, using 150 ohm resistors between the generator terminals and each of the FM antenna terminals. Set the test oscillator to 106 megacycles and tune in signal with gang condenser to obtain approximate maximum on the vacuum tube voltmeter and zero center on the meter. Slightly bend the RF section in the gang condenser for maximum output with vacuum tube voltmeter. Set the signal generator to 98 megacycles, tune in signal with the gang condenser. Repeat the above procedure at this frequency and also at 90 megacycles. Recheck alignment at 106 megacycles.

FINAL ALIGNMENT OF FM IF WITH OSCILLOSCOPE AND VARIABLE AUDIO OSCILLATOR: The oscilloscope and variable audio oscillator should be connected as shown in Figure 2. Adjust the deviation to approximately 25 KC and align trimmers D, E, H, J and M to maximum on the vacuum tube voltmeter while watching the oscilloscope for a straight line. It may be necessary to vary the frequency of the variable audio oscillator in order to make the line straight on the scope. Next increase deviation to approximately 75 KC and repeat procedure, adjusting for maximum or as close to maximum as it is possible to obtain without losing the straight line on the oscilloscope. After all the trimmers have been properly adjusted to a maximum and a straight line on the scope, increase the deviation from approximately 125 to 150 KC. The curves illustrated in Figure 3 should be obtained. In making the above adjustments it may be necessary to make slight variations in the RF frequency in order to hold the zero center meter at the zero point.

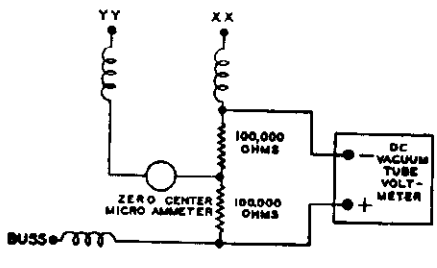

FIG. 1

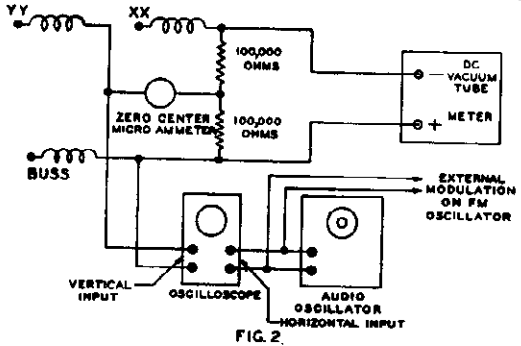

FIG. 2

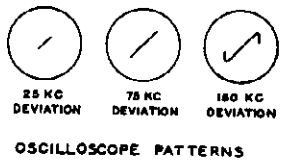

OSCILLOSCOPE PATTERNS

FIG. 3

AERIAL SYSTEM

This receiver has a built-in "Loop" aerial for broadcast reception. Its excellent design is such as to increase pick-up from stations having wide variations in signal strength. The efficiency and selectivity of the loop provide outstanding reception without the use of an external aerial. In or near metal buildings, iron ore deposits or steel structures, or in localities remote from broadcasting stations, reception of the Standard Broadcast Band may require an outside aerial 50 to 100 feet in length including lead-in. Connect the outside aerial to the aerial lead (Blue Wire) located at the rear of the receiver. When using the outside antenna it may be necessary to reverse the power cord plug to eliminate hum or distortion.

The built-in FM aerial is a folded dipole Antenna. Although the receiver performs satisfactorily on the broadcast band, your particular location may require an outside antenna for FM reception. The external aerial for FM reception, must be a dipole Antenna with a 300 ohm line, which you may secure from your local Sonora Dealer. The two lead-in leads of the dipole antenna should be attached, one lead under each screw, to the terminal strip located on the cabinet back after removing the FM antenna furnished with the receiver. For best possible reception with an outside dipole, adjust lead length on the lead-in cable on the weakest station. Cut off lead 6 inches at a time and until signal comes in stronger. If cutting off an additional length does not increase signal, you have reached the correct lengths. It is not necessary to cut off more than 2½ feet.

SONORA RADIO & TELEV. CORP. MODELS WLRU-219, WLRU-220A, WLRU-254A, 402F

9 TUBE A.C.
PHONO-AM-FM SUPERHETERODYNE

AM IF FREQ. 455 KC.
FM IF FREQ. 10.7 MC.

TUNING RANGE—AM: 535 TO 1620 KC.
FM: 87 TO 109 MC.

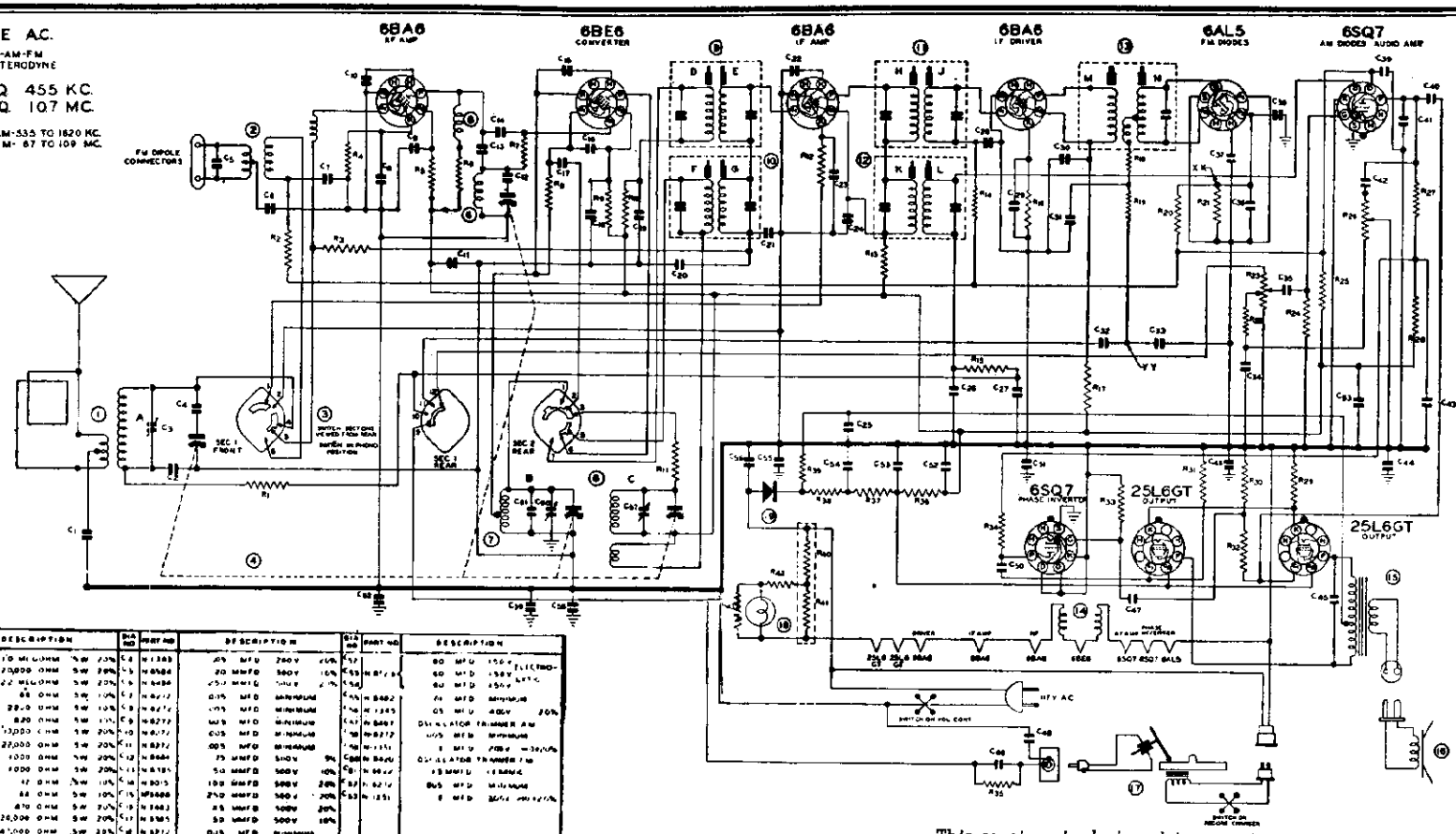

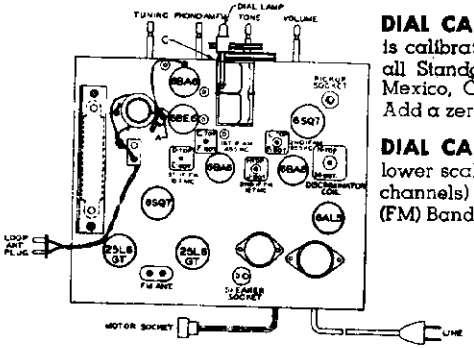

This receiver is designed to operate over two tuning ranges; the broadcast band which extends from 535 to 1620 Kilocycles (KC) (185 to 560 Meters), and the Frequency Modulation (FM) Band which extends from 87 to 109 Megacycles (MC).

DIAL CALIBRATION. (Standard Broadcast Band.) The upper scale is calibrated from 55 to 160 (Standard Broadcast). This band covers all Standard Broadcast frequencies of the United States, Canada, Mexico, Cuba, and many Central and South American Countries. Add a zero to figures on the scale to obtain kilocycles.

DIAL CALIBRATION. (Frequency Modulation Band.) The entire lower scale is calibrated from 88 to 108 Megacycles (201 to 300 FM channels) which covers the entire popular Frequency Modulation (FM) Band.

MODELS WLRU-219, WLRU-220A, WLRU-254A; 402F

SONORA RADIO & TELEV. CORP.

BROADCAST ALIGNMENT PROCEDURE

EQUIPMENT REQUIRED: Modulated Test Oscillator that will cover the frequencies of 455, 600, 1400 and 1620 KC, also an Output Meter to connect across the primary or secondary of the output transformer.

I. F. ALIGNMENT: Put switch in the broadcast position and connect the test oscillator to the converter grid through a .05 condenser. The ground lead of the test oscillator should be connected to the buss of the receiver. Adjust the four I. F. trimmers (F, G, L and K) for maximum reading on the output meter. Always use the peak on the slug which is obtained when screw is out of the can the greatest distance.

R.F. ALIGNMENT. Connect the test oscillator to the antenna lead on the loop through a 100 mmf. condenser. For the antenna adjustment, it is necessary to connect the loop on the cabinet to the chassis, or use an equivalent dummy. An equivalent dummy can be constructed by winding two turns of hookup wire on a piece of carton material to form a loop 22x35 inches. Set the gang condenser to the maximum high frequency position and the test oscillator to 1620 KC. Adjust Trimmer "C" to the maximum output. Set test oscillator to 1400 KC and tune in signal with the gang condenser and adjust Trimmer "A" to maximum response. Set test oscillator to 600 KC and tune in signal with gang condenser. Check for damage to gang condenser or coils.

F. M. ALIGNMENT PROCEDURE

EQUIPMENT REQUIRED: F. M. Generator with frequencies of 90, 98, 106, and 109 megacycles, and generator without any modulation which covers 10.7 megacycles, also a zero center microammeter, and a DC Vacuum Tube Voltmeter (An oscilloscope and variable frequency audio oscillator can be used for better results. This method of alignment is described in the last paragraph).

DISCRIMINATOR ALIGNMENT: Connect DC Vacuum Tube Voltmeter between the buss and point "XX" on circuit diagram. Point "XX" is negative potential on the vacuum tube voltmeter. Isolate point "XX" and buss connections to vacuum tube voltmeter with chokes made by wrapping approximately 20 turns of hookup wire around a pencil. This is illustrated in Figure 1. Connect two 100,000 ohm resistors in series. (These resistors must match to 5%.) Connect them from point "XX" to buss. Between junction of 100,000 ohm resistors and the point "YY" connect Zero Center Meter, which is also isolated by the choke described above. These connections are illustrated in Figure 1. Connect test oscillator which is adjusted to 10.7 megacycles to grid of IF Driver through a 250 mmf condenser. Adjust slug "M" to maximum on the vacuum tube voltmeter. Reduce test oscillator to keep vacuum tube voltmeter to around 5 volts. Adjust slug "N" to bring zero center meter to zero point. Slug "N" should never be touched after this alignment.

PRELIMINARY I. F. ALIGNMENT: Connect test oscillator to the converter grid through a 250 mmf. mica condenser. Adjust slugs D, E, H and J to maximum output on the vacuum tube voltmeter. In making these adjustments reduce the generator input to keep the vacuum tube voltmeter at approximately 5 volts when making this adjustment. Always use the peak on the slug which is obtained when the screw is out of the can the greatest distance.

FINAL I. F. ALIGNMENT: Set the test oscillator to 109 MC without frequency modulation and connect it to converter grid. Adjust trimmer "B" for approximate maximum output on the vacuum tube voltmeter and zero center for exact centering. Adjust test oscillator to approximately 25 KC deviation, carefully adjust trimmers D, E, H, J and M for maximum on vacuum tube voltmeter. It may be necessary to shift the frequency of the oscillator slightly to hold the zero center meter on center. In making this adjustment turn up volume control slightly to obtain an audio signal out of the speaker. If this signal is free of distortion, increase the deviation to approximately 75 KC and repeat the above alignment. If this is done carefully there will be no distortion in the speaker with this deviation. If distortion is obtained in the speaker with this deviation, it will be necessary to carefully repeat the I. F. alignment.

R. F. ALIGNMENT: Move the signal generator to the FM antenna terminals, using 150 ohm resistors between the generator terminals and each of the FM antenna terminals. Set the test oscillator to 106 megacycles and tune in signal with gang condenser to obtain approximate maximum on the vacuum tube voltmeter and zero center on the meter. Slightly bend the RF section in the gang condenser for maximum output with vacuum tube voltmeter. Set the signal generator to 98 megacycles, tune in signal with the gang condenser. Repeat the above procedure at this frequency and also at 90 megacycles. Recheck alignment at 106 megacycles.

FINAL ALIGNMENT OF FM IF WITH OSCILLOSCOPE AND VARIABLE AUDIO OSCILLATOR: The oscilloscope and variable audio oscillator should be connected as shown in Figure 2. Adjust the deviation to approximately 25 KC and align trimmers D, E, H, J and M to maximum on the vacuum tube voltmeter while watching the oscilloscope for a straight line. It may be necessary to vary the frequency of the variable audio oscillator in order to make the line straight on the scope. Next increase deviation to approximately 75 KC and repeat procedure, adjusting for maximum or as close to maximum as it is possible to obtain without losing the straight line on the oscilloscope. After all the trimmers have been properly adjusted to a maximum and a straight line on the scope, increase the deviation from approximately 125 to 150 KC. The curves illustrated in Figure 3 should be obtained. In making the above adjustments it may be necessary to make slight variations in the RF frequency in order to hold the zero center meter at the zero point.

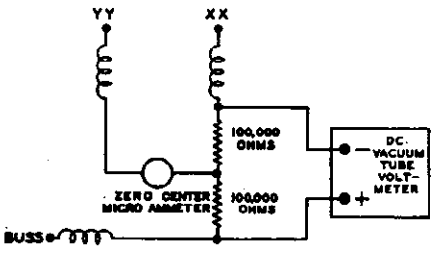

FIG. 1

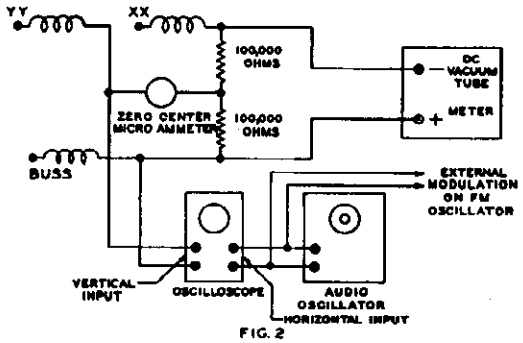

FIG. 2

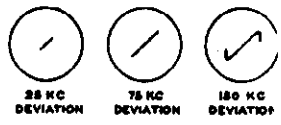

OSCILLOSCOPE PATTERNS

FIG. 3

AERIAL SYSTEM

This receiver has a built-in "Loop" aerial for broadcast reception. Its excellent design is such as to increase pick-up from stations having wide variations in signal strength. The efficiency and selectivity of the loop provide outstanding reception without the use of an external aerial. In or near metal buildings, iron ore deposits or steel structures, or in localities remote from broadcasting stations, reception of the Standard Broadcast Band may require an outside aerial 50 to 100 feet in length including lead-in. Connect the outside aerial to the aerial lead (Blue Wire) located at the rear of the receiver. When using the outside antenna it may be necessary to reverse the power cord plug to eliminate hum or distortion.

The built-in FM aerial is a folded dipole Antenna. Although the receiver performs satisfactorily on the broadcast band, your particular location may require an outside antenna for FM reception. The external aerial for FM reception must be a dipole Antenna with a 300 ohm line, which you may secure from your local Sonora Dealer. The two lead-in leads of the dipole antenna should be attached, one lead under each screw, to the terminal strip located on the chassis after removing the FM antenna furnished with the receiver. For best possible reception with an outside dipole, adjust lead length on the lead-in cable on the weakest station. Cut off lead 6 inches at a time and until signal comes in stronger. If cutting off an additional length does not increase signal, you have reached the correct lengths. It is not necessary to cut off more than 2½ feet.

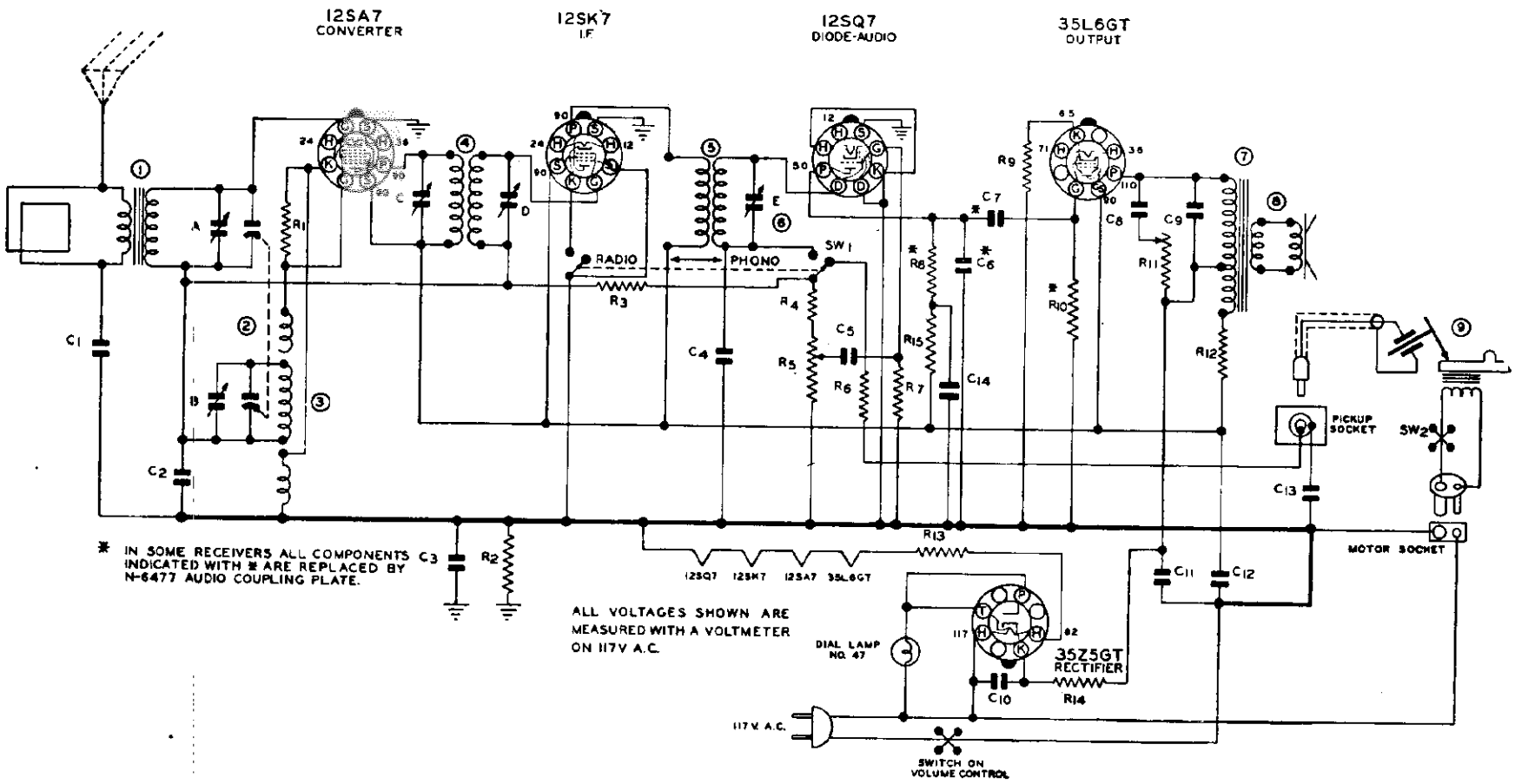

TUNING RANGE

The receiver is designed to operate over the standard broadcast band which extends from 535 to 1620 Kilocycles (KC) (185 to 560 Meters).

DIAL CALIBRATION. **The scale is calibrated from 55 to 160** (Standard Broadcast). This band covers all Standard Broadcast frequencies of the United States, Canada, Mexico, Cuba and many Central and South American Countries. Add a zero to figures on the scale to obtain kilocycles.

I.F 455 KC.
5 TUBE A.C.-D.C.
SUPERHETERODYNE
SINGLE BAND
PHONO-CHANGER COMBINATION

RECORD CHANGER • Crescent Model C-250. RCD.CH.18-

© John F. Dixon

Lack of sensitivity and poor tone quality may be due to any one or a combination of causes such as weak or defective tubes or speaker, open or grounded bias resistor, bypass condenser, etc. Never attempt to realign set until all other possible sources of trouble have been first thoroughly investigated and definitely proved not to be the cause.

NOTE: IT IS ABSOLUTELY NECESSARY THAT AN ACCURATELY CALIBRATED TEST OSCILLATOR WITH SOME TYPE OF OUTPUT MEASURING DEVICE BE USED WHEN ALIGNING THE RECEIVER AND THAT THE PROCEDURE BE CAREFULLY FOLLOWED. OTHERWISE THE RECEIVER WILL BE INSENSITIVE AND THE DIAL CALIBRATION WILL BE INCORRECT. THE TRIMMERS WILL BE REFERRED TO BY THEIR FUNCTION AS INDICATED ON THE PARTS DIAGRAM.

ALIGNMENT PROCEDURE

GENERAL DATA. The alignment of this receiver requires the use of a test oscillator that will cover the frequencies of 455, 600, 1400 and 1620 KC and an output meter to be connected across the primary or secondary of the output transformer. If possible, all alignments should be made with the volume control on maximum and the test oscillator output as low as possible to prevent the AVC from operating and giving false readings.

CORRECT ALIGNMENT PROCEDURE. The intermediate frequency (I.F.) stages should be aligned properly as the first step. After the I.F. transformers have been properly adjusted and peaked, the broadcast band should be adjusted.

I. F. ALIGNMENT. Remove chassis from the cabinet. Care should be taken to have no iron or other metal near the loop.

Do not make this set-up on a metal bench. With the gang condenser set at minimum, adjust the test oscillator to 455 KC and connect the output to the grid of the first detector tube (12SA7) through a .05 or .1 mfd. condenser. The ground on the test oscillator should be connected to the ground buss, indicated on the circuit diagram. Align all three I.F. trimmers to peak or maximum reading on the output meter.

BROADCAST BAND ALIGNMENT. Connect the test oscillator to the antenna of the set through a 100 mmfd. (.0001) condenser. With the gang condenser set at minimum capacity, set the test oscillator at 1620 KC, and adjust the oscillator (or 1620 KC trimmer) on gang condenser. Next—set the test oscillator at 1400 KC, and tune in the signal on the gang condenser. Adjust the antenna trimmer (or 1400 KC trimmer) for maximum signal. Next set the test oscillator at 600 KC, and tune in signal on condenser to check alignment of coils.

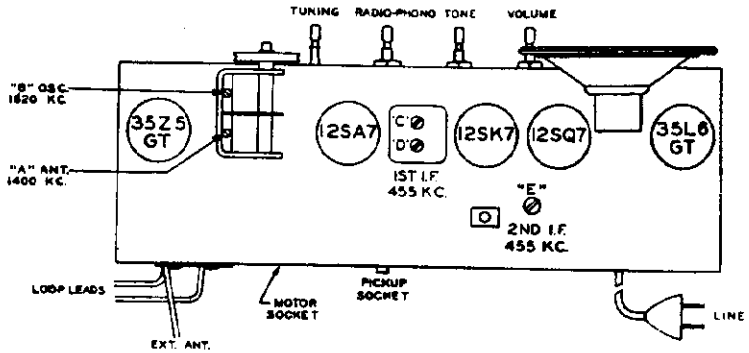

DIAG. NO.	PART NO.	DESCRIPTION
R1	N-4025	22,000 OHM .5W 20%
R2	N-4026	220,000 OHM .5W 20%
R3	N-1262	1 MEGOHM .5W 20%
R4	N-4063	47,000 OHM .5W 20%
R5	N-4843 / N-6757	.5 MEGOHM VOL. CONT.
R6	N-1262	1 MEGOHM .5W 20%
R7	N-4028	6.8 MEGOHM .5W 20%
R8	N-4028	220,000 OHM .5W 20%
R9	N-4067	150 OHM .5W 10%
R10	N-4027	470,000 OHM .5W 20%
R11	N-6157	25,000 OHM TONE CONT.
R12	N-5358	1000 OHM 1.W 10%
R13	N-4023	62 OHM 2W 10%
R14	N-4022	33 OHM .5W 20%
R15	N-4064	35,000 OHM .5W 20%
C1	N-6018	100 MMFD 500V 20%
C2	N-1345	.05 MFD 200V 20%
C3	N-1345	.05 MFD 200V 20%
C4	N-6013	100 MMFD 500V 20%
C5	N-4856	.005 MFD 600V -15+40%
C6	N-6135	250 MMFD 500V 20%
C7	N-1344	.01 MFD 400V 20%
C8	N-1623	.1 MFD. 400V -10 +20%
C9	N-1378	.02 MFD 400V 20%
C10	N-1346	.05 MFD 400V 20%
C11	N-5051	40 MFD 150V ELECTROLYTIC
C12		40 MFD 150V
C13	N-4957	.09 MFD 200V 20%
C14	N-1345	.05 MFD 200V 20%
1	N-6149	ANT. COIL
2	N-6154	2 GANG CONDENSER
3	N-4810	OSCILLATOR COIL
4	N-4813	1ST I.F. TRANSFORMER
5	N-4846	2ND I.F. TRANSFORMER
6	N-4865	TRIMMER
7	N-4875	OUTPUT TRANSFORMER
8	N-6148	5" P.M. SPEAKER
9	N-6151	RECORD CHANGER
S1	N-6145 / N-6156	RADIO-PHONO SWITCH
S2		MOTOR SWITCH ON CHANGER

AERIAL SYSTEM

The receiver has a built-in "loop" aerial. Its excellent design is such as to increase pick-up from stations having wide variations in signal strength. The efficiency and selectivity of the loop provide outstanding reception without the use of an external aerial. The "loop" aerial used on this receiver is somewhat directional so reception from weak stations can be improved by turning the set in the proper direction. In or near metal buildings, iron ore deposits or steel structures or in localities remote from broadcasting stations, reception can be improved by using an outside aerial 50 feet to 100 feet in length including lead-in. Connect the outside aerial to the aerial lead. When using the outside aerial it may be necessary to reverse the power cord plug in wall socket to eliminate hum or distortion.

©John F Rider

(Original) June 24, 1947

INTERMEDIATE FREQUENCY 456 KC.

BOTTOM VIEWS OF ALL SOCKET CONNECTIONS

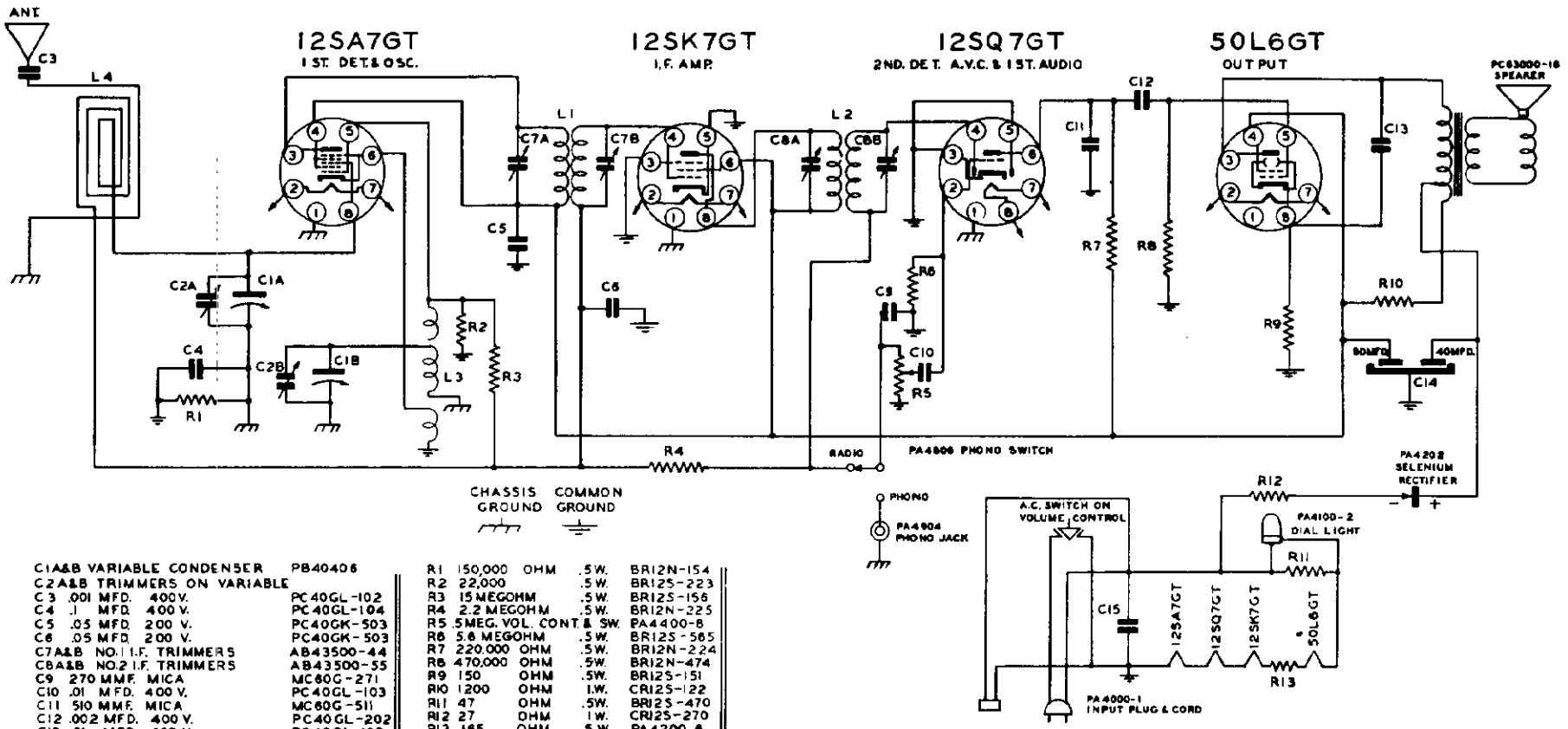

C1A&B VARIABLE CONDENSER		PB40406
C2A&B TRIMMERS ON VARIABLE		
C3 .001 MFD. 400 V.		PC40GL-102
C4 .1 MFD. 400 V.		PC40GL-104
C5 .05 MFD. 200 V.		PC40GK-503
C6 .05 MFD. 200 V.		PC40GK-503
C7A&B NO.1 I.F. TRIMMERS		AB43500-44
C8A&B NO.2 I.F. TRIMMERS		AB43500-55
C9 270 MMF. MICA		MC60G-271
C10 .01 MFD. 400 V.		PC40GL-103
C11 510 MMF. MICA		MC60G-511
C12 .002 MFD. 400 V.		PC40GL-202
C13 .01 MFD. 400 V.		PC40GL-103
C14 ELECTROLYTIC		PA4306
C15 .05 MFD. 400 V.		PC40GL-503

R1	150,000 OHM	.5W.	BR12N-154
R2	22,000	.5W.	BR12S-223
R3	15 MEGOHM	.5W.	BR12S-156
R4	2.2 MEGOHM	.5W.	BR12N-225
R5	.5 MEG. VOL. CONT.& SW.		PA4400-8
R6	5.6 MEGOHM	.5W.	BR12S-565
R7	220,000 OHM	.5W.	BR12N-224
R8	470,000 OHM	.5W.	BR12N-474
R9	150 OHM	.5W.	BR12S-151
R10	1200 OHM	1.W.	CR12S-122
R11	47 OHM	.5W.	BR12S-470
R12	27 OHM	1W.	CR12S-270
R13	165 OHM	5.W.	PA4200-8

L1	NO.1 I.F. COIL ASSEM.	AA6800-1
L2	NO.2 I.F. COIL ASSEM.	AA6800-2
L3	B.C. OSC. COIL ASSEM.	AA6797-1
L4	LOOP ASSEM.	AB43508-1

ALIGNMENT CHART

OPERATION	ALIGNMENT OF	GENERATOR CONNECTED TO	DUMMY ANTENNA	GENERATOR FREQUENCY	TUNING COND. SETTING	TRIMMERS	REMARKS
1	Set dial pointer even with last calibration with cond. gang fully closed.						
2	I.F.	*	.02 MFD. Cond.	456 KC.	Open	C8 A & B	Peak Accurately
						C7 A & B	" "
3	Special Note: Before realigning the R.F. stages of this receiver please observe the special note at the bottom of this page.						
4	Broadcast	**	Driver Loop	1500 KC.	1500 KC.	C2B Osc. Trim.	Peak Accurately
						C2A Ant. Trim.	***
5	Repeat operations (2 and 4).						
6	Check calibration at 600 KC., 1000 KC., and 1500 KC.						

* Pin No. 8 on 12SA7GT Tube.
** Use driver loop as shown
*** Rock dial while adjusting for maximum output.
SPECIAL NOTE: In view of the fact that the metal speaker grill will affect the R. F. alignment on this set, please observe the following instructions when alignment is necessary. After the receiver has been removed from cabinet, turn the chassis in such manner that the speaker faces the metal cabinet grill. Slide chassis up against cabinet so that the metal grill and the loop antenna will be in the same relative position as when the chassis is properly mounted in the cabinet. By using the procedure as outlined in this bulletin the receiver will remain properly aligned when placed back into cabinet.

VOLTAGE CHART

RECEIVER OPERATED ON: A.C.
Line Voltage: 117 Volts

Position of Volume Control: Full with set tunned to quiet channel.

TUBE	FUNCTION	Voltage of socket prongs to B-. See prong Nos. on schematic.							
		No. 1	No. 2	No. 3	No. 4	No. 5	No. 6	No. 7	No. 8
12SA7GT	Osc. & Det.	0	0*	97.0	97.5	**	0	12.4*	0
12SK7GT	I. F. Amp.	0	24.6*	0	-.5	0	97.5	37.2*	97.0
12SQ7GT	2nd Det. A.V.C., 1st Audio	0	0.5	0	**	0	5.5	24.6*	12.4*
50L6GT	Output	0	112*	131	97	0	117*	66.0*	6.2

NOTE: Voltage readings are for schematic diagram in this bulletin. Allow 15% + or - on all measurements. Always use meter scale which will give greatest deflection within scale limits. All DC measurements made with 20,000 ohms per volt voltmeter. All AC voltages made with rectifier type voltmeter.
* Designates A.C. Volts
** Cannot be measured with 20,000 ohms per volt voltmeter.

©John F. Rider

THE SPARKS-WITHINGTON CO. MODEL 5-07-PA

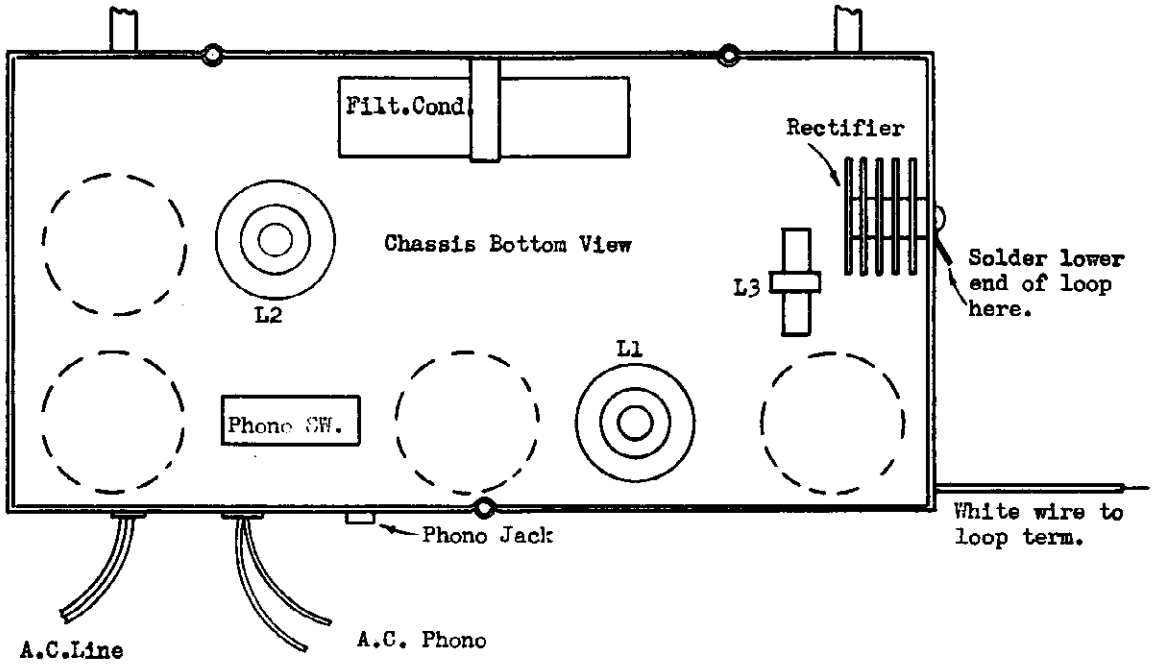

CHASSIS DIAGRAM

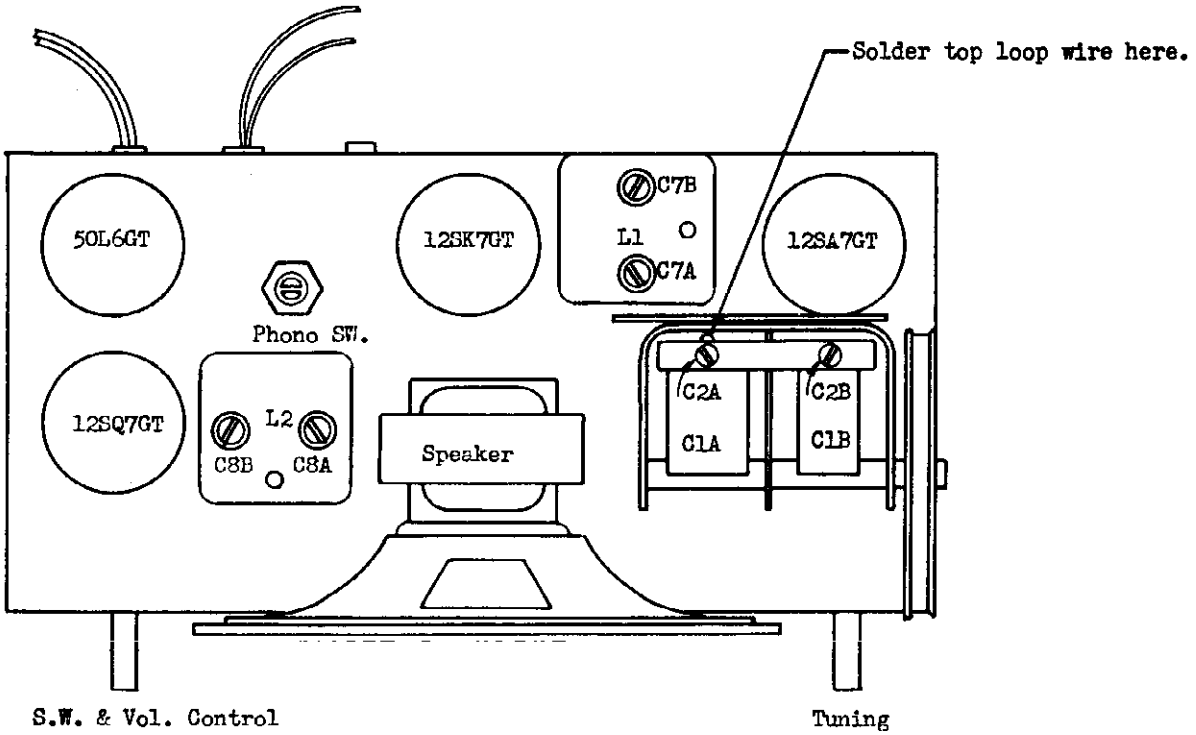

©John F. Rider

MODEL 5-07-PA THE SPARKS-WITHINGTON CO.

DRIVER LOOP

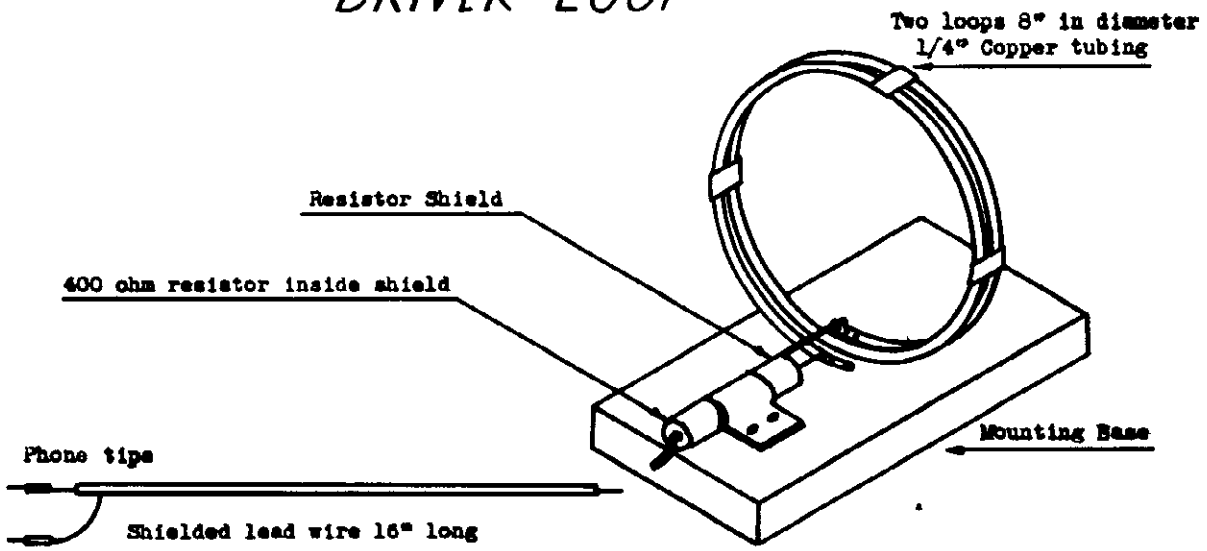

SPECIFICATIONS

Two loops of 1/4" copper tubing 8" in diameter spaced 1/4" apart with 400 ohms resistor in series. Connecting cable and resistor must be shielded.
The loop should be spaced twice the diameter of the loop from the receiver being aligned to prevent an over modulated signal and poor alignment of the receiver.

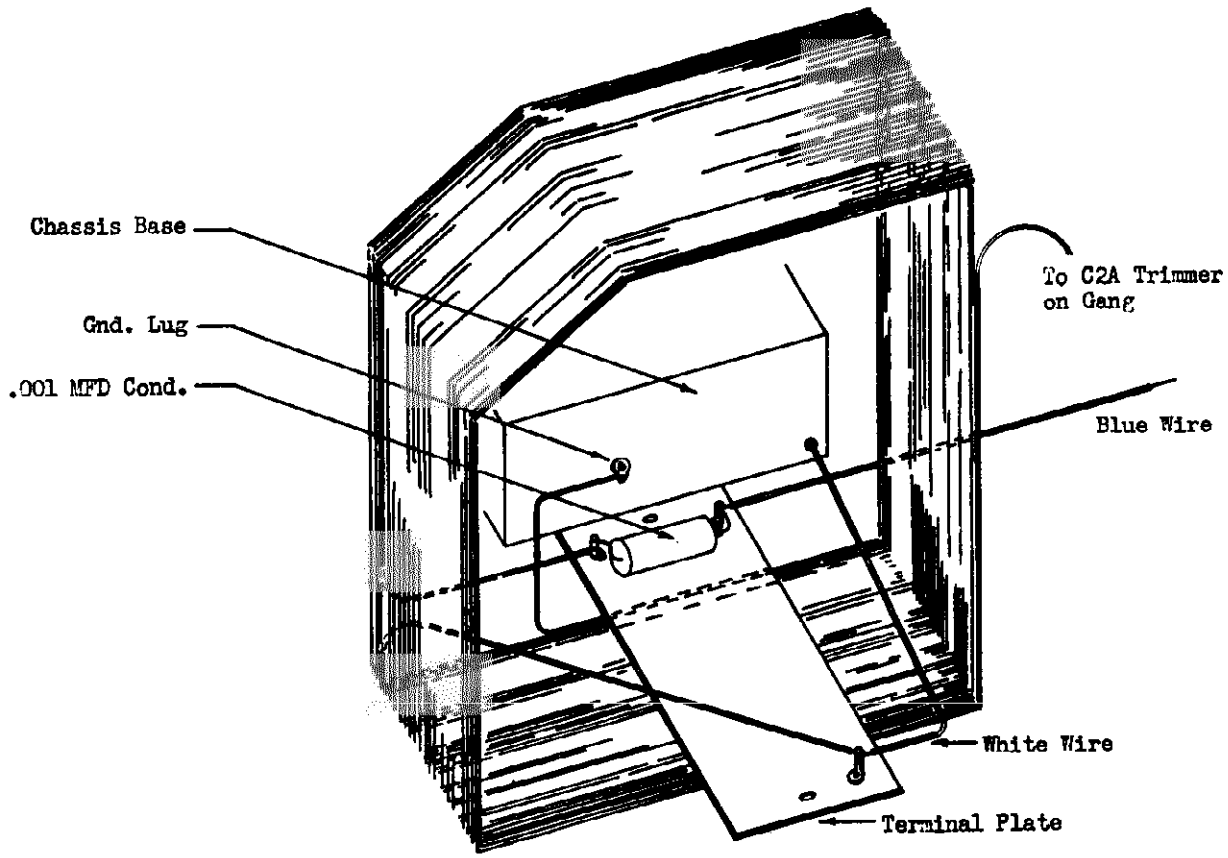

Model 5-07PA Loop Hookup

THE SPARKS-WITHINGTON CO. MODELS 1000, 1001, 1003, 1020, 1021, 1023, CHASSI 12L7

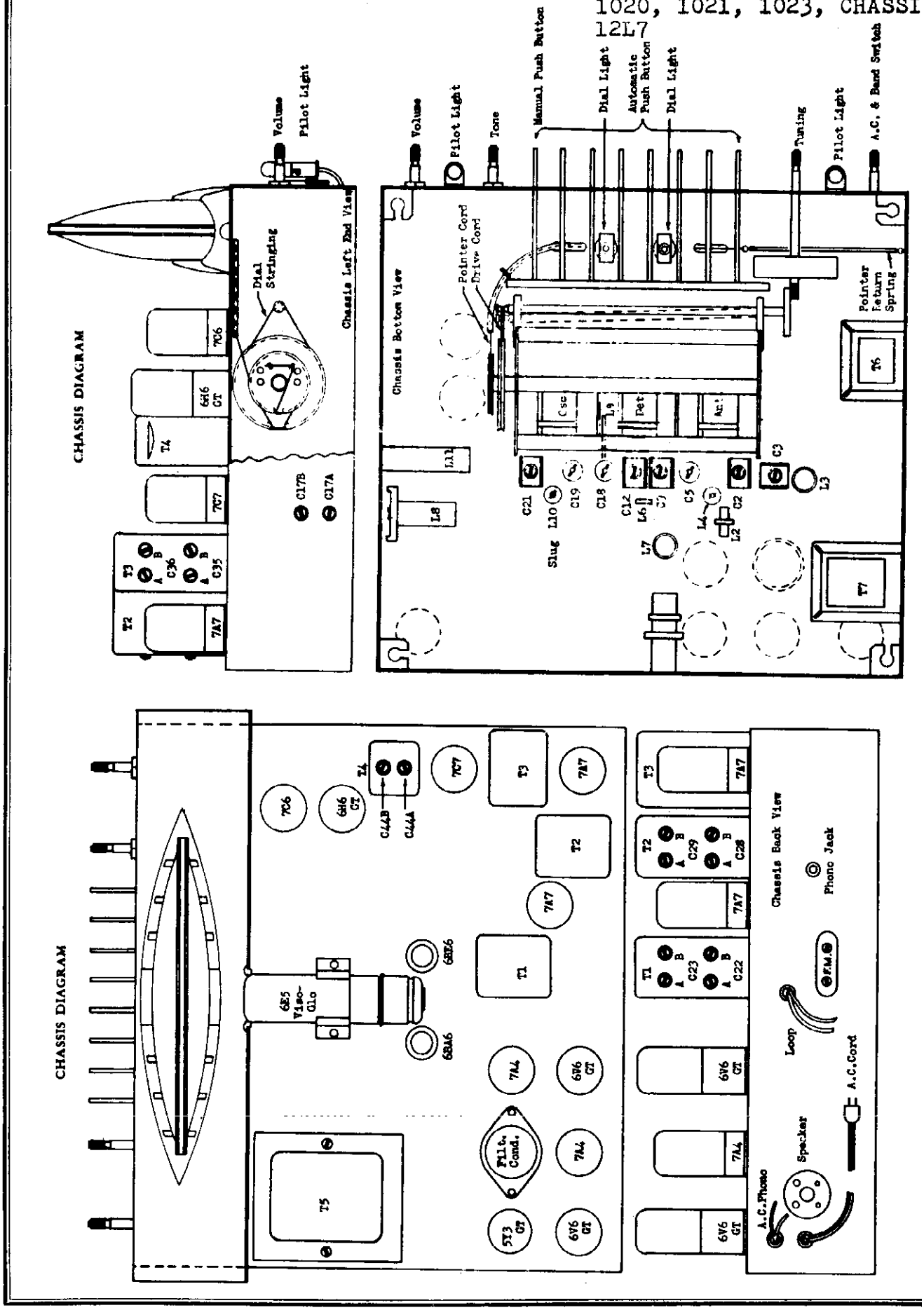

©John F. Rider

INTERMEDIATE FREQUI

BOTTOM VIEWS OF ALL

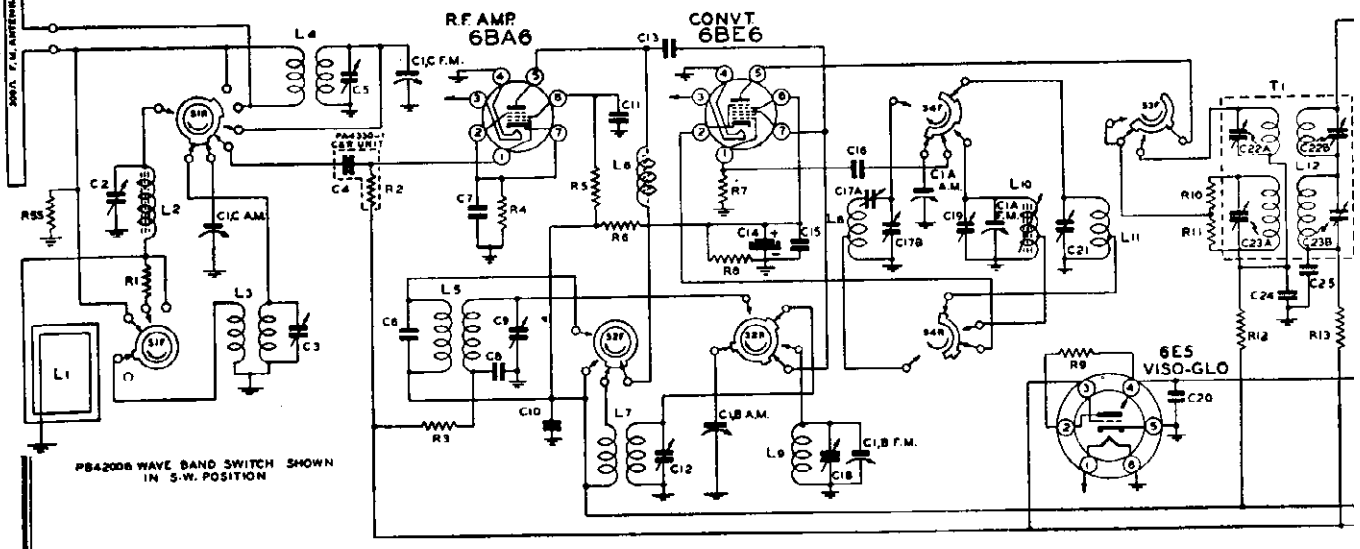

DESCRIPTION	PART NO.	LOCATION
C1A A.M. B.A.M. C.A.M. 3 GANG CONDENSER	PC85000	
C1A F.M. B.F.M. C.F.M. " " "		
C2 B.C. ANT. TRIMMER	PA4378-2	O-2
C3 S.W. ANT. TRIMMER	PA4352-2	O-5
C4 100 MMF. COND. (C&R UNIT)	PA4330-1	O-5
C5 F.M. ANT. TRIMMER	PA4365-1	R-8
C6 51 MMF. CERAMIC	CC30H-510K	O-6
C7 .01 MFD. 100 V. MOLDED PAPER	PA4325-1	P-8
C8 .01 MFD. 100 V. " "	PA4329-1	N-9
C9 B.C. R.F. TRIMMER	PA4378-2	O-8
C10 1000 MMF. CERAMIC	PA4326-8	M-9
C11 1000 MMF. "	PA4326-8	R-10
C12 S.W. R.F. TRIMMER	PA4378-2	M-10
C13 5 MMF. CERAMIC	PA4326-7	S-10
C14 4 MFD. 250 V. ELECTRO. COND	PA4303-8	P-12
C15 1000 MMF. CERAMIC	PA4326-8	P-13
C16 .51 MMF. "	CC30H-510K	O-13
C17A B.C. OSC. PAD. C17B B.C. OSC. TRIM.	AB43500-36	O-13
C18 F.M. R.F. TRIMMER	PA4365-1	M-13
C19 F.M. OSC. "	PA4365-1	P-15
C20 .05 MFD. 400 V. TUBULAR	PC40HL-503	M-18
C21 S.W. OSC. TRIMMER	PA4378-2	P-16
C22 A&B NO. 1 I.F. TRIMMER F.M. *	PA4359-3	O19-20
C23 A&B NO. 2 I.F. " A.M. *	PA4359-1	P19-20
C24 .01 MFD. 400 V. PAPER MOLDED	PC45GL-103	O-19
C25 .01 MFD. 200 V. " "	PC45GR-103	O-19
C26 .01 MFD. 300 V. " "	PA4325-4	O-21
C27 .01 MFD. 200 V. " "	PC45GR-103	P-21
C28 A&B NO. 1 I.F. TRIMMER F.M. *	PA4359-1	Q23-24
C29 A&B NO. 2 I.F. " A.M. *	PA4359-3	P23-24
C30 .05 MFD. 400 V. TUBULAR	PC40HL-503	O-23
C31 .01 MFD. 200 V. PAPER MOLDED	PC45GR-103	O-23
C32 .01 MFD. 300 V. " "	PA4325-4	O-23
C33 .01 MFD. 200 V. " "	PC45GR-103	P-23
C34 .05 MFD. 400 V. TUBULAR	PC40HL-503	P-25
C35 A&B NO. 3 I.F. TRIMMER F.M. *	PA4359-1	Q27-28
C36 A&B NO. 3 I.F. " A.M. *	PA4359-3	R27-28
C37 100 MMF. } DIODE FILTER UNIT	PA4329-1	O-28
C38 100 MMF. }		N-28
C39 .01 MFD. 300 V PAPER MOLDED	PA4325-4	O-30
C40 .01 MFD. 200 V. " "	PC45GR-103	P-30
C41 .1 MFD. 200 V. TUBULAR	PC40HK-104	N-30
C42 .001 MFD. 200 V. PAPER MOLDED	PA4325-2	N-31
C43 .05 MFD. 400 V. TUBULAR	PC40HL-503	N-31
C44 A&B. RATIO DET. TRIMMER *	PA4359-1	R32-33
C45 51 MMF. MICA	MC80F-510	O-32
C46 330 MMF. "	MC60G-331	N-33
C47 1000 " CERAMIC	PA4326-8	P-33
C48 220 " (C&R UNIT)	PA4330-2	M-34
C49 3 MFD. 50 V. ELECTRO. COND.	PA4308-1	P-34
C50 .01 MFD. 200 V. TUBULAR	PC40HK-103	L-35
C51 .01 " 100 V. PAPER MOLDED	PA4325-1	O-36
C52 100 MMF. (C&R UNIT)	PA4330-3	P-36
C53 4 MFD. 400 V. ELECTRO. COND.	PA4303-1	M-37

DESCRIPTION				PART NO	LOCATION
C54 .05 MFD. 400 V. TUBULAR				PC40HL-503	P-37
C55 100 MMF. (C&R UNIT)				PA4330-1	S-40
C56 .005 MFD. 200 V. TUBULAR				PC40HK-502	P-39
C57 .01 MFD. 200 V.				PC40HK-103	P-39
C58 .05 MFD 400 V.				PC40HL-503	N-38
C59 .05 MFD. 400 V.				PC40HL-503	K-39
C60 .05 MFD. 400 V.				PC40HL-503	K-40
C61 .006 MFD. 1000 V.				PC40HN-602	H-37
C62 ELECTRO. COND. 30,20,15 MFD. 450 V. 50 MFD. 25 V.				PA4307-1	J-28,30,32
C63 .05 MFD. 600 V. PAPER MOLDED				PC45GM-503	H-24
C64 150 MMF MICA				MC80F-151	Q-38
R1 2200	OHMS	½ W.	(C&R UNIT)	BR125-222	P-2
R2 100,000	"	"		PA4330-1	P-8
R3 100,000	"	" W.		BR125-104	M-7
R4 68	"	1 "		BR125-680	P-8
R5 47,000	"	½ "		CR125-473	Q-9
R6 15,000	"	2 "		DR125-153	P-10
R7 22,000	"	½ "		BR125-223	Q-11
R8 22,000	"	" "		CR125-223	P-11
R9 1 MEGOHM	"	" "		BR125-105	O-16
R10 220,000	OHMS	" "		BR125-224	P-18
R11 10,000	"	" "		BR125-103	P-18
R12 10,000	"	" "		BR125-103	O-18
R13 100,000	"	" "		BR125-104	O-20
R14 68,000	"	" "		BR125-683	P-20
R15 330	"	" "		BR125-331	P-22
R16 4700	"	" "		BR125-472	O-22
R17 100,000	"	" "		BR125-104	O-24
R18 68,000	"	" "		BR125-683	P-25
R19 330	"	" "		BR125-331	P-27
R20 4700	"	" "		BR125-472	P-27
R21 47,000	"	" "	(DIODE FILTER)	PA4329-1	O-28
R22 220,000	"	½ "		BR125-224	P-29
R23 1000	"	" "		BR125-102	P-31
R24 2.2 MEGOHM	"	" "		BR125-225	N-31
R25 1 "	"	" "		BR125-105	O-31
R26 470,000	OHMS	" "		BR125-474	O-32
R27 4700	"	" "		BR125-472	M-32
R28 10,000	"	" "		BR125-103	O-32
R29 470,000	"	" "		BR125-474	M-33
R30 47	"	" "		BR125-470	S-33
R31 15,000	"	" "		BR125-153	O-34
R32 150,000	"	" "		BR125-154	M-34
R33 22,000	"	" "		BR125-223	M-34
R34 2.2 MEGOHM	"	" "	(C&R UNIT)	PA4330-2	M-34
R35 10,000	OHMS	" W.		BR125-103	M-35
R36 15 MEGOHM	"	" "	(C&R UNIT)	PA4330-3	Q-37
R37 820,000	OHMS	" W.		BR125-824	O-37
R38 33,000	"	" "		BR125-333	N-37

DESCRIPTION				PART NO
R39 100,000	OHMS	½ W.	TONE CONTROL	BR125-1
R40				PA4409-
R41 47,000	OHMS	½ W.		BR125-4
R42 100,000	"	"	(C&R UNIT)	PA4330-
R43 2700	"	½ W.		BR125-2
R44			VOLUME CONTROL	PA4408-1
R45 22,000	OHMS	½ W.		BR125-2
R46 470,000	"	"	"	BR125-4
R47 470,000	"	"	"	BR125-4
R48 470,000	"	"	"	BR125-4
R49 2700	"	"	"	BR125-2
R50 47,000	"	"	"	BR125-4
R51 1500	"	"	"	BR125-1
R52 1500	"	"	"	BR125-1
R53 220	"	2	"	DR125-2
R54 470	"	2	"	DR125-4
R55 100,000	"	½	"	BR125-1
R56 3.3	"	(3-10	½	) AA6887-

L1	B.C. LOOP ASSEMBLY	AC67008-
L2	B.C. ANT. LOADING COIL ASSEM.	AA8780-1
L3	S.W. ANT. COIL "	AA8756-
L4	F.M. " " "	AA8787-
L5	B.C. R.F. " "	AA6758-
L6	R.F. CHOKE "	AA6758-
L7	S.W. R.F. COIL "	AA8760-
L8	B.C. OSC. " "	AA6752
L9	F.M. R.F. " "	PA3234
L10	F.M. OSC. " ASSEM.	AA8787-
L11	S.W. OSC. " "	AA6770-
L12	NO. 1 I.F. COIL ASSEMBLY *	AA8803-
L13	NO. 2 I.F. " " *	AA6803-
L14	NO. 3 I.F. " " *	AA8803-
L15	RATIO DETECTOR COIL ASSEM. *	AA6805-

T1	NO. 1 I.F. TRANS ASSEM. *	AA6768-
T2	NO. 2 I.F. " " *	AA8768-
T3	NO. 3 I.F. " " *	AA8788-
T4	RATIO DET. TRANS. *	AA6805-
T5	POWER TRANS.	AB44011
T6	FILTER CHOKE	AB47006
T7	OUTPUT TRANS.	AB44058

©John F. Rider

HINGTON CO.

MODELS 1000, 1001, 1003, 1020, 1021, 1023, CHASSIS 12L7

CY A.M. 456 Kc.
F.M. 10.7 Mc.
KET CONNECTIONS

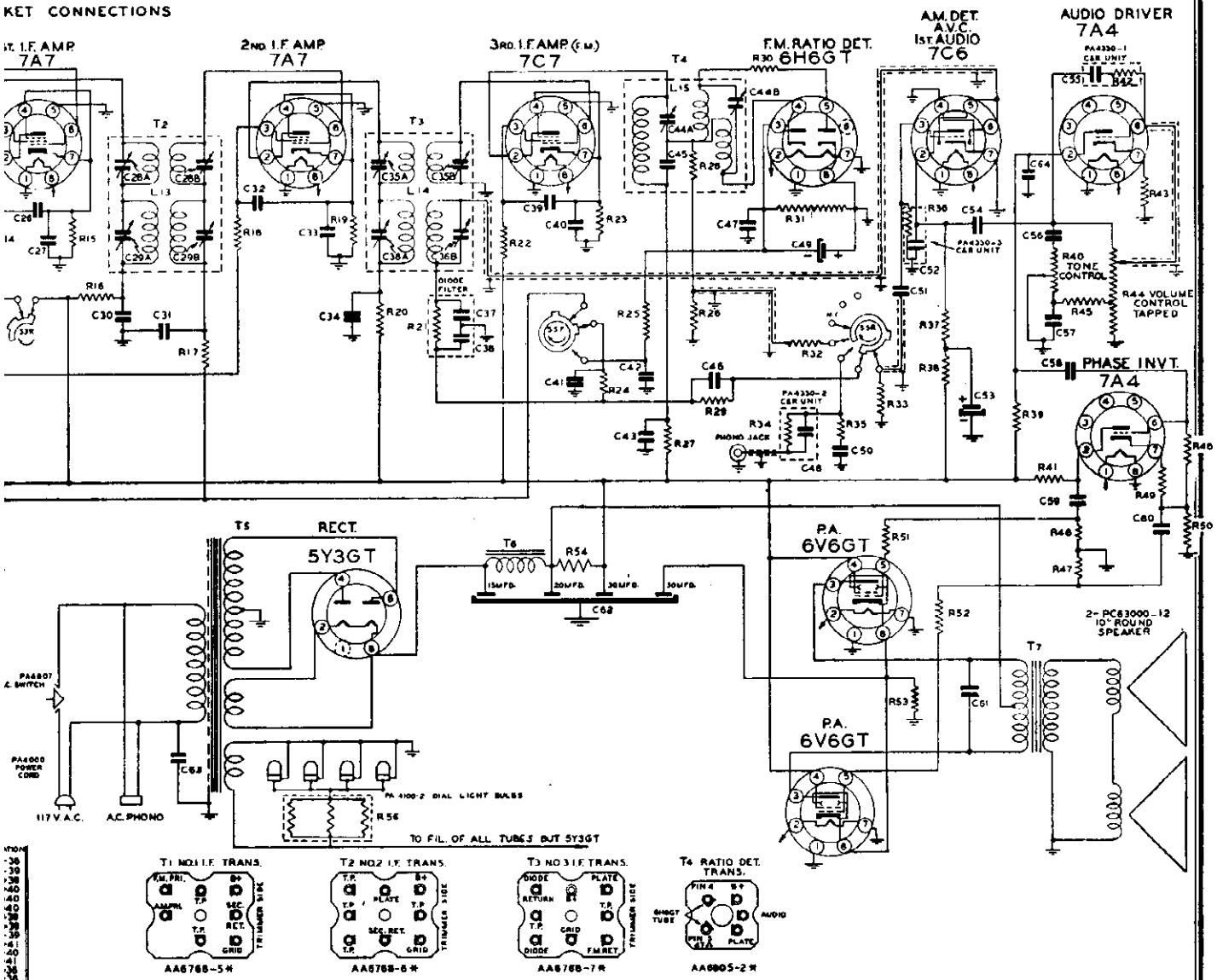

TERMINAL HOOKUP FOR L12, L13, L14 & L15.

*SPECIAL SERVICE NOTE: THESE TRANSFORMERS SUPPLIED AS COMPLETE ASSEMBLIES ONLY.

DUMMY ANTENNA

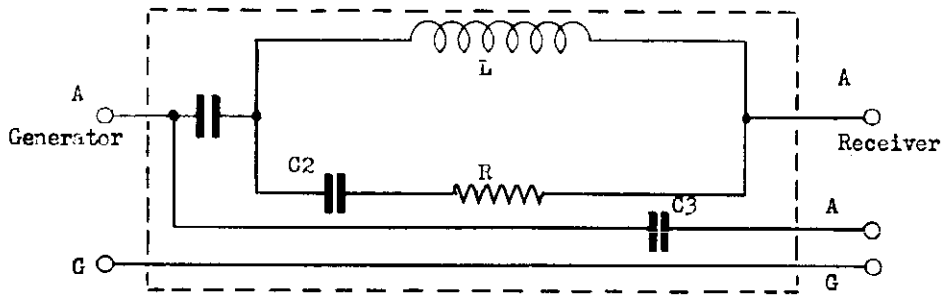

C1-200 mmf. Condenser 400 V.D.C.
C2-400 mmf. Condenser 400 V.D.C.
C3-.02 mmf. Condenser 400 V.D.C.
R-100 ohms Resistor 1/4 Watt
L-Choke Coil

-----Case Shield
Choke Coil Specification
Tubing - 3/8" Diameter Bakelite
Wire - No. 39 Enameled
Turns - 59 closely wound (Impregnated)

NOTE: When using this dummy antenna the generator output impedance should be 10 ohms or lower.

MODELS 1000, 1001, 1003, 1020, 1021, 1023, CHASSIS 12L7

THE SPARKS-WITHINGTON CO.

ALIGNMENT CHART

OPERATION	ALIGNMENT OF	GENERATOR CONNECTED TO	DUMMY ANT.	GENERATOR FREQUENCY	BAND SWITCH SETTING	TUNING COND. SETTING	TRIMMER	REMARKS
1	Set dial pointer to 88 Mc. with gang condenser closed.							
2	A. M. I. F.	Center A. M. Section of Gang Condenser	*	456 KC.	BC.	Open	C36 A & B T3	Peak Accurately
							C29 A & B T2	" "
							C23 A & B T1	" "
3	BC. R.F.	Ant.	*	1600 KC.	BC.	1600 KC.	C17B Osc. Tr.	" "
4				1400 KC.		1400 KC.	C9 R.F. Tr.	**
							C2 Ant. Tr.	Peak Accurately
5				600 KC.		600 KC.	C17A Osc. Pad.	**
6	Repeat operations 2, 3, and 4.							
7	Check calibrations at 600 Kc., 1000 Kc., and 1400 Kc.							
8	S. W. R. F.	Ant.	*	16 MC.	S. W.	16 MC.	C21 Osc. Tr.	Max. A. V. C.
							C12 R.F. Tr.	Peak Accurately
							C3 Ant. Tr.	" "
9	Repeat operation #8.							
10	Check calibrations at 6 Mc., 10 Mc., and 16 Mc.							
11	SPECIAL NOTE: For complete F.M.-I.F. visual alignment instructions please refer to pages 7, 8, 9, 10, 11, and 12 of this bulletin.							
12	F.M.-I.F. alignment using A.M. Generator and Output Meter.							
13	T4 F. M. Ratio Det.	Pin #6 on 7C7 3rd I. F. Amp.	.05 MFD. Cond.	10.7 MC.	F. M.	Open 108 MC.	C44A	Peak Accurately
							C44B	" "
14	NOTE: Operation #13 must be made with generator output as low as possible, consistent with usable output meter reading.							
15	Connect a 15,000 ohm resistor (to prevent overcoupling) between pin #6 (grid) on 7C7 3rd I. F. Amp. tube to gnd. After operation #16 is completed leave resistor connected for operations to follow.							
16	T3 F.M.-I.F.	Pin #6 of 2nd 7A7 Tube	.05 MFD. Cond.	10.7 MC.	F. M.	108 MC.	C35B	Peak Accurately
							C35A	" "
17	Connect a 15,000 ohm resistor between Pin #6 on 2nd 7A7 I. F. Amp. and Gnd. After operation #18 is completed leave resistor connected for operations to follow.							
18	T2 F.M.-I.F.	Pin #6 of 2nd 7A7 I.F.Amp.	.05 MFD. Cond.	10.7 MC.	F. M.	Open 108 MC.	C28B Sec.	Peak Accurately
							C28A Pri.	" "
19	NOTE: Operation #18 must be made with generator output as low as possible, consistent with usable output meter reading.							
20	Connect another 15,000 ohm resistor between Pin #6 (Grid) on 1st 7A7 tube to Gnd. After operation #21 is completed leave resistor connected for operations to follow.							
21	T1 F.M.-I.F.	Center Sec. of Gang Condenser	.05 MFD. Cond.	10.7 MC.	F. M.	Open 108 MC.	C22B Sec.	Peak Accurately
							C22A Pri.	" "
22	NOTE: Operation #21 must be made with generator output as low as possible, consistent with usable output meter reading.							
23	Repeat operations 13, 16, 18, and 21.							
24	Remove the three 15,000 ohm resistor dummies from Pin #6 on the two 7A7 and the 7C6 tubes but leave generator coupled through the .05 MFD. Cond. to the center F.M. Section of Gang Condenser.							
25	Adjust C44B secondary trimmer on T4 ratio detector transformer to minimum deflection or dip on output meter. Under certain conditions it is possible to adjust C44B secondary trimmer to minimum noise with the receiver tuned to a weak station. This operation is very sharp and the receiver must be tuned to the center response only.							
26	Repeat operation #25.							
27	F.M.-R.F. alignment using an A.M. generator with frequency of 88 to 108 Mc. and vacuum tube voltmeter, D.C. Voltmeter (20,000 ohms per volt).							
28	Place meter across C49 Elect. Cond. Meter reading approx. 1 Volt.							

NOTE: * Use dummy antenna
** Rock dial while adjusting for maximum output.

©John F. Rider

ALIGNMENT CHART

OPER-ATION	ALIGNMENT OF	GENERATOR CONNECTED TO	DUMMY ANT.	GENERATOR FREQUENCY	BAND SWITCH SETTING	TUNING COND. SETTING	TRIMMER	REMARKS
29	F. M. R. F.	Ant.	Match to 300 Ohms	108 MC.	F. M.	108 MC.	C19 F.M.Osc.	Max. A. V. C. V.
							C18 F.M.-R.F.	Peak Accurately
							C5 F.M. Ant.	" "
30	Repeat operation #29.							
31	Check calibration at 88 and 100 Mc.							

VOLTAGE CHART

Line Voltage: 117 Volts AC

Position of volume control: Full with set tuned to quiet channel.
Position of Band Switch: Broadcast.

TUBE	FUNCTION	Voltage of Sockets Prongs to Ground See Prong Nos. on schematic.							
		No. 1	No. 2	No. 3	No. 4	No. 5	No. 6	No. 7	No. 8
6BA6	R. F. Amp.	-.15	.65	6.2*	0	235	80	.65	-
6BE6	Converter	-9.0	0	6.2*	0	205	75	-.40	-
7A7	No. 1 I.F. Amp.	0	205	95	2.7	0	-.20	2.7	6.2*
7A7	No. 2 I.F. Amp.	0	205	95	2.7	0	-.20	2.7	6.2*
7C7	No. 3 I.F. Amp. (F.M.)	0	225	100	3.2	0	0	3.2	6.2*
6H6GT	Ratio Det. (F.M.)	0	0	-.15	**	**	-	6.2*	.15
7C6	Det., A.V.C., & 1st A.F.(A.M.)	0	120	-.20	0	-.35	-.35	0	6.2*
7A4	No. 2 A.F. Amp.	0	85	235	75	80	0	0	6.2*
7A4	Phase Inverter	6.2*	160	-	-	70	13	75	0
6V6GT	Power Amp. (2)	0	6.2*	250	235	0	0	0	13
5Y3GT	Rectifier	-	260	-	260*	-	260*	-	260
6E5	Tuning Eye (Viso-Glo)	6.2*	**	-.40	235	0	-	-	-

NOTES: Voltage readings are for schematic diagram in this bulletin. Allow 15% + or - on all measurements. Always use meter scale which will give greatest deflection within scale limits. All DC measurements made with 20,000 ohms per volt voltmeter. All AC voltages made with rectifier type voltmeter.

* AC Volts.

** Cannot be measured with 20,000 Ohms per volt voltmeter.

THE SPARKS-WITHINGTON CO. MODELS 1000, 1001, 1003, 1020, 1021, 1023, CHASSIS 12L7

MODELS 1000, 1001, 1003, 1020, 1021, 1023, CHASSIS 12L7

THE SPARKS-WITHINGTON CO.

VISUAL I. F.-F. M. ALIGNMENT DATA

DESCRIPTION OF CIRCUIT USED:

A 6H6GT is employed as a ratio detector. This tube is preceded by a 7C7 ratio detector driver and two stages of 10.7 Mc. amplification using type 7A7 tubes. All stages are coupled by transformer coupling. The transformers are of the composite type wherein both 10.7 Mc. and 456 Kc. units are constructed within one can.

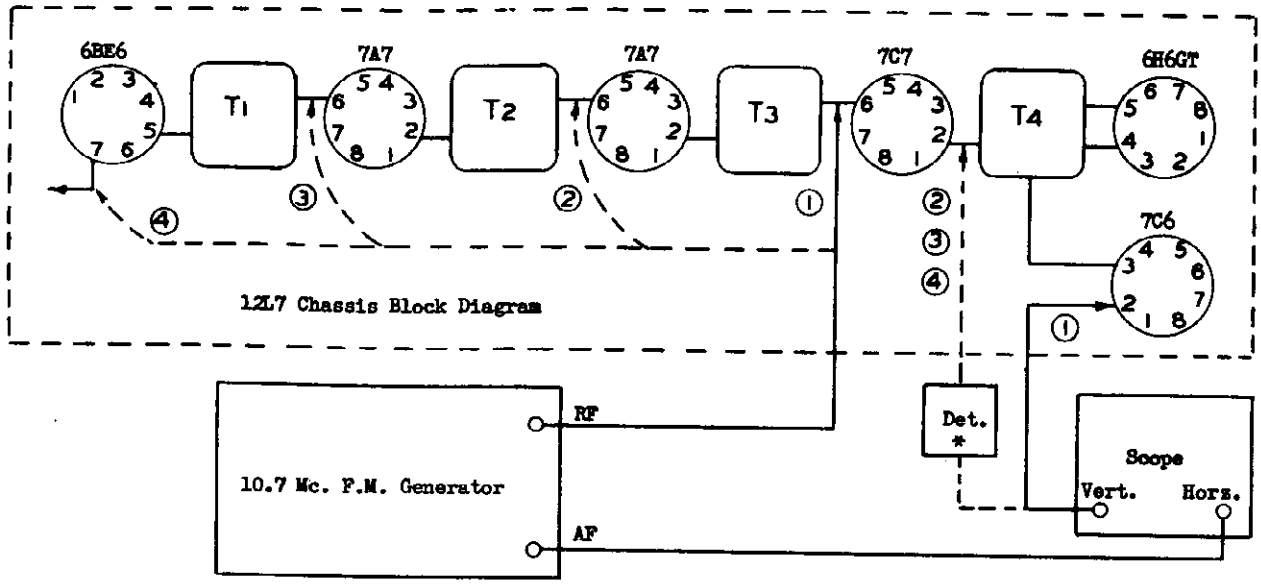

Gen. & Scope Position	Use
1	Align Ratio Detector - Adjust T4
2	Align I.F. - Adjust T3
3	Align I.F. - Adjust T2
4	Align I.F. - Adjust T1
*	See paragraph 3(e) under equipment required.

THEORY OF VISUAL ALIGNMENT.

One of the characteristics of a tuned circuit is the fact that when it is excited or driven by a generator such as a vacuum tube or another tuned circuit, the voltage developed across it will vary with slight changes in frequency. This voltage will be greatest when the frequency is equal to the resonant frequency of the circuit and will be less if the frequency is higher or lower than the resonant frequency.

Thus if we were to shift the frequency from high to low or low to high across the resonant frequency and make a record of the voltage across the tuned circuit, we could plot the voltage against frequency and obtain a curve which might look like Fig. 1.

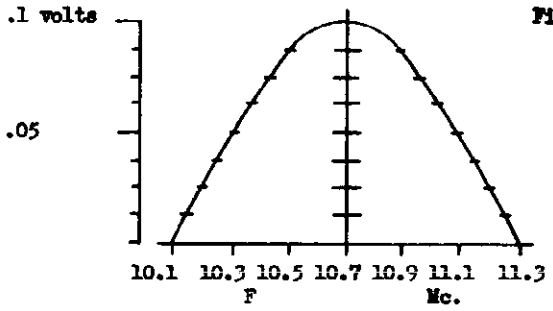

Fig. 1

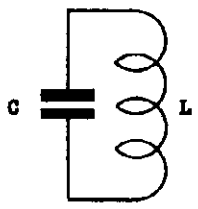

This is the selectivity curve or response curve for the circuit under discussion. This type of circuit may be aligned or adjusted to resonance by simply changing either L or C until maximum voltage is obtained at the resonant frequency. Now if another circuit tuned to the same resonant frequency is coupled to the simple case above, a number of things can happen. First current flowing in one circuit will induce current in the second circuit, the magnitude of this current depending on the degree or amount of coupling between the two circuits. This coupling may be in the form of mutual inductance, mutual capacitance or any impedance common to the two circuits. Now if we repeat the proceedure outlined for obtaining the response curve of a single tuned circuit using the voltage developed across the secondary of the coupled circuit while driving the primary, we may get either

THE SPARKS-WITHINGTON CO.

MODELS 1000, 1001, 1003, 1020, 1021, 1023, CHASSIS 12L7

VISUAL I. F.-F. M. ALIGNMENT DATA

of two types of curves depending on the magnitude of the coupling, (a) in Fig. 2 is a typical curve for two circuits coupled below critical coupling and (b) is a representation of the curve for an overcoupled circuit.

Fig. 2

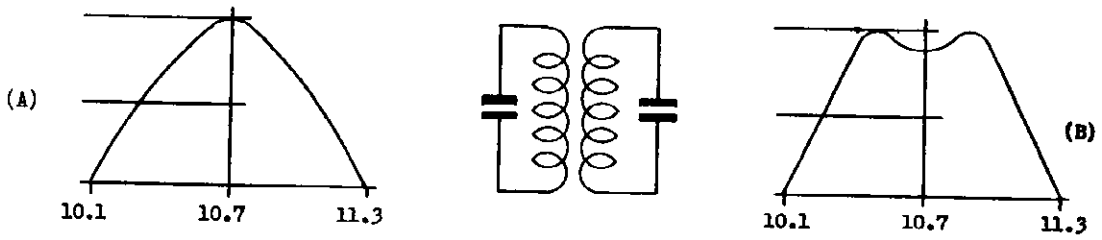

Overcoupled circuits producing a response curve like (b) Fig. 2 are often employed where it is important that the response curve remain approximately flat over a narrow band of frequencies near the resonant frequency. They are also frequently combined with single peaked circuits to produce a response curve like Fig. 3.

Fig. 3

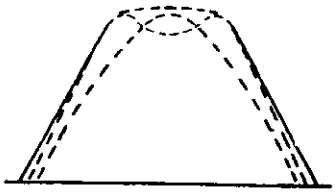

The dotted lines indicate the curves of the individual circuits and the solid curve shows the overall response of the two or more pairs of coupled circuits. Circuits like the above or approaching them in form are desirable in an F.M. receiver where the pass band should be of the order of 200 Kc. Now from the above it is evident that simple peaking both sides of a circuit coupled below critical for maximum voltage will provide optimum alignment but if this proceedure is followed with an overcoupled circuit it is almost a certainty that the two circuits will not be tuned to the resonant frequency but will instead be aligned so that either one or the other is accentuated. The response curve will then look like Fig. 4 (a) or (b).

Fig. 4

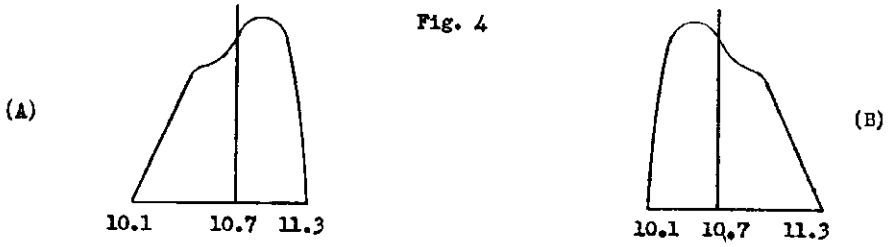

Now if this overcoupled circuit is combined with a single peaked circuit (where the coupling is below critical), the misalignment becomes worse, something like Fig. 5.

Fig. 5

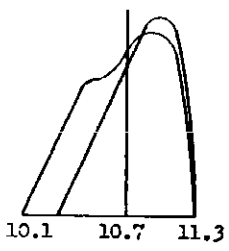

From the above it appears that to properly align a receiver using overcoupled IF transformers it will be necessary to take a response curve of each stage and align the circuit so that the two peaks are symmetrical, that is, approximately equal in amplitude and displaced equally from the center frequency. To do this with a CW or AM signal would be laborious and time consuming whereas the use of visual equipment makes it nearly as simple as adjusting a simple single peaked amplifier.

MODELS 1000, 1001, 1003, 1020, 1021, 1023, CHASSIS 1217

THE SPARKS-WITHINGTON CO.

VISUAL I. F.-F. M. ALIGNMENT DATA

Visual alignment test equipment performs the operation of plotting the response curve almost exactly as described above except that instead of manually changing the generator frequency, recording the voltage and then plotting the results, these operations are performed automatically and simultaneously by a combination of electronic circuits. The operation is briefly as follows.

In the signal generator a low AC voltage is applied to a reactance tube modulator which shifts the oscillator frequency from low to high or from high to low at a rate determined by the frequency of the AC voltage and by an amount determined by the AC voltage. The frequency at any instant is then dependant on the AC voltage present at that instant of time. An oscilloscope is provided which may be considered a voltmeter used to read the voltage across the tuned circuit, provided a detector is used to convert the RF to a low audio frequency. This voltage is then applied to the vertical plates and results in a vertical displacement of the spot on the screen. Some of the voltage used to shift the oscillator frequency is also applied to the horizontal plates of the oscilloscope providing a means of displacing the spot horizontally. It is now evident that since that for any given AC voltage only one frequency may be obtained and since that AC voltage will result in an exact amount of spot deflection on the scope we can read the voltage across the circuit under examination by noticing the position of the spot at this exact instant.

Now if we consider the frequency as shifting from low to high 60 times per second and remember that the spot is moving across the screen of the scope 60 times per second at exact synchronization with the change in frequency it is only necessary to apply the voltage from our circuit to the vertical plates to obtain a replica of the response curve on the face of the cathode ray tube. This curve will be repeated 60 times per second if our sweep frequency is 60 cycles. Adjustments to the circuit may now be made and the effect on the response curve noted instantaneously.

EQUIPMENT REQUIRED.

(a) A sweep signal generator with a center frequency of 10.7 Mc. and a total sweep width of at least 400 Kc. This generator should be equipped with filters to remove all spurious oscillator frequencies and limiters should be provided to remove all amplitude modulation. There should also be a crystal oscillator to provide a marker frequency at 10.7 Mc. for accurate determination of the center frequency.

(b) An amplitude modulated signal generator tuned to 456 Kc. This generator should be either crystal controlled or means should be provided for accurate frequency calibration.

(c) An Oscilloscope with either a 3" or 5" tube equipped with both vertical and horizontal amplifiers.

(d) A power output meter with an internal impedance to match the output transformer for use in 456 Kc. alignment.

(e) A diode detector for use in connection with the oscilloscope while aligning the F.M.-I.F. channel. This diode detector may be either a crystal or a two element vacuum tube such as the 6H6. A diode load resistor, coupling condenser, etc. will also be necessary.

ALIGNMENT OF THE 456 KC. I.F.

This alignment adjustment should be made before attempting to align the 10.7 I.F. circuit because of the possible effects on the operation of the F.M. I.F.

Connect the output meter to the receiver. Connect the signal generator output lead to the converter grid. Turn the wave band switch to BC. and the generator to 456 Kc. Using the output meter as an indicator peak the A.M. I.F. trimmers for maximum output.

ALIGNMENT OF THE 10.7 I.F.

Turn the wave band switch to F.M. and the generator to 10.7 Mc. Move the signal generator lead to the grid of the ratio detector driver tube and the scope to the 1st audio plate. Now proceed to align the ratio detector transformer for maximum linearity and minimum noise. This operation can be facilitated by applying a small amount of amplitude modulation along with the F.M. and then adjusting the secondary trimmer for minimum noise. Please note that the adjustment of the secondary circuit, controls to a large extent, the linearity of the pattern and adjustment of the primary is responsible for the gain in the circuit. Fig. 6 will represent a linear detector curve and Fig. 7, a detector curve with noise or A.M. present.

With the generator output lead connected to the grid of the next I.F. amplifier, connect the scope through the temporary detector mentioned previously (3e) to the ratio detector driver plate. Align for maximum output and symmetry.

© John F. Rider

THE SPARKS-WITHINGTON CO.

MODELS 1000, 1001, 1003, 1020, 1021, 1023, CHASSIS 12L7

VISUAL I. F.-F. M. ALIGNMENT DATA

Fig. 6

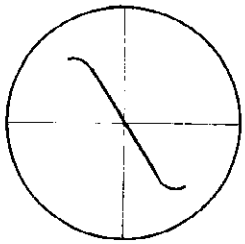

Fig. 7

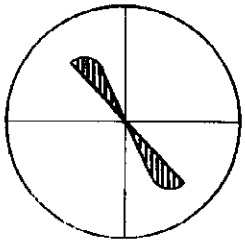

*Move the generator lead to the grid of the next I.F. tube and align the next I.F. transformer. Adjust both trimmer screws for maximum gain, meanwhile maintaining symmetry in the curve. Observe that by alternately adjusting the primary and secondary trimmer, the vertical amplitude can be increased without allowing the response curve to become greatly distorted. Move the generator lead to the grid of the converter tube and align No. 1 I.F. transformer following the same proceedure as above.

Fig. 8, (A), (B), (C), and (D) below represent typical response curves of an overall I.F. amplifier.

Fig. 8

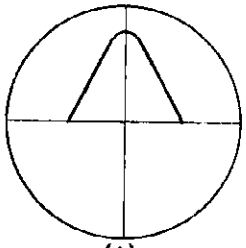

(A) Not Overcoupled Properly Aligned (Right)

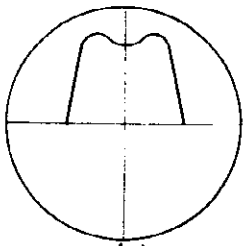

(B) Overcoupled Properly Aligned (Right)

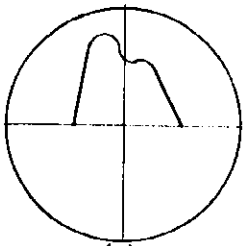

(C) Overcoupled Improperly Aligned (Wrong)

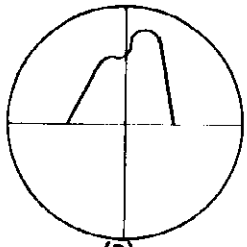

(D) Overcoupled Improperly Aligned (Wrong)

With the generator lead still connected to the converter grid, connect the scope to the 1st audio plate, and check the detector curve for linearity and noise. Should this appear unsatisfactory, a very slight readjustment of the detector secondary alignment may be made at this time. If, however, the adjustment required is very great the entire alignment procedure should be repeated in that the need for adjustment is an indication of incorrect alignment in one of the other stages.

USE OF MARKER FREQUENCIES.

A crystal controlled marker frequency should be provided at 10.7 Mc. The frequency of the sweep oscillator is correct when the pip will appear in the exact center of the sweep and be in the center of the resonance curve. See Fig. 9.

Fig. 9

Marker Pip

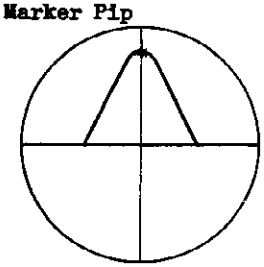

Right

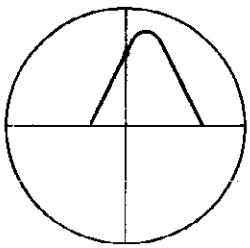

Wrong Resonance Curve Off Frequency

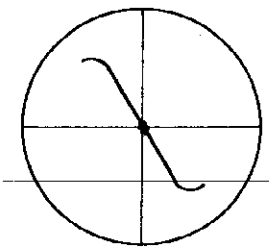

Right

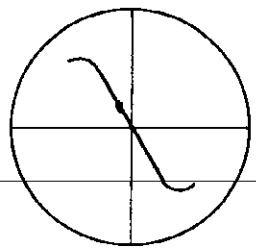

Wrong Sweep Oscillator Off Frequency

Note that either the sweep oscillator or the circuit alignment may be off frequency.

*This stage may or may not be included depending upon the particular model.

MODELS 1035, 1035A, THE SPARKS-WITHINGTON CO.
1036, 1036A, 1037,
1037A, CHASSIS 9L8

STEP BY STEP ALIGNMENT PROCEDURE

OPER-ATION	ALIGNMENT OF	GENERATOR CONNECTED TO	DUMMY ANT.	GENERATOR FREQUENCY	BAND SWITCH SETTING	TUNING COND. SETTING	TRIMMER	REMARKS
1	Set dial pointer even with left-hand stop line with condenser gang closed.							
2	A.M.-I.F.	Pin #7 of 6BE6 Convt. Tube	.02 MFD. Cond.	456 KC.	BC.	Open	C33 A & B	Peak Accurately
							C26 A & B	" "
3	A.M.-R.F.	BC. Ant.	*	1500 KC.	BC.	1500 KC.	C15 Osc. Tr.	" "
							C13 R.F. Tr.	" "
							C2 Ant. Tr.	" "
4				600 KC.		600 KC.	C16 Osc. Pad.	**
5	Repeat operations 3 and 4.							
6	Check calibrations at 600, 1000 and 1500 Kc.							
7	SPECIAL NOTE: For complete F.M.-I.F. Visual alignment instructions please refer to pages 6, 7, 8, 9, 10, and 11.							
8	F.M.-I.F. Alignment using an A.M. Generator and Output Meter.							
9	T4 F. M. Ratio Det.	Pin #6 on 7AG7 Driver Tube	.05 MFD. Cond.	10.7 MC.	F.M.	Open 108 MC.	L13 Sec.	Max. Reading
							L13 Pri.	" "
10	NOTE: Operation #9 must be made with generator output as low as possible with maximum reading on output meter.							
11	T3 Plate Choke	Pin #6 on 7AG7 #2 I.F. Amp.	.05 MFD. Cond.	10.7 MC.	F. M.	Open 108 MC.	L12 Slug	Max. Reading
12	T2 F.M.-I.F.	Pin #6 on 7A7 I.F. Amp.	.05 MFD. Cond.	10.7 MC.	F. M.	Open 108 MC.	C32 B	Peak Accurately
							C32 A	" "
13	NOTE: Operation #11 & 12 must be made with generator output as low as possible with maximum reading on output meter.							
14	Connect a 15,000 ohm resistor between pin #6 (Grid) on 7A7 tube to ground.							
15	T1 F.M.-I.F.	Pin #7 on 6BE6 Tube or C.T. on L6 coil	.05 MFD. Cond.	10.7 MC.	F. M.	Open 108 MC.	C25 B	Peak Accurately
							C25 A	" "
16	NOTE: Operation #15 must be made with generator output as low as possible with maximum reading on output meter.							
17	Remove the 15,000 ohm resistor dummy from pin #6 on 7A7 tube, but leave generator coupled through .05 Mfd. condenser to pin #7 on 6BE6 tube or C.T. on L6 coil.							
18	Adjust L13 secondary slug on T4 ratio detector transformer to minimum deflection or dip on output meter. Under certain conditions it is possible to adjust L13 secondary slug to minimum noise with the receiver tuned to a weak station. This operation is very sharp and the receiver must be tuned to the center response only.							
19	F. M. - R. F. alignment using an A. M. Generator with frequencies of 88 to 108 Mc. and vacuum tube voltmeter, or D.C. Voltmeter. (20,000 ohms per volt).							
20	Place meter across C50 elect. condenser. (Meter reading approx. 1 volt.)							
21	F.M.-R.F.	F.M. Ant.	Match to 300 Ohms.	108 MC.	F. M.	108 MC.	C21 Osc. Tr.	Max. A.V.C. V.
							C18 R.F. Tr.	Peak Accurately
							C3 Ant. Tr.	" "
22	Check calibration at 88 Mc.							

NOTE:
* Use dummy antenna as described
** Rock dial while adjusting for maximum output.

THE SPARKS-WITHINGTON CO.

MODELS 1035, 1035A
1036, 1036A, 1037,
1037A, CHASSIS 9L8

CHASSIS DIAGRAM

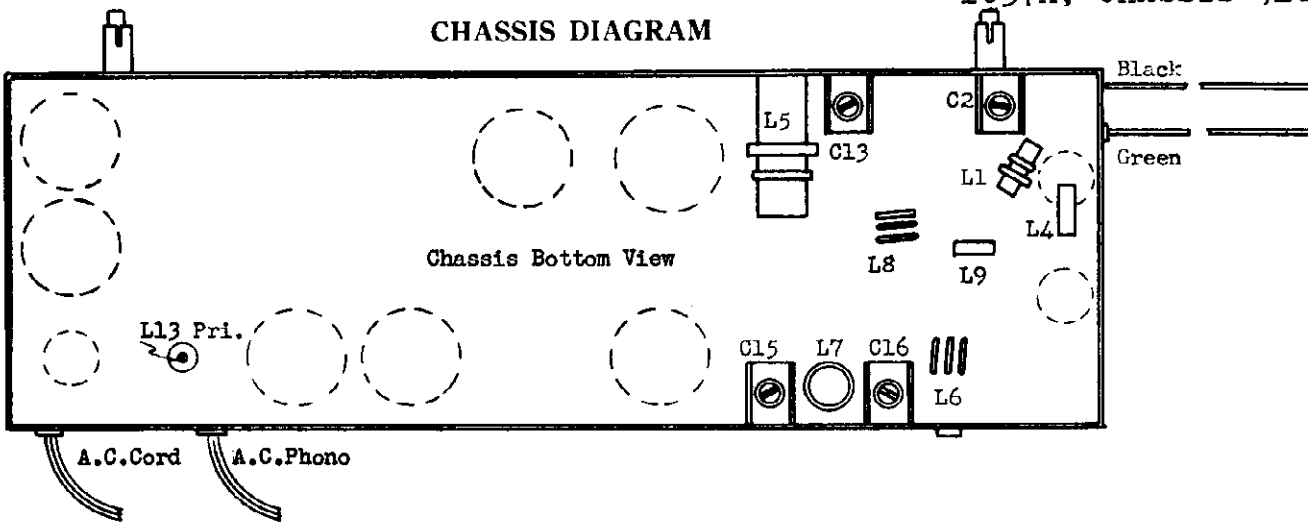

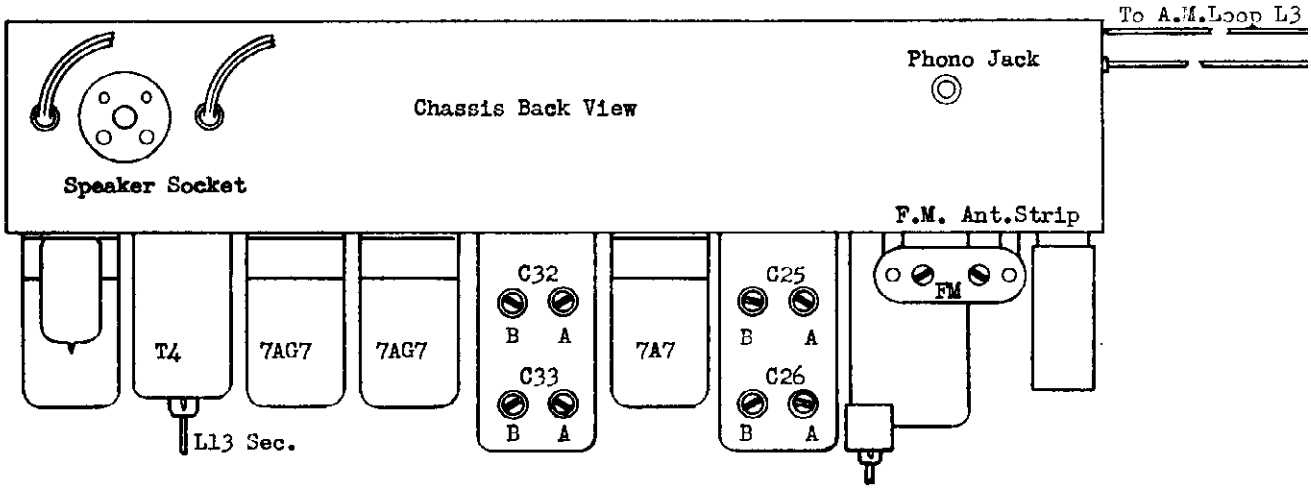

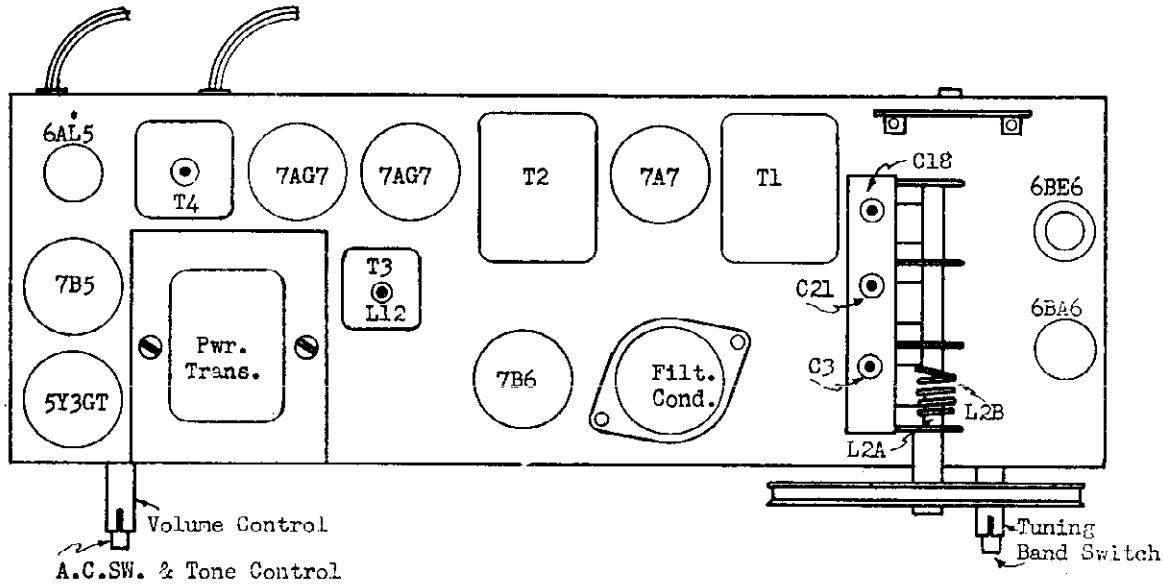

©John F. Rider

THE SPARKS-WITI

INTERMEDIATE FREQ

BOTTOM VIEWS OF AL

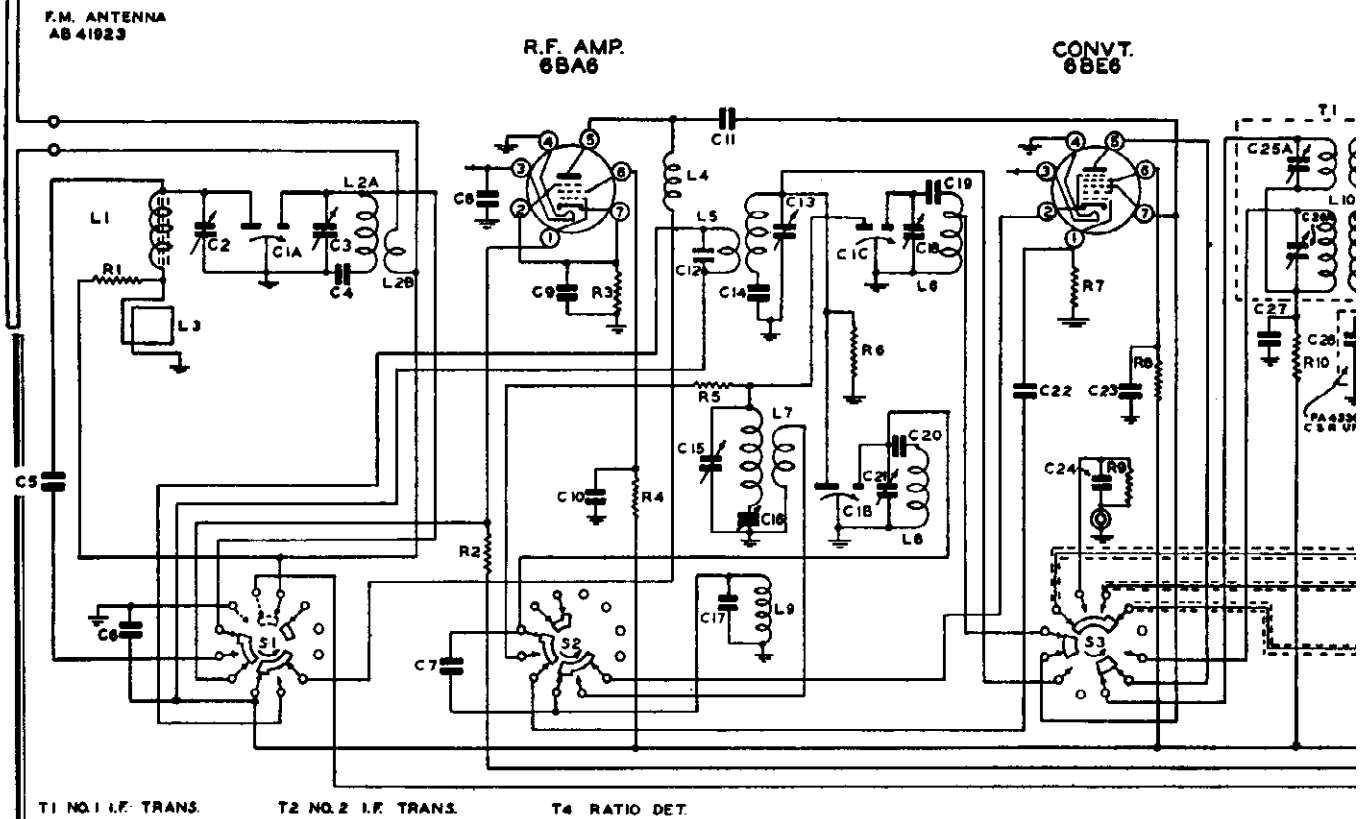

T1 NO. 1 I.F. TRANS. T2 NO. 2 I.F. TRANS. T4 RATIO DET.

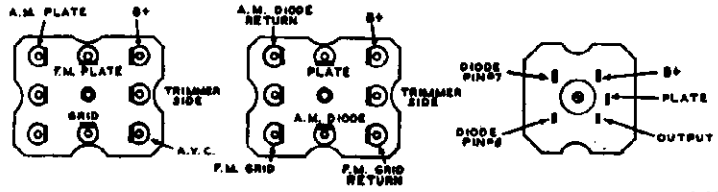

AA 6768-3 AA 6768-4 AA 6684-1

* SPECIAL SERVICE NOTE: THESE TRANSFORMERS SUPPLIED AS A

TERMINAL HOOKUP FOR T1, T2 & T4
BOTTOM VIEW

DESCRIPTION	PART NO.	LOCATION
C1A,B,C 3 GANG CONDENSER	PC 65001	P-4,N-4,P-11
C2 A.M. ANT. TRIMMER	PA 4352-1	P-4
C3 F.M. ANT. TRIMMER	PA 4366	P-5
C4 F.M. ANT. PADDER 51 MMF	PA 4328-9	P-5
C5 51 MMF. MICA	MC 60G-510	N-2
C6 .02 MFD. CERAMIC	HK 35G-203	L-3
C7 10 MMF. CERAMIC	CC 31H-100K	L-7
C8 1000 MMF. MOLDED PAPER	PA 4325-2	Q-7
C9 10,000 MMF. MOLDED PAPER	PA 4325-1	P-8
C10 1000 MMF. MOLDED PAPER	PA 4325-2	M-8
C11 5 MMF CERAMIC	PA 4328-5	R-10
C12 51 MMF. CERAMIC	CC 31H-510K	P-9
C13 B.C. R.F. TRIMMER	PA 4352-1	P-10
C14 .05 MFD. 200 V. TUBULAR	PC 40GK-503	P-10
C15 A.M. OSC. TRIMMER	PA 4352-3	N-10
C16 B.C. OSC. PADDER	PA 4352-8	M-10
C17 15 MMF. CERAMIC	CC 31H-150K	L-10
C18 F.M. R.F. TRIMMER	PA 4366	P-12
C19 F.M. R.F. PADDER (48 MMF)	PA 4328-2	Q-12
C20 F.M. OSC. PADDER (85 MMF)	PA 4328-8	N-12
C21 F.M. OSC. TRIMMER	PA 4366	N-12
C22 51 MMF. MICA	MC 60G-510	O-13
C23 1000 MMF. MOLDED PAPER	PA 4325-2	O-14
C24 .002 MFD. CERAMIC	HK 35G-202	N-14
C25A&B NO. 1 I.F. TRIMMER F.M.	PA 4359-1	O-16, O-17
C26A&B NO. 1 I.F. TRIMMER A.M.	PA 4359-3	P-16, P-17
C27 .02 MFD. CERAMIC	HK 35G-203	O-16
C28 .02 MFD. (C & R UNIT)	PA 4330-4	O-17
C29 .02 MFD. (C & R UNIT)	PA 4330-5	N-18
C30 .02 MFD. (C & R UNIT)	PA 4330-6	O-19
C31 .02 MFD. CERAMIC	HK 35G-203	N-20
C32 A&B NO. 2 I.F. TRIMMER F.M.	PA 4359-1	Q-20, Q-21
C33 A&B NO. 2 I.F. TRIMMER A.M.	PA 4359-3	P-20, P-21
C34 100 MMF. (C & R UNIT)	PA 4329-3	O-21, O-21
C35 100 MMF.		
C36 .001 MFD. (C & R UNIT)	PA 4330-8	P-22
C37 .02 MFD. (C & R UNIT)	PA 4330-6	P-24
C38 100 MMF MICA	MC 60G-101	R-25
C39 20 MMF. MICA	MC 65F-200	P-25
C40 .02 MFD. CERAMIC	HK 35G-203	N-25
C41 .02 MFD. (C & R UNIT)	PA 4330-6	P-28
C42 .02 MFD. CERAMIC	HK 35G-203	O-28
C43 .01 MFD 200 V. TUBULAR	PC 40GK-103	O-27
C44 .002 MFD (C & R UNIT)	PA 4330-7	O-30
C45 .02 MFD. CERAMIC	HK 35G-203	M-27
C46 .02 MFD. CERAMIC	HK 35G-203	J-26
C47 150 MMF MICA	MC 60F-151	N-29

DESCRIPTION	PART NO.	LOCATION
C48 330 MMF. CERAMIC	HK 35 F-331	P-32
C50 3 MFD. 50 V. ELECT.	PA 4308-1	O-31
C51 .05 MFD. 400 V.	PC 40GL-503	N-30
C52 .02 MFD. 400 V.	PC 40GL-203	N-32
C53 .01 MFD. 200 V. TUBULAR	PC 40GK-103	L-33
C54 .008 MFD. 1000 V.	PC 40GN-802	I-30
C55A,B&C 40-40-20 MFD. ELECT.	PA 4307-3	J-27, C-27, L-32
C56 .01 MFD. 400 V.	PC 40FL-103	K-21
C57 33 MMF. MICA	MC 65E-330	Q-30
L1 A.M. ANT. LOADING COIL	AA 6686-2	P-3
L2A F.M. ANT. COIL (PRI.)	AA 6786-1	P-6
L2B F.M. ANT. COIL (SEC.)	AA 6767-10	P-6
L3 A.M. ANT. LOOP	AC 67008-4	O-3
L4 F.M. R.F. CHOKE	AA 6769-2	Q-9
L5 B.C. R.F. COIL	AA 6756-7	P-10
L6 F.M. R.F. COIL	AA 6767-5	P-12
L7 B.C. OSC. COIL	AA 6759-4	N-10
L8 F.M. OSC. COIL	AA 6767-4	N-12
L9 F.M. CATHODE CHOKE	AA 6798-1	L-10
L10 NO. 1 I.F. COIL*	AA 6803-2	Q-17
L11 NO. 2 I.F. COIL*	AA 6803-3	Q-21
L12 TUNED CHOKE ASSEM.*	AA 6785-3	Q-25
L13 RATIO DET. COIL*	AA 6805-3	Q-29

DESCRIPTION			PA
R1 2200	OHMS	.5W	BR
R2 1 MEG.	"	.5W	BR
R3 68	"	.5W	BR
R4 33,000	"	.5W	BR
R5 47	"	.5W	BR
R6 1 MEG	"	.5W	BR
R7 22,000	"	.5W	BR
R8 22,000	"	2W	DR
R9 1 MEG	"	.5W	BR
R10 1000	"	.5W	BR
R11 100,000	"	(C & R UNIT)	PA
R12 82,000	"	(C & R UNIT)	PA
R13 270	"	(C & R UNIT)	PA
R14 1000	OHMS	.5W	BR
R15 56,000	"	(C & R UNIT)	PA
R16 1 MEG	"	(C & R UNIT)	PA
R17 100,000	"	.5W	BR
R18 330,000	"	.5W	BR
R19 270	"	(C & R UNIT)	PA
R20 15,000	"	.5W	BR
R21 270	"	(C & R UNIT)	PA
R22 1000	"	.5W	BR
R23 39,000	"	(C & R UNIT)	PA
R24 10 MEG.	"	.5W	BR
R25 VOLUME CONTROL			PA
R27 650	OHMS	10W	PA
R28 200	"	.5W	BR
R29 470	"	.5W	BR
R30 15,000	"	.5W	BR
R31 15,000	"	.5W	BR
R32 220,000	"	.5W	BR
R33 56,000	"	.5W	BR
R34 TONE CONTROL & SWITCH			PA
R35 470	OHMS	2W	DR

T1	NO. 1 I.F. TRANS. ASSEM.	AA
T2	NO. 2 I.F. TRANS. ASSEM.	AA
T3	F.M. PLATE CHOKE	AA
T4	RATIO DETECTOR ASSEM.	AA
T5	OUTPUT TRANS.	AB
T6	POWER TRANS.	AB

HINGTON CO.

MODELS 1035, 1035A, 1036, 1036A, 1037, 1037A, CHASSIS 9L8

UENCY A.M. 456 Kc.
F.M. 10.7 Mc.

L SOCKET CONNECTIONS

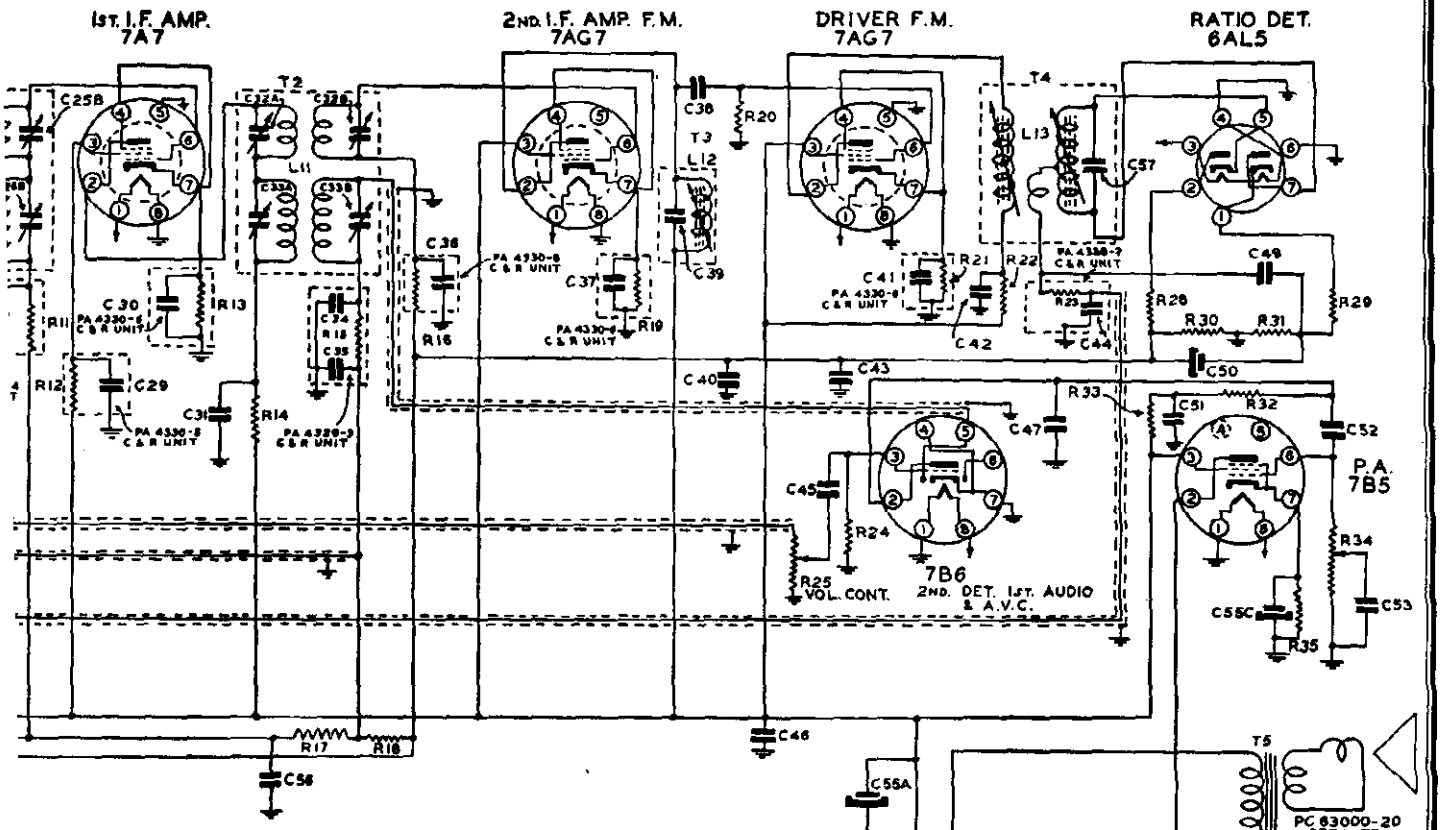

EMBLIES COMPLETE ONLY.

NO.	LOCATION
-222	P-3
-105	M-7
-880	P-8
-333	N-9
-470	O-10
-105	O-11
-223	P-14
-223	O-15
-105	N-14
-102	O-16
0-4	O-17
0-5	N-18
0-6	O-19
-102	N-20
0-3	O-21
0-8	P-22
-104	K-21
-334	J-21
0-6	P-24
-153	R-25
0-6	P-28
-102	O-28
0-7	O-29
106	M-27
7-2	L-26
0-4	I-28
-201	O-29
471	O-32
153	O-31
153	O-32
224	N-31
563	N-30
0-7	M-32
471	L-32
-3	Q-17
-4	Q-20
-5	Q-25
-1	Q-29
16-2	J-32
0-2	

DUMMY ANTENNA

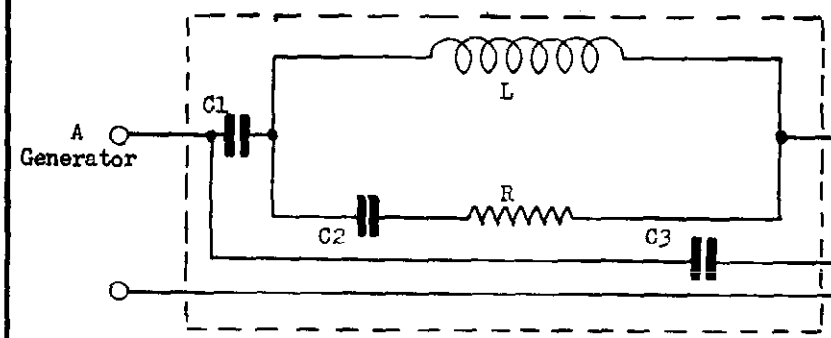

C1 - 200 mmf. Condenser 400 V.D.C.
C2 - 400 mmf. Condenser 400 V.D.C.
C3 - .02 mmf. Condenser 400 V.D.C.
R - 100 Ohms Resistor 1/4 Watt
L - Choke Coil

----Case Shield
Choke Coil Specification
Tubing - 3/8" Diameter Bakelite
Wire - No. 38 Enameled
Turns - 59 closely wound (Impregnated)

NOTE: When using this dummy antenna the generator output impedance should be 10 ohms or lower.

MODELS 1035, 1035A, 1036, 1036A, 1037 1037A, CHASSIS 9L8

THE SPARKS-WITHINGTON CO.

VOLTAGE CHART

Line Voltage: 117 Volts AC		Position of volume control: Full with set tuned to quiet channel. Position of Band Switch: Broadcast.							
TUBE	FUNCTION	Voltage of Sockets Prongs to Ground. See Prong Nos. on schematic.							
		No. 1	No. 2	No. 3	No. 4	No. 5	No. 6	No. 7	No. 8
6BA6	R. F. Amplifier	**	.8	6.3*	0	230	98	.8	-
6BE6	Converter	-1	0	6.3*	0	225	83	0	-
7A7	1st I. F. Amplifier	6.3*	225	75	2.2	0	**	2.2	0
7AG7	2nd I. F. Amplifier (F.M.)	6.3*	220	220	1.8	0	**	1.8	0
7AG7	Driver (F.M.)	6.3*	210	220	1.5	0	**	1.8	0
7B6	2nd Det., A.V.C., & 1st Audio	6.3*	95	**	0	0	.5	0	0
6AL5	Ratio Det.	.25	0	0	6.3*	0	0	0	-
7B5	Power Amp.	0	250	230	0	0	**	14	6.3
5Y3GT	Rectifier	0	270	0	250*	0	250*	0	304

NOTES: Voltage readings are for schematic diagram in this bulletin. Allow 15% + or - on all measurements. Always use meter scale which will give greatest deflection within scale limits. All DC measurements made with 20,000 ohms per volt voltmeter. All AC voltages made with rectifier type voltmeter.

* AC Volts.

** Cannot be measured with 20,000 ohms per volt voltmeter.

VISUAL I. F.-F. M. ALIGNMENT DATA

1. DESCRIPTION OF CIRCUIT USED:

This circuit consists of a 6BE6 Converter, 7A7 1st I.F. (A.M. & F.M.), two 7AG7 2nd F.M.-I.F. Amplifier and Ratio Detector Driver, a 6AL5 Ratio Detector for F.M. The A.M.-I.F. frequency is 456 Kc. and the F.M. frequency is 10.7 Mc.

The diagram below shows the correct hook-up for generator and scope to the receiver circuit.

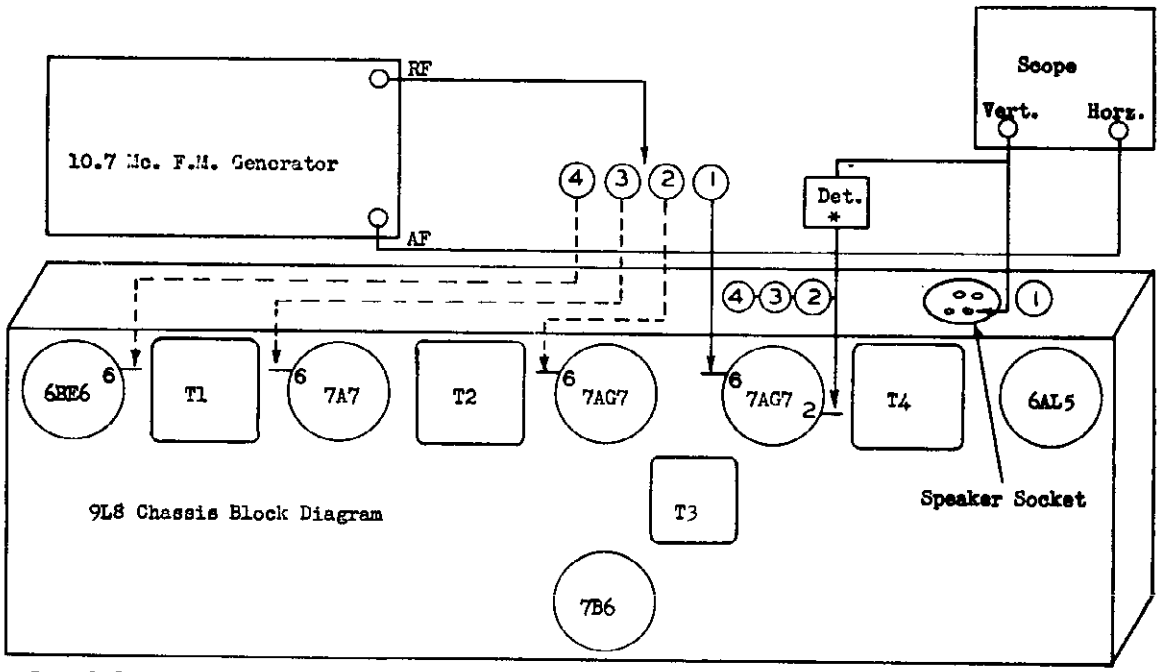

Gen. & Scope Position	Use
1	Align Ratio Det. - Adjust T4
2	Align Plate Choke - Adjust T3
3	Align I.F. - Adjust T2
4	Align I.F. - Adjust T1
*	See paragraph 3 (e) under equipment required.

©John F. Rider

THE SPARKS-WITHINGTON CO.

MODELS 1035, 1035A, 1036, 1036A, 1037, 1037A, CHASSIS 9L8

VISUAL I. F.-F. M. ALIGNMENT DATA

2. THEORY OF VISUAL ALIGNMENT.

One of the characteristics of a tuned circuit is the fact that when it is excited or driven by a generator such as a vacuum tube or another tuned circuit, the voltage developed across it will vary with slight changes in frequency. This voltage will be greatest when the frequency is equal to the resonant frequency of the circuit and will be less if the frequency is higher or lower than the resonant frequency.

Thus if we were to shift the frequency from high to low or low to high across the resonant frequency and make a record of the voltage across the tuned circuit, we could plot the voltage against frequency and obtain a curve which might look like Fig. 1.

Fig. 1

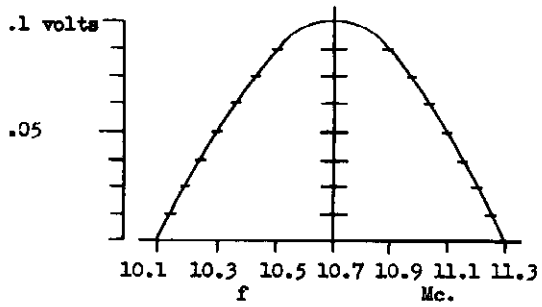

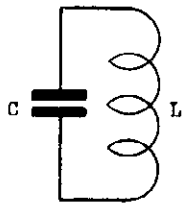

This is the selectivity curve or response curve for the circuit under discussion. This type of circuit may be aligned or adjusted to resonance by simply changing either L or C until maximum voltage is obtained at the resonant frequency. Now if another circuit tuned to the same resonant frequency is coupled to the simple case above, a number of things can happen. First current flowing in one circuit will induce current in the second circuit, the magnitude of this current depending on the degree or amount of coupling between the two circuits. This coupling may be in the form of mutual inductance, mutual capacitance or any impedance common to the two circuits. Now if we repeat the proceedure outlined for obtaining the response curve of a single tuned circuit using the voltage developed across the secondary of the coupled circuit while driving the primary, we may get either of two types of curves depending on the magnitude of the coupling, (a) in Fig. 2 is a typical curve for two circuits coupled below critical coupling and (b) is a representation of the curve for an overcoupled circuit.

Fig. 2

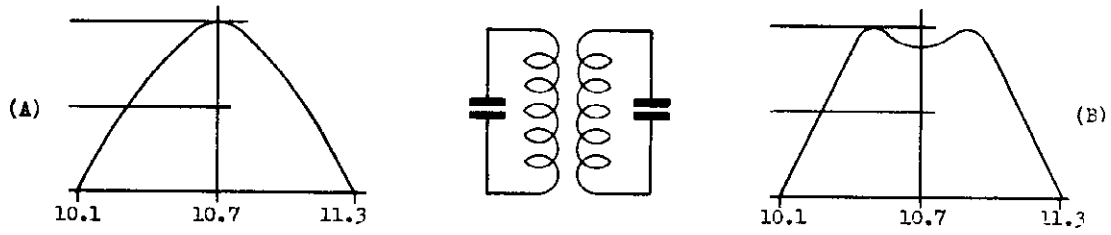

Overcoupled circuits producing a response curve like (b) Fig. 2 are often employed where it is important that the response curve remain approximately flat over a narrow band of frequencies near the resonant frequency. They are also frequently combined with single peaked circuits to produce a response curve like Fig. 3.

Fig. 3

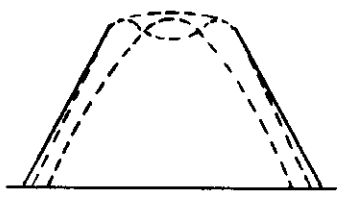

MODELS 1035, 1035A, 1036, 1036A, 1037, 1037A, CHASSIS 9L8

THE SPARKS-WITHINGTON CO.

VISUAL I. F.-F. M. ALIGNMENT DATA

The dotted lines indicate the curves of the individual circuits and the solid curve shows the overall response of the two or more pairs of coupled circuits. Circuits like the above or approaching them in form are desirable in an F.M. receiver where the pass band should be of the order of 200 Kc. Now from the above it is evident that simple peaking both sides of a circuit coupled below critical for maximum voltage will provide optimum alignment but if this proceedure is followed with an overcoupled circuit it is almost a certainty that the two circuits will not be tuned to the resonant frequency but will instead be aligned so that either one or the other is accentuated. The response curve will then look like Fig. 4 (a) or (b).

Fig. 4

(A)

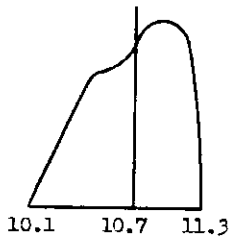

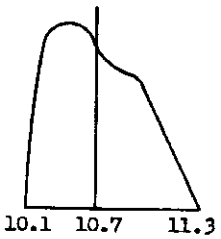

(B)

Now if this overcoupled circuit is combined with a single peaked circuit (where the coupling is below critical), the misalignment becomes worse, something like Fig. 5.

Fig. 5

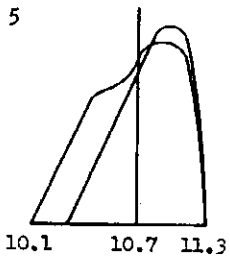

From the above it appears that to properly align a receiver using overcoupled IF transformers it will be necessary to take a response curve of each stage and align the circuit so that the two peaks are symmetrical, that is, approximately equal in amplitude and displaced equally from the center frequency. To do this with a CW or AM signal would be laborious and time consuming whereas the use of visual equipment makes it nearly as simple as adjusting a simple single peaked amplifier.

Visual alignment test equipment performs the operation of plotting the response curve almost exactly as described above except that instead of manually changing the generator frequency, recording the voltage and then plotting the results, these operations are performed automatically and simultaneously by a combination of electronic circuits. The operation is briefly as follows.

In the signal generator a low AC voltage is applied to a reactance tube modulator which shifts the oscillator frequency from low to high or from high to low at a rate determined by the frequency of the AC voltage and by an amount determined by the AC voltage. The frequency at any instant is then dependant on the AC voltage present at that instant of time. An oscilloscope is provided which may be considered a voltmeter used to read the voltage across the tuned circuit, provided a detector is used to convert the RF to a low audio frequency. This voltage is then applied to the vertical plates and results in a vertical displacement of the spot on the screen. Some of the voltage used to shift the oscillator frequency is also applied to the horizontal plates of the oscilloscope providing a means of displacing the spot horizontally. It is now evident that since that for any given AC voltage only one frequency may be obtained and since that AC voltage will result in an exact amount of spot deflection on the scope we can read the result in an exact amount of spot deflection on the scope we can read the voltage across the circuit under examination by noticing the position of the spot at this exact instant.

Now if we consider the frequency as shifting from low to high 60 times per second and remember that the spot is moving across the screen of the scope 60 times per second at exact synchronization with the change in frequency it is only necessary to apply the voltage from our circuit to the vertical plates to obtain a replica of the response curve on the face of the cathode ray tube. This curve will be repeated 60 times per second if our sweep frequency is 60 cycles. Adjustments to the circuit may now be made and the effect on the response curve noted instantaneously.

THE SPARKS-WITHINGTON CO. MODELS 1035, 1035A, 1036, 1036A, 1037, 1037A. CHASSIS 9L8

VISUAL I. F.-F. M. ALIGNMENT DATA

3. EQUIPMENT REQUIRED.

(a) A sweep signal generator with a center frequency of 10.7 Mc. and a total sweep width of at least 400 Kc. This generator should be equipped with filters to remove all spurious oscillator frequencies and limiters should be provided to remove all amplitude modulation. There should also be a crystal oscillator to provide a marker frequency at 10.7 Mc. for accurate determination of the center frequency.

(b) An amplitude modulated signal generator tuned to 456 Kc. This generator should be either crystal controlled or means should be provided for accurate frequency calibration.

(c) An oscilloscope with either a 3" or 5" tube equipped with both vertical and horizontal amplifiers.

(d) A power output meter with an internal impedance to match the output transformer for use in 456 Kc. alignment.

(e) A diode detector for use in connection with the oscilloscope while aligning the F.M.-I.F. channel. This diode detector may be either a crystal or a two element vacuum tube such as the 6H6. A diode load resistor, coupling condenser, etc. will also be necessary.

4. ALIGNMENT OF THE 456 KC. I. F.

This alignment adjustment should be made before attempting to align the 10.7 I.F. circuit because of the possible effects on the operation of the F.M. I.F.

Connect the output meter to the receiver. Connect the signal generator output lead to the converter grid. Turn the wave band switch to Bc. and the generator to 456 Kc. Using the output meter as an indicator peak the A.M. I.F. trimmers for maximum output.

5. ALIGNMENT OF THE 10.7 I.F.

Turn the wave band switch to F.M. and the generator to 10.7 Mc. Move the signal generator lead to the grid of the ratio detector driver tube and the scope to the 1st audio plate. Now proceed to align the ratio detector transformer for maximum linearity and minimum noise. This operation can be facilitated by applying a small amount of amplitude modulation along with the F.M. and then adjusting the secondary trimmer for minimum noise. Please note that the adjustment of the secondary circuit, controls to a large extent, the linearity of the pattern and adjustment of the primary is responsible for the gain in the circuit. Fig. 6 will represent a linear detector curve and Fig. 7, a detector curve with noise or A.M. present.

Fig. 6

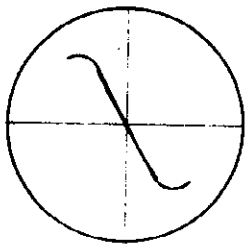

Fig. 7

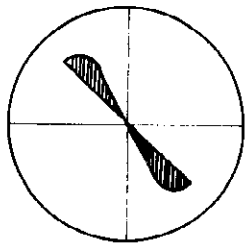

With the generator output lead connected to the grid of the next I.F. amplifier, connect the scope through the temporary detector mentioned previously (3e) to the ratio detector driver plate. Align for maximum output and symmetry.

MODELS 1035, 1035A THE SPARKS-WITHINGTON CO.
1036, 1036A, 1037,
1037A,
CHASSIS 9L8

VISUAL I. F.-F. M. ALIGNMENT DATA

*Move the generator lead to the grid of the next I.F. tube and align the next I.F. transformer. Adjust both trimmer screws for maximum gain, meanwhile maintaining symmetry in the curve. Observe that by alternately adjusting the primary and secondary trimmer, the vertical amplitude can be increased without allowing the response curve to become greatly distorted. Move the generator lead to the grid of the converter tube and align No. 1 I.F. transformer following the same proceedure as above.

Fig. 8, (A), (B), (C), & (D) below represent typical response curves of an overall I.F. amplifier.

Fig. 8

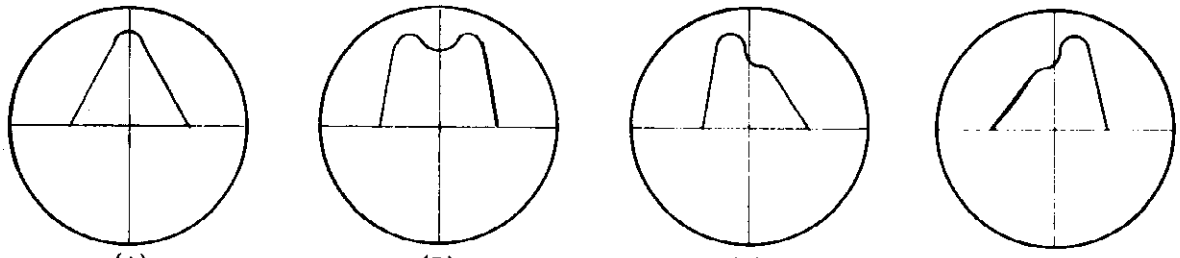

(A) Not Overcoupled Properly Aligned (Right)

(B) Overcoupled Properly Aligned (Right)

(C) Overcoupled Improperly Aligned (Wrong)

(D) Overcoupled Improperly Aligned (Wrong)

With the generator lead still connected to the converter grid, connect the scope to the 1st audio plate, and check the detector curve for linearity and noise. Should this appear unsatisfactory, a very slight readjustment of the detector secondary alignment may be made at this time. If, however, the adjustment required is very great the entire alignment procedure should be repeated in that the need for adjustment is an indication of incorrect alignment in one of the other stages.

6. USE OF MARKER FREQUENCIES.

A crystal controlled marker frequency should be provided at 10.7 Mc. The frequency of the sweep oscillator is correct when the pip will appear in the exact center of the sweep and so in the center of the resonance curve. See Fig. 9.

Fig. 9

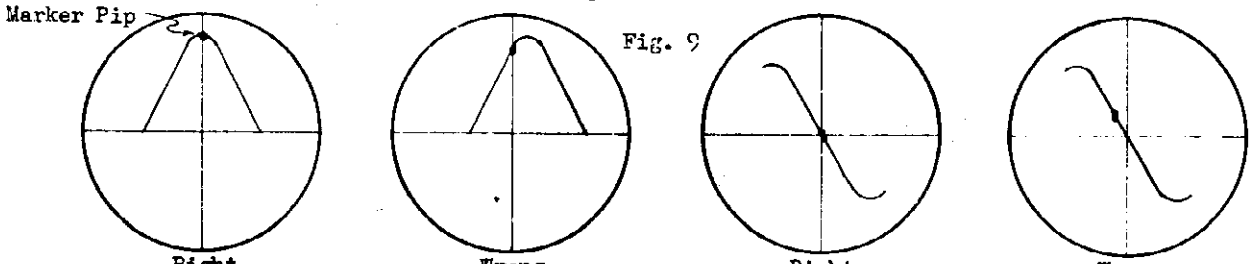

Right

Wrong
Resonance Curve
Off Frequency

Right

Wrong
Sweep Oscillator
Off Frequency

Note that either the sweep oscillator or the circuit alignment may be off frequency.

*This stage may or may not be included depending upon the particular model.

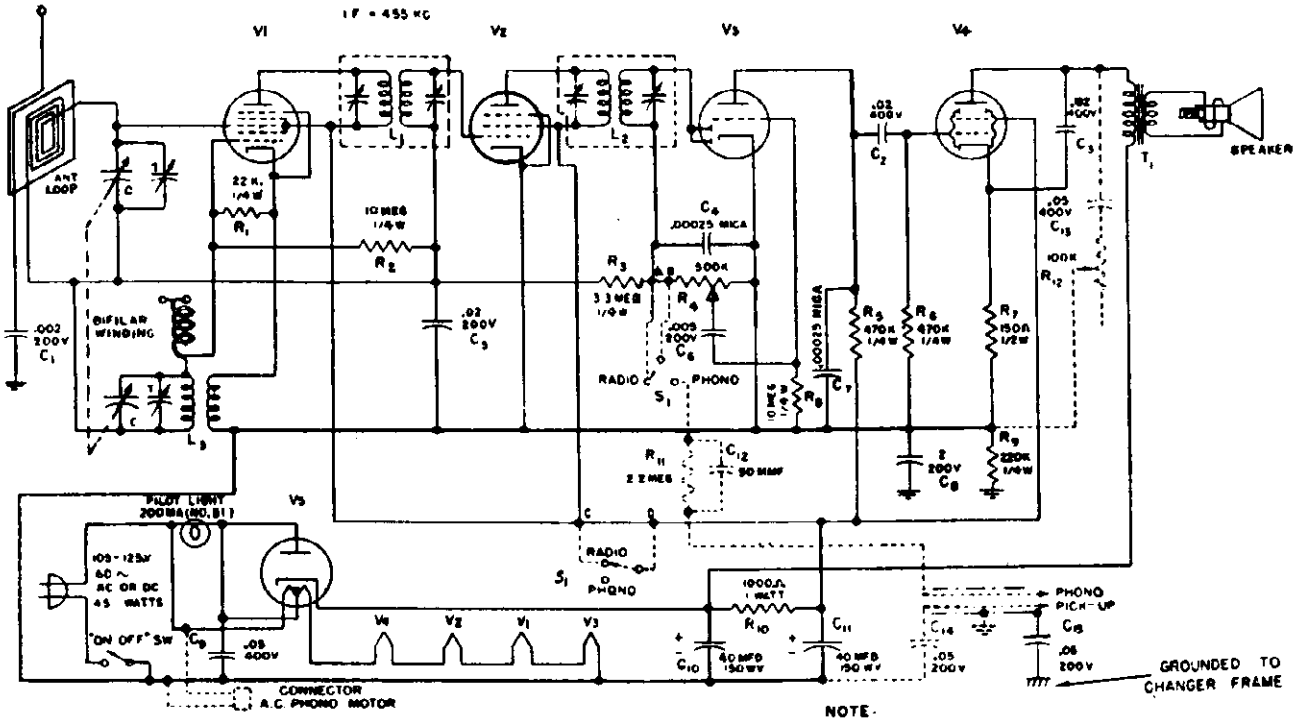

NOTICE: ON SETS HAVING THREE (3) CONTROLS, R12 & C15 ARE OMITTED.

NOTE:
(1) POINTS A-B, C-D JUMPED IN RADIO MODELS. SWITCH S_1 USED IN RADIO-PHONO COMBINATION
(2) DOTTED LINES IN CIRCUIT USED IN PHONO-COMBINATION ONLY
(3) RADIO POWER INPUT IS 30 WATTS, WITH PHONO 45 WATTS.
(4) C_{15} USED ON MODEL 6547 ONLY.
(5) WARNING! — DO NOT USE PHONO ON D.C.

TUBE COMPLEMENT

TUBE	LOCTAL	OCTAL	MINIATURE
V1	14Q7		12BE6
V2	14A7		12BA6
V3	14B6		12AT6
V4	50A5	50L6	50B5
V5	35Y4		35W4

PARTS LIST:

C 1—.002 Mfd., 200V paper
C 2—.02 Mfd., 400V paper
C 3—.02 Mfd., 400V paper
C 4—.00025 Mfd., mica
C 5—.02 Mfd., 200V paper
C 6—.005 Mfd., 200V paper
C 7—.00025 Mfd., mica
C 8—.25 Mfd. (or .20 Mfd.), 200V paper
C 9—.05 Mfd., 400V, molded bakelite
C10, 11—Dual 40 Mfd., 150V (*A-25.019)
C12—50 Mmfd., mica
C13—.05 Mfd., 400V
C14—.05 Mfd., 200V
C15—.05 Mfd., 200V
R 1—22K, ¼W, 20%
R 2—10 meg., ¼W, 20%
R 3 3.3 meg., ¼W, 20%
R 4—500K variable, audio taper, with SPST (*A-9.066)
R 5—470K, ¼W, 20%
R 6—470K, ¼W, 20%
R 7—150 ohms, ½W, 10%
R 8—10 meg., ¼W, 20%
R 9—220K, ¼W, 20%
R10—1000 ohms, 2W (or 1W), 20%
R11—2.2 meg., ¼W, 20%
L 1—Transformer, IF input, 455KC (*C-2.191-1)
L 2—Transformer, IF output, 455KC (*C-2.191-2)
L 3—Coil, oscillator (*B-2.192)
Antenna, loop (*B-5.006)
Loudspeaker, PM, 5" Trans. to match 50A5 (*B-11.037)
Pilot light, Mazda No. 51, 200 Ma.

* Mfg. Part. No.

Figure 4. Schematic Diagram

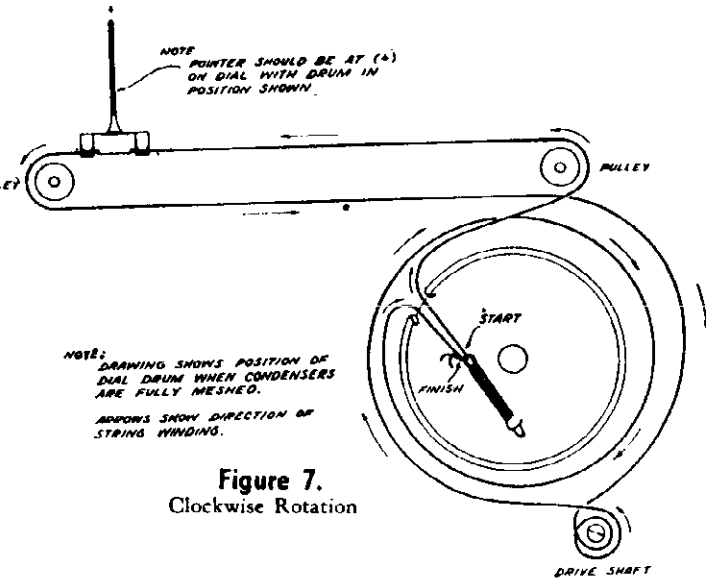

Figure 7.
Clockwise Rotation

MODEL CB-7553 SPIEGEL

Tube Complement:

loctal	*octal*	*miniature*	*function*
V_1—14Q7		12BE6	Osc., Conv.
V_2—14A7		12BA6	I.F. Amp.
V_3—14B6		12AT6	Det., A.V.C., Amp.
V_4—50A5	50L6	50B5	Power Amp.
V_5—35Y4		35W4	Rectifier

Loctal base tubes have a special locking arrangement which holds the tubes securely in the sockets. To remove a tube, use slightly off-side pressure towards socket rivet, thus releasing the socket lock.

This is a 5-tube Superheterodyne radio receiver designed to operate on:

1. 105-125 volts A.C. 60 cycles.
2. *105-125 volts D.C.

This receiver operates on the standard broadcast band, 540-1700 KC.

* Operate phonograph on A.C. only.

ALIGNMENT PROCEDURE.

Steps	*Connect output of oscillator to*	*Tune osc. to*	*Tune radio dial to*	*Adjust the following for max. peak output*
1	Tuning condenser stator (ant.) in series with .01 mfd.	455	Quiet point at high frequency end of dial.	1st and 2nd I.F. Transformers
2	Antenna term. of Ant. loop in series with 100 mmf.	1720	Full clockwise (out of mesh)	Osc. trimmer
3	Antenna term. of Ant. loop in series with 100 mmf.	1500	1500	Ant. trimmer

Output meter is connected across voice coil.

Receiver volume is turned to maximum

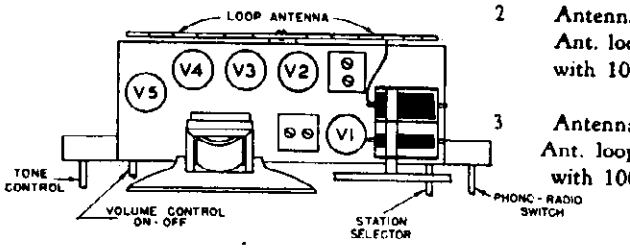

Fig. 3. Tube and Trimmer Locations—4-Control

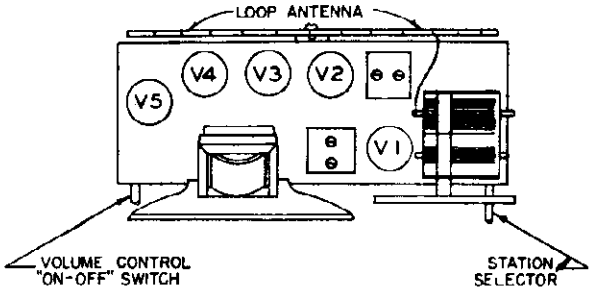

Fig. 1. Tube and Trimmer Locations—2-Control

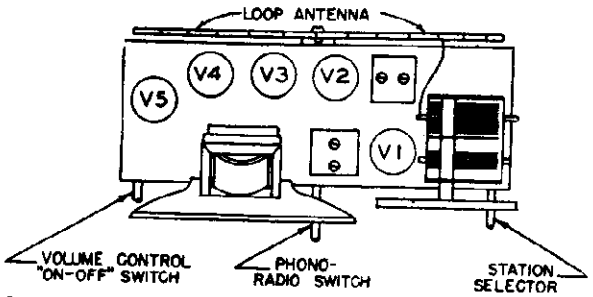

Fig. 2. Tube and Trimmer Locations—3-Control

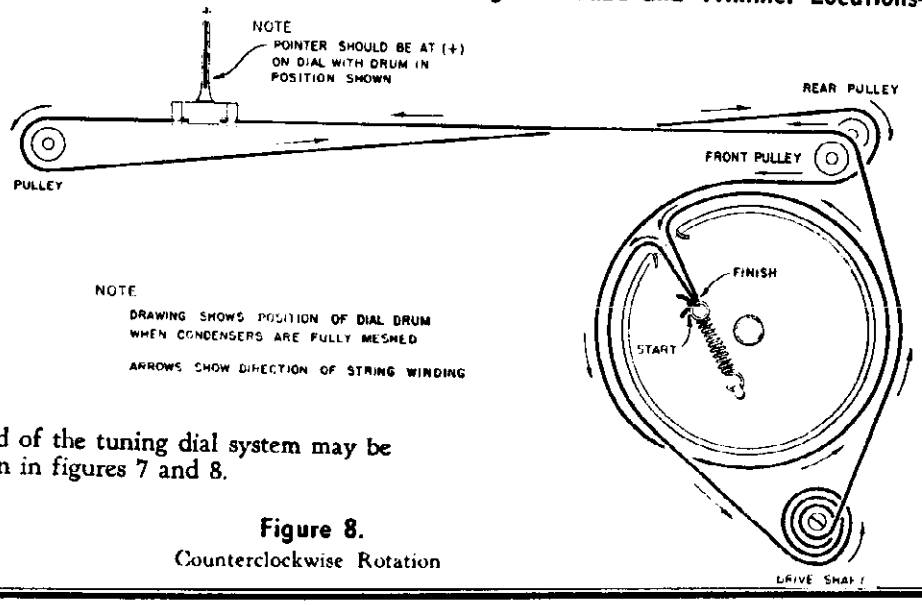

Nylon cord of the tuning dial system may be replaced as shown in figures 7 and 8.

Figure 8.
Counterclockwise Rotation

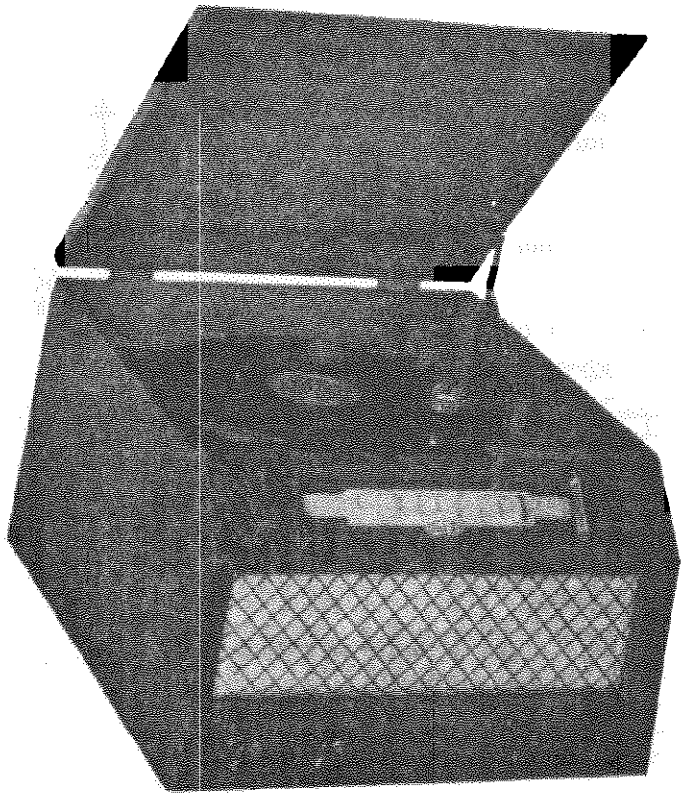

Operation: The set operates on 110 to 120 volts, 60 cycles A.C. only. Power drain is approximately 25 watts for radio and about 10 watts additional for the motor.

Range: Model G-516 covers the broadcast band from 540 to 1620 kilcycles. Since the scale is calibrated 54 to 160, the actual frequency of the station received is obtained by adding a zero to the dial calibration.

Alignment: No attempt should be made to realign this receiver until it has been determined that a poor tube, or some local condition is not responsible for the faulty reception.

The Signal Generator may be connected through a 0.01 mf capacitor (used as dummy antenna) to the lug on RF section (B) of tuning capacitor. Connect ground clip of generator directly to chassis. Align the I. F. trimmers to 455 kc, using least possible input from Signal Generator to avoid developing A.V.C. voltage which would make the tuning adjustments very broad. An output meter may be clipped directly across the voice coil lugs.

To align RF trimmers, remove the 0.01 mf capacitor and connect the Signal Generator leads to two or three turns of heavy wire, forming a self-supporting loop of about 7 or 8 inches diameter, placed about a foot away from the receiver's loop antenna. Again, use the least possible input from the Signal Generator. With the tuning capacitor plates completely out of mesh, and pointer at extreme right end of travel, adjust the oscillator trimmer (A) (on front section of tuning capacitor) to 1700 kc. Readjust both Signal Generator and tuning capacitor to 1550 kc and adjust the RF trimmer (B) (on rear section) for maximum response. With tuning capacitor plates fully meshed, the receiver should tune to 532 kc; however, no adjustment is required at this point. For checking purposes, four fine marks are engraved on the dial plate. These represent, in order, the pointer position with capacitor plates fully meshed, and the pointer setting for 600, 1000 and 1550 kc.

MODEL G-516

SPIEGEL

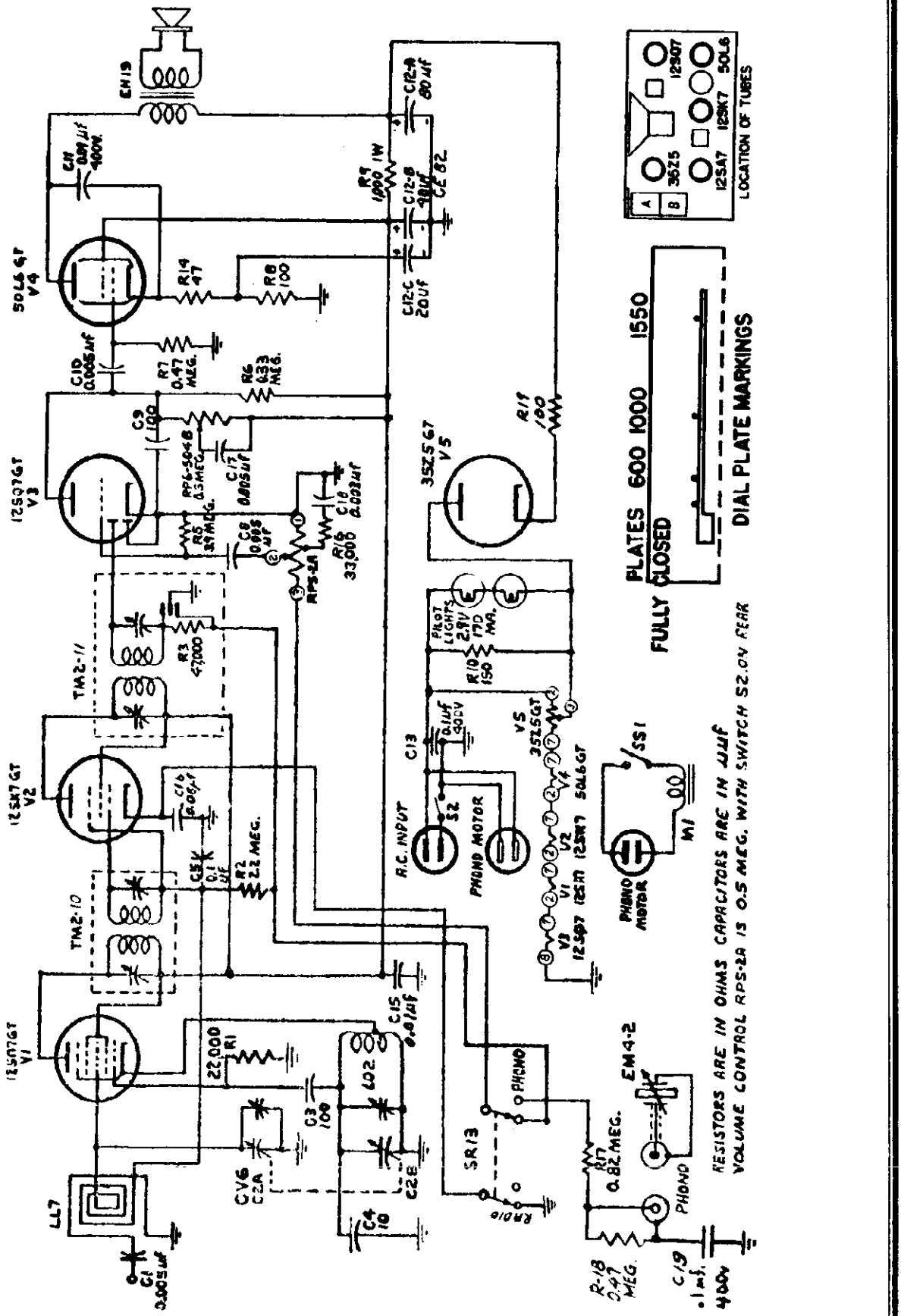

SPIEGEL

MODEL WAU-243

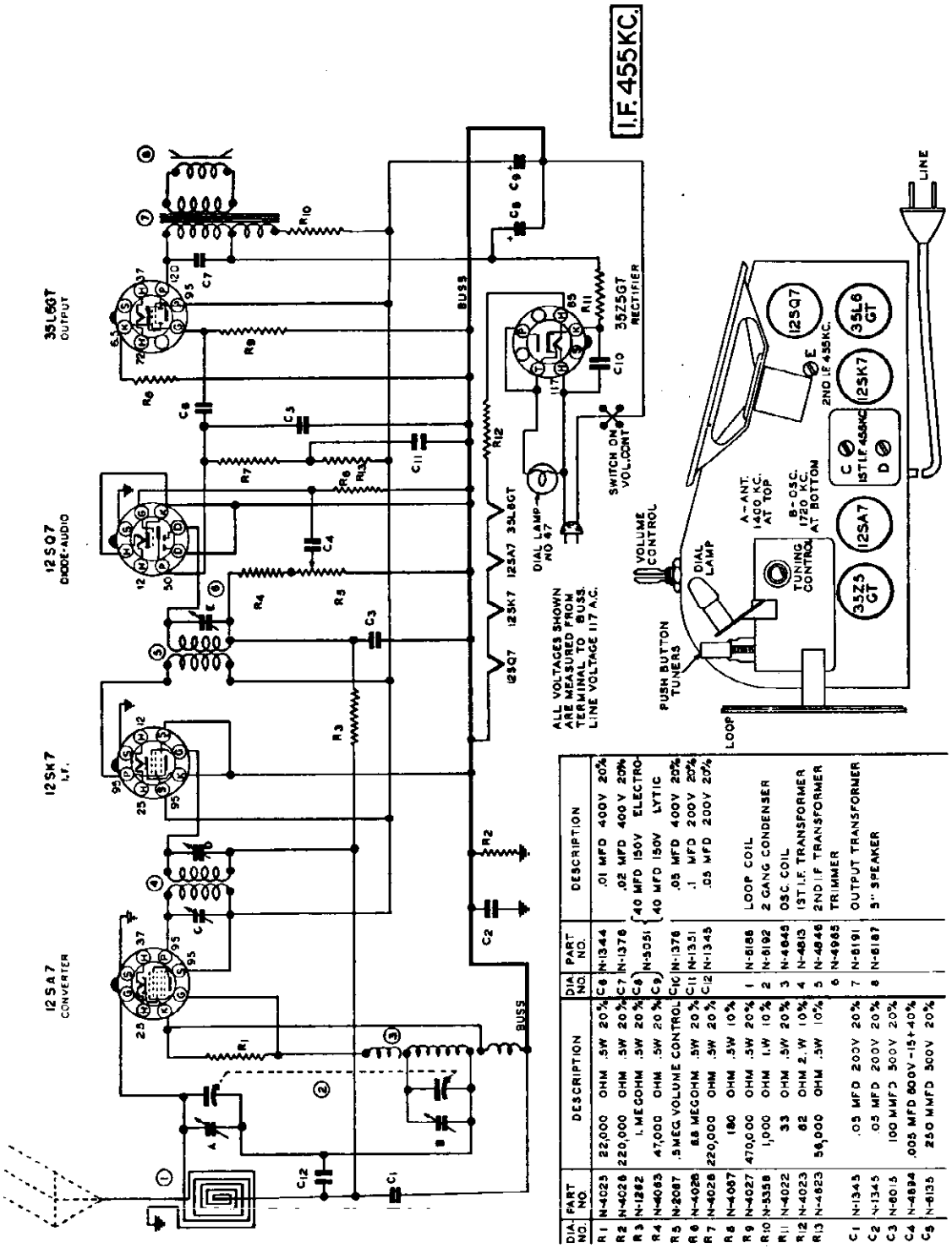

DIA. NO.	PART NO.	DESCRIPTION	DIA. NO.	PART NO.	DESCRIPTION
R1	N-4025	22,000 OHM .5W 20%	C6	N-1344	.01 MFD 400V 20%
R2	N-4026	220,000 OHM .5W 20%	C7	N-1378	.02 MFD 400 V 20%
R3	N-1262	1. MEGOHM .5W 20%	C8	N-5051	40 MFD 150V ELECTRO-
R4	N-4063	47,000 OHM .5W 20%	C9		40 MFD 150V LYTIC
R5	N-2087	.5MEG VOLUME CONTROL	C10	N-1378	.05 MFD 400V 20%
R6	N-4028	68 MEGOHM .5W 20%	C11	N-1351	.1 MFD 200V 20%
R7	N-4028	220,000 OHM .5W 20%	C12	N-1345	.05 MFD 200V 20%
R8	N-4067	180 OHM .5W 10%		N-8188	LOOP COIL
R9	N-4027	470,000 OHM .5W 20%	1	N-8192	2 GANG CONDENSER
R10	N-5358	1,000 OHM 1.W 10%	2	N-4845	OSC COIL
R11	N-4022	33 OHM .5W 20%	3	N-4813	1ST I.F. TRANSFORMER
R12	N-4023	82 OHM 2. W 10%	4	N-4846	2ND I.F. TRANSFORMER
R13	N-4823	56,000 OHM .5W 10%	5	N-4965	TRIMMER
			6	N-8191	OUTPUT TRANSFORMER
C1	N-1345	.05 MFD 200V 20%	7	N-6187	5" SPEAKER
C2	N-1345	.05 MFD 200V 20%	8		
C3	N-8015	100 MMFD 500V 20%			
C4	N-4894	.005 MFD 600V -15+40%			
C5	N-6135	250 MMFD 300V 20%			

MODEL WAU-243 SPIEGEL

SERVICE DATA

Lack of sensitivity and poor tone quality may be due to any one or a combination of causes such as weak or defective tubes or speaker, open or grounded bias resistor, bypass condenser, etc. Never attempt to realign set until all other possible sources of trouble have been first thoroughly investigated and definitely proved not to be the cause.

NOTE: IT IS ABSOLUTELY NECESSARY THAT AN ACCURATELY CALIBRATED TEST OSCILLATOR WITH SOME TYPE OF OUTPUT MEASURING DEVICE BE USED WHEN ALIGNING THE RECEIVER AND THAT THE PROCEDURE BE CAREFULLY FOLLOWED, OTHERWISE THE RECEIVER WILL BE INSENSITIVE AND THE DIAL CALIBRATION WILL BE INCORRECT. THE TRIMMERS WILL BE REFERRED TO BY THEIR FUNCTION AS INDICATED ON THE PARTS DIAGRAM.

TUNING RANGE

This receiver is designed to operate over the standard broadcast band which extends from 535 to 1720 Kilocycles (KC) (174 to 560 Meters).

DIAL CALIBRATION. The scale is calibrated from 55 to 170 (Standard Broadcast). This band covers all Standard Broadcasts frequencies of the United States, Canada, Mexico, Cuba and many Central and South American Countries. Add a zero to figures on the scale to obtain kilocycles.

ALIGNMENT PROCEDURE

GENERAL DATA. The alignment of this receiver requires the use of a test oscillator that will cover the frequencies of 455, 600, 1400 and 1720 KC and an output meter to be connected across the primary or secondary of the output transformer. If possible, all alignments should be made with the volume control on maximum and the test oscillator output as low as possible to prevent the AVC from operating and giving false readings.

CORRECT ALIGNMENT PROCEDURE. The intermediate frequency (I.F.) stages should be aligned properly as the first step. After the I.F. transformers have been properly adjusted and peaked, the broadcast band should be adjusted.

I.F. ALIGNMENT. Remove the chassis and loop antenna from the cabinet and set them up on the bench so that they occupy exactly the same respective positions on the bench as they did in the cabinet. Care should be taken to have no iron or other metal near the loop. Do not make this set-up on a metal bench. With the gang condenser set at minimum, adjust the test oscillator to 455 KC and connect the output to the grid of the first detector tube (12SA7) through a .05 or .1 mfd. condenser. The ground on the test oscillator should be connected to the ground buss, indicated on the circuit diagram. Align all three I.F. trimmers to peak or maximum reading on the output meter.

BROADCAST BAND ALIGNMENT. Connect the test oscillator to the antenna of the set through a 100 mmfd. (.0001) condenser. With the gang condenser set at minimum capacity, set the test oscillator at 1720 KC, and adjust the oscillator (or 1720 KC trimmer) on gang condenser. Next—set the test oscillator at 1400 KC, and tune in the signal on the gang condenser. Adjust the antenna trimmer (or 1400 KC trimmer) for maximum signal. Next set the test oscillator at 600 KC, and tune in signal on condenser to check alignment of coils.

AERIAL SYSTEM

This receiver has a built-in "loop" aerial. Its excellent design is such as to increase pick-up from stations having wide variations in signal strength. The efficiency and selectivity of the loop provide outstanding reception without the use of an external aerial. The "loop" aerial used on this receiver is somewhat directional so reception from weak stations can be improved by turning the set in the proper direction. In or near metal buildings, iron ore deposits or steel structures or in localities remote from broadcasting stations, reception can be improved by using an outside aerial 50 feet to 100 feet in length including lead-in. Connect the outside aerial to the aerial lead. When using the outside aerial with AC power supply it may be necessary to reverse the power cord plug in wall socket to eliminate hum or distortion.

TUBES USED

Five tubes are used. (One tube is a rectifier.) Type numbers and locations are shown in the tube location diagram on the cabinet. If tubes are removed from their sockets for test or replacement purposes, make certain that each tube is placed in its proper socket when replacing the tubes in the set. Failure to replace the tubes in their proper sockets may result in damage to the tube, or to the receiver, or both.

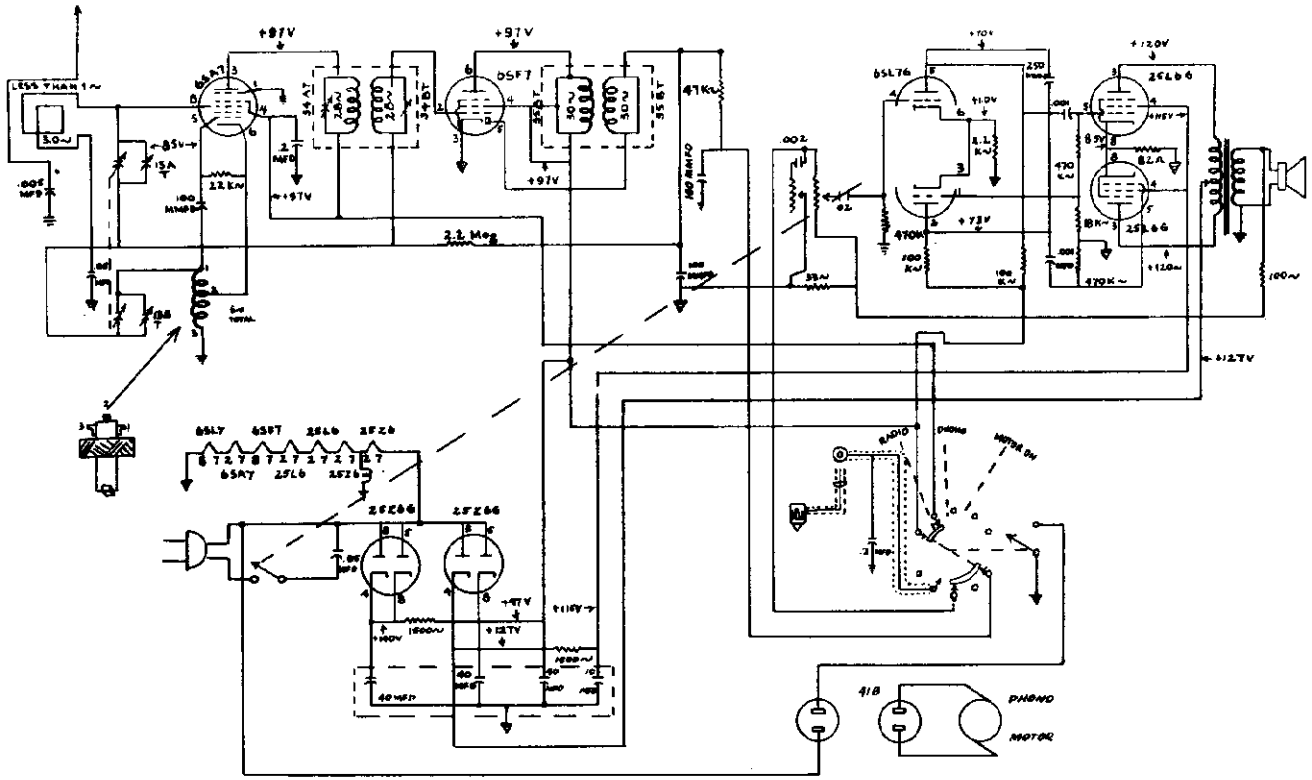

Phono-Radio with automatic record changer for alternating (A.C.) current, of 110 to 125 volts at 60 cycles.

1. The knob marked PHONO-RADIO, controls a three position switch. The extreme counter clockwise position is for radio reception. The center position is for FM reception when desired, to be used with an external F.M. tuning unit.

The extreme clockwise position is for phono reception.

2. The knob marked VOLUME, controls the off and on position of the radio receiver and also acts as a master switch by cutting off the current supply to the record changer.

The unit is turned off when the knob is in the extreme left. (Counter clockwise position).

To turn on, turn this knob to the right (clockwise) until a click is heard. Further rotation adjusts the volume.

3. The knob marked TONE, is the tone control which is of the continuously, variable type and may be placed in the most pleasing position to the listener.

4. The knob marked TUNING, is for dialing the broadcast stations.

MODELS 5011, 5012 SPIEGEL

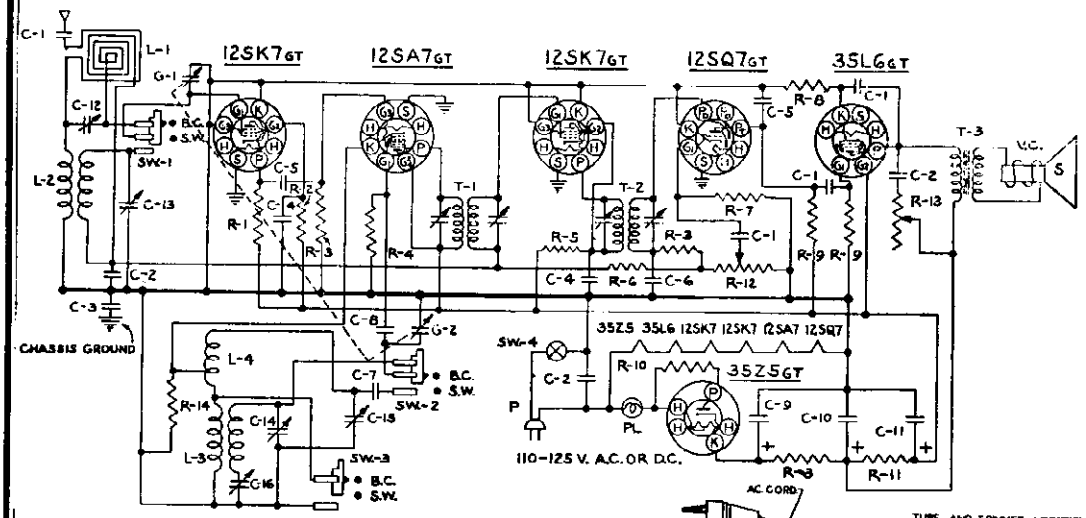

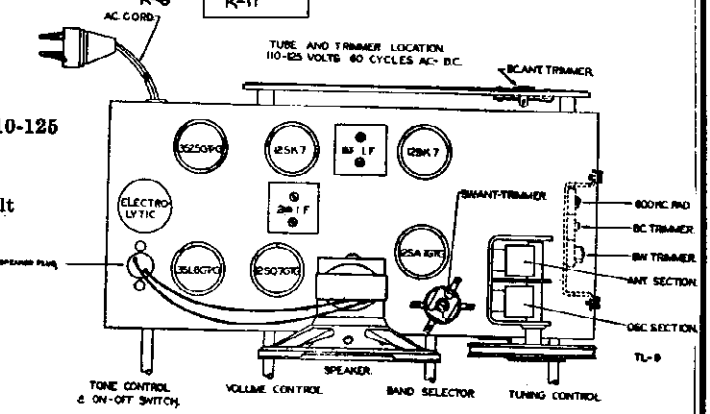

CAUTION

POWER SOURCES: — This receiver will operate either on 110-125 volt A.C., 50-60 cycle current or 110-125 volt D. C. current.

Never plug this receiver into a 220 volt line.

The components in this receiver are designed for 110-125 volt operation only. Any attempt to operate this receiver at a higher than prescribed voltage will cause serious damage.

ALIGNMENT AND SERVICE DATA

Remove the chassis from the cabinet for alignment.

A signal generator is required, having the following frequencies: 455 KC, 1400 KC, 1730 KC. 6 MC, 16 MC, and 18.3 MC. An output meter should be connected across the speaker.

I. F. ALIGNMENT: — Connect the generator lead through a .1 MFD Condenser to the terminal lug on the "Antenna" section of the gang condenser. The ground lead from the generator should be connected to the gang frame. Set the generator at 455 KC. Adjust the trimmer screws in the 1st and 2nd I. F. cans (See Fig. 1) until a maximum reading is noted on the output meter.

The receiver volume control should be turned to maximum during the I. F. and all subsequent alignments, to keep the AVC from working and giving false readings. Keep the generator output as low as possible to prevent overloading.

BC. OR BROADCAST ALIGNMENT: — With the generator leads still connected as in I. F. Alignment, rotate the tuning condenser to complete minimum capacity. Set the generator to 1730 KC. Adjust the BC. oscillator trimmer until the signal is tuned in. Next remove the hot lead of the generator from the "Ant" section of the gang condenser. Connect this lead to the antenna lead wire that projects from the back of the loop antenna through a 200 MMFD condenser. Set the generator to 1400 KC and rotate the tuning condenser until the signal is tuned in. Adjust the BC. antenna trimmer until a maximum reading is noted on the output meter. Set the generator to 600 KC and turn the tuning control until the signal is tuned in. Rock the tuning control back and forth slowly and at the same time adjust the 600 KC pad, slowly to the right or left until a maximum reading is noted on the output meter. It is advisable to return to the 1730 KC adjustment and re-check that setting to make sure it has not changed while padding at 600 KC.

S. W. OR SHORT WAVE ALIGNMENT: — Set the generator at 18.3 MC. Turn the receiver band switch to short band position. Turn the tuning condenser to complete minimum capacity. The generator leads should be connected to the antenna lead wire that projects from the back of the loop antenna through a 400 Ohm resistor. Adjust the S. W. oscillator trimmer slowly until the 18.3 MC signal is tuned in. At this point, it will be well to make sure that the fundamental signal is turned in. Turn up the generator output and tune the receiver to approximately 17.3 MC. At this point the 18.3 MC signal will be heard again but much weaker. This is the image frequency. If the image is not heard, then turn the tuning condenser back to complete minimum and readjust the S. W. oscillator trimmer. Remember, the image must always be heard (at 2 times the I. F. frequency in KC) lower the frequency than the fundamental signal. After the oscillator has been properly set, tune the signal generator to 16 MC and rotate the tuning control until the signal is tuned in. Adjust the S.W. antenna trimmer until a maximum reading is noted on the output meter. It is advisable to rock the gang slowly while adjusting the antenna trimmer. Set the generator to 6 MC and tune the signal in on the receiver. Check the alignment at this frequency. No adjustment should be necessary as the coils have been carefully checked before leaving the factory. A fixed oscillator padding condenser is used at 6 MC.

PART NO.		DESCRIPTION
IR-22	R-1	3900Ω RESISTOR 1/2 W. 10%
IR-8	R-2	22,000Ω RESISTOR 1/2 W. 10%
IR-10	R-3	47000Ω RESISTOR 1/2 W. 20%
IR-9	R-4	22000Ω RESISTOR 1/2 W. 20%
IR-24	R-5	1000Ω RESISTOR 1/2 W. 20%
IR-23	R-6	3.9 MEG. RESISTOR 1/2 W. 20%
IR-13	R-7	2 MEG. RESISTOR 1/2 W. 20%
IR-5	R-8	220Ω RESISTOR 1/2 W. 10%
IR-11	R-9	470000Ω RESISTOR 1/2 W. 20%
IR-17	R-10	39Ω RESISTOR 1/2 W. 20%
IR-21	R-11	330Ω RESISTOR 1/2 W. 10%
VC-3	R-12	1 MEG. VOLUME CONTROL
VC-1	R-13	25MΩ TONE CONTROL & SW.
IR-6	R-14	470Ω RESISTOR 1/2 W. 10%
PC-7	C-1	.01 MFD. CONDENSER 400 V.
PC-5	C-2	.05MFD. CONDENSER 400 V.
PC-9	C-3	.25 MFD. CONDENSER 400 V.
PC-8	C-4	.1 MFD. CONDENSER 400 V.
MC-3	C-5	.00022 MFD. MICA COND. 500 V.
MC-2	C-6	.0001 MFD. MICA COND. 500 V.
MC-1	C-7	.00475 MFD. MICA COND. 3%
MC-4	C-8	.00005 MFD. MICA COND. 500 V.
EC-4	C-9	40 MFD.
	C-10	40 MFD. 150 V. ELECTROLYTIC
	C-11	40 MFD.
TC-7	C-12	LOOP ANTENNA TRIMMER
TC-8	C-13	S.W. ANTENNA TRIMMER
TC-1	C-14	B.C. OSC. TRIMMER
	C-15	S.W. OSC. TRIMMER
	C-16	B.C. OSC. PADDING COND.
GC-1	G-1	GANG CONDENSER
	G-2	
SW-1	SW-1	BAND SWITCH
	SW-2	
	SW-3	
	SW-4	A.C. SW. ON TONE CONTROL
LI-1	T-1	INPUT I.F. TRANSFORMER
LI-2	T-2	OUTPUT I.F. TRANSFORMER
SPK-4	T-3	OUTPUT SPK. TRANSFORMER
	V.C.	VOICE COIL
	S	P.M. SPEAKER
PB-1	PL	PILOT BULB #47
CO-1	P	LINE CORD
LL-2	L-1	LOOP ANTENNA
LA-2	L-2	S.W. ANTENNA COIL
LO-3	L-3	B.C. OSC. COIL
LO-4	L-4	S.W. OSC. COIL
TU-4		12 SK7GT 12 SA7GT 12 SK7GT 12 SQ7GT 35L6GT 35Z5GT

©John F. Rider

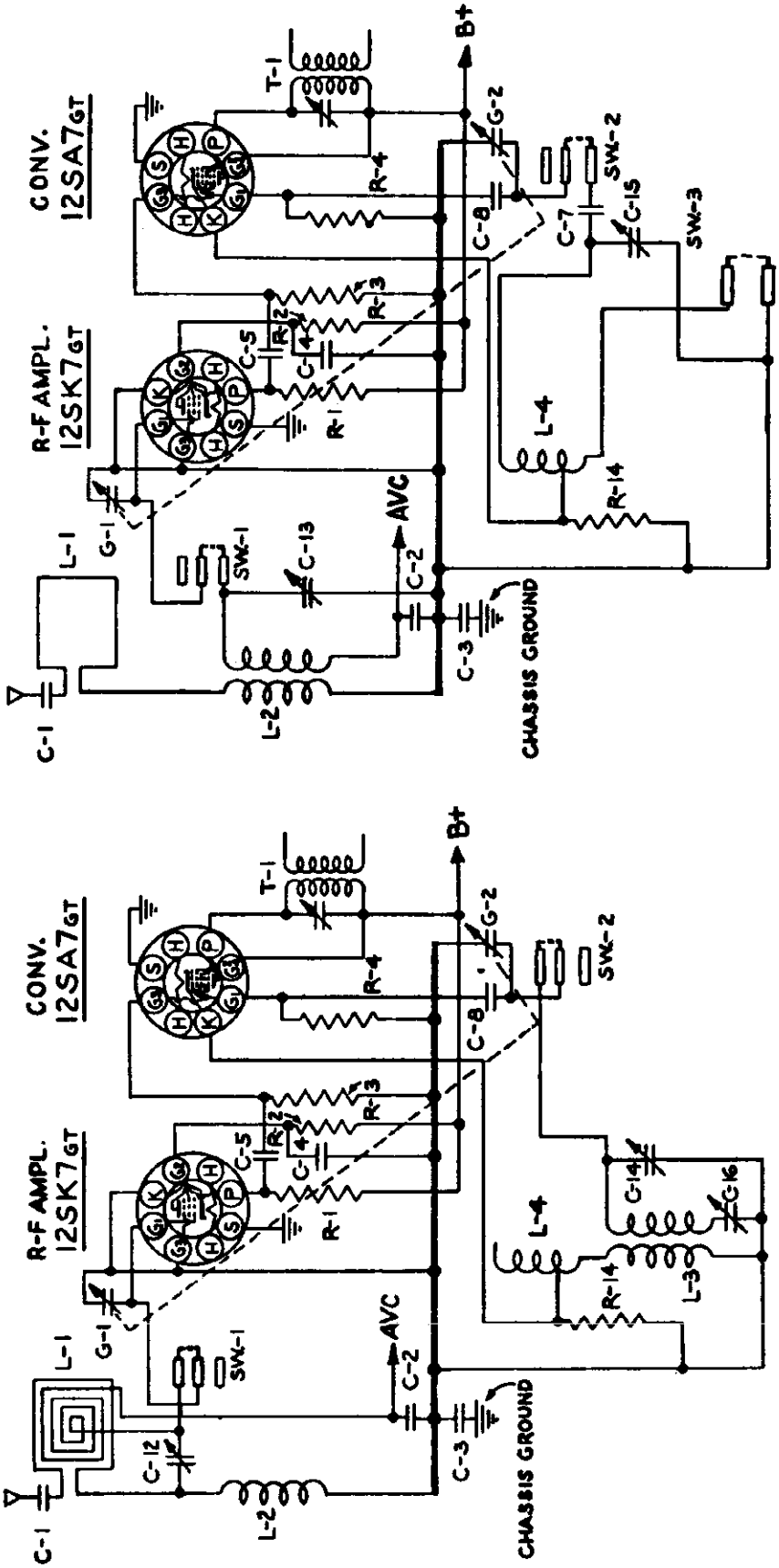
CONV. 12SA7GT
R-F AMPL. 12SK7GT
B+
T-1
G-2
R-4
SW-2
C-8
C-7
C-15
SW-3
R-3
R-2
C-5
C-4
R-1
L-4
R-14
G-1
L-1
SW-1
C-13
AVC
C-2
C-3
CHASSIS GROUND
C-1
L-2
BAND-SWITCH SHOWN AT 2ND POSITION CLOCKWISE SHORT WAVE BAND
CONV. 12SA7GT
R-F AMPL. 12SK7GT
B+
T-1
G-2
R-4
SW-2
C-8
R-3
R-2
C-5
C-4
R-1
C-14
C-16
L-4
R-14
L-3
G-1
L-1
SW-1
AVC
C-2
C-3
CHASSIS GROUND
C-12
C-1
L-2
BAND-SWITCH SHOWN AT 1ST POSITION. BROADCAST BAND

MODEL 5027 SPIEGEL

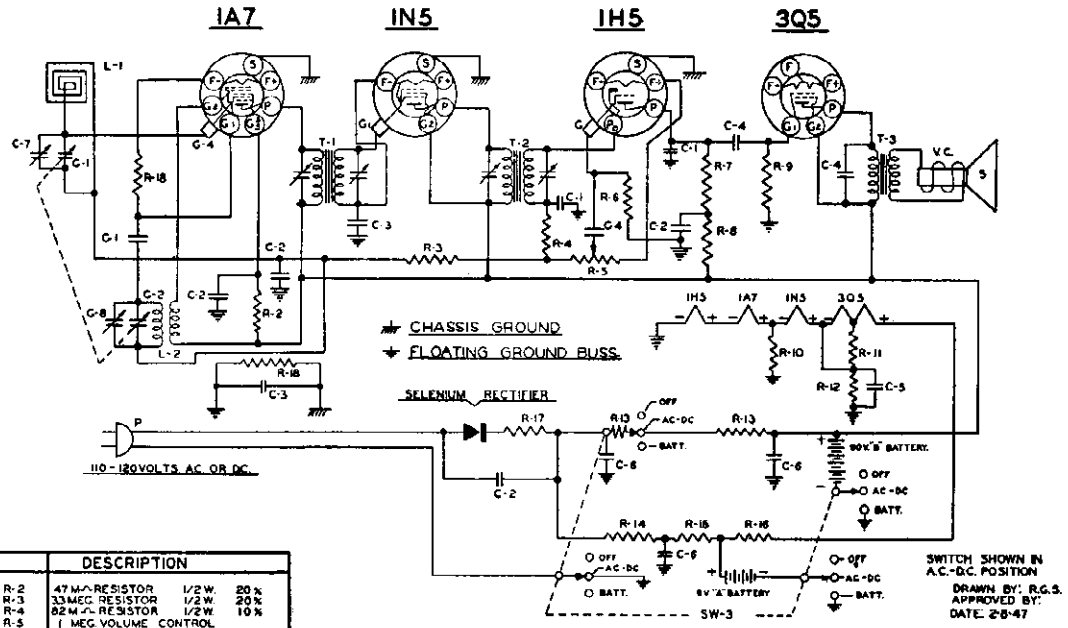

PART NO.		DESCRIPTION	
IR-10	R-2	47M Ω RESISTOR	1/2W. 20%
IR-23	R-3	33 MEG. RESISTOR	1/2W 20%
IR-31	R-4	82M Ω RESISTOR	1/2W 10%
VC-2	R-5	1 MEG VOLUME CONTROL	
IR-3	R-6	10 MEG. RESISTOR	1/2W 20%
IR-12	R-7	1 MEG. RESISTOR	1/2W 20%
IR-11	R-8	470M Ω RESISTOR	1/2W 20%
IR-13	R-9	2.2 MEG RESISTOR	1/2W 20%
IR-32	R-10	680 Ω RESISTOR	1/2W 10%
IR-33	R-11	270 Ω RESISTOR	1/2W 10%
IR-21	R-12	330 Ω RESISTOR	1/2W 10%
IR-39	R-13	620 Ω RESISTOR	1/2W 5%
WR-3A	R-14	1050 Ω	
	R-15	1050 Ω	CANDOHM RESISTOR
	R-16	40 Ω	
IR-35	R-17	82 Ω WIREWOUND RESISTOR.	2W. 10%
IR-20	R-18	220M Ω RESISTOR	1/2W. 20%
MC-2	C-1	100MMFD. CONDENSER. (MICA)	
PC-5	C-2	.05 MFD CONDENSER.	400V.
PC-8	C-3	.1MFD. CONDENSER	400V.
PC-6	C-4	.005 MFD. CONDENSER	600V.

PART NO.		DESCRIPTION	PART NO.		DESCRIPTION
EC-6	C-5	70 MFD. 10V. ELECTROLYTIC		T-3	OUTPUT SPEAKER TRANSFORMER
EC-4	C-6	40-40-40-150V. ELECTROLYTIC	SPK-5	V.C.	VOICE COIL
TC-7	C-7	ANTENNA TRIMMER		S	P.M. SPEAKER
	G-8	OSC. TRIMMER.	SW-5	SW-3	4 POLE 3 POSITION
GC-4	C-1	GANG CONDENSER	SR-1		SELENIUM RECTIFIER
	G-2		TU-11		1A7 - 1N5 - 1H5 - 3Q5
LL-10	L-1	LOOP ANNTENNA	"A" BATTERY		9 VOLTS
LO-8	L-2	OSC. COIL	"B" BATTERY		90 VOLTS.
LI-3	T-1	INPUT I.F. TRANSFORMER			
LI-4	T-2	OUTPUT I.F. TRANSFORMER			
CO-1	P	LINE CORD			

POWER SOURCES: This receiver is designed for operation on either an external power source or on the enclosed batteries.

AC OR DC OPERATION: This receiver may be operated on 50 to 60 cycle, 110 to 125 volt AC current or 110 to 125 DC current.

CAUTION: Never plug this receiver into a 220 volt line as this will seriously damage the component parts which have been designed for 110 to 125 volt operation only.

To operate on AC or DC open the small door at the lower right hand corner in the back of the cabinet. Pull out the power cord and plug into a convenient outlet of the proper voltage and current. Follow instructions under "Controls."

To operate on the enclosed batteries, follow instructions under "Control."

CONTROLS: This receiver has three control knobs which are located on the front panel of the cabinet.

STATION SELECTOR KNOB: The right hand knob is the station selector. Rotate this knob to the right or left to select your desired station. The dial scale is calibrated in kilocycles. By mentally adding a zero to the numbers on the scale, the result will be read directly in (KC) kilocycles. (i.e., 60 plus 0 equals 600 KC or 140 plus 0 equals 1400 KC).

POWER SELECTOR SWITCH: The center knob is the power selector. It has three positions which are indicated on the front panel. The extreme left hand position is the "OFF" position. The small dot on this knob must point to "OFF" when the receiver is not in use. The center position is "AC-DC" and is used when it is desired to operate the receiver from a power line source. The extreme right hand position is "BATT" and is used when it is desired to operate on the enclosed batteries.

AC OPERATION: When an AC power source is used, set the power selector knob to "AC-DC" after the power cord has been plugged into a convenient outlet. The receiver is now ready for operation.

DC OPERATION: If the receiver does not operate after a few seconds, reverse the power cord plug in the outlet and it will operate properly.

BATTERY OPERATION: The power cord is not used for battery operation and may be hanked and put back in the cabinet. Set the power control knob to "BATT" and the receiver is ready for operation on the enclosed batteries.

CAUTION: When the receiver is not in use, the power selector knob must be turned to "OFF." If the knob is allowed to remain in "BATT" position, the batteries will be in use constantly. The volume control does not control the batteries and they are still in operation even though the volume control is turned all the way off.

VOLUME CONTROL: The left hand knob is the volume control. After the power selector knob has been properly set and the receiver is in operation, rotate the volume control knob to the right to increase volume or to the left to decrease volume.

BATTERY SUPPLIERS

The batteries for this receiver may be purchased from any reliable radio dealer.

For proper operation of this receiver, you must use, two (2) 4½ Volt "A" batteries, and two (2) 45 Volt "B" batteries.

The following is a table of manufacturers and their battery type number.

"B" BATTERIES (2 Required)

Mfgr.	Volts	Type No.
Burgess	45 "B"	M30
General	45 "B"	W30B
Bright Star	45 "B"	3033
Usalite	45 "B"	640
Rayovac	45 "B"	P7830
Eveready	45 "B"	482

"A" BATTERIES (2 Required)

Burgess	4½ "A"	G3
General	4½ "A"	3H3
Bright Star	4½ "A"	361
Usalite	4½ "A"	683
Rayovac	4½ "A"	P83A
Eveready	4½ "A"	746

MODEL-5027

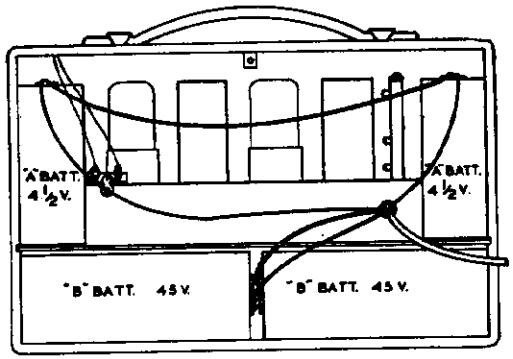

BATTERY LOCATION

BATTERY SERVICING

(See Figure No. 1)

To replace batteries, loosen and remove the two screws at the left and right hand corners of the cabinet back. Remove the back and pull out the plug from each battery. Never pull on the wires connected to the plugs as they may break. Always grasp the plug form between the fingers, or use a flat blade to pry out the plug. Observe with care the position of the batteries and plugs when replacing. Be sure that batteries and plugs are replaced as shown in the "Battery Location" diagram. (Figure No. 1)

After the batteries have been installed, replace the back. Make sure that the two wires from the loop antenna are held in place between the brackets of the cabinet and the back by the two fastening screws.

ALIGNMENT AND SERVICE DATA

Remove chassis from cabinet for alignment.

A Signal Generator is required having the following frequencies: 455 KC, 1400 KC, 1650 KC. An output meter should be connected across the speaker.

The volume control of the receiver should be turned to maximum during the I. F. and all subsequent alignment and the generator output as low as possible to prevent the A. V. C. from working and giving false readings.

FIRST STEP: Connect the hot lead from the generator to the ANT. section of the gang condenser through a .1 MFD. condenser. The ground lead from the generator must be connected to "B" minus under the chassis. Turn the gang condenser to complete minimum capacity. Set the generator to 455 KC. Adjust the trimmers of the first and second I. F. transformers until a maximum reading is noted on the output meter.

SECOND STEP: With the leads from the generator still connected in the same manner, adjust the Signal Generator to 1650 KC. Adjust the OSC. trimmer until the 1650 KC signal is tuned in. The gang condenser must be at complete minimum capacity for this adjustment.

THIRD STEP: Remove the generator leads from the gang condenser and replace the chassis in the cabinet. Loosely couple the generator to the receiver loop by making a complete turn of wire over the outside of the cabinet. With the receiver and generator set at 1400 KC, increase the generator output. Adjust the ANT. trimmer through the hole which is provided in the top of the cabinet until a maximum signal is noted on the output meter. The ANT. trimmer hole in the top of the cabinet is covered by a small plug button. Replace this button after adjustment has been made. No further adjustment should be made as the coils and gang condenser in this receiver have been specially handled at the factory to insure proper alignment at the lower frequencies.

TUBE AND TRIMMER LOCATION
MODEL - 5027

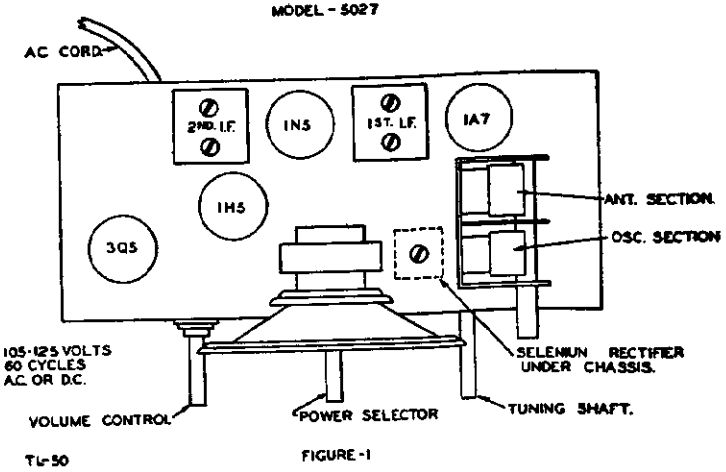

TL-50

FIGURE-1

MODEL 5028 SPIEGEL

POWER SOURCES: This receiver is designed for operation on either an external power source or on the enclosed batteries.

AC OR DC OPERATION: This receiver may be operated on 50 to 60 cycle, 110 to 125 volt AC current or 110 to 125 DC current.

CAUTION: Never plug this receiver into a 220 volt line as this will seriously damage the component parts which have been designed for 110 to 125 volt operation only.

To operate on AC or DC open the small door at the right in the back of the cabinet. Pull out the power cord and plug into a convenient outlet of the proper voltage and current. Follow instructions under "Controls."

To operate on the enclosed batteries, follow instructions under "Controls."

ANTENNA: This receiver is equipped with a sensitive loop antenna and requires no external antenna wire. However, due to the directional qualities of the loop some stations may appear to be weak in reception. This condition may be remedied by rotating or changing the position of the receiver.

CONTROLS: This receiver has three control knobs which are located on the front panel of the cabinet.

STATION SELECTOR KNOB: The right hand knob is the station selector. Rotate this knob to the right or left to select your desired station. The dial scale is calibrated in kilocycles. By mentally adding a zero to the numbers on the scale, the result will be read directly in (KC) kilocycles. (i.e., 60 plus 0 equals 600 KC or 140 plus 0 equals 1400 KC).

POWER SELECTOR SWITCH: The left hand knob is the power selector. It has three positions which are indicated on the front panel. The extreme left hand position is the "OFF" position. The small dot on this knob must point to "OFF" when the receiver is not in use. The center position is "AC-DC" and is used when it is desired to operate the receiver from a power line source. The extreme right hand position is "BATT" and is used when it is desired to operate on the enclosed batteries.

AC OPERATION: When an AC power source is used, set the power selector knob to "AC-DC" after the power cord has been plugged into a convenient outlet. The receiver is now ready for operation.

DC OPERATION: If the receiver does not operate after a few seconds, reverse the power cord plug in the outlet and it will operate properly.

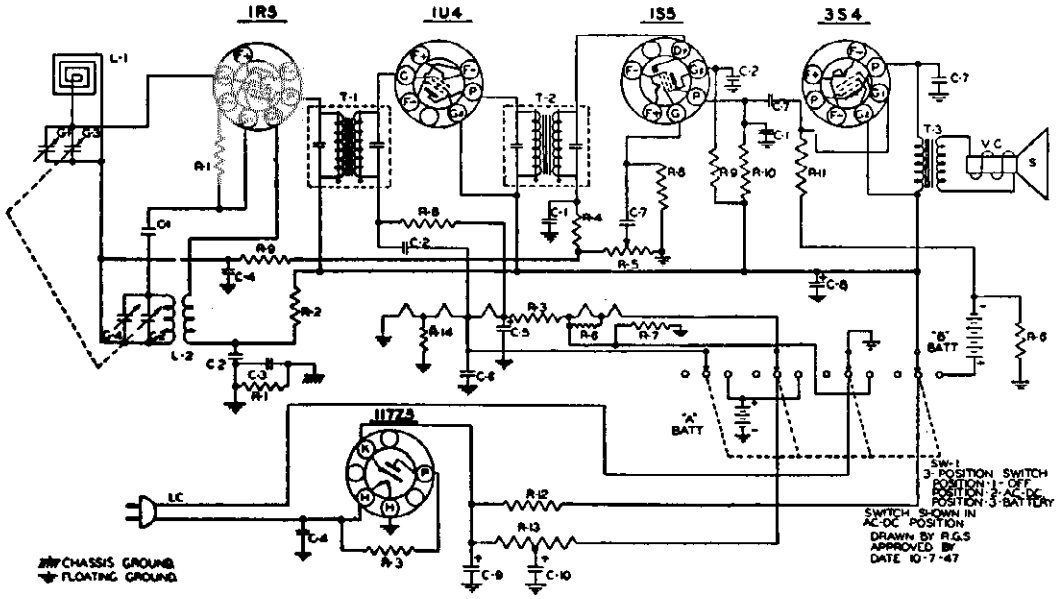

PART NO.		DESCRIPTION
IR-20	R-1	220 M-Ω RESISTOR 1/2W 20 %
IR-37	R-2	[illegible] RESISTOR 1/2W 20 %
IR-17	R-3	[illegible] RESISTOR 1/2W 20 %
IR-31	R-4	[illegible] RESISTOR 1/2W 20 %
VC-11	R-5	1MEG VOLUME CONTROL
IR-33	R-6	270 Ω RESISTOR 1/2W 10 %
IR-39	R-7	620 Ω RESISTOR 1/2W 5 %
IR-3	R-8	10MEG Ω RESISTOR 1/2W 20 %
IR-20	R-9	3.3MEG Ω RESISTOR 1/2W 20 %
IR-12	R-10	1MEG Ω RESISTOR 1/2W 20 %
IR-13	R-11	2.2MEG Ω RESISTOR 1/2W 20 %
IR-10	R-12	3000 Ω RESISTOR 1 W 10 %
WR-7	R-13	1050-1050 CANDOHM RESISTOR SW 5%
IR-1	R-14	470 Ω RESISTOR 1/2 20 %
MC-2	C-1	100MMFD. MICA CONDENSER
PC-7	C-2	.01MFD. CONDENSER 400WV
PC-8	C-3	.1MFD. CONDENSER 400WV
PC-5	C-4	.05MFD. CONDENSER 400WV
EC-6	C-5	70MFD. 10WV ELECTROLYTIC

PART NO.		DESCRIPTION
PC-3	C-6	.1 MFD. CONDENSER 200 W.V
PC-6	C-7	.005MFD CONDENSER 600 W.V
EC-14	C-8	40 MFD. } 150 WV ELECTROLYTIC
	C-9	40 MFD. } 150 WV ELECTROLYTIC
	C-10	20 MFD. } 150 WV ELECTROLYTIC
GC-6X	G-1	ANT TRIMMER
	G-2	} GANG CONDENSER
	G-3	} GANG CONDENSER
	G-4	OSC TRIMMER
LL-14	L-1	LOOP ANTENNA
LO-8	L-2	OSC COIL
CO-1	LC	LINE CORD
SW-8	SW-1	4 POLE-3 POSITION SWITCH

PART NO.		DESCRIPTION
LI-5	T-1	INPUT IF TRANSFORMER
LI-5	T-2	OUTPUT IF TRANSFORMER
SPK-8	T-3	SPEAKER OUTPUT TRANSFORMER
	VC	VOICE COIL
	S	3½ PM SPEAKER
TU-31	—	117Z3-1R5-1U4-1S5-3S4
	X BATT	2"D" SIZE 1½ VOLT FLASHLITE CELLS
	B BATT	1-67½ VOLT BATTERY

©John F. Rider

BATTERY OPERATION: The power cord is not used for battery operation and may be hanked and put back in the cabinet. Set the power control knob to "BATT" and the receiver is ready for operation on the enclosed batteries.

CAUTION: When the receiver is not in use, the power selector knob must be turned to "OFF." If the knob is allowed to remain in "BATT" position, the batteries will be in use constantly. The volume control does not control the batteries and they are still in operation even though the volume control is turned all the way off.

VOLUME CONTROL: The center knob is the volume control. After the power selector knob has been properly set and the receiver is in operation, rotate the volume control knob to the right to increase volume or to the left to decrease volume.

BATTERY SUPPLIERS

The batteries for this receiver may be purchased from any reliable dealer.

For proper operation this receiver requires two "A" batteries and one "B" battery.

The "A" batteries are size "D" flashlight cells and are made by all battery manufacturers.

The "B" battery is a 67½ volt battery and is made by the following manufacturers:

Eveready 67½ vlt. #467

Burgess 67½ vlt. #XX45

General 67½ vlt. #W45A

Ray-O-Vac 67½ vlt. #4367

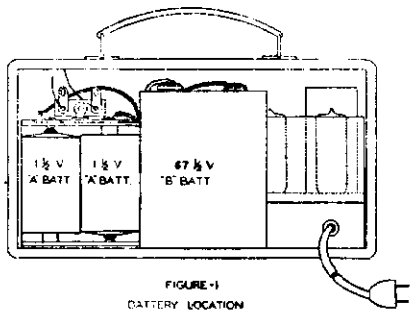

FIGURE-1
BATTERY LOCATION

BATTERY SERVICING

(See Fig. No. 1)

To replace the batteries in this receiver:

Remove the back.

To the left, looking into the rear of the cabinet is the "A" or flashlight battery container. To the right is the "B" or 67½ volt battery.

To replace the "A" batteries, pull the old batteries out of the container. Replace with fresh batteries, making sure the batteries are inserted according to the diagram on the inside of the container.

To replace the "B" battery, disconnect the snap fastener connectors. Replace with a fresh battery and snap the connectors into place. Replace the battery in the cabinet as shown in Fig. No. 1, making sure that the connector end faces the top of the cabinet.

After the batteries have been installed, replace the back, making sure that the two washers in the bottom of the back fit into the slot near the bottom edge of the cabinet.

ALIGNMENT AND SERVICE DATA

(See Fig. No. 2 For Trimmer Location)

Remove chassis from cabinet for alignment.

A Signal Generator is required having the following frequencies: 455 KC, 1400 KC, 1650 KC. An output meter should be connected across the speaker.

The volume control of the receiver should be turned to maximum during the I. F. and all subsequent alignment and the generator output as low as possible to prevent the A. V. C. from working and giving false readings.

FIRST STEP: Connect the hot lead from the generator to the ANT. section of the gang condenser through a .1 MFD. condenser. The ground lead from the generator must be connected to "B" minus under the chassis. Turn the gang condenser to complete minimum capacity. Set the generator to 455 KC. Adjust the movable iron cores in the IF cans. These IF adjustments are made in the top and in the bottom of the can under the chassis. Adjust the cores until a maximum reading is noted on the output meter.

SECOND STEP: With the leads from the generator still connected in the same manner, adjust the Signal Generator to 1650 KC. Adjust the OSC. trimmer until the 1650 KC signal is tuned in. The gang condenser must be at complete minimum capacity for this adjustment.

THIRD STEP: Remove the generator leads from the gang condenser and replace the chassis in the cabinet. Loosely couple the generator to the receiver loop by making a complete turn of wire over the outside of the cabinet. With the receiver and generator set at 1400 KC, increase the generator output. Adjust the ANT. trimmer through the hole which is provided in the end of the cabinet until a maximum signal is noted on the output meter. The ANT. trimmer hole in the side of the cabinet is covered by a small plug button. Replace this button after adjustment has been made. No further adjustment should be made as the coils and gang condenser in this receiver have been specially handled at the factory to insure proper alignment at the lower frequencies.

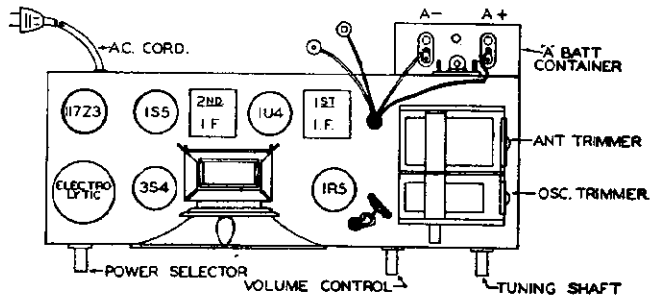

MODEL-5028
TUBE AND TRIMMER LOCATION
FIGURE-2

TL-60

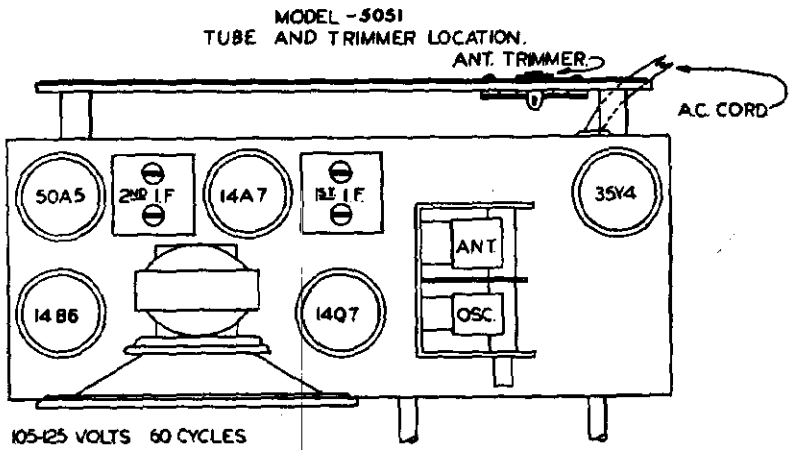

TL - 51

FIGURE -1.

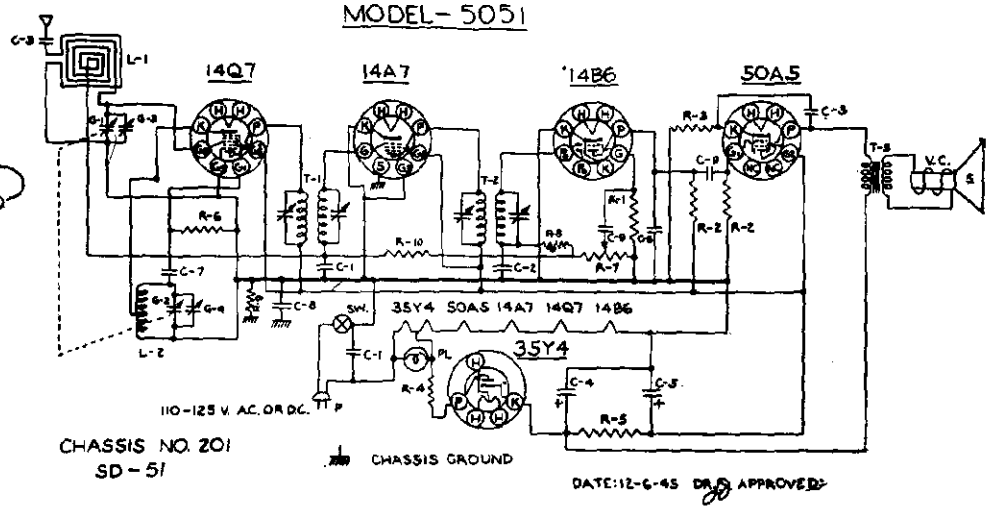

PART NO.		DESCRIPTION	PART NO.		DESCRIPTION	PART NO.		DESCRIPTION
IR-13	R-1	22 MEG. RESISTOR 1/2 W 20%		G-4	OSC. TRIMMER COND.	LO-11	L-2	OSC. COIL
IR-11	R-2	470M RESISTOR 1/2 W 20%	PC-5	C-1	.05 MFD. COND. 400 V.	L1-1	T-1	INPUT I.F. TRANSFORMER
IR-14	R-3	150M RESISTOR 1/2 W 20%	MC-2	C-2	.0001 MFD. MICA COND. 20%	L1-2	T-2	OUTPUT I.F. TRANSFORMER
IR-4	R-4	47M RESISTOR 1/2 W 20%	PC-7	C-3	.01 MFD. COND. 400 V.		T-3	OUTPUT SPK. TRANSFORMER
IR-15	R-5	2200M RESISTOR 1/2 W 20%	EC-12	C-4	40 MFD. 150 V. ELECTROLYTIC	SPK.-4	V.C.	VOICE COIL
IR-16	R-6	33 M RESISTOR 1/2 W 20%		C-5	20 MFD. CONDENSER		S	PM. SPEAKER
VC-3	R-7	1 MEG. VOLUME CONTROL	MC-5	C-6	.0005 MFD. COND. 20%	PB-1	PL	#47 PILOT BULB
GC-4	G-1	GANG CONDENSER	MC-4	C-7	.00005 MFD. MICA 20%		SW.	A.C. SW. ON VOL. CONTROL
	G-2		PC-9	C-8	.1 MFD. COND. 400 V.	CO-1	P	LINE CORD
TC-7	G-3	ANT. TRIMMER COND.	LL-6	L-1	LOOP ANTENNA	TU-6	——	14Q7 14A7 14B6 50A5 35Y4
IR-10	R-8	47M 1/2W 20%	IR-20	R-9	220M 1/2W 20%	IR-23	R-10	3.3 MEG. 1/2 W 20%
						PC-6	C-9	.005 MFD. 600 V

ALIGNMENT AND SERVICE DATA

Remove chassis from cabinet for alignment.

A Signal Generator is required having the following frequencies: 455 KC, 1400 KC, 1720 KC. An output meter should be connected across the speaker.

FIRST STEP: Connect the hot lead from the generator to the ANT. section of the gang condenser, through a .1 MFD condenser. The ground lead from the generator must be connected to the metal frame of the gang condenser. Turn the gang condenser to complete minimum capacity. Adjust the generator to 455KC and adjust the trimmers of the 1st and 2nd I.F. transformers until a maximum reading is noted on the output meter.

SECOND STEP: With the leads from the generator still connected in the same manner, adjust the Signal Generator to 1720 KC. The OSC. trimmer is located on the front of the chassis between the volume and tuning controls. Adjust this trimmer until the 1720 KC signal is tuned in.

THIRD STEP: Remove the hot lead of the generator from the ANT section of the gang condenser. Connect this lead to the antenna lead wire that projects from the back of the loop antenna through a 200 MMFD condenser. Adjust the Signal Generator to 1400 KC. Rotate the tuning control until this signal is tuned in. The ANT trimmer is located on the back of the loop antenna. Adjust this trimmer until a maximum reading is noted on the output meter. No further adjustment should be necessary, unless the set has been damaged, as the coils and condenser in this receiver have been specially handled at the factory to insure proper alignment at the lower frequencies.

ALIGNMENT DATA

MODEL- 6041 SD-69-U

Remove the chassis from the cabinet. A Signal Generator with the following frequencies is required: 455 KC, 1400 KC and 1720 KC.

The receiver volume control should be turned to maximum during the I.F. and all subsequent alignments to keep the A.V.C. from working and giving false readings. Turn the tone control to complete left hand position. Keep the generator output as low as possible to prevent overloading.

Connect an output meter across the voice coil of the speaker.

Connect a 20,000 ohm resistor across the loop connector terminals to reflect the proper loop impedance.

FIRST STEP: Connect the hot lead from the generator to the "ANT." section of the gang condensor through a .1 MFD. condensor. The ground lead must be connected to the floating ground buss under the chassis. Turn the gang condenser to complete minimum capacity. Adjust the generator to 455 KC and adjust the trimmers of the 1st and 2nd I.F. transformers until a maximum reading is noted on the output meter.

SECOND STEP: With the leads from the generator connected in the same manner as in I.F. alignment, adjust the signal generator to 1720 KC. The "OSC." trimmer is located on the front section of the gang condenser. Adjust this trimmer until the signal is tuned in. The gang condenser should be at complete minimum capacity for this setting.

THIRD STEP: Remove the generator leads from the chassis. Remove the 20,000 ohm resistor from the loop connector terminals. Reinstall the chassis in the cabinet, connect the loop leads, motor plug and phono pickup leads.

Connect the generator leads to a transmitting loop, made of a few turns of wire, and loosely couple to the receiver loop antenna which is located on the back end of the cabinet. Adjust the generator to 1400 KC. Rotate the tuning control until this signal is tuned in. The "ANT." trimmer is located on the rear section of the gang condenser. Adjust this trimmer until a maximum signal is noted on the output meter.

No further adjustment should be necessary, unless the receiver has been damaged, as the coils and tuning condenser have been specially handled at the factory to insure proper alignment at the lower frequencies.

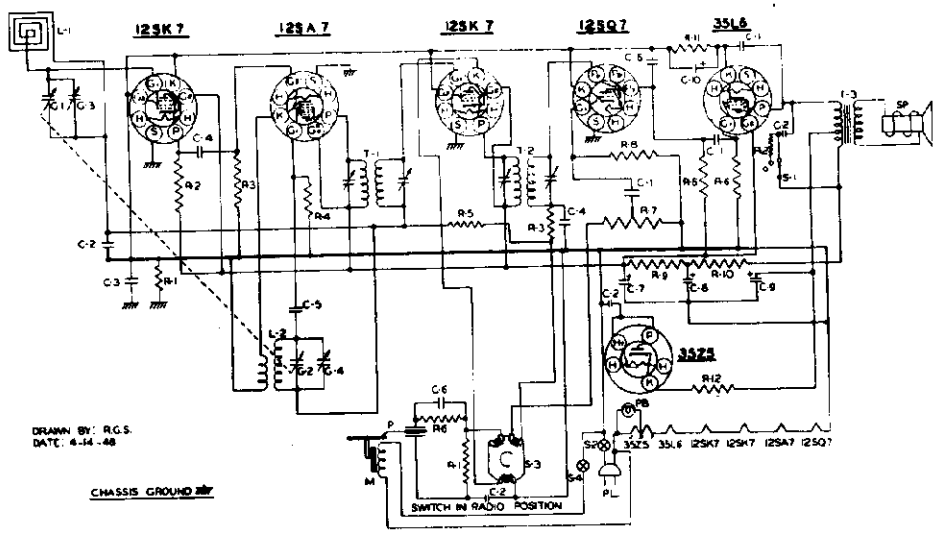

PART NO.		DESCRIPTION	PART NO.		DESCRIPTION
PC-7	C-1	.01 MFD. CONDENSER 400 V.	IR-13	R-8	2.2 MEG. RESISTOR 1/2W 20%
PC-5	C-2	.05 MFD. CONDENSER 400 V.	IR-1	R-9	470 Ω RESISTOR 1/2W 20%
PC-8	C-3	.1 MFD. CONDENSER 400 V.	IR-42	R-10	1000 Ω RESISTOR 1W 10%
MC-2	C-4	100 MMFD. MICA CONDENSER	IR-14	R-11	150 Ω RESISTOR 1/2W 20%
MC-4	C-5	50 MMFD. MICA CONDENSER	IR-17	R-12	33 Ω RESISTOR 1/2W 20%
MC-5	C-6	500 MMFD. MICA CONDENSER	GC-5	C-1	GANG CONDENSER
EC-14	C-7	20 MFD.		C-2	
	C-8	40 MFD. 150 WV. ELECTROLYTIC		C-3	ANT. TRIMMER
	C-9	40 MFD.		C-4	OSC. TRIMMER
EC-2	C-10	10 MFD. 25 WV. ELECTROLYTIC			
			LT-6	T-1	INPUT I.F. TRANSFORMER
IR-20	R-1	220M Ω RESISTOR 1/2W 20%	LT-7	T-2	OUTPUT I.F. TRANSFORMER
IR-15	R-2	2200 Ω RESISTOR 1/2W 20%		T-3	OUTPUT TRANSFORMER
IR-10	R-3	47M Ω RESISTOR 1/2W 20%			
IR-9	R-4	22M Ω RESISTOR 1/2W 20%	LL-17	L-1	LOOP ANT.
IR-23	R-5	3.3 MEG. RESISTOR 1/2W 20%	LO-15	L-2	OSC COIL
IR-11	R-6	470M Ω RESISTOR 1/2W 20%			
VC-14	R-7	MEG. VOLUME CONTROL	SPK-12	SP	5" P.M. SPEAKER

PART NO.		DESCRIPTION
SW-2	S-1	TONE SWITCH
	S-2	SWITCH ON VOLUME CONTROL
SW-1	S-3	PHONO - RADIO SWITCH
	S-4	SWITCH ON RECORD CHANGER
AC-M-7	M	RECORD CHANGER MOTOR
AC-PU-7	P	CRYSTAL PICKUP ARM, CARTRIDGE & H
	PB	#47 PILOT BULB
CO-2	PL	LINE CORD

TUBE AND TRIMMER LOCATION

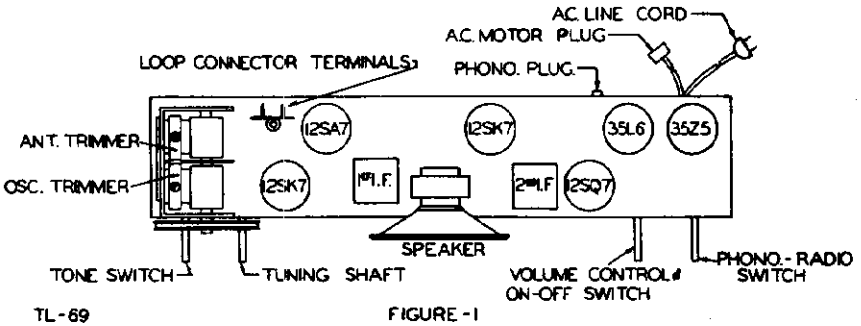

FIGURE - 1

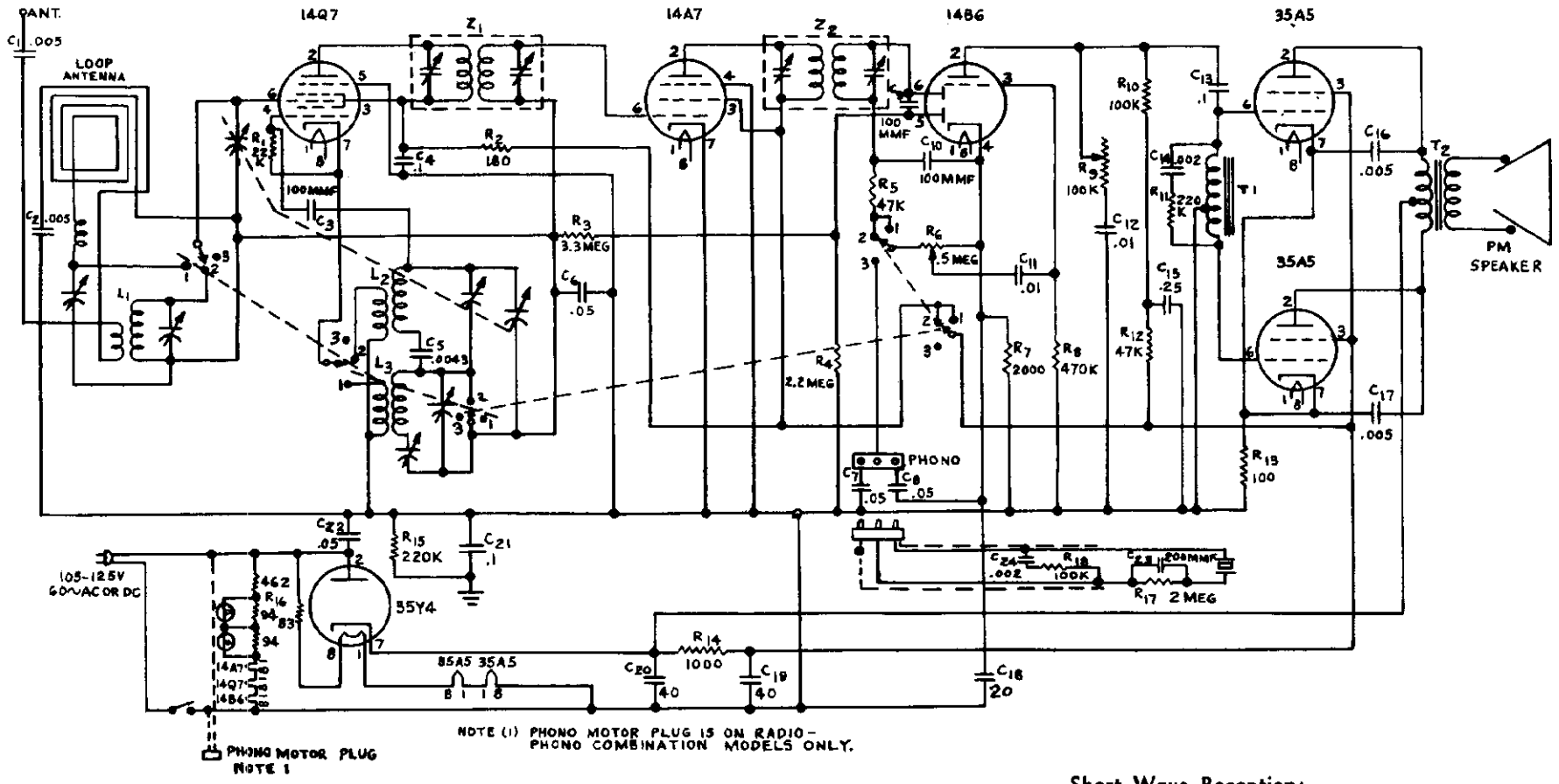

I.F PEAK 455 KC

Tube Complement:

1 type 14Q7 Oscillator-Converter
1 type 14A7 I.F. Amplifier
1 type 14B6 Det. A.V.C. and Amplifier
2 type 35A5 Power Amp.
1 type 35Y4 Rectifier

radio receiver designed to operate on:

1. 105-125 volts A.C. 60 cycles.
2. 105-125 volts D.C.*

Power drawn is 50 watts.

Short Wave Reception:

With a good antenna connected to it this receiver is able to pick up foreign and domestic short wave programs. International broadcasts may be heard in the following bands.

49 meter	6.0 — 6.2 Mc
31 meter	9.5 — 9.7 Mc
25 meter	11.7 — 11.9 Mc
19 meter	15.1 — 15.35 Mc
16 meter	17.75 — 17.85 Mc

Amateur radio stations may be heard on the 20 meter band from 14.0 to 14.4 Mc.

SPIEGEL

MODELS 7541, 7547, 8714, 8715, 8718

©John F. Rider

Tube and Trimmer Location.

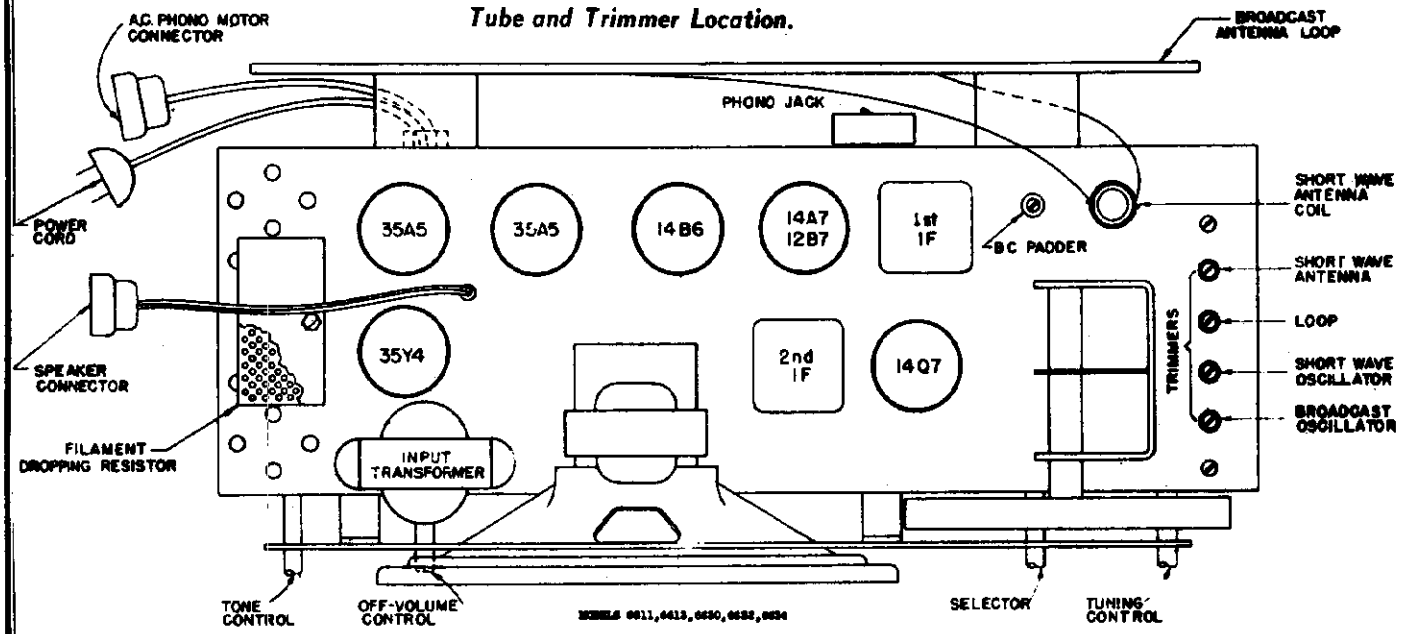

NOTE: FOR PHONO COMBINATION MODELS, SPEAKER IS REMOVED FROM CHASSIS & FILAMENT DROPPING RESISTOR IS LOCATED IN AREA WHERE SPEAKER IS SHOWN.

SPEAKER CONNECTOR IS USED ON PHONO COMBINATION MODELS ONLY.

VI. ALIGNMENT PROCEDURE:

Steps	*Connect output of Generator to*	*Tune Osc. to*	*Band Switch on*	*Tune Radio Dial to*	*Adjust the following for Max. Peak Output*
1	Tuning condenser stator (ant.) in series with .01 mfd	455 Kc	Bcst	Quiet point on high frequency end of dial	1st and 2nd IF transformers
2	Antenna term. of Ant. loop in series with 100 mmf.	1660 Kc	Bcst	Full clockwise (out of mesh)	B.C. Osc. Trimmer
3	Same	1500 Kc	Bcst	Signal (1500 Kc)	B.C. loop trimmer
4	Same	600 Kc	Bcst	600 Kc	Osc. padder (rock in)
5	Same	1660 Kc	Bcst	Full clockwise (out of mesh)	B.C. Osc. Trimmer
6	Ant. term. in series with 100 mmf and 400 ohm resistor	18.6 Mc	S.W.	Full clockwise (out of mesh)	S.W. Osc. Trimmer
7	Same	18.0 Mc	S.W.	Signal (18.0 Mc)	S.W. Ant. Trimmer (rock in)

Output meter is connected across voice coil. Receiver volume is turned to maximum.

Parts List:

C 1—.005 Mfd. 400V
C 2—.005 Mfd. 400V
C 3—100 Mmf. 20%
C 4—.1 Mfd. 200V
C 5—.0043 Mfd. 5%
C 6—.05 Mfd. 200V
C 7—.05 Mfd. 200V
C 8—.05 Mfd. 200V
C 9—100 Mmf. 20%
C10—100 Mmf. 20%
C11—.01 Mfd. 400V
C12—.01 Mfd. 400V
C13—.1 Mfd. 200V
C14—.002 Mfd. 200V
C15—.25 Mfd. 200V
C16—.005 Mfd. 400V
C17—.005 Mfd. 400V
C18—20 Mfd. Electrolytic (*CA25.020)
C19—40 Mfd. Electrolytic (*CA25.020)
C20—40 Mfd. Electrolytic (*CA25.020)
C21—.1Mfd. 200V
C22—.05 Mfd. 400V
C23—200 Mmf. 20%
C24—.002 Mfd. 200V paper
Z 1—1st I.F. Transformer (*ZC2.191-1)
Z 2—2nd I.F. Transformer (*ZC2.191-2)
T 1—Audio Choke (*TA15.018)
R 1—22K ¼W
R 2—180 ohms ¼W
R 3—3.3 Meg ¼W
R 4—2.2 Meg ¼W
R 5—47K ¼W
R 6—.5 Meg Variable (*RA9.066)
R 7—2000 ohms ¼W
R 8—470K ¼W
R 9—100K Variable (*RA9.068)
R10—100K ¼W
R11—220K ¼W
R12—47K ¼W
R13—100 ohms 1W
R14—1000 ohms 1W
R15—220K ¼W
R16—Wire Wound (*RA14.026)
R17—2 Meg ¼W
R18—100K ¼W
Pilot Light, Mazda No. 47, 150 Ma.

*Mfr. Part No.

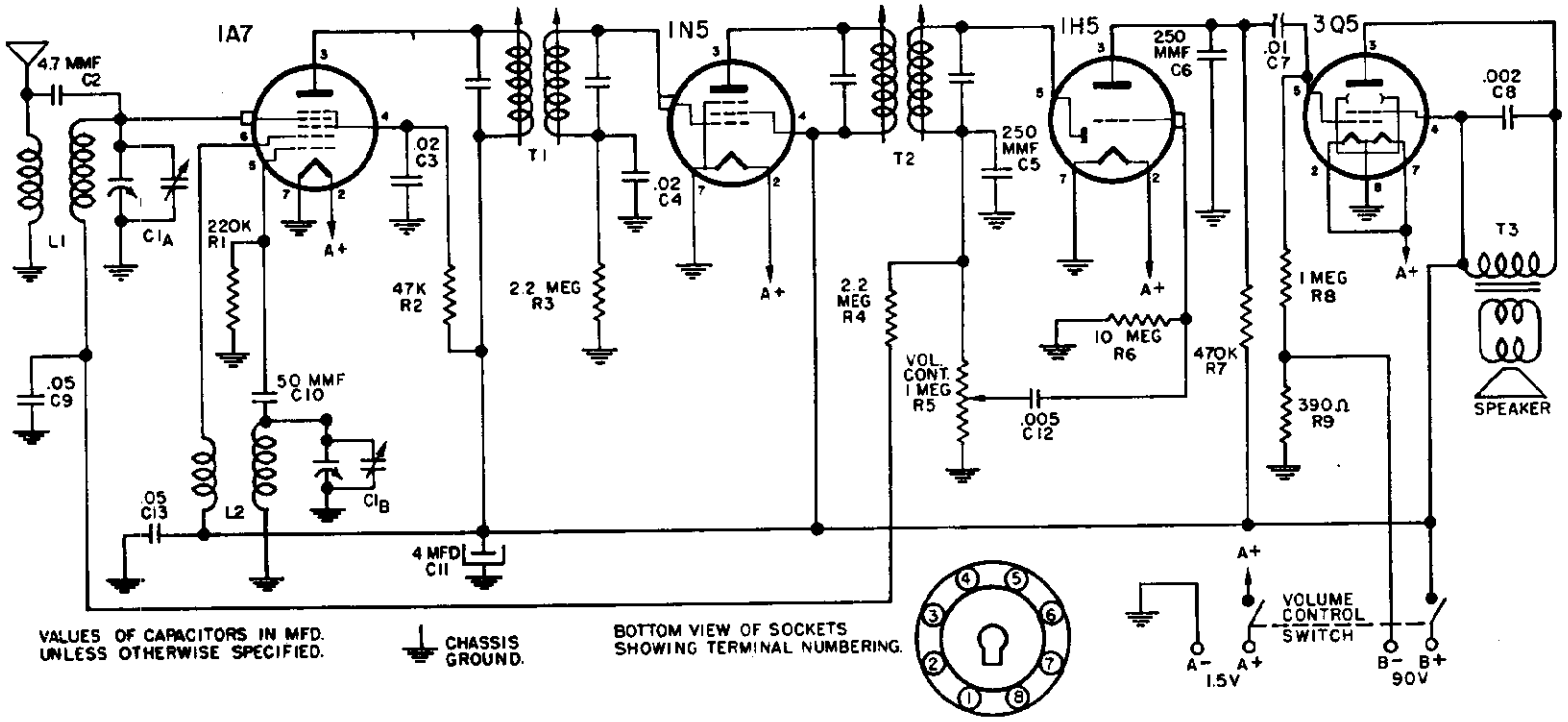

PARTS LIST

Code	Part No.	DESCRIPTION	Code	Part No.	DESCRIPTION	Code	Part No.	DESCRIPTION
C1A, C1B	B19-185	Variable Condenser (For model X132)	R1	A60-667	220K Ohm ½ Watt Resistor		B79-352	Speaker, 5" P.M.
	B19-186	Variable Condenser (For model YX132)	R2	A60-685	47K Ohm ½ Watt Resistor		A75-60	Tuning Shaft
C2	A83-355	4.7 MMFD Condenser	R3, R4	A60-684	2.2 Megohm ½ Watt Resistor		A45-118	Battery Plug
C3, C4	A16-150	.02 MFD 400 Volt Condenser	R5	A24-170	Volume Control, 1 Megohm		B67-515	Dial Scale
C5, C6	A15-176	250 MMFD Mica Condenser	R6	A60-663	10 Megohm, ½ Watt Resistor		58-31	Dial Pointer
C7	A16-156	.01 MFD 400 Volt Condenser	R7	A60-662	470K Ohm ½ Watt Resistor		48-21	Dial Crystal
C8	A16-155	.002 MFD 600 Volt Condenser	R8	A60-668	1 Megohm ½ Watt Resistor		A52-248	Knob, Ivory
C9, C13	A16-152	.05 MFD 200 Volt Condenser	R9	A60-665	390 Ohm ½ Watt Resistor		A42-436	Cabinet, Ivory, Plastic
C10	A15-175	50 MMFD Mica Condenser	L1	A10-414	Antenna Coil (For model X132)		D42-431	Cabinet, Walnut, Plastic
C11	A18-273	4 MFD 150 Volt Electrolytic Condenser		A10-485	Antenna Coil (For model YX132)		D42-437	Cabinet, Walnut, Wood
C12	A16-153	.005 MFD 600 Volt Condenser	L2	A10-415	Oscillator Coil (For model X132)		A52-245	Knob, Walnut
				A10-505	Oscillator Coil (For model YX132)			
			T1, T2	A10-506	1st and 2nd I.F. Transformer			
			T3	B80-232	Output Transformer			

MODEL 13203 SPIEGEL

540 kilocycles to 1725 kilocycles (K.C.). The tubes

1A7 GT—Osc. Converter	1H5 GT—AVC Det. Audio Amplifier
1N5 GT—I. F. Amplifier	3Q5 GT—Power Output

This receiver has been designed to operate on a self-contained battery containing both the "B" battery (90 Volts) and the "A" battery (1½ Volts) such as General #60B6L.

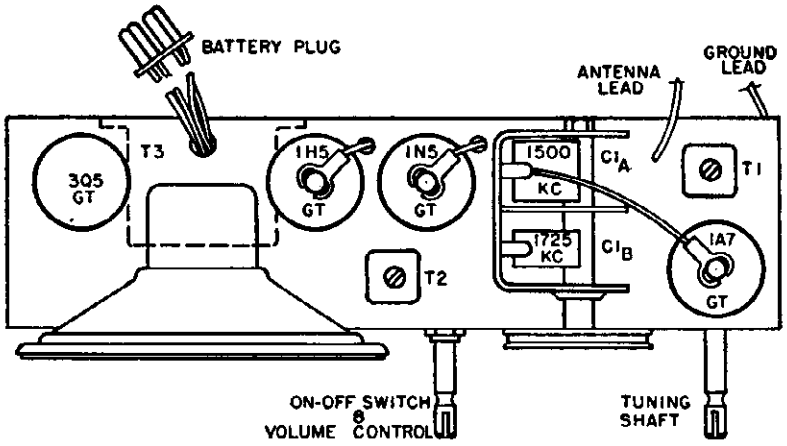

ALIGNMENT PROCEDURE

With an output meter connected across the voice coil of the speaker, the output meter reading for 50 milliwatts is .4 volts using a signal which is modulated 30% at 400 c.p.s. Follow through the procedure as outlined below for proper alignment.

Connect the signal generator to the grid cap of the 1A7 GT Tube through a .1 MFD. Condenser. Connect the ground lead of the generator to the chassis. Adjust the signal generator to 455 K.C. and set the variable condenser of the receiver to minimum capacity (fully opened). With the volume control full on and minimum output from the signal generator adjust the two trimmers on the first and second I.F. transformers for maximum output.

Now connect the signal generator to the antenna connection of the receiver through a .00025 condenser. Adjust the signal generator frequency to 1725 K.C. and set the variable condenser to minimum capacity (fully opened), and adjust the oscillator trimmer (C1B) for maximum output. Set signal generator to 1500 K.C. and tune receiver to signal. Adjust the antenna trimmer (C1A) on the variable condenser for maximum output.

SPIEGEL MODEL 131504

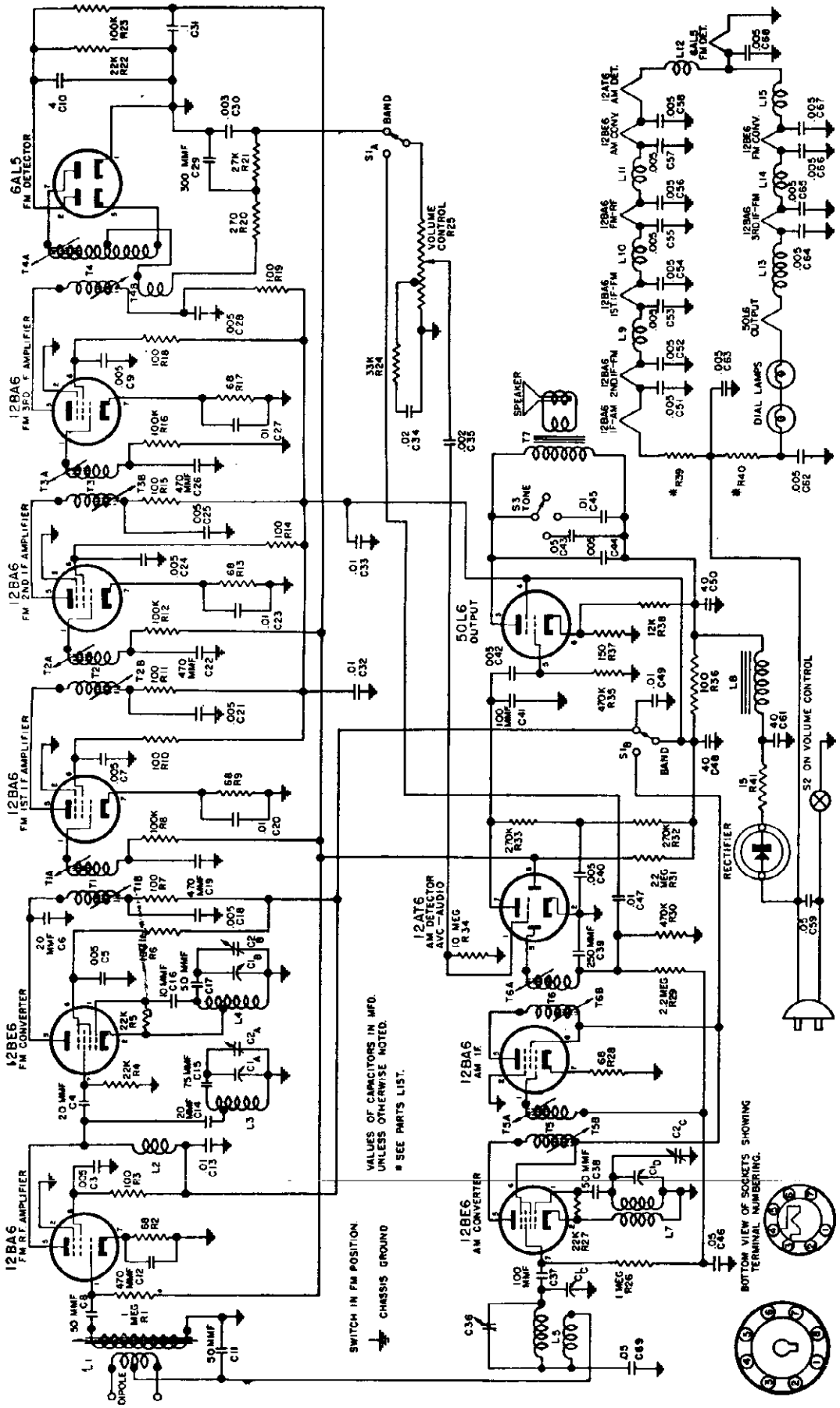

FIG. 3 SCHEMATIC DIAGRAM

©John F. Rider

ALIGNMENT PROCEDURE

STEPS	RECEIVER DIAL SETTING	BAND SWITCH POSITION	SIGNAL GENERATOR FREQUENCY	DUMMY ANTENNA	SIGNAL GENERATOR CONNECTIONS	OUTPUT INDICATOR	TRIMMER ADJUSTMENT	TRIMMER FUNCTION	REMARKS
1	Minimum capacity	AM	455 KC 400 cycle AM	.1 MFD	High side—Grid of AM converter tube (12BE6) Low side—Chassis	Output Meter across voice coil	T5A, T5B T6A, T6B	AM I.F.	Adjust for maximum output
2	"	"	1600 KC 400 cycle AM	.00025 MFD	"	"	C2C	AM Oscillator	Adjust for maximum output
3	1400 KC	"	1400 KC 400 cycle AM	"	High side—One ant. terminal Low side—Other ant. terminal	"	C36 (on back)	AM Antenna	Adjust for maximum output
4	Any position where there is no station interference.	FM	10.7 MC unmodulated .1 volt output.	.1 MFD	High side—Grid of 3rd I.F. amplifier tube (12BA6) Low side—Chassis	Connect V.T.V.M. to plate of Ratio detector tube, pin 2 (6AL5)	T4B	Ratio detector primary	Adjust for maximum negative voltage, about —5 volts
5	"	"	10.7 MC 400 cycle 30% Modulation. (See note A)	"	"	Connect scope to audio take off point (across C30)	T4A	Ratio detector secondary	Adjust for a balanced pattern on scope. See Fig. 4.
6	"	"	"	"	High side—Grid of 2nd I.F. amplifier tube (12BA6) Low side—Chassis	Connect scope across 100K ohm grid return resistor of 3rd I.F. (R16)	T3A, T3B	FM 3rd I.F.	Adjust for maximum gain and best pattern on scope. See Fig. 5 (See note "B" below)
7	"	"	"	"	High side—Grid of 1st I.F. amplifier tube (12BA6) Low side—Chassis	"	T2A, T2B	FM 2nd I.F.	Adjust for maximum gain and best pattern on scope. See Fig. 6.
8	"	"	"	"	High side—Plate of FM R.F. tube, pin 5 (12BA6) Low side—Chassis	"	T1A, T2B	FM 1st I.F.	Adjust for maximum gain and best pattern on scope. See Fig. 7.
9	109 MC	"	109 MC 400 cycle 30% modulation. (22.5 KC Deviation)	150 ohms in each lead.	High side—One ant. terminal Low side—Other ant. terminal	Connect output meter across voice coil	C2B	FM Oscillator	Adjust for maximum output (remove AVC ground)
10	103 MC	"	103 MC 400 cycle 30% modulation. (22.5 KC Deviation)	"	"	"	C2A	FM R.F.	Adjust for maximum output
11	100 MC	"	100 MC 400 cycle 30% modulation. (22.5 KC Deviation)	"	"	"	L1	FM Antenna	Adjust for maximum output

NOTE A: When aligning the FM I.F. circuits, keep the out put from the signal generator as low as possible.

NOTE B: The AVC circuit must be grounded to the chassis when aligning the FM I.F. circuits.

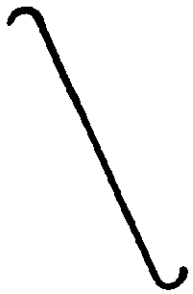

FIGURE 4

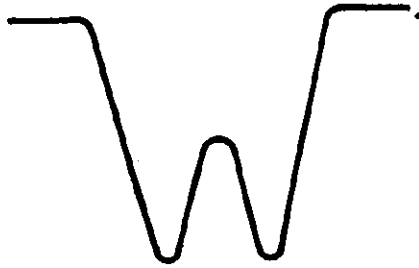

FIGURE 5



FIGURE 6

FIGURE 7

EQUIPMENT USED FOR ALIGNMENT

Vacuum tube voltmeter.
AM Signal generator
FM Sweep generator.
Oscilloscope.
Insulated screw driver.
Dummy antenna:
.1 MFD condenser
.00025 MFD mica condenser
150 ohm resistor (2)
Output meter.

SPIEGEL MODEL 131504

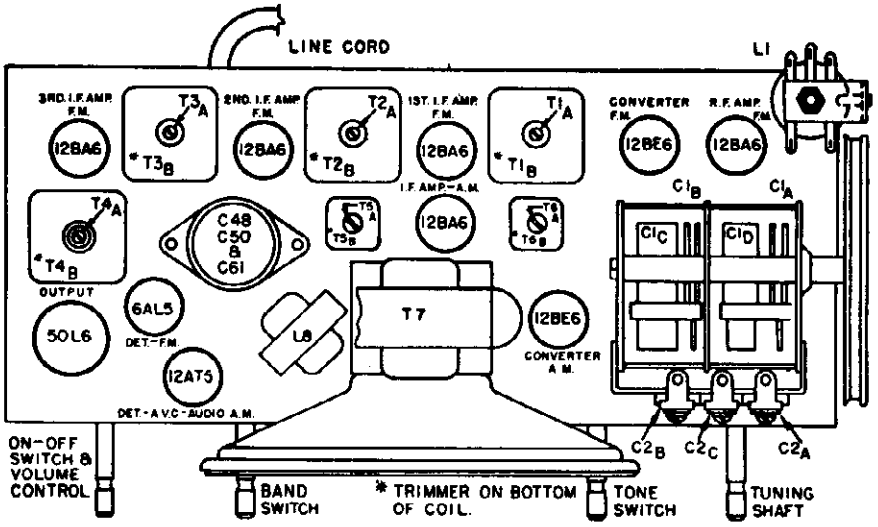

FIG. 1 TUBE AND TRIMMER LOCATIONS

VOLTAGE CHART

TUBE No.	PIN 1	PIN 2	PIN 3	PIN 4	PIN 5	PIN 6	PIN 7	PIN 8
12BE6 AM—Converter	—6	0	29ac	17ac	100	100	0	
12BA6 AM—I.F. Amp.	0	0	75ac	63ac	100	100	1	
12AT6 AM—Det.-AVC-Audio	0	0	17ac	6ac	0	0	30	
12BA6 FM—R.F. Amp.	0	0	29ac	39ac	100	95	1	
12BE6 FM—Converter	0	0	6ac	18ac	95	95	0	
12BA6 FM—1st I.F. Amp.	0	0	39ac	50ac	95	95	1	
12BA6 FM—2nd I.F. Amp.	0	0	50ac	63ac	95	95	1	
12BA6 FM—3rd I.F. Amp.	0	0	18ac	31ac	95	95	1	
6AL5 FM—Ratio detector	0	—3	0	6ac	—4	0	0	
50L6GT Power output	0	31ac	85	95	0	30	80ac	6.5

All voltage readings are taken from tube pin to chassis.

All measurements are made with no signal, using a 20,000 ohm per volt meter.

AC input voltage must be maintained at 117 volts for accurate readings.

AC voltages shown are at 1000 ohms per volt.

All voltages shown are approximate.

RESISTANCE CHART

TUBE No.	PIN 1	PIN 2	PIN 3	PIN 4	PIN 5	PIN 6	PIN 7	PIN 8
12BE6 AM—Converter	20K	1	27	18	25K	25K	3 meg	
12BA6 AM—I. F. Amp.	2 meg.	0	70	62	25K	25K	70	
12AT6 AM—Det.-AVC-Audio	10 meg.	0	18	5	470K	120K	540K	
12BA6 FM—R.F. Amp.	1 meg.	0	27	40	25K	25K	70	
12BE6 FM—Converter	20K	0	5	18	25K	25K	22K	
12BA6 FM—1st I.F. Amp.	220K	0	40	50	25K	25K	70	
12BA6 FM—2nd I.F. Amp.	220K	0	50	62	25K	25K	70	
12BA6 FM—3rd I.F. Amp.	100K	0	18	28	25K	25K	70	
6AL5 FM—Ratio Detector	0	25K	0	5	750K	0	750K	
50L6GT Power output	0	28	25K	25K	450K	250K	70	150

All resistance readings are taken from tube pin to chassis.

Due to manufacturing tolerance on component parts, resistance readings may vary as much as 20%.

All readings are shown in ohms unless otherwise noted.

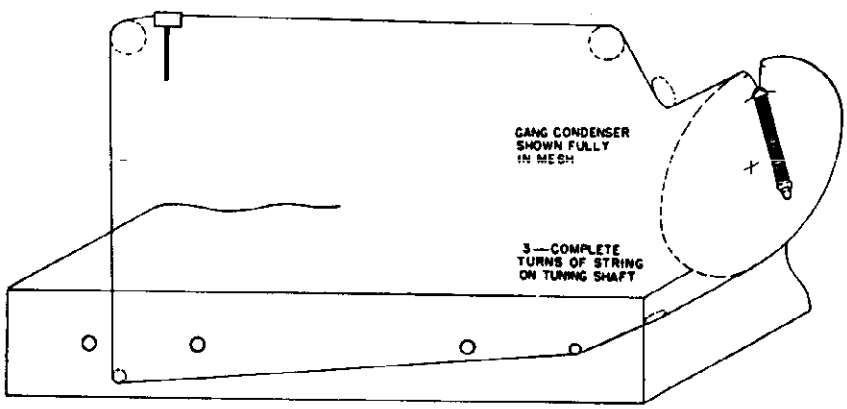

FIG. 2 DIAL CORD STRINGING

MODEL 131504

SPIEGEL

FM-AM radio receiver designed for use on 117 volts 60 cycles AC or DC current.

It covers the standard AM broadcast frequency range, 540-1600 kilocycles (KC) and the FM frequency range from 88 to 108 megacycles (MC).

SPECIFICATIONS

Power Supply	117 volts AC DC
Power Consumption	55 Watts
Frequency Range FM	88 to 108 MC.
Frequency Range AM	540 to 1600 KC.
I.F. frequency FM	10.7 MC.
I.F. frequency AM	455 KC.
Band width, FM, Ratio detector	360 KC.
Band width, FM, 2nd I.F.	280 KC.
Band width, FM, 1st I.F.	240 KC.
Band width, FM, Converter	180 KC.
Tubes	10
Rectifier	Selenium, 150 ma.
Speaker	6" P.M.

The tubes used are as follows:

12BA6	FM, R.F. Amplifier
12BE6	FM, Converter
12BA6	FM, 1st I.F. Amplifier
12BA6	FM, 2nd I.F. Amplifier
12BA6	FM, 3rd I.F. Amplifier
6AL5	FM, Ratio detector
12BE6	AM, Converter
12BA6	AM, I.F. Amplifier
12AT6	AM, Detector-AVC-1st audio
50L6GT	Power output
A83-463	Selenium rectifier
No. 47	Pilot lights (2)

PARTS LIST

Schematic Diagram Reference	Part No.	Description
R8, R12, R16, R23	A60-727	100 K Ohm 20% ½ Watt
R20	A60-723	270 Ohm 20% ½ Watt Resistor
R21	A60-745	27 K Ohm 10% ½ Watt Resistor
R24	A60-748	33 K Ohm 10% ½ Watt Resistor
R25	B24-173	Volume Control with Switch
R29, R31	A60-726	2.2 Megohm 20% ½ Watt
R30, R35	A60-731	470K Ohm ½ Watt Resistor 20%
R32, R33	A60-747	270K Ohm 20% ½ Watt
R34	A60-728	10 Megohm 20% ½ Watt
R36	A60-755	100 Ohm 1 Watt 10% Resistor
R37	A60-741	150 Ohm 10% 1 Watt Resistor
R38	A60-751	12K Ohm 10% 1 Watt Resistor
R39	A60-734	Special Compensating Resistor (Order from Spiegel)
R40	A60-735	Special Compensating Resistor (Order from Spiegel)
R41	A60-738	15 Ohm — Glassohm 10% 3 Watt Resistor
L1	SB10-488	Antenna Coil, FM
L3	B10-489	R. F. Coil, F.M.
L4	B10-490	Oscillator Coil, F. M.
L5	A10-507	Antenna Coil, A. M.
L7	B10-491	Oscillator Coil, A. M.
L8	A33-225	Filter Choke
L2, L9, L10, L11, L12, L14, L15	A33-226	Filament Choke, 11 mh.
L13	A33-227	Filament Choke
S1A, S1B	A69-181	Switch, F.M.—A.M.
S2		Switch, ON-OFF, (on volume control)
S3	A26-125	Tone Control
T1	SA10-493	1st I. F. Transformer, F. M.
T2, T3	SC10-494	2nd & 3rd I. F. Transformer, F.M.
T4	SC10-492	Ratio detector transformer, F.M.
T5	A10-499	1st I. F. transformer, A. M.
T6	A10-500	2nd I. F. transformer, A. M.
T7	A80-234	Output transformer
	B39-285	Drum, for variable condenser
	A23-151	Line cord
	A83-463	Selenium rectifier, 150 ma.
	A75-63	Tuning shaft
	B79-354	Speaker, 6¼" P. M.
	A21-111	Cover, for compensating resistors
	SB82-49	F. M. antenna assembly, Dipole
	B83-325	Speaker baffle
	D42-379	Cabinet, Walnut
	C67-534	Dial Scale
	A98-4	Grille Cloth
	A52-279	Knob, Walnut
	A83-292	Retainer, dial scale, right
	A83-293	Retainer, dial scale, left
	C83-580	Cabinet back
	B83-503	Dial diffusing plate
	A58-65	Dial pointer

	Part No.	Description
C1A, C1B, C1C, C1D	C19-191	Variable Condenser
C2A, C2B, C2C	A20-144	FM—R.F. Trimmer; FM—Oscillator Trimmer; AM—Oscillator Trimmer
C3, C5, C7, C9, C18, C21, C23, C24, C25, C28, C40, C51, C52, C53, C54, C55, C56, C57, C58, C62, C64, C65, C66, C67, C68	A16-177	005 MFD Ceramic Condenser (Centralab No. DA048 or Equiv.)
C4, C14	A15-198	20 MMF 20% Ceramic Condenser (Erie Style "A" or Equiv.)
C6	A15-193	20 MMF 20% Ceramic Condenser (Erie Style K or Equiv.)
C8, C17	A15-194	50 MMF 10% Ceramic Condenser (Erie Style K or Equiv.)
C10	A18-273	4 MFD 150 Volt Elec. Condenser
C34,	A16-150	.02 MFD 400 Volt Tubular Condenser
C12, C19, C22, C26	A15-200	470 MMF 20% Mica Condenser
C13, C32, C33, C47 C49	A16-165	.01 MFD 200 V Tubular Condenser
C15	A15-195	75 MMF 10% Ceramic Condenser (Erie Style K or Equiv.)
C16	A15-197	10 MMF 10% Ceramic Condenser (Erie Style A or Equiv.)
C20, C23, C27	A16-163	.01 MFD 120 V Molded Paper Condenser
C42, C44	A16-153	.005 MFD 600 Volt Tubular Condenser
C29	A15-199	300 MMF 20% Mica Condenser
C30	A16-180	.003 MFD 200 V Molded Paper Condenser
C31	A16-157	.1 MFD 200 V Tubular Condenser
C35	A16-178	.002 MFD 200 V Molded Paper Condenser
C36	A20-139	AM Antenna Trimmer
C37	A15-190	100 MMF 20% Mica Condenser
C11, C38	A15-191	50 MMF 20% Mica Condenser
C39	A15-176	250 MMF 20% Mica Condenser
C41	A15-196	100 MMF 20% Ceramic Condenser (Erie Style K or Equiv.)
C46, C69, C43, C59	A16-158	.05 MFD 400 V Tubular Condenser
C45	A16-156	.01 MFD 400 V Tubular Condenser
C48, C50, C61	A18-284	40 MFD 150 Volt Electrolytic Condenser; 40 MFD 300 Volt Electrolytic Condenser; 40 MFD 300 Volt Electrolytic Condenser
R1, R26	A60-688	1 Megohm Resistor 20% ½ Watt
R2, R13, R17, R28, R9	A60-742	68 Ohm Resistor 10% ½ Watt
R3, R6, R7, R10, R19, R11, R14, R15, R18	A60-743	100 Ohm Resistor 20% ½ Watt
R4, R5, R22, R27	A60-744	22 K Ohm Resistor 10% ½ Watt

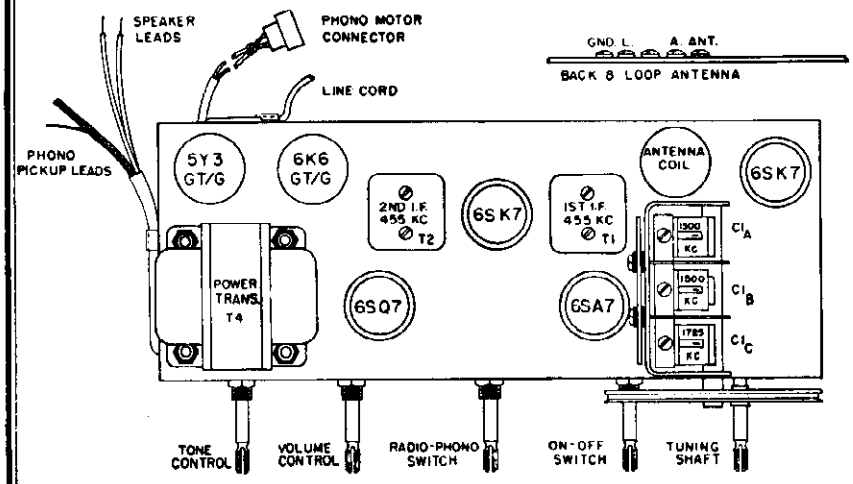

Fig. 1 Chassis. Top View

TUBE COMPLEMENT

The tube complement of this receiver consists of the following:

1—6SK7—R.F. Amplifier
1—6SA7—Mixer—OSC.
1—6SK7—I.F. Amplifier
1—6SQ7—Det. AVC—Audio
1—6K6—Power Output
1—5Y3—Rectifier

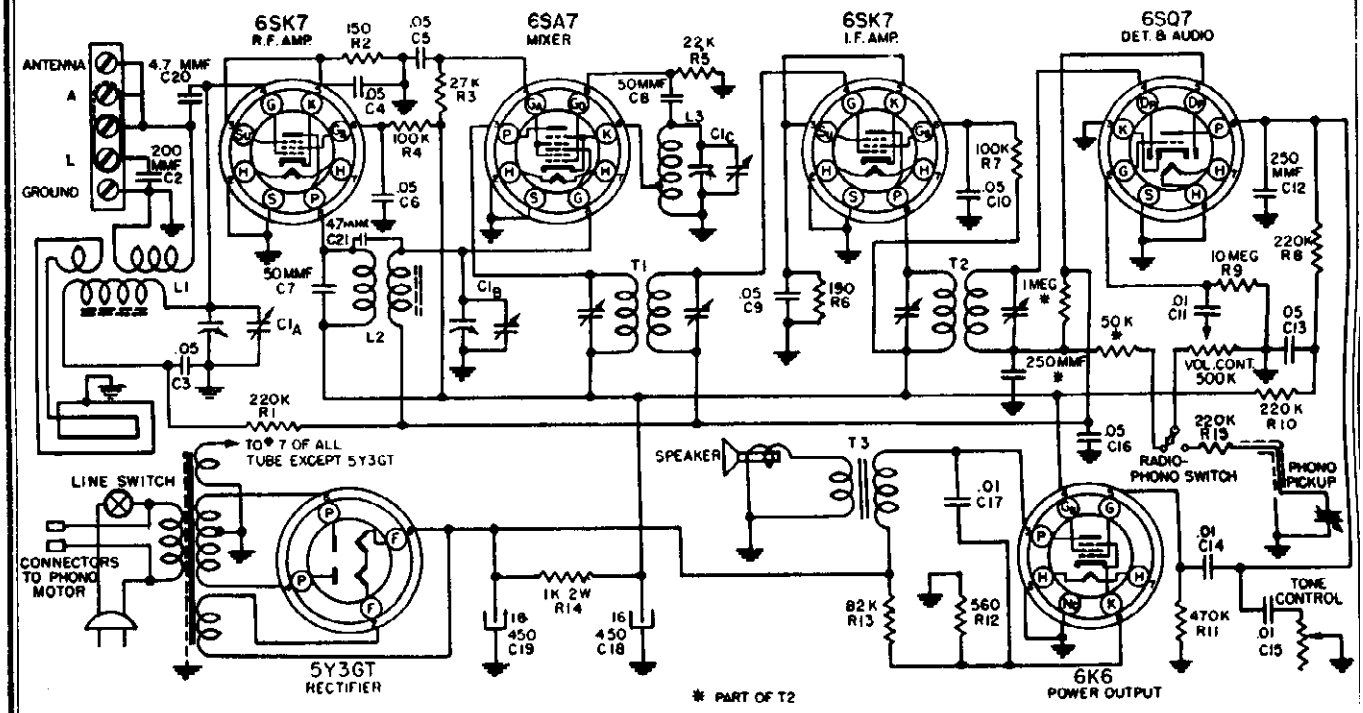

Fig. 2 Schematic Diagram

ALIGNMENT PROCEDURE

Volume control—Maximum: all adjustments.
Tone Control—Treble: Full Clockwise Rotation.
Connect ground lead of signal generator to radio chassis.
Connect dummy antenna in series with output lead of signal generator.
Connect output meter across voice coil of speaker.

The following equipment is necessary for proper alignment:
Signal generator that will provide the test frequencies as listed.
Output meter.
Non-metallic screwdriver.
Dummy antennas—.1 mfd., .00025 mfd.

Position of Variab'e	Generator Frequency	Dummy Ant. mfd.	Generator Connections	Trimmer Adjustment	Trimmer Function
Minimum Capacity (Fully Opened)	455 K.C.	.1	6SA7 Grid (Stator of CIB)	T1 T2	I. F.
Minimum Capacity (Fully Opened)	1725 K.C.	.00025	*Ant. Terminal on Loop	CIC	Osc.
Tune in signal From Generator	1500 K.C.	.00025	*Ant. Terminal on Loop	CIB	R. F.
Tune in signal From Generator	1500 K.C.	.00025	*Ant. Terminal on Loop	CIA	Ant.

*Be sure coupling link is in correct position for external antenna operation. See Fig 3.

Repeat the above alignment procedure as a final check.

With an output meter connected across the voice coil of the speaker, the output meter reading for ½ watt is 1.25 volts using a signal which is modulated 400 c.p.s.

POWER SUPPLY

This receiver is designed to operate from a power source of 117 volts A.C. 60 cycle current. If in doubt about the power rating in your location consult your local power company for this information. Never attempt to operate this radio on any current other than that specified.

ANTENNA and GROUND CONNECTIONS

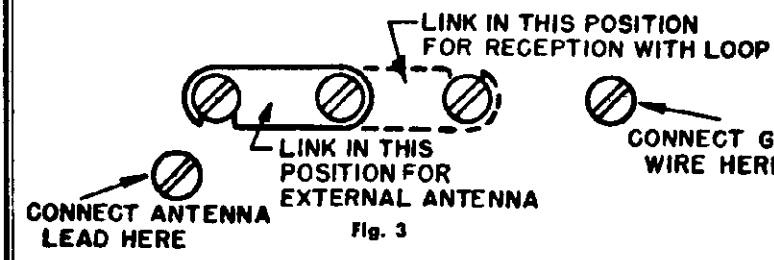

Fig. 3

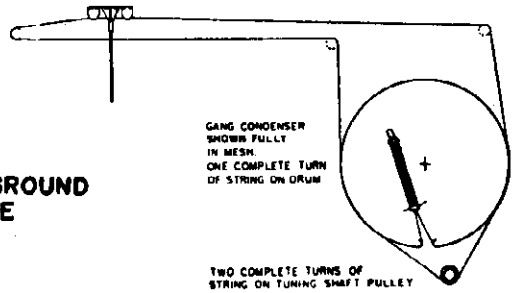

PARTS LIST

CONDENSERS

Circuit Reference	Part No.	Description
C1A, C1B, C1C	B19-186	Variable condenser
C2	B15-189	200 MMF Mica condenser (on loop)
C3, C4, C9, C16	A16-152	.05 MFD 200 volt condenser
C5, C6, C10, C13	A16-158	.05 MFD 400 volt condenser
C7, C8	A15-175	50 MMF mica condenser
C11, C14, C15	A16-156	.01 MFD 400 volt condenser
C12	A15-176	250 MMF mica condenser
C17	A16-168	.01 MFD 1000 volt condenser
C18	A18-279	16 MFD 450 volt electrolytic condenser
C19	A18-274	16 MFD 450 volt electrolytic condenser
C20, C21	A83-355	4.7 MMF condenser

RESISTORS

R1, R8, R10, R15	A60-667	220K ohm ½ watt resistor
R2, R6	A60-686	150 ohm ½ watt resistor
R3	A60-692	27K ohm 1 watt resistor
R4, R7	A60-671	100K ohm ½ watt resistor
R5	A60-659	22K ohm ½ watt resistor
R9	A60-663	10 megohm ½ watt resistor
R11	A60-662	470K ohm ½ watt resistor
R12	A60-701	560 ohm 1 watt resistor
R13	A60-700	82K ohm 1 watt resistor
R14	A60-699	1000 ohm 2 watt resistor

COILS

L1	C10-459	Antenna coil
L2	B10-452	R. F. Coil
L3	B10-446	Oscillator coil
T1	B10-412	1st I.F. transformer
T2	B10-444	2nd I. F. transformer

MISCELLANEOUS

T3	A80-222	Output transformer
T4	C80-223	Power transformer
	A69-169	Switch, on-off
	A26-123	Tone control
	A24-169	Volume control
	A84-41	Dial drive shaft and pulley assembly
	B79-359	Speaker, 10" P. M.
	S84-234	Loop antenna and Back assembly
	C67-529	Dial scale
	A52-263	Knob, (tuning)
	A52-264	Knob, (tone)
	A52-265	Knob, (volume)
	A52-266	Knob, (on-off)
	A52-267	Knob, (radio-phono)
	B58-67	Dial pointer
	A83-537	Retainer, dial scale
	A69-180	Switch, radio-phono
	11200	Milwaukee Automatic Record Changer

SPIEGEL MODEL 138124

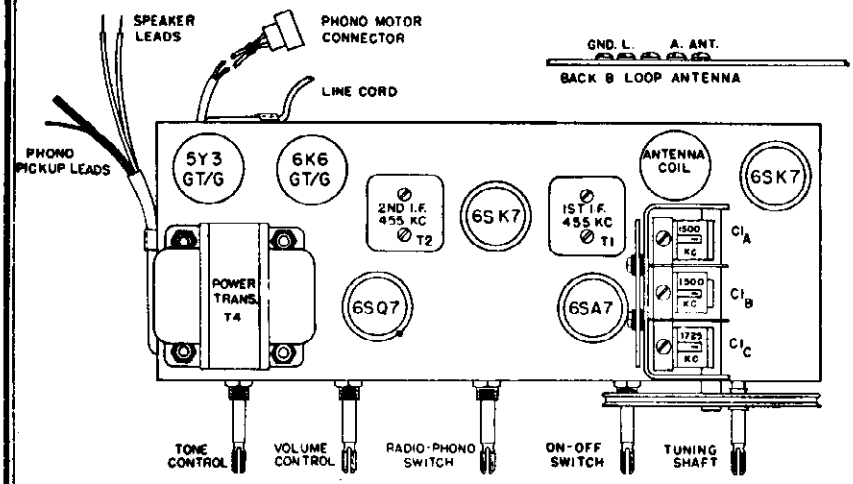

Fig. 1 Chassis, Top View

TUBE COMPLEMENT

The tube complement of this receiver consists of the following:

1—6SK7—R.F. Amplifier
1—6SA7—Mixer—OSC.
1—6SK7—I.F. Amplifier
1—6SQ7—Det. AVC—Audio
1—6K6—Power Output
1—5Y3—Rectifier

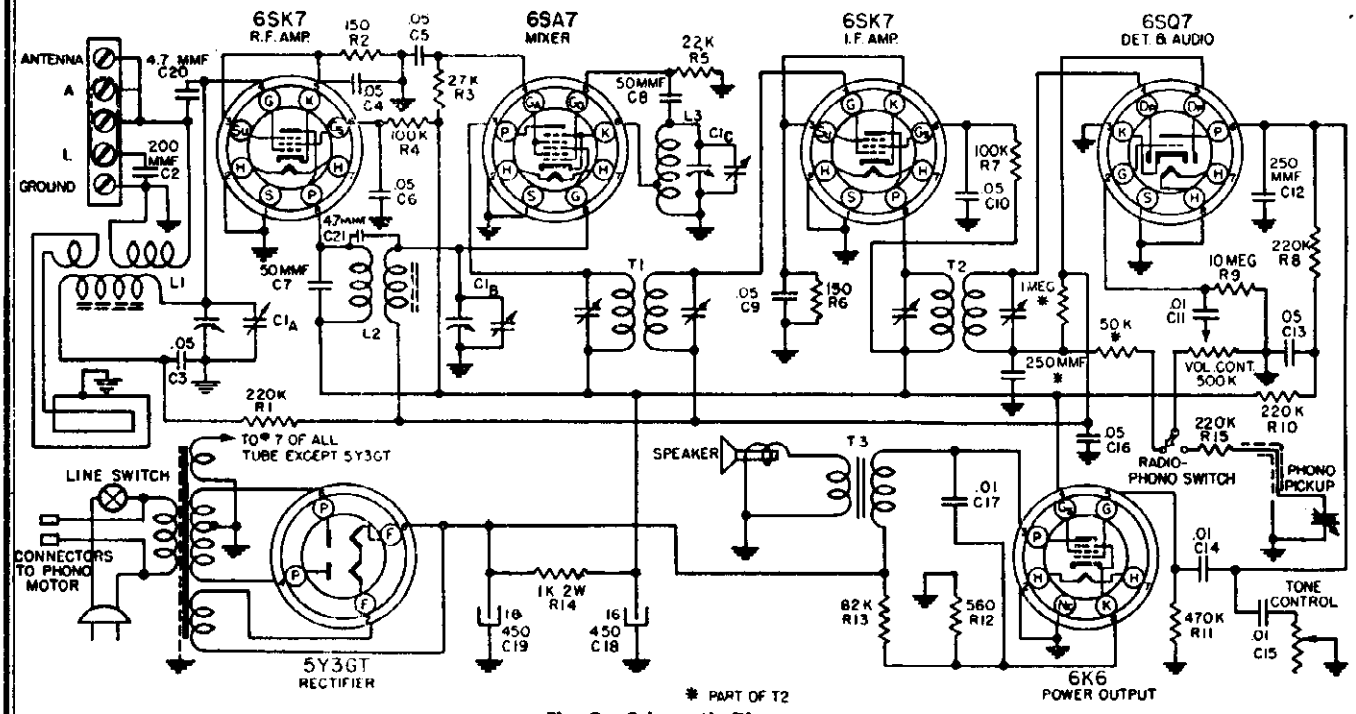

Fig. 2 Schematic Diagram

ALIGNMENT PROCEDURE

Volume control—Maximum; all adjustments.
Tone Control—Treble: Full Clockwise Rotation.
Connect ground lead of signal generator to radio chassis.
Connect dummy antenna in series with output lead of signal generator.
Connect output meter across voice coil of speaker.

The following equipment is necessary for proper alignment:
Signal generator that will provide the test frequencies as listed.
Output meter.
Non-metallic screwdriver.
Dummy antennas—.1 mfd., .00025 mfd.

Position of Variable	Generator Frequency	Dummy Ant. mfd.	Generator Connections	Trimmer Adjustment	Trimmer Function
Minimum Capacity (Fully Opened)	455 K.C.	.1	6SA7 Grid (Stator of C1B)	T1 T2	I. F.
Minimum Capacity (Fully Opened)	1725 K.C.	.00025	*Ant. Terminal on Loop	C1C	Osc.
Tune in signal From Generator	1500 K.C.	.00025	*Ant. Terminal on Loop	C1B	R. F.
Tune in signal From Generator	1500 K.C.	.00025	*Ant. Terminal on Loop	C1A	Ant.

*Be sure coupling link is in correct position for external antenna operation. See Fig 3.

Repeat the above alignment procedure as a final check.

With an output meter connected across the voice coil of the speaker, the output meter reading for ½ watt is 1.25 volts using a signal which is modulated 400 c.p.s.

MODEL 138124 SPIEGEL

POWER SUPPLY

This receiver is designed to operate from a power source of 117 volts A.C. 60 cycle current. If in doubt about the power rating in your location consult your local power company for this information. Never attempt to operate this radio on any current other than that specified.

ANTENNA and GROUND CONNECTIONS

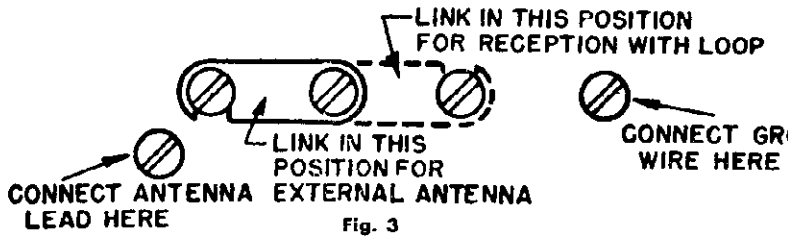

Fig. 3

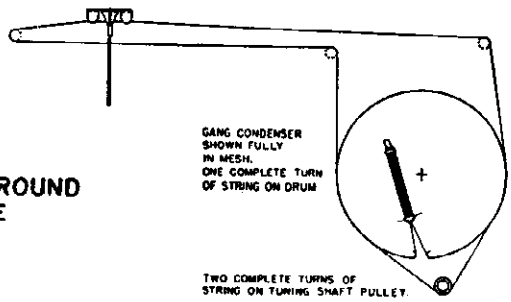

PARTS LIST

Circuit Reference	Part No.	Description
		CONDENSERS
C1A, C1B, C1C	B19-186	Variable condenser
C2	B15-189	200 MMF Mica condenser (on loop)
C3, C4, C9, C16	A16-152	.05 MFD 200 volt condenser
C5, C6, C10, C13	A16-158	.05 MFD 400 volt condenser
C7, C8	A15-175	50 MMF mica condenser
C11, C14, C15	A16-156	.01 MFD 400 volt condenser
C12	A15-176	250 MMF mica condenser
C17	A16-168	.01 MFD 1000 volt condenser
C18	A18-279	16 MFD 450 volt electrolytic condenser
C19	A18-274	16 MFD 450 volt electrolytic condenser
C20, C21	A83-355	4.7 MMF condenser
		RESISTORS
R1, R8, R10, R15	A60-667	220K ohm ½ watt resistor
R2, R6	A60-686	150 ohm ½ watt resistor
R3	A60-692	27K ohm 1 watt resistor
R4, R7	A60-671	100K ohm ½ watt resistor
R5	A60-659	22K ohm ½ watt resistor
R9	A60-663	10 megohm ½ watt resistor
R11	A60-662	470K ohm ½ watt resistor
R12	A60-701	560 ohm 1 watt resistor
R13	A60-700	82K ohm 1 watt resistor
R14	A60-699	1000 ohm 2 watt resistor
		COILS
L1	C10-459	Antenna coil
L2	B10-452	R. F. Coil
L3	B10-446	Oscillator coil
T1	B10-412	1st I.F. transformer
T2	B10-444	2nd I. F. transformer
		MISCELLANEOUS
T3	A80-222	Output transformer
T4	C80-223	Power transformer
	A69-169	Switch, on-off
	A26-123	Tone control
	A24-169	Volume control
	A84-41	Dial drive shaft and pulley assembly
	B79-359	Speaker, 10" P. M.
	S84-248	Loop antenna and Back assembly
	C67-533	Dial scale
	A52-263	Knob, (tuning)
	A52-264	Knob, (tone)
	A52-265	Knob, (volume)
	A52-266	Knob, (on-off)
	A52-267	Knob, (radio-phono)
	A58-68	Dial pointer
	B83-471	Retainer, dial scale
	A69-180	Switch, radio-phono
	11200	Milwaukee Automatic Record Changer

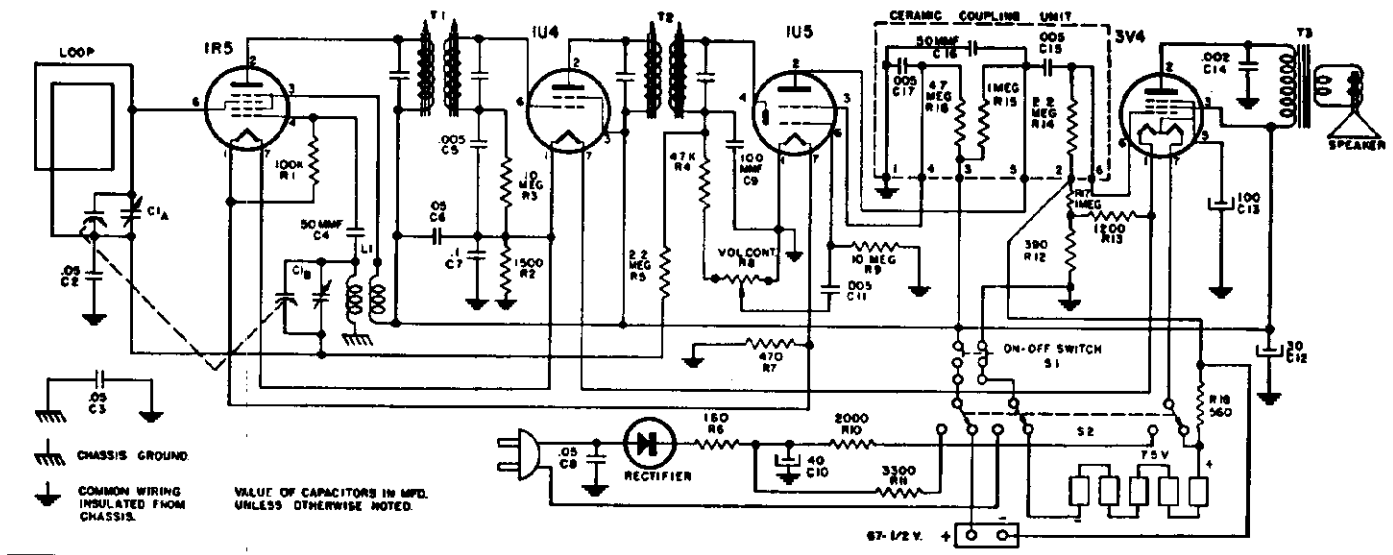

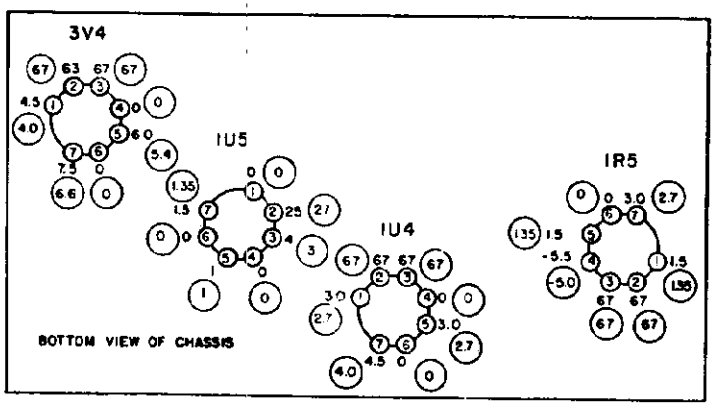

VOLTAGE CHART

All voltages are measured from tube pin to common negative with a 20,000 ohm per volt voltmeter.

Voltages shown in circles are obtained when set is operated on 117 volt current.

Voltages shown outside the circles are obtained when the set is operated on batteries. New batteries in good condition should be used for these measurements.

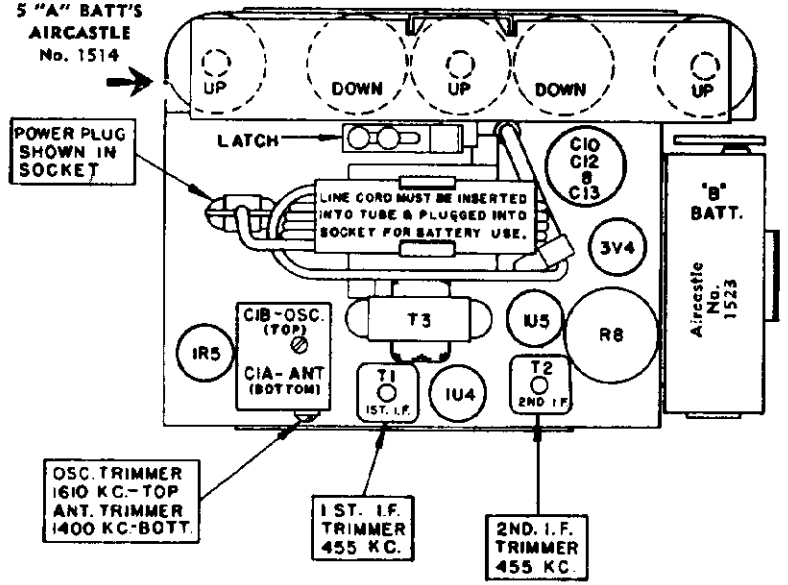

POWER SUPPLY

This receiver is designed to operate from self contained batteries, or from 105-125 volt AC or DC power supply. One 67½ volt "B" battery Aircastle No. 1523, and five (5) 1½ volt "A" batteries, Aircastle No. 1514, are used for battery operation.

MODEL 147114 SPIEGEL

ALIGNMENT PROCEDURE

Volume conrol—Maximum: all adjustments.

Connect ground lead of signal generator to common negative.

Connect dummy antenna in series with output lead of signal generator.

Connect output meter across voice coil of speaker.

The following equipment is necessary for proper alignment:

Signal generator that will provide the test frequencies as listed, 30% modulated, 400 c.p.s.

Output meter.

Non-metallic screwdriver.

Dummy antenna—.1 mfd.

CAUTION: This is an A.C.-D.C. receiver and if alignment is made with the receiver connected to 117 volts A.C. or D.C., it is necessary to isolate the signal generator or the receiver from the line by use of a transformer, or place a .2 M.F.D. condenser in both test leads of the Signal Generator.

Position of Variable	Generator Frequency	Dummy Ant. Mfd.	Generator Connections	Trimmer Adjustment	Trimmer Function
Fully open	455 KC	.1	*1R5 Grid (Stator of C1A)	T2	Output I.F.
Fully open	455 KC	.1	*1R5 Grid (Stator of C1A)	T1	Input I.F.
Fully open	1600 KC	.1	*1R5 Grid (Stator of C1A)	C1B	Oscillator
Tune in signal from generator	1400 KC	—	Loosely coupled to loop	C1A	Antenna

*Connect ground lead of signal generator to common negative.

Circuit Diagram Reference	Part No.	Description
C1A, C1B	B19-197	Variable condenser
C2, C6	A16-152	.05 MFD 200 volt condenser
C3	A16-189	.05 MFD 400 volt condenser
C4	A15-175	50 MMF mica condenser
C5, C11	A16-153	.005 MFD 600 volt condenser
C7	A16-157	.1 MFD 200 volt condenser
C8	A16-172	.05 MFD 400 volt condenser
C9	A15-188	100 MMF mica condenser
C10	A18-290	40 MFD 150 volt electrolytic cond.
C12		30 MFD 150 volt electrolytic cond.
C13		100 MFD 10 volt electrolytic cond.
C14	A16-182	.002 MFD 200 volt condenser
C15	*A17-100	.005 MMF — See note below.
C16		.005 MFD
C17		50 MMF
R1	A60-671	100K ohm ½ watt 20% resistor
R2	A60-680	1500 ohm ½ watt 10% resistor
R3, R9	A60-663	10 megohm ½ watt 20% resistor
R4	A60-685	47K ohm ½ watt 20% resistor
R5	A60-684	2.2 megohm ½ watt 20% resistor
R6	A60-725	160 ohm 5 watt 10% resistor
R7	A60-722	470 ohm ½ watt 10% resistor
R8, S1	A24-178	Volume control, with switch
R10	A60-757	2000 ohm 10 watt 10% resistor
R11	A60-724	3300 ohm 1 watt 10% resistor
R12	A60-665	390 ohm ½ watt 10% resistor
R13	A60-756	1200 ohm ½ watt 10% resistor
R16	*A17-100	2.2 megohm — See note below.
R15		1 megohm
R14		4.7 megohm
R17	A60-668	1 megohm ½ watt 20% resistor
R18	A60-758	560 ohm ½ watt 10% resistor
L1	A10-514	Oscillator coil
T1, T2	C10-475	1st and 2nd I.F. transformer
T3	B80-245	Output transformer
S2	A69-182	Switch, AC-DC, Battery
		MISCELLANEOUS PARTS
	D21-108	Cap for handle
	A83-421	Clip, I.F. transformer mounting
	S84-271	Cover assembly, front (with loop)
	S84-128	Cover assembly, rear
	B83-442	Handle
	S84-243	Hub and pointer assembly
	C52-216	Knob, tuning
	B52-217	Knob, volume
	B23-156	Line cord and plug
	A83-568	Rectifier, selenium
	A71-38	Retainer, paper tube for line cord
	A68-35	Socket, tube
	B79-364	Speaker, 4" P.M.
	A76-49	Terminal, for "B" battery

*NOTE: C15, C16, C17, R14, R15, R16 are contained in the Ceramic Coupling Unit, Part No. A17-100.

© John F. Rider

MODELS A72T3, CHASSIS 9026C; A72T4, CHASSIS 9026D

STEWART-WARNER CORP.

MODELS A72T1, CHASSIS 9026A; A72T2, CHASSIS 9026B

	A72T1	A72T2	A72T3	A72T4
CABINET	Mahogany	(Plastic) Ivory (Plastic)	Walnut (Wood)	Blonde (Wood)

FREQUENCY RANGES
- Broadcast ..... 540-1600 KC
- FM ..... 88-108 MC

POWER OUTPUT
- Undistorted ..... 1 watt
- Maximum ..... 2.5 watts

SPEAKER ..... 5" PM Dynamic

INTERMEDIATE FREQUENCY ..... FM—10.7 MC; AM—455 KC

This receiver will operate on either 50 or 60 cycles Alternating Current (A.C.) at 105 to 125 volts or on Direct Current (D.C.) at 105 to 125 volts. Rectified B+ voltage is obtained by using a miniature selenium type rectifier which is noted for reliability and long life.

The built-in antenna used for AM reception is a high impedance loop that is mounted on the rear of the chassis. A 46" length of wire serves as a built-in FM antenna. This wire is connected to the right hand terminal of the pair of terminals labeled "External FM Antenna" and it must be uncoiled and allowed to hang down at back of receiver.

Tuning of the radio frequency circuits of the receiver is accomplished by a 5 section gang condenser. Two sections are used to tune the AM antenna and oscillator circuits, and three sections are used to tune the FM antenna, R.F., and oscillator circuits.

An R.F. amplifier stage is utilized to give maximum sensitivity and selectivity as well as high image rejection on FM reception. Although this stage is switched out of the circuit on AM reception, overall receiver sensitivity is adequate for highly satisfactory reception where station signals are of moderate strength.

Both transformer coupled I.F. stages are used for FM and one stage is used for AM. The first and second I.F. transformers have two sets of windings; one set is tuned to 455 KC for AM operation and the other is tuned to 10.7 MC for FM operation. Switching of the windings, to alleviate undesired beat frequencies, is necessary only in the first I.F. transformer.

Detection of amplitude modulated 455 KC signals is accomplished by the 6AQ6 diode rectification circuit.

Frequency modulation detection is accomplished by an entirely new circuit that is known as the "RATIO DISCRIMINATOR." This FM detector circuit has the unusual ability to reject noise or other brief variations in amplitude of the signal. The relative insensitivity of the Ratio Discriminator to signal amplitude variation makes it possible to eliminate the use of a "limiter" stage that usually precedes the discriminator in other types of FM detector systems. It will therefore be noted that this receiver utilizes a normal I.F. amplifier stage instead of a low gain limiter stage preceding the FM discriminator.

Audio frequency output from both AM and FM detectors is amplified through the triode section of the 6AQ6. The audio power amplifier stage incorporates a 50B5 tube which is coupled to a permanent magnet dynamic speaker. A special inverse feedback arrangement is used which reduces distortion and contributes to exceptionally good tone quality.

DIAL AND POINTER DRIVE CORD ARRANGEMENT

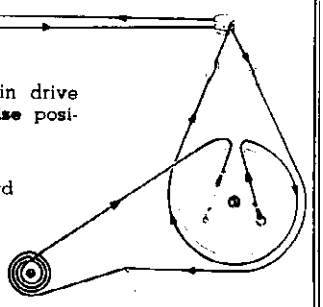

To string dial cord, turn the main drive drum to maximum counter-clockwise position and use following parts:

114955—Clip on end of cord
117057—Cord (6 feet)
119087—Ring for dial cord
161384—Tension Spring

STAGE GAIN MEASUREMENT PROCEDURE

REQUIRED INSTRUMENTS: The amount of amplification or "gain" of each of the stages of this receiver should be measured with an A. C. Vacuum Tube Voltmeter of the high frequency type (uniform response up to 100 MC). A conventional "AM" type signal generator may be used but it must be capable of producing **fundamental** frequencies of 600 KC. and 98 MC—**avoid using a generator that produces the 98 MC. signal by means of harmonics.**

PROCEDURE: It is exceedingly important to adhere to the procedure outlined below since the accuracy of these measurements will be affected to a considerable extent by the failure to establish proper operating conditions.

1. Be sure that R.F., I.F. and Discriminator stages are carefully and accurately aligned by utilizing the alignment procedure given in this manual.
2. Connect Signal Generator as shown below. Note that generator connections differ for "AM" and "FM" measurements.
3. For "AM" measurements, set signal generator to 600 KC. and then carefully tune radio receiver to this signal by using an output meter to indicate peak output. If a local station interferes, set generator to a nearby frequency and re-tune the receiver.
4. For "FM" measurements, set signal generator to 98 MC. and then carefully tune radio receiver to this signal by using a D. C. Vacuum Tube Voltmeter as an output indicator—meter must be connected between pin #3 of 12H6 tube and B—. If a local station interferes, set generator to a nearby frequency and re-tune the receiver.
5. The values of stage gain which are given here were measured with a fixed bias of 1.5 volts on the control grids of all R.F. and I.F. tubes which are connected to the A.V.C. circuit. Therefore, these values are not intended to indicate the full capability of a stage but they will serve as a convenient basis for determining proper operation. In order to duplicate the fixed bias voltage, connect the negative terminal of a 1.5 volt battery to A.V.C. at terminal 7 of the 1st I.F. transformer and connect the positive battery lead to B—.
6. R.F. and I.F. circuits are slightly de-tuned when contact is made with an instrument probe and this action, which is indicated by a change in the output meter reading, may seriously affect the gain measurement. Therefore, it is important to adjust the associated circuit trimmer for a maximum output meter reading and to set the input signal level to a convenient reference point on the gain-measuring instrument while the probe is making contact. After removing the probe it is again necessary to adjust the trimmer so as to obtain the same output meter reading and thereby assure that the signal voltage at the specified point has not changed as a result of circuit de-tuning.

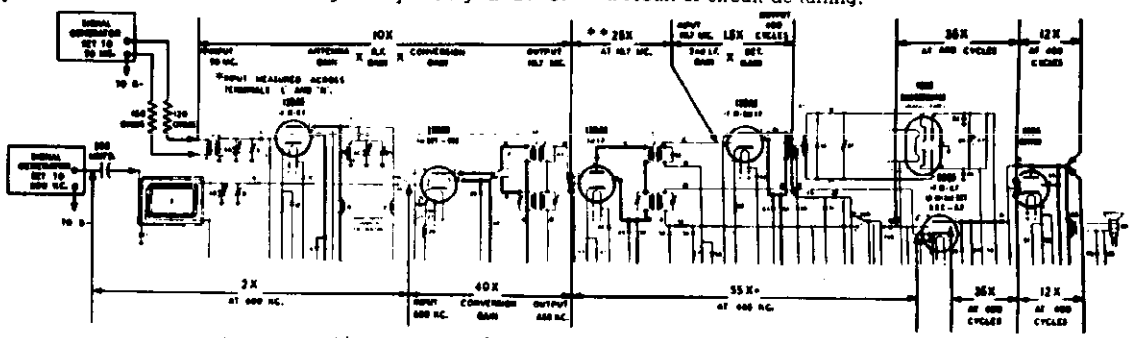

** When measuring the gain of this stage with a vacuum tube voltmeter the input signal level for minimum meter indication may cause overloading. Under those conditions the measured gain will be found to be approximately 14X.

DIFFERENCES in tube characteristics, tolerance of parts, adjustment of tuned circuits and variations in line voltage will influence stage gain. These factors should be given due attention in event the gain of a stage varies extensively from the values shown above.

CLARI-SKEMATIX

Registered Trademark

MODELS A72T1, CHASSIS 9026A; A72T2, CHASSIS 9026B — STEWART-WARNER CORP. — MODELS A72T3, CHASSIS 9026C; A72T4, CHASSIS 9026D

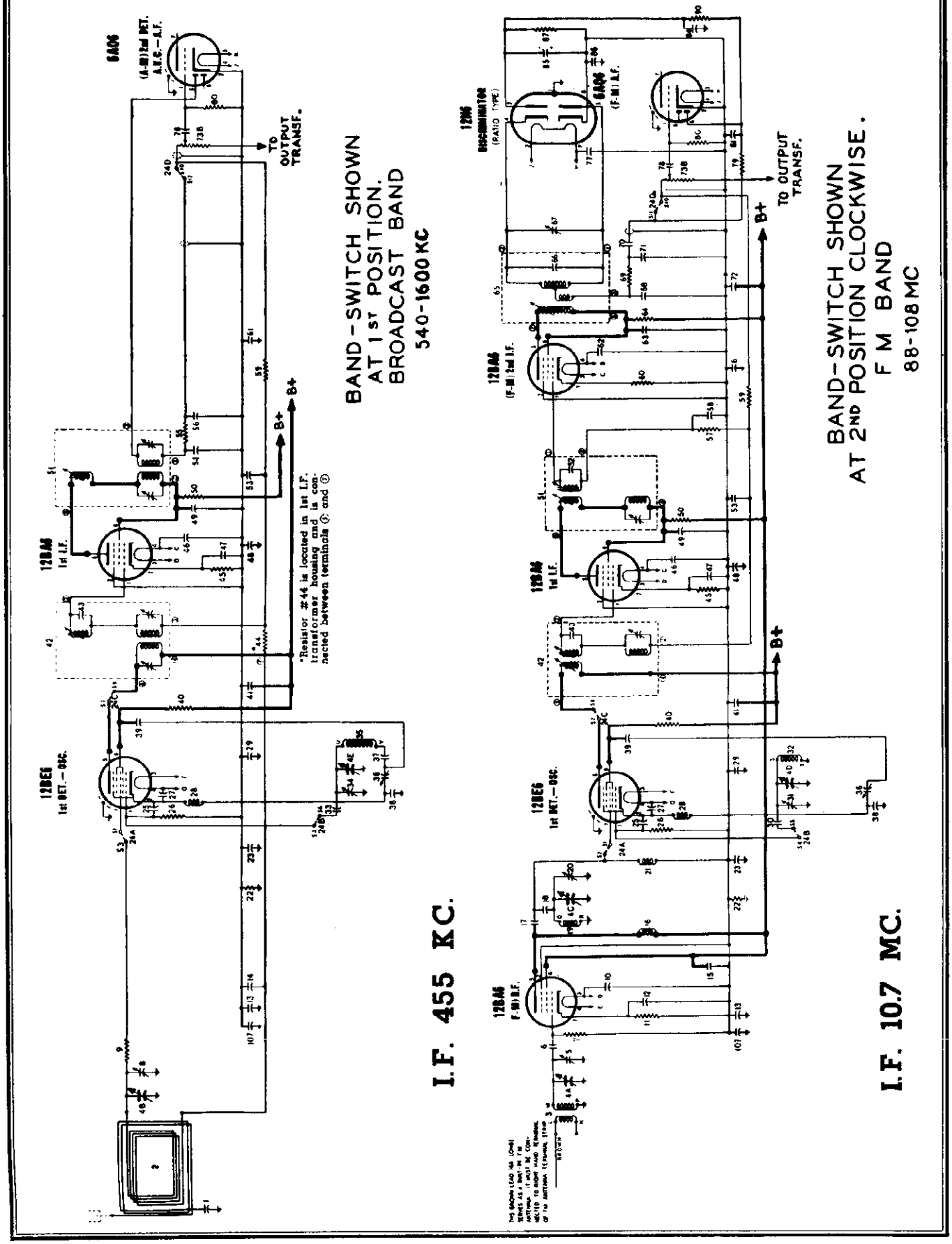

MODELS A72T1, CHASSIS 9026A; A72T2, CHASSIS 9026B; A72T3, CHASSIS 9026C; A72T4, CHASSIS 9026D

FREQUENCY MODULATION

INSTRUMENTS: Alignment of the FM circuits in this receiver may be accomplished with either a conventional AM type signal generator or a FM signal generator. The output indicator should be an oscilloscope or a vacuum tube voltmeter.

Although it is preferable to use an FM generator and an oscilloscope, reasonably accurate alignment is obtainable when using a convention AM generator and a vacuum tube voltmeter providing proper care is exercised in adjusting the discriminator circuit trimmer condenser.

IMPORTANT: If an AM signal generator is used, it should be capable of producing fundamental frequencies of 10.7 and 88 to 108 MC. Avo using an AM generator which produces signals in the 88 to 108 MC range by using harmonics higher than the second. Generators which a dependent upon third, fourth or fifth harmonics for frequencies of 88 to 108 MC will generally produce undesireable spurious beat signals wi the local oscillator in the receiver and alignment will be exceedingly difficult.

The following procedure is adaptable for use with either an AM or FM generator and oscilloscope or vacuum tube voltmeter merely follo the instructions that are applicable to the instruments that are used.

SIGNAL GENERATOR CONNECTIONS			V-T VOLTMETER OR OSCILLOSCOPE CONNECTIONS		
CONNECT HIGH SIDE OF SIGNAL GENERATOR TO	*CONNECT GROUND LEAD OF SIGNAL GENERATOR TO	FREQUENCY & TYPE OF MODULATION	IF A V-T VOLTMETER IS USED, CONNECT IT AS FOLLOWS:	IF AN OSCILLOSCOPE IS USED, CONNECT IT AS FOLLOWS:	BAND SWITCH POSITION
Pin ⌀1 of 12BA6 (FM) 2nd I.F. use a .01 MFD. condenser in series with generator lead.	B— in vicinity of 12BA6 (FM) 2nd I.F. tube.	**10.7 MC** AM signal may be 400 cycle modulated or FM signal should preferably be modulated ±300 KC.	Connect common (or ground) terminal of meter to B—. D.C. probe lead of meter is then connected to pin ⌀3 of the 12H6 tube.	Connect vertical amplifier "high" lead in series with an 0.1 MFD. condenser to pin ⌀7 of 6AQ6 tube. Connect scope ground lead to B—	FM Maximum clockwise position
Same as above	Same as above	Same as above	Before connecting V-T voltmeter, it is necessary to connect two 68,000 ohm resistors (resistance of both units must compare within 1%) in series from pin ⌀3 of the 12H6 tube to B—. Then connect common (or ground) terminal of V-T voltmeter to the junction of these two resistors. D.C. probe lead of meter is now connected to junction of resistor ⌀69 (3300 ohms) and condenser ⌀70 (.05 MFD.) which are in the discriminator output circuit.	Same as above	Same as abo
Recheck the two preceding adjustments to be sure that both trimmers are set as accurately as possible to obain the specified output indication on vacu					
Pin ⌀1 of 12BA6 (FM) 1st I.F. tube; use a .01 MFD. condenser in series with generator lead.	B— in vicinity of 12BA6 (FM) 1st I.F. tube.	Same as above	Connect common (or ground) terminal of meter to B—. D.C. probe lead of meter is then connected to Pin ⌀3 of the 12H6 tube.	Same as above	Same as abo
Pin ⌀7 of 12BE6 tube; use a .01 MFD. condenser in series with generator lead.	B— in vicinity of 12BE6 tube.	Same as above	Same as above	Same as above	Same as abo
Generator output leads must be connected to the two "External FM Antenna" terminals at back of antenna loop frame. Connect "high" lead to one terminal in series with a 120 ohm resistor and connect generator ground lead to the other terminal in series with a 150 ohm resistor.		**98 MC** AM signal may be 400 cycle modulated or FM signal should preferably be modulated ±300 KC.	Same as above	Same as above	Same as abo
Same as above		Same as above	Same as above	Same as above	Same as abo
Same as above		Same as above	Same as above	Same as above	Same as abo
Check calibration and tracking of receiver with input signals of 88 and 108 MC.					

*If your signal generator has an AC-DC type power supply, insert a .25 MFD. condenser in series with the ground lead before making the connections show

©John F. Rider

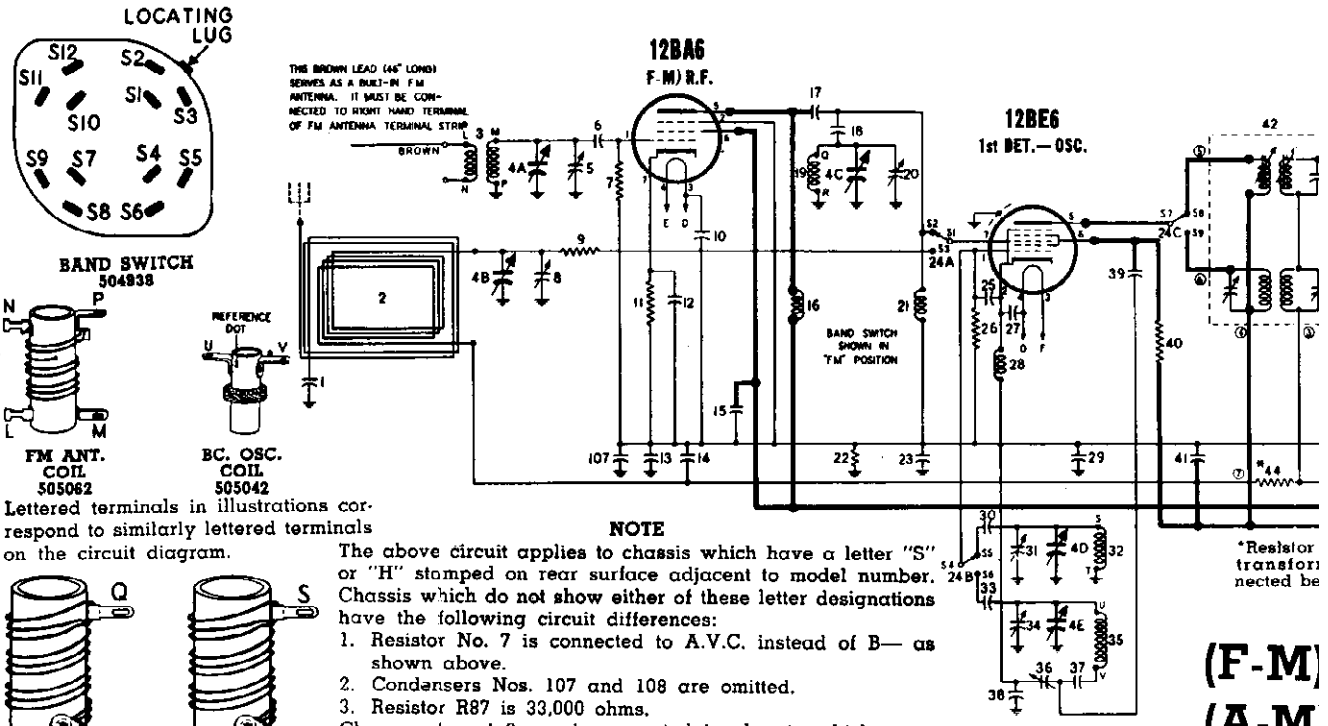

Lettered terminals in illustrations correspond to similarly lettered terminals on the circuit diagram.

NOTE

The above circuit applies to chassis which have a letter "S" or "H" stamped on rear surface adjacent to model number. Chassis which do not show either of these letter designations have the following circuit differences:

1. Resistor No. 7 is connected to A.V.C. instead of B— as shown above.
2. Condensers Nos. 107 and 108 are omitted.
3. Resistor R87 is 33,000 ohms.

Changes 1 and 2 are incorporated in chassis which carry the "S" designation and all three changes appear in chassis with the "H" designation.

These changes were made to increase sensitivity on FM operation.

*Resistor transfor nected be

(F-M)
(A-M

WARNING: Some parts listed below have special characteristics. Do not use substi

DIA-GRAM NO.	PART NO.	DESCRIPTION
		CONDENSERS
1	504725	Condenser—.02 Mfd. 200 volt
4-A to E	504955	Condenser—variable gang and drum
5	504954	Condenser—trimmer; 3 to 12 Mmfd.
6	504974	Condenser—ceramic 47 Mmfd. 500 volt
8	504069	Condenser—trimmer; 3 to 35 Mmfd.
10	504976	Condenser—ceramic 1500 Mmfd. 150 volt
12	505025	Condenser—ceramic 100 Mmfd. 350 volt
13	505052	Condenser—.002 Mfd. 400 volt
14	505073	Condenser—.05 Mfd. 400 volt
15	504975	Condenser—ceramic 470 Mmfd. 350 volt
17	502295	Condenser—ceramic 10 Mmfd. 500 volt
18	505053	Condenser—ceramic 15 Mmfd. 500 volt
20	504954	Condenser—trimmer; 3 to 12 Mmfd.
23	505027	Condenser—.01 Mfd. 400 volt
25	504730	Condenser—ceramic 3 Mmfd. 500 volt
27	504973	Condenser—ceramic 22 Mmfd. 500 volt
29	505454	Condenser—.05 Mfd. 400 volt (low impedance at 455 Kc. do not substitute ordinary capacitor)
30	505072	Condenser—ceramic 33 Mmfd. 350 volt
31	504954	Condenser—trimmer; 3 to 12 Mmfd.
33	504974	Condenser—ceramic 47 Mmfd. 500 volt
34	119491	Condenser—trimmer; 10 to 90 Mmfd.
36	505051	Condenser—trimmer; 440 to 660 Mmfd.
37	504979	Condenser—ceramic .01 Mfd. 150 volt
38	504975	Condenser—ceramic 470 Mmfd. 350 volt
39	504979	Condenser—ceramic .01 Mfd. 150 volt
41	504979	Condenser—ceramic .01 Mfd. 150 volt
43	505068	Condenser ceramic 91 Mmfd. 350 volt
46	504976	Condenser—ceramic 1500 Mmfd. 150 volt
47	505028	Condenser .05 Mfd. 150 volt
48	504979	Condenser—ceramic .01 Mfd. 150 volt
49	505211	Condenser—.08 Mfd. 400 volt
52	505068	Condenser—ceramic 91 Mmfd. 350 volt
53	505028	Condenser—.05 Mfd. 150 volt
54	505026	Condenser—ceramic 150 Mmfd. 350 volt
56	505026	Condenser—ceramic 150 Mmfd. 350 volt
58	504978	Condenser—ceramic .005 Mfd. 150 volt
61	504979	Condenser—ceramic .01 Mfd. 150 volt
62	504976	Condenser—ceramic 1500 Mmfd. 150 volt
63	504978	Condenser—ceramic .005 Mfd. 150 volt
66	505074	Condenser—ceramic 43 Mmfd. 350 volt
67	504954	Condenser—trimmer; 3 to 12 Mmfd.
68	505025	Condenser—ceramic 100 Mmfd. 350 volt
70	505028	Condenser—.05 Mfd. 150 volt
71, 72	504979	Condenser—ceramic .01 Mfd. 150 volt
74	505083	Condenser—.02 Mfd. 400 volt
77	504976	Condenser—ceramic 1500 Mmfd. 150 volt
78	504977	Condenser—ceramic .002 Mfd. 150 volt
81	505082	Condenser—.02 Mfd. 150 volt
84	505027	Condenser—.01 Mfd. 400 volt
85	504937	Condenser—electrolytic 5 Mfd. 50 volt
86	504979	Condenser—ceramic .01 Mfd. 150 volt
88	505025	Condenser—ceramic 100 Mmfd. 350 volt
91	505028	Condenser—.05 Mfd. 150 volt
95	505073	Condenser—.05 Mfd. 400 volt
96	504973	Condenser—ceramic 22 Mmfd. 500 volt
99	505027	Condenser—.01 Mfd. 400 volt
102	505071	Condenser—.2 Mfd. 400 volt
106-A, B, C, D	504980	Condenser—electrolytic A—20 Mfd. 25 volt; B—60 Mfd. 150 volt; C—40 Mfd. 150 volt; D—40 Mfd. 150 volt
107	504975	Condenser—ceramic 470 Mmfd. 350 volt
108	504979	Condenser—ceramic .01 Mfd. 150 volt
		RESISTORS
7	502134	Resistor—carbon 470,000 Ohms ¼ watt
9	504969	Resistor—carbon 33 Ohms ¼ watt
11	502794	Resistor—carbon 68 Ohms ¼ watt
22	502133	Resistor—carbon 220,000 Ohms ¼ watt
26	502130	Resistor—carbon 22,000 Ohms ¼ watt
40	502406	Resistor—carbon 1,500 Ohms ¼ watt
44	502134	Resistor—carbon 470,000 Ohms ¼ watt
45	502794	Resistor—carbon 68 Ohms ¼ watt
50	502287	Resistor—carbon 680 Ohms ¼ watt
55	504710	Resistor carbon 33,000 Ohms ¼ watt
57	502134	Resistor—carbon 470,000 Ohms ¼ watt
59	502268	Resistor—carbon 1 Meg. ¼ watt
60	504968	Resistor—carbon 10 Ohms ¼ watt
64	502287	Resistor—carbon 680 Ohms ¼ watt
69	502514	Resistor—carbon 3,300 Ohms ¼ watt
73-A, B	504967	Resistor—Volume control 1 Meg (with Switch)
75	505024	Resistor—carbon 22 Ohms 2 watt
79	502134	Resistor—carbon 470,000 Ohms ¼ watt
80	502136	Resistor—carbon 10 Meg. ¼ watt
87	504710 / 502408	Resistor carbon 33 000 Ohms ¼ watt / Resistor—carbon 68,000 Ohms ¼ watt (used only in chassis stamped with letter "H")
89, 90	502134	Resistor—carbon 470,000 Ohms ¼ watt
92	502134	Resistor—carbon 470,000 Ohms ¼ watt
94	505023	Resistor—carbon 33 Ohms 1 watt
97	502135	Resistor—carbon 2.2 Meg. ¼ watt
98	504437	Resistor—carbon 150 Ohms ½ watt
103	502132	Resistor—carbon 100,000 Ohms ¼ watt
104	504971	Resistor—carbon 2,200 Ohms ½ watt
105	504970	Resistor—carbon 470 Ohms, 2 watt
		COILS AND TRANSFORMERS
2	505054	Loop Antenna
3	505062	Coil—F.M. antenna
16	505075	Coil—R.F. choke (FM)
19	505060	Coil—FM R.F.
21	505076	Coil—R.F. choke (FM)
28	505076	Coil—R.F. choke (FM)
32	505060	Coil—
35	505042	Coil—
42	505066	Transf
51	505067	Transf
65	505391	Transf
82, 83	505392	Coil—
100	502213 / 504244 / 502904	Transf / Transf / Transf
		OTHER
24-A, B, C, D	504938	Switch
76	110629	Lamp-
93	504972	Rectifi
101	502998	Speak
		MISC
	505084	Back
	505093	Back
	504981	Base
	504598	Base—
	502666	Cabin
	502665	Cabin
	502506	Clamp
	504691	Clip—
	500497	Clip—
	114955	Clip—
	117057	Cord-
	505085	Dial s
	505092	Dial s
	502563	Knob
	502564	Knob-
	505086	Knob-
	505087	Knob-
	505090	Knob
	505091	Knob-
	505088	Knob
	505089	Knob-
	505095	Metal
	502690	Pointe
	81145	Retair
	119087	Ring
	17063	Screw
	114628	Screw
	79905	Screw
	83047	Screw
	501777	Screw
	505045	Shaft-
	504599	Shield
	500499	Socke
	504597	Socke
	116690	Socke
	161384	Spring

©John F. Rider

WARNER CORP.

MODELS A72T1, CHASSIS 9026A; A72T2, CHASSIS 9026B; A72T3, CHASSIS 9026C; A72T4, CHASSIS 9026D

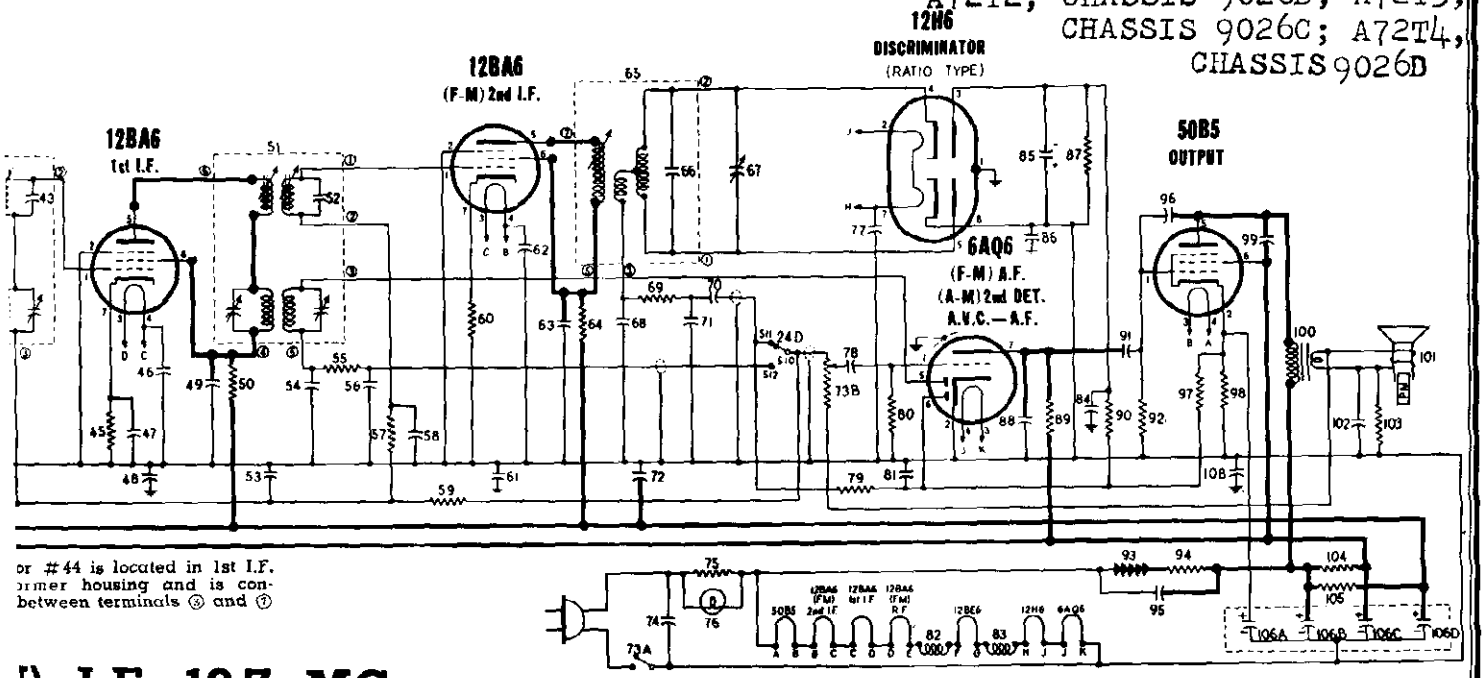

or #44 is located in 1st I.F. ormer housing and is con- between terminals ⑤ and ⑦

I.F. 10.7 MC.
I.F. 455 KC.

litutes for replacement purposes.

DESCRIPTION

-FM oscillator	
-BC oscillator	
nsformer—1st I.F.	
nsformer—2nd I.F.	
nsformer—discriminator	
-R.F. choke (FM)	
nsformer—output (for R-502998 sp'k'r)	
nsformer—output (for W-502998 sp'k'r)	
nsformer—output (for A-502998 sp'k'r)	

R ELECTRICAL PARTS

h—band	
—dial (Mazda #44) 6.3V 0.25 Amps	
ier—selenium	
;er—P.M. dynamic (5 inch) includes transformer	

ELLANEOUS PARTS

for cabinet (Models A72T1, A72T2)	
for cabinet (Models A72T3, A72T4)	
for mounting electrolytic condenser	
-tube shield	
et—Mahogany (Model A72T1)	
et—Ivory (Model A72T2)	
—dial scale mounting	
coil mounting; BC oscillator	
retainer for cabinet back	
retainer on end of dial cord	
-dial drive (6 ft. required)	per ft.
cale (Models A72T1, A72T2)	
cale (Models A72T3, A72T4)	
-volume or tuning (Model A72T1)	
-volume or tuning (Model A72T2)	
-volume or tuning (Model A72T3)	
-volume or tuning (Model A72T4)	
-band (Model A72T1)	
-band (Model A72T2)	
-band (Model A72T3)	
-band (Model A72T4)	
grille (Models A72T3, A72T4)	
ng ring for tuning shaft	
r dial cord	
-No. 6 x ¼ holds dial clamp	
-No. 8 x ½; chassis mounting	
-No. 8 x 1½ for loop mounting	
-No. 8 x ⅞; chassis mounting	
-No. 4 x ½ for mounting back	
turing	
-tube	
-dial lamp (with leads)	
-miniature	
-octal base	
-dial cord tension	

AUDIO OSCILLATION

The audio system of this receiver utilizes a two stage type of inverse feed-back arrangement and, should it ever be necessary to replace the speaker or output transformer, it is important to maintain a definite phase relationship in the feed-back circuit. If the connections to the output transformer are reversed or if the feed-back connection is made to the wrong side of the output transformer secondary, the system will become regenerative instead of degenerative. Under those conditions audio oscillation may result. If that occurs, oscillation may be prevented by reversing the connections to the secondary of the output transformer.

SOCKET VOLTAGES

Measured with voltmeter having sensitivity of 1000 ohms per volt except where indicated by (*). The (*) symbol designates a vacuum tube voltmeter measurement.

ALL MEASUREMENTS MADE WITH BAND SWITCH IN "FM" POSITION UNLESS OTHERWISE INDICATED
DIAL TUNED TO 108MC. FOR "FM" MEASUREMENTS
DIAL TUNED TO 540KC. FOR "AM" MEASUREMENTS
VOLUME CONTROL SET TO MINIMUM WITH NO SIGNAL

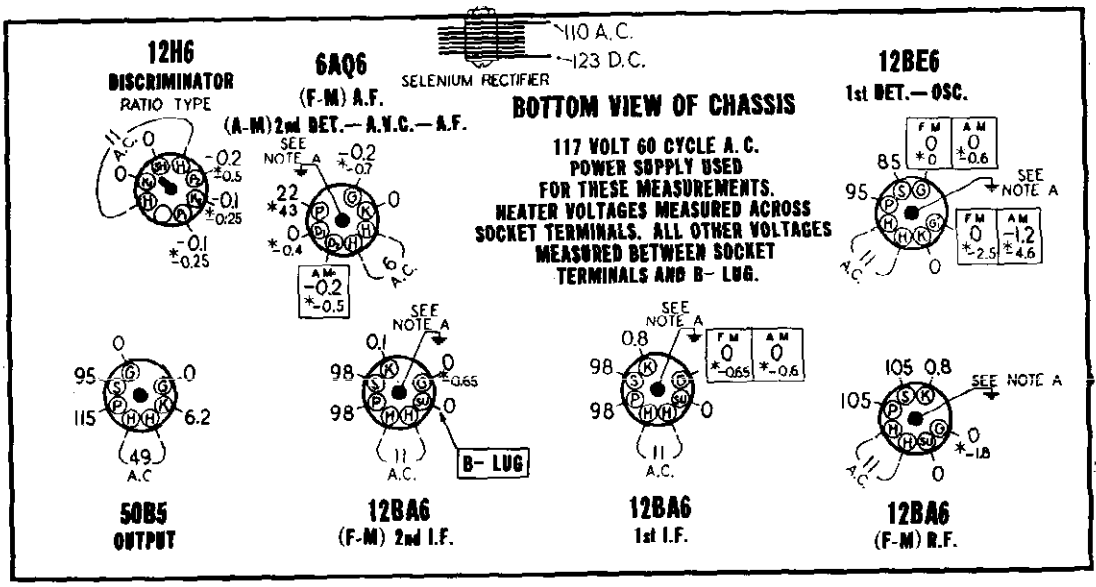

REAR OF CHASSIS

NOTE A: Grounding of center stud on tube socket is necessary to reduce capacity coupling between other pins. Oscillation may result if this ground is omitted.

FM" — ALIGNMENT PROCEDURE

1. If alignment of both AM and FM channels is required it is necessary to align the AM channel first, then align the FM channel as instructed in the following chart (AM alignment procedure is given on page 7).

2. Before removing the chassis from the cabinet, turn the tuning control until dial pointer is at 98 MC. Then remove chassis and place a pencil mark on dial frame so as to indicate the 98 MC calibration point.

3. Do not attempt to reposition pointer by releasing it from clip on dial card as this is done only during AM alignment.

4. Set the receiver volume control to the maximum volume position.

5. Dress FM circuit leads as short and straight as possible, particularly those in the oscillator circuit. I.F. plate and grid leads should also be kept short and straight.

6. Alignment of receiver circuits may now be accomplished by using the procedure in the chart below.

RECEIVER			TYPE OF ADJUSTMENT AND OUTPUT INDICATION	
DIAL SETTING	TRIMMER OR SLUG NUMBER	TRIMMER DESCRIPTION	ADJUSTMENT AND OUTPUT INDICATION WHEN USING A V-T VOLTMETER	ADJUSTMENT AND OUTPUT INDICATION WHEN USING AN OSCILLOSCOPE
ıy position where does not affect signal.	8	Discriminator Primary	Set meter to a low D.C. voltage range and adjust trimmer ⌭8 for maximum meter reading. (This voltage will be negative.)	Set vertical amplifier of scope for maximum amplification. Where FM signal generator provides an output voltage for synchronization, connect this voltage to "sync" terminals of the scope. Then adjust setting of trimmer ⌭9, before attempting to adjust trimmer ⌭8, until a pattern similar to the following appears on the screen. If pattern does not remain stationary, operate sweep frequency control on scope and also "sync" control until desired result is obtained. 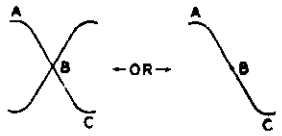 This double "S" curve pattern results when 'scope uses "Sawtooth" horizontal deflection voltage. This single "S" curve pattern results when 'scope uses properly phased "sine wave" horizontal deflection voltage. Adjust trimmer ⌭8 for maximum amplitude and steepness of that portion of the curve between "A" and "C".
Same as above	9	Discriminator Secondary Use an insulated phasing tool to adjust this trimmer.	Set meter for operation on its lowest D.C. voltage range. Note that as trimmer ⌭9 is rotated a point will be found where voltmeter will swing rather sharply from a positive to a negative reading or vice versa. Correct setting of trimmer ⌭9 is obtained when meter reads zero as trimmer is moved through this point. The adjustment is somewhat critical and considerable care must be exercised to set the trimmer for a zero meter indication.	With the 'scope set up as described above, adjust trimmer ⌭9 until the cross-over point "B" is centrally located in both the horizontal and vertical directions; in addition, the portion of the curve between "A" and "C" should be as linear (straight) as possible.
e voltmeter or oscilloscope. Then disconnect and remove the two 68,000 ohm resistors that were used for the vacuum tube voltmeter connection in the 2nd step.				
ame as above	10 and 11	2nd I.F.	Adjust trimmers ⌮10 and ⌭11 for maximum meter reading.	With 'scope set up as described above, adjust trimmers ⌮10 and ⌮11 for maximum amplitude and steepness of that portion of the pattern between "A" and "C".
ame as above	12 and 13	1st I.F.	Adjust trimmers ⌮12 and ⌭13 for maximum meter reading.	Adjust trimmers ⌮12 and ⌮13 for maximum amplitude and steepness of pattern as described above. If the enlarged pattern now indicates a lack of symmetry, readjust trimmer ⌭9 for correct cross-over point.
98 MC	14	Oscillator Trimmer	Set trimmer ⌮14 to receive 98 MC. signal and adjust for maximum meter reading.	Adjust trimmer ⌭14 to obtain the symmetrical pattern shown above. Correct setting of trimmer ⌭14 is obtained when cross-over point in pattern is centrally located.
98 MC	15	R.F. Trimmer	Adjust trimmer ⌮15 for maximum meter reading.	Adjust trimmer ⌮15 for maximum amplitude of pattern.
	12 and 13	1st I.F.	Recheck adjustment of these trimmers for maximum meter reading.	Recheck adjustment of these trimmers for maximum amplitude and symmetry of pattern.
98 MC	16	Antenna Trimmer	Adjust trimmer ⌮16 for maximum meter reading.	Adjust trimmer ⌭16 for maximum amplitude of pattern.

MODELS A72T3, CHASSIS 9026C; A72T4, CHASSIS 9026D

STEWART-WARNER CORP.

MODELS A72T1, CHASSIS 9026A; A72T2, CHASSIS 9026B

BROADCAST BAND — "AM" — ALIGNMENT PROCEDURE

1. Remove chassis and loop antenna from cabinet.
2. With the gang fully meshed, the dial pointer should be in the position indicated by the last mark below 55 on the dial. If it is set incorrectly, release the pointer clip on the dial cord and reposition pointer.
3. During the alignment of this receiver, it will be necessary to set the dial pointer to the following frequencies: 1500 Kc., and 600 Kc. In order to avoid replacing the chassis in the cabinet each time a dial setting is required, it will be found more convenient to mark the required frequency points on the white dial background before starting the alignment.
4. Connect an output meter across speaker voice coil or from plate of the 50B5 tube to B— through a 0.1 Mfd. condenser (see voltage chart for convenient B— connection).
5. Connect ground lead of signal generator to B— lug.
   CAUTION: If your signal generator is designed with an AC-DC type power supply, connect ground lead of signal generator to B— lug through a .25 Mfd. condenser.
6. Set volume control to the maximum volume position and use a weak signal from the signal generator.
7. If alignment of both AM and FM channels is required, it is necessary to align the AM channel first; then align the FM channel as instructed in the preceding section.

DUMMY ANT. IN SERIES WITH SIGNAL GENERATOR	CONNECT HIGH SIDE OF SIGNAL GENERATOR TO	SIGNAL GENERATOR FREQUENCY	BAND SWITCH POSITION	RECEIVER DIAL SETTING	TRIMMER NUMBER	TRIMMER DESCRIPTION	TYPE OF ADJUSTMENT
0.1 MFD. Condenser	Pin #7 of 12BE6 tube.	455 KC	Broadcast (counter-clockwise)	Any point where it does not affect the signal.	1-2	2nd I.F.	Adjust for maximum output. Then repeat adjustment.
					3-4	1st I.F.	
200 MMFD. Mica Condenser	External Antenna Terminal (AM) on Loop Antenna	1500 KC	Broadcast (counter-clockwise)	1500 KC	5	Broadcast Oscillator	Adjust for maximum output.
200 MMFD. Mica Condenser	External Antenna Terminal (AM) on Loop Antenna	1500 KC	Broadcast (counter-clockwise)	Tune to 1500 KC Generator Signal	6	Broadcast Antenna	Adjust for maximum output.
200 MMFD. Mica Condenser	External Antenna Terminal (AM) on Loop Antenna	600 KC	Broadcast (counter-clockwise)	Tune to 600 KC Generator Signal	7	Broadcast Oscillator (Series Pad)	Adjust for maximum output. Try to increase output by detuning trimmer and retuning receiver dial until maximum output is obtained.
200 MMFD. Mica Condenser	External Antenna Terminal (AM) on Loop Antenna	Repeat adjustment of trimmers 5 and 6 at 1500 Kc. Then re-check adjustment of trimmer 7 at 600 Kc.					

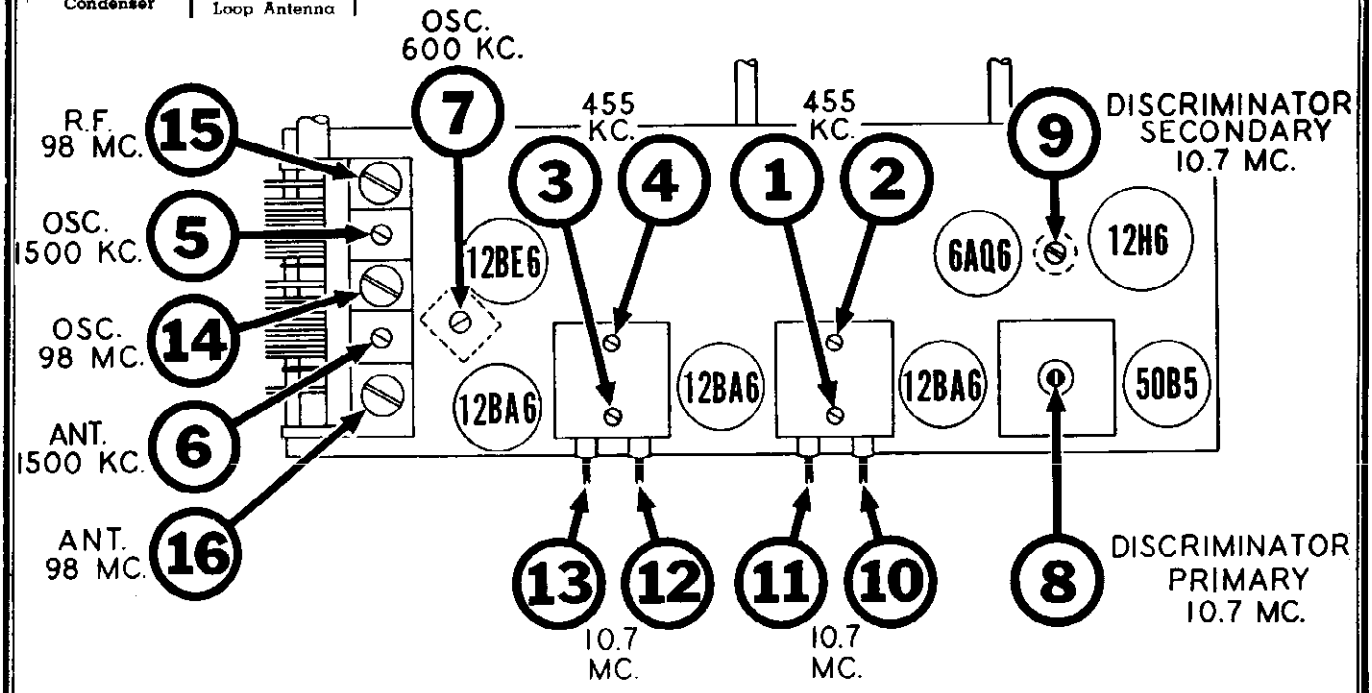

TRIMMER LOCATION CHART

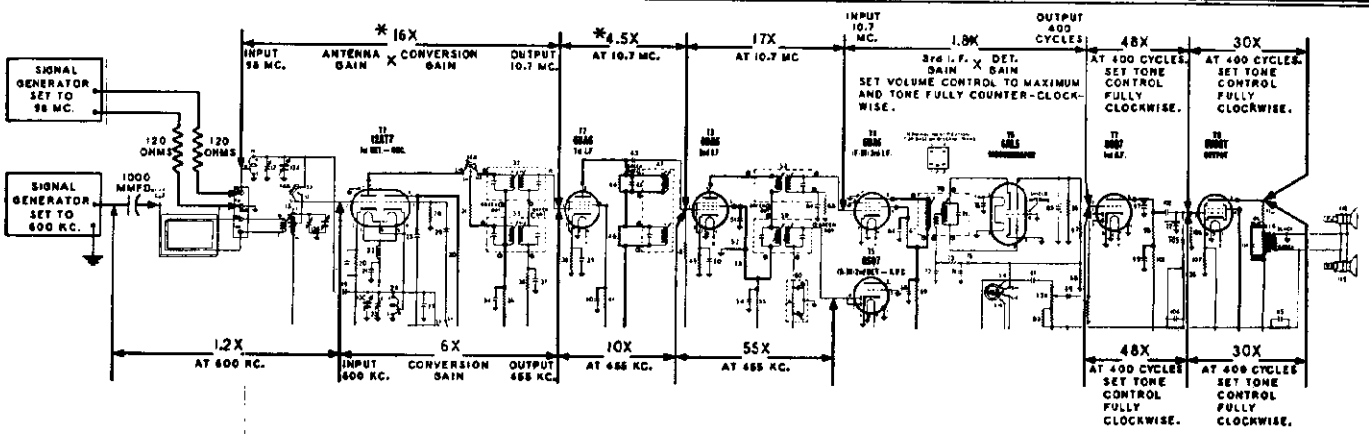

*The gain of these stages cannot be made with a vacuum tube voltmeter due to the presence of RF voltage from the local oscillator as that voltage prevents a true measurement of the incoming signal. To determine actual gain, use a signal generator with calibrated output so that a signal of known value may be injected at desired points. The ratio of signal generator voltage, applied to successive stages to produce a given audio output will be the gain of that section of the receiver.

DIFFERENCES in tube characteristics, tolerance of parts, adjustment of tuned circuits and variations in line voltage will influence stage gain. These factors should be given due attention in event the gain of a stage varies extensively from the values shown above.

STAGE GAIN MEASUREMENT PROCEDURE

REQUIRED INSTRUMENTS: The amount of amplification or "gain" of most of the stages of this receiver can be measured with an A.C. Vacuum Tube Voltmeter of the high frequency type. An AM (600 KC.) as well as an FM (98 MC.) signal source is required. For gain measurements in the FM antenna—FM converter—FM 1st I.F. stages, a microvolt calibrated FM signal generator must be used.

PROCEDURE: It is exceedingly important to adhere to the procedure outlined below since the accuracy of these measurements will be affected to a considerable extent by the failure to establish proper operating conditions.

1. Be sure that R.F., I.F. and Discriminator stages are carefully and accurately aligned by utilizing the alignment procedure given in this manual.
2. Connect Signal Generator as shown below. Note that generator connections differ for "AM" and "FM" measurements.
3. For "AM" measurements, set signal generator to 600 KC. (400 cycle modulation) and then carefully tune radio receiver to this signal by using an output meter to indicate peak output. If a local station interferes, set generator to a nearby frequency and re-tune the receiver.
4. For "FM" measurements, set signal generator to 98 MC. (400 cycle modulation with 22½ KC. deviation) and then carefully tune radio receiver to this signal by using a D.C. Vacuum Tube Voltmeter as an output indicator—meter must be connected between pin #7 of 6AL5 tube and chassis. If a local station interferes, set generator to a nearby frequency and re-tune the receiver.
5. The values of stage gain which are given here were measured with a fixed bias of 3 volts on the control grids of all R.F. and I.F. tubes which are connected to the A.V.C. circuit. Therefore, these values are not intended to indicate the full capability of a stage but they will serve as a convenient basis for determining proper operation. In order to duplicate the fixed bias voltage, connect the negative terminal of a 3 volt battery to A.V.C. at the junctions of resistors #17 and 57 and connect the positive battery lead to the receiver chassis.
6. R.F. and I.F. circuits are slightly de-tuned when contact is made with an instrument probe and this action, which is indicated by a change in the output meter reading, may seriously affect the gain measurement. Therefore, it is important to adjust the associated circuit trimmer for a maximum output meter reading and to set the input signal level to a convenient reference point on the gain measuring instrument while the probe is making contact. After removing the probe it is again necessary to adjust the trimmer so as to obtain the same output meter reading and thereby assure that the signal voltage at the specified point has not changed as a result of circuit de-tuning.

TERMINAL B IS LOCATED ½ TURN FROM TERMINAL C

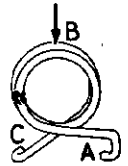

FM ANT. COIL 505919

TERMINAL K IS LOCATED ½ TURN FROM TERMINAL L



FM OSC. COIL 505918

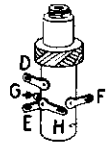

BC. ANT. COIL 505929

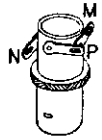

BC. OSC. COIL 505927

STEWART-WARNER CORP. MODELS B92CR1,-2,-3,-4,-8,-9,-10; CHASSIS 9043-A,-B,-C,-D,-K,-L,-

BROADCAST BAND — "AM" — ALIGNMENT PROCEDURE

1. Disconnect leads from FM-AM antenna terminal strip (labelled FM-FM-AM-AM) at back of chassis; also disconnect speaker leads and phone plugs. Remove chassis as well as the two speakers. (If desired, allow speakers to remain in cabinet and connect to receiver by extension leads.)

2. Stand chassis on one edge and space it approximately same distance from loop (attached to back of cabinet) as when installed in cabinet. Reconnect all antenna leads previously connected to the antenna terminal strip. Reconnect the two speakers.

3. With the gang condenser fully meshed, dial pointer should be in the position indicated by the last division below 55 on the dial. If it is set incorrectly, hold tuning shaft steady and reposition pointer.

4. Connect an output meter across speaker voice coils, or from plate of 6V6GT tube to chassis through a 0.1 Mfd. condenser.

5. Connect ground lead of signal generator to the receiver chassis.

6. Set volume control at maximum volume position and use a weak signal from the signal generator.

7. After alignment procedure is completed and chassis and loop antenna have been reinstalled in cabinet, arrange leads to loop so that they are separated from each other as much as possible—avoid twisting, taping or extending these leads.

DUMMY ANT. IN SERIES WITH SIGNAL GENERATOR	CONNECT HIGH SIDE OF SIGNAL GENERATOR TO	SIGNAL GENERATOR FREQUENCY	BAND SWITCH POSITION	RECEIVER DIAL SETTING	TRIMMER OR SLUG NUMBER	TRIMMER DESCRIPTION	TYPE OF ADJUSTMENT
.1 MFD. Condenser	Lug on trimmer #7 at top of gang (see figure below for location of trimmer).	455 KC	AM Broadcast (Middle)	Any point where it does not affect the signal.	1-2	3rd I.F.	Adjust for maximum output. Then repeat adjustment.
					3	2nd I.F.	
					4-5	1st I.F.	
1000 MMFD. Mica Condenser	External Antenna Clip on Cabinet	1500 KC	AM Broadcast (Middle)	1500 KC	6	Broadcast Oscillator	Adjust for maximum output.
1000 MMFD. Mica Condenser	External Antenna Clip on Cabinet	1500 KC	AM Broadcast (Middle)	Tune to 1500 Kc. generator signal.	7	Broadcast Antenna	Adjust for maximum output.
1000 MMFD. Mica Condenser	External Antenna Clip on Cabinet	600 KC	AM Broadcast (Middle)	Tune to 600 Kc. generator signal.	8	Adjustable core of Broadcast Antenna Coil.	Adjust for maximum output.
Repeat adjustment of trimmers 7 and 8 until one no longer detunes the other.							

NOTE: It is preferable to check the alignment of the 2nd IF stage in the FM channel after completing AM alignment.

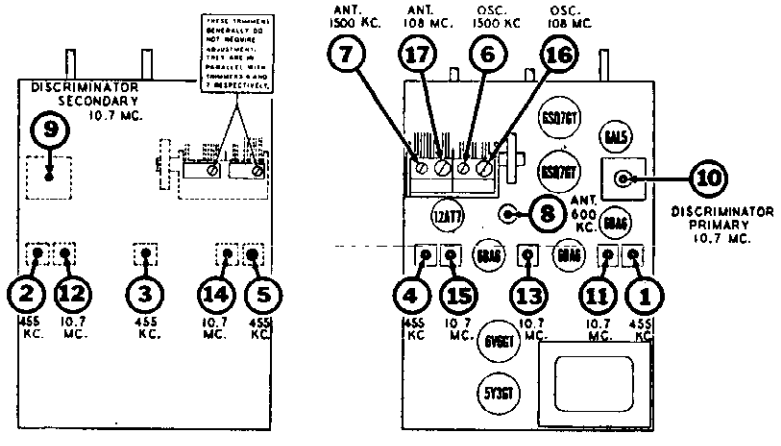

BOTTOM VIEW — Fig. 1 — TOP VIEW

TRIMMER LOCATION CHART

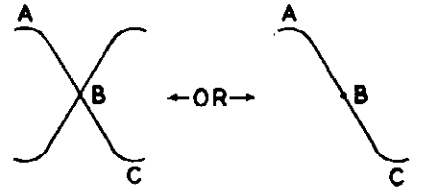

This double "S" curve pattern results when 'scope uses properly phased "Sawtooth" horizontal deflection voltage whose frequency is twice the modulation frequency of signal generator.

This single "S" curve pattern results when 'scope uses properly phased "sine wave" horizontal deflection voltage.

Fig. 2

©John F. Rider

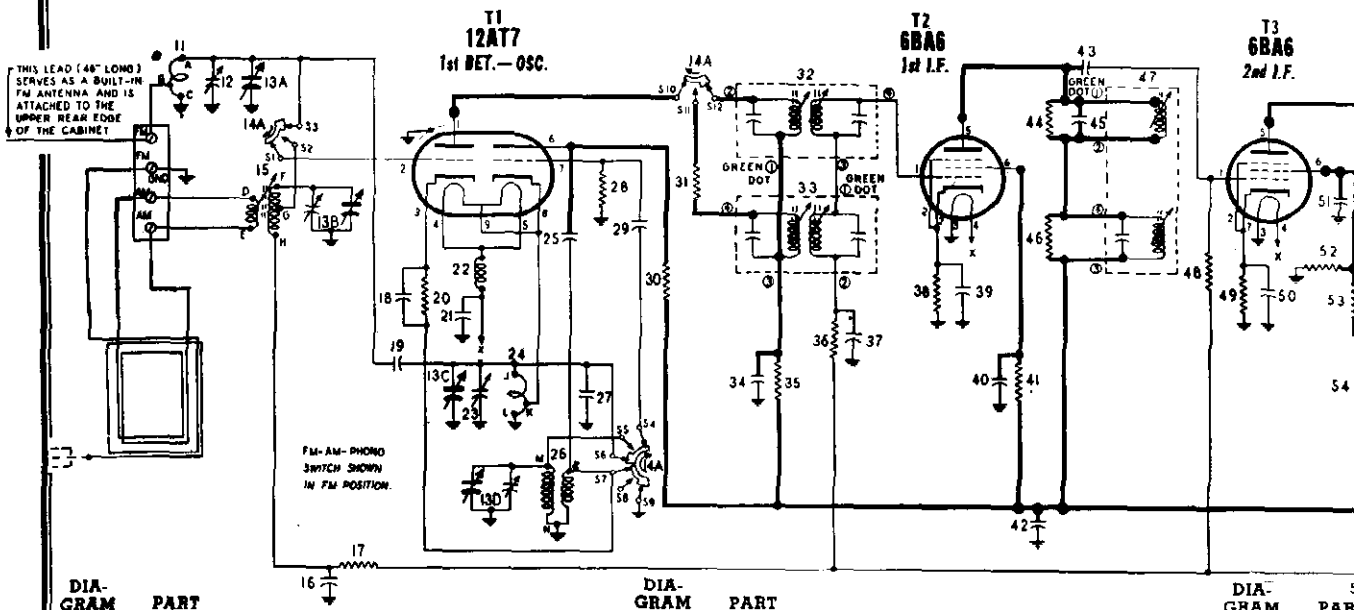

DIA-GRAM NO.	PART NO.	DESCRIPTION

CONDENSERS

12	505920	Condenser—trimmer 3-12 Mmfd.
13 A to D	505916	Condenser—variable gang (with drum)
16	502153	Condenser—.05 Mfd. 200 volt
18	505873	Condenser—ceramic .005 Mfd. 450 volt
19	504983	Condenser—ceramic 1.0 Mmfd. 500 volt
21	502151	Condenser—.01 Mfd. 400 volt
23	505920	Condenser—trimmer 3-12 Mmfd.
25	505873	Condenser—ceramic .005 Mfd. 450 volt
27	504905	Condenser—ceramic 5 Mmfd. 500 V. ± 10%
29	502182	Condenser—ceramic 39 Mmfd. 500 V. ± 5%
34	505873	Condenser—ceramic .005 Mfd. 450 volt
37	505873	Condenser—ceramic .005 Mfd. 450 volt
39	502156	Condenser—.004 Mfd. 400 volt
40	505873	Condenser—ceramic .005 Mfd. 450 volt
42	505873	Condenser—ceramic .005 Mfd. 450 volt
43	504974	Condenser—ceramic 47 Mmfd. 500 volt
45	506399	Condenser ceramic 33 Mmfd. 500 V. ± 5%
50, 51	505873	Condenser—ceramic .005 Mfd. 450 volt
54	505873	Condenser—ceramic .005 Mfd. 450 volt
56	502153	Condenser—.05 Mfd. 200 volt
60 B, C	505946	Condenser—ceramic 150 Mmfd. 400 volts (part of RF filter unit)
62	504719	Condenser—electrolytic 4 Mfd. 450 volt
64	505873	Condenser—ceramic .005 Mfd. 450 volt
66	505873	Condenser—ceramic .005 Mfd. 450 volt
68	505873	Condenser—ceramic .005 Mfd. 450 volt
71	505183	Condenser—ceramic 47 Mmfd. 500 V. ± 2%
72	505026	Condenser—ceramic 150 Mmfd. 350 volt
74	502151	Condenser—.01 Mfd. 400 volt
75	502152	Condenser—.02 Mfd. 400 volt
76	505873	Condenser—ceramic .005 Mfd. 450 volt
77	504974	Condenser—ceramic 47 Mfd. 500 volt
79	502151	Condenser—.01 Mfd. 400 volt
81	502153	Condenser—.05 Mfd. 200 volt
85	504937	Condenser—electrolytic 5 Mfd. 50 volt
89	502260	Condenser—.002 Mfd. 600 volt
91	512044	Condenser—.25 Mfd. 200 volt
97	502931	Condenser—mica 100 Mmfd. 500 volt
99	502410	Condenser—.1 Mfd. 400 volt
100	502157	Condenser—.05 Mfd. 400 volt
102	502152	Condenser—.02 Mfd. 400 volt
103	504904	Condenser—.01 Mfd. 600 volt
104	512032	Condenser—.1 Mfd. 200 volt
110 A to D	505908	Condenser—electrolytic A—20 Mfd. 25 volt B—10 Mfd. 450 volt C—30 Mfd. 450 volt D—40 Mfd. 450 volt
111	502260	Condenser—.002 Mfd. 600 volt
115	512032	Condenser—.1 Mfd. 200 volt
121	512255	Condenser—.01 Mfd. 400 volt

RESISTORS

17	510091	Resistor—carbon 1 Meg. ¼ watt
20	510043	Resistor—carbon 2,200 Ohms ¼ watt
28	510055	Resistor—carbon 10,000 Ohms ¼ watt
30	510043	Resistor—carbon 2,200 Ohms ¼ watt
31	510001	Resistor—carbon 10 Ohms ¼ watt
35	510037	Resistor—carbon 1,000 Ohms ¼ watt
36	510091	Resistor—carbon 1 Meg. ¼ watt
38	510016	Resistor—carbon 68 Ohms ¼ watt
41	510161	Resistor—carbon 22,000 Ohms ½ watt
44	510046	Resistor—carbon 3,300 Ohms ¼ watt
46	510053	Resistor—carbon 8,200 Ohms ¼ W. ± 10%
48	510091	Resistor—carbon 1 Meg. ¼ watt
49	510016	Resistor—carbon 68 Ohms ¼ watt
52	510161	Resistor—carbon 22,000 Ohms ½ watt
53	510155	Resistor—carbon 10,000 Ohms ½ watt
55	510037	Resistor—carbon 1,000 Ohms ¼ watt
57	510093	Resistor—carbon 2.2 Meg. ¼ watt
60-A	505946	Resistor—carbon 47,000 Ohms 1/5 watt (part of RF filter unit)
61	510085	Resistor—carbon 470,000 Ohms ¼ watt
63	510343	Resistor carbon 2,200 Ohms 2 watt
65	510091	Resistor—carbon 1 Meg. ¼ watt
67	510261	Resistor—carbon 22,000 Ohms 1 watt
69	510137	Resistor—carbon 1,000 Ohms ½ watt
73	510046	Resistor—carbon 3,300 Ohms ¼ watt
78	510070	Resistor—carbon 68,000 Ohms ¼ watt
80	510079	Resistor—carbon 220,000 Ohms ¼ watt
82-A,B,C	505911	Volume and tone control A—2 Megohms B—2 Megohms C—"ON-OFF" switch
83	510070	Resistor—carbon 68,000 Ohms ¼ watt
84	510037	Resistor—carbon 1,000 Ohms ¼ watt
86	510061	Resistor—carbon 22,000 Ohms ¼watt
87	510093	Resistor—carbon 2.2 Meg. ¼ watt
88	510085	Resistor—carbon 470,000 Ohms ¼ watt
90	510098	Resistor—carbon 15 Meg ¼ watt
98	510093	Resistor—carbon 2.2 Meg. ¼ watt
101	510079	Resistor—carbon 220,000 Ohms ¼ watt
105	510067	Resistor—carbon 47,000 Ohms ¼ watt
106	510085	Resistor—carbon 470,000 Ohms ¼ watt
107	510128	Resistor—carbon 330 Ohms ½ watt
112	510709	Resistor—wire wound 600 Ohms 5 watt
113	510013	Resistor—carbon 47 Ohms ¼ watt
116	510043	Resistor—carbon 2,200 Ohms ¼ watt
117	510709	Resistor—wire wound 600 Ohms 5 watt

COILS AND TRANSFORMERS

11	505919	Coil—FM antenna
15	505929	Coil BC, antenna
	505894	Slug core for antenna coil
22	505075	Coil—R.F. choke (FM)
24	505918	Coil—FM oscillator
26	505927	Coil BC, oscillator
32	506080	Transformer—1st I.F. (FM)
33	505906	Transformer—1st I.F. (AM)
47	505907	Transformer—2nd I.F. (FM and AM)
58	505905	Transformer—3rd I.F. (FM)
59	505906	Transformer—3rd I.F. (AM)
70	505904	Transformer—discriminator
108	505075	Coil—R.F. choke (FM)
114	505912	Transformer—output
120	505909	Transformer—power

OTHER ELECTRICAL PARTS

14-A, B	505922	Switch—FM-AM-Phono
60-A,B,C	505946	RF filter unit A—Resistor—carbon 47,000 Ohms 1/5 watt B—Condenser—ceramic 150 Mmfd. 400 volt C—Condenser—ceramic 150 Mmfd. 400 volt
92	505100	Crystal cartridge
93	505273	Motor for type "VM"—505339 and "VM"—506261 record changer 115 volt 60 cyc.
	505274	Motor—for type "VM"—505339 and "VM"—506261 record changer 115 volt 50 cyc.
	505750	Motor—for type "A"—505650 record changer 115 volt 50 cyc.
	505758	Motor—for type "A"—505650 record changer 115 volt 60 cyc.

DIA-GRAM NO.	PART NO.
94	505269
	505759
95, 96	110629
109	110629
118	505342
119	506328

NER CORP.

MODELS B92CR1,-2,-3,-4, -8,-9,-10; CHASSIS 9043-A,-B,-C,-D,-K,-L,-M

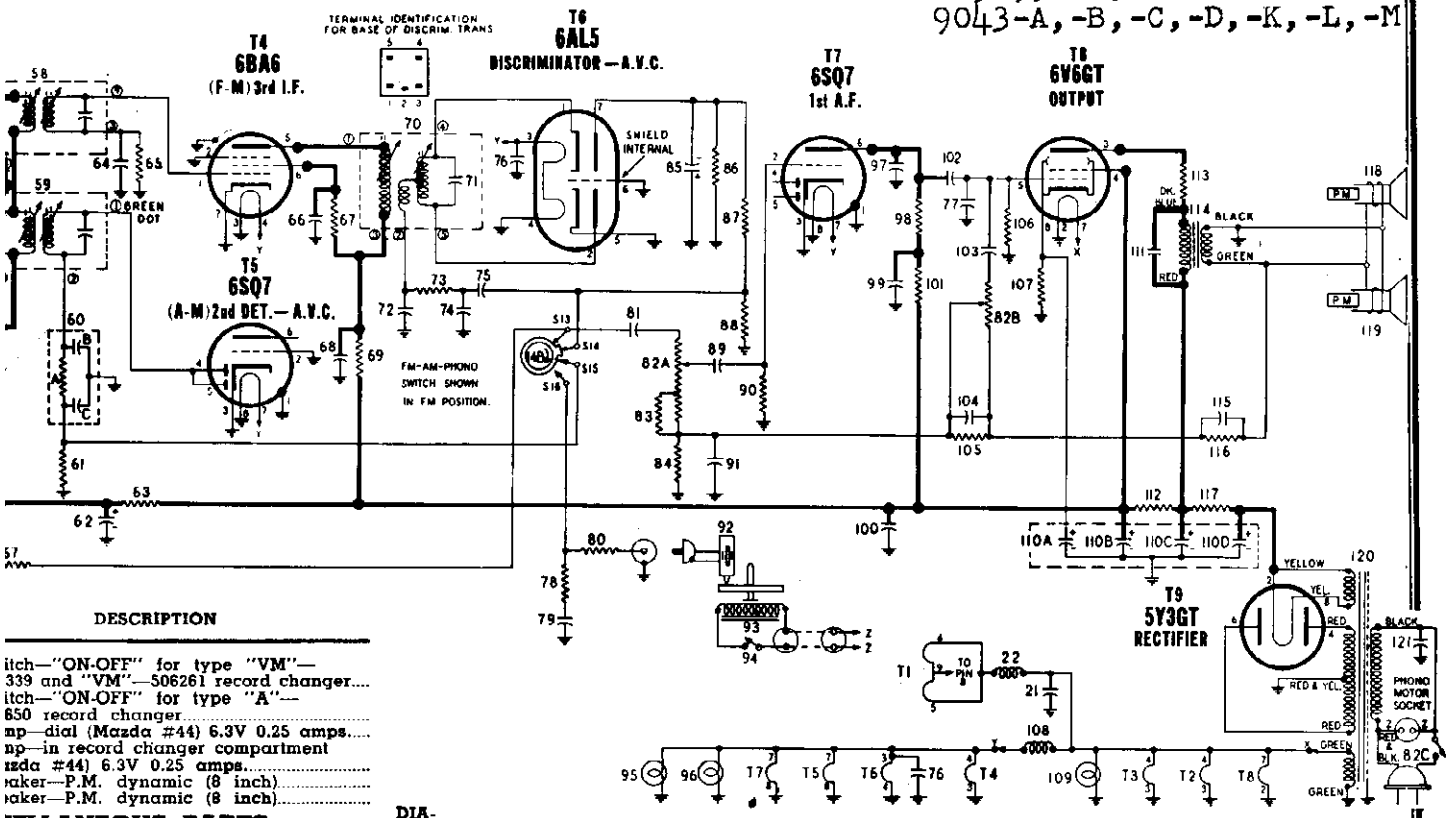

DESCRIPTION

itch—"ON-OFF" for type "VM"—
339 and "VM"—506261 record changer....
itch—"ON-OFF" for type "A"—
650 record changer.....
mp—dial (Mazda #44) 6.3V 0.25 amps.....
mp—in record changer compartment
zda #44) 6.3V 0.25 amps.....
aker—P.M. dynamic (8 inch).....
aker—P.M. dynamic (8 inch).....

CELLANEOUS PARTS

e for mtg. electrolytic condenser.....
e for tube shield.....
ls eye for pilot light in record
hanger compartment .....
" washer .....
p—coil mounting .....
p—retainer on end of dial cord.....
p—retains dial scale.....
p—retains escutcheon .....
p for mounting I.F. transformers.....
rd—dial drive (3 ft. required).....per ft.
l scale (brown background).....
l scale (black background).....
or for radio compartment; upper right;
Model B92CR1 (less hardware).....
or for record compartment; lower left;
Model B92CR1 (less hardware).....
or for record compartment; lower right;
Model B92CR1 (less hardware).....
or for record storage compartment;
Model B92CR3 (less hardware).....
or for record storage compartment;
Model B92CR2 (less hardware).....
or for record storage compartment;
Model B92CR4 (less hardware).....
utcheon—dial .....
tener for loop antenna.....
ndle for record storage compartment
loor; Model B92CR1.....
ndle for door; Models B92CR2, B92CR3,
nd B92CR4 .....
ndle; Models B92CR8, B92CR9, B92CR10
ndle for radio door; Model B92CR1.....
ge—door; Model B92CR1.....per pair
ge—door; Model B92CR3.....per pair
ge for door; Model B92CR2, B92CR4
suplied in pairs).....
ge for lid; Models B92CR2, B92CR4,
92CR8, B92CR9, B92CR10,
supplied in pairs).....
ge for lid; Models B92CR1 and B92CR3
supplied in pairs).....
ob—"TUNING" (brown plastic).....
ob—"VOLUME" (brown plastic).....
ob—"TONE" (brown plastic).....
ob—"FM-AM-PHONO" (brown plastic)....
ob—"TUNE" (black plastic).....
ob—"VOLUME" (black plastic).....
ob—"TONE" (black plastic).....
ob—"FM-AM-PHONO" (black plastic)....
l for record changer compartment;
Model B92CR1 (less hardware).....
l for record changer compartment;
Model B92CR3 (less hardware).....
l for record changer compartment;
Model B92CR2 (less hardware).....

DIA-GRAM NO.	PART NO.	DESCRIPTION
	506160	Lid for record changer compartment; Model B92CR4 (less hardware)
	506268	Lid for record changer compartment; Model B92CR8
	506269	Lid for record changer compartment; Model B92CR9
	506270	Lid for record changer compartment; Model B92CR10
	505456	Lid support for Models B92CR8, B92CR9, and B92CR10
	505463	Lid support for Model B92CR1
	506074	Lid support for Model B92CR3
	506163	Lid support for Models B92CR2, B92CR4
	505469	Light diffusing strip
	505717	Needle—Phonograph
	505686	Pointer
	500986	Plug for phono. pick-up cable
	501031	Plug for phono. motor cable
	119087	Ring for dial cord
	505944	Ruber pad for mtg. chassis
	79993	Screw—#8 x 1¼"; for mtg. chassis
	505923	Shaft—tuning
	503588	Shaft and drum for dial
	505722	Shield—light
	505367	Shield—tube
	505930	Shield—tube (12AT7)
	505894	Slug core for antenna coil
	116690	Socket—octal base
	160039	Socket—phono. plug
	160392	Socket—octal (rectifier)
	504597	Socket—miniature
	505307	Socket and phono. motor cable
	505910	Socket—pilot light
	505921	Socket—novgl base
	505933	Socket pilot light (record changer comp.)
	505161	Spring—tension
	506275	Stop for door; Models B92CR2, B92CR4
	506276	Stop for door; Model B92CR3
	505924	Terminal strip (FM-FM-AM-AM)

NOTE

A revision that occurred during production is included in the circuit on this page and it may be identified as follows:

Condenser #77 was formerly connected from terminal S14 (switch section 14B) to ground.

This change was made to provide greater stability in the audio system. Chassis incorporating the change have a letter "S" stamped on rear surface adjacent to model number.

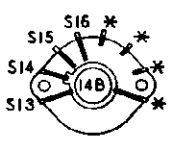

SECTION 2 REAR VIEW

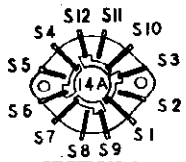

SECTION 1 REAR VIEW

★ Not used; may serve as wiring junction point.

BAND SWITCH 505922

Lettered terminals in illustrations correspond to similarly lettered terminals on the circuit diagram.

(F-M) I. F. 10.7 MC.
(A-M) I. F. 455 KC.

HANGERS: For B92CR1, Model A-505650. RCD.CH.18-1: For B92CR2,-3,-4, Model

MODELS B92CR1,-2,-3,-4, -8,-9,-10; CHASSIS 9043-A,-B,-C,-D,-K,-L,-M

STEWART-WARNER CORP.

FREQUENCY MODULATION — "FM" — ALIGNMENT PROCEDURE

(USING A VACUUM TUBE VOLTMETER AND AM SIGNAL GENERATOR)

INSTRUMENTS: Although it is preferable to use an FM generator and an oscilloscope, reasonably accurate alignment is obtainable when using a conventional AM generator and vacuum tube voltmeter providing proper care is exercised in adjusting the discriminator circuit trimmer.

IMPORTANT: When using an AM signal generator, it should be capable of producing fundamental frequencies of 10.7 MC and 88 to 108 MC — avoid using an AM generator which produces signals in the 88 to 108 MC range by using harmonics higher than the second. Generators which are dependent upon third, fourth or fifth harmonics for output frequencies of 88 to 108 MC will generally produce undesirable spurious beat signals with the local oscillator in the receiver and alignment will be exceedingly difficult.

1. If alignment of both AM and FM channels is required it is necessary to align the AM channel first, then align the FM channel as instructed in chart below (AM alignment procedure is given on the preceding page).
2. Disconnect leads from FM-AM antenna terminal strip (labelled FM-FM-AM-AM) at back of chassis; also disconnect speaker leads and phono plugs. Remove chassis as well as the two speakers. (If desired, allow speaker to remain in cabinet and connect to receiver by extension leads.)
3. With the gang condenser fully meshed, dial pointer should be in the position indicated by the last division below 55 on the dial. If it is set incorrectly, hold tuning shaft steady and reposition pointer.
4. A specific setting of the receiver volume control is not required, however, it will be found convenient to leave it in the maximum volume position so that alignment signals will be audible even though the output indication is obtained by a V-T voltmeter connected to points in the discriminator circuit.
5. Dress FM circuit leads as short and straight as possible, particularly those in the oscillator circuit. I.F. plate and grid leads should also be kept short and straight.
6. Set band switch to the FM (extreme clockwise) position.

SIGNAL GENERATOR CONNECTIONS	FREQUENCY & TYPE OF MODULATION	VACUUM TUBE VOLTMETER CONNECTIONS	RECEIVER DIAL SETTING	TRIMMER OR SLUG NUMBER	TRIMMER DESCRIPTION	TYPE OF ADJUSTMENT AND OUTPUT INDICATION
Connect high side to Pin #2 of 12AT7. Use a .01 MFD. condenser in series with generator lead. Connect ground lead to receiver chassis in vicinity of 12AT7 tube.	**10.7 MC** AM signal may be 400 cycle modulated.	Connect common (or ground) terminal of meter to receiver chassis. D.C. probe lead of meter is then connected to pin #7 of the 6AL5 tube.	Any position where it does not affect the signal.	**10**	Discriminator Primary	Adjust these trimmers for maximum meter reading—the output voltage will be of negative polarity.
				11 and 12	3rd I.F.	
				13	2nd I.F.	
				14 and 15	1st I.F.	
Same as above	Same as above	Before connecting V-T voltmeter, it is necessary to connect two 68,000 ohm resistors (resistance of both units must compare within 1%) in series from pin #7 of the 6AL5 tube to the chassis. Then connect common (or ground) terminal of V-T voltmeter to the junction of these two resistors. D.C. probe lead of meter is now connected to junction of resistor #73 (3300 ohms) and condenser #75 (.02 MFD.) which are in the discriminator output circuit. Set meter for operation on its lowest D.C. voltage range.	Same as above	**9**	Discriminator Secondary	Note that as trimmer #9 is rotated a point will be found where voltmeter will swing rather sharply from a positive to a negative reading or vice versa. Correct setting of trimmer #9 is obtained when meter reads zero as trimmer is moved through this point. The adjustment is somewhat critical and considerable care must be exercised to set the trimmer for a zero meter indication
Recheck adjustment of trimmers #9 and 10 to be sure that both are set as accurately as possible to obtain the specified output indication on vacuum tube voltmeter. Then disconnect and remove the two 68,000 ohm resistors that were used for the vacuum tube voltmeter connection in the preceding step.						
Generator output leads must be connected to the two "FM" antenna terminals at back of chassis. Insert a 120 Ohm resistor in series with each of the generator leads before connecting to receiver antenna terminals.	**108 MC** AM signal may be 400 cycle modulated.	Connect common (or ground) terminal of meter to receiver chassis. D.C. probe lead of meter is then connected to Pin #7 of the 6AL5 tube.	**108 MC**	**16**	Oscillator Trimmer	Set trimmer #16 to receive 108 MC. signal as indicated by maximum meter reading.
Same as above	Same as above	Same as above	By means of tuning control knob, set dial pointer to 108 MC. mark on dial.	**17**	Antenna Trimmer	Adjust trimmer #17 for maximum meter reading.
				14 and 15	1st I.F.	Recheck adjustment of these trimmers for maximum meter reading.

Check calibration and tracking of receiver with input signals of 88 and 98 MC. If difference between dial pointer setting and 88 or 98 MC calibration mark does not exceed ± 0.3 MC. and antenna circuit is tracking properly, then alignment may be considered satisfactory and no further adjustment is necessary.

Where the calibration error is greater than ± 0.3 MC. it is advisable to make the following adjustments:

1. If pointer falls above the 88 MC. calibration point, it will be necessary to slightly spread the windings of the FM oscillator coil. Then repeat the two preceding adjustments of trimmers 16 and 17 at 108 MC. Should it be found impossible to obtain the 108 MC. signal at the proper point on the dial by adjustment of the trimmers it will then be necessary to adjust the spacing of the gang condenser plates.
2. If pointer falls below the 88 MC. calibration point, it will be necessary to push the windings together on the FM oscillator coil. Then repeat the two preceding adjustments of trimmers 16 and 17 at 108 MC. Should it be found impossible to obtain the 108 MC. signal at the proper point on the dial by adjustment of the trimmers it will then be necessary to adjust the spacing of the gang condenser plates.

©John F. Rider

STEWART-WARNER CORP. MODELS B92CR1,-2,-3,-4, -8,-9,-10; CHASSIS 9043-A,-B,-C,-D,-K,-L,-M

FREQUENCY MODULATION — "FM" — ALIGNMENT PROCEDURE

(USING AN OSCILLOSCOPE AND FM "SWEEP" GENERATOR)

INSTRUMENTS: Alignment of the FM circuits in this receiver can be most conveniently accomplished with an FM signal generator. When using this type generator, the output indicator must be an oscilloscope.

1. If alignment of both AM and FM channels is required it is necessary to align the AM channel first, then align the FM channel as instructed in chart below (AM alignment procedure is given on page 4).
2. Disconnect leads from FM-AM antenna terminal strip (labelled FM-FM-AM-AM) at back of chassis; also disconnect speaker leads and phono plugs. Remove chassis as well as the two speakers. (If desired, allow speakers to remain in cabinet and connect to receiver by extension leads.)
3. With the gang condenser fully meshed, dial pointer should be in the position indicated by the last division below 55 on the dial. If it is set incorrectly, hold tuning shaft steady and reposition pointer.
4. A specific setting of the receiver volume control is not required, however, it will be found convenient to leave it in the maximum volume position so that alignment signals will be audible even though the output indication is obtained by an oscilloscope connected to points in the discriminator circuit.
5. Dress FM circuit leads as short and straight as possible, particularly those in the oscillator circuit. I.F. plate and grid leads should also be kept short and straight.
6. Set band switch to the FM (extreme clockwise) position.
7. Set tone control to fully counter-clockwise position.

SIGNAL GENERATOR CONNECTIONS	FREQUENCY & TYPE OF MODULATION	OSCILLOSCOPE CONNECTIONS	RECEIVER DIAL SETTING	TRIMMER OR SLUG NUMBER	TRIMMER DESCRIPTION	TYPE OF ADJUSTMENT AND OUTPUT INDICATION
Connect high side to Pin #2 of 12AT7. Use a .01 MFD. condenser in series with generator lead. Connect ground lead to receiver chassis in vicinity of 12AT7 tube.	**10.7 MC** FM signal should preferably be modulated ±300 KC.	Connect vertical amplifier "high" lead in series with an 0.1 MFD. condenser to pin #6 of 6SQ7 1st A.F. tube. Connect scope ground lead to receiver chassis. Set vertical amplifier of scope for maximum amplification. Where FM signal generator provides an output voltage for synchronization, connect this voltage to "sync" terminals of the scope.	Any position where it does not affect the signal.	9	Discriminator Secondary	Before attempting to adjust trimmer #9, set trimmers #10, 11, 12, 13, 14 and #15 for approximately maximum sound output from the speaker (output meter not required). This is done to obtain sufficient signal for an oscilloscope pattern of desirable amplitude when making the following discriminator trimmer adjustment. Adjust setting of trimmer #9 until a pattern similar to that shown in Fig. 2 appears on the screen. If pattern does not remain stationary operate sweep frequency control on 'scope and also "sync" control until desired result is obtained. Correct setting of trimmer #9 is obtained when crossover point "B" (Fig. 2) is centrally located in both the horizontal and vertical directions; in addition that portion of the curve between "A" and "C" should be as linear (straight) as possible.
Same as above	Same as above	Same as above	Same as above	10	Discriminator Primary	Adjust these trimmers for maximum amplitude and steepness of that portion of the pattern between "A" and "C" (see Fig. 2).
				11 and 12	3rd I.F.	
				13	2nd I.F.	
				14 and 15	1st I.F.	
Recheck adjustments of trimmers #9 and 10 to be sure that both are set as accurately as possible to obtain correct cross-over point or symmetry of pattern.						
Generator output leads must be connected to the two "FM" antenna terminals at back of chassis. Insert a 120 Ohm resistor in series with each of the generator leads before connecting to receiver antenna terminals.	**108 MC** FM signal should preferably be modulated ±300 KC.	Same as above	108 MC	16	Oscillator Trimmer	Adjust trimmer #16 to obtain the symmetrical pattern shown in Fig. 2. Correct setting of trimmer #16 is obtained when cross-over point in pattern is centrally located.
Same as above	Same as above	Same as above	By means of tuning control knob, set dial pointer to 108 MC. mark on dial.	17	Antenna Trimmer	Adjust trimmer #17 for maximum amplitude of pattern.
				14 and 15	1st I.F.	Recheck adjustment of these trimmers for maximum amplitude of pattern.

Check calibration and tracking of receiver with input signals of 88 and 98 MC. If difference between dial pointer setting and 88 or 98 MC calibration mark does not exceed ± 0.3 MC. and antenna circuit is tracking properly, then alignment may be considered satisfactory and no further adjustment is necessary.

Where the calibration error is greater than ± 0.3 MC. it is advisable to make the following adjustments:

1. If pointer falls above the 88 MC. calibration point, it will be necessary to slightly spread the windings of the FM oscillator coil. Then repeat the two preceding adjustments of trimmers 16 and 17 at 108 MC. Should it be found impossible to obtain the 108 MC. signal at the proper point on the dial by adjustment of the trimmers it will then be necessary to adjust the spacing of the gang condenser plates.
2. If pointer falls below the 88 MC. calibration point, it will be necessary to push the windings together on the FM oscillator coil. Then repeat the two preceding adjustments of trimmers 16 and 17 at 108 MC. Should it be found impossible to obtain the 108 MC. signal at the proper point on the dial by adjustment of the trimmers it will then be necessary to adjust the spacing of the gang condenser plates.

©John F. Rider

MODELS B92CR1,-2,-3,-4,-8,-9,-10 STEWART-WARNER CORP. CHASSIS 9043-A,-B,-C,-D,-K,-L,-M

SOCKET VOLTAGES

Measured with voltmeter having sensitivity of 1000 ohms per volt except where indicated by (*). The (*) symbol designates a vacuum tube voltmeter measurement.

ALL MEASUREMENTS MADE WITH BAND SWITCH IN "FM" POSITION UNLESS OTHERWISE INDICATED
DIAL TUNED TO 88MC. FOR "FM" MEASUREMENTS
DIAL TUNED TO 540KC. FOR "AM" MEASUREMENTS
VOLUME CONTROL SET TO MINIMUM WITH NO SIGNAL
TONE CONTROL SET TO FULLY CLOCKWISE POSITION
GROUND ALL ANTENNA TERMINALS

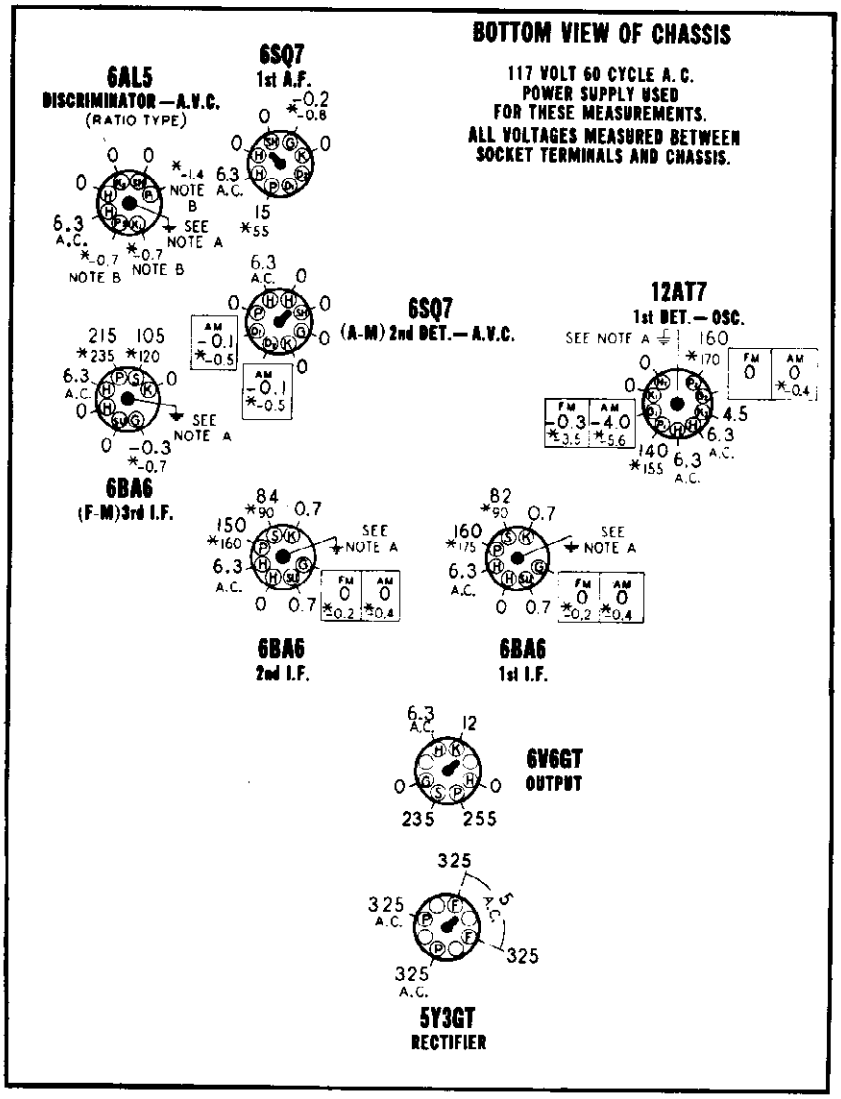

REAR OF CHASSIS

NOTE A: Grounding of center stud on tube socket is necessary to reduce capacity coupling between other pins. Oscillation may result if this ground is omitted.

NOTE B: This measurement should NOT be made with a conventional type voltmeter as circuit may break into oscillation due to coupling thru instrument leads; use a vacuum tube voltmeter with short leads.

To string dial cord, first slip pointer off its shaft. Then remove dial scale by taking out the six clips around edges. Dial plate may be taken off by removing the two screws which are visible and accessible at front of chassis. Now set gang condenser to fully open position and use the following parts:

114955 Clip on end of cord
117057 Cord (3 feet)
119087 Ring for dial cord
505161 Tension spring

To replace and properly position pointer see step 3 in "AM-Alignment Procedure" on page 4.

DIAL AND POINTER DRIVE CORD ARRANGEMENT

SIDE VIEW
(With dial plate removed)

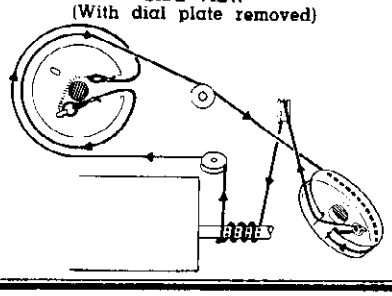

STROMBERG-CARLSON CO.

MODELS 1406PLA, 1406PLM

SPECIFICATIONS

Voltage Rating	50-60 cycle 117V
Tuning Range AM	535 to 1630 Kc.
Tuning Range FM	87 to 109 Mc.
Input Power Rating Radio	70 Watts
Input Power Rating Phono	25 Watts
Itermediate Frequency AM	455 Kc.
Itermediate Frequency FM	10.7 Mc.
Speaker Voice Coil Impedance at 400 Cycles	6 Ohms
Power Output	3 Watts

TUBE COMPLEMENT

6BA6	IF & RF Amplifiers	4
12AT7	FM Converter	1
6BE6	AM Converter	1
6AL5	Ratio Detector	1
6AV6	AM Detector	1
6V6GT	Power Output	1
5Y3GT	Rectifier	1
		10

IDENTIFICATION TABLE

Model	Chassis	Cabinet	Speaker	Phonograph	
				Mfr. No.	S-C No.
PLM	112052	108126	155065	VM-800A	148035
PLA	112052	108127	155065	VM-800A	148035

REPLACEMENT PARTS

The 1406 receiver uses many of the same parts that are also used on the 1407. Therefore, when ordering replacement parts, use the 1407 Service Notes with the exception of the following which replace corresponding parts of the 1407.

Part No.	Circuit No.	Description
110413	C-61	5MMF Ceramic Capacitor
111057	C-44	Electrolytic Capacitor
122035		Dial
124022		Drive Cord Assembly
134054		Ring
134074		Knob (Tuning)
134075		Knob (Tone and Volume)
134077		Knob (Selector)
144020		Pointer
145073	R-33	Potentiometer 2 Meg. (Volume Control)
145074	R-32	Potentiometer 2 Meg. (Tone Control)
147023		Pulley Assembly
149321	R-31	1350 Ohms 4 Watt
158034		Range Switch

CABINET PARTS

Part No.	PLA	PLM	Description
130080	x		Grille Cloth
130081		x	Grille Cloth
132016	x	x	Bullet Catch
132063	x	x	Knife Hinge R.H.
132064	x	x	Knife Hinge L.H.
132109		x	Door Pull
132110	x		Door Pull
132112	x	x	Drawer Slide
132113	x	x	Drawer Glide
148033	x	x	Drawer Assembly
201016	x		Door Pull Screw
204041		x	Door Pull Screw
524198	x	x	Hinge Mounting Screw

©John F. Rider

SCH

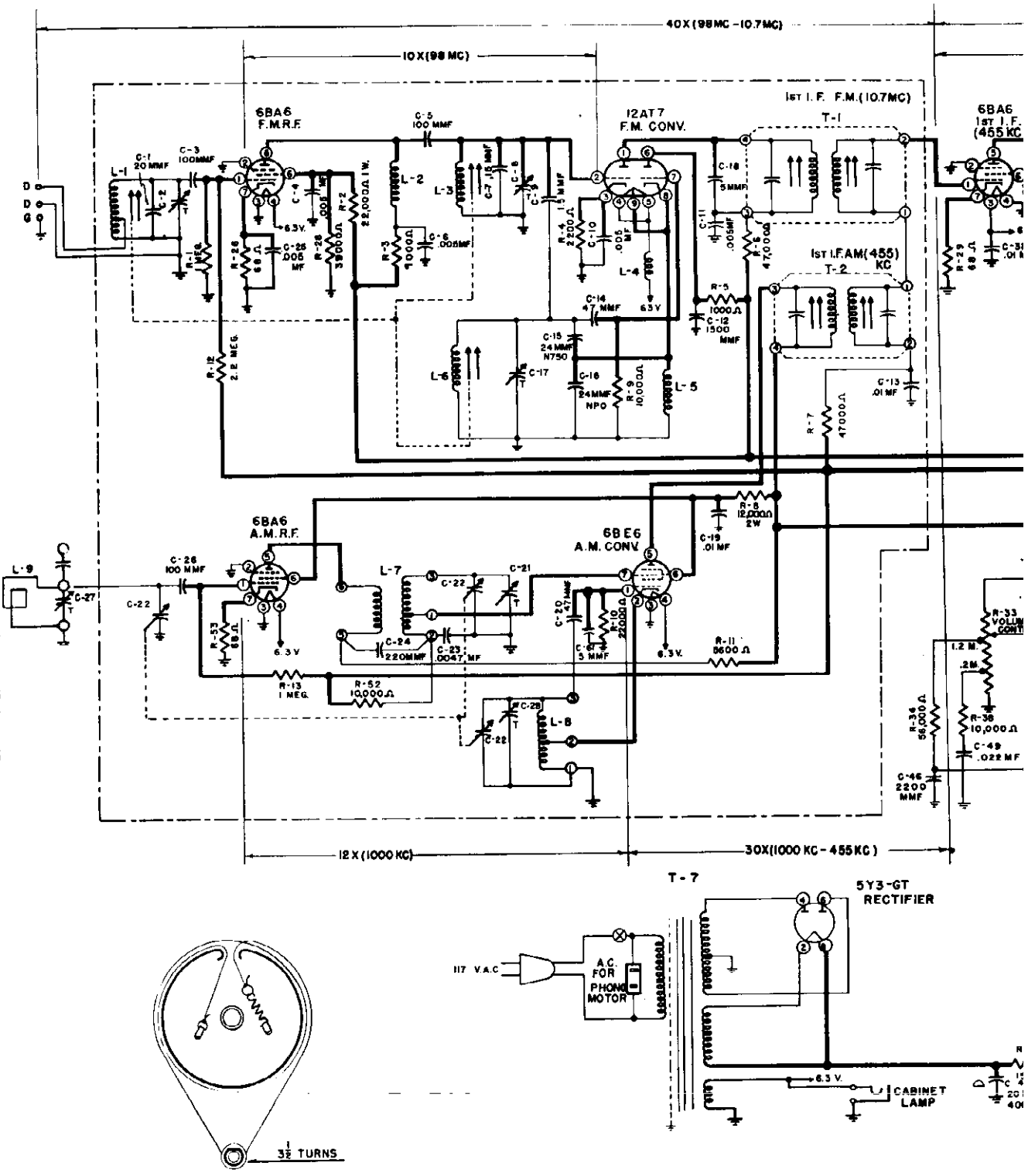
40X (98MC - 10.7MC)
10X (98 MC)
1ST I. F. F.M. (10.7MC)
6BA6
F.M.R.F.
12AT7
F.M. CONV.
T-1
6BA6
1ST I.F.
(455 KC
1ST I.F.AM (455) KC
T-2
6BA6
A.M.R.F.
6BE6
A.M. CONV.
L-1
L-2
L-3
L-4
L-5
L-6
L-7
L-8
L-9
T-7
5Y3-GT
RECTIFIER
117 V.A.C.
A.C. FOR PHONO MOTOR
6.3 V.
CABINET LAMP
12X (1000 KC)
30X (1000 KC - 455 KC)
3½ TURNS

G-CARLSON CO.

MODELS 1406PLA, 1406PLM

HEMATIC

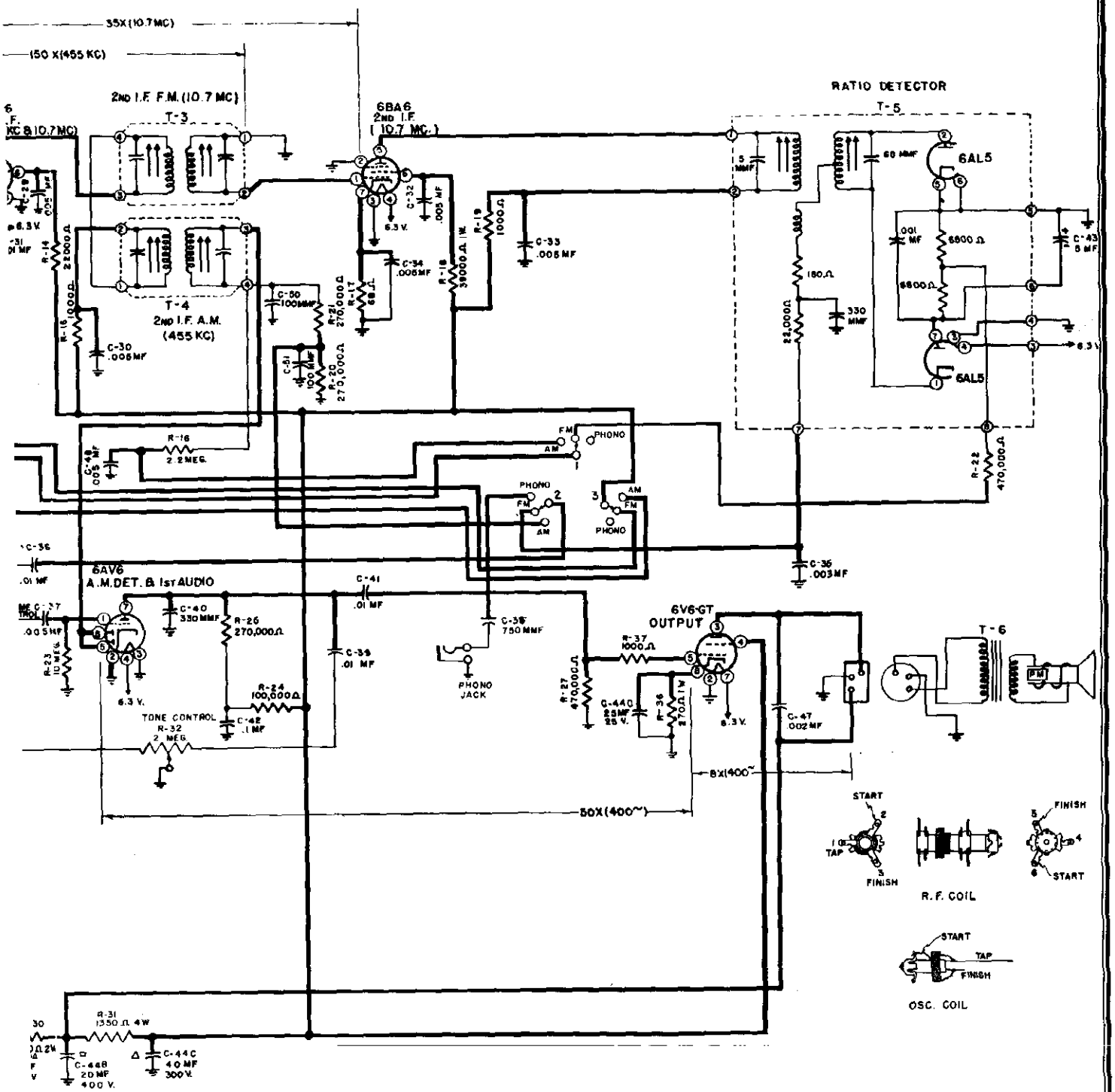

Note: C-30 should be shown returning to 6BA6 1st IF screen grid (Pin 6), instead of to ground. The wire should be shown removed from Pin 5 of 6AV6 AM Detector and then Pin 5 should be shown grounded.

MODELS 1406PLA, 1406PLM

STROMBERG-CARLSON CO.

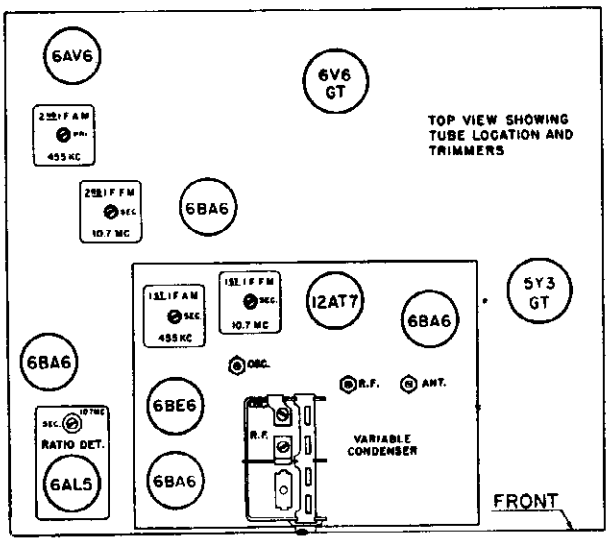

TUBE LOCATION AND VOLTAGE CHARTS

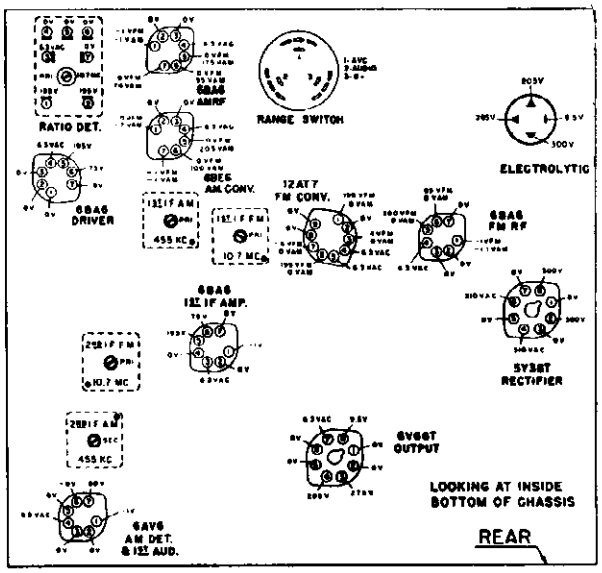

NOTE: Dots on IF trans. indicate the position of the color coded terminals.

ALIGNMENT PROCEDURE

On IF and Ratio Detector transformers, primary slugs are under chassis and secondary slugs above chassis.
Adjust AM loop trimmer after chassis is in cabinet for best reception at 1500 Kc.
Adjust dial pointer to diamond under 88 Mc. with condenser plates fully meshed.

A.M. - I.F.

Band & Pointer	Signal Generator	VTVM or Scope Connection	Adjustment and Notes
1. AM low end of dial.	455 Kc. 400 cy. mod. to Pin 7 (Grid) of 6BE6 tube through .01 cap.	Term. 2 of Range sw and ground.	Adj. two AM-IF trans., using —3V DC Scale.
2. "	455 Kc. swept 15 Kc.	"	Adjust same for best double-trace curve on scope.

F.M. - I.F.

1. FM low end of dial.	10.7 Mc. 400 cy. mod. to Pin 2 (Grid) of 12AT7 tube at RF Coil thru .01 capacitor.	"	Detune secondary of ratio det. Adj. two FM-IF trans. and pri. ratio det. trans., using —3 VDC scale.
2. "	10.7 Mc. swept 150 Kc.	"	Disconnect ground end of C-43 (5 mfd. electrolytic under ratio detector can). Adj. as step 1 for best double-trace curve on scope.
3. "	"	Terms. 2 & 1 of Range sw.	Be sure VTVM is not grounded. Connect C-43, Adj. sec. ratio det. for 0 voltage.

A.M. - R.F.

1. AM 1500 Kc.	1500 Kc. 400 cy. mod. coupled loosely to loop leads.	Term. 2 of Range sw and ground.	Adj. two trimmers on tuning cond., using low —DC scale.

F.M. - R.F.

1. FM 100 mc.	100 Mc. 400 cy. mod. to FM Ant. Terms., thru 270 ohm resistor.	"	Adj. C-17 (Osc.) C-8 (RF) and C-2 (Ant.) on low —DC scale.

Align both IF channels if either is out of adjustment.
Use a non-metallic screwdriver and light pressure for slug adjustment.
2nd AM-IF trans. will be damaged if chassis is placed on left side.
If FM osc. coil is replaced, adjust placement of its ground lead for tracking at 88 mc.
Refer to No. 4 Vol. 1 Current Flash for suggested instrument use.

© John F. Rider

STROMBERG-CARLSON CO. MODELS 1407PFM, 1407PLM, 1409 M-2W, M2-M, M2-Y, M3A, M3M, PGM, PGW

SPECIFICATIONS

	1407	1409
Voltage Rating	50-60 Cycle 117V	50-60 Cycle 117V
Type Of Circuit	Superheterodyne	Superheterodyne
Tuning Range AM	535 to 1630 Kc.	535 to 1630 Kc.
Tuning Range FM	87 to 109 Mc.	87 to 109 Mc.
Input Power Rating Radio	70 Watts	100 Watts
Input Power Rating Phono	25 Watts	25 Watts
Intermediate Frequency AM	455 Kc.	455 Kc.
Intermediate Frequency FM	10.7 Mc.	10.7 Mc.
Speaker Voice Coil Impedance at 400 Cycles	6 Ohms	6 Ohms
Power Output	3 Watts	11 Watts

TUBE COMPLEMENT

		1407	1409
6BA6	IF & RF Amplifiers	4	5
12AT7	FM Converter	1	1
6BE6	AM Converter	1	1
6AL5	Ratio Detector	1	1
6AV6	AM Detector & Audio Amplifier	1	1
12AU7	Audio Phase Inverter		1
6V6GT	Power Output	1	2
5Y3GT	Rectifier	1	1
6E5	Tuning Eye		1
		10	14

IDENTIFICATION TABLES

Model	Cabinet
1409 M3A	108112
1409 M3M	108098
1409 M-2W	108093
1409 M2-Y	108091
1409 M2-M	108092
1409 PGM	108095
1409 PGW	108096
1407 PLM	108090
1407 PFM	108099

Description	Part No.
1409 Chassis	112036
1407 Chassis	112037
1409 & 1407 Speaker	155065
1409 Phonograph	148022 (Seeburg SQ-2)
	148018 (Seeburg S)
	148026 (VM-402 Duo)
	148031 (VM-402)
1407-PL Phonograph	148021 (Seeburg SQ-1)
	148024 (VM-400)
1407-PF Phonograph	148026 (VM-402 Duo)
	148030 (VM-402)
	148021 (Seeburg SQ-1)

REPLACEMENT PARTS

Resistors

Part No.	1409 R-No.	1407 R-No.	Description
27640	34,35		150,000 Ohms ½ W
28144	17,21,26, 29,53	17,26,29,53	68 Ohms ½ W
28162	4	4	2200 Ohms ½ W
28169	40		8200 Ohms ½ W
28170	20		10,000 Ohms ½ W
28176	28	28	39,000 Ohms ½ W
28177	6	6	47,000 Ohms ½ W
28178	43	34	56,000 Ohms ½ W
28184	41	20,21,25	270,000 Ohms ½ W
28186	33		390,000 Ohms ½ W
28187	42,44,55		470,000 Ohms ½ W
28195	12	12	2.2 Meg. ½ W
149020	45		330 Ohms 2 W
149036		30	150 Ohms 2 W
149055	8	8	12,000 Ohms 2 W
149101	3,5,15,19, 23,31	3,5,15,19,37	1000 Ohms ½ W
149103	50,51		2200 Ohms ½ W
149107	9,52*	9,38,52	10,000 Ohms ½ W
149109	10	10	22,000 Ohms ½ W
149111	7	7	47,000 Ohms ½ W
149112	47		68,000 Ohms ½ W
149113	32	24	100,000 Ohms ½ W
149115	38,39		220,000 Ohms ½ W
149117		22,27	470,000 Ohms ½ W
149119	1,13	1,13	1 Meg. ½ W
149121	16,24	16	2.2 Meg. ½ W
149123	27,46		4.7 Meg. ½ W
149125		23	10 Meg. ½ W
149170		36	270 Ohms 1 W
149184	11	11	5600 Ohms 1 W
149188	2	2,14,18	22,000 Ohms 1 W
149189	14,18,22		39,000 Ohms 1 W
149247	30		1,000 Ohms 10 W
149282	54	41	4.7 Ohms 1 W
149286		31,32	2700 Ohms 2 W

Capacitors

Part No.	1409 C-No.	1407 C-No.	Description
25483		42	.1 MF 400 V Tubular
27646	50		.002 MF 600 V Tubular
27760		30,37,48	.005 MF 600 V Tubular
46315		35	.003 MF 400 V Tubular
110025	2,8,17	2,8,17	Trimmer
110029	22	22	Variable Condenser
110031	27	27	Trimmer 1.5-15 MMF
110402	14,20	14,20	47 MMF Ceramic
110403	16	16	24 MMF Ceramic
110404	1	1	20 MMF Ceramic
110405	7	7	15 MMF Ceramic
110419	45		.005 MF 500 V Tubular
110438	9	9	1.5 MMF Ceramic
110451	3,5,26,34,40	3,5,26,50,51	100 MMF Ceramic
110453	24	24	220 MMF Ceramic
110454		40	330 MMF Ceramic
110455	39,43		470 MMF Ceramic
110456	44	38	750 MMF Ceramic
110457	12	12	1500 MMF Ceramic
110476	56		100 MMF Ceramic NPO
110478	31		Diode Filter
110488	37		.003 MF 500 V Tubular
110536		46	2200 MMF Moulded
110540	13,19,29,30, 32,33,35, 36,38,41, 47,53,54, 59,60	13,19,31,36	.01 MF 400 V Moulded

© John F. Rider

MODELS 1407PFM, 1407PLM, Series 1409

STROMBERG-CARLSON CO.

REPLACEMENT PARTS—Continued

Part No.	1409 C-No.	1407 C-No.	Description
110542	46	49	.022 MF 400 V Moulded
110546	57		.1 MF 400 V Moulded
110551		47	.0022 MF 600 V Moulded
110555		39,41	.01 MF 600 V Moulded
110538	23	23	.0047 MF 400 V Moulded
110586	4,6,10,11, 25,42,49	4,6,10,11, 25,29,32, 33,34	.005 MF Disc Ceramic
110587	48		.004 MF 500 V Tubular
110592	15	15	24 MMF Ceramic N 750
110593	18	18	5 MMF Ceramic
111043	51		Electrolytic
111044	52		Electrolytic
111045		45	Electrolytic
111046		44	Electrolytic
111047	58	43	Electrolytic
111048	55		Electrolytic

Potentiometers

145056	R-25		Volume On-Off, 1 Meg.
145057	R-37	R-35	Treble, 1 Meg.
145058	R-36		Bass, 5 Meg.
145059		R-33	Volume On-Off, 2 Meg.
145060		R-40	Bass, 2 Meg.

Coils—Transformers

114051	L-8	L-8	A.M. Osc. Coil
114052	L-7	L-7	A.M. RF Coil
114053	L-1	L-1	FM Ant. Coil
114054	L-3,6	L-3,6	FM RF and Osc. Coil
114329	L-10		3rd. IF FM Coil
114337	T-4		2nd IF AM
114363	T-1,3	T-1,3	IF FM
114364	T-2	T-2,4	IF AM
114365	T-5	T-5	Ratio Detector
114618	L-11,12		Heater Choke Coil
114620	L-5	L-5	R.F. Cathode Choke
114621	L-4	L-4	R.F. Heater Choke Coil
114633	L-2	L-2	R.F. Plate Choke Coil
161239		T-6	Output Transformer
161240	T-6		Output Transformer
161415		T-7	Power Transformer
161416	T-7		Power Transformer

Tone Dial Assembly

18630	x	x	Tone Dial Lamp
119015	x	x	Tone Dial Plug Shell
134061	x	x	Tone Wheel
138017	x	x	Red Lens
138018	x	x	Blue Lens
138019	x	x	Inside Lens Holder
138020	x	x	Outside Lens Holder
143014	x	x	Tone Dial Plug (5 point)
152058	x	x	Tone Dial Lamp Socket

Miscellaneous

29956	x	x	Pilot Lamp
32041	x		Speaker Socket
107010	x	x	Push Button
109031	x	x	Eye Cable Assembly
113030	x	x	I.F. Trans. Mtg. Clip
118028	x	x	F.M. R.F. Core
122031	x	x	Dial Glass
124018	x	x	Drive Cord Assembly
129019	x	x	Pinion Gear
129022	x	x	Core Carriage Gear Assembly
131004	x	x	A-C Cord Grommet
131015	x	x	Dial Glass Grommet
134059	x	x	Knob
139028	x	x	A.M. Loop Assembly
142048	x	x	Dial Plate

Part No.	1409	1407	Description
144017	x	x	Pointer
146192	x	x	Call Letters
147022	x	x	¾" Pulley
147023	x	x	Pulley Assembly
147026	x	x	Balance Wheel
147027	x	x	Dial Drive Pulley
150037	x	x	Dial Drive Shaft
151028	x	x	Tube Shield Base
151036	x	x	Tube Shield
151060	x	x	R.F. Shield
151063	x		I.F. Shield
152009	x	x	Pilot Light Socket & Plug Assembly
152014	x	x	Octal Socket
152021	x	x	7 Pin Miniature Socket
152033		x	Speaker Socket
152038	x	x	A-C Socket
152055	x	x	Pilot Lamp Socket
152056	x	x	9 Pin Miniature Socket
152057	x	x	5 Pt. Socket
154042	x	x	Rubber Coil Spacer
155066	x	x	Speaker Cone
158031	x	x	A.M.-F.M. Switch
158032	x	x	Radio-Phono Switch
159027	x	x	Antenna Binding Post

Cabinet Parts

Part No.	1409—M3M, M3A	1409 M2W, M2Y, M2M	1409—PGM, PGW	1407—PLM	1407—PF	Description
37148			x			Door Pull
38442			x			Bullet Catch
41102			x	x		Stop Hinge R.H.
41103			x	x		Stop Hinge L.H.
108087	x			x	x	Phono Drawer and Track
125018		x				Speaker Escutcheon
125025	x	x	x	x	x	Plastic Escutcheon
125026	x	x	x			Metal Escutcheon
125028				x	x	Metal Escutcheon
130003		x				Grille Cloth
130030				x		Grille Cloth
130031				x		Metal Grille
130062	x					Grille Cloth
130064			x			Grille Cloth
130070					x	Grille Cloth
132009		x				Concealed Door Pull
132013		x				Butt Hinge
132016	x	x		x	x	Bullet Catch
132021		x	x			Right Phono Track
132022		x	x			Left Phono Track
132053		x				Upper Hinge, Semi-Concealed
132059	x			x	x	Right Phono Track
132060	x			x	x	Left Phono Track
132061				x		Door Pull
132062				x		Rosette
132063				x	x	Hinge, R. H.
132064				x	x	Hinge, L. H.
132065		x				Door Pull
132071				x		Album Door Pull
132084		x				Lower Hinge, Semi-Concealed
132089	x					Hinge
132090	x					Door Pull
132103					x	Door Pull
148019		x	x			Phono Drawer and Track
152009		x	x	x	x	Socket and Plug Assembly
201848					x	Door Pull Screw
201849				x		Album Door Pull Screw
801401			x	x	x	Lamp Cap
801403		x				Lamp Cap

STROMBERG-CARLSON CO.

MODELS 1407PFM, PLM

1407 TUBE LOCATION AND VOLTAGE CHARTS

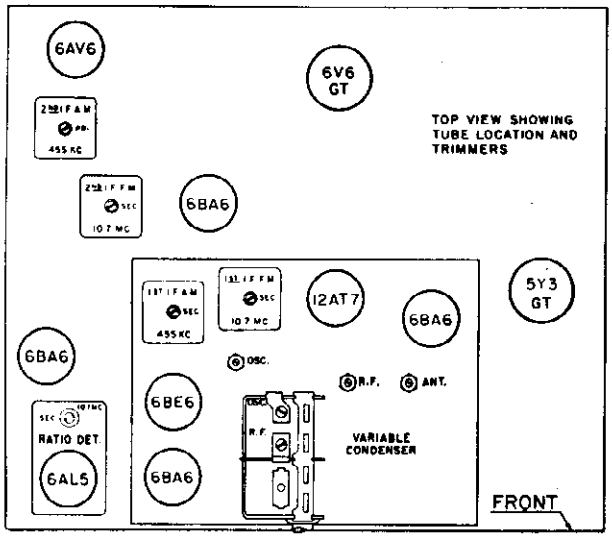

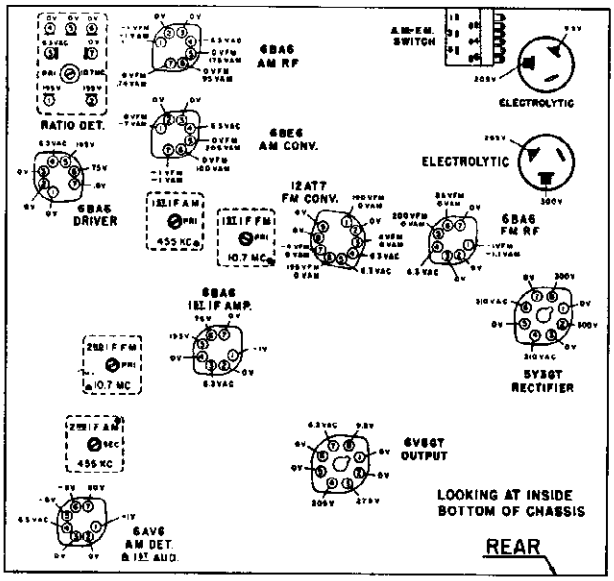

NOTE: Dots on IF trans. indicate the position of the color coded terminals.

ALIGNMENT PROCEDURE 1407

On IF and Radio Detector transformers, primary slugs are under chassis and secondary slugs above chassis.
Adjust AM loop trimmer after chassis is in cabinet for best reception at 1500 Kc.
Adjust dial pointer to marker at top left of dial with condenser plates fully meshed.

A.M. - I.F.

	Band & Pointer	Signal Generator	VTVM or Scope Connection	Adjustment and Notes
1.	AM low end of dial.	455 Kc. 400 cy. mod. to Pin 7 (Grid) of 6BE6 tube through .01 cap.	Term. 2 of AM-FM sw and ground.	Adj. two AM-IF trans., using —3V DC Scale.
2.	"	455 Kc swept 15 Kc.	"	Adjust same for best double-trace curve on scope.

F.M. - I.F.

1.	FM low end of dial.	10.7 Mc. 400 cy. mod. to Pin 2 (Grid) of 12AT7 tube at RF Coil thru .01 capacitor.	"	Detune secondary of ratio det. Adj. two FM-IF trans. and pri. ratio det. trans., using —3 VDC scale.
2.	"	10.7 Mc. swept 150 Kc.	"	Disconnect ground end of C-43 (5 mfd. electrolytic under ratio detector can). Adj. as step 1 for best double-trace curve on scope.
3.	"	"	Terms. 2 & 5 of AM-FM sw.	Be sure VTVM is not grounded. Connect C-43, Adj. sec. ratio det. for 0 voltage.

A.M. - R.F.

1.	AM 1500 Kc.	1500 Kc. 400 cy mod. coupled loosely to loop leads.	Term. 2 of AM-FM sw & ground.	Adj. two trimmers on tuning cond., using low —DC scale.

F.M. - R.F.

1.	FM 100 mc.	100 Mc. 400 cy. mod. to FM Ant. Terms., thru 270 ohm resistor.	"	Adj. C-17 (Osc.) C-8 (RF) and C-2 (Ant.) on low —DC scale.

Align both IF channels if either is out of adjustment.
Use a non-metallic screwdriver and light pressure for slug adjustment.
2nd AM-IF trans. will be damaged if chassis is placed on left side.
If FM osc. coil is replaced, adjust placement of its ground lead for tracking at 88 mc.

MODEL 1409 Series STROMBERG-CARLSON CO.

1409 TUBE LOCATION AND VOLTAGE CHARTS

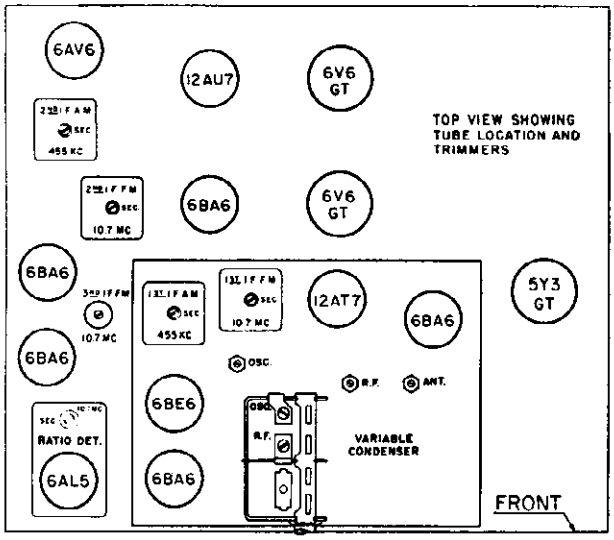

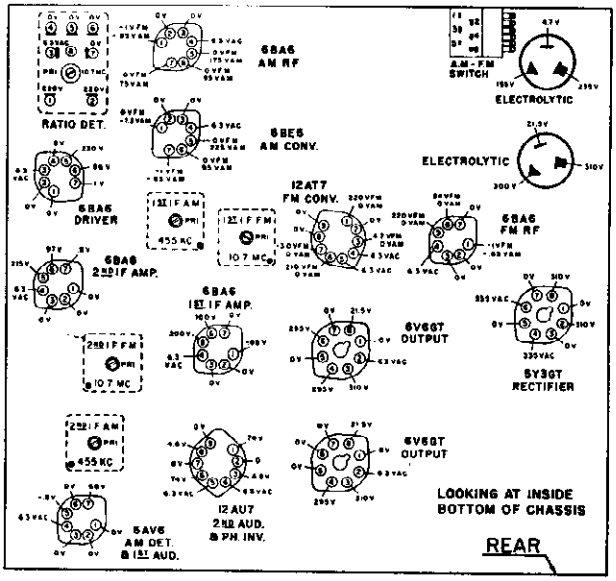

NOTE: Dots on IF trans. indicate the position of the color coded terminals.

ALIGNMENT PROCEDURE 1409

On IF and Ratio Detector transformers, primary slugs are under chassis and secondary slugs above chassis.
Adjust AM loop trimmer after chassis is in cabinet for best reception at 1500 Kc.
Adjust dial pointer to marker at top left of dial with condenser plates fully meshed.

A.M. - I.F.

	Band & Pointer	Signal Generator	VTVM or Scope Connection	Adjustment and Notes
1.	AM low end of dial.	455 Kc. 400 cy. mod. to Pin 7 (Grid) of 6BE6 tube through .01 cap.	Term. 2 of AM-FM sw and ground.	Adj. two AM-IF trans., using —3V DC Scale.
2.	"	455 Kc swept 15 Kc.	"	Adjust same for best double-trace curve on scope.

F.M. - I.F.

1.	FM low end of dial.	10.7 Mc. 400 cy. mod. to Pin 2 (Grid) of 12AT7 tube at RF Coil thru .01 capacitor.	"	Detune secondary of ratio det. Adj. three FM-IF trans & ratio det. primary using —3V DC scale.
2.	"	10.7 Mc swept 150 Kc.	Pin 6 (screen) of third IF tube thru .01 capacitor.	Adj. as above for best double-trace curve on scope.
3.	"	"	Term. 2 of AM-FM switch & Term 8 of ratio det. trans.	Be sure VTVM is not grounded. Adj. sec. of ratio det. for 0 voltage.

A.M. - R.F.

1.	AM 1500 Kc.	1500 Kc. 400 cy mod. coupled loosely to loop leads.	Term. 2 of AM-FM sw & ground.	Adj. two trimmers on tuning cond., using low —DC scale.

F.M. - R.F.

1.	FM 100 mc.	100 Mc. 400 cy. mod. to FM Ant. Terms., thru 270 ohm resistor.	"	Adj. C-17 (Osc.) C-8 (RF) and C-2 (Ant.) on low —DC scale.

Align both IF channels if either is out of adjustment.
Use a non-metallic screwdriver and light pressure for slug adjustment.
2nd AM-IF trans. will be damaged if chassis is placed on left side.
If FM osc. coil is replaced, adjust placement of its ground lead for tracking at 88 mc.

© John F. Rider

MODELS 1409 M-2W, M2-M,
M2-Y, M3A, M3M, PGM, PGW

STROMBERG-C

RADIO

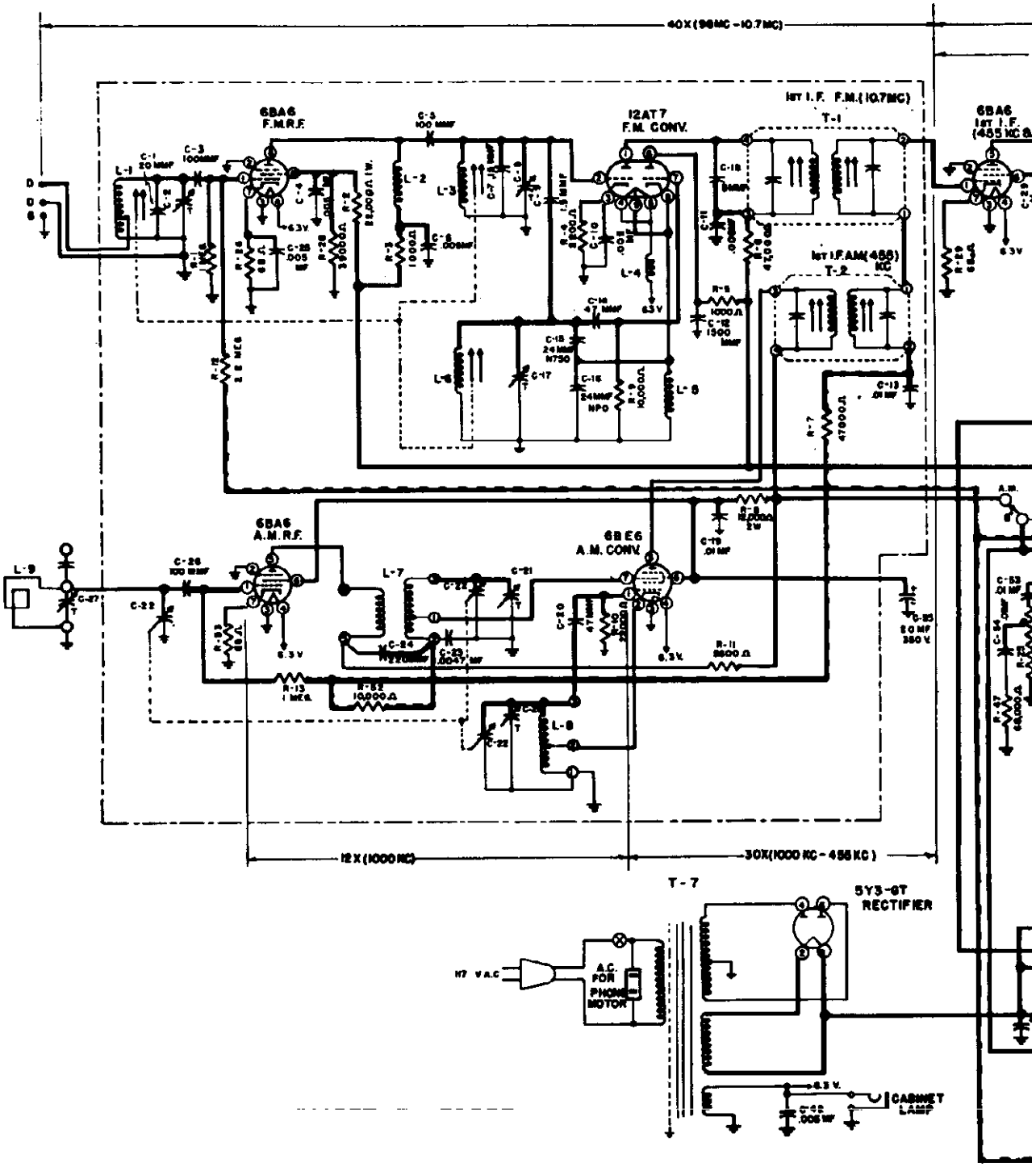

©John F. Rider

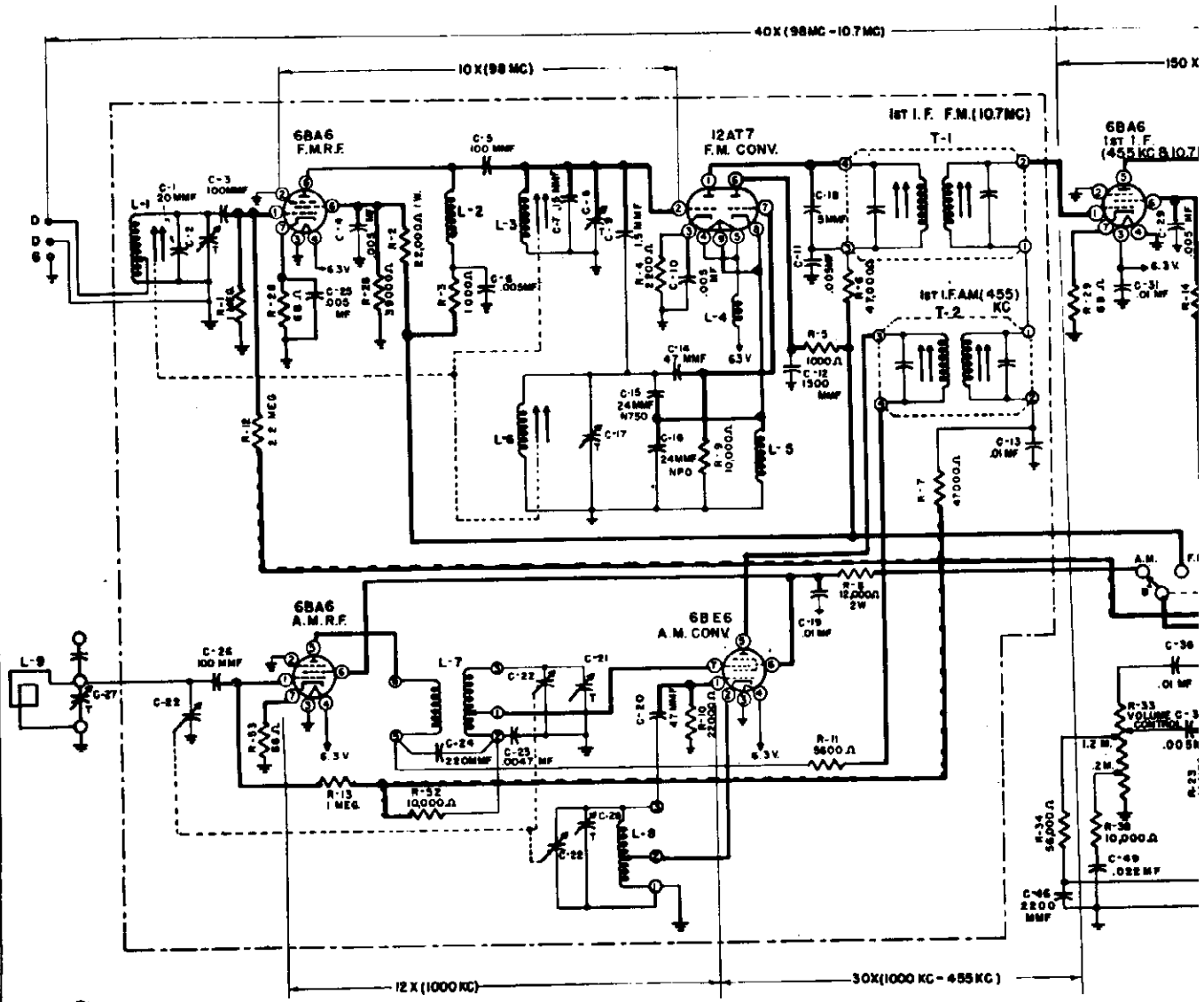

DIAL STRINGING DIAGRAM
1407 AND 1409

G-CARLSON CO.

MODELS 1407PFM, 1407PLM

RECEIVER 1407

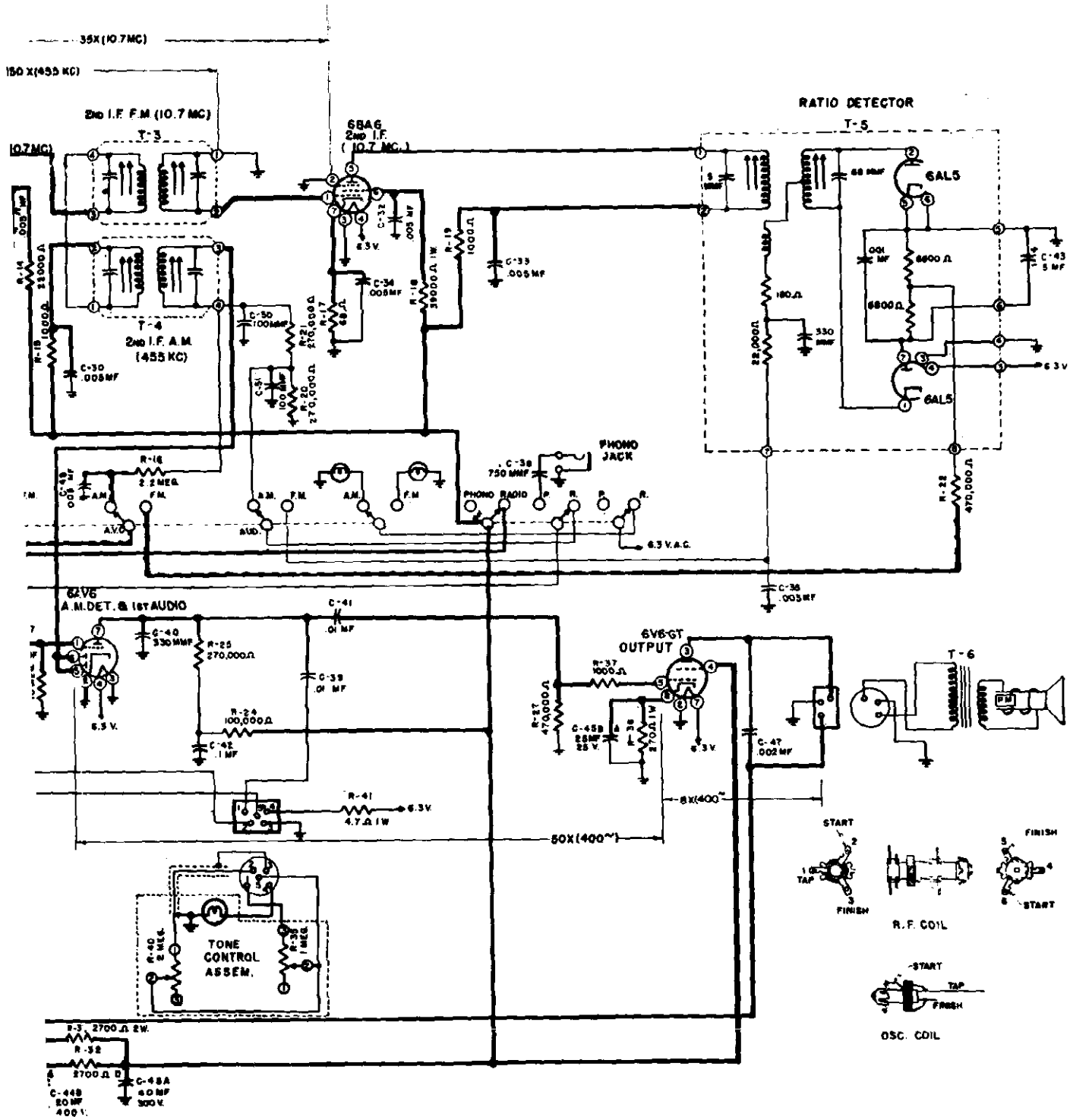

EIVER 1409

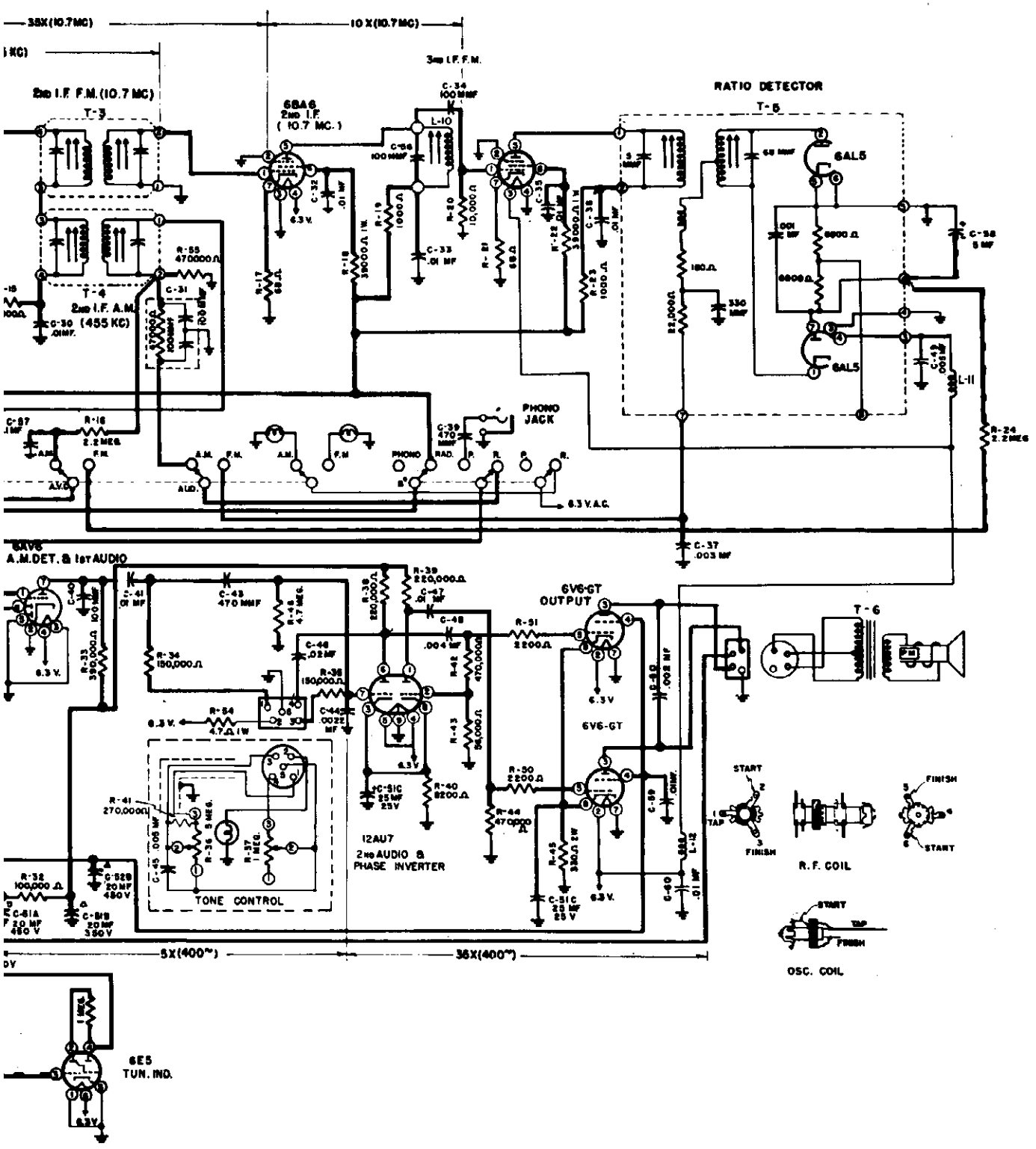
38X(10.7MC)
10 X(10.7MC)
2nd I.F. F.M.(10.7 MC)
T-3
6BA6
2nd I.F.
(10.7 MC.)
3rd I.F. F.M.
L-10
C-34
100 MMF
RATIO DETECTOR
T-5
6AL5
T-4
2nd I.F. A.M.
(455 KC)
C-30 .01MF.
R-55 470000Ω
C-31
PHONO JACK
C-39 470 MMF
A.V.C.
A.M.
F.M.
PHONO
RAD.
6.3 V.A.C.
C-37 .003 MF
6AV6
A.M.DET. & 1st AUDIO
6V6-GT
OUTPUT
T-6
R-39 220,000Ω
R-36 220,000Ω
C-47 .01 MF
C-48 .004 MF
R-51 2200Ω
C-41 .01 MF
C-43 470 MMF
R-34 150,000Ω
C-46 .02 MF
R-35 150,000Ω
C-44 .002 MF
R-54 4.7Ω 1W
R-42 470,000Ω
R-43 56,000Ω
C-45C 25 MF 25V
R-40 8200Ω
12AU7
2nd AUDIO & PHASE INVERTER
R-50 2200Ω
R-44 470000Ω
R-45 330Ω 1W
C-45B .002 MF
C-49 .01MF
C-40 .01 MF
L-12
R-41 270,000Ω
C-45 .005 MF
R-38 1 MEG.
R-37 1 MEG.
TONE CONTROL
R-32 100,000Ω
C-52B 20 MF 450V
C-52A 20 MF 450V
C-51B 20 MF 350V
START
FINISH
TAP
R.F. COIL
OSC. COIL
5X(400**)
36X(400**)
6E5
TUN. IND.

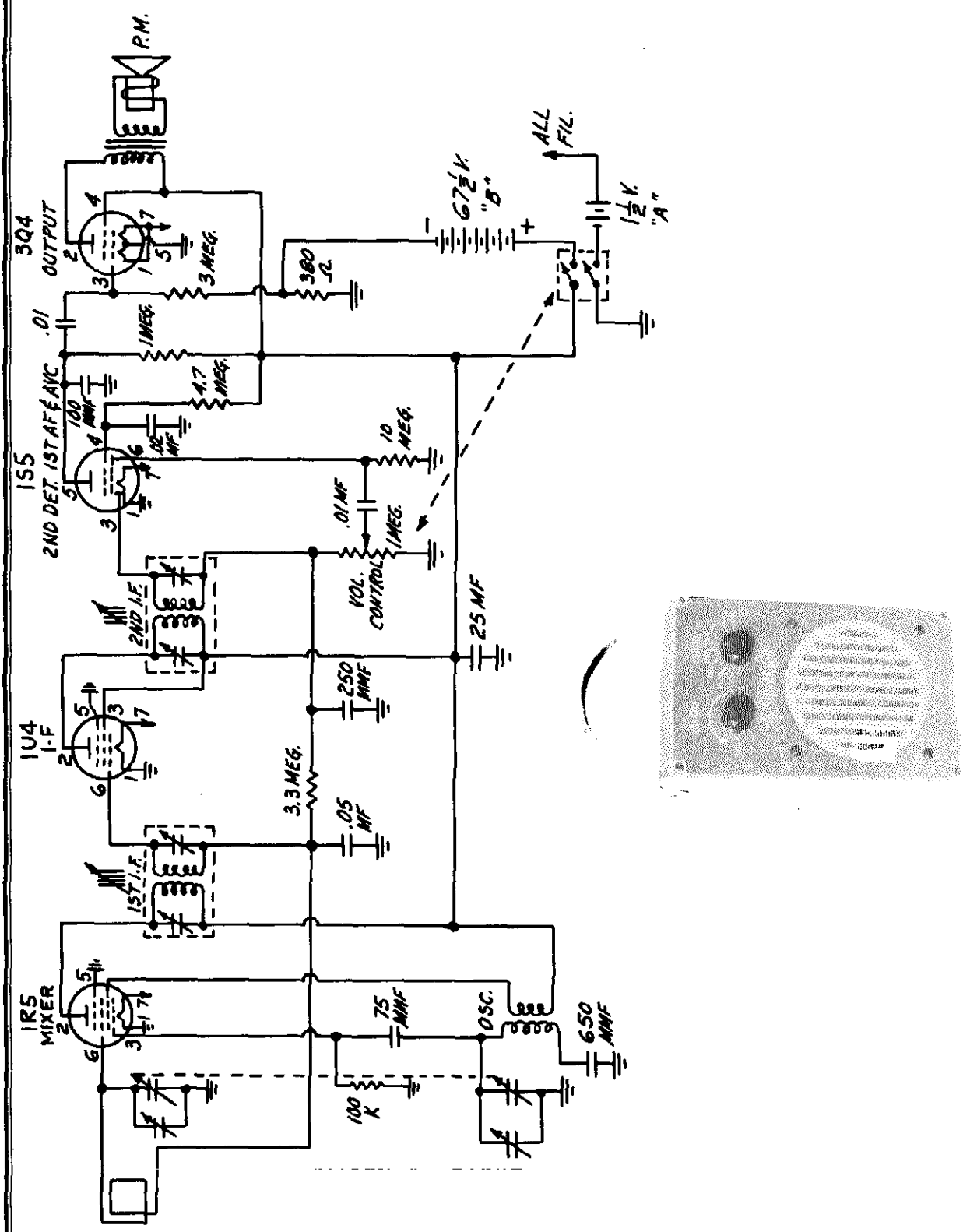
P.M.
3Q4
OUTPUT
.01
1MEG.
3 MEG.
380 Ω
67½ V. "B"
ALL FIL.
1½ V. "A"
100 MMF
.1 MF
4.7 MEG.
1S5
2ND DET. 1ST AF & AVC
10 MEG.
.01 MF
1MEG.
VOL. CONTROL
2ND I.F.
25 MF
1U4
1-F
250 MMF
3.3 MEG.
.05 MF
1ST I.F.
1R5
MIXER
75 MMF
OSC.
650 MMF
100 K

©John F. Rider

MODEL 255 SYMPHONY RADIO & TELEV. CORP.

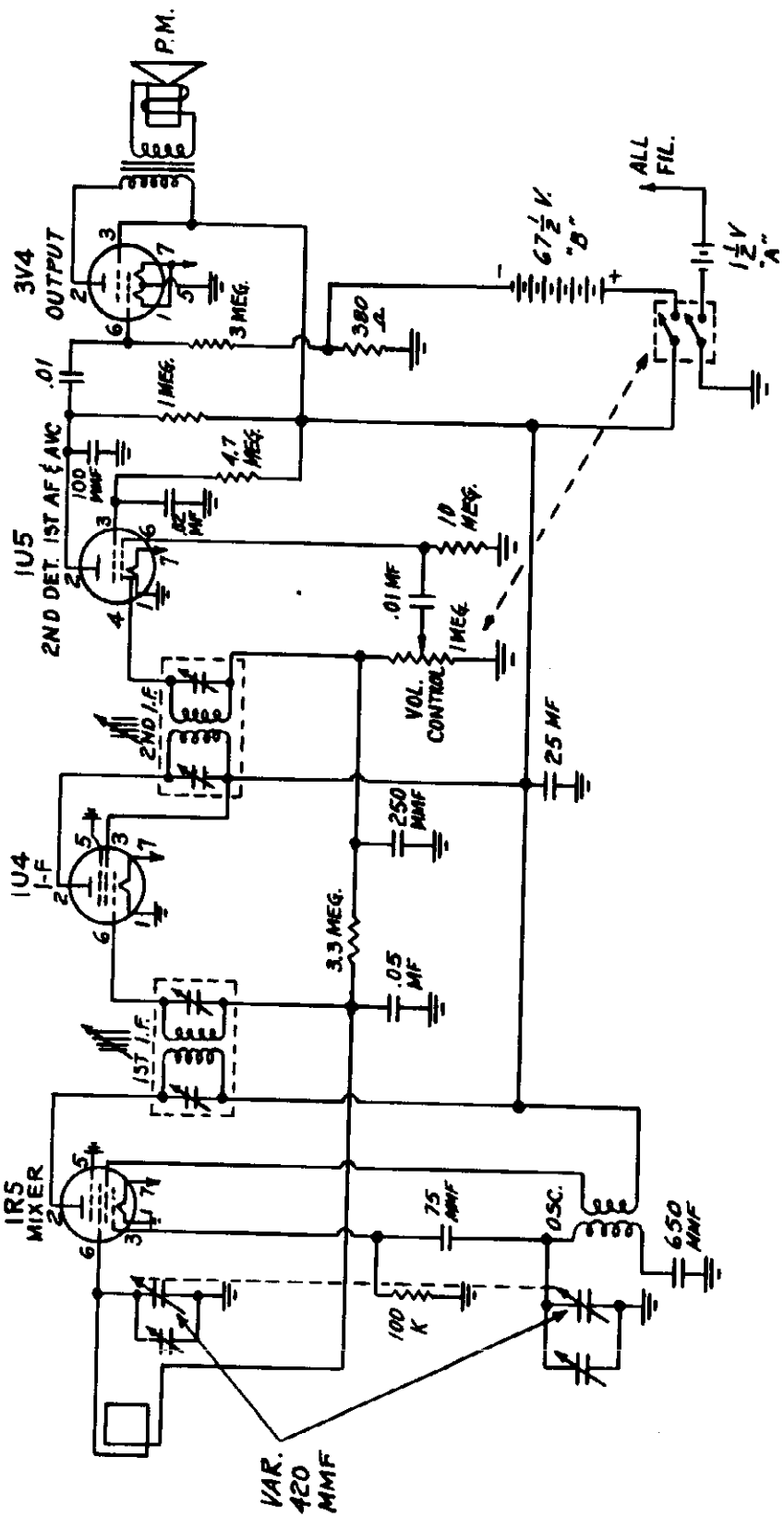

TEMPLETONE RADIO MFG. CORP. MODEL G-510

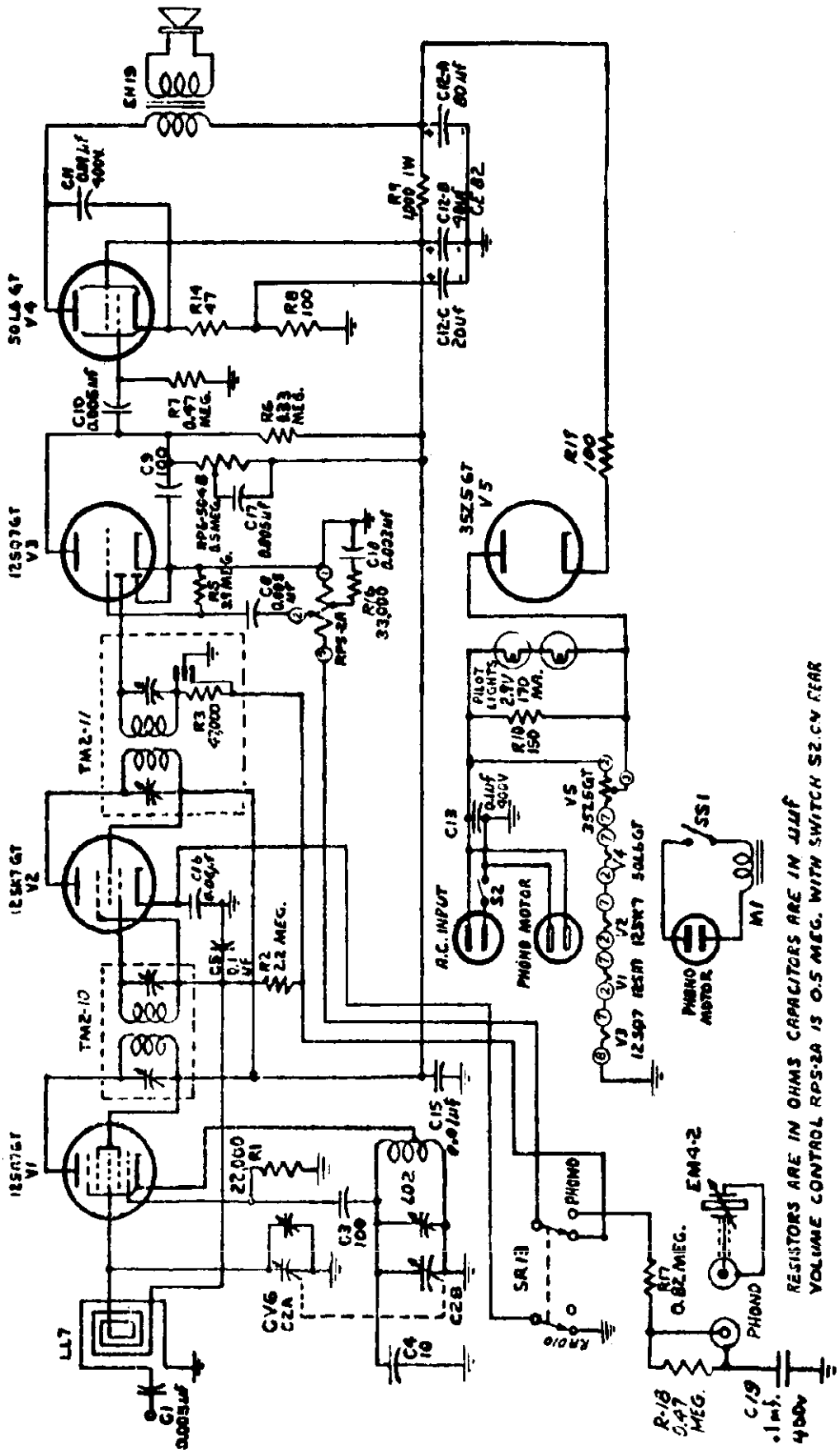

MODELS G-615, G-618

TEMPLETONE RADIO MFG. CORP.

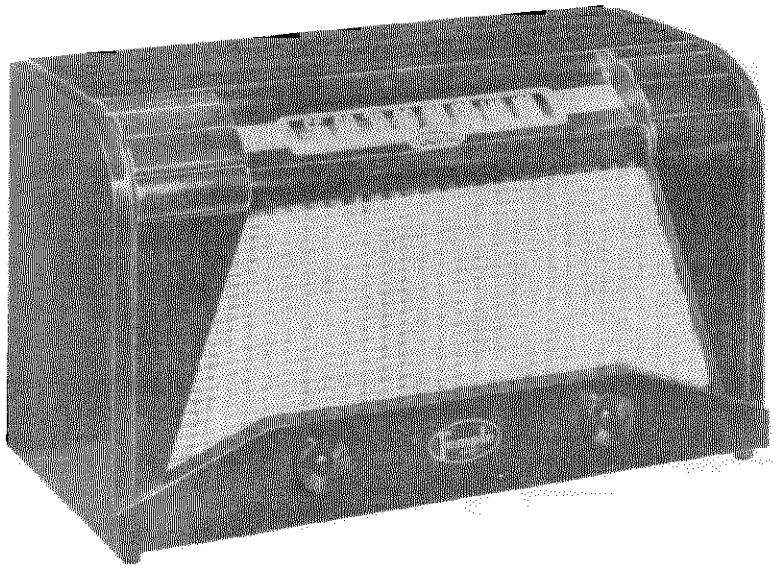

OPERATING INSTRUCTIONS AND SERVICE NOTES

Model G-618 Temple Radio is a 6-tube superheterodyne receiver having an RF stage for increased sensitivity and using the latest type of low-drain electronic tubes.

Operation: The set operates on 110 to 120 volts, 50 or 60 cycles A. C. and 110 to 120 volts D. C. Power drain is approximately 30 watts.

When operated on direct current (D. C.), if no reception is obtained after approximately one minute of warm-up time, reverse the line plug in the power outlet.

Range: Model G-618 covers the broadcast band from 540 to 1620 kilocycles. Since the scale is calibrated 54 to 160, the actual frequency of the station received is obtained by adding a zero to the dial calibration.

Controls: Only two controls are required for operation. The left-hand control puts set into operation, increases the volume with clockwise rotation, and includes the power switch. The right-hand control tunes the dial to the desired station.

Antenna: For normal reception, no outside aerial is required, as more than adequate pickup is obtained by the self-contained loop antenna.

At installations remote from the stations desired to be heard, improved results may be obtained by rotating the receiver for maximum response, as the loop antenna has a marked directional effect on weak signals. Reception can also be improved, and the directional effect reduced, by attaching a length of insulated wire approximately 15 to 25 feet long, to the antenna connection provided at the back of the cabinet. This wire may be laid on the floor along one side of the room, or concealed under the rug. No external ground is required — such ground is automatically provided through the power lines.

Alignment: No attempt should be made to realign this receiver until it has been determined that a poor tube, or some local condition is not responsible for faulty reception. An output meter may be clipped directly across the voice coil lugs.

The Signal Generator may be connected through a 0.01 mf capacitor (used as dummy antenna) to the lug on RF section (B)) of tuning capacitor. Connect ground clip of generator to the common negative of the electrolytic capacitor. Align the I. F. trimmers to 455 kc, using least possible input from Signal Generator to avoid developing A.V.C. voltage which would make the tuning adjustments very broad.

To align RF trimmers, remove the 0.01 mf capacitor and connect the Signal Generator leads to two or three turns of heavy wire, forming a self-supporting loop of about 7 or 8 inches diameter, placed about a footaway from the receiver's loop antenna. Again, use the least possible input from the Signal Generator. With the tuning capacitor plates completely out of mesh, and pointer at extreme right end of travel, adjust the oscillator trimmer (A) (on front section of tuning capacitor) to 1700 kc. Readjust both Signal Generator and tuning capacitor to 1550 kc and adjust the RF trimmer (B) (on rear section) for maximum response. With tuning capacitor plates fully meshed, the receiver should tune to 532 kc; however, no adjustment is required at this point. For checking purposes, four fine marks are engraved on the dial plate. These represent, in order, the pointer position with capacitor plates fully meshed, and the pointer setting for 600, 1000 and 1550 kc.

©John F. Rider

TEMPLETONE RADIO MFG. CORP.

MODELS G-615,
G-618

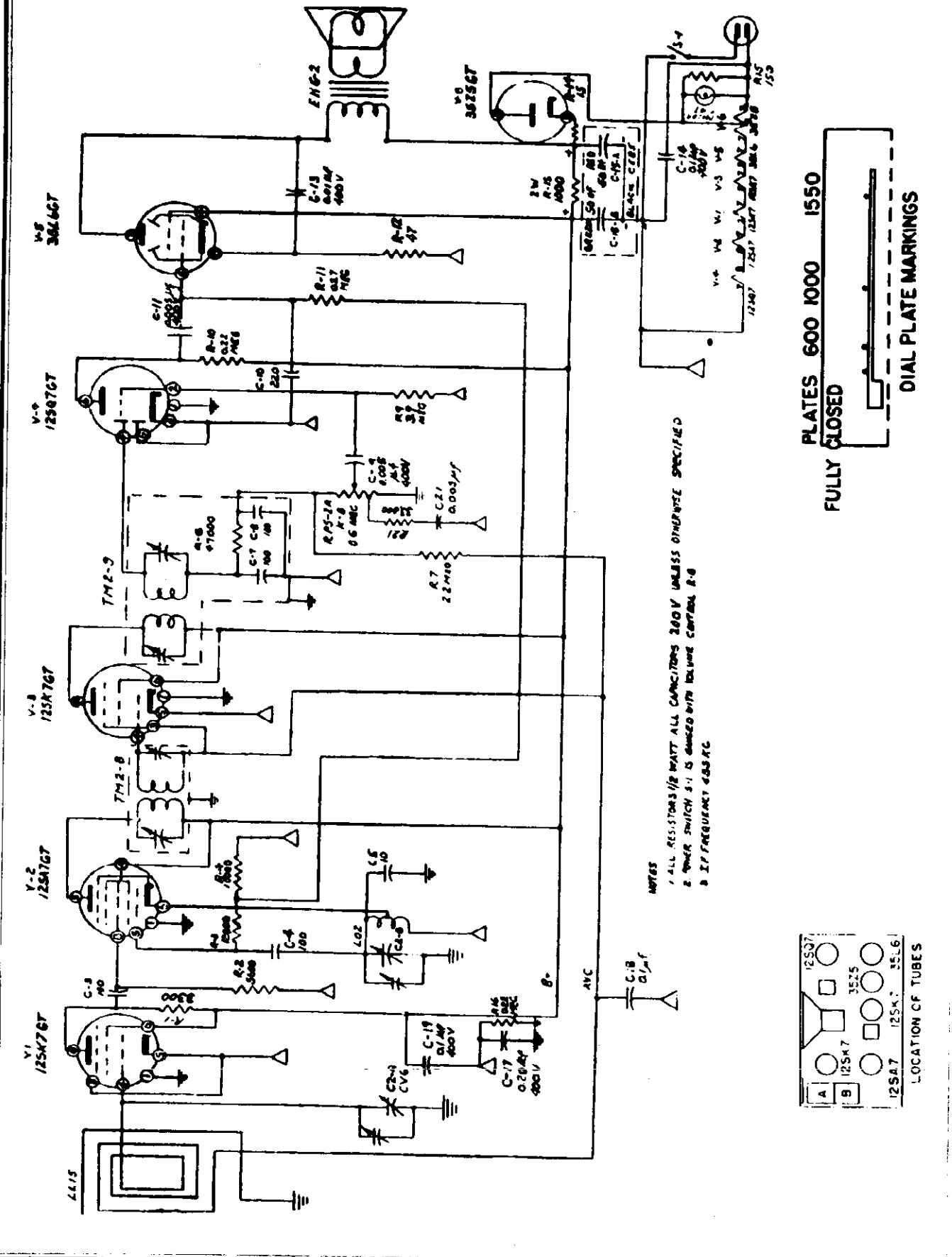

© John F. Rider

MODELS G-722, G-723

TEMPLETONE RADIO MFG. CORP.

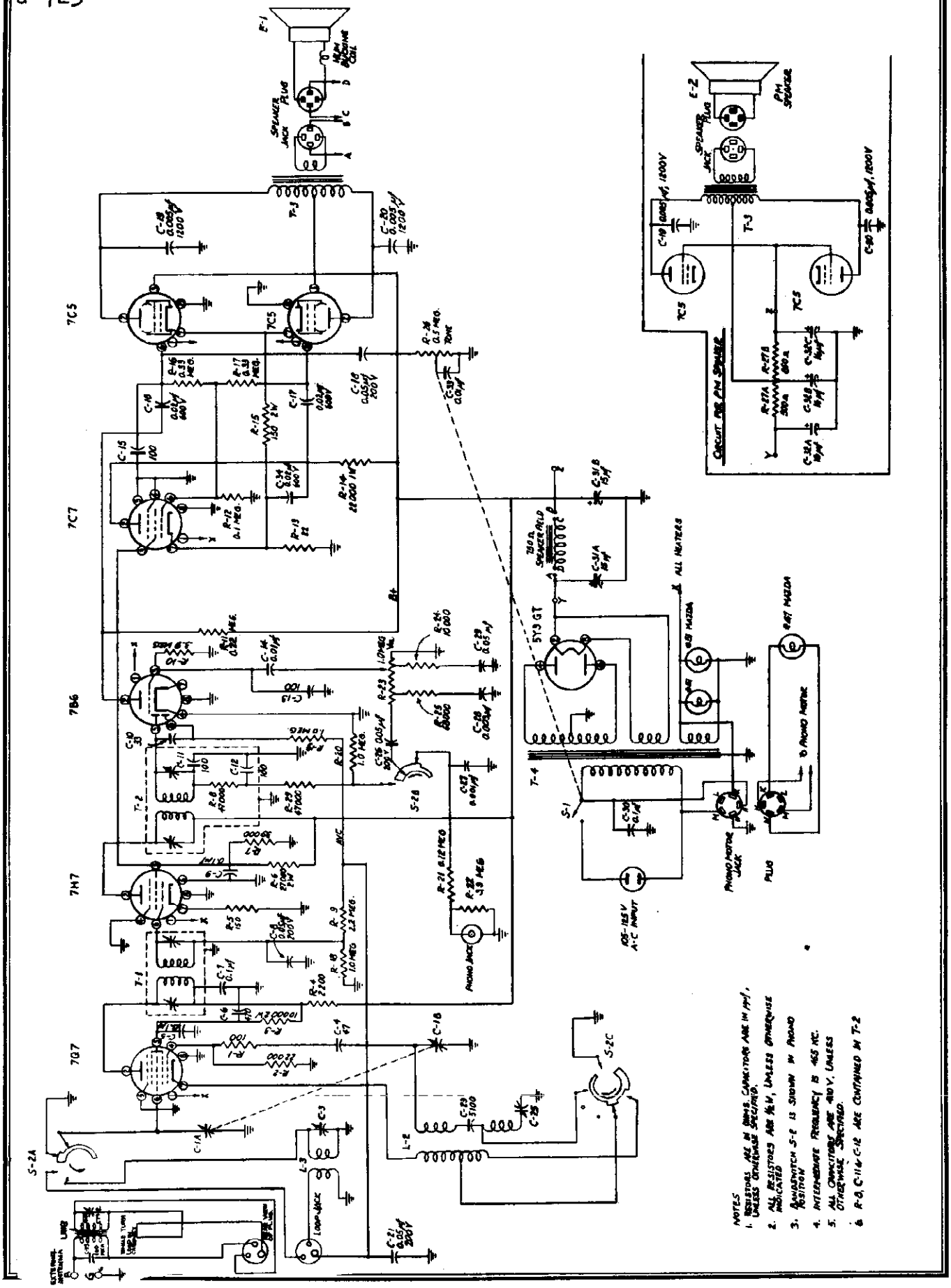

©John F. Rider

TEMPLETONE RADIO MFG. CORP. MODELS G-722, G-723

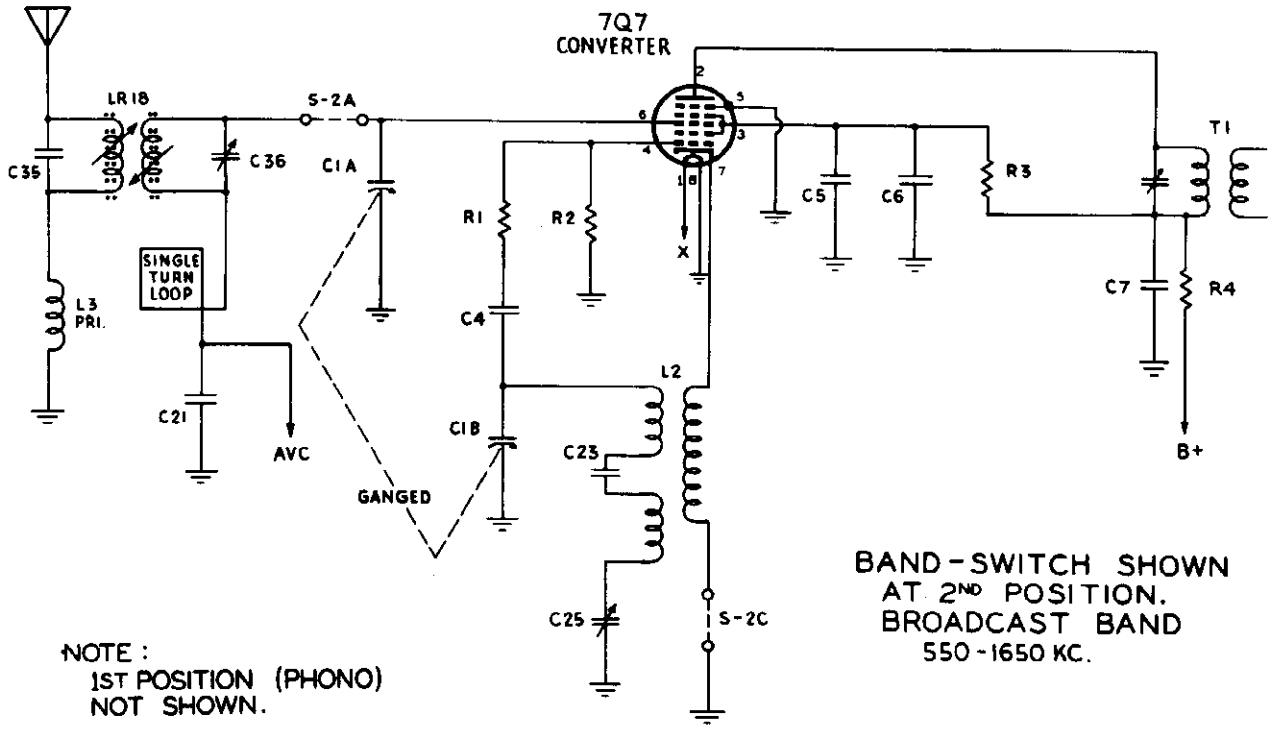

NOTE :
1ST POSITION (PHONO)
NOT SHOWN.

BAND-SWITCH SHOWN AT 2ND POSITION.
BROADCAST BAND
550-1650 KC.

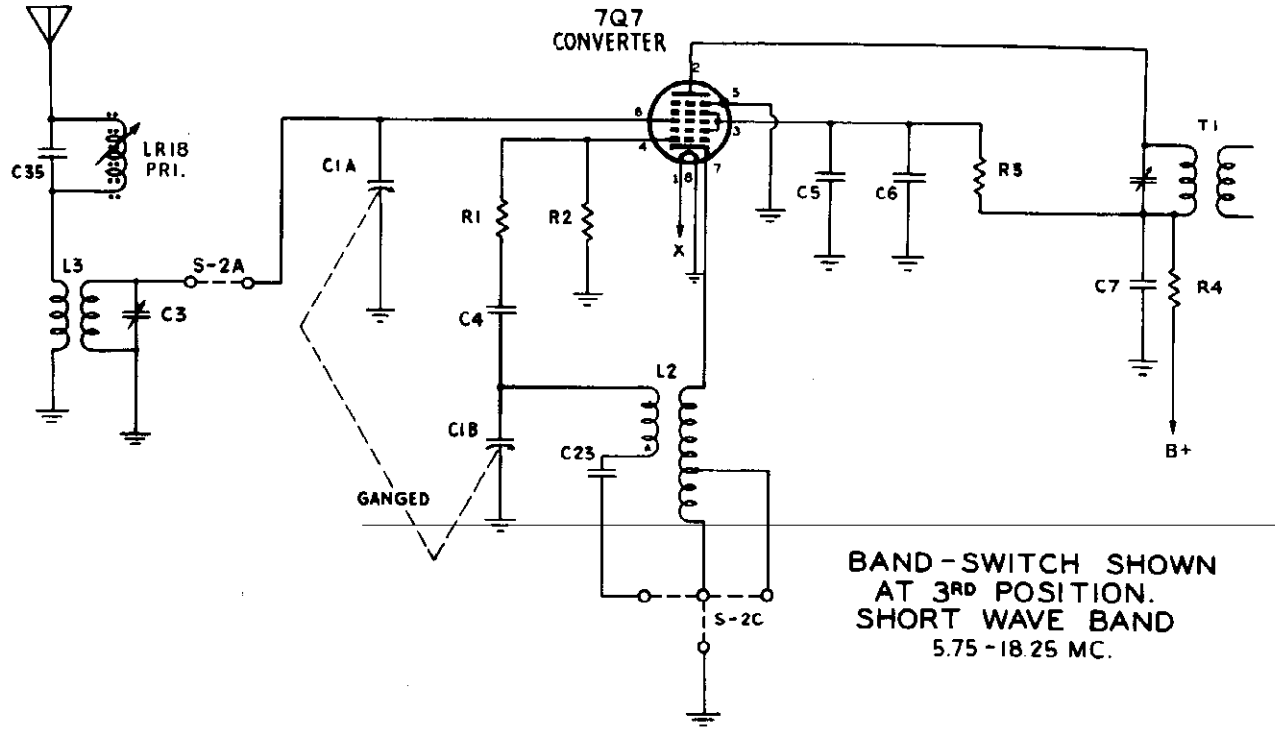

BAND-SWITCH SHOWN AT 3RD POSITION.
SHORT WAVE BAND
5.75-18.25 MC.

MODELS G-722, G-723

TEMPLETONE RADIO MFG. CORP.

Alignment: No attempt should be made to realign this receiver until it has been determined that a poor tube, or some local condition is not responsible for faulty reception. The Signal Generator may be connected through a 0.01 mf capacitor (used as a dummy antenna) to the lug on R. F. section (A) of tuning capacitor. Connect ground clip of generator directly to chassis. Align the I. F. trimmers to 455 K.C., using least possible input from the Signal Generator to avoid developing A.V.C. voltage which would make the tuning adjustments very broad. An output meter may be clipped across the voice coil lugs.

To align broadcast R. F. trimmers, remove the 0.01 mf capacitor and connect the Signal Generator leads to two or three turns of heavy wire, forming a self-supporting loop of about 7 or 8 inches diameter placed about a foot away from the receiver's loop antenna. Again, use the least possible input from the Signal Generator. With the tuning plates completely out of mesh and the pointer at the extreme right end of travel, adjust the broadcast oscillator trimmer, on the under side of the chassis, to 1650 K.C. With tuning capacitor fully meshed adjust the padder on the chassis deck to 535 K.C. Readjust both Signal Generator and tuning capacitor to 1550 K.C. and adjust the R. F. trimmer on the loop for maximum response.

To align the short wave band connect the Signal Generator through a 0.01 mf capacitor and a 400 ohm resistor in series (used as a dummy antenna) to the antenna connection on the loop antenna. With the tuning capacitor plates completely out of mesh, and pointer at the extreme right end of travel, adjust the short wave oscillator trimmer (on the under side of the chassis) to 18.25 magacycles. Readjust both Signal Generator and tuning capacitor to 16 megacycles and adjust short wave antenna coil trimmer for maximum response. With tuning capacitor fully meshed, the receiver should tune to 5.75 megacycles, however, no adjustment is required at this point.

For checking purposes five marks are engraved on the front of the dial plate. These represent, in order, the pointer position with the capacitor plates fully meshed and the pointer settings for 600 kc, 8 mc, 16 mc, and 1550 kc.

Pushbuttons: To set pushbuttons remove pushbutton knobs. This will expose a set screw on the shaft of each pushbutton. Starting at one end push a pushbutton down and loosen its set screw. Set the bandswitch to the broadcast position. Hold the pushbutton down and tune the manual tuning control to the station to which the pushbutton is to be set. Still holding the pushbutton down tighten its set screw. The pushbutton may now be released and its knob replaced. It will now select the station to which it was set. The other pushbuttons may be set in a similar manner.

REPLACEMENT PARTS LIST

Circuit Symbol	Part Number	Item	Description
C-1 A & B	CV-9	Capacitor	Variable 2-gang, Push-button
C-2	CT1-1	Capacitor	Trimmer 1.5—15 MMF
C-3	CT1-2	Capacitor	Trimmer 2.2—40 MMF
C-22	CT1-2	Capacitor	Trimmer 2.2—40 MMF
C-23	CT1-2	Capacitor	Trimmer 2.2—40 MMF
C-25	CX2-1	Capacitor	Padder
E-1	EH-9	Speaker	10" Electrodynamic
E-2	EH-14	Speaker	10" P.M.
L-1	LL-9	Loop Antenna	
L-2	LO-4	Oscillator Coil Assembly	Broadcast & S.W. Osc. Coils
L-3	LR-4	S.W. Antenna Coil	
R-23	RP8-105	Potentiometer	1 Meg. with 2 taps, Volume Control
R-26	RP5-2	Potentiometer	0.5 Meg. with switch, Tone Control
R-27 A & B	RW3-1	Resistor	Wirewound 1350 Ohms 17 watt tapped at 500 Ohms
S-2 A, B & C	SR-9	Bandswitch	
T-1	TM2-4	Transformer	I. F. Input
T-2	TM2-5	Transformer	I. F. Output
T-3	TA-8	Transformer	Push-pull speaker output
T-4	TP-9	Transformer	Power

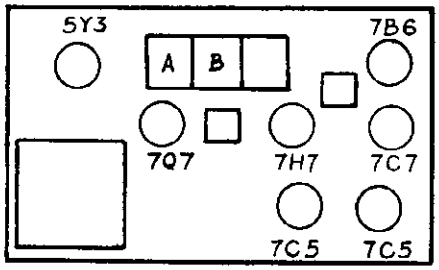

TUBE LOCATION

Instructions For Removing Radio From Cabinet

Main Chassis:

To remove main chassis from the cabinet it is first necessary to remove the four control knobs by pulling them gentl until they come off. Remove all plugs from the rear of the main chassis and power pack chassis. Pull the 5U4G rectifie tube out of the power pack chassis. The four screws holding the chassis may now be removed. The chassis itself ma now be taken out by sliding it straight back toward the rear of the cabinet.

Power Pack Chassis:

The power pack chassis may be removed from the cabinet by unscrewing the four large screws holding it to it support shelf. These are accessible from the under side of the cabinet.

Record Changer:

Most adjustments may be made to the record changer without removing it from its drawer. Before attemptin to remove the record changer from the cabinet the motor plug and the phono pickup plug must first be removed fro the main and power pack chassis. Loosen the cable clamps on the rear of the cabinet sufficiently to lift out cables.

Pull changer drawer forward until it hits its stop. Lift the turntable completely off. Be careful not to lose th spring and loose gear on the spindle of the record changer. Remove retaining washers from the mounting screws a the front and rear of the record changer. The mounting screws may now be removed from the bottom of record change drawer and the record changer may be lifted out.

Alignment:

No attempt should be made to realign this receiver until it has been determined that a poor tube or some loo condition is not responsible for faulty reception. The following is a list of minimum equipment necessary to realig this receiver:

1—AM signal generator covering 455KC, 600KC, 1550KC, 6 MC, 10.7 MC and 18 MC
2—FM signal generator covering 10.7 MC, 92 MC and 106 MC
3—Output meter, rectifier type, approximately 0 to 2 volts RMS
4—Dummy antennas

- 0.01 MFD Capacitor
- 200 MMF Mica Capacitor
- 400 Ohm Resistor
- 300 Ohm Resistor

In the following alignment procedure the high side of the signal generator is connected to the terminal indicated i the "Signal Generator Coupling" column below. The ground side of the signal generator is connected directly to th chassis unless otherwise noted. The output meter should be connected across the voice coil of the speaker for a measurements.

In adjusting the radio frequency trimmers and padders it is advisable to "rock" the variable capacitor gan slightly across the signal being delivered by the signal generator until that particular signal has been accurately peake

The location of the following trimmers, padders and terminals can be found by referring to the tube and trimme location diagram.

© John F. Rider

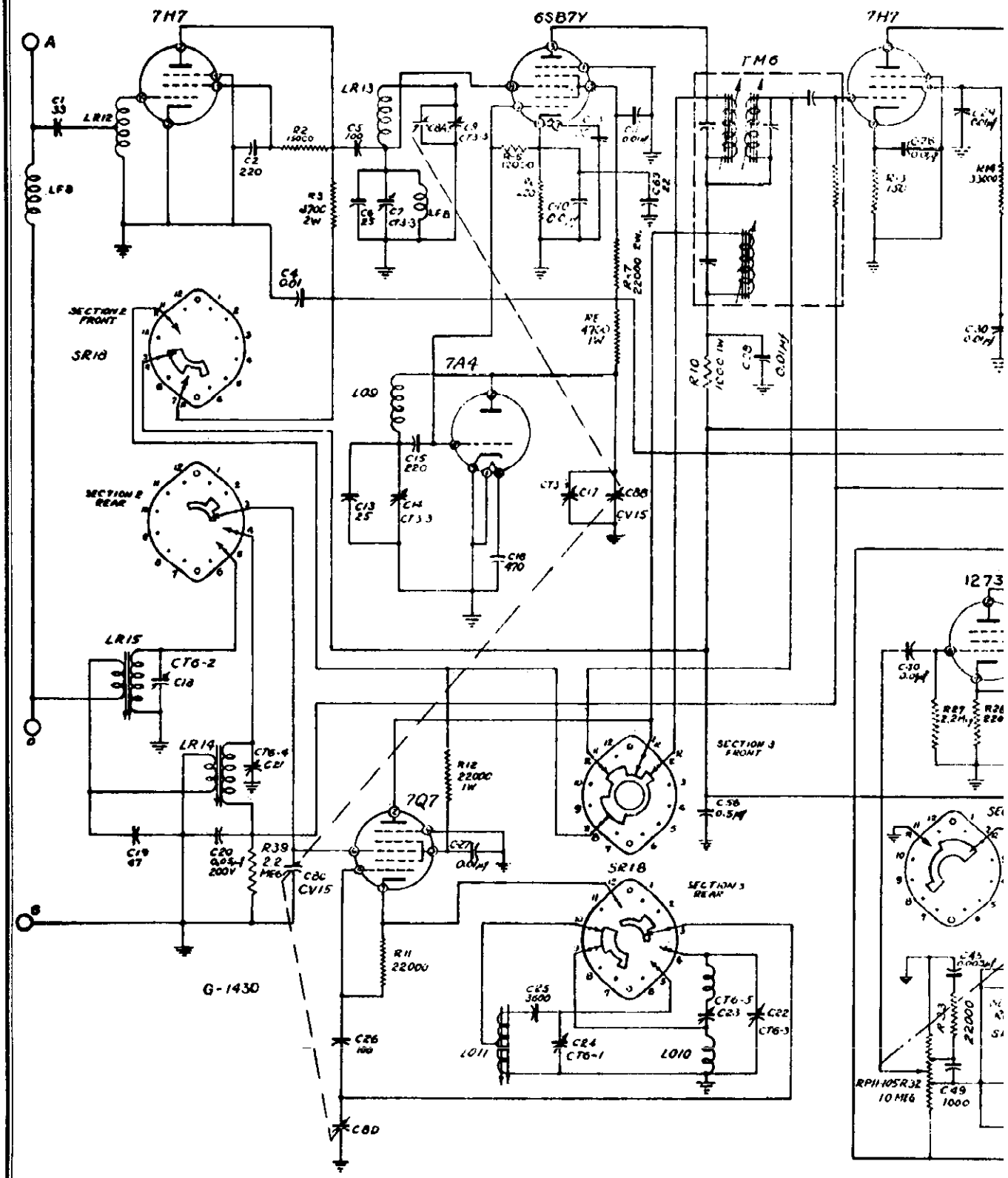
7H7
6SB7Y
7H7
TM6
7A4
7Q7
SR18
SR18
SECTION 2 FRONT
SECTION 2 REAR
SECTION 3 FRONT
SECTION 3 REAR
LR12
LR13
LR14
LR15
LF8
LO9
LO10
LO11
CT6-2
CT6-4
CT6-5
CT6-1
CT6-3
CV15
G-1430
RP11-105R32
10 MEG
1273

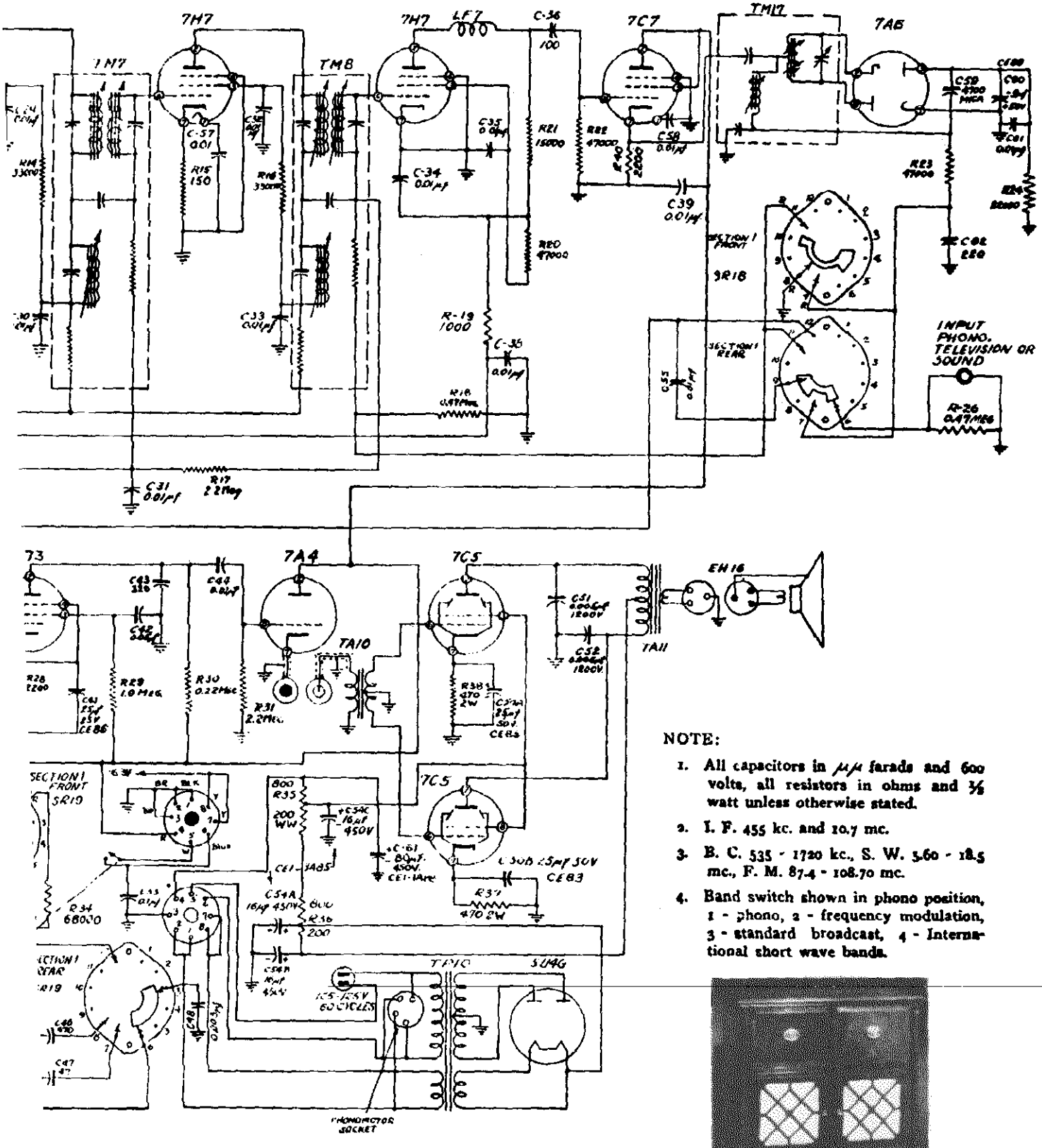

NOTE:

1. All capacitors in $\mu\mu$ farads and 600 volts, all resistors in ohms and ½ watt unless otherwise stated.
2. I. F. 455 kc. and 10.7 mc.
3. B. C. 535 - 1720 kc., S. W. 5.60 - 18.5 mc., F. M. 87.4 - 108.70 mc.
4. Band switch shown in phono position, 1 - phono, 2 - frequency modulation, 3 - standard broadcast, 4 - International short wave bands.

MODEL G-1430 TEMPLETONE RADIO MFG. CORP.

ALIGNMENT PROCEDURE:

Dummy Antenna	Signal Generator Coupling	Signal Generator Frequency	Band Switch Position	Radio Dial Setting	Adjust	Remarks
0.01 MFD	Terminal T-2	455 KC	Broadcast	1700 KC	E-1 C-1 B-1	Adjust for maximum output Repeat for fine adjustment
"	Pin 6 of 7C7 IF tube with FM Signal Generator	10.7MC	FM	109 MC	F-2	Adjust for maximum output (Broad adjustment)
"	"	"	"	"	F-4	Adjust for maximum output
"	AM Signal Generator		"	"	F-1 or F-3	Adjust whichever is required for minimum output
						Repeat last two steps for fine adjustment until settings for maximum FM output coincides with settings for minimum AM output.
"	"	"	"	"	E-3, E-2	Adjust for maximum output
"	"	"	"	"	C-3, C-2	" " " "
"	"	"	"	"	B-3, B-2	" " " "
						Repeat last three steps for fine adjustment
			Broadcast	535 KC	Pointer	Adjust pointer to reference mark
200 MMF	Terminal D	600 KC	Broadcast	600 KC	O, J	Adjust for maximum output
"	"	1550 KC	"	1550 KC	M, N	" " " "
400 Ohm Resistor	"	6 MC	Shortwave	6 MC	P, H	" " " "
"	"	18 MC	"	18 MC	K, L	" " " "
300 Ohm Resistor	Terminal A Ground Side of Signal Generator to Terminal D	92 MC	FM	92 MC	R, S	" " " "
"	"	106 MC	"	106 MC	Q, U	" " " "

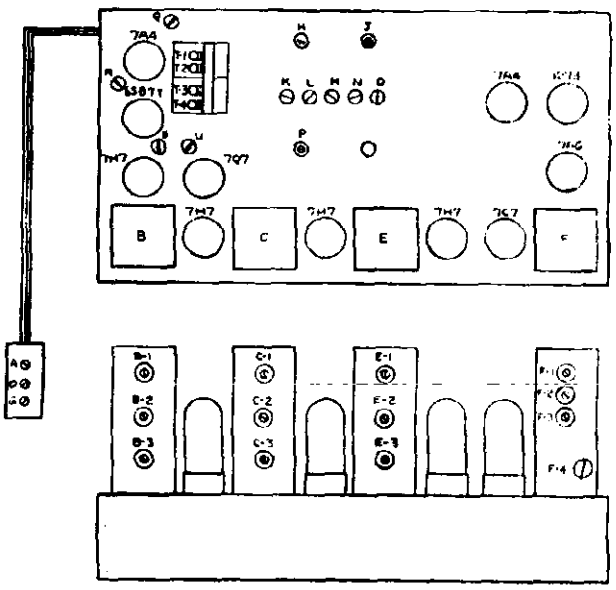

TUBE AND TRIMMER LOCATION

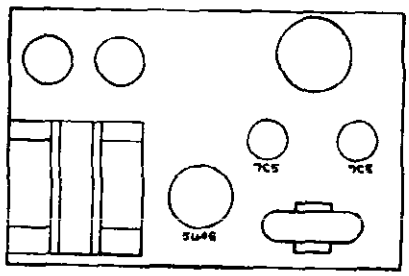

POWER PACK

©John F. Rider

TEMPLETONE RADIO MFG. CORP. MODEL H-411

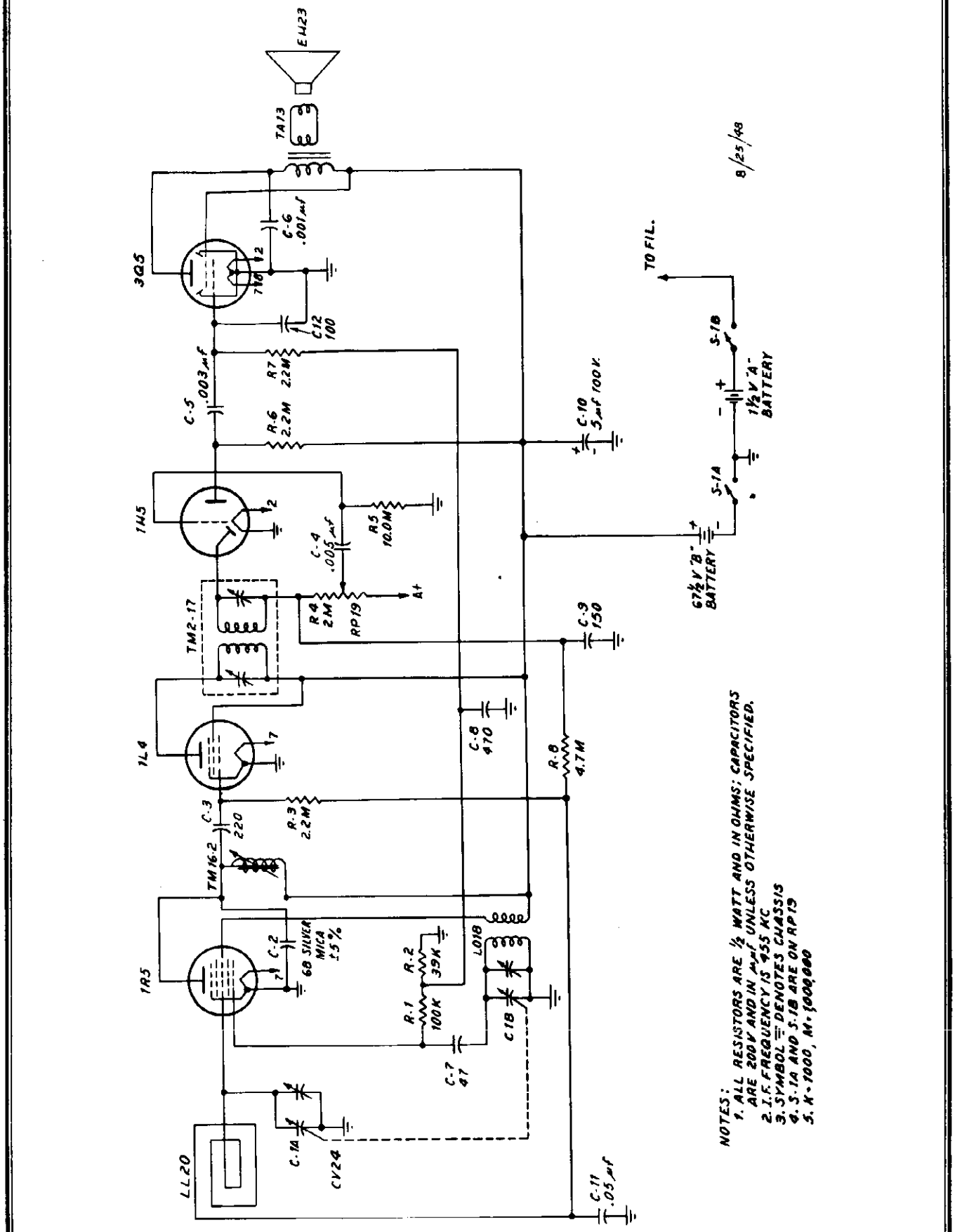

MODEL H-501

TEMPLETONE RADIO MFG. CORP.

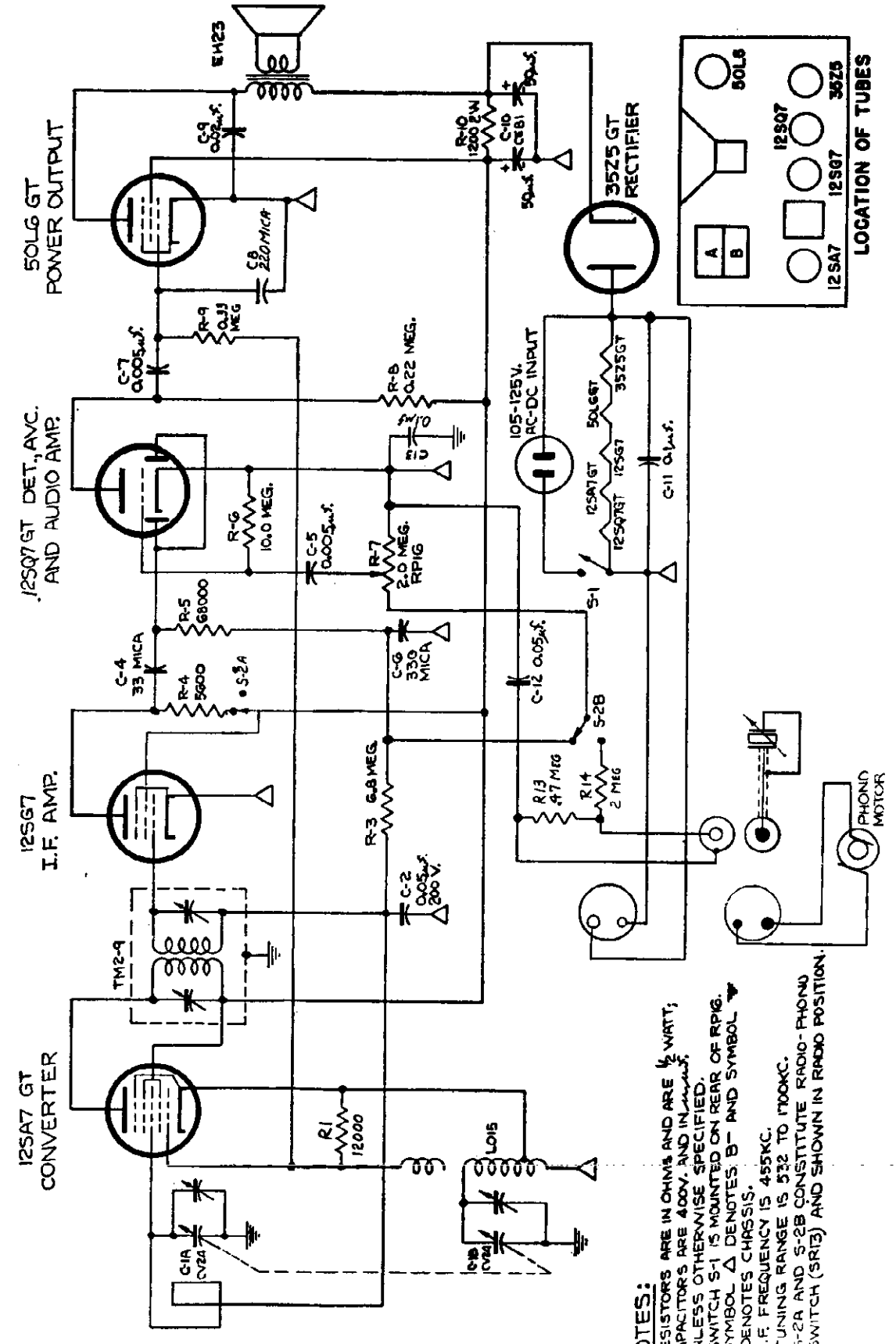

NOTES:
1. RESISTORS ARE IN OHMS AND ARE ½ WATT; CAPACITORS ARE 400V. AND IN μμf. UNLESS OTHERWISE SPECIFIED.
2. SWITCH S-1 IS MOUNTED ON REAR OF RPIG.
3. SYMBOL △ DENOTES B− AND SYMBOL ⏚ DENOTES CHASSIS.
4. I.F. FREQUENCY IS 455KC.
5. TUNING RANGE IS 532 TO 1700KC.
6. S-2A AND S-2B CONSTITUTE RADIO-PHONO SWITCH (SR13) AND SHOWN IN RADIO POSITION.

OPERATING INSTRUCTIONS AND SERVICE NOTES

This radio-phonograph combination includes a five tube superheterodyne receiver and a smoothly-operating dependable, automatic record changer. It has a built-in sensitive loop antenna, an Alnico V permanent magnet speaker, and full size octal tubes for longer life. The radio chassis and record changer are electrically floating to prevent possibility of hazardous shock.

Operation: The set operates on 105-125 volts 60 cycles AC only. Power drain is approximately 25 watts for radio and 17 watts additional for the record changer.

Range: The complete broadcast band is covered, from 532 to 1700 kilocycles. Since the scale is calibrated from 55 to 170, the actual frequencies are read by adding a zero to the dial calibration.

Controls: Three controls are provided for operating the set. The upper right control tunes to any desired station when pointer knob is rotated. The bottom right control incorporates the on-off switch and volume control. The extreme counter-clockwise position is the "off" position and rotating the knob clockwise turns the set on and increases the volume. The control at the left is the phono-radio switch, which switches from phonograph operation in the counter-clockwise position to radio operation in the clockwise position.

Record Changer: The record changer is completely automatic and will play twelve ten-inch records or ten twelve-inch records. Complete operating instructions for the record changer are included in the record changer instruction sheet.

Antenna: For normal reception no outside aerial is required, as more than adequate pickup is obtained by the self-contained loop antenna. At installations remote from the desired stations, improved results may be obtained by rotating the receiver for maximum response, since the loop has marked directional effects on weak signals.

Alignment: No attempt should be made to re-align this receiver until it has been determined that a poor tube, or some local condition is not responsible for faulty reception. The signal generator may be connected through 0.01 mfd capacitor, used as a dummy antenna to the lug on the RF section of the tuning capacitor. Connect ground clip of generator to a B-point. Align the IF trimmers to 455 kilocycles using least possible input from signal generator, for maximum output as measured across voice coil or speaker.

To align RF, remove 0.01 mfd capacitor and connect signal generator to two or three turns of heavy wire forming a self-supporting loop, about 7 or 8 inches in diameter placed about a foot away from the receiver's loop antenna. Again, use least possible input from the signal generator. With the variable completely open (plates out of mesh) adjust the oscillator trimmer to 1700 kilocycles, then tune the set and signal generator to 1550 kilocycles and adjust RF trimmer for maximum response.

MODEL H-521 TEMPLETONE RADIO MFG. CORP.

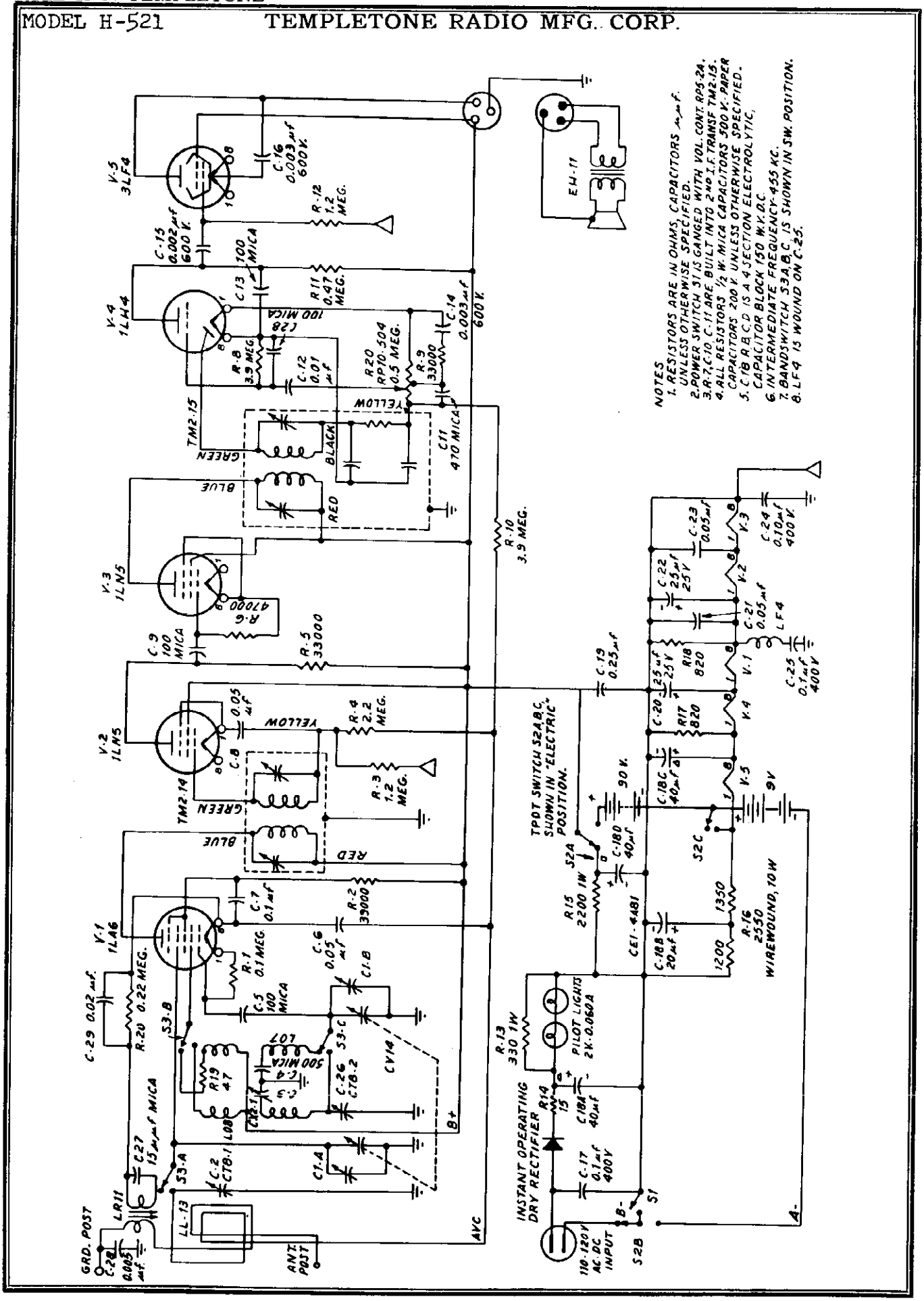

TEMPLETONE RADIO MFG. CORP.

MODEL H-622

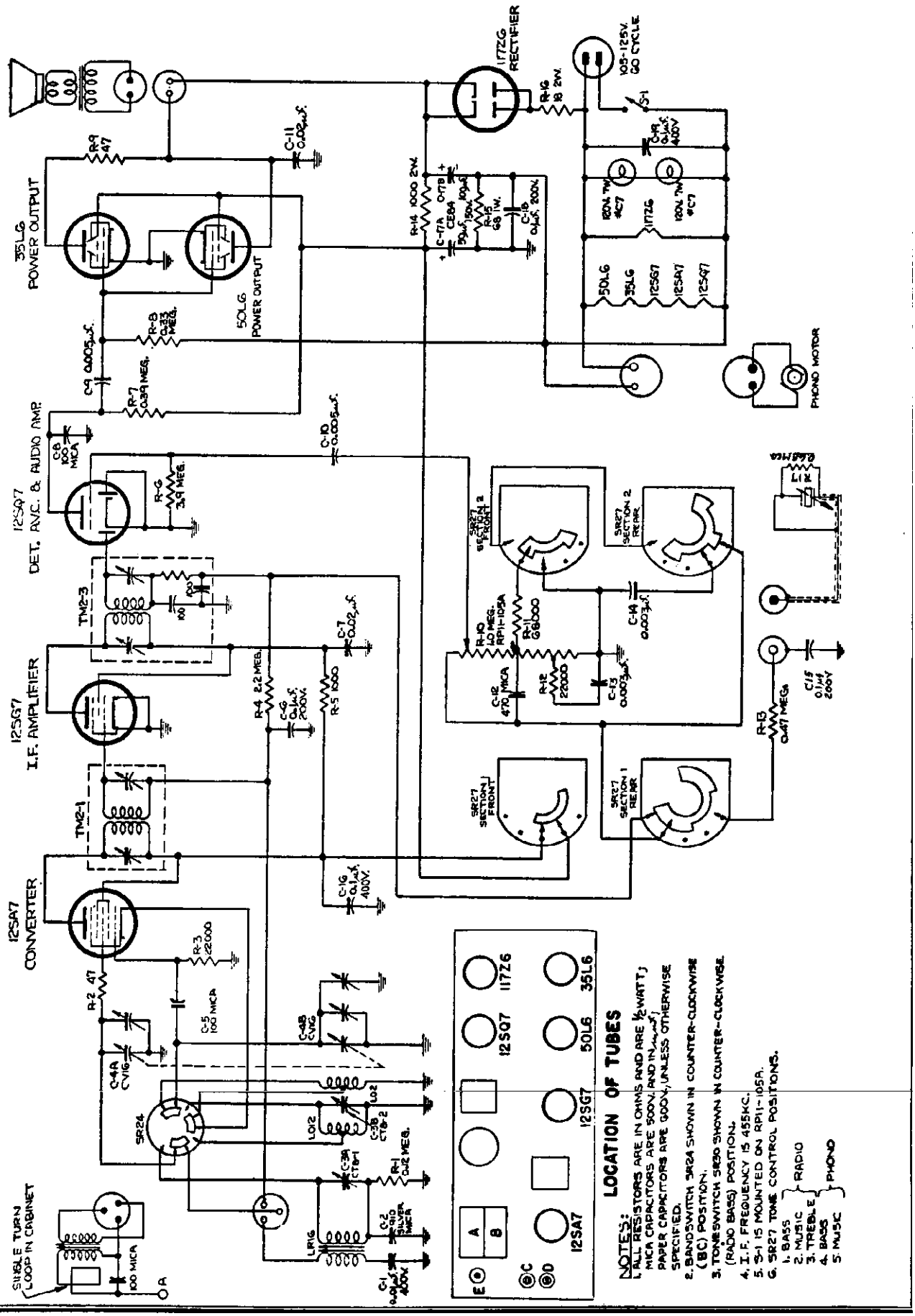

MODEL H-622 TEMPLETONE RADIO MFG. CORP.

OPERATING INSTRUCTIONS AND SERVICE NOTES

This set is a six-tube, two band, superheterodyne receiver and phonograph combination, using the latest type of low-drain electronic tubes and a smoothly operating, dependable record changer.

Operation: The set operates on 105-125 volts 60 cycles, AC. The power drain is approximately 35 watts on radio operation and 17 watts additional on phonograph operation.

Range: This set has both a broadcast and shortwave range. The complete broadcast band is covered from 532 to 1700 kilocycles. Since the broadcast dial scale is calibrated from 55 to 160, the actual frequency of the station may be obtained by adding zero to the dial calibration. The shortwave band covers from 5.6 to 12.5 megacycles. The shortwave dial scale is calibrated directly in megacycles.

Controls Four controls are provided for the operation of the radio set. The control at the extreme left includes the on-off switch and the volume control. The extreme counter-clockwise position is "off", and rotating the knob clockwise turns the set on and increases the volume. The second control from the left is the phono-radio switch and the tone control. The positions in order, from counter-clockwise to clockwise are: radio bass; radio music; radio treble; phonograph bass and phonograph music. Tone is varied electrically by boosting bass, treble or both, and not by merely reducing the high frequency response. The third control is the bandswitch which switches from broadcast in counter-clockwise position, to shortwave in clockwise position. The last control is the tuning control which permits accurate tuning of the slide rule dial through smooth vernier action.

Record Changer: The record changer is completely automatic and will play up to 12 ten-inch records or 10 twelve-inch records. Complete operating instructions for the record changer are included on a separate instruction sheet. It is provided with a precious metal alloy tipped, long-life needle balanced to give high quality reproduction with the speaker, amplifier and tone arm. It will provide many hours of excellent performance with low record wear.

Antenna: For normal reception, no outside antenna is required, as more than adequate pick-up is obtained from the built-in cabinet loop and the high sensitivity of the receiver. In very poor receiving locations improved results may be obtained by connecting an outside aerial to the post marked "A" on the rear of the cabinet.

Alignment: No attempt should be made to re-align this receiver until it has been determined that poor tubes or some local condition is not responsible for faulty reception. The signal generator may be connected through 0.01 mfd capacitor used as a dummy antenna, to the lug on the RF section "B" of the tuning capacitor. Connect ground clip of generator directly to chassis. An output meter may be clipped across the voice coil lug on the speaker. Align IF trimmers to 455 kilocycles, using the least possible input in the signal generator. With tuning plates completely out of mesh (pointer at the extreme right end of travel) the set in broadcast position, adjust the broadcast oscillator trimmer (A) to 1700 kilocycles. Then switch to shortwave and adjust the shortwave oscillator trimmer (D) to 12.5 megacycles. Replace the 01 mfd dummy by a 39 mmfd mica capacitor and connect to antenna terminal "A." Tune set and signal generator to 600 kilocycles and adjust broadcast antenna coil slug for maximum output. Then re-tune set and signal generator to 1550 kilocycles and adjust RF trimmer "B" on tuning capacitor for maximum response. Repeat these adjustments until no further adjustment is required, then switch receiver to shortwave. Tune set and signal generator to 6 megacycles and adjust shortwave antenna coil slug "E" for maximum response. Retune set and signal generator to 10.5 megacycles and tune shortwave antenna, trimmer "C" for maximum response. In these adjustments the tuning control should be rocked for best results. Repeat these adjustments until no further adjustment is needed.

For checking purposes, five marks are engraved on the dial plate. These represent, in order from left to right: the pointer position capacitor plates fully meshed and the pointer settings for 600 kc or 6 mc; 1000 kc, 10.5 mc and 1550 kc.

TRAV-LER RADIO CORP.

MODEL 5054

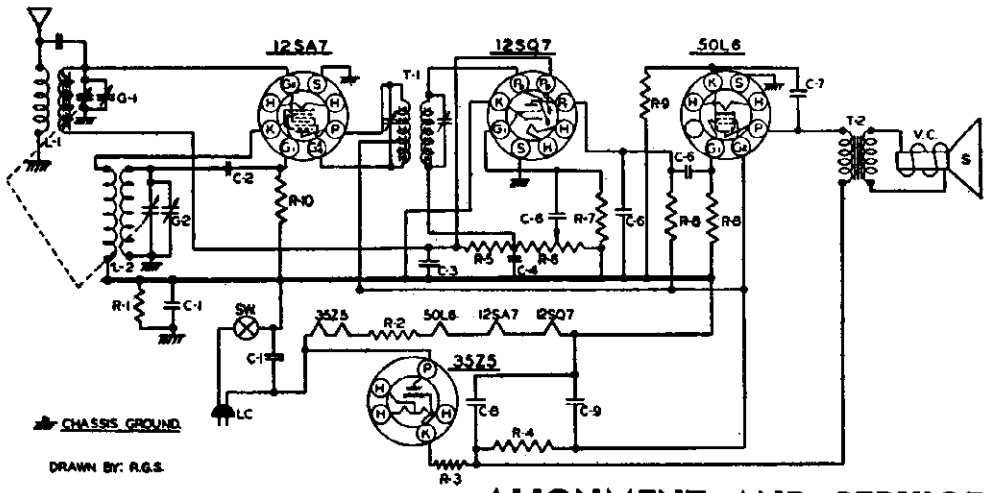

ALIGNMENT AND SERVICE DATA

Remove chassis from cabinet for alignment.

A Signal Generator is required having the following frequencies: 455 KC, 1400 KC, 1650 KC. An output meter should be connected across the speaker.

PART NO.		DESCRIPTION
1R-20	R-1	220M ~ RESISTOR 1/2W. 20
1R-41	R-2	47 ~ RESISTOR 1 W. 10
1R-17	R-3	33 ~ RESISTOR 1/2W 20
1R-25	R-4	2200 ~ RESISTOR 1 W. 10
1R-23	R-5	3.3MEG RESISTOR 1/2W. 20
VC-9	R-6	1MEG VOLUME CONTROL
1R-3	R-7	10 MEG. RESISTOR 1/2W. 20
1R-11	R-8	470M ~ RESISTOR 1/2W. 20
1R-14	R-9	150 ~ RESISTOR 1/2W. 20
1R-9	R-10	22M ~ RESISTOR 1/2W. 20
PC-5	C-1	.05 MFD. CONDENSER 400 V.
MC-4	C-2	50MMFD. MICA.
PC-2	C-3	.05 MFD. CONDENSER 200V
MC-2	C-4	100MMFD. MICA.
MC-5	C-5	500MMFD. MICA.
PC-6	C-6	.005 MFD. CONDENSER 600 V.
PC-7	C-7	.01 MFD. CONDENSER 400 V.
EC-15	C-8	30MFD ELECTROLYTIC COND.
	C-9	20MFD
LA-3	L-1	ANT. COIL
LO-14	L-2	OSC. COIL
LI-8	T-1	I.F. TRANSFORMER
	T-2	OUTPUT TRANSFORMER
SPK-10	S	4" PM. SPEAKER.
	V.C.	VOICE COIL
GC-7X	C-1	TUNING CONDENSER
	C-2	
CO-1	LC	LINE CORD
TU-32		3525-50L6-12SA7-12SQ7

The volume control of the receiver should be turned to maximum during the I. F. and all subsequent alignment and the generator output as low as possible to prevent the A. V. C. from working and giving false readings.

FIRST STEP: Connect the hot lead from the generator to the ANT. section of the gang condenser through a .1 MFD. condenser. The ground lead from the generator must be connected to "B" minus under the chassis. Turn the gang condenser to complete minimum capacity. Set the generator to 455 KC. Adjust the trimmers of the I. F. transformer until a maximum reading is noted on the output meter.

SECOND STEP: With the leads from the generator still connected in the same manner, adjust the Signal Generator to 1650 KC. Adjust the OSC. trimmer until the 1650 KC signal is tuned in. The gang condenser must be at complete minimum capacity for this adjustment.

THIRD STEP: Remove the generator hot lead and connect it to the antenna hank terminal strip through a 200 MMFD. condenser. With the receiver and generator set at 1400 KC, increase the generator output. Adjust the ANT. trimmer until a maximum signal is noted on the output meter. No further adjustment should be made as the coils and gang condenser in this receiver have been specially handled at the factory to insure proper alignment at the lower frequencies.

TUBE AND TRIMMER LOCATION

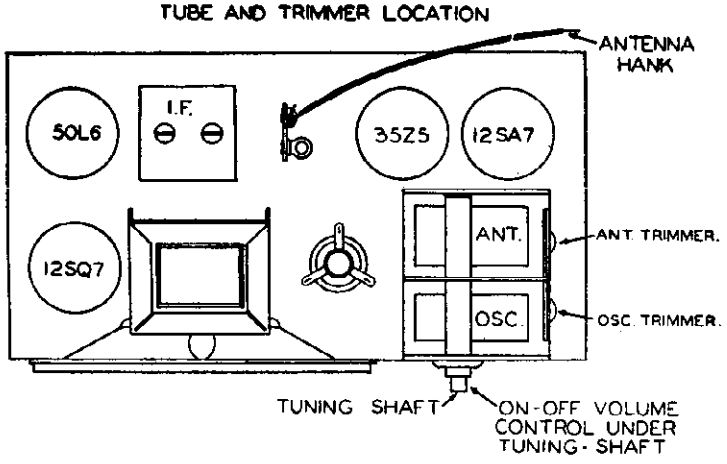

ALIGNMENT AND SERVICE DATA

(See Fig. No. 1 For Trimmer Location)

Remove chassis from cabinet for alignment.

A Signal Generator is required having the following frequencies: 455 KC, 1400 KC, 1700 KC. An output meter should be connected across the speaker.

The volume control of the receiver should be turned to maximum during the I. F. and all subsequent alignment and the generator output as low as possible to prevent the A. V. C. from working and giving false readings.

FIRST STEP: Connect the hot lead from the generator to the ANT. section of the tuner through a .1 MFD. condenser. The ground lead from the generator must be connected to "B" minus under the chassis. Turn the tuner to complete minimum capacity. Set the generator to 455 KC. Adjust the trimmers of the I. F. transformer until a maximum reading is noted on the output meter.

SECOND STEP: With the leads from the generator still connected in the same manner, adjust the Signal Generator to 1700 KC. Adjust the OSC. trimmer until the 1700 KC. signal is tuned in. The tuner must be at complete minimum capacity for this adjustment.

THIRD STEP: Remove the generator hot lead and connect it to the antenna bank terminal strip through a 200 MMFD. condenser. With the receiver and generator set at 1400 KC., increase the generator output. Adjust the ANT. trimmer until a maximum signal is noted on the output meter. No further adjustment should be made as the coils in this receiver have been specially handled at the factory to insure proper alignment at the lower frequencies.

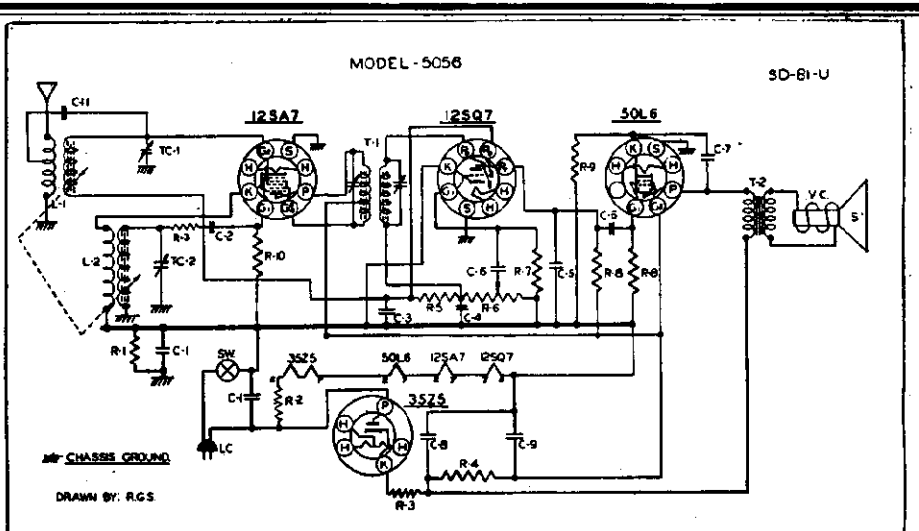

PART NO.		DESCRIPTION	PART NO.		DESCRIPTION
R-20	R-1	220M Ω RESISTOR 1/2W. 20			
R-21	R-2	47 Ω RESISTOR 1 W. 10			
R-17	R-3	33 Ω RESISTOR 1/2 W. 20			
R-25	R-4	2200 Ω RESISTOR 1 W. 10			
R-23	R-5	3.3 MEG. RESISTOR 1/2 W. 20	L1-8	T-1	I.F. TRANSFORMER
VC-9	R-6	1 MEG. VOLUME CONTROL.		T-2	OUTPUT TRANSFORMER
R-3	R-7	10 MEG. RESISTOR 1/2 W. 20	SPK-10	S	4" P.M. SPEAKER.
R-11	R-8	4.3 OM Ω RESISTOR 1/2 W. 20		V.C.	VOICE COIL
R-14	R-9	150 Ω RESISTOR 1/2 W. 20		L-1	ANT. COIL
R-9	R-10	22M Ω RESISTOR 1/2 W. 20	PT-1	L-2	OSC. COIL
				C-8	150 MMFD. MICA.
PC-5	C-1	.05 MFD. CONDENSER 400 V.		TC1	ANT. TRIMMER.
MC-4	C-2	50 MMFD. MICA.		TC2	OSC. TRIMMER.
PC-12	C-3	.05 MFD. CONDENSER 200 V.			
MC-2	C-4	100 MMFD. MICA.	CO-1	LC	LINE CORD.
MC-5	C-5	500 MMFD. MICA.			
PC-6	C-6	.005 MFD. CONDENSER 600 V.			
PC-7	C-7	.01 MFD. CONDENSER 400 V.	TU-32		35Z5 - 50L6 - 12SA7 - 12SQ7
EC-12	C-8	40 MFD. ELECTROLYTIC COND.			
	C-9	20 MFD.			

TUBE AND TRIMMER LOCATION

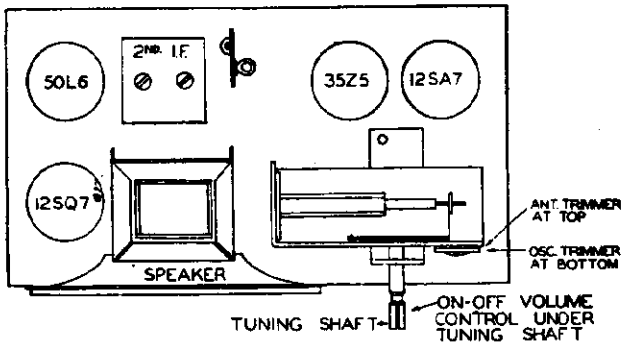

OPERATING INSTRUCTIONS

POWER SOURCES: This receiver may be operated on alternating current (AC) of 110 to 125 volts at 60 cycles or on direct current (DC) of 110 to 125 volts. When used on DC, if the tubes light up but set does not play, reverse the cord plug in the power outlet.

CAUTION: Always predetermine voltage of power source. Never try to plug this receiver into a 220 volt line, as this will cause serious damage.

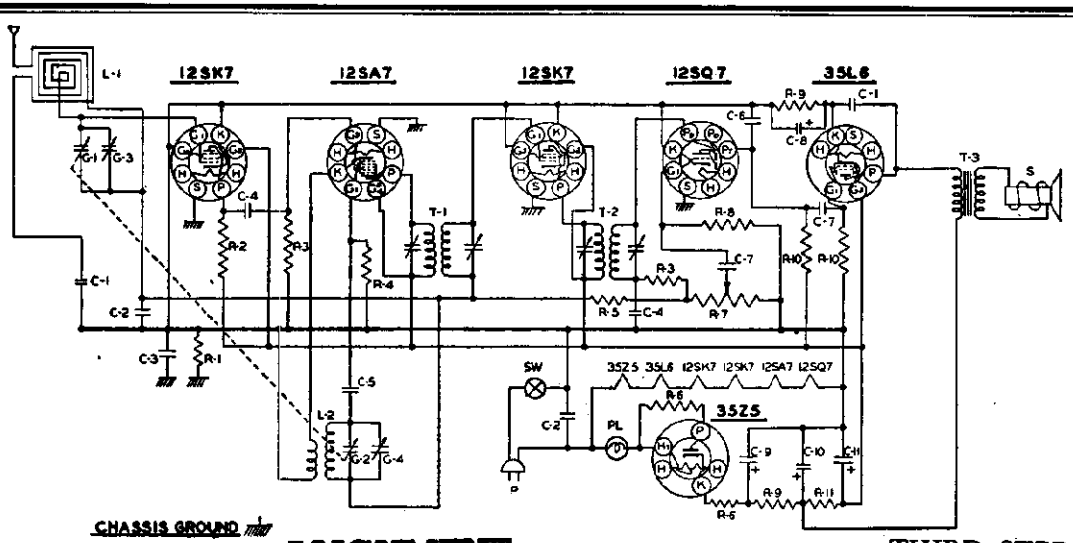

PART NO.		DESCRIPTION	PART NO.		DESCRIPTION
PC-7	C-1	.01MFD. CONDENSER 400 V	IR-9	R-4	22M ~ RESISTOR 1/2W 20%
PC-5	C-2	.05MFD. CONDENSER 400 V	IR-23	R-5	33MEG ~ RESISTOR 1/2W 20%
PC-8	C-3	.1MFD. CONDENSER 400 V.	IR-17	R-6	33 ~ RESISTOR 1/2W 20%
MC-2	C-4	.0001 MICA CONDENSER	VC-13	R-7	1MEG VOLUME CONTROL
MC-4	C-5	.00005 MICA CONDENSER	IR-13	R-8	2.2MEG ~ RESISTOR 1/2W. 20%
MC-5	C-6	.0005 MICA CONDENSER	IR-5	R-9	220 ~ RESISTOR 1/2W. 10%
PC-6	C-7	.005MFD. CONDENSER 600 V.	IR-11	R-10	470M ~ RESISTOR 1/2W 20%
EC-2	C-8	10MFD. 25W.V ELECTROLYTIC	IR-21	R-11	330 ~ RESISTOR 1/2W 10%
EC-14	C-9	40MFD.			
	C-10	40MFD. ELECTROLYTIC 150 W V	GC-5	G-1	GANG CONDENSER
	C-11	20MFD.		G-2	
				G-3	ANT TRIMMER
IR-20	R-1	220M ~ RESISTOR 1/2W 20%		G-4	OSC. TRIMMER
IR-22	R-2	3900 ~ RESISTOR 1/2W 10%	LL-16	L-1	LOOP ANT
IR-10	R-3	47M ~ RESISTOR 1/2W 20%	LO-10	L-2	OSC COIL.
LI-6	T-1	INPUT I.F. TRANSFORMER			
LI-7	T-2	OUTPUT I.F. TRANSFORMER			
	SW	SWITCH ON VOLUME CONTROL			
SPK-12	T-3	OUTPUT TRANSFORMER			
	S	5" P.M. SPEAKER			
PB-1	PL	#47 PILOT BULB			
CO-1	P	LINE CORD			

ALIGNMENT

Remove chassis from cabinet for alignment.

A Signal Generator is required having the following frequencies: 455 KC, 1400 KC, 1720 KC. An output meter should be connected across the speaker.

The receiver volume control should be turned to maximum during the I.F. and all subsequent alignments to keep the AVC from working and giving false readings. Keep the generator output as low as possible to prevent overloading.

FIRST STEP: Connect the hot lead from the generator to the ANT. section of the gang condenser, through a .1 MFD condenser. The ground lead from the generator must be connected to the floating ground buss under the chassis. Turn the gang condenser to complete minimum capacity. Adjust the generator to 455KC and adjust the trimmers of the 1st and 2nd I.F. transformers until a maximum reading is noted on the output meter.

SECOND STEP: With the leads from the generator still connected in the same manner, adjust the Signal Generator to 1720 KC. The OSC. trimmer is located on the front of the chassis. Adjust this trimmer until the 1720 KC signal is tuned in.

THIRD STEP: Remove the hot lead of the generator from the ANT section of the gang condenser. Connect this lead to the primary of the loop antenna through a 200 MMFD condenser. Adjust the Signal Generator to 1400 KC. Rotate the tuning control until this signal is tuned in. The ANT trimmer is located on the back of the loop antenna. Adjust this trimmer until a maximum reading is noted on the output meter. No further adjustment should be necessary, unless the set has been damaged, as the coils and condenser in this receiver have been specially handled at the factory to insure proper alignment at the lower frequencies.

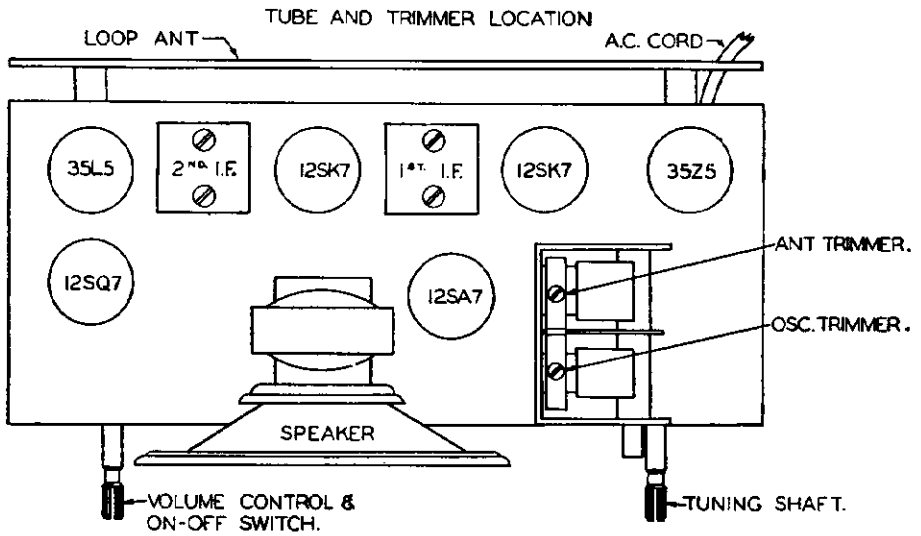

MODEL 6040

TRAV-LER RADIO CORP.

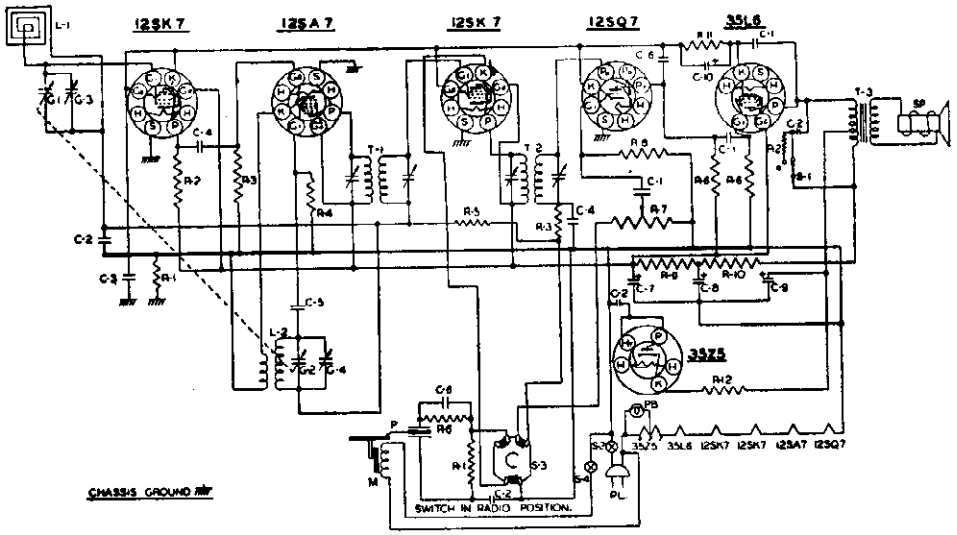

ALIGNMENT DATA

Remove the chassis from the cabinet. A Signal Generator with the following frequencies is required: 455 KC, 1400 KC and 1720 KC.

The receiver volume control should be turned to maximum during the I.F. and all subsequent alignments to keep the A.V.C. from working and giving false readings. Turn the tone control to complete left hand position. Keep the generator output as low as possible to prevent overloading.

Connect an output meter across the voice coil of the speaker.
Connect a 20,000 ohm resistor across the loop connector terminals to reflect proper loop impedance.

FIRST STEP: Connect the hot lead from the generator to the "ANT." section of the gang condenser through a .1 MFD. condenser. The ground lead must be connected to the floating ground buss under the chassis. Turn the gang condenser to complete minimum capacity. Adjust the generator to 455 KC and adjust the trimmers of the 1st and 2nd I.F. transformers until a maximum reading is noted on the output meter.

SECOND STEP: With the leads from the generator connected in the same manner as in I.F. alignment, adjust the signal generator to 1720 KC. The "O.S.C." trimmer is located on the front section of the gang condenser. Adjust this trimmer until the signal is tuned in. The gang condenser should be at complete minimum capacity for this setting.

THIRD STEP: Remove the generator leads from the chassis. Remove the 20,000 ohm resistor from the loop connector terminals. Reinstall the chassis in the cabinet, connect the loop leads, motor plug and phono pickup leads.

Connect the generator leads to a transmitting loop, made of a few turns of wire, and loosely couple to the receiver loop antenna which is located on the back end of the cabinet. Adjust the generator to 1400 KC. Rotate the tuning control until this signal is tuned in. The "ANT." trimmer is located on the rear section of the gang condenser. Adjust this trimmer until a maximum signal is noted on the output meter.

No further adjustment should be necessary, unless the receiver has been damaged, as the coils and tuning condenser have been specially handled at the factory to insure proper alignment at the lower frequencies.

PART NO.		DESCRIPTION
PC-7	C-1	.01 MFD. CONDENSER 400 V.
PC-5	C-2	.05 MFD. CONDENSER 400 V.
PC-6	C-3	.1 MFD. CONDENSER 400 V.
MC-2	C-4	100MMFD. MICA CONDENSER.
MC-4	C-5	50 MMFD. MICA CONDENSER
MC-5	C-6	500MMFD. MICA CONDENSER
EC-14	C-7	20 MFD.
	C-8	40 MFD. 150 WV. ELECTROLYTIC
	C-9	40 MFD.
EC-2	C-10	10 MFD. 25 WV. ELECTROLYTIC
IR-20	R-1	220M ~ RESISTOR 1/2W 20%
IR-15	R-2	2200 ~ RESISTOR 1/2W 20%
IR-10	R-3	47M ~ RESISTOR 1/2W 20%
IR-9	R-4	22M ~ RESISTOR 1/2W 20%
IR-23	R-5	3.3 MEG. RESISTOR 1/2W 20%
IR-11	R-6	470M ~ RESISTOR 1/2W 20%
VC-4	R-7	1MEG VOLUME CONTROL
IR-13	R-8	2.2 MEG. RESISTOR 1/2W 20%
IR-1	R-9	470 ~ RESISTOR 1/2W 20%
IR-42	R-10	1000 ~ RESISTOR 1 W 10%
IR-14	R-11	150 ~ RESISTOR 1/2 W 20%
IR-17	R-12	33 ~ RESISTOR 1/2 W 20%
GC-5	C-1	GANG CONDENSER
	C-2	
	C-3	ANT. TRIMMER
	C-4	OSC. TRIMMER
LI-6	T-1	INPUT IF TRANSFORMER
LI-7	T-2	OUTPUT IF TRANSFORMER
	T-3	OUTPUT TRANSFORMER
LL-17	L-1	LOOP ANT.
LO-13	L-2	OSC. COIL
SPH-12	SP	5" PM SPEAKER
SW-2	S-1	TONE SWITCH
	S-2	SWITCH ON VOLUME CONTROL
SW-1	S-3	PHONO.-RADIO SWITCH
	S-4	SWITCH ON RECORD CHANGER
AC-M-7	M	RECORD CHANGER MOTOR
AC-PU-7	P	CRYSTAL PICKUP ARM, CARTRIDGE & H
	PB	#47 PILOT BULB
CO-2	PL	LINE CORD

TUBE AND TRIMMER LOCATION

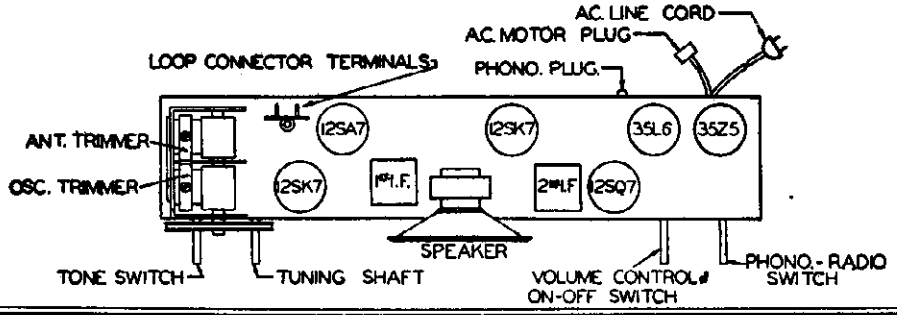

UNITED MOTORS SERVICE
DIV. OF GENERAL MOTORS CORP.

MODEL R-1238

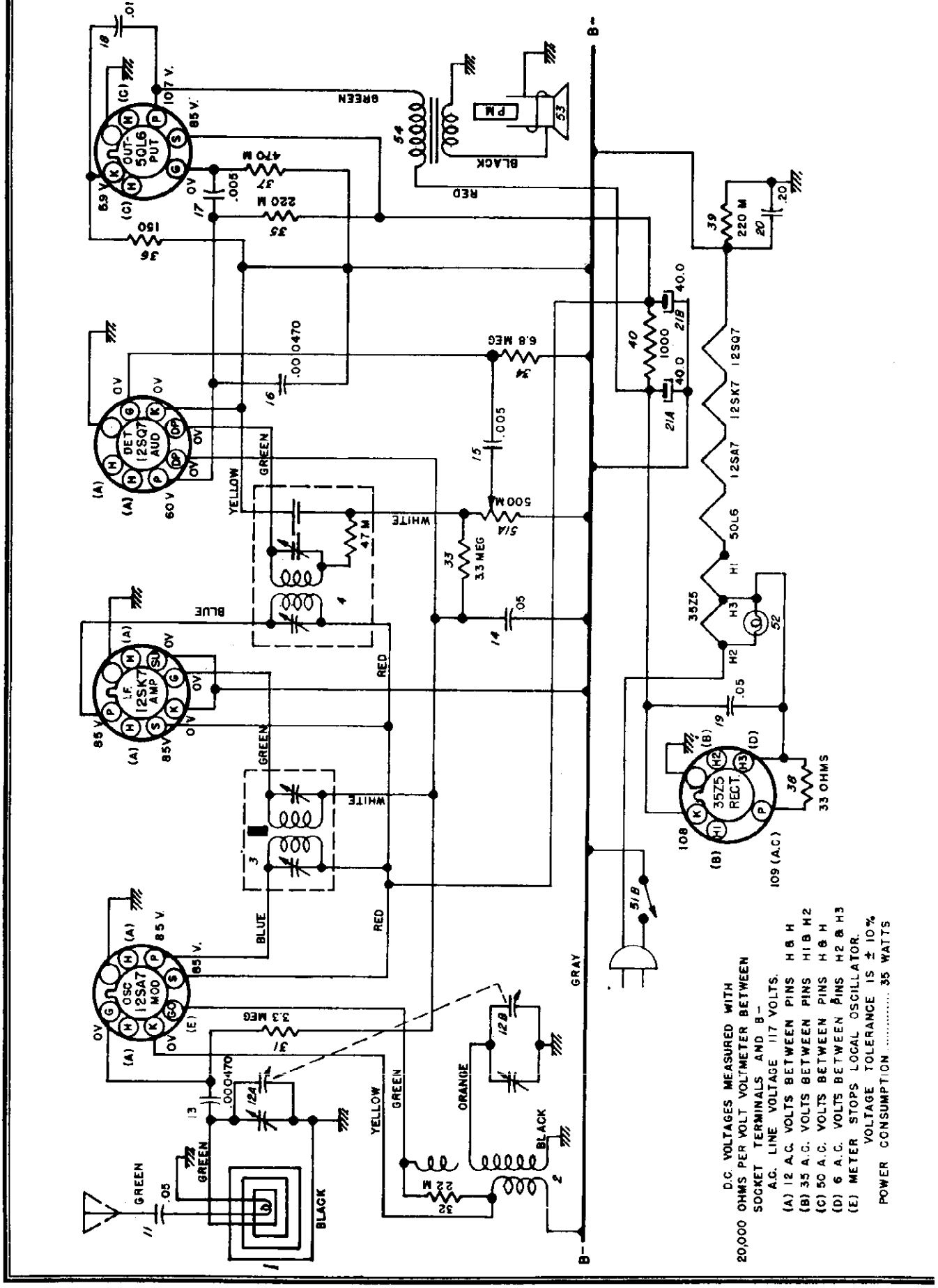

D.C VOLTAGES MEASURED WITH
20,000 OHMS PER VOLT VOLTMETER BETWEEN
SOCKET TERMINALS AND B-
A.C. LINE VOLTAGE 117 VOLTS.
(A) 12 A.C. VOLTS BETWEEN PINS H & H
(B) 35 A.C. VOLTS BETWEEN PINS H1 & H2
(C) 50 A.C. VOLTS BETWEEN PINS H & H
(D) 6 A.C. VOLTS BETWEEN PINS H2 & H3
(E) METER STOPS LOCAL OSCILLATOR.
VOLTAGE TOLERANCE IS ± 10%
POWER CONSUMPTION ..... 35 WATTS

MODEL R-1238

UNITED MOTORS SERVICE
DIV. OF GENERAL MOTORS CORP.

GENERAL:

CIRCUIT ..... AC - DC Superheterodyne

TUBES ..... 4 Plus Rectifier

TUNING ..... Manual

TUNING RANGE ..... 540 - 1720 KC

POWER SUPPLY .....

..... 105/125 Volts AC - DC

POWER CONSUMPTION ..... 35 Watts

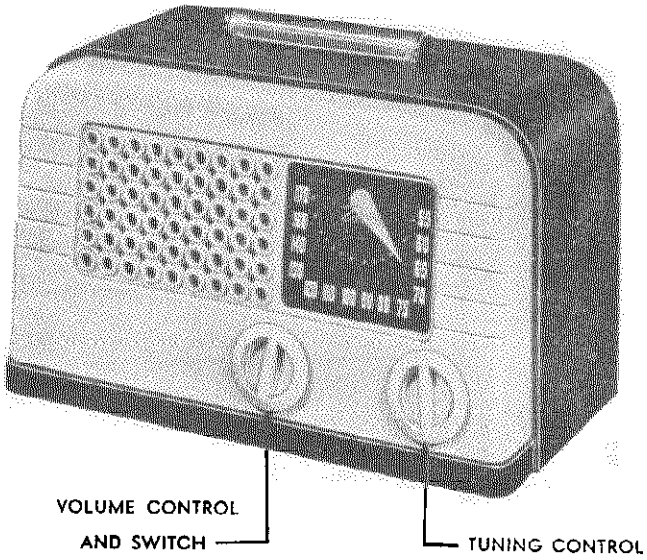

TUBE SOCKET VOLTAGE CHART

The tube socket voltages, as measured at the factory, are shown below. The blank spaces are provided so the service man may fill in actual voltage readings as measured with his own equipment. A normal operating radio should be used for these measurements.

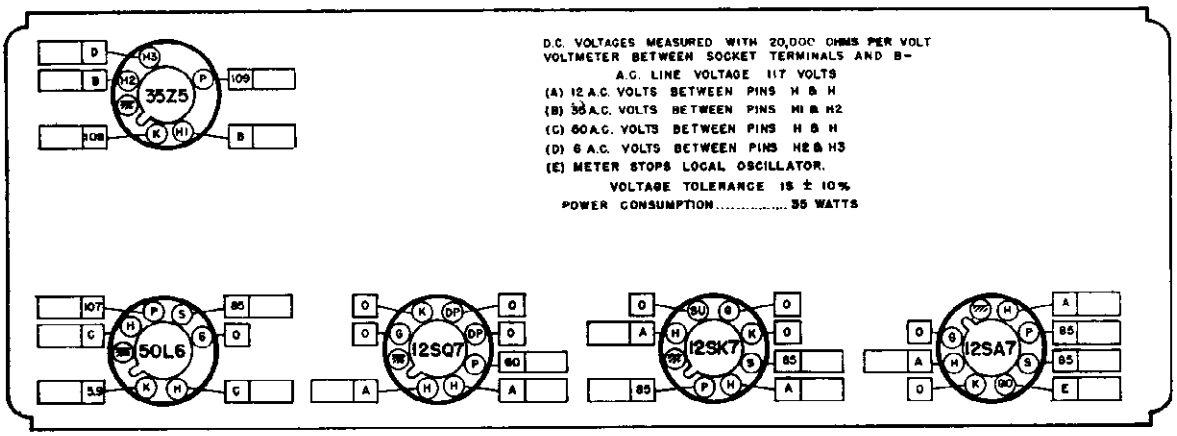

D.C. VOLTAGES MEASURED WITH 20,000 OHMS PER VOLT VOLTMETER BETWEEN SOCKET TERMINALS AND B−

A.C. LINE VOLTAGE 117 VOLTS

(A) 12 A.C. VOLTS BETWEEN PINS H & H

(B) 36 A.C. VOLTS BETWEEN PINS H1 & H2

(C) 60 A.C. VOLTS BETWEEN PINS H & H

(D) 6 A.C. VOLTS BETWEEN PINS H2 & H3

(E) METER STOPS LOCAL OSCILLATOR.

VOLTAGE TOLERANCE IS ± 10%

POWER CONSUMPTION ..... 35 WATTS

Volt Meter Resistance	Ohms Per Volt
Line Voltage	Volts
Voltage Tolerance	± 10%

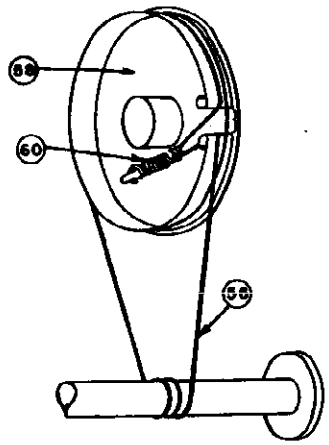

DIAL CORD SYSTEM

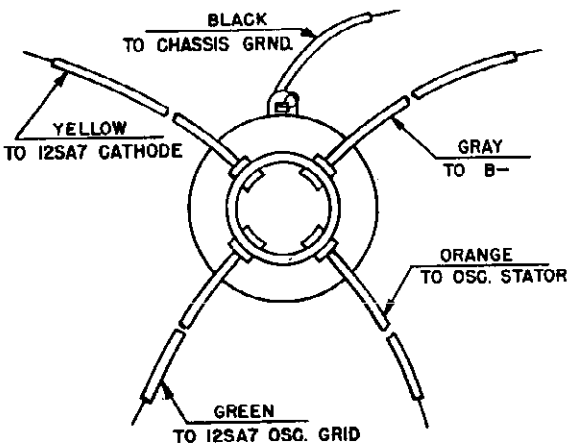

OSCILLATOR COIL

©John F. Rider

UNITED MOTORS SERVICE
DIV. OF GENERAL MOTORS CORP.

MODEL R-123

ALIGNMENT PROCEDURE:

Output Meter Connections ..... Across Voice Coil Winding

Signal Generator Ground ..... To Chassis through .01 MFD

Dummy Antenna ..... In series with generator

Volume Control Position ..... Fully on

Signal Generator Output ..... Minimum

Steps	Series Condenser or Dummy Antenna	Connect Signal Generator To	Adjust Signal Generator To	Turn Radio Dial To	Adjust Trimmers
1	0.1 Mfd.	12SA7 Grid (Pin #8) Ground Generator to B– (not chassis)	456 KC	Quiet Point near H. F. end	A-B (2nd IF Trans) C-D (1st IF Trans)
2	.000200 Mfd.	Ant. lead	1720 KC	1720 KC	E (Osc.)
3	.000200 Mfd.	Ant. lead	1400 KC	1400 KC	F (Ant.)

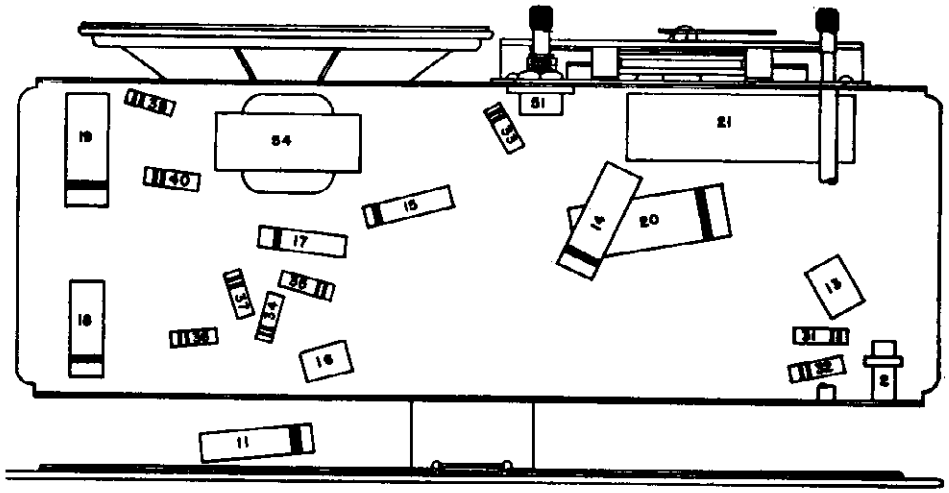

PARTS LAYOUT — CHASSIS VIEW

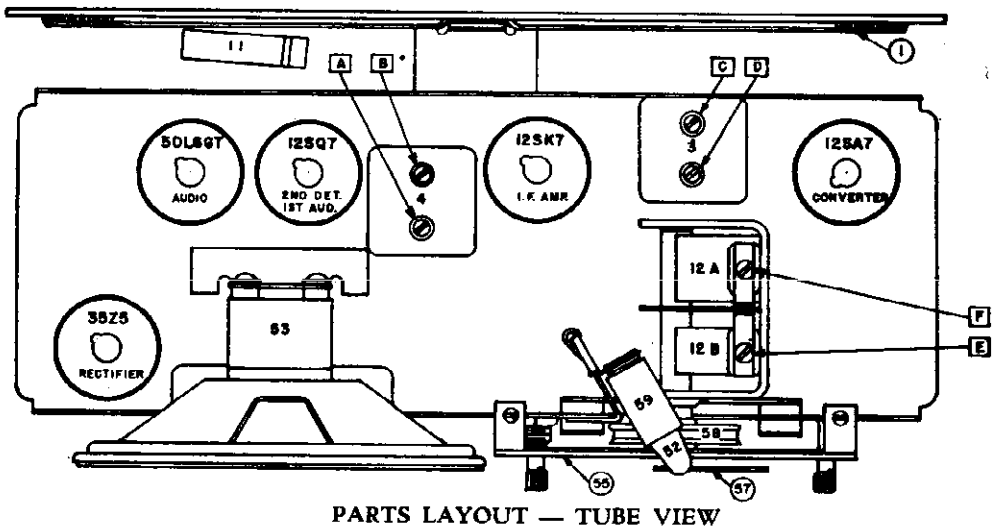

PARTS LAYOUT — TUBE VIEW

MODEL R-1238

UNITED MOTORS SERVICE
DIV. OF GENERAL MOTORS CORP.

SERVICE PARTS LIST

Illus. No.	Prod. Part No.	Service Part No.	Part Description
			ELECTRICAL PARTS
			COILS
1	1217910	1217910	Antenna - Loop Assy. (Includes Illus. 11)
2	1217905	1217905	Oscillator Coil
3	1217886	1217972	1st I. F.
4	1217887	1217973	2nd I. F.
			CONDENSERS
11	7236842	E503	0.05 Mfd. 200V Tubular (In Illus. 1)
12	1217917	1217917	Variable Condenser
			12A Antenna Section
			12B Oscillator Section
13	7238879	G471	0.000470 Mfd. Molded Mica
14	7236842	E503	0.05 200V Tubular
15	7231212	E502	0.005 600V Tubular
16	7238879	G471	0.000470 Molded Mica
17	7231212	E502	0.005 Mfd. 600V Tubular
18	1216513	E103	0.01 Mfd. 600V Tubular
19	7230592	E503	0.05 Mfd. 600V Tubular
20	7238787	E204	0.2 Mfd. 400V Tubular
21	1216527	J908	Electrolytic Condenser
21A			40 Mfd. 150V
21B			40 Mfd. 150V
			RESISTORS
31	1214564	A335	3.3 Meg. Ohms ½Watt Insulated
32	1214550	A223	22,000 Ohm ½Watt Insulated
33	1214564	A335	3.3 Meg. ½Watt Insulated
34	1215563	A685	6.8 Meg. Ohms ½Watt Insulated
35	1214555	A224	220,000 Ohm ½Watt Insulated
36	1213220	A151	150 Ohm ½Watt Insulated
37	1214559	A474	470,000 Ohm ½Watt Insulated
38	1213224	A330	33 Ohm ½Watt Insulated
39	1214555	A224	220,000 Ohm ½Watt Insulated
40	1211037	B102	1000 Ohm 1Watt Insulated
			TUBE COMPLEMENT
	1213809	5341	12SA7
	1213812	5348	12SK7
	1213813	5350	12SQ7
	1214366	5451	50L6GT
	1213848	5408	35Z5GT
			MISCELLANEOUS ELECTRICAL PARTS
51	1217883		Control, Volume and Switch
51A		8123	Volume Control
51B		8201	Switch, On-off
	1216512	1216512	Cord, Power
52	435433	47	Lamp, Dial
53	1216563	1216563	Speaker, 5" P. M
54	1217884	1217884	Transformer, Output
			MISCELLANEOUS MECHANICAL PARTS
55	1217888	1217888	Backplate Assy. Dial
56	1216994	1212233	Cord, 13" Dial Drive
	1217900	1217900	Cabinet Assy
	1217970	1217970	Dial Glass
	1217892	1217892	Knob
57	1217891	1217891	Pointer, Dial
58	1217238	1217238	Pulley, Dial Drive
59	1217839	1217839	Socket, Dial Light, with Leads
	1217403	7236279	Socket, Octal Tube
60	1217323	1217323	Spring, Dial Tension

UNITED MOTORS SERVICE
DIV. OF GENERAL MOTORS CORP.

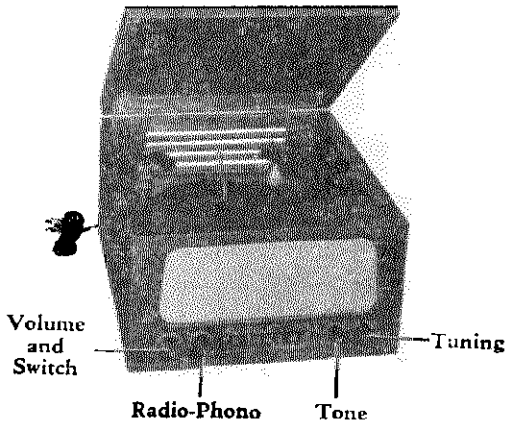

MODEL R-1241

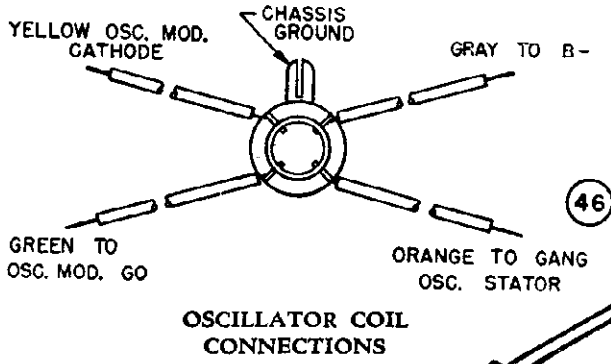

OSCILLATOR COIL CONNECTIONS

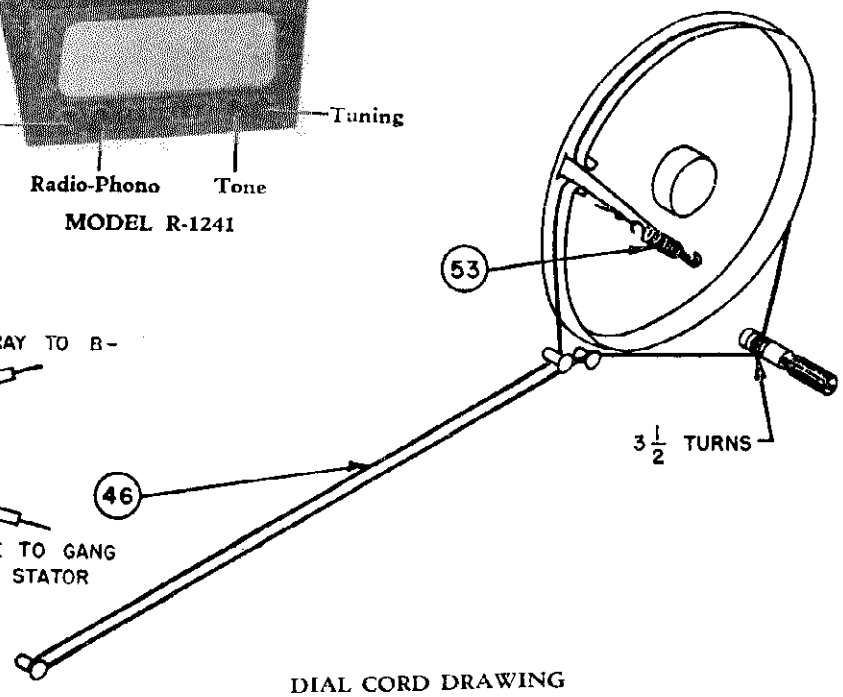

DIAL CORD DRAWING

ALIGNMENT PROCEDURE:

Output Meter Connections ..... Across Voice Coil

Generator Return ..... To B—

Dummy Antenna ..... In Series With Generator

Volume Control Position ..... Maximum Volume

Tone Control Position ..... Treble

Generator Output ..... Minimum for Readable Indication

Steps	Series Condenser or Dummy Antenna	Connect Generator To	Signal Generator Frequency	Tune Receiver To	Adjust in Sequence for Max. Output
1	0.1 Mfd	Stator Lug RF Section of Gang	456 KC	High Frequency Stop	A, B, C, D
2	0.000220 Mfd	Stator Lug RF Section of Gang	1615 KC	High Frequency Stop	E
3	0.000220 Mfd	External Antenna Connection	1400 KC	Signal Generator Signal	F

MODEL R-1241

UNITED MOTORS SERVICE
DIV. OF GENERAL MOTORS CORP.

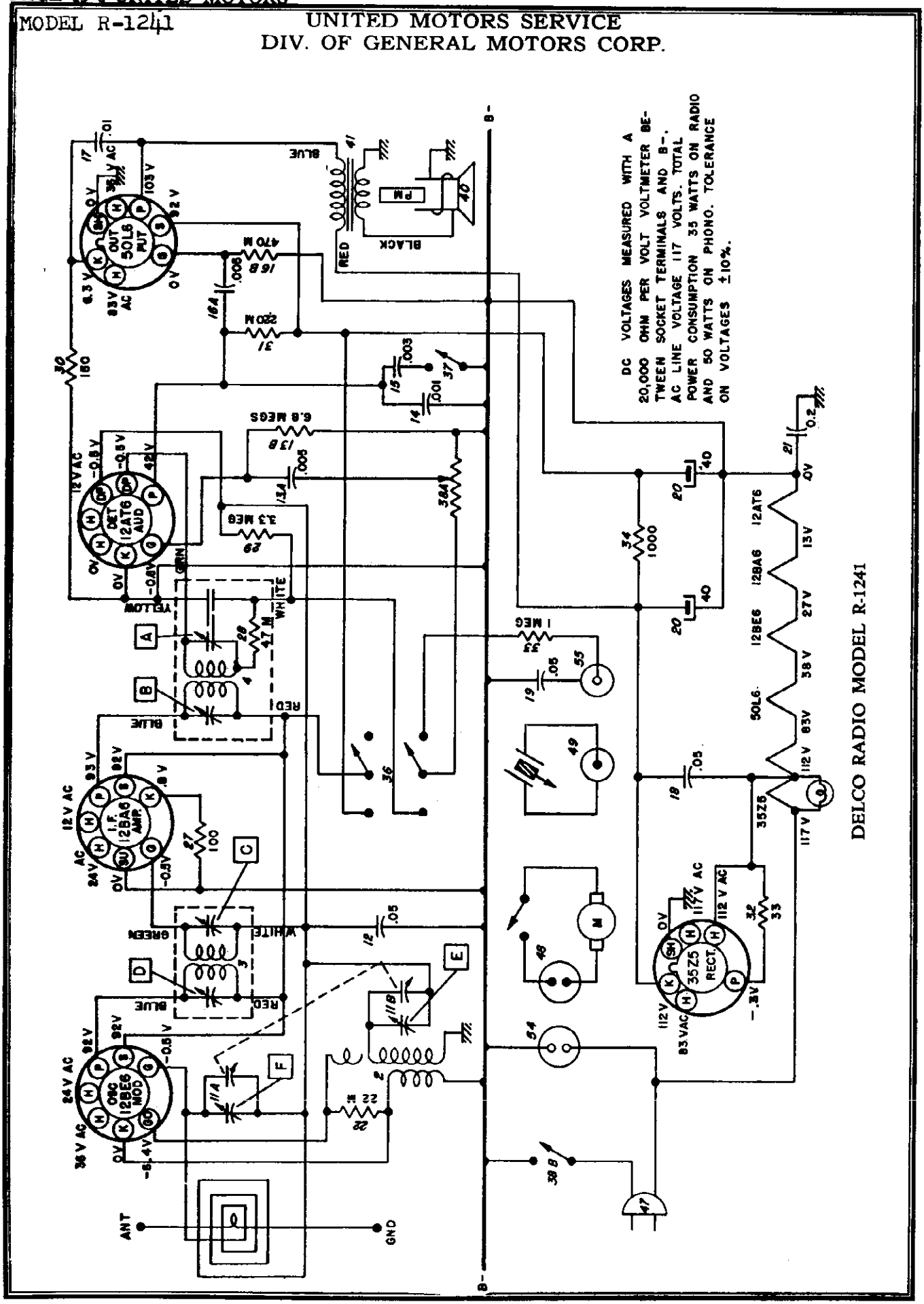

TUBE SOCKET VOLTAGE CHART

The tube socket voltages, as measured at the factory and under the conditions shown on the schematic diagram, are shown below. The blank spaces are provided so the service man may fill in actual voltage readings as measured with his own equipment. A normal operating radio should be used for these measurements.

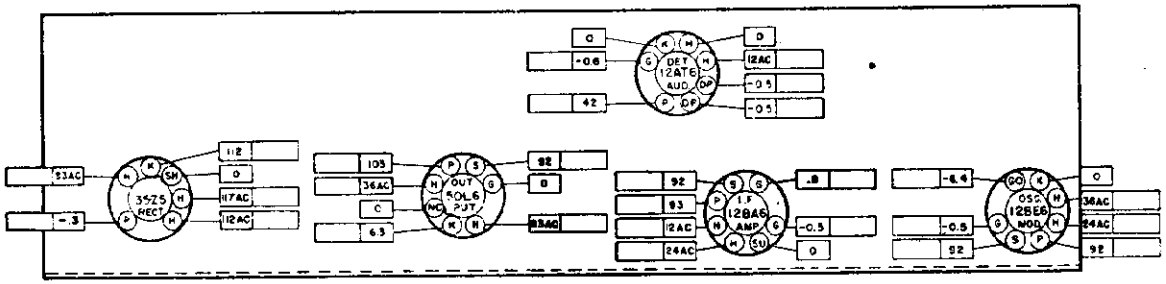

Volt Meter Resistance	Ohms Per Volt
Line Voltage	Volts
Voltage Tolerance	±10%

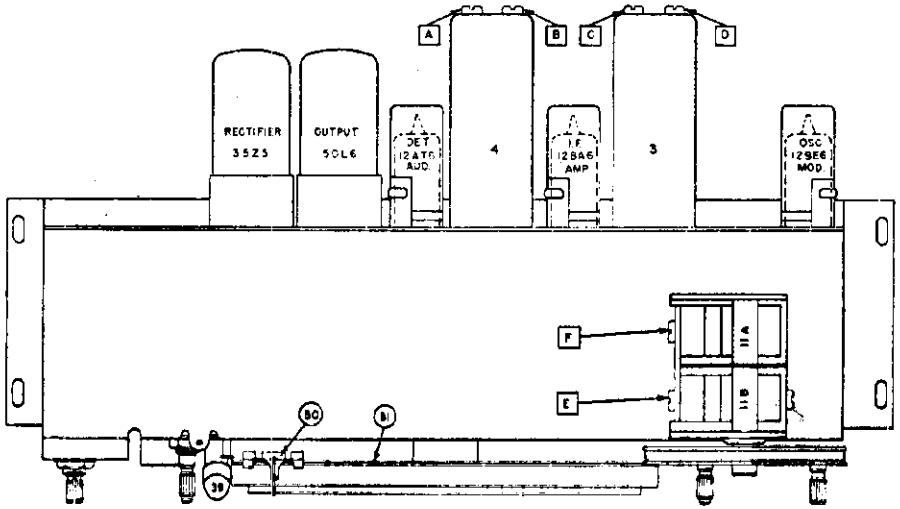

PARTS LAYOUT — TUBE VIEW

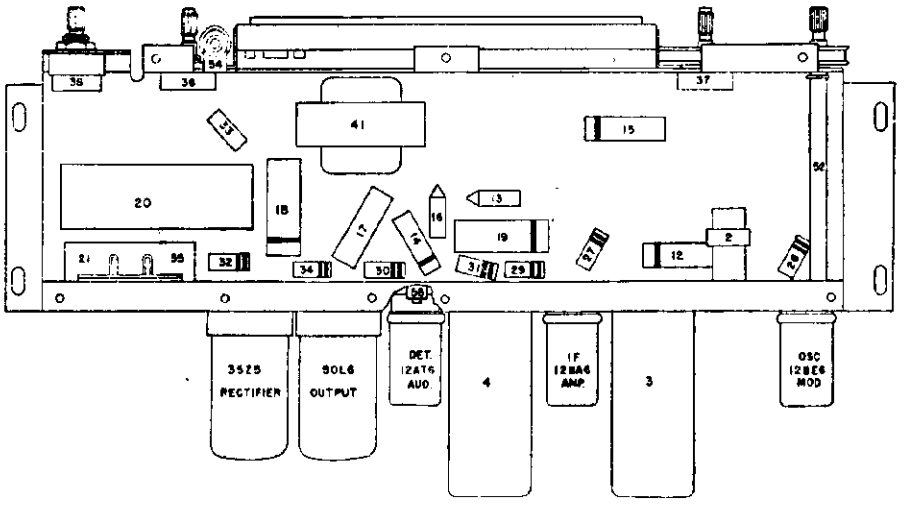

PARTS LAYOUT — CHASSIS VIEW

SERVICE PARTS LIST

Illus. No.	Production Part No.	Service Part No.	Description
			ELECTRICAL PARTS
			Coils
1	1218776	1218776	Loop Antenna
2	1218781	1218781	Oscillator
3	1218766	1217972	1st I.F.
4	1218767	1217973	2nd I.F.
			Condensers
11	1219130	1219130	Variable Condenser and Pulley
11A			R.F. Section
11B			Oscillator Section
12	7236842	E 503	0.05 Mfd. 200 V. Tubular
13	1218258		Capristor
13A		E 502	0.005 Mfd. Ceramic
13B		A 685	6.8 Megohms ½ W Insulated
14	1217790	E 102	0.001 Mfd. 600 V Tubular
15	1216132	E 302	0.003 Mfd. 600 V Tubular
16	1218259		Capristor
16A		E 502	0.005 Mfd. Ceramic
16B		A 474	470,000 Ohms ½ W Insulated
17	7238790	E 103	0 01 Mfd. 200 V Tubular
18	7230592	E 503	0.05 Mfd. 600 V Tubular
19	7230592	E 503	0.05 Mfd. 600 V Tubular
20	1217027	J 908	Electrolytic
20A			40 Mfd. 150 V
20B			40 Mfd. 150 V
21	7238787	E 204	0.2 Mfd. 400 V Tubular
			Resistors
13	1218258		Capristor
13A		E 502	0.005 Mfd. Ceramic
13B		A 685	6.8 Megohms ½ W Insulated
16	1218259		Capristor
16A		E 502	0.005 Mfd. Ceramic
16B		A 474	470,000 Ohms ½ W Insulated
26	1214550	A 223	22,000 Ohms ½ W Insulated
27	1213217	A 101	100 Ohms ½ W Insulated
28	1214553	A 473	47,000 Ohms ½ W Insulated
29	1214564	A 335	3.3 Megohms ½ W Insulated
30	1213220	A 151	150 Ohms ½ W Insulated
31	1214555	A 224	220,000 Ohms ½ W Insulated
32	1214538	A 330	33 Ohms ½ W Insulated
33	1213282	A 105	1 Megohm ½ W Insulated
34	1211037	B 102	1000 Ohms 1 W Insulated
	1214366		
	1218807		
	1218808		
	1218809		
	1213848		
36	1218062		
37	1218806		
38	1218758		
38A			
38B			
39	435433		
40	1218817		
41	1217884		

Illus No.	Production Part No.	Service Part No.	Description
			Tubes
		5451	50L6GT
		5368	12AT6
		5370	12BE6
		5369	12BA6
		5408	35Z5GT, Rectifier
			Miscellaneous Electrical Parts
		1218062	Control - "Radio-Phono"
		1218806	Control - Tone
		1218758	Control - Volume and Switch
			Volume Control
			Switch
		47	Lamp - Dial Light
		1218817	Speaker
		1217884	Transformer - Output
	1217104		
46			
	1216512		
48	1217515		
49	1851850		
50	1218737		
51	1218756		
52	1218073		
53	7242189		
54	1217839		
55	1216925		
	7236279		
56	1216747		
	1218071		
	1219131		
	1218818		
	1218084		
	1218085		

Service Part No.	Description
	MECHANICAL PARTS
	Chassis
1217104	Clip - Fahnestock
6040	Cord - Dial
1216512	Cord - Power
1217515	Plug - Phono Motor
1851850	Plug - Pickup Lead
1218737	Pointer
1218756	Pointer Backplate
1218073	Shaft - Tuning
7242189	Spring - Pointer Cord Tension
1217839	Socket - Dial Light
1216925	Socket - Phono Motor
7236279	Socket - Octal Tube
1216747	Socket - Phono Pickup Lead
1218071	Socket - Seven pin miniature tube
	Cabinet
1219131	Cabinet Assy.
1218818	Dial
1218084	Knob - Volume Control, Tone Control and "Radio-Phono"
1218085	Knob - Tuning

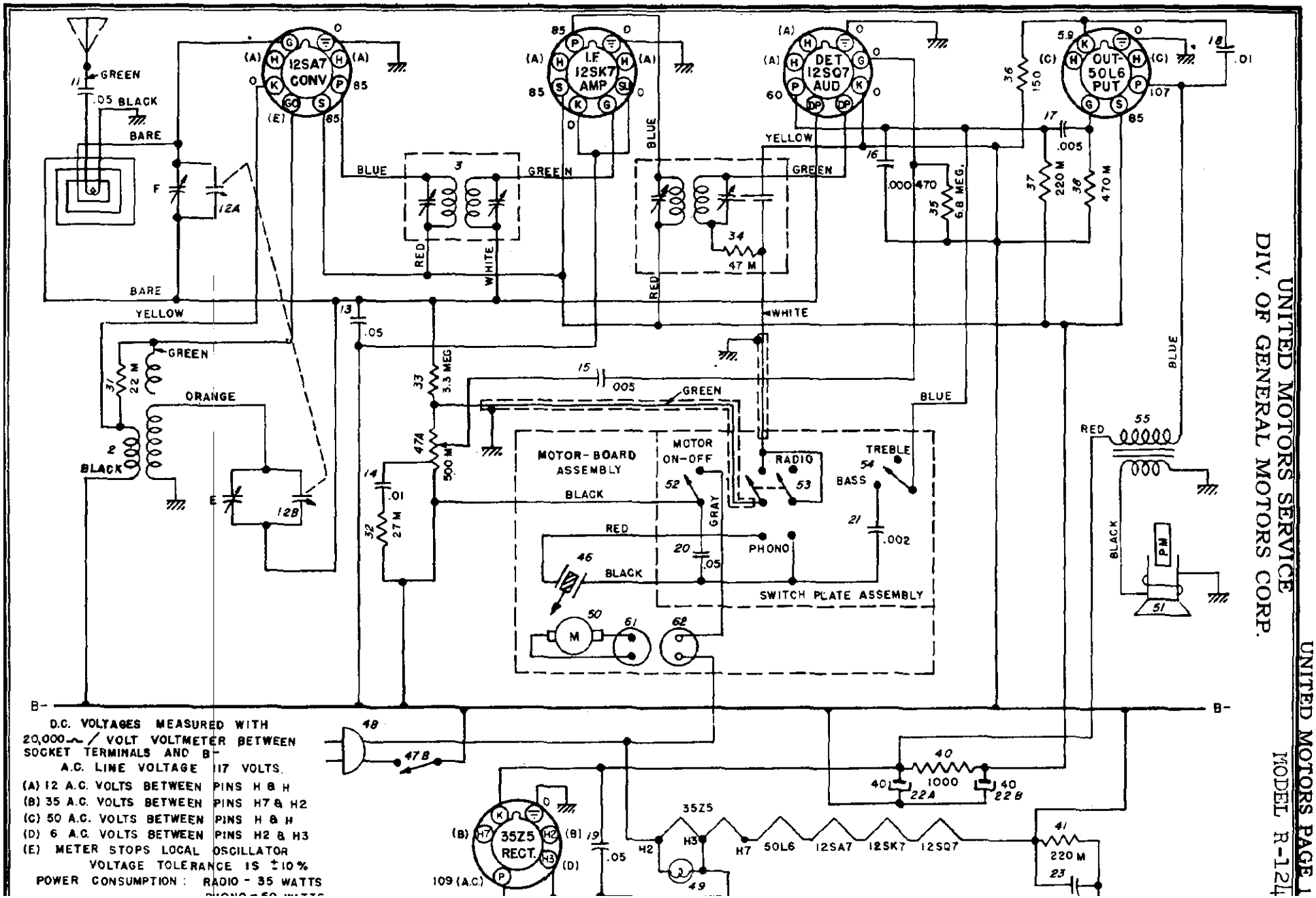

UNITED MOTORS SERVICE
DIV. OF GENERAL MOTORS CORP.

UNITED MOTORS PAGE 1
MODEL R-124

ALIGNMENT PROCEDURE:

Output Meter Connections ..... Across Voice Coil Winding

Generator Ground ..... To Chassis through .01 MFD

Dummy Antenna ..... In Series with generator

Volume Control Position ..... Fully on

Steps	Series Condenser or Dummy Antenna	Connect Signal Generator To	Adjust Signal Generator To	Turn Radio Dial To	Adjust Trimmers
1	.02 Mfd.	12SA7 Grid (Pin #8)	456 KC	Quiet Point near H. F. end	A-B (2nd IF Trans) C-D (1st IF Trans)
2	.000200 Mfd.	Ant. lead	1720 KC	1720 KC	E (Osc.)
3	.000200 Mfd.	Ant. lead	1400 KC	1400 KC	F (Ant.)

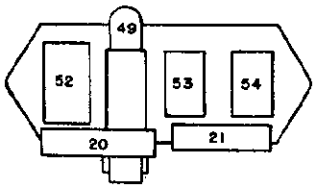

PARTS LAYOUT—SWITCH PLATE
(BOTTOM VIEW)

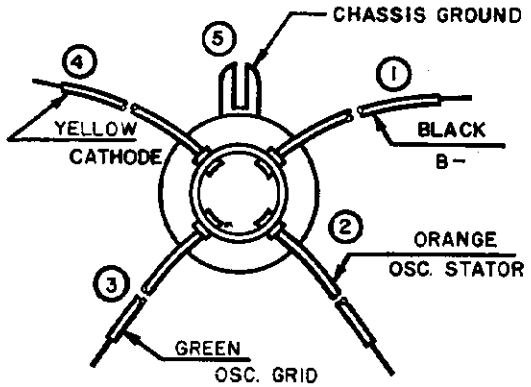

OSCILLATOR COIL CONNECTIONS

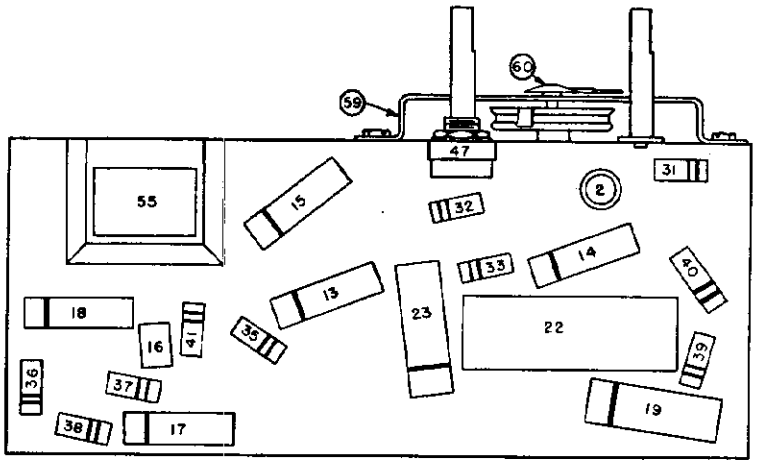

CHASSIS PARTS LAYOUT—CHASSIS VIEW

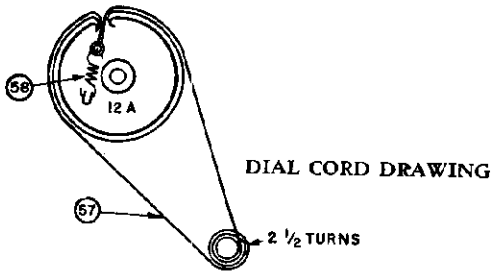

DIAL CORD DRAWING

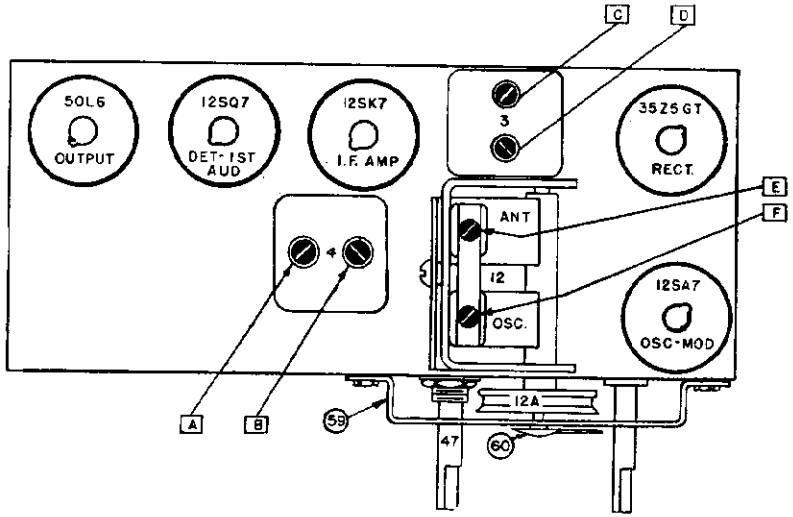

CHASSIS PARTS LAYOUT—TUBE VIEW

UNITED MOTORS SERVICE
DIV. OF GENERAL MOTORS CORP.

MODEL R-1242

GENERAL:

AC RADIO - RECORD PLAYER

POWER SUPPLY ..... 105/125 Volts AC

RADIO

TUBES ..... 4, Plus Rectifier

SPEAKER ..... 5" PM

TUNING ..... Manual

TUNING RANGE ..... 540 to 1720

POWER CONSUMPTION ..... 35 Watts

RECORD PLAYER

TYPE ..... Manual

PICKUP UNIT ..... Crystal

NEEDLE ..... Changeable

MOTOR POWER CONSUMPTION ..... 15 Watts

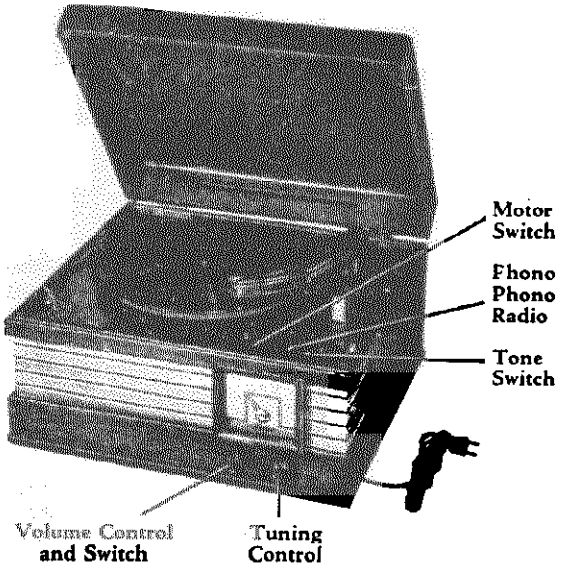

TUBE SOCKET VOLTAGE CHART

The tube socket voltages, as measured at the factory, are shown below. This chart provides blank spaces so the radio serviceman can enter the voltage readings as taken with his own equipment for permanent reference. A normal operating radio - record player should be used to make these measurements.

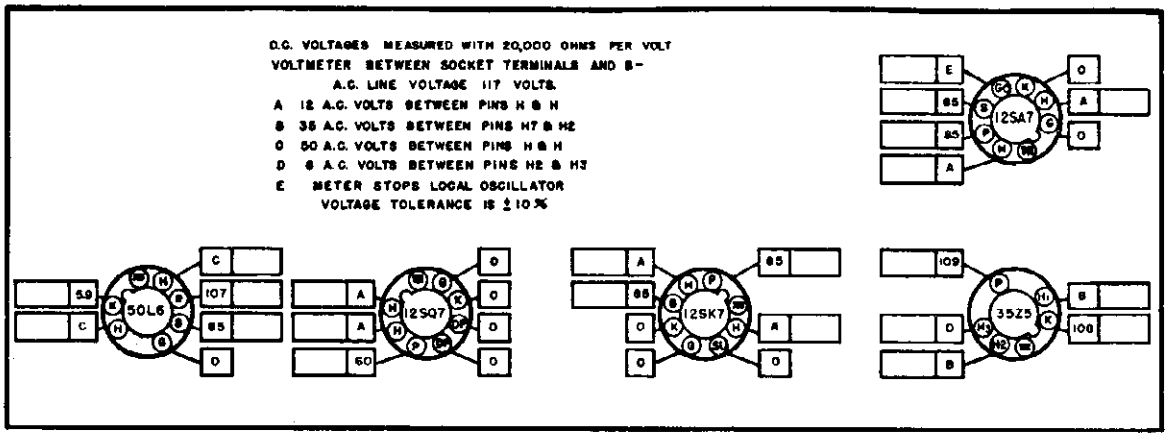

SERVICE PARTS LIST

Illus. No.	Production Part No.	Service Part No.	Description
			ELECTRICAL PARTS
			COILS
1	1217697	1217697	Antenna - Loop and Mounting Board (Includes Condenser Illus. #11)
2	1216518	1216518	Oscillator Coil
3	1217592	1217972	1st I. F. Assy.
4	1217594	1217973	2nd I. F. Assy. (Includes Resistor Illus. #34)
			CONDENSERS
11	7236842	E503	0.05 mfd. 200V Tubular (In Illus. #1)
12	1217391	1217391	Variable Cond. and Pulley Package Condenser

MODEL R-1242

UNITED MOTORS SERVICE
DIV. OF GENERAL MOTORS CORP.

Illus. No.	Production Part No.	Service Part No.	Description
12A	1217810	1217810	Pulley Grommet (3) Spacer Sleeve (3) Screw (3)
13	7236842	E503	0.05 mfd. 200V Tubular
14	7238881	E103	0.01 mfd. 400V Tubular
15	7231212	E502	0.005 mfd. 600V Tubular
16	7238879	G471	0.000470 mfd. Molded Mica
17	7231212	E502	0.005 mfd. 600V Tubular
18	1216513	E103	0.01 mfd. 600V Tubular
19	7230592	E503	0.05 mfd. 600V Tubular
20	7239185	E503	0.05 mfd. 400V Tubular
21	7236756	E202	0.002 mfd. 600V Tubular
22	1217027	J908	Electrolytic Cond., two section 22A—40 mfd. 150V 22B—40 mfd. 150V Common Negative
23	7238787	E204	0.2 mfd. 400V Tubular
		RESISTORS	
31	1214550	A223	22,000 ohm ½W Insulated
32	1214551	A273	27,000 ohm ½W Insulated
33	1214564	A335	3.3 Megohm ½W Insulated
34	1214553	A473	47,000 ohm ½W Insulated (In 2nd I. F. Ass'y)
35	1215563	A685	6.8 Megohm ½W Insulated
36	1213220	A151	150 ohm ½W Insulated
37	1214555	A224	220,000 ohm ½W Insulated
38	1214559	A474	470,000 ohm ½W Insulated
39	1214538	A330	33 ohm ½W Insulated
40	1211037	B102	1,000 ohm 1W Insulated
41	1214555	A224	220,000 ohm ½W Insulated
		TUBE COMPLEMENT	
	1213809	5341	12SA7
	1213812	5348	12SK7
	1213813	5350	12SQ7
	1214366	5451	50L6GT
	1213848	5408	35Z5GT
		MISCELLANEOUS ELECTRICAL PARTS	
47	1216936		Control, Volume and Switch
47A		8156	Volume Control (0.5 Megohm tapped at 100 Megohms)
47B		8201	On-off switch
48	1216512	1216512	Cord, power
49	435433	47	Lamp, dial
51	1216588	1216563	Speaker, 5" P. M.
55	1216571	1217511	Transformer, output
		MECHANICAL PARTS	
57	1217323	1217323	Spring, dial tension
58	1216763	1212233	Cord, 9" Dial Drive
	1216905	1216905	Crystal, dial
59	1217501	1217501	Dial scale and plate
	1216826	1216826	Knob
60	1216831	1216831	Pointer, dial
	1217839	1217839	Socket, dial light
	7236279	7236279	Socket, octal tube
	1218218	1218218	Cabinet Assy. - Includes Motor Board
		RECORD - PLAYER PARTS	
46	1216574	1216574	Pickup Arm Assy.
	1217517	1217517	Cartridge, crystal
50	1217512	1217512	Motor and drive mechanism
	1217513	1217513	Idler Wheel Package
52	1216974	1216974	Switch, SDST - Motor on-off
53	1216695	1216695	Switch, DPDT - Radio - Phono.
54	1216696	1216696	Switch, SPDT - Tone
	1217514	1217514	Turn-Table
61	1217515	1217515	Connector, plug
62	1217516	1217516	Connector, socket

©John F. Rider

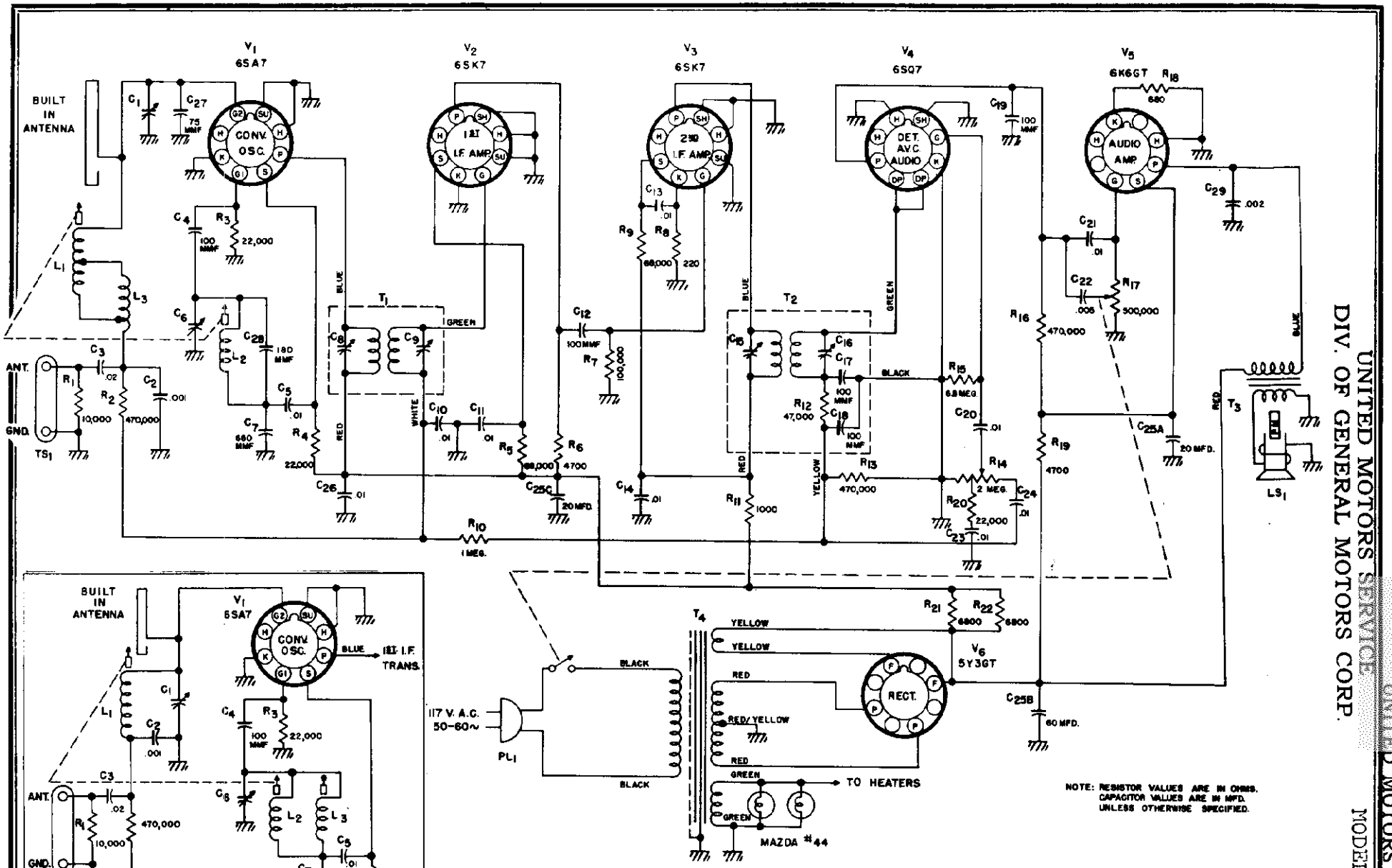
V1 6SA7
V2 6SK7
V3 6SK7
V4 6SQ7
V5 6K6GT
V6 5Y3GT
BUILT IN ANTENNA
CONV. OSC.
1ST I.F. AMP.
2ND I.F. AMP.
DET. A.V.C. AUDIO
AUDIO AMP.
RECT.
ANT.
GND.
TS1
L1
L2
L3
T1
T2
T3
T4
LS1
PL1
C1
C2
C3
C4
C5
C6
C7
C8
C9
C10
C11
C12
C13
C14
C15
C16
C17
C18
C19
C20
C21
C22
C23
C24
C25A
C25B
C25C
C26
C27
C28
C29
R1
R2
R3
R4
R5
R6
R7
R8
R9
R10
R11
R12
R13
R14
R15
R16
R17
R18
R19
R20
R21
R22
10,000
470,000
22,000
100 MMF
75 MMF
180 MMF
680 MMF
68,000
4700
100,000
220
1000
1 MEG.
47,000
6.8 MEG.
2 MEG.
500,000
680
20 MFD.
60 MFD.
6800
117 V. A.C. 50-60~
TO HEATERS
MAZDA #44
BLUE
GREEN
RED
WHITE
BLACK
YELLOW
RED/YELLOW
SCHEMATIC MODIFICATION FOR TUNERS STAMPED № 508199
A.V.C.
B+
1ST I.F. TRANS.
NOTE: RESISTOR VALUES ARE IN OHMS. CAPACITOR VALUES ARE IN MFD. UNLESS OTHERWISE SPECIFIED.

MODEL R-1243

UNITED MOTORS SERVICE
DIV. OF GENERAL MOTORS CORP.

GENERAL

TUBES	Six
SPEAKER	5" x 7" Elliptical P.M. Dynamic
TUNING	Manual
TUNING RANGE	535-1620 KC
ANTENNA	Built-in Antenna Plate and External.
POWER SUPPLY	105-125 V. A.C. 60 Cycles.
POWER CONSUMPTION	50 Watts.

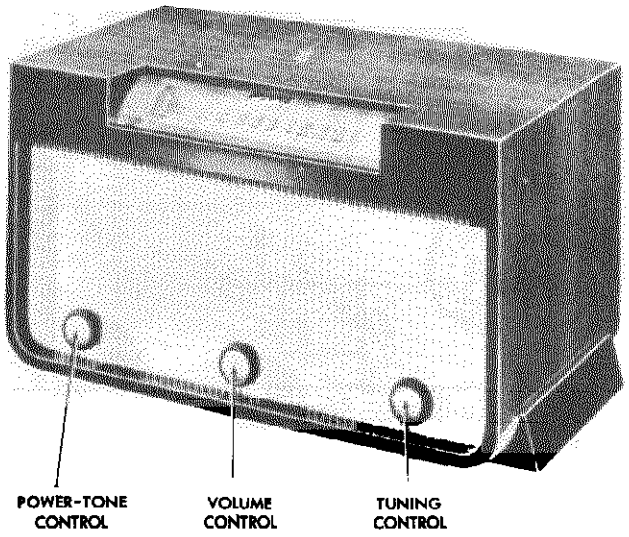

ALIGNMENT PROCEDURE

Output Meter Connections	Across Voice Coil
Generator Ground	To Chassis
Dummy Antenna	In Series With Generator
Volume Control Position	Maximum
Tone Control Position	Treble

NOTE: Reset Ant. Trimmer after installing receiver in cabinet and connecting up cabinet antenna.

USE THIS ALIGNMENT PROCEDURE WHEN ALIGNING RECEIVERS WITH TUNER STAMPED 50B225.

Series Cond. or Dummy Antenna	Connection at Radio	Set Generator At	Tune Receiver To		Adjust Screws At	To Obtain
		455 KC	1000 KC	A B	2nd IF trimmers	
.00025 Mfd	Antenna	455 KC	1000 KC	C D	1st IF trimmers	Max.
		1625 KC	High Freq. Stop	E F	Osc & Ant trimmers	Output
		1400 KC	Signal Generator	G	Ant coil, slide up or down	

Repeat last two steps until no improvement in output can be made. Caution—Do not change the position of the oscillator coil (H). Adjustment of Ant coil (G) is sufficient.

USE THIS ALIGNMENT PROCEDURE WHEN ALIGNING RECEIVERS WITH TUNER STAMPED 50B199.

Series Cond. or Dummy Antenna	Connection at Radio	Set Generator At	Tune Receiver To		Adjust Screws At	To Obtain
		455 KC	1000 KC	A B	2nd IF trimmers	
		455 KC	1000 KC	C D	1st IF trimmers	
		1660 KC	High Freq. Stop	E F	Osc & Ant trimmers	Max.
.00025 Mfd	Antenna	1400 KC	Signal Generator	H	Ant coil, slide up or down	Output
		Repeat last two steps carefully.				
		600 KC	Signal Generator	I	Osc slug. Rock tuner thru signal	

Caution—Do not change the position of the oscillator coil (G). Adjustment of the antenna coil (H) is sufficient.

UNITED MOTORS SERVICE
DIV. OF GENERAL MOTORS CORP.

MODEL R-1243

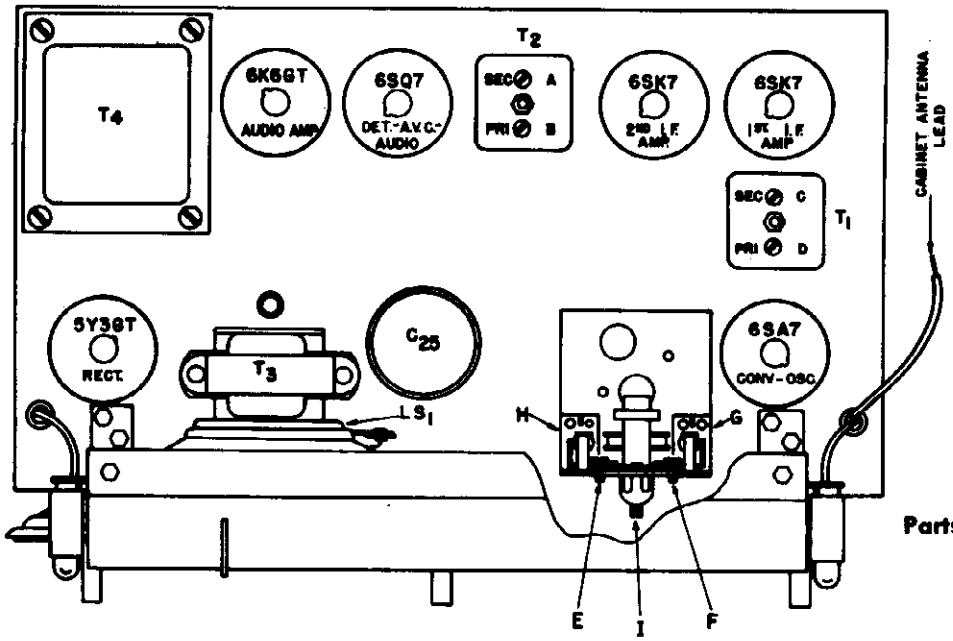

Parts Layout—*Top view.*

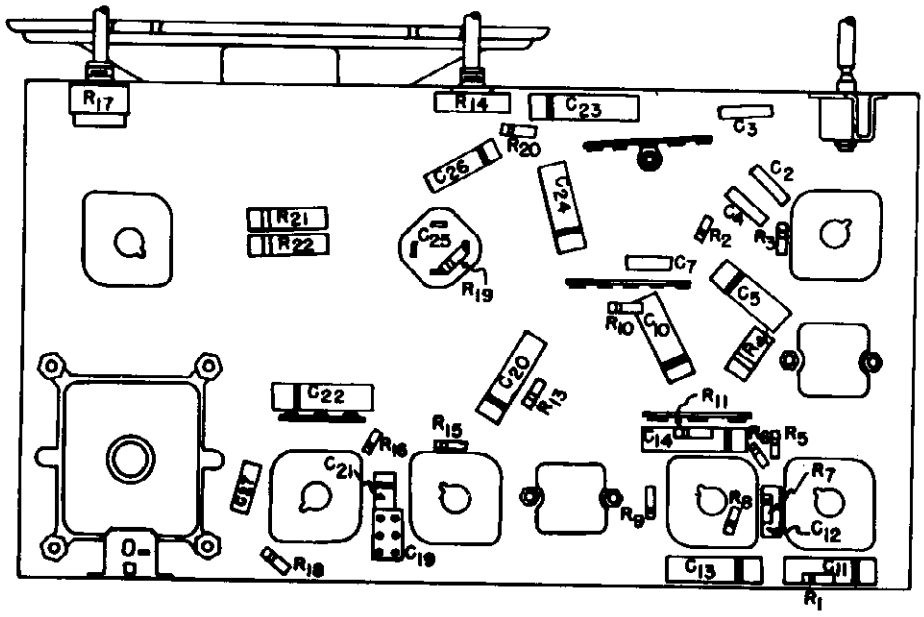

Parts Layout—*Bottom view.*

BOTTOM VIEW OF CHASSIS

ALL VOLTAGES ARE D.C. UNLESS OTHERWISE SPECIFIED.
D.C. VOLTAGES MEASURED WITH ELECTRONIC VOLTMETER BETWEEN SOCKET TERMINALS AND CHASSIS.
A.C. LINE VOLTAGE 117 VOLTS.

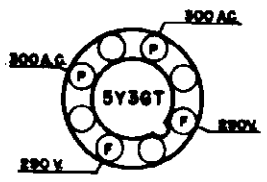

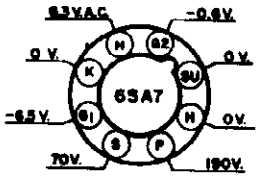

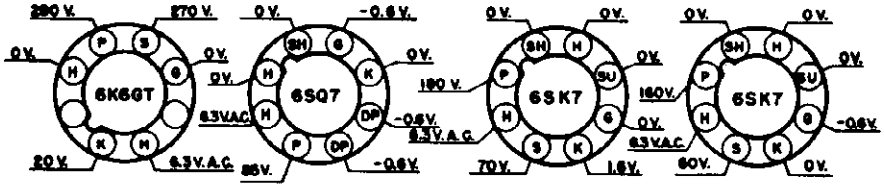

Tube Socket Voltages

MODEL R-1243

UNITED MOTORS SERVICE
DIV. OF GENERAL MOTORS CORP.

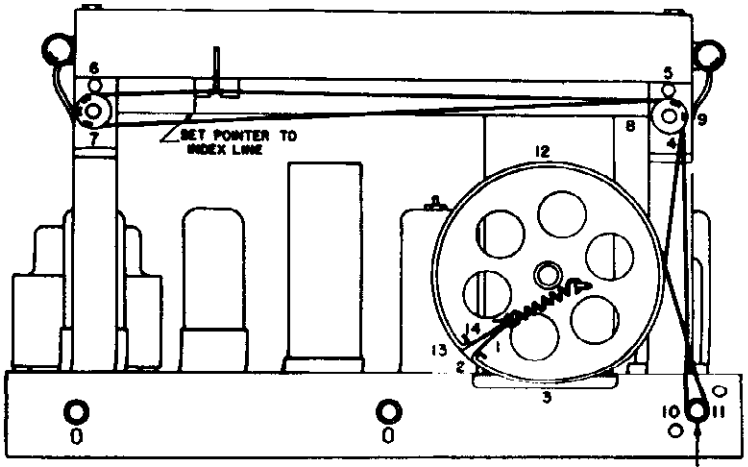

Dial Cord Layout

RESTRINGING DIAL CORD

To replace the dial drive cord, cut a 48" length of 18 lb. test dial cord, tie one end to the tension spring and follow the stringing sequence. A series of numbers are used to show the path of the cord. Stretch the tension spring slightly and tie the finished end of the dial cord securely as shown. To position the pointer, turn the tuning shaft to the left as far as it will go and line up the pointer with the index line stamped on the left hand end of the pointer rail.

SERVICE PARTS LIST

Illus. No.	Production Part No.	Service Part No.	Description
	ELECTRICAL PARTS		
	COILS AND TRANSFORMERS		
*L-1, L-2, L-3	50B225	1217451	Permeability Tuner Assembly
†L-1, L-2, L-3	50B225 / 22C197	1217509	Permeability Tuner Assembly with Calibrated Glass Dial
T-1	50B196-6	1217453	1st I.F. Transformer
T-2	50B211-1	1217454	2nd I.F. Transformer
T-3	55B104	1217504	Output Transformer
T-4	50C130-1	1217459	Power Transformer
	CONDENSERS		
C-2	CM20A102M	G102	.001 Mfd. 500 V. Mica
C-3	46AU203J	E203	.02 Mfd. 600 V. Tubular
C-4, 12, 19	CM20A101M	G101	.0001 Mfd. 500 V. Mica
C-5, 10, 11, 13, 14, 20, 21, 23, 24, 26	46AY103F	E103	.01 Mfd. 600 V. Tubular
C-7	CM20A681M	G681	.000680 Mfd. 500 V. Mica
C-22	46AY502F	E502	.005 Mfd. 600 V. Tubular
C-25	45B113	1217457	60-20-20 Mfd. Electrolytic
C-29	46AZ202J	E202	.002 Mfd. 600 V. Tubular
	RESISTORS		
R-1	RC20AE103M	A103	10,000 Ohms ½ Watt Insulated
R-2, 13, 16	RC20AE474M	A474	470,000 Ohms ½ Watt Insulated
R-3, 20	RC20AE223M	A223	22,000 Ohms ½ Watt Insulated
R-4	RC40AE223M	C223	22,000 Ohms 2 Watts Insulated
R-5, 9	RC20AE683M	A683	68,000 Ohms ½ Watt Insulated
R-6, 19	RC20AE472M	A472	4,700 Ohms ½ Watt Insulated
R-7	RC20AE104M	A104	100,000 Ohms ½ Watt Insulated
R-8	RC20AE221M	A221	220 Ohms ½ Watt Insulated
R-10	RC20AE105M	A105	1 Meg-ohm ½ Watt Insulated
R-11	RC20AE102M	A102	1,000 Ohms ½ Watt Insulated
R-15	RC20AE685M	A685	6.8 Meg-ohm ½ Watt Insulated
R-18	RC30AE681M	B681	680 Ohms, 1 Watt Insulated
R-21, 22	RC40AE682M	C682	6,800 Ohms 2 Watts Insulated
	TUBE COMPLEMENT		
V-1	90X6SA7	5222	6SA7
V-2, 3	90X6SK7	5229	6SK7
V-4	90X6SQ7	5231	6SQ7
V-5	90X6K6GT	5196	6K6GT
V-6	90X5Y3GT	5122	5Y3GT
	MISCELLANEOUS ELECTRICAL PARTS		
R-14	25B620	1217448	Control, Volume
R-17	25B639	1217446	Control, Tone and Switch
		44	Lamp, Dial Light—Mazda No. 44
LS-1	85C067	1217458	Speaker, 5" x 7" Elliptical
PL-1	87B1574	1217433	Power Cord and Plug
	MECHANICAL PARTS		
	CHASSIS PARTS		
		7236279	Socket, Tube
86A058		1217443	Socket, Dial Lamp
41X10203		1217456	Dial Support Assembly (right)
41X10204		1217505	Dial Support Assembly (left)
67B770		1217506	Rail, Pointer
74A205		1217439	Shaft, Drive
4A269		1217447	"C" Washer, Drive Shaft
28A042		1217441	Pulley, Tuner Drive
		1212233	Cord, Dial Drive (48" length)
75A012		1217323	Spring, Cord Tension
82A144		1217442	Pointer, Dial
63C317		1217507	Plate, Dial Background
	CABINET PARTS		
66D408		1217503	Cabinet, Wood
22C196		1217452	Dial, Glass (Calibrated for tuner 50B199)
22C197		1217449	Dial, Glass (Calibrated for tuner 50B225)
76A386		1217440	Fastener, Dial Glass
15B093-1		1217455	Knob, Tone, Tuning and Volume
7B064		1217508	Speaker Grill and Sound Board Assembly
32C420		1217444	Cabinet Back

*Use when replacing Tuners stamped 50B225.
†Use when replacing Tuners stamped 50B199.

©John F. Rider

UNITED MOTORS SERVICE
DIV. OF GENERAL MOTORS CORP.

MODELS R-1244, R-1245, R-1246

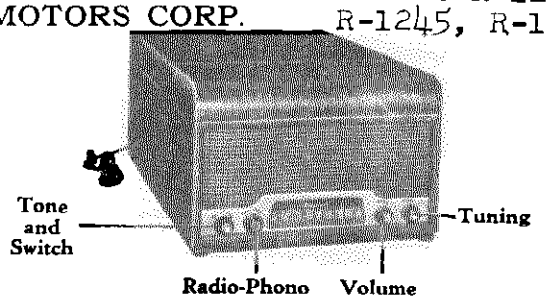

MODEL R-1244

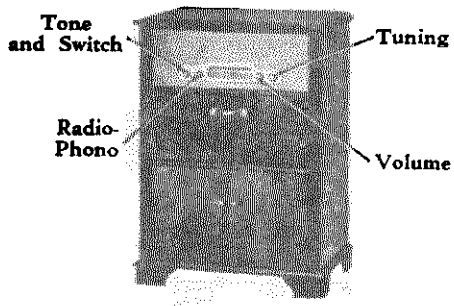

MODELS R-1245 and R-1246

GENERAL:

TUBES—Five, Plus Rectifier.

SPEAKER—5" x 7" Elliptical Permanent Magnet.

TUNING—Manual.

TUNING RANGE—550-1600 KC.

POWER SUPPLY—105/125 Volts, 60 Cycle A. C.

CABINETS:

R-1244—Walnut

R-1245—Walnut

R-1246—Mahogany

TUBE SOCKET VOLTAGE CHART

The tube socket voltages, as measured at the factory and under the conditions shown on the schematic diagram, are shown below. The blank spaces are provided so the service man may fill in actual voltage readings as measured with his own equipment. A normal operating radio should be used for these measurements.

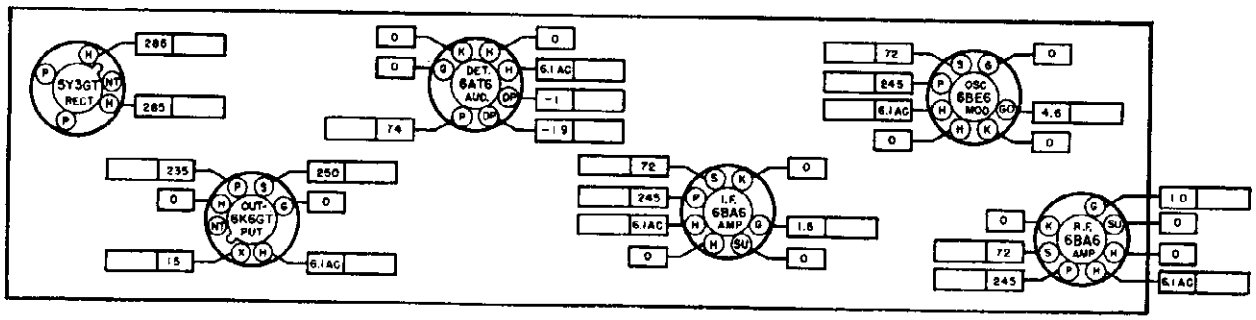

Volt Meter Resistance ..... Ohms Per Volt
Line Voltage ..... Volts
Voltage Tolerance ..... ±10%

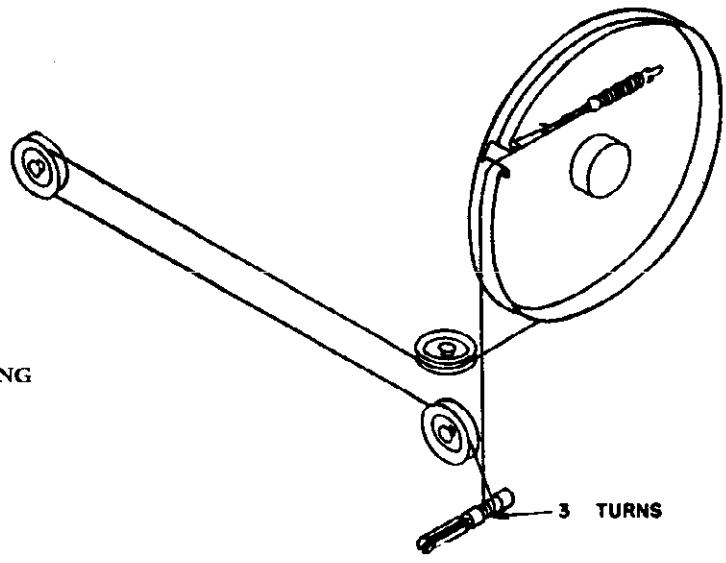

DIAL CORD DRAWING

MODEL R-1244

UNITED MOTORS SERVICE
DIV. OF GENERAL MOTORS CORP.

MODELS R-1245, R-1246

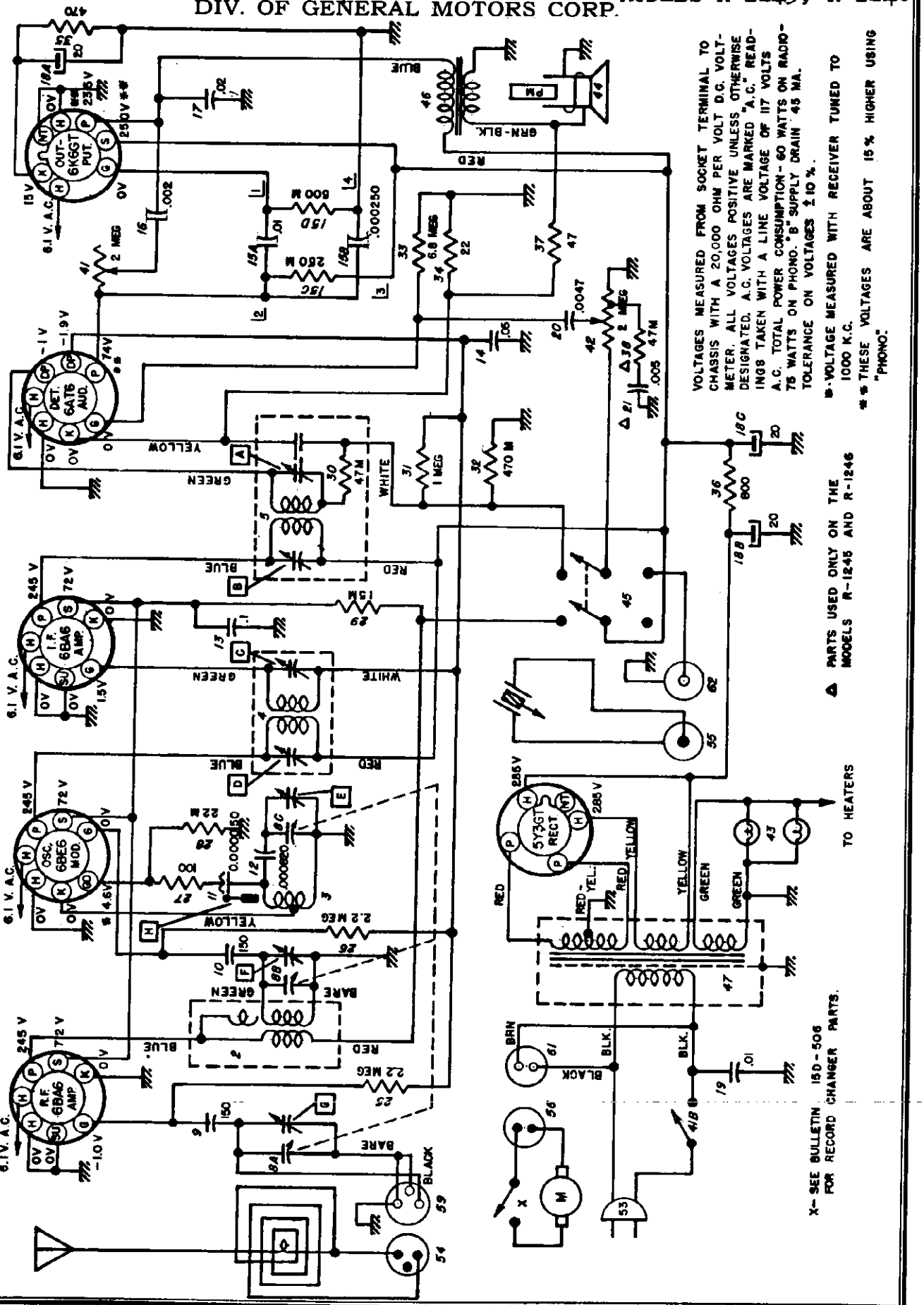

ALIGNMENT PROCEDURE:

Output Meter Connections ..... Across Voice Coil
Generator Return ..... To Receiver Chassis
Dummy Antenna ..... In Series With Generator
Volume Control Position ..... Maximum Volume
Tone Control Position ..... Treble
Generator Output ..... Minimum For Readable Indication

Steps	Series Condenser or Dummy Antenna	Connect Generator To	Signal Generator Frequency	Tune Receiver To	Adjust in Sequence for Max. Output
1	0.1 Mfd.	Stator Lug RF Section of Gang	262 KC	High Frequency Stop	A, B, C, D
2	0.000220 Mfd.	Stator Lug RF Section of Gang	1615 KC	High Frequency Stop	E
3	0.000220 Mfd.	External Antenna Connection	1400 KC	Signal Generator Signal	F, G
4	0.000220 Mfd.	External Antenna Connection	600 KC	Signal Generator Signal	*H
5	0.000220 Mfd.	External Antenna Connection	1615 KC	High Frequency Stop	E
6	0.000220 Mfd.	External Antenna Connection	1400 KC	Signal Generator Signal	F, G

*During this Adjustment rock-in the gang condenser

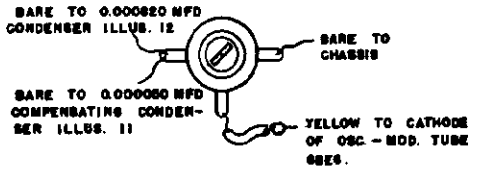

OSCILLATOR
COIL CONNECTIONS

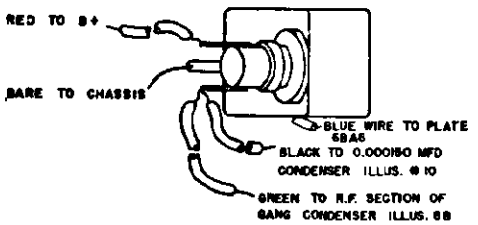

R. F. COIL CONNECTIONS

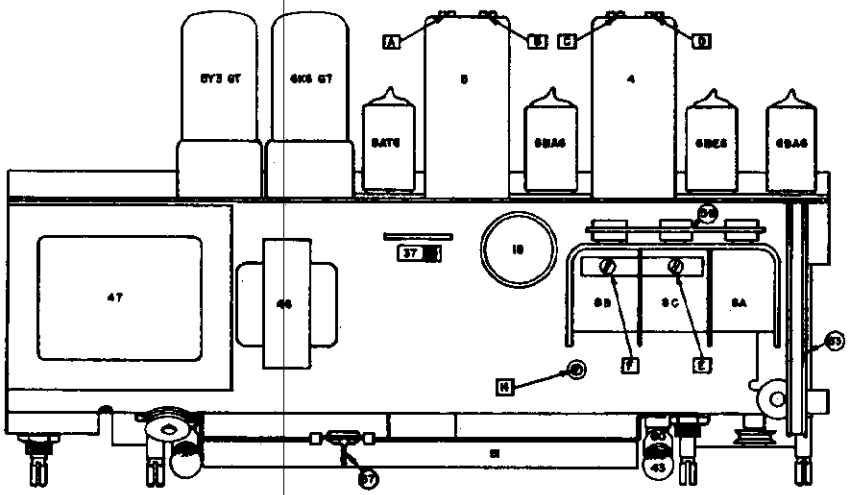

PARTS LAYOUT — TUBE VIEW

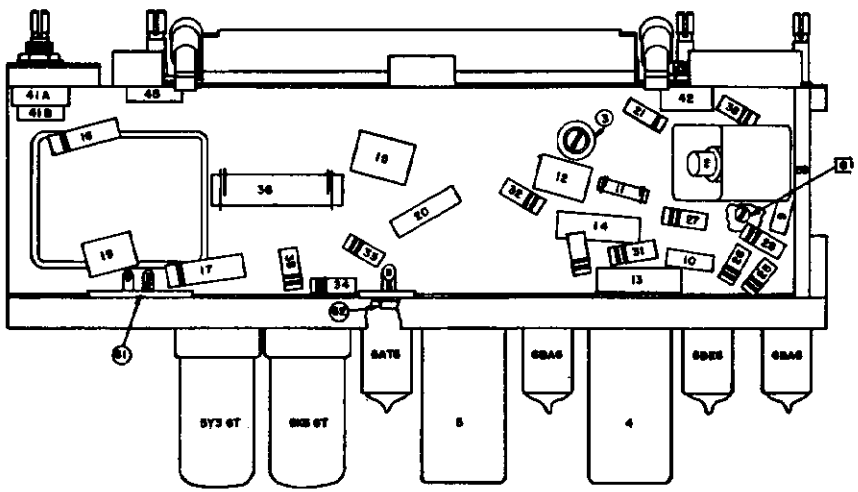

PARTS LAYOUT — CHASSIS VIEW

Illus. No.	Prod. Part No.	Service Part No.	Part Description
			ELECTRICAL PARTS
			Coils
1	1218390	1218390	Loop Assy. - Antenna
2	1218677	1218677	R.F.
3	1218679	1218679	Oscillator
4	1218086	1218676	1st I.F. Assy.
5	1218088	1218088	2nd I.F. Assy.
			CONDENSERS
8	1218095	1218678	Variable Condenser and Pulley
8A			Antenna Section
8B			R.F. Section
8C			Oscillator Section
9	1218121	G151	0.000150 Mfd. Ceramic
10	1218121	G151	0.000150 Mfd. Ceramic
11	7238511	7238511	0.000051 Mfd. Compensating
12	1217742	G821	0.000821 Mfd. Molded
13	7238788	E104	0.1 Mfd. 400 V. Tubular
14	7236842	E503	0.05 Mfd. 200 V. Tubular
15	1218204		Couplate
15A		E103	0.01 Mfd. 450 V.
15B		G271	0.000250 Mfd. 450 V.
15C		A274	250,000 Ohms 1/5 W.
15D		A474	500,000 Ohms 1/5 W.
16	7237836	E202	0.002 Mfd. 600 V. Tubular
17	1209307	H203	0.02 Mfd. 1000 V. Tubular
18	7240724	M908	Electrolytic
18A			20 Mfd. 25 V.
18B			20 Mfd. 400 V.
18C			20 Mfd. 400 V.
19	1217227	E103	0.01 Mfd. 600 V. Tubular
20	1217748	G472	0.004700 Mfd. Molded
21	1216558	E502	0.005 Mfd. (used only on R-1245 and R-1246)
			RESISTORS
15	1218204		Couplate
15A		E103	0.01 Mfd. 450 V.
15B		G271	0.000250 Mfd. 450 V.
15C		A274	250,000 Ohms 1/5 W.
15D		A474	500,000 Ohms 1/5 W.
25	1214563	A225	2.2 Megohms ½ W. Insulated
26	1214563	A225	2.2 Megohms ½ W. Insulated
27	1213217	A101	100 Ohms ½ W. Insulated
28	1214550	A223	22,000 Ohms ½ W. Insulated
29	7233653	C153	15,000 Ohms 2 W. Insulated
30	1214553	A473	47,000 Ohms ½ W. Insulated (Included in 2nd I.F. Assy.)
31	1213282	A105	1 Megohm ½ W. Insulated
32	1214559	A474	470,000 Ohms ½ W. Insulated
33	1215563	A685	6.8 Megohms ½ W. Insulated
34	1214537	A220	22 Ohms ½ W. Insulated
35	1216150	B471	470 Ohms 1 W. Insulated
36	1218241	1218241	800 Ohms 10 W. Insulated
37	1213489	A470	47 Ohms ½ W. Insulated
38	7240731	A473	47,000 Ohms ½ W. Insulated (used only on R-1245 and R-1246)

Illus. No.	Prod. Part No.	Service Part No.	Part Description
			MISCELLANEOUS ELECTRICAL
41	1218078	1218078	Control-Tone and Switch
41A			Tone Control
41B			Switch
42	1218536	1218536	Control-Volume
43	115273	51	Lamp-Dial
44	1218090	1218090	Speaker—5 x 7 Elliptical PM
45	1218062	1218062	Switch DPDT "Radio-Phono"
46	1218118	1218118	Transformer-Output
47	1217165	1217165	Transformer-Power
			MECHANICAL PARTS
51	1218076	1218076	Backplate-Pointer
52		6040	Cord—Pointer Drive
53	1216512	1216512	Cord—Power
54	1215418	1215418	Plug—Antenna Loop
55	1851850	1851850	Plug—Pick Up Arm
56	1217515	1217515	Plug—Phono Motor
57	1218065	1218065	Pointer
58	1218073	1218073	Shaft—Manual Tuning
59	1216962	1216962	Socket—Antenna Loop
60	1217839	1217839	Socket—Dial Light
	7236279	7236279	Socket—Octal Tube
61	1216925	1216925	Socket—Phono Motor
62	1216747	1216747	Socket—Phono Pick Up Arm
	1218071	1218071	Socket—Seven Pin Miniature Tube
63	7242189	7242189	Spring—Pointer Cord Tension
			CABINET PARTS
	1218675	1218675	Cabinet Assy. (R-1244)
	1218865	1218865	Cabinet Assy. (R-1245)
	1218871	1218871	Cabinet Assy. (R-1246)
	1218131	1218131	Dial
	1218085	1218085	Knob—Volume or Tuning
	1218084	1218084	Knob—"Radio-Phono" or Tone
	1218873	1218873	Handle—Record Player Drawer (R-1245 & R-1246)
	1218874	1218874	Knob—Cabinet Door (R-1245 & R-1246)
	1218875	1218875	Track—Record Player Drawer (R-1245 & R-1246)
	1218876	1218876	Tee Nut (R-1245 & R-1246)
	1218877	1218877	Tee Bolt (R-1245 & R-1246)
			TUBES
	1217690	5252	6BA6
	1217691	5253	6BE6
	1218105	5261	6AT6
	1213847	5196	6K6GT
	1216134	5123	5Y3GT

UNITED MOTORS SERVICE
DIV. OF GENERAL MOTORS CORP.

MODEL R-1410

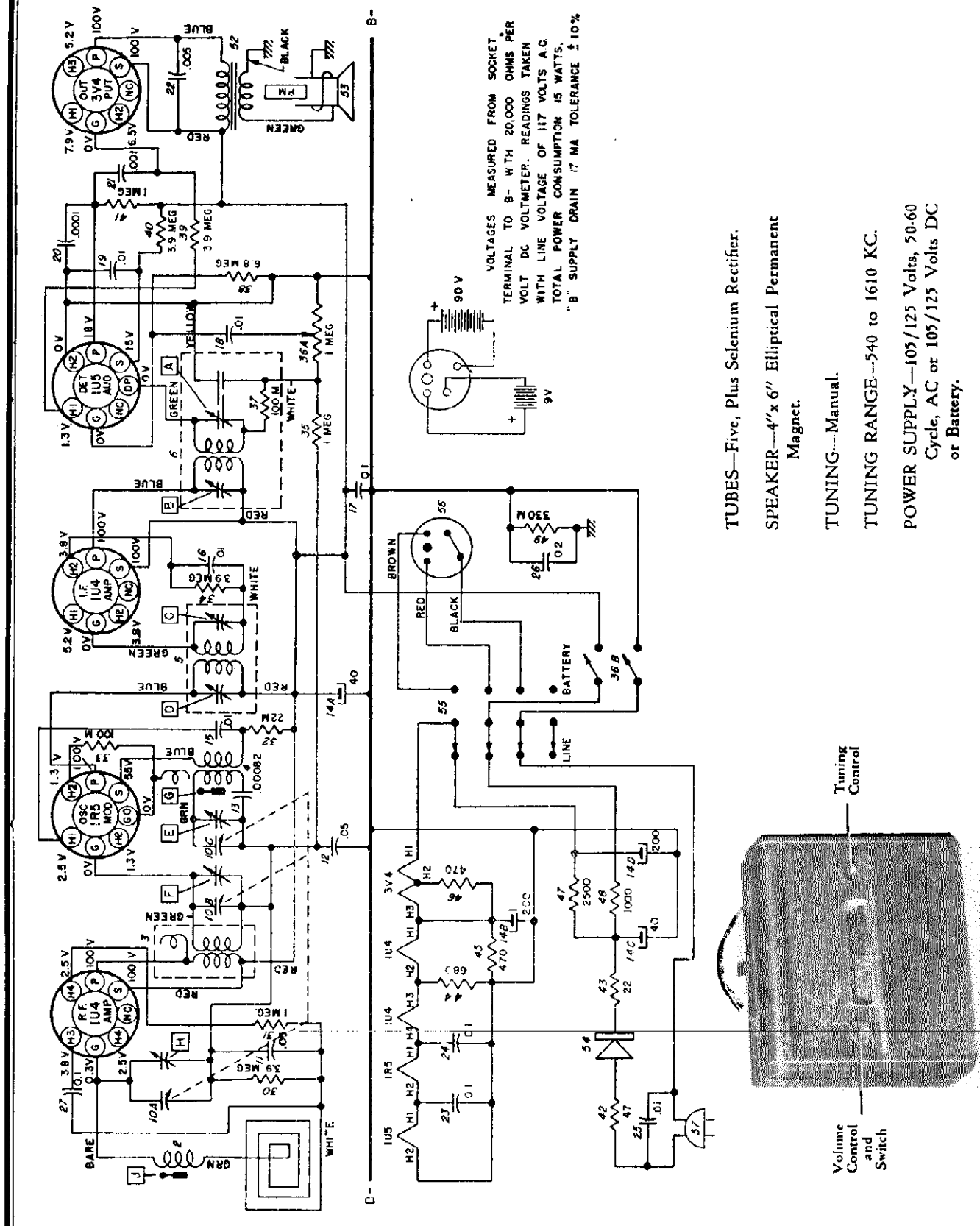

TUBES—Five, Plus Selenium Rectifier.

SPEAKER—4″ x 6″ Elliptical Permanent Magnet.

TUNING—Manual.

TUNING RANGE—540 to 1610 KC.

POWER SUPPLY—105/125 Volts, 50-60 Cycle, AC or 105/125 Volts DC or Battery.

MODEL R-1410

UNITED MOTORS SERVICE
DIV. OF GENERAL MOTORS CORP.

ALIGNMENT PROCEDURE:

Output Meter Connections ..... Across Voice Coil

Generator Return ..... To Receiver Chassis

Dummy Antenna ..... In Series With Generator

Volume Control Position ..... Maximum Volume

Generator Output ..... Minimum for Readable Indication

(For best results align receiver in cabinet with battery in place)

Steps	Series Condenser or Dummy Antenna	Connect Generator To	Signal Generator Frequency	Tune Receiver To	Adjust in Sequence for Max. Output
1	.000220 Mfd	Stator Lug RF* Section of Gang	262 KC	High Frequency Stop	A, B, C, D
2	.000220 Mfd	Stator Lug RF Section of Gang	1615 KC	High Frequency Stop	E
3	.000220 Mfd	Stator Lug of RF Section of Gang	1400 KC	Signal Generator Signal	F
4	.000220 Mfd	Stator Lug of RF Section of Gang	600 KC	Signal Generator Signal	G**
5	None	Test Loop***	1400 KC	Signal Generator Signal	H
6	None	Test Loop	600 KC	Signal Generator Signal	J

*With loop antenna terminal lugs shorted or loop connected for Steps 1, 2, 3, and 4.

**During this adjustment rock-in gang condenser

***The signal generator may be coupled to the receiver by placing a loop electrically across the output of the signal generator and physically near the receiver loop. This loop may be a loop from another radio, a home made loop of 10 or 15 turns, or other similar devices.

TUBE SOCKET VOLTAGE CHART

The tube socket voltages, as measured at the factory and under the conditions shown on the schematic diagram, are shown below. The blank spaces are provided so the service man may fill in actual voltage readings as measured with his own equipment. A normal operating radio should be used for these measurements.

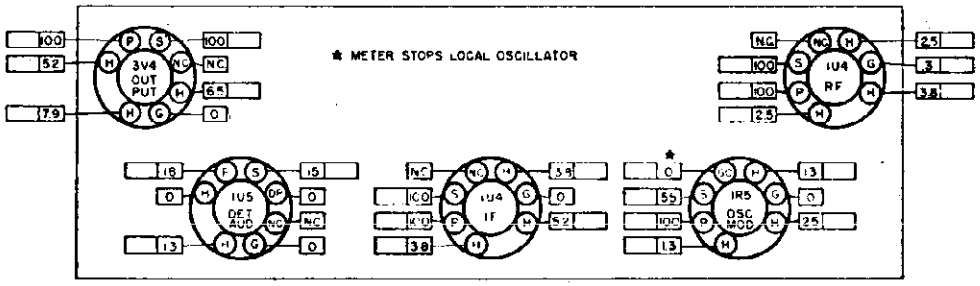

Volt Meter Resistance ..... Ohms Per Volt

Line Voltage ..... Volts

Voltage Tolerance ..... ±10%

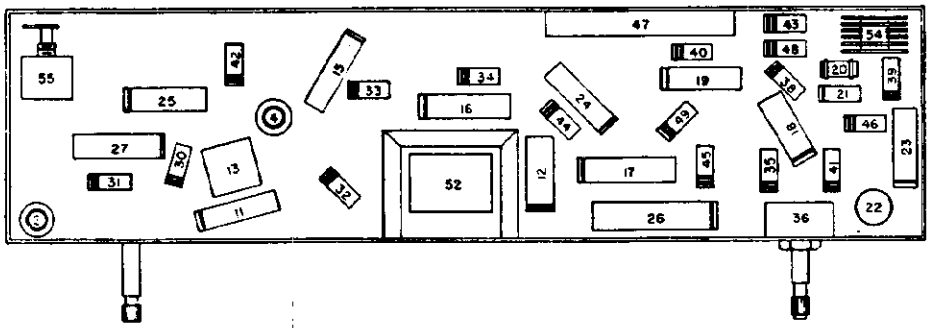

PARTS LAYOUT — CHASSIS VIEW

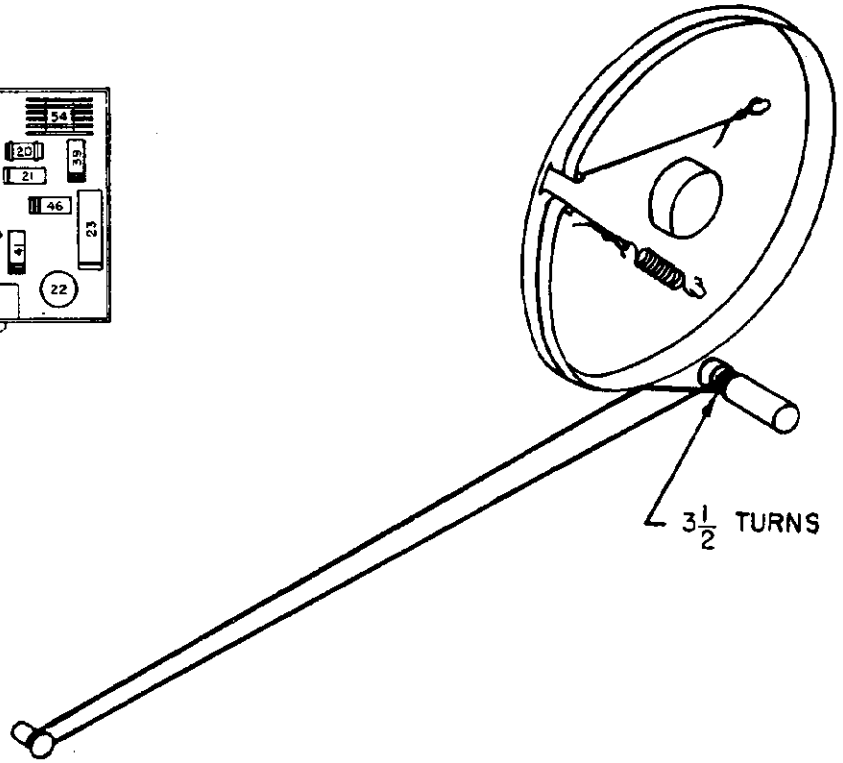

DIAL CORD DRAWING

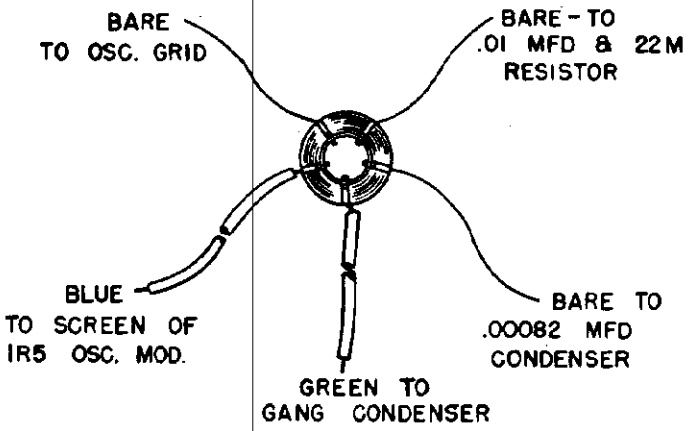

OSCILLATOR
COIL CONNECTIONS

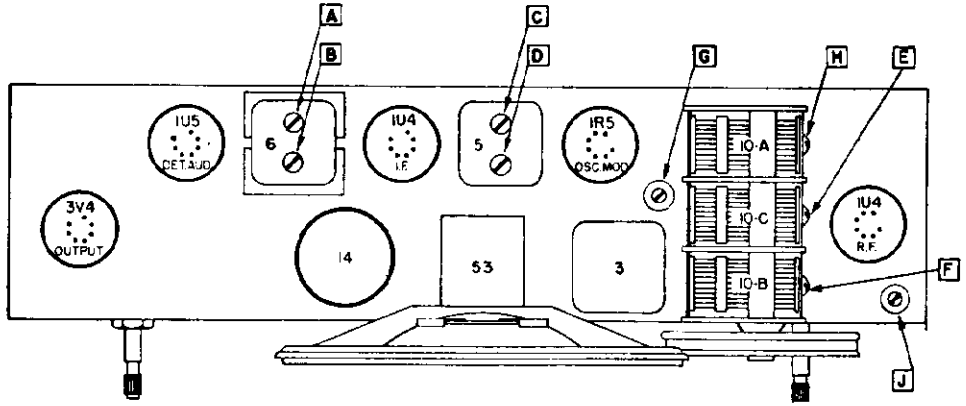

PARTS LAYOUT — TUBE VIEW

MODEL R-1410

UNITED MOTORS SERVICE
DIV. OF GENERAL MOTORS CORP.

Illus. No	Production Part No.	Service Part No.	Description
			ELECTRICAL PARTS
			Coils
1			Loop Antenna (available only with cabinet assy.).
2	1219147	1219147	Loop Compensating Coil
3	1218573	1218573	R. F.
4	1218576	1218576	Oscillator
5	1218705	1218705	1st I. F.
6	1218707	1218707	2nd I. F.
			Condensers
10	1218578	1218578	Variable Condenser and Pulley
10A			Antenna Section
10B			R.F. Section
10C			Oscillator Section
11	7236842	E 503	.05 mfd 200 V. Tubular
12	7236842	E 503	.05 mfd 200 V. Tubular
13	1218142	G 821	.00082 mfd Mica Molded
14	1218721	1218721	Electrolytic
14A			40 mfd 150 V.
14B			200 mfd 25 V.
14C			40 mfd 150 V.
14D			200 mfd 25 V.
15	7238790	E 103	.01 mfd 200 V. Tubular
16	7238790	E 103	.01 mfd 200 V. Tubular
17	7238789	E 104	.1 mfd 200 V. Tubular
18	1216513	E 103	.01 mfd 600 V. Tubular
19	7238790	E 103	.01 mfd 200 V. Tubular
20	1217925	G 101	.0001 mfd Ceramic
21	1218141	G 102	.001 mfd Ceramic
22	1218298	G 472	.005 mfd Ceramic
23	7238789	E 104	.1 mfd 200 V. Tubular
24	7238789	E 104	.1 mfd 200 V. Tubular
25	1216513	E 103	.01 mfd 600 V. Tubular
26	7238787	E 204	.2 mfd 400 V. Tubular
27	7238789	E 104	.1 mfd 200 V. Tubular
			Resistors
30	1216947	A 395	3.9 Megohms ½ W. Insulated
31	7238873	A 105	1 Megohm ½ W. Insulated
32	1211192	A 223	22,000 Ohms ½ W. Insulated
33	1211118	A 104	100,000 Ohms ½ W. Insulated
34	1216947	A 395	3.9 Megohms ½ W. Insulated
35	7238873	A 105	1 Megohm ½ W. Insulated
37	1211118	A 104	100,000 Ohms ½ W. Insulated (Included in 2nd I. F. Coil Assy.)
38	7241937	A 685	6.8 Megohms ½ W. Insulated
39	1216947	A 395	3.9 Megohms ½ W. Insulated
40	1216947	A 395	3.9 Megohms ½ W. Insulated
41	7238873	A 105	1 Megohm ½ W. Insulated
42	1215570	B 470	47 Ohms 1 W. Insulated
43	1215566	B 220	22 Ohms 1 W. Insulated
44	1214543	A 681	680 Ohms ½ W. Insulated
45	1213485	A 471	470 Ohms ½ W. Insulated
46	1213486	A 471	470 Ohms ½ W. Insulated
47	1218570	1218570	2500 Ohms 10 W. Wire Wound
48	1211037	B 102	1,000 Ohms 1 W. Insulated
49	7240732	A 334	330,000 Ohms ½ W. Insulated
			Miscellaneous Electrical Parts
36	1218575	1218575	Volume Control and Switch
52	1218709	1218709	Transformer-Output
53	1218586	1218586	Speaker
54	1218683	1218683	Selenium Rectifier
55	1218571	1218571	Switch and Lever (Battery or Line)
			MECHANICAL PARTS
			Chassis
	1218071	1218071	Socket—7 Pin Miniature Tube
	1218565	1218565	Socket—Shock Proof—Miniature
	1218564	1218564	Drive Shaft—Tuning
	7245333	7245333	"C" Washer—Drive Shaft
		6040	Drive Cord
	7242189	7242189	Spring—Pointer Cord Tension
	1218574	1218574	Dial Pointer
56	1219148	1219148	Battery Plug and Shell
57	1216512	1216512	Power Cord

©John F. Rider

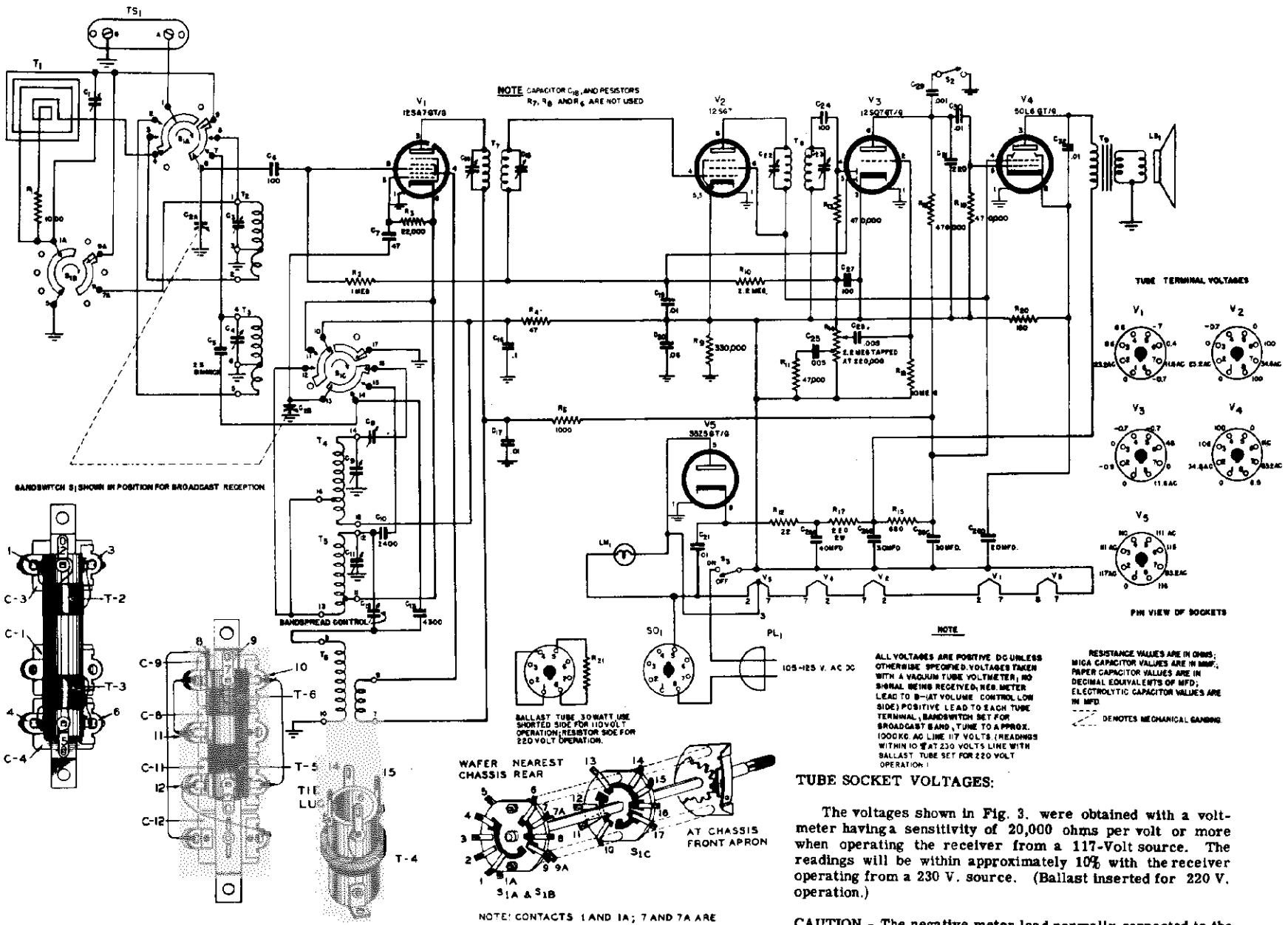

TUBE SOCKET VOLTAGES:

The voltages shown in Fig. 3. were obtained with a voltmeter having a sensitivity of 20,000 ohms per volt or more when operating the receiver from a 117-Volt source. The readings will be within approximately 10% with the receiver operating from a 230 V. source. (Ballast inserted for 220 V. operation.)

CAUTION - The negative meter lead normally connected to the chassis must be connected to the low side of the volume control (electrical ground) in this receiver as in all AC/DC receivers.

MODEL 508

UNITED MOTORS SERVICE
DIV. OF GENERAL MOTORS CORP.

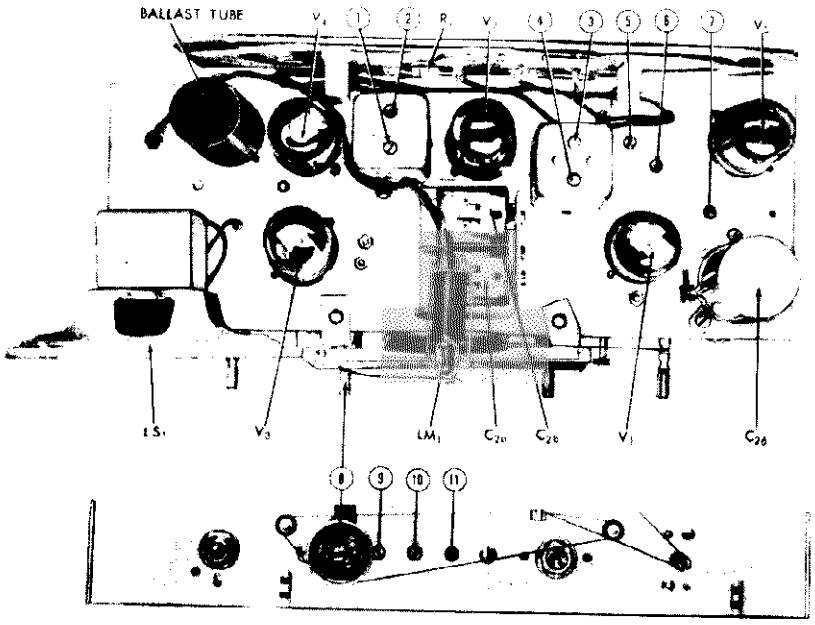

Alignment Points.

RESTRINGING DIAL CORD:

To restring the main tuning dial cord, cut a 25-inch length of 18 lb test dial cord and tie one end to the tension spring of the main tuning condenser drive pulley at position "A" on the diagram. Follow the letters "A" through "S", winding the cord on the pulley and drive shaft. At position "S", stretch the tension spring and tie the cord securely. With the tuning condenser at maximum capacity, set the pointer as shown in the diagram.

To restring the bandspread tuning dial cord, cut a 30-inch length of 18 lb test dial cord and follow the procedure outlined above, except follow the sequence starting at position "1" and ending at "14". With the pulley in the position shown (maximum clockwise), attach the pointer and index it at zero on the bandspread dial scale. Next loosen the pulley set screws and adjust the pulley shaft so that the signals on the 6.9 to 22 megacycle range follow the dial calibration on the general coverage dial. Reset the set screws with the bandspread pointer set at zero.

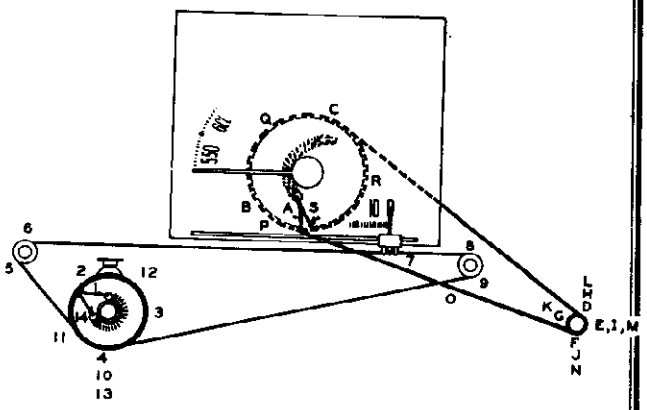

Dial Stringing Detail.

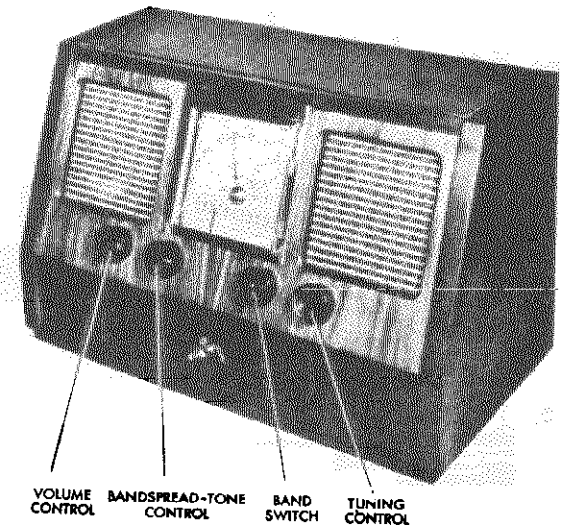

POWER SUPPLY:

CAUTION: This radio must be operated from a 105-125 V. or 210-250 V. 60 cycle AC supply or DC supply only. The ballast tube must be correctly inserted in its socket for the line voltage used. When operating from a 210-250 V. supply, the ballast tube must be correctly inserted in its socket for this line voltage ("230 V") to avoid damaging the receiver. If you are in doubt as to the voltage and frequency (AC) rating of the power supplied to your home, consult the local power company representative before connecting the radio to the wall outlet.

BAND SWITCH CONTROL:

The position of the band switch control determines the range of frequencies tuned by the receiver. In position 1 the receiver tunes the 550-1600 KC range. Note that a zero must be added to the dial reading to obtain the frequency of reception in kilocycles. In position 2 and 3 the receiver tunes the ranges 2.2-7.0 MC and 7-22 MC respectively. The frequency of reception for these bands is shown directly in megacycles on the dial scale.

UNITED MOTORS SERVICE
DIV. OF GENERAL MOTORS CORP.

ALIGNMENT:

Output meter connections..... Across speaker voice coil (3 ohms)
Generator ground..... To "G" terminal on ant. terminal strip.
Generator output..... See chart.
Volume control..... Maximum volume.
Bandspread tuning..... At zero.

CAUTION - Check the line ballast. It must be correctly inserted in its socket to correspond to the line voltage of the power source.

ALIGNMENT CHART:

Step	Dummy Antenna	Signal Generator Coupling	Signal Generator Frequency	Band Switch Pos.	Radio Dial Setting	Adjust	Remarks
1.	.01 mfd. cap.	To stator plates of tuning cond; mixer section	455 kc	1	1500 kc	1,2,3, and 4.	Adjust for max. output
2.	Std RMA dummy	To terminals "A" and "G" of antenna terminal strip	1500 kc	1	1500 kc	*11,6	Adjust for max. output
			600 kc	1	600 kc	*10	
3.	Std RMA dummy	See step 2.	22 mc	3	22 mc	*8	Set oscillator adjustment (8) with the bandspread indicator drive pulley set screw loosened and the pointer set at zero. After making the adjustment, tighten the set screw.
			20 mc	3	20 mc	5	Adjust for max. output.
4.	Std RMA dummy	See step 2.	6 mc	2	6 mc	*9,7	Adjust for max. output.

*Note - Calibration adjustment.
Note - Step 3 must be completed before making the adjustments shown in step 4.

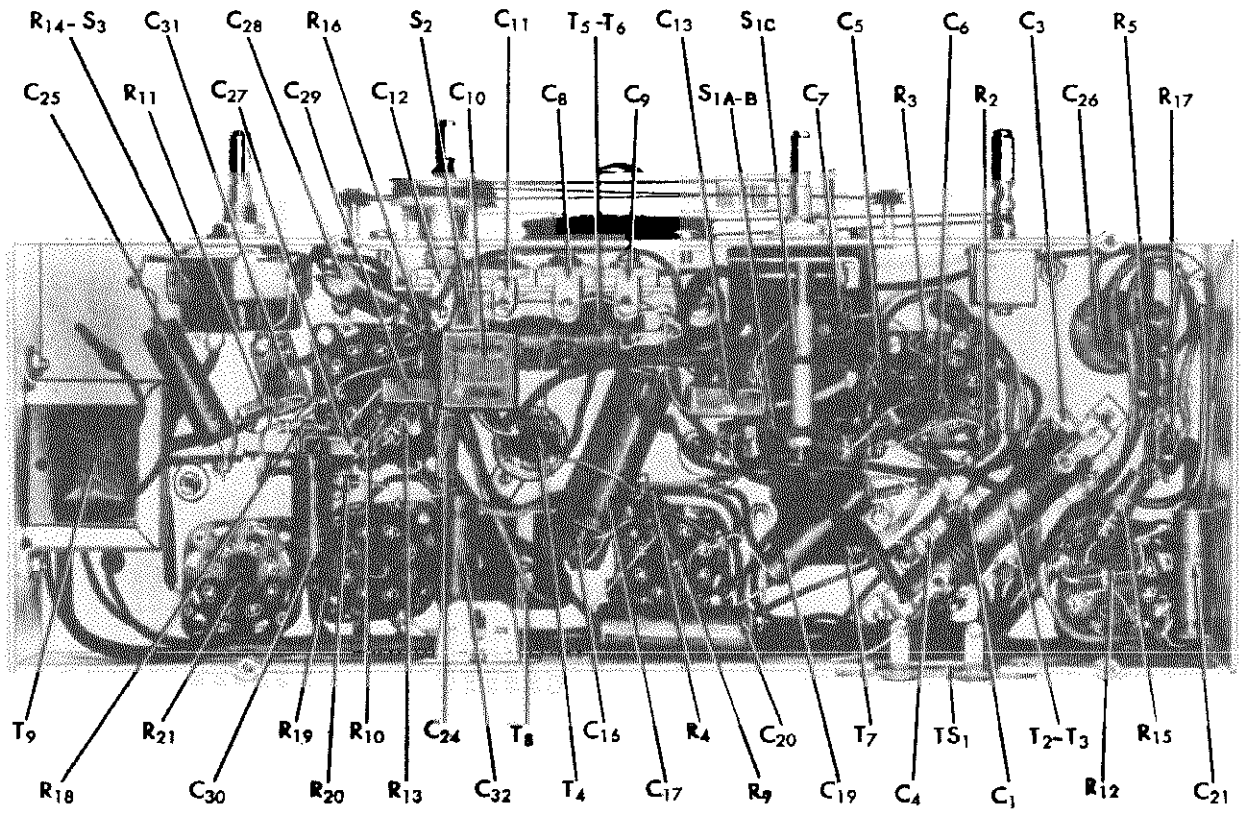

Parts Layout.

©John F. Rider

SERVICE PARTS LIST

Illustration No.	Production Part No.	Service Part No.	Description
			ELECTRICAL PARTS
			COILS AND TRANSFORMERS
T-1	57C104		Antenna loop
T-2,3,	51B814		Transformer, mixer
T-4	51A811		Transformer, oscillator BC
T-5,6	51B815		Transformer, oscillator SW
T-7	50B196-1		Transformer, input IF stage
T-8	50B196-2		Transformer, diode IF stage
T-9	55B080-1		Transformer, output
			CONDENSERS
C-1,3,4,	44A162		Antenna trimmer
C-2	48B165		Main tuning condenser
C-5			2.5 mmf. gimmick.
C-6,24,27	CM20A101M	G101	100 mmf. 500 V., mica
C-7	CM20A470M	G470	47 mmf. 500 V., mica
C-8,9,11,12	44B161		Oscillator trimmer
C-10	CM30A242M	G242	2400 mmf. 500 V., mica
C-13	CM35A432K	G432	4300 mmf. 500 V., mica
C-16	46AX104J	E104	.1 mfd. 600 V., tubular
C-17,19,21,30,32	46AX103F	E103	.01 mfd. 600 V., tubular
C-20	46AY503J	E503	.05 mfd. 600 V., tubular
C-25,28	46AZ502J	E502	.005 mfd. 600 V., tubular
C-26	45B095-1		40-30-30-20 mfd. electrolytic
C-29	46AZ102H	E102	.001 mfd. 600 V., tubular
C-31	CM20A101M	G221	220 mmf. 500 V., mica
			RESISTORS
R-1,5	RC20AE102M	A102	1000 ohms $\frac{1}{2}$ watt insulated
R-2	RC20AE105M	A105	1 megohm $\frac{1}{2}$ watt insulated
R-3	RC20AE223M	A223	22,000 ohms $\frac{1}{2}$ watt insulated
R-4	RC20AE470M	A470	47 ohms $\frac{1}{2}$ watt insulated
R-9	RC20AE334M	A334	330,000 ohms $\frac{1}{2}$ watt insulated
R-10	RC20AE225M	A225	2.2 megohms $\frac{1}{2}$ watt insulated
R-11	RC20AE473M	A473	47,000 ohms $\frac{1}{2}$ watt insulated
R-12	RC30AE220M	B220	22 ohms 1 watt insulated
R-13,18,19	RC20AE474M	A474	470,000 ohms $\frac{1}{2}$ watt insulated
R-15	RC30AE681M	B681	680 ohms 1 watt insulated
R-16	RC20AE106M	A106	10 megohms $\frac{1}{2}$ watt insulated
R-17	RC40AE221K	C221	220 ohms 2 watt insulated
R-20	RC20AE151M	A151	150 ohms $\frac{1}{2}$ watt insulated
R-21	24B858		Ballast resistor, 460 ohms 30 watts

Illustration No.	Production Part No.	Service Part No.	Description
			TUBE COMPLEMENT
V-1	90X12SA7GT	5342	12SA7GT
V-2	90X12SG7	5345	12SG7
V-3	90X12SQ7GT	5351	12SQ7GT
V-4	90X50L6GT	5451	50L6GT
V-5	90X35Z5GT	5408	35Z5GT
			MISCELLANEOUS ELECTRICAL PARTS
S-1	60B250		Switch, band
S-2	60A246		Switch, tone control
R-14	25A561		Volume control and switch
LS-1	85B038		Speaker
TS-1	88A569		Antenna Terminal strip
LM-1	39A004		Lamp, 6-8V., Mazda #47
PL-1	87A078		Power cord and plug
			MECHANICAL PARTS
			CHASSIS PARTS
	38A001		Dial cord
	75A012		Spring, large pulley.
	75A070		Spring, small pulley.
	83B335		Dial Scale (with calibration)
	82A106		Pointer, main tuning
	82A107		Pointer, band spread tuning
	86A036-1		Socket, dial light
	6A256		Socket, tube (octal)
	6A255		Socket, tube (octal, two keyways 180 degrees apart)
	76A299	1217671	Line cord lock
			CABINET PARTS
	66F451		Cabinet
	32D439		Cabinet back
	22B181		Dial crystal
	7C027		Escutcheon
	15B067-4		Knob

UNITED MOTORS SERVICE
DIV. OF GENERAL MOTORS CORP.

MODEL 608

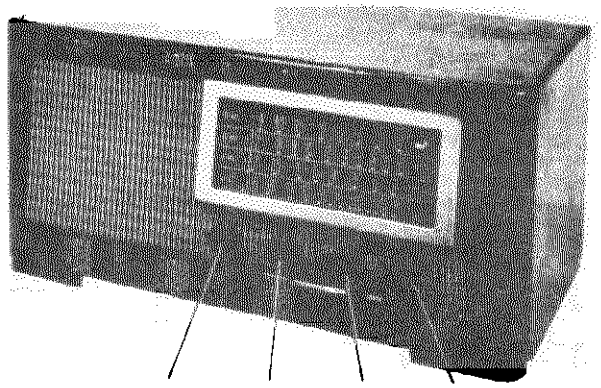

POWER SUPPLY:

This radio operates from a 105-125 volt or 210-250 volt, 50/60 cycle AC supply only. If you are in doubt as to the voltage and frequency rating of the power available at the outlets, consult the local power company. CAUTION: BEFORE PLUGGING THE POWER CORD INTO THE WALL OUTLET, CHECK TO SEE THAT THE LINE VOLTAGE SWITCH (SW2) IS SET FOR THE LINE VOLTAGE AVAILABLE. Refer to Fig. 5 for the location of this switch. The power receptacle provided for a record player supplies 110 V. AC regardless of the setting of the 110/220 V. switch on the receiver or the source to which the receiver has been connected.

ANTENNA:

A loop antenna has been installed inside the cabinet of the receiver and for reception of local and nearby stations no other additional antenna is usually required.

Metal structures concealed in walls, radiators, or other large metal objects near the receiver prevent best possible pickup of radio signals. Locate your receiver as far as possible from such objects.

For best results, especially at remote points from broadcast stations, an outside antenna about 25 to 100 feet long, including lead-in, may be necessary. The lead-in wire is connected to the terminal marked "A" located on the rear apron of the chassis. To avoid excessive electrical noise, erect the antenna so that its length runs at right angles to nearby power lines, streetcar lines, and other similar types of electrical apparatus. For some installations it will be found desirable to connect a ground wire between the "G" terminal and a suitable ground such as a water pipe or radiator.

LOCATION: Do not place the radio in a warm location, such as on a radiator or over a hot air register. When placing the radio against a wall, leave sufficient clearance for the circulation of air.

BAND SELECTOR - The band selector knob has five positions which perform the following functions in the order of its rotation from left to right.

Position 1 - Phono - When a record player is connected to the power and pick-up receptacle on the rear apron of the receiver, the receiver will operate as a phonograph. The volume and tone controls function as they do for radio reception.

Position 2 - BROADCAST Band - The receiver will tune the standard broadcast band in this position. The receiver frequency is read from the dial scale marked BROADCAST.

Positions 3, 4, 5 - SHORTWAVE Bands - The receiver tunes the shortwave ranges (A-2.2 to 7 mc), (B-7 to 22 mc), and (C-9 to 12 mc) on these last three positions and dial scales SHORTWAVE A,B, and C respectively are used to indicate the receiver frequency directly in megacycles.

CONDITIONS AFFECTING OPERATION

Though your radio may be functioning perfectly, there are circumstances under which prefect radio reception is not possible. These are not always subject to control by any presently known means. In general, the effect on reception is usually greatest when the radio is tuned to a weak station.

DAY AND NIGHT RECEPTION:

You will notice that you are able to receive several more stations during the night than during the day. This is a phenomenon due to the sun's effect on the ionosphere. It is not a peculiairty of your receiver.

FADING:

Fading will be encountered only on distant stations. It will be recognized by a gradual diminishing of volume, sometimes to a point where the signal is no longer heard, followed by a gradual return to normal volume. This happens without any change of the controls of the radio. It is often accompanied by distortion or "garbling" of the signal. By means of the automatic volume control in your receiver this effect is reduced considerably. In severe cases it will be necessary to tune to some other station.

STATIC:

Static, like fading, is not attributable to a defective receiver. It is caused by electrical disturbances in the atmosphere (lightning flashes will be heard as severe static) and the more sensitive the receiver the more static will be heard. It us usually most prevalent in the summer and during storm periods.

STATION INTERFERENCE:

Because of the limited number of channels to which broadcasting stations can be assigned it has been necessary to assign more than one station to a channel. This results in interference between the stations particularly if the desired station is not powerful or if it tends to fade. The interference will take the form of whistles or growls and in some cases the interfering station will actually be louder than the desired station. There is no remedy for this other than to tune to a different station at another point on the dial.

LOCAL INTERFERENCE:

Interference caused by electrical apparatus is known as local or "man made" static. Though somewhat similar to static it can usually be distinguished by its regularity or by some peculiar tone. It is caused by arcing or leaking of current in industrial equipment, appliances, high tension power lines, automobile ignition systems, electric razors, etc. It is usually much more prevalent in cities or industrial areas although rural power lines are a common source.

Local interference can be controlled to some exfent by proper filtering of appliances and equipment and to this end present day manufacturers of such equipment are contributing a great deal in improved designs. Power companies are also helpful and cooperative in seeking out and eliminating interference where their equipment is at fault.

©John F. Rider

MODEL 608

UNITED MOTORS SERVICE
DIV. OF GENERAL MOTORS CORP.

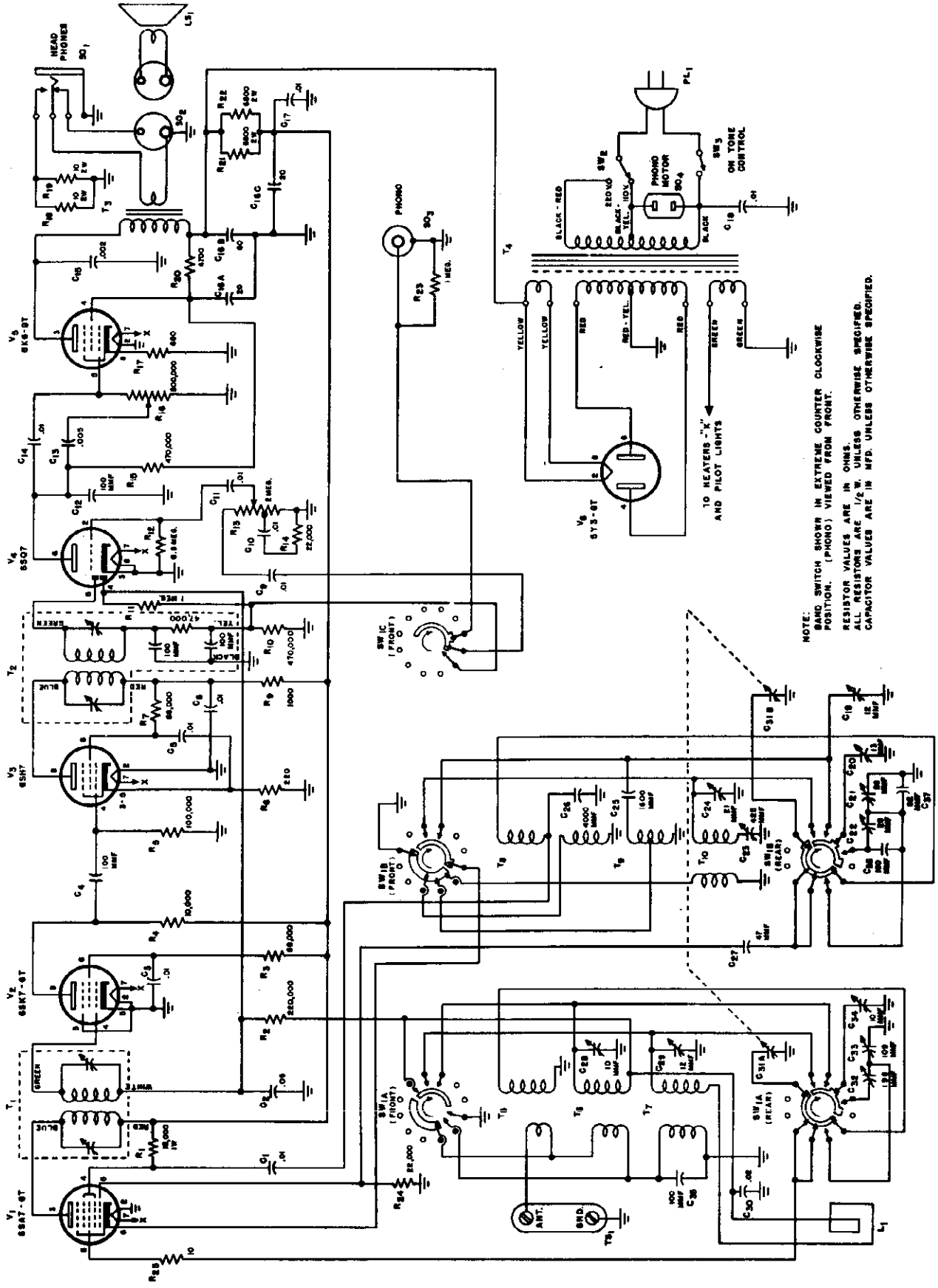

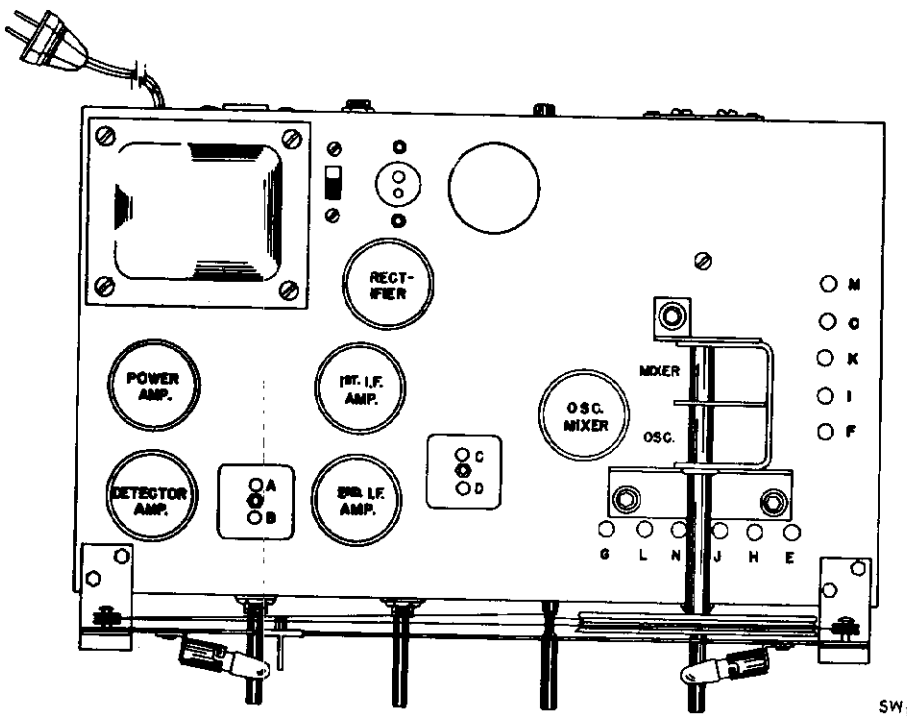

Alignment Points.

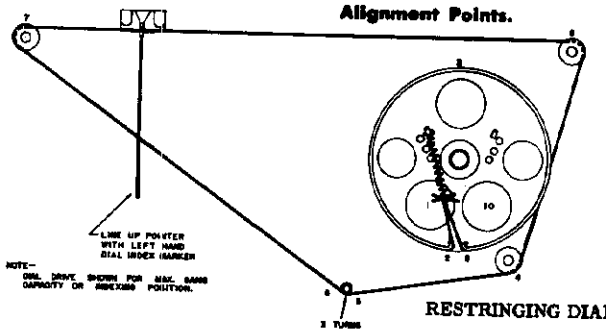

RESTRINGING DIAL CORD:

Restring the dial drive with 30 lb. test dial cord. Tie one end to the tension spring and follow the sequence outlined in Fig. 4. Stretch the tension spring and tie the end of the cord securely to the spring as shown. Set the tuning condenser at maximum capacity (closed), attach the pointer to the string and line it up with the left hand index mark on the dial scale.

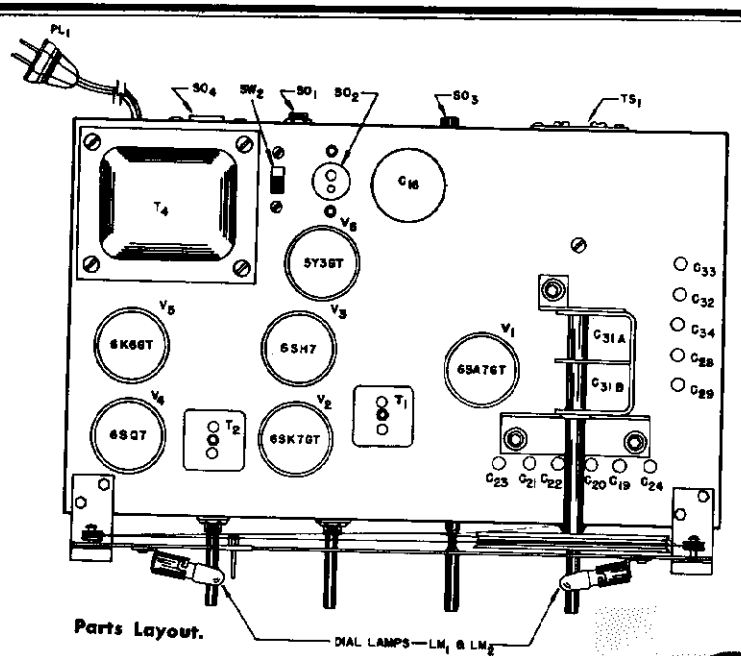

Parts Layout.

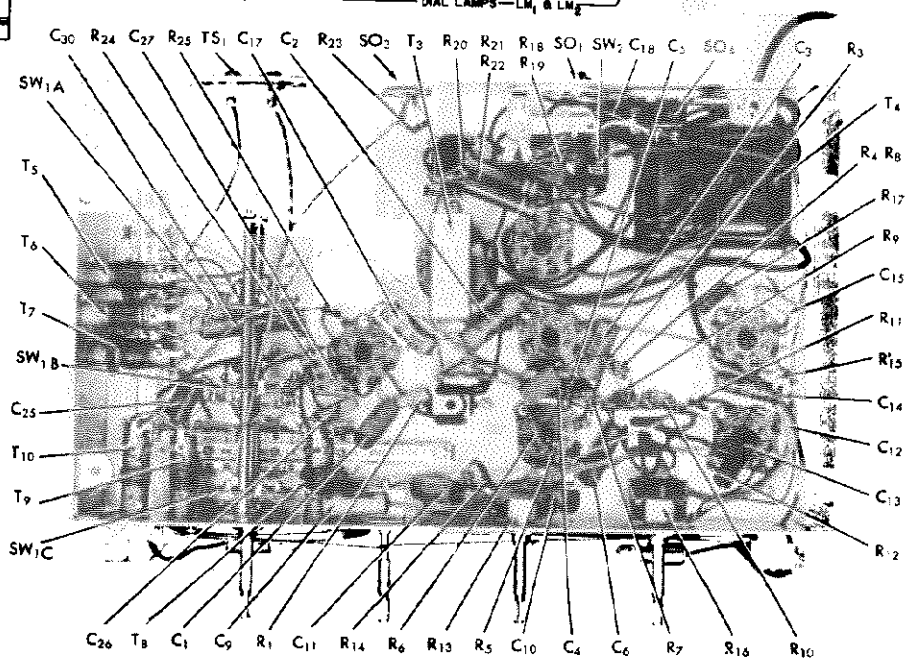

Parts Layout.

MODEL 608

UNITED MOTORS SERVICE
DIV. OF GENERAL MOTORS CORP.

TUBES AND DIAL LAMP REPLACEMENT:

The types of tubes required and their relative position in the receiver are shown in Fig. 5. When installing a replacement tube, insert the center guide pin into the center hole of the tube socket. Rotate the tube until the key on the guide pin drops into the notch in the socket hole. Push down until the base of the tube rests firmly on the socket. To replace dial lamps it will be necessary to remove the chassis from the cabinet. Replace lamps with 6-8 V. Mazda #44 (Blue bead) or equivalent.

SOCKET VOLTAGES:

The voltages shown in the voltage chart were obtained with a 20,000 ohm per volt meter when operating the receiver from a 117-volt a-c source. All voltages are to be measured between the tube pin and chassis. Blanks are provided for your meter readings to establish an average set of readings for this receiver as measured with your test equipment. The normal power consumption for the receiver is 55 watts.

ALIGNMENT:

All connections and adjustments necessary for alignment are accessible from the top of the chassis. The output transformer is located on the under side of the chassis, hence, the output meter connection should be made at the speaker socket. Output voice coil impedance is 3 ohms.

Make all alignment adjustments at maximum volume and refer to the alignment chart for the dial and band switch settings.

The standard RMA dummy antenna specified in the alignment chart consists of a 200 mmf condenser in series with a 20 uh r-f choke which is shunted by a 400 mmf condenser in series with a 400-ohm carbon resistor.

CAUTION - The loop antenna must be connected during alignment.

ALIGNMENT CHART:

Step	Dummy Antenna	Signal Generator Coupling	Signal Generator Frequency	Band Switch Setting	Receiver Dial Setting	Adjust
1	.01 mfd capacitor	Connect to rear section stator of tuning cap.	455 kc	BC	1000 kc	ABCD
2	Std RMA dummy	Connect to terminals "A" and "G" of antenna terminal strip TS_1.	1500 kc	BC	1500 kc	E*F
			600 kc		600 kc	G*
3	Std RMA dummy	See step 2.	6 mc	SW(A)	6 mc	H*I
4	Std RMA dummy	See step 2.	20 mc	SW(B)	20 mc	J*K
5	Std RMA dummy	See step 2.	11.5 mc	SW(C)	11.5 mc	L*M
			9.2 mc		9.2 mc	N*O

* Note - Calibration adjustment.

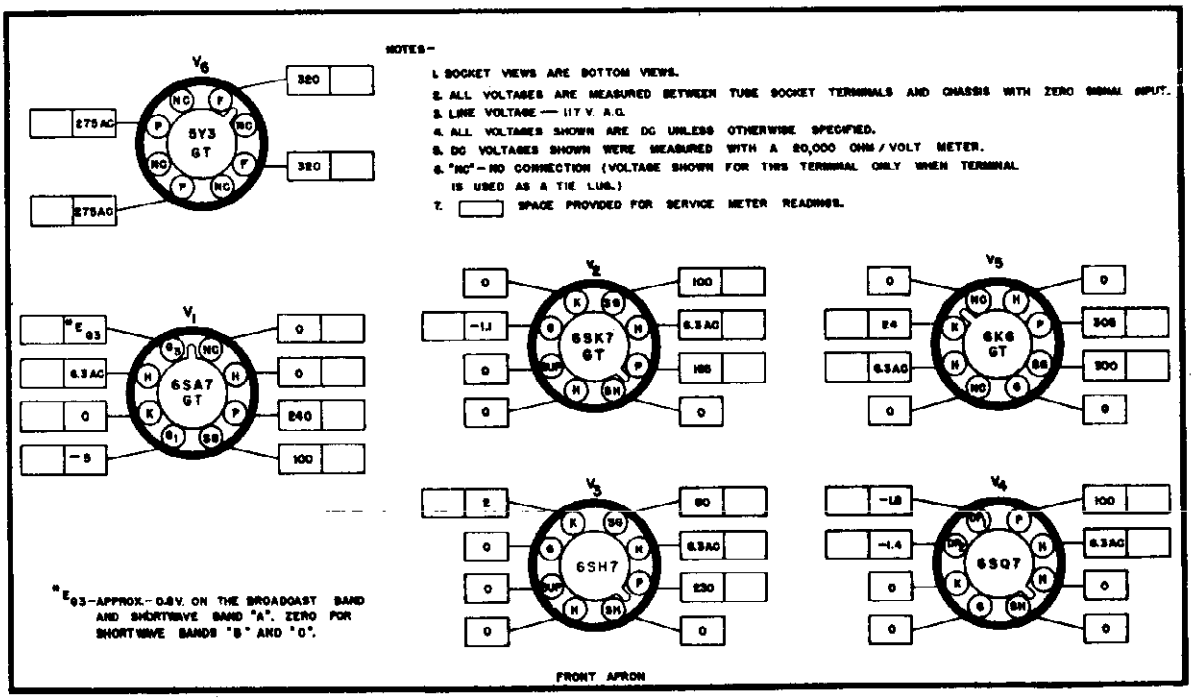

Voltage Chart.

Illustration No.	Production Part No.	Service Part No.	Description
			ELECTRICAL PARTS
			TRANSFORMERS AND COILS
T-1	50C365		Transformer, 1st I.F.
T-2	50C364		Transformer, Detector Stage
T-3	55B104-1		Transformer, Audio Output
T-4	52C149		Transformer, Power
T-5	51B1018		Transformer, Antenna Stage, SW (B) (C)
T-6	51B960		Transformer, Antenna Stage, SW (A)
T-7	51B1060		Transformer, Antenna Stage, BC
T-8	51B964		Transformer, Oscillator Stage, SW (B) (C)
T-9	51B963		Transformer, Oscillator Stage, SW (A)
T-10	51B962		Transformer, Oscillator Stage, BC
			CONDENSERS
C-1,3,5,6,9, 10,11,14,17	46AZ103F	E103	.01 mfd. 600 V., tubular
C-2	46AY503F	E503	.05 mfd. 600 V., tubular
C-4,12,35	CM20A101M	G101	100 mmf. 500 V., mica
C-13	46AZ502J	E502	.005 mfd. 600 V., tubular
C-15	46AZ202J	E202	.002 mfd. 600 V., tubular
C-16	45B113		60-20-20 mfd. 450 V., electrolytic
C-18	46AG103J		.01 mfd. 600 V., molded
C-19,20,21, 22,23,24	44B217		Trimmer assembly, 6 section, oscillator stage
C-25	CM30C162G		1600 mmf. 2% 500 V., mica
C-26	CM35A402J		4000 mmf. 5% 500 V., mica
C-27	CM20A470M	G470	47 mmf. 500 V., mica
C-28,29,32, 33,34	44B216		Trimmer assembly, 5 section, antenna stage
C-30	46AY203F		.02 mfd. 150 V., tubular
C-31	48B184		Tuning condenser, 2 section
C-36	CM20A820J		82 mmf. 5% 500 V., mica
C-37	CM20A181J		180 mmf. 5% 500 V., mica
			RESISTORS
R-1	RC30AE183M	B183	18,000 ohms 1 watt, insulated
R-2	RC20AE224M	A224	220,000 ohms ½ watt, insulated
R-3,7	RC20AE683M	A683	68,000 ohms ½ watt, insulated
R-4	RC30AE103M	B103	10,000 ohms 1 watt, insulated
R-5	RC20AE104M	A104	100,000 ohms ½ watt, insulated
R-6	RC20AE221M	A221	220 ohms ½ watt, insulated
R-9	RC20AE102M	A102	1000 ohms ½ watt, insulated
R-10,15	RC20AE474M	A474	470,000 ohms ½ watt, insulated
R-11,23	RC20AE105M	A105	1 megohm ½ watt, insulated
R-12	RC20AE685M	A685	6.8 megohm ½ watt, insulated
R-14,24	RC20AE223M	A223	22,000 ohms ½ watt, insulated
R-17	RC30AE681M	B681	680 ohms 1 watt, insulated

Illustration No.	Production Part No.	Service Part No.	Description
			RESISTORS (Cont.)
R-18,19	RC40AE100M	C100	10 ohms 2 watt, insulated
R-20	RC20AE472M	A472	4700 ohms ½ watt, insulated
R-21,22	RC40AE682M	C682	6800 ohms 2 watt, insulated
R-25	RC20AE151K	A100	10 ohms ½ watt, insulated
			TUBES AND RECTIFIER COMPLEMENT
V-1	90X6SA7GT	5223	6SA7GT, mixer
V-2	90X6SK7GT	5230	6SK7GT, 1st I.F.
V-3	90X6SH7	5255	6SH7, 2nd I.F.
V-4	90X6SQ7	5231	6SQ7, Detector and 1st Audio
V-5	90X6K6GT	5196	6K6GT, audio power amp.
V-6	90X5Y3GT	5123	5Y3GT, rectifier
			MISCELLANEOUS ELECTRICAL PARTS
R-13	25B621		Control, volume
R-16	25B640		Control, tone, includes power switch SW-3
LM-1,2	39A003	44	Lamp 6-8V., 250 Ma Mazda #44
PL-1	87A078		Line cord and plug
LS-1	85C063		Speaker, P.M.
SW-1	60B290		Band switch assembly
SW-2	60A228		Line voltage switch, S.P.D.T
TS-1	88A327		Terminal strip, antenna
			MECHANICAL PARTS
			CHASSIS PARTS
	76A299	1217671	Lock, line cord
	38A001		Cord, dial drive (54")
	75A006	1217624	Spring, dial drive
	67B727		Rail, pointer
	83C322		Dial scale
	82A135		Dial pointer
	22B189		Dial glass
SO-1	36A036-1		Receptacle, headphone jack
SO-2	88A072		Receptacle, speaker
SO-3	36A029		Receptacle, phono
SO-4	10A015	1217633	Receptacle, phono motor
	6A190	1217684	Socket, octal (tube)
	86A054		Socket, dial light
			CABINET PARTS
	66F542		Cabinet, wood
	32C440		Cover, back
	7C061		Escutcheon
	15B068-3		Knob, volume, tone and tuning
	15B137		Knob, band switch
	57C120		Loop antenna

GENERAL

MOUNTING—All 1949 Buick Cars.

TUBES—Six, Plus Synchronous Vibrator.

SPEAKER—8" Round, Permanent Magnet.

TUNING—Manual and 5 P. B. Mechanical.

ANTENNA TRIMMER COMPENSATION—For Antennas Between 0.000052 — 0.000068 Mfd.

TUNING RANGE—550-1600 KC.

PUSH BUTTON SETUP PROCEDURE

Pull Push Button to the left and out. Tune in desired station manually. Push button all the way in.

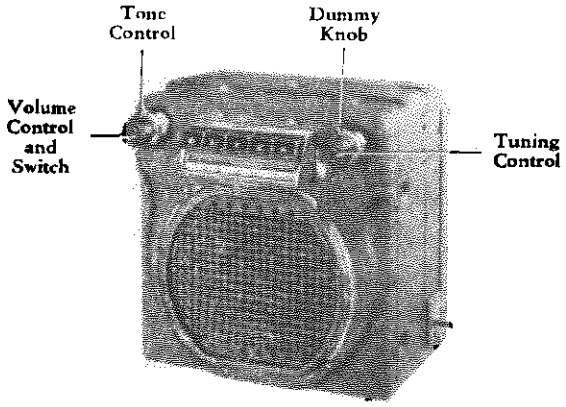

MODEL 980782

ALIGNMENT PROCEDURE

Output Meter Connections ..... Across Voice Coil
Generator Return ..... To Receiver Chassis
Dummy Antenna ..... In Series With Generator
Volume Control Position ..... Maximum Volume
Tone Control Position ..... Treble
Generator Output ..... Minimum for Readable Indication

Steps	Series Condenser or Dummy Antenna	Connect Signal Generator to	Signal Generator Frequency	Tune Receiver To	Adjust in Sequence For Max. Output
1	0.1 Mfd.	7Q7 Grid (Pin #6)	260 KC	High Frequency Stop	A, B, C, D
2	0.000056 Mfd.	Antenna Connector	1615 KC	High Frequency Stop	*E, F, G
3	0.000056 Mfd.	Antenna Connector	1400 KC	Signal Generator Signal	J, K
4	0.000056 Mfd.	Antenna Connector	1615 KC	High Frequency Stop	F, G
5	0.000056 Mfd.	Antenna Connector	1000 KC	Signal Generator Signal	L**

*Before making this adjustment check mechanical setting of oscillator core "H." The rear of the core should be 1 25/32" from the mounting end of the coil form. (This measurement is readily made by inserting a suitable plug in the mounting end of the coil form.) Core adjustments should be made with an insulated screw driver, and core studs should be cemented in place with glyptal or household cement after alignment.

**L is the pointer adjustment screw which is on the connecting link, between the pointer assembly and the parallel guide bar. It should be adjusted so that the dial pointer corresponds with the 1000 KC mark on the dial. (On first "0" of "100.")

With the radio installed and the car antenna plugged in adjust the antenna trimmer "G" for maximum volume with the radio tuned to a weak station near 1400 KC (see sticker on case).

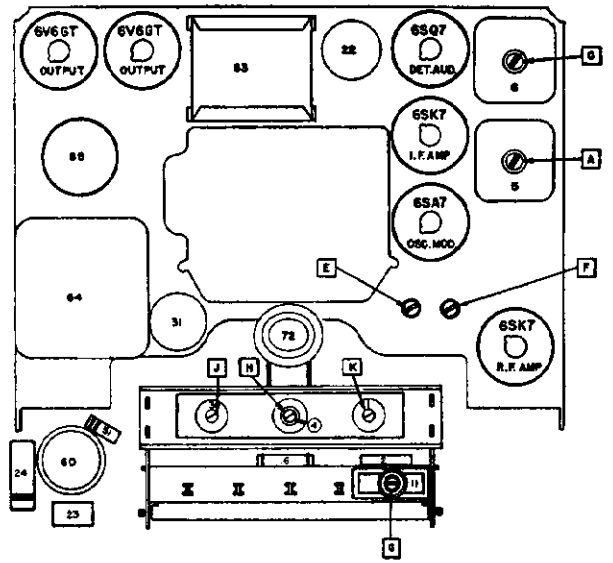

PARTS LAYOUT — TUBE VIEW

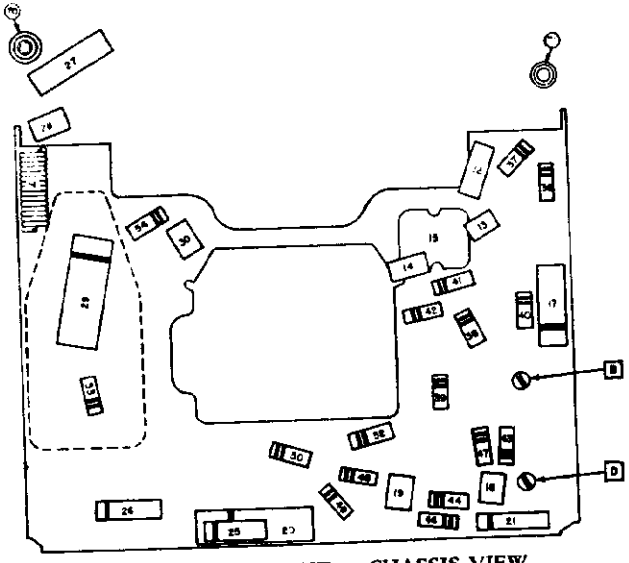

PARTS LAYOUT — CHASSIS VIEW

TUBE SOCKET VOLTAGE CHART

The tube socket voltages, as measured at the factory and under the conditions shown on the schematic diagram on Page 3 are shown.

The blank spaces are provided so the service man may fill in the actual voltage readings as taken with his own equipment. A normal operating radio should be used for these measurements.

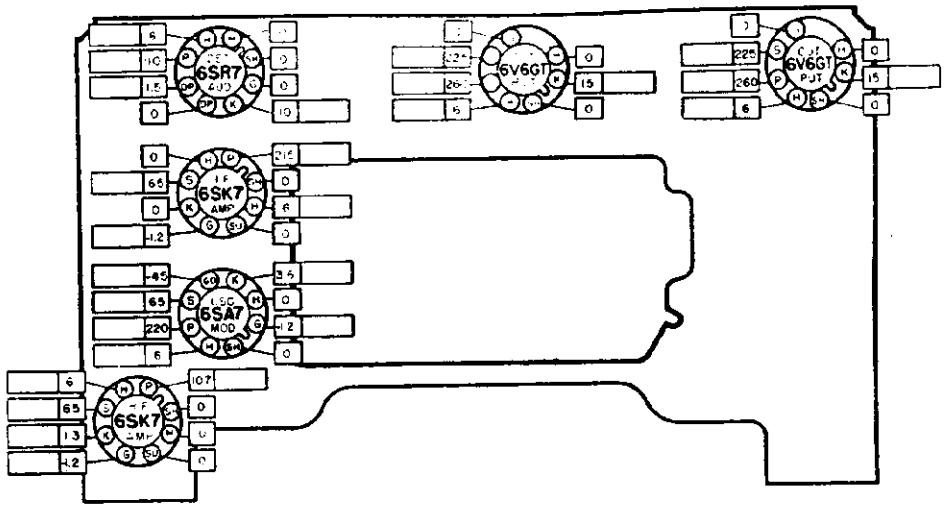

VOLT METER RESISTANCE OHMS PER VOLT. READINGS TAKEN WITH VOLTS AT SPARK PLATE. VOLTAGES MEASURED FROM SOCKET TERMINALS TO CHASSIS AND ARE POSITIVE UNLESS MARKED OTHERWISE.

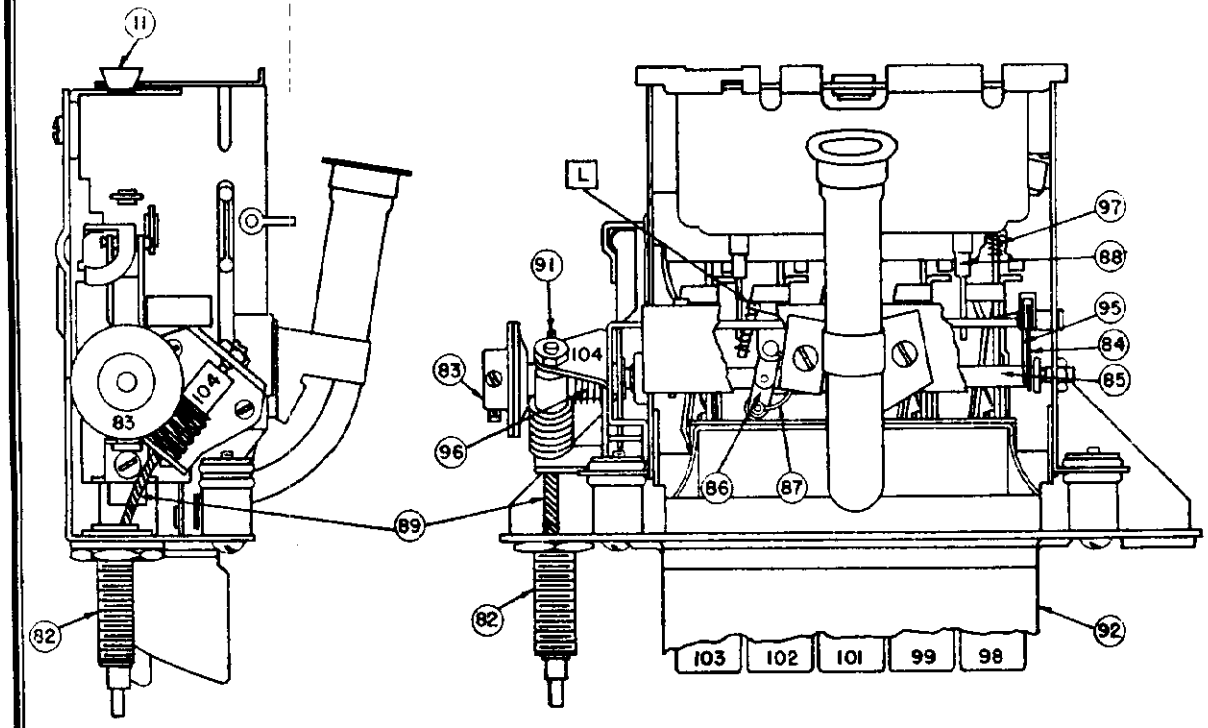

TUNER

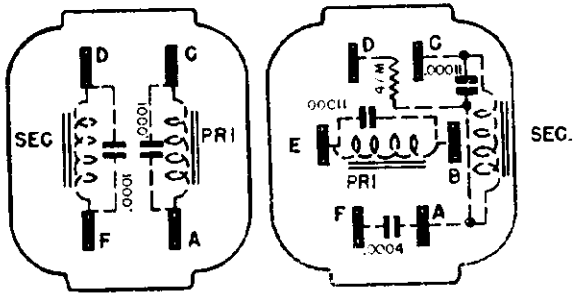

1st I. F. ASSY. 2ND I. F. ASSY.

I. F. COIL CONNECTIONS

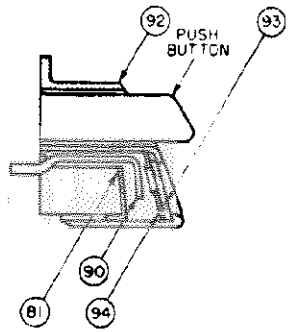

ESCUTCHEON CROSS SECTION

MODEL 980782

UNITED MOTORS SERVICE
DIV. OF GENERAL MOTORS CORP.

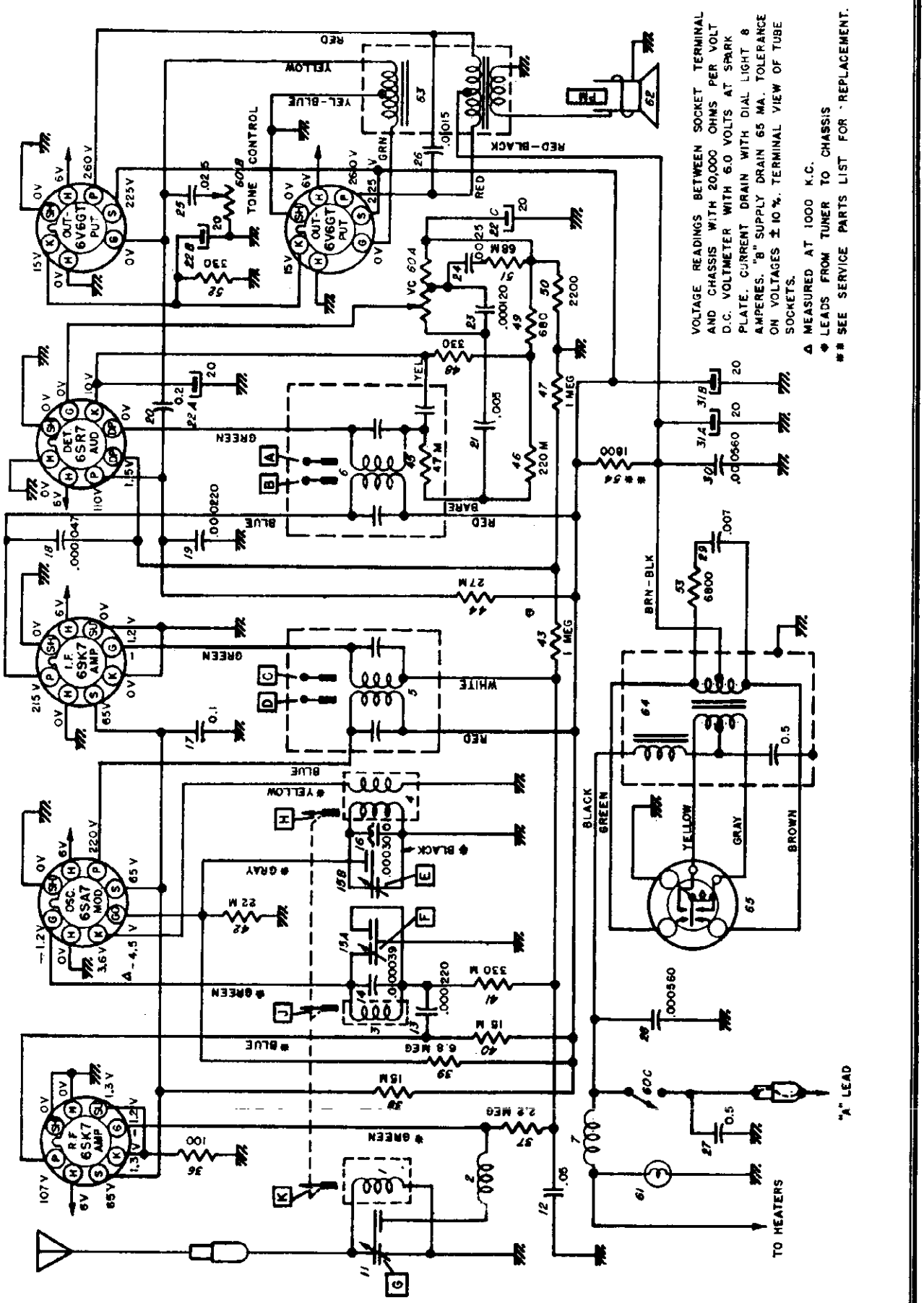

UNITED MOTORS SERVICE
DIV. OF GENERAL MOTORS CORP.

MODEL 980782

SERVICE PARTS LIST

Illus. No.	Production Part No.	Service Part No.	Description
			ELECTRICAL PARTS
			Coils
1	7257979	7257979	Antenna
2	7240251	7240251	Antenna Spark Choke
3	7257979	7257979	R. F.
4	7258148	7258148	Oscillator
5	7238546	7238546	1st I. F.
6	7240467	7240467	2nd I. F.
7	7241701	7241701	"A" Spark Choke
			Condensers
11	7256905	7256905	Antenna Trimmer
12	7236842	E 503	0.05 mfd. 200 V Tubular
13	7236105	G 221	0.000220 mfd. Molded
14	7258221	G 390	0.000039 mfd. Ceramic
15	7242454	7242454	Dual Trimmer
15A			R. F. Section
15B			Oscillator Section
16	7258162	7258162	0.000300 mfd. Compensating
17	7238788	E 104	0.1 mfd. 400 V Tubular
18	7233313	G 470	0.000047 mfd. Molded
19	7236105	G 221	0.000220 mfd. Molded
20	7240579	E 204	0.2 mfd. 400 V Tubular
21	7232956	E 502	0.005 mfd. 600 V Tubular
22	7238553	7238553	Electrolytic
22A			20 mfd. 25 V
22B			20 mfd. 25 V
22C			20 mfd. 25 V
23	7240577	G 121	0.000120 mfd. Molded
24	7240578	7240578	0.0025 mfd. 400 V Tubular
25	1211232	1211232	0.025 mfd. 400 V Tubular
26	7236134	7236134	0.0015 mfd. 800 V Tubular
27	7236621	E 504	0.5 mfd. 200 V Tubular
28	7240566	7240566	0.000560 mfd. Hi-Q Mica
29	7257439	7257439	0.007 mfd. 3000 V Buffer
30	7240566	7240566	0.000560 mfd. Hi-Q Mica
31	7240612	7240612	Electrolytic
31A			20 mfd. 400 V.
31B			20 mfd. 400 V
			Resistors
36	1213217	A 101	100 Ohms ½ W Insulated
37	1214563	A 225	2.2 Megohms ½ W Insulated
38	7233653	C 153	15,000 Ohms 2 W Insulated
39	1215563	A 685	6.8 Megohms ½ W Insulated
40	7237595	B 153	15,000 Ohms 1 W Insulated
41	1214557	A 334	330,000 Ohms ½ W Insulated
42	1214550	A 223	22,000 Ohms ½ W Insulated
43	1213282	A 105	1 Megohm ½ W Insulated
44	1213342	B 273	27,000 Ohms 1 W Insulated
45	1214553	A 473	47,000 Ohms ½ W Insulated
46	1214555	A 224	220,000 Ohms ½ W Insulated
47	1213282	A 105	1 Megohm ½ W Insulated
48	1213224	A 331	330 Ohms ½ W Insulated
49	1214543	A 681	680 Ohms ½ W Insulated
50	1214545	A 222	2200 Ohms ½ W. Insulated
51	1213844	A 683	68,000 Ohms ½ W Insulated
52	1214572	C 331	330 Ohms 2 W Insulated
53	1216154	B 682	6800 Ohms 1 W Insulated
54	1214573	C 272 + B 562	1800 Ohms — Replace with 2700 Ohm 2 W and 5600 Ohm 1 W in parallel
			Tubes
	1213793	5241	6V6GT
	1218107	5233	6SR7
	7237751	5229	6SK7
	7237752	5222	6SA7

MODEL 980782

UNITED MOTORS SERVICE
DIV. OF GENERAL MOTORS CORP.

SERVICE PARTS LIST

Illus. No.	Production Part No.	Service Part No.	Description
			Miscellaneous Electrical
60	7256847	7256847	Control, Volume, Tone and Switch
60A			Volume Control
60B			Tone Control
60C			Switch
61	125588	55	Lamp - Dial Light
62	7255895	7255895	Speaker - 8" round, PM
63	7240464	7240464	Transformer - Input-Output
64	7256939	7256939	Transformer - Power
65	7238525	8630	Vibrator - Synchronous
			MECHANICAL PARTS
			Chassis
70	7242034	7242034	Connector - "A" Lead
71	7242035	7242035	Connector - Antenna
72	1217841	1217841	Socket - Dial Light
73	7236279	7236279	Socket - Octal Tube
74	7238539	7238539	Socket - Vibrator
			Tuner
81	7257606	7257606	Backplate - Pointer
82	7256874	7256874	Bushing - Drive Shaft
83	7258072	7258072	Clutch Disc - Driven
84	7258203	7258203	Connecting Link - Core Bar
85	7258211	7258211	Core Guide Bar - Parallel
86	7256271	7256271	Pointer Connecting Link
87	7255992	7255992	Spring - Pointer Connecting Link
88	7258468	7258468	Core - Powdered Iron
89	7256871	7256871	Drive Shaft - Manual
90	7256861	7256861	Pointer Assembly
	1219093	1219093	Pointer Tip Package
91	7256102	7256102	Gear and Bushing - Clutch
92	7256883	7256883	Escutcheon Assy.
93	7256885	7256885	Dial
94	7256886	7256886	Backplate - Dial
95	7257415	7257415	Spring - Core Bar Connecting Link
96	7255991	7255991	Spring - Clutch
97	7255984	7255984	Spring - Slide Return
98	1218036	1218036	Pushbutton and Tuner Slide "B" (Gray)
98A	1219150	1219150	Pushbutton and Tuner Slide "B" (Black)
99	1218037	1218037	Pushbutton and Tuner Slide "U" (Gray)
99A	1219151	1219151	Pushbutton and Tuner Slide "U" (Black)
101	1218038	1218038	Pushbutton and Tuner Slide "I" (Gray)
101A	1219152	1219152	Pushbutton and Tuner Slide "I" (Black)
102	1218039	1218039	Pushbutton and Tuner Slide "C" (Gray)
102A	1219153	1219153	Pushbutton and Tuner Slide "C" (Black)
103	1218040	1218040	Pushbutton and Tuner Slide "K" (Gray)
103A	1219154	1219154	Pushbutton and Tuner Slide "K" (Black)
	1219124	1219124	Pushbutton Insert - Chrome "B"
	1219125	1219125	Pushbutton Insert - Chrome "U"
	1219126	1219126	Pushbutton Insert - Chrome "I"
	1219127	1219127	Pushbutton Insert - Chrome "C"
	1219128	1219128	Pushbutton Insert - Chrome "K"
104	7256866	7256866	Worm Gear and Bracket
			INSTALLATION PARTS
	1321178	1321178	"A" Lead and Fuse Connector
	1336763	6015	Condenser - Generator
	1910147	6015	Condenser - Ignition Coil
	120151	120151	Fuse - 15 amperes
	1334393	1334393	Knob - Control
	1320577	1320577	Knob - Dummy
	1320576	1320576	Knob - Tone Control
	1853686	6008	Suppressor Adapter
	1207820	6001	Suppressor - Distributor

©John F. Rider

UNITED MOTORS SERVICE
DIV. OF GENERAL MOTORS CORP.

MODEL 982120, Early Oldsmobile

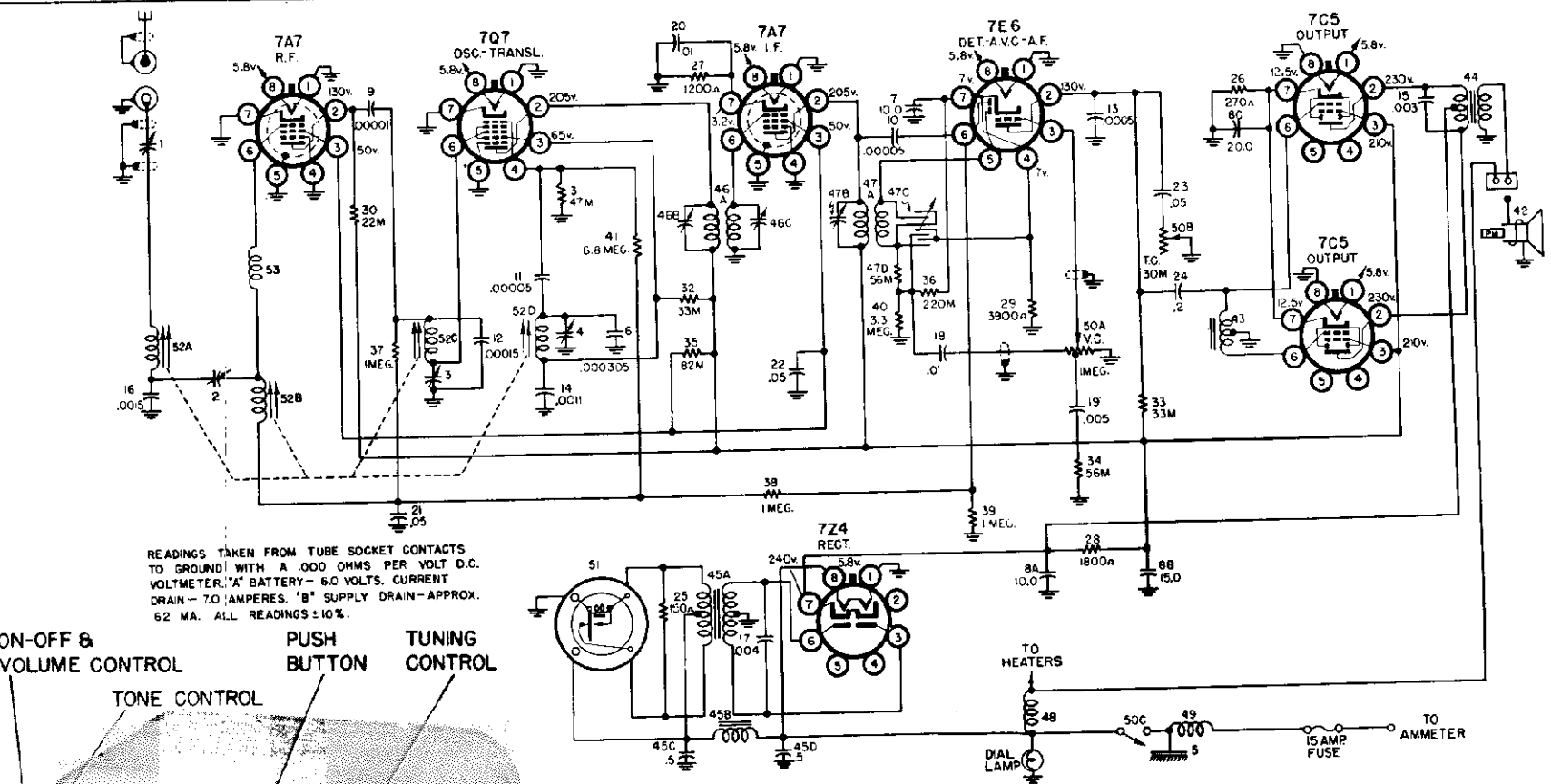

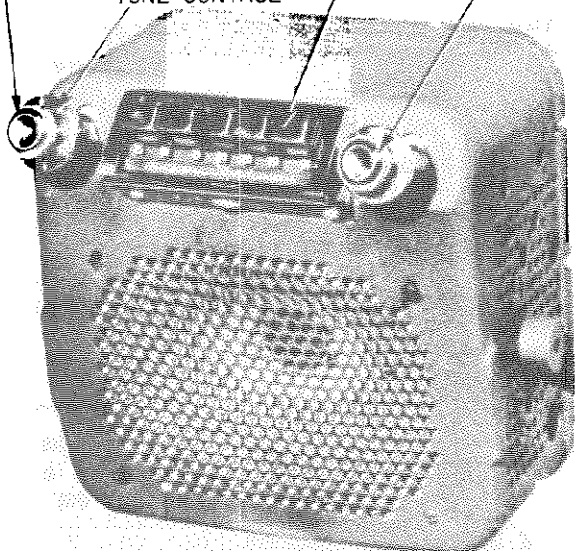

TUBES — 7A7, 7Q7, 7A7, 7E6, 7C5, 7C5, 7Z4

SPEAKER — 6" x 9" Elliptical Permanent-Dynamic

TUNING — Manual and 5 P. B.

TUNING RANGE — 535 KC 1610 KC

CAR ANTENNA CAPACITY — 70 mmfd.

PUSH BUTTON SET-UP

Pull button slightly to the left and then out - tune in manually - depress selected button to set.

ALIGNMENT PROCEDURE

Volume Control maximum.
Tone Control on high position.
Signal Generator Output minimum for satisfactory output indication.

Series Capacitor Or Dummy Antenna	Connect To	Signal Generator Frequency	Adjust Screws In Order
0.1 mfd.	Terminal X (See Parts Layout)	257.5 KC	A, B, C, D
.000070 mfd.	Antenna Terminal	1610 KC	E, H, F, G

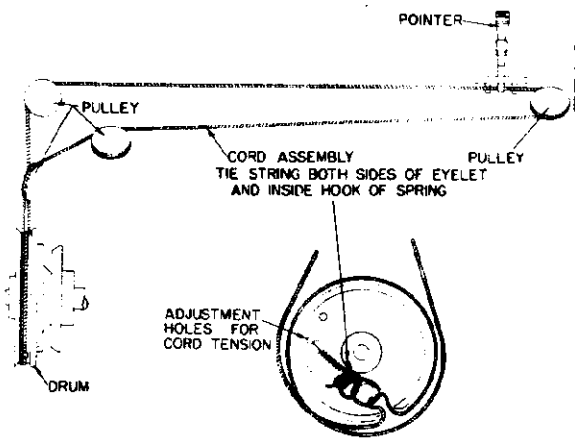

Low frequency alignment not required.
Adjust Trimmer "H" to match car antenna (1400 KC) when radio is installed.

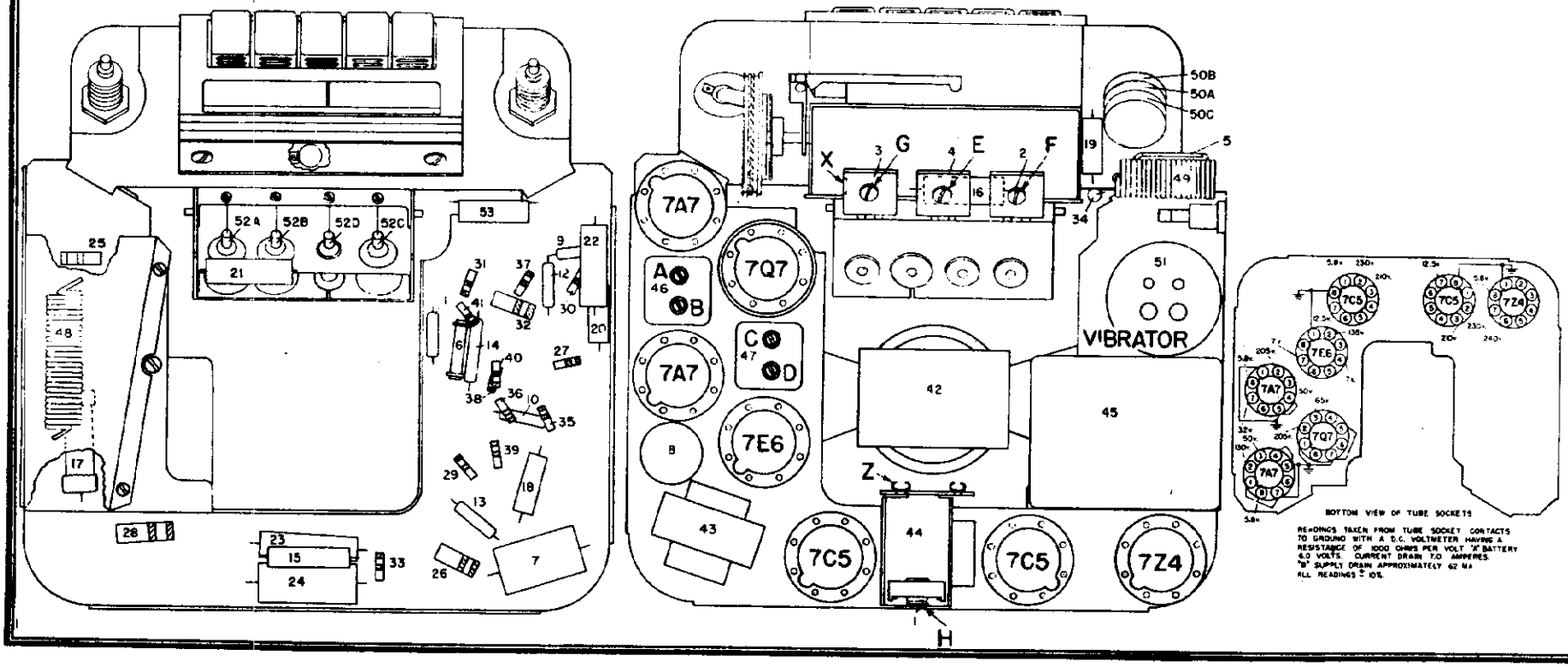

UNITED MOTORS SERVICE
DIV. OF GENERAL MOTORS CORP.

MODEL 982420,
Late; Oldsmobile

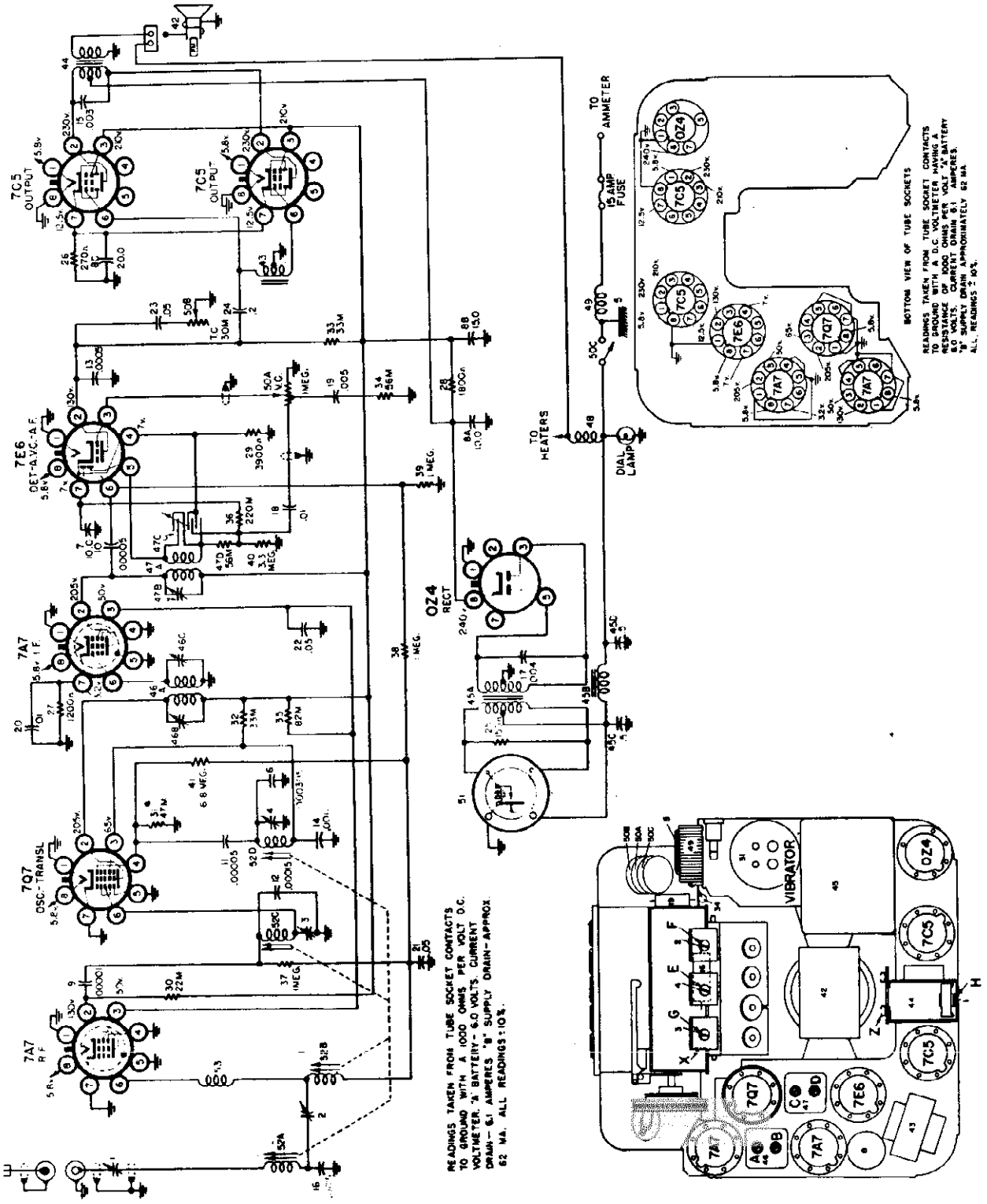

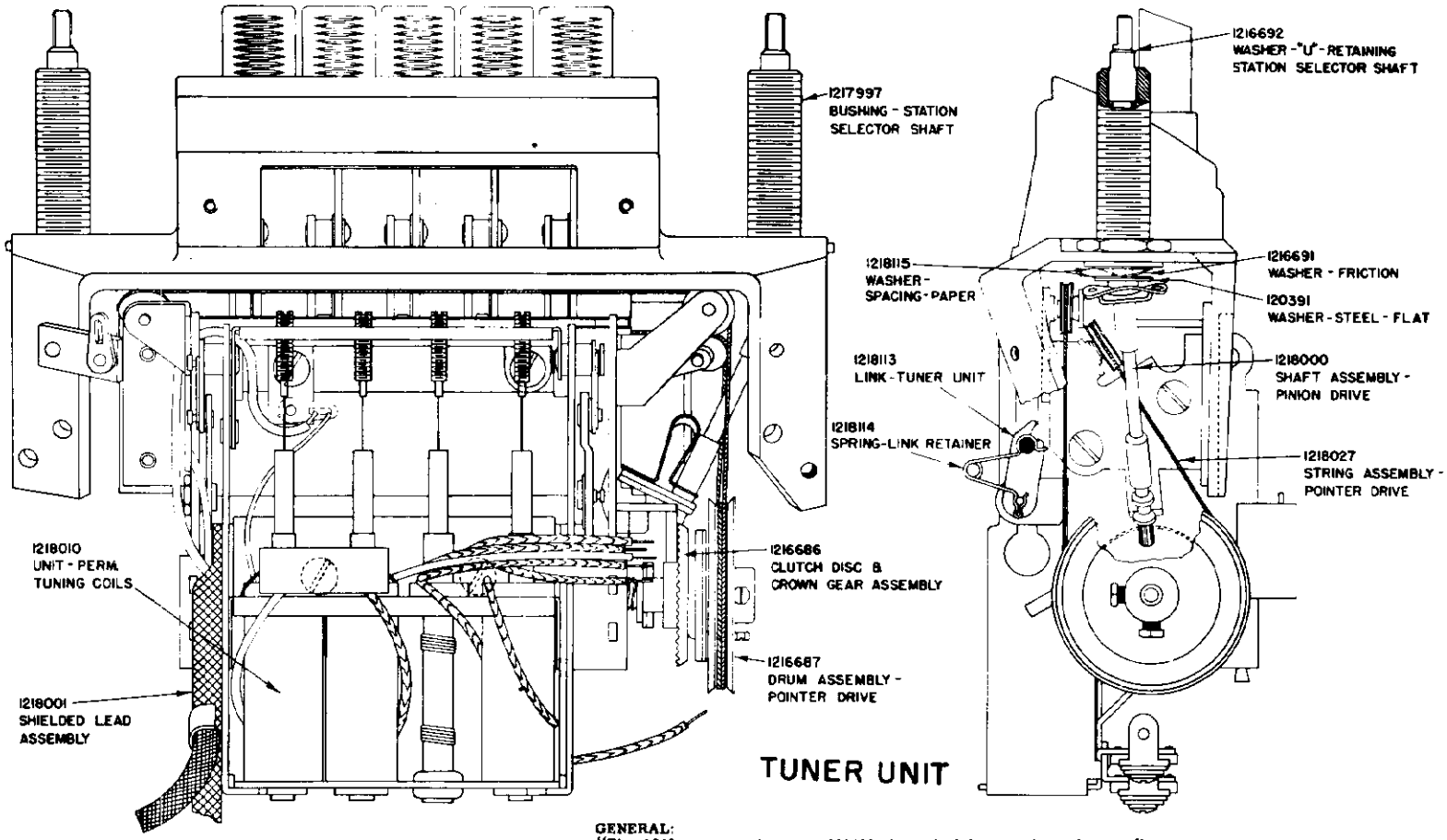

TUNER UNIT

GENERAL:
"The 1949 version of Model 982420 (identified by serial number prefix 'B-59') is identically the same as the 1948 version of Model 982420 (identified by serial number prefix 'B-58') except for the following TUBE, MOUNTING & INSTALLATION PARTS and MISCELLANEOUS CHASSIS PARTS changes:"

SERVICE PARTS LIST

PRODUCTION PART NUMBER	SERVICE PART NUMBER	DESCRIPTION
DELETIONS		
554516		Nut - 1/2-28 Hex.
419511		Washer - Felt - 9/32 I.D. (Anti-Rattle) Tone Control
1562090		Washer - Felt - 3/16 I.D. (Anti-Rattle) Tuning & Volume Control
554518		Bracket - Receiver Mounting
554520		Gasket - Speaker Baffle
1910147		Condenser - Ignition Coil
122159		Screw - #8-32 x 1/4 - Rd. Head
121841		Washer - Lock - #8 (Split)
1218424		Tube - 7Z4 Rectifier
ADDITIONS		
7255287		Nut - 1/2-28 Hex.
7257400		Washer - Wave - 3/16 I.D. (Anti-Rattle) Tuning & Volume Control
7256654		Bracket - Receiver Mounting
555437 or 1912757		Condenser - Ignition Coil
7256684		Condenser - Ignition Coil
164349		Gasket - Speaker Baffle
		Screw - #8-32 x 1/4 - Phillips Hd. - Self Tapping
1912900		Condenser - Voltage Regulator
1211924	5003	Tube - 0Z4 Rectifier
1219086		Socket - 8 Prong Octal (Rectifier)

UNITED MOTORS SERVICE
DIV. OF GENERAL MOTORS CORP.

MODEL 982420, Early, Late; Oldsmobile

Illus. No.	Service * Part No.	Production Part No.	Description
			CAPACITORS
1		1218002	Antenna - Trimmer - Capacitor
2		1218047	Grid Trimmer - Capacitor
3		1218046	R. F. Trimmer - Capacitor
4		1218043	Oscillator - Trimmer - Capacitor
5		1212278	Spark - Capacitor
6		1217993	305 Mmfd. Compensating Capacitor
7	J100	1217998	Electrolytic - 10 Mfd. 25 Volt
8		1218009	Electrolytic
8A			10 Mfd. 350 Volt
8B			15 Mfd. 350 Volt
8C			20 Mfd. 25 Volt
9	G100	7234242	.00001 Mfd. Mica
10	G470	1207625	.00005 Mfd. Mica
11	G470	1207625	.00005 Mfd. Mica
12	G151	7230893	.00015 Mfd. Mica
13	G471	7238879	.0005 Mfd. Mica
14		1218015	.C01l Mfd. Mica - Silver
15	E302	7234126	.C03 Mfd. 600 Volt
16	E102	7236134	.0015 Mfd. 600 Volt
17	H402	1217875	.004 Mfd. 1500 Volt
18	E103	1208600	.01 Mfd. 600 Volt
19	E502	7230912	.C05 Mfd. 600 Volt
20	E103	1208600	.01 Mfd. 600 Volt
21	E503	7230592	.05 Mfd. 600 Volt
22	E503	7230592	.05 Mfd. 600 Volt
23	E503	7230592	.05 Mfd. 600 Volt
24		7234127	.2 Mfd. 200 Volt
			RESISTORS
25	B151	1211005	150 Ohm - 1 Watt
26	B271	1213846	270 Ohm - 1 Watt
27	A122	1213236	1200 Ohm - 1/2 Watt
28	C182	1214573	1800 Ohm - 2 Watt
29	A392	1214546	3900 Ohm - 1/2 Watt
30	A223	1214550	22,000 Ohm - 1/2 Watt
31	A473	1214553	47,000 Ohm - 1/2 Watt
32	A333	1213845	33,000 Ohm - 1/2 Watt
33	A333	1213845	33,000 Ohm - 1/2 Watt
34	A563	1213267	56,000 Ohm - 1/2 Watt
35	A823	1214554	82,000 Ohm - 1/2 Watt
36	A224	1214555	220,000 Ohm - 1/2 Watt
37	A105	1213282	1 Megohm - 1/2 Watt
38	A105	1213282	1 Megohm - 1/2 Watt
39	A105	1213282	1 Megohm - 1/2 Watt
40	A335	1214564	3.3 Megohm - 1/2 Watt
41	A685	1215563	6.8 Megohm - 1/2 Watt
			MISCELLANEOUS ELECTRICAL PARTS
42		1218060	Speaker - 6" x 9" Elliptical Permanent-Dynamic
43		1218029	Transformer - Audio Input
44		1218059	Transformer - Audio Output
45		1218008	Transformer & Filter Assembly
45A			Transformer - Power
45B			Hash - Choke
45C			.5 Mfd. 100 Volt
45D			.5 Mfd. 100 Volt
46		1218033	1st I. F. Transformer Assembly
46A			I. F. Coil Assembly
46B			Primary Trimmer
46C			Secondary Trimmer
47		1218035	2nd I. F. Transformer Assembly
47A			I. F. Coil Assembly
47B			Primary Trimmer
47C			Secondary Trimmer
47D			56,000 Ohm - 1/2 Watt
48		1217996	Filament Choke
49		1217995	Spark Choke
50		1218005	Control - Volume - Tone On-Off Switch
50A			Volume Control - 1 Megohm
50B			Tone Control - 30,000 Ohm
50C			On-Off Switch
51	8542	1218006	Vibrator

Illus. No.	Service * Part No.	Production Part No.	Description
			TUNER UNIT & PARTS
52		1218010	Unit - Perm. Tuning Coil
52A			Antenna Coil
52B			Preselector Coil
52C			R. F. Coil
52D			Oscillator Coil
		1217997	Bushing - Station Selector Shaft
		1218044	Tuner Unit Assembly - Mechanical Portion only - Includes Push Buttons, Clutch Disc, Crown Gear and Drum Assembly
		1216686	Clutch Disc & Crown Gear Assy.
		1208004	Dial Glass - Calibrated
		1218042	Escutcheon Assy. & Light Shields Without Dial (for service only)
		1216687	Drum Assembly - Pointer Drive
		1218001	Lead Assembly - Shielded
		1218000	Shaft Assembly - Drive Pinion
		1218030	Pointer & Slide Assembly
		1216692	Washer - "U" Retaining - Station Selector Shaft
		1216691	Washer - Friction - Station Selector Shaft
		1217999	Actuator Plate Assembly
		1217994	Lever Assembly
		1217992	Screw - #10-32 Special
		1218027	String Assembly - Pointer Drive
		1218041	Connector Assembly - Antenna
		121391	Washer - Steel - Flat
		1218115	Washer - Spacing - Paper
		1218113	Link - Tuner Unit
		1218114	Spring - Link Retaining
53		1214382	Antenna Choke
			TUBES
5290		1213583	7A7 - R. F. Amplifier
5301		1213853	7Q7 - Oscillator-Translator
5290		1213583	7A7 - I. F. Amplifier
5298		1213852	7E6 - Detector AVC - 1st Audio
5295		1213586	7C5 - Audio Output
5295		1213586	7C5 - Audio Output
5308		1218424	7Z4 - Rectifier
			MOUNTING & INSTALLATION PARTS
		414997	Washer - Flat 33/64 I. D.
		554516	Nut - 1/2-28 Hex
		419512	Washer - Rubber - 9/32 I. D. (Anti-Rattle) Dummy Control
		419511	Washer - Felt - 9/32 I. D. (Anti-Rattle) Tone Control
		554515	Knob - Tone & Dummy
		1562090	Washer - Felt - 3/16 I.D. (Anti-Rattle) Tuning & Volume Control
		7256702	Knob (Tuning & Volume Control) Included Set Screw
		554518	Bracket - Receiver Mounting
		554519	Bracket - Side Mounting
		554690	Bolt - 1/4-20 x 3/8 long Truss Head
		120706	Bolt - 1/4-20 x 1/2 long - Hex Hd.
		121797	Bolt - 1/4-20 x 3/8 long - Hex Hd.
		120392	Washer - Flat - 17/64 I.D. 5/8 O.D.
		120423	Washer - Lock - 1/4 (Internal Tooth Type "B")
		103319	Washer - Lock - 1/4 (Split)
		554691	"A" Lead Connector & Filter Condenser Assembly
		120151	Fuse - "A" Lead 15 Amp. 25 Volt
		1910147	Condenser - Ignition Coil
		1911095	Condenser - Generator - .5 Mfd.
		7257239	Distributor Suppressor - 15,000 Ohm
		414237	Grommet - Distributor Suppressor
		415823	Static Collector (Front Wheel)
		122159	Screw - #8-32 x 1/4 - Rd. Hd.
		121641	Washer - Lock - #8 (Split)
		554339	Panel - Radio Control
		554520	Gasket - Speaker Baffle
		7256717	Spacer - Instrument Panel to Gasket
		555348	Hood Grounding Clip
			MISCELLANEOUS CHASSIS PARTS
		1216041	Socket - Vibrator
		7238455	Socket - Tube - 8 Prong Lock-In
		1217991	Shield - Tube
		1218007	Cover Assembly - Case Back

MODEL 982421,
Oldsmobile

UNITED MOTORS SERVICE
DIV. OF GENERAL MOTORS CORP.

GENERAL

MOUNTING—All 1949 Oldsmobile Cars.

TUBES—Six, Plus Rectifier.

SPEAKER—6"x 9" Elliptical Permanent Manget.

TUNING—Manual and 5 P. B. Mechanical.

ANTENNA TRIMMER COMPENSATION—For Antennas Between 0.000050 — 0.000070 Mfd.

TUNING RANGE—550 - 1600 KC.

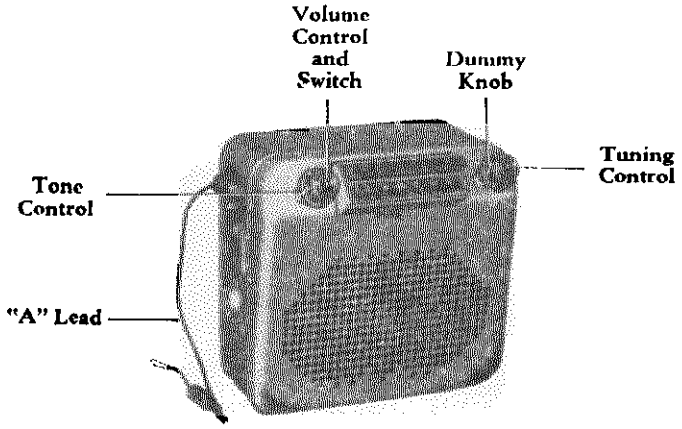

MODEL 982421

PUSHBUTTON SET-UP

Pull pushbutton to the left and out. Tune in desired station manually. Push button all the way in.

ALIGNMENT PROCEDURE:

Output Meter Connections ..... Across Voice Coil
Generator Return ..... To Receiver Chassis
Dummy Antenna ..... In Series With Generator
Volume Control Position ..... Maximum Volume
Tone Control Position ..... Treble
Generator Output ..... Minimum for Readable Indication

Steps	Series Condenser or Dummy Antenna	Connect To	Signal Generator Frequency	Tune Receiver To	Adjust in Sequence For Max. Output
1	0.1 Mfd.	7Q7 Grid (Pin #6)	260 KC	High Frequency Stop	A ,B, C, D
2	0.1 Mfd.	7Q7 Grid (Pin #6)	1615 KC	High Frequency Stop	*E
3	0.000068 Mfd.	Antenna Connector	1615 KC	High Frequency Stop	F, G, H
4	0.000068 Mfd.	Antenna Connector	1400 KC	Signal Generator Signal	K, L, M
5	0.000068 Mfd.	Antenna Connector	1615 KC	High Frequency Stop	F, G, H
6	0.000068 Mfd.	Antenna Connector	1000 KC	Signal Generator Signal	**N

*Before making this adjustment check the mechanical setting of the oscillator core "J." The slotted end of core should be 1 21/32" from the mounting end of the coil form. (This measurement is readily made by inserting a suitable plug in the monting end of the coil form.) Core adjustments should be made with an insulated screwdriver and core studs should be cemented in place with glyptal or household cement after alignment.

**"N" is the pointer adjustment screw which is on the pointer connecting link (see tuner drawing) and should be adjusted so the pointer reads 1000 KC. (On first "0" of "100.")

With the radio installed and the car antenna plugged in adjust the antenna trimmer "H" for maximum volume with the radio tuned to a weak station near 1400 KC. (See sticker on case.)

UNITED MOTORS SERVICE
DIV. OF GENERAL MOTORS CORP.

MODEL 982421,
Oldsmobile

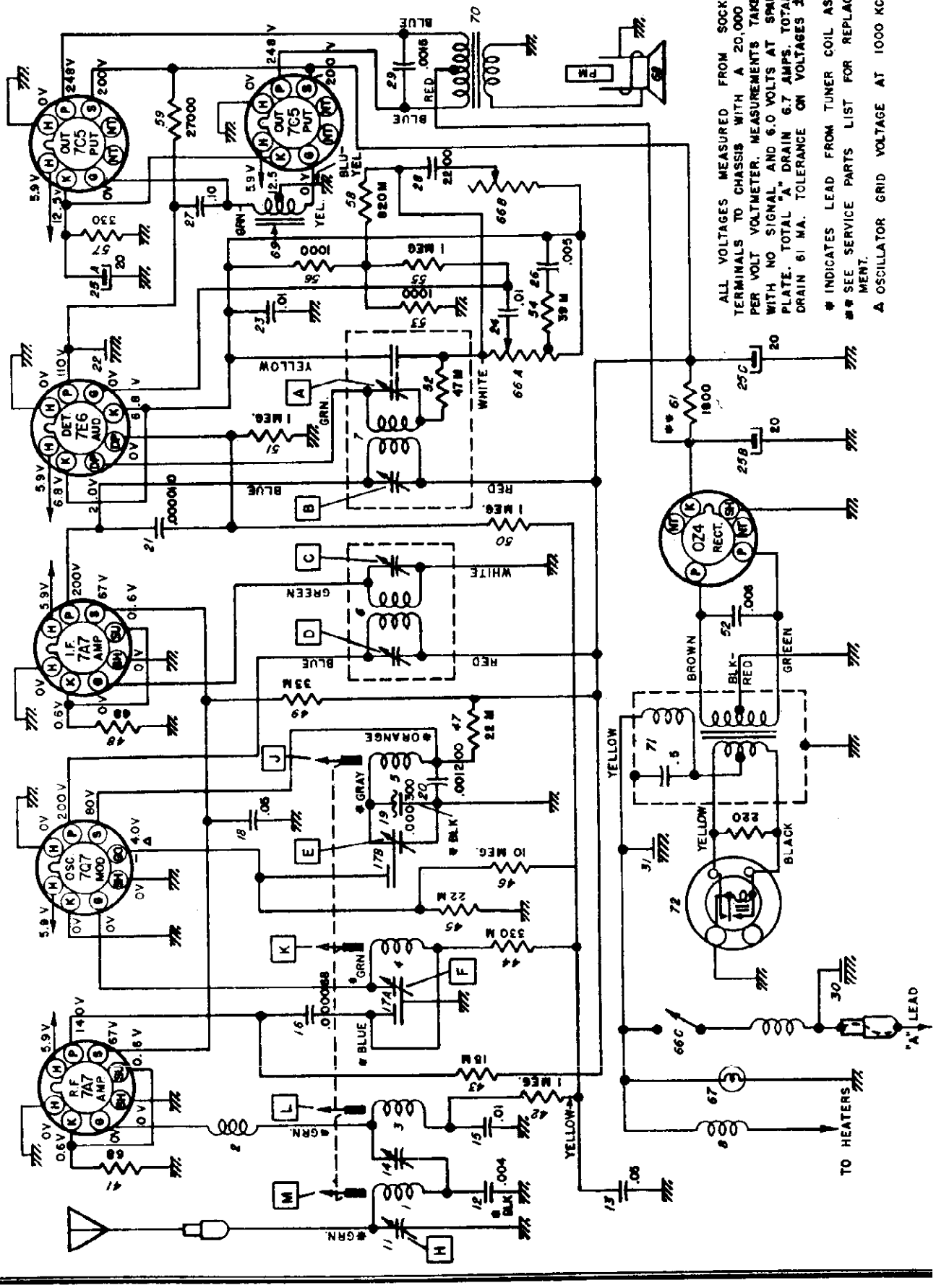

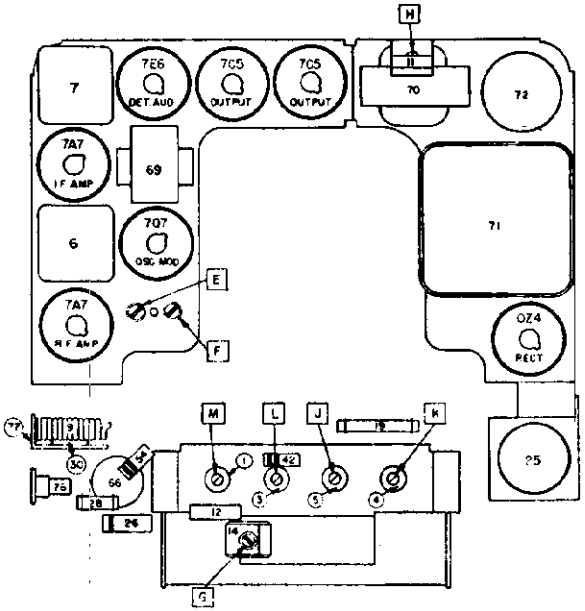

PARTS LAYOUT — TUBE VIEW

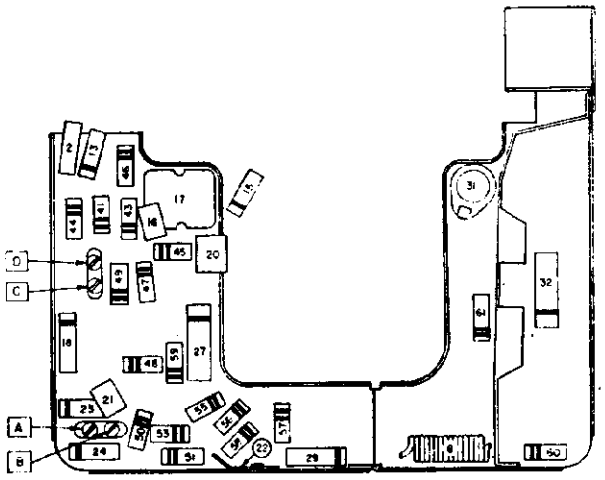

PARTS LAYOUT — CHASSIS VIEW

The tube socket voltages as measured at the factory and under the conditions shown on the schematic diagram are shown here. The blank spaces are provided so the serviceman may fill in the actual readings as taken with his own equipment. A normal operating radio should be used for these measurements.

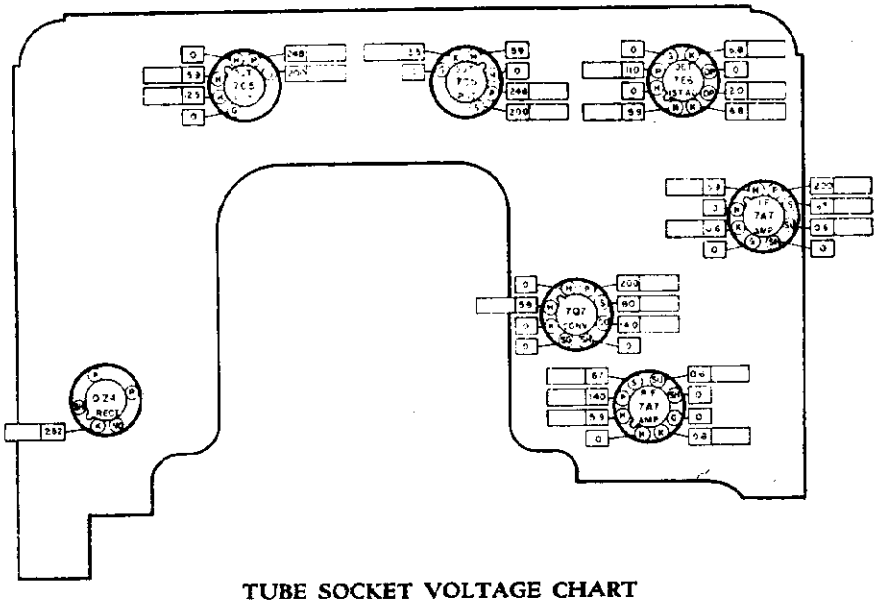

TUBE SOCKET VOLTAGE CHART

VOLTMETER RESISTANCE ..... OHMS PER VOLT. READING TAKEN WITH ..... VOLTS AT SPARK PLATE. THE VOLTAGES ARE MEASURED FROM TUBE SOCKET TERMINALS TO CHASSIS AND ARE POSITIVE UNLESS MARKED OTHERWISE.

UNITED MOTORS SERVICE
DIV. OF GENERAL MOTORS CORP.

MODEL 982421,
Oldsmobile

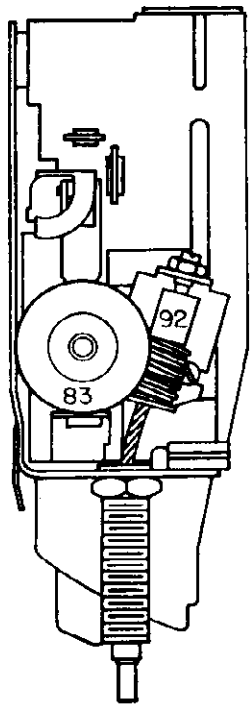

ESCUTCHEON MOUNTING

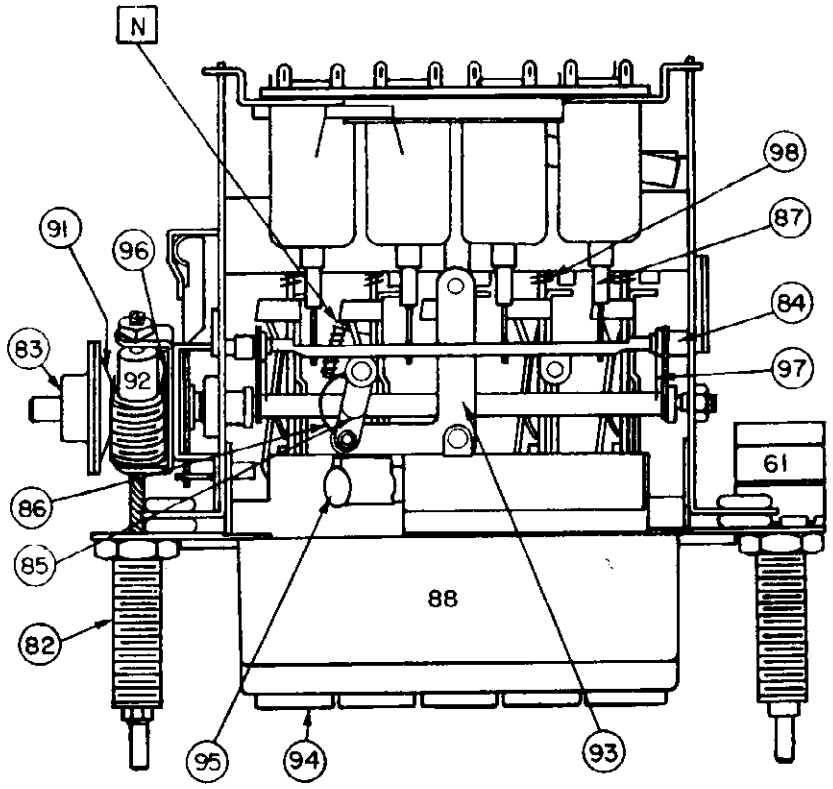

TUNER

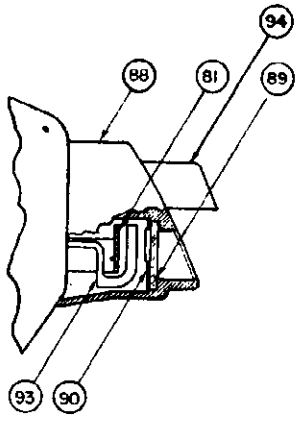

ESCUTCHEON CROSS SECTION

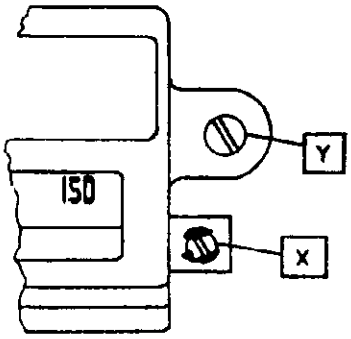

ESCUTCHEON MOUNTING

SPECIAL INSTRUCTIONS

Unless special precautions are taken in removing the dial escutcheon, there is a possibility that the dial pointer tip will be broken. Therefore in removal of the escutcheon the following procedure is recommended.

1. Loosen but do not remove the two screws holding the pointer back plate ("X" in Escutcheon Mounting Drawing Above) and loosen the shellac so that the back plate is free to move.
2. Remove the escutcheon mounting screws "Y" (see Escutcheon Mounting).
3. Carefully lift off the escutcheon (DO NOT FORCE). If the dial backplate is free to move slightly downward the escutcheon will come off easily.

The same caution should be exercised when replacing the escutcheon.

MODEL 982421,
Oldsmobile

UNITED MOTORS SERVICE
DIV. OF GENERAL MOTORS CORP.

SERVICE PARTS LIST

Illus. No.	Production Part No.	Service Part No.	Description
			ELECTRICAL PARTS
			Coils
1	7258375	7258375	Antenna (Sheet Metal Coil Cans)
1A	7258367	7258367	Antenna (Die Cast Coil Cover)
2	7240251	7240251	Antenna Spark Choke
3	7258375	7258375	1st R. F. (Sheet Metal Coil Cans)
3A	7258367	7258367	1st R. F. (Die Cast Coil Cover)
4	7258375	7258375	2nd R. F. (Sheet Metal Coil Cans)
4A	7258367	7258367	2nd R. F. (Die Cast Coil Cover)
5	7258376	7258376	Oscillator (Sheet Metal Coil Cans)
5A	7258568	7258568	Oscillator (Die Cast Coil Cover)
6	7257832	7257832	1st I. F. Assy.
7	7256932	7256932	2nd I. F. Assy.
8	1217846	1217846	Hash Choke
9	7258434	7258434	"A" Spark Choke, Fuse Connector and spark plate condenser.
			Condensers
11	7258160	7258160	Antenna Trimmer.
12	7258286	E 402	0.004 Mfd. 600 V Tubular
13	7236842	E 503	0.005 Mfd. 200 V Tubular
14	7258213	7258213	1st R. F. Trimmer
15	7239738	E 103	0.01 Mfd. 400 V Tubular
16	7236104	G 680	0.000068 Mfd. Molded
17	7258372	7258372	Dual Trimmer
17A			2nd R. F. Section
17B			Oscillator Section
18	7230892	E 503	0.05 Mfd. 200 V Tubular
19	7258445	7258445	0.000300 Mfd. Compensating
20	1217743	G 122	0.001200 Mfd. Molded
21	1215189	G 100	0.000010 Mfd. Molded
22	1217848	1217848	Chassis Plate Condenser
23	7237870	E 103	0.01 Mfd. 400 V Tubular
24	7237870	E 103	0.01 Mfd. 400 V Tubular
25	7241198	7241198	Electrolytic
25A			20 Mfd. 25 V
25B			20 Mfd. 400 V
25C			20 Mfd. 400 V
26	7232956	E 502	0.005 Mfd. 600 V Tubular
27	7238788	E 104	0.1 Mfd. 400 V Tubular
28	1217436	G 222	0.002200 Mfd. Ceramic
29	7236134	7236134	0.0015 Mfd. 800 V Tubular
30	1212278	1212278	Spark Condenser (Included in 7258434)
31	1217848	1217848	Chassis Plate Condenser
32	7240906	H 602	0.006 Mfd. 1600 V Buffer
			Resistors
41	1215558	A 680	68 Ohms ½ W Insulated
42	1213282	A 105	1 Megohm ½ W Insulated
43	7237595	B 153	15,000 Ohms 1 W Insulated
44	1214557	A 334	330,00 Ohms ½ W nsulated
45	1214550	A 223	22,000 Ohms ½ W Insulated
46	1215548	A 106	10 Megohms ½ W Insulated
47	1216156	B 223	22,000 Ohms 1 W Insulated
48	1215558	A 680	68 Ohms ½ W Insulated
49	7242447	B 333	33,000 Ohms 1 W Insulated
50	1213282	A 105	1 Megohm ½ W Insulated
51	1213282	A 105	1 Megohm ½ W Insulated
52	1214553	A 473	47,000 Ohms ½ W Insulated
53	1213235	A 102	1,000 Ohms ½ W Insulated
54	1213480	A 393	39,000 Ohms ½ W Insulated
55	1213282	A 105	1 Megohm ½ W Insulated
56	1213235	A 102	1,000 Ohms ½ W Insulated
57	7233773	B 331	330 Ohms 1 W Insulated
58	1214561	A 824	820,000 Ohms ½ W Insulated
59	1213342	B 273	27,000 Ohms 1 W Insulated
60	7237994	B 221	220 Ohms 1 W Insulated
61	1214573	C 272 and B 562	1800 Ohms — Replace with 2700 ohms 2 W and 5600 ohms 1 W in parallel

UNITED MOTORS SERVICE
DIV. OF GENERAL MOTORS CORP.

MODEL 982421,
Oldsmobile

SERVICE PARTS LIST (Cont.)

Illus. No.	Production Part No.	Service Part No.	Description
		Tubes	
	1211924	5003	0Z4—Rectifier
	1213980	5298	7E6
	1213568	5295	7C5
	1213562	5290	7A7
	1213981	5301	7Q7
		Miscellaneous Electrical	
66	7256697	7256697	Control—Volume, Tone, and Switch
66A			Volume Control
66B			Tone Control
66C			Switch
67	187189	44	Lamp—Dial Light
68	7258146	7258146	Speaker—6 x 9 Elliptical PM
69	7256432	7256432	Transformer—Input
70	7258182	7258182	Transformer—Output
71	7255881	7255881	Transformer—Power
72	7239124	8542	Vibrator—Non-synchronous
		MECHANICAL PARTS	
		Chassis	
76	7256742	7256742	Connector—Antenna
77	7258434	7258434	Connector—"A" Lead, Fuse Holder and Spark Plate Condenser
	7241356	7241356	Socket—Loctal Tube
	7236279	7236279	Socket—Octal Tube
	7239125	7239125	Socket—Vibrator
		Tuner	
81	7256688	7256688	Backplate—Pointer
	115529	115529	Ball Bearing Pkg.
82	7258492	7258492	Bushing and Manual Drive Shaft
83	7258072	7258072	Clutch Disc—Driven
84	7258366	7258366	Core Guide Bar—Parallel
85	7256271	7256271	Pointer Connecting Link
86	7255992	7255992	Spring—Pointer Connecting Link
87	7258214	7258214	Core—Powdered Iron
88	7258371	7258371	Escutcheon
89	7258154	7258154	Dial (Dark Numbers)
89A	7258596	7258596	Dial (Light Numbers)
90	7258369	7258369	Backplate—Dial
91	7256495	7256495	Gear and Bushing—Clutch
92	7256705	7256705	Gear and Bracket—Worm
93	7257898	7257898	Pointer Assy.
	1219174	1219174	Pointer Tip Pkg.
94	1219173	1219173	Pushbutton and Slide Assy. (Chrome)
94A	1219200	1219200	Pushbutton and Slide Assy. (Black)
95	1217820	1217820	Socket—Dial Light
96	7256488	7256488	Spring—Clutch
97	7257415	7257415	Spring—Core Bar Connecting Link
98	7255984	7255984	Spring—Slide Return
		INSTALLATION PARTS	
	554339	554339	Trim Plate—Instrument Panel
	554691	554691	"A" Lead, Condenser, and Fuse Connector, male
		6016	Condenser, "A" Lead
	1911095	6015	Condenser, Generator
	1912757	6015	Condenser, Ignition Coil
	1912900	1912900	Condenser, Voltage Regulator
	120151	120151	Fuse, 15 amperes
	555348	555348	Hood Ground Clip
	7256702	7256702	Knob—Control
	554515	554515	Knob—Tone Control and Dummy
	7240138	6013	Static Collector
	7257239	7257239	Suppressor—Distributor
	414237	414237	Suppressor Insulator

MODEL 982454,
Oldsmobile

UNITED MOTORS SERVICE
DIV. OF GENERAL MOTORS CORP.

GENERAL

MOUNTING—All 60 and 70 Series 1948 Oldsmobile Cars.

TUBES—Five, plus rectifier.

SPEAKER — 6"x 9" Elliptical, Permanent Magnet.

TUNING—Manual and 5 P. B. Mechanical.

ANTENNA TRIMMER COMPENSATION — For Antennas Beween 0.000060 — 0.000080 Mfd.

TUNING RANGE—550-1600 K.C.

PUSH BUTTON SETUP PROCEDURE

Pull Push Button to the left and out. Tune in desired station manually. Push button all the way in.

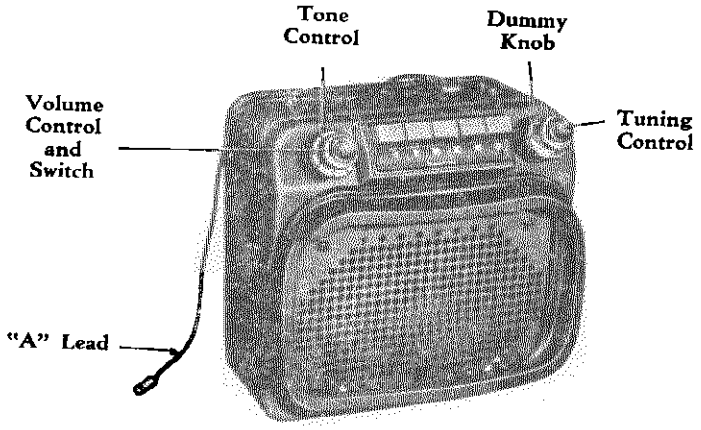

MODEL 982454

ALIGNMENT PROCEDURE

Output Meter Connections ..... Across Voice Coil
Generator Return ..... To Receiver Chassis
Dummy Antenna ..... In Series With Generator
Volume Control Position ..... Maximum Volume
Tone Control Position ..... Treble
Generator Output ..... Minimum for Readable Indication

Steps	Series Condenser or Dummy Antenna	Connect Signal Generator to	Signal Generator Frequency	Tune Receiver To	Adjust In Sequence For Max. Output
1	0.1 Mfd.	7Q7 Grid (Pin #6)	260 KC	High Frequency Stop	A B, C, D
2	0.000068 Mfd.	Antenna Connector	1615 KC	High Frequency Stop	*E, F, G
3	0.000068 Mfd.	Antenna Connector	600 KC	Signal Generator Signal	J, K
4	0.000068 Mfd.	Antenna Connector	1615 KC	High Frequency Stop	F, G
5	0.000068 Mfd.	Antenna Connector	600 KC	Signal Generator Signal	L**

*Before making this adjustment check mechanical setting of oscillator core "H." The rear of the core should be 1¾" from the mounting end of the coil form. (This measurement is readily made by inserting a suitable plug in the mounting end of the coil form.) Core adjustments should be made with an insulated screw driver, and core studs should be cemented in place with glyptal or household cement after alignment.

**L is the pointer adjustment screw which is on the connecting link, Illus. #88, between the pointer assembly and the parallel guide bar. It should be adjusted so that the dial pointer corresponds with the 600 KC mark on the dial. (Between the "6" and the "0".)

With the radio installed and the car antenna plugged in adjust the antenna trimmer "G" for maximum volume with the radio tuned to a weak station near 1400 KC (see sticker on case).

UNITED MOTORS SERVICE
DIV. OF GENERAL MOTORS CORP.

MODEL 982454,
Oldsmobile

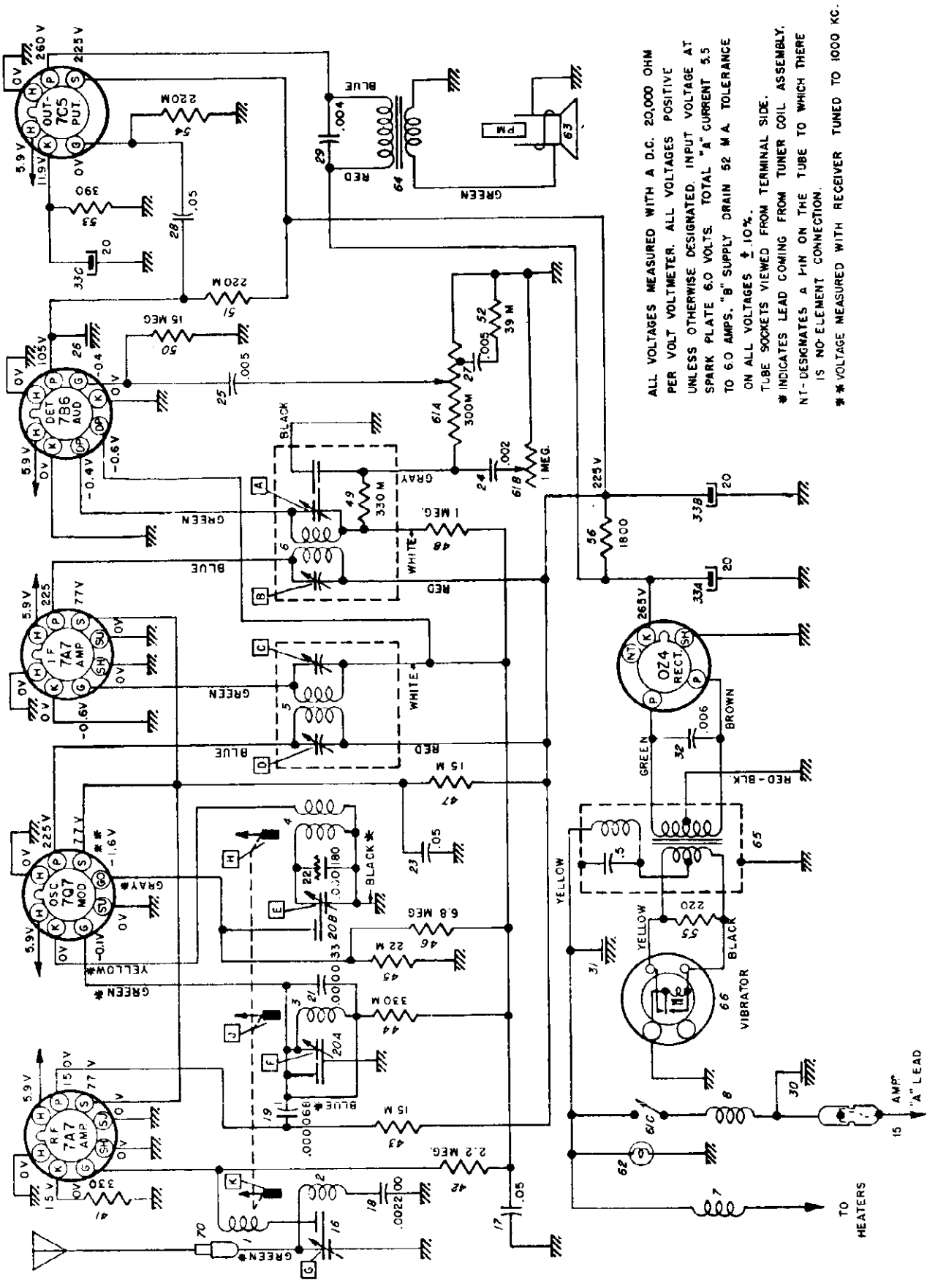

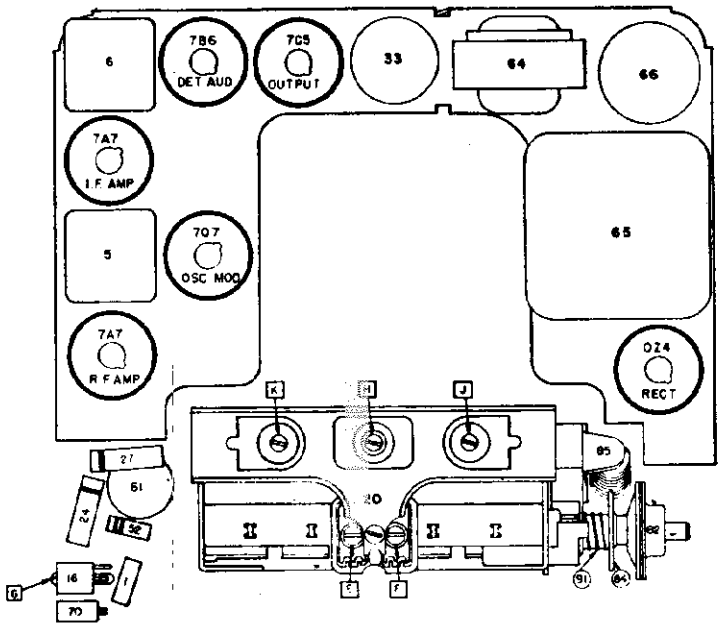

PARTS LAYOUT — TUBE VIEW

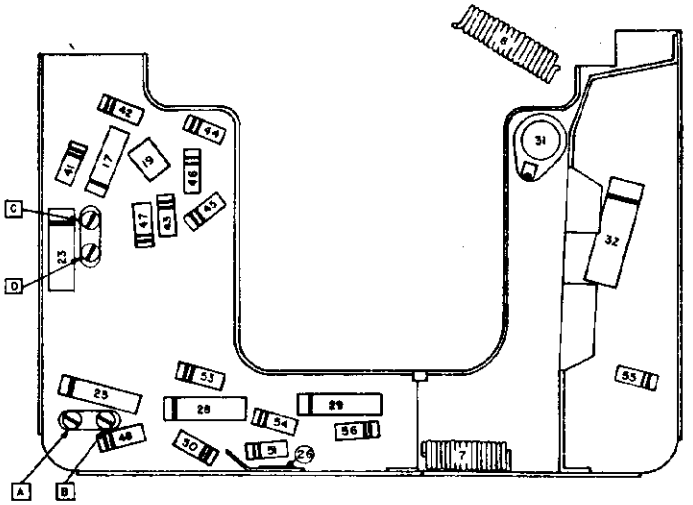

PARTS LAYOUT — CHASSIS VIEW

TUBE SOCKET VOLTAGE CHART

The tube socket voltages, as measured at the factory and under the conditions shown on the schematic diagram

The blank spaces are provided so the service man may fill in the actual voltage readings as taken with his own equipment. A normal operating radio should be used for these measurements.

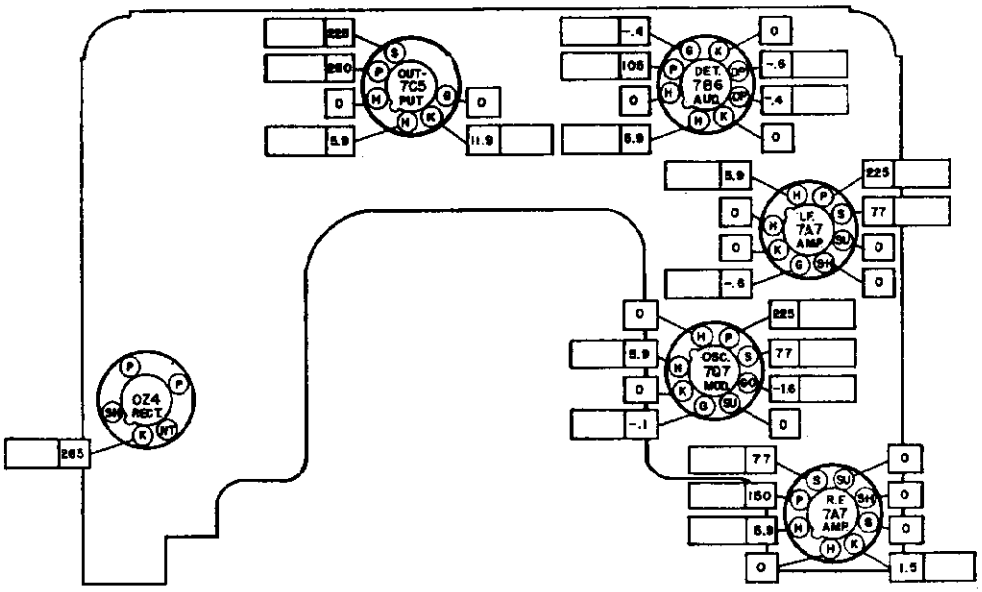

VOLT METER RESISTANCE .....OHMS PER VOLT. READINGS TAKEN WITH ..... VOLTS AT SPARK PLATE. VOLTAGES MEASURED FROM SOCKET TERMINALS TO CHASSIS AND ARE POSITIVE.

UNITED MOTORS SERVICE
DIV. OF GENERAL MOTORS CORP.

MODEL 982454,
Oldsmobile

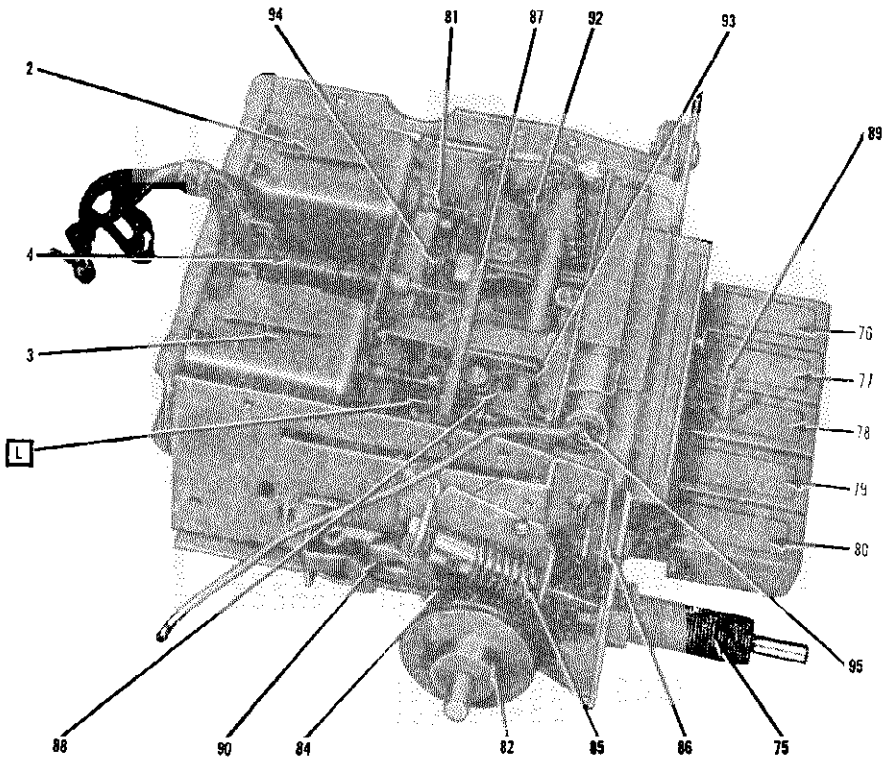

TUNER

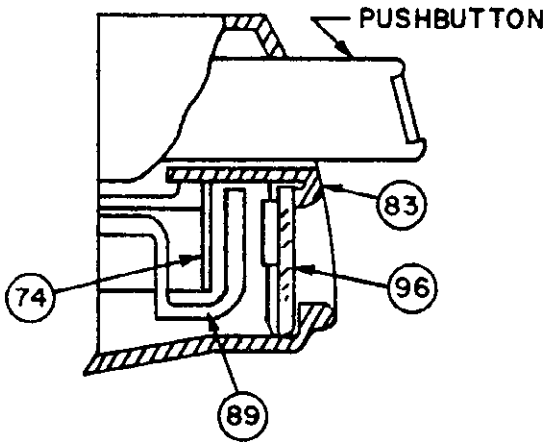

ESCUTCHEON CROSS SECTION

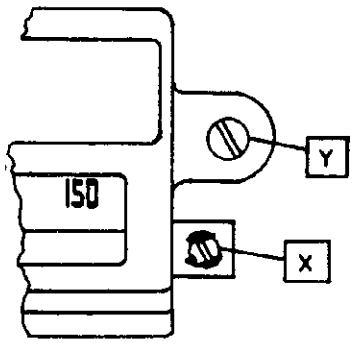

ESCUTCHEON MOUNTING

SPECIAL INSTRUCTIONS

Unless special precautions are taken in removing the dial escutcheon, there is a possibility that the dial pointer tip will be broken. Therefore in removal of the escutcheon the following procedure is recommended.

1. Loosen but do not remove the two screws holding the pointer back plate ("X" in Escutcheon Mounting Drawing Above) and loosen the shellac so that the back plate is free to move.
2. Remove the escutcheon mounting screws "Y" (see Escutcheon Mounting).
3. Carefully lift off the escutcheon (DO NOT FORCE). If the dial backplate is free to move slightly downward the escutcheon will come off easily.

The same caution should be exercised when replacing the escutcheon.

Illus. No.	Production Part No.	Service Part No.	Description
			ELECTRICAL PARTS
			COILS
1	7240251	7240251	Antenna Noise Choke
2	7257391	7257391	Antenna Coil
3	7257391	7257391	R. F. Coil
4	7257386	7257386	Oscillator Coil
5	7257832	7257832	1st I. F. Assy.
6	7256662	7256662	2nd I. F. Assy.
7	7241708	7241708	Hash Choke
8	1217846	1217846	"A" Spark Noise Choke
			CONDENSERS
16	7242013	7242013	Antenna Trimmer and Bracket
17	7236842	E503	.05 Mfd. 200V Tubular
18	1217744	G222	.002200 Mfd. Ceramic
19	1212359	G680	.000068 Mfd. Molded
20	7242454	7242454	Dual Trimmer
20A			R. F. Section — Fixed Capacity .000300 Mfd.
20B			Osc. Section — Fixed Capacity .000100 Mfd.
21	1217735	G330	.000033 Mfd. Molded
22	7257424	7257424	.000180 Mfd. Temperature Compensating
23	7230892	E503	.05 Mfd. 400V Tubular
24	7236756	E202	.002 Mfd. 600V Tubular
25	7232456	E502	.005 Mfd. 600V Tubular
26	1217848	1217848	Chassis Plate Condenser
27	7232956	E502	.005 Mfd. 600V Tubular
28	7230892	E503	.05 Mfd. 400V Tubular
29	7233243	7233243	.004 Mfd. 800V Tubular
30	7241259	7241259	Spark Plate Assy.
31	1217848	1217848	Chassis Plate Condenser
32	7240906	H602	.006 Mfd. 1600V Buffer
33	7241198	7241198	Electrolytic
33A			20 Mfd. 400V
33B			20 Mfd. 400V
33C			20 Mfd. 25V
			RESISTORS
41	1213224	A331	330 Ohms ½ W Insulated
42	1214563	A225	2.2 Megohm ½ W Insulated
43	7237595	B153	15,000 Ohms 1 W Insulated
44	1214557	A334	330,000 Ohms ½ W Insulated
45	1214550	A223	22,000 Ohms ½ W Insulated
46	1215563	A685	6.8 Megohm ½ W Insulated
47	7233653	C153	15,000 Ohms 2 W Insulated
48	1213282	A105	1 Megohm ½ W Insulated
49	1214557	A334	330,000 Ohms ½ W Insulated (In 2nd I. F.)
50	1213289	A156	15 Megohm ½ W Insulated
51	1214555	A224	220,000 Ohm ½ W Insulated
52	1213480	A393	39,000 Ohms ½ W Insulated
53	1216149	B391	390 Ohms 1 W Insulated
54	1214555	A224	220,000 Ohms ½ W Insulated
55	7237994	B221	220 Ohms 1 W Insulated
56	1214573	C272 / B562	Replace Illus. 56 with parallel — 2700 Ohm 2 W Insulated / 5600 Ohm 1 W Insulated
			TUBES
		5290	7A7
		5301	7Q7
		1213565	7B6
		5292	7C5
		1213568	0Z4 Rectifier
		5295	
		1211924	
		5003	
			MISCELLANEOUS ELECTRICAL PARTS
61	7257526	7257526	Control — Volume, Tone and Switch
61A			Volume Control
61B			Tone Control
61C			On-off Switch
62	187189	44	Lamp, Dial (Mazda 44)
63	7257645	7257645	Speaker, 6 x 9 Elliptical, Permanent Magnet
64	7256664	7256664	Transformer, Output
65	7255881	7255881	Transformer, Power
66	7239124	8542	Vibrator
			MECHANICAL PARTS
			CHASSIS
70	7256742	7256742	Connector, Antenna
	7241356	7241356	Socket, Loctal Tube
	7236279	7236279	Socket, Octal Tube
	7239125	7239125	Socket, Vibrator
			TUNER PARTS
74	7257535	7257535	Backplate, Pointer
75	1218277	1218277	Bushing and Drive Shaft Assy.
76	1218270	1218270	Button and Slide Assy. No. 1 Button
77	1218271	1218271	Button and Slide Assy. No. 2 Button
78	1218272	1218272	Button and Slide Assy. No. 3 Button
79	1218273	1218273	Button and Slide Assy. No. 4 Button
80	1218274	1218274	Button and Slide Assy. No. 5 Button
81	7257392	7257392	Core, Tuning
82	7256105	7256105	Disc. Clutch
83	7257536	7257536	Escutcheon Assy.
96	7257534	7257534	Dial
84	7256495	7256495	Gear and Bushing Assy.
85	7256705	7256705	Gear and Bracket (Worm Gear)
86	7237172	7237172	Grommet, Tuner Mounting
87	7256179	7256179	Parallel Guide Bar Assy.
88	7256271	7256271	Pointer Adjuster Assy.
89	1218269	1218269	Pointer Tip Package
			Pointer Tip
			Screw, Nut, and Lockwasher
90	7255989	7255989	Spring, Cam Return
91	7256488	7256488	Spring, Clutch
92	7257415	7257415	Spring, Connecting Link, Guide Bar
93	7255992	7255992	Spring, Connecting Link, Pointer
94	7255984	7255984	Spring, Slide Return
95	1217820	1217820	Socket and Lead, Dial Light
			INSTALLATION PARTS
	7255608	6016	Condenser, "A" Lead
	1211095	6015	Condenser, Generator
	1910147	6015	Condenser, Ignition Coil
	1218333	1218333	Fuseholder
	120151	120151	Fuse, 15 Amp.
	414237	414237	Insulator, Distributor Suppressor
	7256702	7256702	Knob
	7257427	7257427	Knob (Dummy)
	7256692	7256692	Knob, Tone Control
	7240138	6013	Static Collector
	7257239	7257239	Suppressor, Distributor

UNITED MOTORS SERVICE
DIV. OF GENERAL MOTORS CORP.

MODEL 982455, Oldsmobile

GENERAL

MOUNTING ..... All 60 and 70 Series 1948 Oldsmobiles

TUBES ..... Six, Plus Rectifier

SPEAKER ..... 6" x 9" Elliptical Permanent Magnet

TUNING ..... Manual and 5 P. B. Mechanical

ANTENNA TRIMMER COMPENSATION — For Antennas Between 0.000060 — 0.000080 Mfd.

TUNING RANGE ..... 550 - 1600 KC.

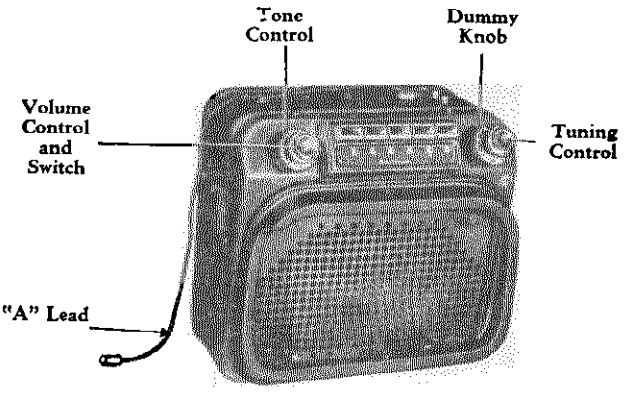

MODEL 982455

PUSHBUTTON SET-UP

Pull pushbutton to the left and out. Tune in desired station manually. Push button all the way in.

ALIGNMENT PROCEDURE:

Output Meter Connections ..... Across Voice Coil
Generator Return ..... To Receiver Chassis
Dummy Antenna ..... In Series With Generator
Volume Control Position ..... Maximum Volume
Tone Control Position ..... Treble
Generator Output ..... Minimum for Readable Indication

Steps	Series Condenser or Dummy Antenna	Connect To	Signal Generator Frequency	Tune Receiver To	Adjust In Sequence For Max. Output
1	0.1 Mfd.	7Q7 Grid (Pin. #6)	260 KC	High Frequency Stop	A, B, C, D
2	0.000068 Mfd.	Antenna Connector	1615 KC	High Frequency Stop	*E, F, G
3	0.000068 Mfd.	Antenna Connector	600 KC	Signal Generator Signal	J, K
4	0.000068 Mfd.	Antenna Connector	1615 KC	High Frequency Stop	F, G
5	0.000068 Mfd.	Antenna Connector	600 KC	Signal Generator Signal	**L

*Before making this adjustment check the mechanical setting of the oscillator core "H". The slotted end of core should be 1¾" from the mounting end of the coil form. (This measurement is readily made by inserting a suitable plug in the mounting end of the coil form.) Core adjustments should be made with an insulated screwdriver and core studs should be cemented in place with gyptal or household cement after alignment.

**L is the pointer adjustment screw which is on the pointer connecting link (illustration #88, see tuner picture) and should be adjusted so the pointer reads 600 KC. (Between the "6" and the "0".)

With the radio installed and the car antenna plugged in adjust the antenna trimmer "G" for maximum volume with the radio tuned to a weak station near 1400 KC. (See sticker on case.)

The tube socket voltages as measured at the factory and under the conditions shown on the schematic diagram The blank spaces are provided so the serviceman may fill in the actual readings as taken with his own equipment. A normal operating radio should be used for these measurements.

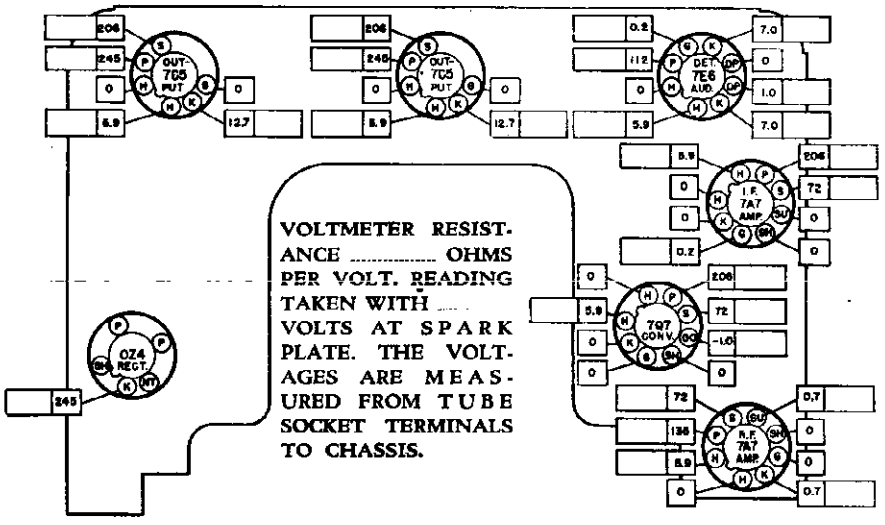

TUBE SOCKET VOLTAGE CHART

MODEL 982455,
Oldsmobile

UNITED MOTORS SERVICE
DIV. OF GENERAL MOTORS CORP.

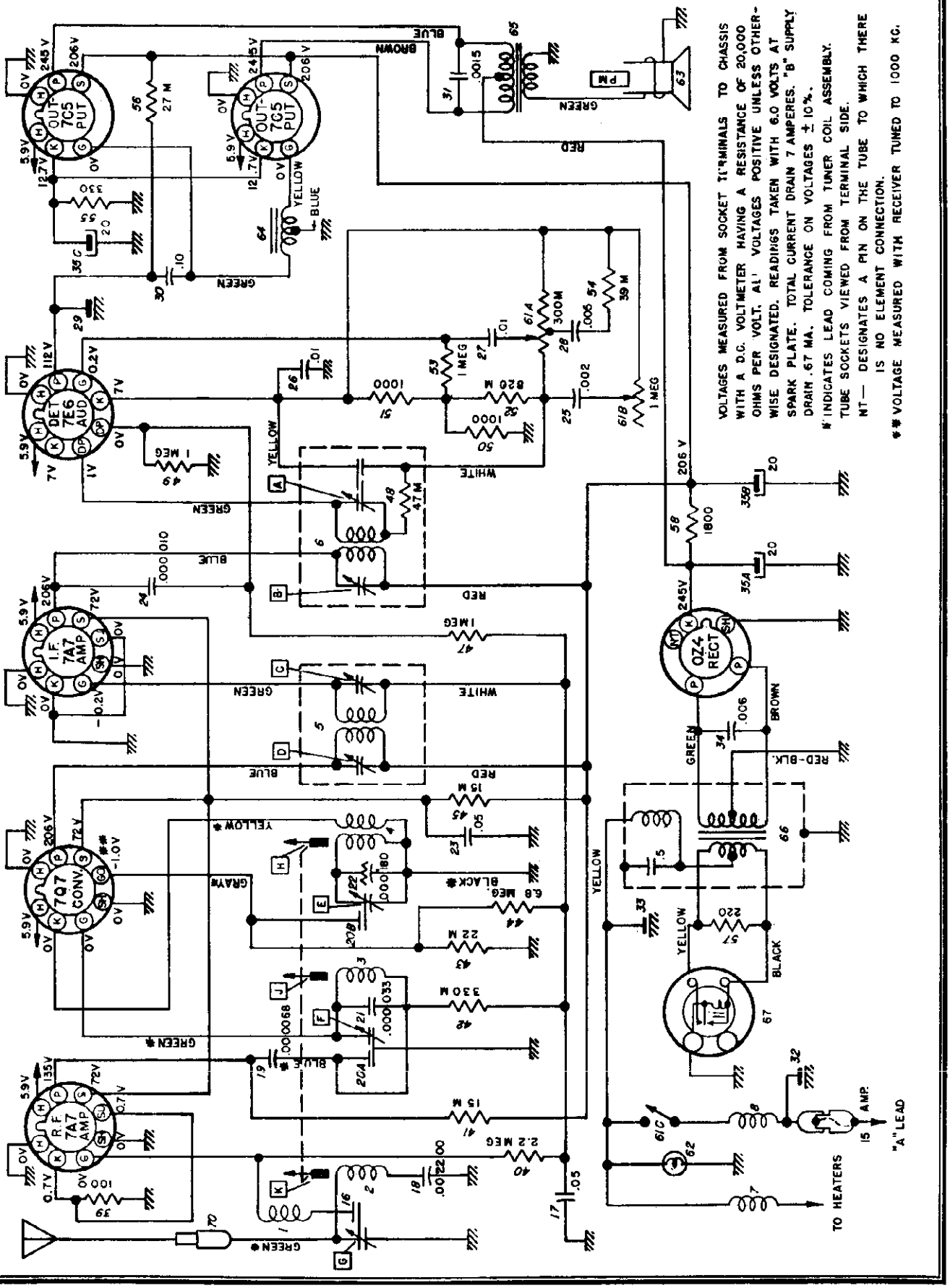

UNITED MOTORS SERVICE
DIV. OF GENERAL MOTORS CORP.

MODEL 982455,
Oldsmobile

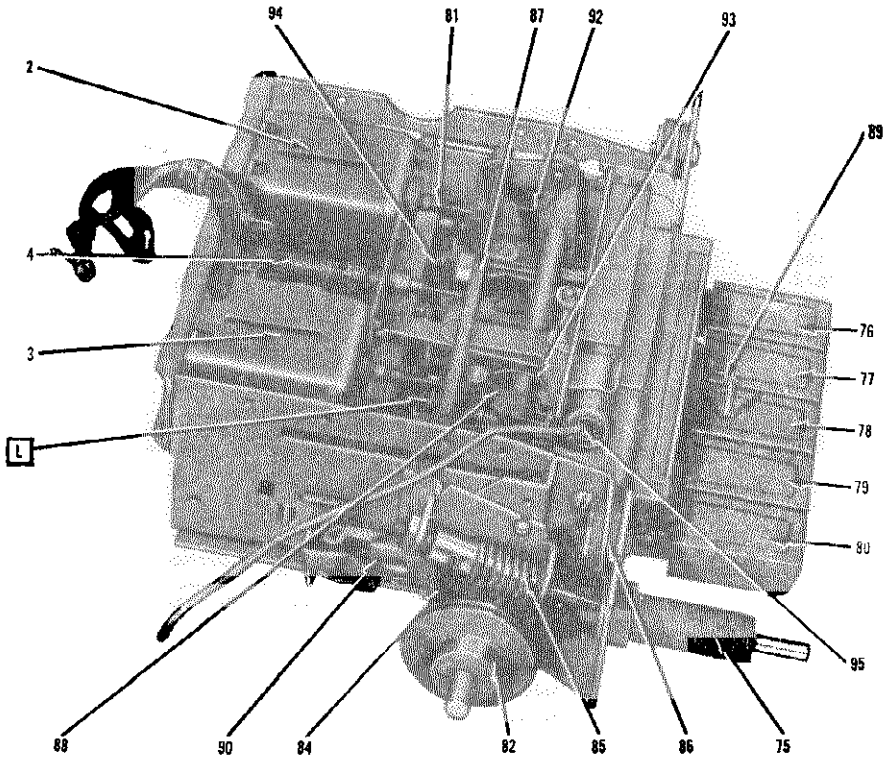

TUNER

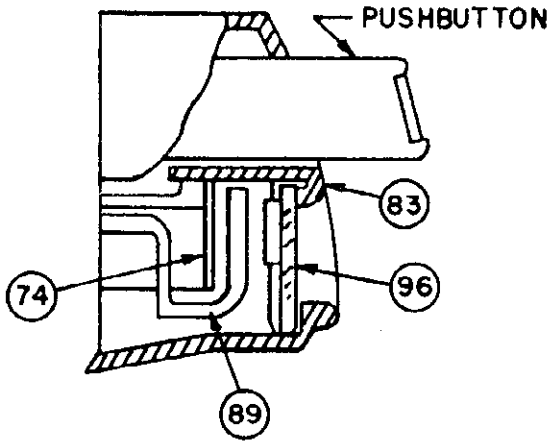

ESCUTCHEON CROSS SECTION

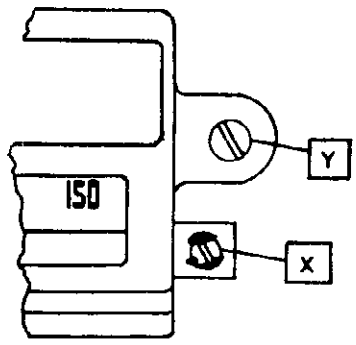

ESCUTCHEON MOUNTING

SPECIAL INSTRUCTIONS

Unless special precautions are taken in removing the dial escutcheon, there is a possibility that the dial pointer tip will be broken. Therefore in removal of the escutcheon the following procedure is recommended.

1. Loosen, but do not remove, the two screws holding the pointer backplate ("X" in Escutcheon Mounting Drawing Above) and loosen the shellac so that the backplate is free to move.
2. Remove the escutcheon mounting screw "Y". (See Escutcheon Mounting).
3. Carefully lift off the escutcheon (DO NOT FORCE.) If the dial backplate is free to move slightly downward the escutcheon will clear the backplate and come off easily without breaking the pointer tip.

The same caution should be used when replacing the escutcheon.

MODEL 982455, Oldsmobile

UNITED MOTORS SERVICE
DIV. OF GENERAL MOTORS CORP.
SERVICE PARTS LIST

Illus. No.	Production Part No.	Service Part No.	Description
			ELECTRICAL PARTS
			COILS
1	7240251	7240251	Antenna Choke
2	7257391	7257391	Antenna Coil
3	7257391	7257391	R. F. Coil
4	7257386	7257386	Oscillator Coil
5	7257832	7257832	1st I. F. Assembly
6	7256932	7256932	2nd I. F. Assembly (Contains Illus. #48)
7	7241708	7241708	Hash Choke
8	1217846	1217846	"A" Spark Noise Choke
			CONDENSERS
16	7242013	7242013	Antenna Trimmer and Bracket
17	7236842	E503	.05 Mfd. 200 V. Tubular
18	1217744	G222	.002200 Mfd. Ceramic
19	1212359	G680	.000068 Mfd. Molded
20	7242454	7242454	Dual Trimmer
20A			R. F. Section - Fixed Capacity .000300 Mfd.
20B			Osc. Section - Fixed Capacity .000100 Mfd.
21	1217735	G330	.000033 Mfd. Molded
22	7257424	7257424	.000180 Mfd. — Temperature Compensating
23	7230892	E503	.05 Mfd. 400 V. Tubular
24	1215189	G100	.000010 Mfd. Molded
25	7236756	E202	.002 Mfd. 600 V. Tubular
26	7237870	E103	.01 Mfd. 400 V. Tubular
27	7237870	E103	.01 Mfd. 400 V. Tubular
28	7232956	E502	.005 Mfd. 600 V. Tubular
29	1217848	1217848	Chassis Plate Condenser
30	7238788	E104	0.1 Mfd. 400 V. Tubular
31	7236134	7236134	.0015 Mfd. 800 V. Tubular
32	7241259	7241259	Spark Plate
33	1217848	1217848	Chassis Plate Condenser
34	7240906	H602	.006 Mfd. 1600 V. Buffer
35	7241198	7241198	Electrolytic Condenser
35A			20 Mfd. 400 V.
35B			20 Mfd. 400 V.
35C			20 Mfd. 25 V.
			RESISTORS
39	1213217	A101	100 Ohms ½ W. Insulated
40	1214563	A225	2.2 Megohm ½ W. Insulated
41	7237595	B153	15,000 Ohms 1 W. Insulated
42	1214557	A334	330,000 Ohms ½ W. Insulated
43	1214550	A223	22,000 Ohms ½ W. Insulated
44	1214565	A395	3.9 Megohm ½ W. Insulated
45	7233653	C153	15,000 Ohms 2 W. Insulated
47	1213282	A105	1 Megohm ½ W. Insulated
48	1214553	A473	47,000 Ohms ½ W. Insulated (Included in 2nd I. F. Assy.)
49	1213282	A105	1 Megohm ½ W. Insulated
50	1213235	A102	1,000 Ohms ½ W. Insulated
51	1213235	A102	1,000 Ohms ½ W. Insulated
52	1214561	A824	820,000 Ohms ½ W. Insulated
53	1213282	A105	1 Megohm ½ W. Insulated
54	1213480	A393	39,000 Ohms ½ W. Insulated
55	7233773	B331	330 Ohms 1 W. Insulated
56	1213342	B273	27,000 Ohms 1 W. Insulated
57	7237994	B221	220 Ohms 1 W. Insulated
58	1214573	C272 / B562	Replace Illus. 58 with parallel (2700 Ohms 2 W. Insulated / 5600 Ohms 1 W. Insulated)
			TUBES
	1213562	5290	7A7
	1213981	5301	7Q7
	1213980	5298	7E6
	1213568	5295	7C5
	1211924	5003	0Z4

TUBE SOCKET VOLTAGE CHART

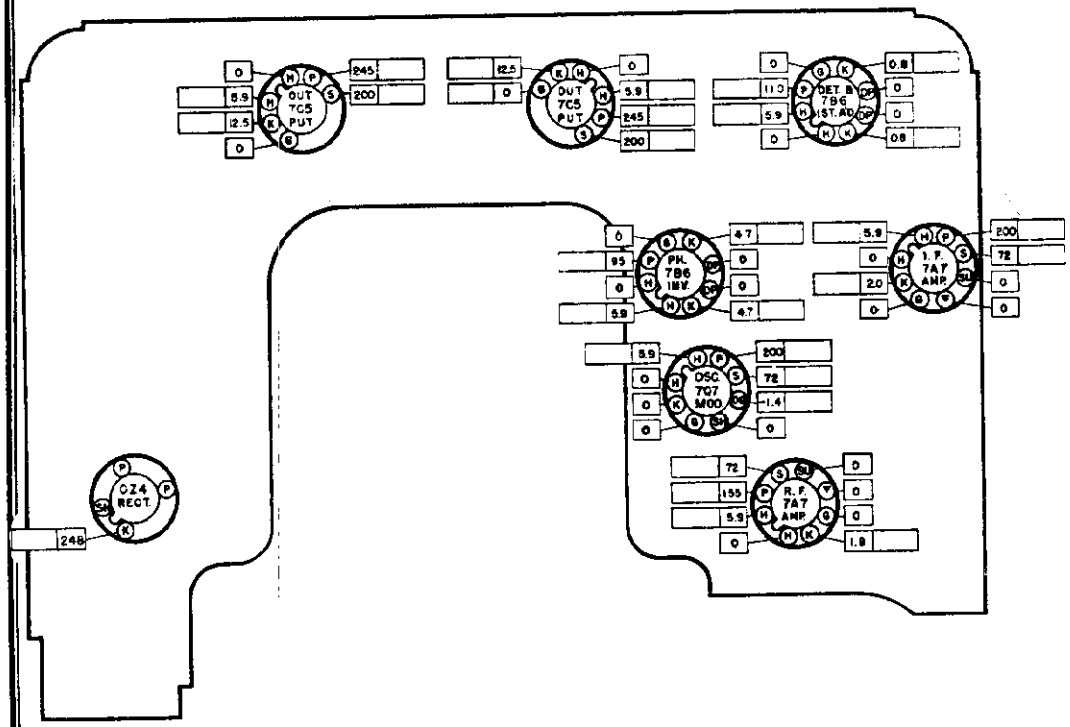

The tube socket voltages, as measured at the factory and under the conditions shown on the Schematic Diagram on Page 3, are shown above. The blank spaces are provided so the serviceman may fill in actual voltage readings as taken with his own equipment. A normal operating radio should be used for these measurements.

Voltmeter resistance is .....ohms per volt. Voltages taken with..... volts at the spark plate. Tolerance on voltages is ± 10%. All readings are taken from socket terminals to chassis.

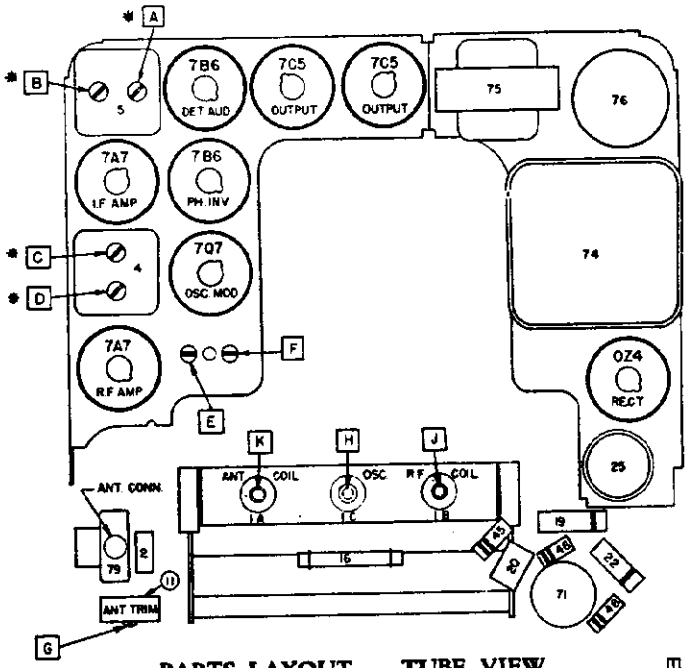

PARTS LAYOUT — TUBE VIEW

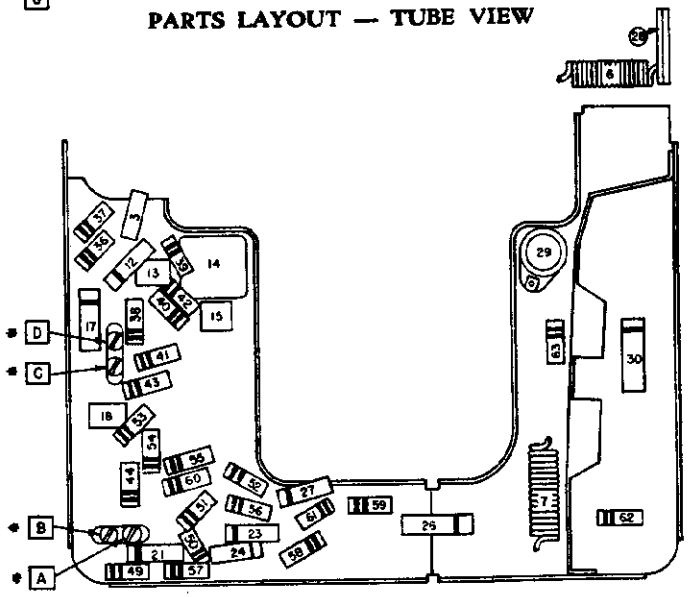

PARTS LAYOUT — CHASSIS VIEW

*Radios with serial numbers starting with "6" have these trimmers on the PARTS side of chassis. Radios with serial numbers starting with "B" have these trimmers on TUBE side of chassis.

MODEL 984296,
Pontiac

UNITED MOTORS SERVICE
DIV. OF GENERAL MOTORS CORP.

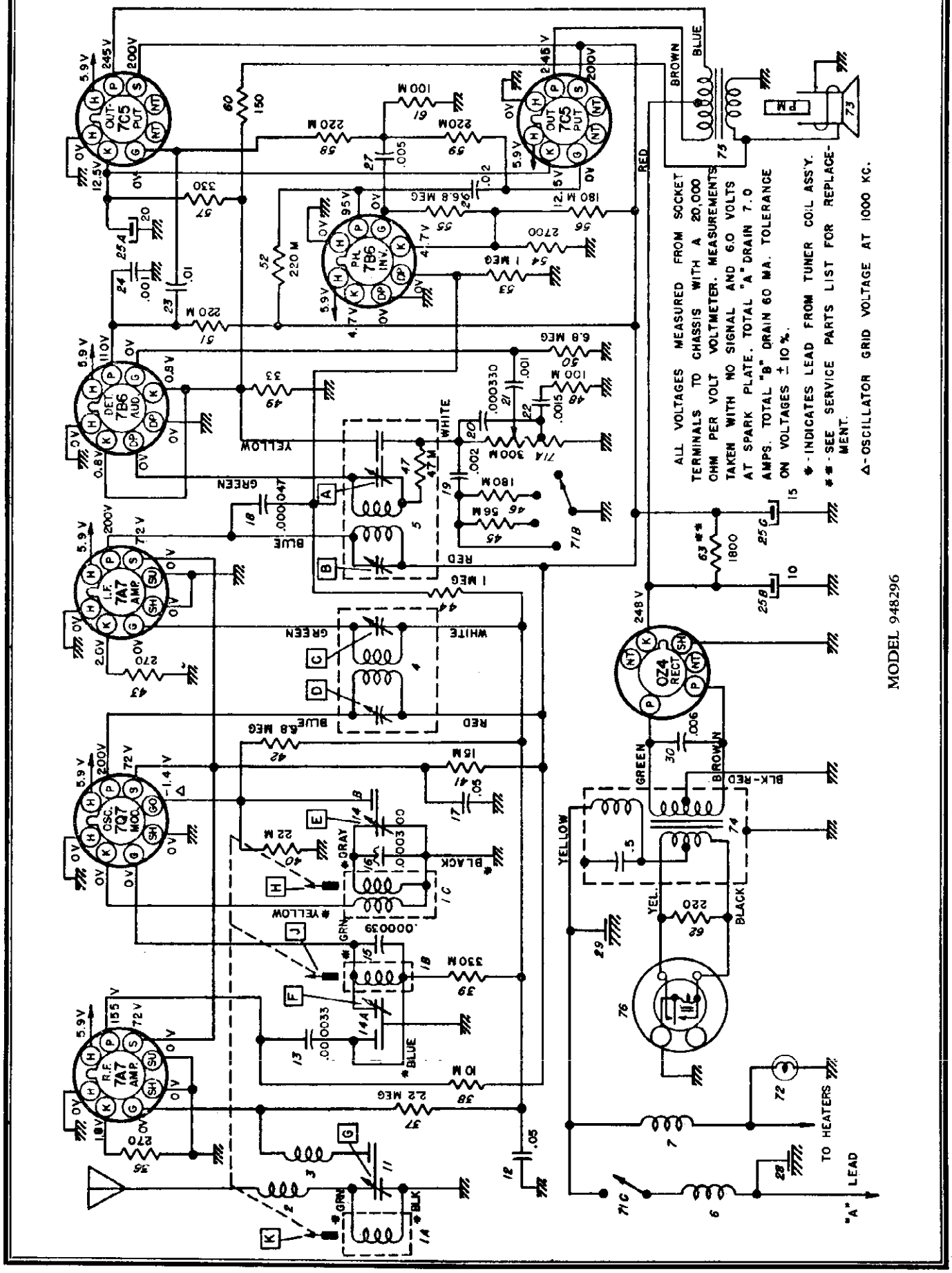

UNITED MOTORS SERVICE
DIV. OF GENERAL MOTORS CORP.
SERVICE PARTS LIST

MODEL 984296, Pontiac

Illus. No.	Production Part No.	Service Part No.	Description
			ELECTRICAL PARTS
			Coils
1	7257956	7257956	Coil Assy. - Tuning
1A			Antenna
1B			R. F.
1C			Oscillator
2	7255738	7255738	Antenna Series Choke
3	7240251	7240251	Antenna Spark Choke
4	7257832	7257832	1st I. F.
5	7256932	7256932	2nd I. F.
6	7241701	7241701	"A" Spark Choke
7	7241708	7241708	Hash Choke
			Condensers
11	7257959	7257959	Antenna Trimmer
12	7236842	E 503	0.05 Mfd. 200 V. Tubular
13	1218348	G 330	0.000033 Mfd. Ceramic
14	7242454	7242454	Dual Trimmer
14A			R. F. Section
14B			Oscillator Section
15	7258221	G 390	0.000039 Mfd. Ceramic
16	7258162	7258162	0.000300 Mfd. Compensating
17	7258125	E 503	0.05 Mfd. 400 V. Tubular
18	7233313	G 470	0.000047 Mfd. Molded
19	7237954	E 202	.002 Mfd. 600 V. Tubular
20	7232957	G 331	0.000330 Mfd. Molded
21	7239188	E 102	0.001 Mfd. 600 V. Tubular
22	1218499	1218499	0.0015 Mfd. 200 V. Tubular
23	1209309	E 103	0.01 Mfd. 400 V. Tubular
24	7239188	E 102	.001 Mfd. 600 V. Tubular
25	7238830	M 908	Electrolytic
25A			20 Mfd. 25 V.
25B			10 Mfd. 400 V.
25C			15 Mfd. 400 V.
26	7258124	E 203	0.02 Mfd. 400 V. Tubular
27	7230767	E 502	0.005 Mfd. 600 V. Tubular
28	7241259	7241259	Spark Plate
29	1217848	1217848	Chassis Plate Condenser
30	7240906	H 602	0.006 Mfd. 1600 V. Buffer
			Resistors
36	1214542	A 271	270 Ohms ½ W. Insulated
37	1214563	A 225	2.2 Megohms ½ W. Insulated
38	1211085	B 103	10,000 Ohms 1 W. Insulated
39	1214557	A 334	330,000 Ohms ½ W. Insulated
40	1214550	A 223	22,000 Ohms ½ W. Insulated
41	7233653	C 153	15,000 Ohms 2 W. Insulated
42	1215563	A 685	6.8 Megohms ½ W. Insulated
43	1214542	A 271	270 Ohms ½ W. Insulated
44	1213282	A 105	1 Megohm ½ W. Insulated
45	1213267	A 563	56,000 Ohms ½ W. Insulated
46	1215560	A 184	180,000 Ohms ½ W. Insulated
47	1214553	A 473	47,000 Ohms ½ W. Insulated (in 2nd I. F. Can)
48	1213270	A 104	100,000 Ohms ½ W. Insulated
49	1214538	A 330	33 Ohms ½ W. Insulated
50	1215563	A 685	6.8 Megohms ½ W. Insulated
51	1214555	A 224	220,000 Ohms ½ W. Insulated
52	1214555	A 224	220,000 Ohms ½ W. Insulated
53	1213282	A 105	1 Megohm ½ W. Insulated
54	1213240	A 272	2700 Ohms ½ W. Insulated
55	1215563	A 685	6.8 Megohms ½ W. Insulated
56	1215560	A 184	180,000 Ohms ½ W. Insulated
57	7233773	B 331	330 Ohms 1 W. Insulated
58	1214555	A 224	220,000 Ohms ½ W. Insulated
59	1214555	A 224	220,000 Ohms ½ W. Insulated
60	1213220	A 151	150 Ohms ½ W. Insulated
61	1213270	A 104	100,000 Ohms ½ W. Insulated
62	7237994	B 221	220 Ohms 1 W. Insulated
63	1214573	C 272 / B 562	1800 Ohms — Replace with 2700 Ohms 2 W. and 5600 Ohm 1 W. in parallel

MODEL 984296,
Pontiac

UNITED MOTORS SERVICE
DIV. OF GENERAL MOTORS CORP.

SERVICE PARTS LIST

Illus. No.	Production Part No.	Service Part No.	Description
		Tubes	
	1213565	5292	7B6
	1213568	5295	7C5
	1213981	5301	7Q7
	1213562	5290	7A7
	1211924	5003	OZ4
		Miscellaneous Electrical	
71	7257708	7257708	Control - Volume, Tone and Switch
71A			Volume Control
71B			Tone Control
71C			Switch
72	187189	44	Lamp - Dial Light
73	7256355	7256355	Speaker - 6 x 9 Elliptical, Permanent Magnet
74	7255881	7255881	Transformer - Power
75	7240453	7240453	Transformer - Output
76	7239124	8542	Vibrator - Nonsynchronous
		MECHANICAL PARTS	
		Chassis	
79	7257746	7257746	Socket - Antenna
	7241356	7241356	Socket - Loctal Tube
	7236279	7236279	Socket - Octal Tube
	7239125	7239125	Socket - Vibrator
		Tuner	
81	7257722	7257722	Backplate - Pointer
82	7258494	7258494	Bushing and Manual Drive Shaft
83	7258072	7258072	Clutch Disc - Driven
84	7258203	7258203	Connecting Link - Core Bar
85	7258210	7258210	Core Guide Bar - Parallel
86	7256271	7256271	Pointer Connecting Link
87	7255992	7255992	Spring - Pointer Connecting Link
88	7258468	7258468	Core - Powdered Iron
89	7257717	7257717	Escutcheon Assy.
90	7257721	7257721	Dial
	7257719	7257719	Backplate - Dial
	7257718	7257718	Spring, Dial Retainer
91	7256495	7256495	Gear and Bushing - Clutch
92	7257742	7257742	Pointer Assy.
	1219120	1219120	Pointer Tip Pkg.
93	7256488	7256488	Spring Clutch
94	7257415	7257415	Spring - Core Bar Connecting Link
95	7255984	7255984	Spring - Slide Return
96	1218884	1218884	Socket - Dial Light
97	1218885	1218885	Push Button and Tuner Slide
98	7257711	7257711	Worm Gear and Bracket
		INSTALLATION PARTS	
	1911948	6015	Condenser, "A" Lead
	1911095	6015	Condenser, Generator
	147685	147685	Fuse, 14 Amps
	511834	511834	Knob, Control
	511831	511831	Knob, Dummy
	511833	511833	Knob, Tone Control
	511836	511836	Trim Plate, Radio

UNITED MOTORS SERVICE
DIV. OF GENERAL MOTORS CORP.

MODEL 984249,
Pontiac

GENERAL

MOUNTING—All 1948 Pontiac Cars.

TUBES—Seven, Plus Rectifier.

SPEAKER—6" x 9" Elliptical, Permanent Magnet.

TUNING—Manual and 5 P. B. Solenoid Operated.

ANTENNA TRIMMER CONPENSATION — For Antennas Between 0.000060 - 0.000095 Mfd.

TUNING RANGE — 550-1600 KC.

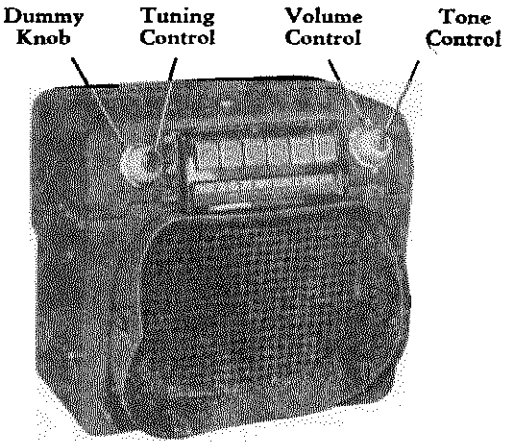

MODEL 984249

PUSHBUTTON SET-UP

Pull button off. Push set up knob all the way in and release. Turn set up knob until desired station is tuned in. Replace button.

ALIGNMENT PROCEDURE

Output Meter Connections ..... Across Voice Coil

Generator Ground ..... Receiver Chassis

Dummy Antenna ..... In Series With Generator

Volume Control Position ..... Maximum Volume

Tone Control Position ..... Treble

Generator Output ..... Minimum For Readable Indication

Steps	Dummy Antenna or Series Condenser	Connect To	Signal Generator Frequency	Tune Receiver To	Adjust In Order For Max. Output
1	0.1 Mfd.	6SA7 Grid (Pin #8)	260 KC	High Frequency Stop	A, B, C, D
2	0.000068 Mfd.	Antenna Connector	1615 KC	High Frequency Stop	*F, G
3	0.000068 Mfd.	Antenna Connector	1200 KC	Signal Generator Sig.	J, K
4	0.000068 Mfd.	Antenna Connector	1615 KC	High Frequency Stop	F, G

*Before making this adjustment check setting of oscillator core "H." This should be adjusted so that the end opposite the core stud is $1\frac{11}{32}$" from the terminal board end of the coil form. (This measurement is readily made by inserting a suitable plug in the coil form.)

With radio installed and the antenna plugged in adjust trimmer "G" for maximum volume with the radio tuned to a weak station near 1400 KC.

TUBE SOCKET VOLTAGE CHART

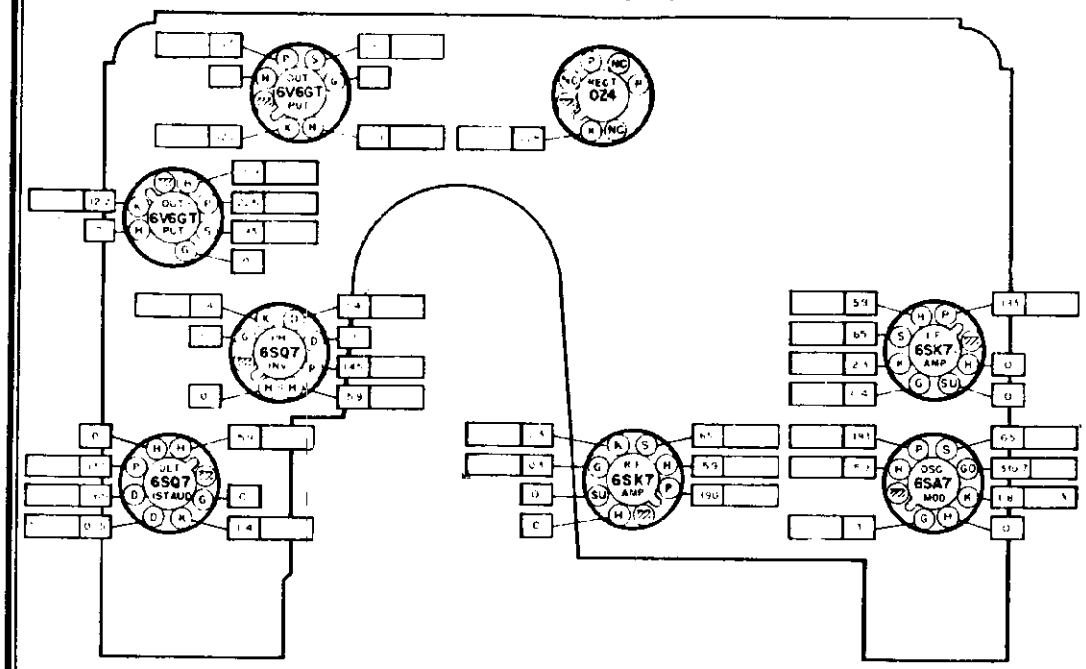

PARTS LAYOUT — TUBE VIEW

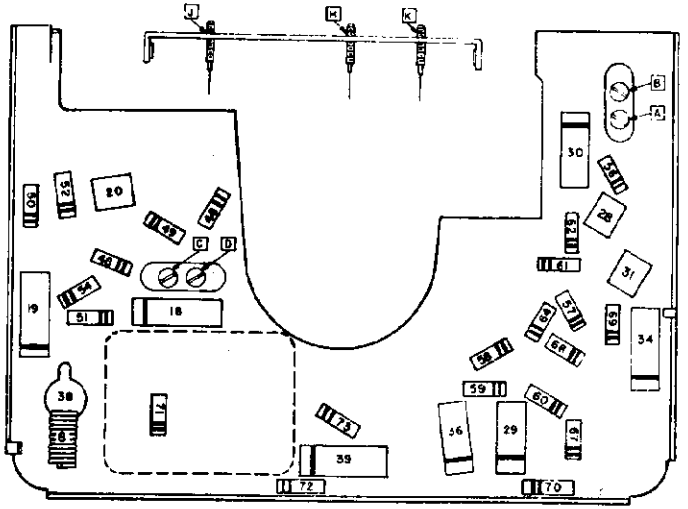

PARTS LAYOUT — CHASSIS VIEW

The tube socket voltages, as measured at the factory and under the conditions shown on the Schematic Diagram on Page 3, are shown above. The blank spaces are provided so the serviceman may fill in actual voltage readings as taken with his own equiqment. A normal operating radio should be used for these measurements.

Voltmeter resistance is .... ohms per volt. Voltages taken with..... volts at the spark plate. Tolerance on voltages is ± 10%. All readings are taken from socket terminals to chassis.

UNITED MOTORS SERVICE
DIV. OF GENERAL MOTORS CORP.

MODEL 984249,
Pontiac

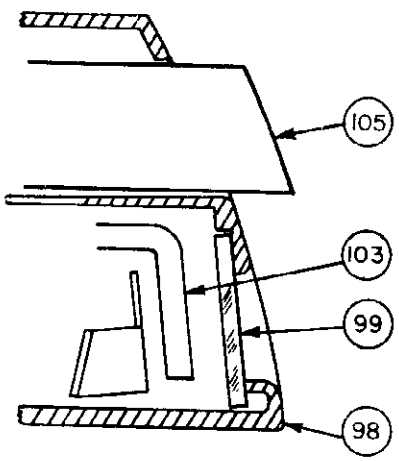

ESCUTCHEON CROSS SECTION

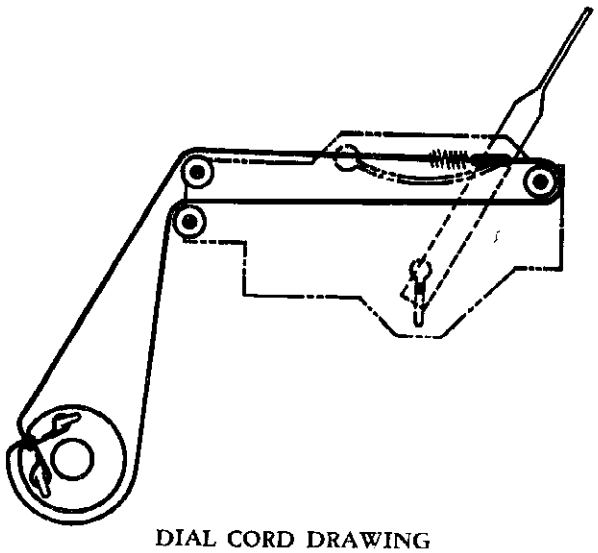

DIAL CORD DRAWING

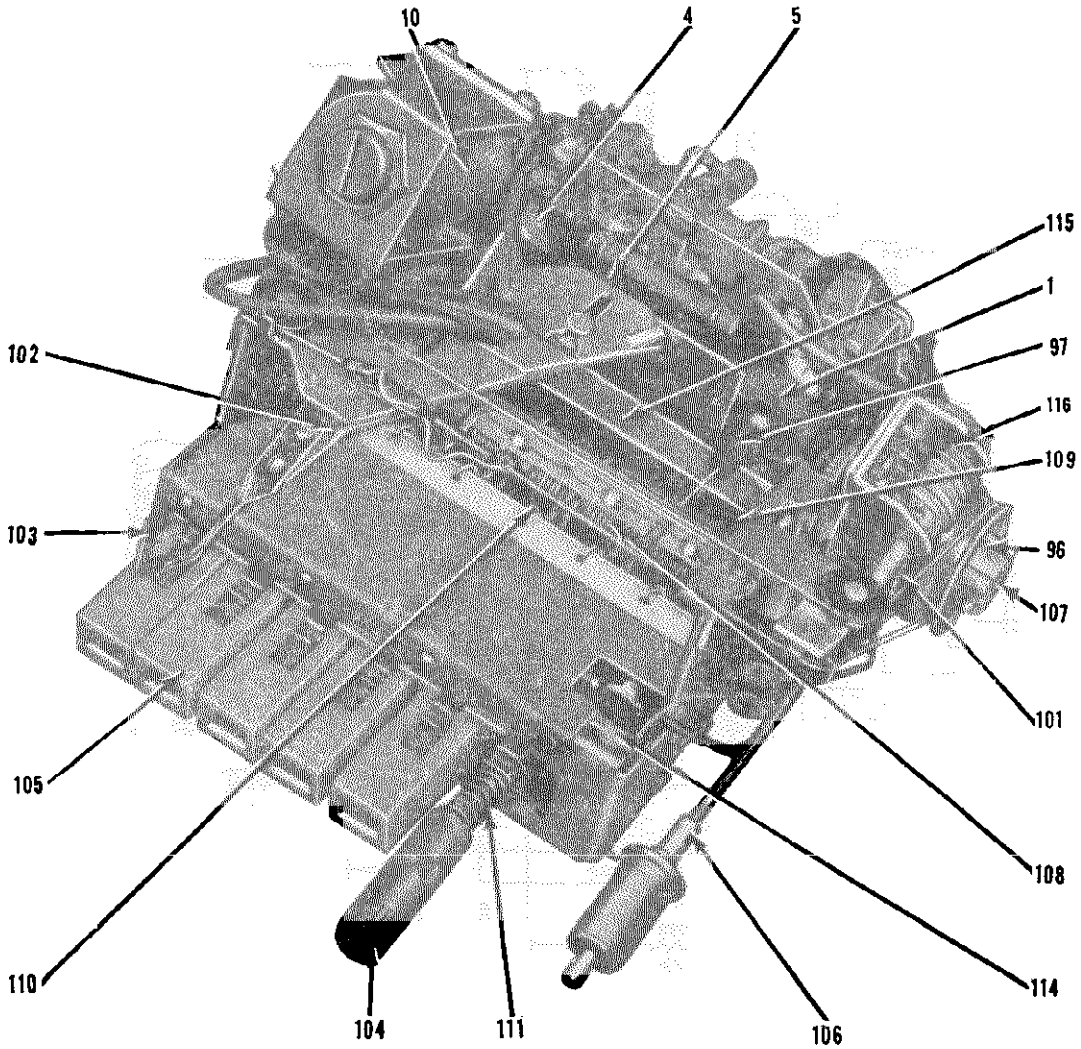

TUNER

MODEL 984249,
Pontiac

UNITED MOTORS SERVICE
DIV. OF GENERAL MOTORS CORP.

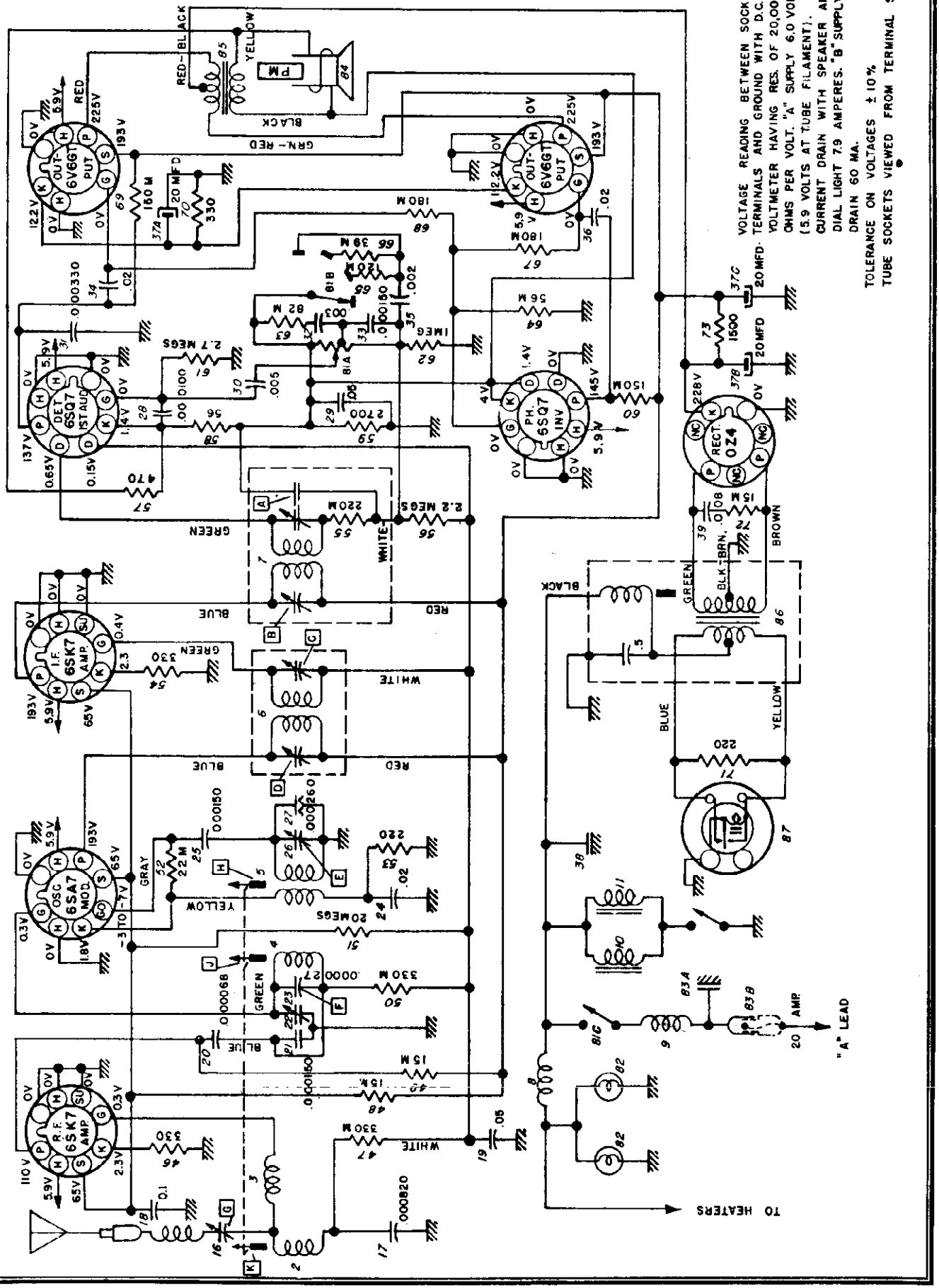

©John F. Rider

UNITED MOTORS SERVICE
DIV. OF GENERAL MOTORS CORP.
SERVICE PARTS LIST

MODEL 984249, Pontiac

Illus. No.	Production Part No.	Service Part No.	Description
			ELECTRICAL PARTS
			COILS
1	7255738	7255738	Antenna Choke
2	7257603	7257603	Antenna
3	7257558	7257558	R. F. Choke
4	7257603	7257603	R. F.
5	7257605	7257605	Oscillator
6	7257988	7257988	1st I. F.
7	7257594	7257594	2nd I. F.
8	1217846	1217846	Hash Choke
9	7257096	7257096	"A" Choke
10	1216431	1216431	Solenoid
11	1214463	1214463	Clutch
			CONDENSERS
16	1215074	1215074	Antenna Trimmer (Included in Antenna Connector Illus. #91)
17	1217742	G821	.000820 Mfd. Molded
18	7238788	E104	.1 Mfd. 400 V. Tubular
19	7236842	E503	.05 Mfd. 200 V. Tubular
20	1212359	G680	.000068 Mfd. Molded
21	7230893	G151	.000150 Mfd. Molded
22	1214456	1214456	Trimmer — R. F.
23	7256259	G270	.000027 Mfd. Ceramic
24	7236107	E203	.02 Mfd. 200 V. Tubular
25	7230893	G151	.000150 Mfd. Molded
26	1214456	1214456	Trimmer — Oscillator
27	7257567	7257567	.000260 Mfd. Compensating
28	1210275	G101	.000100 Mfd. Molded
29	7236842	E503	.05 Mfd. 200 V. Tubular
30	7230767	E502	.005 Mfd. 600 V. Tubular
31	7232957	G331	.000330 Mfd. Molded
32	7232954	E302	.003 Mfd. 600 V. Tubular
33	7230893	G151	.000150 Mfd. Molded
34	7231542	E203	.02 Mfd. 400 V. Tubular
35	7237954	E202	.002 Mfd. 600 V. Tubular
36	7231542	E203	.02 Mfd. 400 V. Tubular
37	7240724	M908	3 Section Electrolytic
37A			20 Mfd. 25 V.
37B			20 Mfd. 400 V.
37C			20 Mfd. 400 V.
38	1217848	1217848	Chassis Plate Condenser
39	1215191	H802	.008 Mfd. 1600 V. Tubular
			RESISTORS
46	1213224	A331	330 Ohms ½ W. Insulated
47	1214557	A334	330,000 Ohms ½ W. Insulated
48	7233653	C153	15,000 Ohms 2 W. Insulated
49	7237595	B153	15,000 Ohms 1 W. Insulated
50	1214557	A334	330,000 Ohms ½ W. Insulated — Replace With 2
51	7242581	7242581	20 Megohms ½ W. Insulated — A106 Resistors
52	1214550	A223	22,000 Ohms ½ W. Insulated — In Series
53	7237835	A221	220 Ohms ½ W. Insulated
54	1213224	A331	330 Ohms ½ W. Insulated
55	1214555	A224	220,000 Ohms ½ W. Insulated
56	1214563	A225	2.2 Megohms ½ W. Insulated
57	1213486	A471	470 Ohms ½ W. Insulated
58	1214540	A560	56 Ohms ½ W. Insulated
59	1213240	A272	2700 Ohms ½ W. Insulated
60	1213272	A154	150,000 Ohms ½ W. Insulated
61	7241614	A275	2.7 Megohms ½ W. Insulated
62	1213282	A105	1 Megohm ½ W. Insulated
63	1214554	A823	82,000 Ohms ½ W. Insulated
64	1213267	A563	56,000 Ohms ½ W. Insulated
65	1213271	A124	120,000 Ohms ½ W. Insulated
66	1213480	A393	39,000 Ohms ½ W. Insulated
67	1215560	A184	180,000 Ohms ½ W. Insulated
68	1215560	A184	180,000 Ohms ½ W. Insulated
69	1213272	A154	150,000 Ohms ½ W. Insulated
70	7233773	B331	330 Ohms 1 W. Insulated
71	7237994	B221	220 Ohms 1 W. Insulated
72	7237595	B153	15,000 Ohms ½ W. Insulated
73	1216125	C152	1500 Ohms 2 W. Insulated

MODEL 984249,
Pontiac

UNITED MOTORS SERVICE
DIV. OF GENERAL MOTORS CORP.

SERVICE PARTS LIST

Illus. No.	Production Part No.	Service Part No.	Description
			TUBE COMPLEMENT
	7237251	5229	6SK7
	7237752	5222	6SA7
	7237753	5131	6SQ7
	1213793	5241	6V6GT
	1211924	5003	0Z4
			MISCELLANEOUS ELECTRICAL PARTS
81	7257655	7257655	Control — Volume, Tone, and Switch
81A			Volume Control, 1 Meg. tapped at 250,000
81B			Tone Control
81C			Switch
82	115273	51	Lamp — Dial (Mazda #51)
83	7240797	7240797	Spark Plate, "A" Choke, and "A" Connector
83A			Spark Plate
9			"A" Choke
83B			"A" Connector
84	1216432	1216432	Speaker — 6" x 9" Elliptical, Permanent Magnet
85	7257220	7257220	Transformer — Output
86	1215807	1215807	Transformer — Power
87	7242449	8542	Vibrator
			MECHANICAL PARTS
			CHASSIS
	7239125	7239125	Socket — Vibrator
	7236279	7236279	Socket — Octal Tube
91	1214494	1214494	Socket — Antenna (Includes Illus. #16 Trimmer)
92	7257836	7257836	Socket — Dial Light
			TUNER
96	7256995	7239125	Clutch Jaw — Driven
97	1215810	1215810	Core — Iron
98	7257627	7257627	Escutcheon Assy.
99	7257561	7257561	Dial
101	1216092	1216092	Gear and Disc
102	7256996	7256996	Pointer Bracket and Cord
		1212233	Cord (48 Inches)
		7238860	Spring
103	1215826	1215826	Pointer Tip
104	1215814	1215814	Pushbutton Setup Knob
105	1215813	1215813	Pushbutton
106	7256962	7256962	Shaft — Manual Drive (Includes Bushing)
107	1215828	1215828	Shaft — Clutch and Drive Gear
108	1215827	1215827	Slide Assy., Pushbutton Tuning
109	7257171	7257171	Spring — Connecting Link
110	1216441	1216441	Spring — Slide Return
111	1216118	1216118	Spring — Setup Knob
	7257598	7257598	Spring — Treadle Bar Lock
	1214466	1214466	Spring — Clutch
114	1214460	1214460	Stop Rail and Switch Contact
115	7256967	7256967	Treadle Bar and Gear
116	7256983	7256983	Worm Gear and Bracket
			INSTALLATION PARTS
	7257464	7257464	"A" Lead and Fuse Connector
	1885292	6015	Condenser — "A" Lead
	1911095	6015	Condenser — Generator
	106653	106653	Fuse — 20 Amperes
	507505	507505	Knob — Control
	507510	507510	Knob — Dummy
	507511	507511	Knob — Tone Control
	7257478	7257478	Station Tabs
	508583	508583	Trim Plate
	*1207821	6000	Suppressor — Distributor
	*1853686	6008	Suppressor Adaptor
	*509129	509129	Suppressor Insulator

*Cars having a distributor with the center tower of the distributor cap 1⅝" high instead of ⅞" high have a built in distributor suppressor and should not have an external suppressor installed. These distributors are marked "Radio" on the lower flange.

UNITED MOTORS SERVICE
DIV. OF GENERAL MOTORS CORP.

MODEL 984273,
Pontiac

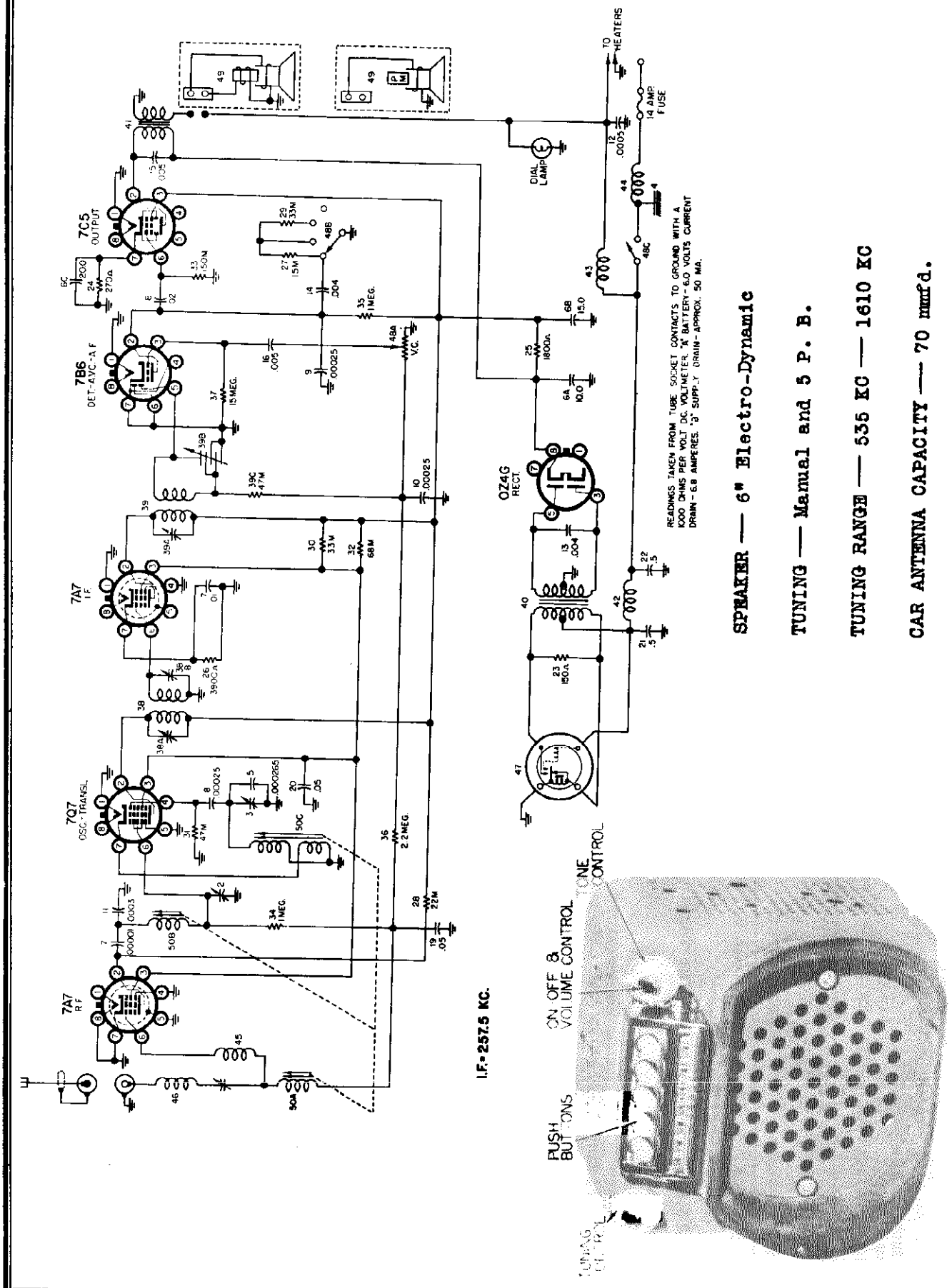

SPEAKER — 6" Electro-Dynamic

TUNING — Manual and 5 P. B.

TUNING RANGE — 535 KC — 1610 KC

CAR ANTENNA CAPACITY — 70 mmfd.

ALIGNMENT PROCEDURE

Volume Control maximum.
Tone Control on high position.
Signal Generator Output minimum for satisfactory output indication.

Series Capacitor Or Dummy Antenna	Connect To	Signal Generator Frequency	Adjust Screws In Order
0.1 mfd.	Terminal X (See Parts Layout)	257.5 KC	A, B, C, D
.000070 mfd.	Antenna Terminal	1610 KC	E, F, G

Low frequency alignment not required.
Adjust Trimmer G to match car antenna (1400 KC) when radio is installed.

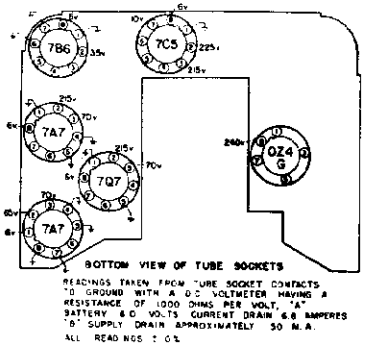

SOCKET VOLTAGES

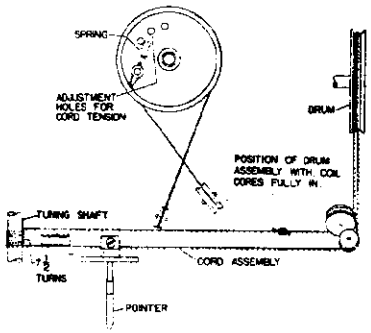

DIAL CORD HOOKUP

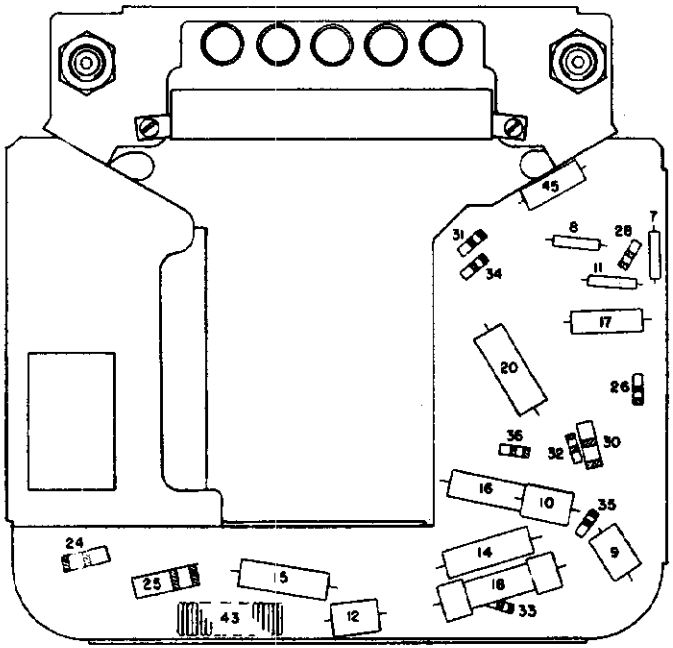

PARTS LAYOUT

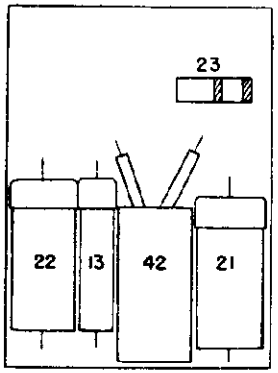

POWER PACK LAYOUT

UNITED MOTORS SERVICE
DIV. OF GENERAL MOTORS CORP.

MODEL 9[illegible]273
Pontiac

PUSH BUTTON SET-UP

Turn counter clockwise - tune in manually - depress loosened button - turn button clockwise to tighten.

Illus. No.	Service * Part No.	Production Part No.	Description
			CAPACITORS
1		1216671	Antenna Trimmer
2		1216672	R. F. Trimmer
3		1215925	Oscillator Trimmer
4		1212878	Capacitor - Spark - 225 Mmfd.
5		1216540	Capacitor - Compensating - 265 Mmfd.
6		1213868	Electrolytic
6A			10 Mfd. 350 Volt
6B			15 Mfd. 300 Volt
6C			20 Mfd. 25 Volt
7	G100	7234242	Capacitor - Mica Moulded - 10 Mmfd.
8	G221	1209055	Capacitor - Mica Moulded - 250 Mmfd.
9	G221	1209055	Capacitor - Mica Moulded - 250 Mmfd.
10	G221	1209055	Capacitor - Mica Moulded - 250 Mmfd.
11	G271	1215553	Capacitor - Mica Moulded - 300 Mmfd.
12	G471	7238879	Capacitor - Mica Moulded - 500 Mmfd.
13	H402	1217875	Capacitor - .004 Mfd. 1500 Volt
14	H402	1212098	Capacitor - .004 Mfd. 600 Volt
15	H502	7230912	Capacitor - .005 Mfd. 600 Volt
16	H502	7230912	Capacitor - .005 Mfd. 600 Volt
17	H103	7233608	Capacitor - .01 Mfd. 600 Volt
18	H203	1207902	Capacitor - .02 Mfd. 600 Volt
19	H503	7230592	Capacitor - .05 Mfd. 600 Volt
20	H503	7230592	Capacitor - .05 Mfd. 600 Volt
21		7240248	Capacitor - .5 Mfd. 100 Volt
22		7240248	Capacitor - .5 Mfd. 100 Volt
			RESISTORS
23	B151	1211005	Resistor - 150 Ohm - 1 Watt
24	B271	1213846	Resistor - 270 Ohm - 1 Watt
25	C182	1214573	Resistor - 1800 Ohm - 2 Watt
26	A392	1214546	Resistor - 3900 Ohm - 1/2 Watt
27	A153	1213257	Resistor - 15,000 Ohm - 1/2 Watt
28	A223	1214550	Resistor - 22,000 Ohm - 1/2 Watt
29	A333	1213845	Resistor - 33,000 Ohm - 1/2 Watt
30	A333	7242447	Resistor - 33,000 Ohm - 1 Watt
31	A473	1214553	Resistor - 47,000 Ohm - 1/2 Watt
32	A683	1213844	Resistor - 68,000 Ohm - 1/2 Watt
33	A154	1213272	Resistor - 150,000 Ohm - 1/2 Watt
34	A105	1213282	Resistor - 1 Megohm - 1/2 Watt
35	A105	1213282	Resistor - 1 Megohm - 1/2 Watt
36	A225	1214563	Resistor - 2.2 Megohm - 1/2 Watt
37	A156	1213289	Resistor - 15 Megohm - 1/2 Watt
			MISCELLANEOUS ELECTRICAL PARTS
38		1215916	1st I. F. Transformer Assembly
38A			Primary Trimmer
38B			Secondary Trimmer
39		1215917	2nd I. F. Transformer Assembly
39A			Primary Trimmer
39B			Secondary Trimmer
39C			Resistor - 47,000 Ohm - 1/2 Watt
40		1214391	Transformer - Power
41		1215918	Transformer - Output
42		1213663	Choke - Hash
43		1214385	Choke - Filament
44		1217193	Choke - Spark
45		1214382	Choke - Antenna Spark
46		1218138	Coil - Antenna Choke
47		8638	Vibrator
48		1216541	Controls
48A			Volume Control
48B			Tone Control
48C			On-Off Switch
49		1214389	Speaker - 6" Electro-Dynamic
49		1217417	Speaker - 6" Permanent-Dynamic (Alternate)
			TUNER UNIT AND PARTS
50		1218217	Tuner Unit - Perm. Tuning Coils
50A			Antenna Coil
50B			R. F. Coil
50C			Oscillator Coil
			TUNER UNIT AND PARTS (CONT'D)
		1215926	Bushing - Station Selector Shaft
		1216535	Connector Assembly - Antenna
		1218014	Connector Assembly - "A" Lead
		1217919	Dial Pointer & Slide Assembly
		1214471	*Pulley - Wood 17/32 O. D.*
		1214472	Pulley - Wood 7/16 O. D.
		1216587	Push Button Assembly
		1215932	Shaft Assembly - Front Drive
		1218019	Shaft Assembly - Rear Drive
		1215936	Socket Assembly - Pilot Light
		1216036	Spring - Core Driving
		1215934	Spring - Rear Drive Shaft
		1214386	Spring & String Assembly - Pointer Drive
		1216538	Tuner Unit Assembly - Mechanical *Portion only - Push Buttons* Included
			MISCELLANEOUS CHASSIS PARTS
		187189	Bulb - Pilot Light (Mazda #44)
		1215937	Cover Assembly - Case Back
		1215927	Cover Assembly - Power Supply
		1217918	Dial - Window
		1218112	Escutcheon
		7242463	Nut - 1/2-28 Mounting Spacer
		1213685	Screw - Cover Retaining
		7238455	Socket - Lock-In
		1213684	Socket - Vibrator
		1214420	Socket - Rectifier
		1214399	Speaker Gasket - Rubber
			TUBES
5290		1213683	7A7 - R. F. Amplifier
5301		1213853	7Q7 - Oscillator - Translator
5290		1213683	7A7 - I. F. Amplifier
5292		1213782	7B6 - Detector AVC - 1st Audio
5295		1213686	7C5 - Audio Output
5004		7231696	OZ4G - Rectifier
			INSTALLATION AND MOUNTING PARTS
		507505	Knob - Tuning & Volume Control
		507510	Knob - Dummy
		507511	Knob - Tone Control
		1879777	Capacitor - Generator
		1882758	Capacitor - Ammeter
		504617	*"A" Lead Assembly*
		7235968	Nut - 1/2"-28 Hex. - Zinc (Receiver Mounting - Front)
		505630	Washer - Tone Control - Felt
		7238755	Washer - Dummy Knob - Spring
		505629	Screw - 1/4"-20 x 5/8" Hex. Hd.
		1299232	Washer - 1/4" Flat
		121753	Washer - 1/4" Ext. Tooth - Shakeproof
		144722	Screw - #7 x 3/8" (Self Tapping)
		147685	Fuse - 14 Ampere
		501270	Tube - Fuse Insulating
6000		1207821	*Suppressor - Distributor*
6008		1853686	Adaptor - Distributor Suppressor
		509129	Insulator - Distributor Suppressor
		508583	Plate - Control Finish

* Order parts, *using service part number* where shown, otherwise use production part number for service.

MODEL 986146, Serial B47-1001 and up; Chevrolet

UNITED MOTORS SERVICE
DIV. OF GENERAL MOTORS CORP.

For Alignment data see Chevrolet Model 985792, page 13-3.

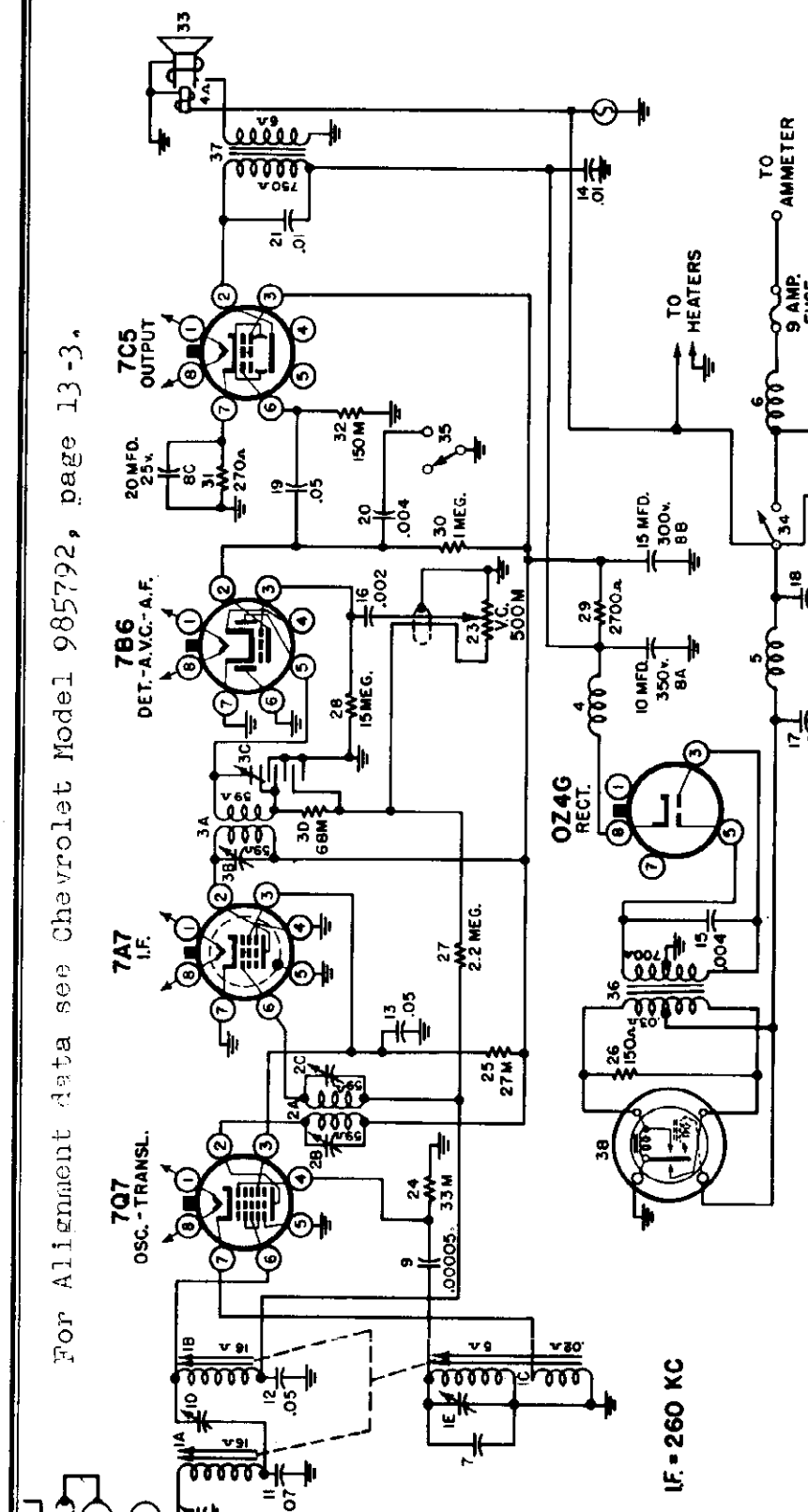

The antenna system used with this receiver consists of a rod-type antenna with a specially designed low capacity lead-in.

ANTENNA SYSTEM

TUBE COMPLEMENT

Type	Function	Type	Function
7Q7	Oscillator-Modulator	7C5	Audio Output
7A7	I.F. Amplifier	0Z4G	Rectifier
7B6	Detector A.V.C.-1st Audio		

CIRCUIT DESCRIPTION

The circuit used in this receiver is the superheterodyne type, employing the permeability method of tuning. An adjustable condenser is provided for matching the antenna circuit to the antenna. This adjustment is made near the high frequency end of the band (1400 kilocycles).

UNITED MOTORS SERVICE
DIV. OF GENERAL MOTORS CORP.

MODEL 986146, Serial B47-1001 and up; Chevrolet

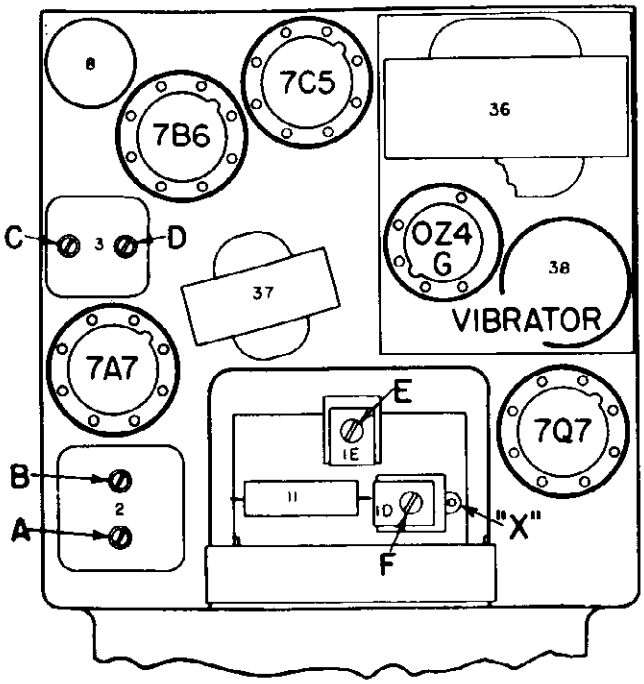

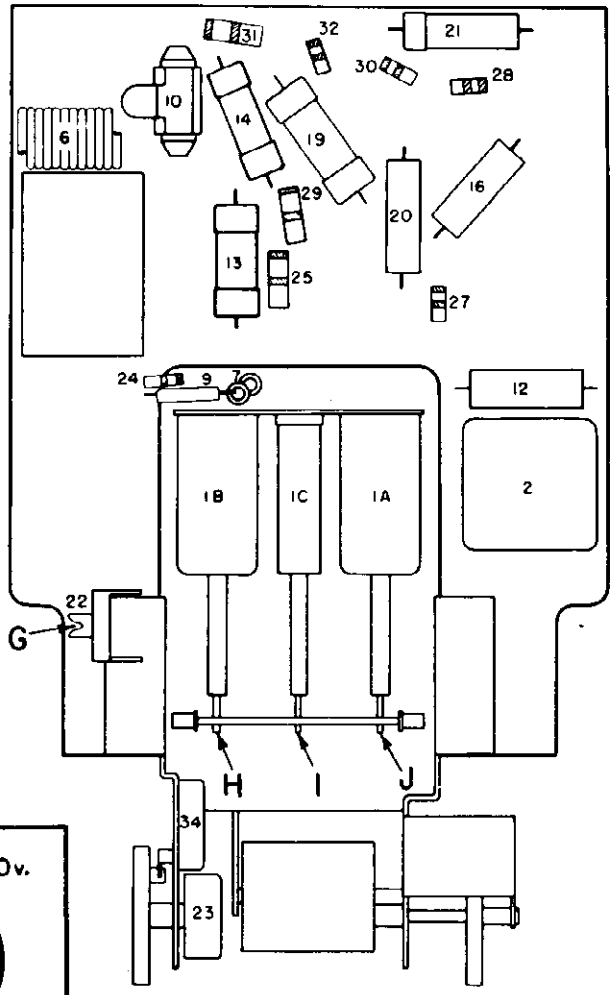

Parts Layout

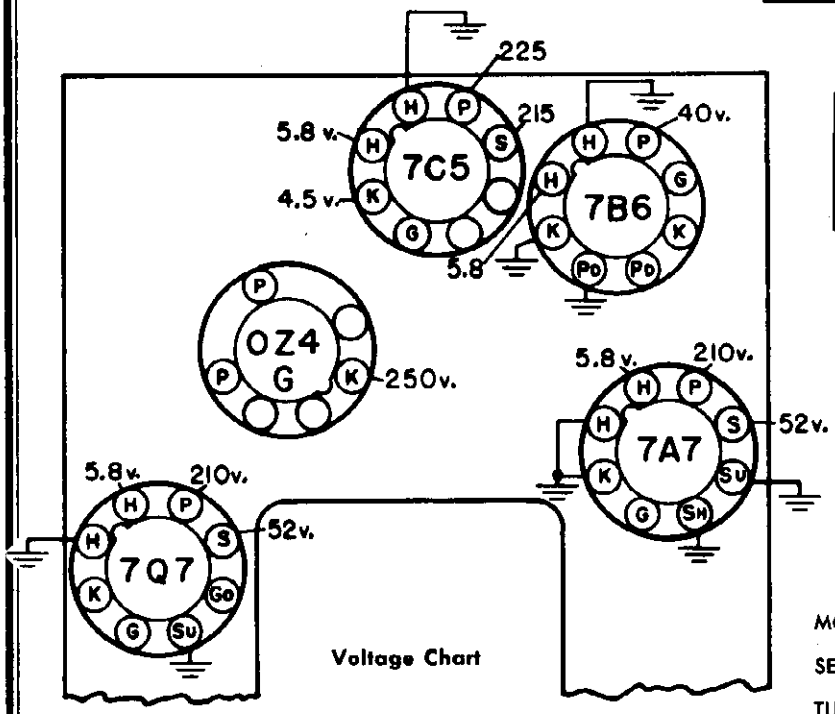

Voltage Chart

BOTTOM VIEW OF TUBE SOCKETS

READINGS TAKEN FROM TUBE SOCKET CONTACTS TO GROUND WITH A D.C. VOLTMETER HAVING A RESISTANCE OF 1000 OHMS PER VOLT. ALL VOLTAGES EXCEPT THE HEATER VOLTAGES MEASURED ON THE 0-250 VOLT SCALE.
"A" BATTERY 6.0 VOLTS. CURRENT DRAIN 6.2 AMPERES.
"B" SUPPLY DRAIN APPROXIMATELY 45 MA.

RADIO DATA

MODEL NUMBER—986146

SERIAL NUMBER—

TUBE COMPLEMENT—7Q7, 7A7, 0Z4G, 7B6, 7C5

BATTERY CURRENT—6.2 AMPERES

B+ VOLTS—250 VOLTS

I.F. KC—260

R.F. KC—1610-540

VIBRATOR TYPE—NON SYNCHRONOUS

YEAR—1947 AND 1948

MODEL 7258155, Cadillac

UNITED MOTORS SERVICE
DIV. OF GENERAL MOTORS CORP.

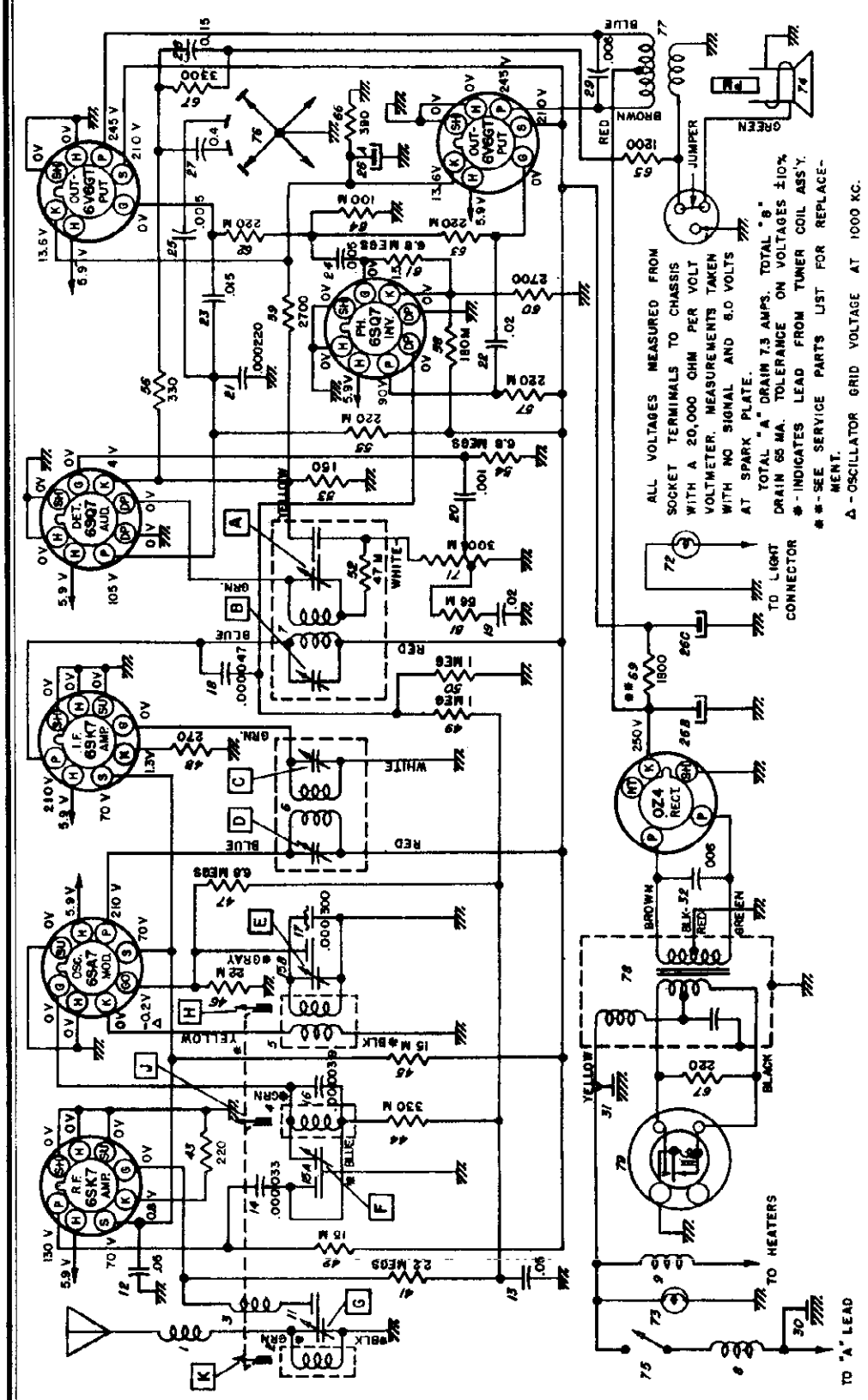

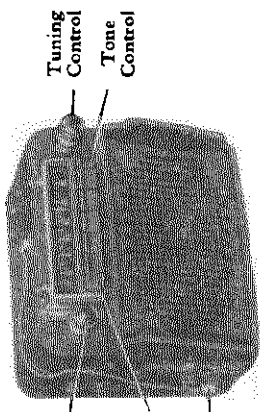

MODEL 7258155

GENERAL

MOUNTING—All 1949 Cadillac Cars.

TUBES—Seven, Plus Rectifier.

SPEAKER — 6" x 9" Elliptical, Permanent Magnet.

TUNING—Manual and 5 P.B. Mechanical.

ANTENNA TRIMMER COMPENSATION — 0.000060 - 0.000085 Mfd.

TUNING RANGE—550-1600 KC.

PUSHBUTTON SET-UP

Pull pushbutton to the right and out. Tune in desired station manually. Push button all the way in.

© John F. Rider

UNITED MOTORS SERVICE
DIV. OF GENERAL MOTORS CORP.

MODEL 7258155,
Cadillac

ALIGNMENT PROCEDURE:

Output Meter Connection ..... Across Voice Coil
Signal Generator Return ..... To Chassis
Dummy Antenna ..... In Series With Generator
Volume Control ..... Maximum Volume
Tone Control ..... Treble
Generator Output ..... Minimum for Readable Indication

Steps	Series Condenser or Dummy Antenna	Connect To	Signal Generator Frequency	Tune Receiver To	Adjust in Sequence for Max. Output
1	0.1 Mfd.	6SA7 Grid (Pin #8)	260 KC	High Freq. Stop	A, B, C, D
2	0.000068 Mfd.	Antenna Connector	1615 KC	High Freq. Stop	*E, F, G
3	0.000068 Mfd.	Antenna Connector	1430 KC	Signal Gen. Signal	J, K
4	0.000068 Mfd.	Antenna Connector	1615 KC	High Freq. Stop	F, G
5	0.000068 Mfd.	Antenna Connector	1000 KC	Signal Gen. Signal	L**

*Before making this adjustment check the mechanical setting of the oscillator core "H." The slotted end of the core should be 1 25/32" from the mounting end of the coil form. (This measurement is readily made by inserting a suitable plug in the mounting end of the coil form). Core adjustments are made from the mounting end of the coil form with an insulated screwdriver, and core studs should be sealed with glyptal or household cement after alignment.

**"L" is the pointer adjustment screw on the pointer connecting link (See tuner drawing). Adjust so pointer reads 1000 KC (on the "10" calibration mark).

With the radio installed and the car antenna plugged in adjust antenna trimmer "G" (See sticker on case) for maximum volume with the radio tuned to a weak station near 1400 KC.

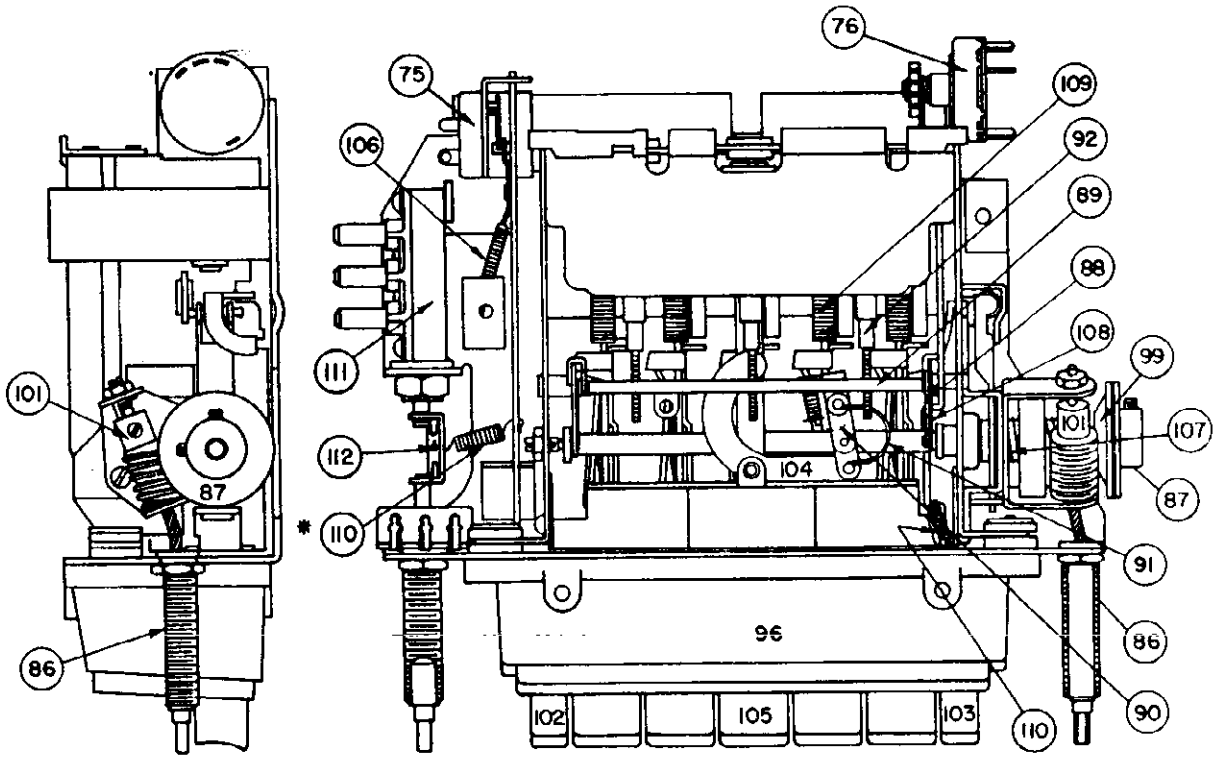

TUNER

*When installing this spring be sure it is fastened through the holes in the Vacuum Valve Yoke and the "On-Off" Button and Plunger as shown.

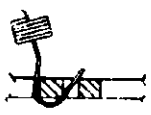

TUBE SOCKET VOLTAGE CHART

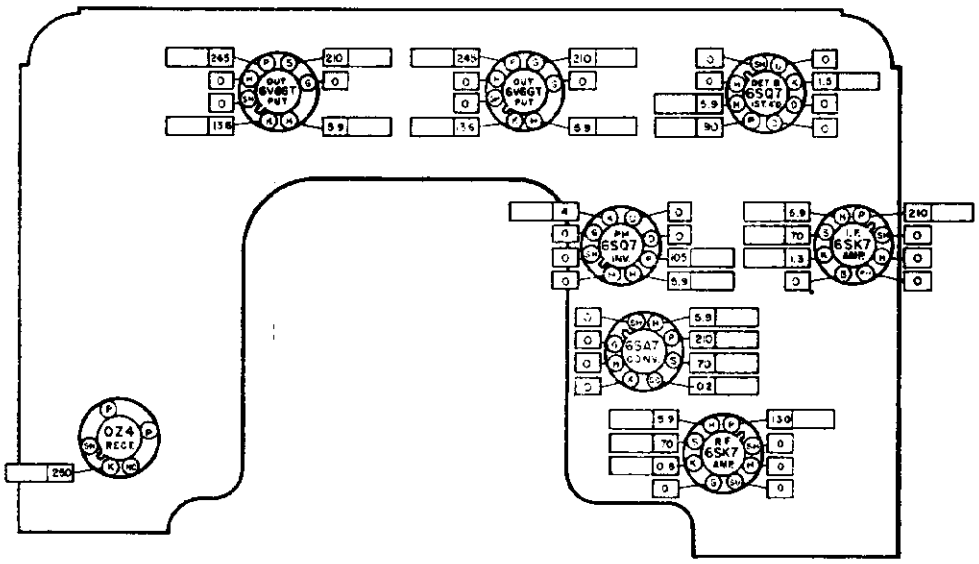

The tube socket voltages, as measured at the factory and under the conditions shown on the schematic diagram, are shown above. The blank spaces are provided so that the serviceman may fill in actual voltage readings as taken with his own equipment. A normal operating radio should be used for these measurements.

Voltmeter resistance..... Ohms Per Volt.

Readings taken with.....Volts At Spark Plate.

All voltages measured from socket terminals to chassis.

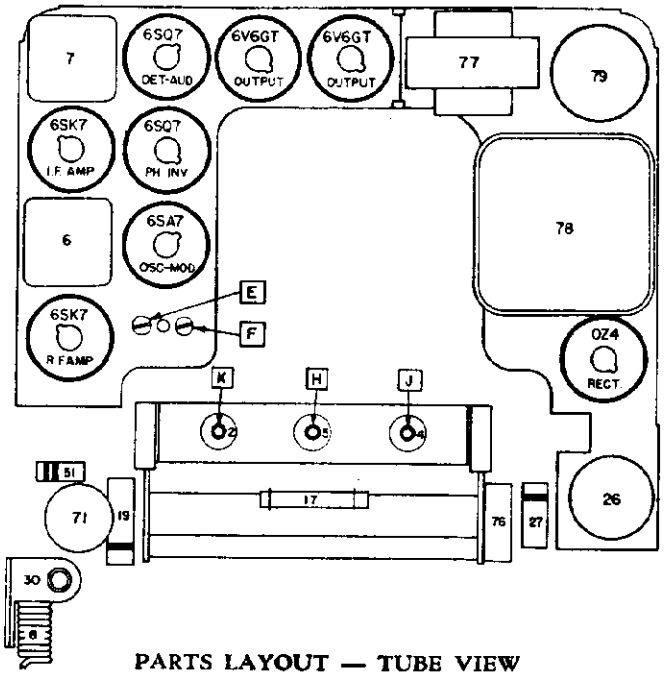

PARTS LAYOUT — TUBE VIEW

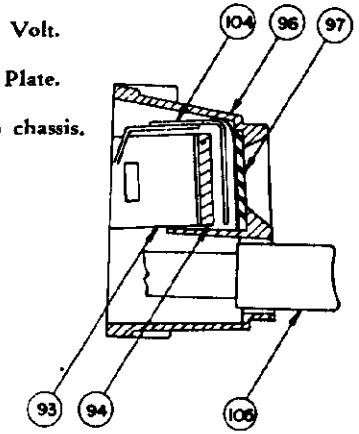

ESCUTCHEON CROSS SECTION

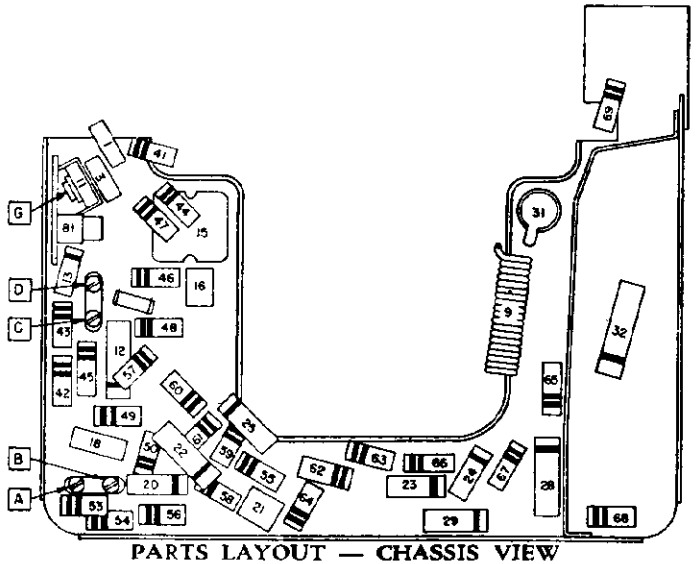

PARTS LAYOUT — CHASSIS VIEW

UNITED MOTORS SERVICE
DIV. OF GENERAL MOTORS CORP.
SERVICE PARTS LIST

MODEL 7258155,
Cadillac

Illus. No.	Production Part No.	Service Part No.	Description
			ELECTRICAL PARTS
			Coils
1	7255738	7255738	Antenna Series Choke
2	7257979	7257979	Antenna
3	7240251	7240251	Antenna Spark Choke
4	7257979	7257979	R. F.
5	7258148	7258148	Oscillator
6	7257832	7257832	1st I. F. Assy.
7	7256932	7256932	2nd I. F. Assy.
8	1217846	1217846	"A" Spark Choke
9	1217846	1217846	Hash Choke
			Condensers
11	7258226	7258226	Antenna Trimmer
12	7258125	7230592	0.05 mfd 400 V Tubular
13	1210697	7230592	0.05 mfd 200 V Tubular
14	1218348	1217735	0.000033 mfd Ceramic
15	7242454	7242454	Dual Trimmer
15A			R. F. Section
15B			Oscillator Section
16	7258221	1217736	0.000039 mfd Ceramic
17	7258598	7258598	0.000300 mfd Compensating
18	1218202	7233313	0.000047 mfd Ceramic
19	7233770	7233770	0.02 mfd 600 V Tubular
20	1218883	1217790	0.001 mfd 600 V Tubular
21	1218886	7236105	0.000220 mfd Ceramic
22	7237720	7233770	0.02 mfd 400 V Tubular
23	7237719	7237719	0.015 mfd 600 V Tubular
24	7232956	7230767	0.005 mfd 600 V Tubular
25	7230767	7230767	0.005 mfd 600 V Tubular
26	7241198	7241198	Electrolytic
26A			20 mfd 25 V
26B			20 mfd 400 V
26C			20 mfd 400 V
27	1218882	1218882	0.4 mfd 100 V Tubular
28	1218880	1218880	0.15 mfd 100 V Tubular
29	1219084	1219084	0.006 mfd 800 V Tubular
30	7240797	7240797	Spark Plate and Choke Assy.
31	1217848	1217848	Chassis Plate Condenser
32	7240906	7240906	0.006 mfd 1600 V Buffer
			Resistors
41	1214563	1214563	2.2 Megohms ½ W Insulated
42	7233653	7233653	15,000 Ohms 2 W Insulated
43	7237835	7237835	220 Ohms ½ W Insulated
44	1214557	1214557	330,000 Ohms ½ W Insulated
45	7237595	7237595	15,000 Ohms 1 W Insulated
46	1214550	1214550	22,000 Ohms ½ W Insulated
47	1215563	1215563	6.8 Megohms ½ W Insulated
48	1214542	1214542	270 Ohms ½ W Insulated
49	1213282	1213282	1 Megohm ½ W Insulated
50	1213282	1213282	1 Megohm ½ W Insulated
51	1213267	1213267	56,000 Ohms ½ W Insulated
52	1214553	1214553	47,000 Ohms ½ W Insulated
53	1213220	1213220	150 Ohms ½ W Insulated
54	1215563	1215563	6.8 Megohms ½ W Insulated
55	1214555	1214555	220,000 Ohms ½ W Insulated
56	1213224	1213224	330 Ohms ½ W Insulated
57	1214555	1214555	220,000 Ohms ½ W Insulated
58	1215560	1215560	180,000 Ohms ½ W Insulated
59	1213240	1213240	2700 Ohms ½ W Insulated
60	1213240	1213240	2700 Ohms ½ W Insulated
61	1215563	1215563	6.8 Megohms ½ W Insulated
62	1214555	1214555	220,000 Ohms ½ W Insulated
63	1214555	1214555	220,000 Ohms ½ W Insulated
64	1213270	1213270	100,000 Ohms ½ W Insulated
65	1213236	1213236	1200 Ohms ½ W Insulated
66	1216149	1216149	390 Ohms 1 W Insulated
67	1213481	1213481	3300 Ohms ½W Insulated
68	7237994	7237994	220 Ohms 1 W Insulated
69	1214573	7242844 and 7240918	1800 Ohms — Replace with 2700 ohms 2 W and 5600 ohms 1 W in parallel

MODEL 7258155,
Cadillac

UNITED MOTORS SERVICE
DIV. OF GENERAL MOTORS CORP.
SERVICE PARTS LIST

Illus. No.	Production Part No.	Service Part No.	Description
		Tubes	
	7237751	7237751	6SK7
	7237752	7237752	6SA7
	7237753	7237753	6SQ7
	1213793	1213793	6V6GT
	1211924	1211924	OZ4—Rectifier
		Miscellaneous Electrical	
71	7258283	7258283	Control—Volume
72	125588	125588	Lamp—Dial Light
73	187189	187189	Lamp—Pilot Light
74	7258488	7258488	Speaker—6x9 Elliptical PM
75	7242411	7242411	Switch—"On-Off"
76	7258273	7258273	Switch—Tone Control
77	7258390	7258390	Transformer—Output
78	7255881	7255881	Transformer—Power
79	7239124	7239124	Vibrator—Non-synchronous
		MECHANICAL PARTS	
		Chassis	
81	7239475	7239475	Socket—Antenna
82	1219106	1219106	Socket—Dial Light
	7236279	7236279	Socket—Octal Tube
	7239125	7239125	Socket—Vibrator
		Tuner	
86	7258496	7258496	Bushing and Manual Drive Shaft
87	7258072	7258072	Clutch Disc—Driven
88	7258203	7258203	Connecting Link—Core Bar
89	7258206	7258206	Core Guide Bar—Parallel
90	7256271	7256271	Pointer Connecting Link
91	7255992	7255992	Spring—Pointer Connecting Link
92	7258468	7258468	Core—Powdered Iron
93	1219105	1219105	Dial Backplate Assy.
94	7258254	7258254	Dial—Calibration
95	7258239	7258239	Dial Retainer Spring
96	7258270	7258270	Escutcheon
97	7258236	7258236	Dial Glass
98	7258232	7258232	Dial Retainer
99	7256760	7256760	Gear and Bushing
101	7256758	7256758	Gear and Bracket—Worm
102	7258267	7258267	Plunger and Button—"On-Off"
103	1219138	1219138	Plunger and Button—Tone Control
104	7258269	7258269	Pointer Assy.
105	1219104	1219104	Pushbutton and Slide Assy.
106	7257361	7257361	Spring—Toggle Lever
107	7256761	7256761	Spring—Clutch
108	7257415	7257415	Spring—Core Bar Connecting Link
109	7255984	7255984	Spring—Slide Return
110	7241042	7241042	Spring—Yoke
111	7258260	7258260	Vacuum Valve
112	7258229	7258229	Vacuum Valve Drive Yoke
		INSTALLATION PARTS	
	7258542	7258542	"A" Lead and Fuse Connector
	121926	121926	Bolt—¼-20x1½
	7258219	7258219	Bracket—Radio Mtg. (Firewall)
	7258220	7258220	Bracket—Radio Mtg. (Instrument Panel)
	147685	147685	Fuse—14 amps
	7258400	7258400	Knob—Control
	7258399	7258399	Knob—Dummy
	120380	120380	Lockwasher—¼
	7258237	7258237	Nut, Spanner
	157716	157716	Screw—¼-20x½
	186493	186493	Screw and Lockwasher—¼-20x⅝
	7258436	7258436	Spacer Sleeve
	7258113	7258113	Suppressor—Distributor
	7240808	7240808	Suppressor Insulator
	7258526	7258526	Suppressor—Spark Plug
	7240138	7240138	Static Collector
	7234666	7234666	Washer—¼

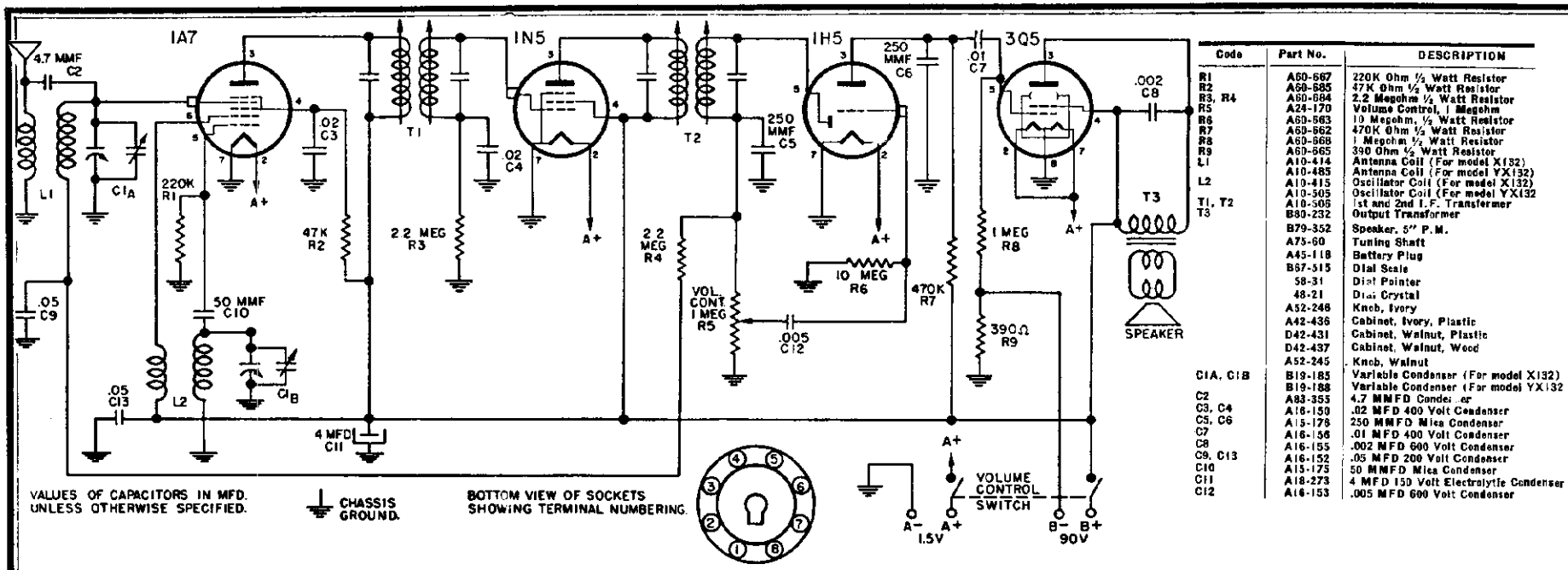

Code	Part No.	DESCRIPTION
R1	A60-667	220K Ohm ½ Watt Resistor
R2	A60-585	47K Ohm ½ Watt Resistor
R3, R4	A60-684	2.2 Megohm ½ Watt Resistor
R5	A24-170	Volume Control, 1 Megohm
R6	A60-563	10 Megohm, ½ Watt Resistor
R7	A60-662	470K Ohm ½ Watt Resistor
R8	A60-668	1 Megohm ½ Watt Resistor
R9	A60-665	390 Ohm ½ Watt Resistor
L1	A10-414	Antenna Coil (For model X132)
	A10-485	Antenna Coil (For model YX132)
L2	A10-415	Oscillator Coil (For model X132)
	A10-505	Oscillator Coil (For model YX132
T1, T2	A10-506	1st and 2nd I.F. Transformer
T3	B80-232	Output Transformer
	B79-352	Speaker, 5" P.M.
	A75-60	Tuning Shaft
	A45-118	Battery Plug
	B67-515	Dial Scale
	58-31	Dial Pointer
	48-21	Dial Crystal
	A52-248	Knob, Ivory
	A42-436	Cabinet, Ivory, Plastic
	D42-431	Cabinet, Walnut, Plastic
	D42-437	Cabinet, Walnut, Wood
	A52-245	Knob, Walnut
C1A, C1B	B19-185	Variable Condenser (For model X132)
	B19-188	Variable Condenser (For model YX132
C2	A83-355	4.7 MMFD Condenser
C3, C4	A16-150	.02 MFD 400 Volt Condenser
C5, C6	A15-178	250 MMFD Mica Condenser
C7	A16-156	.01 MFD 400 Volt Condenser
C8	A16-155	.002 MFD 600 Volt Condenser
C9, C13	A16-152	.05 MFD 200 Volt Condenser
C10	A15-175	50 MMFD Mica Condenser
C11	A18-273	4 MFD 150 Volt Electrolytic Condenser
C12	A16-153	.005 MFD 600 Volt Condenser

This receiver has been designed to operate on a self-contained battery containing both the "B" battery (90 Volts) and the "A" battery (1½ Volts) such as General #60B6L.

The battery cable coming from the receiver has been made long enough so that it may be used with larger batteries placed outside of the cabinet. Any-one of the following batteries can be used with this receiver when they are placed on the outside of the cabinet: Eveready No. 748, General No. 60DL-11 L, Burgess No. 17G-D60, Ray-O-Vac No. AB 82.

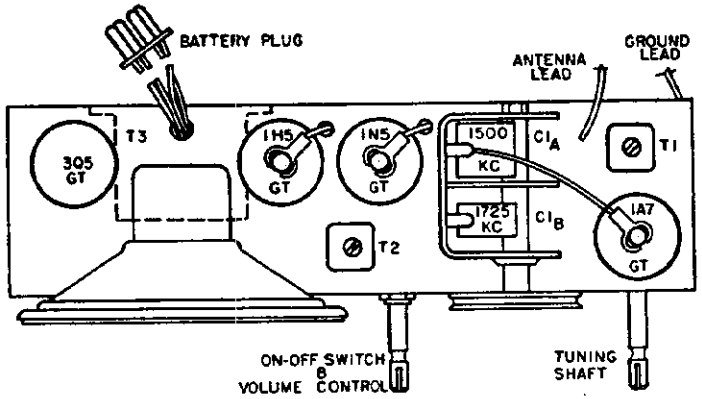

This model is a 4-Tube Superhetrodyne radio receiver designed to cover a frequency range of from 540 kilocycles to 1725 kilocycles (K.C.). The tubes used are —

1A7 GT—Osc. Converter
1N5 GT—I. F. Amplifier
1H5 GT—AVC Det. Audio Amplifier
3Q5 GT—Power Output

ALIGNMENT PROCEDURE

With an output meter connected across the voice coil of the speaker, the output meter reading for 50 milliwatts is .4 volts using a signal which is modulated 30% at 400 c.p.s. Follow through the procedure as outlined below for proper alignment.

Connect the signal generator to the grid cap of the IA7 GT Tube through a .1 MFD. Condenser. Connect the ground lead of the generator to the chassis. Adjust the signal generator to 455 K.C. and set the variable condenser of the receiver to minimum capacity (fully opened). With the volume control full on and minimum output from the signal generator adjust the two trimmers on the first and second I.F. transformers for maximum output.

Now connect the signal generator to the antenna connection of the receiver through a .00025 condenser. Adjust the signal generator frequency to 1725 K.C. and set the variable condenser to minimum capacity (fully opened), and adjust the oscillator trimmer (C1B) for maximum output. Set signal generator to 1500 K.C. and tune receiver to signal. Adjust the antenna trimmer (C1A) on the variable condenser for maximum output.

MODEL 147 Series

WARWICK MFG. CORP.

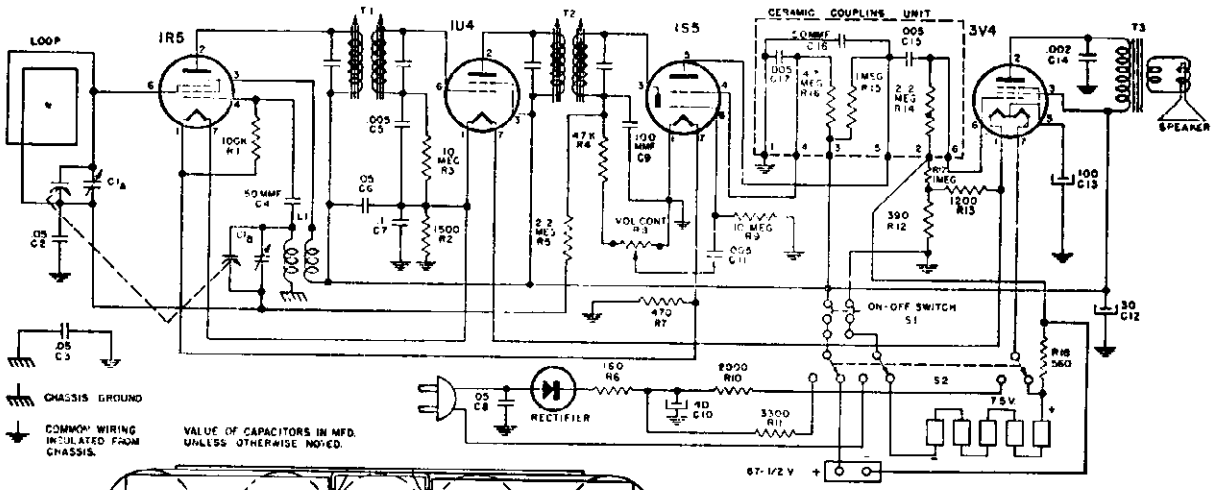

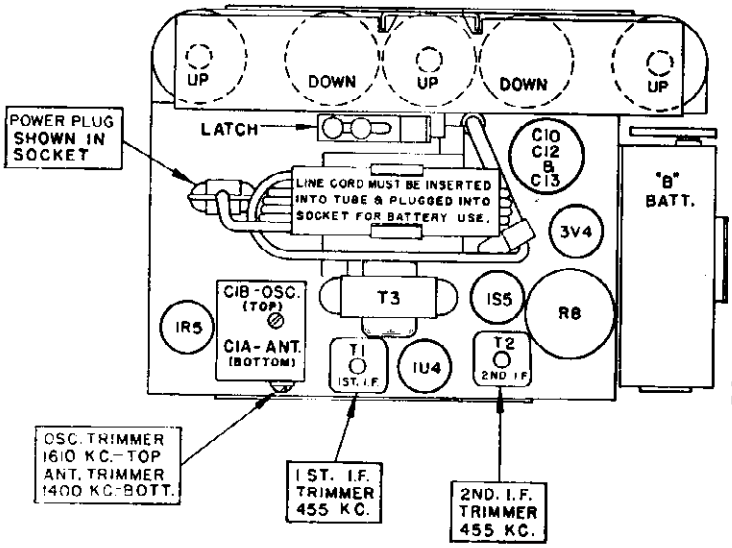

Fig. 1. Tube, Trimmer and Battery Locations

PARTS LIST

CODE NO.	PART NO.	DESCRIPTION
C1A, C1B	B19-197	Variable condenser
C2, C6	A18-152	.05 MFD 200 volt condenser
C3	A18-169	.05 MFD 400 volt condenser
C4	A15-175	50 MMF mica condenser
C5, C11	A16-153	.005 MFD 600 volt condenser
C7	A16-157	.1 MFD 200 volt condenser
C8	A16-172	.05 MFD 400 volt condenser
C9	A15-188	100 MMF mica condenser
C10, 12, 13	A18-290	40-30 MFD 150 volt, 100 MFD 10 volt, electrolytic
C14	A18-182	.002 MFD 200 volt condenser
C15, 16, 17	A17-100	.005 MMF. .005 MFD. 50 MMF. See note below.
R1	A60-671	100K ohm ½ watt 20% resistor
R2	A60-680	1500 ohm ½ watt 10% resistor
R3, R9	A60-663	10 megohm ½ watt 20% resistor
R4	A60-685	47K ohm ½ watt 20% resistor
R5	A60-684	2.2 megohm ½ watt 20% resistor
R6	A60-725	150 ohm 5 watt 10% resistor
R7	A60-722	470 ohm ½ watt 10% resistor
R8, S1	A24-178	Volume control, with switch
R10	A60-757	2000 ohm 10 watt 10% resistor
R11	A60-724	3300 ohm 1 watt 10% resistor
R12	A60-665	390 ohm ½ watt 10% resistor
R13	A60-756	1200 ohm ½ watt 10% resistor
R14, 15, 16	A17-100	2.2 megohm, 1 megohm, 4.7 megohm. See note below.

NOTE: C15, C16, C17, R14, R15, R16 are contained in the Ceramic Coupling Unit Part No. A17-100

R17	A60-668	1 megohm, ½ watt 20% resistor
R18	A60-758	560 ohm ½ watt 10% resistor
L1	A10-514	Oscillator coil
T1, T2	C10-475	1st and 2nd I.F. transformer
T3	B60-245	Output transformer
S2	A69-182	Switch, AC-DC. battery
	S84-242	Bracket, "A" battery retainer
	S84-278	Cover, front, grey (with loop)
	S84-281	Cover, front, maroon (with loop)
	S84-128	Cover, rear, grey
	S84-169	Cover, rear, maroon
	D21-108	End-cap, for handle
	A83-421	Clip, I.F. transformer mounting
	S83-442	Handle, rubber, grey
	A83-494	Handle, rubber, black
	S84-243	Hub and pointer assembly
	C52-216	Knob, tuning, grey
	A52-229	Knob, tuning, maroon
	B52-217	Knob, volume control, grey
	A52-232	Knob, volume control, maroon
	A83-568	Rectifier, selenium
	B79-364	Speaker, 4" P.M.
	A78-49	Terminal, for "B" battery

(See schematic diagram.)

ALIGNMENT PROCEDURE

The following alignment procedure is for use only by competent servicemen having the proper equipment.

The alignment should be made with volume control fully on, and the output from the signal generator as low as possible, to prevent A.V.C. action from interfering with correct alignment.

With the output meter connected across the voice coil of the speaker; the output meter reading for 50 milliwatts is .4 volts using a signal which is modulated 400 c.p.s.

Adjust all trimmers for maximum output. Repeat alignment procedure given below as a final check.

For alignment points refer to Figure No. 1.

CAUTION: This is an A.C.-D.C. receiver and if alignment is made with the receiver connected to 117 volts A.C. or D.C., it is necessary to isolate the signal generator or the receiver from the line by use of a transformer, or place a .2 M.F.D. condenser in both test leads of the Signal Generator.

1R5—Mixer, Oscillator
1U4—I.F. Amplifier
1S5—Detector and 1st Audio
3V4—Power output

Position of Variable	Generator Frequency	Dummy Ant. Mid.	Generator Connections	Trimmer Adjustment	Trimmer Function
Fully open	455 KC	.1	*1R5 Grid (Stator of C1A)	T2	Output I.F.
Fully open	455 KC	.1	*1R5 Grid (Stator of C1A)	T1	Input I.F.
Fully open	1600 KC	.1	*1R5 Grid (Stator of C1A)	C1B	Oscillator
Tune in signal from generator	1400 KC	—	Loosely coupled to loop	C1A	Antenna

*Connect ground lead of signal generator to common negative.

© John F. Rider

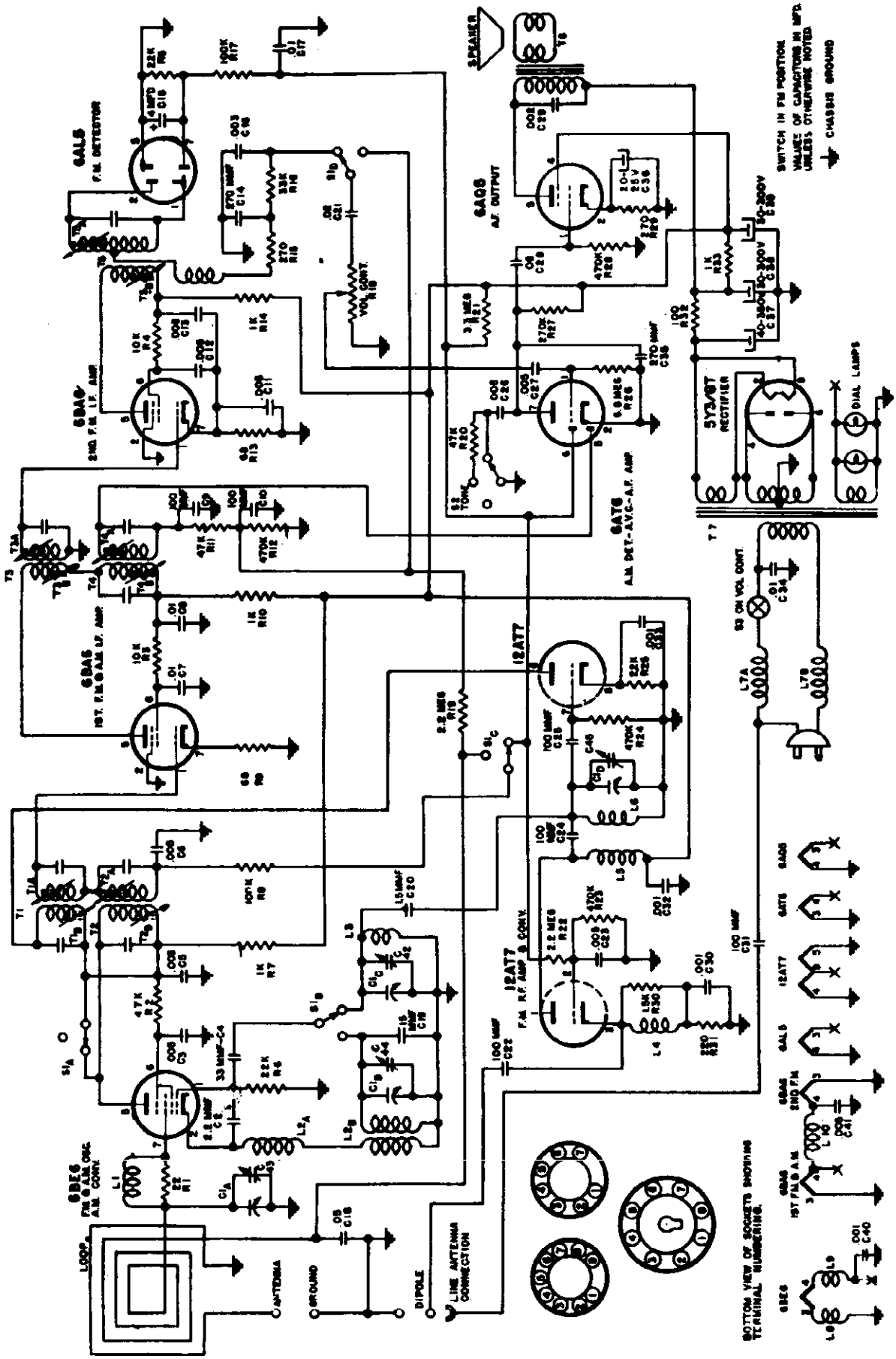

FIG. 1 SCHEMATIC DIAGRAM

MODEL 149 Series WARWICK MFG. CORP.

SPECIFICATIONS

Power Supply	105-125 volts 60 cycle AC only.
Power Consumption	65 Watts
Frequency Range FM	88 to 108 MC.
Frequency Range AM	540 to 1600 KC.
I.F. Frequency FM	10.7 MC.
I.F. Frequency AM	455 KC.
Band width, FM, Ratio Detector	330 KC.
Band width, FM, 1st I.F.	280 KC.
Band width, FM, Converter	220 KC.
Speaker	6¼" P.M.

The tubes used are as follows:

12AT7	FM RF Amplifier, Converter
6BE6	FM Osc, Am Osc, Converter
6BA6	FM-AM, 1st I.F. Amplifier
6BA6	FM-AM, 2nd I.F. Amplifier
6AL5	FM Detector
6AT6	AM Detector, AVC, Audio
6AQ5	Power Output
5Y3	Power Rectifier
No. 47	Pilot Lights (2)

SERVICE NOTES

INSTALLATION

This receiver is shipped from the factory complete with a built-in loop antenna for standard AM broadcast reception. A power-line antenna is used for the reception of FM stations. These antennas will be satisfactory for good reception under normal conditions. Terminals are provided at the back of the radio for connecting external AM and FM antennas, wherever this is found to be desirable as explained below.

When the receiver is to be used under difficult conditions, such as in buildings constructed mainly of steel, or those with steel lath, or, when large buildings, mountains or other objects are between the receiver and the station to be received, it may be necessary to use an external dipole antenna. Remember too, FM reception is limited as to distance and when used outside the primary service area of the transmitter, an outside antenna is very necessary.

The type of dipole to be used depends upon the signal strength of the station in that particular area, as well as conditions of reception as outlined above. There are three types of FM dipole antenna available, the single dipole, the folded dipole, and the non-directional dipole. When the stations to be received are in one general direction, a reflector may be added to either of the first two types to increase their efficiency.

GENERAL

Due to the high frequencies at which FM signals are received the service man must use great care when servicing these sets. Extreme caution must be used regarding the moving of component parts in the R.F. and oscillator circuits of the receiver as those circuits can be detuned in this manner.

If it becomes necessary to replace components such as resistors and condensers they must be replaced with parts of the same size, type, voltage rating and tolerance as called for in the parts list.

When installing new parts they should be placed in the same position as the original, and the leads should be cut to the same length.

ALIGNMENT NOTES

This receiver has been thoroughly inspected and tested at the factory, using the most modern test equipment available, such as FM sweep generators and oscilloscopes. All R.F. and I.F. circuits have been accurately adjusted at the factory and no attempt should be made to realign these circuits unless it is absolutely necessary.

CAUTION: If realignment is necessary be sure the proper test equipment is available, as listed below, before proceeding with the alignment procedure as given

EQUIPMENT USED FOR ALIGNMENT

Vacuum tube voltmeter.

AM Signal generator

FM Sweep generator.

Oscilloscope.

Insulated screw driver.

Dummy antenna:
- .1 MFD condenser
- .00025 MFD mica condenser
- 150 ohm resistor (2)

Output meter.

© John F. Rider

ALIGNMENT PROCEDURE

STEPS	RECEIVER DIAL SETTING	BAND SWITCH POSITION	SIGNAL GENERATOR FREQUENCY	DUMMY ANTENNA	SIGNAL GENERATOR CONNECTIONS	OUTPUT INDICATOR	TRIMMER ADJUSTMENT	TRIMMER FUNCTION	REMARKS
1	Minimum capacity	AM	455 KC 400 cycle AM	.1 MFD	High side—grid of AM converter tube (6BE6) Low side—chassis	Output Meter across voice coil	T4A, T4B T2A, T2B	AM I.F.	Adjust for maximum output
2	"	"	1600 KC 400 cycle AM	"	"	"	C44	AM Oscillator	"
3	1400 KC	"	1400 KC 400 cycle AM	.00025 MFD	High side—One ant. terminal Low side—Other ant. terminal	"	C43	AM Antenna	"
4	Any position where there is no station interference.	FM	10.7 MC unmodulated .1 volt output.	.1 MFD	High side—grid of 2nd I.F. amplifier tube (6BA6) Low side—chassis	Connect V.T.V.M. to plate of Ratio Detector tube, pin 7 (6AL5)	T5B	Ratio detector primary	Adjust for maximum negative voltage, about —5 volts
5	"	"	10.7 MC 400 cycle 30% Modulation. (See note A)	"	"	Connect scope to audio take-off point (across C16)	T5A	Ratio detector secondary	Adjust for a balanced pattern on scope. See Fig. 2
6	"	"	"	"	High side—grid of 1st I.F. amplifier tube (6BA6) Low side—chassis	"	T3A T3B	FM 2nd I.F.	Adjust for maximum gain and best pattern on scope. See Fig. 2
7	"	"	"	"	High side—grid (pin 7) of FM converter tube (12AT7) Low side—chassis	"	T1A T1B	FM 1st I.F.	"
8	108.5 MC	"	108.5 MC 400 cycle 30% modulation (22.5 KC deviation)	300 ohms in high side	High side—ant. terminal Low side—chassis	Connect output meter across voice coil	C42	FM oscillator	Adjust for maximum output
9	105 MC	"	105 MC 400 cycle 30% modulation (22.5 KC deviation)	"	"	"	C46	FM R.F.	"

NOTE A: When aligning the FM I.F. circuits, keep the out put from the signal generator as low as possible.

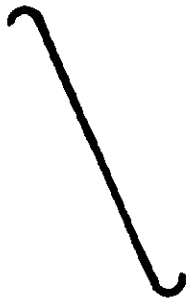

FIGURE 2

© John F. Rider

RESISTANCE CHART

	PIN 1	PIN 2	PIN 3	PIN 4	PIN 5	PIN 6	PIN 7	PIN 8	PIN 9
6BE6 FM & AM OSC AM CONV	22K	1.5	.5	.5	3.5M	3.5M	2.5M		
12AT7 FM RF AMP & CONV	3.3M	500K	250	0	0	3.5M	500K	2K	0
6BA6 1st IF AM & FM	200K	0	0	0	3.5M	3.5M	70		
6BA6 2nd IF AM & FM	0	0	0	0	3.5M	3.5M	70		
6AL5 FM DETECTOR	OPEN	OPEN	0	0	0	0	22K		
6AT6 AM DETECTOR, AVC, AUDIO	7M	0	0	0	500K	120K	3.5M		
6AQ5 POWER OUTPUT	470K	300	0	0	3.5M	3.5M	0		
5Y3 POWER RECTIFIER		3.5M		0		0		3.5M	

All voltages shown are approximate.

All resistance readings are taken from tube pin to chassis.

Due to manufacturing tolerance on component parts, resistance readings may vary as much as 20%.

All readings are shown in ohms unless otherwise noted.

VOLTAGE CHART

	PIN 1	PIN 2	PIN 3	PIN 4	PIN 5	PIN 6	PIN 7	PIN 8	PIN 9
6BE6 FM & AM OSC AM CONV	0	0	0	6 AC	155	125	0		
12AT7 FM RF AMP & CONV	170	0	1.5	0	0	155	0	1	6 AC
6BA6 1st IF AM & FM	0	0	0	6 AC	150	100	0		
6BA6 2nd IF AM & FM	0	0	0	6 AC	155	110	1		
6AL5 FM DETECTOR	0	0	6 AC	0	0	0	0		
6AT6 AM DETECTOR, AVC, AUDIO	—.5	0	0	6	0	0	60		
6AQ5 POWER OUTPUT	0	7.5	6 AC	0	215	170	0		
5Y3 POWER RECTIFIER		235		230 AC		230 AC		235	

All voltage readings are taken from tube pin to chassis.

All measurements are made with no signal, using a 20,000 ohm per volt meter.

AC input voltage must be maintained at 117 volts for accurate readings.

AC voltages shown are at 1000 ohms per volt.

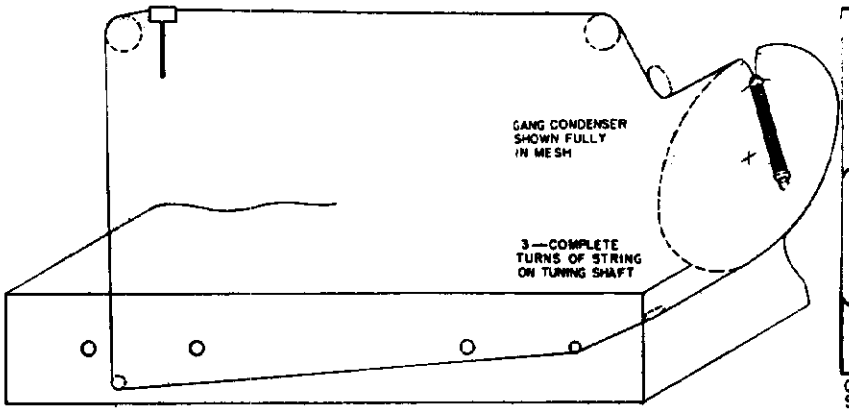

FIG. 4 DIAL CORD STRINGING

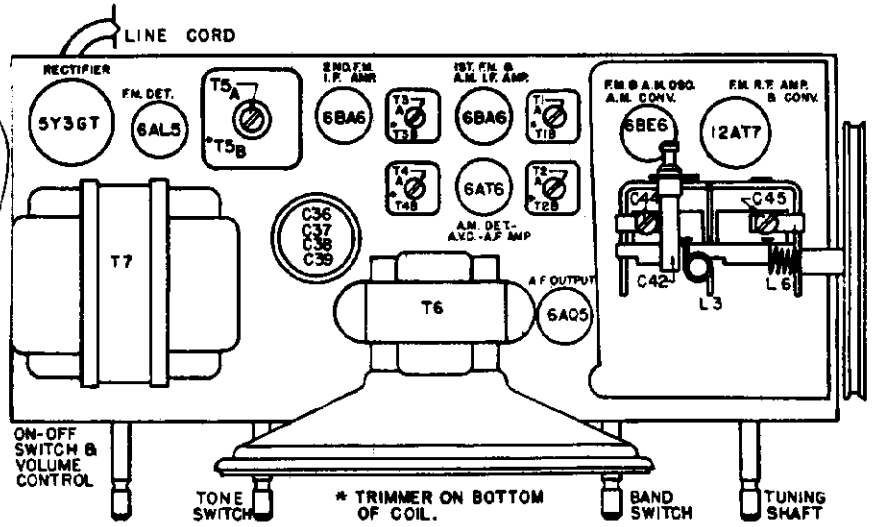

FIG. 3 TUBE AND TRIMMER LOCATIONS

PARTS LIST

Schematic Diagram Reference	Part No.	Description
C1A, C1B, C1C, C1D	C19-200	Variable Condenser
C2	A83-376	2.2 MMF, gimmick
C3, C5, C6, C23, C41	A16-177	.005 MFD ceramic (Centralab NO. DA048 or equiv.)
C4	A15-210	33 MMF ceramic, 20%, (Erie Style "A" N1400)
C7, C8, C34	A16-192	.01-400 volts, paper tubular
C9, C10, R11	A17-101	100 MMF, 100 MMF, 47K ohms (Diode filter unit, Herlec F06-001)
C11, C12, C13	A17-102	3 x .005 MFD Herlec B34-005
C14, C35	A15-208	270 MMF ceramic, 20%, (Erie Style "K" or equiv.)
C15	A18-292	4 MFD—50 volt electrolytic
C16	A16-180	.003-200 volts, paper tubular
C17	A16-165	.01-200 volts, paper tubular
C18	A16-197	.05-200 volts, paper tubular
C19	A15-209	15 MMF ceramic, 10%, (Erie Style "A" or equiv.)
C20	A15-206	1.5 MMF ceramic, 33%, (Erie Style "A" or equiv.)
C21, C28	A16-196	.02-400 volts, paper tubular
C22, C24, C25, C31	A15-196	100 MMF 20% Ceramic Condenser (Erie Style K or Equiv.)
C26, C27	A16-199	.005-400 volts, paper tubular
C29	A16-198	.002-600 volts, paper tubular
C30, C32, C33, C40	A16-195	.001 MMF ceramic (Centralab NO. BC20A or equiv.)
C36, C37, C38, C39	A18-291	20-25 volts, 40-350 volts, 30-300 volts, 30-300 volts electrolytic
C42	A20-146	FM oscillator trimmer
R1	A33-231	See L1.
R2	A60-759	4.7 K ohms, ½ watt, 10%
R3, R4	A60-760	10 K ohms, ½ watt, 10%
R5, R6	A60-744	22 K ohms, ½ watt, 10%
R7, R10, R14	A60-675	1 K ohms, ½ watt, 20%
R8, R17	A60-727	100 K ohms, ½ watt, 20%
R9, R13	A60-742	68 ohms, ½ watt, 10%
R11, C9, C10	A17-101	47 K ohms, 100 MMF, 100 MMF (Diode filter unit, Herlec FO6-001)
R12, R23, R24, R28	A60-731	470 K ohms, ½ watt, 20%
R15	A60-723	270 ohms, ½ watt, 20%
R16	A60-748	33 K ohms, ½ watt, 10%
R18	B24-181	Volume control and switch S3
R19, R22	A60-726	2.2 Megohms, ½ watt, 20%
R20	A60-730	47 K ohms, ½ watt, 20%
R21	A60-761	3.3 Megohms, ½ watt, 20%
R25	A60-714	2.2 K ohms, ½ watt, 10%
R26	A60-762	6.8 Megohms, ½ watt, 20%
R27	A60-747	270 K ohms, ½ watt, 20%
R29	A60-754	270 ohms, ½ watt, 10%
R30	A10-516	See L4
R31	A60-753	220 ohms, ½ watt, 10%
R32	A60-755	100 ohms, 1 watt, 10%
R33	A60-763	1 K ohms, 4 watts, 10%
R34	A60-667	220 K ohms ½ watt 20%
L1	A33-231	Choke, wound on R1, 22 ohms
L2A, L2B	A10-515	Oscillator coil, AM
L3	A10-517	Oscillator coil, FM
L4	A10-516	Antenna coil, FM, wound on R30, 1.5 K ohms
L5	A33-233	Plate choke, FM RF
L6	A10-518	RF coil, FM
L7A, L7B	A33-230	Line choke
L8, L9	A33-232	FM oscillator filament choke
L10	A33-227	Filament choke
S1A, S1B, S1C, S1D	A69-183	Band switch
S2	A26-125	Tone control
S3	B24-181	ON-OFF SWITCH, on volume control
T1	A10-519	1st I.F., FM
T2	A10-521	1st I.F., AM
T3	A10-520	2nd I.F., FM
T4	A10-522	2nd I.F., AM
T5	SC10-492	Ratio detector, FM
T6	A80-247	Output transformer
T7	C80-246	Power transformer
	A23-153	Line cord and plug
	B79-351	Speaker, 6¼", P.M.
	B79-342	Speaker, 6¼", P.M. Alternate
	B79-341	Speaker, 6¼", P.M. Alternate
	SC84-292	Back and loop
	D42-379	Cabinet, walnut
	A42-401	Cabinet, ivory
	C67-537	Dial scale, glass
	A52-284	Knob, FM-AM, walnut
	A52-285	Knob, FM-AM, ivory
	A52-250	Knob, ON-OFF-VOL, ivory
	A52-253	Knob, ON-OFF-VOL, walnut
	A52-249	Knob, TONE 1-2-3, ivory
	A52-254	Knob, TONE 1-2-3, walnut
	A52-248	Knob, TUNING, ivory
	A52-255	Knob, Walnut
	A58-65	Pointer, slide type
	A83-292	Retainer, dial scale, RH
	A83-293	Retainer, dial scale, LH
	A87-31	Socket, pilot light
	A70-122	Spring, string tension
	A51-105	String, pointer travel, 42"

MODEL 150 Series

WARWICK MFG. CORP.

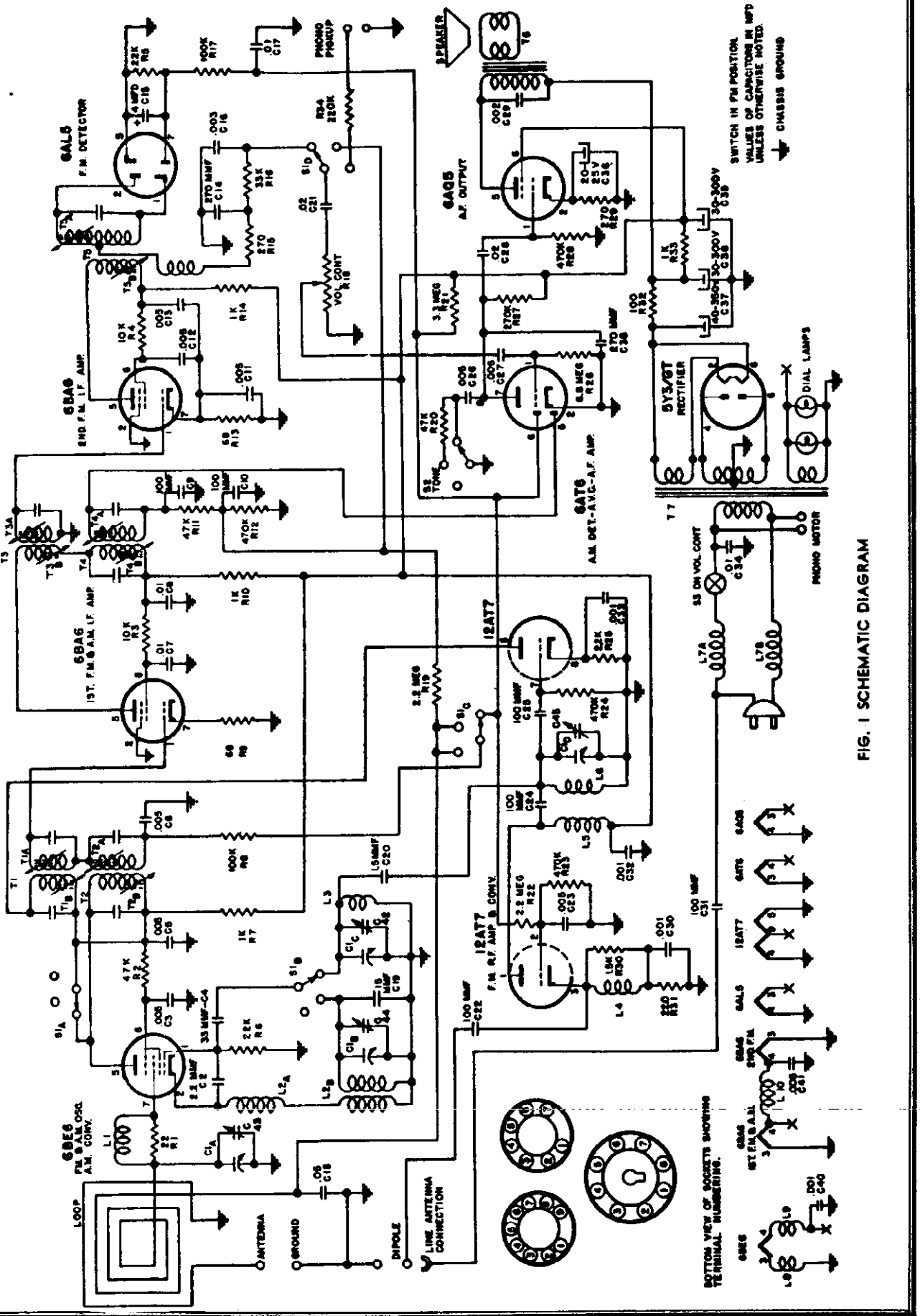

FIG. 1 SCHEMATIC DIAGRAM

RECORD CHANGER: Gen. Inst. Model 205 RCD CH 15 5

SPECIFICATIONS

Power Supply	105-125 volts 60 cycle AC only.
Power Consumption	65 Watts
Frequency Range FM	88 to 108 MC.
Frequency Range AM	540 to 1600 KC.
I.F. Frequency FM	10.7 MC.
I.F. Frequency AM	455 KC.
Band width, FM, Ratio Detector	330 KC.
Band width, FM, 1st I.F.	280 KC.
Band width, FM, Converter	220 KC.
Speaker	6 1/4" P.M.

The tubes used are as follows:

12AT7	FM RF Amplifier, Converter
6BE6	FM Osc, Am Osc, Converter
6BA6	FM-AM, 1st I.F. Amplifier
6BA6	FM-AM, 2nd I.F. Amplifier
6AL5	FM Detector
6AT6	AM Detector, AVC, Audio
6AQ5	Power Output
5Y3	Power Rectifier
No. 47	Pilot Lights (2)

SERVICE NOTES

INSTALLATION

This receiver is shipped from the factory complete with a built-in loop antenna for standard AM broadcast reception. A power-line antenna is used for the reception of FM stations. These antennas will be satisfactory for good reception under normal conditions. Terminals are provided at the back of the radio for connecting external AM and FM antennas, wherever this is found to be desirable as explained below.

When the receiver is to be used under difficult conditions, such as in buildings constructed mainly of steel, or those with steel lath, or, when large buildings, mountains or other objects are between the receiver and the station to be received, it may be necessary to use an external dipole antenna. Remember too, FM reception is limited as to distance and when used outside the primary service area of the transmitter, an outside antenna is very necessary.

The type of dipole to be used depends upon the signal strength of the station in that particular area, as well as conditions of reception as outlined above. There are three types of FM dipole antenna available, the single dipole, the folded dipole, and the non-directional dipole. When the stations to be received are in one general direction, a reflector may be added to either of the first two types to increase their efficiency.

GENERAL

Due to the high frequencies at which FM signals are received the service man must use great care when servicing these sets. Extreme caution must be used regarding the moving of component parts in the R.F. and oscillator circuits of the receiver as those circuits can be detuned in this manner.

If it becomes necessary to replace components such as resistors and condensers they must be replaced with parts of the same size, type, voltage rating and tolerance as called for in the parts list.

When installing new parts they should be placed in the same position as the original, and the leads should be cut to the same length.

ALIGNMENT NOTES

This receiver has been thoroughly inspected and tested at the factory, using the most modern test equipment available, such as FM sweep generators and oscilloscopes. All R.F. and I.F. circuits have been accurately adjusted at the factory and no attempt should be made to realign these circuits unless it is absolutely necessary.

CAUTION: If realignment is necessary be sure the proper test equipment is available, as listed below, before proceeding with the alignment procedure as given

EQUIPMENT USED FOR ALIGNMENT

Vacuum tube voltmeter.
AM Signal generator
FM Sweep generator.
Oscilloscope.
Insulated screw driver.
Dummy antenna:
.1 MFD condenser
.00025 MFD mica condenser
150 ohm resistor (2)
Output meter.

© John F. Rider

ALIGNMENT PROCEDURE

STEPS	RECEIVER DIAL SETTING	BAND SWITCH POSITION	SIGNAL GENERATOR FREQUENCY	DUMMY ANTENNA	SIGNAL GENERATOR CONNECTIONS	OUTPUT INDICATOR	TRIMMER ADJUSTMENT	TRIMMER FUNCTION	REMARKS
1	Minimum capacity	AM	455 KC 400 cycle AM	.1 MFD	High side—grid of AM converter tube (6BE6) Low side—chassis	Output Meter across voice coil	T4A, T4B T2A, T2B	AM I.F.	Adjust for maximum output
2	"	"	1600 KC 400 cycle AM	"	"	"	C44	AM Oscillator	"
3	1400 KC	"	1400 KC 400 cycle AM	.00025 MFD	High side—One ant. terminal Low side—Other ant. terminal	"	C43	AM Antenna	"
4	Any position where there is no station interference.	FM	10.7 MC unmodulated .1 volt output.	.1 MFD	High side—grid of 2nd I.F. amplifier tube*(6BA6) Low side—chassis	Connect V.T.V.M. to plate of Ratio Detector tube, pin 7 (6AL5)	T5B	Ratio detector primary	Adjust for maximum negative voltage, about —5 volts
5	"	"	10.7 MC 400 cycle 30% Modulation. (See note A)	"	"	Connect scope to audio take-off point (across C16)	T5A	Ratio detector secondary	Adjust for a balanced pattern on scope. See Fig. 2
6	"	"	"	"	High side—grid of 1st I.F. amplifier tube (6BA6) Low side—chassis	"	T3A T3B	FM 2nd I.F.	Adjust for maximum gain and best pattern on scope. See Fig. 2
7	"	"	"	"	High side—grid (pin 7) of FM converter tube (12AT7) Low side—chassis	"	T1A T1B	FM 1st I.F.	"
8	108.5 MC	"	108.5 MC 400 cycle 30% modulation (22.5 KC deviation)	300 ohms in high side	High side—ant. terminal Low side—chassis	Connect output meter across voice coil	C42	FM oscillator	Adjust for maximum output
9	105 MC	"	105 MC 400 cycle 30% modulation (22.5 KC deviation)	"	"	"	C45	FM R.F.	"

NOTE A: When aligning the FM I.F. circuits, keep the out put from the signal generator as low as possible.

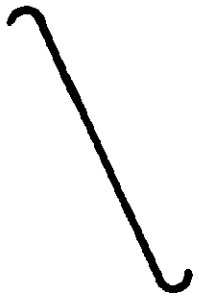

FIGURE 2

VOLTAGE CHART

	PIN 1	PIN 2	PIN 3	PIN 4	PIN 5	PIN 6	PIN 7	PIN 8	PIN 9
6BE6 FM & AM OSC AM CONV	0	0	0	6 AC	155	125	0		
12AT7 FM RF AMP & CONV	170	0	1.5	0	0	155	0	1	6 AC
6BA6 1st IF AM & FM	0	0	0	6 AC	150	100	0		
6BA6 2nd IF AM & FM	0	0	0	6 AC	155	110	1		
6AL5 FM DETECTOR	0	0	6 AC	0	0	0	0		
6AT6 AM DETECTOR, AVC, AUDIO	—.5	0	0	6	0	0	60		
6AQ5 POWER OUTPUT	0	7.5	6 AC	0	215	170	0		
5Y3 POWER RECTIFIER		235		230 AC		230 AC		235	

All voltage readings are taken from tube pin to chassis.

All measurements are made with no signal, using a 20,000 ohm per volt meter.

AC input voltage must be maintained at 117 volts for accurate readings.

AC voltages shown are at 1000 ohms per volt.

RESISTANCE CHART

	PIN 1	PIN 2	PIN 3	PIN 4	PIN 5	PIN 6	PIN 7	PIN 8	PIN 9
6BE6 FM & AM OSC AM CONV	22K	1.5	.5	.5	3.5M	3.5M	2.5M		
12AT7 FM RF AMP & CONV	3.3M	500K	250	0	0	3.5M	500K	2K	0
6BA6 1st IF AM & FM	200K	0	0	0	3.5M	3.5M	70		
6BA6 2nd IF AM & FM	0	0	0	0	3.5M	3.5M	70		
6AL5 FM DETECTOR	OPEN	OPEN	0	0	0	0	22K		
6AT6 AM DETECTOR, AVC, AUDIO	7M	0	0	0	500K	120K	3.5M		
6AQ5 POWER OUTPUT	470K	300	0	0	3.5M	3.5M	0		
5Y3 POWER RECTIFIER		3.5M		0		0		3.5M	

All voltages shown are approximate.

All resistance readings are taken from tube pin to chassis.

Due to manufacturing tolerance on component parts, resistance readings may vary as much as 20%.

All readings are shown in ohms unless otherwise noted.

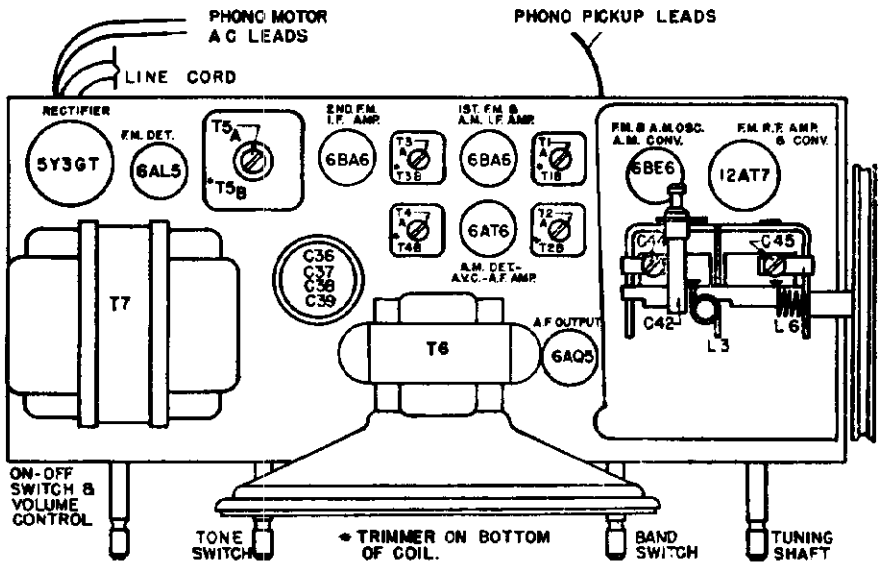

FIG. 3 TUBE AND TRIMMER LOCATIONS

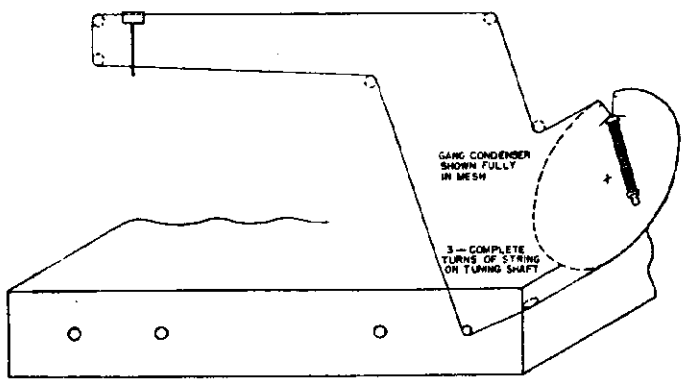

FIG. 4 DIAL CORD STRINGING

PARTS LIST

Schematic Diagram Reference	Part No.	Description
C1A, C1B C1C, C1D	C19-200	Variable Condenser
C2	A83-376	2.2 MMF, gimmick
C3, C5, C6 C23, C41	A16-177	.005 MFD ceramic (Centralab NO. DAO48 or equiv.)
C4	A15-210	33 MMF ceramic, 20%, (Erie Style "A" NI400)
C7, C8, C34	A16-192	.01-400 volts, paper tubular
C9, C10, R11	A17-101	100 MMF, 100 MMF, 47K ohms (Diode filter unit, Herlec F06-001)
C11, C12, C13	A17-102	3 x .005 MFD Herlec B34-005
C14, C35	A15-208	270 MMF ceramic, 20%, (Erie Style "K" or equiv.)
C15	A18-292	4 MFD—50 volt electrolytic
C16	A16-180	.003-200 volts, paper tubular
C17	A16-165	.01-200 volts, paper tubular
C18	A16-197	.05-200 volts, paper tubular
C19	A15-209	15 MMF ceramic, 10%, (Erie Style "A" or equiv.)
C20	A15-206	1.5 MMF ceramic, 33%, (Erie Style "A" or equiv.)
C21, C28	A16-196	.02-400 volts, paper tubular
C22, C24 C25, C31	A15-196	100 MMF 20% Ceramic Condenser (Erie Style K or Equiv.)
C26, C27	A16-199	.005-400 volts, paper tubular
C29	A16-198	.002-600 volts, paper tubular
C30, C32 C33, C40	A16-195	.001 MMF ceramic (Centralab NO. BC20A or equiv.)
C36, C37 C38, C39	A18-291	20-25 volts, 40-350 volts 30-300 volts, 30-300 volts electrolytic
C42	A20-146	FM oscillator trimmer
R1	A33-231	See L1.
R2	A60-759	4.7 K ohms, ½ watt, 10%
R3, R4	A60-760	10 K ohms, ½ watt, 10%
R5, R6	A60-744	22 K ohms, ½ watt, 10%
R7, R10, R14	A60-675	1 K ohms, ½ watt, 20%
R8, R17	A60-727	100 K ohms, ½ watt, 20%
R9, R13	A60-742	68 ohms, ½ watt, 10%
R11, C9, C10	A17-101	47 K ohms, 100 MMF, 100 MMF (Diode filter unit, Herlec FO6-001)
R12, R23 R24, R28	A60-731	470 K ohms, ½ watt, 20%
R15	A60-723	270 ohms, ½ watt, 20%
R16	A60-748	33 K ohms, ½ watt, 10%
R18	B24-181	Volume control and switch S3
R19, R22	A60-726	2.2 Megohms, ½ watt, 20%
R20	A60-730	47 K ohms, ½ watt, 20%
R21	A60-761	3.3 Megohms, ½ watt, 20%
R25	A60-714	2.2 K ohms, ½ watt, 10%
R26	A60-762	6.8 Megohms, ½ watt, 20%
R27	A60-747	270 K ohms, ½ watt, 20%
R29	A60-754	270 ohms, ½ watt, 10%
R30	A10-516	See L4
R31	A60-753	220 ohms, ½ watt, 10%
R32	A60-755	100 ohms, 1 watt, 10%
R33	A60-763	1 K ohms, 4 watts, 10%
R34	A60-667	220 K ohms ½ watt 20%
L1	A33-231	Choke, wound on R1, 22 ohms
L2A, L2B	A10-515	Oscillator coil, AM
L3	A10-517	Oscillator coil, FM
L4	A10-516	Antenna coil, FM, wound on R30, 1.5 K ohms
L5	A33-233	Plate choke, FM RF
L6	A10-518	RF coil, FM
L7A, L7B	A33-230	Line choke
L8, L9	A33-232	FM oscillator filament choke
L10	A33-227	Filament choke
S1A, S1B S1C, S1D	A69-184	Band switch
S2	A26-125	Tone control
S3	B24-181	ON-OFF SWITCH, on volume control
T1	A10-519	1st I.F., FM
T2	A10-521	1st I.F., AM
T3	A10-520	2nd I.F., FM
T4	A10-522	2nd I.F., AM
T5	SC10-492	Ratio detector, FM
T6	A80-247	Output transformer
T7	C80-246	Power transformer
	A23-153	Line cord and plug
	B79-351	Speaker, 6¼", P.M.
	B79-342	Speaker, 6¼", P.M. Alternate
	B79-341	Speaker, 6¼", P.M. Alternate
	S84-299	Back and loop
	C67-539	Dial scale, glass
	A52-260	Knob, TONE 1-2-3
	A52-261	Knob, ON-OFF-VOL
	A52-263	Knob, TUNING
	A52-286	Knob, FM-AM-PH
	A58-53	Pointer, slide type
	A83-429	Retainer, dial scale
	A70-122	Spring, string tension
	A87-29	Socket, pilot light
	A51-105	String, pointer travel
	B59-16	Record changer, General Instrument No. 205

©John F. Rider

WARWICK MFG. CORP. MODEL 155 Series

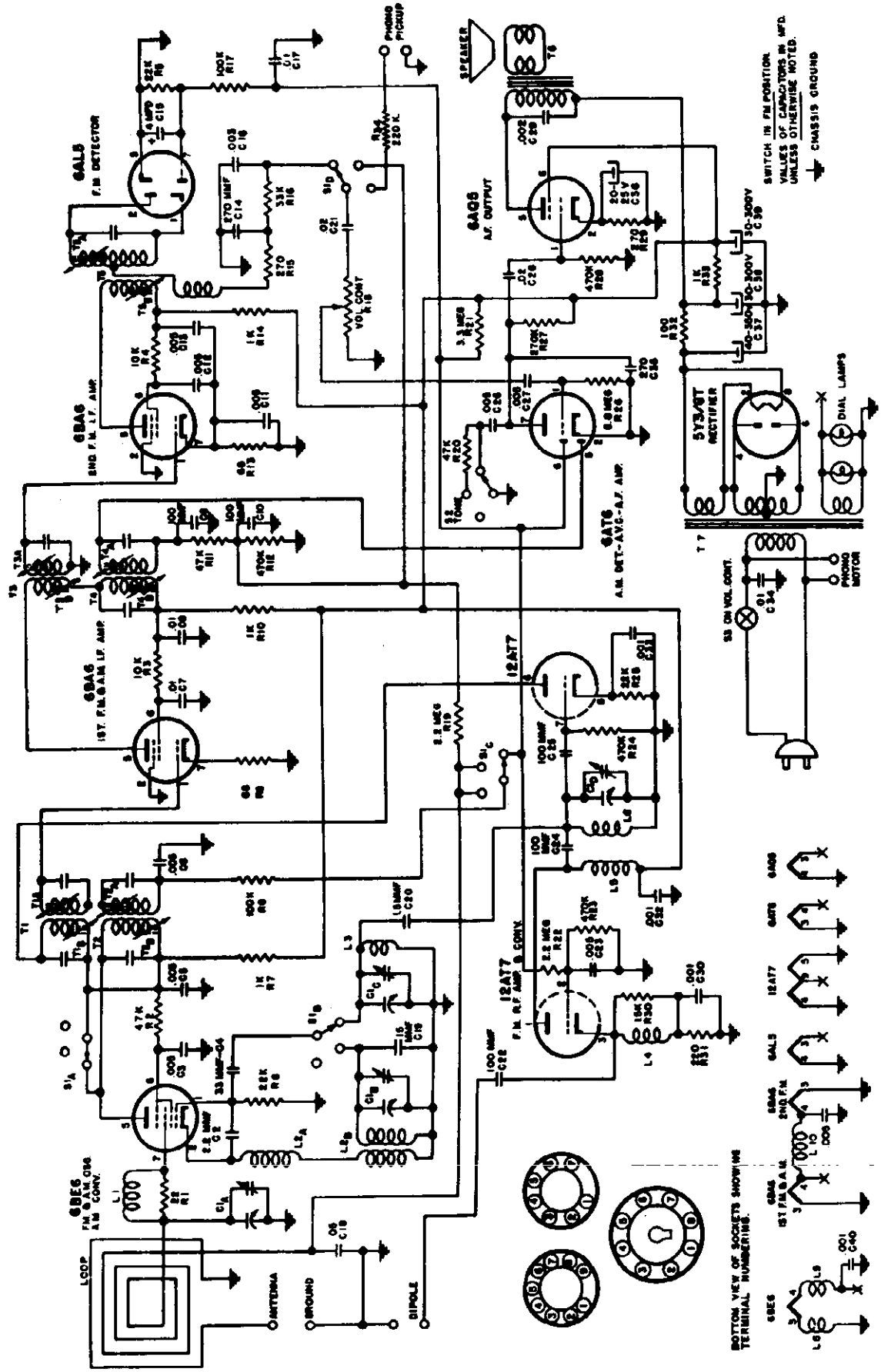

FIG. 1 SCHEMATIC DIAGRAM

MODEL 155 Series WARWICK MFG. CORP.

SPECIFICATIONS

Power Supply	105-125 volts 60 cycle AC only.
Power Consumption	65 Watts
Frequency Range FM	88 to 108 MC.
Frequency Range AM	540 to 1600 KC.
I.F. Frequency FM	10.7 MC.
I.F. Frequency AM	455 KC.
Band width, FM, Ratio Detector	330 KC.
Band width, FM, 1st I.F.	280 KC.
Band width, FM, Converter	220 KC.
Speaker	6¼" P.M.

The tubes used are as follows:

12AT7	FM RF Amplifier, Converter
6BE6	FM Osc, Am Osc, Converter
6BA6	FM-AM, 1st I.F. Amplifier
6BA6	FM-AM, 2nd I.F. Amplifier
6AL5	FM Detector
6AT6	AM Detector, AVC, Audio
6AQ5	Power Output
5Y3	Power Rectifier
No. 47	Pilot Lights (2)

SERVICE NOTES

INSTALLATION

This receiver is shipped from the factory complete with a built-in loop antenna for standard AM broadcast reception. A power-line antenna is used for the reception of FM stations. These antennas will be satisfactory for good reception under normal conditions. Terminals are provided at the back of the radio for connecting external AM and FM antennas, wherever this is found to be desirable as explained below.

When the receiver is to be used under difficult conditions, such as in buildings constructed mainly of steel, or those with steel lath, or, when large buildings, mountains or other objects are between the receiver and the station to be received, it may be necessary to use an external dipole antenna. Remember too, FM reception is limited as to distance and when used outside the primary service area of the transmitter, an outside antenna is very necessary.

The type of dipole to be used depends upon the signal strength of the station in that particular area, as well as conditions of reception as outlined above. There are three types of FM dipole antenna available, the single dipole, the folded dipole, and the non-directional dipole. When the stations to be received are in one general direction, a reflector may be added to either of the first two types to increase their efficiency.

GENERAL

Due to the high frequencies at which FM signals are received the service man must use great care when servicing these sets. Extreme caution must be used regarding the moving of component parts in the R.F. and oscillator circuits of the receiver as those circuits can be detuned in this manner.

If it becomes necessary to replace components such as resistors and condensers they must be replaced with parts of the same size, type, voltage rating and tolerance as called for in the parts list.

When installing new parts they should be placed in the same position as the original, and the leads should be cut to the same length.

ALIGNMENT NOTES

This receiver has been thoroughly inspected and tested at the factory, using the most modern test equipment available, such as FM sweep generators and oscilloscopes. All R.F. and I.F. circuits have been accurately adjusted at the factory and no attempt should be made to realign these circuits unless it is absolutely necessary.

CAUTION: If realignment is necessary be sure the proper test equipment is available, as listed below, before proceeding with the alignment procedure as given on page 5.

EQUIPMENT USED FOR ALIGNMENT

Vacuum tube voltmeter.

AM Signal generator

FM Sweep generator.

Oscilloscope.

Insulated screw driver.

Dummy antenna:
- .1 MFD condenser
- .00025 MFD mica condenser
- 150 ohm resistor (2)

Output meter.

©John F. Rider

ALIGNMENT PROCEDURE

STEPS	RECEIVER DIAL SETTING	BAND SWITCH POSITION	SIGNAL GENERATOR FREQUENCY	DUMMY ANTENNA	SIGNAL GENERATOR CONNECTIONS	OUTPUT INDICATOR	TRIMMER ADJUSTMENT	TRIMMER FUNCTION	REMARKS
1	Minimum capacity	AM	455 KC 400 cycle AM	.1 MFD	High side—grid of AM converter tube (6BE6) Low side—chassis	Output Meter across voice coil	T4A, T4B T2A, T2B	AM I.F.	Adjust for maximum output
2	"	"	1600 KC 400 cycle AM	"	"	"	C44	AM Oscillator	"
3	1400 KC	"	1400 KC 400 cycle AM	.00025 MFD	High side—One ant. terminal Low side—Other ant. terminal	"	C43	AM Antenna	"
4	Any position where there is no station interference.	FM	10.7 MC unmodulated .1 volt output.	.1 MFD	High side—grid of 2nd I.F. amplifier tube (6BA6) Low side—chassis	Connect V.T.V.M. to plate of Ratio Detector tube, pin 7 (6AL5)	T5B	Ratio detector primary	Adjust for maximum negative voltage, about —5 volts
5	"	"	10.7 MC 400 cycle 30% Modulation. (See note A)	"	"	Connect scope to audio take-off point (across C16)	T5A	Ratio detector secondary	Adjust for a balanced pattern on scope. See Fig. 2
6	"	"	"	"	High side—grid of 1st I.F. amplifier tube (6BA6) Low side—chassis	"	T3A T3B	FM 2nd I.F.	Adjust for maximum gain and best pattern on scope. See Fig. 2
7	"	"	"	"	High side—grid (pin 7) of FM converter tube (12AT7) Low side—chassis	"	T1A T1B	FM 1st I.F.	"
8	108.5 MC	"	108.5 MC 400 cycle 30% modulation (22.5 KC deviation)	300 ohms in high side	High side—ant. terminal Low side—chassis	Connect output meter across voice coil	C42	FM oscillator	Adjust for maximum output
9	105 MC	"	105 MC 400 cycle 30% modulation (22.5 KC deviation)	"	"	"	C45	FM R.F.	"

NOTE A: When aligning the FM I.F. circuits, keep the out put from the signal generator as low as possible.



FIGURE 2

© John F. Rider

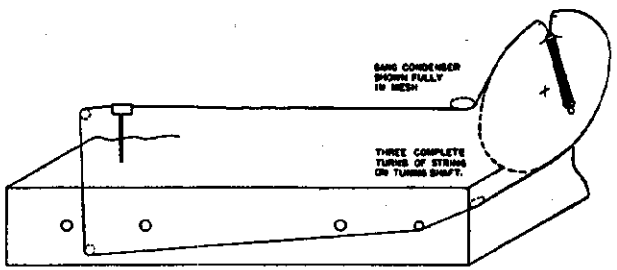

FIG. 4 DIAL CORD STRINGING

VOLTAGE CHART

	PIN 1	PIN 2	PIN 3	PIN 4	PIN 5	PIN 6	PIN 7	PIN 8	PIN 9
6BE6 FM & AM OSC AM CONV	0	0	0	6 AC	155	125	0		
12AT7 FM RF AMP & CONV	170	0	1.5	0	0	155	0	1	6 AC
6BA6 1st IF AM & FM	0	0	0	6 AC	150	100	0		
6BA6 2nd IF AM & FM	0	0	0	6 AC	155	110	1		
6AL5 FM DETECTOR	0	0	6 AC	0	0	0	0		
6AT6 AM DETECTOR, AVC, AUDIO	—.5	0	0	6	0	0	60		
6AQ5 POWER OUTPUT	0	7.5	6 AC	0	215	170	0		
5Y3 POWER RECTIFIER		235		230 AC		230 AC		235	

All voltage readings are taken from tube pin to chassis.

All measurements are made with no signal, using a 20,000 ohm per volt meter.

AC input voltage must be maintained at 117 volts for accurate readings.

AC voltages shown are at 1000 ohms per volt.

RESISTANCE CHART

	PIN 1	PIN 2	PIN 3	PIN 4	PIN 5	PIN 6	PIN 7	PIN 8	PIN 9
6BE6 FM & AM OSC AM CONV	22K	1.5	.5	.5	3.5M	3.5M	2.5M		
12AT7 FM RF AMP & CONV	3.3M	500K	250	0	0	3.5M	500K	2K	0
6BA6 1st IF AM & FM	200K	0	0	0	3.5M	3.5M	70		
6BA6 2nd IF AM & FM	0	0	0	0	3.5M	3.5M	70		
6AL5 FM DETECTOR	OPEN	OPEN	0	0	0	0	22K		
6AT6 AM DETECTOR, AVC, AUDIO	7M	0	0	0	500K	120K	3.5M		
6AQ5 POWER OUTPUT	470K	300	0	0	3.5M	3.5M	0		
5Y3 POWER RECTIFIER		3.5M		0		0		3.5M	

All voltages shown are approximate.

All resistance readings are taken from tube pin to chassis.

Due to manufacturing tolerance on component parts, resistance readings may vary as much as 20%.

All readings are shown in ohms unless otherwise noted.

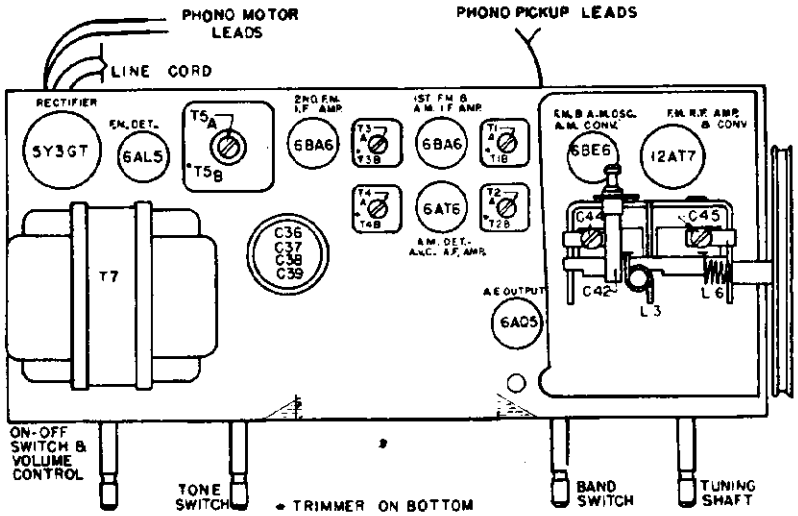

FIG. 3 TUBE AND TRIMMER LOCATIONS

PARTS LIST

Schematic Diagram Reference	Part No.	Description
C1A, C1B C1C, C1D	C19-200	Variable Condenser
C2	A83-376	2.2 MMF, gimmick
C3, C5, C6 C23, C41	A16-177	.005 MFD ceramic (Centralab NO. DAO48 or equiv.)
C4	A15-210	33 MMF ceramic, 20%, (Erie Style "A" N1400)
C7, C8, C34	A16-192	.01-400 volts, paper tubular
C9, C10, R11	A17-101	100 MMF, 100 MMF, 47K ohms (Diode filter unit, Herlec F06-001)
C11, C12, C13	A17-102	3 x .005 MFD Herlec B34-005
C14, C35	A15-208	270 MMF ceramic, 20%, (Erie Style "K" or equiv.)
C15	A18-292	4 MFD—50 volt electrolytic
C16	A16-180	.003-200 volts, paper tubular
C17	A16-165	.01-200 volts, paper tubular
C18	A16-197	.05-200 volts, paper tubular
C19	A15-209	15 MMF ceramic, 10%, (Erie Style "A" or equiv.)
C20	A15-206	1.5 MMF ceramic, 33%, (Erie Style "A" or equiv.)
C21, C28	A16-196	.02-400 volts, paper tubular
C22, C24 C25,	A15-196	100 MMF 20% Ceramic Condenser (Erie Style K or Equiv.)
C26, C27	A16-199	.005-400 volts, paper tubular
C29	A16-198	.002-600 volts. paper tubular
C30, C32 C33, C40	A15-195	.001 MMF ceramic (Centralab NO. BC20A or equiv.)
C36, C37 C38, C39	A18-291	20-25 volts, 40-350 volts 30-300 volts, 30-300 volts electrolytic
C42	A20-146	FM oscillator trimmer
R1	A33-231	See L1.
R2	A60-759	4.7 K ohms, ½ watt, 10%
R3, R4	A60-760	10 K ohms, ½ watt, 10%
R5, R6	A60-744	22 K ohms, ½ watt, 10%
R7, R10, R14	A60-675	1 K ohms, ½ watt, 20%
R8, R17	A60-727	100 K ohms, ½ watt, 20%
R9, R13	A60-742	68 ohms, ½ watt, 10%
R11, C9, C10	A17-101	47 K ohms, 100 MMF, 100 MMF (Diode filter unit, Herlec FO6-001)
R12, R23 R24, R28	A60-731	470 K ohms, ½ watt, 20%
R15	A60-723	270 ohms, ½ watt, 20%
R16	A60-748	33 K ohms, ½ watt, 10%
R18	B24-181	Volume control and switch S3
R19, R22	A60-726	2.2 Megohms, ½ watt, 20%
R20	A60-730	47 K ohms, ½ watt, 20%
R21	A60-761	3.3 Megohms, ½ watt, 20%
R25	A60-714	2.2 K ohms, ½ watt, 10%
R26	A60-762	6.8 Megohms, ½ watt, 20%
R27	A60-747	270 K ohms, ½ -watt, 20%
R29	A60-754	270 ohms, ½ watt, 10%
R30	A10-516	See L4
R31	A60-753	220 ohms, ½ watt, 10%
R32	A60-755	100 ohms, 1 watt, 10%
R33	A60-763	1 K ohms, 4 watts, 10%
R34	A60-667	220 K ohms ½ watt 20%
L1	A33-231	Choke, wound on R1, 22 ohms
L2A, L2B	A10-515	Oscillator coil, AM
L3	A10-517	Oscillator coil, FM
L4	A10-516	Antenna coil, FM, wound on R30, 1.5 K ohms
L5	A33-233	Plate choke, FM RF
L6	A10-518	RF coil, FM
L8, L9	A33-232	FM oscillator filament choke
L10	A33-227	Filament choke
S1A, S1B S1C, S1D	A69-184	Band switch
S2	A26-125	Tone control
S3	B24-181	ON-OFF SWITCH, on volume control
T1	A10-519	1st I.F., FM
T2	A10-521	1st I.F., AM
T3	A10-520	2nd I.F., FM
T4	A10-522	2nd I.F., AM
T5	SC10-492	Ratio detector, FM
T6	A80-247	Output transformer
T7	C80-246	Power transformer
	S84-302	Antenna assembly, AM loop
	SB82-53	Antenna asembly, FM dipole
	C67-539	Dial scale, glass
	A52-203	Knob, TUNING
	A52-236	Knob, TONE 1-2-3
	A52-237	Knob, ON-OFF-VOL
	A52-288	Knob, FM-AM-PH
	23-153	Line cord and plug
	A58-68	Pointer, slide type
	C83-429	Retainer, dial scale
	A87-29	Socket, pilot light
	C79-358	Speaker, 10" P.M.
	A59-22	Record changer, Webster No. 50-1

MODEL 11901 WARWICK MFG. CORP.

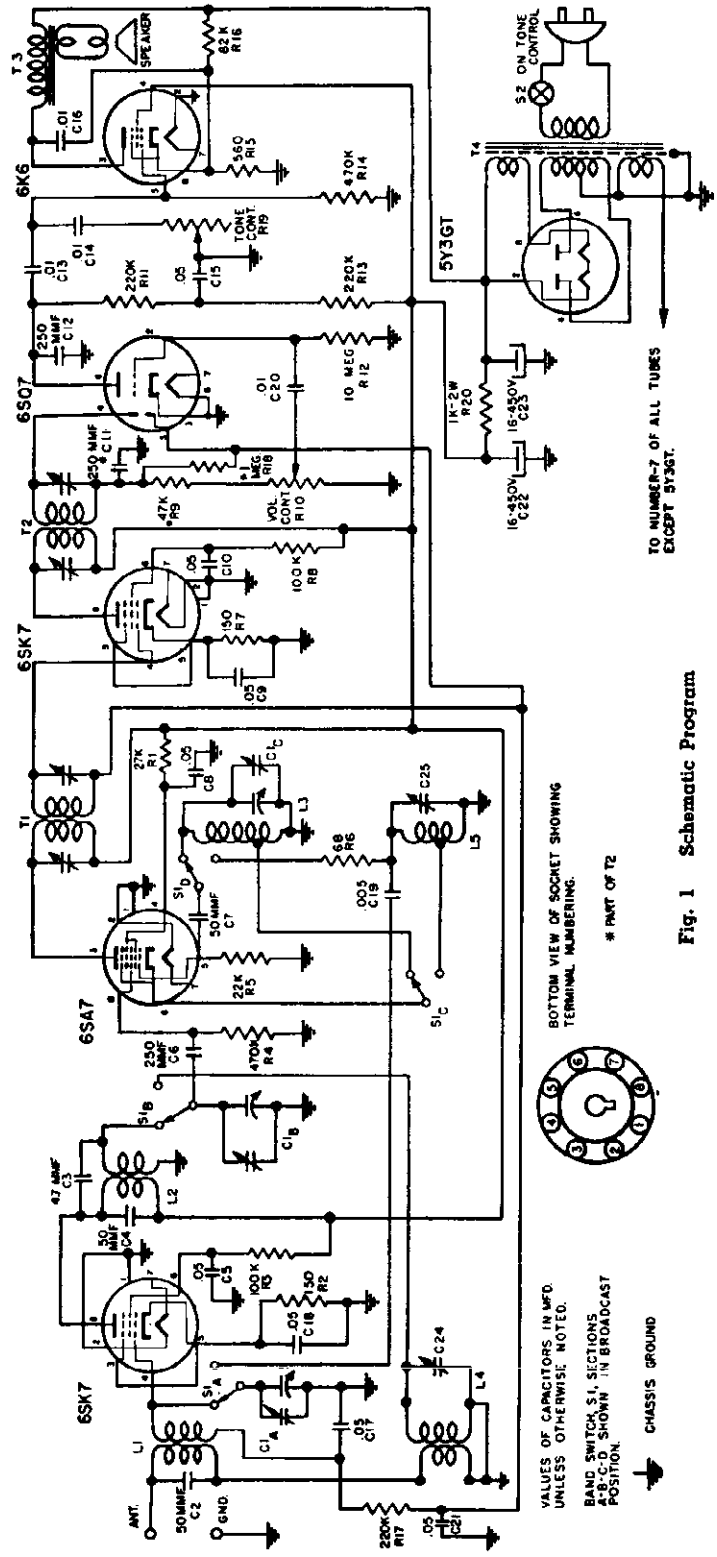

Fig. 1 Schematic Program

CODE	PART NO.	DESCRIPTION
C1A, C1B	B19-186	Variable Condenser
C1C		
C2, C4, C7	A15-175	30 MMFD Mica condenser
C3	A83-355	4.7 MMFD condenser
C5, C8, C10, C15	A16-158	.05 MFD 400 volt condenser
C6, C12	A15-176	250 MMFD Mica condenser
C9, C17, C18, C21	A16-152	.05 MFD 200 Volt condenser
C13, C14, C20	A16-156	.01 MFD 400 Volt condenser
C16	A16-168	.01 MFD 1000 Volt condenser
C19	A15-181	.005 MFD Mica condenser
C22	A16-279	16 MFD 450 Volt electrolytic condenser
C23	A18-224	16 MFD 450 Volt Electrolytic condenser
C24	A20-143	S.W. Antenna trimmer
C25	A20-143	S.W. Oscillator trimmer
R1	A60-692	27K ohm 1 watt resistor

CODE	PART NO.	DESCRIPTION
R2, R7	A60-686	150 ohm ½ watt resistor
R3, R8	A60-671	100K ohm ½ watt resistor
R4, R14	A60-662	470K ohm ½ watt resistor
R5	A60-659	22K ohm ½ watt resistor
R6	A60-733	68 ohm ½ watt resistor
R10	A24-169	Volume control, 500,000 ohm
R11, R13, R17	A60-667	220K ohm ½ watt resistor
R12	A60-663	10 megohm ½ watt resistor
R15	A60-701	560 ohm 1 watt resistor
R16	A60-700	82K ohm 1 watt resistor
R19	A26-124	Tone control, 2 megohm, with switch
R20	A60-699	1K ohm 2 watt resistor
L1	A10-438	B.C. Antenna coil
L2	B10-452	R.F. Coil
L3	B10-446	B.C. Oscillator coil
L4	A10-482	S.W. Antenna coil
L5	A10-481	S.W. Oscillator coil
T1	B10-412	1st I. F. Transformer
T2	B10-444	2nd. I. F. Transformer
T3	A90-222	Output Transformer
T4	C80-223	Power Transformer

CODE	PART NO.	DESCRIPTION
	A84-41	Dial drive shaft assembly
	B79-341	Speaker, 6¼" P.M.
	B79-342	Alternate Speaker, 6¼" P.M.
	D83-453	Cabinet back
	B83-325	Baffle speaker
	D42-379	Cabinet, mahogany
	A42-401	Cabinet, ivory
	B67-563	Dial Glass
	A52-187	Knob, mahogany
	A52-191	Knob, ivory
	A56-65	Dial pointer
	A83-292	Dial glass retainer, right
	A83-293	Dial glass retainer, left
	B79-176	Band switch
	B79-351	Alternate Speaker, 6¼" P.M.

DESCRIPTION

Model 11901 is a 6 tube (including rectifier) superhetrodyne radio receiver designed for operation on 50-60 cycle 105-125 volt, AC current.

The tubes used are:

6SK7	R.F. Amplifier	6SQ7	Det, AVC, audio
6SA7	Mixer, Osc.	6K6GT	Power Output
6SK7	I.F. Amplifier	5Y3GT	Rectifier

This receiver covers the standard broadcast frequency range from 535 to 1725 kilocycles (K.C.) and the shortwave frequency range from 6 to 18.2 Megocycles (MC).

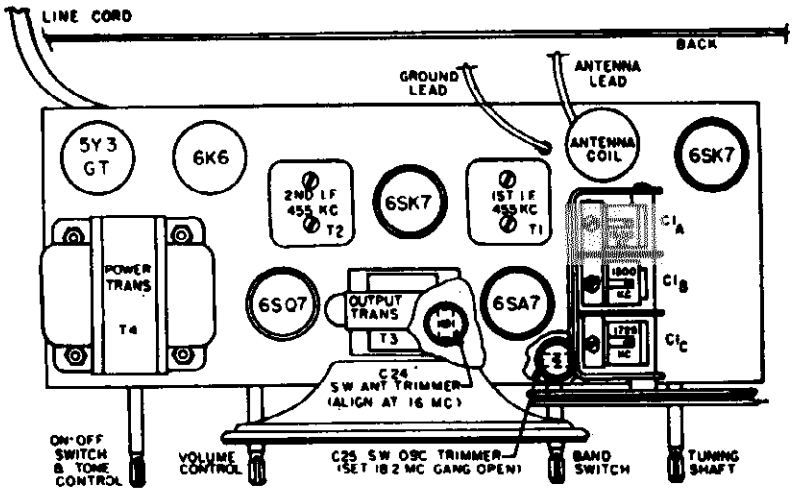

Fig. 2 Tube Positions and Alignment Points

ALIGNMENT PROCEDURE

The following alignment procedure is for use only by competent servicemen having the proper equipment.

With an output meter connected across the voice coil of the speaker, the output meter reading for ½ watt is 1.25 volts, using a signal which is modulated 400 C.P.S. Follow through the procedure as outlined below for proper alignment.

The alignment should be made with volume control fully on, and the output from the signal generator as low as possible, for accurate alignment.

Position of Variable	Band Switch Position	Generator Frequency	Dummy Ant.	Generator Connections	Trimmer Adjustment	Trimmer Function
Fully open	BC	455 KC	.1 MFD.	6SA7 Grid (stator of C1B)	T1 T2	I. F.
Fully open	BC	1725 KC	.00025 MFD.	Ant. lead	C1C	BC Osc.
Tune in signal from generator	BC	1500 KC	.00025 MFD.	Ant. lead	C1B	R. F.
Tune in signal from generator	BC	1500 KC	.00025 MFD.	Ant. lead	C1A	BC Ant.
Fully open	SW	18.2 MC	400 ohms	Ant. lead	C25	SW Osc.
Tune in signal from generator	SW	16 MC	400 ohms	Ant. lead	C24	SW Ant.

GROUND lead of generator should be attached to the chassis for all adjustments

C24 and C25 are located under the chassis

For alignment points refer to Figure 2

Repeat alignment procedure as a final check

MODEL 12001

WARWICK MFG. CORP.

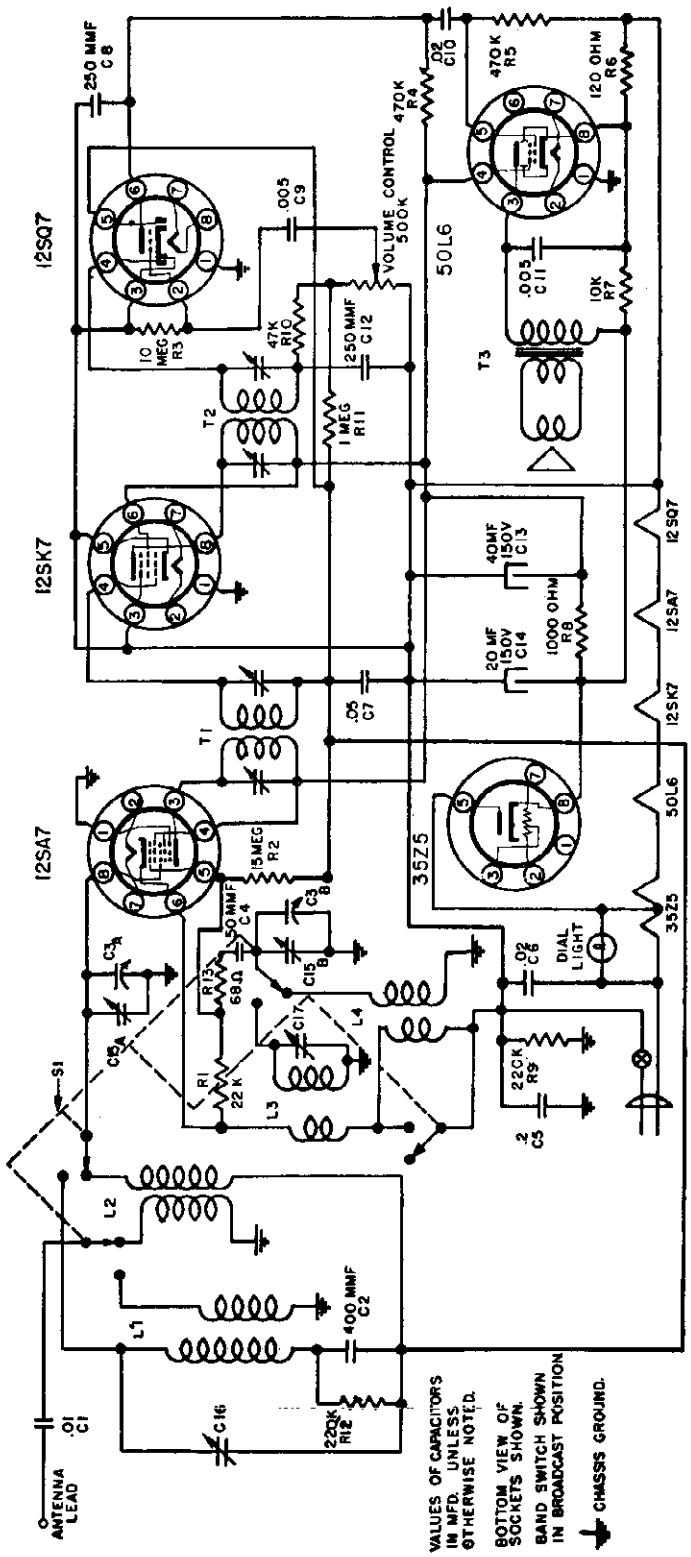

PARTS LIST

CODE	PART NO.	DESCRIPTION
C1	A16-156	.01 MFD 400 volt condenser
C2	A15-192	400 MMF mica condenser
C3A, C3B	B19-180	Variable condenser
C4	A15-175	50 MMF mica condenser
C5	A16-154	.2 MFD 400 volt condenser
C6	A16-151	.02 MFD 600 volt condenser
C7	A16-152	.05 MFD 200 volt condenser
C8, C12	A15-176	250 MMF mica condenser
C9, C11	A16-153	.005 MFD 600 volt condenser
C10	A16-150	.02 MFD 400 volt condenser
C13	A18-280	40 MFD 150 volt electrolytic condenser
C14	A18-272	20 MFD 150 volt electrolytic condenser
C15A		B.C. antenna trimmer (on variable condenser)
C15B		B.C. oscillator trimmer (on variable condenser)
C16	A20-143	S.W. antenna trimmer condenser
C17	A20-143	S.W. oscillator trimmer condenser
R1	A60-659	22K ohm ½ watt resistor

CODE	PART NO.	DESCRIPTION
R2	A60-664	.15 megohm ½ watt resistor
R3	A60-663	10 megohm ½ watt resistor
R4, R5	A60-662	470K ohm ½ watt resistor
R6	A60-658	120 ohm ½ watt resistor
R7	A60-698	10K ohm 1 watt resistor
R8	A60-198	1000 ohm ½ watt resistor
R9, R12	A60-660	220K ohm ½ watt resistor
R10	A60-685	47K ohm ½ watt resistor
R11	A60-668	1 megohm ½ watt resistor
R13	A60-733	68 ohm ½ watt resistor
T1	B10-453	1st I.F. transformer
T2	B10-454	2nd I.F. transformer
T3		Output transformer (part of speaker)
L1	A10-483	S.W. antenna coil
L2	A10-485	B.C. antenna coil
L3	A10-484	S.W. oscillator coil
L4	A10-411	B.C. oscillator coil

CODE	PART NO.	DESCRIPTION
	A71-22	Cover for volume control
	A75-52	Dial drive shaft
	A24-164	Volume control and switch
	B79-340	5" P.M. speaker with output transformer
	D83-452	Cabinet back
	D42-376	Cabinet, Mahogany
	A42-398	Cabinet, Ivory
	B67-504	Dial scale
	A52-181	Knobs, Mahogany
	A52-189	Knobs, Ivory
	A52-223	Knobs, Band switch
	A58-46	Dial pointer
	A83-279	Dial scale retainer, left
	A83-280	Dial scale retainer, right
	A69-177	Band switch

DESCRIPTION

Model 12001 is a 5 tube (including rectifier) super-heterodyne radio receiver designed for use on 105-125 volt A.C., 60 cycle, or 117 volt D.C. current.

The tubes are:—

1—12SA7 Oscillator, converter
1—12SK7 I.F. Amplifier
1—12SQ7 AVC, Detector, 1st audio
1—50L6GT Power Output
1—35Z5GT Rectifier

This receiver covers the standard broadcast frequency range of 535 to 1725 K.C. (560 to 174 meters), and the Short Wave frequency range of 9 to 18.2 Megacycles (33 to 16.5 meters).

ALIGNMENT PROCEDURE

The following alignment procedure is for use only by competent servicemen having the proper equipment.

The alignment should be made with volume control full on and the output from the signal generator as low as possible to prevent AVC action from interfering with correct alignment.

With the output meter connected across the voice coil of the speaker, the output meter reading for 50 milliwatts is .4 volts, using a signal which is modulated 400 c.p.s.

Adjust all trimmers for maximum output. Repeat alignment procedure as a final check.

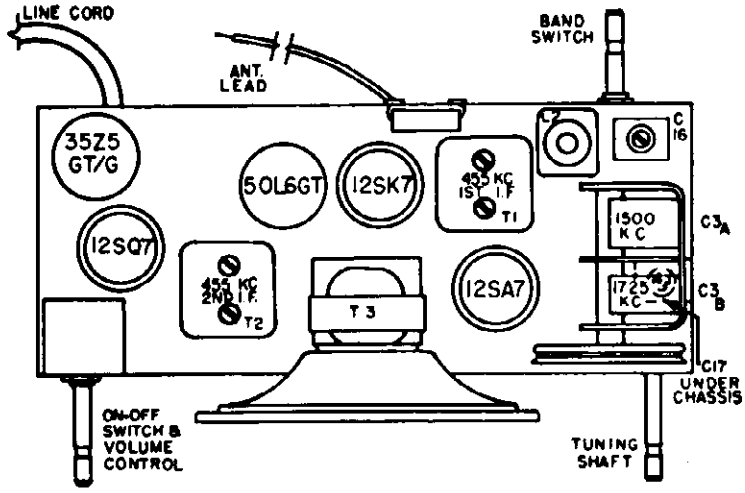

ALIGNMENT PROCEDURE—Continued

CAUTION: This is an AC-DC receiver and when aligning the set it is necessary to isolate the signal generator or the receiver from the line by use of a transformer, or place a .2 MFD condenser in both test leads of the signal generator.

Before proceeding with actual alignment the dial pointer must be set to the proper position. With the variable condenser fully open the dial pointer should read 1725 K.C.

Position of Variable	Band Switch Position	Generator Frequency	Dummy Ant.	Generator Connections	Trimmer Adjustment	Trimmer Function
Fully open	B. C.	455 KC	.1 MFD	*12SA7 Grid (Stator of C3A)	T1 - T2	I. F.
Fully open	B. C.	1725 KC	.00025 MFD	*Ant. lead	**C3B	B. C. Oscillator
Tune in signal from generator	B. C.	1400 KC	.00025 MFD	*Ant. lead	**C3A	B. C. Antenna
16 MC	S. W.	16 MC	400 ohms	*Ant. lead	C17	S. W. Oscillator
16 MC	S. W.	16 MC	400 ohms	*Ant. lead	C16	S. W. Antenna

* Connect ground lead of signal generator to "Common B."

** C3A, C3B, are located on variable condenser

NOTE: The above procedure must be followed in exact sequence for proper alignment.

MODEL 12110 WARWICK MFG. CORP.

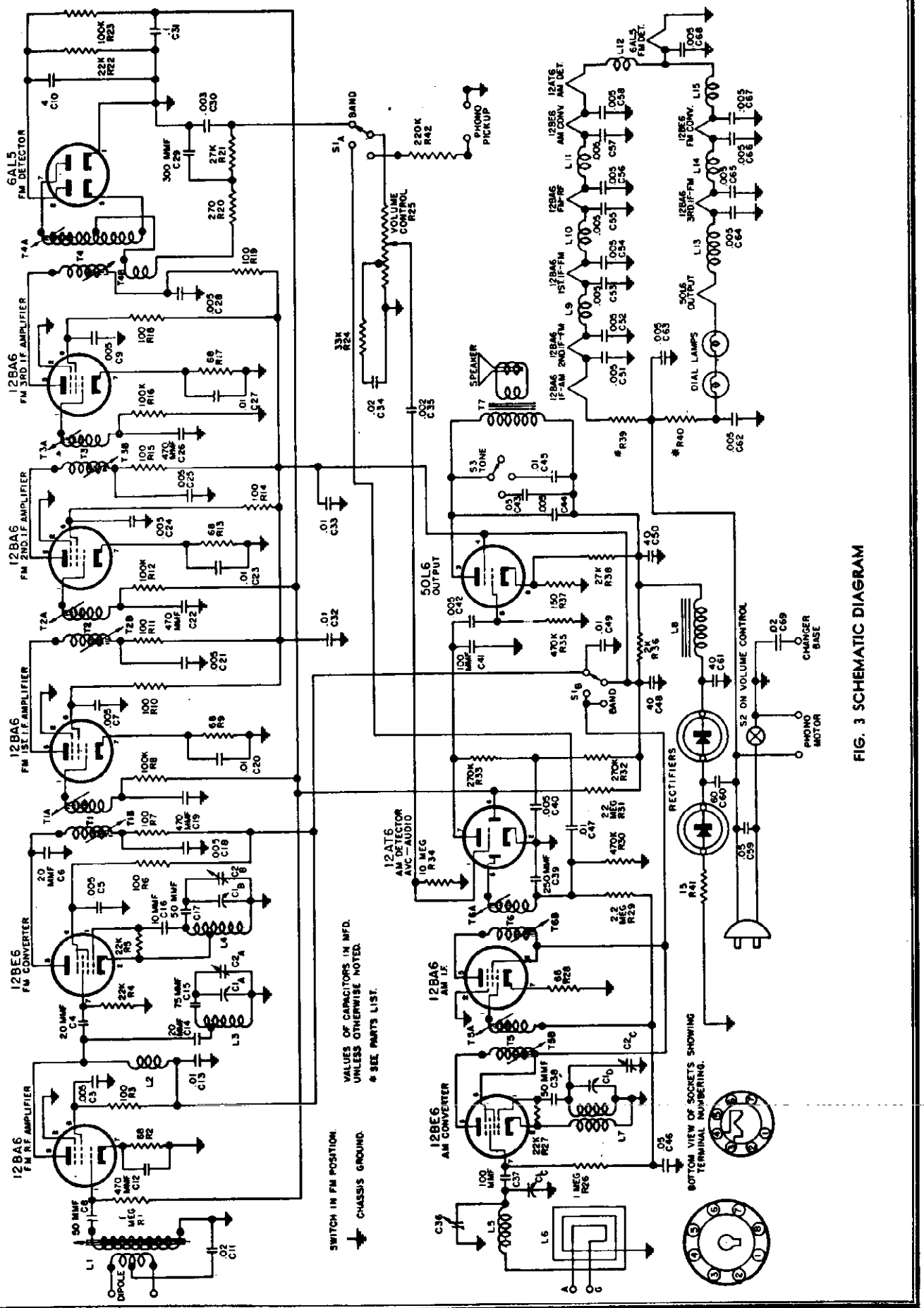

FIG. 3 SCHEMATIC DIAGRAM

RECORD CHANGER: Webster Model 50 RCD CH 15-1

SPECIFICATIONS

Power Supply	117 volts AC 60 cycle
Power Consumption	95 Watts
Frequency Range FM	88 to 108 MC.
Frequency Range AM	540 to 1600 KC.
I.F. frequency FM	10.7 MC.
I.F. frequency AM	455 KC.
Band width, FM, Ratio detector	360 KC.
Band width, FM, 2nd I.F.	280 KC.
Band width, FM, 1st I.F.	240 KC.
Band width, FM, Converter	180 KC.
Tubes	10
Rectifiers	Selenium, 150 ma.
Speaker	10" P.M.

The tubes used are as follows:

12BA6	FM, R.F. Amplifier
12BE6	FM, Converter
12BA6	FM, 1st I.F. Amplifier
12BA6	FM, 2nd I.F. Amplifier
12BA6	FM, 3rd I.F. Amplifier
6AL5	FM, Ratio detector
12BE6	AM, Converter
12BA6	AM, I.F. Amplifier
12AT6	AM, Detector-AVC-1st audio
50L6GT	Power output
A83-463	Selenium rectifier (2)
No. 47	Pilot lights (2)

SERVICE NOTES

INSTALLATION

The loop antenna provided with the receiver will prove adequate for the reception of all AM stations under normal operating conditions. The flexible folded dipole antenna will be adequate for the reception of powerful or near-by FM stations except when the set is used in a building constructed mainly of steel or where FM reception is otherwise difficult. When the radio is used with the inside antenna as provided, it is suggested that you try placing the set in different locations in the room. FM reception especially will vary greatly according to the location of the antenna within the room.

When it is desired to receive FM stations outside of the primary service area, or if the receiver is being used under difficult conditions, the use of an outside dipole antenna is recommended. There are three types of such aerials, namely single dipole, the folded dipole, and the non-directional dipole. To increase the "pick-up" or sensitivity, a reflector may be used with either of the first two types. The proper type of antenna as well as its location are determined by the terrain and distance from the station to be received, the direction, etc. Your local service man will advise you of the proper antenna installation, for your particular area. Two terminals are provided on the back of the set for connecting the outside dipole antenna leads.

FM reception is very directional, and even when using the FM antenna furnished with the receiver, reception can sometimes be very much improved by turning the receiver in a different direction. Be careful not to place the radio close to large metal objects as this might tend to cause reflections or otherwise interfere with good reception.

CAUTION: Always disconnect the line cord before removing the back for tube replacement, etc.

GENERAL

Due to the high frequencies at which FM signals are received the service man must use great care when servicing these sets. Extreme caution must be used regarding the moving of component parts in the R.F. and oscillator circuits of the receiver as those circuits can be detuned in this manner.

If it becomes necessary to replace components such as resistors and condensers they must be replaced with parts of the same size, type, voltage rating and tolerance as called for in the parts list.

When installing new parts they should be placed in the same position as the original, and the leads should be cut to the same length.

ALIGNMENT NOTES

This receiver has been thoroughly inspected and tested at the factory, using the most modern test equipment available, such as FM sweep generators and Oscilloscopes. All I.F. circuit adjustments have been sealed at the factory and no attempt should be made to realign these circuits unless it is absolutely necessary.

CAUTION: If realignment is necessary be sure the proper test equipment is available, as listed below, before proceeding with the alignment procedure as given on page 5. This receiver employs the "double peak" type of I.F. circuits, and can not be satisfactorily aligned with conventional AM equipment. Visual alignment procedures must be used.

EQUIPMENT USED FOR ALIGNMENT

AM Signal generator

FM Sweep generator.

Oscilloscope.

Vacuum tube voltmeter.

Insulated screw driver.

Dummy antenna:
- .1 MFD condenser
- .00025 MFD mica condenser
- 150 ohm resistor (2)

Output meter.

MODEL 12110 WARWICK MFG. CORP.

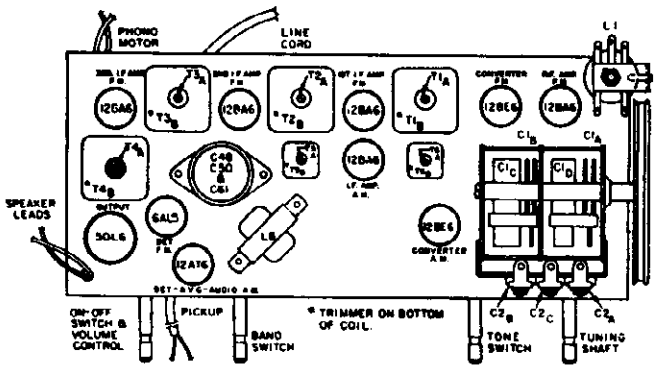

FIG. 1 TUBE AND TRIMMER LOCATIONS

VOLTAGE CHART

TUBE No.	PIN 1	PIN 2	PIN 3	PIN 4	PIN 5	PIN 6	PIN 7	PIN 8
12BE6 AM—Converter	—6	0	29ac	17ac	100	100	0	
12BA6 AM—I.F. Amp.	0	0	75ac	63ac	100	100	1	
12AT6 AM—Det.-AVC-Audio	0	0	17ac	6ac	0	0	30	
12BA6 FM—R.F. Amp.	0	0	29ac	39ac	100	95	1	
12BE6 FM—Converter	0	0	6ac	18ac	95	95	0	
12BA6 FM—1st I.F. Amp.	0	0	39ac	50ac	95	95	1	
12BA6 FM—2nd I.F. Amp.	0	0	50ac	63ac	95	95	1	
12BA6 FM—3rd I.F. Amp.	0	0	18ac	31ac	95	95	1	
6AL5 FM—Ratio detector	0	—3	0	6ac	—4	0	0	
50L6GT Power output	0	31ac	225	100	0	30	80ac	6.5

All voltage readings are taken from tube pin to chassis.

All measurements are made with no signal, using a 20,000 ohm per volt mater.

AC input voltage must be maintained at 117 volts for accurate readings.

AC voltages shown are at 1000 ohms per volt.

All voltages shown are approximate.

RESISTANCE CHART

TUBE No.	PIN 1	PIN 2	PIN 3	PIN 4	PIN 5	PIN 6	PIN 7	PIN 8
12BE6 AM—Converter	20K	1	27	18	25K	25K	3 meg.	
12BA6 AM—I. F. Amp.	2 meg.	0	70	62	25K	25K	70	
12AT6 AM—Det.-AVC-Audio	10 meg.	0	18	5	470K	120K	640K	
12BA6 FM—R.F. Amp.	1 meg.	0	27	40	25K	25K	70	
12BE6 FM—Converter	20K	0	5	18	25K	25K	22K	
12BA6 FM—1st I.F. Amp.	220K	0	40	50	25K	25K	70	
12BA6 FM—2nd I.F. Amp.	220K	0	50	62	25K	25K	70	
12BA6 FM—3rd I.F. Amp.	100K	0	18	28	25K	25K	70	
6AL5 FM—Ratio Detector	0	25K	0	5	750K	0	750K	
50L6GT Power output	0	28	25K	25K	450K	250K	70	150

All resistance readings are taken from tube pin to chassis.

Due to manufacturing tolerance on component parts, resistance readings may vary as much as 20%.

All readings are shown in ohms unless otherwise noted.

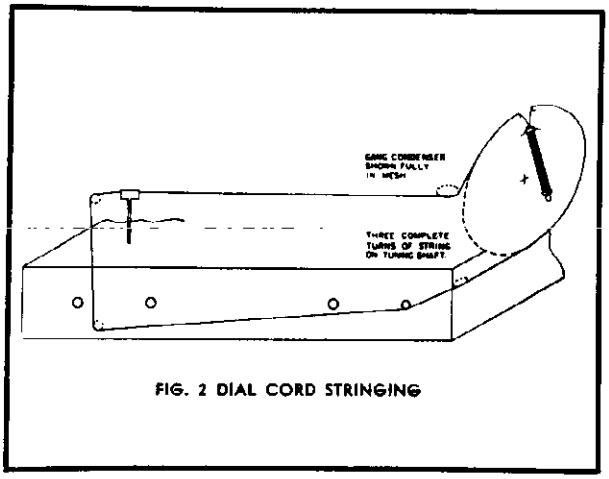

FIG. 2 DIAL CORD STRINGING

©John F. Rider

©John F. Rider

ALIGNMENT PROCEDURE

STEPS	RECEIVER DIAL SETTING	BAND SWITCH POSITION	SIGNAL GENERATOR FREQUENCY	DUMMY ANTENNA	SIGNAL GENERATOR CONNECTIONS	OUTPUT INDICATOR	TRIMMER ADJUSTMENT	TRIMMER FUNCTION	REMARKS
1	Minimum capacity	AM	455 KC 400 cycle AM	.1 MFD	High side—Grid of AM converter tube (12BE6) Low side—Chassis	Output Meter across voice coil	T5A, T5B T6A, T6B	AM I.F.	Adjust for maximum output
2	"	"	1600 KC 400 cycle AM	.00025 MFD	"	"	C2C	AM Oscillator	Adjust for maximum output
3	1400 KC	"	1400 KC 400 cycle AM	"	High side—One ant. terminal Low side—Other ant. terminal	"	C36 (on back)	AM Antenna	Adjust for maximum output
4	Any position where there is no station interference.	FM	10.7 MC unmodulated .1 volt output.	.1 MFD	High side—Grid of 3rd I.F. amplifier tube (12BA6) Low side—Chassis	Connect V.T.V.M. to plate of Ratio detector tube, pin 2 (6AL5)	T4B	Ratio detector primary	Adjust for maximum negative voltage, about —5 volts
5	"	"	10.7 MC 400 cycle 30% Modulation. (See note A)	"	"	Connect scope to audio take off point (across C30)	T4A	Ratio detector secondary	Adjust for a balanced pattern on scope. See Fig. 4.
6	"	"	"	"	High side—Grid of 2nd I.F. amplifier tube (12BA6) Low side—Chassis	Connect scope across 100K ohm grid return resistor of 3rd I.F. (R16)	T3A, T3B	FM 3rd I.F.	Adjust for maximum gain and best pattern on scope. See Fig. 5 (See note "B" below)
7	"	"	"	"	High side—Grid of 1st I.F. amplifier tube (12BA6) Low side—Chassis	"	T2A, T2B	FM 2nd I.F.	Adjust for maximum gain and best pattern on scope. See Fig. 6.
8	"	"	"	"	High side—Plate of FM R.F. tube, pin 5 (12BA6) Low side—Chassis	"	T1A, T2B	FM 1st I.F.	Adjust for maximum gain and best pattern on scope. See Fig. 7.
9	109 MC	"	109 MC 400 cycle 30% modulation. (22.5 KC Deviation)	150 ohms in each lead.	High side—One ant. terminal Low side—Other ant. terminal	Connect output meter across voice coil	C2B	FM Oscillator	Adjust for maximum output (remove AVC ground)
10	103 MC	"	103 MC 400 cycle 30% modulation. (22.5 KC Deviation)	"	"	"	C2A	FM R.F.	Adjust for maximum output
11	100 MC	"	100 MC 400 cycle 30% modulation. (22.5 KC Deviation)	"	"	"	L1	FM Antenna	Adjust for maximum output

NOTE A: When aligning the FM I.F. circuits, keep the out put from the signal generator as low as possible.

NOTE B: The AVC circuit must be grounded to the chassis when aligning the FM I.F. circuits.

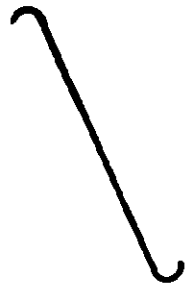

FIGURE 4

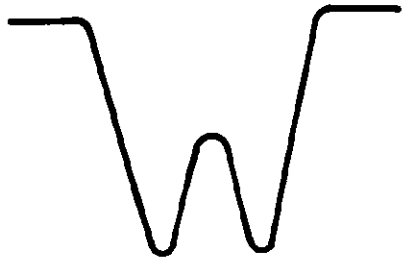

FIGURE 5

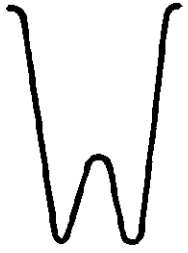

FIGURE 6

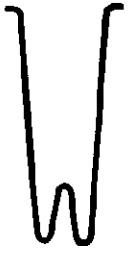

FIGURE 7

Schematic Diagram Reference	Part No.	Description
C1A, C1B		
C1C, C1D	C19-191	Variable Condenser
C2A, C2B, C2C	A20-144	FM—R.F. Trimmer FM—Oscillator Trimmer AM—Oscillator Trimmer
C3, C5, C7, C9, C18, C21, C23, C24, C25, C28, C40, C51, C52, C53, C54, C55, C56, C57, C58, C62, C64, C65, C66, C67, C68	A16-177	005 MFD Ceramic Condenser (Centralab No. DA048 or Equiv.)
C4, C14	A15-198	20 MMF 20% Ceramic Condenser (Erie Style "A" or Equiv.)
C6	A15-193	20 MMF 20% Ceramic Condenser (Erie Style K or Equiv.)
C8, C17	A15-194	50 MMF 10% Ceramic Condenser (Erie Style K or Equiv.)
C10	A18-273	4 MFD 150 Volt Elec. Condenser
C34, C69	A16-150	.02 MFD 400 Volt Tubular Condenser
C12, C19, C22, C26	A15-200	470 MMF 20% Mica Condenser
C13, C32, C33, C47 C49	A16-165	.01 MFD 200 V Tubular Condenser
C15	A15-195	75 MMF 10% Ceramic Condenser (Erie Style K or Equiv.)
C16	A15-197	10 MMF 10% Ceramic Condenser (Erie Style A or Equiv.)
C20, C23, C27	A16-163	.01 MFD 120 V Molded Paper Condenser
C42, C44	A16-153	.005 MFD 600 Volt Tubular Condenser
C29	A15-199	300 MMF 20% Mica Condenser
C30	A16-180	.003 MFD 200 V Molded Paper Condenser
C31	A16-157	.1 MFD 200 V Tubular Condenser
C35	A16-178	.002 MFD 200 V Molded Paper Condenser
C36	A20-139	AM Antenna Trimmer
C37	A15-190	100 MMF 20% Mica Condenser
C38	A15-191	50 MMF 20% Mica Condenser
C39	A15-176	250 MMF 20% Mica Condenser
C41	A15-196	100 MMF 20% Ceramic Condenser (Erie Style K or Equiv.)
C46, C67, C43, C59	A16-158	.05 MFD 400 V Tubular Condenser
C45	A16-156	.01 MFD 400 V Tubular Condenser
C48, C50, C61	A18-284	40 MFD 150 Volt Electrolytic Condenser 40 MFD 300 Volt Electrolytic Condenser 40 MFD 300 Volt Electrolytic Condenser
C60	A18-285	60 MFD 150 Volt Electrolytic Condenser
R1, R26	A60-668	1 Megohm Resistor 20% ½ Watt
R2, R13, R17, R28, R9	A60-742	68 Ohm Resistor 10% ½ Watt
R3, R6, R7, R10, R19, R11 R14, R15, R18	A60-743	100 Ohm Resistor 20% ½ Watt
R4, R5, R22, R27	A60-744	22 K Ohm Resistor 10% ½ Watt
R8, R12, R16, R23	A60-727	100 K Ohm 20% ½ Watt
R20	A60-723	270 Ohm 20% ½ Watt Resistor
R21	A60-745	27 K Ohm 10% ½ Watt Resistor
R24	A60-748	33 K Ohm 10% ½ Watt Resistor
R25	B24-173	Volume Control with Switch
R29, R31	A60-726	2.2 Megohm 20% ½ Watt
R30, R35	A60-731	470K Ohm ½ Watt Resistor 20%
R32, R33	A60-747	270K Ohm 20% ½ Watt
R34	A60-728	10 Megohm 20% ½ Watt
R36	A60-739	2K Ohm Resistor 5% 10 Watt
R37	A60-741	150 Ohm 10% 1 Watt Resistor
R38	A60-740	27K Ohm Resistor 10% 2 Watt
R39	A60-734	Special Compensating Resistor (Order from MFG.)
R40	A60-735	Special Compensating Resistor (Order from MFG.)
R41	A60-738	15 Ohm — Glassohm 10% 3 Watt Resistor
R42	A60-667	220K Ohm Resistor 20% ½ Watt
L1	SB10-488	Antenna Coil, FM
L3	B10-489	R. F. Coil, F.M.
L4	B10-490	Oscillator Coil, F. M.
L5	A10-504	Antenna Loading Coil
L6	S84-166	Loop Antenna Assembly
L7	B10-491	Oscillator Coil, A. M.
L8	A33-225	Filter Choke
L2, L9, L10, L11, L12, L14, L15	A33-226	Filament Choke, 11 mh.
L13	A33-227	Filament Choke
S1A, S1B	A69-178	Switch, FM-AM-PHONO
S2		Switch, ON-OFF, (on volume control)
S3	A26-125	Tone Control
T1	SA10-493	1st I. F. Transformer, F. M.
T2, T3	SC10-494	2nd & 3rd I. F. Transformer, F.M.
T4	SC10-492	Ratio detector transformer, F.M.
T5	A10-499	1st I. F. transformer, A. M.
T6	A10-500	2nd I. F. transformer, A. M.
T7	A80-241	Output Transformer
	B39-285	Drum, for Variable Condenser
	A23-153	Line Cord
	A83-463	Selenium rectifier, 150 ma.
	A75-63	Tuning shaft
	C79-358	Speaker, 10" P.M.
	A21-111	Cover, for Compensating Resistors
	S882-53	FM Antenna Assembly, Dipole
	C67-503	Dial Scale
	C83-471	Retainer, Dial Scale
	B83-482	Dial Diffusing Plate
	A58-68	Dial Pointer
	A52-203	Knob, Tuning
	A52-236	Knob, Tone
	A52-237	Knob, ON-OFF-VOLUME
	A52-238	Knob, PH-AM-FM

NOTE: Model 12110M uses a Webster Record Changer No. 50-1

©John F. Rider

WARWICK MFG. CORP. MODEL 1310

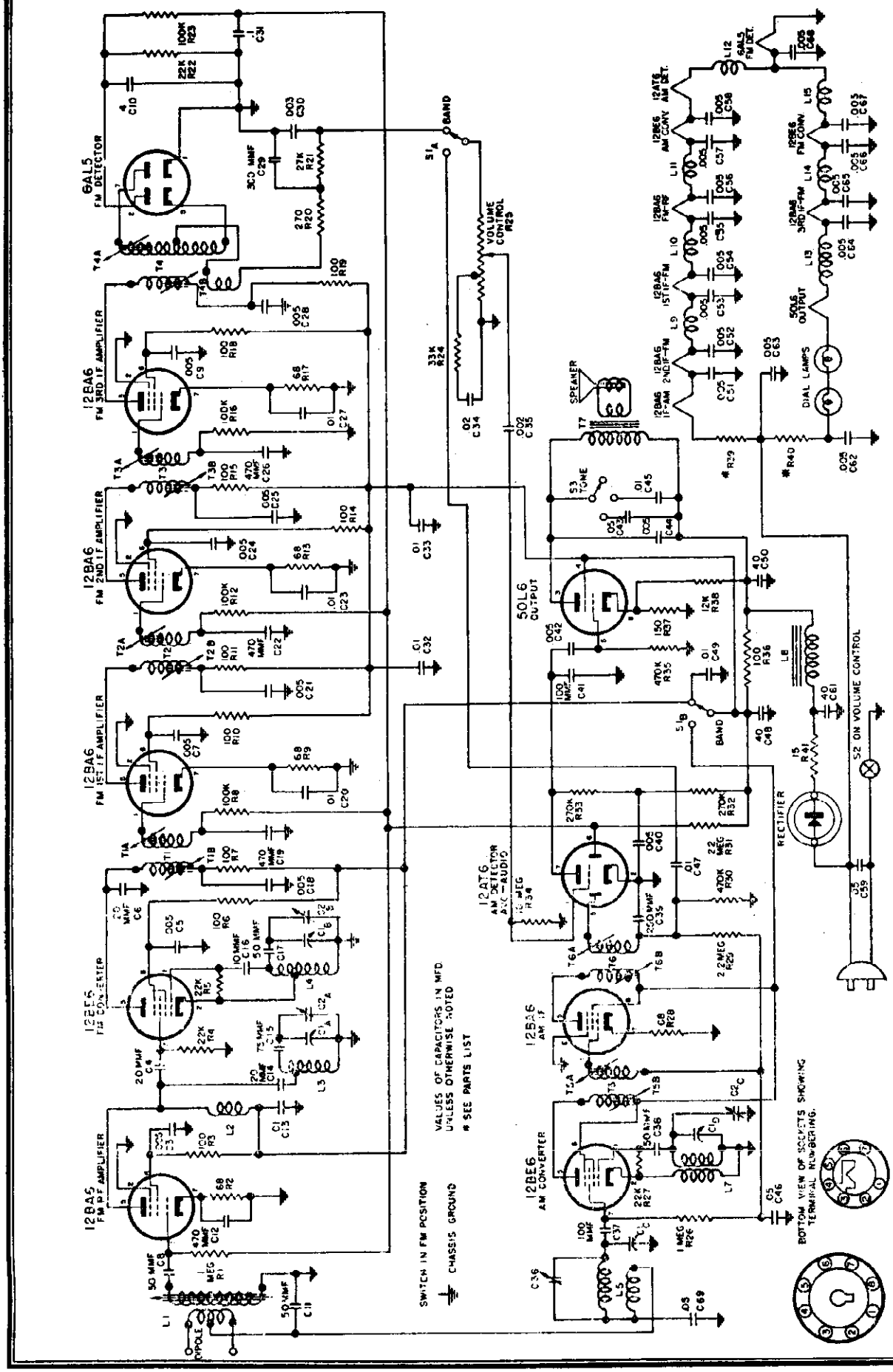

FIG. 3 SCHEMATIC DIAGRAM

SPECIFICATIONS

Power Supply	117 volts AC-DC
Power Consumption	55 Watts
Frequency Range FM	88 to 108 MC.
Frequency Range AM	540 to 1600 KC.
I.F. frequency FM	10.7 MC.
I.F. frequency AM	455 KC.
Band width, FM, Ratio detector	360 KC.
Band width, FM, 2nd I.F.	280 KC.
Band width, FM, 1st I.F.	240 KC.
Band width, FM, Converter	180 KC.
Tubes	10
Rectifier	Selenium, 150 ma.
Speaker	6" P.M.

The tubes used are as follows:

12BA6	FM, R.F. Amplifier
12BE6	FM, Converter
12BA6	FM, 1st I.F. Amplifier
12BA6	FM, 2nd I.F. Amplifier
12BA6	FM, 3rd I.F. Amplifier
6AL5	FM, Ratio detector
12BE6	AM, Converter
12BA6	AM, I.F. Amplifier
12AT6	AM, Detector-AVC-1st audio
50L6GT	Power output
A83-463	Selenium rectifier
No. 47	Pilot lights (2)

GENERAL SERVICE INFORMATION

INSTALLATION

This receiver is shipped from the factory complete with a flexible, folded dipole antenna. This antenna will be satisfactory for good reception under normal conditions. It should be connected to the two (2) dipole terminals on the back of the cabinet, and then extended to its full length. Since FM signals are directional, reception may be sometimes improved by rotating the extended sections of the flexible antenna in different directions.

This antenna is also used in conjunction with the AM antenna coil for standard AM broadcast reception, and therefore must be connected as described above for reception of standard broadcast stations.

When the receiver is to be used under difficult conditions, such as in buildings constructed mainly of steel, or those with steel lath, or, when large buildings, mountains or other objects are between the receiver and the station to be received, it may be necessary to use an external dipol antenna. Remember too, FM reception is limited as to distance and when used outside the primary service area of the transmitter, an outside antenna is very necessary.

The type of dipole to be used depends upon the signal strength of the station in that particular area, as well as conditions of reception as outlined above. There are three types of FM dipole antenna available, the single dipole, the folded dipole, and the non-directional dipole. When the stations to be received are in one general direction, a reflector may be added to either of the first two types to increase their efficiency.

GENERAL

Due to the high frequencies at which FM signals are received the service man must use great care when servicing these sets. Extreme caution must be used regarding the moving of component parts in the R.F. and oscillator circuits of the receiver as those circuits can be detuned in this manner.

If it becomes necessary to replace components such as resistors and condensers they must be replaced with parts of the same size, type, voltage rating and tolerance as called for in the parts list.

When installing new parts they should be placed in the same position as the original, and the leads should be cut to the same length.

ALIGNMENT NOTES

This receiver has been thoroughly inspected and tested at the factory, using the most modern test equipment available, such as FM sweep generators and Oscilloscopes. All I.F. circuit adjustments have been sealed at the factory and no attempt should be made to realign these circuits unless it is absolutely necessary.

CAUTION: If realignment is necessary be sure the proper test equipment is available, as listed below, before proceeding with the alignment procedure as given on page 5. This receiver employs the "double peak" type of I.F. circuits, and can not be satisfactorily aligned with conventional AM equipment. Visual alignment procedures must be used.

EQUIPMENT USED FOR ALIGNMENT

Vacuum tube voltmeter.

AM Signal generator

FM Sweep generator.

Oscilloscope.

Insulated screw driver.

Dummy antenna:

.1 MFD condenser
.00025 MFD mica condenser
150 ohm resistor (2)

Output meter.

© John F. Rider

WARWICK MFG. CORP. MODEL 131

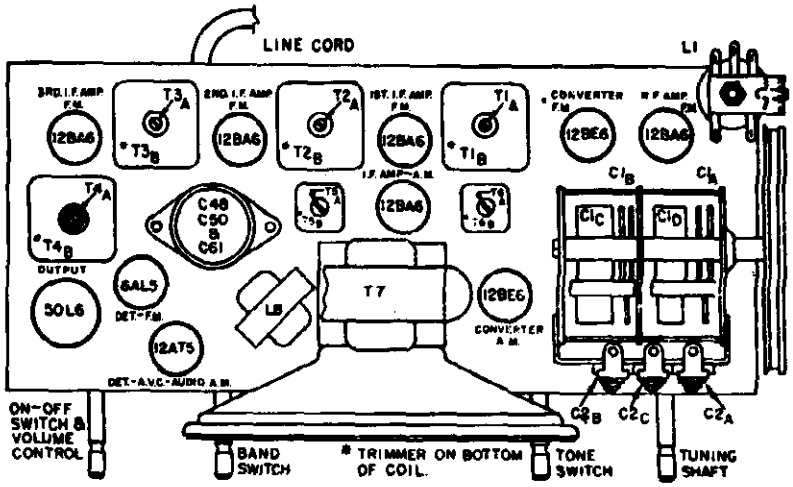

FIG. 1 TUBE AND TRIMMER LOCATIONS

VOLTAGE CHART

TUBE No.	PIN 1	PIN 2	PIN 3	PIN 4	PIN 5	PIN 6	PIN 7	PIN 8
12BE6 AM—Converter	—6	0	29ac	17ac	100	100	0	
12BA6 AM—I.F. Amp.	0	0	75ac	63ac	100	100	1	
12AT6 AM—Det.-AVC-Audio	0	0	17ac	6ac	0	0	30	
12BA6 FM—R.F. Amp.	0	0	29ac	39ac	100	95	1	
12BE6 FM—Converter	0	0	6ac	18ac	95	95	0	
12BA6 FM—1st I.F. Amp.	0	0	39ac	50ac	95	95	1	
12BA6 FM—2nd I.F. Amp.	0	0	50ac	63ac	95	95	1	
12BA6 FM—3rd I.F. Amp.	0	0	18ac	31ac	95	95	1	
6AL5 FM—Ratio detector	0	—3	0	6ac	—4	0	0	
50L6GT Power output	0	31ac	95	95	0	30	80ac	6.5

All voltage readings are taken from tube pin to chassis.

All *measurements* are made with no signal, using a 20,000 ohm per volt meter.

AC input voltage must be maintained at 117 volts for accurate readings.

AC *voltages shown are at 1000* ohms per volt.

All voltages shown are approximate.

RESISTANCE CHART

TUBE No.	PIN 1	PIN 2	PIN 3	PIN 4	PIN 5	PIN 6	PIN 7	PIN 8
12BE6 AM—Converter	20K	1	27	18	25K	25K	3 meg.	
12BA6 AM—I. F. Amp.	2 meg.	0	70	62	25K	25K	70	
12AT6 AM—Det.-AVC-Audio	10 meg.	0	18	5	470K	120K	540K	
12BA6 FM—R.F. Amp.	1 meg.	0	27	40	25K	25K	70	
12BE6 FM—Converter	20K	0	5	18	25K	25K	22K	
12BA6 FM—1st I.F. Amp.	220K	0	40	50	25K	25K	70	
12BA6 FM—2nd I.F. Amp.	220K	0	50	62	25K	25K	70	
12BA6 FM—3rd I.F. Amp.	100K	0	18	28	25K	25K	70	
6AL5 FM—Ratio Detector	0	25K	0	5	750K	0	750K	
50L6GT Power output	0	28	25K	25K	450K	250K	70	150

All resistance readings are taken from tube pin to chassis.

Due to manufacturing tolerance on component parts, resistance readings may vary as much as 20%.

All readings are shown in ohms unless otherwise noted.

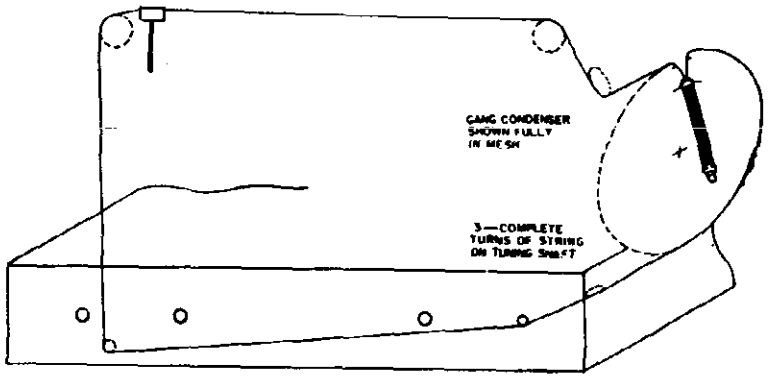

FIG. 2 DIAL CORD STRINGING

ALIGNMENT PROCEDURE

STEPS	RECEIVER DIAL SETTING	BAND SWITCH POSITION	SIGNAL GENERATOR FREQUENCY	DUMMY ANTENNA	SIGNAL GENERATOR CONNECTIONS	OUTPUT INDICATOR	TRIMMER ADJUSTMENT	TRIMMER FUNCTION	REMARKS
1	Minimum capacity	AM	455 KC 400 cycle AM	.1 MFD	High side—Grid of AM converter tube (12BE6) Low side—Chassis	Output Meter across voice coil	T5A, T5B T6A, T6B	AM I.F.	Adjust for maximum output
2	"	"	1600 KC 400 cycle AM	.00025 MFD	"	"	C2C	AM Oscillator	Adjust for maximum output
3	1400 KC	"	1400 KC 400 cycle AM	"	High side—One ant. terminal Low side—Other ant. terminal	"	C36 (on back)	AM Antenna	Adjust for maximum output
4	Any position where there is no station interference.	FM	10.7 MC unmodulated .1 volt output.	.1 MFD	High side—Grid of 3rd I.F. amplifier tube (12BA6) Low side—Chassis	Connect V.T.V.M. to plate of Ratio detector tube, pin 2 (6AL5)	T4B	Ratio detector primary	Adjust for maximum negative voltage, about —5 volts
5	"	"	10.7 MC 400 cycle 30% Modulation. (See note A)	"	"	Connect scope to audio take off point (across C30)	T4A	Ratio detector secondary	Adjust for a balanced pattern on scope. See Fig. 4.
6	"	"	"	"	High side—Grid of 2nd I.F. amplifier tube (12BA6) Low side—Chassis	Connect scope across 100K ohm grid return resistor of 3rd I.F. (R16)	T3A, T3B	FM 3rd I.F.	Adjust for maximum gain and best pattern on scope. See Fig. 5 (See note "B" below)
7	"	"	"	"	High side—Grid of 1st I.F. amplifier tube (12BA6) Low side—Chassis	"	T2A, T2B	FM 2nd I.F.	Adjust for maximum gain and best pattern on scope. See Fig. 6
8	"	"	"	"	High side—Plate of FM R.F. tube, pin 5 (12BA6) Low side—Chassis	"	T1A, T2B	FM 1st I.F.	Adjust for maximum gain and best pattern on scope. See Fig. 7.
9	109 MC	"	109 MC 400 cycle 30% modulation. (22.5 KC Deviation)	150 ohms in each lead.	High side—One ant. terminal Low side—Other ant. terminal	Connect output meter across voice coil	C2B	FM Oscillator	Adjust for maximum output (remove AVC ground)
10	103 MC	"	103 MC 400 cycle 30% modulation. (22.5 KC Deviation)	"	"	"	C2A	FM R.F.	Adjust for maximum output
11	100 MC	"	100 MC 400 cycle 30% modulation. (22.5 KC Deviation)	"	"	"	L1	FM Antenna	Adjust for maximum output

NOTE A: When aligning the FM I.F. circuits, keep the out put from the signal generator as low as possible.

NOTE B: The AVC circuit mus tbe grounded to the chassis when aligning the FM I.F. circuits.



FIGURE 4

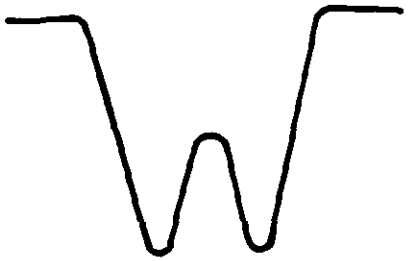

FIGURE 5

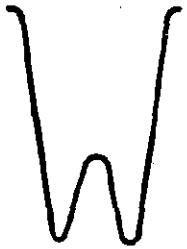

FIGURE 6

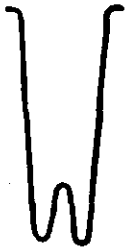

FIGURE 7

PARTS LIST

Schematic Diagram Reference	Part No.	Description
C1A, C1B C1C, C1D	C19-191	Variable Condenser
C2A C2B C2C	A20-144	FM—R.F. Trimmer FM—Oscillator Trimmer AM—Oscillator Trimmer
C3, C5, C7 C9, C18, C21, C24, C25, C28 C40, C51, C52 C53, C54, C55 C56, C57, C58 C62, C23, C64 C65, C66, C67	A16-177	005 MFD Ceramic Condenser (Centralab No. DA048 or Equiv.)
C68 C4, C14	A15-198	20 MMF 20% Ceramic Condenser (Erie Style "A" or Equiv.)
C6	A15-193	20 MMF 20% Ceramic Condenser (Erie Style K or Equiv.)
C8, C17	A15-194	50 MMF 10% Ceramic Condenser (Erie Style K or Equiv.)
C10	A18-273	4 MFD 150 Volt Elec. Condenser
C34	A16-150	.02 MFD 400 Volt Tubular Condenser
C12, C19 C22, C26	A15-200	470 MMF 20% Mica Condenser
C13, C32, C33 C47 C49	A16-165	.01 MFD 200 V Tubular Condenser
C15	A15-195	75 MMF 10% Ceramic Condenser (Erie Style K or Equiv.)
C16	A15-197	10 MMF 10% Ceramic Condenser (Erie Style A or Equiv.)
C20, C23, C27	A16-163	.01 MFD 120 V Molded Paper Condenser
C42, C44	A16-153	.005 MFD 600 Volt Tubular Condenser
C29	A15-199	300 MMF 20% Mica Condenser
C30	A16-180	.003 MFD 200 V Molded Paper Condenser
C31	A16-157	.1 MFD 200 V Tubular Condenser
C35	A16-178	.002 MFD 200 V Molded Paper Condenser
C36	A20-139	AM Antenna Trimmer
C37	A15-190	100 MMF 20% Mica Condenser
C11, C38	A15-191	50 MMF 20% Mica Condenser
C39	A15-176	250 MMF 20% Mica Condenser
C41	A15-196	100 MMF 20% Ceramic Condenser (Erie Style K or Equiv.)
C46 C69, C43, C59 C45	A16-158	.05 MFD 400 V Tubular Condenser
	A16-156	.01 MFD 400 V Tubular Condenser
C43 C50 C61	A18-284	40 MFD 150 Volt Electrolytic Condenser 40 MFD 300 Volt Electrolytic Condenser 40 MFD 350 Volt Electrolytic Condenser
R1, R26	A60-688	1 Megohm Resistor 20% ½ Watt
R2, R13, R17, R28, R9	A60-742	68 Ohm Resistor 10% ½ Watt
R3, R6, R7, R10, R19, R11 R14, R15, R18	A60-743	100 Ohm Resistor 20% ½ Watt
R4, R5, R22 R27	A60-744	22 K Ohm Resistor 10% ½ Watt
R8, R12, R16 R23	A60-727	100 K Ohm 20% ½ Watt
R20	A60-723	270 Ohm 20% ½ Watt Resistor
R21	A60-745	27 K Ohm 10% ½ Watt Resistor
R24	A60-748	33 K Ohm 10% ½ Watt Resistor
R25	B24-173	Volume Control with Switch
R29, R31	A60-726	2.2 Megohm 20% ½ Watt
R30, R35	A60-731	470K Ohm ½ Watt Resistor 20%
R32, R33	A60-747	270K Ohm 20% ½ Watt
R34	A60-728	10 Megohm 20% ½ Watt
R36	A60-755	100 Ohm 1 Watt 10% Resistor
R37	A60-741	150 Ohm 10% 1 Watt Resistor
R38	A60-751	12K Ohm 10% 1 Watt Resistor
R39	A60-734	Special Compensating Resistor (Order from Mfg.)
R40	A60-735	Special Compensating Resistor (Order from Mfg.)
R41	A60-738	15 Ohm — Glassohm 10% 3 Watt Resistor
L1	SB10-488	Antenna Coil, FM
L3	B10-489	R. F. Coil, F.M.
L4	B10-490	Oscillator Coil, F. M.
L5	A10-507	Antenna Coil, A. M.
L7	B10-491	Oscillator Coil, A. M.
L8	A33-225	Filter Choke
L2, L9, L10 L11, L12, L14 L15	A33-226	Filament Choke, 11 mh.
L13	A33-227	Filament Choke
S1A, S1B	A69-181	Switch, F.M—A.M. Switch, ON-OFF, (on volume control)
S2	A26-125	Tone Control
S3	SA10-493	1st I. F. Transformer, F. M.
T1	SC10-494	2nd & 3rd I. F. Transformer, F.M.
T2, T3	SC10-492	Ratio detector transformer, F.M.
T4	A10-499	1st I. F. transformer, A. M.
T5	A10-500	2nd I. F. transformer, A. M.
T6	A80-234	Output transformer
T7	B39-285	Drum, for variable condenser
	A23-151	Line cord
	A83-463	Selenium rectifier, 150 ma.
	A75-63	Tuning shaft
	B79-354	Speaker, 6¼" P. M.
	A21-111	Cover, for compensating resistors
	SB82-49	F. M. antenna assembly, Dipole
	B83-325	Speaker baffle
	A42-401	Cabinet, Ivory
	D42-379	Cabinet, Walnut
	C67-511	Dial Scale
	A98-4	Grille Cloth
	A52-191	Knob, Ivory
	A52-187	Knob, Walnut
	A83-292	Retainer, dial scale, right
	A83-293	Retainer, dial scale, left
	C83-502	Cabinet back
	B83-503	Dial diffusing plate
	A58-65	Dial pointer

MODEL 13915 WARWICK MFG. CORP.

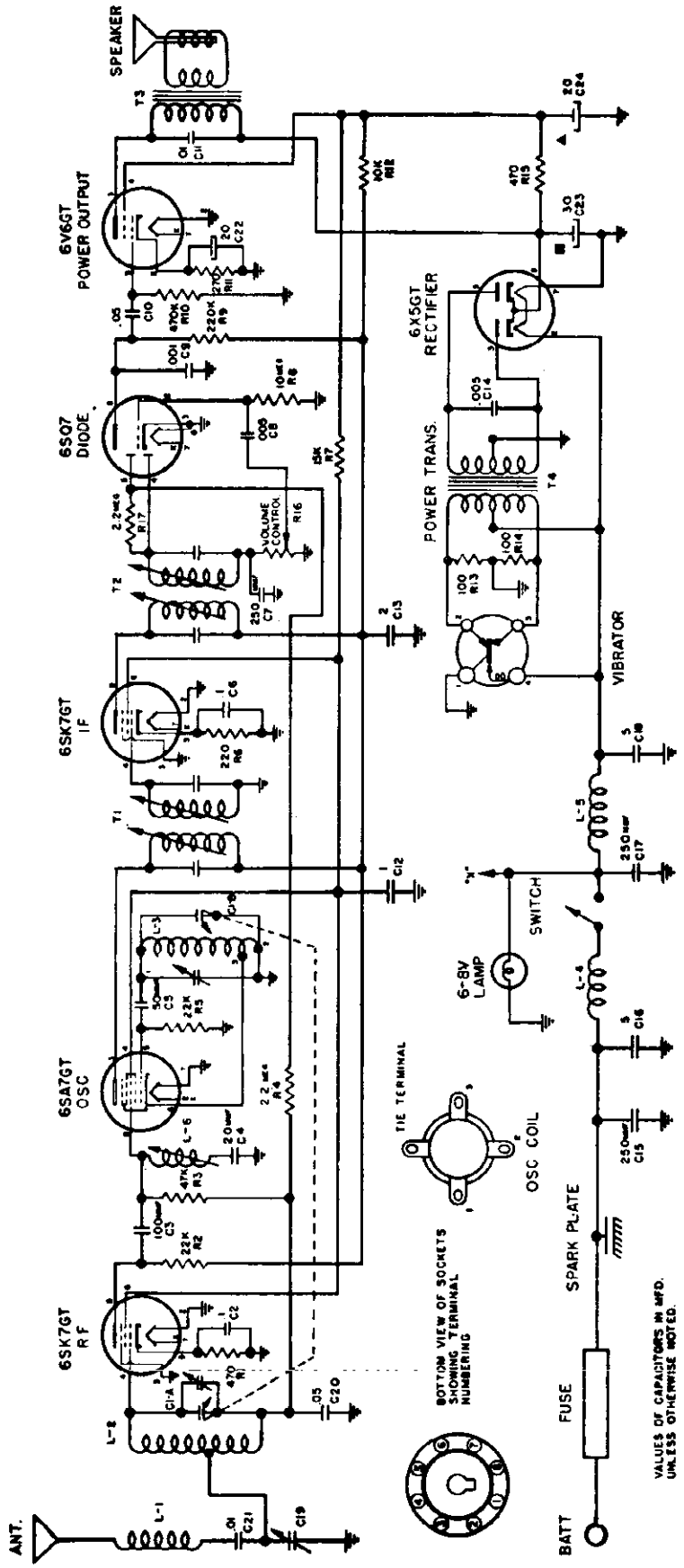

Fig. 3 Schematic Diagram

©John F. Rider

INSTALLATION

This radio comes to you complete with all hardware necessary for mounting, and also with a distributor suppressor, ammeter condenser and generator condenser. By referring to Figures 1 and 2, and following the instructions outlined below, you will find that it is very simple to install.

First determine where the receiver is to be mounted by holding it with the hands in the approximate location in the car. Using the front mounting bracket as a template, mark and drill two 5/8" holes in the instrument panel flange. Now secure the mounting bracket to the radio receiver with the screws provided, and then mount the front of the radio to the instrument panel, using the bolts, lock washers and nuts provided for this purpose. The back of the radio is supported by means of the rear mounting strap. The mounting strap should be formed to the correct angles, as illustrated in Figure 2, so that it can then be fastened to the fire wall. After marking and center-punching the fire wall at the correct location, drill with a 3/8" drill. The mounting strap is then secured to the radio and fastened to the fire wall of the car with the 1/4" bolt, lock washer and nut furnished with the receiver.

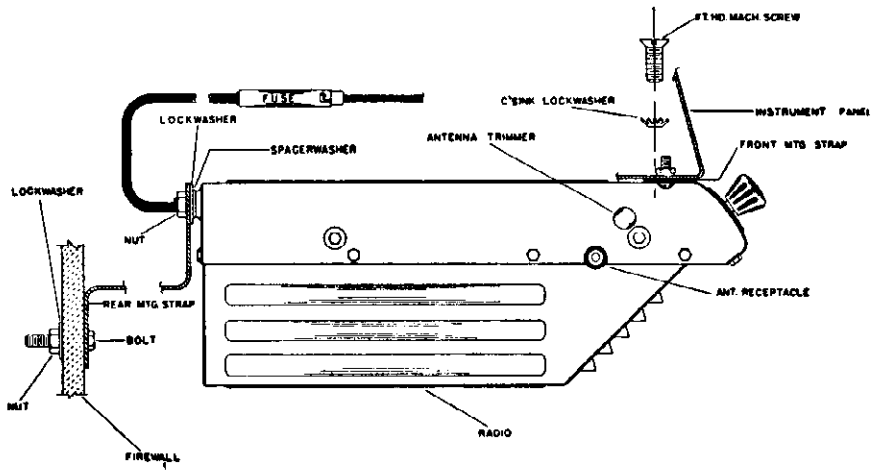

Fig. 2 Side View, Showing Mounting

CONNECTING THE RADIO

The antenna cable should be connected to the radio by inserting the jack into the socket provided on the side of the radio. Connect the battery cable to the hot side of the ammeter behind the instrument panel. The fuse should then be inserted into the cable receptor.

FINAL ADJUSTMENTS

The input circuit has been especially designed to be used with a low capacity antenna, of the fish pole or whip type.

To adjust the antenna trimmer condenser, carefully tune the receiver to a weak station at approximately 600 kilocycles (K.C.). Remove the snap button covering the antenna trimmer (See Figure 2) and adjust the trimmer for maximum volume. A small screw driver will be needed for this purpose.

ACCESSORIES FURNISHED FOR INSTALLATION

All of the parts that are needed for installing this receiver are furnished in the Mounting Parts Kit, part No. S84-192, and the Suppression and Misc. Parts Kit, part No. S84-230, as listed below. Also supplied are the rear mounting strap, part No. B31-134, and the front mounting plate, part No. A31-138.

NOTE: For shipping, the two control knobs have been removed from the tuning and volume control shafts. To install the knobs, line up the flat side of the knob spring, (inside knob) with the flat side of the control shaft and push the knob forward until it stops.

S84-192 MOUNTING PARTS KIT

- 1 1/4" Bolt
- 2 1/4" Lock Washers
- 2 1/4" Hexagon Nuts
- 2 10-32 x 5/8" Screws
- 2 External Tooth Lock Washers
- 2 Internal Tooth Lock Washers
- 2 10-32 Hexagon Nuts

S84-230 SUPPRESSION KIT & MISC. PARTS

- 1 S84-233 "A" lead assem.
- 1 A43-10 Fuse
- 2 A52-256 Control knobs
- 1 A81-13 Sleeve (for fuse)
- 1 S84-193 Suppression Kit consisting of:
  - 2 .5 MFD Condensers
  - 1 Distributor Suppressor
  - 20" Wire Braid

ELIMINATING MOTOR NOISE

IMPORTANT: Special care should be taken when mounting the radio to make sure all paint, grease, rust, etc., is removed from all three mounting points. A good electrical contact at these points will aid materially in eliminating motor noise.

GENERATOR CONDENSER

The generator condenser must be connected to the battery terminal of the generator in all cases. If your car is equipped with a generator using an automatic regulator, make sure the condenser IS NOT fastened to the field winding terminal. If in doubt, your local car dealer can advise you as to where the car manufacturer recommends connecting it.

DISTRIBUTOR SUPPRESSOR

Remove the coil to distributor high tension lead from the distributor. Cut the lead two inches from the end, and screw the distributor resistor on to the coil lead, then screw the short length into the resistor and plug the cable into the distributor cap.

AMMETER CONDENSER

A .5 MFD bypass condenser is furnished for attaching to the ammeter. This should be connected to either side of the ammeter with the ground lug fastened to a good ground nearby. In most cases the use of this condenser, the distributor suppressor, and the generator condenser, will eliminate all objectionable ignition interference.

ELECTRICAL ACCESSORIES

In some cases, it may be found that car accessories such as electric heaters, lighters, automatic relays, or gauges, may cause interference while in operation. Proper procedure in such cases is to try another by-pass condenser from ground to the suspected accessory until the source of the interference is found. The condenser then should be permanently mounted in this location.

HIGH AND LOW TENSION LEADS

In many cases the low tension battery leads, etc., are grouped together with the high tension wires. These leads will very often pick up motor noise and feed it into the receiver through the battery circuit. In cases such as these it will be necessary to separate the low tension from the high tension wires and run them through another hole if they run from the engine compartment up to the instrument panel. This condition is particularly true on the V-8 Ford, as the battery and primary leads run through a special tube which also houses the high tension leads. Shield and ground these leads.

IGNITION COILS

In cars where the ignition coil is located on the back side of the instrument panel it is often necessary to use an additional condenser. It must be installed from the battery side of the ignition coil to the closest ground on the instrument panel.

Short leads are very important. Where coils are mounted either on the instrument panel or in the driver's compartment, it may be necessary to shield the high tension lead from the coil to the distributor.

WHEEL STATIC

Wheel Static is a form of interference caused by the rotation of the front wheels of the car, and it is, of course, only noticed when the car is in motion. If this form of interference is present it can be eliminated by installing wheel static collector springs between the inner hub cap and the spindle shaft.

BONDING OF FIRE WALL TUBES

Bonding the steering column to the fire wall with a short braid may also be effective. Clean the paint from the steering column at the fire wall where the column enters the motor compartment, and solder on a short piece of braid. Ground the end of the braid to the fire wall.

In some cases it may be necessary to ground the tubes and rods coming through the fire wall in order to reduce the interference. Clean them with emery cloth and spot-solder the braid, fastening the end under a convenient screw. A ¼" piece of wire braid 20 inches long is furnished in the suppression kit assembly for this purpose.

ELECTRICAL SPECIFICATIONS

Power Supply	6.3 volts DC
Current	4.8 amp. average
Frequency Range	540 to 1600 KC
I. F. Frequency	455 KC
Speaker	4" P. M.
Power Output	1.2 watts, undistorted 2.5 watts, maximum
Sensitivity	10 microvolts average for 1 watt output
Selectivity	20 KC broad at 1000 times signal, at 1000 KC

SERVICE NOTES

Voltages taken from the different points of the circuit to the chassis are measured with volume control in maximum position, all tubes in their sockets, no signal applied, and with a volt meter having a resistance of 20,000 ohms per volt. These voltages are clearly shown on the voltage chart, (Fig. 4).

All voltages should be measured with an input voltage of 6.3 volts DC.

To check for open by-pass condensers, shunt each condenser with another one having the same capacity and voltage rating which is known to be good until the defective unit is located.

ALIGNING INSTRUCTION

Never attempt any adjustments on this receiver unless it becomes necessary to replace a coil or transformer, or the adjustments have been tampered with in the field. Always make certain that other circuit components, such as tubes, condensers, resistors, etc., are normal before proceeding with realignment.

If realignment is necessary follow the instructions given under the heading "ALIGNMENT PROCEDURE". After realignment has been completed repeat the procedure as a final check.

The tube compliment of this receiver is as follows:

1—6SK7GT—R. F. Amplifier.

1—6SA7GT—Converter.

1—6SK7GT—I.F. Amplifier.

1—6SQ7—Detector—AVC—1st audio.

1—6V6GT—Power output.

1—6X5GT—Rectifier.

INSTRUCTIONS FOR REMOVING CHASSIS FROM THE CASE

The bottom cover (the one with the speaker louvers) can be removed to permit servicing of major components, such as tubes and vibrator, by removing the eight (8) screws holding it to the top cover. There are three (3) screws on each side, one (1) in the rear, and one (1) in the front.

CAUTION: Before attempting to remove the top cover, to service condensers, resistors, etc., the screw connecting the spark plate to the "A" terminal (inside case) must be removed. This is a round head screw, and is located on the rear of the case, close to the mounting stud bolt. It is recessed in a ½ inch hole in the case itself, thereby permitting contact with the spark plate.

After removing the spark plate screw, remove the two knobs by pulling forward and remove the eight (8) screws securing the cover to the chassis. Lift the chassis at the rear, at the same time moving it away from the front of the case so that the volume and tuning shafts will clear the holes in the cover.

NOTE: When reinstalling the chassis into the case, be sure the screw connecting the spark plate to the "A" terminal (inside case) is tightened very securely, otherwise the receiver will not operate properly.

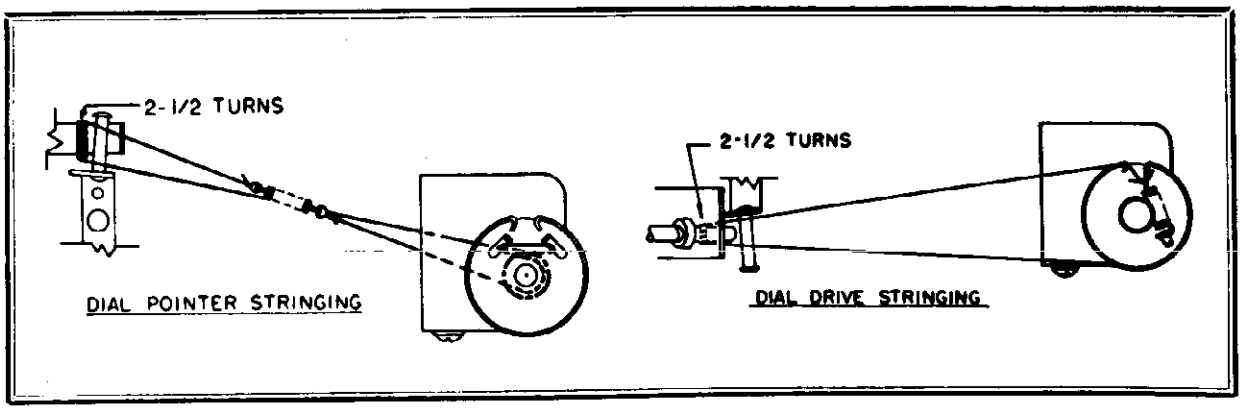

ALIGNMENT PROCEDURE

Volume control—Maximum, all adjustments.

No signal applied to antenna.

Power input—6.3 volts.

Connect dummy antenna in series with output lead of signal generator.

Connect output meter across voice coil.

Connect ground lead of signal generator to chassis.

Repeat alignment procedure as a final check.

The following equipment is necessary for proper alignment:

Signal generator that will provide the test frequencies as listed.

Non-metallic screwdriver.

Output meter.

Dummy antennas—.1 MFD., .00025 MFD.

For alignment points refer to Figures 4 ad 5.

Dial Setting	*Generator Frequency*	*Dummy Ant.*	*Generator Connections*	*Trimmer Reference*	*Trimmer Adjustment*	*Trimmer Function*
Fully Open	455 KC	.1 MFD.	6SA7 Grid	T2	Maximum	Output I.F.
Fully Open	455 KC	.1 MFD.	6SA7 Grid	T1	Maximum	Input I.F.
Fully Open	455 KC	.00025 MFD.	Ant. lead	L6	Minimum	Wave trap
Fully Open	1600 KC	.00025 MFD.	Ant. lead	C1B	Maximum	Oscillator
Tune in signal from generator	1400 KC	.00025 MFD.	Ant. lead	C1A	Maximum	Antenna

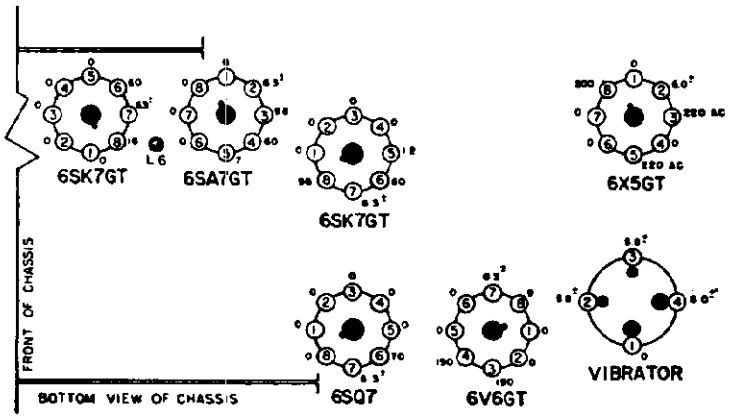

Fig. 4 Socket Voltages

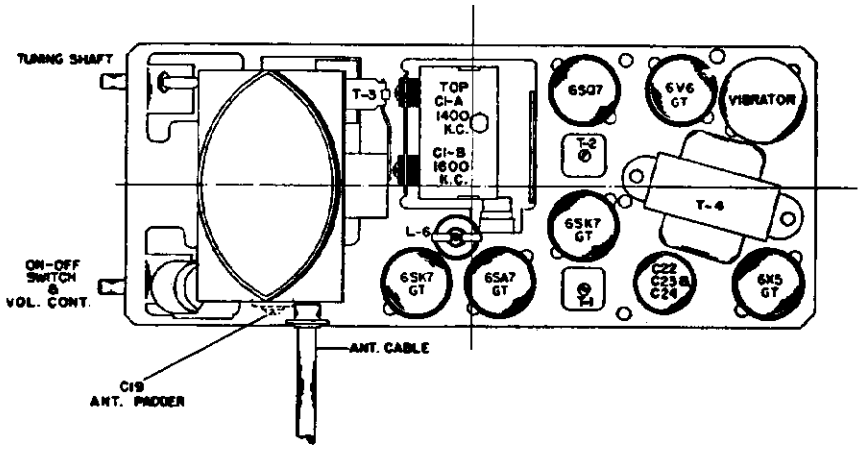

Fig. 5 Tube and Trimmer Locations

WARWICK MFG. CORP. MODEL 13915

Schematic Diagram Reference	Part No.	Description
		CONDENSERS
C1A, C1B	B19-196	Variable Condenser
C2, C6, C12	A16-187	.1 MFD. 400 Volt Condenser
C3	A15-196	100 MMFD Ceramic Condenser
C4	A15-202	20 MMFD Ceramic Condenser
C5	A15-204	50 MMFD Ceramic Condenser
C7, C15, C17	A15-176	250 MMFD Mica Condenser
C8	A16-190	.005 MFD. 600 Volt Condenser
C9	A16-195	.001 MFD. Ceramic Condenser
C10	A16-193	.05 MFD. 600 Volt Condenser
C11, C21	A16-192	.01 MFD. 400 Volt Condenser
C13	A16-188	.2 MFD. 400 Volt Condenser
C14	A16-185	.005 MFD. 1600 Volt Oil Filled Condenser
C16, C18	A16-184	.5 MFD. 100 Volt Condenser
C19	A20-145	Trimmer Condenser
C20	A16-189	.05 MFD. 400 Volt Condenser
C22	A18-289	20 MFD 25 Volt Electrolytic Condenser
C23		30 MFD 350 Volt Electrolytic Condenser
C24		20 MFD. 350 Volt Electrolytic Condenser
		RESISTORS
R1	A60-722	470 Ohm ½ Watt 20% Resistor
R13, R14	A60-752	100 Ohm ½ Watt 10% Resistor
R2, R5	A60-744	22K Ohm ½ Watt 10% Resistor
R3	A60-685	47K Ohm ½ Watt 20% Resistor
R4, R17	A60-726	2.2 Megohm ½ Watt 20% Resistor
R6	A60-753	220 Ohm ½ Watt 10% Resistor
R7	A60-716	15K Ohm 1 Watt 10% Resistor
R8	A60-728	10 Megohm ½ Watt 20% Resistor
R9	A60-667	220K Ohm ½ Watt 20% Resistor
R10	A60-731	470K Ohm ½ Watt 20% Resistor
R11	A60-754	270 Ohm 1 Watt 10% Resistor
R12	A60-698	10K Ohm 1 Watt 10% Resistor
R15	A60-694	470 Ohm 1 Watt 10% Resistor
R16	A24-177	Volume Control, 500,000 Ohms, with Switch
		COILS
L1	A10-513	Antenna Loading Coil
L2	B10-511	Antenna Coil
L3	A10-512	Oscillator Coil
L4	A33-229	Choke, "A" Line
L5	A33-228	Choke, Vibrator Hash
L6	A10-510	I.F. Trap Coil
T1	A10-508	1st I.F. Transformer
T2	A10-509	2nd I.F. Transformer
		TRANSFORMERS
T3	B80-242	Output Transformer (Part of Speaker)
T4	B80-243	Power Transformer
		DIAL PARTS
	A11-303	Bracket, Dial Scale
	A11-304	Bracket, String Guide
	A72-29	Bushing, Tuning Shaft Bearing
	A70-130	Clip, Spring, for Tuning Shaft
	B48-44	Dial Crystal
	A58-55	Dial Pointer
	B67-525	Dial Scale
	A28-101	Gasket for Speaker
	A52-256	Knob
	A89-10	Pilot Light, Type G.E. No. 422
	A65-37	Rivet, Shoulder, for String Guide Bracket
	A75-68	Shaft, Tuning
	A75-67	Shaft, for Dial Pointer
	A70-132	Spring, for Pilot Light Socket
	A70-133	Spring, String Tension, Pointer Drive, and Tuning
		MISCELLANEOUS
	A83-421	Clip, I.F. Transformer Mounting
	A83-517	Clip, Oscillator Coil Mounting
	A43-10	Fuse, 15 Amp.
	A47-112	Grommet, Rubber (for Mounting Speaker and Variable Condenser)
	B31-134	Mounting Strap, Rear
	A31-138	Mounting Plate, Front
	S84-192	Mounting Parts Kit
	A87-38	Receptacle, Antenna Cable
	B79-362	Speaker, 4" P.M. (includes Output Transformer)
	S84-193	Suppression Kit Assembly
	A34-105	Vibrator
	A83-519	Wiper, Grounding, for Case Covers

MODEL 14515

WARWICK MFG. CORP.

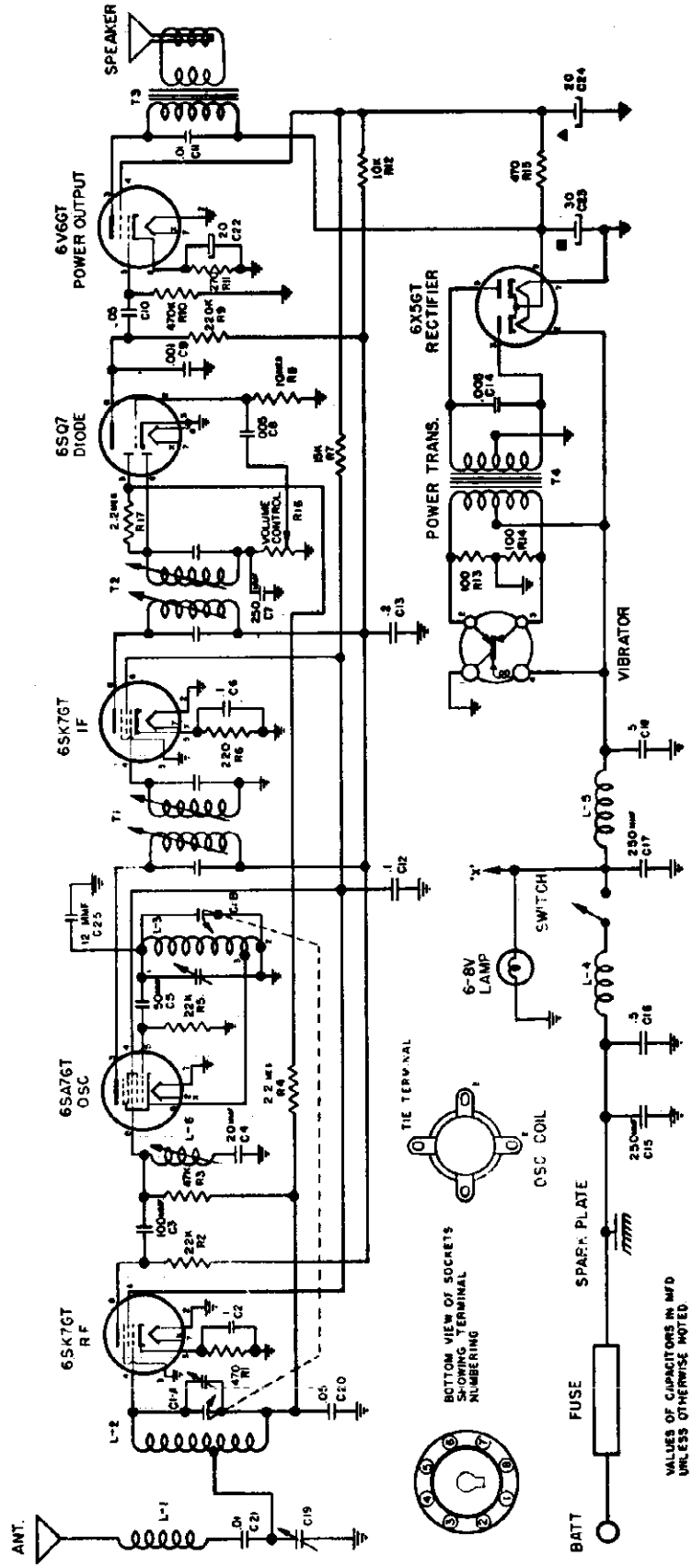

Fig. 3 Schematic Diagram

©John F. Rider

INSTALLATION

This radio comes to you complete with all hardware necessary for mounting, and also with a distributor suppressor, ammeter condenser and generator condenser. By referring to Figures 1 and 2, and following the instructions outlined below, you will find that it is very simple to install.

First determine where the receiver is to be mounted by holding it with the hands in the approximate location in the car Using the front mounting bracket as a template, mark and drill two 5/8" holes in the instrument panel flange. Now secure the mounting bracket to the radio receiver with the screws provided, and then mount the front of the radio to the instrument panel, using the bolts, lock washers and nuts provided for this purpose. The back of the radio is supported by means of the rear mounting strap. The mounting strap should be formed to the correct angles, as illustrated in Figure 2, so that it can then be fastened to the fire wall. After marking and center-punching the fire wall at the correct location, drill with a 3/8" drill. The mounting strap is then secured to the radio and fastened to the fire wall of the car with the 1/4" bolt, lock washer and nut furnished with the receiver.

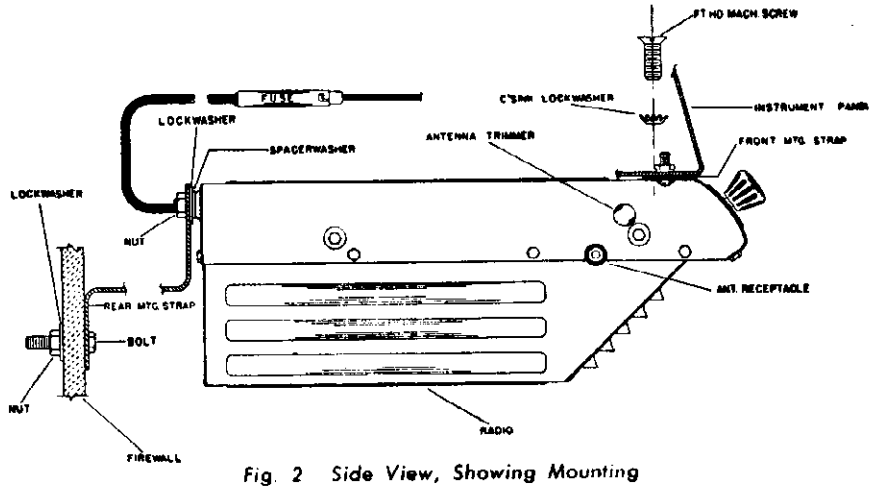

Fig. 2 Side View, Showing Mounting

CONNECTING THE RADIO

The antenna cable should be connected to the radio by inserting the jack into the socket provided on the side of the radio. Connect the battery cable to the hot side of the ammeter behind the instrument panel. The fuse should then be inserted into the cable receptor.

FINAL ADJUSTMENTS

The input circuit has been especially designed to be used with a low capacity antenna, of the fish pole or whip type.

To adjust the antenna trimmer condenser, carefully tune the receiver to a weak station at approximately 600 kilocycles (K.C.). Remove the snap button covering the antenna trimmer (See Figure 2) and adjust the trimmer for maximum volume. A small screw driver will be needed for this purpose.

ACCESSORIES FURNISHED FOR INSTALLATION

All of the parts that are needed for installing this receiver are furnished in the Mounting Parts Kit, part No. S84-192, and the Suppression and Misc. Parts Kit, part No. S84-230, as listed below. Also supplied are the rear mounting strap, part No. B31-134, and the front mounting plate, part No. A31-138.

NOTE: For shipping, the two control knobs have been removed from the tuning and volume control shafts. To install the knobs, line up the flat side of the knob spring, (inside knob) with the flat side of the control shaft and push the knob forward until it stops.

S84-192 MOUNTING PARTS KIT

- 1 1/4" Bolt
- 2 1/4" Lock Washers
- 2 1/4" Hexagon Nuts
- 2 10-32 x 5/8" Screws
- 2 10-32 x 3/8" Screws
- 2 External Tooth Lock Washers
- 2 Internal Tooth Lock Washers
- 2 10-32 Hexagon Nuts
- 1 Washer Spacer

S84-230 SUPPRESSION KIT & MISC. PARTS

- 1 S84-233 "A" lead assem.
- 1 A43-10 Fuse
- 2 A52-256 Control knobs
- 1 A81-13 Sleeve (for fuse)
- 1 S84-193 Suppression Kit consisting of:
  - 2 .5 MFD Condensers
  - 1 Distributor Suppressor
  - 20" Wire Braid

MODEL 14515 WARWICK MFG. CORP.

ELIMINATING MOTOR NOISE

IMPORTANT: Special care should be taken when mounting the radio to make sure all paint, grease, rust, etc., is removed from all three mounting points. A good electrical contact at these points will aid materially in eliminating motor noise.

GENERATOR CONDENSER

The generator condenser must be connected to the battery terminal of the generator in all cases. If your car is equipped with a generator using an automatic regulator, make sure the condenser IS NOT fastened to the field winding terminal. If in doubt, your local car dealer can advise you as to where the car manufacturer recommends connecting it.

DISTRIBUTOR SUPPRESSOR

Remove the coil to distributor high tension lead from the distributor. Cut the lead two inches from the end, and screw the distributor resistor on to the coil lead, then screw the short length into the resistor and plug the cable into the distributor cap.

AMMETER CONDENSER

A .5 MFD bypass condenser is furnished for attaching to the ammeter. This should be connected to either side of the ammeter with the ground lug fastened to a good ground nearby. In most cases the use of this condenser, the distributor suppressor, and the generator condenser, will eliminate all objectionable ignition interference.

ELECTRICAL ACCESSORIES

In some cases, it may be found that car accessories such as electric heaters, lighters, automatic relays, or gauges, may cause interference while in operation. Proper procedure in such cases is to try another by-pass condenser from ground to the suspected accessory until the source of the interference is found. The condenser then should be permanently mounted in this location.

HIGH AND LOW TENSION LEADS

In many cases the low tension battery leads, etc., are grouped together with the high tension wires. These leads will very often pick up motor noise and feed it into the receiver through the battery circuit. In cases such as these it will be necessary to separate the low tension from the high tension wires and run them through another hole if they run from the engine compartment up to the instrument panel. This condition is particularly true on the V-8 Ford, as the battery and primary leads run through a special tube which also houses the high tension leads. Shield and ground these leads.

IGNITION COILS

In cars where the ignition coil is located on the back side of the instrument panel it is often necessary to use an additional condenser. It must be installed from the battery side of the ignition coil to the closest ground on the instrument panel.

Short leads are very important. Where coils are mounted either on the instrument panel or in the driver's compartment, it may be necessary to shield the high tension lead from the coil to the distributor.

WHEEL STATIC

Wheel Static is a form of interference caused by the rotation of the front wheels of the car, and it is, of course, only noticed when the car is in motion. If this form of interference is present it can be eliminated by installing wheel static collector springs between the inner hub cap and the spindle shaft.

BONDING OF FIRE WALL TUBES

Bonding the steering column to the fire wall with a short braid may also be effective. Clean the paint from the steering column at the fire wall where the column enters the motor compartment, and solder on a short piece of braid. Ground the end of the braid to the fire wall.

In some cases it may be necessary to ground the tubes and rods coming through the fire wall in order to reduce the interference. Clean them with emery cloth and spot-solder the braid, fastening the end under a convenient screw. A 1/4" piece of wire braid 20 inches long is furnished in the suppression kit assembly for this purpose.

WARWICK MFG. CORP. MODEL 14515

ELECTRICAL SPECIFICATIONS

Power Supply.....6.3 volts DC
Current.....4.8 amp. average
Frequency Range.....540 to 1600 KC
I. F. Frequency.....455 KC
Speaker.....4" P. M.
Power Output.....1.2 watts, undistorted
2.5 watts, maximum
Sensitivity.....10 microvolts average for 1 watt output
Selectivity...20 KC broad at 1000 times signal, at 1000 KC

SERVICE NOTES

Voltages taken from the different points of the circuit to the chassis are measured with volume control in maximum position, all tubes in their sockets, no signal applied, and with a volt meter having a resistance of 20,000 ohms per volt. These voltages are clearly shown on the voltage chart, (Fig. 4).

All voltages should be measured with an input voltage of 6.3 volts DC.

To check for open by-pass condensers, shunt each condenser with another one having the same capacity and voltage rating which is known to be good until the defective unit is located.

ALIGNING INSTRUCTION

Never attempt any adjustments on this receiver unless it becomes necessary to replace a coil or transformer, or the adjustments have been tampered with in the field. Always make certain that other circuit components, such as tubes, condensers, resistors, etc., are normal before proceeding with realignment.

If realignment is necessary follow the instructions given under the heading "ALIGNMENT PROCEDURE". After realignment has been completed repeat the procedure as a final check.

The tube compliment of this receiver is as follows:

1—6SK7GT—R. F. Amplifier.

1—6SA7GT—Converter.

1—6SK7GT—I.F. Amplifier.

1—6SQ7—Detector—AVC—1st audio.

1—6V6GT—Power output.

1—6X5GT—Rectifier.

INSTRUCTIONS FOR REMOVING CHASSIS FROM THE CASE

The bottom cover (the one with the speaker louvers) can be removed to permit servicing of major components, such as tubes and vibrator, by removing the eight (8) screws holding it to the top cover. There are three (3) screws on each side, one (1) in the rear, and one (1) in the front.

CAUTION: Before attempting to remove the top cover, to service condensers, resistors, etc., the screw connecting the spark plate to the "A" terminal (inside case) must be removed. This is a round head screw, and is located on the rear of the case, close to the mounting stud bolt. It is recessed in a ½ inch hole in the case itself, thereby permitting contact with the spark plate.

After removing the spark plate screw, remove the two knobs by pulling forward and remove the eight (8) screws securing the cover to the chassis. Lift the chassis at the rear, at the same time moving it away from the front of the case so that the volume and tuning shafts will clear the holes in the cover.

NOTE: When reinstalling the chassis into the case, be sure the screw connecting the spark plate to the "A" terminal (inside case) is tightened very securely, otherwise the receiver will not operate properly.

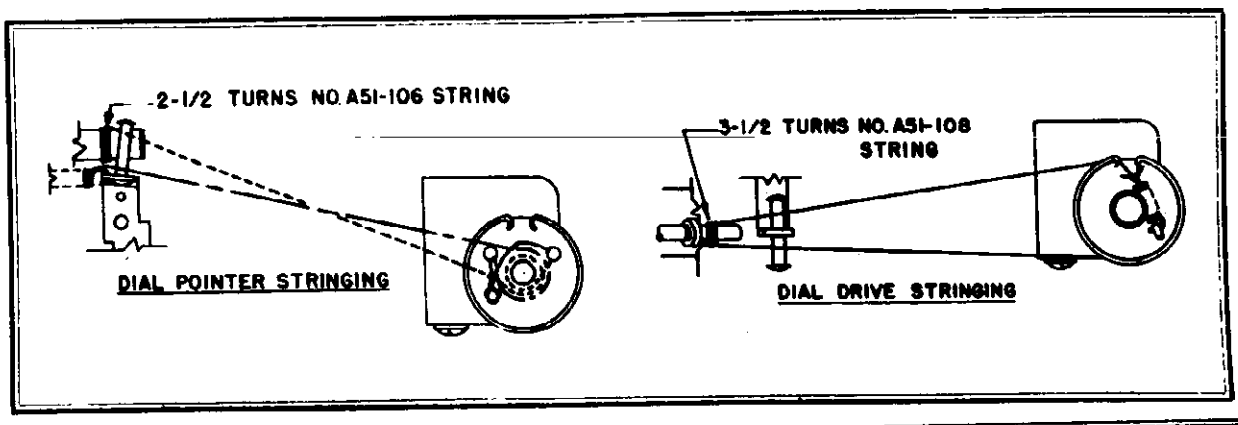

ALIGNMENT PROCEDURE

Volume control—Maximum, all adjustments.

No signal applied to antenna.

Power input—6.3 volts.

Connect dummy antenna in series with output lead of signal generator.

Connect output meter across voice coil.

Connect ground lead of signal generator to chassis.

Repeat alignment procedure as a final check.

The following equipment is necessary for proper alignment:

Signal generator that will provide the test frequencies as listed.

Non-metallic screwdriver.

Output meter.

Dummy antennas—.1 MFD., .00025 MFD.

For alignment points refer to Figures 4 ad 5.

Dial Setting	*Generator Frequency*	*Dummy Ant.*	*Generator Connections*	*Trimmer Reference*	*Trimmer Adjustment*	*Trimmer Function*
Fully Open	455 KC	.1 MFD.	6SA7 Grid	T2	Maximum	Output I.F.
Fully Open	455 KC	.1 MFD.	6SA7 Grid	T1	Maximum	Input I.F.
Fully Open	455 KC	.00025 MFD.	Ant. lead	L6	Minimum	Wave trap
Fully Open	1600 KC	.00025 MFD.	Ant. lead	C1B	Maximum	Oscillator
Tune in signal from generator	1400 KC	.00025 MFD.	Ant. lead	C1A	Maximum	Antenna

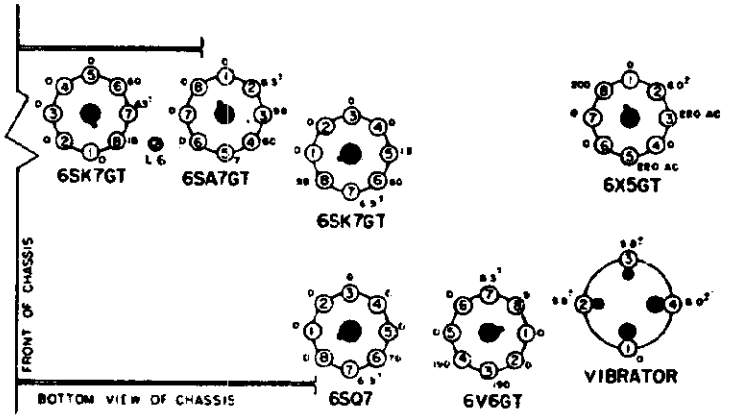

Fig 4 Socket Voltages

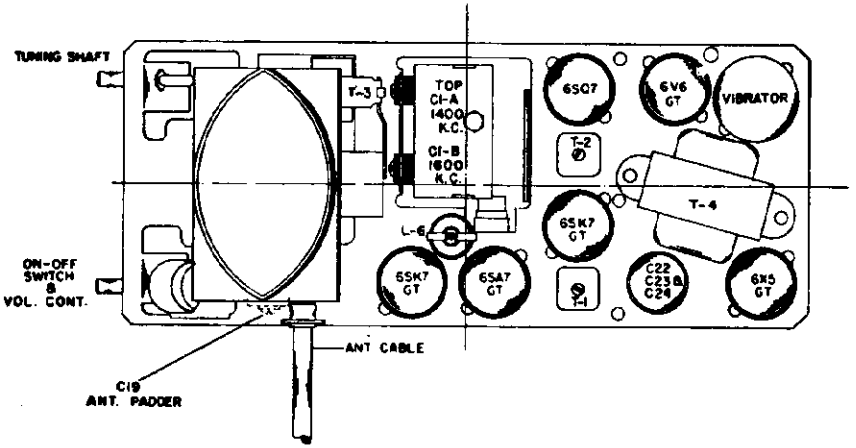

Fig. 5 Tube and Trimmer Locations

WARWICK MFG. CORP.

MODEL 14515

Schematic Diagram Reference	Part No.	Description
		CONDENSERS
C1A, C1B	B19-196	Variable Condenser
C2, C6, C12	A16-187	.1 MFD. 400 Volt Condenser
C3	A15-196	100 MMFD Ceramic Condenser
C4	A15-202	20 MMFD Ceramic Condenser
C5	A15-204	50 MMFD Ceramic Condenser
C7, C15, C17	A15-176	250 MMFD Mica Condenser
C8	A16-190	.005 MFD. 600 Volt Condenser
C9	A16-195	.001 MFD. Ceramic Condenser
C10	A16-193	.05 MFD. 600 Volt Condenser
C11, C21	A16-192	.01 MFD. 400 Volt Condenser
C13	A16-188	.2 MFD. 400 Volt Condenser
C14	A16-185	.005 MFD. 1600 Volt Oil Filled Condenser
C16, C18	A16-184	.5 MFD. 100 Volt Condenser
C19	A20-145	Trimmer Condenser
C20	A16-189	.05 MFD. 400 Volt Condenser
C22	A18-289	20 MFD 25 Volt Electrolytic Condenser
C23		30 MFD 350 Volt Electrolytic Condenser
C24		20 MFD. 350 Volt Electrolytic Condenser
C25	A15-205	12 MMFD ceramic condenser, temp. comp.
		RESISTORS
R1	A60-722	470 Ohm ½ Watt 20% Resistor
R13, R14	A60-752	100 Ohm ½ Watt 10% Resistor
R2, R5	A60-744	22K Ohm ½ Watt 10% Resistor
R3	A60-685	47K Ohm ½ Watt 20% Resistor
R4, R17	A60-726	2.2 Megohm ½ Watt 20% Resistor
R6	A60-753	220 Ohm ½ Watt 10% Resistor
R7	A60-716	15K Ohm 1 Watt 10% Resistor
R8	A60-728	10 Megohm ½ Watt 20% Resistor
R9	A60-667	220K Ohm ½ Watt 20% Resistor
R10	A60-731	470K Ohm ½ Watt 20% Resistor
R11	A60-754	270 Ohm 1 Watt 10% Resistor
R12	A60-698	10K Ohm 1 Watt 10% Resistor
R15	A60-694	470 Ohm 1 Watt 10% Resistor
R16	A24-177	Volume Control, 500,000 Ohms, with Switch
		COILS
L1	A10-513	Antenna Loading Coil
L2	B10-511	Antenna Coil
L3	A10-512	Oscillator Coil
L4	A33-229	Choke, "A" Line
L5	A33-228	Choke, Vibrator Hash
L6	A10-510	I.F. Trap Coil
T1	A10-508	1st I.F. Transformer
T2	A10-509	2nd I.F. Transformer
		TRANSFORMERS
T3	B80-242	Output Transformer (Part of Speaker, not furnished separately)
T4	B80-243	Power Transformer
		DIAL PARTS
	A11-303	Bracket, Dial Scale
	B11-328	Bracket, String Guide
	A72-29	Bushing, Tuning Shaft Bearing
	A70-130	Clip, Spring, for Tuning Shaft
	B48-44	Dial Crystal
	A58-55	Dial Pointer
	B67-525	Dial Scale
	A28-101	Gasket for Speaker
	A52-256	Knob
	A11-329	Link, String Guide
	A89-10	Pilot Light, Type G. E. No. 422
	A65-37	Rivet, Shoulder, for Dial Pointer Stringing
	A65-41	Rivet, Shoulder, for String Guide Brkt. and Link
	A65-12	Rivet, Shoulder, for Dial Drive Stringing
	A75-70	Shaft, Tuning
	A75-67	Shaft, for Dial Pointer
	A70-132	Spring, for Pilot Light Socket
	A70-133	Spring, Dial Drive String Tension
	A70-142	Spring, Pointer Drive String Tension
		MISCELLANEOUS
	S84-233	"A" Lead Assembly
	A83-421	Clip, I.F. Transformer Mounting
	A83-517	Clip, Oscillator Coil Mounting
	A43-10	Fuse, 15 Amp.
	A47-112	Grommet, Rubber (for Mounting Speaker and Variable Condenser)
	B31-134	Mounting Strap, Rear
	A31-138	Mounting Plate, Front
	S84-192	Mounting Parts Kit
	A87-38	Receptacle, Antenna Cable
	B79-362	Speaker, 4" P.M. (includes Output Transformer)
	S84-193	Suppression Kit Assembly
	A34-105	Vibrator
	A83-519	Wiper, Grounding, for Case Covers

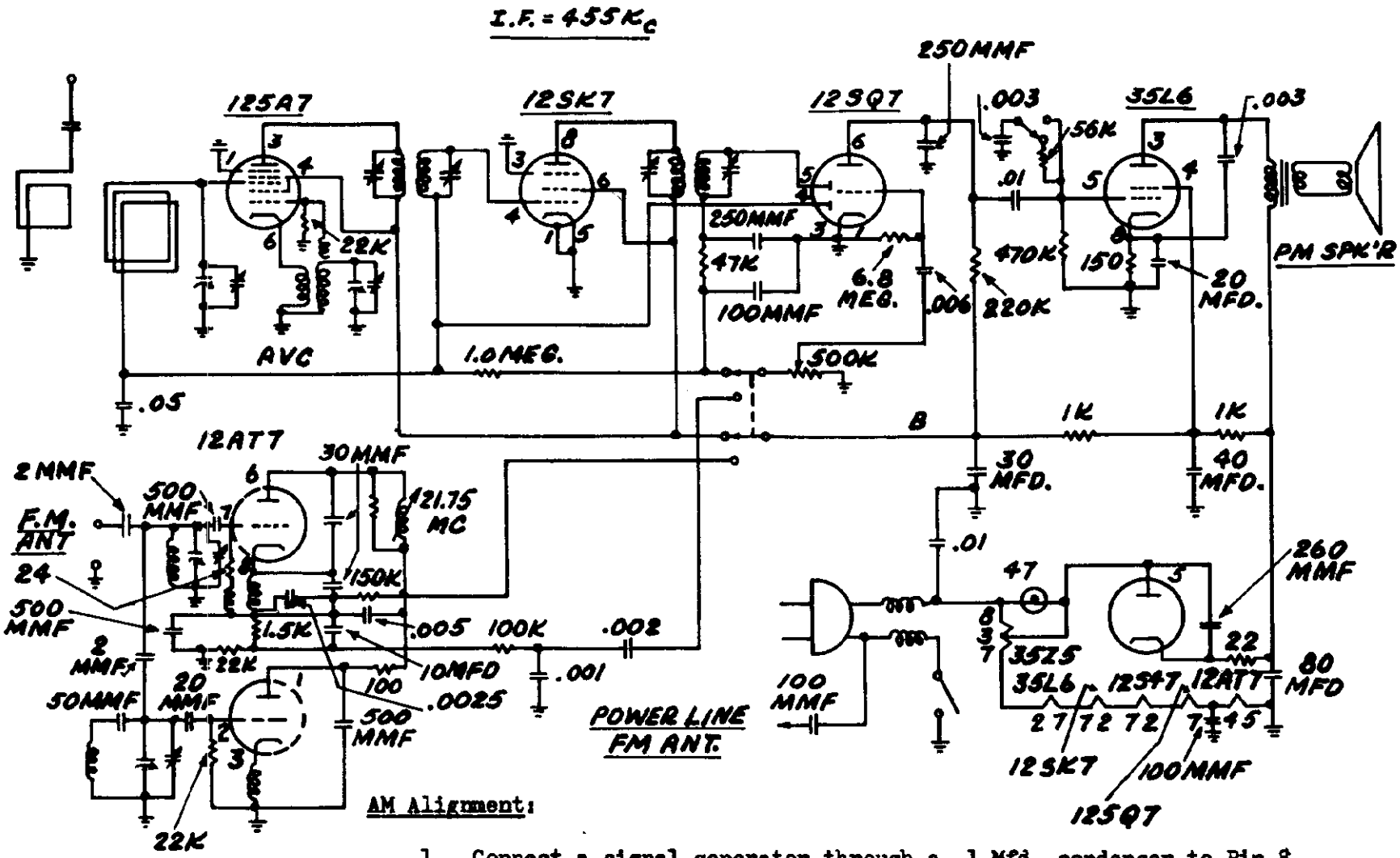

AM Alignment:

1. Connect a signal generator through a .1 Mfd. condenser to Pin 8 of the 12SA7. With only enough signal to give a good indication, peak the IF trimmers at 455Kc.

2. With the generator connected to a transmitting loop near the receiver, peak the osc. trimmer at 1620 Kc. with the receiver gang full open. Next, set the signal generator at 1400 Kc. and tune in this signal on the receiver. Peak the antenna trimmer.

Use an unmodulated signal and tune for minimum noise in all FM adjustments.

FM Alignment:

MODEL 4800
AM/FM

1. Connect a signal generator to the FM ant. terminals. Using a 21.75 Mc. signal, tune the IF slug adjustment for minimum noise making sure slug is at the tuning point nearest top of can. There is another tuning point with the slug screwed farther down into the coil which produces unwanted coupling.

2. With a 150 ohm resistor in each lead, connect a high frequency generator to the FM ant. Terminals. Set ant. trimmer to maximum capacity. Use enough signal to give a definite dip in noise but do not block the receiver. Set the osc. section to track from 87.5 Mc. to 108.5 Mc. by trimming on the high end and adjusting the osc. coil spacing on the low end. Check each of these adjustments several times. Next, with the generator set at 103 Mc. Tune in this signal on the receiver. While rocking the dial slightly, tune the ant. trimmer for minimum noise. Use an insulated screw driver on all RF adjustments.

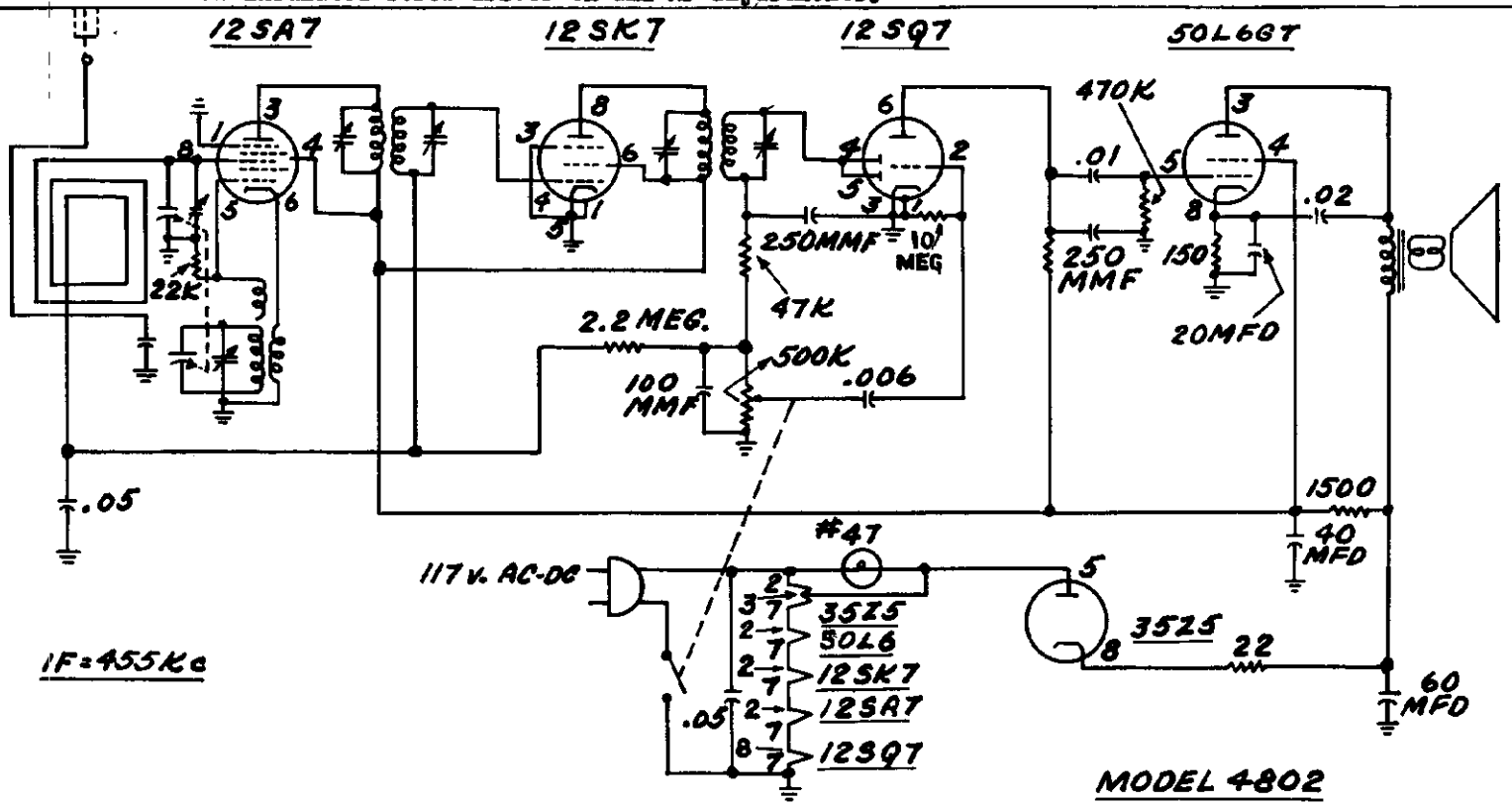

WESTERN AUTO SUPPLY CO. MODEL D1835B

SHORT WAVE BAND

5.75 to 18.3 Megacycles

This band is calibrated in both megacycles and meters. The principal international short wave stations will be found in the 16, 19, 25, 31 and 49 meter bands.

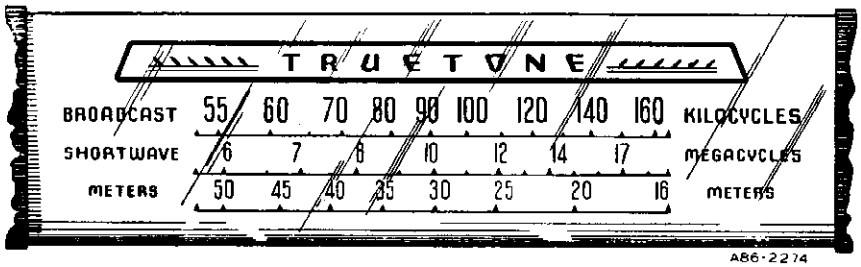

BROADCAST BAND

540 to 1600 ← Kilocycles

This band is calibrated in channel numbers. Add a zero to the dial number to get the kilocycle number.

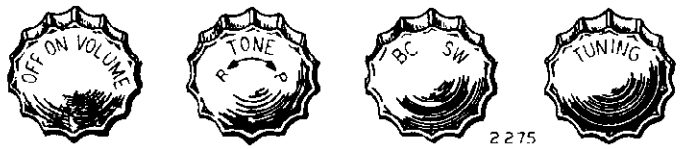

ON-OFF SWITCH AND VOLUME CONTROL

Turn radio on by turning knob to the right. A click will be heard—wait 30 seconds for tubes to heat. Continuing to turn the knob to the right will increase the volume.

TONE CONTROL AND PHONO-RADIO SWITCH

PHONO-RADIO SWITCH—For radio reception, turn knob completely to the left. A click will be heard, if the knob was in the phono position. For phonograph reproduction, turn knob completely to the right. (See page 2 for Record Player Connections). A click will be heard, if the knob was in the radio position.

TONE CONTROL—When knob is turned to the right, a brilliant tone is obtained and when turned to the left, a deep bass effect is produced. Do not turn knob past the stop position when adjusting the tone or the position of the Phono-Radio Switch will be changed as explained above.

BAND SWITCH

This knob has two positions. The position to the left provides reception on the standard Broadcast Band. The position to the right switches the tuning to the Short Wave Band.

TUNING KNOB

Turn until desired station is heard. Then slowly rotate back and forth until signal is clearest and strongest. If signal is too strong, reduce it by means of the volume control, not by using the tuning knob.

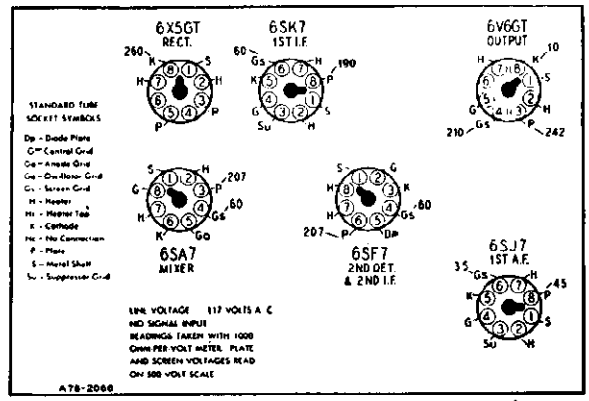

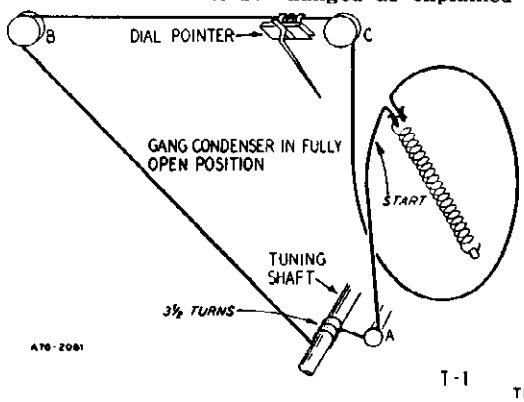

DRIVE CORD REPLACEMENT

The drive cord should be replaced as shown on the accompanying illustration using a new 10X66 drive cord assembly for the purpose. After the cord has been installed, stretch the tension spring and fasten the free end of the cord to it.

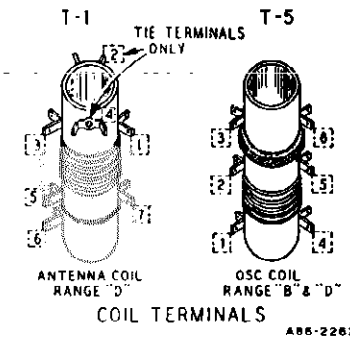

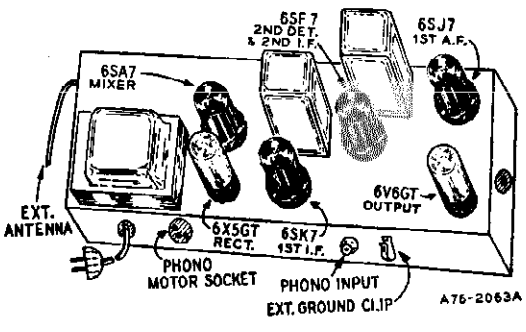

MODEL D1835B

WESTERN AUTO SUPPLY CO.

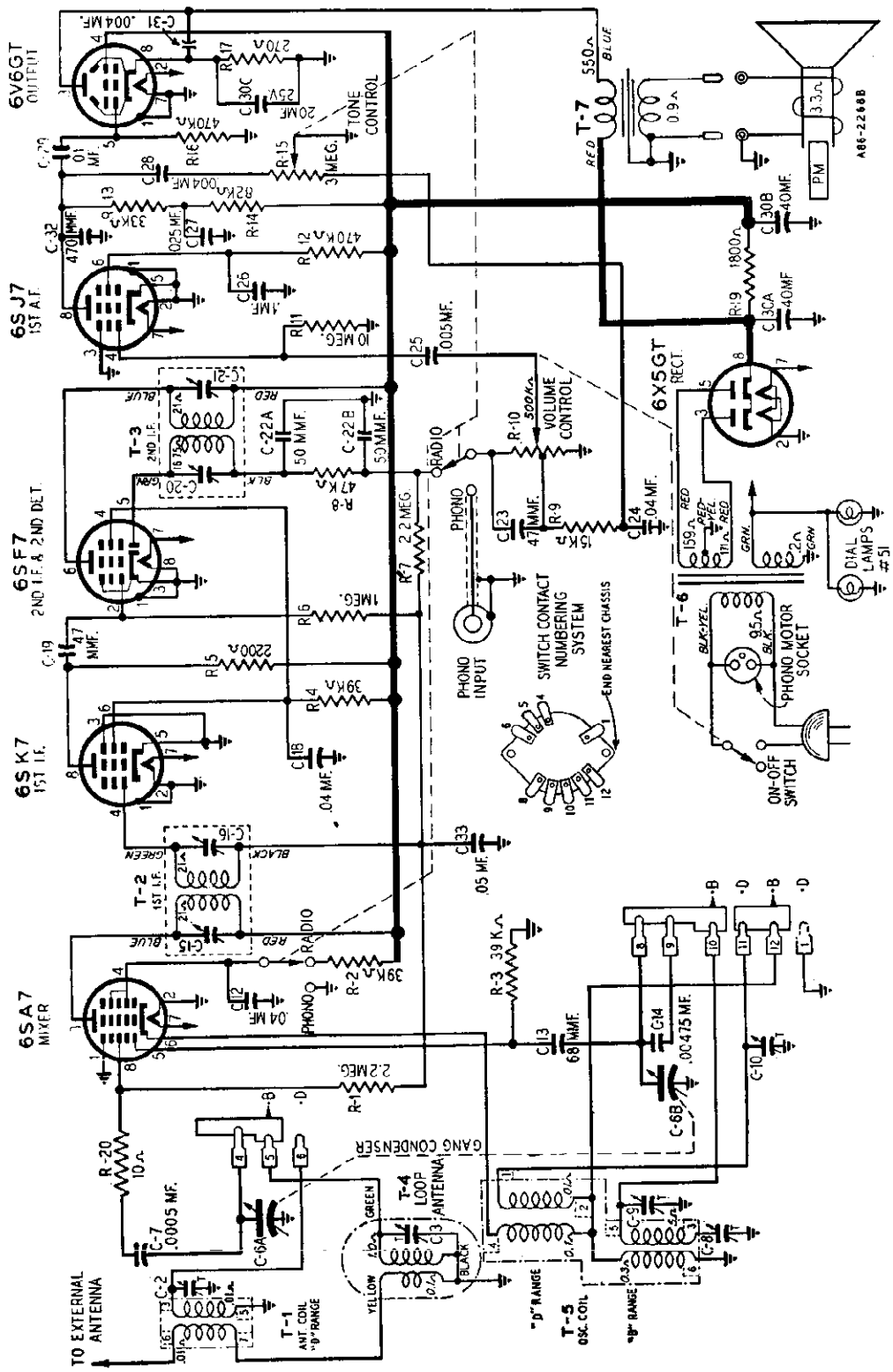

WESTERN AUTO SUPPLY CO.

MODEL D1835B

ALIGNMENT PROCEDURE

Volume Control—Maximum All Adjustments.

Connect Radio Chassis to Ground Post of Signal Generator with a Short Heavy Lead.

Allow Chassis and Signal Generator to "Heat Up" for several minutes.

The following equipment is required for aligning: An All Wave Signal Generator which will provide ... accurately calibrated signal at the test frequencies as listed.

Output Indicating Meter—Non-Metallic Screwdriver.

Dummy Antennas—.1 mf., 50 mmf., and 400 ohms.

	SIGNAL GENERATOR FREQUENCY SETTING	CONNECTION AT RADIO	DUMMY ANTENNA	BAND SWITCH SETTING	CONDENSER SETTING	ADJUST TRIMMERS TO MAXIMUM
I.F.	455 KC	Grid of 6SA7 Pin 8	.1 mf.	B Range	Turn Rotor to Full Open	1st I.F. (C15) & (C16) 2nd I.F. (C20) & (C21)
RANGE B	1620 KC	Antenna Lead	50 mmf.	B Range	Turn Rotor to Full Open	Oscillator Range B (C9)
	1400 KC	Antenna Lead	50 mmf.	B Range	Tune Rotor to Max. Output	Ant. Range B (C3)
	600 KC	Antenna Lead	50 mmf.	B Range	Tune Rotor to Max. Output	600 KC (C8) See Note B
	Repeat above steps at 1620 and 600 KC until readjusting the oscillator Range B Trimmer (C9) causes no further improvement in output.					
RANGE D	18.3 MC	Antenna Lead	400 Ohm	D Range	Turn Rotor to Full Open	Oscillator Range D (C10)
	16 MC	Antenna Lead	400 Ohm	D Range	Tune Rotor to Max. Output	Ant. Range D (C2) Rock Rotor—See Note B
LOOP RANGE B	Reassemble chassis in cabinet. 1400 KC	Antenna Lead	50 mmf.	B Range	Tune Rotor to Max. Output See Note A	Ant. Range B (C3)

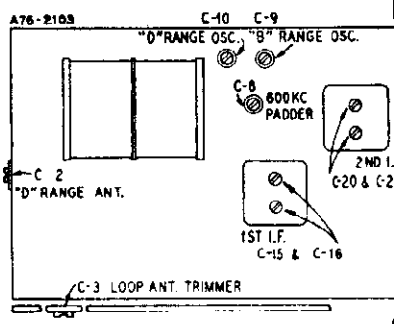

NOTE A—Set pointer at the 1400 KC mark on the dial scale. Attach pointer to drive cord.

NOTE B—Turn rotor back and forth, and adjust the trimmer until peak of greatest intensity is obtained.

SPECIFICATIONS

Power Consumption .....45 Watts (At 117 volts AC)

Power Output .....4 Watts Maximum 2.3 Watt 10% Harmonics

Selectivity .....40KC Broad at 1000 times Signal

Intermediate Frequency .....455 KC

Speaker .....12" PM Dynamic

Tuning Frequency Range

B Range .....540 to 1600 KC

D Range .....5.75 to18.3 MC

Sensitivity (For .05 watt output—External Antenna).

B Range .....9 Microvolts Average

D Range .....20 Microvolts Average

REMOVAL OF CHASSIS FROM CABINET

Before removing the chassis from the cabinet it will be necessary to detach the dial pointer from the dial string. To do this, spread the tabs on the pointer and pull the dial string off the pointer.

The dial lamp socket assemblies may be disengaged from the cabinet mounting by squeezing together and pulling away from the cabinet mounting, the spring bracket to which the dial lamp socket is mounted. Take care not to bend or damage the large drive pulley on the gang condenser while doing this.

When replacing the chassis in the cabinet it will be necessary to tune in a station of a known frequency and move the dial pointer until that frequency is indicated on the dial and then attach the pointer to the dial string. Take care not to scuff or cut the dial string or bend the pointer during this operation.

REPLACEMENT PARTS LIST

NOTICE: There is a model number label on the chassis. This label identifies the radio as to chassis, dial and issue letter. When ordering parts or writing, give ALL information appearing on this label.

MISCELLANEOUS

12A486	12" P.M. Speaker
3A303	Tube Socket—Octal (8 prong) Moulded
3A304	Phono Motor Socket
3A305	Phono Socket—Single Pin Tip
10A689	Knob (Tuning)
10A690	Knob (Off-On Volume)
10A687	Knob (SW-BC)
10A688	Knob (Tone—R.P.)
2A372	Band Change Switch
13X328	Line Cord and Plug Assembly
	No. 856 Console Cabinet

TRANSFORMERS AND COILS

T-1	9A1917	"D" Range Antenna Coil Assembly
T-2	9A1814	1st I-F Coil Assembly
T-3	9A1815	2nd I-F Coil Assembly
T-4	26A474	"B" Range Loop Antenna
T-5	9A1918	Oscillator Coil Assembly
T-6	53X282	Power Transformer
T-7	51X134	Output Transformer

CAPACITORS

C-2	17A164	5-50 mmf		Trimmer
C-3	17A235	2-24 mmf		Trimmer
C-6A, C-6B	14A184	Gang Condenser with Drive Pulley		
C-7	B66501	.0005 mf	200 V	Tubular
C-8	17A155	350-430 mmf		Trimmer
C-9, C-10	17A109	2.5-35 mmf		Dual Trimmer
C-12, C-18	D66403	.04 mf	400 V	Tubular
C-13	47X466	68 mmf		Moulded
C-14	46X289	.00475 mf	180 V	Tubular
C-15, C-16	Part of T-2 (1st I-F Coil Assembly)			
C-19, C-23	47X463	47 mmf		Moulded
C-20, C-21	Part of T-3 (2nd I-F Coil Assembly)			
C-22A, C-22B	47X112	50-50 mmf		Dual Mica
C-24	D64403	.04 mf	400 V	Tubular
C-25	D66502	.005 mf	400 V	Tubular
C-26	D67104	.10 mf	400 V	Tubular
C-27	D64253	.025 mf	400 V	Tubular
C-28	D66402	.004 mf	400 V	Tubular
C-29	D66103	.01 mf	400 V	Tubular
C-30A	45X346	40 mf	450 V	3 Section Electrolytic
C-30B		40 mf	450 V	
C-30C		20 mf	25 V	
C-31	H66402	.004	800 V	Tubular
C-32	47X467	470 mmf		Moulded
C-33	B66503	.05 mf	200 V	Tubular

RESISTORS

885225	R-1, R-7	2.2 megohms	0.5 W	Carbon
C84393	R-2, R-4	39 K ohms	1.0 W	Carbon
884393	R-3	39 K ohms	0.5 W	Carbon
884222	R-5	2200 ohms	0.5 W	Carbon
885105	R-6	1 megohm	0.5 W	Carbon
885473	R-8	47 K ohms	0.5 W	Carbon
884153	R-9	15 K ohms	0.5 W	Carbon
36X358	R-10	500 K ohms	Volume Control and Line Switch	
885106	R-11	10 megohms	0.5 W	Carbon
885474	R-12, R-16	470 K ohms	0.5 W	Carbon
884333	R-13	33 K ohms	0.5 W	Carbon
884823	R-14	82 K ohms	0.5 W	Carbon
40X276	R-15	3.0 megohms	Tone Control & Radio Phono Switch	
C84271	R-17	270 ohms	1.0 W	Carbon
D84182	R-19	1800 ohms	2.0 W	Carbon
885100	R-20	10 ohms	0.5 W	Carbon

DIAL AND DRIVE ASSEMBLY

6X21	Rubber Grommet	Mtg. Gang Condenser
20X329	Cond. Cushion Stud	Mtg. Gang Condenser
25X1489	Pulley Bracket (Right)	
25X1490	Pulley Bracket (Left)	
26X485	Drive Shaft	
19X192	"C" Washer	
25X1491	Pointer Bracket	
15X229	Pointer	
10X66	Drive Cord Assembly	
28X113	Drive Cord Tension Spring	
30X517	Dial Clamp	
4X915	Escutcheon, Dial (Right)	
4X916	Escutcheon, Dial (Left)	
4X931	Escutcheon Insert	
58X694	Dial Glass	
7A200	Pilot Light Socket Assembly	
7A32	Pilot Light Bulb No. 51	

TUBE COMPLEMENT

The tube complement of this receiver consists of the following:

1—6SK7—R.F. Amplifier
1—6SA7—Mixer—OSC.
1—6SK7—I.F. Amplifier
1—6SQ7—Det. AVC—Audio
1—6K6—Power Output
1—5Y3—Rectifier

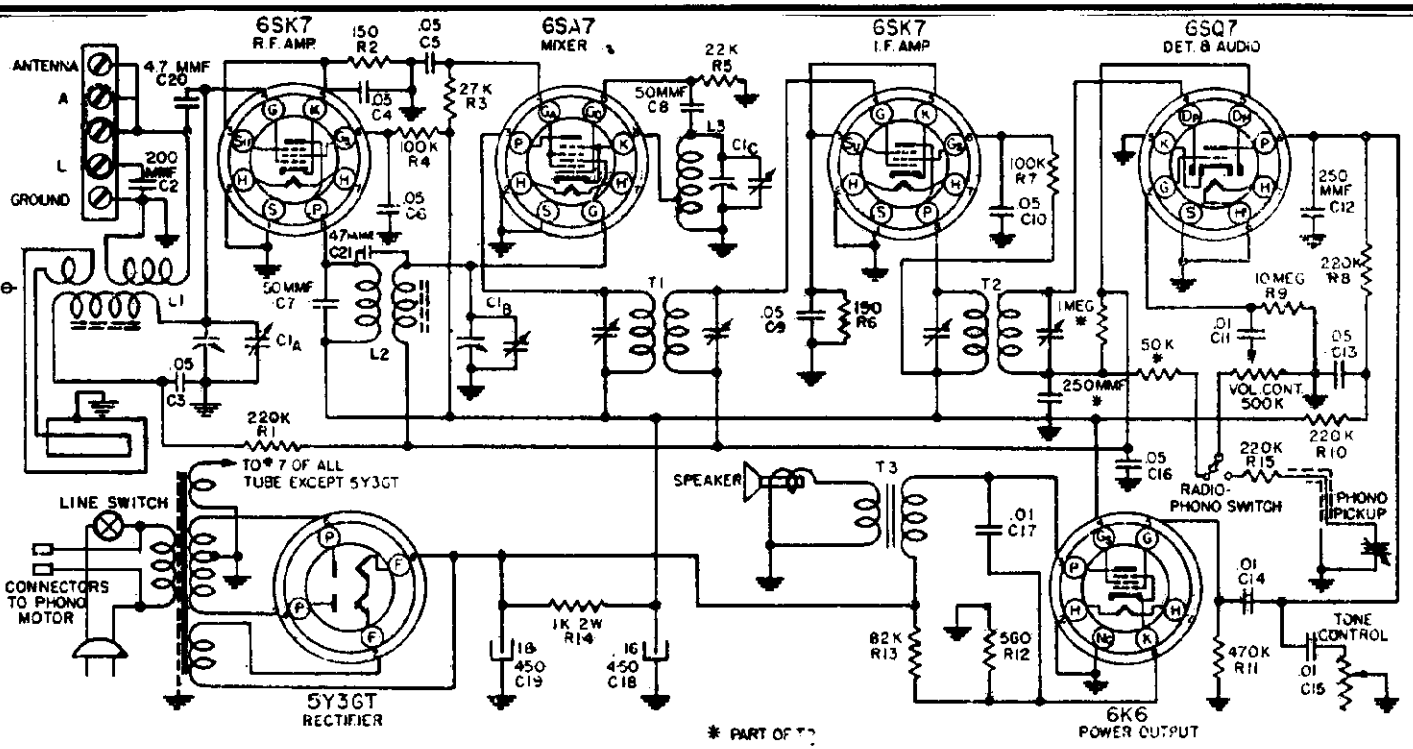

SOCKET VOLTAGES

All voltages are measured with a 1000 ohm per volt meter on the 150 volt scale, with no signal. To obtain an accurate voltage check the A.C. line voltage must be 117 volts. Where no voltage is shown the voltage is O or cannot be read with this type of voltmeter.

SERVICE NOTES

Voltages taken from the different points of the circuit to the chassis are measured with volume control in maximum position, all tubes in their sockets and with a volt meter having a resistance of 1000 ohms per volt, using the 150 volt scale. These voltages are clearly indicated on the voltage chart. (Fig. 2).

All voltages should be measured with an A.C. line voltage of 117 volts.

To check for open by-pass condensers, shunt each condenser with another one having the same capacity and voltage rating which is known to be good until the defective unit is located.

ALIGNING INSTRUCTIONS

Never attempt any adjustments on this receiver unless it becomes necessary to replace a coil or transformer, or the adjustments have been tampered with in the field. Always make certain that other circuit components, such as tubes, condensers, resistors, etc., are normal before proceeding with realignment.

If realignment is necessary follow the instructions given under the heading "ALIGNMENT PROCEDURE" on the next page. After realignment has been completed repeat the procedure as a final check.

REMOVING CHASSIS FROM CABINET

The dial pointer must be removed from the pointer rail assembly, and cabinet before the chassis can be taken from the cabinet. This can be done by detaching the dial cord from the pointer and sliding the pointer to the right (viewed from the rear of the cabinet) as far as it will go. The dial pointer can now be removed from the cabinet.

The chassis can now be removed in the conventional manner by taking out the four chassis mounting bolts after disconnecting the speaker and phono leads.

ALIGNMENT PROCEDURE

Volume control—Maximum: all adjustments.
Tone Control—Treble: Full Clockwise Rotation.
Connect ground lead of signal generator to radio chassis.

Connect dummy antenna in series with output lead of signal generator.

Connect output meter across voice coil of speaker.

The following equipment is necessary for proper alignment

Signal generator that will provide the test frequencies as listed.

Output meter.

Non-metallic screwdriver.

Dummy antennas—.1 mfd., 00025 mfd.

Position of Variable	Generator Frequency	Dummy Ant. mfd.	Generator Connections	Trimmer Adjustment	Trimmer Function
Minimum Capacity (Fully Opened)	455 K.C.	.1	6SA7 Grid (Stator of C1B)	T1 T2	I. F.
Minimum Capacity (Fully Opened)	1725 K.C.	.00025	*Ant. Terminal on Loop	C1C	Osc.
Tune in signal From Generator	1500 K.C.	.00025	*Ant. Terminal on Loop	C1B	R. F.
Tune in signal From Generator	1500 K.C.	.00025	*Ant. Terminal on Loop	C1A	Ant.

*Be sure coupling link is in correct position for external antenna operation. See illustration below (Fig. 4).

Repeat the above alignment procedure as a final check.

With an output meter connected across the voice coil of the speaker, the output meter reading for ½ watt is 1.25 volts using a signal which is modulated 400 c.p.s.

ANTENNA and GROUND CONNECTIONS

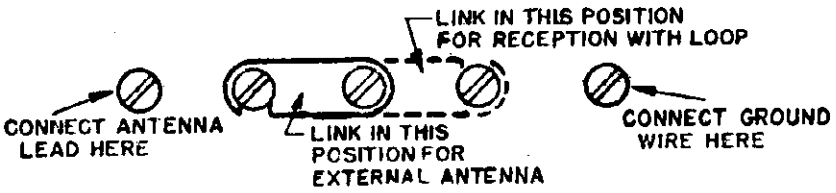

Fig. 4

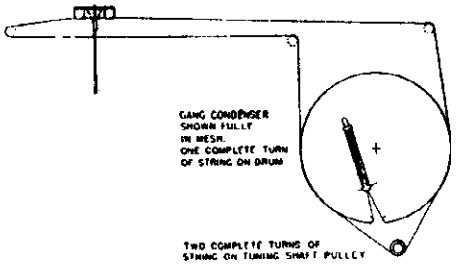

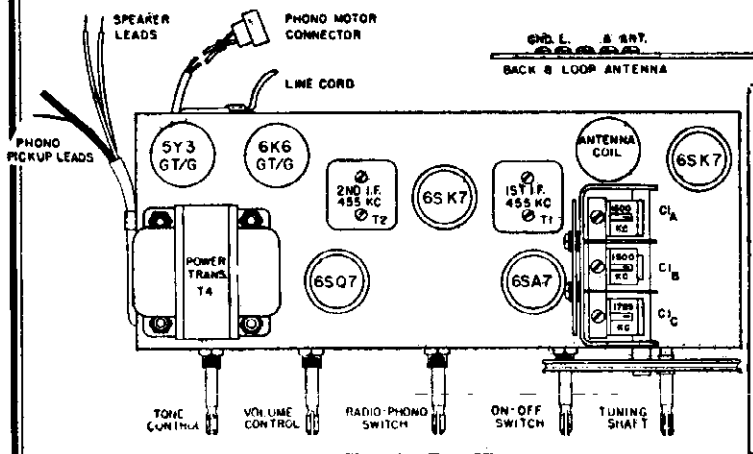

Fig. 1 Chassis. Top View

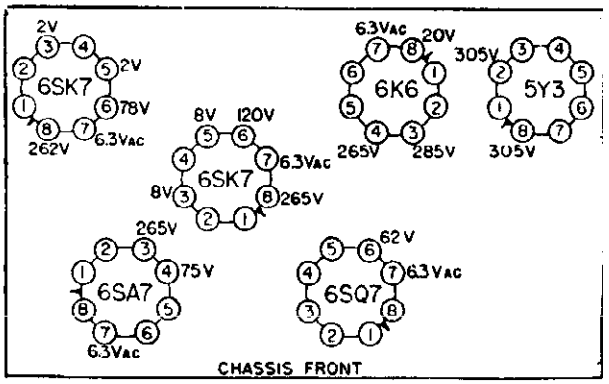

Fig. 2 Chassis. Bottom View

MODEL D1840

WESTERN AUTO SUPPLY CO.

CONDENSERS

Circuit Reference	Part No.	Description
C1A, C1B, C1C	B19-186	Variable condenser
C2	B15-189	200 MMF Mica condenser (on loop)
C3, C4, C9, C16	A16-152	.05 MFD 200 volt condenser
C5, C6, C10, C13	A16-158	.05 MFD 400 volt condenser
C7, C8	A15-175	50 MMF mica condenser
C11, C14, C15	A16-156	.01 MFD 400 volt condenser
C12	A15-176	250 MMF mica condenser
C17	A16-168	.01 MFD 1000 volt condenser
C18	A18-279	16 MFD 450 volt electrolytic condenser
C19	A18-274	16 MFD 450 volt electrolytic condenser
C20, C21	A83-355	4.7 MMF condenser

RESISTORS

R1, R8, R10, R15	A60-667	220K ohm ½ watt resistor
R2, R6	A60-686	150 ohm ½ watt resistor
R3	A60-692	27K ohm 1 watt resistor
R4, R7	A60-671	100K ohm ½ watt resistor
R5	A60-659	22K ohm ½ watt resistor
R9	A60-663	10 megohm ½ watt resistor
R11	A60-662	470K ohm ½ watt resistor
R12	A60-701	560 ohm 1 watt resistor
R13	A60-700	82K ohm 1 watt resistor
R14	A60-699	1000 ohm 2 watt resistor

COILS

L1	C10-459	Antenna coil
L2	B10-452	R. F. coil
L3	B10-446	Oscillator coil
T1	B10-412	1st I.F. transformer
T2	B10-444	2nd I.F. transformer

MISCELLANEOUS

T3	A80-222	Output transformer
T4	C80-223	Power transformer
	A69-169	Switch, on-off
	A26-123	Tone control
	A24-169	Volume control
	A84-41	Dial drive shaft and pulley assembly
	B79-359	Speaker, 10" P. M.
	S84-204	Loop antenna and Back assembly
	C67-520	Dial scale
	A52-203	Knob, (tuning)
	A52-207	Knob, (tone)
	A52-208	Knob, (volume)
	A52-209	Knob, (on-off)
	A52-242	Knob, (radio-phono)
	B58-70	Dial pointer
	A83-532	Retainer, dial scale, right
	A83-533	Retainer, dial scale, left
	A69-180	Switch, radio-phono

©John F. Rider

WESTERN AUTO SUPPLY CO. MODEL D1650

ELECTRICAL SPECIFICATIONS

Power Supply.....105 to 125 volts, AC, 60-cycles; Chassis only 122 watts. With phono operation 150 watts.

Frequency Range....Broadcast Band—535 to 1620 kc. FM Band—88 to 108 mc.

Intermediate Freq...AM-455 kc; FM-10.7 mc.

Selectivity.....AM-48 kc. broad at 1000 times signal, measured at 1000 kc.
I.F. FM-180 kc. broad at 2 times down.
I.F. FM-320 kc. broad at 10 times down.

AM Sensitivity.....(For .5 watt output with external antenna)—3 microvolts average.

FM Sensitivity.....(For .5 watt output)—10 microvolts average.

Power Output.....8 watts. 10% distortion. 10 watts maximum.

Loud Speaker.....12" electrodynamic. Voice coil impedance 3.2 ohms, 400 cycles.

Tube and Lamp Complement.....6BA6, FM—AM R.F. stage.
12AT7, FM—AM oscillator and mixer.
6BA6, FM—AM—1st I.F.
6BA6, FM—2nd I.F.
6AL5, FM—ratio detector.
6AT6, AM detector.
A. F. AMP. and A.V.C.
6SN7, Push-Pull. Driver and phase-inverter.
5U4G, rectifier.
6V6, output.
6V6, output.
T-44 dial lamp (2 used).

Automatic changer..Oak 6666 with P-93 Cartridge.

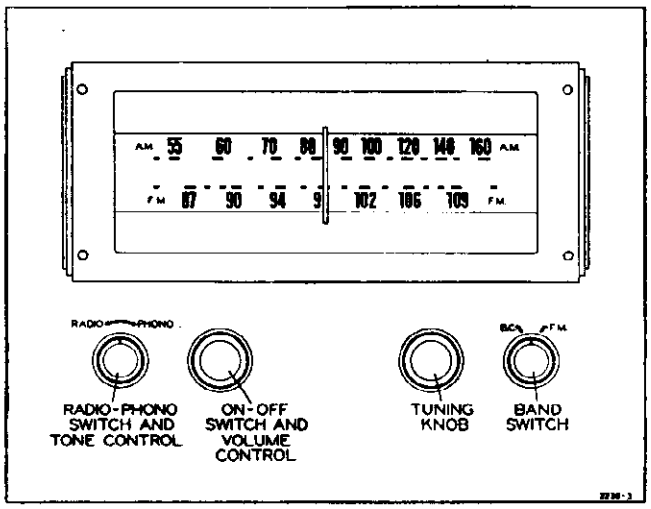

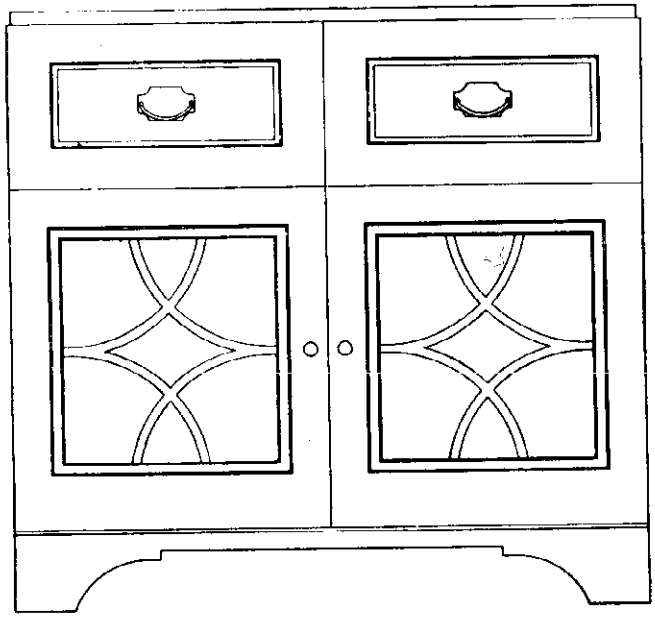

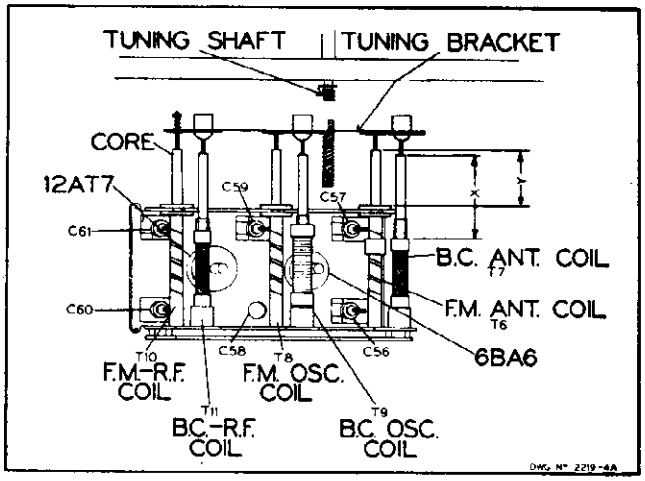

TUNER ADJUSTMENT

With tuner all the way out, dimension "X" should be 1½ inches. "Y" should be 1-1/32 inches. "X" is from the end of the slug to edge of the coil winding. Check these dimensions before R.F. alignment is attempted of either the AM or FM Band. No slug adjustment should be necessary since the slugs are properly set at the factory.

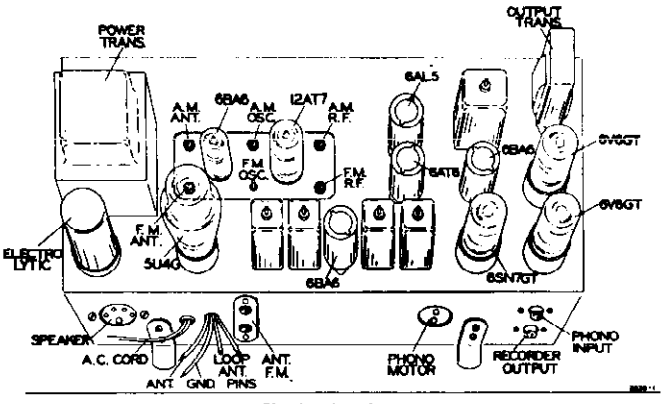

Chassis — top view

MODEL D1850

WESTERN AUTO SUPPLY CO.

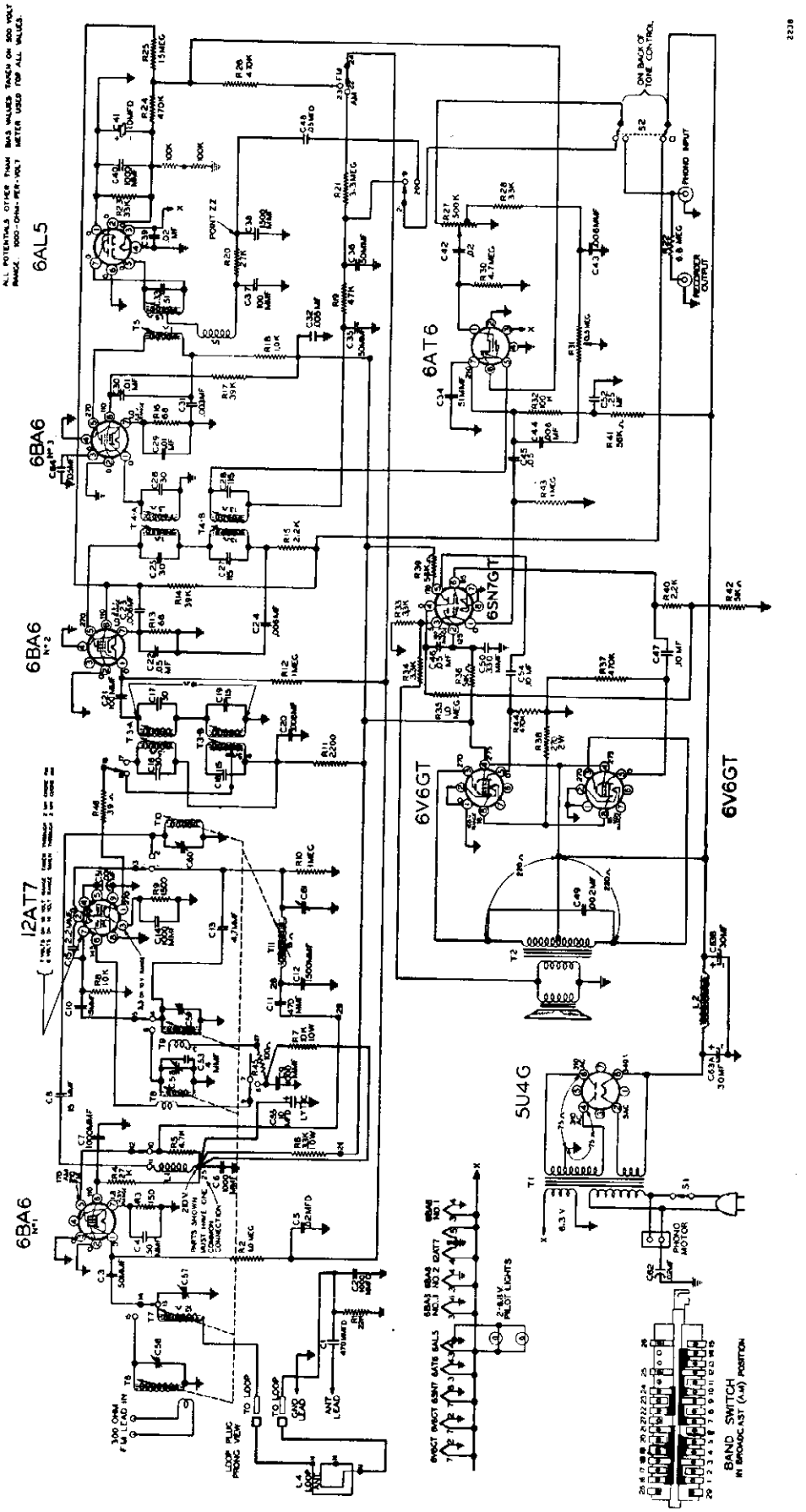

NOTE: Two 100K ohm resistors in series from Pin No. 2 of the 6AL5 to ground are connected as shown only when aligning the FM I. F. Refer to FM I. F. alignment procedure.

NOTE: B.C. Oscillator Coil T9 and number 7 terminal of slide switch should be connected together.

NOTE: Resistor R22 removed; with shielded wire from recorder output jack to radio side of radio-phono switch S2 added.

WESTERN AUTO SUPPLY CO. MODEL D185C

ALIGNMENT PROCEDURE

Broadcast Band Section I.F. and R.F.

The alignment procedure below includes the sensitivities at the inputs of various stages. All signal input values are based on an output of ½ watt. This may be measured by disconnecting the speaker voice coil and substituting a 3.2-ohm resistor across the secondary winding of the output transformer. A reading of 1.3 volts AC across this resistor will be approximately equivalent to a ½-watt output with the speaker connected. The volume control must be set at maximum. The tone control must be set for maximum treble.

The signal source must be an accurately calibrated signal generator capable of supplying the frequencies designated, modulated 30% with a 400-cycle audio signal. A 400 cycle audio signal is required for the audio measurement. Variations in sensitivities of plus or minus 25% are usually permissable.

AM-I. F. ALIGNMENT

Band Switch in AM Position. Tune Set to 1400 Kc. Dummy Antenna .1 Mfd.

SIGNAL GENERATOR FREQUENCY	CONNECTION TO RADIO	ADJUSTMENTS TO BE MADE	ADJUST FOR
455 Kc. Use 1000 microvolts	Pin No. 1 of 6BA6 No. 2 and ground	Primary and Secondary of T4B AM windings See I. F. view	Maximum output Should be ½ watt.
455 Kc. Use 30 microvolts	Pin No. 2 of 12AT7 and ground	Primary and Secondary of T3B AM windings See I. F. view	Maximum output Should be ½ watt.
400 cycles. Use 28 millivolts	Hot end of volume control and ground	None	Maximum output Should be ½ watt.

BROADCAST BAND-R.F. ALIGNMENT

Check pointer so that it coincides with the right hand marker to the extreme right when iron cores are all the way out.
For adjustment, see dial mechanism illustration.

SIGNAL GENERATOR FREQ.	CONNECTION TO RADIO	DUMMY ANTENNA	ADJUST
1620 Kc. Use 3 microvolts	AM Antenna and Ground	200 mmf.	C59, C57, C61. For maximum, ½ watt

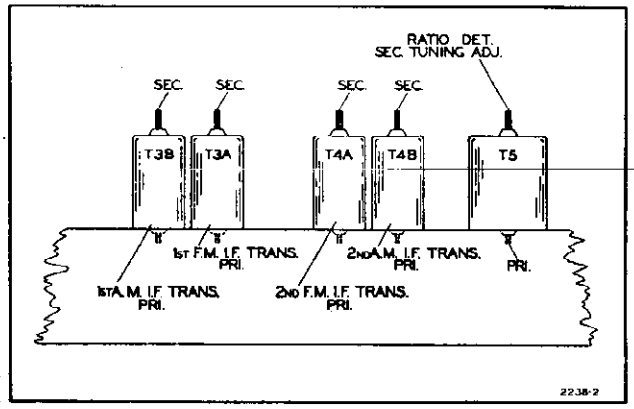

I. F. VIEW

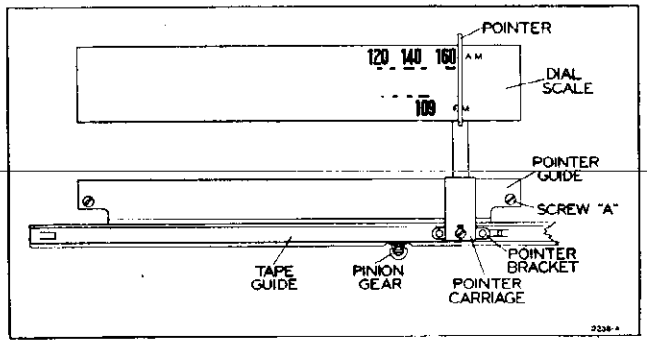

DIAL ADJUSTMENT VIEW

Loosen screw "A" so that teeth of tape can be properly meshed with pinion gear to give proper pointer travel.

MODEL D1850 WESTERN AUTO SUPPLY CO.

ALIGNMENT PROCEDURE

FM Band Section I.F. and R.F.

A non-metallic alignment tool must be used.

IMPORTANT— No alignment of the FM section of this radio should be attempted unless you are positive that the circuits are in need of adjustment and you have the necessary equipment.

All components used in this radio are extremely stable and the tuned circuits should require no adjustment over a long period of time.

NOTE— The following alignment is based on the use of the new Simpson vacuum tube voltmeter which has a "floating ground". In other words, the meter, when used as a vacuum tube volt-meter, can have both the positive and negative sides connected to points above ground and still give true readings.

A standard AM signal generator is required.

FM-I.F. ALIGNMENT

Band Switch in FM Position. Dummy Antenna .1 Mfd.

SIGNAL GENERATOR FREQUENCY	CONNECTION TO RADIO	VACUUM TUBE VOLT METER CONNECTION TO RADIO	ADJUSTMENT TO BE MADE	ADJUST FOR
10.7 Mc. Use about .1 volt	Pin No. 1 of 6BA6 No. 3 and ground	Pin No. 2 of 6AL5 and ground	Primary of T5	Resonance should be about 3 volts
10.7 Mc. Use about .1 volt	Pin No. 1 of 6BA6 No. 3 and ground	See note "A"	Secondary of T5	Resonance should be about 3 volts
10.7 Mc. Use about 3300 microvolts	Pin No. 1 of 6BA6 No. 2 and ground	Pin No. 2 of 6AL5 and ground	Primary and Secondary of T4A 10.7 m.c. windings See I.F. view	Zero. Use zero center scale See note "B"
10.7 Mc. Use about 200 microvolts	Pin No. 2 of 12AT7 and ground	Pin No. 2 of 6AL5 and ground	Primary and Secondary of 10.7 m.c. windings of T3A See I.F. view	Resonance should be about 3 volts

NOTES ON FM—I. F. ALIGNMENT

NOTE "A" Connect two resistors, 100K OHMS each, from Pin No. 2 of 6AL5 to ground. These resistors must be matched within 5%. Connect as shown in dotted lines on schematic diagram. Connect vacuum tube voltmeter between the mid-point of the resistors and point zz.

NOTE "B" If T5 has been tampered with, it is possible that no crossover point will be found at first. Careful adjustment of both primary and secondary is necessary.

GENERAL: Input signals should be adjusted to give approximately 3 volts. The ratio detector is operating at reasonable level at this point and will give the truest indication of correct alignment with the procedure specified.

FM-R.F. ALIGNMENT

Check pointer so that it coincides with the right hand marker to the extreme right when iron cores are all the way out.

For adjustment, see dial mechanism illustration.

SIGNAL GENERATOR FREQUENCY	CONNECTION TO RADIO	DUMMY ANTENNA	ADJUST	VACUUM TUBE VOLT METER CONNECTION TO RADIO	ADJUST TO
100 Mc. Use about 10 microvolts	FM Antenna Terminals See note	300 ohms	C58 Osc. C60 R. F. C56 Ant.	Pin No. 2 of 6AL5 and Ground	Resonance about 3 volts

NOTE: If a signal generator with the above fundamental frequency is not available, it is sometimes possible to use harmonics. Use extreme care in picking harmonics. An alternate procedure is to use a local station carrier of known frequency to align the FM Band and to use the vacuum tube volt-meter as above for resonance indication. A weak carrier, however, will not produce 3 volts.

NOTE: Connect 300 ohms in series with hot side of generator and connect to one screw. Connect cold side of generator to other screw.

©John F. Rider

REPLACEMENT PARTS LIST

TUNER PARTS

Condensers

Ref. No.	Part No.	Description	Qty. Used
C58	A-8H-15444	Trimmer, FM oscillator	1
C56, 57, 59, 61	A-2M-12618	Trimmer plate, large	4
C60	A-2M-14368	Trimmer plate, small	1
	A-5M-12615	Locator, for trimmer plates	5
C59, C61	B-6M-12616-S-2	Silvered mica film	2
C56, 57, 60	A-6M-12616	Clear mica film	3
	A-3C-12617	Spacer, for trimmer plates	5
C1, C11	C-8G-11732	470 mmf, ceramic	2
C2	C-8G-13695	1000 mmf, ceramic	1
C6, 7, 9, 14, 51	C-8G-13201	1000 mmf, ceramic	5
C12	C-8G-11731	1500 mmf, ceramic	1
C10, C8	C-8G-13017	15 mmf, ceramic	2
C3, C4	C-8G-11484	50 mmf, ceramic	2
C13	A-8G-12495-6	4.7 mmf, ceramic	1
C15	A-8G-12495-4	2.2 mmf, ceramic	1
C53	C-8G-15859	4 mmf, ceramic	1
C5	C-8D-11304	.02 x 200 volts, paper	1

Resistors

R4	C-9B2-79	27K ohms, 1 watt	1
R1	C-9B1-21	22K ohms, ½ watt	1
R3	C-9B1-52	150 ohms, ½ watt	1
R5	C-9B1-17	4700 ohms, ½ watt	1
R8	C-9B1-19	10K ohms, ½ watt	1
R2, R10	C-9B1-31	1 megohm, ½ watt	2
R21	C-9B1-34	3.3 megohms, ½ watt	1
R45	C-9B1-50	100 ohms, ½ watt	1
R46	C-9B1-45	39 ohms, ½ watt	1
R9	C-9B1-64	1500 ohms, ½ watt	1
R6	C-9B2-6	3300 ohms, 1 watt	1
R7	C-9B2-74	10K ohms, 1 watt	1

Coils

T8	B-13D-13027-1	F.M. oscillator coil	1
—	B-51A-13056	Core for F.M. oscillator coil	1
T6	B-13E-13028	FM antenna coil	1
—	B-51A-13058	Core for FM antenna coil	1
T10	B-13C-13029	FM R.F. coil	1
—	B-51A-13057	Core for FM R.F. coil	1
T9	A-13D-15704	B.C. oscillator coil	1
—	B-51A-12722	Core for B.C. oscillator coil	1
T7	B-13E-13031	B.C. Antenna coil	1
T11	B-13C-13032	B.C. R.F. coil	1
—	B-51A-12723	Core for B.C. ant. and R.F. coil	2

Miscellaneous

	B-20B-15628	Slide switch	1
	A-15B-12997	7-prong min., tube socket	1
	A-15B-13430	9-prong min., tube socket	1
	B-3A-15415	Lead screw	1
	A-3J-12309	Pinion gear	1
	A-49A-14439	Drive pring	2
	A-49A-13228	Tension spring	1
	A-49A-12394	Spiral spring for slugs	3
	B-2J-13006	Rack tape with teeth and pointer bracket	1
	B-2D-15416	Guide for rack tape	1
	B-2D-15649	Pointer carriage	1
	A-5M-13741	Pointer	1
	32F4SE-11488	4-40 x ⅛" screw for pointer	2

MAIN CHASSIS PARTS

Condensers

C63A, C63B	B-8C-11629	Electrolytic filter condenser, 30 — 30 x 450 volts	1
C52	C-8D-13439	.25 mfd x 400 volts	1
C54, C47	C-8D-10760	.1 mfd x 400 volts	2
C31	C-8D-11013	.003 x 600 volts	1
C44, 43, 24, 23, 20	C-8D-10785	.006 x 600 volts	5
C29, C30	C-8D-10761	.01 x 400 volts	2
C46, C45	C-8D-10813	.05 x 400 volts	2
C49	C-8D-10789	.002 x 600 volts	1
C48, C22	C-8D-10770	.05 x 200 volts	2
C64	C-8D-15860	.05 x 200 volts	1
C41	A-8C-13132	Electrolytic, 10 mfd x 50 volts	1
C62	C-8J-11321	.02 x 600 volts, molded case	1
C35	A-8G-13962	.005 x 500 volts, ceramic	1
C21	C-8G-11734	100 mmf, ceramic	1
C38	C-8G-13059	1500 mmf, ceramic	1
C34	C-8G-13060	51 mmf, ceramic	1
C40	C-8G-13201	1000 mmf, ceramic	1
C50	C-8G-11741	330 mmf, ceramic	1
C37	C-8F3-225	100 mmf, mica	1
C39, C42	C-8D-11304	.02 x 200 volts, paper	2
C35, C36	A-8F-13047	Mica condenser, 50 mmf, dual	1
C55	A-8C-12154	Electrolytic, 10 mfd, 450 volts	1

Resistors

R27, S1	A-10A-13114	Volume control and switch, 500K ohms	1
R31, S2	A-11A-15645	Tone control and phono radio switch	1
R22	C-9B1-36	6.8 megohms, ½ watt	1
R32	C-9B1-86	100K ohms, ½ watt	1
R44, R37	C-9B1-94	470K ohms, ½ watt	2
R41, R39	C-9B1-83	56K ohms, ½ watt	2
R33, R34	C-9B1-68	3300 ohms, ½ watt	2
R30	C-9B1-35	4.7 megohms, ½ watt	1
R23, R28	C-9B1-80	33K ohms, ½ watt	2
R20	C-9B1-79	27K ohms, ½ watt	1
R13, R16	C-9B1-48	68 ohms, ½ watt	2
R14, R17	C-9B2-81	39K ohms, 1 watt	2
R24, R26	C-9B1-29	470K ohms, ½ watt	2
R25	C-9B1-302	15 megohms, ½ watt	1
R19	C-9B1-23	47K ohms, ½ watt	1
R12,R43,R35	C-9B1-31	1 megohm, ½ watt	3
R40	C-9B1-66	2200 ohms, ½ watt	1
R36, R42	C-9B1-200	51K ohms, ½ watt	2
R38	C-9B4-55	270 ohms, 2 watts	1
R18	C-9B1-13	1000 ohms, ½ watt	1
R11, R15	C-9B2-15	2200 ohms, 1 watt	2

Coils

	B-13A-15680	Input I.F. transformer, 455 kc.	1
	B-13B-15681	Output I.F. transformer, 455 kc.	1
	B-13A-15682	Input I.F. transformer, 10.7 megohms	1
	B-13B-15683	Second I.F. transformer, 10.7 megohms	1
	B-13M-15684	Ratio detector, 10.7 megs.	1
	C-13E-15687	Loop antenna assembly	1

Transformers

T1	B-12A-13038-1	Power transformer, 105-125 volts 50-60 cycles, primary	1
T2	B-12C-13042-1	Output transformer, for speaker	1

Speaker

	B-18B-13043-1	Electrodynamic speaker, 12-inch, less output transformer	1

Miscellaneous

	C-30A-15686	Dial scale	1
	B-30B-13943	Dial glass	1
	2G-13696	Escutcheon	1
	56D2-12463	Screws for escutcheon	4
	B-5B-13737-37	Knob, mahogany—small with dot	2
	B-5B-13738-37	Knob, mahogany—large, without dot	2
	B-5B-13737-14	Knob, walnut—small, with dot	2
	B-5B-13738-14	Knob, walnut—large, without dot	2
	A-3A-15630	Shaft for band switch	1
	A-43D-12934	"U" speed clip	1
	A-55C-12935	Ball bearing	1
	B-47A-13801	Pilot lite assembly	1
	A-46A-11739	Pilot lite bulb, 6-8 volts	2
	A-2H-10974	Tube shield	4
	A-15C-13174	7-prong, min., tube socket	4
	A-15B-10440	8-prong, octal, socket	4
	A-7B-13050	FM dipole socket	1
	A-15B-11538	Speaker socket	1
	A-19B-12468	Phono-motor socket	1
	A-19B-11044	Recorder socket	1
	A-19B-12470	Phono input socket	1
	B-14M-11479	AC line cord	1
	32K10-14306	10-32 x 1 inch, chassis mounting screws	4

RECORD CHANGER

	B-201-15368	6666 Record Changer assembly, with P-93 crystal cartridge	1
	P-93	Crystal cartridge only	1

MODEL D1946 WESTERN AUTO SUPPLY CO.

ELECTRICAL SPECIFICATIONS

Power Consumption—
117 volts AC 60 watts normal
85 watts phono operating

Power Output—
4.5 watts maximum
2.5 watts 10% distortion

Speaker—8" PM dynamic

Frequency Ranges—
Broadcast 540-1600 KC
Frequency Modulation 88-108 MC

Intermediate Frequency—
AM 455 KC — FM 10.7 MC

Selectivity — AM — 45 KC broad at 1000 times signal, measured at 1000 KC

I.F. FM—200 KC broad at 2 times down

I.F. FM—950 KC broad at 200 times down

AM Sensitivity—(For .5 watt output with external antenna)
10 microvolts average

FM Sensitivity—(For .5 watt output)
100 microvolts average

REMOVAL OF CHASSIS FROM CABINET

Before removing the chassis from the cabinet it will be necessary to detach the dial pointer from the dial string. To do this, spread the tabs on the pointer and pull the dial string off the pointer.

The dial lamp socket assembly may be disengaged from the cabinet mounting by squeezing together and pulling away from the cabinet mounting, the spring bracket to which the dial lamp socket is mounted. Take care not to bend or damage the large drive pulley on the gang condenser while doing this.

When replacing the chassis in the cabinet it will be necessary to tune in a station of a known frequency and move the dial pointer until that frequency is indicated on the dial and then attach the pointer to the dial string. Take care not to scuff or cut the dial string or bend the pointer during this operation.

DRIVE CORD REPLACEMENT

Replacement of the drive cord may be accomplished as shown in the illustration. For this purpose use the new drive cord assembly listed in the Replacement Parts List. Turn the gang condenser until the plates are fully meshed. Then install the string as shown, winding three turns clockwise around the tuning shaft with the turns progressing away from the chassis. After the cord is installed, rotate the tuning shaft several times in order to take up any slack in the cord.

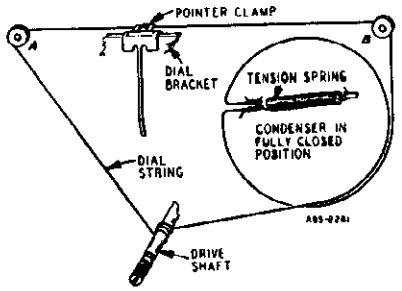

TUBE SOCKET VOLTAGES

Socket voltages are shown on the Bottom Socket diagram at the tube socket terminals. All voltages are between the socket terminal and chassis ground. Plate, screen and cathode voltages were taken with a 1000 ohm-per-volt meter with a 300 volt scale used for plate and screen voltages. Audio grid voltages were read with a vacuum tube volt-meter. Conditions of measurement are:

Line voltage .....117 Volts AC
Signal Input .....None
A Variation of ±10% is usually permissible.

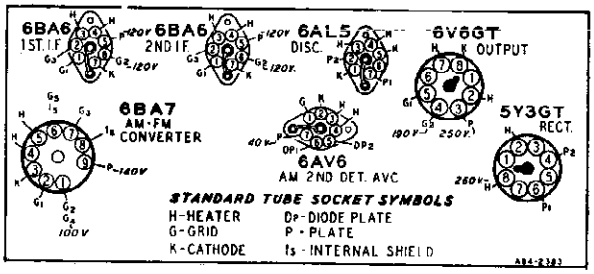



WESTERN AUTO SUPPLY CO.

MODEL D194

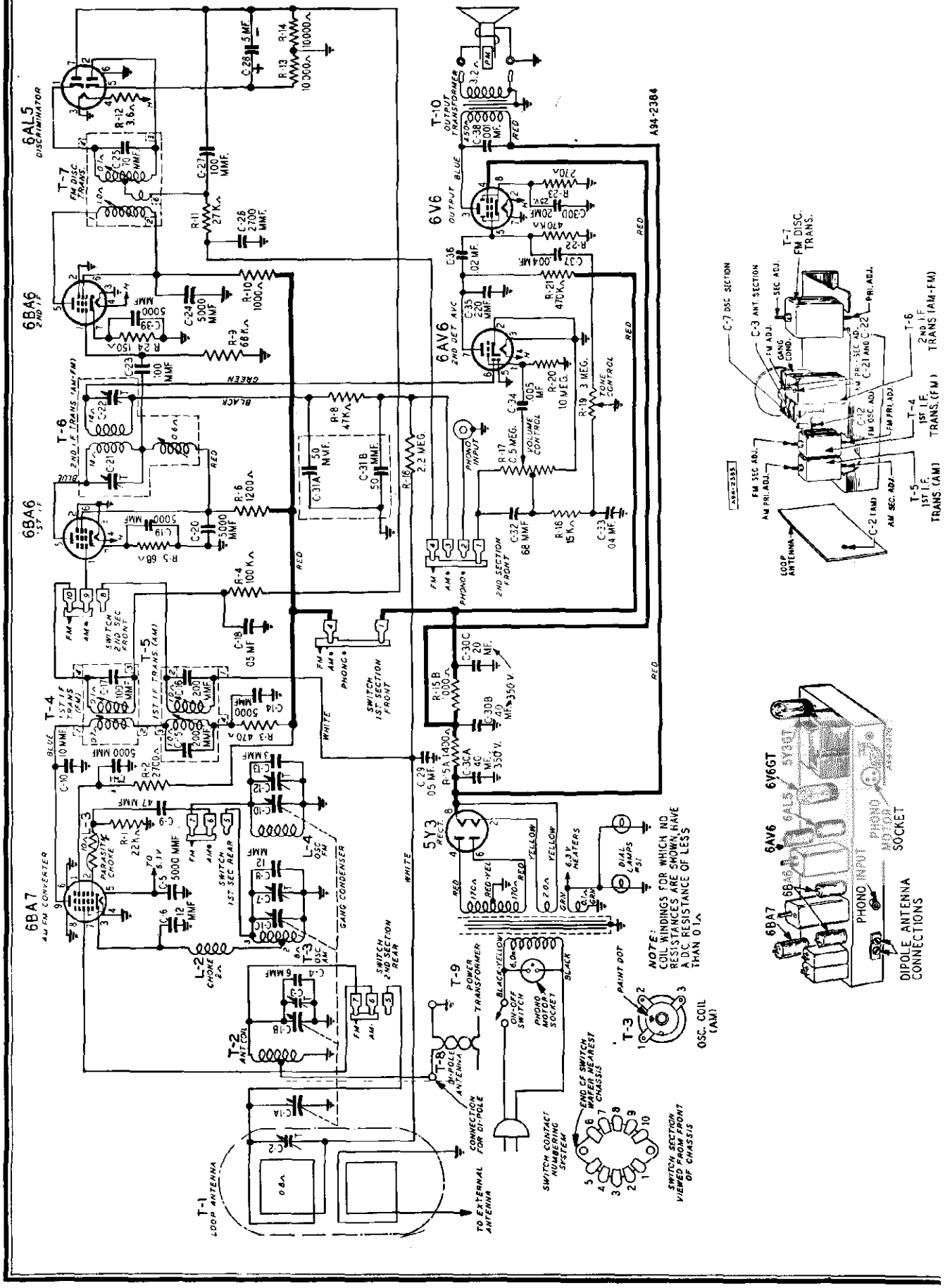

MODEL D1946

WESTERN AUTO SUPPLY CO.

ALIGNMENT PROCEDURES

AM STAGES

Volume Control Maximum all Adjustments.

Connect Radio Chassis to Ground Post of Signal Generator with a Short Heavy Lead.

Allow Chassis and Signal Generator to "Heat Up" for Several Minutes.

The following is required for aligning:

An All Wave Signal Generator Which Will Provide an Accurately Calibrated Signal at the Test Frequencies as Listed.

Output Indicating Meter, Non-Metallic Screwdriver, Dummy Antennas — .1 mf, and 50 mmf.

SIGNAL GENERATOR					
FREQUENCY SETTING	CONNECTION AT RADIO	GROUND CONNECTION	DUMMY ANTENNA	GANG CONDENSER SETTING	ADJUST TUNING SLUGS AND TRIMMERS
455 KC	Control Grid 1st 6BA6 Pin No. 1	Chassis Base	.1 mf	Turn Rotor to Full Open	2nd I.F. C-21 & C-22
455 KC	Control Grid 6BA7 Pin No. 7 1st Det.	Same as above	.1 mf	Turn Rotor to Full Open	1st I.F. Pri. & Sec.
1620 KC	Control Grid 6BA7 Pin No. 7	Same as above	.1 mf	Turn Rotor to Full Open	Oscillator C-7
1400 KC	External Antenna Lead	Same as above	50 mmf	Turn Dial to 1400 KC. See Note A	Antenna C-2

NOTE A—Set pointer at the 1400 KC mark on the dial scale. Attach pointer to drive cord.

FM STAGES

Allow chassis and signal generator to warm up for several minutes.

The following equipment is required for aligning:

An accurately calibrated signal generator providing unmodulated signals at the test frequencies listed below.

Non-metallic screwdriver.

Dummy Antennas and I-F Loading Resistor—2500 mmf, 300 ohms and a 3300 ohm .5 watt resistor with short leads.

Zero center scale DC vacuum tube voltmeter having a range of approximately 3 volts.

(If a zero center scale meter is not available, a standard scale vacuum tube voltmeter may be used by reversing the meter connections for negative readings.)

	SIGNAL GENERATOR					
	FREQUENCY SETTING	CONNECTION AT RADIO	DUMMY ANTENNA	BAND SWITCH SETTING	CONDENSER SETTING	ADJUSTMENT FOR MAX. METER DEFLECTION
Discriminator	10.7 MC	6BA6 2nd I-F Pin 1 & Chassis	2500 mmf	FM	Rotor Fully Open	Disc. Pri. Note A
	10.7 MC	Same as above	2500 mmf	FM	Rotor Fully Open	Disc. Sec. Note B
	10.7 MC	Same as above	2500 mmf	FM	Rotor Fully Open	Disc. Pri. Note A
	10.7 MC	Same as above	2500 mmf	FM	Rotor Fully Open	Disc. Sec. Note B
I-F	10.7 MC Note E	6BA6 1st I-F Pin 1 & Chassis	2500 mmf	FM	Rotor Fully Open	2nd I-F Note C
Discriminator	10.7 MC	6BA6 2nd I-F Pin 1 & Chassis	2500 mmf	FM	Rotor Fully Open	Disc. Pri. Note A
I-F	10.7 MC	Antenna and Chassis	2500 mmf	FM	Rotor Fully Open	1st. I-F Pri. and Sec. and Note C
	10.7 MC	Antenna and Chassis Solder a 3300 ohm resistor across terminals 3 and 4 of 1st. I-F trans.	2500 mmf	FM	Rotor Fully Open	1st. I-F Pri. Note C
	10.7 MC	Antenna and Chassis Note D	2500 mmf	FM	Rotor Fully Open	1st. I-F Sec. Note C
	RECHECK I-F ADJUSTMENTS IN ORDER GIVEN					
Oscillator	108.4 Note F	Disconnect built-in dipole antenna and connect generator to dipole terminals with resistor in series.	300 ohms	FM	Rotor Fully Open	Osc. C-12
Antenna	104.5	Same as above	300 ohms	FM	Tune rotor for max. AVC voltage	Ant. C-3
	RECHECK ANTENNA & OSC. ADJUSTMENTS IN ORDER GIVEN					

FM ALIGNMENT NOTES

NOTE A—The zero center scale DC vacuum tube voltmeter is to be connected between chassis ground and the AVC line. A signal of .1 volt must be fed into the receiver for this adjustment.
Note output voltage on the zero center DC vacuum tube voltmeter.

NOTE B—Disconnect zero center DC vacuum tube voltmeter from AVC and connect it to the audio takeoff point at the 27 K ohm resistor (R-11) and its junction with the terminal strip. Adjust for zero voltage indication.

NOTE C—Connect zero center DC vacuum tube voltmeter as in Note A. Adjust input to give same output on the zero center DC vacuum tube voltmeter as in Note A.

NOTE D—Unsolder 3300 ohm resistor from terminals 3 and 4 of 1st I-F transformer and resolder across terminals 1 and 2.

NOTE E—2nd I-F Trimmers (AM) must be aligned before attempting to adjust 2nd I-F (FM) tuning slug.

NOTE F—Remove the 3300 ohm load resistor before attempting to check the antenna and oscillator adjustments.

©John F. Rider

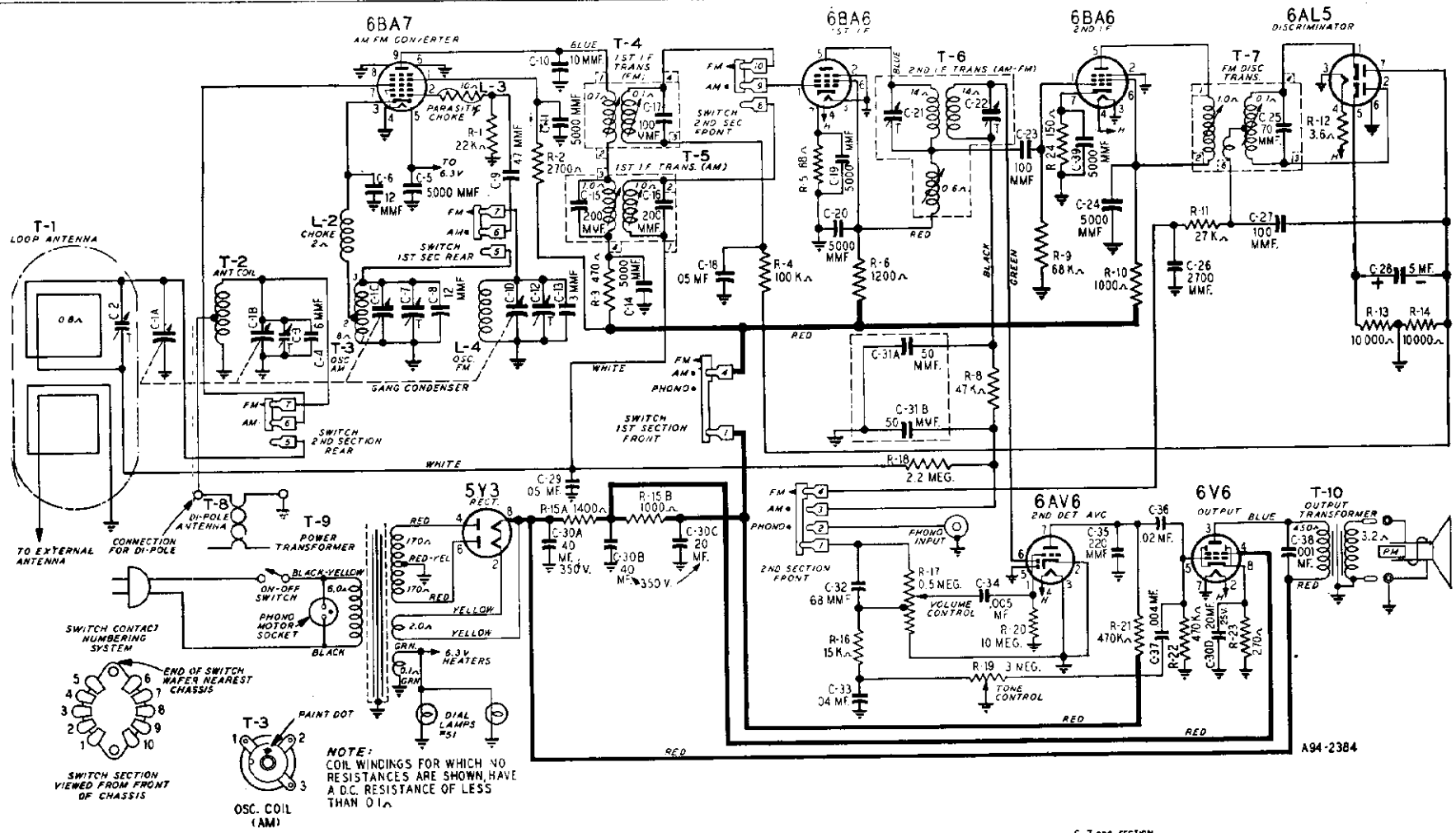

NOTE:
COIL WINDINGS FOR WHICH NO RESISTANCES ARE SHOWN, HAVE A D.C. RESISTANCE OF LESS THAN 0.1Ω

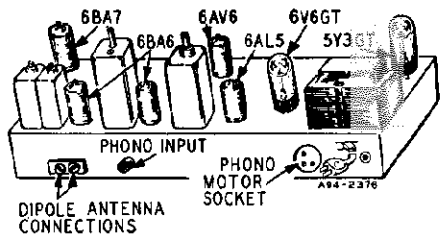

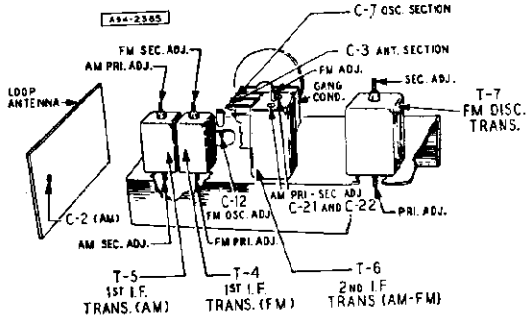

MODEL D1946

WESTERN AUTO SUPPLY CO.

ALIGNMENT PROCEDURES

AM STAGES

Volume Control Maximum all Adjustments.

Connect Radio Chassis to Ground Post of Signal Generator with a Short Heavy Lead.

Allow Chassis and Signal Generator to "Heat Up" for Several Minutes.

The following is required for aligning:

An All Wave Signal Generator Which Will Provide an Accurately Calibrated Signal at the Test Frequencies as Listed.

Output Indicating Meter, Non-Metallic Screwdriver, Dummy Antennas — .1 mf, and 50 mmf.

SIGNAL GENERATOR					
FREQUENCY SETTING	CONNECTION AT RADIO	GROUND CONNECTION	DUMMY ANTENNA	GANG CONDENSER SETTING	ADJUST TUNING SLUGS AND TRIMMERS
455 KC	Control Grid 1st 6BA6 Pin No. 1	Chassis Base	.1 mf	Turn Rotor to Full Open	2nd I.F. C-21 & C-22
455 KC	Control Grid 6BA7 Pin No. 7 1st Det.	Same as above	.1 mf	Turn Rotor to Full Open	1st I.F. Pri. & Sec.
1620 KC	Control Grid 6BA7 Pin No. 7	Same as above	.1 mf	Turn Rotor to Full Open	Oscillator C-7
1400 KC	External Antenna Lead	Same as above	50 mmf	Turn Dial to 1400 KC. See Note A	Antenna C-2

NOTE A—Set pointer at the 1400 KC mark on the dial scale. Attach pointer to drive cord.

FM STAGES

Allow chassis and signal generator to warm up for several minutes. The following equipment is required for aligning:

An accurately calibrated signal generator providing unmodulated signals at the test frequencies listed below.

Non-metallic screwdriver.

Dummy Antennas and I-F Loading Resistor—2500 mmf, 300 ohms and a 3300 ohm .5 watt resistor with short leads.

Zero center scale DC vacuum tube voltmeter having a range of approximately 3 volts.

(If a zero center scale meter is not available, a standard scale vacuum tube voltmeter may be used by reversing the meter connections for negative readings.)

	SIGNAL GENERATOR					
	FREQUENCY SETTING	CONNECTION AT RADIO	DUMMY ANTENNA	BAND SWITCH SETTING	CONDENSER SETTING	ADJUSTMENT FOR MAX. METER DEFLECTION
Discriminator	10.7 MC	6BA6 2nd I-F Pin 1 & Chassis	2500 mmf	FM	Rotor Fully Open	Disc. Pri. Note A
	10.7 MC	Same as above	2500 mmf	FM	Rotor Fully Open	Disc. Sec. Note B
	10.7 MC	Same as above	2500 mmf	FM	Rotor Fully Open	Disc. Pri. Note A
	10.7 MC	Same as above	2500 mmf	FM	Rotor Fully Open	Disc. Sec. Note B
I-F	10.7 MC Note E	6BA6 1st I-F Pin 1 & Chassis	2500 mmf	FM	Rotor Fully Open	2nd I-F Note C
Discriminator	10.7 MC	6BA6 2nd I-F Pin 1 & Chassis	2500 mmf	FM	Rotor Fully Open	Disc. Pri. Note A
I-F	10.7 MC	Antenna and Chassis	2500 mmf	FM	Rotor Fully Open	1st. I-F Pri. and Sec. and Note C
	10.7 MC	Antenna and Chassis Solder a 3300 ohm resistor across terminals 3 and 4 of 1st. I-F trans.	2500 mmf	FM	Rotor Fully Open	1st. I-F Pri. Note C
	10.7 MC	Antenna and Chassis Note D	2500 mmf	FM	Rotor Fully Open	1st. I-F Sec. Note C
	RECHECK I-F ADJUSTMENTS IN ORDER GIVEN					
Oscillator	108.4 Note F	Disconnect built-in dipole antenna and connect generator to dipole terminals with resistor in series.	300 ohms	FM	Rotor Fully Open	Osc. C-12
Antenna	104.5	Same as above	300 ohms	FM	Tune rotor for max. AVC voltage	Ant. C-3
	RECHECK ANTENNA & OSC. ADJUSTMENTS IN ORDER GIVEN					

FM ALIGNMENT NOTES

NOTE A—The zero center scale DC vacuum tube voltmeter is to be connected between chassis ground and the AVC line. A signal of .1 volt must be fed into the receiver for this adjustment.
Note output voltage on the zero center DC vacuum tube voltmeter.

NOTE B—Disconnect zero center DC vacuum tube voltmeter from AVC and connect it to the audio takeoff point at the 27 K ohm resistor (R-11) and its junction with the terminal strip. Adjust for zero voltage indication.

NOTE C—Connect zero center DC vacuum tube voltmeter as in Note A. Adjust input to give same output on the zero center DC vacuum tube voltmeter as in Note A.

NOTE D—Unsolder 3300 ohm resistor from terminals 3 and 4 of 1st I-F transformer and resolder across terminals 1 and 2.

NOTE E—2nd I-F Trimmers (AM) must be aligned before attempting to adjust 2nd I-F (FM) tuning slug.

NOTE F—Remove the 3300 ohm load resistor before attempting to check the antenna and oscillator adjustments.

WESTERN AUTO SUPPLY CO. MODEL D1946

REPLACEMENT PARTS LIST

NOTICE: There is a Model Number label on the chassis. This label identifies the radio as to chassis, dial and issue letter. When ordering parts or writing, give ALL information appearing on this label.

MISCELLANEOUS

12A477	8" PM Speaker
2A373	Band Change Switch
3A303	Molded Octal Tube Socket
3A304	Phono Motor Jack
3A305	Phono Input Jack
3A426	Miniature Tube Socket
3A443	Miniature Tube Socket (For AM-FM Converter Tube)
10A691	Knob (Tuning)
10A692	Knob (Off-On Volume)
10A693	Knob (Tone)
10A694	Knob (AM-FM Phono)
13X546	Line Cord and Plug
30X547	Line Cord Clamp

CAPACITORS

C-1A, C-1B, C-1C, C-1D	14A204	Gang Condenser Assembly		
C-2		Part of T-1 (Loop Antenna Assembly)		
C-3, C-7		Part of C-1 (Gang Condenser Assembly)		
C-4	47X521	6 mmf		Ceramic
C-5, C-11, C-14, C-19, C-20, C-24, C-39	47X507	5000 mmf		Silvered Ceramic
C-6, C-8	47X522	12 mmf		Ceramic
C-9	47X517	47 mmf		Ceramic
C-10	47X512	10 mmf		Ceramic
C-12	17A255	1-8 mmf		Trimmer
C-13	47X547	3 mmf		Ceramic
C-15, C-16		Part of T-5 (1st I.F. Transformer AM)		
C-17		Part of T-4 (1st I.F. Transformer FM)		
C-18, C-29	B66503	.05 mf	200 V	Tubular
C-21, C-22		Part of T-6 (2nd I.F. Transformer AM-FM)		
C-23	47X497	100 mmf		Ceramic
C-25		Part of T-7 (Discriminator Coil Assembly)		
C-26	47X492	2700 mmf		Molded
C-27	47X526	100 mmf		Molded
C-28	45X361	5 mf	100 V	Dry Electrolytic
C-30A		40 mf	350 V	Dry Electrolytic
C-30B		40 mf	350 V	
C-30C	45X359	20 mf	350 V	
C-30D		20 mf	25 V	
C-31A, C-31B	47X112	50-50 mmf		Dual Mica
C-32	47X471	68 mmf		Molded
C-33	B66403	.04 mf	200 V	Tubular
C-34	D66502	.005 mf	400 V	Tubular
C-35	47X468	220 mmf		Ceramic
C-36	D66203	.02 mf	400 V	Tubular
C-37	B66402	.004 mf	200 V	Tubular
C-38	H66102	.001 mf	800 V	Tubular

RESISTORS

		Ohms	Watts	
R-1	B84223	22 K	.5	Carbon
R-2	B83272	2700	.5	Carbon
R-3	B84471	470	.5	Carbon
R-4	B85104	100 K	.5	Carbon
R-5	B83680	68	.5	Carbon
R-6	B84122	1200	.5	Carbon
R-8	B85473	47 K	.5	Carbon
R-9	B85683	68 K	.5	Carbon
R-10	B84102	1000	.5	Carbon
R-11	B84273	27 K	.5	Carbon
R-12	43X233	3.6	.5	Wire Wound
R-13, R-14	B84103	10K	.5	Carbon
R-15A	43X224	1000	6.0	Wire Wound
R-15B		1400	4.0	
R-16	B84153	15 K	.5	Carbon
R-17	36X371	.5 meg		Volume Control
R-18	B85225	2.2 meg.	.5	Carbon
R-19	40X284	3 meg.		Tone Control
R-20	B85106	10 meg.	.5	Carbon
R-21, R-22	B85474	470 K	.5	Carbon
R-23	B84271	270	.5	Carbon
R-24	B84151	150	.5	Carbon

TRANSFORMERS AND COILS

L-2	35A1	Insulated Choke
L-3	9A1940	Parasitic Choke Assembly
L-4	9A2021	Oscillator Coil Assembly (FM)
T-1	9A1972	"B" Range Loop Antenna Assembly
T-2	9A1956	Antenna Coil Assembly
T-3	9A1997	Oscillator Coil (AM)
T-4	9A1932	1st I.F. Transformer (FM)
T-5	9A1998	1st I.F. Transformer (AM)
T-6	9A1999	2nd I.F. Transformer (AM-FM)
T-7	9A1970	Discriminator Coil Assembly
T-8	9A2003	Dipole Antenna Assembly
T-9	53X290	Power Transformer
T-10	51X134	Output Transformer

DIAL AND DRIVE ASSEMBLY

15X229	Pointer
6X21	Rubber Grommet, Mtg. Gang Condenser
20X260	Condenser Cushion Stud, Mtg. Gang Condenser
58X717	Dial
28X113	Drive Cord Tension Spring
26X507	Drive Shaft
19X192	"C" Washer (For drive shaft)
10X66	Drive Cord Assembly
7A215	Pilot Light Socket Assembly
7A32	No. 51 Pilot Light
25X1491	Pointer Bracket
4X915	Escutcheon (Right)
4X916	Escutcheon (Left)
30X517	Dial Clamp
25X1571	Idler Bracket
4X931	Escutcheon Inserts

MODEL D1950 WESTERN AUTO SUPPLY CO.

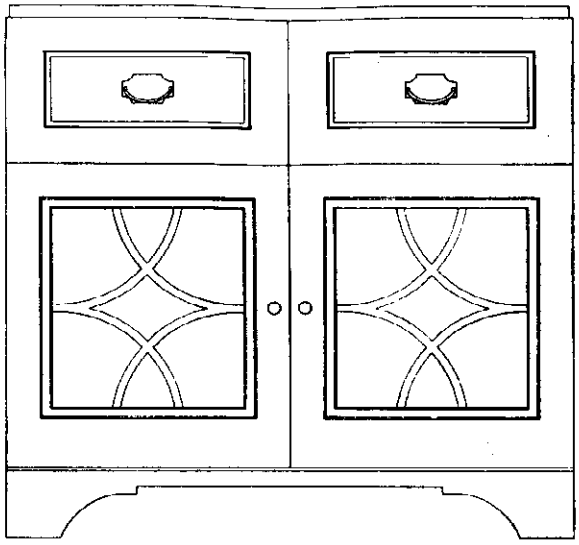

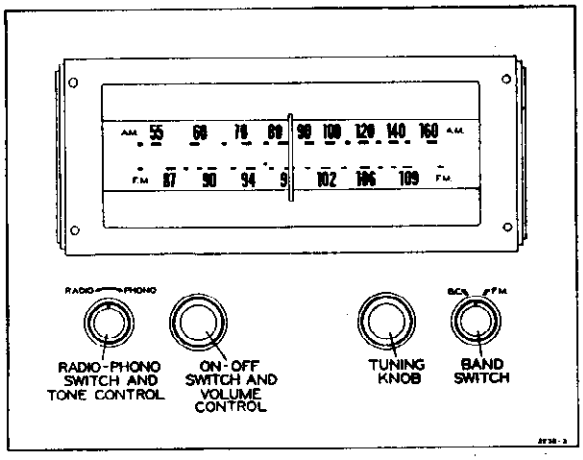

ELECTRICAL SPECIFICATIONS

Power Supply.....105 to 125 volts, AC, 60-cycles; Chassis only 122 watts. With phono operation 150 watts.

Frequency Range....Broadcast Band—535 to 1620 kc. FM Band—88 to 108 mc.

Intermediate Freq...AM-455 kc; FM-10.7 mc.

Selectivity.....AM-48 kc. broad at 1000 times signal, measured at 1000 kc.
I.F. FM-180 kc. broad at 2 times down.
I.F. FM-320 kc. broad at 10 times down.

AM Sensitivity.....(For .5 watt output with external antenna)—3 microvolts average.

FM Sensitivity.....(For .5 watt output)—10 microvolts average.

Power Output.....8 watts. 10% distortion. 10 watts maximum.

Loud Speaker.....12" electrodynamic. Voice coil impedance 3.2 ohms, 400 cycles.

Tube and Lamp Complement.....6BA6, FM—AM R.F. stage.
12AT7, FM—AM oscillator and mixer.
6BA6, FM—AM—1st I.F.
6BA6, FM—2nd I.F.
6AL5, FM—ratio detector.
6AT6, AM detector.
A. F. AMP. and A.V.C.
6SN7, Push-Pull. Driver and phase-inverter.
5U4G, rectifier.
6V6, output.
6V6, output.
T-44 dial lamp (2 used).

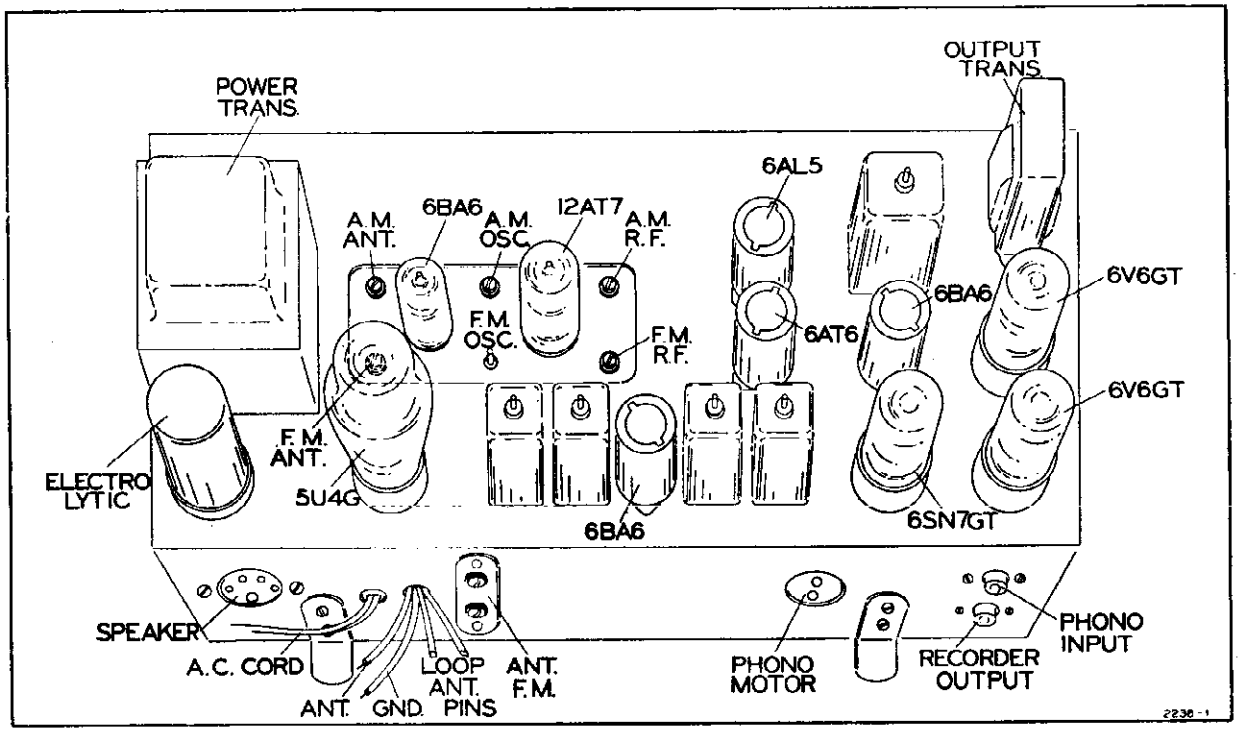

Chassis — top view

© John F. Rider

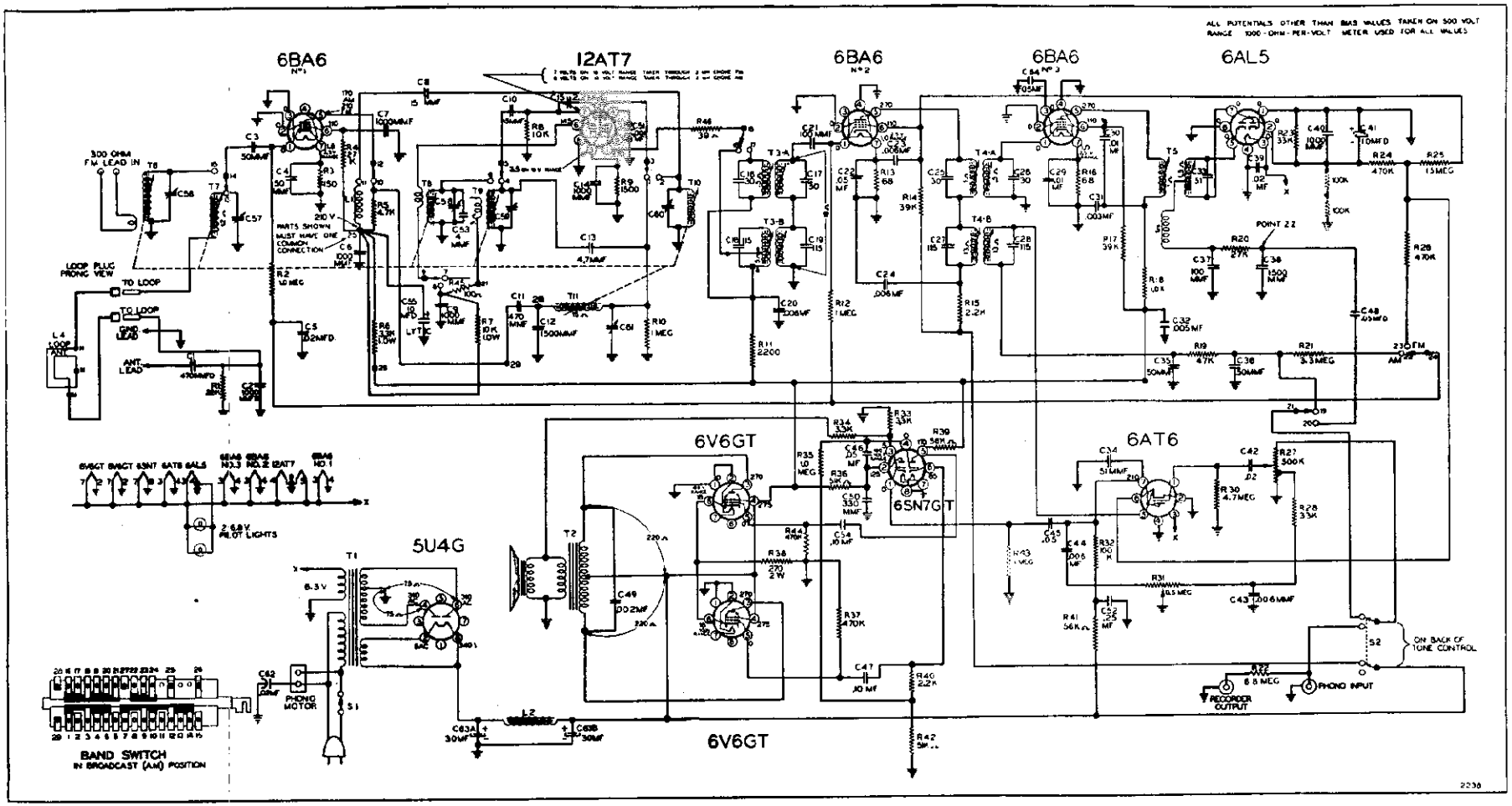

NOTE: Two 100K ohm resistors in series from Pin No. 2 of the 6AL5 to ground are connected as shown only when aligning the FM I. F. Refer to FM I. F. alignment procedure.

NOTE: B.C. Oscillator Coil T9 and number 7 terminal of slide switch should be connected together.

NOTE: A 3.3 ohm resistor C-9B1-1069 is connected between Pin 3 of 6AL5 and the filament line (X) in some productions.

MODEL D1950 WESTERN AUTO SUPPLY CO.

ALIGNMENT PROCEDURE

Broadcast Band Section I.F. and R.F.

The alignment procedure below includes the sensitivities at the inputs of various stages. All signal input values are based on an output of ½ watt. This may be measured by disconnecting the speaker voice coil and substituting a 3.2-ohm resistor across the secondary winding of the output transformer. A reading of 1.3 volts AC across this resistor will be approximately equivalent to a ½-watt output with the speaker connected. The volume control must be set at maximum. The tone control must be set for maximum treble.

The signal source must be an accurately calibrated signal generator capable of supplying the frequencies designated, modulated 30% with a 400-cycle audio signal. A 400 cycle audio signal is required for the audio measurement. Variations in sensitivities of plus or minus 25% are usually permissable.

AM-I. F. ALIGNMENT

Band Switch in AM Position. Tune Set to 1400 *Kc. Dummy Antenna* .1 *Mfd.*

SIGNAL GENERATOR FREQUENCY	CONNECTION TO RADIO	ADJUSTMENTS TO BE MADE	ADJUST FOR
455 Kc. Use 1000 microvolts	Pin No. 1 of 6BA6 No. 2 and ground	Primary and Secondary of T4B AM windings See I. F. view	Maximum output Should be ½ watt.
455 Kc. Use 30 microvolts	Pin No. 2 of 12AT7 and ground	Primary and Secondary of T3B AM windings See I. F. view	Maximum output Should be ½ watt.
400 cycles. Use 28 millivolts	Hot end of volume control and ground	None	Maximum output Should be ½ watt.

BROADCAST BAND-R.F. ALIGNMENT

Check pointer so that it coincides with the right hand marker to the extreme right when iron cores are all the way out.
For adjustment, see dial mechanism illustration.

SIGNAL GENERATOR FREQ.	CONNECTION TO RADIO	DUMMY ANTENNA	ADJUST
1620 Kc. Use 3 microvolts	AM Antenna and Ground	200 mmf.	C59, C57, C61. For maximum, ½ watt

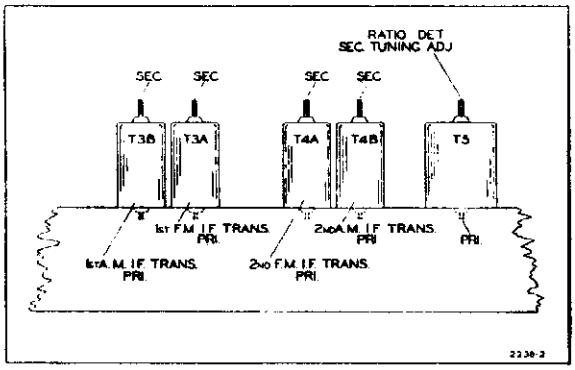

I. F. VIEW

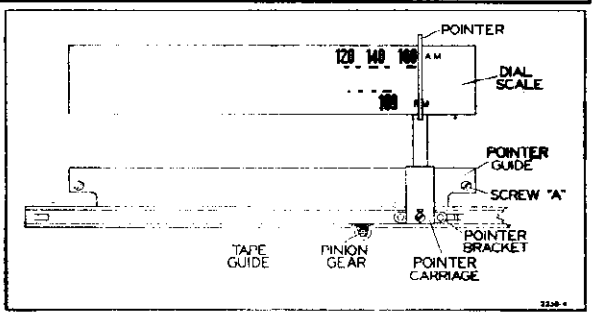

DIAL ADJUSTMENT VIEW

Loosen screw "A" so that teeth of tape can be properly meshed with pinion gear to give proper pointer travel.

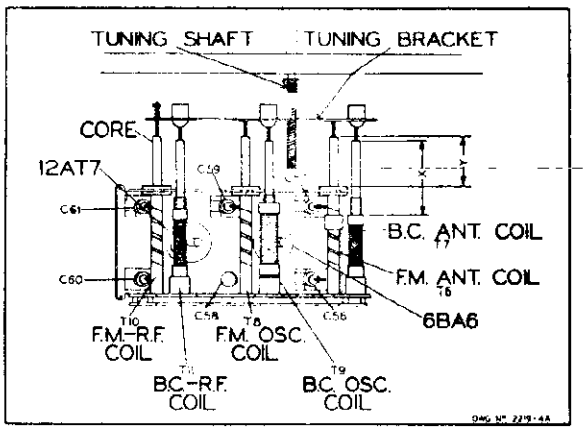

TUNER ADJUSTMENT

With tuner all the way out, dimension "X" should be 1½ inches. "Y" should be 1-1/32 inches. "X" is from the end of the slug to edge of the coil winding. Check these dimensions before R.F. alignment is attempted of either the AM or FM Band. No slug adjustment should be necessary since the slugs are properly set at the factory.

© John F. Rider

ALIGNMENT PROCEDURE

FM Band Section I.F. and R.F.

A non-metallic alignment tool must be used.

IMPORTANT— No alignment of the FM section of this radio should be attempted unless you are positive that the circuits are in need of adjustment and you have the necessary equipment.

All components used in this radio are extremely stable and the tuned circuits should require no adjustment over a long period of time.

NOTE— The following alignment is based on the use of the new Simpson vacuum tube voltmeter which has a "floating ground". In other words, the meter, when used as a vacuum tube volt-meter, can have both the positive and negative sides connected to points above ground and still give true readings.

A standard AM signal generator is required.

FM-I.F. ALIGNMENT

Band Switch in FM Position. Dummy Antenna .1 Mfd.

SIGNAL GENERATOR FREQUENCY	CONNECTION TO RADIO	VACUUM TUBE VOLT METER CONNECTION TO RADIO	ADJUSTMENT TO BE MADE	ADJUST FOR
10.7 Mc. Use about .1 volt	Pin No. 1 of 6BA6 No. 3 and ground	Pin No. 2 of 6AL5 and ground	Primary of T5	Resonance should be about 3 volts
10.7 Mc. Use about .1 volt	Pin No. 1 of 6BA6 No. 3 and ground	See note "A"	Secondary of T5	Zero. Use zero center scale See note "B"
10.7 Mc. Use about 3300 microvolts	Pin No. 1 of 6BA6 No. 2 and ground	Pin No. 2 of 6AL5 and ground	Primary and Secondary of T4A 10.7 m.c. windings See I.F. view	Resonance should be about 3 volts
10.7 Mc. Use about 200 microvolts	Pin No. 2 of 12AT7 and ground	Pin No. 2 of 6AL5 and ground	Primary and Secondary of 10.7 m.c. windings of T3A See I.F. view	Resonance should be about 3 volts

NOTES ON FM—I. F. ALIGNMENT

NOTE "A" Connect two resistors, 100K OHMS each, from Pin No. 2 of 6AL5 to ground. These resistors must be matched within 5%. Connect as shown in dotted lines on schematic diagram. Connect vacuum tube voltmeter between the mid-point of the resistors and point zz.

NOTE "B" If T5 has been tampered with, it is possible that no crossover point will be found at first. Careful adjustment of both primary and secondary is necessary.

GENERAL: Input signals should be adjusted to give approximately 3 volts. The ratio detector is operating at reasonable level at this point and will give the truest indication of correct alignment with the procedure specified.

FM-R.F. ALIGNMENT

Check pointer so that it coincides with the right hand marker to the extreme right when iron cores are all the way out.

For adjustment, see dial mechanism illustration.

SIGNAL GENERATOR FREQUENCY	CONNECTION TO RADIO	DUMMY ANTENNA	ADJUST	VACUUM TUBE VOLT METER CONNECTION TO RADIO	ADJUST TO
100 Mc. Use about 10 microvolts	FM Antenna Terminals See note	300 ohms	C58 Osc. C60 R. F. C56 Ant.	Pin No. 2 of 6AL5 and Ground	Resonance about 3 volts

NOTE: If a signal generator with the above fundamental frequency is not available, it is sometimes possible to use harmonics. Use extreme care in picking harmonics. An alternate procedure is to use a local station carrier of known frequency to align the FM Band and to use the vacuum tube volt-meter as above for resonance indication. A weak carrier, however, will not produce 3 volts.

NOTE: Connect 300 ohms in series with hot side of generator and connect to one screw. Connect cold side of generator to other screw.

REPLACEMENT PARTS LIST

TUNER PARTS

Condensers

Ref. No.	Part No.	Description	Qty. Used
C58	A-8H-15444	Trimmer, FM oscillator	1
C56, 57, 59, 61	A-2M-12618	Trimmer plate, large	4
C60	A-2M-14368	Trimmer plate, small	1
	A-5M-12615	Locator, for trimmer plates	5
C59, C61	B-6M-12616-S-2	Silvered mica film	2
C56, 57, 60	A-6M-12616	Clear mica film	3
	A-3C-12617	Spacer, for trimmer plates	5
C1, C11	C-8G-11732	470 mmf, ceramic	2
C2	C-8G-13695	1000 mmf, ceramic	1
C6, 7, 9, 14, 51	C-8G-13201	1000 mmf, ceramic	5
C12	C-8G-11731	1500 mmf, ceramic	1
C10, C8	C-8G-13017	15 mmf, ceramic	2
C3, C4	C-8G-11484	50 mmf, ceramic	2
C13	A-8G-12495-6	4.7 mmf, ceramic	1
C15	A-8G-12495-4	2.2 mmf, ceramic	1
C53	C-8G-15859	4 mmf, ceramic	1
C5	C-8D-11304	.02 x 200 volts, paper	1

Resistors

R4	C-9B2-79	27K ohms, 1 watt	1
R1	C-9B1-21	22K ohms, ½ watt	1
R3	C-9B1-52	150 ohms, ½ watt	1
R5	C-9B1-17	4700 ohms, ½ watt	1
R8	C-9B1-19	10K ohms, ½ watt	1
R2, R10	C-9B1-31	1 megohm, ½ watt	2
R21	C-9B1-34	3.3 megohms, ½ watt	1
R45	C-9B1-50	100 ohms, ½ watt	1
R46	C-9B1-45	39 ohms, ½ watt	1
R9	C-9B1-64	1500 ohms, ½ watt	1
R6	C-9B2-6	3500 ohms, 1 watt	1
R7	C-9B2-74	10K ohms, 1 watt	1

Coils

T8	B-13D-13027-1	F.M. oscillator coil	1
—	B-51A-13056	Core for F.M. oscillator coil	1
T6	B-13E-13028	FM antenna coil	1
—	B-51A-13058	Core for FM antenna coil	1
T10	B-13C-13029	FM R.F. coil	1
—	B-51A-13057	Core for FM R.F. coil	1
T9	A-13D-15704	B.C. oscillator coil	1
—	B-51A-12722	Core for B.C. oscillator coil	1
T7	B-13E-13031	B.C. Antenna coil	1
T11	B-13C-13032	B.C. R.F. coil	1
—	B-51A-12723	Core for B.C. ant. and R.F. coil	2

Miscellaneous

	B-20B-15628	Slide switch	1
	A-15B-12997	7-prong min., tube socket	1
	A-15B-13430	9-prong min., tube socket	1
	B-3A-15415	Lead screw	1
	A-3J-12309	Pinion gear	1
	A-49A-14439	Drive pring	2
	A-49A-13228	Tension spring	1
	A-49A-12394	Spiral spring for slugs	3
	B-2J-13006	Rack tape with teeth and pointer bracket	1
	B-2D-15416	Guide for rack tape	1
	B-2D-15649	Pointer carriage	1
	A-5M-13741	Pointer	1
	32F4SE-11488	4-40 x ⅛" screw for pointer	2

MAIN CHASSIS PARTS

Condensers

C63A, C63B	B-8C-11629	Electrolytic filter condenser, 30 — 30 x 450 volts	1
C52	C-8D-13439	.25 mfd x 400 volts	1
C54, C47	C-8D-10760	.1 mfd x 400 volts	2
C31	C-8D-11013	.003 x 600 volts	1
C44, 43, 24, 23, 20	C-8D-10785	.006 x 600 volts	5
C29, C30	C-8D-10761	.01 x 400 volts	2
C46, C45	C-8D-10813	.05 x 400 volts	2
C49	C-8D-10789	.002 x 600 volts	1
C48, C22	C-8D-10770	.05 x 200 volts	2
C64	C-8D-15860	.05 x 200 volts	1
C41	A-8C-13132	Electrolytic, 10 mfd x 50 volts	1
C62	C-8J-11321	.02 x 600 volts, molded case	1
C35	A-8G-13962	.005 x 500 volts, ceramic	1
C21	C-8G-11734	100 mmf, ceramic	1
C38	C-8G-13059	1500 mmf, ceramic	1
C34	C-8G-13060	51 mmf, ceramic	1
C40	C-8G-13201	1000 mmf, ceramic	1
C50	C-8G-11741	330 mmf, ceramic	1
C37	C-8F3-225	100 mmf, mica	1
C39, C42	C-8D-11304	.02 x 200 volts, paper	2
C35, C36	A-8F-13047	Mica condenser, 50 mmf, dual	1
C55	A-8C-12154	Electrolytic, 10 mfd, 450 volts	1

Resistors

R27, S1	A-10A-13114	Volume control and switch, 500K ohms	1
R31, S2	A-11A-15645	Tone control and phono radio switch	1
R22	C-9B1-36	6.8 megohms, ½ watt	1
R32	C-9B1-86	100K ohms, ½ watt	1
R44, R37	C-9B1-94	470K ohms, ½ watt	2
R41, R39	C-9B1-83	56K ohms, ½ watt	2
R33, R34	C-9B1-68	3300 ohms, ½ watt	2
R30	C-9B1-35	4.7 megohms, ½ watt	1
R23, R28	C-9B1-80	33K ohms, ½ watt	2
R20	C-9B1-79	27K ohms, ½ watt	1
R13, R16	C-9B1-48	68 ohms, ½ watt	2
R14, R17	C-9B2-81	39K ohms, 1 watt	2
R24, R26	C-9B1-29	470K ohms, ½ watt	2
R25	C-9B1-302	15 megohms, ½ watt	1
R19	C-9B1-23	47K ohms, ½ watt	1
R12,R43,R35	C-9B1-31	1 megohm, ½ watt	3
R40	C-9B1-66	2200 ohms, ½ watt	1
R36, R42	C-9B1-200	51K ohms, ½ watt	2
R38	C-9B4-55	270 ohms, 2 watts	1
R18	C-9B1-13	1000 ohms, ½ watt	1
R11, R15	C-9B2-15	2200 ohms, 1 watt	2
	C-9B1-1069	3.3 ohms, ½ watt	1

Coils

	B-13A-15680	Input I.F. transformer, 455 kc.	1
	B-13B-15681	Output I.F. transformer, 455 kc.	1
	B-13A-15682	Input I.F. transformer, 10.7 megohms	1
	B-13B-15683	Second I.F. transformer, 10.7 megohms	1
	B-13M-15684	Ratio detector, 10.7 megs.	1
	C-13E-15687	Loop antenna assembly	1

Transformers

T1	B-12A-13038-1	Power transformer, 105-125 volts, 50-60 cycles, primary	1
T2	B-12C-13042-1	Output transformer, for speaker	1

Speaker

	B-18B-13043-1	Electrodynamic speaker, 12-inch, less output transformer	1

Miscellaneous

	C-30A-15686	Dial scale	1
	B-30B-13943	Dial glass	1
	2G-13696	Escutcheon	1
	56D2-12463	Screws for escutcheon	4
	B-5B-13737-37	Knob, mahogany—small with dot	2
	A-15B-11538	Speaker socket	1
	A-19B-12468	Phono-motor socket	1
	A-19B-11044	Recorder socket	1
	A-19B-12170	Phono input socket	1
	B-14M-11479	AC line cord	1
	32K10-14306	10-32 x 1 inch, chassis mounting screws	4
	B-5B-13738-37	Knob, mahogany—large, without dot	2
	B-5B-13737-14	Knob, walnut—small, with dot	2
	B-5B-13738-14	Knob, walnut—large, without dot	2
	A-3A-15630	Shaft for band switch	1
	A-43D-12934	"U" speed clip	1
	A-55C-12935	Ball bearing	1
	B-47A-13801	Pilot lite assembly	1
	A-46A-11739	Pilot lite bulb, 6-8 volts	2
	A-2H-10974	Tube shield	4
	A-15C-13174	7-prong, min., tube socket	4
	A-15B-10440	8-prong, octal, socket	4
	A-7B-13050	FM dipole socket	1

WESTERN AUTO SUPPLY CO.

MODEL D2690,
1st Type

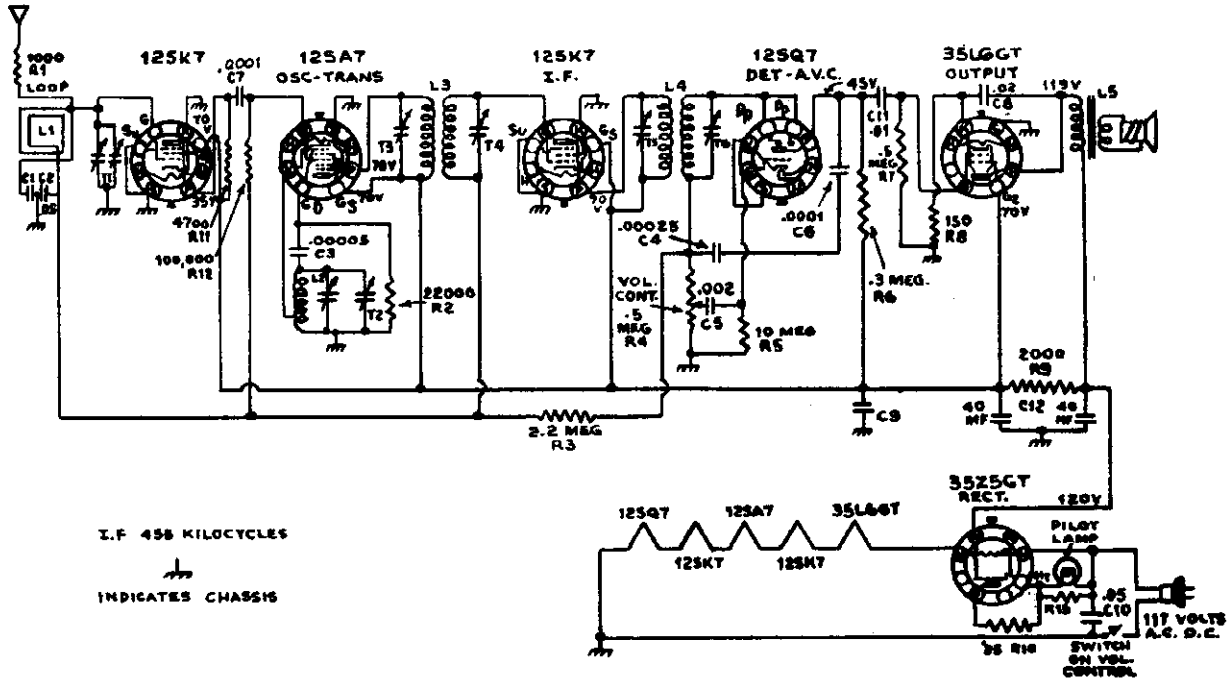

ALIGNMENT PROCEDURE

Output meter connections.....Across primary output transformer

Connection of generator ground.....Chassis

Generator modulation.....App. 30% @ 400 cycles

Position of volume control.....Fully Clockwise

POSITION OF DIAL POINTER	GENERATOR FREQUENCY	GENERATOR CONNECTION	TRIMMERS ADJUSTED	TRIMMER FUNCTION
540 kc	455 kc	12SA7GT	T3, T4, T5, T6	I. F.
1500 kc	1500 kc	* * *	T2, T1	Osc., R. F.

See Note Below

IMPORTANT ALIGNMENT NOTES

It is advisable to repeat the entire alignment procedure in the original order to insure greater accuracy.

Always keep the output from the test oscillator at its lowest possible value. As the sensitivity is increased by alignment, the generator output should be reduced correspondingly.

***Run a wire from the output terminal of the generator near the receiver. However, no connection is made between the signal generator and the receiver.

MODEL D2690, 2nd Type

WESTERN AUTO SUPPLY CO.

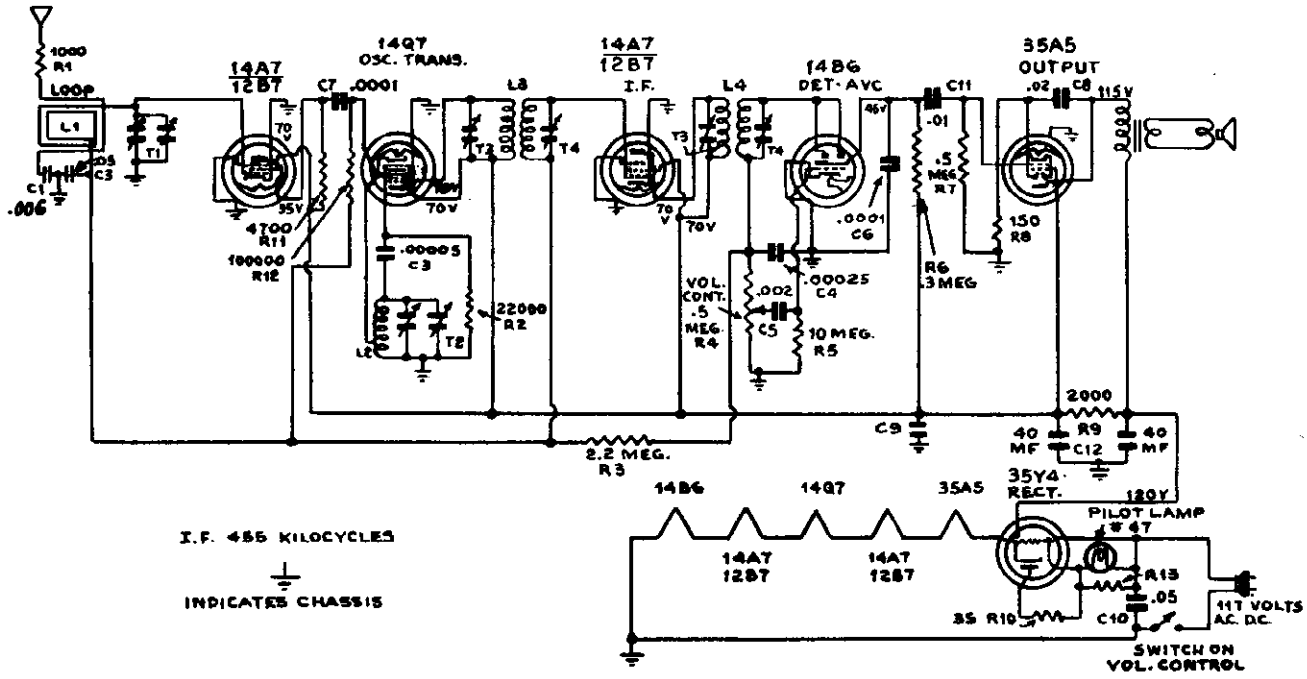

ALIGNMENT PROCEDURE

Output meter connections.....Across primary output transformer

Connection of generator ground.....Chassis

Generator modulation.....App. 30% @ 400 cycles

Position of volume control.....Fully Clockwise

POSITION OF DIAL POINTER	GENERATOR FREQUENCY	GENERATOR CONNECTION	TRIMMERS ADJUSTED	TRIMMER FUNCTION
540 kc	455 kc	14Q7	T3, T4, T5, T6	I. F.
1500 kc	1500 kc	* * * See Note Below	T2, T1	Osc., R. F.

IMPORTANT ALIGNMENT NOTES

It is advisable to repeat the entire alignment procedure in the original order to insure greater accuracy.

Always keep the output from the test oscillator at its lowest possible value. As the sensitivity is increased by alignment, the generator output should be reduced correspondingly.

***Run a wire from the output terminal of the generator near the receiver. However, no connection is made between the signal generator and the receiver.

WESTERN AUTO SUPPLY CO. MODEL D2692

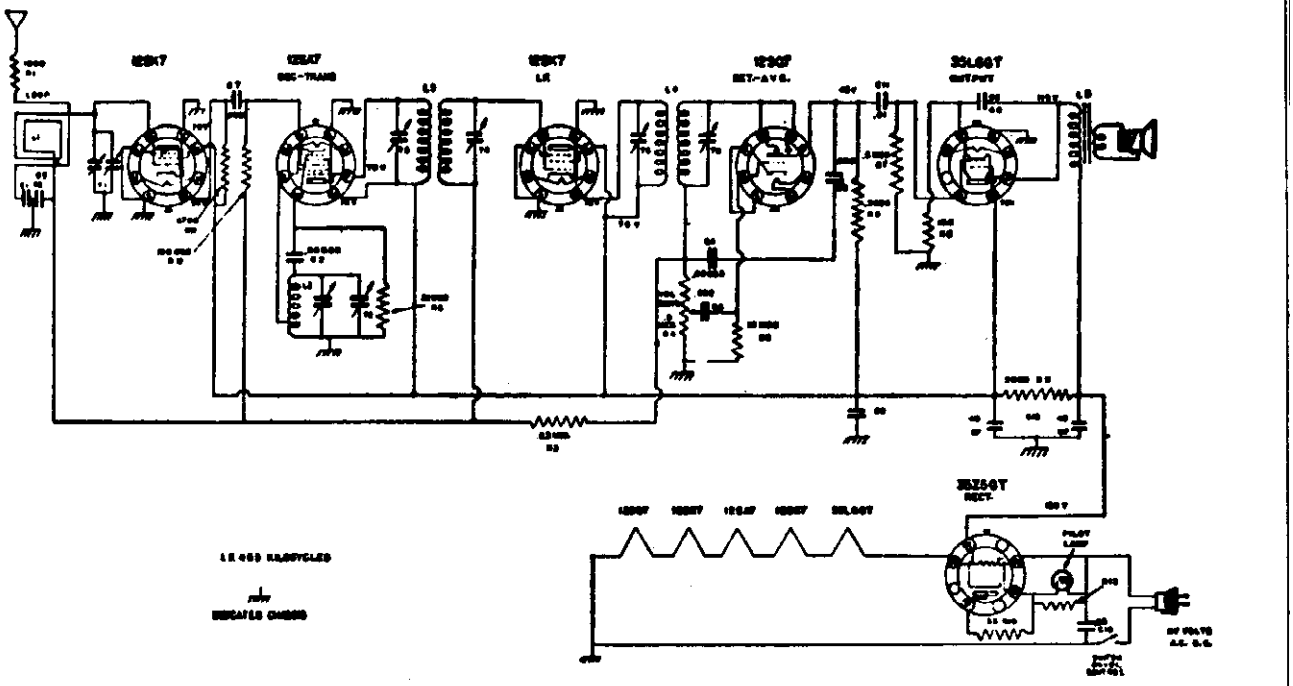

ALIGNMENT PROCEDURE

Output meter connections.....Across primary output transformer

Connection of generator ground.....Chassis

Generator modulation.....App. 30% @ 400 cycles

Position of volume control.....Fully Clockwise

POSITION OF DIAL POINTER	GENERATOR FREQUENCY	GENERATOR CONNECTION	TRIMMERS ADJUSTED	TRIMMER FUNCTION
540 kc	455 kc	12SA7GT	T3, T4, T5, T6	I. F.
1500 kc	1500 kc	* * *	T2, T1	Osc., R. F.

See Note Below

IMPORTANT ALIGNMENT NOTES

It is advisable to repeat the entire alignment procedure in the original order to insure greater accuracy.

Always keep the output from the test oscillator at its lowest possible value. As the sensitivity is increased by alignment, the generator output should be reduced correspondingly.

***Run a wire from the output terminal of the generator near the receiver. However, no connection is made between the signal generator and the receiver.

MODEL D2718B WESTERN AUTO SUPPLY CO.

BROADCAST AND SHORT WAVE RADIO WITH BUILT-IN LOOP AERIAL

7 TUBE AC-DC
(Including Rectifier)
2 BANDS

SHORT WAVE BAND

6 to 18 Megacycles

This band is calibrated in megacycles. The 16, 19, 25, 31 and 49 meter bands, in which the principal international short wave broadcasts will be heard, are located in this band.

These bands will be found on the dial as follows:

16 Meter Band...17.7—17.9 MC
19 Meter Band...15.1—15.3 MC
25 Meter Band...11.7—11.9 MC
31 Meter Band... 9.5— 9.7 MC
49 Meter Band... 6— 6.2 MC

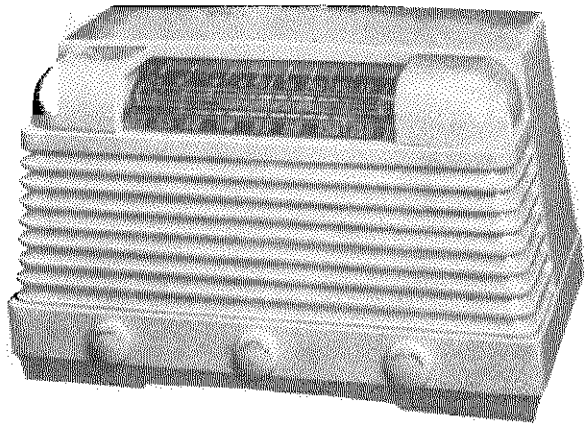

BROADCAST BAND

540 to 1600 Kilocycles

This band is calibrated in channel numbers. Add a zero to the dial number to get the kilocycle number.

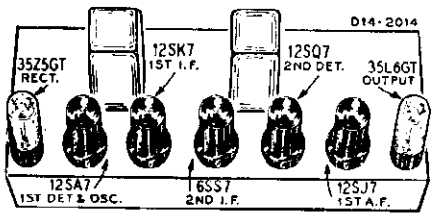

CHECK YOUR LINE VOLTAGE

Unless otherwise marked, this radio must be operated on a power supply of 105-125 volts AC, 50 to 60 cycles only, or 105-125 volts DC.

REPLACEMENT PARTS LIST

MISCELLANEOUS

12A464	4" x 6" P.M. Speaker, Complete with Mtg. Bracket	
3A303	Tube socket—Octal (8 prong) Molded	
2A206	Band change switch	
10A601	Knob—Tuning	For Ivory Cabinet
10A602	Knob—Volume	For Ivory Cabinet
10A603	Knob—Band	For Ivory Cabinet
10A604	Knob—Tuning	For Brown Cabinet
10A605	Knob—Volume	For Brown Cabinet
10A606	Knob—Band	For Brown Cabinet
13X546	Line Cord and Plug Assembly	
55X292	Cabinet, Ivory Plastic	
55X296	Cabinet, Brown Plastic	
28X292	Snap Button (Mtg. Antenna to cabinet)	
6X53	Rubber Bumpers (Mtd. to bottom of cabinet)	

TRANSFORMERS AND COILS

T-1	9A1443	"D" Range Antenna Coil Assembly
T-2	26A451	"B" Band Loop Antenna Assembly (For Ivory Cabinet)
T-2	26A452	"B" Band Loop Antenna Assembly (For Brown Cabinet)
T-3	9A1444	"D" Range Oscillator Coil Assembly
T-4	9A1442	"B" Band Oscillator Coil Assembly
T-5	9A1793	1st I-F Coil Assembly
T-6	9A1794	2nd I-F Coil Assembly
T-7	51X118	Output Transformer

CAPACITORS

C-1	B67102	.001 mf	200 V	Tubular
C-2, C-9, C-3A	17A152	2-25 mmf		Trimmer strip
C-3B	14A148	Gang Condenser Assembly		
C-4	46X289	.00475 mf	180 V	Tubular
C-5	17A174	2-25 mmf		Trimmer
C-6	Part of C-3 (Gang Condenser Assembly)			
C-7, C-16, C-21	47X463	47 mmf		Molded
C-8	47X466	68 mmf		Molded
C-10	17A234	300-450 mmf		Trimmer
C-11, C-23, C-12	B66104	1 mf	200 V	Tubular
C-15, C-22	B66403	.04 mf	200 V	Tubular
C-13, C-14, C-17	Part of T-5 (1st I-F Coil Assembly)			
C-18	Part of T-6 (2nd I-F Coil Assembly)			
C-19	47X476	100 mmf		Molded
C-20	B66502	.005 mf	200 V	Tubular
C-25, C-28	B66103	.01 mf	200 V	Tubular
C-26	B67253	.025 mf	200 V	Tubular
C-27A	45X342	50 mf	150 V	Dry Electrolytic
C-27B		50 mf	150 V	
C-27C		20 mf	25 V	
C-29	D67204	.2 mf	400 V	Tubular
C-30	D67104	.1 mf	400 V	Tubular
C-31	17A123	1.5-12 mmf		Trimmer

RESISTORS

		Ohms	Watts	
R-1	B84393	39K	0.5	Carbon
R-2	B84472	4700	0.5	Carbon
R-3, R-5	B85473	47K	0.5	Carbon
R-4	B84332	3300	0.5	Carbon
R-6	B85104	100K	0.5	Carbon
R-7	B85225	2.2 meg	0.5	Carbon
R-8	B85475	4.7 meg	0.5	Carbon
R-9	36X309	.5 meg		Volume control and switch
R-10	B84153	15K	0.5	Carbon
R-11, R-14	B85474	470K	0.5	Carbon
R-12	B84333	33K	0.5	Carbon
R-13	B84823	82K	0.5	Carbon
R-15	B84181	180	0.5	Carbon
R-16	B85224	220K	0.5	Carbon
R-18	B84270	27	0.5	Carbon
R-19	C85152	1500	1.0	Carbon

DIAL AND DRIVE ASSEMBLY

20X329	Cond. Cushion Stud, (Mtg. Gang Cond.)
6X21	Rubber Grommet, (Mtg. Gang Cond.)
26A450	Dial Bracket Assembly
25A1044	Diffuser and Clamp Assembly
58X671	Dial (for Ivory Cabinet)
30X532	Dial Clamps
15X236	Pointer
25X580	Drive Shaft Bracket
26X465	Drive Shaft
19X192	"C" Washer (for drive shaft)
24X564	Drive Shaft Spool
10X51	Drive Cord Assembly
28X113	Drive Cord Tension Spring
7A185	Pilot Light Socket Assembly
7A103	No. 47 Pilot Light Bulb
17X96	Celluloid Crystal

WESTERN AUTO SUPPLY CO. MODEL D2718B

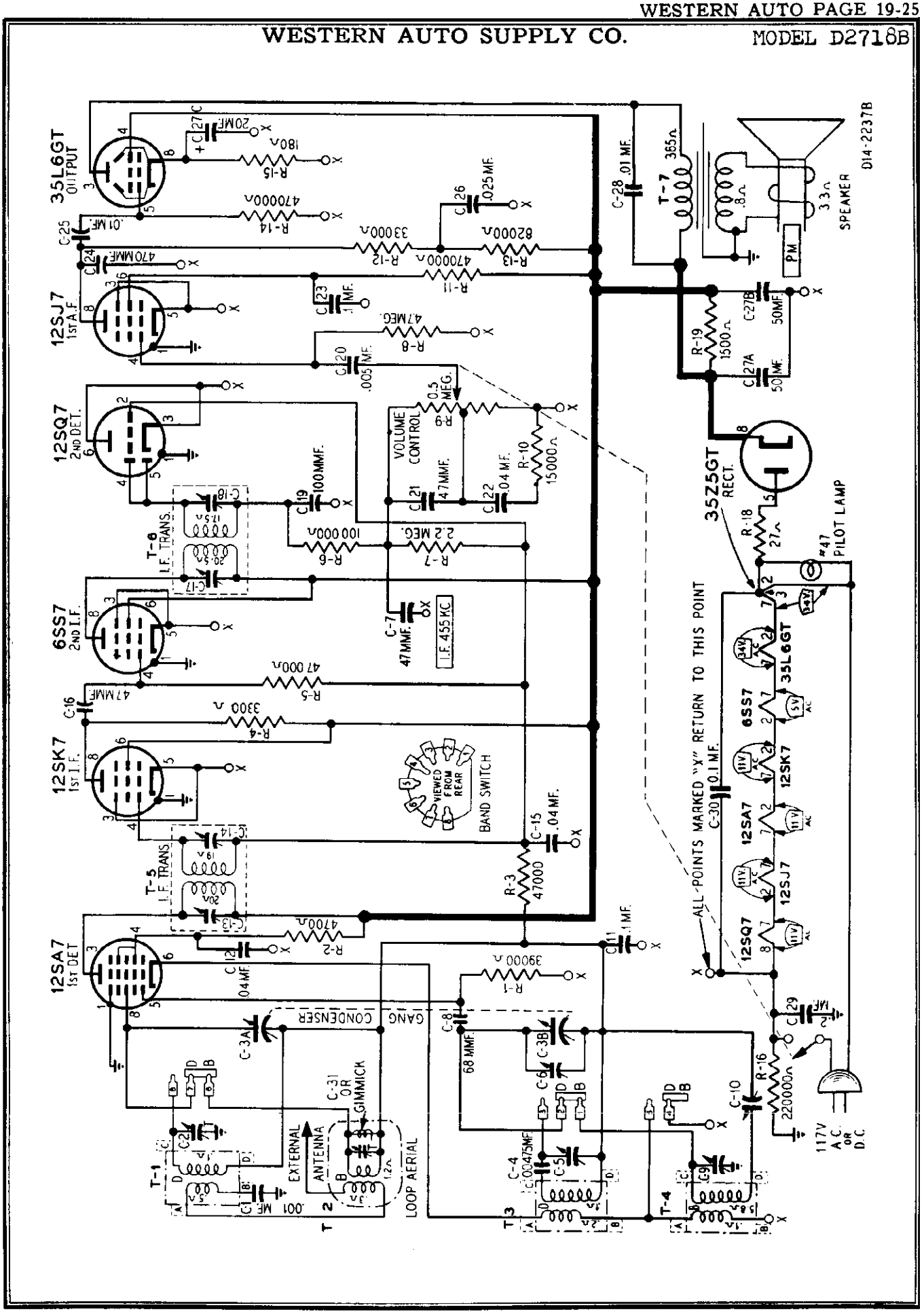

ALIGNMENT PROCEDURE

Volume Control—Maximum All Adjustments.

Allow Chassis and Signal Generator to "Heat Up" for several minutes.

The equipment in column at right is required for Aligning:

Signal Generator which will provide an accurately calibrated signal at test frequencies as listed.

Output indicating Meter; Non-Metallic Screwdriver.

Dummy Antennas—.1 mf., 50 mmf., and 400 ohm.

SIGNAL GENERATOR						
FREQUENCY SETTING	ANTENNA CONNECTION	GROUND CONNECTION	DUMMY ANTENNA	BAND SWITCH SETTING	CONDENSER SETTING	ADJUST TRIMMERS TO MAXIMUM (See Trimmer Illustration)
I.F. 455 KC	Signal Grid of 1st Det. Connect at Stator of Large Gang Section.	Point "X" 12SK7—1st I-F Prong No. 3	.1 mf.	B Range	Turn Rotor to Fully Open Position	1st I.F. (C13) & (C14) 2nd I.F. (C17) & (C18)
RANGE B 1600 KC	External Antenna Clip	Point "X"	50 mmf.	B Range	Turn Rotor to Fully Open Position	Oscillator Range B (C9) See Note A
1400 KC Note D	External Antenna Clip	Point "X"	50 mmf.	B Range	Turn Rotor to Max. Output. Set pointer to 1400 KC See Note C	Antenna Range B (C-31)
600 KC	External Antenna Clip	Point "X"	50 mmf.	B Range	Turn Rotor to Max. Output and Rock	600 KC Padder (C10) Rock Rotor See Note B
	Repeat above oscillator adjustments at 1600 and 600 KC until readjusting the oscillator Range B Trimmer (C9) causes no further improvement of output.					
RANGE D 18.3 MC	External Antenna Clip	Point "X"	400 Ohm	D Range	Turn Rotor to Fully Open Position	Oscillator Range D (C5)
17 MC	External Antenna Clip	Point "X"	400 Ohm	D Range	Turn Rotor to Max. Output	Ant. Range D (C2)
Loop Range B 1400 KC Note D	Reassemble chassis in cabinet External Antenna Clip	Chassis	50 mmf.	B Range	Turn Rotor to Max. Output	Ant. Range B (C-31)

DRIVE CORD REPLACEMENT

Use a new 10X51 drive cord assembly or a piece of new cord 45" long for this installation. Turn the large drive pulley counterclockwise until the gang condenser is in the fully open position, then fasten one end of the new drive cord to one end of the tension spring. Hook the other end of the tension spring over the tab on the drive pulley, pass the drive cord through the slot in the drive pulley rim and wind it ½ turn counterclockwise around the top of the drive pulley. Wind 2 turns around the drive shaft spool with the turns progressing towards the chassis. Continue with the cord around idler studs A, B and C as shown in the illustration. Wind the cord ¾ turn counterclockwise around the large drive pulley, pass it through the slot in the pulley rim and fasten the end to the tension spring. Rotate the tuning shaft several turns to take up any slack in the drive cord, then attach the dial pointer to the cord.

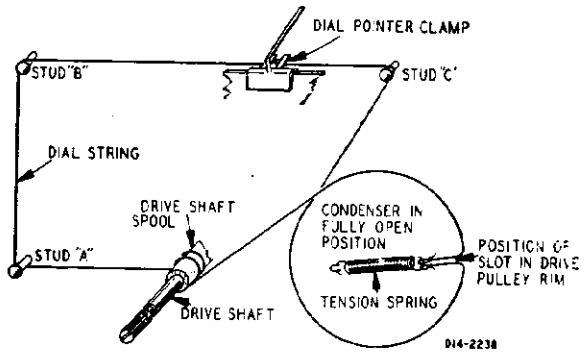

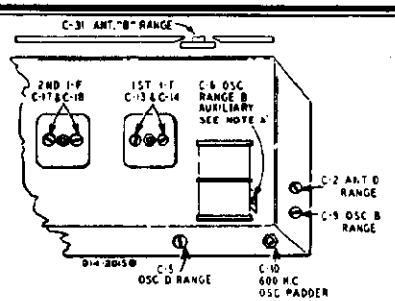

ALIGNMENT NOTES

NOTE A—Adjust Oscillator Range B (C9) trimmer on side of chassis. Oscillator Range B (C6) auxiliary trimmer on gang condenser is adjusted at factory and ordinarily need not be readjusted in the field.

NOTE B—Turn the rotor back and forth and adjust the trimmer until the peak of greatest intensity is obtained.

NOTE C—Attach pointer to drive cord and position at 1400 KC mark on dial scale.

NOTE D—Some receivers have a "gimmick" capacity formed by twisting two wires together on the loop antenna in place of the Antenna Range B Trimmer, C-31. When aligning receivers having the "gimmick" capacity, proceed as instructed in the Alignment Procedure Table but omit the steps at 1400 KC involving C-31.

The "gimmick" capacity is set at the factory and normally will not require adjustments when realigning the receiver. Adjustment is obtained by twisting or untwisting the wires.

On receivers having the "gimmick" the dial pointer should be set at 1600 KC rather than as instructed in Note C.

On receivers having neither a trimmer or a "gimmick", the dial pointer should also be set at 1600 KC.

SPECIFICATIONS

Power Consumption.....42 Watts (At 117 volts AC)
Power Output.....1.5 Watts Maximum .9 Watt 10% Harmonics
Selectivity.....49KC Broad at 1000 times Signal
Intermediate Frequency.....455 KC
Speaker.....4"x6" oval PM Dynamic
Tuning Frequency Range
B Range.....540 to 1600 KC
D Range.....6000 to 18,000 KC
Sensitivity (For .05 watt output—External Antenna).
B range.....9 Microvolts Average
D Range.....30 Microvolts Average

WESTERN AUTO SUPPLY CO. MODEL D2748

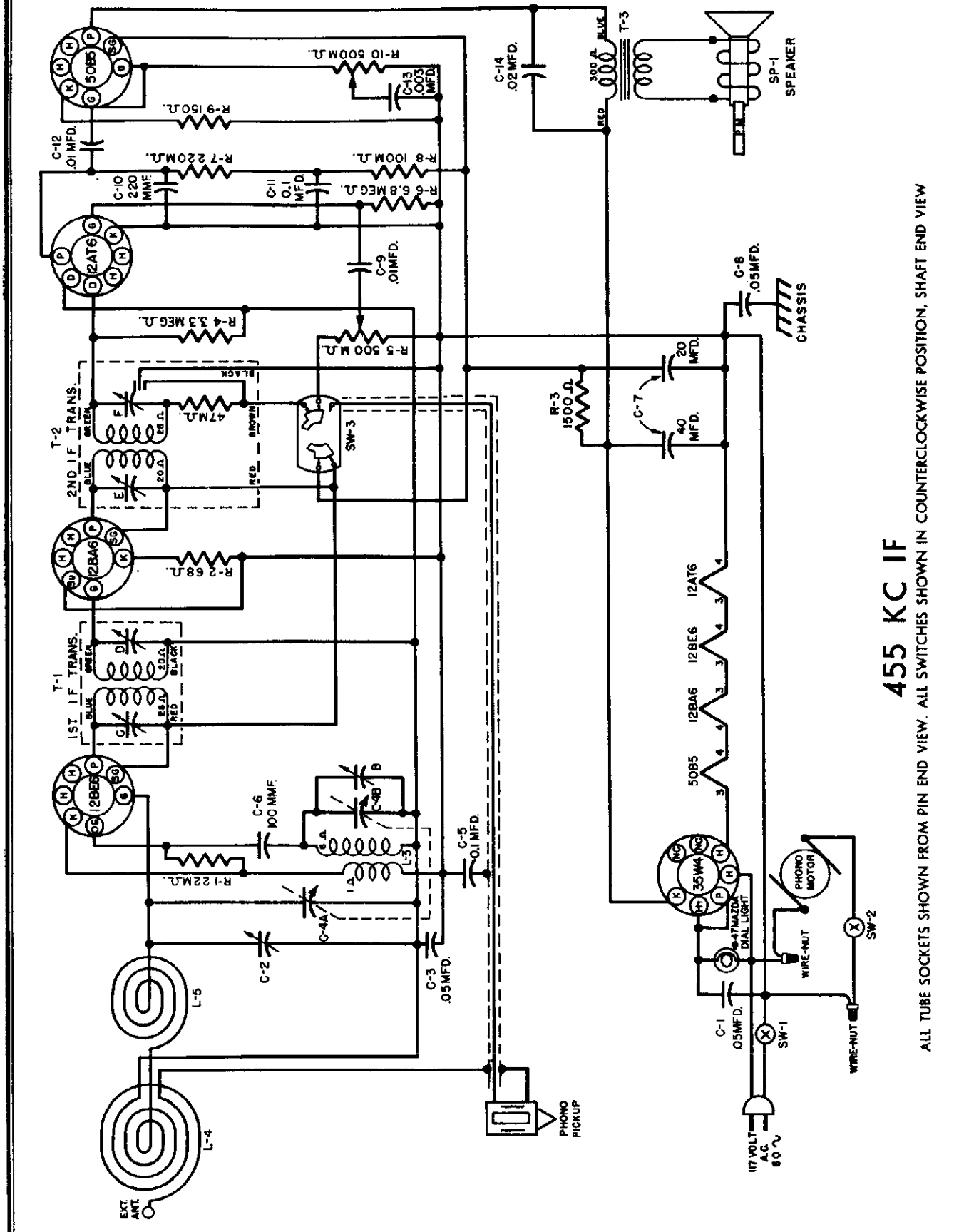

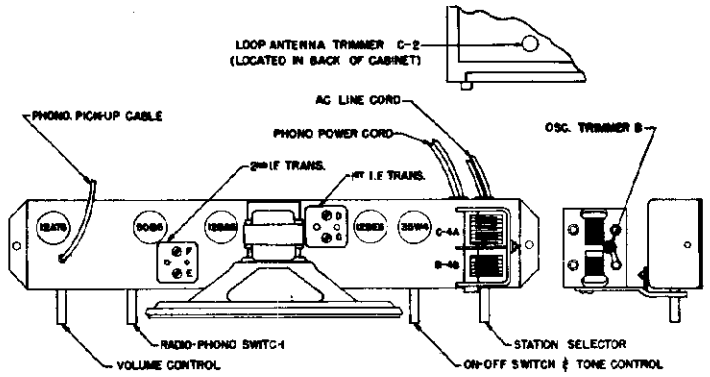

Tube Layout

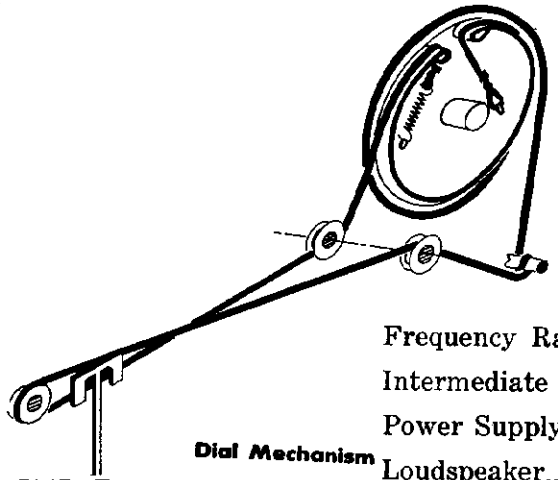

Dial Mechanism

Frequency Range.....540-1600 kc.
Intermediate Frequency.....455 kc.
Power Supply.....117 volts AC, 60 cycle
Loudspeaker.....5x7 elliptical type PM

TUBE COMPLEMENT

1—12BE6 Converter tube
1—12BA6 IF Amplifier tube
1—12AT6 Detector—AVC—First Audio tube
1—50B5 Power Output tube
1—35W4 Rectifier tube

V.C. Impedance.....3.2 ohms at 400 cycles
Power Output (Undistorted).....8 watt
Power Output (Maximum).....1.5 watts
Tuning Drive Ratio.....7 to 1

ALIGNMENT PROCEDURE

The following equipment is necessary to properly align this chassis:

1. A signal generator which will provide an accurately calibrated signal at the frequencies listed.
2. An output meter.
3. A non-metallic screwdriver.
4. Dummy antenna: — .1 mfd. — RMA loop.

NOTE: Intermediate Frequency and Oscillator adjustments may be made with the loop disconnected provided a resistor of 10,000 to 50,000 ohms is substituted to close the 12BE6 grid circuit. The loop alignment must be done with the loop and chassis mounted in operating position in the cabinet. A single turn loosely coupled to loop may be substituted for RMA loop.

* Loop trimmer accessible through back of cabinet.

GENERATOR	CONNECTION AT RADIO	DUMMY ANTENNA	DIAL	TO TUNE TRIMMERS	REMARKS
IF 455 kc.	12BE6 grid	.1 mfd.	HF end	IF trimmers C D E F	Tune to max.
1620 kc.	12BE6 grid	RMA loop	HF end	Osc. trimmer B	Set limit of band
1400 kc.	Through loop*	RMA loop	1400 kc.	Ant. trimmer C-2	Tune to max.

WESTERN AUTO SUPPLY CO. MODEL D2748

SOCKET VOLTAGES

TUBE	POSITION	1	2	3	4	5	6	7
12BE6	Converter	-5	0	24 AC	12 AC	88	88	0
12BA6	I.F. Amplifier	0	0	24 AC	35 AC	88	88	0.7
12AT6	2nd DET.—1st AF—AVC	0	0	12 AC	0	0	0	12
50B5	Power Output	0	5	85 AC	85 AC	115	88	0
35W4	Rectifier	0	0	85 AC	117 AC	112 AC	112 AC	122

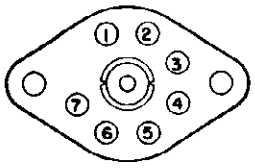

NOTE: All DC voltages measured with a 1000 ohm-per-volt meter from ON-OFF switch (—B) to socket contact indicated. All AC voltages are measured from ON-OFF switch (—B) to socket contact indicated. All voltages are positive DC unless otherwise marked. Volume Control full on. No signal input. Line voltage 117 volts AC.

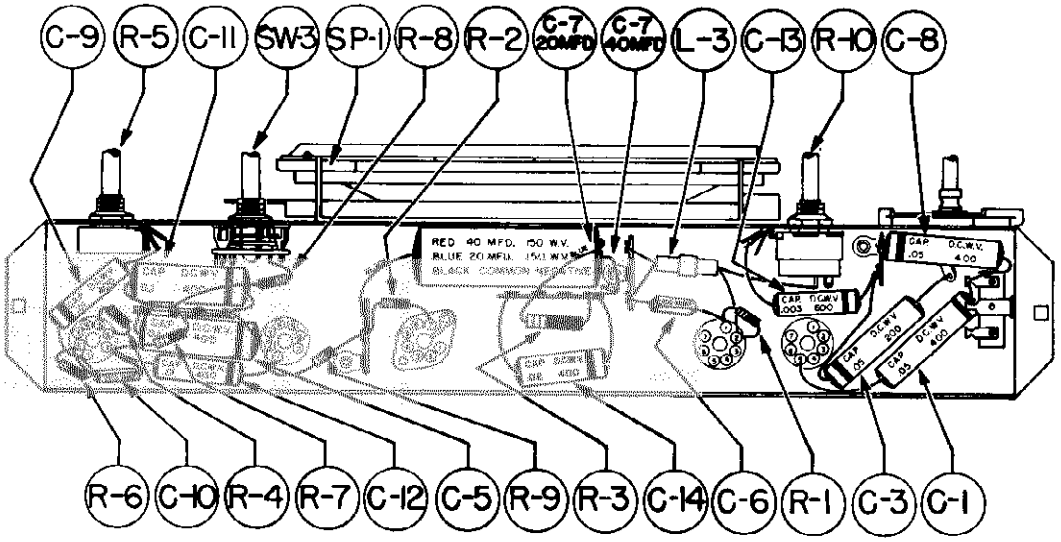

Parts Layout—Chassis Model 7156

SERVICE PARTS LIST

Symbol	Part No.	Description
C-3	BD210503	Capacitor, Paper, .05 mfd., 200 v.
C-9, C-12	BD410103	Capacitor, Paper, .01 mfd., 400 v.
C-5, C-11	BD410104	Capacitor, Paper, 0.1 mfd., 400 v.
C-14	BD410203	Capacitor, Paper, .02 mfd., 400 v.
C-1, C-8	BD410503	Capacitor, Paper, .05 mfd., 400 v.
C-13	BD610302	Capacitor, Paper, .003 mfd., 600 v.
C-6	BM74A101	Capacitor, Mica, 100 mmf.
C-10	BM74A221	Capacitor, Mica, 220 mmf.
R-2	BR16B680	Resistor, 68 ohm, ⅓ w.
R-9	BR16C151	Resistor, 150 ohm, ½ w.
R-8	BR17B104	Resistor, 100,000 ohm, ⅓ w.
R-1	BR17B223	Resistor, 22,000 ohm, ⅓ w.
R-7	BR17B224	Resistor, 220,000 ohm, ⅓ w.
R-4	BR17B335	Resistor, 3.3 megohm, ⅓ w.
R-6	BR17B685	Resistor, 6.8 megohm, ⅓ w.
R-3	BR17E152	Resistor, 1500 ohm, 1 w.
	A-2163	Cable, Drive
	A-6158	Lamp, Pilot, No. 47 Mazda, 6.3 v.
	A-6182-1	Socket, Dial Light
C-7	B-9564-1	Cap., Electro., 40-20 mfd., 150 v.
	A-51163	Clip, Spring
	B-51427-5	Grommet (large)
	B-51427-8	Grommet (small)
SW-3	B-51576-2	Switch, Radio-Phono
	A-51787	Spring, for Dial Cable
	A-54122	Button, Plug
R-5	B-54466-2	Control, Volume, 500,000 ohm
T-2	B-56718-1	Transformer Assembly, 2nd IF
T-1	B-56722-1	Transformer Assembly, 1st IF
	B-57262-6	Cord, AC Phono.
R-10	B-57841-1	Control, Tone & Switch, 500,000 ohm
	B-57842	Coil Assembly, Oscillator
SP-1	C-57843	Speaker, 5x7 PM
	B-57848-1	Shaft, Tuning Drive
	B-57857-1	Pointer, Dial
	B-57858-1	Strip Assembly, Light Diffusing
C-4	C-57859-1	Capacitor, Variable
	A-57891	Sheet, Operating and Service
L-4 & L-5	D-57870	Coil Assembly, Loop
	C-57872-1	Knob
	E-57873-1	Cabinet
	A-57878	Clip, Gang Mounting
C-2	B-57879-1	Capacitor Assembly, Trimmer
	C-57862-1	Crystal and Indicator, Dial
	B-58069-1	Cord, AC Power

MODELS D2806, D2807

WESTERN AUTO SUPPLY CO.

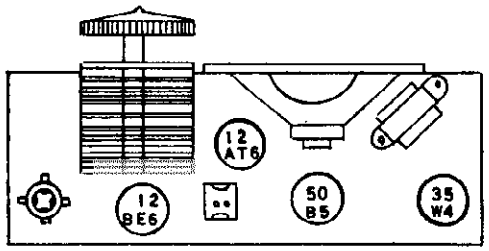

Remove back to replace tubes

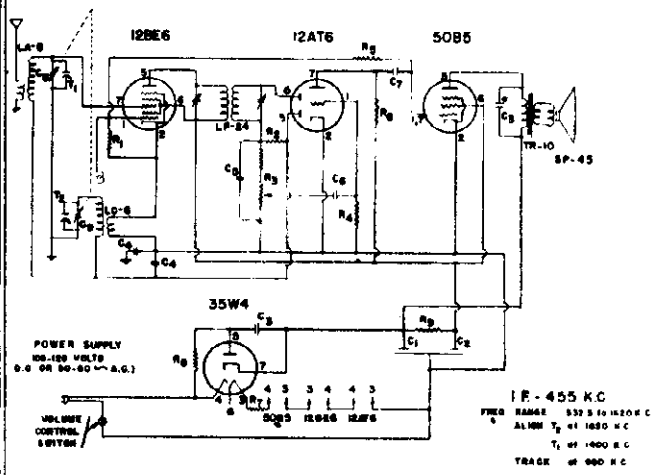

CHASSIS SERIES "AG"

ELECTRICAL SPECIFICATIONS

Power Supply ..... 105-125 Volts D.C. or 50-60 Cycles A.C. 30 Watts

Frequency Range ..... 532.5 to 1620 kc.

Intermediate Freq. ..... 455 kc.

Tuning ..... Two gang capacitor

Speaker ..... 4 inch PM 3.5 ohm voice coil impedance

Power Output ..... 1 watt undistorted 1.5 watt maximum

Sensitivity ..... 800 Microvolts at 50 milliwatts Output

Selectivity ..... 120 kc broad at 1000 times signal at 1000 kc.

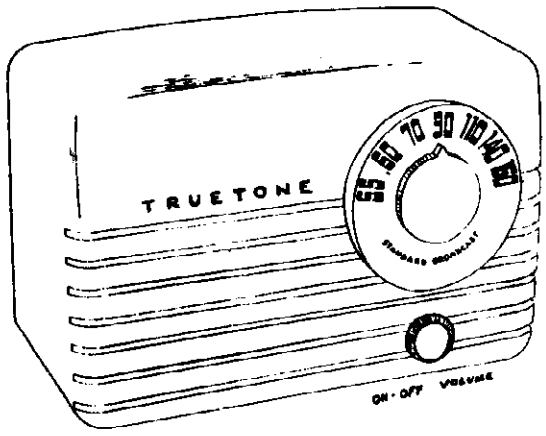

REPLACEMENT PARTS LIST

Ref. No.	Part No.	Description
CAPACITORS		
C1, C2	CE-15	2 x 40 mfd V. Elect
C3	CP203-1	.02 mfd 400V paper cond.
C4	CP503-4	.05 mfd 200V paper cond.
C5	CM151-1	.00015 mfd 500V paper cond.
C6	CP202-2	.002 mfd 400V paper cond.
C7	CP502-3	.005 mfd 200V paper cond.
C8, C9	CV-14	Variable Condenser (2 gang)
RESISTORS		
R1	RC183-2	18,000 ohms ½W 10%
R2	RC475-1	4.7 megohms ½W 20%
R3	VC-11	2 meg. vol. cont., 100 K Stop
R4	RC106-1	10 megohms ½W 20%
R5	RC334-1	330,000 ohms ½W 20%
R6	RC224-1	220,000 ohms ½W 20%
R7	RC390-4	39 ohms 1W 20%
R8	RC180-1	18 ohms ½W 20%
R9	RC222-4	2200 ohms 1W 20%
COILS & TRANSFORMERS		
	LA-5	Antenna Coil
	LC-6	Oscillator Coil
	LF-24	I.F. Transformer
	TR-10	Output Transformer
MISCELLANEOUS		
	CB-106	Cabinet (specify Ivory or Walnut)
	KN-20	Knob
	KN-21	Pointer Knob
	SP-45	4" PM Speaker

ALIGNMENT PROCEDURE

- Output meter across 3.5 ohm output load.
- Volume control at maximum for all adjustments.
- Align for maximum output. Reduce input as needed to keep output near 0.4 volts.

SIGNAL GENERATOR				*SETTING TUNER*	*ADJUST TRIMMERS TO MAXIMUM OUTPUT (in order shown)*
Frequency	*Coupling Factor*	*Connection to Receiver*	*Ground Connection*		
455 kc	.1 mfd	12BE6 Grid	B—	Rotor full open (Plates out of mesh)	Input and output trimmers on IF cans
1620 kc	.1 mfd	12BE6 Grid	B—	Rotor full open (Plates out of mesh)	Oscillator trimmer T2
1400 kc	75 mmf	Hook	B—	1400 kc	Antenna trimmer T1

WESTERN AUTO SUPPLY CO.

MODELS D2819A, D2819B, D2819C, D2819D, D2819E

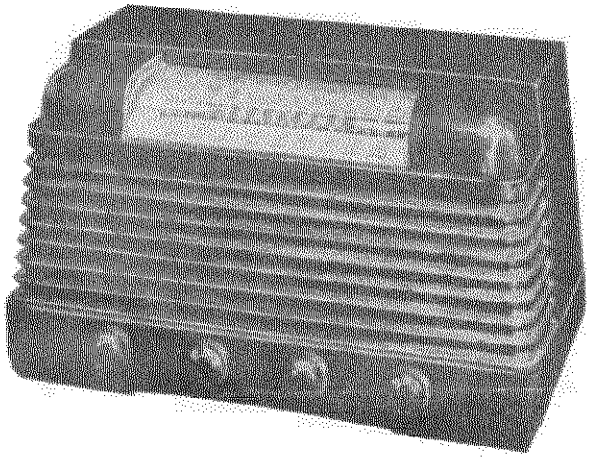

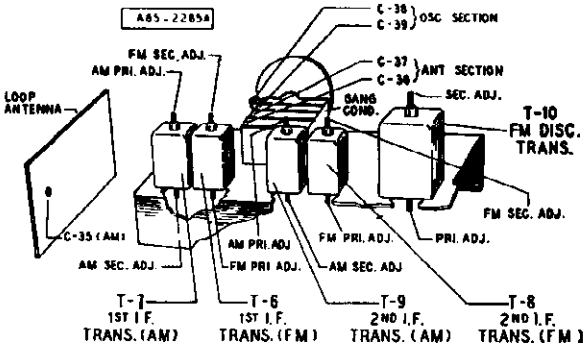

DRIVE CORD REPLACEMENT

Replacement of the drive cord may be accomplished as shown in the illustration. For this purpose use the new drive cord assembly listed in the Replacement Parts List. Turn the gang condenser until the plates are fully meshed. Then install the string as shown, winding three turns clockwise around the tuning shaft with the turns progressing away from the chassis. After the cord is installed, rotate the tuning shaft several times in order to take up any slack in the cord.

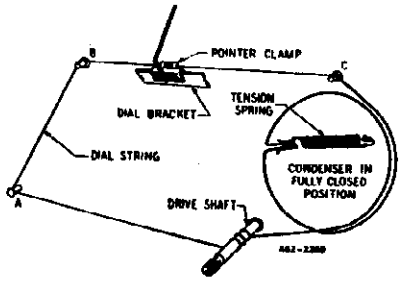

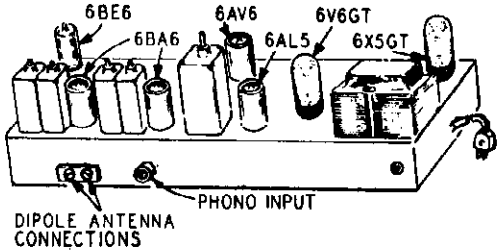

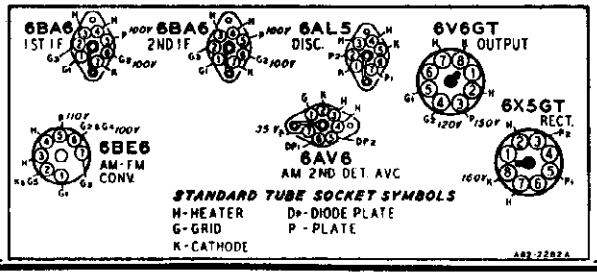

RECORD PLAYER AND TELEVISION SOUND CONNECTIONS

For models not equipped with built-in record player, a socket marked PHONO is provided on the back of the chassis for connections to an external record player or automatic record changer. When it is desired to play records through the radio, insert the connector on the cable of any standard record player into this socket. Turn the phono-radio switch to the phono position and use the volume control to adjust the sound level.

When television programs become available in your community, the audio amplifier and speaker of this radio may be used in conjunction with a Television Picture Receiver and sound converter to reproduce the sound portion of the television programs. Simply insert the connector on the cable of the Television Converter into the socket marked PHONO and operate the receiver in the same manner as described in the foregoing paragraph.

TUBE SOCKET VOLTAGES

Socket voltages are shown on the Bottom Socket diagram at the tube socket terminals. All voltages are between the socket terminal and chassis ground. Plate, screen and cathode voltages were taken with a 1000 ohm-per-volt meter with a 300 volt scale used for plate and screen voltages. Audio grid voltages were read with a vacuum tube volt-meter. Conditions of measurement are:

Line voltage .....117 Volts AC
Signal Input .....None
A Variation of ±10% is usually permissible.

MODEL D2819A

WESTERN AUTO SUPPLY CO.

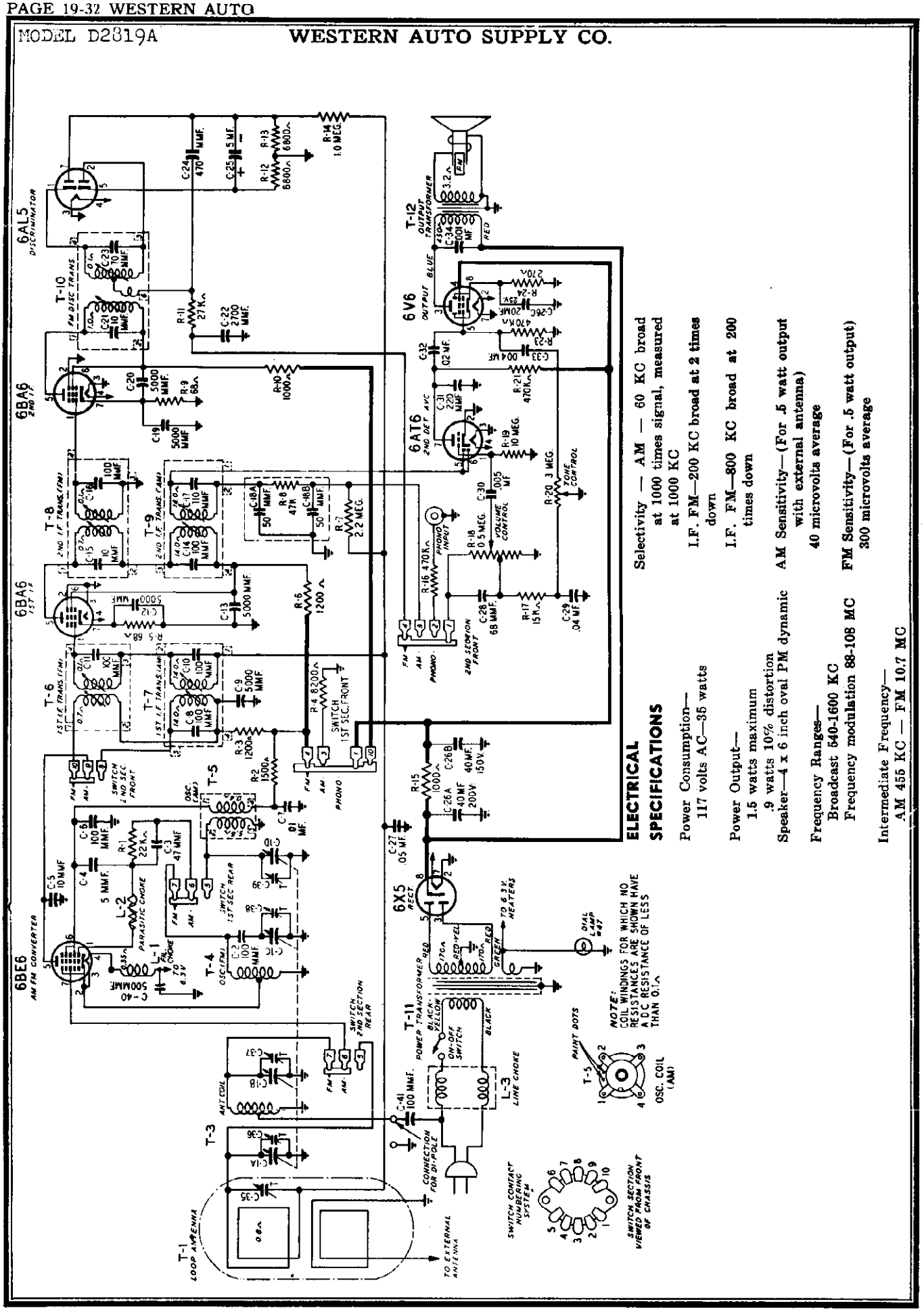

ELECTRICAL SPECIFICATIONS

Power Consumption—
117 volts AC—85 watts

Power Output—
1.5 watts maximum
.9 watts 10% distortion
Speaker—4 x 6 inch oval PM dynamic

Selectivity — AM — 60 KC broad at 1000 times signal, measured at 1000 KC

I.F. FM—200 KC broad at 2 times down

I.F. FM—800 KC broad at 200 times down

AM Sensitivity—(For .5 watt output with external antenna)
40 microvolts average

FM Sensitivity—(For .5 watt output)
300 microvolts average

Frequency Ranges—
Broadcast 540-1600 KC
Frequency modulation 88-108 MC

Intermediate Frequency—
AM 455 KC — FM 10.7 MC

WESTERN AUTO SUPPLY CO.

MODELS D2819B
D2819C

SUPPLEMENTARY SERVICE DATA

TRUETONE MODEL D2819B

Model "B" chassis differ from the model "A" chassis as follows:

PARTS LIST ADDITION:

L-4	9A1882	Choke

SCHEMATIC DIAGRAM CHANGE:

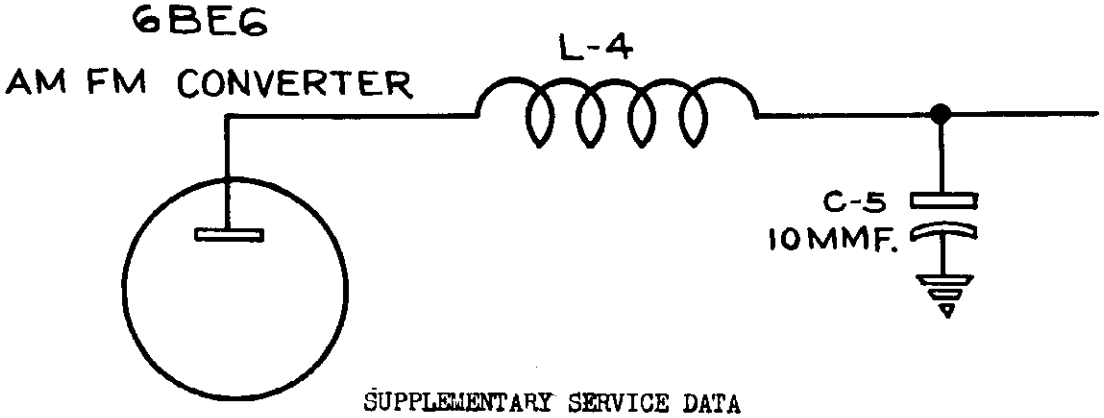

SUPPLEMENTARY SERVICE DATA

TRUETONE MODEL D2819C

A choke has been added to the circuit to eliminate parasitic oscillation on the FM Band.

PARTS LIST ADDITION

Ref. #	Part #	Description
L-5	9A1967	Parasitic Choke

The circuit connection of L-5 is shown in the partial schematic below.

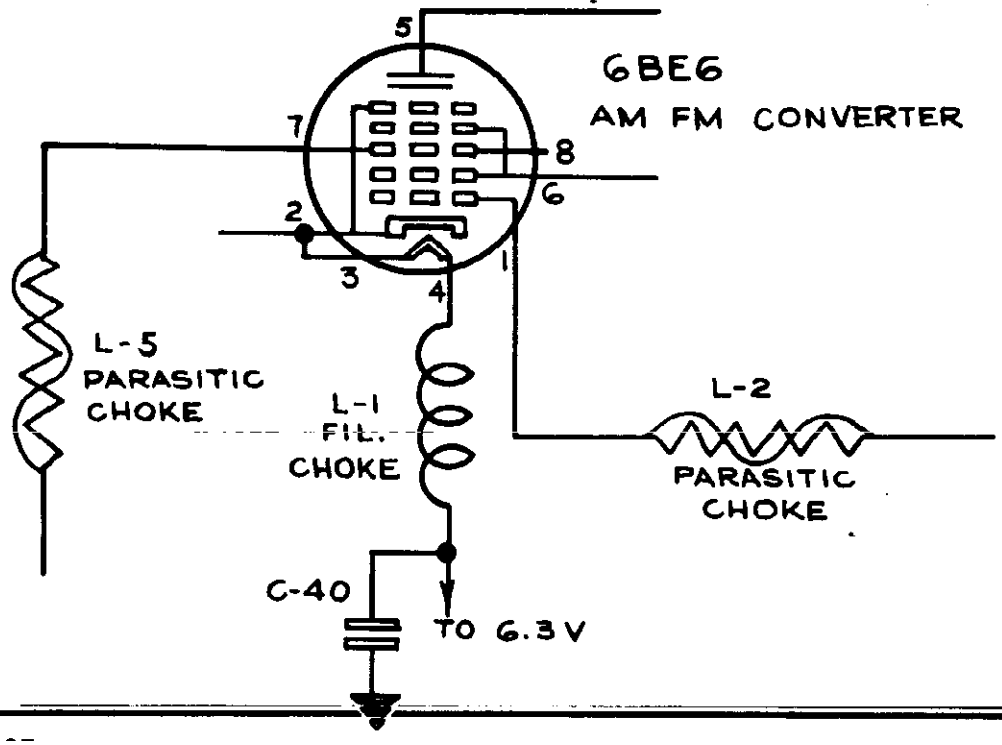

© John F. Rider

MODEL D2819C

WESTERN AUTO SUPPLY CO.

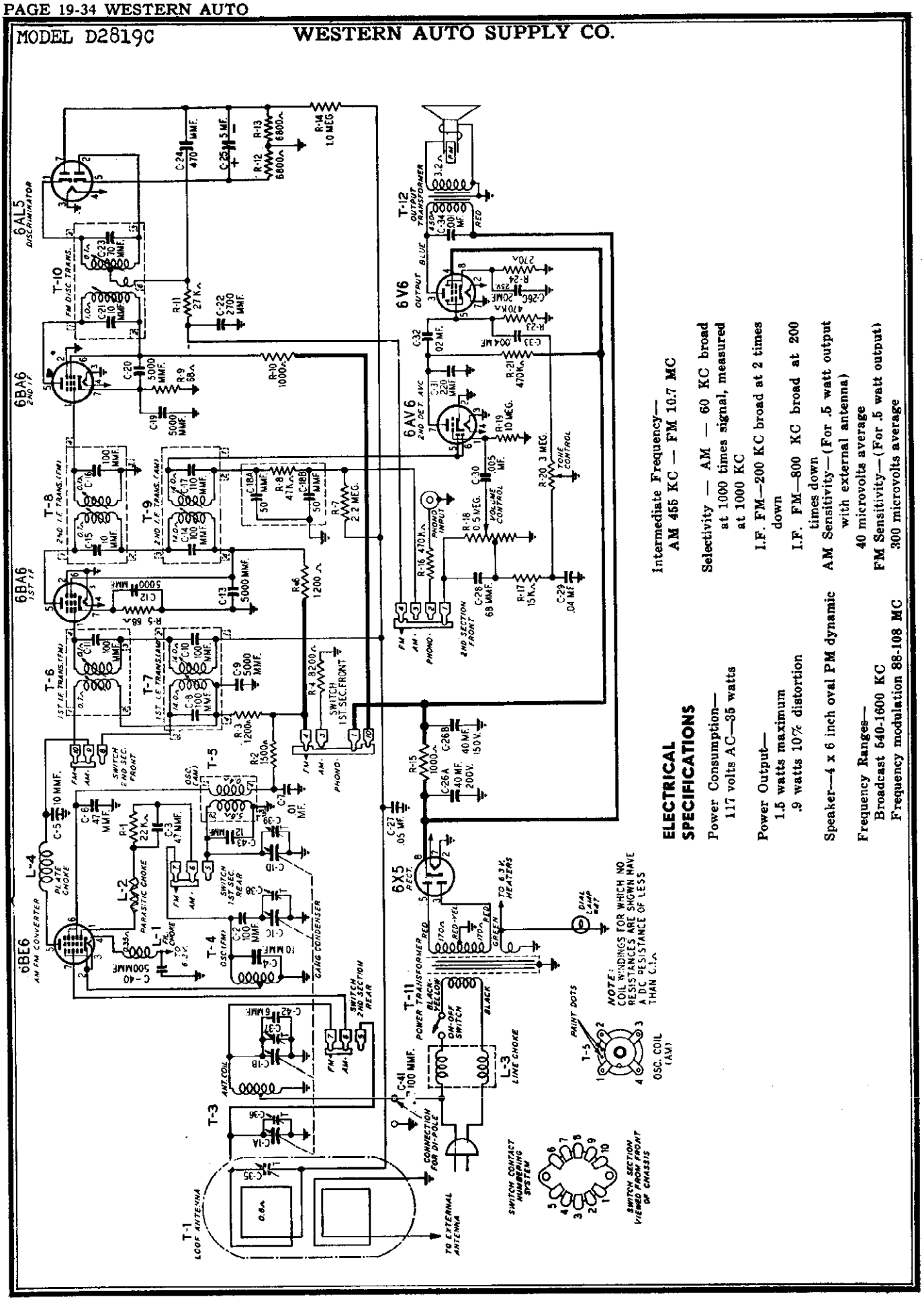

ELECTRICAL SPECIFICATIONS

Power Consumption—
117 volts AC—35 watts

Power Output—
1.5 watts maximum
.9 watts 10% distortion

Speaker—4 x 6 inch oval PM dynamic

Frequency Ranges—
Broadcast 540-1600 KC
Frequency modulation 88-108 MC

Intermediate Frequency—
AM 455 KC — FM 10.7 MC

Selectivity — AM — 60 KC broad at 1000 times signal, measured at 1000 KC

I.F. FM—200 KC broad at 2 times down

I.F. FM—800 KC broad at 200 times down

AM Sensitivity—(For .5 watt output with external antenna)
40 microvolts average

FM Sensitivity—(For .5 watt output)
300 microvolts average

WESTERN AUTO SUPPLY CO. MODELS D2819D, D2819E

SUPPLEMENTARY SERVICE DATA

TRUETONE MODEL D2819D

Model "D" receivers differ from the model "C" receivers by the change in value of resistors R-12 and R-13 from 6800 ohms to 15,000 ohms.

The new part number and description follows:

R-12, R-13	B84153	15,000 ohms	0.5 W

SCHEMATIC DIAGRAM CHANGE:

The wires on lugs 1 and 4 of "SWITCH 1ST SEC. FRONT" view have been interchanged. This change is shown on the partial schematic below.

SUPPLEMENTARY SERVICE DATA

TRUETONE MODEL D2819E

SCHEMATIC DIAGRAM CHANGE

The wires on lugs 1 and 4 of "SWITCH 1st SEC. FRONT" view has been interchanged. This change is shown on the partial schematic below.

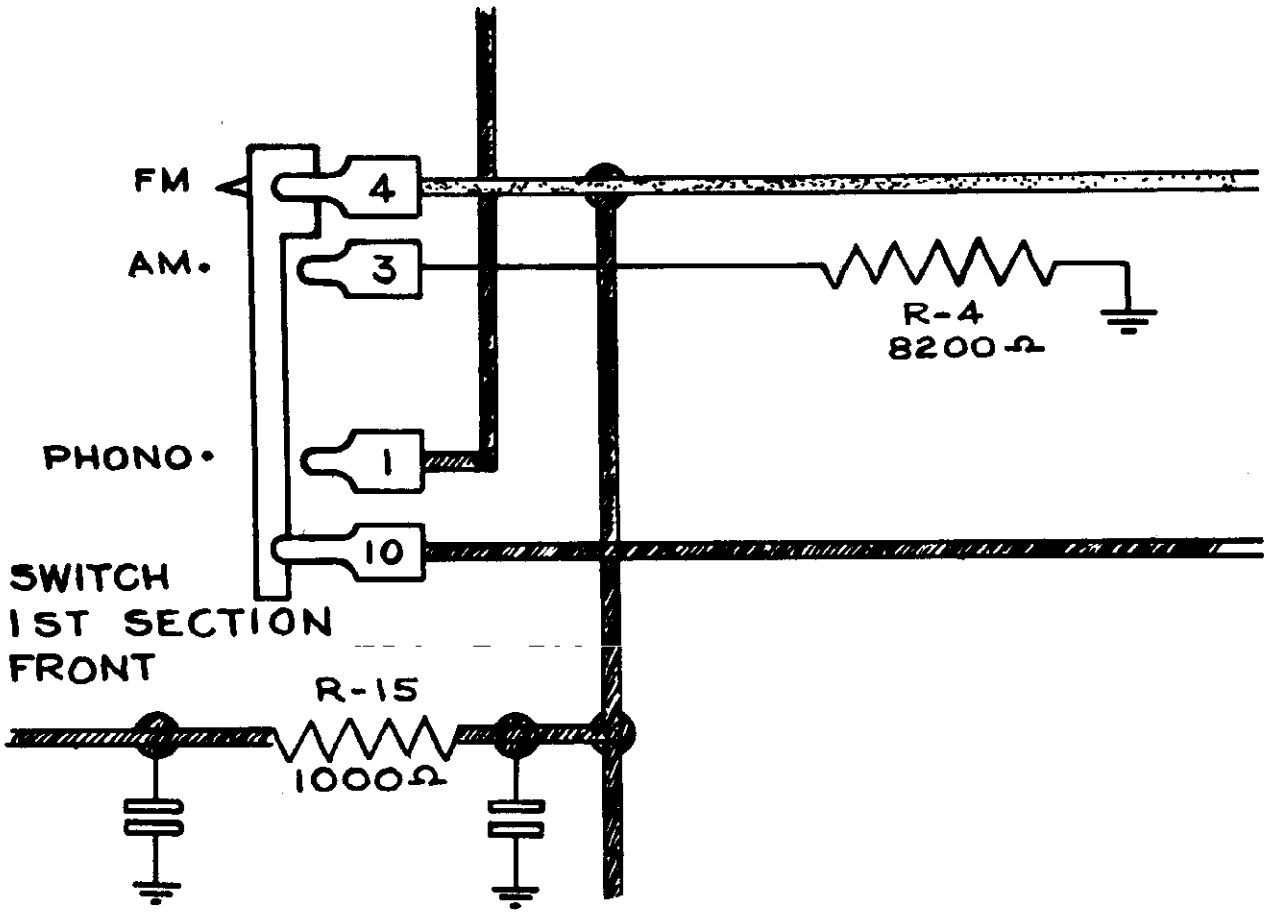

MODEL D2819E

WESTERN AUTO SUPPLY CO.

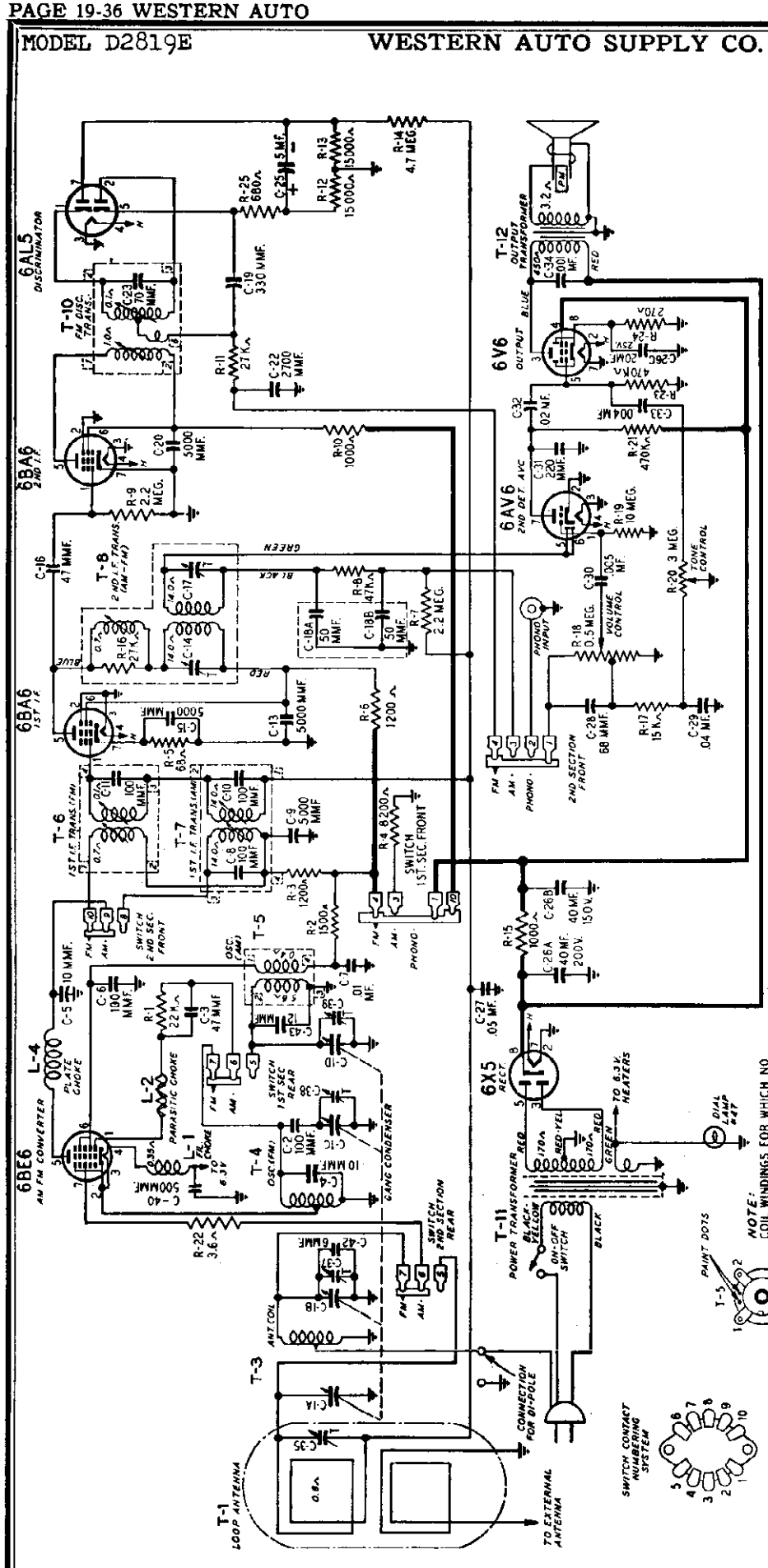

ELECTRICAL SPECIFICATIONS

Power Consumption—
117 volts AC—35 watts

Power Output—
1.5 watts maximum
.9 watts 10% distortion

Speaker—4 x 6 inch oval PM dynamic

Frequency Ranges—
Broadcast 540-1600 KC
Frequency modulation 88-108 MC

Intermediate Frequency—
AM 455 KC — FM 10.7 MC

Selectivity — AM — 60 KC broad at 1000 times signal, measured at 1000 KC

I.F. FM—200 KC broad at 2 times down

I.F. FM—700 KC broad at 200 times down

AM Sensitivity—(For .5 watt output with external antenna)
60 microvolts average

FM Sensitivity—(For .5 watt output)
150 microvolts average

WESTERN AUTO SUPPLY CO.

MODELS D2819A, D2819B, D2819C, D2819D

ALIGNMENT PROCEDURES

AM STAGES

Volume Control Maximum all Adjustments.

Connect Radio Chassis to Ground Post of Signal Generator with a Short Heavy Lead.

Allow Chassis and Signal Generator to "Heat Up" for Several Minutes.

The following is required for aligning:

An All Wave Signal Generator Which Will Provide an Accurately Calibrated Signal at the Test Frequencies as Listed.

Output Indicating Meter, Non-Metallic Screwdriver, Dummy Antennas — .1 mf, and 50 mmf.

SIGNAL GENERATOR					
FREQUENCY SETTING	CONNECTION AT RADIO	GROUND CONNECTION	DUMMY ANTENNA	GANG CONDENSER SETTING	ADJUST TUNING SLUGS (I-F ONLY) TRIMMERS (OSC. & ANT.)
455 KC	Control Grid 1st 6BA6 Pin No. 1	Chassis Base	.1 mf	Turn Rotor to Full Open	2nd I.F. Pri. & Sec.
455 KC	Control Grid 6BE6 Pin No. 7 1st Det.	Same as above	.1 mf	Turn Rotor to Full Open	1st I.F. Pri. & Sec.
1620 KC	Control Grid 6BE6 Pin No. 7	Same as above	.1 mf	Turn Rotor to Full Open	Oscillator C-39
1400 KC	External Antenna Lead	Same as above	50 mmf	Turn Dial to 1400 KC. See Note A	Antenna C-35

NOTE A—Attach pointer to drive cord and position at 1400 KC mark on dial scale.

FM STAGES

Allow chassis and signal generator to warm up for several minutes. The following equipment is required for aligning:

An accurately calibrated signal generator providing unmodulated signals at the test frequencies listed below.

Non-metallic screwdriver.

Dummy Antennas and I-F Loading Resistor—.01 mf, 300 ohms and 100 K ohms.

Zero center scale DC vaccum tube voltmeter having a range of approximately 3 volts.

(If a zero center scale meter is not available, a standard scale vacuum tube voltmetor may be used by reversing the meter connections for negative readings.)

	SIGNAL GENERATOR					
	FREQUENCY SETTING	CONNECTION AT RADIO	DUMMY ANTENNA	BAND SWITCH SETTING	CONDENSER SETTING	ADJUSTMENT FOR MAX. METER DEFLECTION
Discriminator	10.7 MC	6BA6 2nd I-F Pin 1 & Chassis	.01 mf	FM	Rotor to Full Open	Disc. Pri. Note A
	10.7 MC	Same as above	.01 mf	FM	Same as above	Disc. Sec. Note B
	10.7 MC	Same as above	.01 mf	FM	Same as above	Disc. Pri. Note A
	10.7 MC	Same as above	.01 mf	FM	Same as above	Disc. Sec. Note B
I-F	10.7 MC	6BA6 1st IF Pin 1 & Chassis	.01 mf	FM	Same as above	2nd I-F Pri. 2nd I-F Sec. Note C
	10.7 MC	Unsolder lead from Pin 7 to band switch. Insert 100K ohm resistor between Pin 7 & Ground and feed signal into Pin 7 of 6BE6	.01 mf	FM	Same as above	1st I-F Pri. Note C
	10.7 MC	Same as above	.01 mf	FM	Same as above	1st I-F Sec. Note C
	RECHECK I-F ADJUSTMENTS IN ORDER GIVEN					
Ant. & Osc.	108.5 Note D	Disconnect built-in line antenna and connect generator to dipole terminals with resistor in series.	300 ohms	FM	Rotor to Full Open	Osc. C-38
	104.5	Same as above	300 ohms	FM	Tune rotor for max. AVC voltage	Ant. C-37
RECHECK ANTENNA & OSC. ADJUSTMENTS IN ORDER GIVEN						

FM ALIGNMENT NOTES

NOTE A—The zero center scale DC vacuum tube voltmeter is to be connected between chassis ground and the A.V.C. line at the 27 K. ohm resistor (R-11) and its junction with terminal strip. A signal of .1 volt must be fed into the receiver for this adjustment.
Note output voltage on the zero center DC vacuum tube voltmeter.

NOTE B—Disconnect zero center DC vacuum tube voltmeter from A.V.C. and connect it to the audio takeoff point at the 1 megohm resistor (R-14) and its junction with the terminal strip. Adjust for zero voltage indication.

NOTE C—Connect zero center DC vacuum tube voltmeter as in Note A. Adjust input to give same output on the zero center DC vacuum tube voltmeter as in Note A.

NOTE D—Remove the 100 K ohm load resistor and solder the lead from pin 7 of 6BE6 tube to the band switch before attempting to check the antenna and oscillator coil adjustments.

MODEL D2819E

WESTERN AUTO SUPPLY CO.

ALIGNMENT PROCEDURES

AM STAGES

Volume Control Maximum all Adjustments.

Connect Radio Chassis to Ground Post of Signal Generator with a Short Heavy Lead.

Allow Chassis and Signal Generator to "Heat Up" for Several Minutes.

The following is required for aligning:

An All Wave Signal Generator Which Will Provide an Accurately Calibrated Signal at the Test Frequencies as Listed.

Output Indicating Meter, Non-Metallic Screwdriver, Dummy Antennas — .1 mf, and 50 mmf.

SIGNAL GENERATOR					
FREQUENCY SETTING	CONNECTION AT RADIO	GROUND CONNECTION	DUMMY ANTENNA	GANG CONDENSER SETTING	ADJUST TUNING SLUGS AND TRIMMERS
455 KC	Control Grid 1st 6BA6 Pin No. 1	Chassis Base	.1 mf	Turn Rotor to Full Open	2nd I.F. C-14 & C-17
455 KC	Control Grid 6BE6 Pin No. 7 1st Det.	Same as above	.1 mf	Turn Rotor to Full Open	1st I.F. Pri. & Sec.
1620 KC	Control Grid 6BE6 Pin No. 7	Same as above	.1 mf	Turn Rotor to Full Open	Oscillator C-39
1400 KC	External Antenna Clip	Same as above	50 mmf	Turn Dial to 1400 KC. See Note A	Antenna C-35

NOTE A—Attach pointer to drive cord and position at 1400 KC mark on dial scale.

FM STAGES

Allow chassis and signal generator to warm up for several minutes. The following equipment is required for aligning:

An accurately calibrated signal generator providing unmodulated signals at the test frequencies listed below.

Non-metallic screwdriver.

Dummy Antennas and I-F Loading Resistor—.01 mf, 300 ohms and 100 K ohms.

Zero center scale DC vaccum tube voltmeter having a range of approximately 3 volts.

(If a zero center scale meter is not available, a standard scale vacuum tube voltmeter may be used by reversing the meter connections for negative readings.)

	SIGNAL GENERATOR			BAND SWITCH		ADJUSTMENT FOR MAX. METER DEFLECTION
	FREQUENCY SETTING	CONNECTION AT RADIO	DUMMY ANTENNA	SETTING	CONDENSER SETTING	
Discriminator	10.7 MC	6BA6 2nd I-F Pin 1 & Chassis	.01 mf	FM	Rotor to Full Open	Disc. Pri. Note A
	10.7 MC	Same as above	.01 mf	FM	Same as above	Disc. Sec. Note B
	10.7 MC	Same as above	.01 mf	FM	Same as above	Disc. Pri. Note A
	10.7 MC	Same as above	.01 mf	FM	Same as above	Disc. Sec. Note B
I-F	10.7 MC Note E	6BA6 1st IF Pin 1 & Chassis	.01 mf	FM	Same as above	2nd I-F Note C
	10.7 MC	Unsolder lead from Pin 7 to band switch. Insert 100K ohm resistor between Pin 7 & Ground and feed signal into Pin 7 of 6BE6	.01 mf	FM	Same as above	1st I-F Pri. Note C
	10.7 MC	Same as above	.01 mf	FM	Same as above	1st I-F Sec. Note C
	RECHECK I-F ADJUSTMENTS IN ORDER GIVEN					
Ant. & Osc.	108.5 Note D	Disconnect built-in line antenna and connect generator to dipole terminals with resistor in series.	300 ohms	FM	Rotor to Full Open	Osc. C-38
	104.5	Same as above	300 ohms	FM	Tune rotor for max. AVC voltage	Ant. C-37

RECHECK ANTENNA & OSC. ADJUSTMENTS IN ORDER GIVEN

FM ALIGNMENT NOTES

NOTE A—The zero center scale DC vacuum tube voltmeter is to be connected between chassis ground and the A.V.C. line at the 27 K. ohm resistor (R-11) and its junction with terminal strip. A signal of .1 volt must be fed into the receiver for this adjustment.
Note output voltage on the zero center DC vacuum tube voltmeter.

NOTE B—Disconnect zero center DC vacuum tube voltmeter from A.V.C. and connect it to the audio takeoff point at the 4.7 megohm resistor (R-14) and its junction with the terminal strip. Adjust for zero voltage indication.

NOTE C—Connect zero center DC vacuum tube voltmeter as in Note A. Adjust input to give same output on the zero center DC vacuum tube voltmeter as in Note A.

NOTE D—Remove the 100 K ohm load resistor and solder the lead from pin 7 of 6BE6 tube to the band switch before attempting to check the antenna and oscillator adjustments.

NOTE E—2nd I-F trimmers (AM) must be aligned before attempting to adjust 2nd I-F (FM) tuning slug.

WESTERN AUTO SUPPLY CO. MODEL D2819A

REPLACEMENT PARTS LIST

NOTICE: There is a Model Number label on the chassis. This label identifies the radio as to chassis, dial and issue letter. When ordering parts or writing, give ALL information appearing on this label.

MISCELLANEOUS

12A478	Speaker, 4" x 6" PM with Output Transformer
2A374	Band Change Switch
3A303	Molded Octal Tube Socket
3A304	Phono Socket - Single Pin
3A427	Tube Socket, Miniature (For AM-FM Converter Tube)
3A312	Tube Socket, Miniature
32X221	Tube Shield, Miniature
10A639	Knob, Tuning
10A640	Knob (Off-On-Volume)
10A641	Knob (Tone)
10A642	Knob (AM-FM-Phono)
13X546	Line Cord and Plug
76X1	Resistor-Capacitor Combination
55X318	Plastic Cabinet

CAPACITORS

C-1A, C-1B, C-1C, C-1D	14A198	Gang Condenser Assembly		
C-6, C-41	47X476	100 mmf		Molded
C-3	47X517	47 mmf		Ceramic
C-4	47X513	5 mmf		Ceramic
C-5	47X512	10 mmf		Ceramic
C-2	47X511	100 mmf		Ceramic
C-9, C-12, C-13, C-19, C-20	47X507	5000 mmf		Silvered Mica
C-8, C-10		Part of T-7 (1st I-F Trans. AM)		
C-7	D66103	.01 mf	400 V	Tubular
C-11		Part of T-6 (1st I-F Trans. FM)		
C-14, C-17		Part of T-9 (2nd I-F Trans. AM)		
C-15, C-16		Part of T-8 (2nd I-F Trans. FM)		
C-18A, C-18B		Part of 76X1 Resistor-Capacitor Combination		
C-21, C-23		Part of T-10 Discriminator Coil Assem.		
C-22	47X492	2700 mmf		Molded
C-24	47X510	470 mmf		Silvered Mica
C-25	45X361	5 mf	100 V	Dry Electrolytic
C-26A	45X360	40 mf	200 V	Dry Electrolytic
C-26B		40 mf	150 V	
C-26C		20 mf	25 V	
C-27	B66503	.05 mf	200 V	Tubular
C-28	47X471	68 mm		Molded
C-29	B66403	.04 mf	200 V	Tubular
C-30	D66502	.005 mf	400 V	Tubular
C-31	47X468	220 mmf		Ceramic
C-32	D66203	.02 mf	400 V	Tubular
C-33	B66402	.004 mf	200 V	Tubular
C-34	H66102	.001 mf	800 V	Tubular
C-35	17A123	1.5-12 mmf		Trimmer
C-36, C-37, C-39		Part of C-1 Gang Condenser		
C-38	17A247	3-12 mmf		Trimmer
C-40	47X508	500 mmf		Ceramic

RESISTORS

		Ohms	Watts	
R-1	B84223	22 K	0.5	Carbon
R-2	B84152	1500	0.5	Carbon
R-3, R-6	B84122	1200	0.5	Carbon
R-4	D84822	8200	2.0	Carbon
R-5, R-9	B83680	68	0.5	Carbon
R-7	B85225	2.2 meg	0.5	Carbon
R-8		47 K	Part of 76X1 Resistor—Capacitor Combination	
R-10	B85102	1000	0.5	Carbon
R-11	B84273	27 K	0.5	Carbon
R-12, R-13	B84682	6800	0.5	Carbon
R-14	B85105	1 meg	0.5	Carbon
R-15	D84102	1000	2.0	Carbon
R-16, R-21, R-23	B85474	470 K	0.5	Carbon
R-17	B84153	15 K	0.5	Carbon
R-18	36X347	.5 meg	Volume Control & Switch	
R-19	B85106	10 meg	0.5	Carbon
R-20	40X254	3 meg		Tone Control
R-24	B84271	270	0.5	Carbon

TRANSFORMERS AND COILS

L-1	9A1882	Filament Choke Assembly
L-2	9A1940	Parasitic Choke Assembly
L-3	9A1930	Line Choke Assembly
T-1	9A1931	"B" Range Loop Antenna Assembly
T-3	9A1937	Antenna Coil Assembly
T-4	9A1938	Oscillator Coil Assembly (FM)
T-5	9A1929	Oscillator Coil Assembly (AM)
T-6	9A1932	1st I.F. Transformer (FM)
T-7	9A1934	1st I.F. Transformer (AM)
T-8	9A1933	2nd I.F. Transformer (FM)
T-9	9A1935	2nd I.F. Transformer (AM)
T-10	9A1936	Discriminator Coil Assembly
T-11	53X291	Power Transformer
T-12		Output Transformer (See Miscellaneous)

DIAL AND DRIVE ASSEMBLY

15X236	Pointer	
6X21	Rubber Grommet	Mtg. Gang Condenser
20X260	Condenser Cushion Stud	Mtg. Gang Condenser
10X68	Drive Cord Assembly	
19X192	"C" Washer	
26X506	Drive Shaft	
58X698	Dial Scale	
17X96	Dial Crystal	
7A103	No. 47 Pilot Light	
7A216	Pilot Light Socket Assembly	
25X1573	Dial Bracket	
25A1044	Diffuser and Clamp Assembly	
28X113	Drive Cord Tension Spring	

MODEL D2819C WESTERN AUTO SUPPLY CO.

REPLACEMENT PARTS LIST

NOTICE: There is a Model Number label on the chassis. This label identifies the radio as to chassis, dial and issue letter. When ordering parts or writing, give ALL information appearing on this label.

MISCELLANEOUS

12A478	Speaker, 4" x 6" PM with Output Transformer
2A374	Band Change Switch
3A303	Molded Octal Tube Socket
3A305	Phono Socket - Single Pin
3A427	Tube Socket, Miniature (For AM-FM Converter Tube)
3A426	Tube Socket, Miniature
32X386	Tube Shield, Miniature
10A683	Knob, Tuning
10A684	Knob (Off-On-Volume)
10A685	Knob (Tone)
10A686	Knob (AM-FM-Phono)
13X546	Line Cord and Plug
76X1	Resistor-Capacitor Combination
55X318	Plastic Cabinet

CAPACITORS

C-1A, C-1B, C-1C, C-1D	14A204	Gang Condenser Assembly		
C-2	47X511	100 mmf		Ceramic
C-3	47X517	47 mmf		Ceramic
C-4	47X523	10 mmf		Ceramic
C-5	47X512	10 mmf		Ceramic
C-6	47X463	47 mmf		Ceramic
C-9, C-12, C-13, C-19, C-20	47X507	5000 mmf		Silvered Ceramic
C-8, C-10		Part of T-7 (1st I-F Trans. AM)		
C-7	D66103	.01 mf	400 V	Tubular
C-11		Part of T-6 (1st I-F Trans. FM)		
C-14, C-17		Part of T-9 (2nd I-F Trans. AM)		
C-15, C-16		Part of T-8 (2nd I-F Trans. FM)		
C-18A, C-18B		Part of 76X1 Resistor-Capacitor Combination		
C-21, C-23		Part of T-10 Discriminator Coil Assem.		
C-22	47X492	2700 mmf		Molded
C-24	47X510	470 mmf		Silvered Mica
C-25	45X361	5 mf	100 V	Dry Electrolytic
C-26A	45X360	40 mf	200 V	Dry Electrolytic
C-26B		40 mf	150 V	
C-26C		20 mf	25 V	
C-27	B66503	.05 mf	200 V	Tubular
C-28	47X471	68 mmf		Molded
C-29	B66403	.04 mf	200 V	Tubular
C-30	D66502	.005 mf	400 V	Tubular
C-31	47X468	220 mmf		Ceramic
C-32	D66203	.02 mf	400 V	Tubular
C-33	B66402	.004 mf	200 V	Tubular
C-34	H66102	.001 mf	800 V	Tubular
C-35	17A256	2-24 mmf		Trimmer
C-36, C-37, C-39		Part of C-1 Gang Condenser		
C-38	26A489	1-8 mmf		Trimmer Assy.
C-40	47X508	500 mmf		Ceramic
C-41	47X476	100 mmf		Molded
C-42	47X521	6 mmf		Ceramic
C-43	47X522	12 mmf		Ceramic

RESISTORS

		Ohms	Watts	
R-1	B84223	22 K	0.5	Carbon
R-2	B84152	1500	0.5	Carbon
R-3, R-6	B84122	1200	0.5	Carbon
R-4	D84822	8200	2.0	Carbon
R-5, R-9	B83680	68	0.5	Carbon
R-7	B85225	2.2 meg	0.5	Carbon
R-8		47 K		Part of 76X1 Resistor—Capacitor Combination
R-10	B84102	1000	0.5	Carbon
R-11	B84273	27 K	0.5	Carbon
R-12, R-13	B84682	6800	0.5	Carbon
R-14	B85105	1 meg	0.5	Carbon
R-15	D84102	1000	2.0	Carbon
R-16, R-21, R-23	B85474	470 K	0.5	Carbon
R-17	B84153	15 K	0.5	Carbon
R-18	36X347	.5 meg		Volume Control & Switch
R-19	B85106	10 meg	0.5	Carbon
R-20	40X287	3 meg		Tone Control
R-24	B84271	270	0.5	Carbon

TRANSFORMERS AND COILS

L-1, L-4	9A1882	Choke Assembly
L-2	9A1940	Parasitic Choke Assembly
L-3	9A1930	Line Choke Assembly
T-1	9A1931	"B" Range Loop Antenna Assembly
T-3	9A1956	Antenna Coil Assembly
T-4	9A1938	Oscillator Coil Assembly (FM)
T-5	9A1929	Oscillator Coil Assembly (AM)
T-6	9A1932	1st I.F. Transformer (FM)
T-7	9A1934	1st I.F. Transformer (AM)
T-8	9A1933	2nd I.F. Transformer (FM)
T-9	9A1935	2nd I.F. Transformer (AM)
T-10	9A1936	Discriminator Coil Assembly
T-11	53X291	Power Transformer
T-12		Output Transformer (See Miscellaneous)

DIAL AND DRIVE ASSEMBLY

15X236	Pointer	
6X21	Rubber Grommet	Mtg. Gang Condenser
20X260	Condenser Cushion Stud	Mtg. Gang Condenser
10X68	Drive Cord Assembly	
19X192	"C" Washer	
26X506	Drive Shaft	
58X698	Dial Scale	
17X96	Dial Crystal	
7A103	No. 47 Pilot Light	
7A216	Pilot Light Socket Assembly	
25X1573	Dial Bracket	
25A1044	Diffuser and Clamp Assembly	
28X113	Drive Cord Tension Spring	

WESTERN AUTO SUPPLY CO. MODEL D2819E

REPLACEMENT PARTS LIST

NOTICE: There is a model number label on the chassis. This label identifies the radio as to chassis, dial and issue letter. When ordering parts or writing, give ALL information on this label.

MISCELLANEOUS

12A478	Speaker, 4" x 6" PM with Output Transformer	
2A374	Band Change Switch	
3A303	Molded Octal Tube Socket	
3A305	Phono Socket - Single Pin	
3A427	Tube Socket, Miniature (For AM-FM Converter Tube)	
3A426	Tube Socket, Miniature	
10A683	Knob, Tuning	
10A684	Knob (Off-On-Volume)	
10A685	Knob (Tone)	
10A686	Knob (AM-FM-Phono)	
13X612	Line Cord and Plug	
55X318	Plastic Cabinet	

CAPACITORS

C-1A, C-1B, C-1C, C-1D	14A204	Gang Condenser Assembly			
C-2	47X511	100 mmf		Ceramic	
C-3	47X517	47 mmf		Ceramic	
C-4	47X523	10 mmf		Ceramic	
C-5	47X512	10 mmf		Ceramic	
C-6	47X476	100 mmf		Ceramic	
C-7	D66103	.01 mf	400 V	Tubular	
C-8, C-10	Part of T-7 (1st I.F. Trans. AM)				
C-7, C-13, C-15, C-20	47X507	5000 mmf		Silvered Ceramic	
C-11	Part of T-6 (1st I.F. Trans. FM)				
C-14, C-17	Part of T-8 (2nd I.F. Trans. AM-FM)				
C-16	47X463	47 mmf		Ceramic	
C-18A, C-18B	47X112	50-50 mmf		Dual Mica	
C-19	47X529	330 mmf		Silvered Ceramic	
C-22	47X492	2700 mmf		Molded	
C-23	Part of T-10 (Discriminator Coil Assembly)				
C-25	45X361	5 mf	100 V	Dry Electrolytic	
C-26A	45X360	40 mf	200 V	Dry Electrolytic	
C-26B		40 mf	150 V		
C-26C		20 mf	25 V		
C-27	B66503	.05 mf	200 V	Tubular	
C-28	47X471	68 mmf		Molded	
C-29	B66403	.04 mf	200 V	Tubular	
C-30	D66502	.005 mf	400 V	Tubular	
C-31	47X468	220 mmf		Ceramic	
C-32	D66203	.02 mf	400 V	Tubular	
C-33	B66402	.004 mf	200 V	Tubular	
C-34	H66102	.001 mf	800 V	Tubular	
C-35	17A256	2-24 mmf		Trimmer	
C-37, C-39	Part of C-1 Gang Condenser				
C-38	26A489	1-8 mmf		Trimmer Assy.	
C-40	47X508	500 mmf		Ceramic	
C-42	47X521	6 mmf		Ceramic	
C-43	47X522	12 mmf		Ceramic	

RESISTORS

		Ohms	Watts		
R-1	B84223	22 K	0.5	Carbon	
R-2	B84152	1500	0.5	Carbon	
R-3, R-6	B84122	1200	0.5	Carbon	
R-4	D84822	8200	2.0	Carbon	
R-5	B83680	68	0.5	Carbon	
R-7, R-9	B85225	2.2 meg	0.5	Carbon	
R-8	B85473	47 K	0.5	Carbon	
R-10	B84102	1000	0.5	Carbon	
R-11	B84273	27 K	0.5	Carbon	
R-12, R-13, R-17	B84153	15 K	0.5	Carbon	
R-14	B85475	4.7 meg.	0.5	Carbon	
R-15	D84102	1000	2.0	Carbon	
R-16	Part of T-8 (2nd I-F Trans. AM-FM)				
R-18	36X347	.5 meg		Volume Control & Switch.	
R-19	B85106	10 meg	0.5	Carbon	
R-20	40X287	3 meg		Tone Control	
R-21, R-23	B85474	470 K	0.5	Carbon	
R-22	43X233	3.6	0.5	Wire Wound	
R-24	B84271	270	0.5	Carbon	
R-25	B84681	680	0.5	Carbon	

TRANSFORMERS AND COILS

L-1, L-4	9A1882	Choke Assembly
L-2	9A1940	Parasitic Choke Assembly
T-1	9A1931	"B" Range Loop Antenna Assembly
T-3	9A1956	Antenna Coil Assembly
T-4	9A1938	Oscillator Coil Assembly (FM)
T-5	9A1929	Oscillator Coil Assembly (AM)
T-6	9A1932	1st I.F. Transformer (FM)
T-7	9A1934	1st I.F. Transformer (AM)
T-8	9A1973	2nd I.F. Transformer (AM-FM)
T-10	9A1970	Discriminator Coil Assembly
T-11	53X291	Power Transformer
T-12		Output Transformer (See Miscellaneous)

DIAL AND DRIVE ASSEMBLY

15X236	Pointer	
6X21	Rubber Grommet	Mtg. Gang Condenser
20X260	Condenser Cushion Stud	Mtg. Gang Condenser
10X68	Drive Cord Assembly	
19X192	"C" Washer	
26X506	Drive Shaft	
58X698	Dial Scale	
17X96	Dial Crystal	
7A103	No. 47 Pilot Light	
7A216	Pilot Light Socket Assembly	
25X1573	Dial Bracket	
25A1044	Diffuser and Clamp Assembly	
28X113	Drive Cord Tension Spring	

WESTERN AUTO SUPPLY CO. MODEL D2819E

REPLACEMENT PARTS LIST

NOTICE: There is a model number label on the chassis. This label identifies the radio as to chassis, dial and issue letter. When ordering parts or writing, give ALL information on this label.

MISCELLANEOUS

12A478	Speaker, 4" x 6" PM with Output Transformer
2A374	Band Change Switch
3A303	Molded Octal Tube Socket
3A305	Phono Socket - Single Pin
3A427	Tube Socket, Miniature (For AM-FM Converter Tube)
3A426	Tube Socket, Miniature
10A683	Knob, Tuning
10A684	Knob (Off-On-Volume)
10A685	Knob (Tone)
10A686	Knob (AM-FM-Phono)
13X612	Line Cord and Plug
55X318	Plastic Cabinet

CAPACITORS

C-1A, C-1B, C-1C, C-1D	14A204	Gang Condenser Assembly		
C-2	47X511	100 mmf		Ceramic
C-3	47X517	47 mmf		Ceramic
C-4	47X523	10 mmf		Ceramic
C-5	47X512	10 mmf		Ceramic
C-6	47X476	100 mmf		Ceramic
C-7	D66103	.01 mf	400 V	Tubular
C-8, C-10	Part of T-7 (1st I.F. Trans. AM)			
C-9, C-13, C-15, C-20	47X507	5000 mmf		Silvered Ceramic
C-11	Part of T-6 (1st I.F. Trans. FM)			
C-14, C-17	Part of T-8 (2nd I.F. Trans. AM-FM)			
C-16	47X463	47 mmf		Ceramic
C-18A, C-18B	47X112	50-50 mmf		Dual Mica
C-19	47X529	330 mmf		Silvered Ceramic
C-22	47X492	2700 mmf		Molded
C-23	Part of T-10 (Discriminator Coil Assembly)			
C-25	45X361	5 mf	100 V	Dry Electrolytic
C-26A	45X360	40 mf	200 V	Dry Electrolytic
C-26B		40 mf	150 V	
C-26C		20 mf	25 V	
C-27	B66503	.05 mf	200 V	Tubular
C-28	47X471	68 mmf		Molded
C-29	B66403	.04 mf	200 V	Tubular
C-30	D66502	.005 mf	400 V	Tubular
C-31	47X468	220 mmf		Ceramic
C-32	D66203	.02 mf	400 V	Tubular
C-33	B66402	.004 mf	200 V	Tubular
C-34	H66102	.001 mf	800 V	Tubular
C-35	17A256	2-24 mmf		Trimmer
C-37, C-39	Part of C-1 Gang Condenser			
C-38	26A489	1-8 mmf		Trimmer Assy.
C-40	47X508	500 mmf		Ceramic
C-42	47X521	6 mmf		Ceramic
C-43	47X522	12 mmf		Ceramic

RESISTORS

		Ohms	Watts	
R-1	B84223	22 K	0.5	Carbon
R-2	B84152	1500	0.5	Carbon
R-3, R-6	B84122	1200	0.5	Carbon
R-4	D84822	8200	2.0	Carbon
R-5	B83680	68	0.5	Carbon
R-7, R-9	B85225	2.2 meg	0.5	Carbon
R-8	B85473	47 K	0.5	Carbon
R-10	B84102	1000	0.5	Carbon
R-11	B84273	27 K	0.5	Carbon
R-12, R-13, R-17	B84153	15 K	0.5	Carbon
R-14	B85475	4.7 meg.	0.5	Carbon
R-15	D84102	1000	2.0	Carbon
R-16	Part of T-8 (2nd I-F Trans. AM-FM)			
R-18	36X347	.5 meg		Volume Control & Switch.
R-19	B85106	10 meg	0.5	Carbon
R-20	40X287	3 meg		Tone Control
R-21, R-23	B85474	470 K	0.5	Carbon
R-22	43X233	3.6	0.5	Wire Wound
R-24	B84271	270	0.5	Carbon
R-25	B84681	680	0.5	Carbon

TRANSFORMERS AND COILS

L-1, L-4	9A1882	Choke Assembly
L-2	9A1940	Parasitic Choke Assembly
T-1	9A1931	"B" Range Loop Antenna Assembly
T-3	9A1956	Antenna Coil Assembly
T-4	9A1938	Oscillator Coil Assembly (FM)
T-5	9A1929	Oscillator Coil Assembly (AM)
T-6	9A1932	1st I.F. Transformer (FM)
T-7	9A1934	1st I.F. Transformer (AM)
T-8	9A1973	2nd I.F. Transformer (AM-FM)
T-10	9A1970	Discriminator Coil Assembly
T-11	53X291	Power Transformer
T-12		Output Transformer (See Miscellaneous)

DIAL AND DRIVE ASSEMBLY

15X236	Pointer	
6X21	Rubber Grommet	Mtg. Gang Condenser
20X260	Condenser Cushion Stud	Mtg. Gang Condenser
10X68	Drive Cord Assembly	
19X192	"C" Washer	
26X506	Drive Shaft	
58X698	Dial Scale	
17X96	Dial Crystal	
7A103	No. 47 Pilot Light	
7A216	Pilot Light Socket Assembly	
25X1573	Dial Bracket	
25A1044	Diffuser and Clamp Assembly	
28X113	Drive Cord Tension Spring	

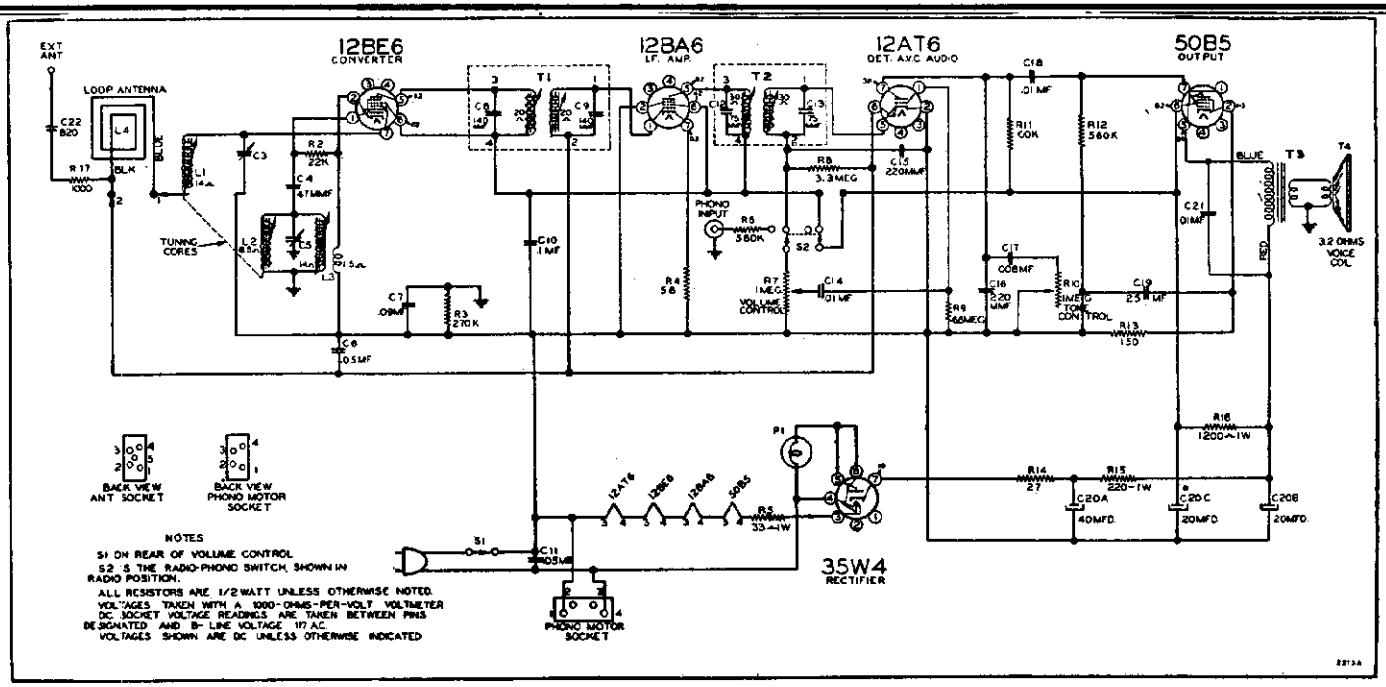

On some sets a 100M ohm resistor is in series with the high side of volume control. On some sets R5 is eliminated.

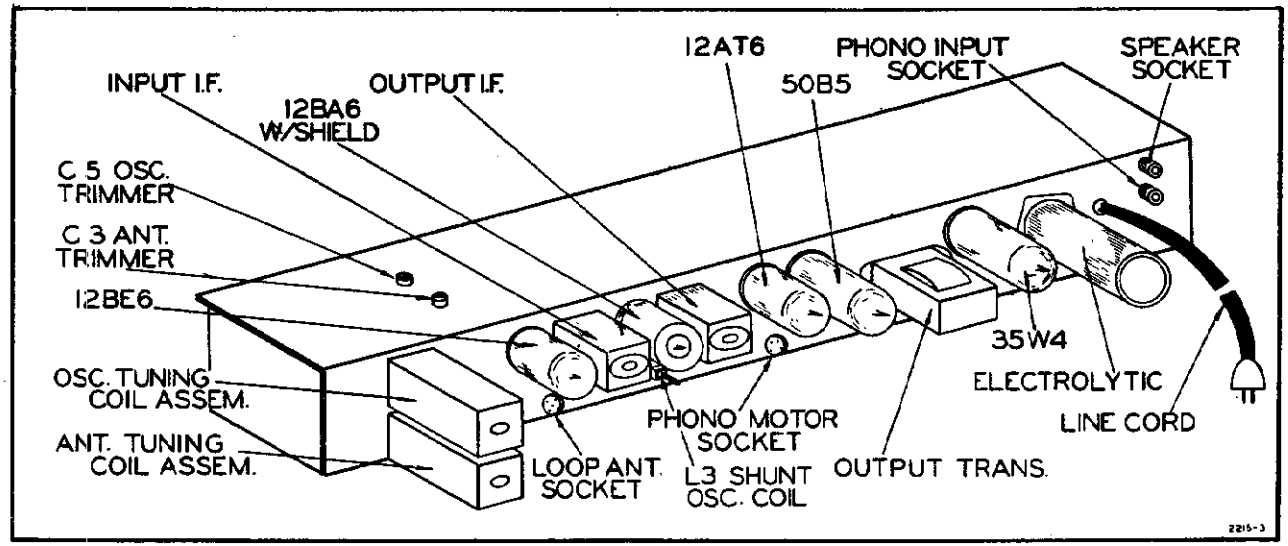

SIGNAL GENERATOR				TUNER SETTING	ADJUST FOR MAXIMUM OUTPUT	INPUT FOR 50 MILLIWATT OUTPUT
Frequency	*Coupling Capacitor*	*Connection to Radio*	*Ground Connection*			
455 kc.	.1 mf.	12BE6, Pin 7	12AT6, Pin 2	Iron cores all the way out	Cores in output and input I.F. cans	28 microvolts
1620 kc.	.1 mf.	12BE6, Pin 7	12AT6, Pin 2	Iron cores all the way out	Oscillator trimmer C5	———
535 kc.	200 mmf	External antenna clip	12AT6, Pin 2	Iron cores all the way in	Shunt osc. coil L3	11 microvolts
1620 kc.	200 mmf	External antenna clip	12AT6, Pin 2	1620 kc.	Antenna trimmer C3*	8 microvolts
1400 kc.	200 mmf	External antenna clip	12AT6, Pin 2	1400 kc.	Adjust position of ant. core (see coil illustration view)	8 microvolts
400 cycles	.1 mf.	12AT6, Pin 1	12AT6, Pin 2	———	———	.03 volts

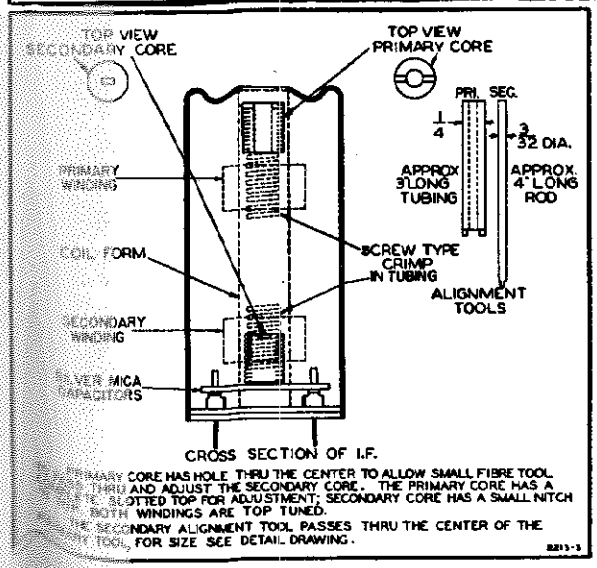

PRIMARY CORE HAS HOLE THRU THE CENTER TO ALLOW SMALL FIBRE TOOL TO BE INSERTED THRU AND ADJUST THE SECONDARY CORE. THE PRIMARY CORE HAS A SCREW DRIVER SLOTTED TOP FOR ADJUSTMENT; SECONDARY CORE HAS A SMALL NITCH FOR ADJUSTMENT. BOTH WINDINGS ARE TOP TUNED.
THE SECONDARY ALIGNMENT TOOL PASSES THRU THE CENTER OF THE PRIMARY CORE. FOR SIZE SEE DETAIL DRAWING.

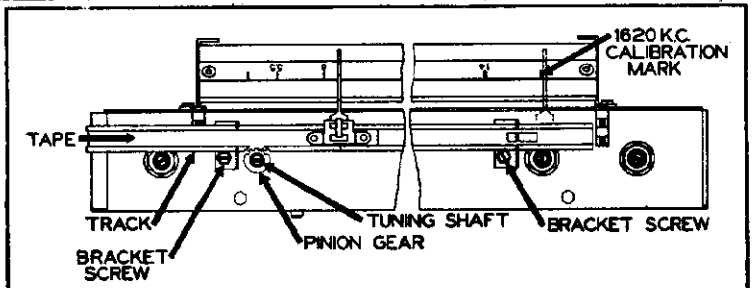

POINTER ADJUSTMENT

ROTATE TUNING SHAFT FULLY CLOCKWISE SO THAT POINTER IS AT RIGHT SIDE OF DIAL. LOOSEN BRACKET SCREWS AND LIFT UP TRACK. SLIDE POINTER SO THAT LEFT EDGE OF THE POINTER COINCIDES WITH RIGHT EDGE OF 1620 K.C. CALIBRATION MARK.

PULL TRACK DOWN SO THAT TAPE TEETH ENGAGE PINION GEAR AND TIGHTEN BRACKET SCREWS. CAREFULL ADJUSTMENT OF TAPE PRESSURE ON PINION GEAR TEETH WILL GIVE A SMOOTH MOTION TO THE TUNING SHAFT. IF IT FEELS "GEARY" DECREASE PRESSURE OF TAPE ON GEAR TEETH SLIGHTLY. IF THERE IS LOST MOTION BETWEEN TAPE TEETH AND GEAR TEETH INCREASE PRESSURE SLIGHTLY.

DWG. Nº 2215-2

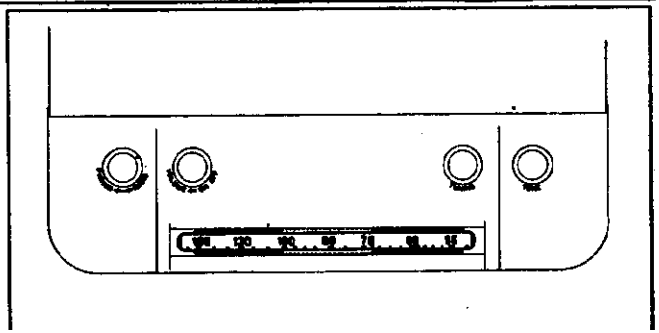

Complement....12BE6, converter
12BA6, I.F. amplifier.
12AT6, detector, AVC, audio amplifier.
50B5, output amplifier.
35W4, rectifier.
Pilot lite, 6-8 volts, T-47.

Ref. No.	Part No.	Description	Qty. Used In Set
		COILS AND TRANSFORMERS	
T1, C8, 9	B-13A-13071	Input I.F. coil	1
T2, C12, 13	B-13B-13072	Output I.F. coil	1
L4	C-13E-13305-1	Loop antenna assembly	1
L3	B-13D-12371	Osc. shunt coil assembly	1
L2	A-23D-12667	Osc. tuning coil	1
L1	A-13E-12668	Antenna tuning coil	1
T3	B-12C-12356	Output transformer for speaker	1
		SPEAKER	
T4	B-18A-13369	4"x 6", P.M. speaker, less output transformer	1
		PHONO PARTS	
	D-21H-12439	Record changer, Detrola 650	1
	L70	Crystal cartridge,	1
		DIAL AND TUNING PARTS	
	B-30A-13408	Dial scale	1
	B-5B-13391-60	Knob	4
	A-2G-13404	Pointer	1
	B-2J-13292	Rack tape, with teeth and pointer bracket	1
	A-200-13288	Tuning shaft assembly	1
	B-6B-13407	Diffuser	1
	B-2M-7758	Snap-pin rivets to fasten diffuser	4
	A-47A-13468	Pilot lite and bracket assembly	1
P1	A-46A-10793	Pilot lite bulb, 6-8 volt, type T-47	1
	5C-13400	Escutcheon	1
		MISCELLANEOUS	
	A-15C-10717	Miniature 7 prong tube socket	5
	B-15B-10076	Mounting plate for lytic	1
	A-19B-12644	Phono motor socket	1
	A-19B-12645	Loop antenna socket	1
	A-19B-12170	Speaker socket	1
	A-19B-11044	Pick-up socket	1
	A-23A-10344	Line cord lock	1
S2	A-20A-12653	Radio-phono switch	1

Ref. No.	Part No.	Description	
		CONDENSERS	
C20A, B, C	A-8C-10077 or	40 mf; 20 mf; 20 mf; 150 volts Electrolytic filter condenser	1
	A-8C-10937	40 mf; 20 mf; 20 mf; 150 volts Electrolytic filter condenser	1
C3, 5	A-2M-12618	Trimmer plate	2
	A-6M-12616	Insulator for trimmer	2
C3	A-2M-14054	Trimmer plate	1
	A-6M-14203	Insulator for trimmer (laminated)	1
C10	C-8D-10771	.1 mf x 200 volts, 20%	1
C14, 18, 21	C-8D-10761	.01 mf x 400 volts, 20%	3
C11	C-8D-10813	.05 mf x 400 volts, 20%	1
C6	C-8D-10770	.05 mf x 200 volts, 20%	1
C7	C-8D-11251	.89 mf x 400 volts, 10%	1
C17	C-8D-12243	.006 mf x 600 volts, 10%	1
C19	A-8C-11678	Electrolytic condenser, 25 mf x 25 volts	1
C15, C16	C-8G-11733	220 mmf x 500 volts, 20%	2
C22	C-8F3-124	820 mmf x 300 volts, 10%, mica	1
C4	C-8G-12198	47 mmf, 10%, ceramic	1
		RESISTORS	
R7, S1	A-10A-12654	Volume (1 megohm) control and switch	1
R10	A-11B-12659	Tone control, 1 megohm	1
R3	C-9B1-91	270K ohms, ½ watt, 10%	1
R4	C-9B1-47	56 ohms, ½ watt, 10%	1
R14	C-9B1-43	27 ohms, ½ watt, 10%	1
R5	C-9B2-44	33 ohms, 1 watt, 10%	1
R11	C-9B1-86	100K ohms, ½ watt, 10%	1
R13	C-9B1-52	150 ohms, ½ watt, 10%	1
R15	C-9B2-54	220 ohms, 1 watt, 10%	1
R16	C-9B2-63	1200 ohms, 1 watt, 10%	1
R2	C-9B1-78	22K ohms, ½ watt, 10%	1
R17	C-9B1-62	1000 ohms, ½ watt, 10%	1
R6, R12	C-9B1-95	560K ohms, ½ watt, 10%	2
R8	C-9B1-34	3.3 megohms, ½ watt, 20%	1
R9	C-9B1-36	6.8 megohms, ½ watt, 20%	1

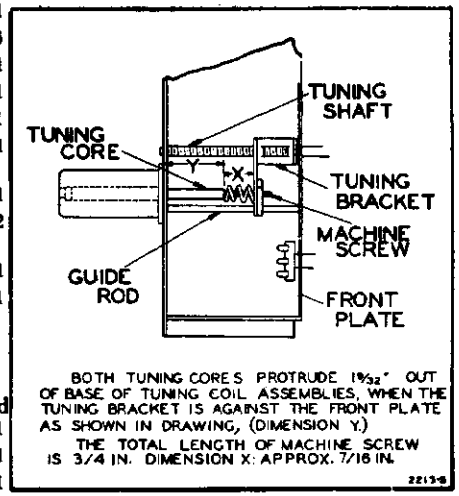

BOTH TUNING CORES PROTRUDE 19/32" OUT OF BASE OF TUNING COIL ASSEMBLIES, WHEN THE TUNING BRACKET IS AGAINST THE FRONT PLATE AS SHOWN IN DRAWING, (DIMENSION Y.)
THE TOTAL LENGTH OF MACHINE SCREW IS 3/4 IN. DIMENSION X: APPROX. 7/16 IN.
22134

WESTERN AUTO SUPPLY CO.

MODELS D2906, D2907

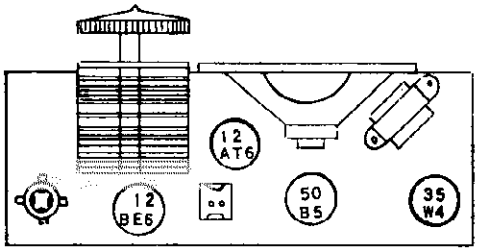

Remove back to replace tubes

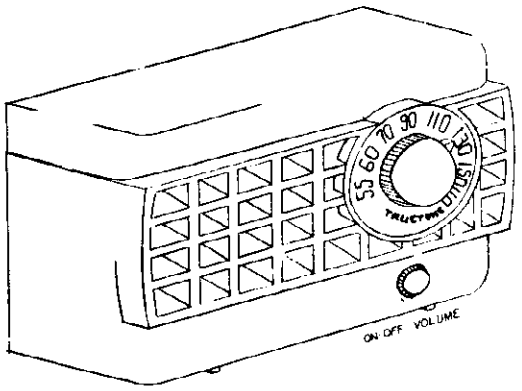

ELECTRICAL SPECIFICATIONS

Power Supply	105-125 Volts D.C. or 50-60 Cycles A.C. 30 Watts
Frequency Range	532.5 to 1620 kc.
Intermediate Freq.	455 kc.
Tuning	Two gang capacitor
Speaker	4 inch PM 3.5 ohm voice coil impedance
Power Output	1 watt undistorted 1.5 watt maximum
Sensitivity	800 Microvolts at 50 milli-watts Output
Selectivity	120 kc broad at 1000 times signal at 1000 kc.

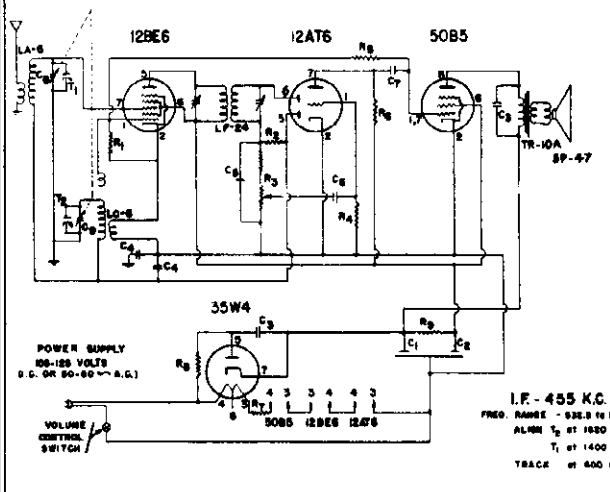

CHASSIS SERIES "AG"

REPLACEMENT PARTS LIST

Ref. No.	*Part No.*	*Description*
		CAPACITORS
C1, C2	CE-15	2 x 40 mfd V. Elect
C3	CP203-1	.02 mfd 400V paper cond.
C4	CP503-4	.05 mfd 200V paper cond.
C5	CM151-1	.00015 mfd 500V paper cond.
C6	CP202-2	.002 mfd 400V paper cond.
C7	CP502-3	.005 mfd 200V paper cond.
C8, C9	CV-14	Variable Condenser (2 gang)
		RESISTORS
R1	RC183-2	18,000 ohms ½W 10%
R2	RC475-1	4.7 megohms ½W 20%
R3	VC-11	2 meg. vol. cont., 100 K Stop
R4	RC106-1	10 megohms ½W 20%
R5	RC334-1	330,000 ohms ½W 20%
R6	RC224-1	220,000 ohms ½W 20%
R7	RC390-4	39 ohms 1W 20%
R8	RC180-1	18 ohms ½W 20%
R9	RC222-4	2200 ohms 1W 20%
		COILS & TRANSFORMERS
	LA-5	Antenna Coil
	LC-6	Oscillator Coil
	LF-24	I.F. Transformer
	TR-10	Output Transformer
		MISCELLANEOUS
	CB-106	Cabinet (specify Ivory or Walnut)
	KN-20	Knob
	KN-21	Pointer Knob
	SP-45	4" PM Speaker

ALIGNMENT PROCEDURE

- Output meter across 3.5 ohm output load.
- Volume control at maximum for all adjustments.
- Align for maximum output. Reduce input as needed to keep output near 0.4 volts.

SIGNAL GENERATOR				*SETTING TUNER*	*ADJUST TRIMMERS TO MAXIMUM OUTPUT (in order shown)*
Frequency	*Coupling Factor*	*Connection to Receiver*	*Ground Connection*		
455 kc	.1 mfd	12BE6 Grid	B—	Rotor full open (Plates out of mesh)	Input and output trimmers on IF cans
1620 kc	.1 mfd	12BE6 Grid	B—	Rotor full open (Plates out of mesh)	Oscillator trimmer T2
1400 kc	75 mmf	Hank	B—	1400 kc	Antenna trimmer T1

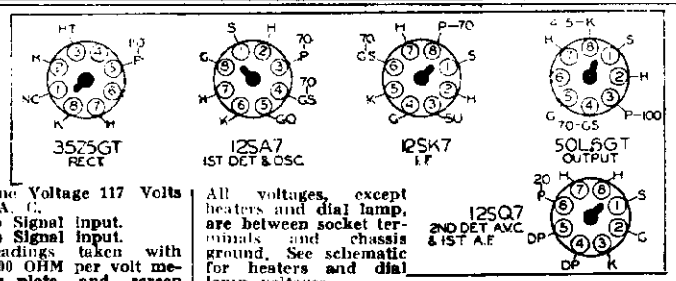

Line Voltage 117 Volts A. C.
No Signal input.
No Signal input.
Readings taken with 1000 OHM per volt meter plate and screen voltages read on 500 volt scale.

All voltages, except heaters and dial lamp, are between socket terminals and chassis ground. See schematic for heaters and dial lamp voltages.

E. W. Mc2910 818



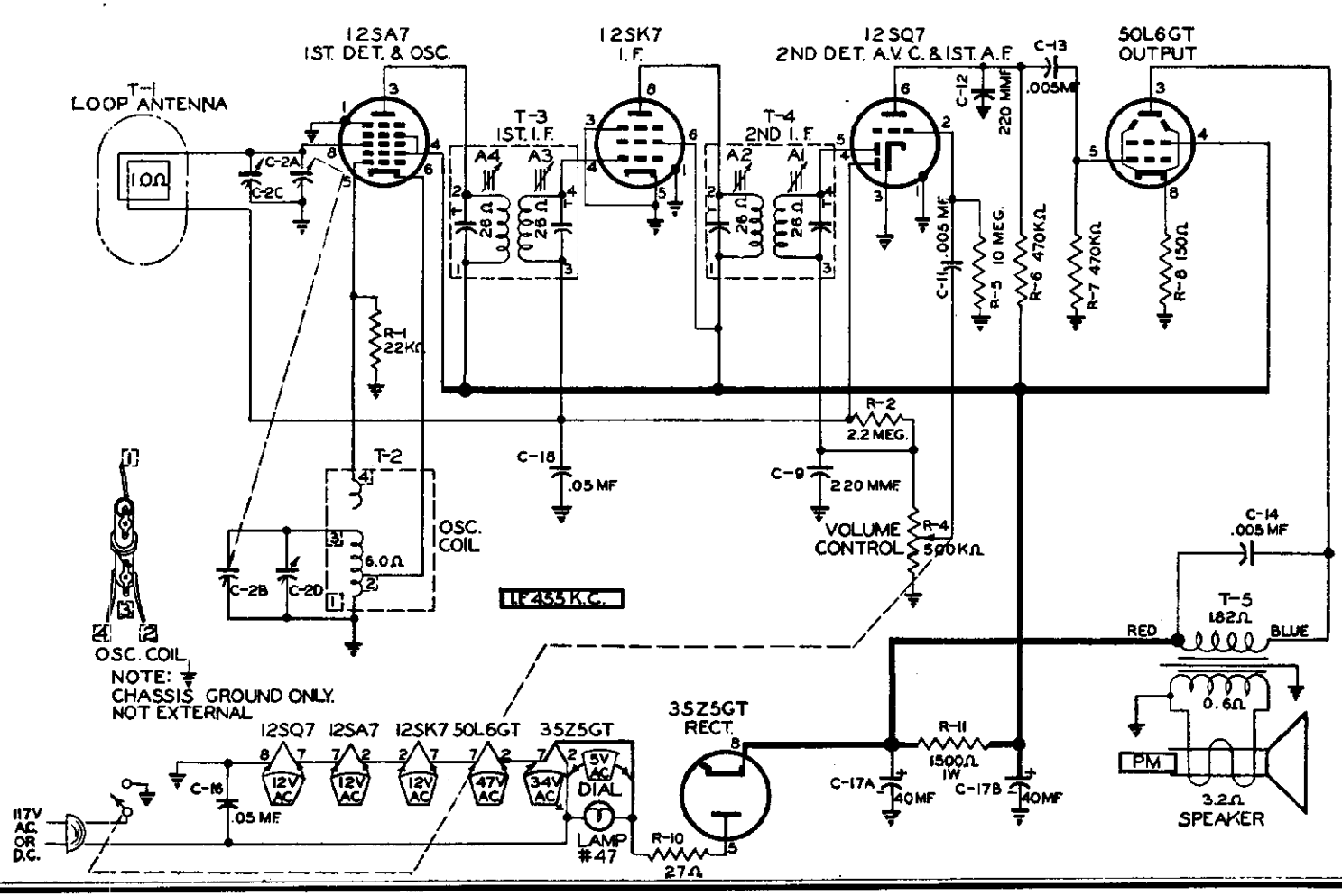

WESTERN AUTO SUPPLY CO.

MODEL D2910

SPECIFICATIONS

5 Tube Superheterodyne, including Rectifier Tube

Tuning Frequency Range ..... 540 to 1600 KC

Power Consumption ..... 30 watts (At 117 volts AC

Power Output ..... 1.5 watt maximum, 9 watt (10% distortion)

Intermediate Frequency ..... 455 KC

Speaker ..... 5" PM Dynamic

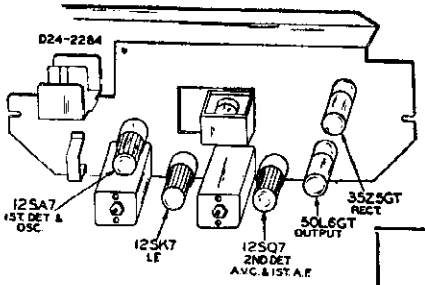

CHECK YOUR LINE VOLTAGE

Unless otherwise marked, this radio must be operated on a power supply of 105-125 volts AC, 50 to 60 cycles only, or 105-125 volts DC.

ALIGNMENT PROCEDURE

Volume Control—Maximum All Adjustjustments.

Allow Chassis and Signal Generator to "Heat Up" for several Minutes.

The equipment in column at right is requqired for aligning:

Signal Generator which will provide an accurately calibrated signal at the test frequencies as listed.

Output Indicating Meter: Non-Metalic Screwdriver.

Dummy Antennas—.1 mf., 50 mmf.

Blocking Condenser—.1 mf.

SIGNAL GENERATOR				GANG	ADJUST TRIMMERS TO MAXIMUM
FREQUENCY SETTING	ANTENNA CONNECTION	GROUND CONNECTION	DUMMY ANTENNA	CONDENSER SETTING	(See Trimmer Illustration)
455 K C	Control Grid 12SK7—I. F. Prong No. 4	Chassis Base Through .1 mf. Condenser	.1 mf.	Turn Rotor to full open	2nd I. F. A2 & A1
455 K C	Control Grid 12SA7—1st Det. Prong No, 8	Same As Above	.1 mf.	Turn Rotor to full open	1st I. F. A4 & A3
1620 KC	Control Grid 12SA7—1st Det. Prong No, 8	Same As Above	.1 mf.	Turn Rotor to full open	Oscillator (C-2D)
1400 KC	Reassemble chassis in cabinet See Note B	Same As Above	50 mmf.	Set pointer to 1400 KC. See Note A	Antenna (C-2C)

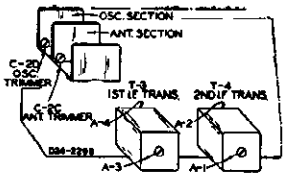

NOTE—Attach pointer to drive cord and position at 1400 KC mark on dial scale.

NOTE B—Wind 2 turn loop of heavy enameled wire 6" diameter connect to signal generator Place loop of wire 6" from loop on set and in the same plane.

DRIVE CORD REPLACEMENT

Turn the large drive pulley to the fully closed position. Use a new 10x66 drive cord assembly or a piece of cord 43 inches long and fasten one end to the tension spring and fasten the other end of the spring to the drive pulley. Install the cord as shown in the illustration. Wind 2¾ turns counterclockwise around the tuning shaft with the turns progressing toward the front of the chassis. After string is installed, stretch the tension spring and fasten free end of cord to spring.

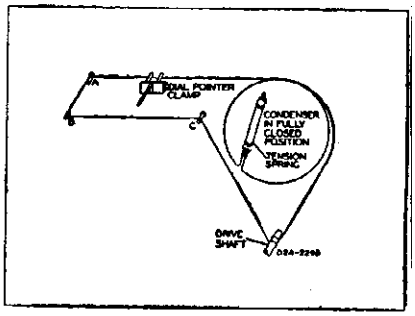

Replacement Parts List

MISCELLANEOUS

2A479	5" PM Speaker	
3A435	Molded Octal Tube Socket	
55X321	Cabinet, Plastic	
14x411	Grille Cloth	
10A297	Knob	
13x328	Line Cord and Plug Assembly.	

TRANSFORMERS AND COILS

T-1	9A1943	Loop Antenna Assembly
T-2	9A1914	Oscillat r Coil Assembly
T-3	X-1295	1st I-F Trans. Assembly
T-4	X-1296	2nd I-F Trans. Assembly
T-5	X-507	Output Transformer

CAPACITATORS

C-2A, C-2B		
C-2C, C-2D	14A199	Gang Condenser Assembly
C-9, C-12	47x468	220 mmfd
C-11, C13	B66502	.005 mf 200 V Tubular
C-14	D66502	.005 mf 400 V Tubular
C-16	D66503	.05 mf 400 V Tubular.... 50 mf 150 V Dry
C-17A	45x363	50 mf 150 V Electro-
C-17B		lytic Con.
C-18	B66503	.05 mf. 200 V Tubular....

RESISTORS

		OHMS	WATTS	
R-1	B81223	22K	0.5	Carbon
R-2	B85225	2.2 meg	0.5	Carbon
R-4	36x373	500K Volume Control & Switch		
R-5	B85106	10 meg.	0.5	Carbon
R-6, R-7	B84474	470K	0.5	Carbon
R-8	B83151	150	0.5	Carbon
R-10	B83270	27	0.5	Carbon
R-11	C85152	1500	1.0	Carbon

DIAL AND DRIVE ASSEMBLY

15x242	Pointer	
26x508	Drive Shaft	
19x192	"C" Washer	doz
10x66	Drive Cord Assembly	
28x113	Drive Cord Tension Spring	doz.
7A217	Pilot Light Socket Assembly	
7A103	No. 47 Pilot Light	
58x701	Dial Glass	

MODEL D2923 WESTERN AUTO SUPPLY CO.

TUBE COMPLEMENT

The tube complement of this receiver consists of the following:

1—6SK7—R.F. Amplifier

1—6SA7—Mixer—OSC.

1—6SK7—I.F. Amplifier

1—6SQ7—Det. AVC—Audio

1—6K6—Power Output

1—5Y3—Rectifier

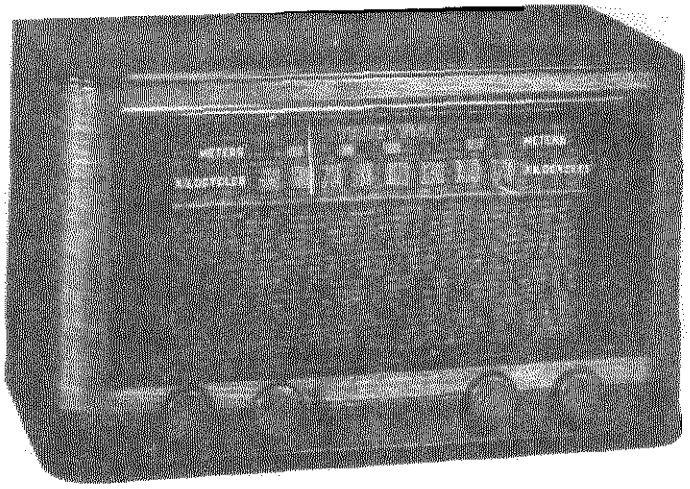

POWER SUPPLY

This receiver is designed to operate from a power source of 117 volts A.C. 60 cycle current

Frequency - Range
535-1725 KC

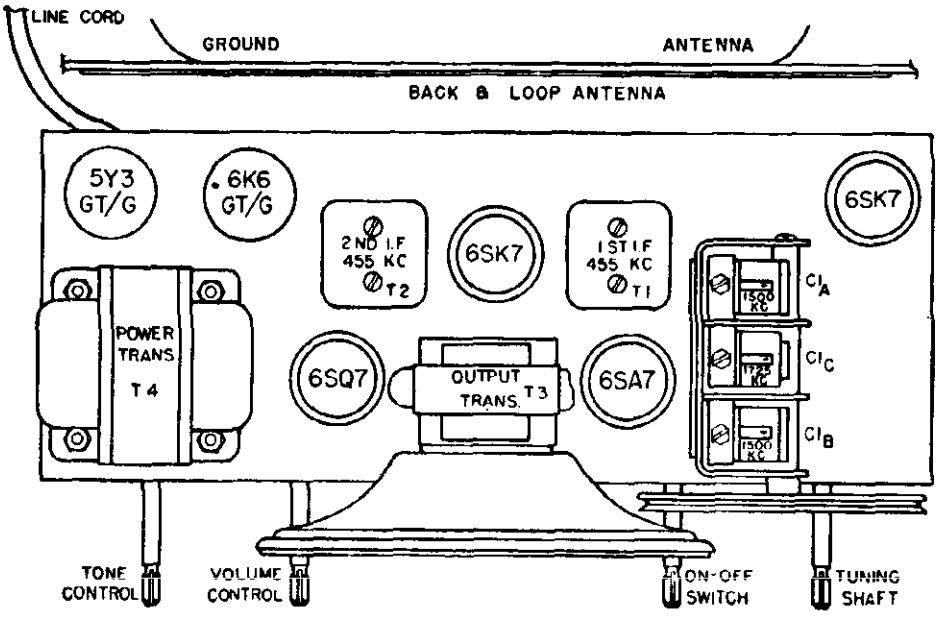

Fig 1 Chassis, Top View

WESTERN AUTO SUPPLY CO. MODEL D2923

SERVICE NOTES

Voltages taken from the different points of the circuit to the chassis are measured with volume control in maximum position, all tubes in their sockets and with a volt meter having a resistance of 1000 ohms per volt, using the 150 volt scale. These voltages are clearly indicated on the voltage chart. (Fig. 2).

All voltages should be measured with an A.C. line voltage of 117 volts.

To check for open by-pass condensers, shunt each condenser with another one having the same capacity and voltage rating which is known to be good until the defective unit is located.

ALIGNING INSTRUCTIONS

Never attempt any adjustments on this receiver unless it becomes necessary to replace a coil or transformer, or the adjustments have been tampered with in the field. Always make certain that other circuit components, such as tubes, condensers, resistors, etc., are normal before proceeding with realignment.

If realignment is necessary follow the instructions given under the heading "ALIGNMENT PROCEDURE" on the nert page. After realignment has been completed repeat the procedure as a final check.

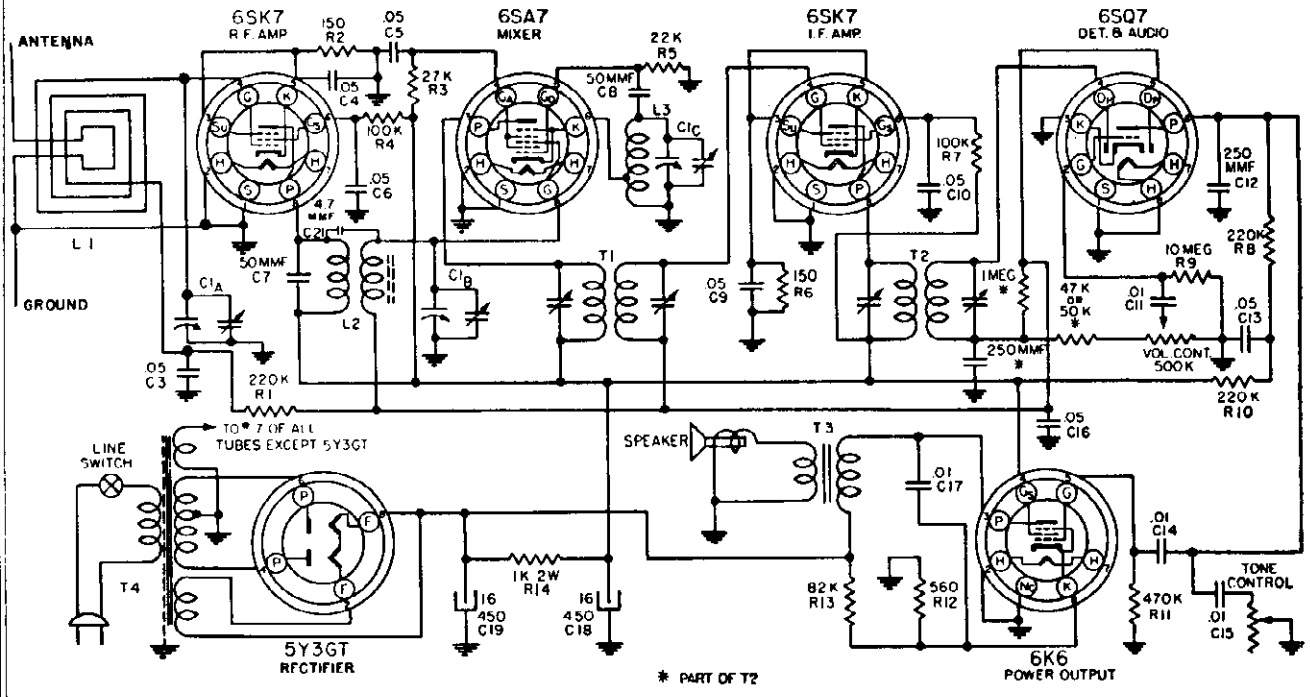

Fig. 3 Schematic Diagram

ALIGNMENT PROCEDURE

Volume control—Maximum: all adjustments.

Tone Control—Treble: Full Clockwise Rotation.

Connect dummy antenna in series with output lead of signal generator.

Connect output meter across voice coil of speaker.

The following equipment is necessary for proper alignment:

Signal generator that will provide the test frequencies as listed.
Output meter.
Non-metallic screwdriver.
Dummy antennas—.1 mfd., .00025 mfd.

Position of Variable	*Generator Frequency*	*Dummy Ant. mfd.*	*Generator Connections*	*Trimmer Adjustment*	*Trimmer Function*
Minimum Capacity (Fully Opened)	455 K.C.	.1	High side to 6SA7 grid Low side to chassis	T1 T2	I. F.
Minimum Capacity (Fully Opened)	1725 K.C.	.00025	High side to ant. lead Low side to ground lead	C1C	Osc.
Tune in signal From Generator	1500 K.C.	.00025	High side to ant. lead Low side to ground lead	C1B	R. F.
Tune in signal from Generator	1500 K.C.	.00025	High side to ant. lead Low side to ground lead	C1A	Ant.

Repeat the above alignment procedure as a final check.

With an output meter connected across the voice coil of the speaker, the output meter reading for ½ watt is 1.25 volts using a signal which is modulated 400 c.p.s.

PARTS LIST

CONDENSERS

Circuit Reference	Part No.	Description
C1A, C1B, C1C	B19-186	Variable condenser
C3, C4, C9, C16	A16-152	.05 MFD 200 volt condenser
C5, C6, C10, C13	A16-158	.05 MFD 400 volt condenser
C7, C8	A15-175	50 MMF mica condenser
C11, C14, C15	A16-156	.01 MD 400 volt condenser
C12	A15-176	250 MMF mica condenser
C17	A16-168	.01 MFD 1000 volt condenser
C18	A18-279	16 MFD 450 volt electrolytic condenser
C19	A18-274	16 MFD 450 volt electrolytic condenser
C21	A83-355	4.7 MMF condenser

RESISTORS

R1, R8, R10	A60-667	220K ohm ½ watt resistor
R2, R6	A60-686	150 ohm ½ watt resistor
R3	A60-692	27K ohm 1 watt resistor
R4, R7	A60-671	100K ohm ½ watt resistor
R5	A60-659	22K ohm ½ watt resistor
R9	A60-663	10 megohm ½ watt resistor
R11	A60-662	470K ohm ½ watt resistor
R12	A60-701	560 ohm 1 watt resistor
R13	A60-700	82K ohm 1 watt resistor
R14	A60-699	1000 ohm 2 watt resistor

COILS

L2	B10-452	R. F. coil
L3	A10-446	Oscillator coil
T1	B10-412	1st I.F. transformer
T2	B10-444	2nd I.F. transformer

MISCELLANEOUS

T3	A80-222	Output transformer
T4	C80-223	Power transformer
	A69-169	On-Off Switch
	A26-123	Tone Control
	A24-169	Volume Control
	A84-41	Dial drive shaft and pulley assembly
	B79-341	6¼" P.M. Speaker
	C83-323	Baffle Board and Grille Cloth
	D42-400	Wood cabinet
	C67-493	Dial glass
	A52-193	Knob
	A58-60	Dial pointer
	C82-59	Loop antenna
	D83-602	Cabinet back

SOCKET VOLTAGES

All voltages are measured with a 1000 ohm per volt meter on the 150 volt scale, with no signal. To obtain an accurate voltage check the A.C. line voltage must be 117 volts. Where no voltage is shown the voltage is O or cannot be read with this type of voltmeter.

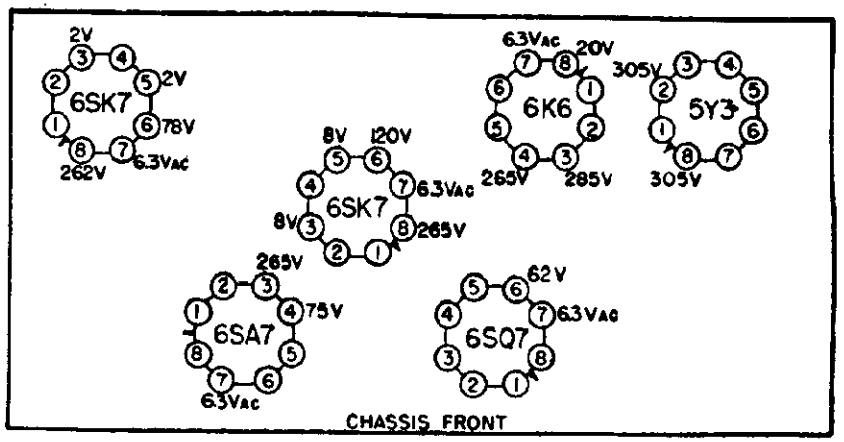

Fig. 2—Chassis, Bottom View

WESTERN AUTO SUPPLY CO. MODEL D361

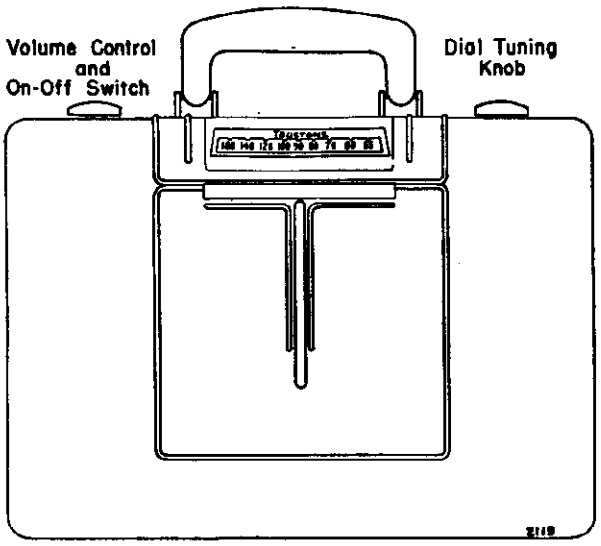

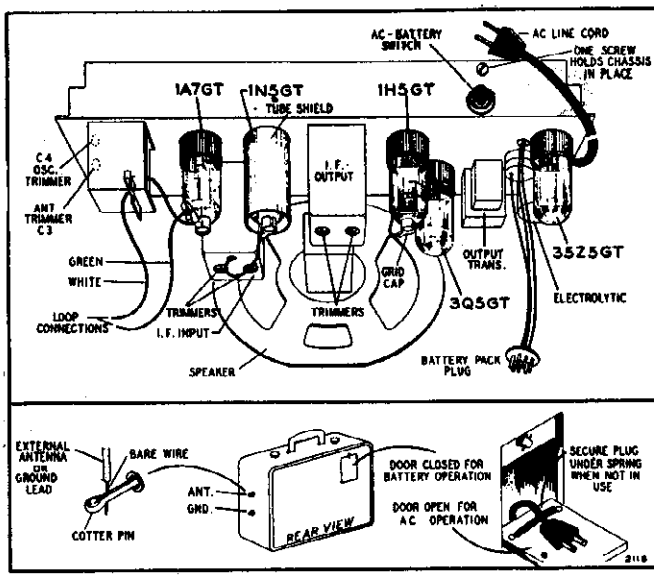

Chassis View

LINE VOLTAGE

If the set is to be operated from a house receptacle, the voltage, unless otherwise indicated, must be 105-125-volt DC (direct current) or 105-125-volt, 50-60 cycle AC (alternating current). If you are in doubt as to the voltage of the power supply, consult your local power company.

BATTERY PACK

The battery pack used with this radio must contain a 7½-volt "A" battery and a 90-volt "B" battery. Use Wizard Battery Pack No. B6460 or No. B6470.

PILOT LIGHT

If the pilot lamp burns out, the set should no be operated on AC or DC power until a new lam has been installed. Failure to heed this caution may result in a burned-out 35Z5GT tube.

ELECTRICAL SPECIFICATIONS

Power Supply	105 to 125 volts DC or 50-60 cycle AC, 29 watts. Battery: A—7½ volts, 50 ma. B—90 volts, 11 ma.
Frequency Range	530 to 1650 kc.
Intermediate Freq.	455 kc.
Tuning	Two-gang capacitor
Antenna	Built-in loop. Provisions also for external antenna and ground.
Speaker	5-inch; P.M.; voice coil impedance 3.2 ohms.
Power Output	150 milliwatts undistorted. 250 milliwatts maximum.
Sensitivity	30 microvolts average for 50-milliwatt output.
Selectivity	43 kc broad at 1000 times signal at 1000 kc.

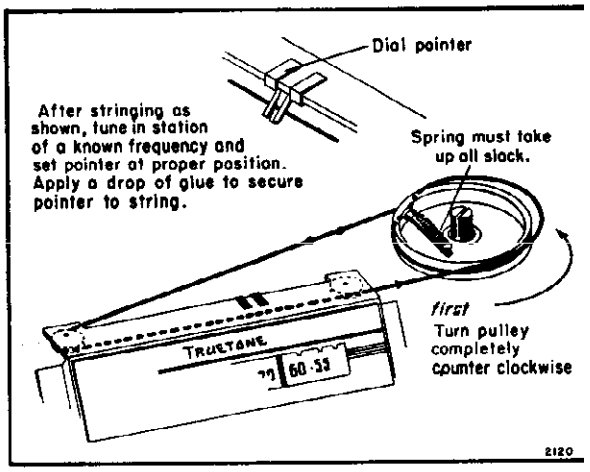

Replacement of Dial Pointer Drive Cord

MODEL D3619

WESTERN AUTO SUPPLY CO.

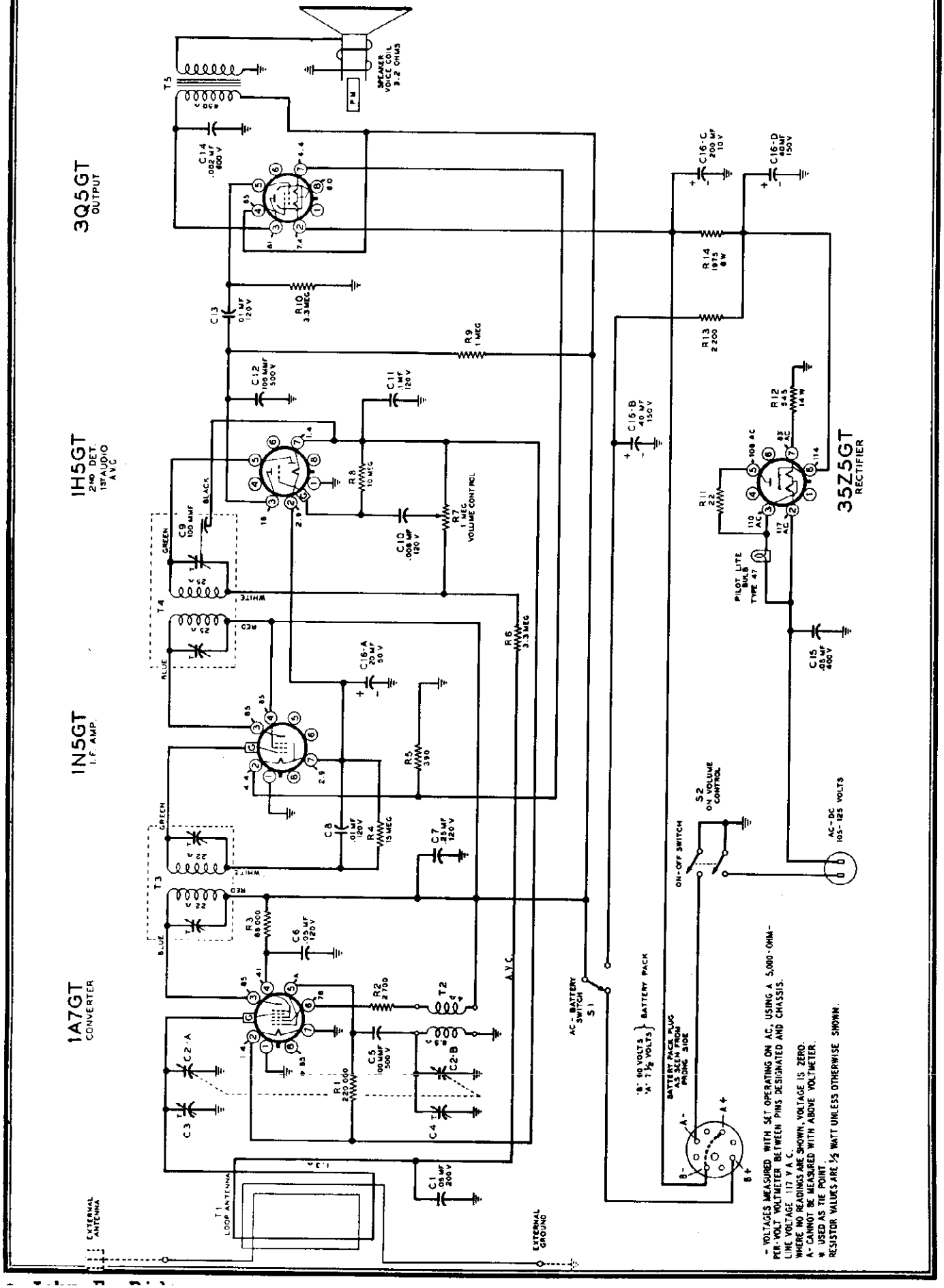

- VOLTAGES MEASURED WITH SET OPERATING ON AC, USING A 5,000-OHM-PER-VOLT VOLTMETER BETWEEN PINS DESIGNATED AND CHASSIS.
LINE VOLTAGE 117 V A.C.
WHERE NO READINGS ARE SHOWN, VOLTAGE IS ZERO.
A- CANNOT BE MEASURED WITH ABOVE VOLTMETER.
w USED AS TIE POINT.
RESISTOR VALUES ARE ½ WATT UNLESS OTHERWISE SHOWN.

WESTERN AUTO SUPPLY CO. MODEL D3619

ALIGNMENT PROCEDURE

- Output meter across 3.2-ohm output load.
- Volume control at maximum for all adjustments.
- Align for maximum output. Reduce input as needed to keep output near 0.4 volts.

SIGNAL GENERATOR				SETTING TUNER	ADJUST TRIMMERS TO MAXIMUM OUTPUT (in order shown)
Frequency	Coupling Capacitor	Connection to Radio	Ground Connection		
455 kc	.1 mf	1A7GT grid cap*	Chassis	Rotor full open (plates out of mesh)	Input and output trimmers on IF cans
1650 kc	.1 mf	1A7GT grid cap*	Chassis	Rotor full open (plates out of mesh)	Oscillator trimmer C4
1400 kc†	200 mmf	External antenna clip	External ground clip	1400 kc	Antenna trimmer C3

* If loop is not connected when making this adjustment, substitute a 1-megohm resistor across the loop leads.

† For this adjustment chassis should be remounted in cabinet and loop connected. Antenna trimmer can be reached through a hole in the side of the cabinet.

REPLACEMENT PARTS LIST

Ref. No.	Part No.	Description
		CAPACITORS
C1	1009	.05 mf, 200 volts, 25%
C2-A, C2-B, C3, C4	B-8A-10246	Two-gang, including antenna and oscillator trimmers. Range of gang: 14-452 mmf (ant) and 10-198 mmf (osc)
C5, C12	1295	100 mmf, 20%, mica
C6	100128	.05 mf, 120 volts, 25%
C7	100135	.25 mf, 120 volts, 25%
C8, C13	100127	.01 mf, 120 volts, 25%
C9		Approx. 100 mmf. Part of I.F. can.
C10	100134	.006 mf, 120 volts, 25%
C11	100133	.1 mf, 120 volts, 25%
C14	10025	.002 mf, 600 volts, 25%
C15	10013	.05 mf, 400 volts, 25%
C16-A, -B, -C, -D	119123	Electrolytic; 20 mf x 50 volts, 40 mf x 150 volts. 200 mf x 10 volts, 40 mf x 150 volts
		RESISTORS*
R1	C-9B1-27	220,000 ohms, ½ watt, 20%
R2	C-9B1-67	2700 ohms, ½ watt, 10%
R3	C-9B1-84	68,000 ohms, ½ watt, 10%
R4	C-9B1-302	15 megohms, ½ watt, 20%
R5	C-9B1-57	390 ohms, ½ watt, 10%
R6, R10	C-9B1-34	3.3 megohms, ½ watt, 20%
R7, S2	101252	Volume control (1 megohm) and on-off switch
R8	C-9B1-37	10 megohms, ½ watt, 20%
R9	C-9B1-31	1 megohm, ½ watt, 20%
R11	C-9B1-42	22 ohms, ½ watt, 10%
R12	130343	545 ohms, 14 watts, 5%
R13	C-9B1-66	2200 ohms, ½ watt, 10%
R14	130344	1975 ohms, 6 watts, 5%

Ref. No.	Part No.	Description
		COILS AND TRANSFORMERS
T1	B-13E-10184	Loop antenna assembly
T2	A-13D-10239	Oscillator coil
T3	108201	Input I.F. coil complete in can. Range of trimmers: 53-97 mmf each
T4, C9	108200	Output I.F. coil complete in can. Range of trimmers: 39-71 mmf each
T5	105119C	Output transformer
		MISCELLANEOUS
	114241B	Speaker, 5-inch P.M.
	B-14A-10145	Battery cable assembly
	121171	Tube socket, octal
S1	A-20F-10247	Line-battery switch
	107363	Line cord and plug
	115396B	Tube shield
	112922	Dial pointer
	B-53A-11340	Drive cord for dial pointer
	120197	Spring for drive cord
	B-6D-10244	Dial scale
	112925	Diffuser
	A-2M-7758	Snap-in rivets (4 for diffuser, 2 for dial scale)
	107249	Dial lamp, 6-8 volts, type T-47
	107362	Socket assembly for dial lamp
	112910	Escutcheon for dial
	128634	Escutcheon for grille
	128645-8	Knob, tuning
	128647-8	Knob, volume

WESTERN AUTO SUPPLY CO.

MODELS D3630, D3630N

POWER SUPPLY

This receiver is designed to operate on either a Battery Pack; or any AC (Alternating Current) power supply line of 105 to 125 volts, 50 to 60 cycles; or DC (Direct Current) power supply line of 105 to 125 volts.

BATTERY

Any one of the following battery packs may be used in this portable radio: Western Auto Supply Wizard B6460 or B6470, Ensign AB50, Ensign AB49, General 60A-6F6-5, General 60B-6F6-5, Burgess F6A60, Burgess G6M60, Eveready 754, Ray-O-Vac AB878 or Ray-O-Vac AB994. For best results, use Western Auto Supply Wizard B6460 (Standard) or B6470 (Deluxe) battery packs for replacement.

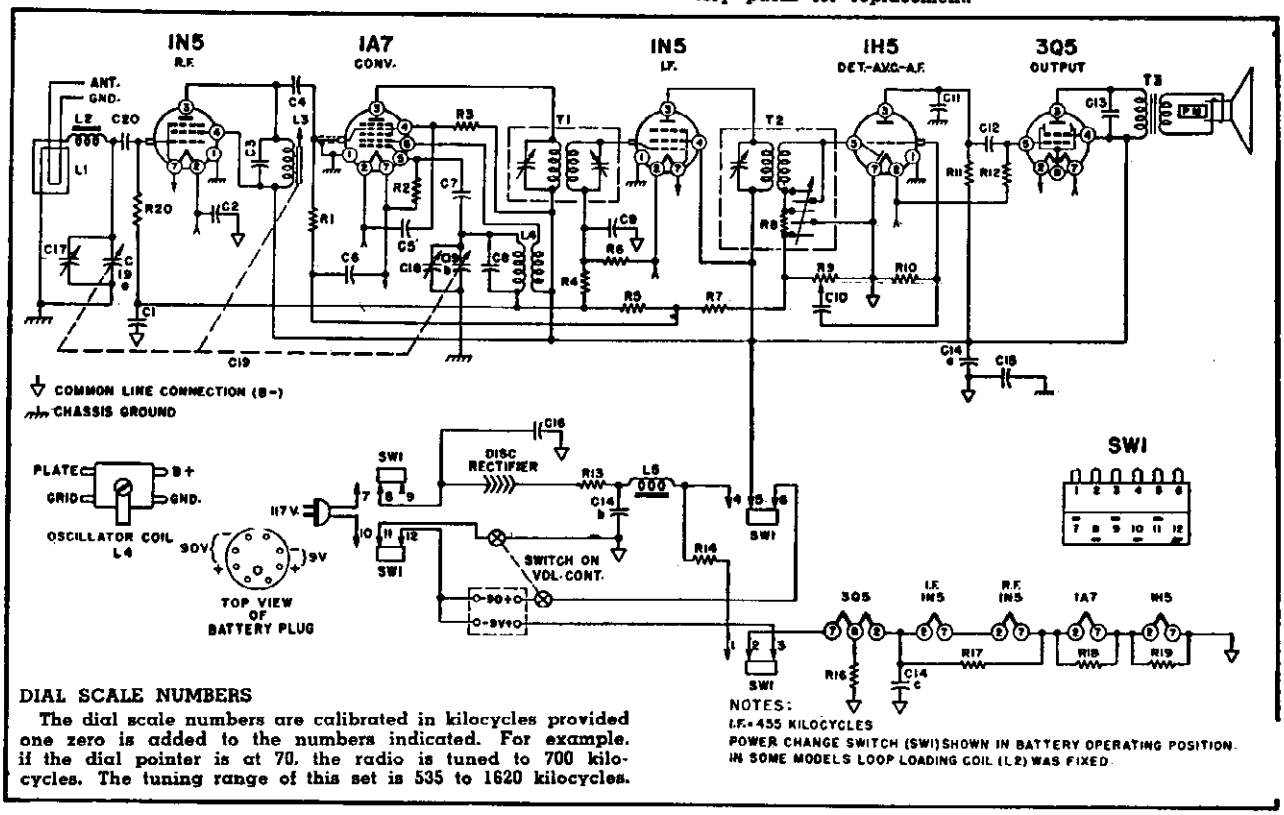

DIAL SCALE NUMBERS

The dial scale numbers are calibrated in kilocycles provided one zero is added to the numbers indicated. For example, if the dial pointer is at 70, the radio is tuned to 700 kilocycles. The tuning range of this set is 535 to 1620 kilocycles.

VOLTAGE CHART

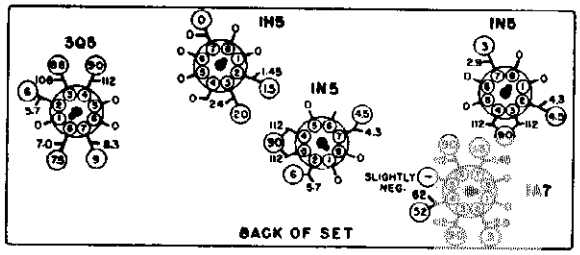

VOLTAGE DATA

1. Voltage readings circled (O) are for Battery Operation.
2. All readings made between Tube Socket Terminals and Pin No. 7 on the 1H5.
3. A.C. Voltages measured on a 117 Volt A.C. line.
4. Battery Voltages measured with a fresh battery.
5. Dial turned to low frequency end, no signal.
6. All Voltages measured with a 1000 ohm-per-volt meter.

REPLACEMENT PARTS

CONDENSERS

Symbol	Description	Part No.
C1	.05 Mfd., 200 Volt, Paper	64B1-32
C2	.25 Mfd., 200 Volt, Paper	64B1-28
C3	.00042 Mfd., Mica	65B1-13
C4, C11	.00025 Mfd., Mica	65B5-22
C5, C6, C9, C10, C12	.01 Mfd., 400 Volt, Paper	64B1-25
C7	.00005 Mfd., Mica	65B5-11
C8	.000015 Mfd., Mica	65B5-3
C13	.002 Mfd., 600 Volt, Paper	64B1-14
C14a	50 Mfd., 150 Volt Elect.	
C14b	30 Mfd., 150 Volt Elect.	67C7-42
C14c	100 Mfd., 25 Volt Cond.	
C15	.2 Mfd., 400 Volt, Paper	64A2-1
C16	.05 Mfd., 400 Volt, Paper	64B1-22
C17	Antenna Trimmer	66A12-5
C18	Oscillator Trimmer	(Part of Gang)
C19 (C19a, C19b)	Condenser, Gang	68B4
C20	.00025 Mfd., Mica	65B7-22

RESISTORS

R1	100,000 Ohms, ½ Watt, Carbon	60B8-104
R2	220,000 Ohms, ½ Watt, Carbon	60B8-224
R3	47,000 Ohms, ½ Watt, Carbon	60B8-473

RESISTORS

Symbol	Description	Part No.
R4, R5	4.7 Megohms, ¼ Watt, Carbon	60B2-475
R6	4.7 Megohms, ¼ Watt, Carbon	60B2-475
R7	3.3 Megohms, ¼ Watt, Carbon	60B2-335
R8	47,000 Ohms, ½ Watt, Carbon	60B8-473
R9	1 Megohm Volume Control	75B1-10C
R10	15 Megohms, ¼ Watt, Carbon	60B2-156
R11, R20	1 Megohm, ¼ Watt, Carbon	60B2-105
R12	2.2 Megohms, ¼ Watt, Carbon	60B2-225
R13	68 Ohms, Wire Wound, 1 Watt	60B28-4
R14	2,275 Ohms, Wire Wound, 5 Watt	61A3-6
R16	1,500 Ohms, ½ Watt, Carbon	60B8-152
R17	560 Ohms, ½ Watt, Carbon	60B8-561
R18	220 Ohms, ½ Watt, Carbon	60B8-221
R19	120 Ohms, ½ Watt, Carbon	60B8-121

COILS and TRANSFORMERS

Symbol	Description	Part No.
L2	Coil, Loop Loading, (fixed)	AA114
	Coil, Loop Loading, (variable)	AA115
L3	Iron Slug for plate coil	71B1-3
	Coil, Plate	AB100-5
L4	Oscillator Coil	69A7
L5	Choke Filter	74A5
T1	1st I.F. Transformer	72B9-2

COILS and TRANSFORMERS

Symbol	Description	Part No.
T2	2nd I.F. Tranformer	72B10-2
T3	Transformer, Output	*
	* When ordering, specify all numbers on the speaker and transformer.	
SW1	Switch, Power Change D3630	77A6
	Switch, Power Change D3630N	77A10

MISCELLANEOUS

Description	Part No.
Dial Background	21A18-2
Dial Cord, 12"	50A1-3
Dial Cord Tension Spring	19A1-2
Escutcheon and Dial Scale	23C14
Knob, Tuning	33A14-6
Knob, Volume	33A14-5
Plug, Battery (9 prong)	88A3-3
Pointer, Cream Tenite	25A15-1
Rectifier, Selenium	93A1-2
Speaker and Output Transformer	78B8
Tube Shields	87A8

©John F. Rider

WESTERN AUTO SUPPLY CO.

MODELS D3630, D3630N

1. Be sure both set and signal generator are thoroughly warmed up before starting alignment.
2. Make alignment, using a battery whenever possible.
3. Disconnect Loop Antenna leads from clips on set and remove chassis from cabinet.
4. Connect a 50,000 ohm carbon resistor across the two clips from which the Loop Antenna was removed.
5. Connect Output Meter across the Voice Coil.
6. Connect a fresh battery to the set.
7. Turn receiver Volume Control full on.

Step	Dummy Antenna Used in Series with Signal Generator	Connect High Side Signal Generator to	Signal Generator Frequency	Gang Condenser Setting	Trimmer Description and Designation	Type of Adjustment
1	.00025 Mfd. when using A.C. .1 Mfd. when using Battery	Grid Cap 1A7	455 K.C.	Any point where it does not affect Signal	2nd I.F. (A), (B). 1st I.F. (C), (D).	Maximum Deflection. Then repeat
2	.00025 Mfd. when using A.C. .1 Mfd. when using Battery	Grid Cap 1N5	1620 K.C.	Rotor full open (Plates out of mesh)	Oscillator Trimmer (G)	Maximum Deflection.
3	.00025 Mfd. when using A.C. .1 Mfd. when using Battery	Grid Cap 1N5	1400 K.C.	Tune in Generator Signal	R.F. Slug (H)	Maximum Deflection.
4	Replace Set in Cabinet					
5	.00025 Mfd.	Antenna and Ground Leads*	1400 K.C.	Tune in Generator Signal	Antenna Trimmer (F)	Maximum Deflection.
6	Disregard the next two steps if the set being aligned is a model with a fixed loop loading coil (L2).					
7	.00025 Mfd.	Antenna and Ground Leads	600 K.C.	Tune in Generator Signal	Loop Loading Coil Slug (E)	Maximum Deflection.
8	.00025 Mfd.	Antenna and Ground Leads	1400 K.C.	Tune in Generator Signal	Reset Antenna Trimmer (F)	Maximum Deflection.

Seal adjusting screw on the loop loading coil with any quick drying cement.

REPLACING R.F. TUNING SLUG

If the R.F. Tuning Slug has to be changed, use the following procedure. Set the gang condenser to the point where the plates are fully meshed. Screw the slug adjusting screw about halfway down. Place the slug in the coil in such a position that the top of the slug is flush with the top of the Coil. Solder the slug wire to the adjusting screw. Be sure that the position of the slug does not change during the soldering and that the slug wire is straight. Proceed to re-align the set as shown in the chart.

TUBE AND TRIMMER LAYOUT

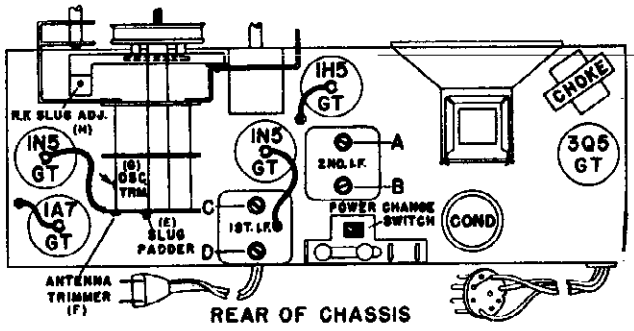

REAR OF CHASSIS

DIAL CORD STRINGING

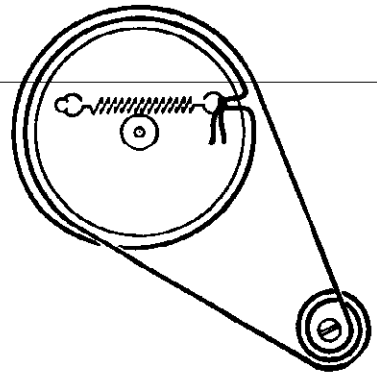

© John F Rider

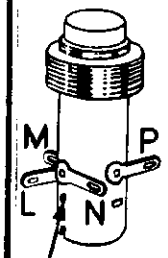

ANTENNA COIL
502499

Lettered terminals in illustrations correspond to similarly lettered terminals on the circuit diagram.

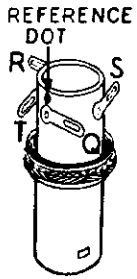

OSC. COIL
502498

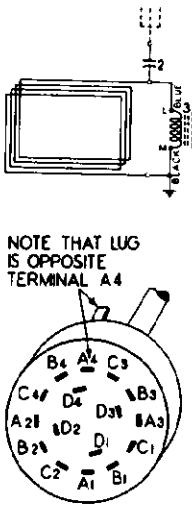

AC-DC-BAT.-CHARGE SWITCH
502526

PARTS LIST

DIA-GRAM NO.	PART NO.	DESCRIPTION
		CONDENSERS
2	502150	Condenser—.004 Mfd. 600 volt
4-A, B	502494	Condenser—variable gang
5	119132	Condenser—trimmer 2 to 15 Mmfd.
7	502159	Condenser—mica 50 Mmfd. 500 volt
8	502153	Condenser—.05 Mfd. 200 volt
11	502547	Condenser—electrolytic 4 Mfd. 150 volt
15	502153	Condenser—.05 Mfd. 200 volt
16	502155	Condenser—.1 Mfd. 200 volt
17	502153	Condenser—.05 Mfd. 200 volt
25, 26	502159	Condenser—mica 50 Mmfd. 500 volt
28	502155	Condenser—.1 Mfd. 200 volt
31	502156	Condenser—.004 Mfd. 400 volt
35	502160	Condenser—mica 110 Mmfd. 500 volt
37	502155	Condenser—.1 Mfd. 200 volt
40	502151	Condenser—.01 Mfd. 400 volt
42	502527	Condenser—electrolytic 50 Mfd. 25 volt
48	502155	Condenser—.1 Mfd. 200 volt
50	502453	Condenser—.002 Mfd. 400 volt
56-A,B,C	500714	Condenser—electrolytic A—20 Mfd. 150 volt B—20 Mfd. 200 volt C—20 Mfd. 200 volt
58	502153	Condenser—.05 Mfd. 200 volt
59	502411	Condenser—2 Mmfd. 500 volt
		RESISTORS
6	502133	Resistor—carbon 220,000 ohms ¼ watt
12	502465	Resistor—carbon 33,000 ohms 1 watt
14	502136	Resistor—carbon 10 Meg. ¼ watt
18	502455	Resistor—carbon 27 ohms ¼ watt
19	502457	Resistor—carbon 330 ohms ¼ watt
20	502458	Resistor—carbon 430 ohms ¼ watt
21	502269	Resistor—carbon 3.3 Meg. ¼ watt
24	502132	Resistor—carbon 100,000 ohms ¼ watt
29	502269	Resistor—carbon 3.3 Meg. ¼ watt
30-A,B,C,D	502525	Volume control (with switch) 1 Meg.
32	502269	Resistor—carbon 3.3 Meg. ¼ watt
33, 34	502456	Resistor—carbon 220 ohms ¼ watt
36	502268	Resistor—carbon 1 Meg. ¼ watt
38	502134	Resistor—carbon 470,000 ohms ¼ watt
39	500712	Resistor—wire wound 1830 ohms 5 watt
41	502135	Resistor—carbon 2.2 Meg. ¼ watt
44	502266	Resistor—carbon 15,000 ohms ¼ watt
45	502459	Resistor—carbon 6800 ohms ¼ watt
46	502457	Resistor—carbon 330 ohms ¼ watt
47	502455	Resistor—carbon 27 ohms ¼ watt
49-A,B,C	500715	Resistor—wire wound A—1460 ohms 10 watt B— 155 ohms 1 watt C— 310 ohms 10 watt
54	502454	Resistor—wire wound 47 ohms 1 watt
57	502454	Resistor—wire wound 47 ohms 1 watt

DIA-GRAM NO.	PART NO.	DESCRIPTION
		COILS AND TRANSFORMERS
3	502499	Coil—antenna coupling
9	502498	Coil—oscillator
13	502495	Transformer—1st I.F.
23	500749	Transformer—2nd I.F.
51	502902	Trans.—output for A-502491 speaker
	502492	Trans.—output for R-502491 speaker
55	502528	Filter choke
		OTHER ELECTRICAL PARTS
10	500746	Cable—for use with individ. batteries
22	502536	Cable—for use with battery pack
27	500713	Neon indicator lamp
43-A,B,C,D	502526	Switch—"AC-DC—BAT.—CHARGE"
52	502901	Cone & voice coil for A-502491 speaker
	502493	Cone & voice coil for R-502491 speaker
53	502491	Speaker—P.M. dynamic (5 inch)
		MISCELLANEOUS PARTS
	160026	Base for mtg. electrolytic condenser
	112745	Clip—coil mtg.
	114955	Clip—retainer on end of dial cord
	117057	Cord—dial drive (28" required) per ft.
	502760	Escutcheon plate
	502764	Knob—volume or tuning
	502765	Knob—"AC-DC—BAT.—CHARGE"
	500747	Plug for battery cable (fits chassis)
	502537	Plug for battery cable (fits batt. pack)
	502786	Pointer
	81145	Retaining ring for tuning shaft
	119087	Ring for dial cord
	79894	Screw—No. 8x⅜"; for mtg. chassis
	502524	Shaft—tuning control
	117716	Shield—tube
	116690	Socket—octal base
	500681	Socket—for battery cable
	161384	Spring—dial cord tension
	502533	Terminal strip for antenna
	111456	Washer—spring washer for tuning shaft
	502534	Washer—felt: for knobs

SOCKET VOLTAGES

Measured with voltmeter having sensitivity of 1000 ohms per volt except where indicated by (*).

VOLUME ON FULL WITH NO SIGNAL — **DIAL TUNED TO 540 KC.**

"AC-DC—BAT.—CHARGE" SWITCH IN "AC-DC" POSITION

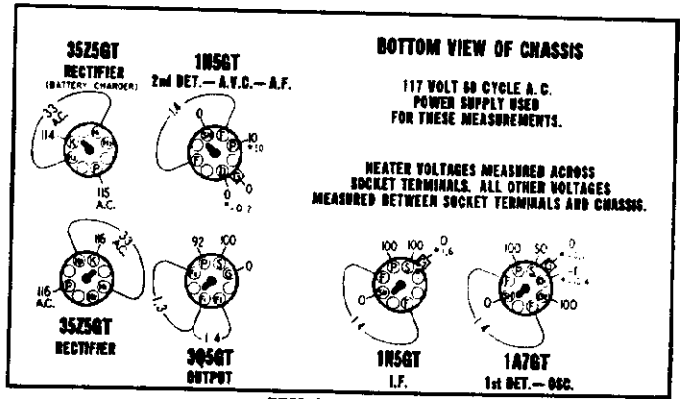

REAR OF CHASSIS

*—Measured with vacuum tube voltmeter.

WESTERN AUTO SUPPLY CO. MODEL D3635

ALIGNMENT PROCEDURE

1. Slide chassis partially out of cabinet by removing staples at each side of wood shelf and pulling entire shelf back about 2 inches. Do not disturb connections to loop antenna.
2. Connect an output meter across the voice coil of the speaker or between the plate of the 3Q5GT output tube and chassis through a .1 mfd. condenser.
3. Connect the ground lead of the signal generator to chassis through a .25 mfd. condenser.
4. Set the volume control in the maximum position and use a weak signal from the generator.
5. Set "AC-DC—BAT.—CHARGE" Switch in "AC-DC" position.

DUMMY ANT. IN SERIES WITH SIGNAL GENERATOR	CONNECT HIGH SIDE OF SIG. GENERATOR TO	SIGNAL GENERATOR FREQUENCY	RECEIVER DIAL SETTING	TRIMMER NUMBER	TRIMMER DESCRIPTION	TYPE OF ADJUSTMENT
300 MMFD. Condenser	Grid Cap of 1A7GT Tube	455 KC.	Any Point Where It Does Not Affect Signal	1	2nd I.F.	Loosen lock nut. Adjust screw for maximum output.
				2-3	1st I.F.	Adjust for maximum output. Recheck 1, 2 and 3 for maximum output and tighten lock nut on 1.
300 MMFD. Condenser	Center Terminal on Antenna Terminal Strip at bottom of cabinet.	1500 KC.	1500 KC. (Slide set into cabinet and replace pointer to set dial.)	4	Broadcast Oscillator (Shunt)	Adjust trimmer for maximum output.
300 MMFD. Condenser	Center Terminal on Antenna Terminal Strip at bottom of cabinet.	1500 KC.	Tune to 1500 KC. Generator Signal	5	Broadcast Antenna	Adjust for maximum output. Slide chassis all the way into cabinet when making this adjustment.

TOP VIEW OF CHASSIS

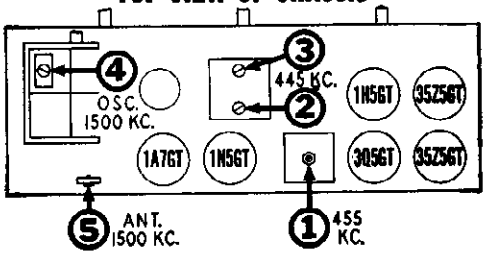

INDICATOR LAMP

The flashing neon lamp on the dial face indicates condition of batteries. This lamp is included in an oscillating (R-C) circuit which is designed to oscillate at approximately 3 pulses per second when batteries are in a fully charged condition. As the battery voltage decreases with use, number of pulses per second decreases.

This lamp will only show the true condition of the batteries when the Selector Switch is in the "Battery" position. Lamp flashes more rapidly during charging or "AC-DC" operation.

When battery voltage is low (approximately 72 volts) the lamp flashes more slowly (about once per second). The set should not be operated from battery power after this point is reached and batteries should be recharged immediately. Charge for at least twice the time they were used and as soon as possible after they are run down. As batteries age it is necessary to charge for a longer period. For longest battery life, charge immediately after using.

IMPORTANT:
1. Completely dead batteries cannot be recharged.
2. When set is connected to a DC line, check for correct polarity by operating it before attempting to charge the batteries.
3. Batteries will be discharged if ON-OFF switch is left ON when power cord is not connected to wall outlet.

CHARGING CIRCUIT

The battery charging circuit consists of a 35Z5GT rectifier and a suitable resistor voltage dividing network. This circuit provides a very low charging current when the receiver is operated on AC-DC and is just enough to maintain the batteries but will not charge them. A separate charging position is provided for the regular charging operation. A charging rate of approximately ⅓ the discharge rate is used to give best results.

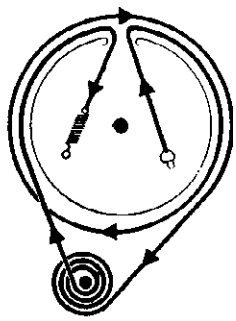

DIAL DRIVE CORD ARRANGEMENT

To string dial cord, set gang condenser to fully meshed position and use following parts:

114955	Clip on end of cord
117057	Cord (28 inches)
119087	Ring for dial cord
161384	Tension Spring

APPROXIMATE STAGE GAIN DATA

Be sure R.F. and I.F. stages are accurately aligned before measuring gain. R.F. gains can be measured with a "channel" type instrument containing a tuned and calibrated R.F. amplifier. A vacuum tube voltmeter may be used for audio gain measurements.

1. For all gain measurements connect signal generator as shown. Use 600 KC. signal with 400 cycle modulation (use nearby frequency if local station interferes).
2. For R.F. and I.F. measurements connect negative terminal of a 1½-volt battery to A.V.C. lead and positive terminal to chassis. This provides a definite operating point.
3. Be sure radio is carefully tuned to generator signal (use weak signal for sharp tuning).
4. When using a "channel" type instrument carefully tune it for maximum output at desired frequency before making measurements.

The R.F. and I.F. stage gains shown below are less than under normal operating conditions due to the use of 1½ volts fixed bias in order to establish a definite operating point. Therefore, these values are not intended to indicate the full capability of a stage.

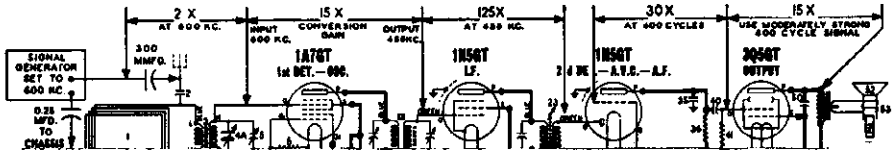

Differences in tube characteristics, tolerance of parts, adjustment of tuned circuits, and variations of line voltage will influence stage gain. Accuracy of measurements is dependent upon careful tuning of receiver to generator signal and experience in using your test equipment. These factors may create considerable variation in gain measurements.

© John F. Rider

MODEL D3635 WESTERN AUTO SUPPLY CO.

CHARGING THE BATTERY

The specially developed electronic circuit used for charging the battery will produce best results if battery deterioration has not progressed too far. Check the battery frequently as described in the previous section. To use the built-in charger proceed as follows:

1. Plug the power cord into wall outlet.
2. Turn Selector Switch to "AC-DC" position and turn On-Off Switch to "ON" position.
3. Make sure that radio operates properly before attempting to use the charger. **This is especially important when the radio power cord is connected to a D.C. (Direct Current) power supply. After you are sure the radio operates properly, turn the Selector Switch to the "CHARGE" position.**
4. Allow the set to operate in this manner and charge the battery for at least twice as many hours as battery was previously used.
5. **After charging is completed be sure to turn the radio On-Off Switch to the "OFF" position. If this switch is left on and the power cord is disconnected from the wall outlet, the battery will discharge.**

If the receiver is equipped with individual "A" and "B" batteries instead of a single unit battery pack, the built-in charging circuits will recharge all four batteries.

THE DIAL SCALE is calibrated to cover frequencies between 540 Kc and 1600 Kc. Add a zero to dial number to obtain the frequency in kilocycles (Kc). Examples: When pointer is set to 90, radio is tuned to 900 Kc. See your newspaper for frequencies of local stations.

INSTALLATION

The bottom compartment of the cabinet provides adequate space to accommodate a single unit battery pack (or individual "A" and "B" batteries if desired). **Any of the following single unit type battery packs may be used as a suitable power supply for this receiver.**

WIZARD B6460
EVEREADY 754
GENERAL 60A-6F6-5
RAY-O-VAC AB-878 or AB-994
BURGESS G6BB60 or F6A60

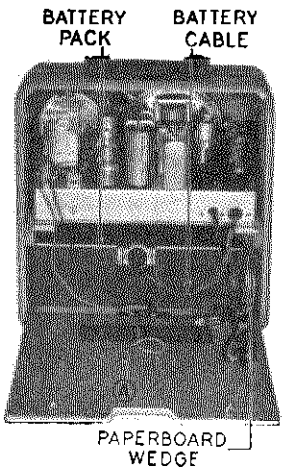

FIG. 1

Place the battery in the bottom compartment of the cabinet and wedge a piece of corrugated paperboard between the battery and the wall of the cabinet (see Fig. 1). The paperboard serves to hold the battery in a fixed position.

After the battery is installed in the cabinet it must be connected to the cable extending from the rear of the radio chassis. This cable is equipped with a special plug that will fit the receptacle in any of the single unit battery packs whose type numbers are listed above.

Where it is desired to use individual "A" and "B" batteries instead of the single unit battery pack, it will be necessary to obtain a special adapter cable (part 500746) in order to connect the separate batteries to the radio. Four batteries (two 4½ volt "A" batteries and two 45 volt "B" batteries) would be required for this type of installation. The following batteries will satisfactorily fit in the space provided:

4½ Volt "A" Battery (2 required)

Wizard B6135
Ray-O-Vac P83A
Eveready 746
Burgess G3

45 Volt "B" Battery (2 required)

Wizard B6241
Ray-O-Vac P7830
Eveready 482
Burgess M-30

CONNECTING RADIO TO ELECTRIC POWER SUPPLY: The rubber covered power cord and plug, which is coiled up and placed inside the cabinet when the radio is battery operated, must be connected to an electric power outlet if you wish to operate the radio from the power line. The power cord must also be connected to the electric power outlet when using the special battery charger in this receiver.

IMPORTANT: Before connecting the power cord to the electric power outlet, close the back of the cabinet. Do not handle the metal chassis or attempt to remove tubes after the power cord is connected.

When connecting the radio to the electric power outlet be sure that outlet will supply the proper current and voltage. This radio may be connected to either 50 or 60 cycle Alternating Current (A.C.) at 105 to 125 volts or Direct Current (D.C.) at 105 to 125 volts. If in doubt as to the voltage and type of current which is supplied by an electric power outlet, call local power company.

If a Direct Current power supply is used and the radio does not operate after it has been turned on for approximately one minute, reverse plug connection at wall outlet.

© John F. Rider

TUBE LOCATION

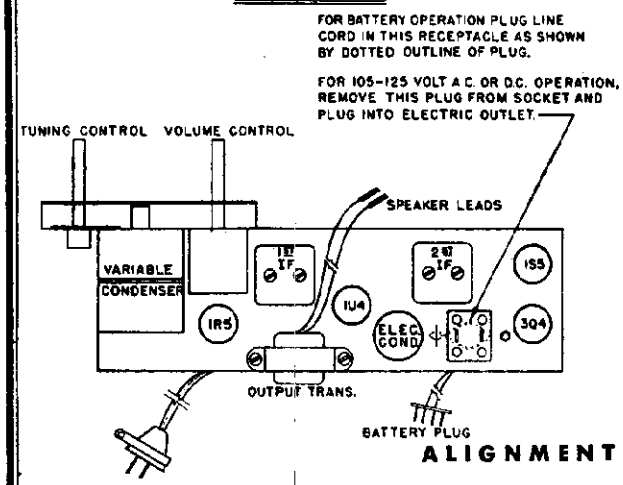

DIAL STRINGING DIAGRAM

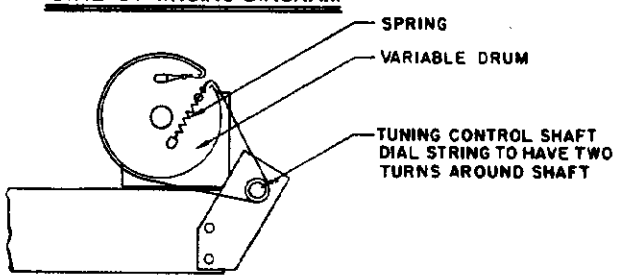

ALIGNMENT PROCEDURE

- Output Meter across 3.2 ohm output load
- Volume control at maximum
- Align for maximum output. Reduce input as needed to keep ouput near 0.05 watts
- Connect ground post of signal generator to chassis

SIGNAL GENERATOR				
Frequency	*Connection to Radio*	*Dummy Antenna*	*Tuner Setting*	*Adjust for Maximum Output (in order shown)*
455 KC	Center of antenna section of Gang	0.2 mf	Any	Trimmers on I.F. Can
1500 KC	* *	* *	Set pointer at second dot from end. On dial pan	Oscillator Trimmer on Gang.
1500 KC	* *	* *	Set pointer at second dot from end. On dial pan	R.F. Trimmer on Gang

** Run a wire from Output Terminal of the Generator near the Receiver. However, no connection is made between the signal generator and the Receiver.

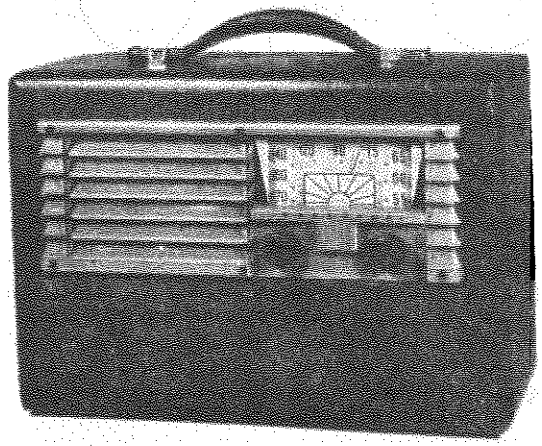

REPLACEMENT PARTS LIST

Ref. No.	*Part No.*	*Description*
		CAPACITORS
C1	1694	Variable
C2, C14		Paper, .05 MFD 200 volts
C3		Paper, .2 MFD 200 volts
C4, C8		Mica or ceramic, 100 MMFD
C5, C13		Paper, .005 MFD 200 volts
C6, C7, C15		Paper, .02 MFD 200 volts
C9, C12		Paper, .001 MFD 200 volts
C10, C11		Paper, .1 MFD 200 volts
C16 A.B.C.	2075	Electrolytic
		RESISTORS
R1		100,000 ohms, ¼ watt
R2		8200 ohms, ¼ watt
R3		470,000 ohms, ¼ watt
R4		3.3 meg ohms, ¼ watt
R5		10 meg ohms, ¼ watt
R6		Control, volume, DPST Switch, 1 meg ohm
R7		4.7 meg ohms, ¼ watt
R8		330,000 ohms, ¼ watt
		RESISTORS
R9		2.2 meg ohms, ¼ watt
R10		270 ohms, ¼ watt
R11		820 ohms, ¼ watt
R12		33 ohms, 1 watt
R13		Filter and Fitament, dropping
		COILS AND TRANSFORMERS
	28197	Oscillator coil
L2	3371	Input IF Transformer
L3	3535	Output IF Transformer
T1	1337	Output transformer
L1	28190	Loop
		MISCELLANEOUS
	5588	Cord, Line (Polarized)
	39164	Knobs
	5899	Loud Speaker 4"
	472	Cabinet
	18132	Wafer, Switch—Battery A.C.

WESTERN AUTO SUPPLY CO. MODEL D3722

MODEL D3722

WESTERN AUTO SUPPLY CO.

TECHNICAL DATA

Tuning Range	540-1600	Sensitivity (For 0.05 Watt Output)	300 Microvolts per Meter Average
Intermediate Frequency	455 KC	Power Output (in voice coil):	
Power Consumption	15 Watts	Undistorted	130 Watts
Selectivity	A.C.A. 12-1	Maximum	300 Watts

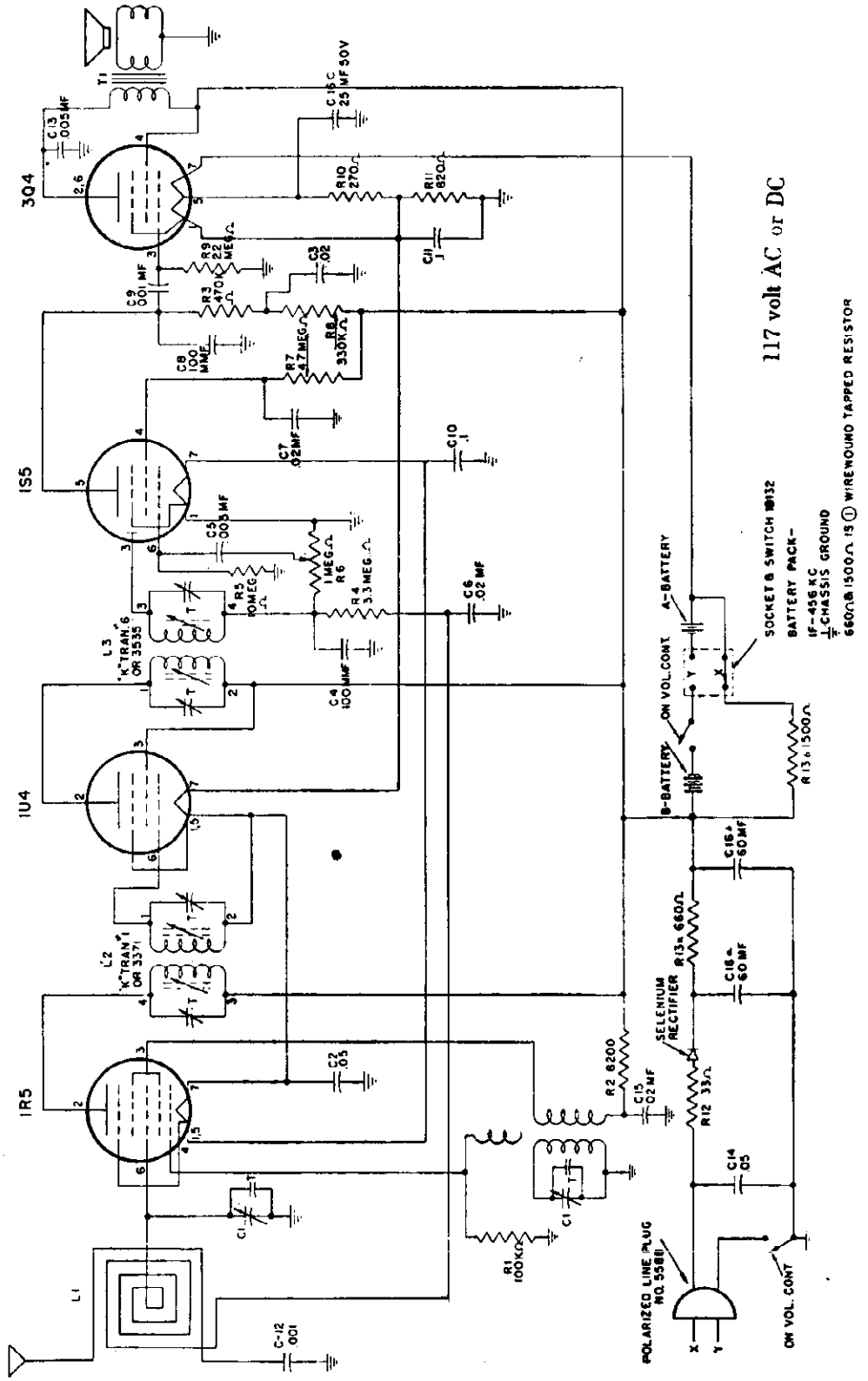

WESTINGHOUSE ELECTRIC CORP. MODEL H-169

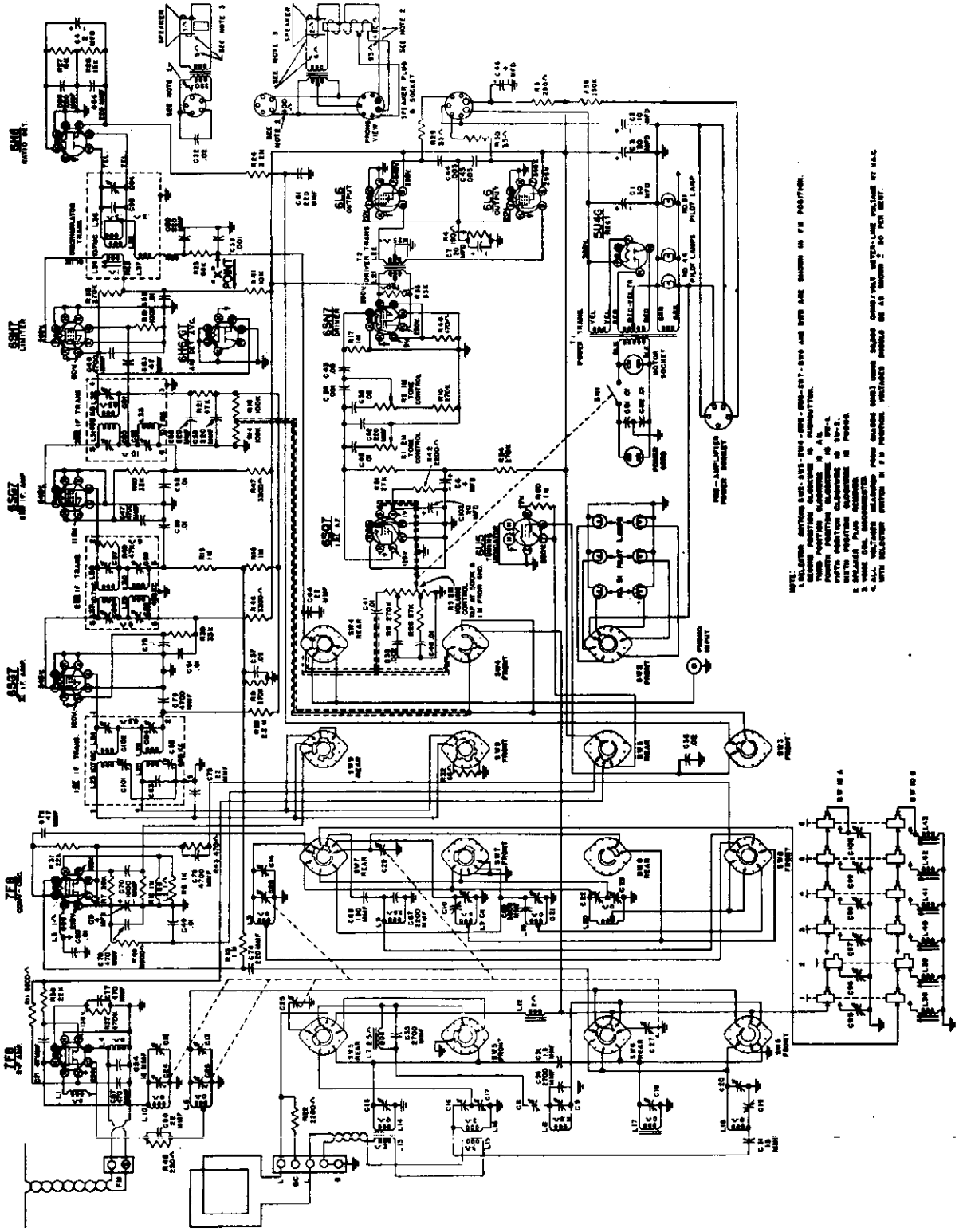

CLARI-SKEMATIX
Registered Trademark

MODEL H-169

WESTINGHOUSE ELECTRIC CORP.

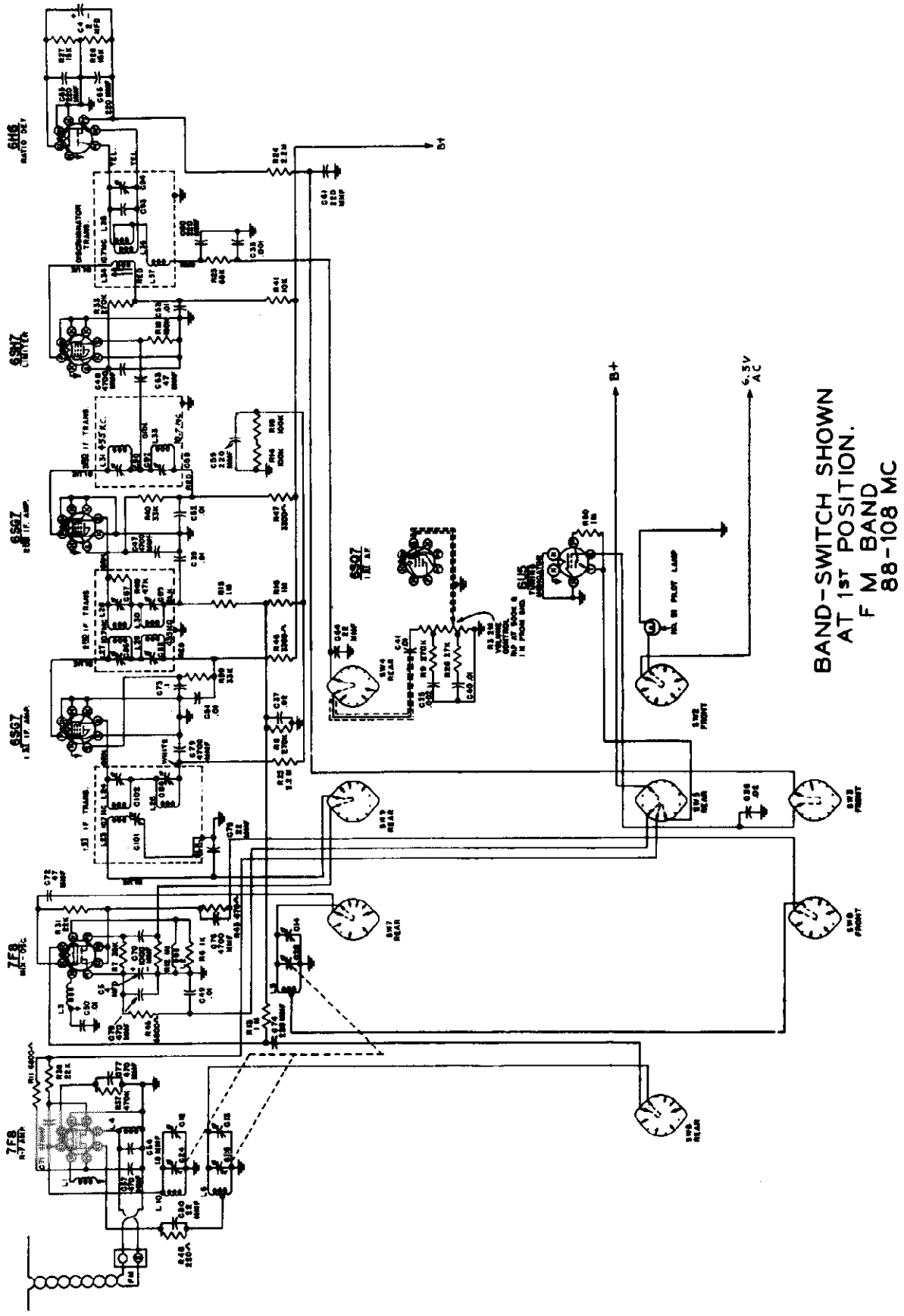

WESTINGHOUSE ELECTRIC CORP. MODEL H-169

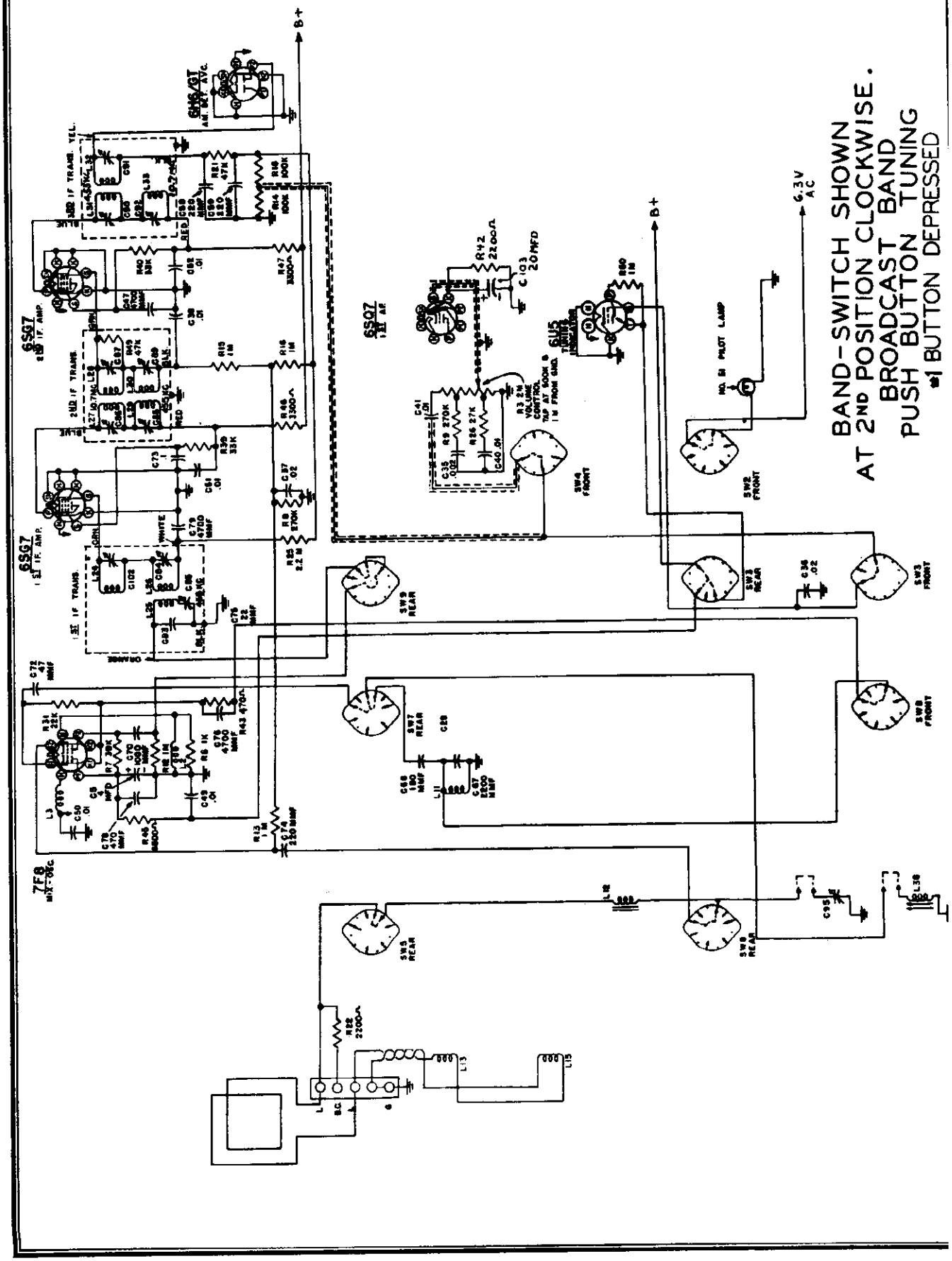

CLARI-SKEMATIX
Registered Trademark

MODEL H-169

WESTINGHOUSE ELECTRIC CORP.

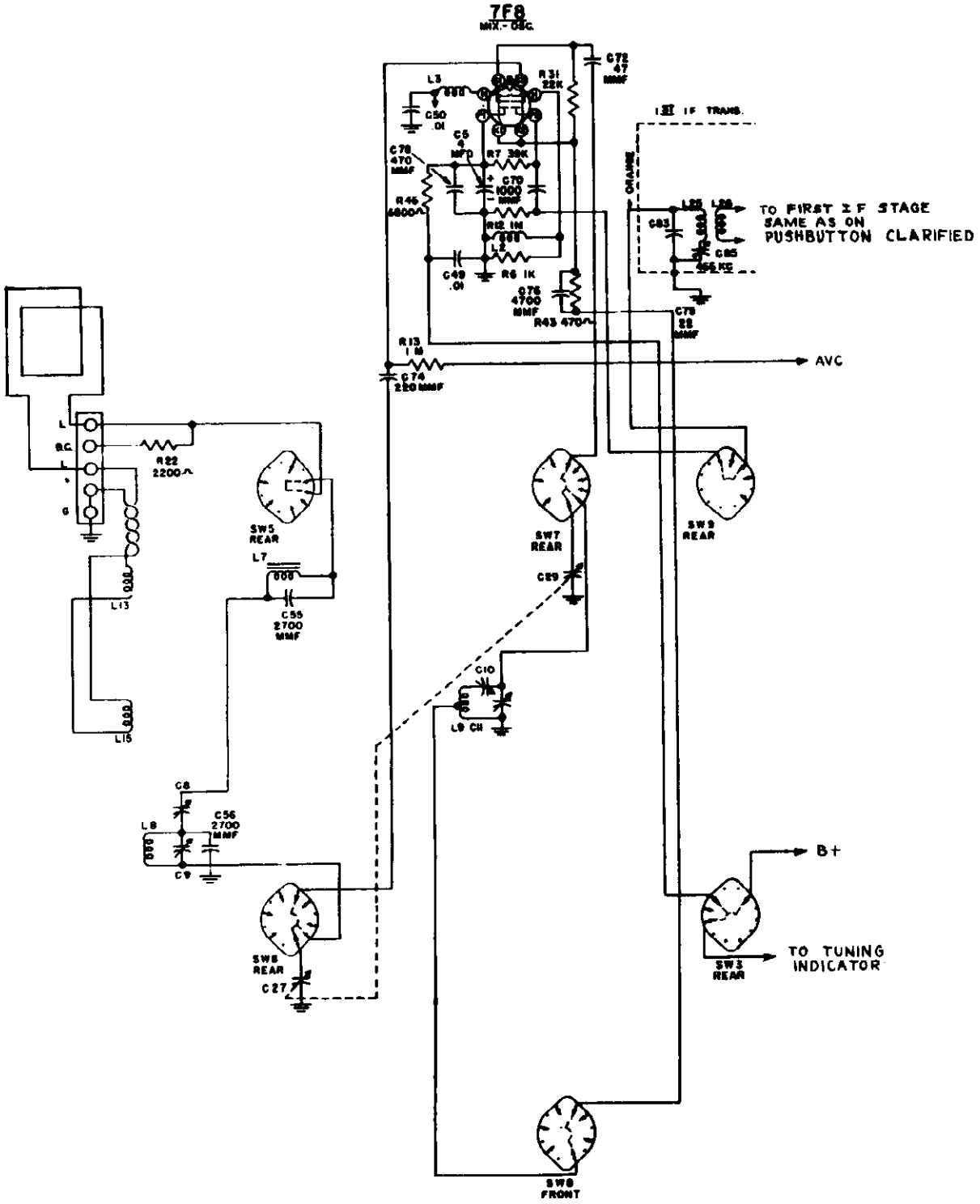

BAND-SWITCH SHOWN
AT 3RD POSITION CLOCKWISE
BROADCAST BAND
MANUAL TUNING
540 - 1615 KC

WESTINGHOUSE ELECTRIC CORP. MODEL H-169

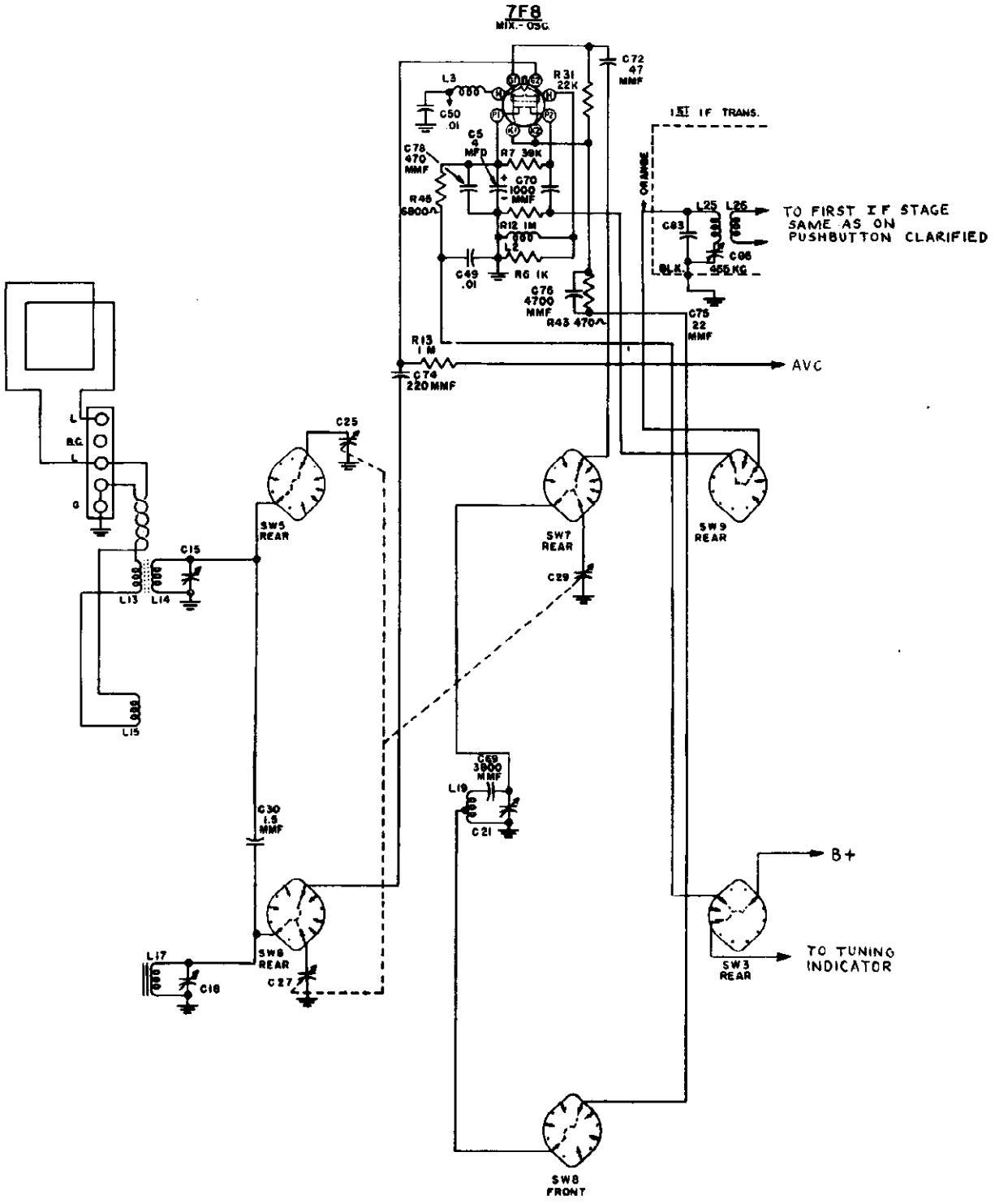

BAND-SWITCH SHOWN
AT 4TH POSITION CLOCKWISE.
SHORT WAVE -1BAND
5-10 MC

CLARI-SKEMATIX
Registered Trademark

MODEL H-169 WESTINGHOUSE ELECTRIC CORP.

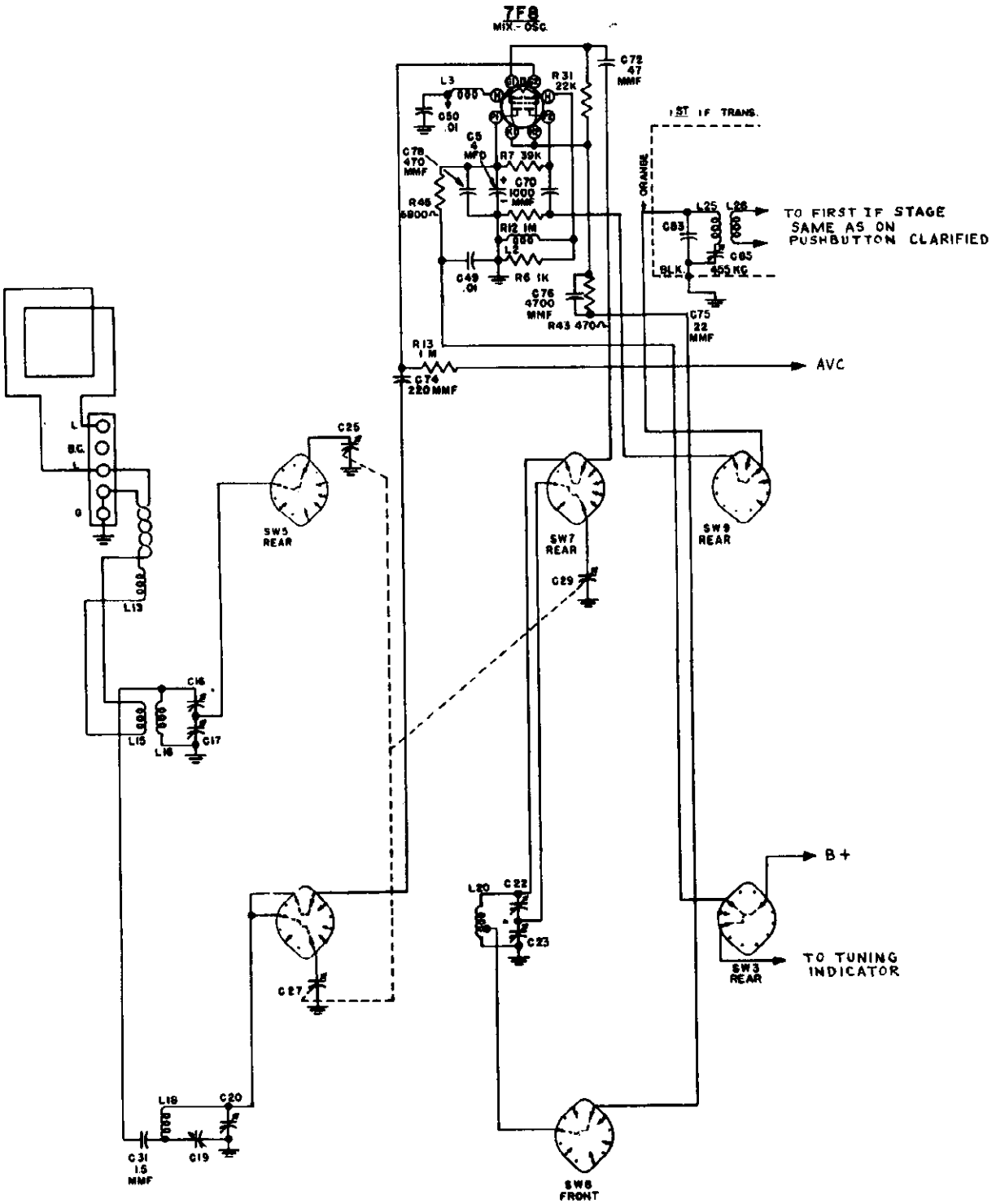

BAND-SWITCH SHOWN
AT 5TH POSITION CLOCKWISE.
SHORT WAVE 2ND BAND
12 - 20 MC

© John F. Rider

WESTINGHOUSE ELECTRIC CORP. MODEL H-169

MODEL H-169 WESTINGHOUSE ELECTRIC CORP.

ALIGNMENT PROCEDURE

BROADCAST AND SHORT WAVE BANDS

Connect an output meter across the speaker voice coil.

With the volume control set for maximum output and the signal from the generator attenuated to avoid A.V.C. action, proceed as follows:

Step	Connect Signal Generator to —	Signal Generator Frequency	Radio Dial Setting	Adjust
1.	Set selector switch to "AM"			
2.	Pin #4 on 6SG7, 2nd I-F amplifier tube through a 0.1 mfd capacitor	455 kc	550 kc	455 kc secondary and primary trimmers of 3rd I-F for max. output.
3.	Pin #4 on 6SG7, 1st I-F amplifier tube through a 0.1 mfd capacitor	455 kc	550 kc	455 kc secondary and primary trimmers of 2nd I-F for max. output.
4.	Pin #1 on 7F8, converter tube through a 0.1 mfd capacitor	455 kc	550 kc	455 kc secondary and primary trimmers of 1st I-F for max. output.
5.	Converter section of gang (C27) through a 0.1 mfd capacitor	455 kc	550 kc	Carefully "peak" all 455 kc I-F transformers for max. output.
6.	B.C. antenna terminal through a 200 mmf capacitor	1500 kc	1500 kc	B.C. oscillator trimmer (C11) for max. output.
7.	Radiated signal (no actual connection)	1400 kc	1400 kc	B.C. converter (C9) and antenna (C8) trimmers for max. output.
8.	B.C. antenna terminal through a 200 mmf capacitor	600 kc	600 kc	B.C. oscillator padder (C10) for max. output. Rock gang while aligning padder.
9.	Recheck steps 6, 7, and 8.			
10.	Set selector switch to "SW-1"			
11.	Short wave antenna terminal through a 400 ohm resistor (center terminal marked "L")	9 mc	9 mc	Short Wave #1 oscillator trimmer (C21) for max. output.*
12.	Short wave antenna terminal through a 400 ohm resistor (center terminal marked "L")	9 mc	9 mc	Short Wave #1 converter (C18) and antenna (C15) trimmers for max. output. Rock gang while adjusting trimmers.
13.	Set selector switch to "SW-2"			
14.	Short wave antenna terminal through a 400 ohm resistor (center terminal marked "L")	18 mc	18 mc	Short Wave #2 oscillator trimmer (C23) for max. output.*

FREQUENCY RANGES:

Standard Broadcast ..... 540 to 1615 kc.
Short Wave 1 ..... 5 to 10 mc.
Short Wave 2 ..... 12 to 20 mc.
Frequency Modulation ..... 88 to 108 mc.

TUBE COMPLEMENT:

1 7F8 ..... R-F Amp.
1 7F8 ..... Conv.-Osc.
2 6SG7 ..... 1st and 2nd I-F Amp.
1 6SH7 ..... Limiter (FM)
1 6H6 ..... Ratio Det. (FM)
1 6H6 or 6H6GT ..... Det. and AVC (AM)
1 6SQ7 ..... A-F Amp.
1 6SN7 or 6SN7GT ..... Driver
2 6L6 or 6L6GA ..... Power Output Amp.
1 6U5 ..... Tuning Indicator
1 5U4G ..... Rectifier
1 6SC7 ..... Phono. Pre-Amp.

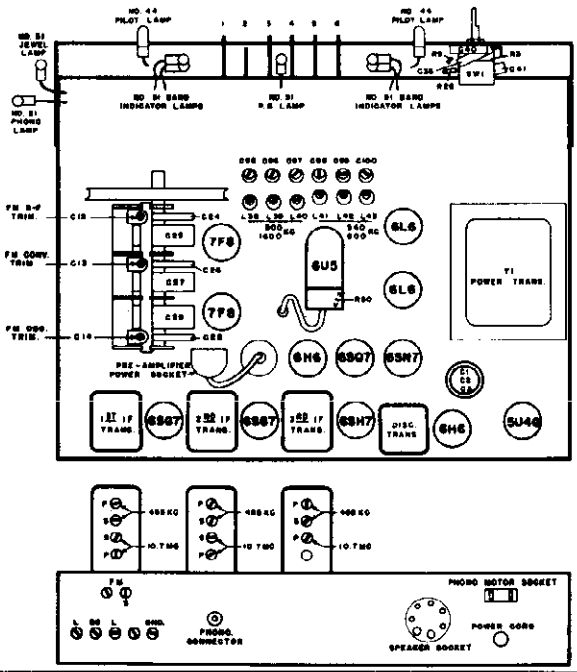

©John F. Rider

PUSH BUTTONS

Push buttons 1 to 3 are designed to receive stations from 900 to 1600 kc; push buttons 4 to 6 receive stations from 540 to 900 kc.

Refer to Fig. 3 for adjustor locations, and then proceed as follows:

1. Turn on radio and allow it to warm for five minutes.
2. Set the selector on AM, and tune in the desired station of the highest frequency (900 to 1600 kc).
3. Re-set the selector to PUSH BUTTONS and depress No. 1 push button (right button viewed from the front).
4. Adjust C95 for maximum receiver output (either a station or static will be heard depending on the setting of L38). Now adjust L38 until the desired station is heard. It may be necessary to re-adjust C95 at intervals to maintain receiver sensitivity.
5. Make a final adjustment of L38 for correct tuning and C95 for maximum output.
6. Return the selector to AM to make certain that the push button has been set on the desired station.
7. Adjust the remaining push buttons in the same manner.

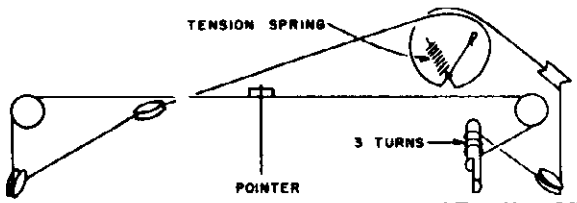

BROADCAST AND SHORT WAVE BANDS

Step	Connect Signal Generator to —	Signal Generator Frequency	Radio Dial Setting	Adjust
15.	Short wave antenna terminal through a 400 ohm resistor (center terminal marked "L")	18 mc	18 mc	Short Wave #2 converter (C20) and antenna (C17) trimmers for max. output.
16.	Short wave antenna terminal through a 400 ohm resistor (center terminal marked "L")	12 mc	12 mc	Short Wave #2 oscillator padder (C22) to receive 12 mc signal.
17.	Short wave antenna terminal through a 400 ohm resistor (center terminal marked "L")	12 mc	12 mc	Short Wave #2 converter (C19) and antenna (C16) padders for max. output.
18.	Repeat steps 14, 15, 16 and 17 until calibration and tracking is correct.			

FM BAND

	Do not align the 10.7 mc I-F circuits until all 455 kc I-F adjustments have been completed.			
1.	Set selector switch to "FM"			
2.	Connect a vacuum tube voltmeter between point X (see Figs. 1 and 2) and ground (chassis).			
3.	Pin #4 on 6SH7 limiter tube through a .001 mfd capacitor	UNMODULATED 10.7 mc	88 mc	Secondary of discriminator transformer (C94) for *zero* voltage.
4.	Re-connect the vacuum tube voltmeter to pin #3 on the 6H6 ratio detector tube.			
5.	Pin #4 on 6SH7 limiter tube through a .001 mfd capacitor	UNMODULATED 10.7 mc	88 mc	Primary of discriminator transformer (L34) for max. voltage.
6.	Pin #4 on 6SG7 2nd I-F tube through a .001 mfd capacitor	UNMODULATED 10.7 mc	88 mc	10.7 mc. pri. of 3rd I-F trans. for max. voltage.
7.	Pin #4 on 6SG7 1st I-F tube through a .001 mfd capacitor	UNMODULATED 10.7 mc	88 mc	10.7 mc. pri. and sec. of 2nd I-F trans. for max. voltage.
8.	Pin #1 of 7F8 converter tube through a .001 mfd capacitor	UNMODULATED 10.7 mc	88 mc	10.7 mc. pri. and sec. of 1st I-F trans. for max. voltage.
9.	Pin #1 of 7F8 converter tube through a .001 mfd capacitor	UNMODULATED 10.7 mc	88 mc	Recheck all 10.7 mc. I-F adjustments and discriminator primary (L34) adjustment.
10.	Re-connect the vacuum tube voltmeter to point X.			
11.	Stator of FM tuning capacitor (C26) through a .001 mfd capacitor	UNMODULATED 10.7 mc	88 mc	Secondary of discriminator trans. (C94) for *zero* voltage.
12.	Re-connect the vacuum tube voltmeter to pin #3 on the 6H6 ratio detector.			
13.	FM antenna terminals through a 72 ohm resistor (low side of generator to "S" terminal)	UNMODULATED 105 mc	105 mc	FM oscillator trimmer (C14) for max. voltage.
14.	FM antenna terminals through a 72 ohm resistor (low side of generator to "S" terminal)	UNMODULATED 105 mc	105 mc	FM converter (C13) and R-F (C12) trimmers for max. voltage.
15.	Re-check steps 13 and 14.			

MODEL H-169 WESTINGHOUSE ELECTRIC CORP.

Part No.	Description
V-4777-1	Antenna Assembly, FM dipole
V-5104	Background, dial
V-5224	Bearing, ball, for speaker turntable
V-5223	Bearing, sleeve, for speaker turntable
V-3507	Bracket and Clip Assembly, for tuning eye
V-4893	Bumper, recessed, for doors
V-5225	Bumper, speaker turntable
V-5189	Button, hole plug
V-5191	Cable and Socket, for eye tube
V-4931	Cable, output for pre-amplifier
V-4965-1	Cable, phono input
V-4930	Cable, power for pre-amplifier
V-5115	Capacitor, electrolytic 30-10-30 mfd 450 v. (C1, C2, C3)
V-5311	Capacitor, electrolytic 2 mfd 450 v. (C4)
V-4885	Capacitor, electrolytic 4 mfd 450 v. (C5, C6, C46)
V-3236	Capacitor, electrolytic cartridge, 20 mfd 25 v. (C7, C93)
V-5159	Capacitor, trimmer, B.C. antenna (C8)
V-5208	Capacitor, trimmer, B.C. converter (C9)
V-5143	Capacitor, trimmer, 2-gang (C10, C11)
V-3713-1	Capacitor, ceramic variable, F.M. (C12, C13, C14)
V-5219	Capacitor, trimmer, SW1 and SW2 antenna (C15, C16, C17)
V-5220	Capacitor, trimmer, SW1 and SW2 converter (C18, C19 C20)
V-5221	Capacitor, trimmer, SW1 and SW2 oscillator (C21, C22, C23)
V-3296	Capacitor, variable 3-gang (C24, C25, C26, C27, C28, C29)
V-5362	Capacitor, 1.5 mmf (C30, C31)
RCP10W6102M	Capacitor, .001 mfd 600 v. (C33, C34)
RCP10W6202M	Capacitor, .002 mfd 600 v. (C35)
RCP10W4203A	Capacitor, .02 mfd 400 v. (C36, C37, C38)
RCP10W4103A	Capacitor, .01 mfd 400 v. (C39, C40, C41, C42)
RCP10W4503A	Capacitor, .05 mfd 400 v. (C43)
RCP10W6502A	Capacitor, .005 mfd 600 v. (C44, C45)
RCM30B472M	Capacitor, 4700 mmf mica (C47, C48)
RCM30B103M	Capacitor, .01 mfd mica (C49, C50, C51, C52, C53)
RCM20B180K	Capacitor, 18 mmf mica (C54)
RCM30B292H	Capacitor, 2700 mmf mica (C55, C56)
RCM20B471M	Capacitor, 470 mmf mica (C57)
RCM20B221M	Capacitor, 220 mmf mica (C58, C59, C60, C61, C62)
RCM20B470M	Capacitor, 47 mmf mica (C63)
RCM20B220M	Capacitor, 22 mmf mica (C64)
RCM20B221K	Capacitor, 220 mmf mica (C65,

Part No.	Description
RCM30B222M	Capacitor, 2200 mmf mica (C67)
RCM20C181J	Capacitor, 180 mmf mica (C68)
RCM30B382J	Capacitor, 3800 mmf mica (C69)
R5CC26ZY102M	Capacitor, 1000 mmf ceramic (C70)
R2CC26PJ470K	Capacitor, 47 mmf ceramic (C71, C72)
RCP10W4104A	Capacitor, 0.1 mfd 400 v. (C73)
R2CC36SL221M	Capacitor, 220 mmf ceramic (C74)
R2CC21PJ220K	Capacitor, 22 mmf ceramic (C75)
R5CC36ZY472M	Capacitor, 4700 mmf ceramic (C76)
R5CC21ZY471M	Capacitor, 470 mmf ceramic (C77, C78)
R5CC35ZY472M	Capacitor, 4700 mmf ceramic (C79)
RCM20B220K	Capacitor, 22 mmf mica (C80)
V-4634	Capacitor, dual line filter (C81, C82)
V-5064-1	Catch, bullet (mahogany)
V-5064-2	Catch, bullet (blonde)
V-4638	Choke, filament, R-F amplifier tube (L1)
V-4886	Choke, filament, converter tube (L2, L3)
V-5261	Choke, FM antenna input (L4)
V-4763	Clamp, dial
V-5139	Coil, FM oscillator (L5)
V-5140	Coil, FM converter (L6)
V-5129	Coil, BC antenna (L7)
V-5149	Coil, BC converter (L8)
V-5127	Coil, BC oscillator (L9)
V-5140	Coil, FM antenna (L10)
V-3313	Coil, oscillator cathode (L11)
V-5128	Coil, push button converter (L12)
V-5125	Coil, SW1 antenna (L13, L14)
V-5147	Coil, SW2 antenna (L15, L16)
V-5126	Coil, SW1 converter (L17)
V-5148	Coil, SW2 converter (L18)
V-5124	Coil, SW1 and SW2 oscillator (L19, L20)
V-3254S	Connector, phono
V-5130	Control, tone, dual 2.0 megohms (R1) and 1.0 megohms (R2)
V-5111	Control, volume 2.0 megohms (R3) and switch (SW1)
V-4304-12	Cord Assembly, dial drive
V-3239	Cord, power A-C
V-4966-1	Cord, record changer power
V-4525-3	Cushion, chassis mounting
V-5109	Dial Background, rivet assembly
V-5112	Dial, glass
V-5171	Escutcheon, push button
V-4902	Glide, furniture
V-5060-1	Grille Cloth Assembly, speaker box (mahogany)
V-5060-2	Grille Cloth Assembly, speaker box (blonde)
V-5059-1	Grille Cloth, top (mahogany)
V-5074	Grille Cloth, top (blonde)
V-5123	Grille, metal, speaker
V-3345S-4	Grommet, variable capacitor mounting
V-5067-1	Hinge, center, split door (mahogany)
V-5067-2	Hinge, center, split door (blonde)
V-5363-1	Hinge, lower left hand(mahogany)

WESTINGHOUSE ELECTRIC CORP. MODEL H-169

Part No.	Description
V-5170 ...	Retainer, molding for V-5169 ....
V-5188 ...	Rosette, brass .....
V-5173 ...	Screw, #2-56, for front glass plate
V-3429-8 .	Screw, #10-32 Hex Head, chassis mounting .....
V-5187-1 .	Screw, mounting, for front glass plate .....
V-5110 ...	Shaft, tuning .....
V-3344S-2	Sleeve, spacer, variable capacitor mounting .....
V-3353-5 .	Slide Mechanism, left hand .....
V-3353-6 .	Slide Mechanism, right hand .....
V-3393-4 .	Socket, A-C power, phono .....
V-5117-2 .	Socket Assembly, tube (7F8) .....
V-4933 ...	Socket, molded octal, for pre-amplifier .....
V-4195 ...	Socket, molded octal tube (6L6)
V-3275S ..	Socket, molded octal tube (5U4G)
V-3246 ...	Socket, octal tube (wafer) .....
V-5181 ...	Socket, pilot light, jewel .....
V-5237 ...	Socket, pilot light, phono .....
V-5183 ...	Socket, pilot light, push buttons
V-5180-3	Socket, pilot light, (SW1, SW2, BC, FM) .....
V-5192 ...	Socket, 7 contact for speaker ...
V-5193 ...	Socket, tuning eye (plus R50) ...
V-5182 ...	Sockets, pilot light, edge lights
V-5354 ...	Spacer, Neoprene, for speaker turn-table .....
V-5160 ...	Speaker, 12" Electro-Dynamic ....
V-5161 ...	Speaker, 5" x 7" P.M. (plus C32)
V-3248S ..	Spring, dial drive .....
V-3258S ..	Spring, knob .....
V-5233 ...	Spring, speaker turntable .....
V-5065-1 .	Strike, bullet catch (mahogany)
V-5065-2 .	Strike, bullet catch (blonde) ...
V-5168-1 .	Strip, felt, 5/16" x 15" (mahogany)
V-5168-2 .	Strip, felt, 5/16" x 15" (blonde)
V-5234 ...	Stud, bearing, for speaker turntable
V-3167S-1	Stud, pulley, threaded .....
V-5235 ...	Stud, threaded, for speaker turntable
V-3261-3 .	Switch, push button (SW10A, SW10B)
V-5135 ...	Switch, selector, (SW2, SW3, SW4, SW5, SW6, SW7, SW8, SW9) .....
V-5152 ...	Tab, AM and SW1 .....
V-5185 ...	Tab, FM and SW2 .....
V-5174 ...	Tabs, station ... .
V-3482 ...	Teenut, for speaker box .....
V-5144 ...	Terminal Board, ANT-GND .....
V-3417 ...	Terminal Board, FM antenna .....
V-5136 ...	Transformer, driver (L21, L22) ..
V-5373 ...	Transformer, 1st I-F (C83, C84, C85, C101, C102, L23, L24, L25, L26)
V-5374 ...	Transformer, 2nd I-F (C86, C87, C88, C89, R49, L27, L28, L29, L30)
V-5375 ...	Transformer, 3rd I-F (C90, C91, C92, L31, L32, L33) .....
V-5212 ...	Transformer, discriminator (C93, C94, L34, L35, L36, L37) .....
V-5137 ...	Transformer, power .....
V-3274S ..	Tube Holder .....
V-3317 ...	Tuner, push button .....
V-5222 ...	Turntable Assembly, for speaker box .....
V-3506S-1	Washer, chassis mounting, Neoprene
V-3752S ..	Washer, felt, for knobs .....
V-3267S-3	Washer, flat, chassis mounting ...
V-3267S-10	Washer, flat, record changer mounting .....
V-3215S ..	Washer, spring, for tuning shaft
V-5175 ...	Windows, station tab .....

Part No.	Description
V-5363-2 .	Hinge, lower right hand (mahogany)
V-5363-3 .	Hinge, lower left hand (blonde)
V-5363-4 .	Hinge, lower right hand (blonde)
V-5179-1 .	Jewel, pilot light .....
V-5155-1 .	Knob, band (mahogany) .....
V-5155-2 .	Knob, band (blonde) .....
V-4362-4 .	Knob, tone, front (mahogany) ...
V-4362-5 .	Knob, tone, front (blonde) .....
V-5028-2 .	Knob, tone, rear .....
V-5095-1 .	Knob, volume and tuning (mahogany)
V-5095-2 .	Knob, volume and tuning (blonde)
No. 44 ...	Lamp, pilot light .....
No. 51 ...	Lamp, pilot light .....
V-3283-4 .	Loop Assembly .....
V-5169 ...	Molding, bronze strip, front ...
V-5365-1 .	Molding, plastic, for lower doors (mahogany) .....
V-5365-2 .	Molding, plastic, for lower doors (blonde) .....
V-5205 ...	Nut, speed, for front glass plate
V-5236 ...	Plate, anchor, 1½" x 1½" .....
V-5158-1 .	Plate Assembly, front glass (mahogany) .....
V-5158-2 .	Plate Assembly, front glass(blonde)
V-5229 ...	Plate, bottom, for speaker turn-table .....
V-5230 ...	Plate, mounting, for speaker turn-table .....
V-5231 ...	Plate, top, for speaker turntable
V-5133 ...	Pointer .....
V-5062 ...	Pull, door, lower (mahogany) ...
V-5305 ...	Pull, door, lower (blonde) .....
V-5061 ...	Pull, door, upper (mahogany) ...
V-5306 ...	Pull, door, upper (blonde) .....
V-3166S ..	Pulley, 7/16 dia. .....
V-5166-1 .	Push button .....
V-5232 ...	Race, bearing, for speaker turn-table .....
V-5203 ...	Reflector, dial .....
V-5134 ...	Resistor, 190 ohms 4 w. (R4) ...
V-5340 ...	Resistor, 290 ohms 2.3 w. (R5) .
RC10AE102M	Resistor, 1000 ohms 1/4 w. (R6)
RC20AE393K	Resistor, 39K ½ w. (R7) .....
RC10AE274M	Resistor, 270K 1/4 w. (R8, R9, R10)
RC20AE682K	Resistor, 6800 ohms ½ w. (R11) .
RC10AE105M	Resistor, 1.0 megohm 1/4 w. (R12, R13, R15, R16, R17) .....
RC10AE104K	Resistor, 100K 1/4 w. (R14, R18, R19)
RC10AE273K	Resistor, 27K 1/4 w. (R20) .....
RC10AE473M	Resistor, 47K 1/4 w. (R21) .....
RC10AE222M	Resistor, 2200 ohms 1/4 w. (R22)
RC10AE683M	Resistor, 68K 1/4 w. (R23) .....
RC10AE225M	Resistor, 2.2 megohms 1/4 w. (R24, R25) .....
RC10AE273M	Resistor, 27K 1/4 w. (R26) .....
RC10AE153J	Resistor, 15K 1/4 w. (R27, R28)
RC20AE330K	Resistor, 33 ohms ½ w. (R29, R30)
RC10AE223K	Resistor, 22K 1/4 w. (R31) .....
RC10AE680M	Resistor, 68 ohms 1/4 w. (R32) .
RC10AE274K	Resistor, 270K 1/4 w. (R33, R34)
RC20AE333M	Resistor, 33K ½ w. (R35) .....
RC10AE154K	Resistor, 150K 1/4 w. (R36) ....
RC10AE474M	Resistor, 470K 1/4 w. (R37) ....
RC40AE223K	Resistor, 22K 2 w. (R38) .....
RC30AE333K	Resistor, 33K 1 w. (R39, R40) ..
RC20AE103K	Resistor, 10K ½ w. (R41) .....
RC10AE222K	Resistor, 2200 ohms 1/4 w. (R42)
RC20AE471K	Resistor, 470 ohms ½ w. (R43, R44)
RC40AE682K	Resistor, 6800 ohms 2 w. (R45) .
RC30AE332K	Resistor, 3300 ohms 1 w. (R46, R47)
RC10AE221K	Resistor, 220 ohms ½ w. (R48) ..

MODEL H-178 WESTINGHOUSE ELECTRIC CORP.

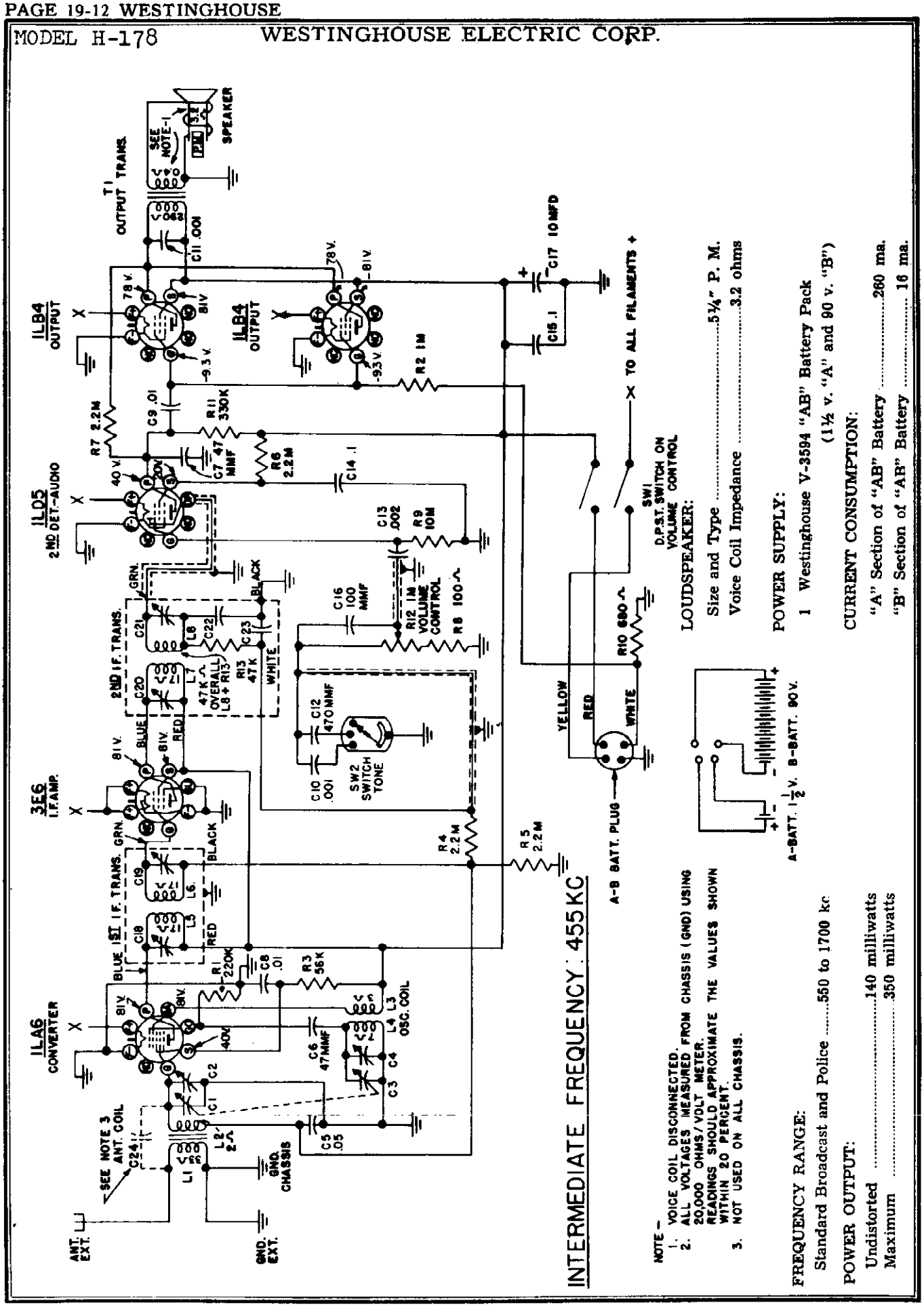

NOTE –
1. VOICE COIL DISCONNECTED.
2. ALL VOLTAGES MEASURED FROM CHASSIS (GND) USING 20,000 OHMS/VOLT METER. READINGS SHOULD APPROXIMATE THE VALUES SHOWN WITHIN 20 PERCENT.
3. NOT USED ON ALL CHASSIS.

FREQUENCY RANGE:
Standard Broadcast and Police .....550 to 1700 kc

POWER OUTPUT:
Undistorted .....140 milliwatts
Maximum .....350 milliwatts

LOUDSPEAKER:
Size and Type .....5¼" P. M.
Voice Coil Impedance .....3.2 ohms

POWER SUPPLY:
1 Westinghouse V-3594 "AB" Battery Pack (1½ v. "A" and 90 v. "B")

CURRENT CONSUMPTION:
"A" Section of "AB" Battery .....260 ma.
"B" Section of "AB" Battery ..... 16 ma.

©John F. Rider

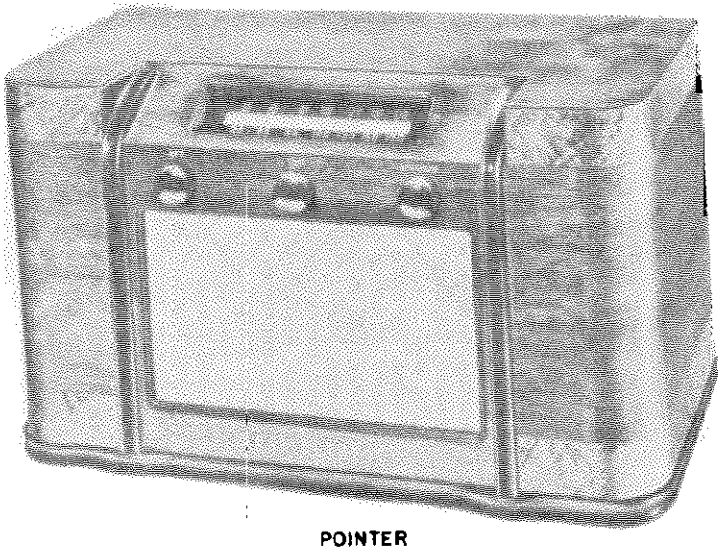

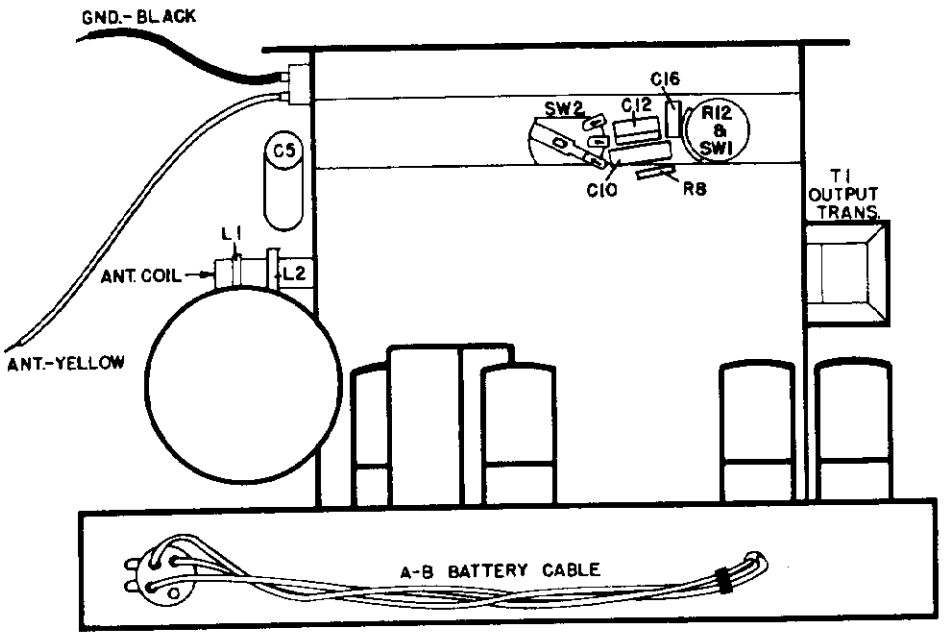

REAR VIEW OF CHASSIS

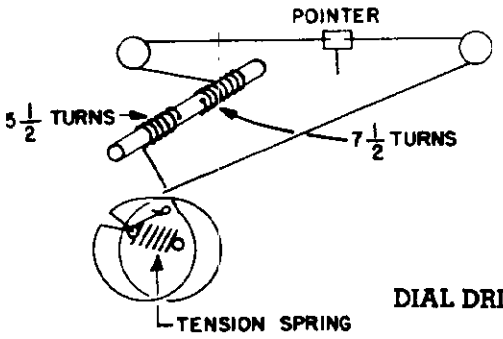

DIAL DRIVE MECHANISM

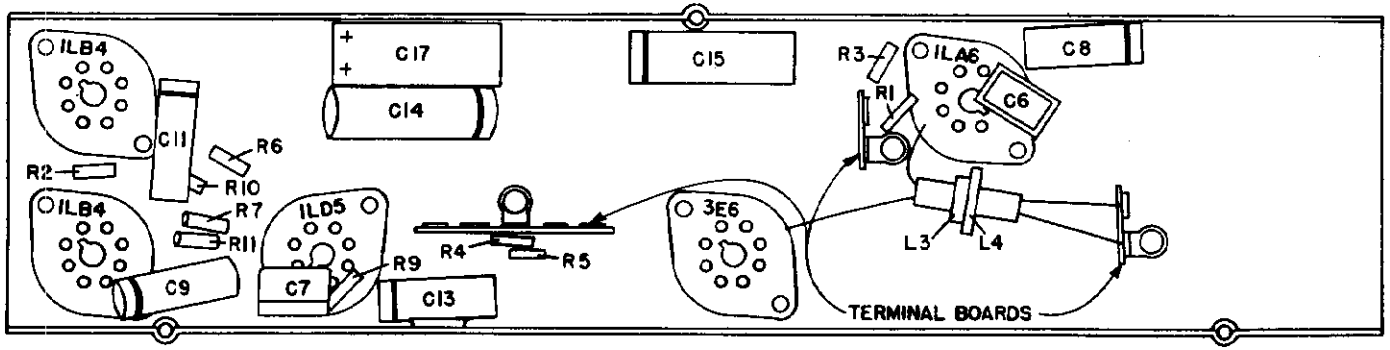

BOTTOM VIEW OF CHASSIS

MODEL H-178 WESTINGHOUSE ELECTRIC CORP.

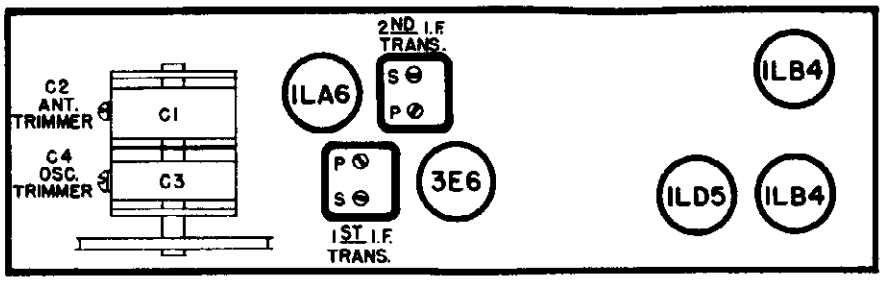

CHASSIS LAYOUT

ALIGNMENT

Before beginning alignment, make certain that the dial pointer aligns with the dot on the extreme high-frequency end of the dial when the tuning capacitor is set for minimum capacity.

Connect an output meter across the speaker voice coil.

While making the following adjustments, keep the volume control set for maximum output and the signal generator output attenuated to avoid A. V. C. action.

Step	Connect Signal Generator to—	Signal Generator Frequency	Radio Dial Setting	Adjust
1	3E6 control grid through 0.1 mfd capacitor	455 kc	550 kc	Secondary and Primary trimmers of 2nd I-F trans. for max. output.
2	1LA6 control grid through 0.1 mfd capacitor	455 kc	550 kc	Secondary and Primary trimmers of 1st I-F trans. for max. output.
3	Antenna terminal through 200 mmf capacitor	455 kc	550 kc	"Peak" all I-F trimmers.
4	Antenna terminal through 200 mmf capacitor	1500 kc	1500 kc	Oscillator trimmer for max. output.
5	Antenna terminal through 200 mmf capacitor	1500 kc	1500 kc	Antenna trimmer for max. output.

PARTS LIST FOR MODEL H-178

When ordering parts specify model number of set in addition to part number and description of part.

Part No.	Description
V-3603	Background, dial
V-3593	Baffle, speaker
V-3594	Battery, "A-B"
V-3550	Bracket, dial mounting
V-3551	Bracket, pulley stud assembly
V-3600	Bracket, speaker mounting
V-3555	Bracket, tuning shaft mounting
V-3580	Bracket, variable capacitor
V-1147-1	Cabinet
V-5324	Cable Assembly, battery
V-3569	Capacitor, variable 2 gang (C1, C2, C3, C4)
RCP10W2503A	Capacitor, .05 mfd 200 v. (C5)
RCM20A470K	Capacitor, 47 mmf mica (C6, C7)
RCP10W4103A	Capacitor, .01 mfd 400 v. (C8, C9)
RCP10W6102K	Capacitor, .001 mfd 600 v. (C10, C11)
RCM20A471K	Capacitor, 470 mmf mica (C12)
RCP10W6202A	Capacitor, .002 mfd 600 v. (C13)
RCP10W2104A	Capacitor, 0.1 mfd 200 v. (C14, C15)
RCM20A101M	Capacitor, 100 mmf mica (C16)
V-3581	Capacitor, electrolytic, tubular 10 mfd 150 v. (C17)
V-3562	Clamp, dial
V-3567	Coil, antenna (L1, L2, C24)
V-3582	Coil, oscillator (L3, L4)
V-3564	Control, volume, 2 meg. (R12) with switch (SW1)
V-4157S-66	Cord, dial drive
V-3596	Decal, OFF
V-3662	Decal, STATIONS
V-3660	Decal, TONE
V-3665	Decal, WESTINGHOUSE
V-3559	Dial, glass

Part No.	Description
V-3489S-1	Foot, rubber
V-3592-2	Grille Cloth
V-3268	Grommet, variable condenser mounting
V-3331-1	Knob, volume-switch
V-3331-3	Knob, tone
V-3331-2	Knob, tuning
V-3585	Plug, battery cable
V-3558	Pointer Assembly
V-3166S	Pulley, 7/16" dia.
RC10AE224M	Resistor, 220K ¼ w. (R1)
RC10AE105M	Resistor, 1.0 meg. ¼ w. (R2)
RC10AE563M	Resistor, 56K ¼ w. (R3)
RC10AE225M	Resistor, 2.2 meg. ¼ w. (R4, R5, R6, R7)
RC10AE101M	Resistor, 100 ohms ¼ w. (R8)
RC10AE106M	Resistor, 10.0 meg. ¼ w. (R9)
RC10AE681K	Resistor, 680 ohms ¼ w. (R10)
RC10AE334M	Resistor, 330K ¼ W. (R11)
V-3573	Socket, loktal, miniature tube
V-3601	Speaker, 5¼" P. M.
V-3248S	Spring, dial drive
V-3258S	Spring, knobs
V-3563	Switch, tone (SW2)
V-3574	Terminal Board, 2 lugs
V-3575	Terminal Board, 5 lugs
V-3576	Transformer, output (T1)
V-3577	Transformer, 1st I-F (L5, L6, C18, C19)
V-3578	Transformer, 2nd I-F (L7, L8, C20, C21, C22, C23, R13)
V-3556	Tuning Shaft Assembly
V-3752S	Washer, felt
V-3267S-4	Washer, flat, chassis mounting
V-3237	Washer, cup, variable capacitor Mounting

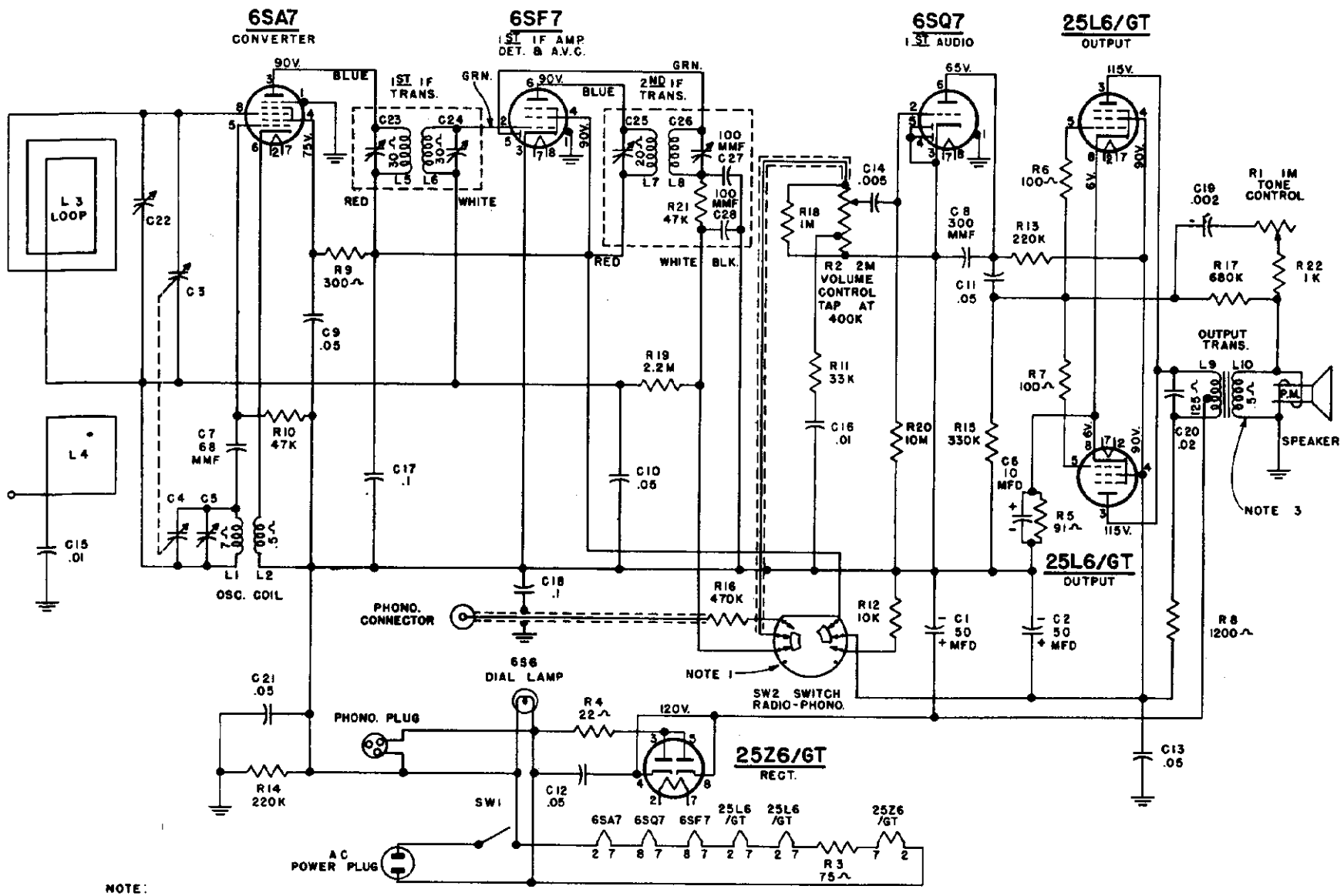

NOTE:
1. SELECTOR SWITCH (SW2) IS SHOWN IN BROADCAST POSITION. SECOND POSITION CLOCKWISE IS PHONO.
2. ALL VOLTAGES MEASURED FROM CIRCUIT (GND.) USING A 20,000 OHM/VOLT METER - LINE VOLTAGE 117 V.A.C. VOLTAGES SHOULD BE AS SHOWN ± 20%.
3. VOICE COIL DISCONNECTED.

ALIGNMENT

The use of an isolation transformer in the power line is recommended.

Connect an output meter across the speaker voice coil.

While making the following adjustments, keep the volume control set for maximum output and the signal generator output attenuated to avoid A. V. C. action.

Step	Connect Signal Generator to—	Signal Generator Frequency	Radio Dial Setting	Adjust
1	Pin No. 2 of 6SF7 tube through a 200 mmf capacitor	455 kc	540 kc	Secondary and primary of 2nd I-F transformer for maximum output.
2	Stator of tuning capacitor (C3) through a 200 mmf capacitor	455 kc	540 kc	Secondary and primary of 1st I-F transformer for maximum output.
3	Recheck 1st and 2nd I-F transformers.			
4	Antenna terminal through a 200 mmf capacitor	1615 kc	1615 kc	Oscillator trimmer (C5) for maximum output.
5	Radiated signal (no actual connection)	1400 kc	1400 kc	Antenna trimmer (C22) for maximum output.



FREQUENCY RANGE .....540 to 1615 kc.

INTERMEDIATE FREQUENCY .....455 kc.

TUBE COMPLEMENT:

1 6SA7 .....Converter
1 6SF7 .....1st I-F Amp., Det., and AVC
1 6SQ7 .....1st Audio
2 25L6GT .....Output
1 25Z6GT .....Rectifier

PILOT LAMP ....Westinghouse No. 6S6 120 v., .05 amp.

POWER OUTPUT:

Undistorted .....2 watts
Maximum .....2.5 watts

LOUDSPEAKER .....10" PM

OPERATING VOLTAGES (radio section only):

105 to 120 volts, 50-60 cycles or 105 to 120 volts, D.C.

POWER CONSUMPTION (radio section) .....35 watts

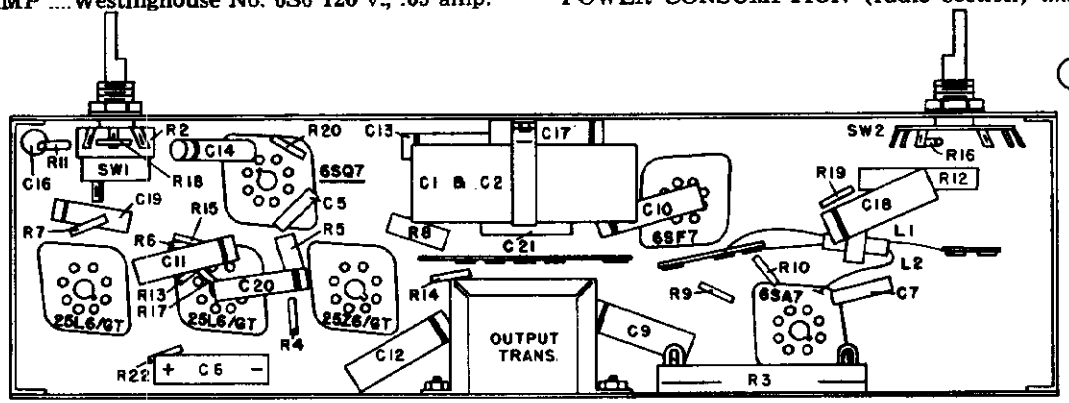

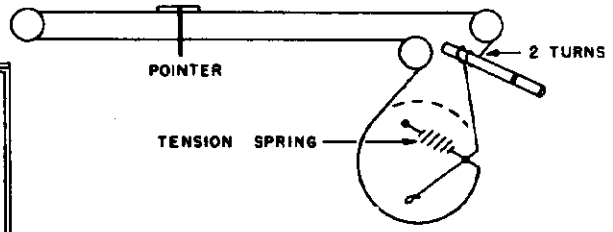

WESTINGHOUSE ELECTRIC CORP. MODELS H-183, H-183A

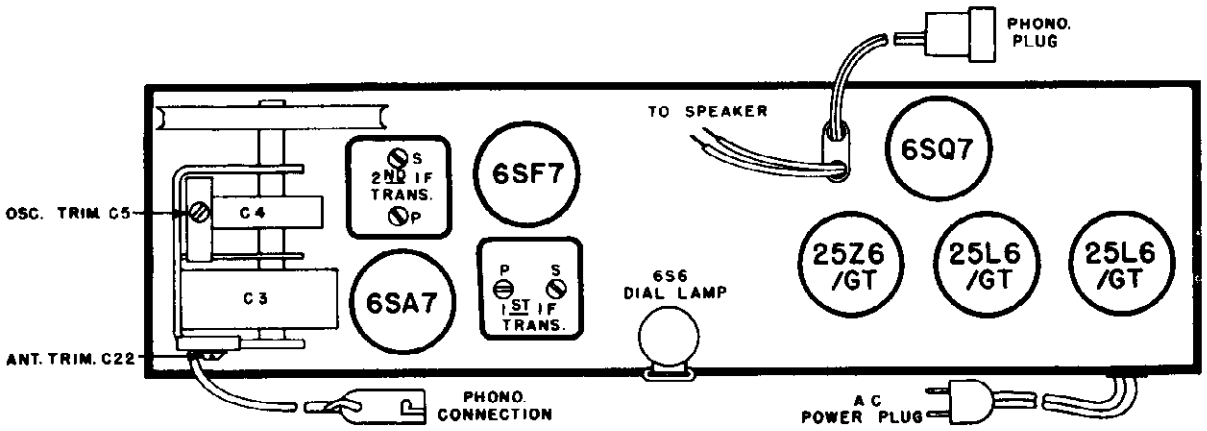

Part No.	Description
V-3166S	Pulley, 7/16 dia.
V-3321	Rail, pointer
V-4994	Resistor, 75 ohms 2 w. (R3)
RC20AE220M	Resistor, 22 ohms ½ w. (R4)
RC30AE910J	Resistor, 91 ohms 1 w. (R5)
RC10AE101M	Resistor, 100 ohms ¼ w. (R6, R7)
RC40AE122K	Resistor, 1200 ohms 2 w. (R8)
RC10AE332M	Resistor, 3300 ohms ¼ w. (R9)
RC10AE473M	Resistor, 47,000 ohms ¼ w. (R10)
RC10AE333M	Resistor, 33,000 ohms ¼ w. (R11)
RC40AE103M	Resistor, 10,000 ohms 2 w. (R12)
RC10AE224M	Resistor, 220,000 ohms ¼ w. (R13, R14)
RC10AE334M	Resistor, 330,000 ohms ¼ w. (R15)
RC10AE474M	Resistor, 470,000 ohms ¼ w. (R16)
RC10AE684M	Resistor, 680,000 ohms ¼ w. (R17)
RC10AE105M	Resistor, 1 megohm ¼ w. (R18)
RC10AE225M	Resistor, 2.2 megohms ¼ w. (R19)
RC10AE106M	Resistor, 10M ¼ w. (R20)
RC10AE102M	Resistor, 1000 ohms ¼ w. (R22)
V-3322	Shaft, tuning
V-5620	Shield, light
V-3344-1	Sleeve, spacer
V-5631-1	Slide Mechanism, left hand
V-5631-2	Slide Mechanism, right hand
V-5619-1	Socket, dial lamp
V-3163	Socket, octal No. 1 ground
V-3246S	Socket, octal tube
V-5571	Speaker, 10" P. M.
V-3248S	Spring, dial drive
V-3258S	Spring, knob
V-5628-1	Strike, bullet catch
V-3301	Switch, radio-phono (SW2)
V-3482	Teenut, phono mounting (H-183)
V-3328	Transformer, 1st I-F (C23, C24, L5, L6)
V-3329	Transformer, 2nd I-F (R21, C25, C26, C27, C28, L7, L8)
V-5430	Transformer, output (L9, L10)
V-3668S	Washer, felt (knobs)
V-3267S-10	Washer, flat (record changer mounting for H-183A)
V-3267S-4	Washer, flat (chassis and record changer mounting for H-183 and chassis mounting for H-183A)

Part No.	Description
V-5580	Bracket, dial lamp
V-5584	Cable and Socket, phono power
V-5593	Capacitor, electrolytic 50-50 mfd (C1, C2)
V-5586	Capacitor, variable 2-gang (C3, C4, C5)
V-5621	Capacitor, electrolytic cartridge 10 mfd (C6)
RCM20A680M	Capacitor, 68 mmf mica (C7)
RCM20A301M	Capacitor, 300 mmf mica (C8)
RCP10W4503A	Capacitor, .05 mfd 400 v. (C9, C10, C11, C12, C13)
RCP10W6502A	Capacitor, .005 mfd 600 v. (C14)
RCP10W4103A	Capacitor, .01 mfd 400 v. (C15, C16)
RCP10W4104A	Capacitor, .1 mfd 400 v. (C17, C18)
RCP10W4202A	Capacitor, .002 mfd 400 v. (C19)
RCP10W4203A	Capacitor, .02 mfd 400 v. (C20)
V-5618-1	Capacitor, .05 mfd 400 v. (C21)
V-4992	Capacitor, trimmer, antenna (C22)
V-5627-1	Catch, bullet
V-5622	Clip, dial mounting
V-3473	Coil, oscillator (L1, L2)
V-5585	Connector, phono, female
V-3303	Control, tone (R1)
V-5617	Control, volume (R2) and switch (SW1)
V-4304-15	Cord Assembly, dial drive
V-3663	Decal, radio-phono
V-3662	Decal, stations
V-3660	Decal, tone
V-3661	Decal, volume
V-5567	Dial, plastic
V-5569	Escutcheon
V-5629	Glide, furniture
V-5625-1	Grille Cloth
V-3766	Grommet, fibre
V-3345-7	Grommet, phono mounting (H-183)
V-5630-1	Hinge, door
V-3667-6	Knob, radio-phono
V-3262-5	Knob, tone and band
V-3667-5	Knob, volume
No. 6S6	Lamp, dial
V-5583	Loop, antenna
V-5632-1	Nameplate
V-3712S	Needle, phono
V-3366-2	Pin, escutcheon-nameplate mounting
V-5577	Pointer, dial
V-5626-1	Pull, door

MODEL H-188 WESTINGHOUSE ELECTRIC CORP.

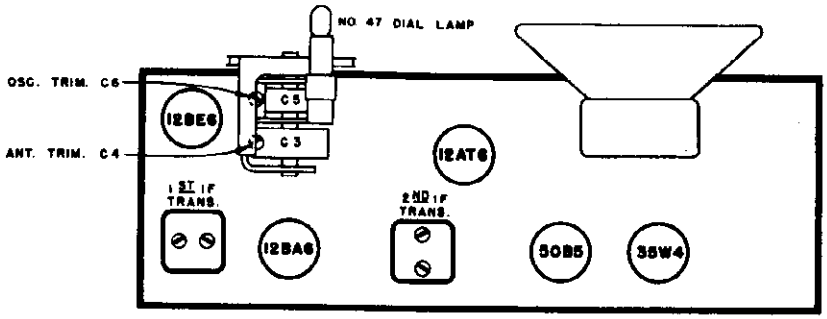

CHASSIS NO. V-2133

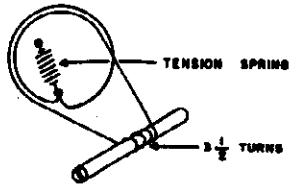

Step	Connect Signal Generator to —	Signal Generator Frequency	Radio Dial Setting	Adjust
1.	Stator of antenna tuning capacitor (C3) through a 0.1 mfd capacitor	455 kc	minimum capacity	Trimmers in 1st and 2nd I-F trans. for max. output
	NOTE: If the I-F transformers are badly mis-aligned, it may be impossible to obtain sufficient output using the above system. In this event, it will be necessary to align each transformer separately. Start with the last I-F transformer and work forward, connecting the signal generator to the control grid of the tube preceding the transformer under alignment.			
2.	Recheck Step 1 adjustments.			
3.	Radiated signal (no actual connection)	1615 kc	minimum capacity	Osc. trimmer (C6) for max. output
4.	Radiated signal (no actual connection)	1400 kc	tune to signal	Ant. trimmer (C4) for max. output (rock-in adjustment)

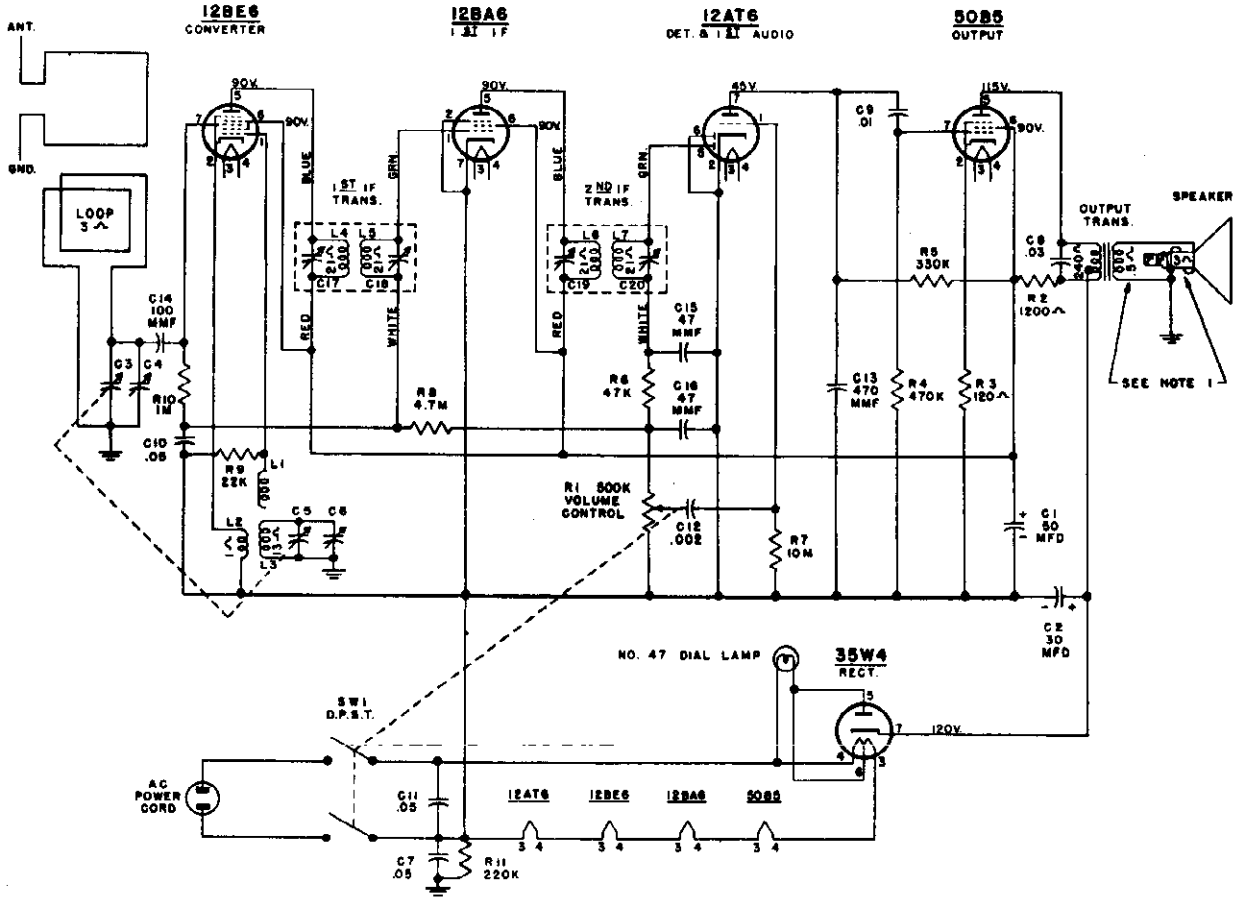

NOTE:
1. VOICE COIL DISCONNECTED.
2. ALL VOLTAGES MEASURED FROM CIRCUIT (GND.) USING 20,000 OHM/VOLT METER—LINE VOLTAGE 117 V.A.C. VOLTAGES SHOULD BE AS SHOWN ± 20 PER CENT.

CHASSIS NO. V-2133

©John F. Rider

Part No.	Description
V-5778-1	Baffle and Grille Cloth Assembly .....
**V-1160-1 ...	Cabinet .....
V-4044	Capacitor, electrolytic .....
	50 mfd 150 v. (C1)
	30 mfd 150 v. (C2)
V-5819	Capacitor, variable, 2 gang .....
	Tuner, antenna (C3)
	Trimmer, antenna (C4)
	Tuner, oscillator (C5)
	Trimmer, oscillator (C6)
V-5618-1	Capacitor, .05 resonant 400 v. (C7) .....
RCP10W4303A ..	Capacitor, .03 mfd 400 v. (C8) .....
RCP10W4103A ..	Capacitor, .01 mfd 400 v. (C9) .....
RCP10W4503A ..	Capacitor, .05 mfd 400 v. (C10, C11) .....
RCP10W6202A ..	Capacitor, .002 mfd 600 v. (C12) .....
RCM20A471M ...	Capacitor, 470 mmf mica (C13) .....
RCM20A101M ...	Capacitor, 100 mmf mica (C14) .....
RCM20A470M ...	Capacitor, 47 mmf mica (C15, C16) .....
V-5851	Coil, oscillator (L1, L2, L3) .....
V-5833	Control, volume, variable resistor 500K (R1) and switch D.P.S.T. (SW1) .....
V-4304-18	Cord, dial drive .....
V-5679-1	Cover, back .....
V-5777	Dial .....
V-5784	Disc, pointer .....
V-5785-1	Hub, pointer .....
V-5780-1	Knob .....
No. 47	Lamp, pilot light .....
RC30AE122K ...	Resistor, 1200 ohms 1 w. (R2) .....
RC20AE121K ...	Resistor, 120 ohms ½ w. (R3) .....
RC20AE474M ...	Resistor, 470,000 ohms ½ w. (R4) .....
RC20AE334M ...	Resistor, 330,000 ohms ½ w. (R5) .....
RC20AE473M ...	Resistor, 47,000 ohms ½ w. (R6) .....
RC20AE106M ...	Resistor, 10 megohms ½ w. (R7) .....
RC20AE475M ...	Resistor, 4.7 megohms ½ w. (R8) .....
RC20AE223M ...	Resistor, 22,000 ohms ½ w. (R9) .....
RC20AE105M ...	Resistor, 1 megohm ½ w. (R10) .....
RC20AE224M ...	Resistor, 220,000 ohms ½ w. (R11) .....
V-4053	Socket, dial light .....
V-5852-2	Socket, miniature wafer .....
V-5852-1	Socket, miniature wafer (shielded) .....
**V-5682	Speaker, 5" P.M. .....
V-4057	Spring, dial drive .....
V-5685	Transformer, 1st I-F (L4, L5, C17, C18) ...
V-5686	Transformer, 2nd I-F (L6, L7, C19, C20) ...
V-5775-1	Transformer, output .....
V-5421-3	Washer, felt, knob .....
V-5776	Window, dial .....

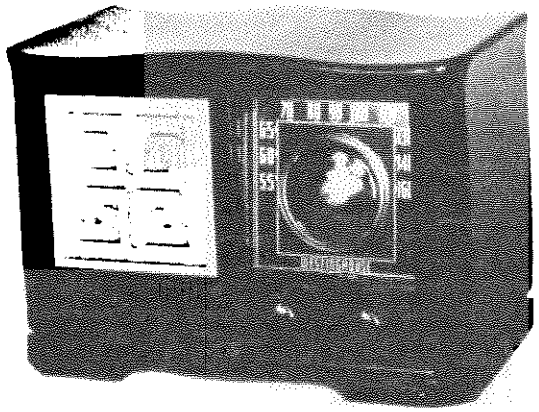

ALIGNMENT

It is recommended that the chassis be isolated from the power line by means of an isolation transformer.

Connect an output meter across the speaker voice coil.

While making the following adjustments, keep the volume control set for maximum output and the signal generator attenuated to avoid AVC action.

SPECIFICATIONS

FREQUENCY RANGE: ..... 540 to 1600 kc.

INTERMEDIATE FREQUENCY: ..... 455 kc.

TUBE COMPLEMENT:

1	12BE6	Converter
1	12BA6	I-F Amp.
1	12AT6	Det., AVC, and 1st Audio
1	50B5	Output Amp.
1	35W4	Rectifier

PILOT LAMP: ..... Westinghouse No. 47, 6.3 v., 0.15 a.

POWER OUTPUT:

Undistorted	0.8 watts
Maximum	1.3 watts

LOUDSPEAKER: ..... 5" P.M.

OPERATING VOLTAGE: ..... 105 to 120 volts 50-60 cycles A-C or D-C

POWER CONSUMPTION: ..... 35 watts at 117 volts

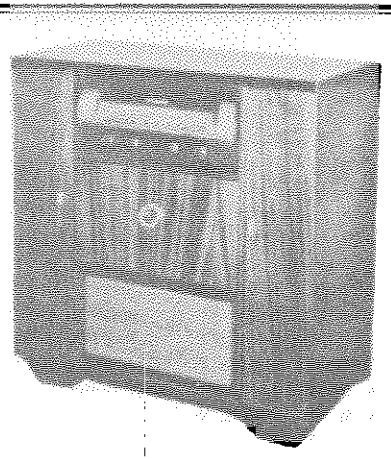

H-190

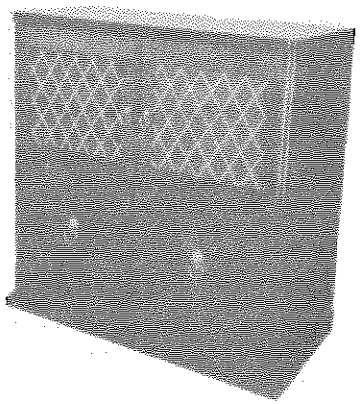

H-191 & H-191A

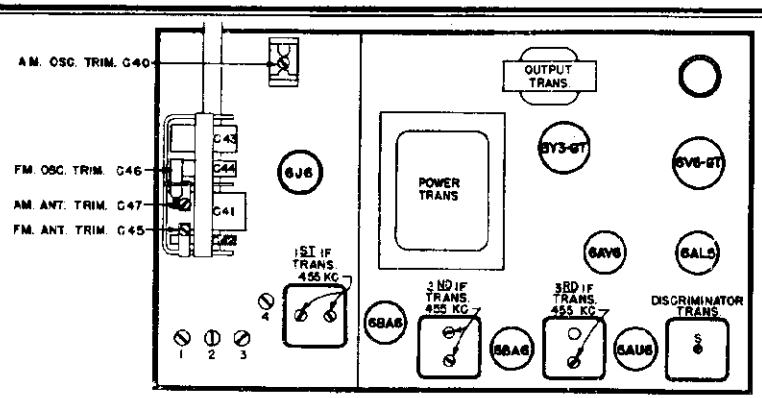

CHASSIS NO. V-2134

— TOP VIEW

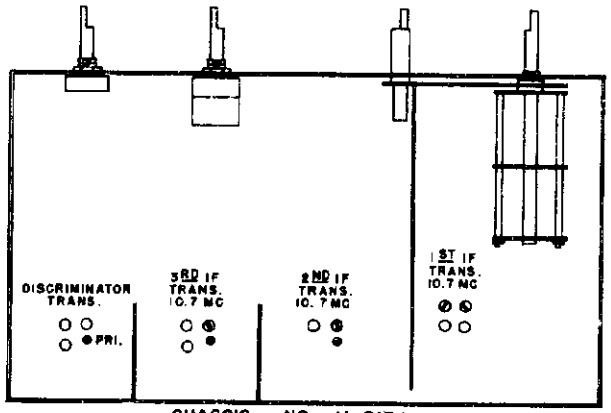

CHASSIS NO. V-2134
BOTTOM VIEW

BOTTOM VIEW

SPECIFICATIONS

FREQUENCY RANGES:

Standard Broadcast ..... 540 - 1600 kc.
Frequency Modulation ..... 88 - 108 mc.

INTERMEDIATE FREQUENCIES:

Amplitude Modulation ..... 455 kc.
Frequency Modulation ..... 10.7 mc.

TUBE COMPLEMENT:

1 6J6 ..... Osc. - Converter
2 6BA6 ..... 1st and 2nd I-F Amp.
1 6AU6 ..... Limiter (FM)
1 6AV6 ..... Det. (AM) and 1st A-F Amp.
1 6AL5 ..... Ratio Det. (FM)
1 6V6GT ..... Output Amp.
1 5Y3GT ..... Rectifier

PILOT LAMPS:

...2 Westinghouse No. 44, 6.3 v., 0.25 amp.

POWER OUTPUT:

Undistorted ..... 3.5 watts
Maximum ..... 5 watts

LOUDSPEAKER:

H-190 ..... 8" P.M.
H-191 and H-191A ..... 10" P.M.

OPERATING VOLTAGE:

..... 105 to 120 volts, 60 cycles A-C

POWER CONSUMPTION ..... 150 watts

WESTINGHOUSE ELECTRIC CORP. MODELS H-190, H-191, H-191A

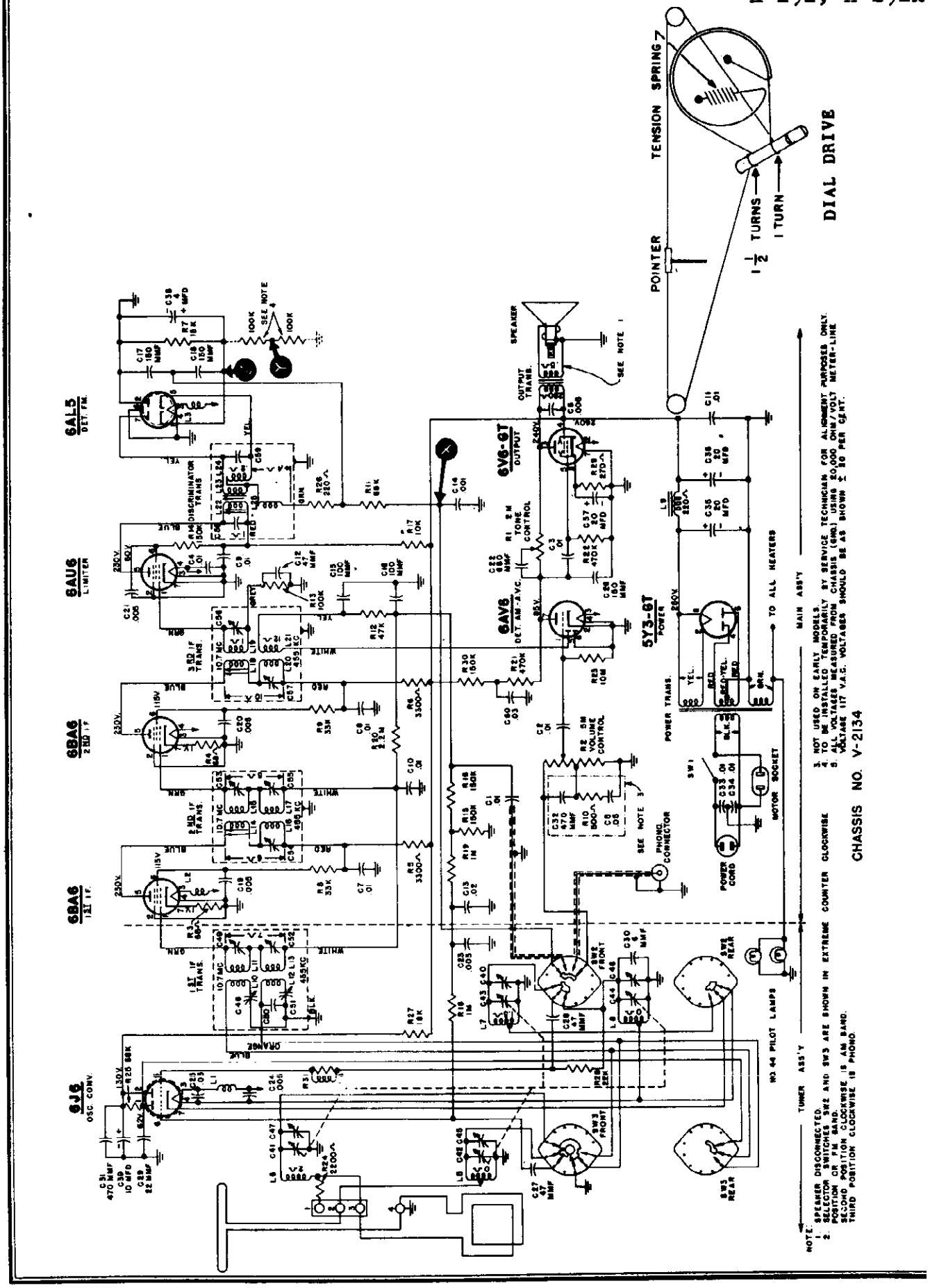

MODELS H-190, H-191, H-191A

WESTINGHOUSE ELECTRIC CORP.

ALIGNMENT

BROADCAST BAND

Completely mesh the tuning capacitor plates and set the dial pointer to the end mark on the dial scale.

Connect an output meter across the speaker voice coil.

While making the following adjustments, keep the volume control set for maximum output, the tone control set for maximum treble, and the signal generator output attenuated to avoid A.V.C. action.

Step	Connect Signal Generator to —	Signal Generator Frequency	Radio Dial Setting	Adjust
1	Set the band switch to AM.			
2	Stator of tuning capacitor (C41) through a 0.1 mfd capacitor	455 kc	maximum capacity	455 kc. pri. of 3rd I-F trans., sec. and pri. of 2nd I-F trans., and sec. and pri. of 1st I-F trans. for max. output
	NOTE: If the I-F transformers are badly mis-aligned, it may be impossible to obtain sufficient output using the above system. In this event, it will be necessary to align each transformer separately. Start with the last I-F transformer and work forward, connecting the signal generator to the control grid of the tube preceding the transformer under alignment.			
3	Radiated signal (no actual connection)	1600 kc	1600 kc	AM osc. trimmer (C40) for max. output
4	Radiated signal (no actual connection)	1400 kc	tune to signal	AM ant. trimmer (C47) for max. output (rock-in adjustment)

FM BAND

Do not align the 10.7 mc. I-F circuits until all 455 kc. I-F adjustments have been completed.

1	Set the band switch to FM.			
2	Connect two 100,000 ohm resistors (the resistances must be equal within 5 percent) between pin #1 of the 6AL5 tube and ground as shown in Fig. 4.			
3	Connect a V.T.V.M. between points "X" and "Y" (see Fig. 4).			
4	Pin #1 of the 6BA6, 1st I-F amp. through a .001 mfd mica capacitor	10.7 mc	maximum capacity	Sec. of discriminator trans. for zero voltage (the voltage will go positive on one side of the correct setting and negative on the other side)
5	Connect the V.T.V.M. between point "Z" and ground.			
6	Pin #1 of the 6BA6, 1st I-F amp. through a .001 mfd mica capacitor	10.7 mc	maximum capacity	Pri. of discriminator trans., 10.7 mc. sec. and pri. of 3rd I-F trans., and 10.7 mc. sec. and pri. of 2nd I-F trans. for max. voltage
7	Using the same sig. generator and V.T.V.M. connections as in Step 6, adjust the sig. generator output until the V.T.V.M. indicates 4 volts. Use this sig. generator setting to perform Step 9.			
8	Reconnect the V.T.V.M. between points "X" and "Y".			
9	Pin #1 of the 6BA6, 1st I-F amp. through a .001 mfd mica capacitor	10.7 mc	maximum capacity	Sec. of discriminator trans. for zero voltage. The voltage will change polarity as the sec. is tuned through resonance — tune carefully for exact zero
10	Remove the two 100,000 ohm resistors which were inserted in Step 2.			
11	Reconnect the V.T.V.M. between point "Z" and ground.			
12	Pin #1 of the 6BA6, 1st I-F amp. through a .001 mfd mica capacitor	10.7 mc	maximum capacity	Recheck pri. of discriminator trans. for max. voltage
13	Stator of FM tuning capacitor (C42) through a .01 mfd mica capacitor	10.7 mc	maximum capacity	Sec. and pri. of 10.7 mc. 1st I-F trans. for max. voltage
14	Ant. terminal #2 through a 300 ohm resistor	108 mc	108 mc	FM osc. trimmer (C46) for max. voltage*
15	Ant. terminal #2 through a 300 ohm resistor	105 mc	tune to signal	FM ant. trimmer (C45) for max. voltage (rock-in adjustment)**

*After adjusting the oscillator trimmer at 108 mc., check dial calibration by tuning the receiver to an 88 mc. signal from the generator. If the dial pointer indicates 88 mc., no further oscillator adjustments are necessary. If the pointer is on the high frequency side of 88 mc., slightly expand the length of the oscillator coil (L8); if the pointer is on the low frequency side of 88 mc., slightly compress the oscillator coil. Re-adjust the oscillator trimmer at 108 mc., and again check the calibration. Repeat this process until calibration is correct.

**After adjusting the antenna trimmer at 105 mc., check tracking by tuning to a 90 mc. signal from the generator and re-adjusting the antenna trimmer for max. output. If the peak setting is the same at 90 mc. as it was at 105 mc., no further adjustments are necessary. If the trimmer capacitance must be increased to obtain max. output at 90 mc., slightly compress the antenna coil (L5); if the capacitance must be decreased, slightly expand the coil. Re-adjust the antenna trimmer at 105 mc., and again check the tracking. Repeat this process until tracking is correct.

©John F. Rider

Part No.	Description
V-5803	Coil, antenna loading (L6)
V-5804	Coil, oscillator (L7)
V-4674	Coil, FM antenna (L5)
V-6076	Coil, FM oscillator (L8)
V-3254S	Connector, phono
V-5790	Control, tone, 2 megohms (R1)
V-5791	Control, volume-off-on, .5 megohm (R2) and switch (SW1)
V-4304-17	Cord, dial drive
V-7[illegible]	Crystal Cartridge (Shure P-93) (H-190)
V-7689	Crystal Cartridge (Shure P-30) (H-191 and H-191A)
V-4690	Decal, band
V-4691	Decal, tone
V-4692	Decal, tuning
V-4693	Decal, volume
V-4474	Decal, Westinghouse (H-190)
V-5820	Dial
V-5998-1	Grille Cloth, speaker (H-190)
V-5363-1	Hinge, L.H.
V-5363-2	Hinge, R.H.
V-3667-7	Knob Assembly, band switch
V-3667-5	Knob Assembly, tone-volume-tuning
No. 44	Lamp, pilot light
V-5869	Molding, decals
V-7682	Motorboard (H-190)
V-4696	Nameplate, Westinghouse-FM (H-191 and H-191A
V-3712	Needle, phono (H-190)
V-7690	Needle, phono (H-191 and H-191A)
V-5793	Pointer, dial
V-6000-1	Pull, door, phono (H-190)
V-5877-2	Pull, door, phono (H-191 and H-191A)
V-5999-1	Pull, door, record compartment (H-190)
V-5877-1	Pull, door, record compartment (H-191 and H-191A)
V-4886-3	Reactor, R-F (L1, L2, L3)
V-4886-7	Reactor, R-F (L4, R31)
V-5794	Reactor, filter choke (L9)
RC10AE680K	Resistor, 68 ohms ½ w. (R3, R4)
RC30AE332K	Resistor, 3300 ohms 1 w. (R5, R6)
RC10AE153K	Resistor, 15,000 ohms ½ w. (R7)
RC30AE333K	Resistor, 33,000 ohms 1 w. (R8, R9)
RC10AE152M	Resistor, 1500 ohms ½ w. (R10)
RC10AE683M	Resistor, 68,000 ohms ½ w. (R11)
RC10AE473M	Resistor, 47,000 ohms ½ w. (R12)
RC10AE104K	Resistor, 100,000 ohms ½ w. (R13)
RC20AE154K	Resistor, 150,000 ohms ½ w. (R14)
RC10AE154M	Resistor, 150,000 ohms ½ w. (R15, R16, R30)
RC30AE103K	Resistor, 10,000 ohms 1 w. (R17)
RC10AE105M	Resistor, 1 megohm ½ w. (R18, R19)

Part No.	Description
**V-5982-1	Antenna Assembly, AM loop (H-190)
**V-5875-1	Antenna Assembly, AM loop (H-191 and H-191A)
**V-5986-1	Antenna Assembly, FM dipole (H-190)
**V-5986-2	Antenna Assembly, FM dipole (H-191 and H-191A)
V-5812	Background, dial
V-5860-2	Cable Assembly, speaker (H-190)
V-5860-1	Cable Assembly, speaker (H-191 and H-191A)
V-4965-2	Cable, phono input (H-191 only)
RCP10W4103A	Capacitor, .01 mfd 400 v. (C1, C2, C3)
V-5040-13	Capacitor, .01 mfd 200 v. (C4)
RCP10W2503M	Capacitor, .05 mfd 200 v. (C5)
RCP10M6502A	Capacitor, .005 mfd 600 v. (C6)
V-5040-15	Capacitor, .01 mfd 600 v. (C7, C8, C9, C10, C11)
RCM20A470M	Capacitor, 47 mmf mica (C12)
RCP10W4203A	Capacitor, .02 mfd 400 v. (C13)
RCP10W6102A	Capacitor, .001 mfd 600 v. (C14)
RCM20A101M	Capacitor, 100 mmf mica (C15, C16)
RCM20A151J	Capacitor, 150 mmf mica (C17, C18)
V-5040-11	Capacitor, .005 mfd 600 v. (C19, C20, C21)
R5CC25ZY681M	Capacitor, 680 mmf ceramicon (C22)
V-5596	Capacitor, .005 mfd 450 v. (C23, C24, C25)
RCM20A151M	Capacitor, 150 mmf mica (C26)
R3CC21SL470K	Capacitor, 47 mmf ceramicon (C27, C28)
RCM20B220K	Capacitor, 22 mmf mica (C29)
R3CC20UK060G	Capacitor, 6 mmf ceramicon (C30)
R5CC20ZY471M	Capacitor, 470 mmf ceramicon (C31)
RCM20A471M	Capacitor, 470 mmf mica (C32)
V-4634	Capacitor, dual line filter (C33, C34)
V-5821	Capacitor, electrolytic 20-20 mfd 400 v. (C35, C36)
V-3236	Capacitor, electrolytic 20 mfd 25 v. (Cathode bypass - C37)
V-4885	Capacitor, electrolytic 4 mfd 450 v. (C38)
V-5985	Capacitor, electrolytic 10 mfd 350 v. (C39)
V-4672	Capacitor, trimmer, AM oscillator (C40)
V-5802	Capacitor, variable — AM antenna (C41); FM antenna (C42); AM oscillator (C43); FM oscillator (C44); Trimmer FM antenna (C45); Trimmer FM oscillator (C46); Trimmer AM antenna (C47)
RCP10W4303M	Capacitor, .03 mfd 400 v. (C60)

Part No.	Description
RC10AE225M	Resistor, 2.2 megohms ½ w. (R20)
RC10AE474K	Resistor, 470,000 ohms ½ w. (R21, R22)
RC10AE106M	Resistor, 10 megohms ½ w. (R23)
RC10AE222M	Resistor, 2200 ohms ½ w. (R24)
RC20AE683K	Resistor, 68,000 ohms ½ w. (R25)
RC10AE221M	Resistor, 220 ohms ½ w. (R26)
RC30AE183K	Resistor, 18,000 ohms 1 w. (R27)
RC10AE223K	Resistor, 22,000 ohms ½ w. (R28)
RC30AE271K	Resistor, 270 ohms 1 w. (R29)
V-4169-1	Shield Base, miniature tube (6J6)
V-4169-2	Shield, miniature tube (6J6)
V-5795-1	Socket, dial light
V-4292S-2	Socket, miniature molded (6J6)
V-5670	Socket, miniature wafer (4)
V-5673	Socket, miniature wafer (unshielded) (6AV6)
V-3275S	Socket, molded octal tube (5Y3G)
V-4195	Socket, molded octal tube (6V6)
V-5405	Socket, molded power (phono A-C)
**V-5981	Speaker, 8" P.M. (H-190)
**V-5571	Speaker, 10" P.M. (H-191 and H-191A)
V-3248S	Spring, dial drive
V-3258S	Spring, knob
V-4491-5	Strip, dial
V-6017-2	Support and Grille Cloth Assembly, L.H. Door (H-191 and H-191A)
V-6017-1	Support and Grille Cloth Assembly, R.H. Door (H-191 and H-191A)
V-5878-1	Support and Grille Cloth Assembly, speaker (H-191 and H-191A)
V-5806	Switch, selector
V-4627	Transformer, 1st I-F (C48, C49, C50, C51, C52, L10, L11, L12, L13)
V-4628	Transformer, 2nd I-F (C53, C54, C55, L14, L15, L16, L17)
V-4629	Transformer, 3rd I-F (C56, C57, L18, L19, L20, L21)
V-5796	Transformer, discriminator (C58, C59, L22, L23, L24, L25)
V-5798	Transformer, audio output
V-5797	Transformer, power
V-3668S	Washer, felt, for knobs

MODELS H-202, H-204, WESTINGHOUSE ELECTRIC CORP. H-204A, CHASSIS V-2128-2

MODELS H-202, H-204

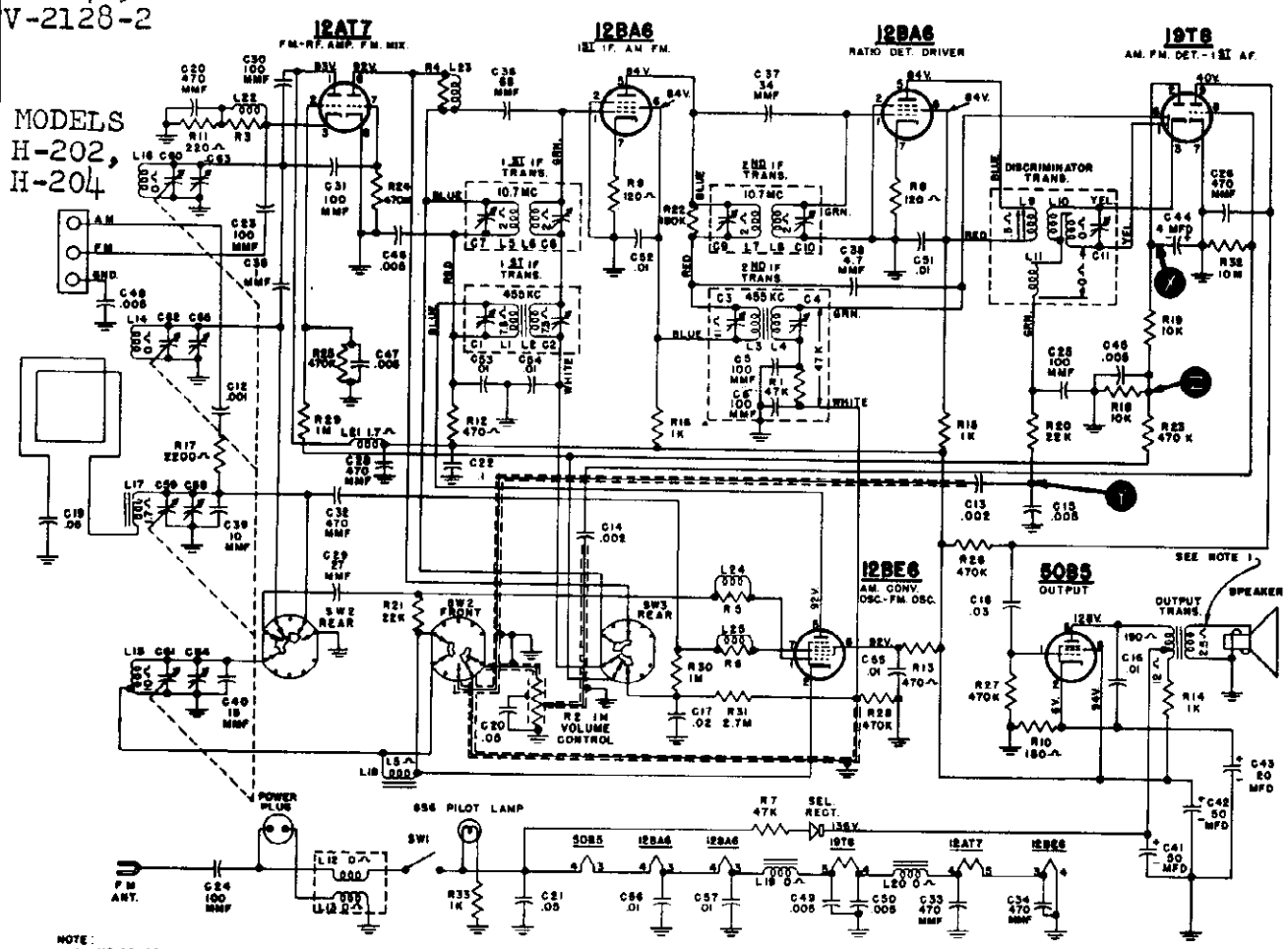

NOTE:
1. VOICE COIL DISCONNECTED.
2. SELECTOR SWITCH SW2 - SW3 SHOWN IN EXTREME COUNTER CLOCKWISE POSITION OR AM BAND. SECOND POSITION CLOCKWISE IS FM BAND.
3. ALL VOLTAGES MEASURED FROM CHASSIS (GND.) USING 20,000 OHM/VOLT METER-LINE VOLTAGE 117 V.A.C. VOLTAGES SHOULD BE AS SHOWN ± 20 PER CENT.

CHASSIS NO. V-2128-2

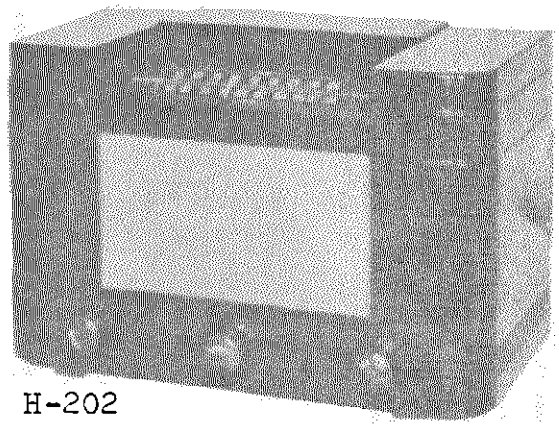

H-202

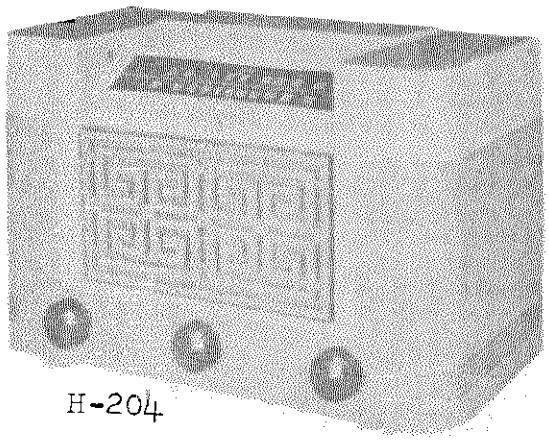

H-204

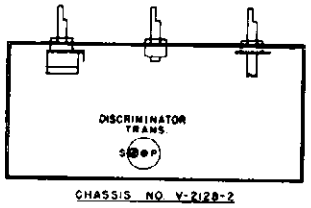

CHASSIS NO. V-2128-2

UNDER CHASSIS ADJUSTMENT

MODELS H-202, H-204, H-204A

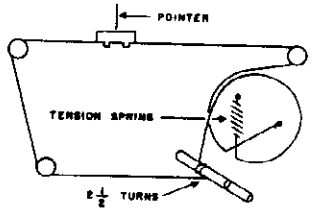

DIAL DRIVE

© John F. Rider

WESTINGHOUSE ELECTRIC CORP.

MODEL H-204A,
CHASSIS
V-2128-4

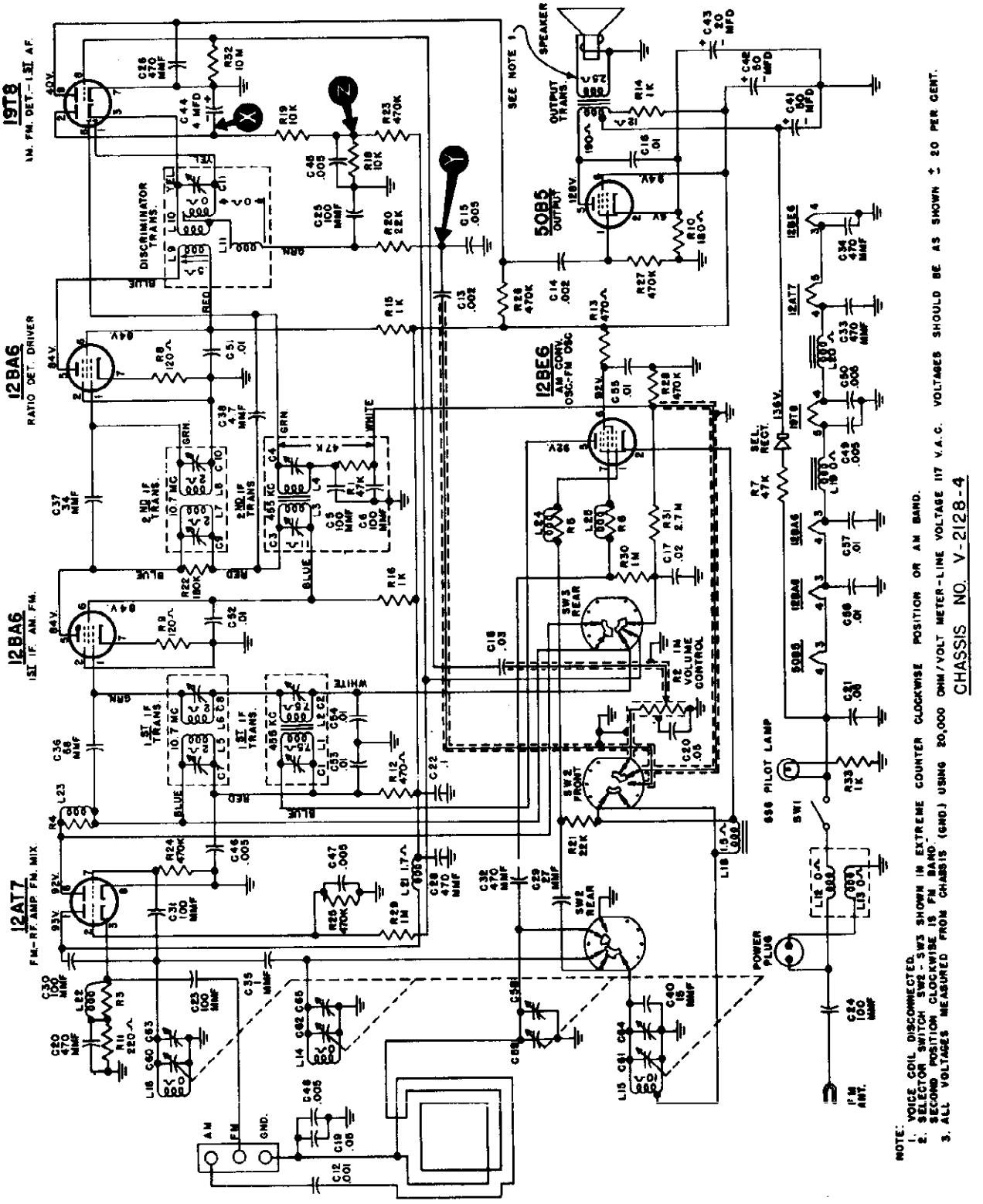

NOTE:
1. VOICE COIL DISCONNECTED.
2. SELECTOR SWITCH SW2-SW3 SHOWN IN EXTREME COUNTER CLOCKWISE POSITION OR AM BAND.
SECOND POSITION CLOCKWISE IS FM BAND.
3. ALL VOLTAGES MEASURED FROM CHASSIS (GND.) USING 20,000 OHM/VOLT METER-LINE VOLTAGE 117 V.A.C. VOLTAGES SHOULD BE AS SHOWN ± 20 PER CENT.

CHASSIS NO. V-2128-4

MODELS H-202, H-204, H-204A, CHASSIS V-2128-2

WESTINGHOUSE ELECTRIC CORP.

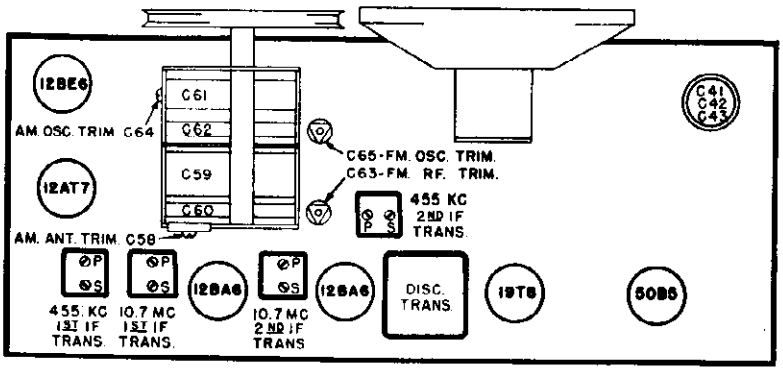

CHASSIS NO. V-2128-2

TOP VIEW

SPECIFICATIONS

FREQUENCY RANGES:

Standard Broadcast ... 540 to 1600 kc.
Frequency Modulation ... 88 to 108 mc.

INTERMEDIATE FREQUENCIES:

Amplitude Modulation ..... 455 kc.
Frequency Modulation ..... 10.7 mc.

TUBE COMPLEMENT:

1 12AT7 ..... R-F Amp. and Mixer (FM)
1 12BE6 ... Converter (AM), Osc. (FM)
1 12BA6 ..... I-F Amp.
1 12BA6 ..... Ratio Det. Driver (FM)
1 19T8 ..... Det., AVC, A-F Amp.
1 50B5 ..... Output Amp.

PILOT LAMP: ... Westinghouse #6S6, 120 volts, .05 amp.

POWER OUTPUT:

Undistorted ..... 1 watt
Maximum ..... 2.1 watts

LOUDSPEAKER: ..... 5" P.M.

OPERATING VOLTAGE:

105 to 120 volts 50 - 60 cycles A-C or 105 to 120 volts D-C.

POWER CONSUMPTION: ..... 40 watts

Model H-204A is identical in external appearance with Model H-204. The similarity of these models extends also to the chassis, where the same chassis layout, adjustment points, and basic circuit exist. However, a low-impedance loop antenna is used in Model H-204, while the H-204A incorporates a high-impedance loop with a slightly different input circuit.

The service notes for Models H-202 and H-204, with the exception of the schematic diagram and a few of the items on the parts list, apply to the Model H-204A. The necessary parts information is given below,

With the exception of items that are equivalent to those listed below, all items that apply to the Model H-204, as listed in the H-202 and H-204 service notes, apply also to the Model H-204A.

The parts listed below apply only to Model H-204A.

Part No.	Description
V-6168-1	Cover Rivet Assembly, back (H-204A brown) .....
V-6168-2	Cover Rivet Assembly, back (H-204A ivory and green)
V-6061	Loop, antenna (H-204A) .....

WESTINGHOUSE ELECTRIC CORP. MODELS H-202, H-204, H-204A, CHASSIS V-2128-2

CAUTION: One side of the power line is connected directly to the chassis in this model. Care must be exercised to avoid contacting the radio chassis and ground at the same time — ***SERIOUS SHOCK MAY RESULT.*** When making repairs or adjustments to the radio, it is recommended that the chassis be isolated from the power line by means of an isolation transformer.

ALIGNMENT

BROADCAST BAND

Connect an output meter across the speaker voice coil.

While making the following adjustments, keep the volume control set for maximum output and the signal generator output attenuated to avoid AVC action.

Step	Connect Signal Generator to —	Signal Generator Frequency	Radio Dial Setting	Adjust
1	Set band switch to AM.			
2	Pin #1 of 12BA6 (1st I-F) tube through a 0.1 mfd capacitor	455 kc	minimum capacity	Sec. and pri. of 455 kc 2nd I-F trans. for max. output
3	Stator of tuning capacitor (C59) through a 0.1 mfd capacitor	455 kc	minimum capacity	Sec. and pri. of 455 kc 1st I-F 1st I-F trans. for max. output
4	Radiated signal (no actual connection)	1615 kc	minimum capacity	AM osc. trimmer (C64) for max. output
5	Radiated signal (no actual connection)	1400 kc	1400 kc	AM ant. trimmer (C58) for max. output

FM BAND

Do not align 10.7 mc. I-F circuits until 455 kc I-F adjustments have been completed.

1	Set band switch to FM.			
2	Connect a V.T.V.M. between point "X" and ground (See Fig. 4).			
3	Pin #1 of 12BA6 (Ratio det. driver) tube through a .002 mfd capacitor	10.7 mc	minimum capacity	Pri. of discriminator trans. for max. voltage
4	With the V.T.V.M. and signal generator connected as in Step 3, adjust the output of the signal generator until a reading of 2.5 volts is obtained on the V.T.V.M. Use this signal generator setting when performing Step 6.			
5	Connect the V.T.V.M. between points "Y" and "Z" (See Fig. 4).			
6	Same as Step 3.	10.7 mc	minimum capacity	Sec. of discriminator trans. for *zero* voltage. The voltage will change polarity as the trimmer is tuned through resonance — tune carefully for zero
7	Reconnect the V.T.V.M. between point "X" and ground.			
8	Same as Step 3.	10.7 mc	minimum capacity	Pri. of discriminator trans. for max. voltage
9	Pin #1 of 12BA6 (1st I-F) tube through a .002 mfd capacitor	10.7 mc	minimum capacity	Sec. and pri. of 10.7 mc 2nd I-F trans. for max. voltage
10	Pin #7 of 12AT7 tube through a .002 mfd capacitor	10.7 mc	minimum capacity	Sec. and pri. of 10.7 mc 1st I-F trans. for max. voltage
NOTE:	*Do not attempt to peak the 2nd I-F transformer or discriminator transformer with the signal generator connected as in Step 10.*			
11	FM ant. terminals through a 300 ohm non-inductive resistor	108 mc	minimum capacity	FM osc. trimmer (C65) for max. voltage
12	Check calibration as explained below*.			
13	Same as Step 11.	105 mc	105 mc	FM R-F trimmer (C63) for max. voltage (rock in adjustment)
14	Check tracking as explained below**.			

*To check dial calibration, completely mesh the tuning capacitor plates and vary the signal generator frequency until the signal is maximum on the V.T.V.M. If at this setting, the generator frequency is 88 mc., no further oscillator adjustments are required. If the generator is higher in frequency than 88 mc., slightly compress the FM oscillator coil (L14); if the generator frequency is lower than 88 mc., slightly expand the FM oscillator coil (L14). Repeat Steps 11 and 12 until the receiver tunes to 108 mc. with the tuning capacitor fully open and 88 mc. with the tuning capacitor fully closed.

**Tune the receiver to a 90 mc. signal from the generator and adjust the FM R-F trimmer for maximum voltage. If the "peak" setting is the same at 90 mc. as it was at 105 mc., no further adjustment is necessary. If the trimmer capacitance must be increased for maximum voltage at 90 mc., slightly compress the FM R-F coil (L16); if the trimmer capacitance must be decreased for maximum voltage at 90 mc., slightly expand the FM R-F coil (L16). Re-adjust the FM R-F trimmer at 105 mc., and again check the tracking. Repeat this process until the tracking is correct.

MODELS H-202, H-204, H-204A — WESTINGHOUSE ELECTRIC CORP. — CHASSIS V-2128-2

Part No.	Description
V-5608	Background, dial
V-5528-1	Baffle and grille cloth assembly (H-202)
V-5527	Bushing, insulator, control
*V-1153-1	Cabinet (H-202 Ivory)
*V-1153-2	Cabinet (H-202 Brown)
*V-1153-3	Cabinet (H-204 Green)
RCP10M6102A	Capacitor, .001 mfd 600 v.(C12)
RCP10M6202M	Capacitor, .002 mfd 600 v. (C13, C14)
RCP10M6502A	Capacitor, .005 mfd 600 v.(C15)
RCP10M2103M	Capacitor, .01 mfd 200 v. (C16)
RCP10M2203A	Capacitor, .02 mfd 200 v. (C17)
RCP10M2303M	Capacitor, .03 mfd 200 v. (C18)
RCP10M2503A	Capacitor, .05 mfd 200 v. (C19, C20, C21)
RCP10M2104A	Capacitor, .1 mfd 200 v. (C22)
RCM20A101K	Capacitor, mica 100 mmf (C23, C24)
RCM20A101M	Capacitor, mica 100 mmf (C25)
RCM20A471M	Capacitor, mica 470 mmf (C26, C27, C28)
R2CC25HK270K	Capacitor, ceramicon 27 mmf (C29)
R2CC32CF101K	Capacitor, ceramicon 100 mmf (C30, C31)
R5CC20ZY471M	Capacitor, ceramicon 470 mmf (C32)
R5CC21ZY471M	Capacitor, ceramicon 470 mmf (C33, C34)
V-5658-1	Capacitor, 1 mmf (C35)
V-5658-4	Capacitor, 0.68 mmf (C36)
V-5658-5	Capacitor, 0.34 mmf (C37)
V-5658-6	Capacitor, 4.7 mmf (C38)
V-5658-7	Capacitor, 10 mmf (C39)
V-5658-8	Capacitor, 15 mmf (C40)
V-5493	Capacitor, dry electrolytic 50 mfd 150 v. (C41) 50 mfd 150 v. (C42) 20 mfd 25 v. (C43)
V-4637	Capacitor, electrolytic 4 mfd 50 v. (C44)
V-5596	Capacitor, Hi-kaps 5000 mmf (C45, C46, C47, C48, C49, C50)
V-5040-13	Capacitor, paper molded .01 mfd 200 v. (C51, C52, C53, C54, C55, C56, C57)
V-4992	Capacitor, trimmer (C58)
V-5494	Capacitor, variable 2-gang AM antenna (C59) FM antenna (C60) AM oscillator (C61) FM oscillator (C62) Trimmer, FM antenna (C63) Trimmer, AM oscillator (C64) Trimmer, FM oscillator (C65)
V-5743	Coil, choke antenna (line) (L12, L13)
V-5545	Coil, oscillator FM (L14)
V-6078-1	Coil, oscillator AM (L15)
V-5546	Coil, R-F FM (L16)
V-5605	Coil, antenna loading AM (L17)
V-5517	Control, volume, 1 megohm (R2) and switch (SW1)
V-4304-19	Cord assembly, dial
V-5522	Cord, power A-C
V-5610-1	Cover rivet assembly, back (H-202 brown, H-204 green)
V-5523	Dial
V-6092-1	Grille (H-204 green)
V-5560-1	Knob, AM-FM (H-202)
V-5560-2	Knob, AM-FM (H-204)
V-5558-1	Knob, tuning (H-202)
V-5558-2	Knob, tuning (H-204)
V-5559-1	Knob, volume (H-202)
V-5559-2	Knob, volume (H-204)
No. 6S6	Lamp, pilot light
*V-5638	Loop assembly, antenna
V-6119	Pointer
V-6096-1	Pulley (metal)
V-3166S	Pulley (wood)
V-4886-1	Reactor, R-F (L18)
V-4886-2	Reactor, R-F (L19, L20)
V-4886-4	Reactor, R-F (L21)
V-4886-5	Reactor, R-F (L22, R3)
V-4886-6	Reactor, R-F (L23, R4)
V-4886-7	Reactor, R-F (L24, R5)
V-4886-8	Reactor, R-F (L25, R6)
V-6070	Rectifier, selenium (100 milliamperes)
V-6067-2	Resistor, glasohm 47 ohms (R7)
RC20AE121K	Resistor, 120 ohms ½ w.(R8, R9)
RC20AE181K	Resistor, 180 ohms ½ w. (R10).
RC20AE221K	Resistor, 220 ohms ½ w. (R11).
RC20AE471K	Resistor, 470 ohms ½ w.(R12, R13)
RC40AE102K	Resistor, 1000 ohms 2 w. (R14, R33)
RC20AE102K	Resistor, 1000 ohms ½ w. (R15, R16)
RC20AE222M	Resistor, 2200 ohms ½ w. (R17)
RC20AE103J	Resistor, 10,000 ohms ½ w. (R18, R19)
RC20AE223M	Resistor, 22,000 ohms ½ w.(R20)
RC20AE223K	Resistor, 22,000 ohms ½ w.(R21)
RC20AE184K	Resistor, 180,000 ohms ½ w. (R22)
RC20AE474M	Resistor, 470,000 ohms ½ w. (R23, R24, R25, R26, R27, R28)
RC20AE105M	Resistor, 1 megohm ½ w. (R29, R30)
RC20AE275M	Resistor, 2.7 megohms ½ w. (R31)
RC20AE106M	Resistor, 10 megohms ½ w. (R32)
V-5601-1	Screw, #6-32 rosette head (H-202 brown, H-204 green)
V-5601-2	Screw, #6-32 rosette head (H-202 ivory)
V-4292S	Socket, miniature molded (7 prong)
V-5673	Socket, miniature wafer (7 prong)
V-5670	Socket, miniature wafer (7 prong)
V-6072-1	Socket, miniature wafer(9 prong)
V-4989	Socket, pilot light
*V-5533	Speaker, 5" P.M.
V-3248S	Spring, dial drive
V-7332	Spring, knob
V-5534	Switch, selector, (SW2, SW3)
V-5723	Transformer, 1st I-F AM (C1, C2, L1, L2)
V-5539	Transformer, 2nd I-F AM (C3, C4, C5, C6, R1, L3, L4)
V-5540	Transformer, 1st and 2nd I-F FM 1st (C7, C8, L5, L6) 2nd (C9, C10, L7, L8)
V-5538	Transformer, discriminator (C11, L9, L10, L11)
V-5537	Transformer, output
V-5606-1	Washer, felt

When ordering parts, specify model number of set in addition to part number and description of part.

WESTINGHOUSE ELECTRIC CORP. MODELS H-203, H-212

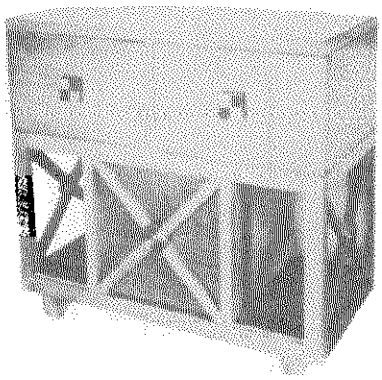

H-203

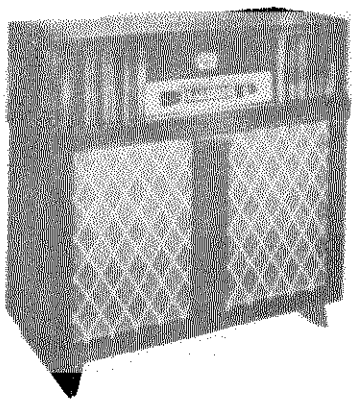

H-212

SPECIFICATIONS

FREQUENCY RANGES:

Amplitude Modulation .... 540 to 1600 kc.
Frequency Modulation ..... 88 to 108 mc.

INTERMEDIATE FREQUENCIES:

Amplitude Modulation ..... 455 kc.
Frequency Modulation ..... 10.7 mc.

TUBE COMPLEMENT:

1 12AT7 ..... R-F Amp. and Mixer (FM)
1 6BE6 H-F Osc. (AM/FM) and converter(AM)
1 6BA6 ..... I-F Amp.
1 6BA6 ..... I-F Driver (FM)
1 6AL5 ..... Ratio Det. (FM)
1 6AV6 ..... Det. & AVC (AM) and A-F Amp.
1 6V6GT ..... Output Amp.
1 5Y3GT ..... Rectifier

PILOT LAMPS:

2 Westinghouse No. 47 ... 6.3 v., 0.15 a.

POWER OUTPUT:

Undistorted ..... 3.5 watts
Maximum ..... 6 watts

LOUDSPEAKER:

H-203 ..... 10" P.M.
H-212 ..... 8" P.M.

OPERATING VOLTAGE:

..... 105 to 120 volts, 60 cycles A-C

POWER CONSUMPTION:

H-203 ..... 110 watts
H-212 ..... 85 watts

SERVICE NOTES

For information on the V-4944-2 record changer used with Model H-203, refer to the V-4944 Automatic Record Changer Service Notes. However, when ordering replacement parts, specify the items listed below rather than the corresponding parts as listed in the V-4944 Service Notes. The following parts are for the V-4944-2 changer only.

Loc.	Part No.	Description
9	V-7962	Pickup Cable with Connector (28")
13	V-7689	Cartridge, crystal (P-30)
15	V-7963	Nut, needle retaining (for P-30 cartridge)
(Last item on parts list)	V-7964	Needle, phonograph (for P-30 cartridge)

MODELS H-203,
H-212, CHASSIS
V-2137

WESTINGHOUSE ELECTRIC CORP.

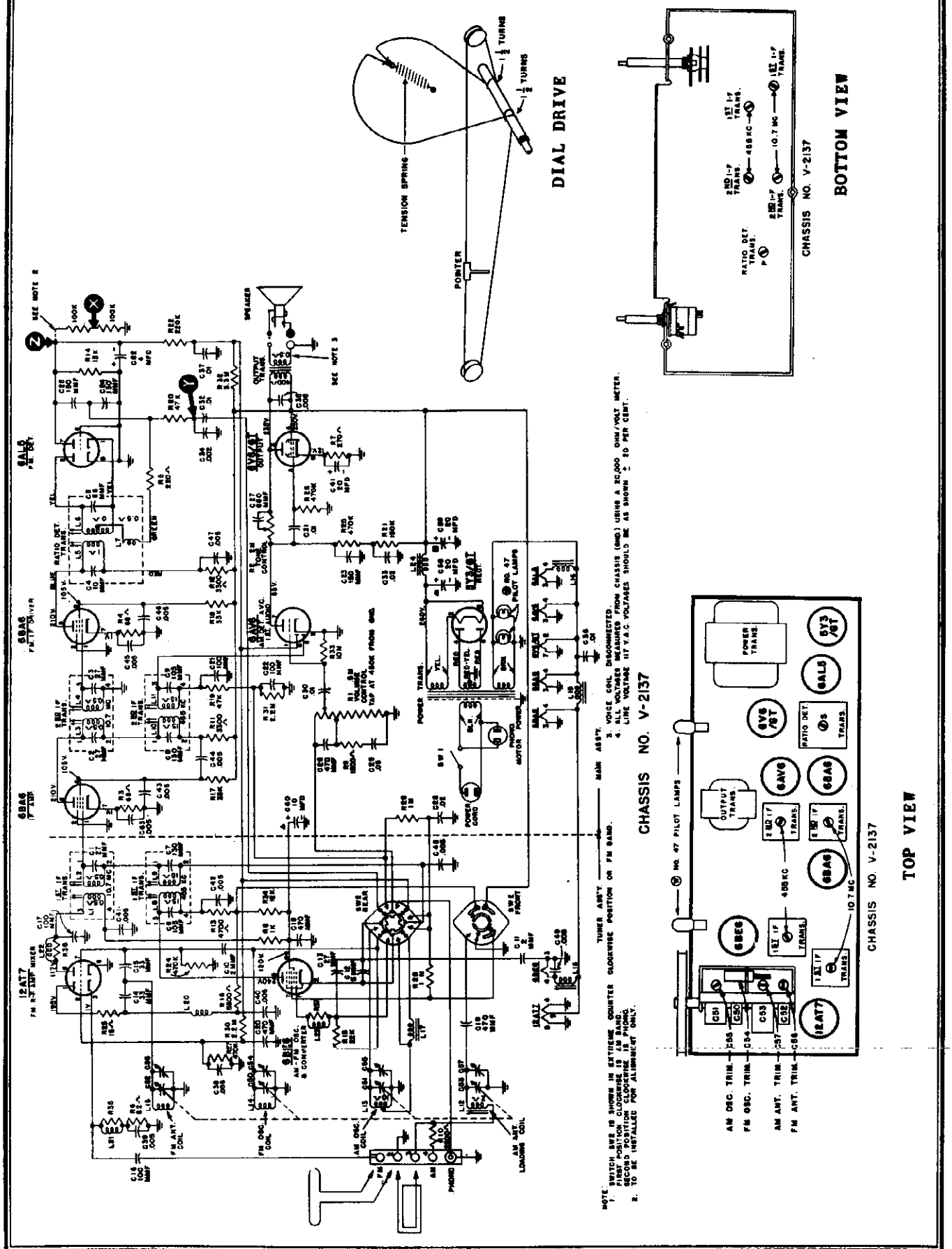

WESTINGHOUSE ELECTRIC CORP. MODELS H-203, H-212, CHASSIS V-2137

ALIGNMENT

BROADCAST BAND

Connect an output meter across the speaker voice coil.

While making the following adjustments, keep the volume control set for maximum output, the tone control set for maximum treble, and the signal generator output attenuated to avoid A.V.C. action.

Step	Connect Signal Generator to —	Signal Generator Frequency	Radio Dial Setting	Adjust
1	Set the band switch to AM.			
2	Stator of tuning capacitor (C51) through a 0.1 mfd capacitor	455 kc.	maximum capacity	455 kc. pri. and sec. of 1st and 2nd I-F trans. for max. output
	NOTE: If the I-F transformers are badly mis-aligned, it may be impossible to obtain sufficient output using the above system. In this event, it will be necessary to align each transformer separately. Start with the last I-F transformer and work forward, connecting the signal generator to the control grid of the tube preceding the transformer under alignment.			
3	Radiated signal (no actual connection)	1600 kc.	1600 kc.	AM osc. trimmer (C55) for max. output
4	Radiated signal (no actual connection)	1400 kc.	tune to signal	AM ant. trimmer (C57) for max. output (rock-in adjustment)

FM BAND

Do not align the FM circuits until all AM adjustments have been completed.

Step	Connect Signal Generator to —	Signal Generator Frequency	Radio Dial Setting	Adjust
1	Set the band switch to FM.			
2	Connect two 100,000 ohm resistors (the resistances must be equal within 5 percent) between pin #7 of the 6AL5 tube and ground as shown on the schematic diagram.			
3	Connect a V.T.V.M. between points "X" and "Y" (see schematic diagram).			
4	Stator of FM osc. section (C50) on tuning capacitor through a .01 mfd mica capacitor	10.7 mc.	maximum capacity	Sec. of ratio det. trans. for *zero* (use medium strength signal)
5	Connect the V.T.V.M. between point "Z" and ground.			
6	Same as step 4	10.7 mc.	maximum capacity	Pri. of ratio det. trans. and pri. and sec. of 10.7 mc. 1st and 2nd I-F trans. for max.
	NOTE: The pri. of the ratio det. trans. peaks in two places. Use the peak with the slug farthest out.			
7	Reconnect the V.T.V.M. between points "X" and "Y", and increase the signal strength 2 times.			
8	Same as step 4	10.7 mc.	maximum capacity	Recheck sec. of ratio det. trans. for *zero* voltage
9	Reconnect the V.T.V.M. between point "Z" and ground.			
10	Same as step 4	10.7 mc.	maximum capacity	Pri. of ratio det. trans. for maximum voltage
11	Remove the two 100,000 ohm resistors that were inserted in step 2.			
12	FM ant. terminal through a 300 ohm non-inductive resistor	105 mc.	105 mc.	FM osc. trimmer (C54) for maximum output
13	Same as step 12	105 mc.	105 mc.	FM ant. trimmer (C56) for maximum output

MODELS H-203, H-212, WESTINGHOUSE ELECTRIC CORP.
CHASSIS V-2137

PARTS LIST FOR MODELS H-203 AND H-212

When ordering parts, specify model number of set in addition to part number and description of part.

Part No.	Description
V-5982-2	Antenna Assembly, AM loop .....
V-5986-3	Antenna Assembly, FM dipole(H-203)
V-5986-4	Antenna Assembly, FM dipole(H-212)
V-6120	Background, dial .....
V-5860-3	Cable Assembly, speaker .....
R2CC30CK020D	Capacitor, 2 mmf (C10) .....
R2CC30UK020D	Capacitor, 2 mmf (C11) .....
R2CC30CK050D	Capacitor, 5 mmf (C12) .....
R3CC30CK270K	Capacitor, 27 mmf (C13) .....
R3CC26CK330M	Capacitor, 33 mmf (C14, C15) ....
R3CC30SL101M	Capacitor, 100 mmf (C16) .....
R3CC30SL101J	Capacitor, 100 mmf (C17) .....
R5CC21ZY471M	Capacitor, 470 mmf (C18, C19, C20)
RCM20A101M	Capacitor, 100 mmf (C21, C22) ....
RCM20A151M	Capacitor, 150 mmf (C23) .....
RCM20A151J	Capacitor, 150 mmf (C24, C25) ....
RCM20A471M	Capacitor, 470 mmf (C26) .....
RCM20A681M	Capacitor, 680 mmf (C27) .....
RCP10W2203A	Capacitor, .02 mfd 200 v. (C28) ..
RCP10W2503A	Capacitor, .05 mfd 200 v. (C29) ..
RCP10W4103A	Capacitor, .01 mfd 400 v. (C30, C31, C32) .....
RCP10W4303A	Capacitor, .03 mfd 400 v. (C33) ..
RCP10W6202A	Capacitor, .002 mfd 600 v. (C34) .
RCP10M6502A	Capacitor, .005 mfd 600 v. (C35) .
V-5040-13	Capacitor, molded paper .01 mfd 200 v. (C36, C37) .....
V-5596	Capacitor, Hi-Kaps .005 mfd (C38, C39, C40 C41, C42, C43, C44, C45, C46, C47, C48, C49) .....
V-6137	Capacitor, variable (C50, C51, C52, C53, C54, C55, C56, C57) .....
V-6121	Capacitor, electrolytic ..... 20 mfd 400 v. (C58) 20 mfd 400 v. (C59) 10 mfd 350 v. (C60) 20 mfd 25 v. (C61)
V-4885	Capacitor, electrolytic 4 mfd 450 v. (C62) .....
V-4898-1	Catch, bullet (H-203 mahogany) ..
V-4898-2	Catch, bullet (H-203 blond) .....
V-5637	Clip, tubular .....
V-6164	Coil, AM oscillator (L13) .....
V-6157	Coil, antenna loading (L12) .....
V-6139	Coil, FM antenna (L15) .....
V-6138	Coil, FM oscillator (L14) .....
V-6122	Control, volume - 0.5 megohm (R1), tone - 2.0 megohms (R2) and switch (SW1) .....
V-6123	Dial .....
V-6155	Fastener .....
V-5998-2	Grille Cloth, speaker (H-203 mahogany) .....
V-6148-1	Grille Cloth, speaker (H-203 blond) .....
V-6246-1	Grille Cloth Assembly (H-212) ...
V-5066-5	Hinge, L.H. (H-203 mahogany) ....
V-5066-3	Hinge, L.H. (H-203 blond) .....
V-5066-6	Hinge, R.H. (H-203 mahogany) ....
V-5066-4	Hinge, R.H. (H-203 blond) ....
V-6146-2	Knob, band (H-212 and H-203 mahogany .....
V-6146-4	Knob, band (blond) .....
V-6147-2	Knob, rear (tuning) .....
V-6146-1	Knob, OFF-ON-TONE (H-212 and H-203 mahogany) .....
V-6146-3	Knob, OFF-ON-TONE (blond) .....
V-6147-1	Knob, rear (volume) .....
No. 47	Lamp, pilot light .....
V-6160	Molding .....
V-4696	Nameplate, Westinghouse FM .....
V-6154-1	Panel, control .....
V-6125	Pointer .....
V-6150-1	Pull, door (H-203 mahogany) .....
V-6150-2	Pull, door (H-203 blond) .....
V-3166S	Pulley, 7/16 dia. .....
V-4886-1	Reactor, R-F 14 microhenries (L16)
V-4886-2	Reactor, R-F 1.1 microhenries (L17, L18, L19) .....
V-4886-4	Reactor, R-F (L20) .....
V-4886-10	Reactor, R-F (L21, R35) .....
V-4886-6	Reactor, R-F (L22, R36) .....
V-4886-7	Reactor, R-F (L23, R37) .....
V-6161	Reactor, filter choke (L24) ....
RC10AE680K	Resistor, 68 ohms ½ w. (R3, R4)
RC10AE221M	Resistor, 220 ohms ½ w. (R5) .....
RC10AE820K	Resistor, 82 ohms ½ w. (R6) .....
RC30AE271K	Resistor, 270 ohms 1 w. (R7) .....
RC10AE102K	Resistor, 1000 ohms ½ w. (R8) ....
RC10AE152M	Resistor, 1500 ohms ½ w. (R9) ....
RC10AE222K	Resistor, 2200 ohms, ½ w. (R10) ..
RC30AE332K	Resistor, 3300 ohms 1 w. (R11, R12) .....
RC10AE472K	Resistor, 4700 ohms ½ w. (R13) ...
RC10AE153K	Resistor, 15,000 ohms ½ w. (R14) .
RC10AE223K	Resistor, 22,000 ohms ½ w. (R15) .
RC30AE562K	Resistor, 5600 ohms 1 w. (R16) ...
RC30AE333K	Resistor, 33,000 ohms 1 w. (R17, R18) .....
RC10AE473M	Resistor, 47,000 ohms ½ w. (R19, R20) .....
RC10AE154M	Resistor, 150,000 ohms ½ w. (R21)
RC10AE224M	Resistor, 220,000 ohms ½ w. (R22)
RC10AE150M	Resistor, 15 ohms ½ w. (R23) .....
RC10AE474M	Resistor, 470,000 ohms ½ w. (R24, R25, R26, R27) .....
RC10AE105M	Resistor, 1.0 megohm ½ w. (R28, R29) .....
RC10AE225M	Resistor, 2.2 megohms ½ w. (R30, R31) .....
RC10AE335M	Resistor, 3.3 megohms ½ w. (R32) .
RC10AE106M	Resistor, 10.0 megohms ½ w. (R33)
RC41AE123K	Resistor, 12,000 ohms 2 w. (R34) .
V-6151-1	Rosette (H-203 mahogany) .....
V-6151-2	Rosette (H-203 blond) .....
V-6126-1	Shockmount .....
V-6127	Sleeve, dial drive .....
V-3353-3	Slide Mechanism, L.H. (H-203) ....
V-3353-4	Slide Mechanism, R.H. (H-203) ....
V-6165-1	Socket, dial light, 5" leads .....
V-6165-2	Socket, dial light, 7" leads .....
V-5670	Socket, miniature wafer .....
V-5673	Socket, miniature wafer (unshielded) .....
V-4195	Socket, molded octal tube .....
V-5405	Socket, molded power .....
V-3246S	Socket, octal tube .....
V-5571	Speaker, 10" P.M. (H-203) .....
V-6251	Speaker, 8" P.M. (H-212) .....
V-3248S	Spring, dial drive .....
V-4900-1	Strike, bullet catch (H-203 mahogany) .....
V-4900-2	Strike, bullet catch (H-203 blonde) .....
V-6140	Switch, selector ..... Front wafer - SW2 Rear wafer - SW2
V-6136	Terminal Board, PHONO-ANT-GND.....
V-6130	Transformer, AM 1st and 2nd I-F (455 kc.) (L8, L9, C6, C7, and L10, L11, C8, C9) .....
V-5798	Transformer, audio output .....
V-6142	Transformer, FM 1st I-F (10.7 mc.) (L1, L2, C1) .....
V-6129	Transformer, FM 2nd I-F (10.7 mc.) (L3, L4, C2, C3) .....
V-6131	Transformer, power .....
V-6128	Transformer, ratio detector (L5, L6, L7, C4, C5) .....

WESTINGHOUSE ELECTRIC CORP. MODELS H-210, H-211, CHASSIS V-2144, V-2144-1

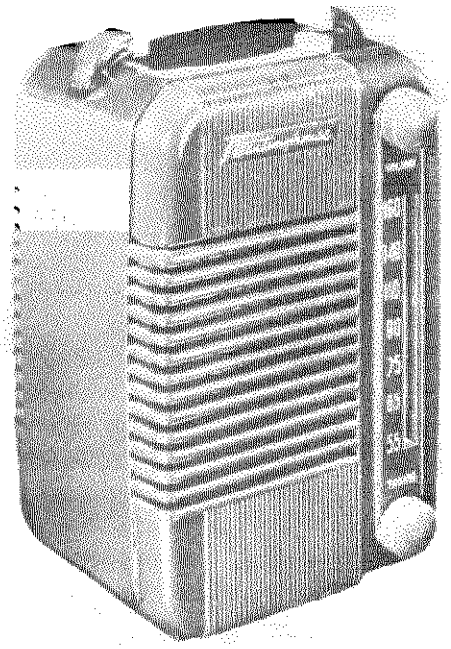

H-210

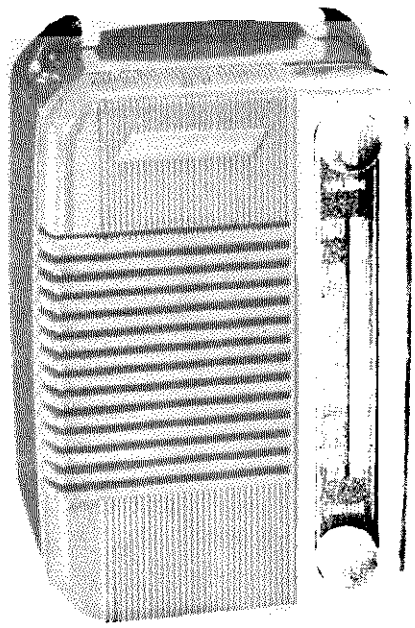

H-211

SPECIFICATIONS

FREQUENCY RANGE: ..... 540 to 1600 kc.

INTERMEDIATE FREQUENCY: ..... 455 kc.

TUBE COMPLEMENT:

1	12BE6	Converter
1	12BA6	I-F Amp.
1	12AT6	Det. and 1st A-F Amp.
1	50C5	Output Amp.
1	35W4	Rectifier

PILOT LAMP (H-211 only): ..... Westinghouse No. 47

POWER OUTPUT:

Undistorted	1 watt
Maximum	1.5 watts

LOUDSPEAKER: ..... 4" P.M.

OPERATING VOLTAGE: ..... 105 to 125 volts 50 - 60 cycles A-C or D-C

POWER CONSUMPTION: ..... 35 watts

MODELS H-210, H-211, WESTINGHOUSE ELECTRIC CORP. CHASSIS V-2144, V-2144-1

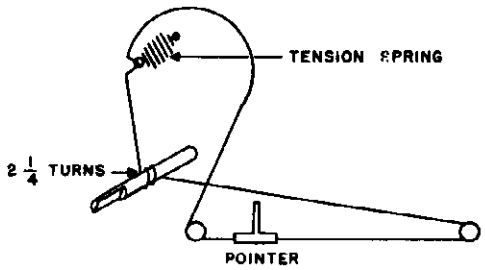

FIG. 1 — DIAL DRIVE

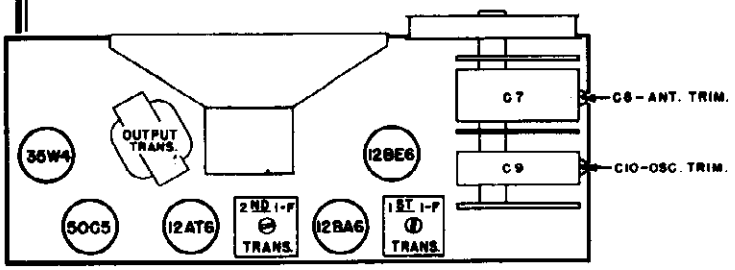

CHASSIS V-2144 and V-2144-1

FIG. 2 — TOP VIEW

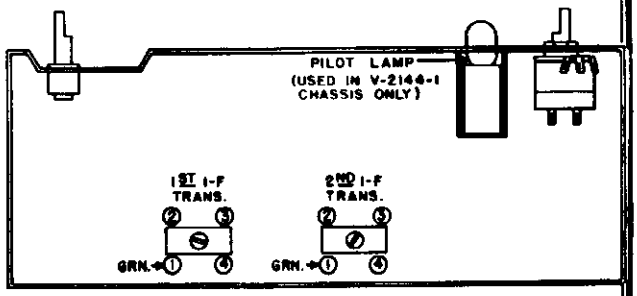

CHASSIS V-2144 and V-2144-1

FIG. 3 — BOTTOM VIEW

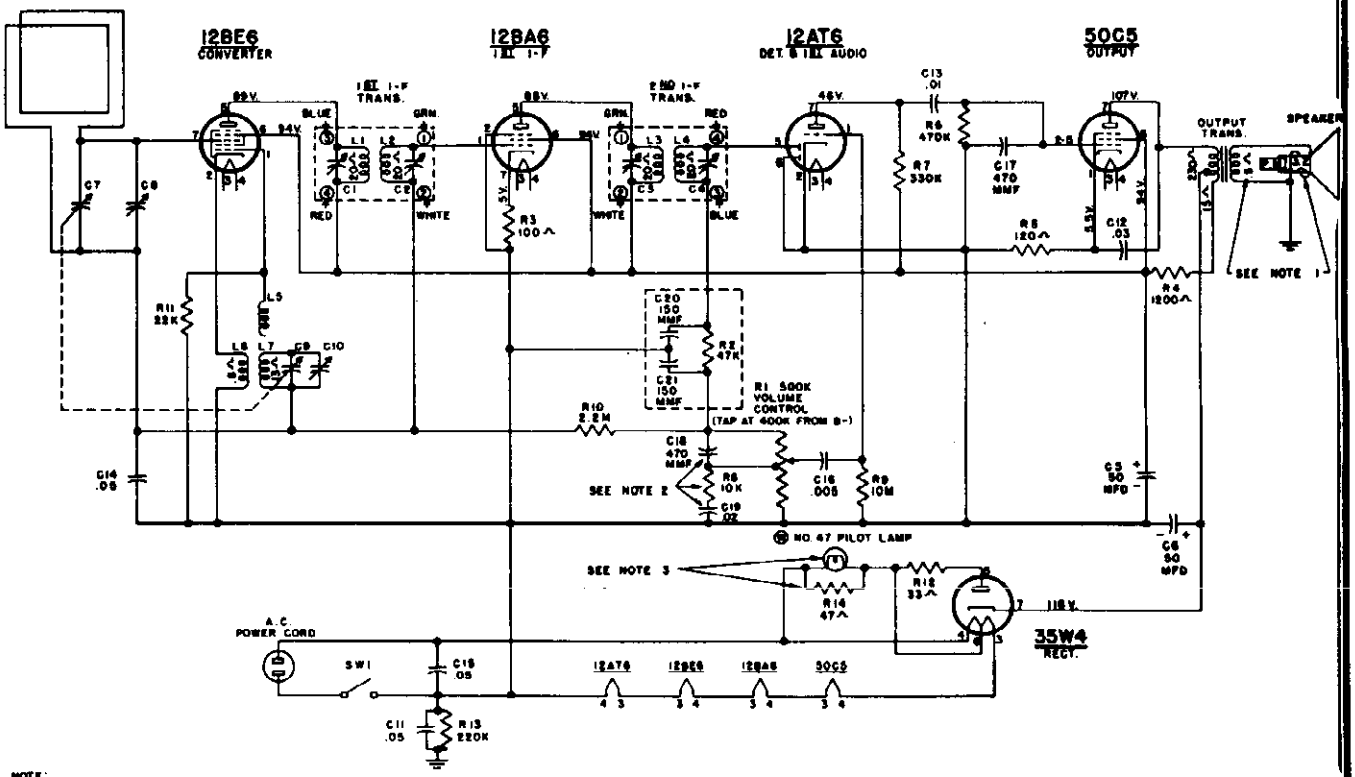

NOTE:
1. VOICE COIL DISCONNECTED FOR RESISTANCE MEASUREMENT.
2. C18, C19 AND R8 ARE NOT USED IN V-2144 CHASSIS (H-210).
3. THE PILOT LAMP IS USED IN THE V-2144-1 CHASSIS (H-211) ONLY. R14 IS USED IN THE V-2144 CHASSIS (H-210) IN PLACE OF THE PILOT LAMP
4. ALL VOLTAGES MEASURED FROM COMMON NEGATIVE LINE USING A 20,000 OHMS PER VOLT METER. LINE VOLTAGE 117 V.A.C. VOLTAGES SHOULD BE AS SHOWN ± 20 PER CENT.

WESTINGHOUSE ELECTRIC CORP. MODELS H-210, H-211, CHASSIS V-2144, V-2144-1

ALIGNMENT

It is recommended that the chassis be isolated from the power line by means of an isolation transformer.

Make certain that the dial pointer is correctly positioned on the dial cord.

While making the following adjustments, keep the volume control set for maximum output and the signal generator output attenuated to avoid AVC action.

Step	Connect Signal Generator to —	Signal Generator Frequency	Radio Dial Setting	Adjust
1.	Stator of R-F tuning capacitor (C7) through a 0.1 mfd capacitor	455 kc.	maximum capacity	Pri. and sec. of 1st and 2nd I-F transformers for max. output
	NOTE: If the I-F transformers are badly mis-aligned, it may be impossible to obtain sufficient output to use the above system. In this event, it will be necessary to align each transformer separately. Start with the last I-F transformer and work forward, connecting the signal generator to the control grid of the tube preceding the transformer under alignment.			
2.	Radiated signal (no actual connection)	1615 kc.	minimum capacity	Osc. trimmer (C10) for max. output
3.	Radiated signal (no actual connection	1400 kc.	1400 kc.	Ant. trimmer (C8) for max. output

PARTS LIST FOR MODELS H-210 AND H-211

When ordering parts, specify model number of set in addition to part number and description of part.

Part No.	Description
V-6188	Background Rivet Assembly, dial .....
V-1168-1	Cabinet (H-210 Maroon) .....
V-1168-2	Cabinet (H-211 Grey) .....
V-6230	Capacitor, electrolytic ..... 50 mfd 150 v. (C5) 50 mfd 150 v. (C6)
V-6231	Capacitor, variable 2-gang .. Tuner, antenna (C7) Trimmer, antenna (C8) Tuner, oscillator (C9) Trimmer, oscillator (C10)
V-5618-1	Capacitor, .05 resonant (C11)
RCP10W4303A	Capacitor, .03 mfd 400 v. (C12)
RCP10W4103A	Capacitor, .01 mfd 400 v. (C13)
RCP10W4503A	Capacitor, .05 mfd 400 v. (C14, C15) .....
RCP10W4502A	Capacitor, .005 mfd 400 v. (C16)
RCM20A471M	Capacitor, 470 mmf (C17, C18)
RCP10W4203A	Capacitor, .02 mfd 400 v. (C19)
V-5426	Clip, I-F mounting .....
V-5684	Clip, tubular (Back cover clamp) .....
V-6182	Clip, spring (Back cover catch)
V-5851	Coil, oscillator (L5, L6, L7)
V-6198-1	Control, volume, 500 K (R1, SW1) (H-210) .....
V-6198-2	Control, volume, 500 K (R1, SW1) (H-211) .....
V-6242-1	Cover Plate, trim (H-211) ....
V-6232-1	Filter, diode (C20, C21, R2) .

Part No.	Description
V-6184-1	Knob (H-210) .....
V-6184-2	Knob (H-211) .....
#47	Lamp, pilot (H-211) .....
V-6186	Loop, antenna .....
V-6190	Pointer .....
RC10AE101J	Resistor, 100 ohms ½ w. (R3) .
RC30AE122M	Resistor, 1200 ohms 1 w. (R4)
RC20AE121J	Resistor, 120 ohms ½ w. (R5) .
RC10AE474M	Resistor, 470,000 ohms ½ w. (R6)
RC10AE334M	Resistor, 330,000 ohms ½ w. (R7)
RC10AE103M	Resistor, 10,000 ohms ½ w. (R8) (H-211) .....
RC10AE106M	Resistor, 10 megohms ½ w. (R9)
RC10AE225M	Resistor, 2.2 megohms ½ w. (R10)
RC10AE223M	Resistor, 22,000 ohms ½ w. (R11)
RC20AE330M	Resistor, 33 ohms ½ w. (R12) .
RC10AE224M	Resistor, 220,000 ohms ½ w. (R13) .....
RC30AE470M	Resistor, 47 ohms 1 w. (R14) (H-210) .....
V-5673	Socket, miniature wafer, unshielded (50C5,35W4) .....
V-5852-1	Socket, miniature wafer (12AT6, 12BA6) .....
V-5852-3	Socket, miniature wafer (12BE6)
V-6193	Speaker, 4" P.M. .....
V-4057	Spring, dial drive .....
V-6199-2	Transformer, 1st and 2nd I-F (C1, C2, L1, L2, and C3, C4, L3, L4) .....
V-6233-1	Transformer, output .....

MODELS 7E40,
7E44

WILC

Models
Schema
(Serial N

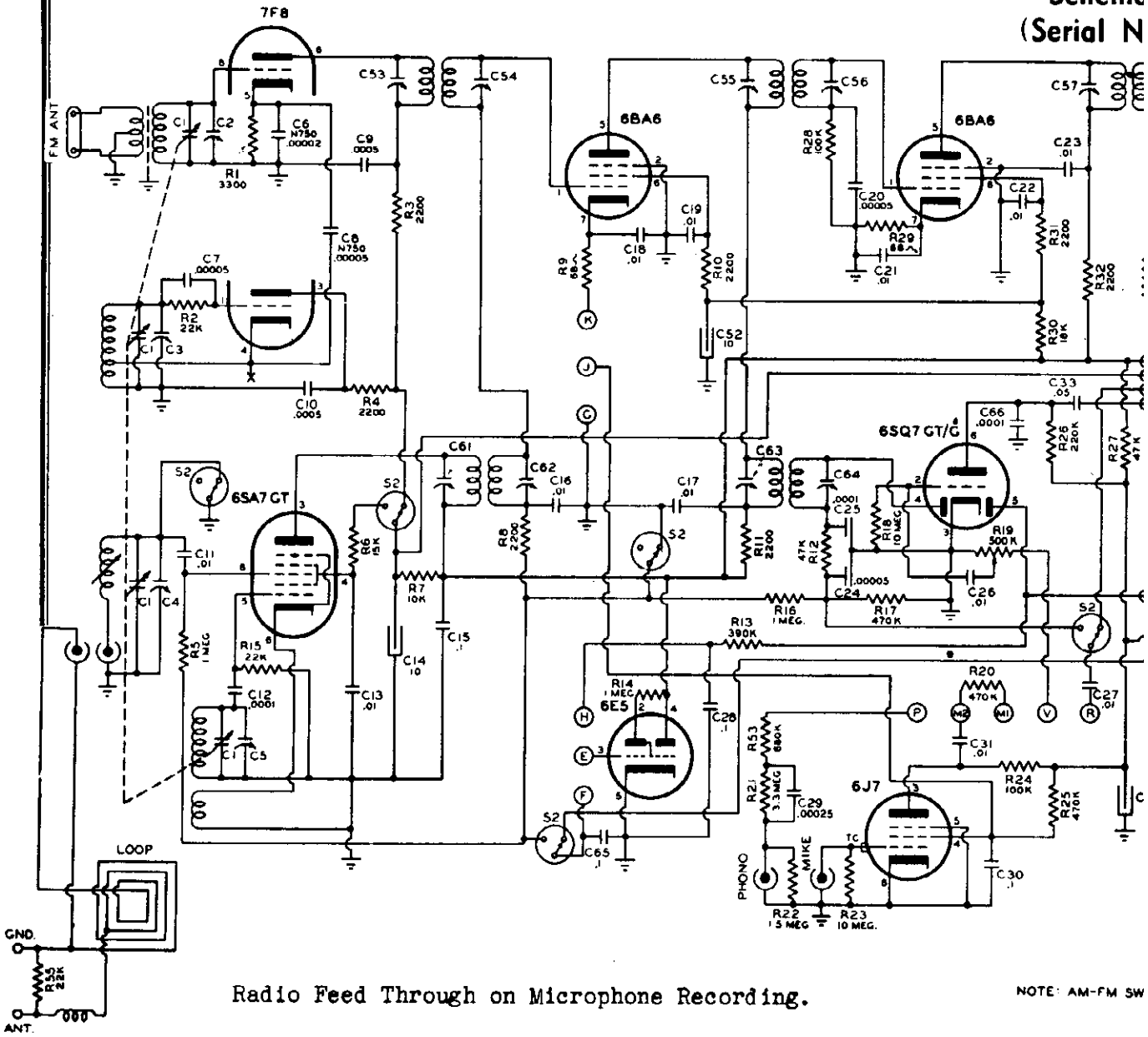

Radio Feed Through on Microphone Recording.

NOTE: AM-FM SW

In some localities where signal strength is great, difficulty has been encountered with the radio signal "leaking through" on Microphone Recording. This trouble is eliminated by removing the orange wire connecting pin No. 4 on the 6J7 tube socket to terminal J on the push-button switch.

All 7E40 and 7E44 models with serial numbers above 803,108 will have this lead removed.

©John F. Rider

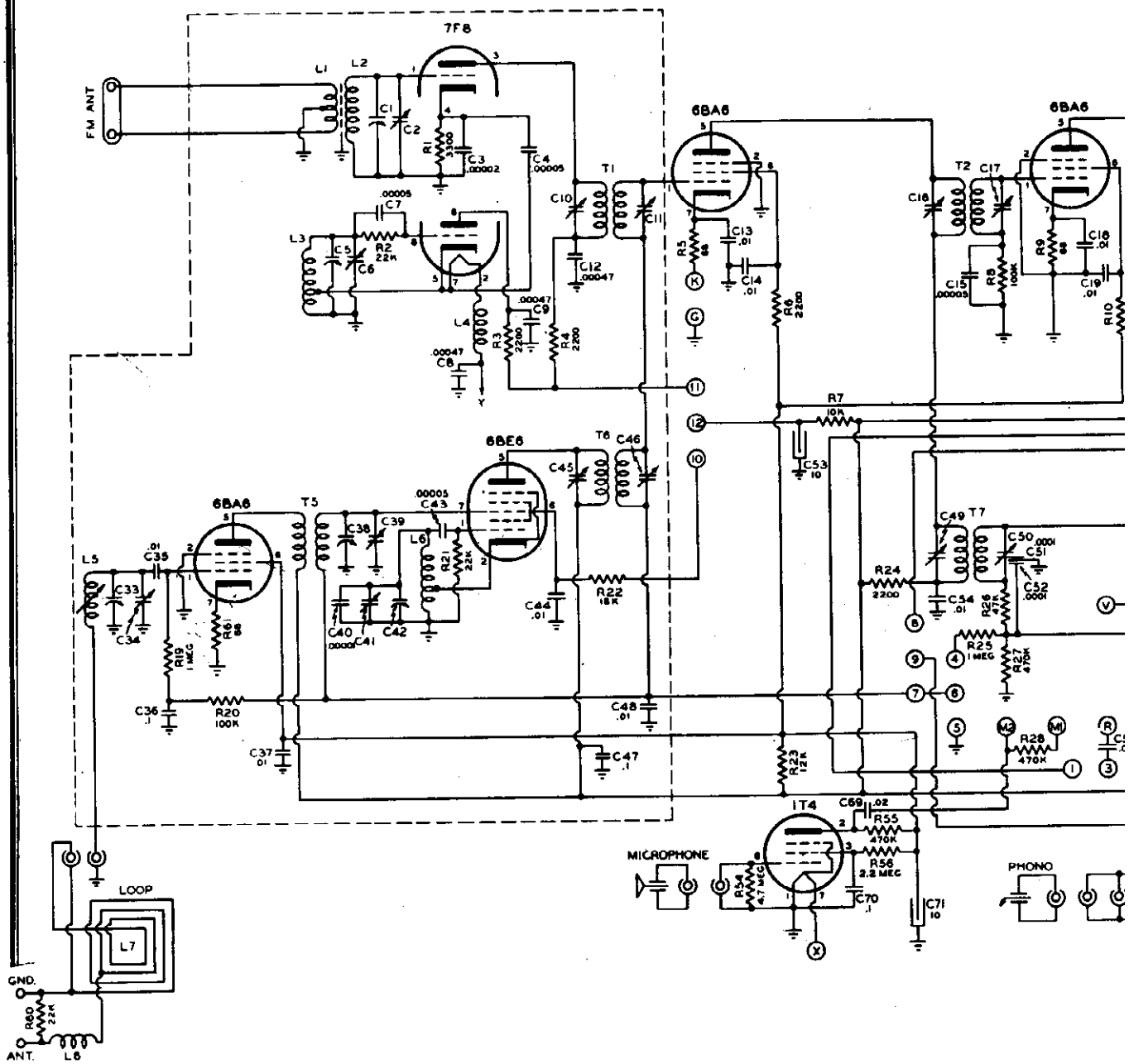
7F8
6BA6
6BA6
6BE6
6BA6
1T4
FM ANT
L1
L2
L3
L4
L5
L6
L7
L8
T1
T2
T5
T6
T7
C1
C2
C3 .00002
C4 .00005
C5
C6
C7 .00005
C8 .00047
C9 .00047
C10
C11
C12 .00047
C13 .01
C14 .01
C15 .00005
C16
C17
C18 .01
C19 .01
C33
C34
C35 .01
C36 .1
C37 .01
C38
C39
C40 .00005
C41
C42
C43 .00005
C44 .01
C45
C46
C47 .1
C48 .01
C49
C50 .0001
C51
C52 .0001
C53 10
C54 .01
C69 .02
C70 .1
C71 10
R1 68
R2 22K
R3 2200
R4 2200
R5 68
R6 2200
R7 10K
R9 68
R10
R19 1 MEG
R20 100K
R21 22K
R22 18K
R23 12K
R24 2200
R25 1 MEG
R26 47K
R27 470K
R28 470K
R54 4.7 MEG
R55 470K
R56 2.2 MEG
R60 22K
R61 68
LOOP
GND.
ANT.
MICROPHONE
PHONO

©John F. Rider

GAY CORP.

MODELS 7D42, 7D44

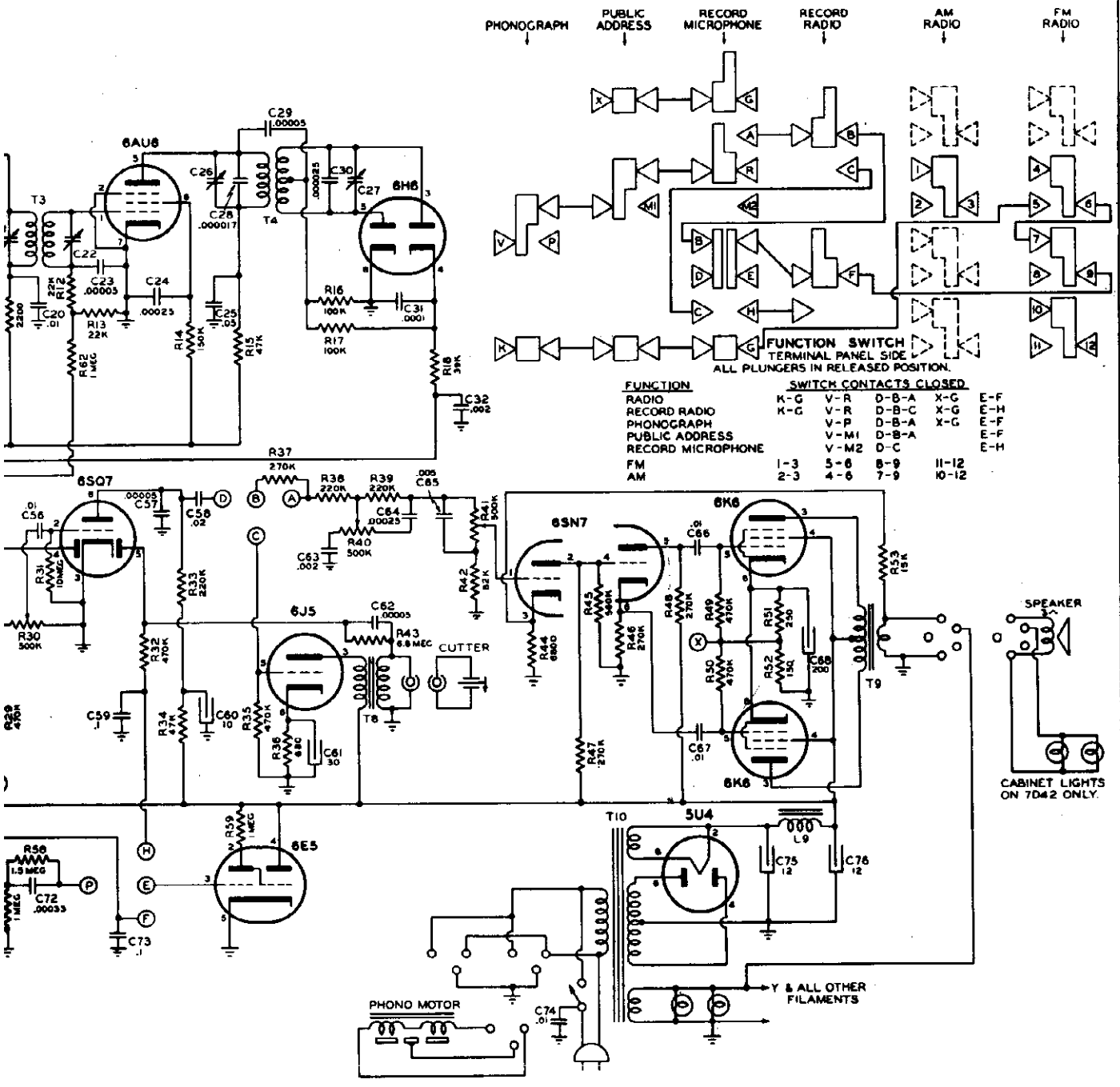

40, 7E44
Diagram
801,056 up)

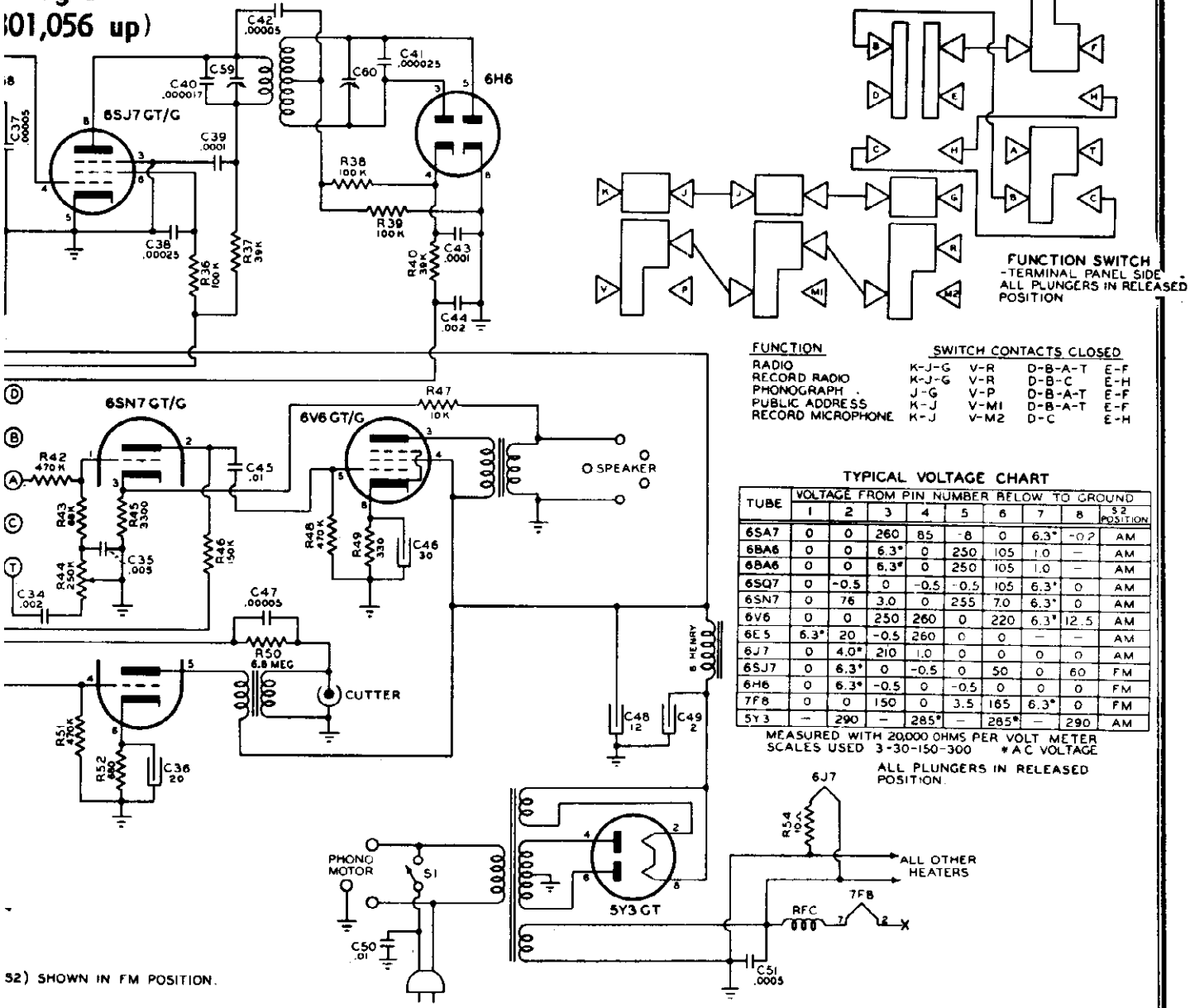

FUNCTION	SWITCH CONTACTS CLOSED			
RADIO	K-J-G	V-R	D-B-A-T	E-F
RECORD RADIO	K-J-G	V-R	D-B-C	E-H
PHONOGRAPH	J-G	V-P	D-B-A-T	E-F
PUBLIC ADDRESS	K-J	V-MI	D-B-A-T	E-F
RECORD MICROPHONE	K-J	V-M2	D-C	E-H

TYPICAL VOLTAGE CHART

TUBE	VOLTAGE FROM PIN NUMBER BELOW TO GROUND								S2 POSITION
	1	2	3	4	5	6	7	8	
6SA7	0	0	260	85	-8	0	6.3*	-0.2	AM
6BA6	0	0	6.3*	0	250	105	1.0	—	AM
6BA6	0	0	6.3*	0	250	105	1.0	—	AM
6SQ7	0	-0.5	0	-0.5	-0.5	105	6.3*	0	AM
6SN7	0	76	3.0	0	255	7.0	6.3*	0	AM
6V6	0	0	250	260	0	220	6.3*	12.5	AM
6E5	6.3*	20	-0.5	260	0	0	—	—	AM
6J7	0	4.0*	210	1.0	0	0	0	0	AM
6SJ7	0	6.3*	0	-0.5	0	50	0	60	FM
6H6	0	6.3*	-0.5	0	-0.5	0	0	0	FM
7F8	0	0	150	0	3.5	165	6.3*	0	FM
5Y3	—	290	—	285*	—	285*	—	290	AM

MEASURED WITH 20,000 OHMS PER VOLT METER
SCALES USED 3-30-150-300 *A.C. VOLTAGE
ALL PLUNGERS IN RELEASED POSITION.

52) SHOWN IN FM POSITION.

On all chassis with serial number 804,045 and up, R53 in the phono circuit has been changed from 820 K to 470 K. This compensates for variance in values of the volume control and provides greater voltage to the audio section of the 6SQ7 phono amplifier tube.

If low phonograph gain is encountered on chassis with serial numbers <u>below</u> 804,045, R53 should be changed to 470 K to increase the gain.

WILCOX-GAY CORP.

MODELS 7E40, 7E44

Alignment Data

An OUTPUT METER or other indication device should be used for accuracy in making ganging adjustments. If an output meter is not available, the tuning indicator may be used as an output indicator. Resonance of the circuits will be indicated by the maximum closing of the tuning eye.

ALIGNMENT OF STANDARD BROADCAST (AM) BAND.

1. Connect signal generator to lug on-ANT. AM section of variable condenser.
2. Set volume control to near maximum.
3. Set tuning dial at 1500 K.C.
4. Set signal generator at 456 K.C.
5. Align trimmers in the following order:

1. Secondary 2nd. I.F. (C-64)
2. Primary 2nd. I.F. (C-63)
3. Secondary 1st. I.F. (C-62)
4. Primary 1st. I.F. (C-61)

Note: Repeat procedure to obtain greatest accuracy in the adjustment of the trimmer condensers.

6. Turn condenser gang to full maximum capacity and check position of dial pointer with reference line on the scale which is the second graduation to the left of the 550 K.C. calibration.
7. If chassis is out of the cabinet, signal generator should be connected across the loop antenna socket when adjusting AM oscillator trimmer C-5, and for an approximate adjustment of trimmer C-4 and L.F. antenna iron core. Final adjustment must be made with the chassis in cabinet and with loop plugged in.

   Signal generator is then connected to antenna and ground terminals on cabinet. Trimmer C-4 and antenna coil slug are adjusted for maximum indication of the tuning eye at the frequencies listed below.

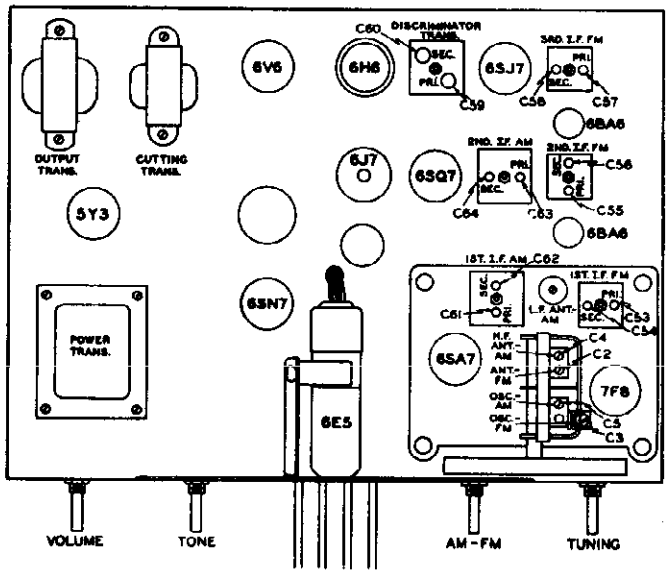

MODELS 7E40, 7E44

WILCOX-GAY CORP.

A loading coil, can be substituted for the loop for bench alignment but the final adjustment of trimmer C-4 and L.F. antenna coil slug should be made with the chassis in cabinet. To make this loading coil, close wind 50 turns of #24 enamel wire on a 3/4" O.D. bakelite form. An antenna can be coupled to the ungrounded side of this coil through a .0001 mfd. condenser.

SIGNAL GENERATOR FREQUENCY	DIAL SETTING	TRIMMER
1400 K.C.	1400 K.C.	Osc. (C-5)
1400 K.C.	1400 K.C.	Det. (C-4)
600 K.C.	600 K.C.	L.F. ANT.-AM

Note: Repeat procedure to obtain greatest accuracy in the adjustment of the trimmer condensers.

ALIGNMENT OF FREQUENCY MODULATION (FM) BAND.

An unmodulated signal generator with output at 10.7 MC and 100 MC is required for FM alignment. A vacuum tube voltmeter or a high resistance voltmeter, at least 20,000 OHMS per volt, is required to measure limiter grid voltage and discriminator output voltage.

FM alignment can be accomplished with an FM signal generator and oscilloscope. Instructions for this type of alignment are furnished by the manufacturers of FM signal generators.

I.F. SECTION

1. Connect 10.7 MC Signal Generator across ANT.FM section, (copper plates), of tuning condenser gang.
2. Connect VTVM or high resistance voltmeter across R-34 with positive terminal to ground.
3. Adjust trimmers C58, C57, C56, C55, C54 and C53 in order listed for maximum voltmeter reading.

Note: Reduce output from signal generator as alignment progresses so that the limiter grid voltage does not exceed 5 volts.

4. With signal generator connected as above, remove voltmeter from limiter grid and connect across discriminator load resistor, R39.
5. Adjust trimmer C-59 on Disc. Transformer for maximum voltmeter reading.
6. Connect voltmeter from 6H6 pin #4 to ground.
7. Adjust trimmer C-60 on Disc. Transformer for zero reading on voltmeter.

Note: When trimmer C-60 is adjusted correctly, slight detuning will give a positive voltage reading in one direction and a negative reading in the other.

R.F. SECTION

1. Disconnect FM antenna and connect signal generator with 150 ohm resistor in each lead to FM ANT terminals.
2. Connect voltmeter across R-34.
3. Set signal generator and radio dial pointer at 100 MC.
4. Adjust trimmer C-3 (OSC FM) to bring in signal.

Note: Two settings of this trimmer will give a response. The correct adjustment is the one for least capacity.

5. Adjust trimmer C-2 (ANT FM) for maximum voltmeter reading.

PART NO.	NAME
17-3026-A	Antenna Coupling Coil Assembly
59-2128	Cap Shield for metal 6J7 tube
147-1	Capristor .01 mfd. and 10 meg ohm res. Cap. 20-.50 Res. 20%
78-2053	Condenser, trimmer
77-2096	Condenser, variable, 2 gang
81-2096	Cutter Transformer
56-2220	Dial Background
20-2002	Dial Cord 54" long
62-2134	Dial Light Socket Assembly
56-2221	Dial Scale
68-3007-A	Discriminator Transformer Assembly FM
27-2034-A	Drive Drum Assembly
18-2040	Electrolytic Capacitor 10-400V . . 20-25V
18-2049	Electrolytic Capacitor 12-450V . . 30-25V
9-2195	F.M. Transmission line
14-2101	Filter Choke
68-3005-A	I.F. Transformer 10.7 K.C.
68-3001-C	I.F. Transformer 456 K.C.
68-3006-A	I.F. Transformer Assembly AM 2nd
68-3005-A	I.F. Transformer Assembly FM 3rd
68-3005-B	I.F. Transformer Assembly FM 2nd
59-2106-1	Loctal Tube Shield
17-3015-A	Loop Loading Coil Assembly
62-2135	Magic eye socket and cable
59-3002	Mike Socket Shield
17-3028	Mixer Coil, F.M.
81-2095	Output Transformer
17-3023-A	Osc. Coil Assembly A.M.
17-3029	Osc. Coil, F.M.
45-2003	Pilot Lamp
39-2022-3	Pointer
20-2038	Power Cord
80-2182	Power Transformer
40-2043	Push Button
66-2173	Push Button Switch
17-3025-A	R.F. Choke Coil Assembly
59-3020	R.F. Coil Shield
66-3016	Switch
19-2193	Tone Control
97-3005	Tension Spring—Dial Cord
19-2188-1	Volume Control

CORRECTION FOR EXCESSIVE AC HUM ON 7E MODELS

(Serial Nos. 800,000 to 801,055 Incl.)

Due to variance in tube characteristics, AC hum in some cases was objectionable on the first production run on 7E Models.

On all chassis with serial numbers above 801,055 the plate resistor (R46) of the audio section of the 6SN7 GT/G tube is connected to the junction of Resistor (R27) and Filter Capacitor (C32) instead of directly to the plate supply.

This change, shown below, takes care of tube variances and should be made, when necessary, in the field.

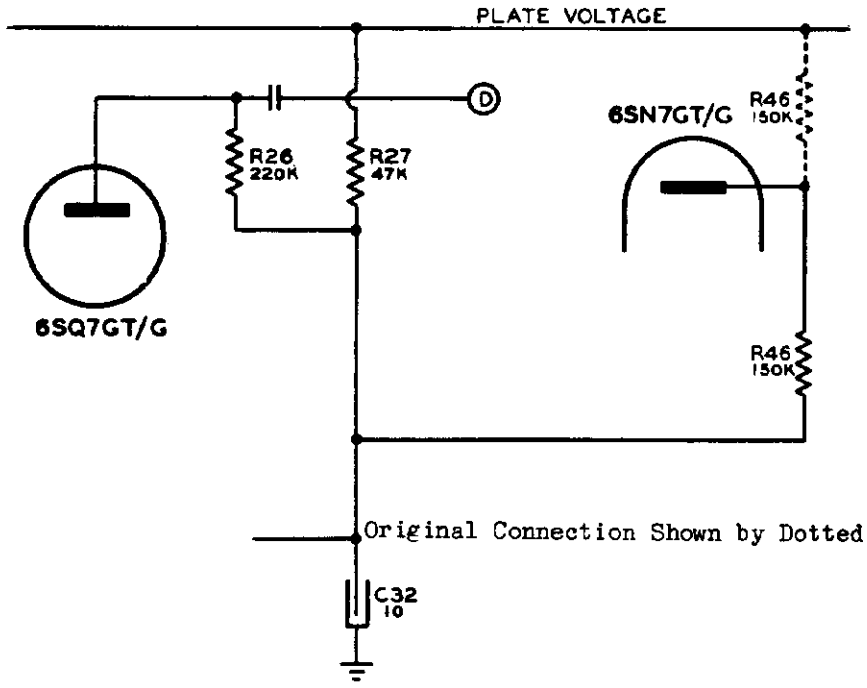

Original Connection Shown by Dotted Lines.

ZENITH RADIO CORP.

MODEL 6MN738E,
Nash

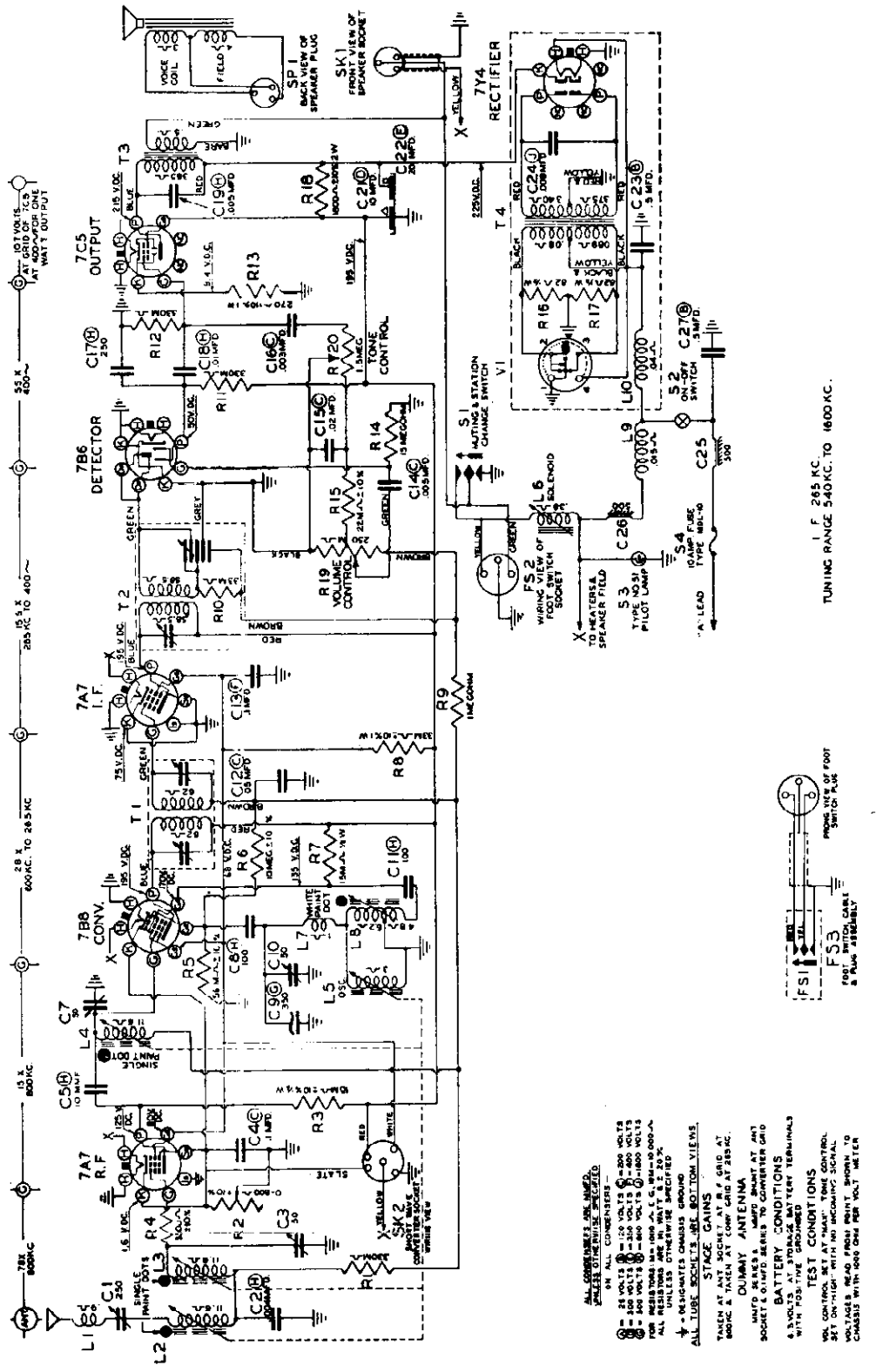

SETTING THE AUTOMATIC TUNER

Pressing the Push-Bar at the right below the dial repeatedly will cause the tuning mechanism to change through a cycle of six positions. Five of the automatic positions may be set for favorite local stations while the sixth position, at which "M" appears on the indicator drum, is used for selecting stations manually.

Allow the receiver to operate for at least fifteen minutes to bring the operating temperature up to normal before making the following automatic tuning settings.

Using "M" position as a reference point, the remaining five positions may be adjusted in succession to any desired dial setting. Setting these stations in sequence according to their frequencies beginning at the lowest frequency for number 1, and progressing through to the high frequency end of the dial for number 5 is the recommended practice to simplify the identification of each automatic tuned station.

1. Press station selector bar until number 1 appears in station indicator window.
2. Pull manual tuning knob outward to engage the automatic mechanism.
3. Select the station desired and tune to its frequency by turning tuning knob. Tune very carefully for clearest reception.
4. Press station selector bar, pull manual tuning knob outward, and tune in station desired for No. 2 position. Use same procedure for positions No. 3, 4 and 5.

NOTE: When "M" appears in the station indicator window, the manual tuning knob must be pulled outward and rotated to select the stations manually.

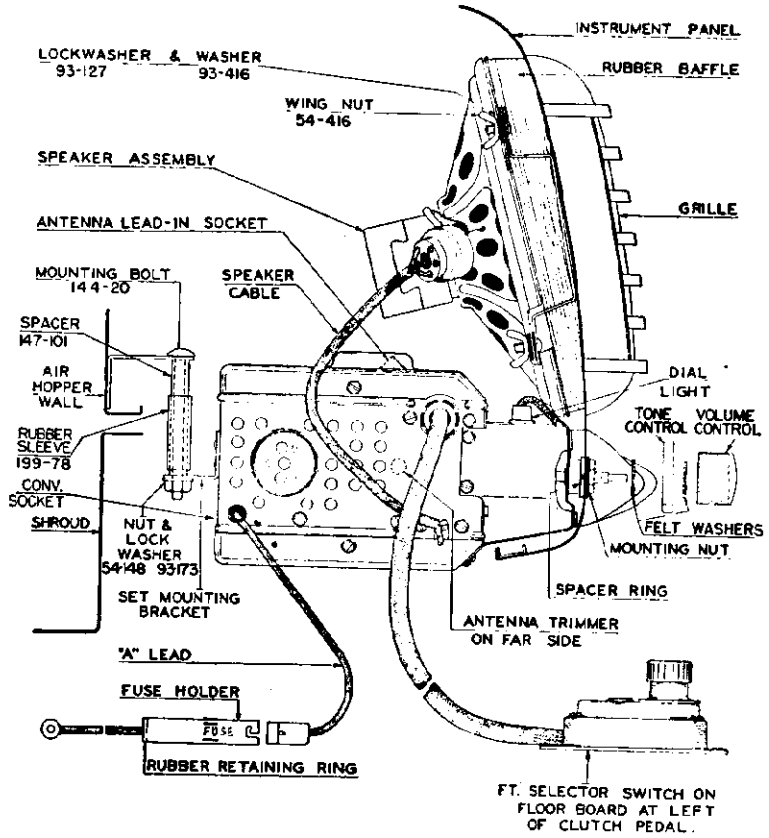

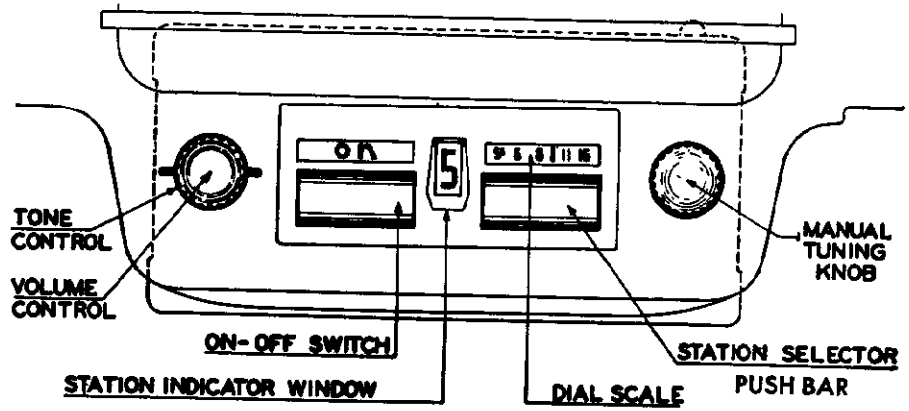

MODELS 6S624CT, 6S643CT, Ch. 6B16CT

ZENITH RADIO CORP.

MODELS 6S643AT, 6S659AT, Ch. 6B16AT; 6S624BT, 6S643BT, 6S659BT, Ch. 6B16BT

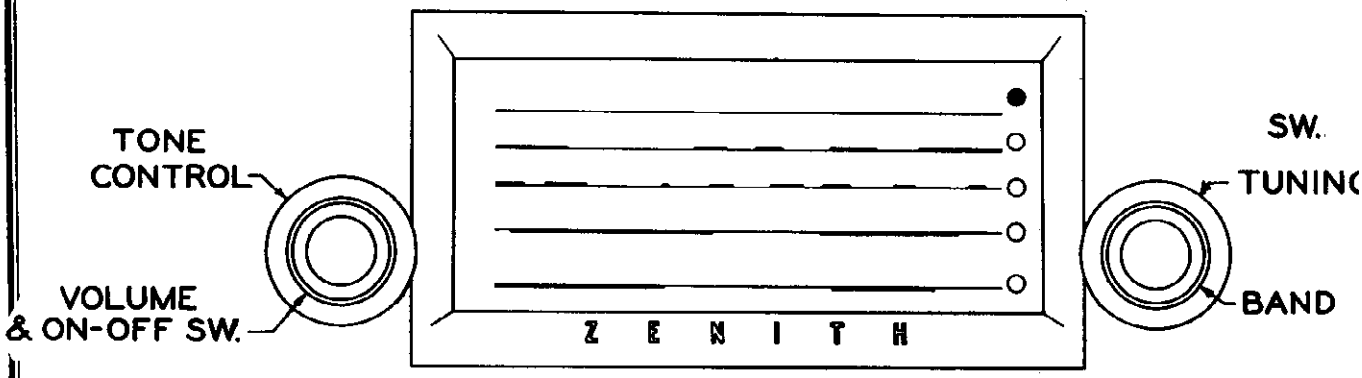

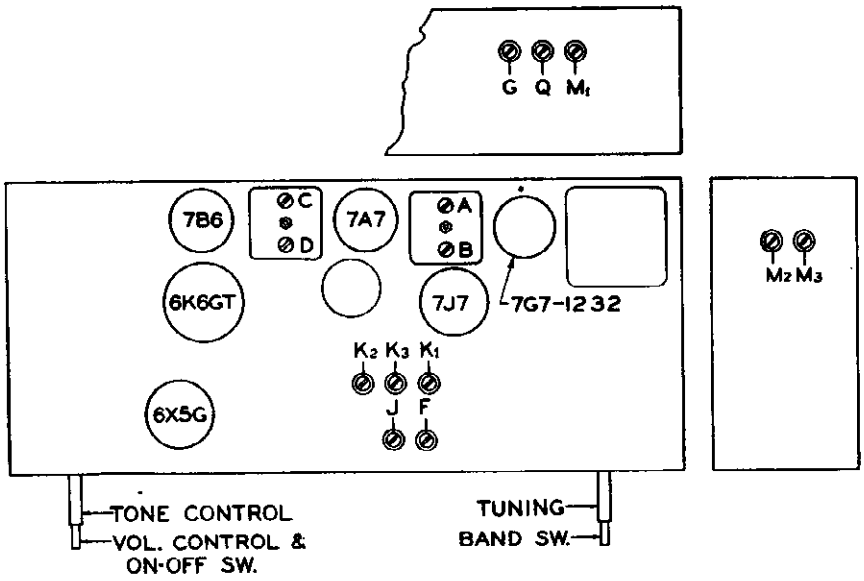

Operation	Connect test osc. to	Dummy Ant.	Input signal frequency	Band	Set Dial	Adjust Trim	Purpose
1	1st det. Gnd.	.1 mfd.	455 kc.	BC	600 kc.	ABCD	Align IF
2	Ant. Gnd.	200 mmf.	1400 kc.	BC	1400 kc.	F	Set osc. to scale
3	Ant. Gnd.	200 mmf.	1400 kc.	BC	1400 kc.	G	Align Ant.
4	Ant. Gnd.	200 mmf.	600 kc.	BC	Rock at 600 kc.	J	Set Padder
5	Ant. Gnd.	400 ohm	6.5 mc.	SW2	6.5 mc.	Q	Align SW2
6	Ant. Gnd.	400 ohm	18.0 mc.	SW1	18.0 mc.	K1	Set osc. to scale
7	Ant. Gnd.	400 ohm	18.0 mc.	SW1	18.0 mc.	M1	Align Ant.
8	Ant. Gnd.	400 ohm	17.8 mc.	19-16m	17.8 mc.	K3	Set osc. to scale
9	Ant. Gnd.	400 ohm	17.8 mc.	19-16m	17.8 mc.	M3	Align Ant.
10	Ant. Gnd.	400 ohm	11.8 mc.	25-31m	11.8 mc.	K2	Set osc. to scale
11	Ant. Gnd.	400 ohm	11.8 mc.	25-31m	11.8 mc.	M2	Align Ant.

POWER

Under no circumstances should this receiver be connected to direct current (D.C.).

6B16AT — This chassis is designed to operate on 25 cycles alternating current (A.C.) and may be adjusted for use on 110–125–190–220 or 240 volts by means of the switch on top of the transformer.

6B16BT — This chassis is designed to operate on 50 to 100 cycle alternating current (A.C.) and may be adjusted for use on either 115 or 225 volts by means of the switch on the power transformer.

6B16CT — This chassis is designed to operate on 50 to 60 cycle alternating current (A.C.) and may be adjusted for use on either 95, 115 or 150 volts by means of the switch on the power transformer.

The total power consumption is 50 watts.

TUBES

The following tubes are used – (see Fig. 2):

7G7/1232 - 7J7 - 7A7 - 7B6 - 6K6GT - 6X5G

MODELS 6S643AT, 6S659AT, Ch. 6B16AT;
6S624BT, 6S643BT, 6S659BT, Ch. 6B16BT;
6S624CT, 6S643CT, Ch. 6B16CT

ZENITH RADIO CORP.

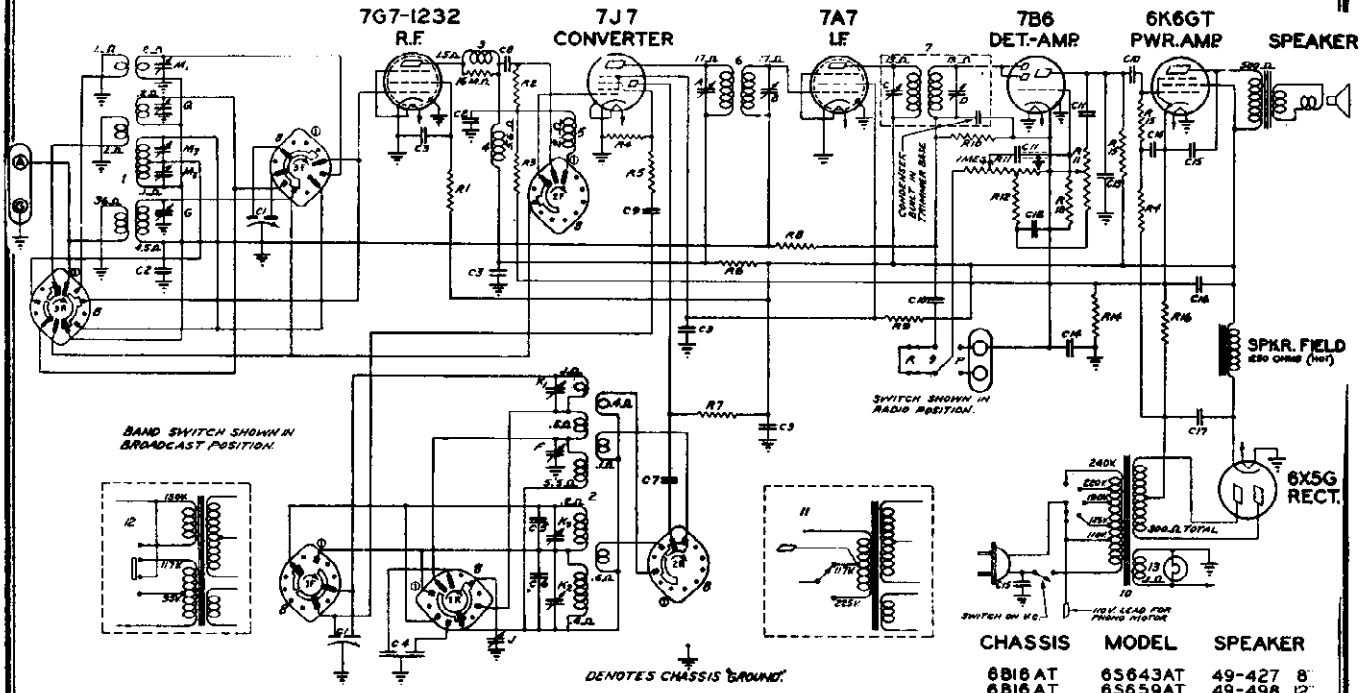

CHASSIS	MODEL	SPEAKER
6B16AT	6S643AT	49-427 8"
6B16AT	6S659AT	49-498 12"
6B16BT	6S624BT	49-419 6½"
6B16BT	6S643BT	49-427 8"
6B16BT	6S659BT	49-498 12"
6B16CT	6S624CT	49-419 6½"
6B16CT	6S643CT	49-427 8"

I.F. FREQUENCY 455 KC.
6 TUBE SUPERHETERODYNE
95-240 V. A.C. 5-BAND
CHASSIS Nº 6B16 AT-BT-CT

DIAG NO	PART NO	DESCRIPTION		DIAG NO	PART NO	DESCRIPTION		DIAG NO	PART NO	DESCRIPTION		DIAG NO	DESCRIPTION
C1	22-1092	TWIN GANG VARIABLE		A1	63-595	100 M OHM	½ W	L	5 8997	OSCILLATOR COIL ASSEMBLY		C	1ST I.F. TRANS. PRI.
C2	22-318	.05 MFD.	400 V.	A2	63-766	3300 OHM	½ W	J	5 8995	CHOKE @ RES -		D	2ND I.F. " SEC.
C3	22-819	.05 MFD.	600 V.	A3	63-585	2200 OHM	½ W	K	5 8997	PLATE CHOKE "		F	BROADCAST OSC. (NOTE 1)
C4	22-708	DUAL PADDER		A4	63-593	470 M OHM	½ W	S	5 8998	GRID CHOKE "		G	BROADCAST ANT. (NOTE 2)
C5	22-145	45 MMFD. COMP.		A5	63-621	33 OHM	½ W	T	95-767	1ST I.F. TRANSFORMER		J	BROADCAST ANTENN (NOTE 3)
C6	22-162	40 MMFD. COMP.		A6	63-603	1000 OHM	½ W	1	93-758	2ND I.F. "		K1	SHORTWAVE, OSC. (NOTE 3)
C7	22-716	.0005 MFD.	600 V.	A7	63-958	22 M OHM	1 W	8	95-845	BAND SELECTOR SWITCH		K2	31-25 M. OSC (NOTE 3)
C8	22-162	.0001 MFD.	600 V.	A8	63-711	1 MEG OHM	½ W	9	95-844	PHONO-RADIO SWITCH		K3	19-16 M. OSC (NOTE 3)
C9	22-289	.50 MMFD.	600 V.	A9	63-1137	47 M OHM	½ W	10	95-857	(PWR TRANS 95-115-130V 50-60 CY.) 6B16 AT		K4	SHORTWAVE, ANT (NOTE 2)
C10	22-810	.06 MFD.	600 V.	A10	63-597	470 M OHM	½ W			(PWR TRANS 115-125V 50 60 CY.) 6B16BT		K5	31-25 M. ANT (NOTE 2)
C11	22-866	.004 MFD.	600 V.	A11	63-1136	VOLUME & TONE CONTROL		11	95-858	(PWR TRANS 95-115-150V 50 60 CY.) 6B16 CT		K6	19-16 M. ANT (NOTE 2)
C12	22-1120	.05 MFD.	400 V.	A12	63-715	33 M OHM	½ W	12	95-859	DIAL LIGHT 6.3 V. .25 A.		G	SHORTWAVE ANT. (NOTE 2)
C13	22-1119	.0005 MFD.	600 V.	A13	63-606	10 MEGOHM	½ W	13	100-36			NOTE	(1) TRIMMERS F & G ARE MOUNTED ON STRIP 22-1088
C14	22-861	.1 MFD.	400 V.	A14	63-975	82 OHM WIREWOUND	2 W						(2) TRIMMERS K, S, M & G ARE MOUNTED ON STRIP 22-1090
C15	22-806	.006 MFD.	1000 V.	A15	63-596	220 M OHM	½ W						(3) TRIMMERS K, S, M & G ARE MOUNTED ON STRIP 22-1091
C16	22-719	16 MFD ELECTROLYTIC	350 V.	A16	63-1058	250 OHM WIREWOUND	2 W						(4) TRIMMERS M1 & M2 ARE MOUNTED ON STRIP 22-1089
C17	22-1097	20 MFD. "	450 V.					A		1ST I.F. TRANS. PRI.			
				1	5 8909	ANTENNA COIL ASSEMBLY		B		1ST I.F. " SEC.			

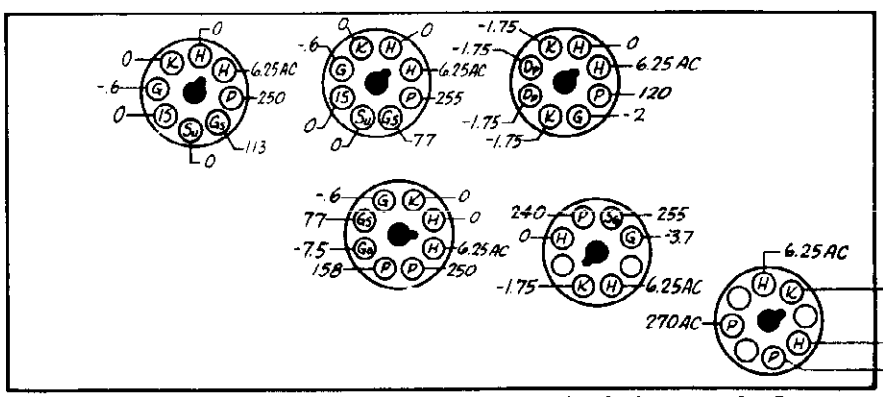

SOCKET VOLTAGES BOTTOM VIEW

ZENITH RADIO CORP.

MODEL 7H820
CHASSIS 7E0

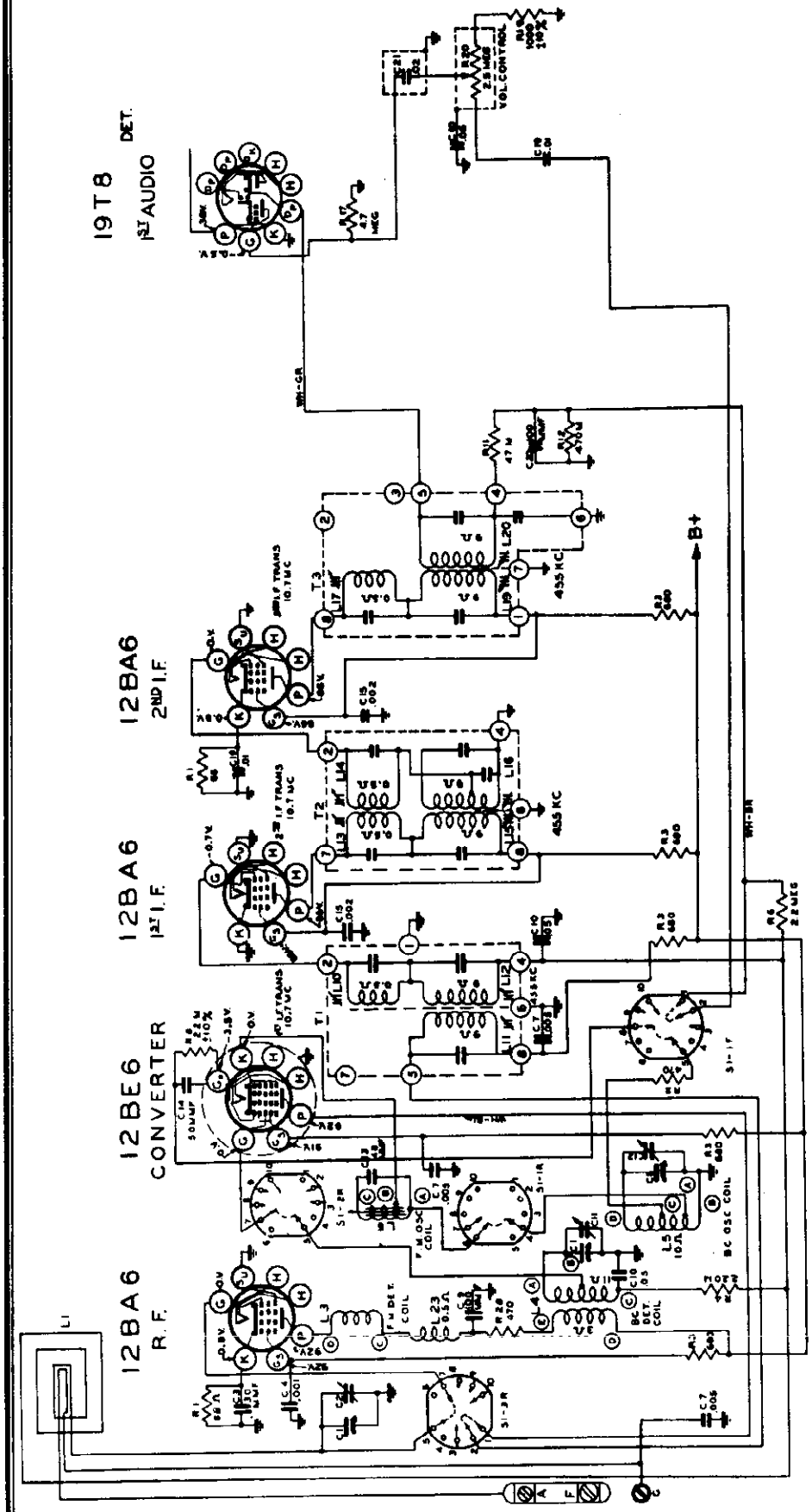

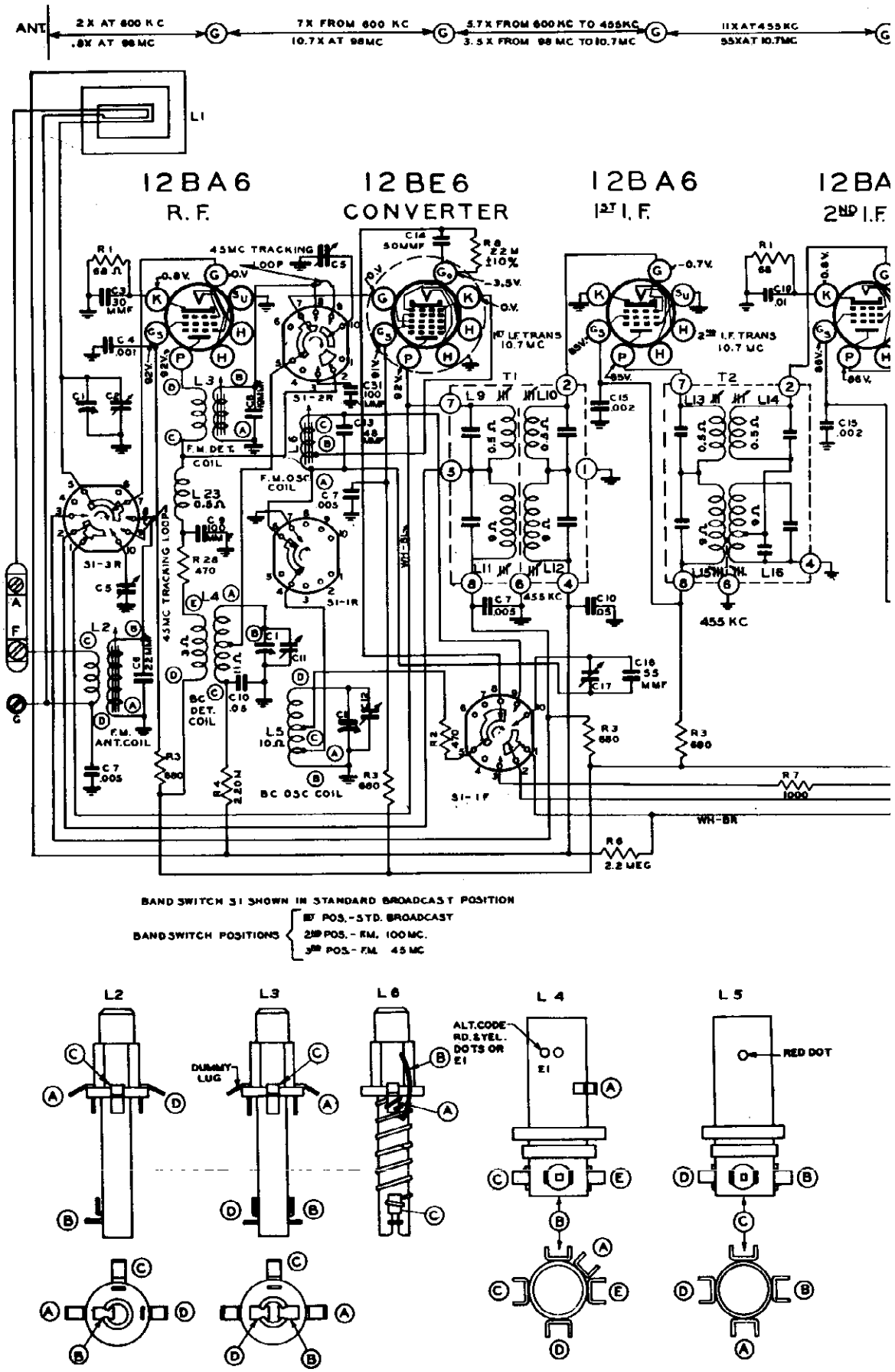
ANT.
2 X AT 600 KC
.8X AT 98 MC
7X FROM 600 KC
10.7X AT 98MC
5.7X FROM 600 KC TO 455KC
3.5X FROM 98 MC TO 10.7MC
11X AT 455 KC
55X AT 10.7MC
12BA6
R.F.
12BE6
CONVERTER
12BA6
1ST I.F.
12BA
2ND I.F.
45MC TRACKING LOOP
10.7 MC I.F. TRANS
2ND I.F. TRANS
F.M. DET. COIL
F.M. OSC COIL
F.M. ANT. COIL
BC DET. COIL
BC OSC COIL
45MC TRACKING LOOP
455 KC
WH-BR
BAND SWITCH S1 SHOWN IN STANDARD BROADCAST POSITION
BAND SWITCH POSITIONS
1ST POS. - STD. BROADCAST
2ND POS. - F.M. 100 MC.
3RD POS. - F.M. 45 MC
L2
L3
L6
L4
L5
DUMMY LUG
ALT. CODE RD. & YEL. DOTS OR E1
RED DOT

RADIO CORP.

MODEL 7H820,
CHASSIS 7E01

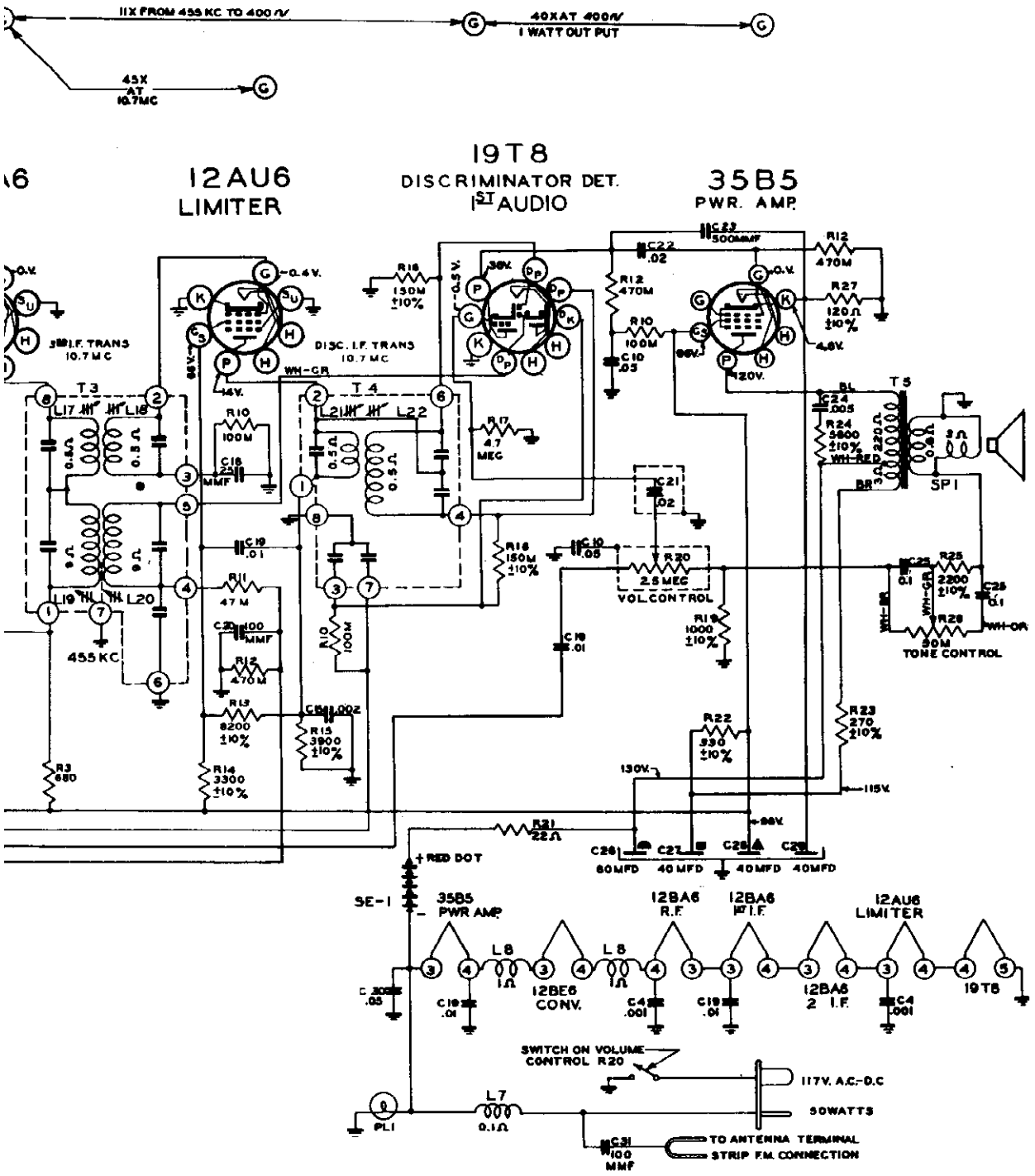

ALL VOLTAGE MEASURED FROM COMMON RETURN TO POINTS INDICATED WITH AN A.C., D.C. OR VACUUM TUBE VOLTMETER

ALL VOLTAGES ARE D.C. UNLESS OTHERWISE SPECIFIED

ALL RESISTORS ±20% TOLERANCE UNLESS OTHERWISE SPECIFIED

AMP. MOD. I.F. FREQUENCY 455 K.C.
FREQ. MOD. I.F. FREQUENCY 10.7 M.C.

TUNING RANGES
540-1620 K.C. STD. B.C.
88-108 M.C. F.M. 100
42-48.5 M.C. F.M. 45

DENOTES CHASSIS

CLARI-SKEMATIX
Registered Trademark

MODEL 7H820,
CHASSIS 7E01

ZENITH RADIO CORP.

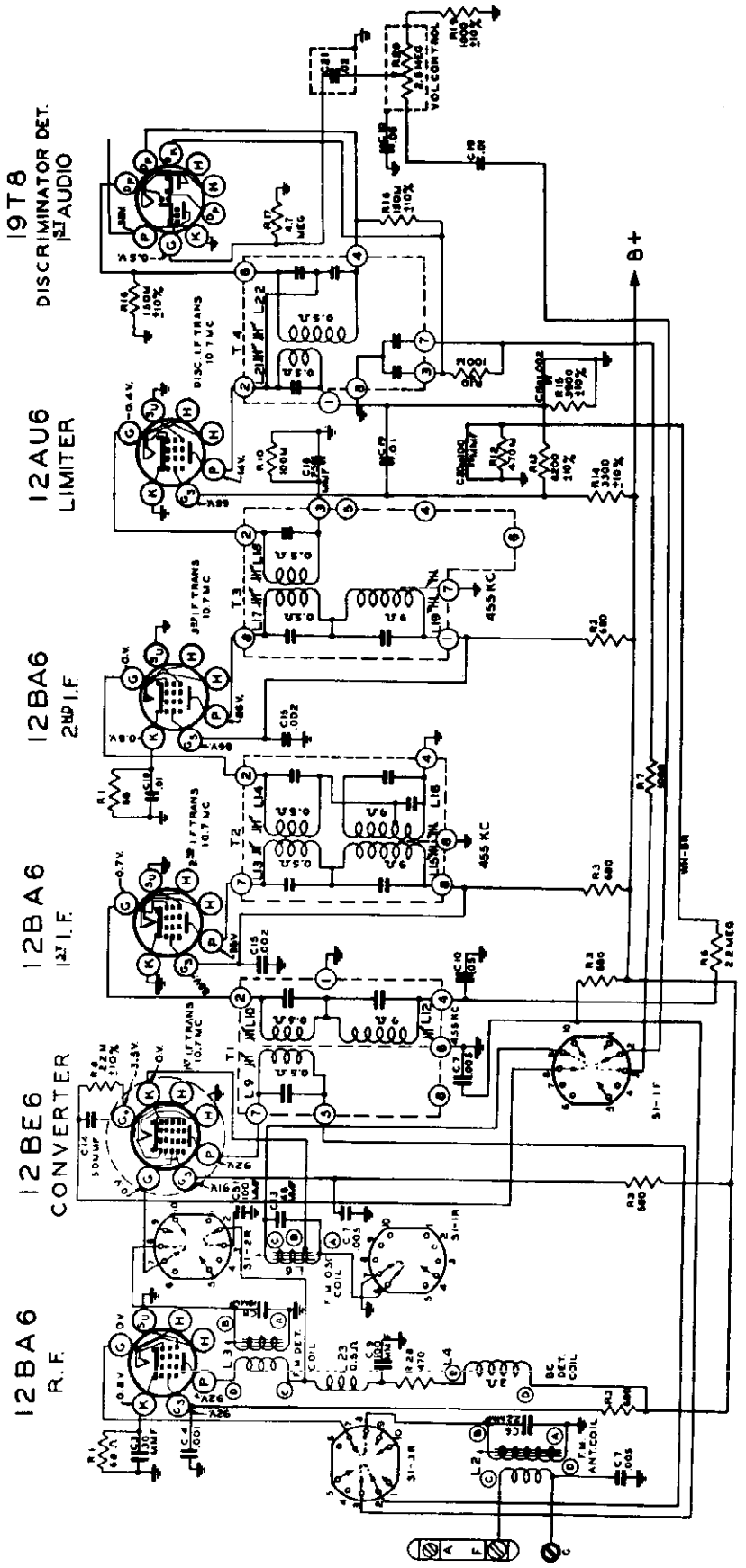

© John F. Rider

ZENITH RADIO CORP.

MODEL 7H820,
CHASSIS 7E01

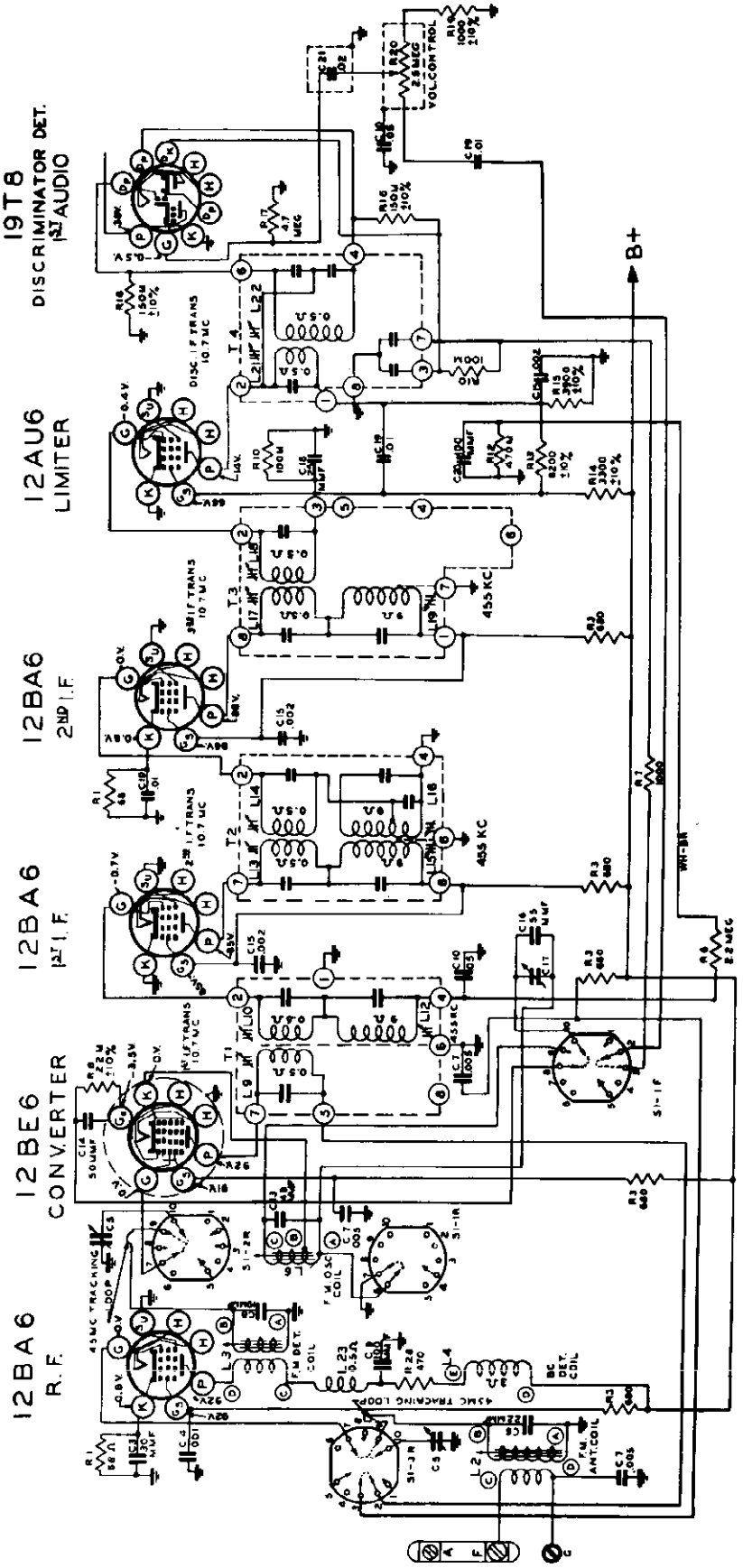

BAND-SWITCH SHOWN
AT 3RD POSITION CLOCKWISE.
F-M BAND
42-48.5 MC

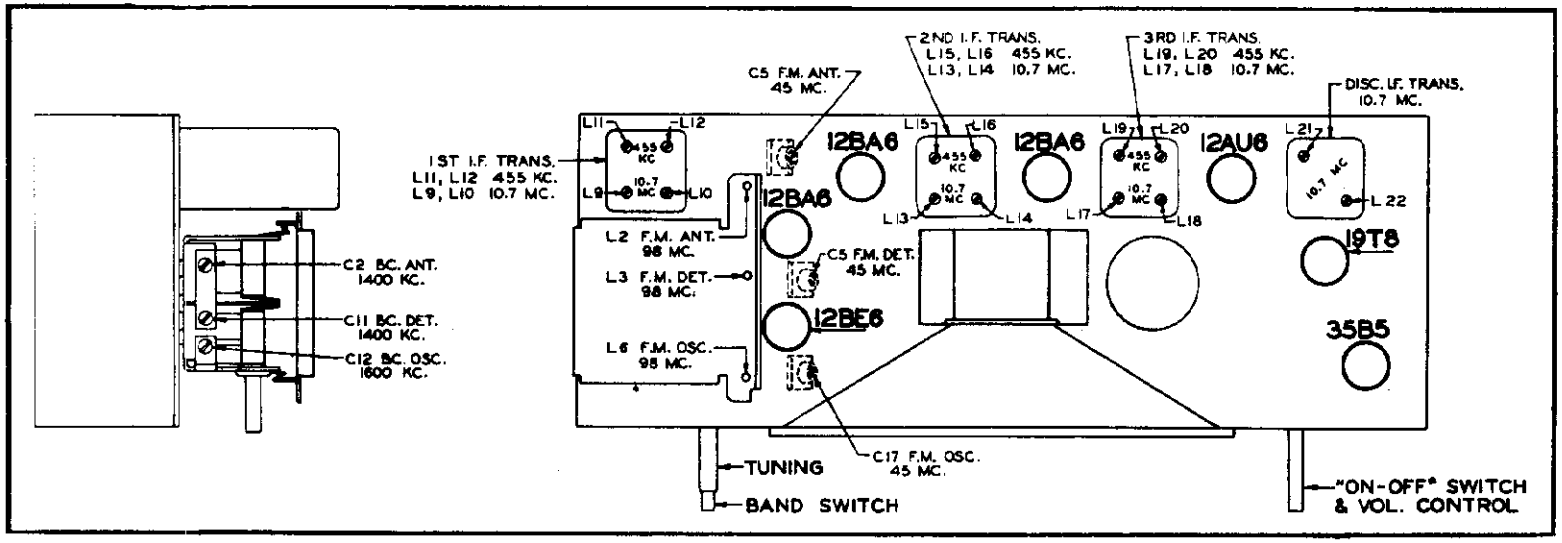

TUBE AND TRIMMER LOCATION

The 7E01 chassis incorporates a superheterodyne circuit with two stages of IF, and one stage of RF amplification on all bands.

When adjustments are made on the 7E01 or any AC-DC chassis, a line isolation transformer (110 V input to 110 V output) is recommended in order to avoid a "hot" chassis. If an isolation transformer is not available, check the AC voltage between chassis and bench ground, and if there is any indication of voltage, reverse the plug before handling the set.

AM Alignment: The alignment of this chassis on the standard broadcast band is conventional. The alignment slugs in the IF transformers are threaded and screw into the coil forms. The slugs are slotted for a small size fiber screw driver. Do not press hard on the aligning tool or the threads in the coil forms will strip and adjustment will be impossible.

FM RF Alignment: The same coil slug arrangement which tunes the 100 MC FM band also tunes the 45 MC band. However, on 45 MC the band switch connects trimmer condensers in parallel and padding wires in series with the 100 MC coils. The tuning slugs are attached to threaded shafts and the slugs are varied in the field of the coils by turning the shafts clockwise or counter-clockwise. After adjustment the shafts must be secured with a drop of speaker cement.

FM IF Alignment: The same type of tuning slugs for aligning the AM IF Amplifier are used for the FM I.F.'s. Observe the same precautions when making adjustments.

FM Discriminator Alignment: When the secondary of the discriminator is aligned (operation 5) use sufficient signal input to get a good positive and negative indication before setting the slug for zero reading. A center zero indicating meter is recommended for this adjustment, but is not absolutely necessary. Reversing the leads of a non-zero center meter, or observing closely when the meter starts to go to the left (negative) of zero will give the same results.

The tone control is of the low impedance type in which a portion of the audio voltage is taken from the voice coil and fed back into the grid of the first audio. The voltage is fed back out of phase. R25, 26 and C25 determine the characteristic of the feed back voltage. A much greater varation of tone can be had by this system.

The filter circuits of chassis 7E01 incorporate new features. An examination of the schematic drawing will show the output transformer tapped slightly off center. This tap is the B + connection from filter capacitor C26 off the selenium rectifier to the 35B5 plate. The lower connection of the output transformer feeds B + to the rest of the tubes in the receiver. Current flowing through the upper windings of the output transformer to the 35B5 produces a magnetic field which is 180° out of phase with the magnetic field produced by current flowing in the opposite direction through the output transformer to the rest of the receiver, therefore, most of the AC hum is cancelled. Further reductoon of hum is accomplished by filtering through resistors R22 and R23 capacitors C27 and C28.

This development in filtering systems allows a higher effective plate voltage on the 35B5 for increased power output.

NOTE: The output transformer must be replaced with an exact duplicate, Part No. 95-1035 be sure to add the speaker code letter to the transformer Part Number when ordering replacements.

ALIGNMENT PROCEDURE

Operation	Connect Oscillator to	Dummy Antenna	Input Signal Frequency	Band	Set Dial To	Adj. Trimmers	Purpose
1	Pin 7 12BE6 Converter	.05 Mfd.	455 KC. Modulated	BC	600 Kc.	L-11, 12, 15, 16, 19 and 20	Align I. F. channel for maximum output.
2	2 turns loosely cpld. to wavemagnet		1600 Kc. Modulated	BC	1600 Kc.	C12	Set oscillator to dial scale.
3	2 turns loosely cpld. cpld. to wavemagnet		1400 Kc. Modulated	BC	1400 Kc.	C11 and C2	Align det. and ant. stages.
4 (a)	Pin 1 (grid) on 12AU6 limiter.	.05 Mfd.	10.7 Mc. Unmodulated	FM 45		L21 coil slug Primary discr.	Align primary of discriminator for maximum reading.
5 (b)	Pin 1 (grid) on 12AU6 limiter.	.05 Mfd.	10.7 Mc. Unmodulated	FM 45		L22 coil slug sec. of discr.	Adjust secondary of discriminator for zero reading.
6 (c)	Pin 1 (grid) on 12BA6 2nd IF.	.05 Mfd.	10.7 Mc. Unmodulated	FM 45		L17 and L18 Prim. and Sec. of 3rd IF trans.	Align 3rd IF transformer for maximum reading.
7 (c)	Pin 1 (grid) on 12BA6 1st IF.	.05 Mfd.	10.7 Mc. Unmodulated	FM 45		L13 and L14 Prim. and Sec. of 2nd IF transformer	Align 2nd IF transformer for maximum reading.
8 (c)	Pin 7 (grid) on 12BE6 converter tube socket	.05 Mfd.	10.7 Mc. Unmodulated	FM 45		L9 and L10 Prim. and Sec. of 1st IF transformer	Align 1st IF transformer for maximum reading.
9 (c)(d)	Antenna Post F (Remove line ant.)	270 ohms	98 Mc. Unmodulated	FM 100	98 Mc.	L6 Osc. Coil Slug	Set Oscillator to dial scale.
10 (c)(d)		270 ohms	98 Mc. Unmodulated	FM 100	98 Mc.	L3 and L2 Det. and RF coil Slugs	Align det. and ant. stages to maximum reading.
11 (c)		270 ohms	45 Mc. Unmodulated	FM 45	45 Mc.	C17	Set oscillator to dial scale.
12 (c)		270 ohms	45 Mc. Unmodulated	FM 45	45 Mc.	C5 Det., C5 Ant.	Align detector and ant. stages for maximum reading.

IMPORTANT

Alignment of this chassis will in most cases be unnecessary unless an IF or RF transformer is replaced or the adjustments have been tampered with.

Correct alignment can only be made if the following procedure is followed:

A vacuum tube voltmeter with an isolation resistor of 2000,000 ohms in series with the hot lead will serve for FM adjustments. This lead should be shielded.

An AC output meter connected across the primary or secondary of the output transformer will be satisfactory for all AM adjustments.

The signal generator output should be kept just high enough to get an indication on the meter.

(a) Vacuum Tube Voltmeter Lug 6 on discriminator transformer to chassis (half discriminator load).

(b) Vacuum Tube Voltmeter Lug 3 on discriminator transformer to chassis (full discriminator load).

(c) Vacuum Tube Voltmeter Lug 3 on 3rd IF transformer (Limiter Grid).

(d) Loosen Slugs by applying a hot iron to the cement.

MODEL 7H820,
CHASSIS 7E01

ZENITH RADIO CORP.

PARTS LIST

PART NO.	REF. NO.	DESCRIPTION
		DIAL ASSEMBLY
12-1407		Dial Light Socket Mounting Bracket
26-389		Louvre Dial
46-538		Tuning Control Knob
46-688		Tone Control Knob
46-718		Band Switch Knob
54-211		Speed Nut (Dial Scale Mtg.)
57-1335		Tone Knob Escutcheon
76-493		Tuning Shaft
78-786		Dial Light Socket
80-69		Dial Cord Spring
80-209		Dial Cord Spring
80-444		Tuner Arm Tension Spring
80-580		Tuner Arm Stop Spring
80-581		Tuner Arm Pressure Spring
83-1504		Dial Light Shield
93-475		Felt Washer
94-371		Pointer Pulley Bushing (S13944)
97-284		Dial Cord Guide Stud
100-97		Dial Light Bulb - 115 V. - 10 W.
188-30		Retaining Ring (76-493)
188-102		Clamping Ring (46-538)
S-13944		Pointer Pulley and Bushing Assembly (59-205)
S-13945		Cam, Pulley and Bushing Assembly
S-13981		Tone Control Mtg. Bracket and Lug Assem. (12-1404)
S-13982		Dial Cord and Eyelet Assembly (Short)
S-13983		Dial Cord and Eyelet Assembly (Long)
S-14129		Volume Control Knob Assembly (46-522-697)
S-14429		Tuner Arm Assembly
		COILS AND CHOKES
S-11157	L5	Broadcast Oscillator Coil Assembly
S-12256	L7	A.C. Line Choke Coil Assembly
S-12259	L6	F.M. Oscillator Coil Assembly
S-13871	L3	F.M. Detector Coil Assembly
S-13970	T1	1st I.F. Transformer Assembly
S-13971	T2	2nd I.F. Transformer Assembly
S-13972	T3	3rd I.F. Transformer Assembly
S-13973	T4	Discriminator Transformer Assembly
S-13974	L4	Broadcast Detector Coil Assembly
S-13997	L8	Filament Choke Coil Assembly
S-14126	L23	R.F. Choke Coil Assembly
S-14192	L2	F.M. Antenna Coil Assembly
93-125		#6 Internal Shakeproof Lockwasher #1206
93-126		#8 Internal Shakeproof Lockwasher #1208
93-665		Fibre Washer
93-735		.012 x .093 x 11/64" Steel Washer - Cadmium
93-889		Insulating Washer
94-334		Speaker Mtg. Bushing
94-485		Fibre Bushing
94-598		R.F. Plate Mtg. Bushing
95-1035		Output Transformer
97-293		Insulating Stud (Chassis Mtg. Stud) (4 used)
102-466		Dial Calibration Label
110-130		Grille Cloth
112-281		#10 x 3/4" Oval Binding Hd. Self Tapping Screw Type Z - Stat. Bronze
114-26		#8 x 1/4" Hex Hd. Self Tapping Screw - Type Z - Cad.
114-48		#6-32 x 1/4" Hex Acorn Hd. M.S., Steel N.P. (9 used)
114-78		#8 x 5/16" Hex Hd. Slotted Self Tapping Screw (Wavemagnet Mtg.)
114-92		#6 x 1-1/8" Hex Hd. Slotted Self Tapping Screw Type Z - Cad.
114-157		#6 x 1/2" Hex Hd. Self Tapping Screw - Stan-Tap. Cad
114-218		#10 x 7/8" Slotted Washer Hd. Self Tapping Screw (Chassis Mtg.)
114-291		#8-32 x 7/16" Hex Hd, Slotted M. Screw - Steel, N.P
114-292		#6 x 5/8" Hex Hd. Slotted Self Tapping Screw Stan-Tap. - Cad.
125-17		Rubber Grommet (4 used) (49-608)
125-62		Rubber Grommet (Used on R.F. Plate) (4 used)
126-554		Miniature Tube Shield
139-69		Speaker Baffle
149-39		Iron Core (Used on all I.F. and Discriminator Transf.)
149-64		Tuning Core
188-34		Retaining Ring
202-506		F.M. Instruction Book
202-553		Instruction Book
212-3		Selenium Rectifier (or 212-4)
S-13977		Wavemagnet Assembly - Type 29D
S-14128		Cabinet Back, A.C. Plug and Cord Assembly (7H820)
S-14168		Bandswitch and Terminal Strip Assembly
S-14358		Wavemagnet Cable Assembly
S-14562		Cabinet Back, A.C. Plug and Cord Assembly (7H820W)

PART NO.	REF. NO.	DESCRIPTION
		CONDENSERS
22-162	C31	10U Mmfd. (or 22-1669) . . .500 V.
22-365	C20	100 Mmfd. (or 22-1701) . . .500 V.
22-829	C10	.05 Mfd. . . . . .200 V.
22-830	C22	.02 Mfd. . . . . .600 V.
22-1017	C30	.05 Mfd. . . . . .400 V.
22-1138	C23	500 Mmfd. (or 22-1703) . . .500 V.
22-1220	C15	.002 Mfd . . . . . .600 V.
22-1367	C14	50 Mmfd. . . . . .500 V.
22-1385	C19	.01 Mfd. . . . . .200 V.
22-1418	C25	.1 Mfd . . . . . .200 V.
22-1506	C6	22 Mmfd. (Ceramic) . . . .500 V.
22-1507	C18	25 Mmfd. (Ceramic) . . . .500 V.
22-1661	C26, C27, C28, C29	Dry Electrolytic 80-40-40 Mfd. 150 V. X 40 Mfd. - 25 V
22-1669	C9	100 Mmfd. (Ceramic) . . . .500 V.
22-1676	C4	.001 Mfd. (Ceramic) . . . .500 V.
22-1677	C1	Three Gang Variable
22-1683	C21	.02 Mfd. (Shielded) . . . .400 V.
22-1685	C5	Single Section Trimmer
22-1686	C17	Single Section Trimmer
22-1688	C8	19 Mmfd. (Ceramic) . . . .500 V.
22-1689	C13	48 Mmfd. (Ceramic) . . . .500 V.
22-1691	C16	55 Mmfd. (Silver on Ceramic)
22-1702	C24	.005 Mfd . . . . . .400 V.
22-1705	C2	30 Mmfd. (Ceramic) . . . .500 V.
22-1706	C7	.005 Mfd. (Ceramic) (Disc Type) . .450 V.
		RESISTORS
63-1202	R22	330 Ohm (Wirewound) . . . .2 W.
63-1450	R21	22 Ohm (Wirewound) . . . .1 W.
63-1452	R23	270 Ohm (Wirewound) . . . .2 W.
63-1582	R26	50M Ohm Tone Control
63-1584	R20	Volume Control and Switch
63-1737	R1	68 Ohm (Insulated) . . . .1/2 W.
63-1747	R27	120 Ohm (Insulated) . . . .1/2 W.
63-1772	R2	470 Ohm (Insulated) . . . .1/2 W.
63-1779	R3	680 Ohm (Insulated) . . . .1/2 W.
63-1765	R19	1M Ohm (Insulated) . . . .1/2 W.
63-1786	R7	1000 Ohm (Insulated) . . . .1/2 W.
63-1799	R25	2200 Ohm (Insulated) . . . .1/2 W.
63-1806	R14	3300 Ohm (Insulated) . . . .1/2 W.
63-1810	R15	3900 Ohm (Insulated) . . . .1/2 W.
63-1871	R29	5600 Ohm (Insulated) . . . .1/2 W.
63-1824	R13	8200 Ohm (Insulated) . . . .1/2 W.
63-1841	R8	22M Ohm (Insulated) . . . .1/2 W.
63-1856	R11	47M Ohm (Insulated) . . . .1/2 W.
63-1870	R10	100M Ohm (Insulated) . . . .1/2 W.
63-1876	R16	150M Ohm (Insulated) . . . .1/2 W.
63-1884	R4	220M Ohm (Insulated) . . . .1/2 W.
63-1898	R12	470M Ohm (Insulated) . . . .1/2 W.
63-1926	R6	2.2 Megohm (Insulated) . . . .1/2 W.
63-1940	R17	4.7 Megohm (Insulated) . . . .1/2 W.
		MISCELLANEOUS
12-1070		Wavemagnet Mounting Bracket
14-848		Model 820W - Plastic Cabinet (7H820W)
14-1020		Model 820 - Bakelite Cabinet (7H820)
19-139		Cabinet Back Retaining Clip (4 used)
49-608		7½" P. M. Speaker 208-608 and Voice Coil
54-30		#8-32 x 5/16" x 7/64" Hex Nut - Steel N.P. (6 used)
54-139		#3/8-32 x 9/16" Palnut - Type 9N-Steel-Cad. (2 used)
54-226		Speed Nut - Tinnerman #C518B-014-27 (3 used)
57-1269		I.F. Transformer Terminal Plate
58-168		Two Prong Plug
73-30		#6-32 x 1/4" Hex Hd. Set Screw - Cuppoint (2 used)
78-782		Socket - Miniature Tube (7 Contact) (2 used)
78-786		Socket - Miniature Tube (9 Contact)
78-794		Socket - Miniature Tube (7 Contact) (3 used)
78-795		Socket - Miniature Tube (7 Contact)
83-1063		Threaded Insert (used on all I.F. Transformers)
83-1064		Threaded Insert (used on all I.F. and Discriminator Transformers)
83-1090		Insulating Strip (58-168)
83-1479		Insulating Strip
83-1480		Insulating Strip
83-1503		Tone Arm Insulating Strip
85-417		Band Switch (use S-14168)
93-2		.016 x .134 x 1/4" Brass Washer
93-94		Bakelite Shoulder Washer

OPERATING INSTRUCTIONS

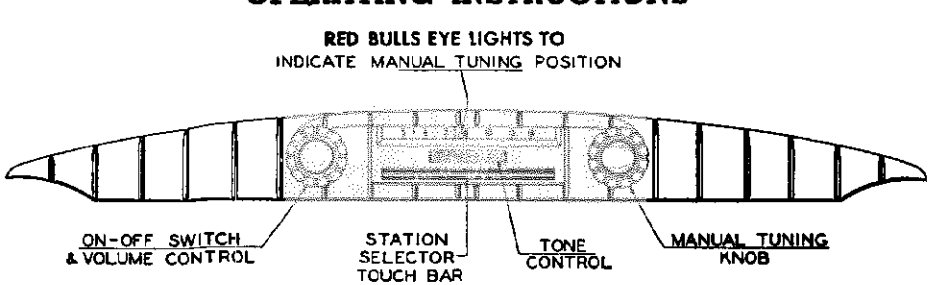

LINCOLN FIG. 1A

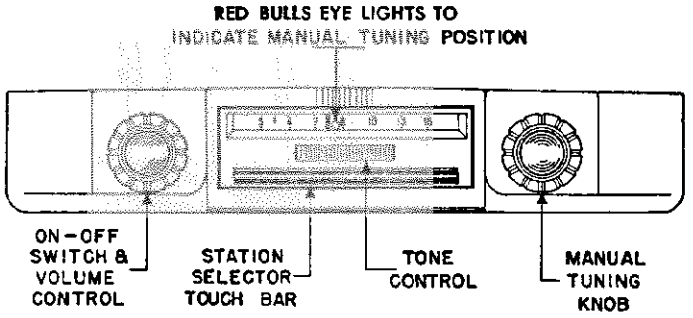

LINCOLN CONTINENTAL FIG. 1B

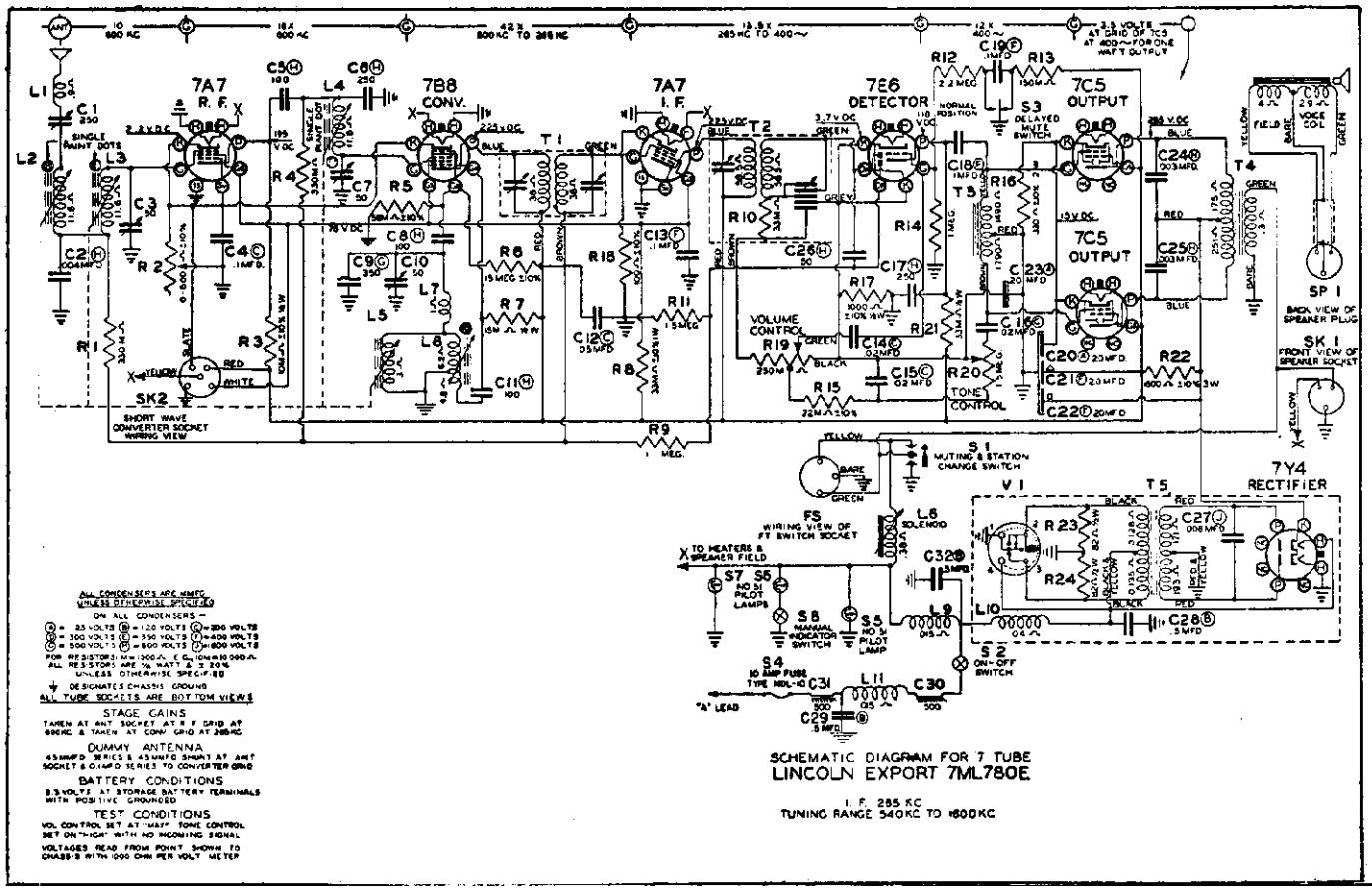

SCHEMATIC DIAGRAM FOR 7 TUBE
LINCOLN EXPORT 7ML780E

I. F. 285 KC
TUNING RANGE 540KC TO 1600KC

MODEL 7ML780E, ZENITH RADIO CORP.
Lincoln

Lincoln Receiver Installation

1—Remove the cardboard cover from the speaker hole in the center of the instrument panel. Do not discard the nuts. Remove the bezel from the instrument panel by loosening the nuts on the underside.

2—Remove the protective cover from the speaker. Install the speaker on the rear of the grille so the cable is toward the left. Use the nuts that held the instrument panel hole cover in place.

3—Hang the hook bolts "A" in the holes provided for them in the dash so that the hooks are turned away from the receiver.

4—Place the receiver in position and slip the threaded end of the hook bolts through the upper hanger brackets.

5—Apply lock washers "B" and wing nuts "C" to the hook bolts and tighten them sufficiently to hold the receiver in place while installing the lower support brackets "D." Fasten the tapped end of the brackets to the instrument panel, using spacer washers "F," lock washers "B", and oval head screws "E." Fasten the other end of the bracket to the lower angle bracket of the receiver. Tighten all screws and nuts so that the receiver is held firmly in place (Fig. 2).

6—Connect the "A" lead to the battery terminal of the circuit breaker on the firewall. (Fig. 3.)

7—Connect the speaker cable and the antenna lead-in cable to the receiver and turn the power on.

8—Place the escutcheon plate, furnished with the receiver, over the tuning and volume control shafts and fasten it in place with the two 8/32" flat head screws furnished in the installation kit.

9—Fit tuning and volume control knobs to their respective shafts.

NOTE: Tuning control knob is fastened to the shaft with a set screw. Shaft has a milled recess for the screw.

Lincoln Continental Receiver Installation

The Continental Radio installation is similar to the Lincoln installation with the exception of the speaker.

To install the Continental speaker, remove the speaker grille which is held in place by four nuts on the back of the instrument panel. Place the speaker in position through the front of instrument panel so the cable is to the left. Fasten securely with the four No. 10/32 machine screws and lock washers. Replace the grille and proceed with the installation of the receiver as instructed under Lincoln Receiver installation. Note position of bracket D in figure 2A.

Foot Control Switch Installation

1—Remove the floor mat around the clutch and brake pedals.

2—Drill a hole in each of the three extrusions in the floor, between the clutch and brake pedals, with a No. 27 drill. (Fig. 3.)

3—Fasten the foot control switch in place with the sheet metal screws furnished. Dress the cable so that the plug can be inserted into the foot switch cable receptacle at the left side of the receiver as shown in figure 2.

4—Cut a hole in the floor mat for the foot switch button. Install the foot switch eyelet (furnished in the installation kit) in the hole. Replace the floor mat. A piece of 1⅛" pipe that has been sharpened on the inside of one end may be used to cut the hole.

ANTENNA. The new Lincoln antenna is especially designed to work satisfactorily with this receiver. The installation instructions are included with the antenna.

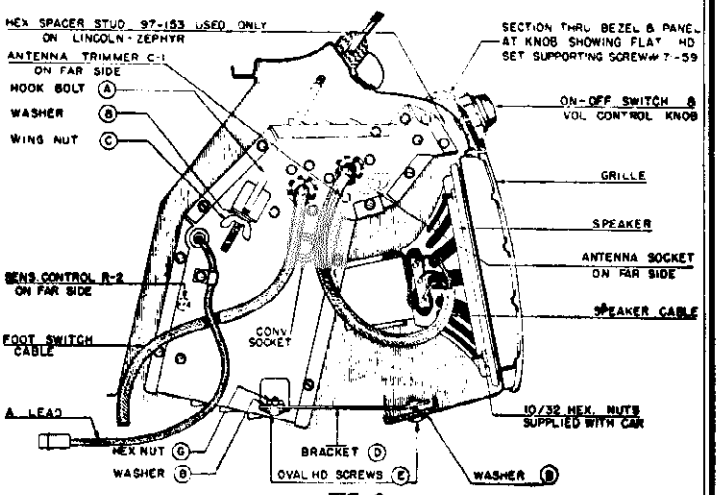

FIG. 2

IMPORTANT: 1200 K.C. ANTENNA ADJUSTMENT. After the receiver has operated for approximately 15 minutes, tune in a weak station near 1200 Kc. Adjust the antenna trimmer (C1, Fig. 2) for maximum signal.

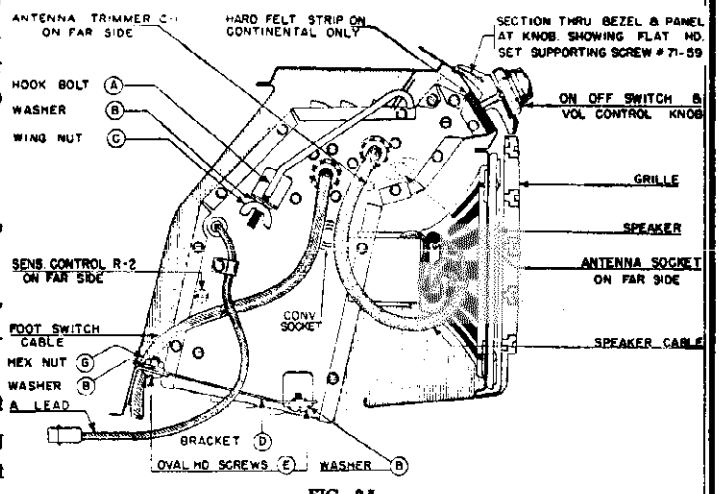

FIG. 2A

ZENITH RADIO CORP.

MODEL 7ML780E, Lincoln

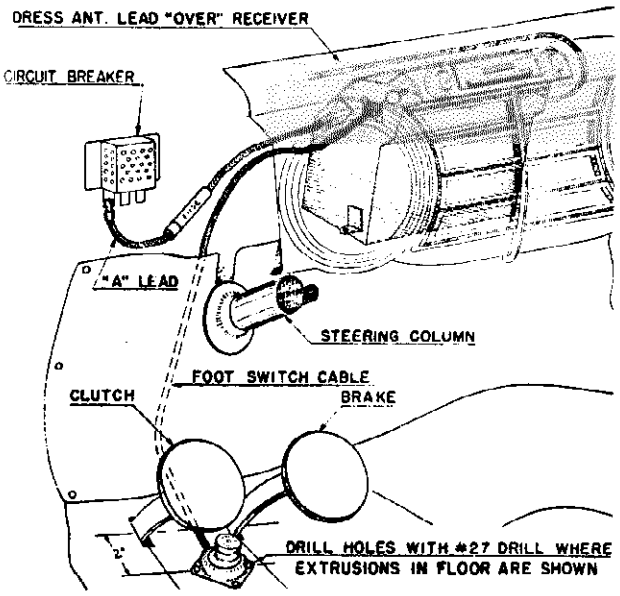

FIG. 3

Setting the Touch-Bar Tuning

Pressing the station selector touch-bar six times will cause the tuning mechanism to change through a cycle of six positions. Five of the Adjust-O-Matic positions may be set for favorite local stations. A red dot will appear in the tuning scale background when the Adjust-O-Matic is in the sixth position. This position may be used for selecting stations manually.

Using the manual (DIAL) position as a reference point, the remaining five positions may be adjusted in succession to any desired dial settings. Setting the stations in sequence according to their frequencies, beginning at the low frequency and progressing through to the high frequency end of the dial, is the recommended practice for simplifying the identification of each Adjust-O-Matic station.

Turn the receiver on and allow it to operate for at least fifteen minutes to bring the temperature up to normal before making the following Adjust-O-Matic settings.

1—Press station selector touch-bar (Figs. 1A and 1B) until red dot appears in dial scale background. Press the touch-bar once more to advance Adjust-O-Matic mechanism to No. 1 position.

2—Pull manual tuning knob outward to engage the Adjust-O-Matic mechanism.

3—Select the station desired and tune to its frequency by turning the tuning knob. Tune very carefully for clearest reception.

CAUTION: DO NOT ATTEMPT TO FORCE THE KNOB IN. The knob will automatically return to the "IN" position when the station selector touch bar or the foot switch is operated.

4—Press station selector bar, pull tuning knob outward, and tune in station desired for No. 2 position. Use same procedure for positions No. 3, 4 and 5. Note: When the red dot appears in the tuning scale background, the manual tuning knob must be pulled outward and rotated to select the stations manually.

Interference Elimination

IMPORTANT: Use the utmost care in the following operations to insure freedom from interference. Be sure that clean contacts are made when connecting condensers in the car. If necessary, clean away paint or dirt with emery paper to make good ground. Tighten all bolts and nuts securely.

1. Mount the voltage regulator condenser No. 22-1192 and the ground strap No. S-9343 on "ground" terminal of the voltage regulator. (Fig. 4.) Connect the lead of the condenser to the ARM. terminal of the voltage regulator. Connect the end of the ground strap to the lower, left hand voltage regulator mounting screw. (Fig. 4.)

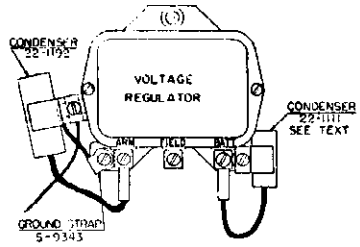

FIG. 4

2. Mount condenser No. 22-1111 under the lower right hand voltage regulator mounting bolt, and connect the lead to the BATT. terminal of the voltage regulator. (Fig. 4).

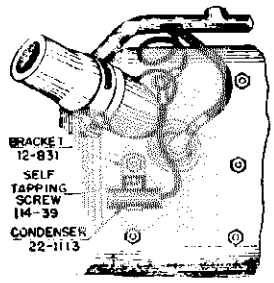

FIG. 5

3. Install the water temperature gauge condenser No. 22-1113 with its separate bracket (which fastens under one of the cylinder head nuts.) (Fig. 5.)

4. Install the condenser No. 22-1113 on the oil gauge unit. (Fig. 6.)

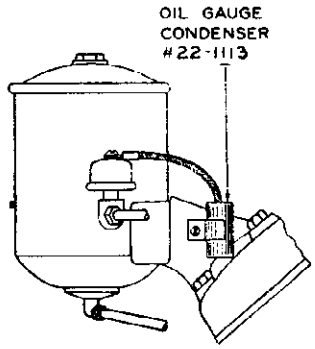

FIG. 6

5. Install the motor hood grounding spring. (Fig. 7.)

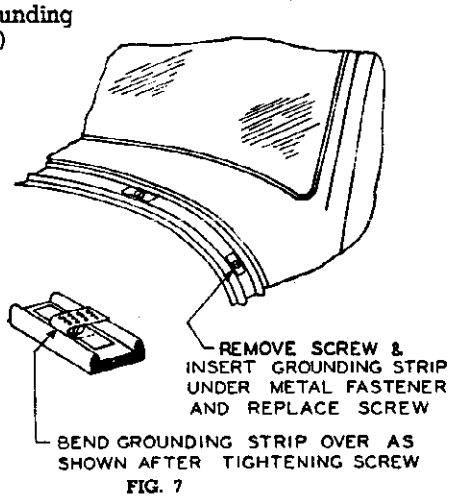

FIG. 7

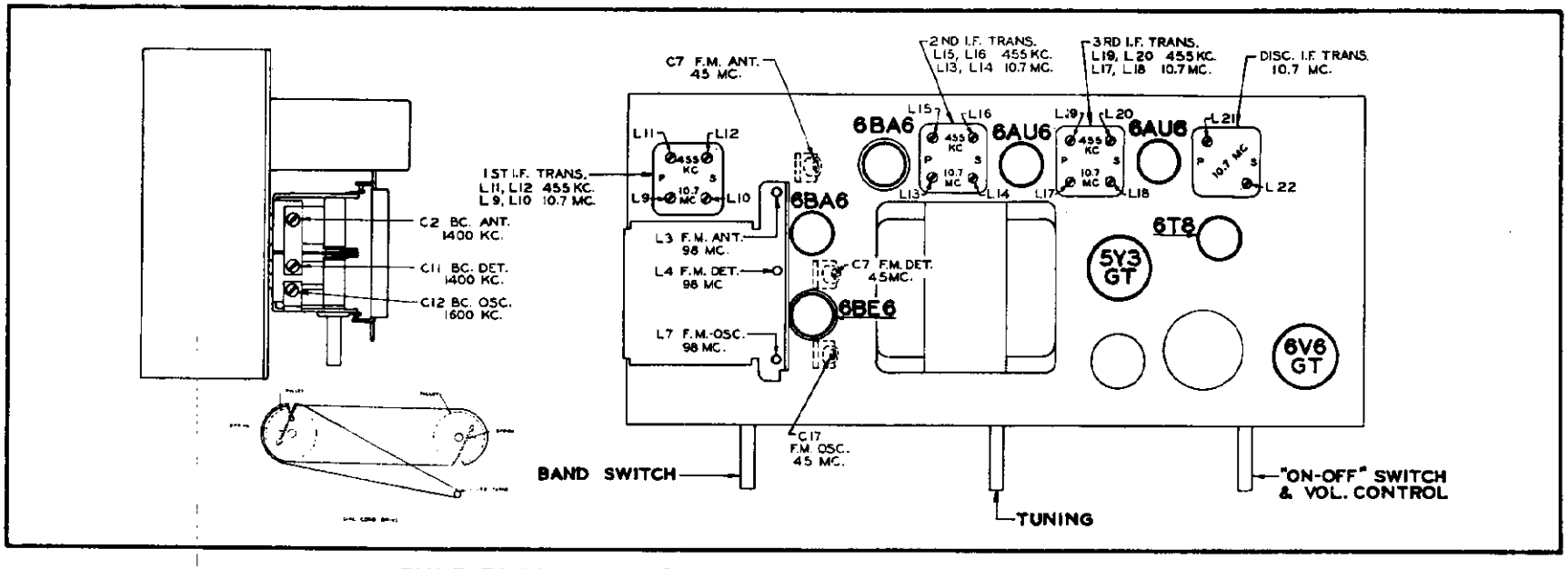

TUBE, TRIMMER LOCATION AND DIAL CABLE DRAWING

The 8E20 chassis incorporates a superheterodyne circuit with two stages of IF, and one stage of RF amplification on all bands.

The Radiorgan tone control is of the low impedance type in which a portion of the audio voltage is taken from the speaker voice coil and fed back out of phase into the grid of the first audio. The characteristic of the feedback voltage is determined by the setting of the Radiorgan buttons. To attenuate the high notes, more highs are fed back. To attenuate the low notes, more lows are fed back. For normal reproduction, both highs and lows are fed back and results in no overall change in tone.

AM Alignment: The alignment of this chassis on the standard broadcast band is conventional. The alignment slugs in the IF transformers are threaded and screw into the coil forms.. The slugs are slotted for a small size fiber screw driver. Do not press hard on the aligning tool or the threads in the coil forms will strip and adjustment will be impossible.

FM RF Alignment: The same coil slug arrangement which tunes the 100 MC FM band also tunes the 45 MC band. However, on 45 MC the band switch connects trimmer condensers in parallel and padding wires in series with the 100 MC coils. The tuning slugs are attached to threaded shafts and the slugs are varied in the field of the coils by turning the shafts clockwise or counter-clockwise. After adjustment the shafts must be secured with a drop of speaker cement.

FM IF Alignment: Because of the wide band pass, it is desirable to use a FM signal generator and a cathode ray oscilloscope when aligning the FM IF channel. The instruction book for the Zenith Model 800 Signal Generator (Form Z800I) covers complete FM alignment procedure. If visual alignment equipment is unavailable, reasonably accurate alignment can be made by following the procedure outlined below.

FM Discriminator Alignment: When the secondary of the discriminator is aligned (operation 5) use sufficient signal input to get a good positive and negative indication before setting the slug for zero reading. A center zero indicating meter is recommended for this adjustment, but is not absolutely necessary. Reversing the leads of a non-zero center meter, or observing closely when the meter starts to go to the left (negative) of zero will give the same results.

NOTE: The output transformer must be replaced with an exact duplicate, Part No. 95-1096. Be sure to add the speaker code letter to the transformer Part Number when ordering replacements.

ALIGNMENT PROCEDURE

Operation	Connect Oscillator to	Dummy Antenna	Input Signal Frequency	Band	Set Dial To	Adj. Trimmers	Purpose
1	Pin 7 6BE6 Converter	.05 Mfd.	455 KC. Modulated	BC	600 Kc.	L-11, 12, 15, 16, 19 and 20.	Align I. F. channel for maximum output
2	2 turns loosely cpld. to wavemagnet.		1600 Kc. Modulated	BC	1600 Kc.	C12	Set oscillator to dial scale.
3			1400 Kc. Modulated	BC	1400 Kc.	C11 and C2	Align det. and ant. stages.
4 (a)	Pin 1 (grid) on 6AU6 Limiter	.05 Mfd.	10.7 Mc Unmodulated	FM 45		L21 coil slug Primary discr.	Align primary of discriminator for maximum reading.
5 (b)		.05 Mfd.	10.7 Mc Unmodulated	FM 45		L22 coil slug sec. of discr.	Adjust secondary of discriminator for zero reading.
6 (c)	Pin 1 (grid) on 6AU6 2nd IF.	.05 Mfd.	10.7 Mc. Unmodulated	FM 45		L17 and L18 Prim. and Sec. of 3rd IF trans.	Align 3rd IF transformer for maximum reading.
7 (c)	Pin 1 (grid) on 6BA6 1st IF.	.05 Mfd	10.7 Mc Unmodulated	FM 45		L13 and L14 Prim. and Sec. of 2nd IF transformer	Align 2nd IF transformer for maximum reading.
8 (c)	Pin 7 (grid) on 6BE6 converter tube	.05 Mfd.	10.7 Mc. Unmodulated	FM 45		L9 and L10 Prim. and Sec. of 1st IF transformer	Align 1st IF transformer for maximum reading
9 (c)(d)	FM Antenna Post (Remove line ant.)	270 ohms	98 Mc. Unmodulated	FM 100	98 Mc.	L7 Osc. Coil Slug	Set Oscillator to dial scale.
10 (c)(d)		270 ohms	98 Mc. Unmodulated	FM 100	98 Mc.	L4 and L3 Det. and RF coil Slugs	Align det. and ant. stages to maximum reading.
11 (c)		270 ohms	45 Mc. Unmodulated	FM 45	45 Mc.	C17	Set oscillator to dial scale.
12 (c)		270 ohms	45 Mc. Unmodulated	FM 45	45 Mc.	C7 Det., C7 Ant.	Align detector and ant. stages for maximum reading.

IMPORTANT

Alignment of this chassis will in most cases be unnecessary unless an IF or RF transformer is replaced or the adjustments have been tampered with.

Correct alignment can only be made if the following procedure is followed:

A vacuum tube voltmeter with an isolation resistor of 200,000 ohms in series with the hot lead will serve for FM adjustments. This lead should be shielded.

An AC output meter connected across the primary or secondary of the output transformer will be satisfactory for all AM adjustments.

The signal generator output should be kept just high enough to get an indication on the meter.

(a) Vacuum Tube Voltmeter Lug 6 on discriminator transformer to chassis (half discriminator load).

(b) Vacuum Tube Voltmeter Lug 3 on discriminator transformer to chassis (full discriminator load).

(c) Vacuum Tube Voltmeter Lug 3 on 3rd IF transformer (Limiter Grid).

(d) Loosen Slugs by applying a hot iron to the cement.

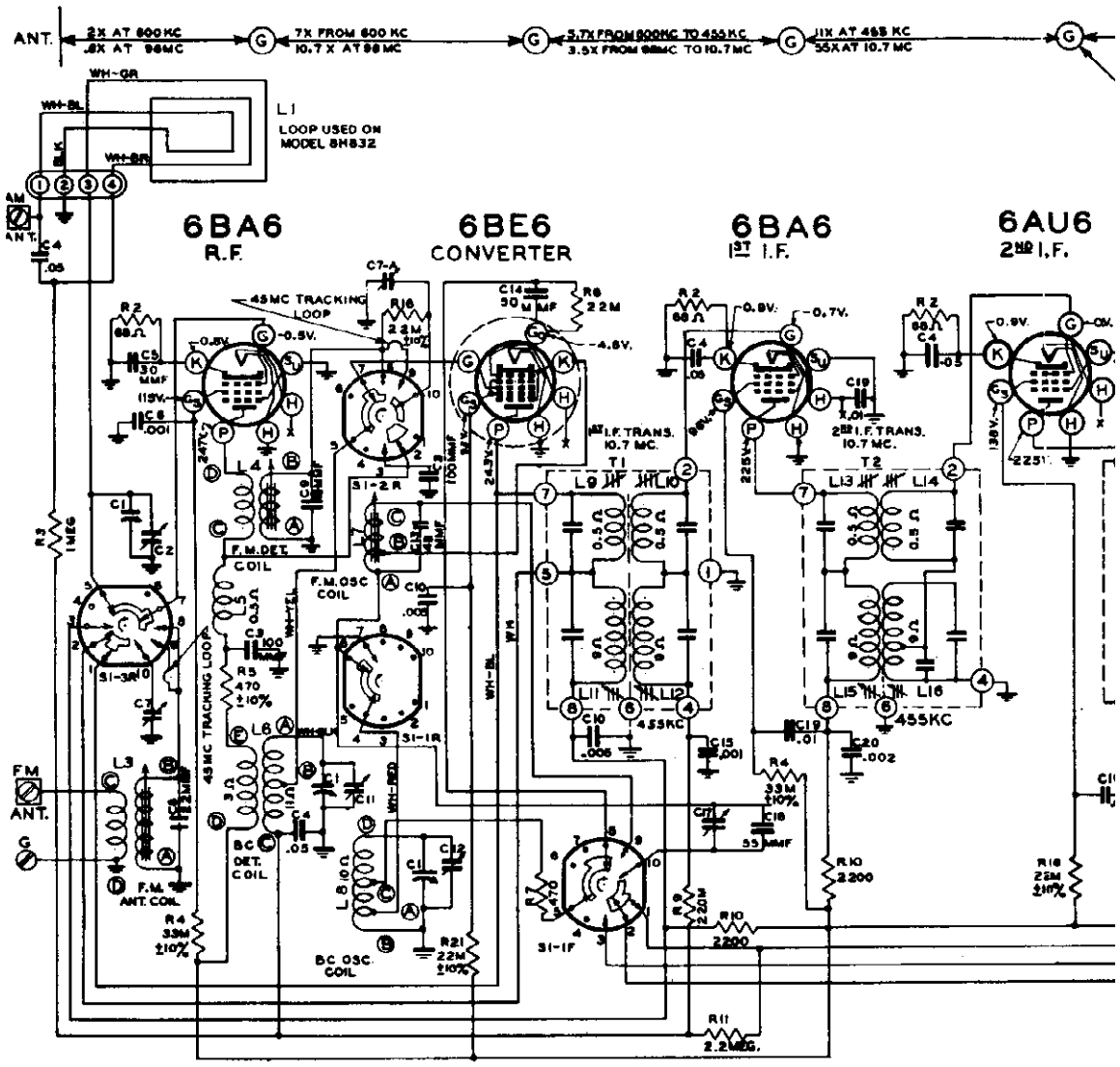

BAND SWITCH S1 SHOWN IN STANDARD BROADCAST POSITION

BAND SWITCH POSITIONS
- 1ST POS.- STD. BROADCAST
- 2ND POS.- F.M. 100 MC.
- 3RD POS.- F.M. 45 MC.

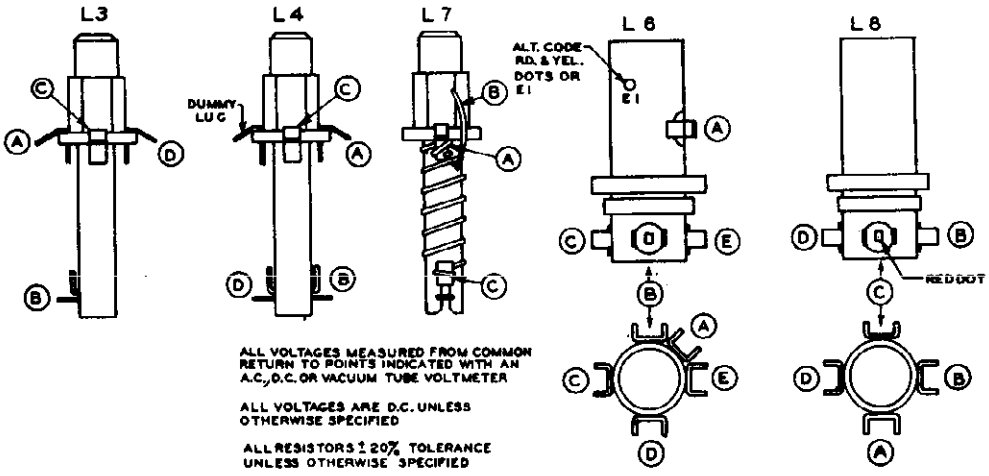

ALL VOLTAGES MEASURED FROM COMMON RETURN TO POINTS INDICATED WITH AN A.C., D.C. OR VACUUM TUBE VOLTMETER

ALL VOLTAGES ARE D.C. UNLESS OTHERWISE SPECIFIED

ALL RESISTORS ± 20% TOLERANCE UNLESS OTHERWISE SPECIFIED

DENOTES

RADIO CORP.

MODELS 8H832, 8H861,
CHASSIS 8E20

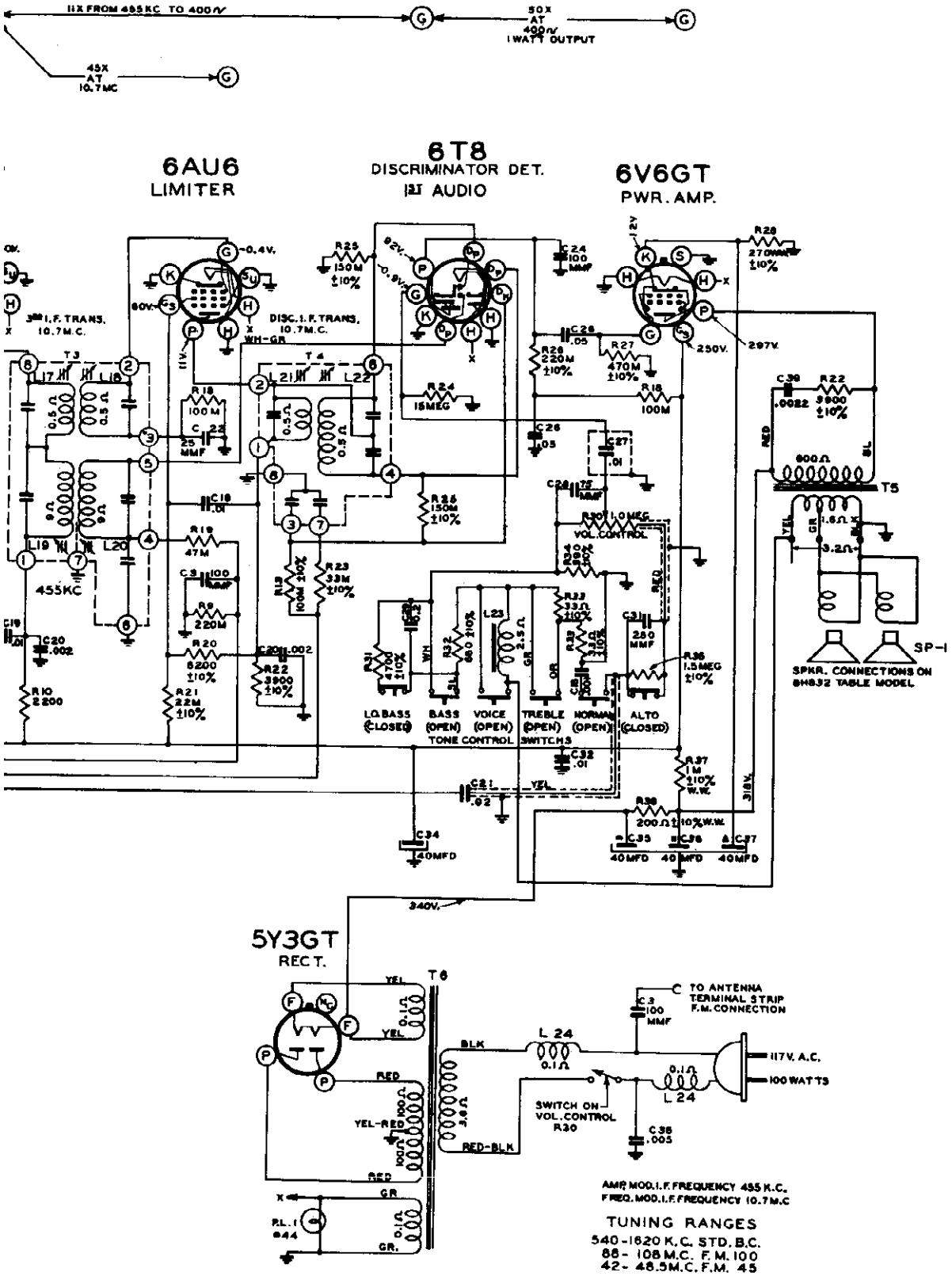

CHASSIS

MODELS 8H832, 8H861,
CHASSIS 8E20

ZENITH RADIO CORP.

PART NO.	REF. NO.	DESCRIPTION
		DIAL ASSEMBLY
26-396		Dial Scale
59-209		Dial Pointer
76-498		Pointer Shaft
76-499		Tuning Control Shaft
78-797		Dial Light Socket
80-69		Dial Cord Tension Spring
80-209		Dial Cord Tension Spring
80-444		Tuner Arm Tension Spring
80-580		Tuner Arm Stop Spring
80-581		Tuner Arm Pressure Spring
93-721		Black Felt Dial Washer
100-36	PL-1	Dial Light Bulb Mazda #44
149-64		Tuning Core & Spring
188-32		Retaining Ring (76-499)
S-14254		Pointer Pulley Assembly
S-14256		Pulley & Bushing Assembly
S-14268		Dial Cord & Eyelet Assembly (Short)
S-14269		Dial Cord & Eyelet Assembly (Long)
S-14270		Dial Scale & Strip Assembly (26-396)
S-14429		Tuner Arm Assembly
		COILS AND CHOKES
S-11157	L8	Broadcast Oscillator Coil Assembly
S-12256	L24	A. C. Line Choke Coil Assembly
S-12259	L7	F. M. Oscillator Coil Assembly
S-13800	L23	Tone Choke Assembly
S-13871	L4	F. M. Detector Coil Assembly
S-13970	T1	1st. I. F. Transformer Assembly
S-13971	T2	2nd. I. F. Transformer Assembly
S-13972	T3	3rd. I. F. Transformer Assembly
S-13973	T4	Discriminator Transformer Assembly
S-13974	L6	Broadcast Detector Coil Assembly
S-14126	L5	R. F. Choke Coil Assembly
S-14192	L3	F. M. Antenna Coil Assembly
		CONDENSERS
22-171	C26	.05 MFD. .600 V.
22-196	C32	.01 MFD. .600 V.
22-348	C15	.001 MFD .500 V.
22-365	C24	100 MMFD. (or 22-1670) .500 V.
22-829	C4	.05 MFD. .200 V.
22-830	C21	.02 MFD. .600 V.
22-1041	C38	.005 MFD .400 V.
22-1136	C31	250 MMFD. (or 22-1745) .500 V.
22-1220	C20	.002 MFD. .600 V.
22-1256	C28	75 MMFD. (or 22-1746) .500 V.
22-1367	C14	50 MMFD. (Ceramic) .500 V.
22-1385	C19	.01 MFD. .200 V.
22-1506	C8	22 MMFD. (Ceramic) .500 V.
22-1507	C22	25 MMFD. (Ceramic) .500 V.
22-1531	C29	.2 MFD .200 V.
22-1573	C34	40 MFD. Electrolytic .450 V.
22-1669	C3	100 MMFD (Ceramic) .500 V.
22-1676	C6	.001 MFD (Ceramic) .500 V.
22-1678	C1	Three Gang Variable
22-1685	C7	Single Section Trimmer
22-1686	C17	Single Section Trimmer
22-1688	C9	19 MMFD. (Ceramic) .500 V.
22-1689	C13	48 MMFD. (Ceramic) .500 V.
22-1691	C16	55 MMfD. (Silver on Ceramic)
22-1705	C5	30 MMFD. (Ceramic) .500 V.
22-1706	C10	.005 MMFD. (Ceramic) (Disc Type) .450 V.
22-1717	C18	.001 MFD .200 V.
22-1718	C27	.01 MFD. (Shielded) .400 V.
22-1720	C35,36,37	Three Section Electrolytic 40 MFD.-25V x 40-40 MFD. 450 V.
22-1754	C39	.0022 MFD. .600 V.
		RESISTORS
63-957	R4	33M Ohm (Insulated) .1 W.
63-1369	R28	270 Ohm (Insulated) W. W .1 W.
63-1566	R21	22M Ohm (Insulated) .2 W.
63-1588	R30	Volume Control & switch
63-1589	R37,B8	Two Section Candohm
63-1722	R33	33 Ohm (Insulated) $\frac{1}{2}$ W.
63-1737	R2	68 Ohm (Insulated) $\frac{1}{2}$ W.
63-1768	R34	390 Ohm (Insulated) $\frac{1}{2}$ W.
63-1771	R5	470 Ohm (Insulated) 10% $\frac{1}{2}$ W.
63-1772	R7	470 Ohm (Insulated) 20% $\frac{1}{2}$ W.
63-1778	R32	680 Ohm (Insulated) $\frac{1}{2}$ W.
63-1800	R10	2200 Ohm (Insulated) $\frac{1}{2}$ W.

© John F. Rider

ZENITH RADIO CORP.

MODELS 8H832, 8H861,
CHASSIS 8E20

PART NO.	REF. NO.	DESCRIPTION
		RESISTORS--Continued
63-1810	R22	3900 Ohm . (Insulated) . . . . . ½ W.
63-1813	R31	4700 Ohm . (Insulated) . . . . . ½ W.
63-1824	R20	8200 Ohm . (Insulated) . . . . . ½ W.
63-1841	R16	22K Ohm. . (Insulated) 10% . . . . . ½ W.
63-1842	R8	22K Ohm. . (Insulated) 20% . . . . . ½ W.
63-1848	R23	33K Ohm. . (Insulated) . . . . . ½ W.
63-1856	R19	47K Ohm. . (Insulated) . . . . . ½ W.
63-1869	R13	100K Ohm . (Insulated) 10% . . . . . ½ W.
63-1870	R18	100K Ohm . (Insulated) 20% . . . . . ½ W.
63-1876	R25	150K Ohm . (Insulated) . . . . . ½ W.
63-1883	R26	220K Ohm . (Insulated) 10% . . . . . ½ W.
63-1884	R9	220K Ohm . (Insulated) 20% . . . . . ½ W.
63-1897	R28	470K Ohm . (Insulated) . . . . . ½ W.
63-1912	R3	1 Megohm . (Insulated) . . . . . ½ W.
63-1918	R35	1.5 Megohm (Insulated) . . . . . ½ W.
63-1926	R11	2.2 Megohm (Insulated) . . . . . ½ W.
63-1961	R24	15 Megohm (Insulated) . . . . . ½ W.
		MISCELLANEOUS
2-134		Cabinet Back . . . . .
11-104		Line Cord & Plug (7 ft.) . . . . .
46-697		Volume & Tuning Control Knob (2 used) . . . . .
46-718		Bandswitch Knob . . . . .
49-641	SP-1	5¼" P. M. Speaker (2 used) . . . . .
		208-641 Cone & Voice Coil . . . . .
54-30		#8-32 x 5/16" Hex Nut - Steel - N.P. (4 used) . . . . .
54-31		#10-32 x 3/8" x 1/8" Hex Nut (4 used on 95-1062) . . . . .
54-139		#3/8-32 x 9/16" Palnut-Cads (used on 63-1588) . . . . .
54-226		Speed Nut (3 used) . . . . .
54-262		Speed Nut . . . . .
57-1353		Diffusing Plate . . . . .
57-1386		Dial Escutcheon . . . . .
70-83		#6 x ½" Washer Hd. Wood Screw (8 used) (Cabt. Back Mtg.) . .
72-58		#2 x 3/8" Phillips Flat Hd. Wood Screw (6 used) (Escutcheon Mtg.) . . . . .
78-250		Electrolytic Capacitor Socket . . . . .
78-782		Miniature Tube Socket (2 used) . . . . .
78-788		Miniature Tube Socket (9 Contact) . . . . .
78-793		Octal Tube Socket (2 used) . . . . .
78-794		Miniature Tube Socket (3 used) (7 Contact) . . . . .
85-424	S1	Bandswitch . . . . .
93-125		#6 Int. Lockwasher . . . . .
93-127		#10 Int. Lockwasher (4 used on 95-1062) . . . . .
93-392		3/32" x 33/64" x 1 Brown Felt Washer . . . . .
93-719		.031 x 3/16" x 7/16" Steel Washer . . . . .
95-1062		Pwr. Transformer . . . . .
95-1096		Output Transformer . . . . .
112-56		#6 x 1/4" Hex. Hd. Self Tapping Screw . . . . .
112-142		#8-32 x 1-1/8" Swedged Hd. M.S. (4 used) . . . . .
114-43		#10-32 x 3/8" Hex. Washer Hd. M.S.-Steel-N.P . . . . .
114-128		#10 x 1-1/16" Hex. Washer Hd. Self Tapping Screw (4 used). (Chassis Mtg.) . . . . .
114-159		#6 x 1/4" Hex. Hd. Self Tapping Screw-Type A-Cad. Pl. . . . .
114-270		#8 x 1/2" Hex. Hd. Slotted Self Tapping Screw . . . . .
114-292		#6 x 5/8" Hex. Hd. Slotted Self Tapping Screw . . . . .
125-62		Rubber Grommet (4 used) . . . . .
166-46		Rubber Bumper (4 used) (Rubber Feet) . . . . .
192-115		Dial Glass . . . . .
196-109		Dial Dust Gasket . . . . .
202-506		F. M. Instruction Book . . . . .
202-610		Instruction Book . . . . .
S-14647	L1	Wavemagnet Assembly Type 29E . . . . .
S-14648		Wavemagnet and Back Assembly . . . . .
		RADIORGAN PARTS
57-1351		Radiorgan Escutcheon (L.H.) . . . . .
57-1352		Radiorgan Escutcheon (R.H.) . . . . .
76-444		Radiorgan Knob Retaining Shaft (2 Used) . . . . .
80-595		Radiorgan Mounting Spring (2 Used) . . . . .
S-13800		Tone Choke Assembly . . . . .
S-14255		Radiorgan Mounting Bracket Assembly (2 Used) . . . . .
S-14260		Radiorgan Strip and Contact Assembly (R.H.) . . . . .
S-14261		Radiorgan Strip and Contact Assembly (L.H.) . . . . .
S-14273		Radiorgan Knob and Eyelet Assembly (Lo-Bass) . . . . .
S-14274		Radiorgan Knob and Eyelet Assembly (Bass) . . . . .
S-14275		Radiorgan Knob and Eyelet Assembly (Voice) . . . . .
S-14276		Radiorgan Knob and Eyelet Assembly (Treble) . . . . .
S-14277		Radiorgan Knob and Eyelet Assembly (Alto) . . . . .
S-14278		Radiorgan Knob and Eyelet Assembly (Normal) . . . . .
S-14310		Radiorgan Escutcheon and Knob Assembly (L. H.) (Lo-Bass, Bass, Voice) . . . . .
S-14311		Radiorgan Escutcheon and Knob Assembly (R.H.) (Treble, Alto, Normal) . . . . .

MODELS 9H881, 9H882R, 9H885, 9H888R, CHASSIS 9E21

ZENITH RADIO CORP.

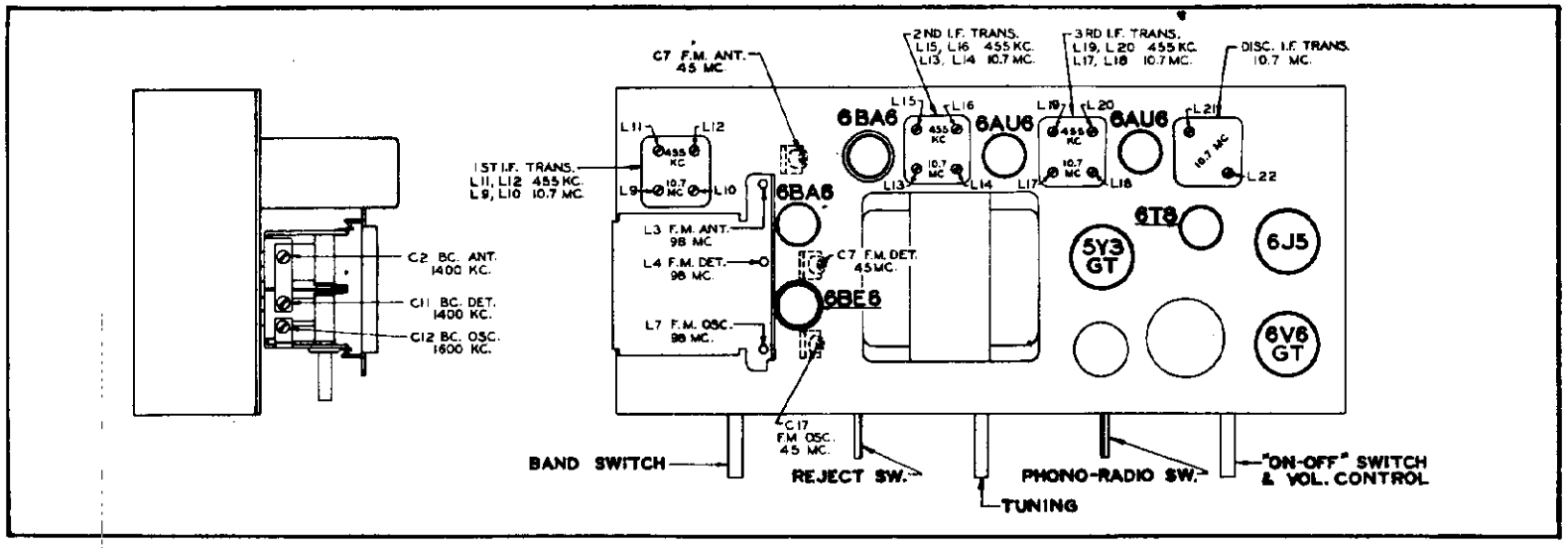

TUBE AND TRIMMER LOCATION

TO THE SERVICE MAN:

The 9E21 chassis incorporates a superheterodyne circuit with two stages of IF, and one stage of RF amplification on all bands.

The Radiorgan tone control is of the low impedance type in which a portion of the audio voltage is taken from the speaker voice coil and fed back out of phase into the grid of the first audio. The characteristic of the feedback voltage is determined by the setting of the Radiorgan buttons. To attenuate the high notes, more highs are fed back. To attenuate the low notes, more lows are fed back. For normal reproduction, both highs and lows are fed back and results in no overall change in tone.

The 6BA6 1st IF tube is also the phono pre-amplifier. The output from the phono oscillator is fed to the grid of the 6BA6 through C21 and R14. The amplified output is taken from the screen grid and fed back through R12 and C20 into the volume control circuit and the grid of the 6T8 1st audio amplifier.

AM Alignment: The alignment of this chassis on the standard broadcast band is conventional. The alignment slugs in the IF transformers are threaded and screw into the coil forms. The slugs are slotted for a small size fiber screw driver. Do not press hard on the aligning tool or the threads in the coil forms will strip and adjustment will be impossible.

FM RF Alignment: The same coil slug arrangement which tunes the 100 MC FM band also tunes the 45 MC band. However, on 45 MC the band switch connects trimmer condensers in parallel and padding wires in series with the 100 MC coils. The tuning slugs are attached to threaded shafts and the slugs are varied in the field of the coils by turning the shafts clockwise or counter-clockwise. After adjustment the shafts must be secured with a drop of speaker cement.

FM IF Alignment: The same type of tuning slugs for aligning the AM IF Amplifier are used for the FM IF's. Observe the same precautions when making adjustments.

FM Discriminator Alignment: When the secondary of the discriminator is aligned (operation 5) use sufficient signal input to get a good positive and negative indication before setting the slug for zero reading. A center zero indicating meter is recommended for this adjustment, but is not absolutely necessary. Reversing the leads of a non-zero center meter, or observing closely when the meter starts to go to the left (negative) of zero will give the same results.

NOTE: The output transformer must be replaced with an exact duplicate, Part No.95-1063. Be sure to add the speaker code letter to the tranformer Part Number when ordering replacements.

©John F. Rider

ALIGNMENT PROCEDURE

Operation	Connect Oscillator to	Dummy Antenna	Input Signal Frequency	Band	Set Dial To	Adj. Trimmers	Purpose
1	Pin 7 6BE6 Converter	.05 Mfd.	455 KC. Modulated	BC	600 Kc.	L-11, 12, 15, 16, 19 and 20.	Align I. F. channel for maximum output
2	2 turns loosely cpld. to wavemagnet.		1600 Kc. Modulated	BC	1600 Kc.	C12	Set oscillator to dial scale.
3			1400 Kc. Modulated	BC	1400 Kc.	C11 and C2	Align det. and ant. stages.
4 (a)	Pin 1 (grid) on 6AU6 Limiter	.05 Mfd.	10.7 Mc Unmodulated	FM 45		L21 coil slug Primary discr.	Align primary of discriminator for maximum reading.
5 (b)		.05 Mfd.	10.7 Mc Unmodulated	FM 45		L22 coil slug sec. of discr.	Adjust secondary of discriminator for zero reading.
6 (c)	Pin 1 (grid) on 6AU6 2nd IF.	.05 Mfd.	10.7 Mc. Unmodulated	FM 45		L17 and L18 Prim. and Sec. of 3rd IF trans.	Align 3rd IF transformer for maximum reading.
7 (c)	Pin 1 (grid) on 6BA6 1st IF.	.05 Mfd	10.7 Mc Unmodulated	FM 45		L13 and L14 Prim. and Sec. of 2nd IF transformer	Align 2nd IF transformer for maximum reading.
8 (c)	Pin 7 (grid) on 6BE6 converter tube	.05 Mfd.	10.7 Mc. Unmodulated	FM 45		L9 and L10 Prim. and Sec. of 1st IF transformer	Align 1st IF transformer for maximum reading
9 (c)(d)	FM Antenna Post (Remove line ant.)	270 ohms	98 Mc. Unmodulated	FM 100	98 Mc.	L7 Osc. Coil Slug	Set Oscillator to dial scale.
10 (c)(d)		270 ohms	98 Mc. Unmodulated	FM 100	98 Mc.	L4 and L3 Det. and RF coil Slugs	Align det. and ant. stages to maximum reading.
11 (c)		270 ohms	45 Mc. Unmodulated	FM 45	45 Mc.	C17	Set oscillator to dial scale.
12 (c)		270 ohms	45 Mc. Unmodulated	FM 45	45 Mc.	C7 Det., C7 Ant.	Align detector and ant. stages for maximum reading.

IMPORTANT

Alignment of this chassis will in most cases be unnecessary unless a IF or RF transformer is replaced or the adjustments have been tampered with.

Correct alignment can only be made if the following procedure is followed:

A vacuum tube voltmeter with an isolation resistor of 200,000 ohms in series with the hot lead will serve for FM adjustments. This lead should be shielded.

An AC output meter connected across the primary or secondary of the output transformer will be satisfactory for all AM adjustments.

The signal generator output should be kept just high enough to get an indication on the meter.

(a) Vacuum Tube Voltmeter Lug 6 on discriminator transformer to chassis (half discriminator load).

(b) Vacuum Tube Voltmeter Lug 3 on discriminator transformer to chassis (full discriminator load).

(c) Vacuum Tube Voltmeter Lug 3 on 3rd IF transformer (Limiter Grid).

(d) Loosen Slugs by applying a hot iron to the cement.

MODELS 9H881, 9H882R, 9H885, 9H888R — ZENITH RADIO CORP. — CHASSIS 9E21

PARTS LIST

PART NUMBER	REF. NUMBER	DESCRIPTION
		DIAL ASSEMBLY
12-1434		Dial Light Mounting Bracket
26-396		Dial Scale (use S-14270)
59-209		Dial Pointer
76-499		Tuning Control Shaft
78-797		Dial Light Socket
80-69		Dial Cord Tension Spring
80-209		Dial Cord Tension Spring
80-444		Tuner Arm Tension Spring
80-580		Tuner Arm Stop Spring
80-581		Tuner Arm Pressure Spring
100-36		Dial Light Bulb-Mazda 44
188-32		Retaining Ring (76-499)
196-109		Dial Dust Gasket
S14254		Pointer Pulley Assembly
S14256		Cam Pulley and Bushing Assembly (Gang Cond)
S14268		Dial Cord & Eyelet Assembly (Short)
S14269		Dial Cord & Eyelet Assembly (Long)
S14270		Dial Scale and Strip Assembly (26-396)
S14429		Tuner Arm Assembly
		COILS AND CHOKES
S11157	L8	Broadcast Oscillator Coil Assembly
S12256	L24	A.C. Line Choke Coil Assembly
S12259	L7	F.M. Oscillator Coil Assembly
S12603	L25	Phono Oscillator Coil Assembly
S13800	L23	Tone Choke Assembly
S13871	L4	F.M. Detector Coil Assembly
S13970	T1	1st I.F. Transformer Assembly
S13971	T2	2nd I.F. Transformer Assembly
S13972	T3	3rd I.F. Transformer Assembly
S13973	T4	Discriminator Transformer Assembly
S13974	L6	Broadcast Detector Coil Assembly
S14126	L5	R.F. Choke Coil Assembly
S14192	L3	F.M. Antenna Coil Assembly
		CONDENSERS
22-171	C26	.05MFD
22-196	C32	.01MFD 600V.
22-348	C15	.001MFD. (Mica) 500V.
22-365	C24	100MMFD. (or 22-1670) 500V.
22-829	C4	.05MFD 200V.
22-830	C21	.02MFD 600V.
22-1041	C42	.005MFD 400V.
22-1136	C31	250MMFD. (or 22-1745) 500V.
22-1220	C20	.002MFD. 600V.
22-1256	C28	75MMFD. (or 22-1746) 500V.
22-1367	C14	50MMFD. (Ceramic) 500V.
22-1385	C19	.01MFD 200V.
22-1418	C38	.1MFD. 200V.
22-1489	C30	10MMFD (Ceramic) 500V.
22-1506	C8	22MMFD. (Ceramic) 500V.
22-1507	C22	25MMFD. (Ceramic) 500V.
22-1531	C29	.2MFD. 200V.
22-1532	C40	50MMFD (or 22-1674) 500V.
22-1664	C39	50MMFD. (Ceramic) 500V.
22-1669	C3	100MMFD. (Ceramic) 500V.
22-1676	C6	.001MFD. (Ceramic) 500V.
22-1678	C1	Three Gang Variable
22-1685	C7	Single Section Trimmer
22-1686	C17	Single Section Trimmer
22-1688	C9	19MMFD. (Ceramic) 500V.
22-1689	C13	48MMFD. (Ceramic) 500V.
22-1691	C16	55MMFD. (Silver on Ceramic)
22-1705	C5	30MMFD. (Ceramic) 500V.
22-1706	C10	.005MFD. (Ceramic Disc Type) 450V.
22-1717	C18	.001MFD. 200V.
22-1718	C27	.01MFD. (Shielded) 400V.
22-1719	C33,C34	Two Section Electrolytic 15-40MFD 450V.
22-1720	C35,C36 C37	Three Section Electrolytic 40MFD.-25V.x40-40MFD.-450. 450V.
22-1754	C43	.0022MFD 600V.
		RESISTORS
63-957	R4	33M ohm (Insulated) .1 W.
63-1065	R6	15M ohm (Insulated) .1 W.
63-1369	R28	270 ohm (Insulated-WW) .1 W.
63-1565	R36	4700 ohm (Insulated) .1 W.
63-1566	R21	22M ohm (Insulated) .2 W.
63-1588	R30	Volume Control and Switch
63-1589	R37,R38	Two Section Candohm (1000 ohm WW 5W., 200 ohm WW 3W) 1/2 W.
63-1722	R33	33 ohm (Insulated) 1/2 W.
63-1737	R2	68 ohm (Insulated) 1/2 W.
63-1768	R34	390 ohm (Insulated) 1/2 W.
63-1771	R5	470 ohm (Insulated) 1/2 W
63-1772	R7	470 ohm (Insulated) 1/2 W.
63-1778	R32	680 ohm (Insulated) 1/2 W
63-1779	R12	680 ohm (Insulated) 1/2 W.
63-1800	R10	2200 ohm (Insulated) 1/2 W
63-1810	R22	3900 ohm (Insulated) 1/2 W
63-1813	R31	4700 ohm (Insulated) 1/2 W
63-1824	R20	8200 ohm (Insulated) 1/2 W.
63-1827	R14	10M ohm (Insulated) 1/2 W.
63-1841	R16	22M ohm (Insulated) 1/2 W.
63-1842	R8	22M ohm (Insulated) 1/2 W.
63-1848	R23	33M ohm (Insulated) 1/2 W.
63-1856	R19	47M ohm (Insulated) 1/2 W.
63-1869	R13	100M ohm (Insulated) 1/2 W.
63-1870	R18	100M ohm (Insulated) 1/2 W.
63-1876	R25	150M ohm (Insulated) 1/2 W.
63-1883	R26	220M ohm (Insulated) 1/2 W.
63-1884	R9	220M ohm (Insulated) 1/2 W.
63-1897	R27	470M ohm (Insulated) 1/2 W.
63-1911	R17	1 Megohm (Insulated) 1/2 W.
63-1912	R3	1 Megohm (Insulated) 1/2 W.
63-1918	R35	15 Megohm (Insulated) 1/2 W.
63-1926	R11	2.2 Megohm (Insulated) 1/2 W.
63-1951	R24	15 Megohm (Insulated) 1/2 W.
		MISCELLANEOUS
11-106		Line Cord and Plug (9 ft. long) (or 11-101)
54-226		Speed Nut-Tinnerman
78-709		Socket-Octal Tube
78-782		Socket-Miniature Tube (2 used)
78-788		Socket-Noval Miniature (9 contact)
78-791		Socket-Phono Cable (7 contact)
78-793		Socket-Octal Tube (2 used)
78-794		Socket-Miniature Tube (7 contact)
85-421	S2	Phono-Radio Switch
85-422	S3	Phono-Reject Switch
85-424	S1	Band Switch
94-295		Phono Switch Mounting Bushing
94-598		R.F. Plate Mounting Bushing (4 used)
95-1062	T6	Power Transformer
95-1063	T5	Output Transformer
125-17		Rubber Grommet (2 used (1 on 85-421) (1 on 85-422)
125-62		Rubber Grommet (4 used)
126-553		Miniature Tube Shield (Metal)
126-554		Miniature Tube Shield (Paper)
126-569		Heat Shield
149-64		Tuning Core and Spring (3 used)
		RADIORGAN ESCUTCHEON PARTS
57-1351		Radiorgan Escutcheon (L.H.)
57-1352		Radiorgan Escutcheon (R.H.)
76-444		Radiorgan Knob Retaining Shaft (2 used)
80-595		Radiorgan Mounting Spring (2 used)
114-159		#6x1/4 Hex.Hd. Self Tapping Screw (2 used)
S14255		Radiorgan Mounting Bracket Assembly (2 used)
S14260		Radiorgan Strip and Contact Assembly (R.H.)
S14261		Radiorgan Strip and Contact Assembly (L.H.)
S14274		Radiorgan Knob and Eyelet Assembly (Bass)
S14273		Radiorgan Knob and Eyelet Assembly (Lo-Bass)
S14275		Radiorgan Knob and Eyelet Assembly (Voice)
S14276		Radiorgan Knob and Eyelet Assembly (Treble)
S14277		Radiorgan Knob and Eyelet Assembly (Alto)
S14278		Radiorgan Knob and Eyelet Assembly (Normal)
S14310		Radiorgan Escutcheon & Knob Assembly (L.H.) (Lo-Bass--Bass-Voice)
S14311		Radiogran Escutcheon and Knob Assembly (R.H.) (Treble-Alto-Normal)
		MODEL 9H881 CABINET PARTS
15-82		Plug Cap and Insulator (used on S14353)
19-123		Record Changer Mounting Clip (3 used)
27-81		Shaft Bearing Disc
36-39		Record Changer Frame Handle
40-43		Cabinet Hinge (R.H.)
40-44		Cabinet Hinge (L.H.)
46-648		Door Pull (2 used)
46-697		Volume and Tuning Control Knob (2 used)
46-718		Band Switch Knob
46-726		Phono Switch Knob
49-624		12" P.M. Speaker 208-624 Cone and Voice Coil
57-1336		Dial Escutcheon
57-1353		Diffusing Plate
58-169		Seven Prong Plug (used on S-14353)
72-58		#2 x 3/8 Phillips Flat Hd. Wood Screw-Steel Brass Plate (Esc.Mtg.)
78-798		Seven Contact Socket (used on S-14353)
80-463		Record Changer Mounting Spring (4 used)
83-1244		Record Changer Trim Strip
93-392		3/32 x 33/64" Brown Felt Washer (3 used)
112-489		#8 x 1/2" Phillips R.H. Self Tapping Screw-cad. (Handle Mtg. Screw)
112-682		Record changer Mounting Screw (4 used)

ZENITH RADIO CORP. MODELS 9H881, 9H882R, 9H885, 9H888R, CHASSIS 9E21

PART NUMBER	REF. NUMBER	DESCRIPTION
114-148		#10 x 7/8" Hex Washer Hd. Self-Tapping Screw (4 used) (Chassis Mtg.)
114-233		#14 x 1-1/4" Slotted Hex Washer Hd. Self-Tapping Screw, Cad.
125-56		Rubber Grommet (4 used) (Spk. Mtg.)
138-25		Metal Grille
159-52		Plug Button (4 used)
165-13		Metal Glide (4 used)
166-31		Rubber Bumper
188-91		Rubber Ring (2 used)
192-115		Dial Glass
202-508		F. M. Instruction Book
202-566		Instruction Book
S12864		Drive Wheel & Pin Assembly (2 used)
S14002		Intermixer Record Changer
S14195		Loading Coil Assembly (9H881, 9H885, 9H888)
S14305	L1	Low Impedance Loop Assembly (9H881, 9H885, 9H888)
S14352		Record Changer Mtg. Frame Assembly (complete)
S14353		Interconnecting Cable Assembly

MODEL 9H882R CABINET PARTS

12-1183		Door Stop Bracket
15-64		Pin Plate Plug
15-65		Plug Cap & Insulator (used on S12591)
15-82		Plug Cap & Insulator (used on S14539)
19-123		Record Changer Mounting Clip
22-1240		Wavemagnet Trimmer Condenser
22-1501		Electrolytic Capacitor, 150 Mfd, 60V.
36-39		Record Changer Frame Handle
40-54		Cabinet Hinge
46-697		Volume & Tuning Control Knob (2used)
46-718		Band Switch Knob
46-726		Phono Switch Knob (2 used)
49-637		10" P.M. Speaker
		208-637 Cone & Voice Coil
52-188		Plug & Wire (used on S14539)
57-1336		Dial Escutcheon
57-1353		Diffusing Plate
58-86		Two Prong Plug (used on S12591)
58-132		6 Prong Plug
58-169		7 Prong Plug (used on S14539)
70-126		#10 x 1-7/8" R.H. Wood Screw-Steel N.P.
72-58		#2 x 3/8" Phillips Flat Hds. Wood Screw (Esc. Mtg.) (8 used)
78-555		Six Contact Socket (used on S12591)
78-798		Seven Contact Phono Socket (used on S14539)
80-407		Motor Mounting Spring (8 used)
80-443		Cabinet Door Return Spring
80-463		Record Changer Mtg. Spring (4 used)
80-570		Shaft Tension Spring
83-1244		Record Changer Trim Strip
83-1431		Plastic Strip
85-351		Drive Out Control Switch (used on S12591)
85-382		S.P.D.T. Switch (used on S12591)
93-168		Rubber Shoulder Washer (6 used)
93-392		Brown Felt Washer (3 used)
93-540		Rubber Washer (4 used)
94-502		Motor Mounting Bushing
112-490		#8 x 5/8" Phillips R.H. Self Tapping Screw (Handle Mtg.)
112-611		Record Changer Mtg. Screw (3 used)
112-682		Record Changer Mtg. Screw (1 used)
114-132		#10 x 1-5/8" Hex Washer Hd. Self-Tapping Screw (Chassis Mtg.)
125-50		Rubber Grommet (2 used)
125-51		Rubber Grommet (8 used)
125-56		Rubber Grommet (4 used) (Spk. Mtg.)
143-44		Drive Out Coupling
165-12		Ball Bearing Caster (4 used)
192-115		Dial Glass
202-506		F. M. Instruction Book
202-566		Instruction Book (Radio & Phono)
S-12389	L2	Wavemagnet Loading Coil Assembly
S-12411		Ball Bearing Shaft & Washer Assembly
S-12412		Phono Drive Out Motor, Mtg. Brkt. & Cable Assembly
S-12591		Drive Out Switch, Plug & Cable Assembly
S-14002		Intermixer Record Changer
S-14445	L1	Wavemagnet Assembly-Type 30N
S-14538		Record Changer Mounting Frame Assembly
S-14539		Interconnecting Cable Assembly
S-12583		Phono Drive Out Motor & Plug (141-91) Induction Motor)

MODEL 9H885 CABINET PARTS

15-82		Plug Cap & Insulator (used on S-14306)
19-123		Record Changer Mounting Clip (3 used)
40-42		Knife Hinge (R.H.)
40-65		Knife Hinge (L.H.)
46-662		Key Escutcheon (2 used)
46-697		Volume & Tuning Knob (2 used)
46-718		Band Switch Knob
46-725		Door Pull (2 used)
46-726		Phono Switch Knob (2 used)
49-624		12" P.M. Speaker
		208-624 Cone & Voice Coil
57-1336		Dial Escutcheon
57-1353		Diffusing Plate
58-169		Seven Prong Plug (used on S14306)
70-96		#10 x 1-3/4" R.H.W.S. Steel N.P. (6 used)
72-58		#2 x 3/8" Phillips Flat Hd. Wood Screw-(Esc. Mtg.) (6 used)
78-798		Seven Contact Socket (used on S-14306)
80-423		Chassis Lift Spring (2 used)
80-463		Record Changer Mounting Spring (4 used)
83-1244		Record Changer Trim Strip
93-392		3/32" x 33/64" x 1" Brown Felt Washer (3 used)
112-558		#10-32 x 7/8 Flat Phillips Hd. M.S. Steel-Statuary Bronze (Pinch Pt.)
112-611		Record Changer Mtg. Screw (3 used)
112-682		Record Changer Mtg. Screw (1 used)
114-257		#10 x 1-3/8" Hex Slotted Washer Hd. Sheet, Metal Screw
125-49		Rubber Grommet (4 used)
125-56		Rubber Grommet (4 used) (49-624)
159-61		Plug Button-Statuary Bronze
165-9		Metal Glides
192-115		Dial Glass
202-506		F. M. Instruction Book
202-566		Instruction Book (Radio & Phono)
S-10796		Lid Support Arm, Hinge Plate & Brkt. (R.H.)
S-10797		Lid Support Arm, Hinge Plate & Brkt. (L.H.)
S-11429		Record Changer Mounting Frame Assembly
S-12545		Phono Lift Spring & Bushing Assembly
S-14002		Intermixer Record Changer Assembly
S-14195		Loop Loading Coil Assembly
S-14305		Low Impedance Loop Assembly
S-14306		Interconnecting Cable Assembly (Phono)
S-14433		Chassis Compartment Hinge Assembly (R.H.)
S-14434		Chassis Compartment Hinge Assembly (L.H.)

MODEL 9H888R CABINET PARTS

15-82		Plug Cap & Insulator (used on S-14306 S-14306)
19-123		Record Changer Mounting Clip (3 used)
40-42		Knife Hinge (R.H.)
40-65		Knife Hinge (L.H.)
46-648		Door Pull (2 used)
46-659		Key Escutcheon
46-697		Volume & Tuning Control Knob (2 used)
46-718		Band Switch Knob
46-726		Phono Switch Knob
49-624		12" P.M. Speaker
		208-624 Cone & Voice Coil
57-1336		Dial Escutcheon
57-1353		Diffusing Plate
58-169		Seven Prong Plug (used on S14306)
70-96		#10 x 1-3/4" R.H.W.S.-Steel N.P. (6 used)
72-58		#2-3/8" Phillips Flat Hds. Wood Screw
78-798		Seven Contact Socket (used on S14306)
80-423		Chassis Lift Spring (2 used)
80-463		Record Changer Mtg. Screw (4 used)
83-1244		Record Changer Trim Strip
93-392		3/32" x 33/64" x 1 Brown Felt Washer (3 used)
112-558		#10-32 x 7/8 Flat Phillips Hd. M. Screw-Steel-Statuary-Bronze (Pinch Pt.)
112-611		Record Changer Mounting Screw (3 used)
112-682		Record Changer Mounting Screw (1 used)
114-257		#10 x 1-3/8" Hex Slotted Washer Hd. Sheet Metal Screw
125-49		Rubber Grommet
125-56		Rubber Grommet
138-26		Metal Grille
159-61		Plug Button-Statuary Bronze
165-9		Metal Glides (4 used)
192-115		Dial Glass
202-506		F.M. Instruction Book
202-566		Instruction Book (Radio & Phono)
S-10796		Lid Support Arm, Hinge Plate & Brkt. (R.H.)
S-10797		Lid Support Arm, Hinge Plate & Brkt. (L.H.)
S-11429		Record Changer Mtg. Frame Assembly
S-12545		Phono Lift Spring & Bushing Assembly
S-14002		Intermixer Record Changer
S-14195		Loop Loading Coil Assembly
S-14305		Low Impedance Loop Assembly
S-14306		Interconnecting Cable Assembly (Phono)
S-14433		Chassis Compartment Hinge Assembly (R.H.)
S-14434		Chassis Compartment Hinge Assembly (L.H.)

CLARI-SKEMATIX
Registered Trademark

MODELS 9H881, 9H882R, 9H885, 9H888R, CHASSIS 9E21

ZENITH RADIO CORP.

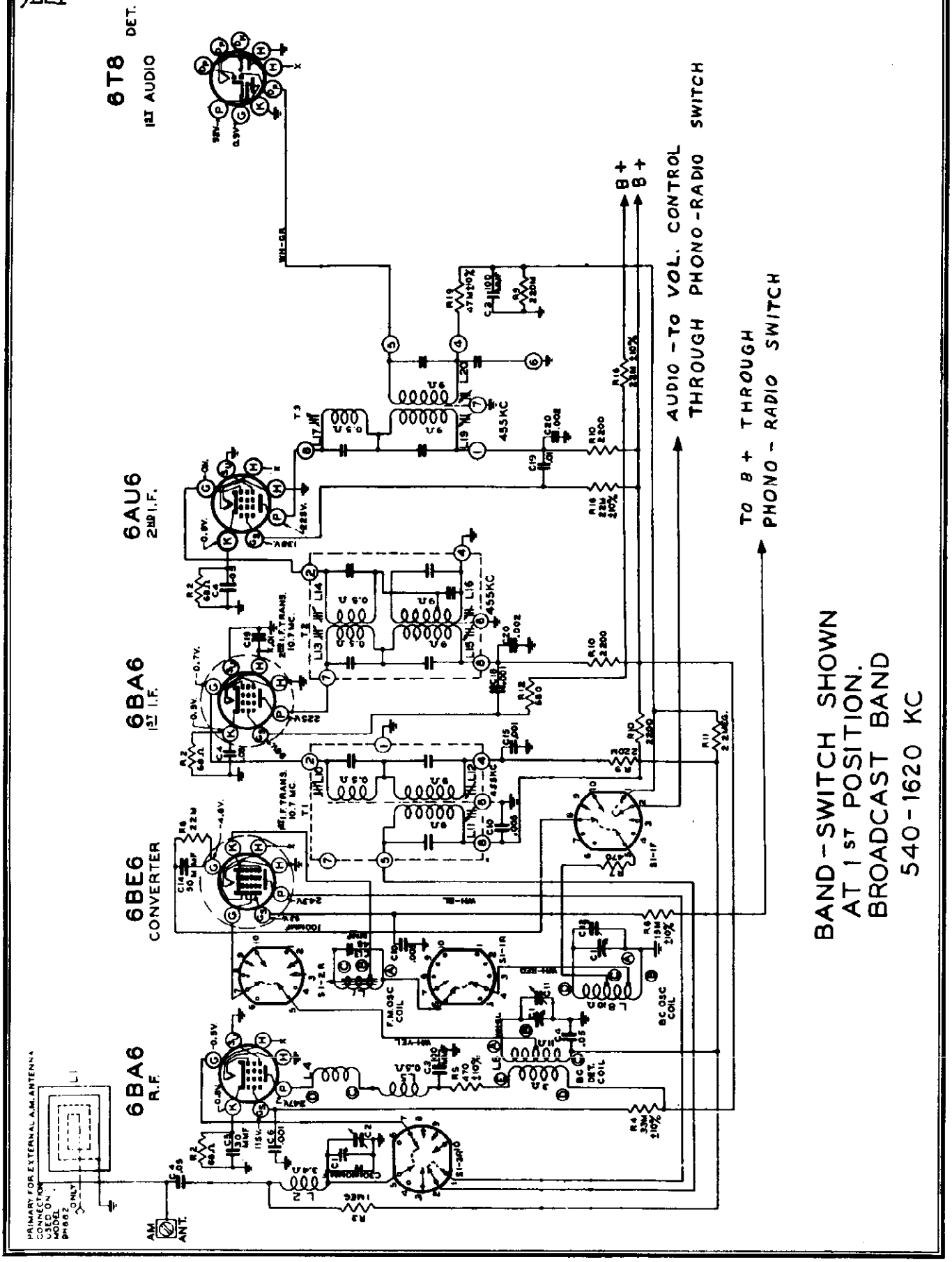

ZENITH RADIO CORP. MODELS 9H881, 9H882R, 9H885, 9H888R, CHASSIS 9E21

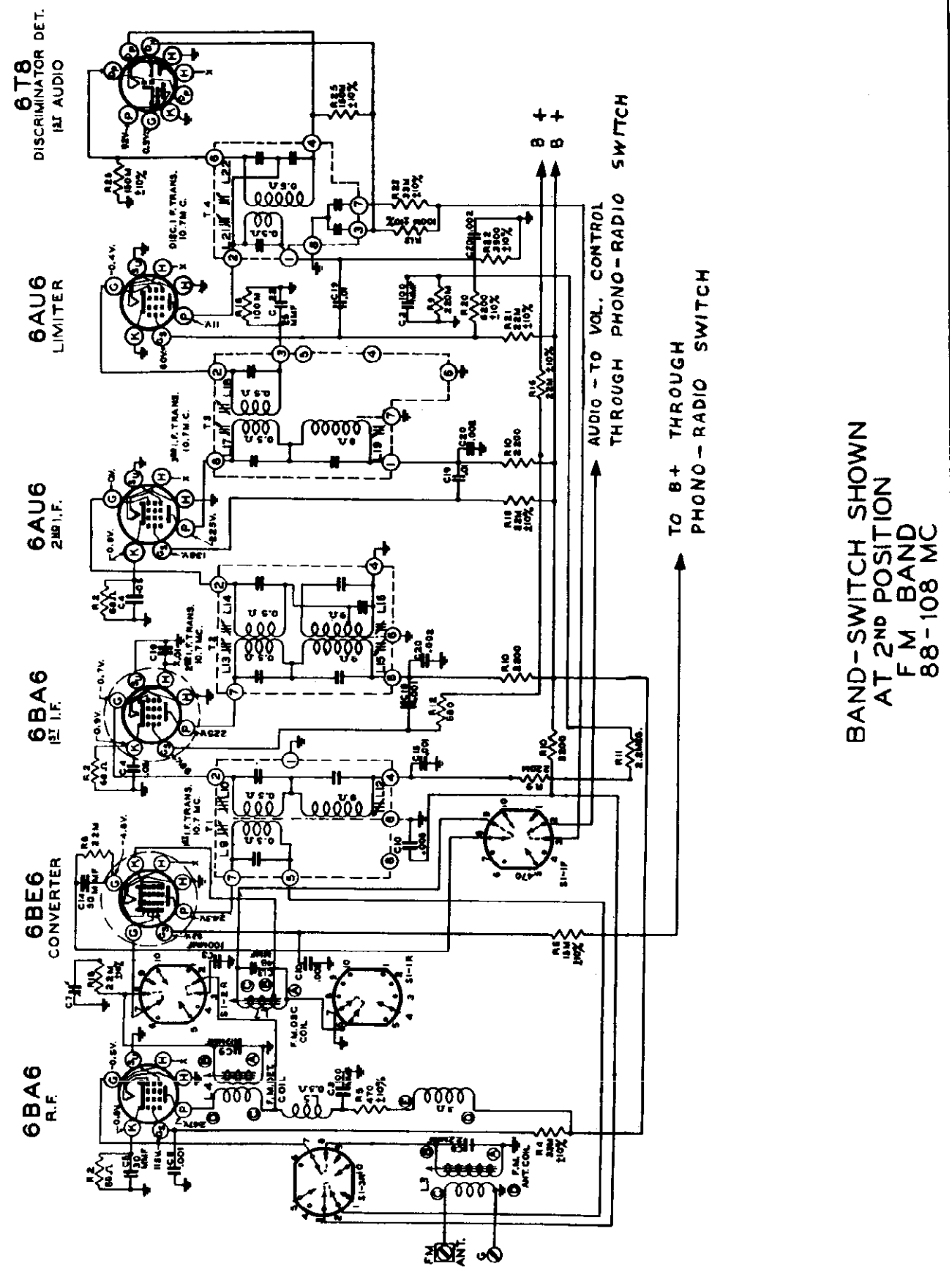

CLARI-SKEMATIX
Registered Trademark

MODELS 9H881, 9H882R, 9H885, 9H888R

ZENITH RADIO CORP.

CHASSIS 9E21

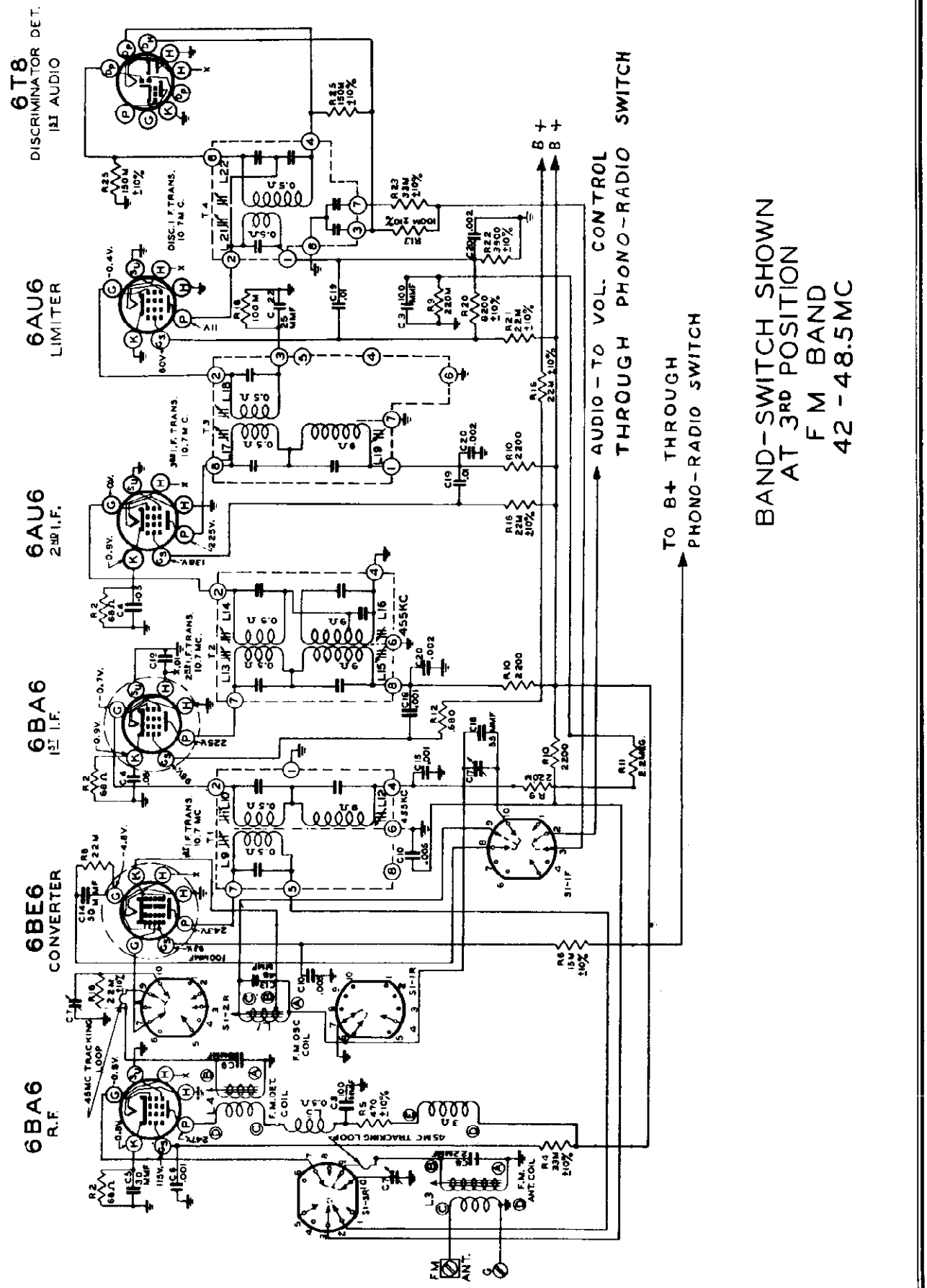

MODELS 9H984, 9H984LP,
CHASSIS 9F22

ZENITH

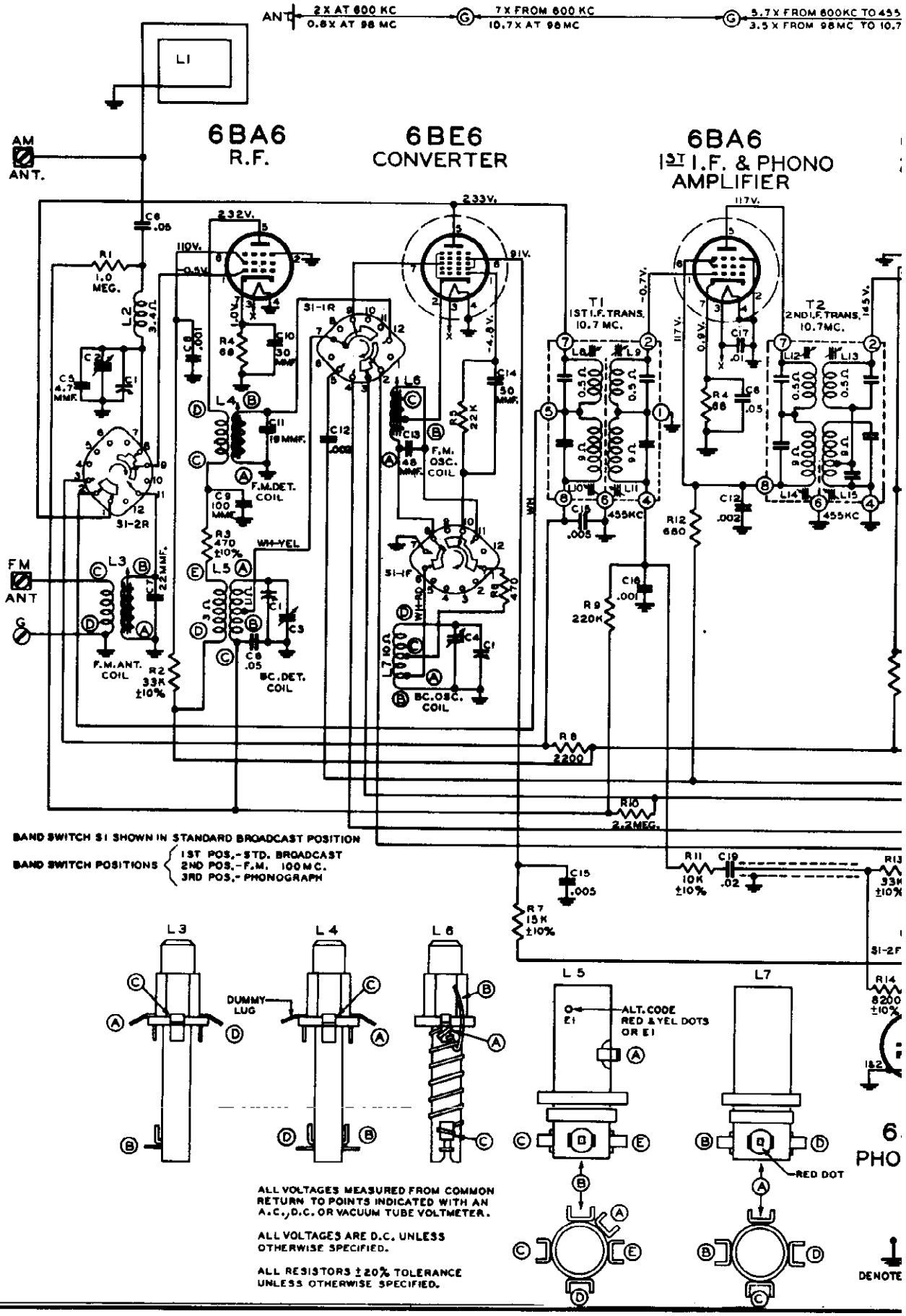

©John F. Rider

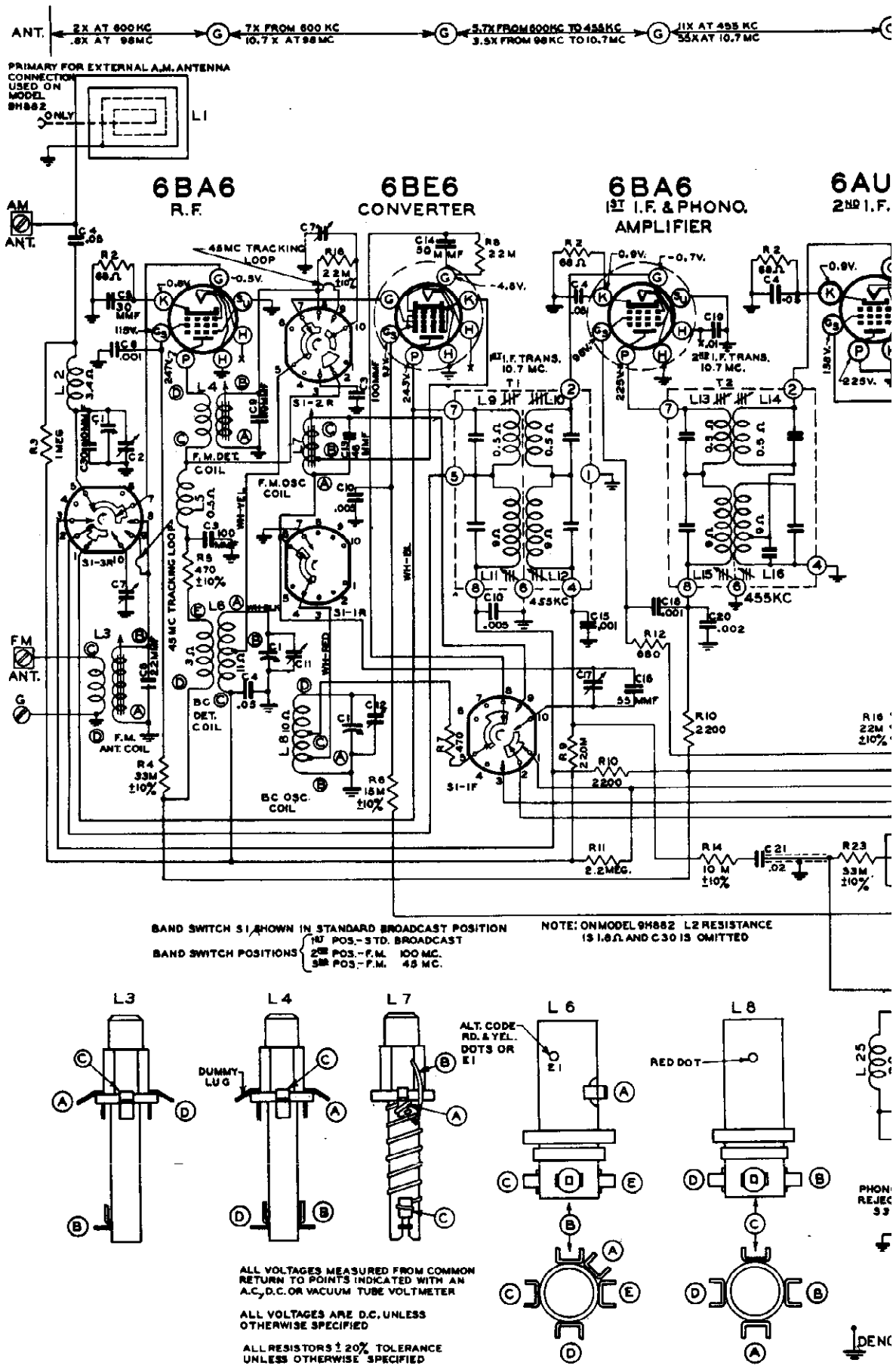
ANT.
2X AT 600KC
.8X AT 98MC
7X FROM 600 KC
10.7 X AT 98 MC
5.7X FROM 600KC TO 455KC
3.5X FROM 98KC TO 10.7MC
11X AT 455 KC
55X AT 10.7 MC
PRIMARY FOR EXTERNAL A.M. ANTENNA CONNECTION USED ON MODEL 9H882 ONLY
L1
6BA6
R.F.
6BE6
CONVERTER
6BA6
1ST I.F. & PHONO. AMPLIFIER
6AU
2ND I.F.
AM ANT.
FM ANT.
G
45MC TRACKING LOOP
F.M. DET. COIL
F.M. OSC COIL
BC DET. COIL
BC OSC. COIL
F.M. ANT. COIL
1ST I.F. TRANS. 10.7 MC.
2ND I.F. TRANS. 10.7 MC.
455KC
S1-1R
S1-2R
S1-3R
S1-1F
BAND SWITCH S1 SHOWN IN STANDARD BROADCAST POSITION
BAND SWITCH POSITIONS
1ST POS.-STD. BROADCAST
2ND POS.-F.M. 100 MC.
3RD POS.-F.M. 45 MC.
NOTE: ON MODEL 9H882 L2 RESISTANCE IS 1.8Ω AND C30 IS OMITTED
L3
L4
L7
L6
L8
DUMMY LUG
ALT. CODE RD. & YEL. DOTS OR E1
RED DOT
ALL VOLTAGES MEASURED FROM COMMON RETURN TO POINTS INDICATED WITH AN A.C., D.C. OR VACUUM TUBE VOLTMETER
ALL VOLTAGES ARE D.C. UNLESS OTHERWISE SPECIFIED
ALL RESISTORS ± 20% TOLERANCE UNLESS OTHERWISE SPECIFIED

ADIO CORP.

MODELS 9H881, 9H882R, 9H885, 9H888R, CHASSIS 9E21

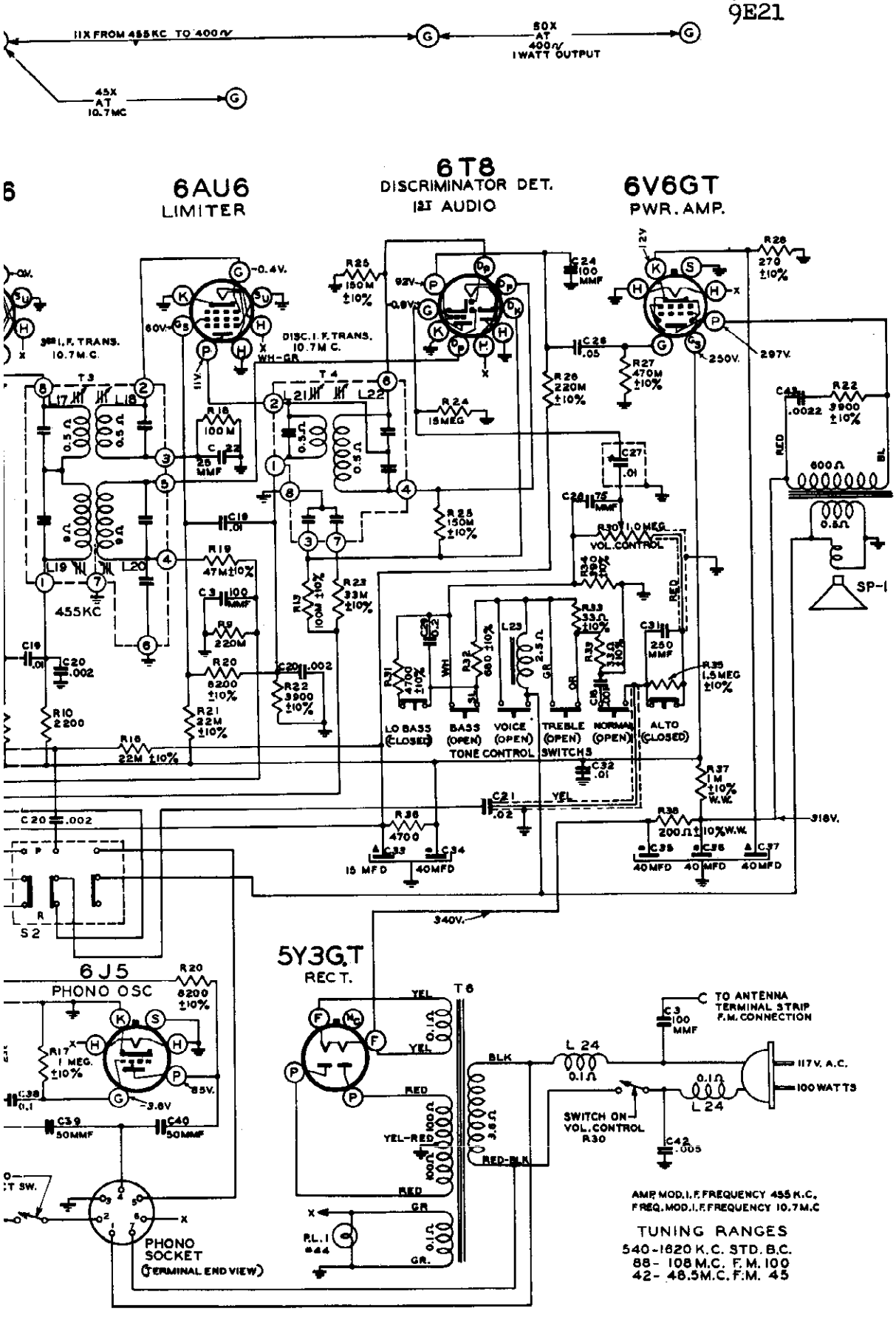

OTLS CHASSIS

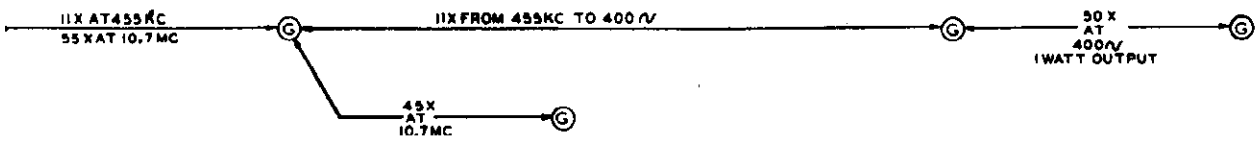

6U6 I.F.

6AU6 LIMITER

6T8 DISCRIMINATOR DET. 1ST AUDIO

6K6GT PWR. AMP.

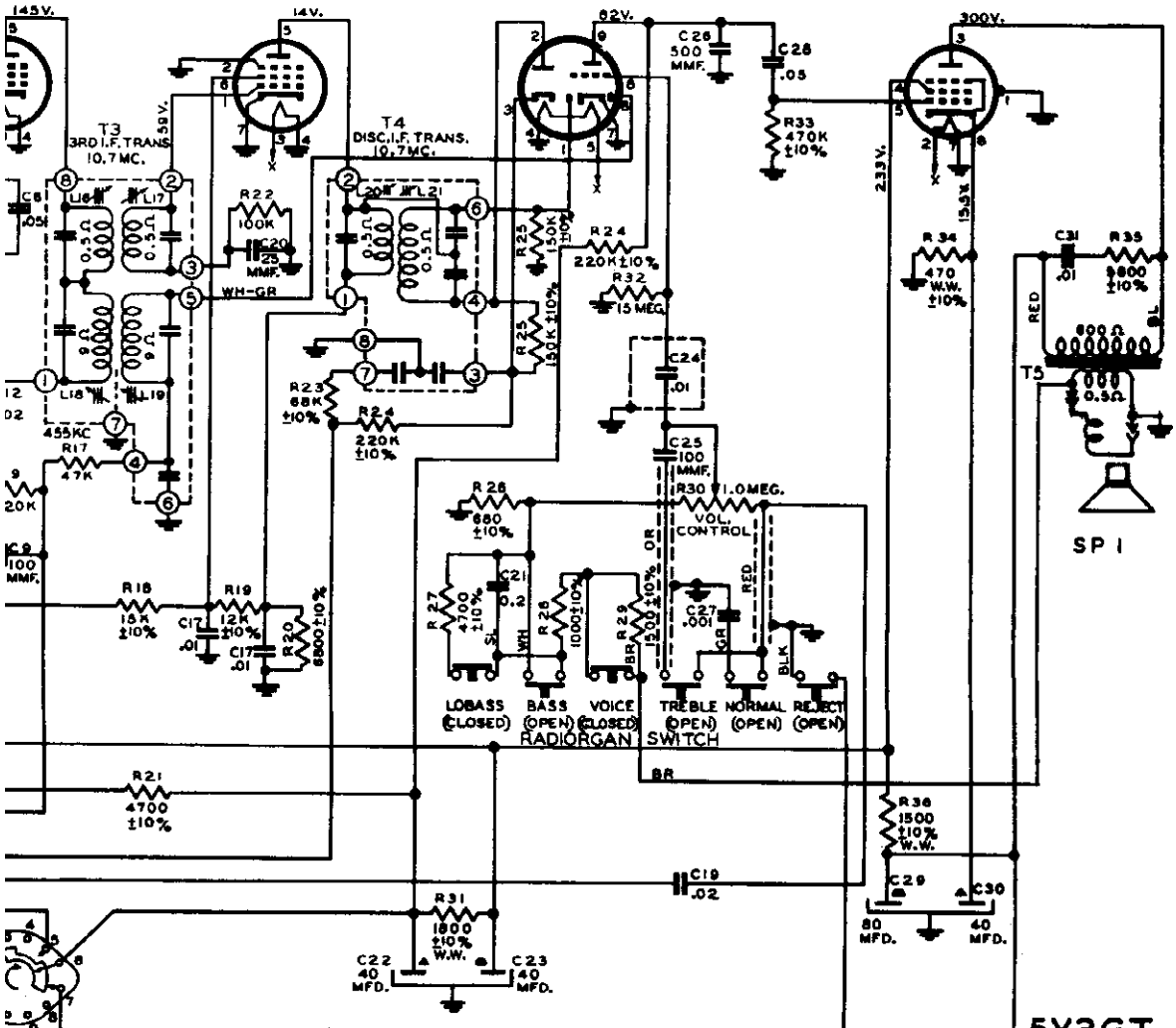

5Y3GT RECT.

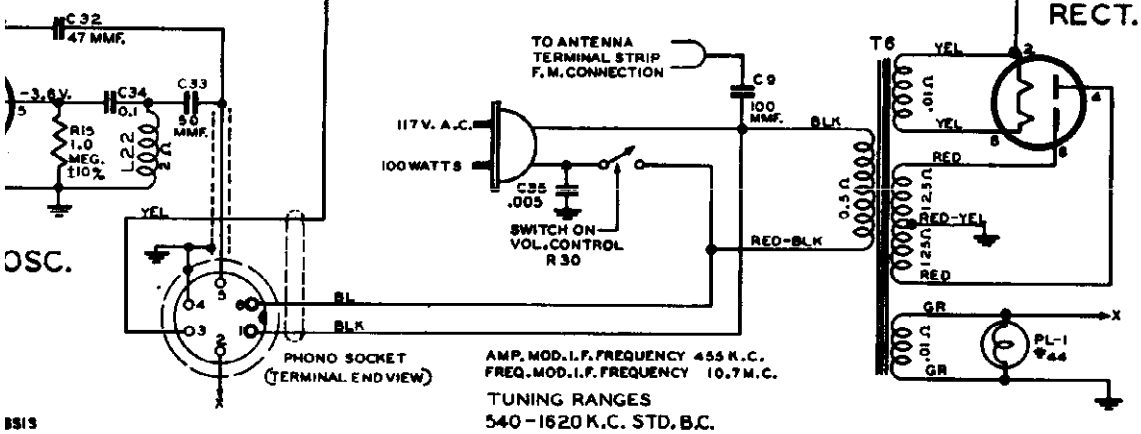

AMP. MOD. I.F. FREQUENCY 455 K.C.
FREQ. MOD. I.F. FREQUENCY 10.7 M.C.

TUNING RANGES
540 - 1620 K.C. STD. B.C.
88 - 108 M.C. F.M. 100

BSIS

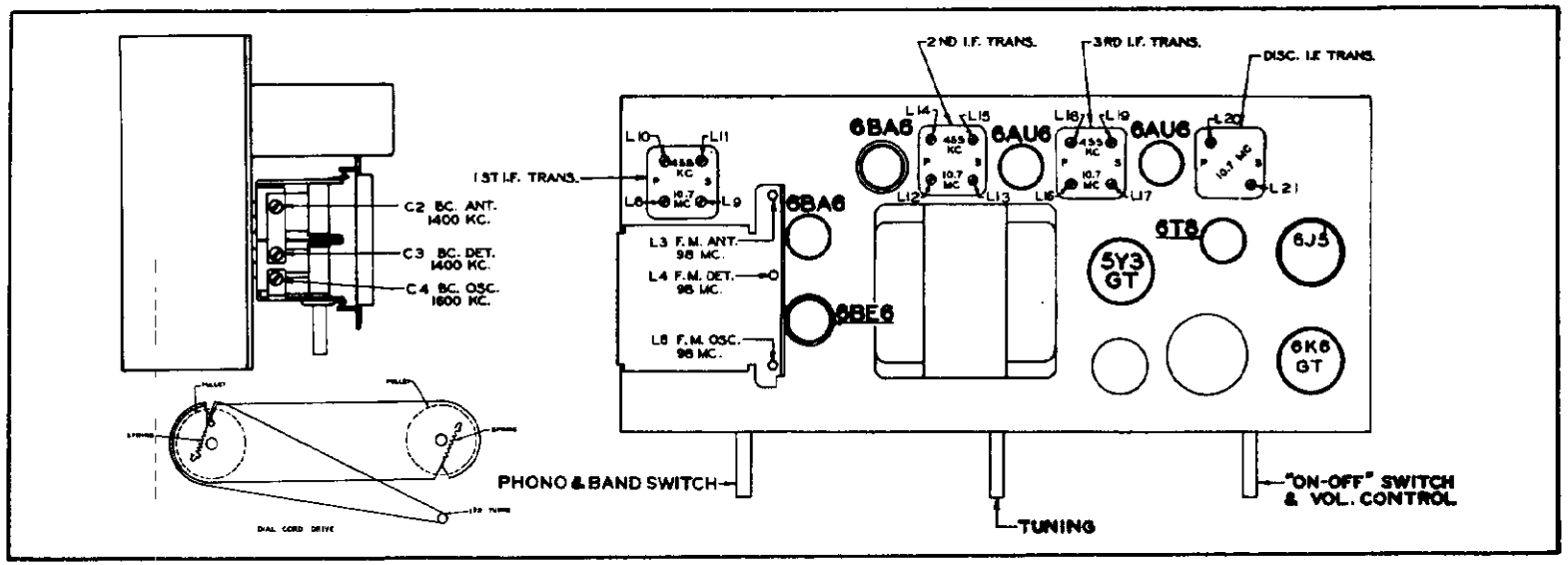

TUBE TRIMMER LOCATION AND DIAL CABLE DRAWING

The 9F22 chassis incorporates a superheterodyne circuit with two stages of IF, and one stage of RF amplification on all bands.

The Radiorgan tone control is of the low impedance type in which a portion of the audio voltage is taken from the speaker voice coil and fed back out of phase into the grid of the first audio. The characteristic of the feedback voltage is determined by the setting of the Radiorgan buttons. To attenuate the high notes, more highs are fed back. To attenuate the low notes, more lows are fed back. For normal reproduction, both highs and lows are fed back and results in no overall change in tone.

The 6BA6 1st IF tube is also the phono pre-amplifier. The output from the phono oscillator is fed to the grid of the 6BA6 through C19 and R11. The amplified output is taken from the screen grid and fed back through R12, and C12 into the volume control circuit and the grid of the 6T8 1st audio amplifier.

AM Alignment: The alignment of this chassis on the standard broadcast band is conventional. The alignment slugs in the IF transformers are threaded and screw into the coil forms. The slugs are slotted for a small size fiber screw driver. Do not press hard on the aligning tool or the threads in the coil forms will strip and adjustment will be impossible.

FM RF Alignment: A coil slug arrangement tunes the 100 MC FM band. The tuning slugs are attached to threaded shafts and the slugs are varied in the field of the coils by turning the shafts clockwise or counter clockwise. After adjustment the shafts must be secured with a drop of speaker cement.

FM IF Alignment: The same type of tuning slugs for aligning the AM IF Amplifier are used for the FM IF's. Observe the same precautions when making adjustments.

FM Discriminator Alignment: When the secondary of the discriminator is aligned (operation 5) use sufficient signal input to get a good positive and negative indication before setting the slug for zero reading. A center zero indicating meter is recommended for this adjustment, but is not absolutely necessary. Reversing the leads of a non-zero center meter, or observing closely when the meter starts to go to the left (negative) of zero will give the same results.

NOTE: The output transformer must be replaced with an exact duplicate, Part No. 95-1063. Be sure to add the speaker code letter to the transformer Part Number when ordering replacements.

FM IF Alignment: Because of the wide band pass, it is desirable to use a FM signal generator and a cathode ray oscilloscope when aligning the FM IF channel. The instruction book for the Zenith Model 800 Signal Generator (Form Z800I) covers complete FM alignment procedure. If visual alignment equipment is unavailable, reasonably accurate alignment can be made by following the procedure outlined below.

ALIGNMENT PROCEDURE

Operation	Connect Oscillator to	Dummy Antenna	Input Signal Frequency	Band	Set Dial To	Adj. Trimmers	Purpose
1	Pin 7 6BE6 Converter	.05 Mfd.	455 Kc. Modulated	BC	600 Kc.	L-10, 11, 14, 15 16, 18 and 19.	Align I. F. channel for maximum output.
2	2 turns loosely cpld. to wavemagnet.		1600 Kc Modulated	BC	1600 Kc.	C4	Set oscillator to dial scale.
3			1400 Kc. Modulated	BC	1400 Kc.	C3 and C2	Align det. and ant. stages.
4 (a)	Pin 1 (grid) on 6AU6 Limiter	.05 Mfd.	10.7 Mc Unmodulated	FM 100		L20 coil slug Primary discr.	Align primary of discriminator for maximum reading.
5 (b)		.05 Mfd.	10.7 Mc Unmodulated	FM 100		L21 coil slug sec. of discr.	Adjust secondary of discrimina-or for zero reading.
6 (c)	Pin 1 (grid) on 6AU6 2nd IF.	.05 Mfd.	10.7 Mc Unmodulated	FM 100		L16 and L17 Prim. and Sec. of 3rd IF trans.	Align 3rd IF transformer for maximum reading.
7 (c)	Pin 1 (grid) on 6BA6 1st IF.	.05 Mfd.	10.7 Mc Unmodulated	FM 100		L12 and L13 Prim. and Sec. of 2nd IF transformer	Align 2nd IF transformer for maximum reading.
8 (c)	Pin 7 (grid) on 6BE6 converter tube	.05 Mfd.	10.7 Mc Unmodulated	FM 100		L8 and L9 Prim. and Sec. of 1st IF transformer	Align 1st IF transformer for maximum reading.
9 (c)(d)	FM Antenna Post (Remove line ant.)	270 ohms	98 Mc. Unmodulated	FM 100	98 Mc.	L6 Osc. Coil Slug	Set Oscillator to dial scale.
10 (c)(d)		270 ohms	98 Mc. Unmodulated	FM 100	98 Mc.	L4 and L3 Det. and RF coil Slugs	Align det. and ant. stages to maximum reading.

IMPORTANT

Alignment of this chassis will in most cases be unnecessary unless an IF or RF transformer is replaced or the adjustments have been tampered with.

Correct alignment can only be made if the following procedure is followed:

A vacuum tube voltmeter with an isolation resistor of 200,000 ohms in series with the hot lead will serve for FM adjustments. This lead should be shielded.

An AC output meter connected across the primary or secondary of the output transformer will be satisfactory for all AM adjustments.

The signal generator output should be kept just high enough to get an indication on the meter.

(a) Vacuum Tube Voltmeter Lug 6 on discriminator transformer to chassis (half discriminator load).

(b) Vacuum Tube Voltmeter Lug 3 on discriminator transformer to chassis (full discriminator load).

(c) Vacuum Tube Voltmeter Lug 3 on 3rd IF transformer (Limiter Grid).

(d) Loosen Slugs by applying a hot iron to the cement.

ZENITH RADIO CORP.

MODELS 9H984, 9H984LP, CHASSIS 9F22

PART NUMBER	REF. NUMBER	DESCRIPTION
		DIAL ASSEMBLY
12-1434		Dial Light Mtg. Bracket.
26-418		Dial Scale use S 15394
59-209		Dial Pointer
76-489		Tuning Control Shaft
78-797		Dial Light Socket.
80-69		Dial Cord Tension Spring
80-209		Dial Cord Tension Spring
80-444		Tuner Arm Tension Spring
80-581		Pressure Arm Tension Spring.
93-721		Black Felt Washer (used on 59-209)
100-36	PL-1	Dial Light Bulb.
189-32		Retaining Ring
S-14254		Pointer Pulley Assy (76-498)
S-14256		Pulley & Bushing Assy.
S-14268		Dial Cord & Eyelet Assy (short).
S-14269		Dial Cord & Eyelet Assy (long)
S-14429		Tuner Arm Assy
S-15394		Dial Scale & Strip Assy. (26-418).
		COILS & CHOKES
S-11157	L7	B.C. Oscillator Coil Assy.
S-12251	L8	F.M. Oscillator Coil Assy.
S-12603	L22	Phono Oscillator Coil Assy.
S-13871	L4	F.M. Detector Coil Assy.
S-13970	T1	1st I.F. Transformer Assy.
S-13971	T2	2nd I.F. Transformer Assy.
S-13972	T3	3rd I.F. Transformer Assy.
S-13974	L5	B.C. Detector Coil Assy.
S-14192	L3	F.M. Antenna Coil Assy.
S-14984	T4	Discriminator Trans. Assy.
		CONDENSERS
22-171	C28	.05 Mfd. .600 V.
22-348	C16	.001 Mfd. .500 V.
22-385	C25	100 MMFD (or 22-1670). .500 V.
22-429	C6	.05 Mfd. .200 V.
22-830	C19	.02 Mfd. .600 V.
22-854	C26	.0005 Mfd. .600 V.
22-1041	C35	.005 Mfd. (molded) .400 V.
22-1220	C12	.002 Mfd. .600 V.
22-1367	C14	50 MMFD (ceramic). .500 V.
22-1385	C17	.01 Mfd. .200 V.
22-1418	C24	.1 Mfd. .200 V.
22-1508	C7	22 MMFD (ceramic). .500 V.
22-1507	C20	25 MMFD (ceramic). .500 V.
22-1516	C5	4.7 MMFD (molded). .500 V.
22-1531	C21	.2 Mfd. .200 V.
22-1532	C32	50 MMFD. (or 22-1674). .500 V.
22-1627	C31	.01 Mfd. (or 22-1651). .600 V.
22-1664	C33	50 MMFD (ceramic). .500 V.
22-1668	C9	100 MMFD (ceramic) .500 V.
22-1676	C8	.001 MMFD (ceramic). .500 V.
22-1677	C1	Three gang variable.
22-1688	C11	19 MMFD (ceramic). .500 V.
22-1689	C13	40 MMFD (ceramic). .500 V.
22-1705	C10	30 MMFD (ceramic). .500 V.
22-1706	C15	.005 Mfd. (ceramic)(disc type). .450 V.
22-1717	C27	.001 Mfd. .200 V.
22-1718	C24	.01 Mfd. (shielded). .400 V.
22-1884	C22.23	Two Sect. Electrolytic 40 Mfd. 40 Mfd. .350VX. .450 V.
22-1885	C29.30	Two Sect. Electrolytic 40 Mfd.-25VX 80 Mfd.-450 V.
		RESISTORS
63-943	R21	4700 Ohm Insulated Resistor 10%. .1 W.
63-957	R2	33K Ohm Insulated Resistor 10% .1 W.
63-1065	R7	15K Ohm Insulated Resistor 10% .1 W.
63-1222	R34	470 Ohm Insulated W. W. Resistor 10% .1 W.
63-1588	R30	Volume Control & Switch.
63-1681	R36	Two Section Candoha.
63-1691	R31	1800 Ohm W.W. Zipohm 10% .2 W.
63-1737	R4	68 Ohm Ins. Res. 20% .1/2 W.
63-1771	R3	470 Ohm Ins. Res. 10% .1/2 W.
63-1772	R6	470 Ohm Ins. Res. 20% .1/2 W.
63-1776	R26	680 Ohm Ins. Res. 10% .1/2 W.
63-1778	R12	680 Ohm Ins. Res. 20% .1/2 W.
63-1785	R28	1 K Ohm Ins. Res. 10% .1/2 W.
63-1792	R29	1500 Ohm Ins. Res. 10% .1/2 W.
63-1800	R8	2200 Ohm Ins. Res. 20% .1/2 W.
63-1813	R27	4700 Ohm Ins. Res. 10% .1/2 W.
63-1817	R35	5600 Ohm Ins. Res. 10% .1/2 W.
63-1820	R20	6800 Ohm Ins. Res. 10% .1/2 W.
63-1824	R14	8200 Ohm Ins. Res. 10% .1/2 W.
63-1827	R11	10K Ohm Ins. Res. 10% .1/2 W.
63-1831	R19	12K Ohm Ins. Res. 10% .1/2 W.
63-1834	R18	15K Ohm Ins. Res. 10% .1/2 W.
63-1842	R5	22K Ohm Ins. Res. 20% .1/2 W.
63-1848	R13	33K Ohm Ins. Res. 10% .1/2 W.
63-1856	R17	47K Ohm Ins. Res. 20% .1/2 W.
63-1862	R23	68K Ohm Ins. Res. 10% .1/2 W.
63-1870	R22	100K Ohm Ins. Res. 20% .1/2 W.
63-1876	R25	150K Ohm Ins. Res. 10% .1/2 W.
63-1883	R24	220K Ohm Ins. Res. 10% .1/2 W.
63-1884	R9	220K Ohm Ins. Res. 20% .1/2 W.
63-1897	R33	470K Ohm Ins. Res. 10% .1/2 W.
63-1911	R15	1 Megohm Ins. Res. 10% .1/2 W.
63-1912	R1	1 Megohm Ins. Res. 20% .1/2 W.
63-1926	R10	2.2 Megohm Ins. Res. 20% .1/2 W.
63-1961	R32	15 Megohm Ins. Res. 20% .1/2 W.
63-1998	R16	4700 Ohm W.W. Ins. Res. 10%. .2 W.

PART NUMBER	REF. NUMBER	DESCRIPTION
		MISCELLANEOUS
11-108		Line Cord and Plug (9 ft. long).
54-226		Speed Nut - Tinnerman.
57-1269		I.F. Trans. Terminal Plate
78-709		Octal Tube Socket.
78-750		Six Contact Socket
78-782		Miniature Tube Socket (2 used)
78-788		Noval Miniature Socket
78-793		Octal Tube Socket (2 used)
78-794		Miniature Tube Socket (3 used)
83-1545		Insulating Strip (4 used).
85-442	S1	Band Switch.
95-1063	T5	Output Transformer
95-1117	T6	Power Transformer.
125-26		Rubber Grommet (2 used) (mts. 78-709).
125-62		Rubber Grommet (4 used).
126-553		Metal Tube Shield.
126-569		Heat Shield.
149-64		Tuning Core & Spring (3 used).
S-15193		Phono Cable Assy. (or S-15467)
		RADIORGAN ESC. ASSEMBLY
57-1351		Radiorgan Esc..
57-1352		Radiorgan Esc.
76-444		Radiorgan Knob Retaining Shaft (2 used)
80-585		Radiorgan Mtg. Spring (2 used).
80-695		Knob Tension Spring
112-533		#6 x 1/4" Rd. Phill. Hd. S.T. Screw Type #25 CAD. (2 each used with S-15449 & S-15397).
114-159		#6 x 1/4" Hex. Hd. S.T. Screw Type A CAD (2 each used with S-15449 & S-15397)
S-14255		Radiorgan Mtg. Bracket Assy
S-14261		Radiorgan Strip & Contact Assy.
S-14273		Radiorgan Knob & Eyelet Assy. (Lo-Bass)
S-14274		Radiorgan Knob & Eyelet Assy. (Bass).
S-14663		Radiorgan Knob & Eyelet Assy. (Voice)
S-14276		Radiorgan Knob & Eyelet Assy. (Treble).
S-14278		Radiorgan Knob & Eyelet Assy. (Normal).
S-15397		Radiorgan Esc. & Knob Assy. (R.H.).
S-15449		Radiorgan Esc. & Knob Assy. (L.H.).
		TUBES
2	6BA6	
1	6BE6	
2	6AU6	
1	6T8.	
1	6X8GT.	
1	6J5.	
1	5Y3G1.	
		CABINET PARTS
2-139		Cabinet Back.
12-1547		Tone Arm Rest Bracket
19-9		Cable Clip.
19-88		Cable Clip.
19-169		Record Changer Mtg. Clip (4 used)
19-171		Loop Connector Clip (2 used).
27-81		Shaft Bearing Disc.
35-38		Record Changer Frame Handle
46-697		Tuning Control Knob (2 used).
46-710		Band Switch Knob.
46-786		Band Switch Knob.
49-624	SP1	Speaker 12" P.M.
57-1353		208-624 Cone & Voice Coil
57-1469		Diffusing Plate.
70-83		Dial Escutcheon
72-55		6 x 1/2" Washer Hd. Wood Screw Steel Stat.Br (10 used to mount cab. back)
72-58		#6 x 3/8" Phill. Fl-Hd. Wood Screw Steel N.P. (2 used with 27-81).
80-678		#2 x 3/8" Phill. Fl. Hd. Wood Screw Steel Brass Pl. (8 used to mount 57-1469).
83-1247		Record Changer Mtg. Spring (4 used)
93-392		Trim Strip.
112-489		Brown Felt Washer - 3/32 x 33/64 x 1". (used with 46-697 & 46-710)
112-712		#8 x 1/2" Phill. R.H.S.T. ShakeProof #25 Cad. Pl. (Handle Mtg. Screw).
113-17		Record Changer Mtg. Screw (4 used).
114-78		6-32 x 1/4" R.H.M.S. Steel N.P. Lockwasher Attached (2 used to mount 12-1547 on L.P. only).
114-148		#8 x 5/16 Hex. Hd. Slotted S.T. Type Z N.P. (used with 19-88).
114-233		#10 x 7/8" Hex. Washer Hd. S.T. Type Z CAD. Pl. (4 used chassis mtg.).
159-52		#14 x 1-1/4" Slotted Hex. Washer Hd. S.T. Type Z CAD
188-91		Plug Button (4 used).
192-115		Rubber Ring (2 used).
196-109		Dial Glass.
202-683		Dial Glass Dust Gasket
202-684		Radio Instruction Book.
202-685		Phono Instruction Book.
S-12064		Phono Instruction Book (L.P. Only).
S-14004		Drive Wheel & Pin Assy.
S-14012		Non-Intermixer Record Changer
S-14305		Non-Intermixer Record Changer (9H984L.P. only)
S-15386		Low Impedance Loop.
S-15395		Knob & Eyelet Assy (46-776)
S-15398	L2	Record Changer Mtg. Frame Assy (complete).
		Loading Coil Assy.

CLARI-SKEMATIX
Registered Trademark

MODEL 14H789,
CHASSIS 13D22

ZENITH RADIO CORP.

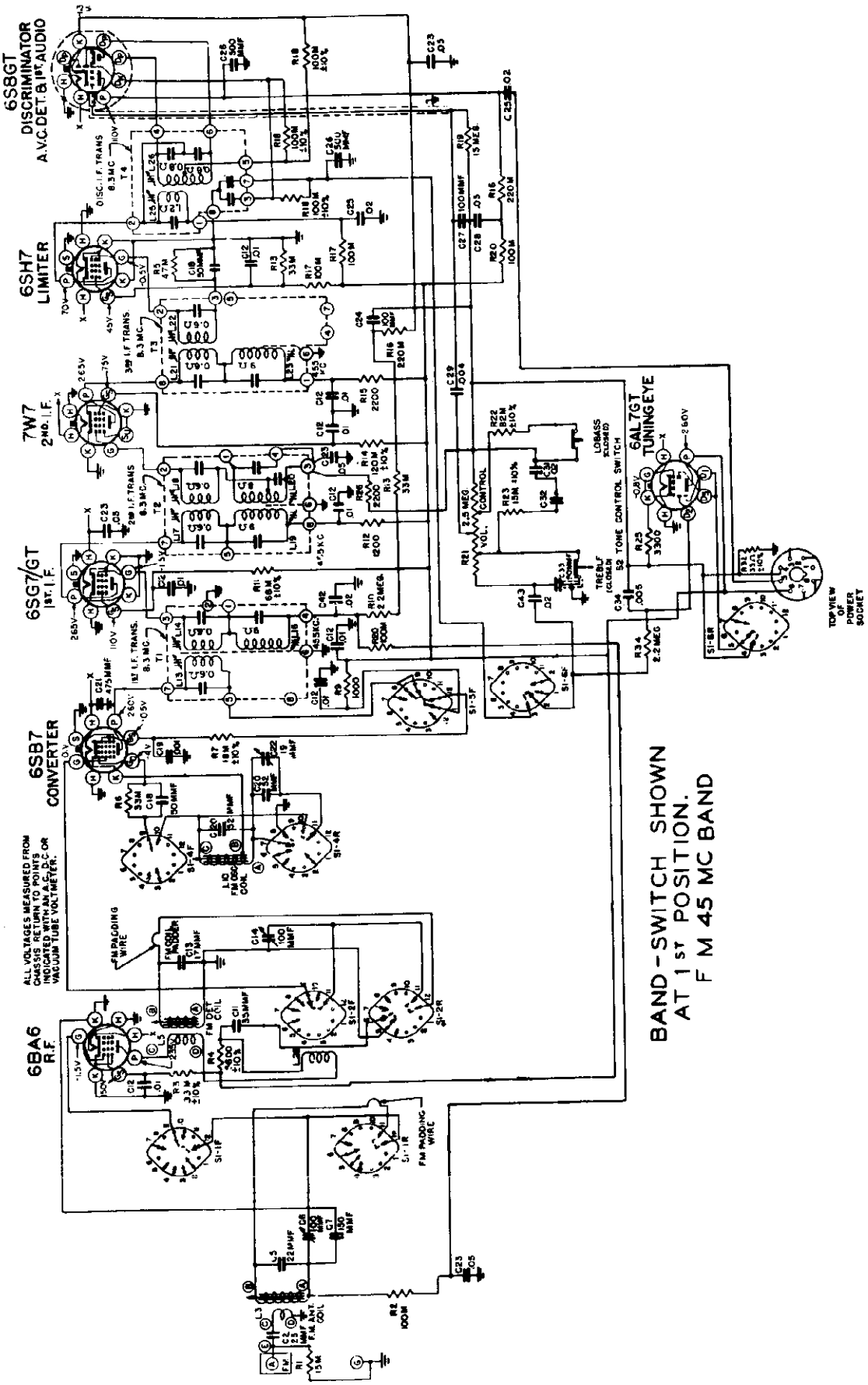

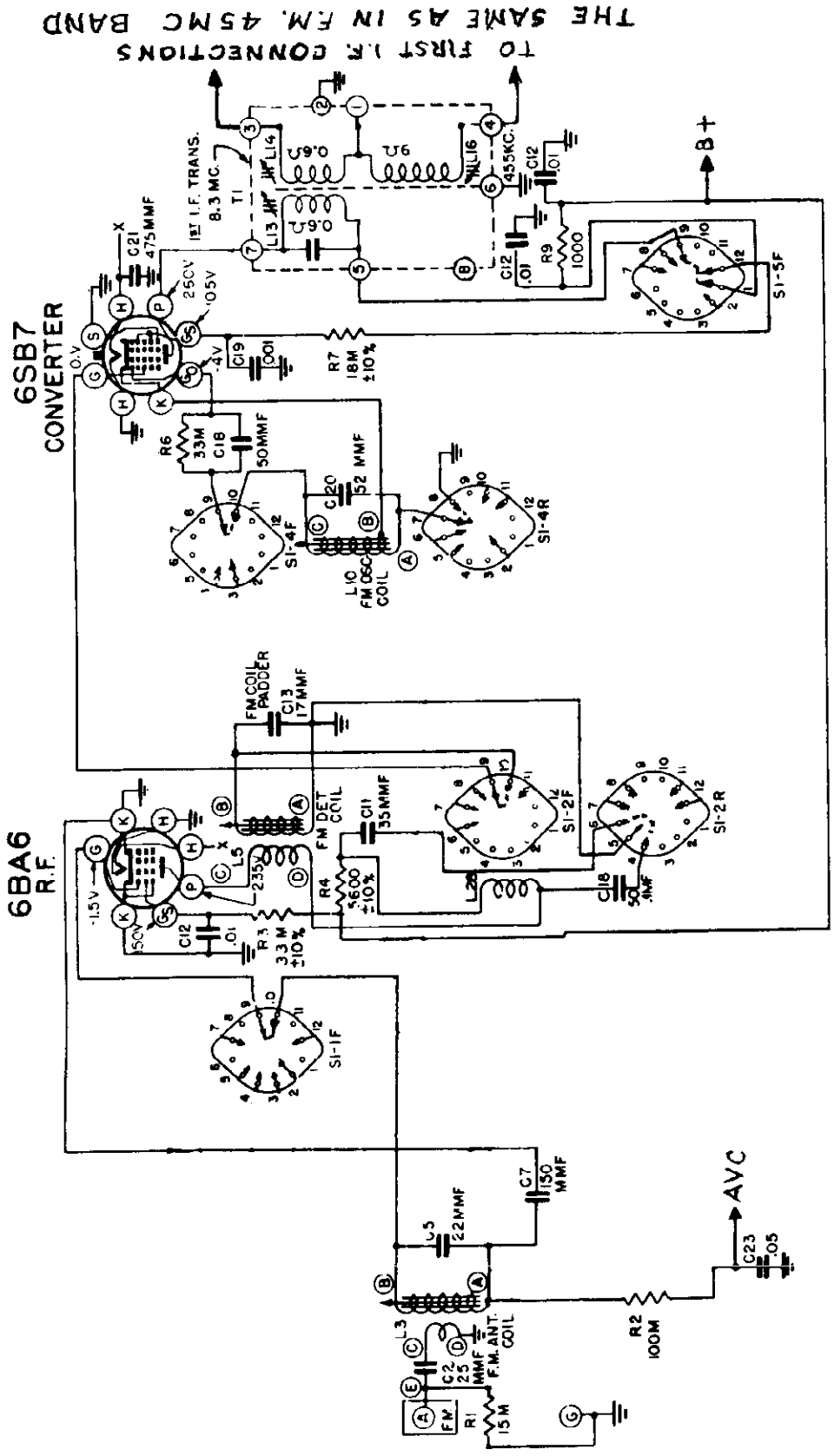

BAND-SWITCH SHOWN
AT 2ND POSITION
F M-100 MC BAND

CLARI-SKEMATIX
Registered Trademark

MODEL 14H789,
CHASSIS 13D22

ZENITH RADIO CORP.

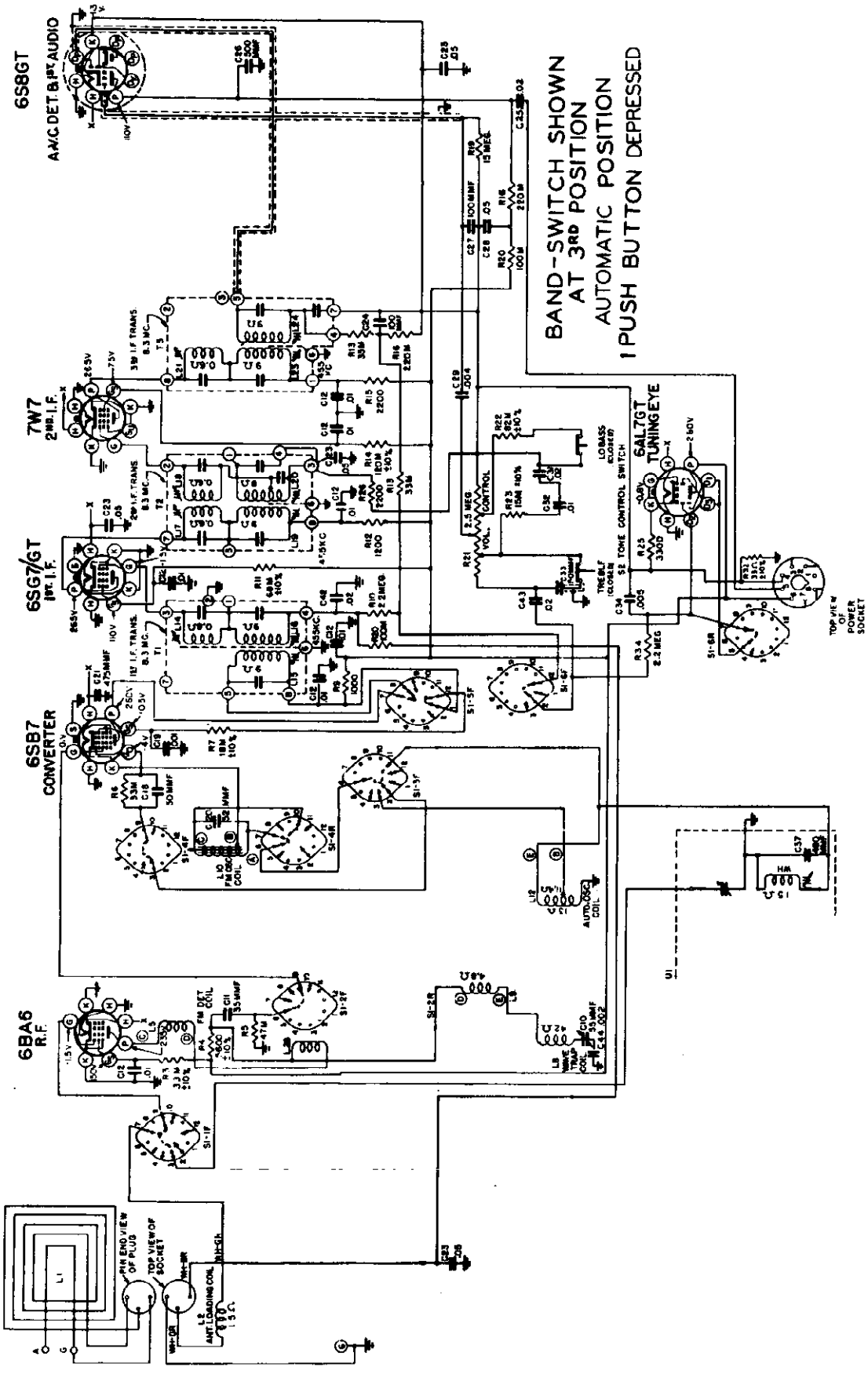

ZENITH RADIO CORP.

MODEL 14H789
CHASSIS 13D22

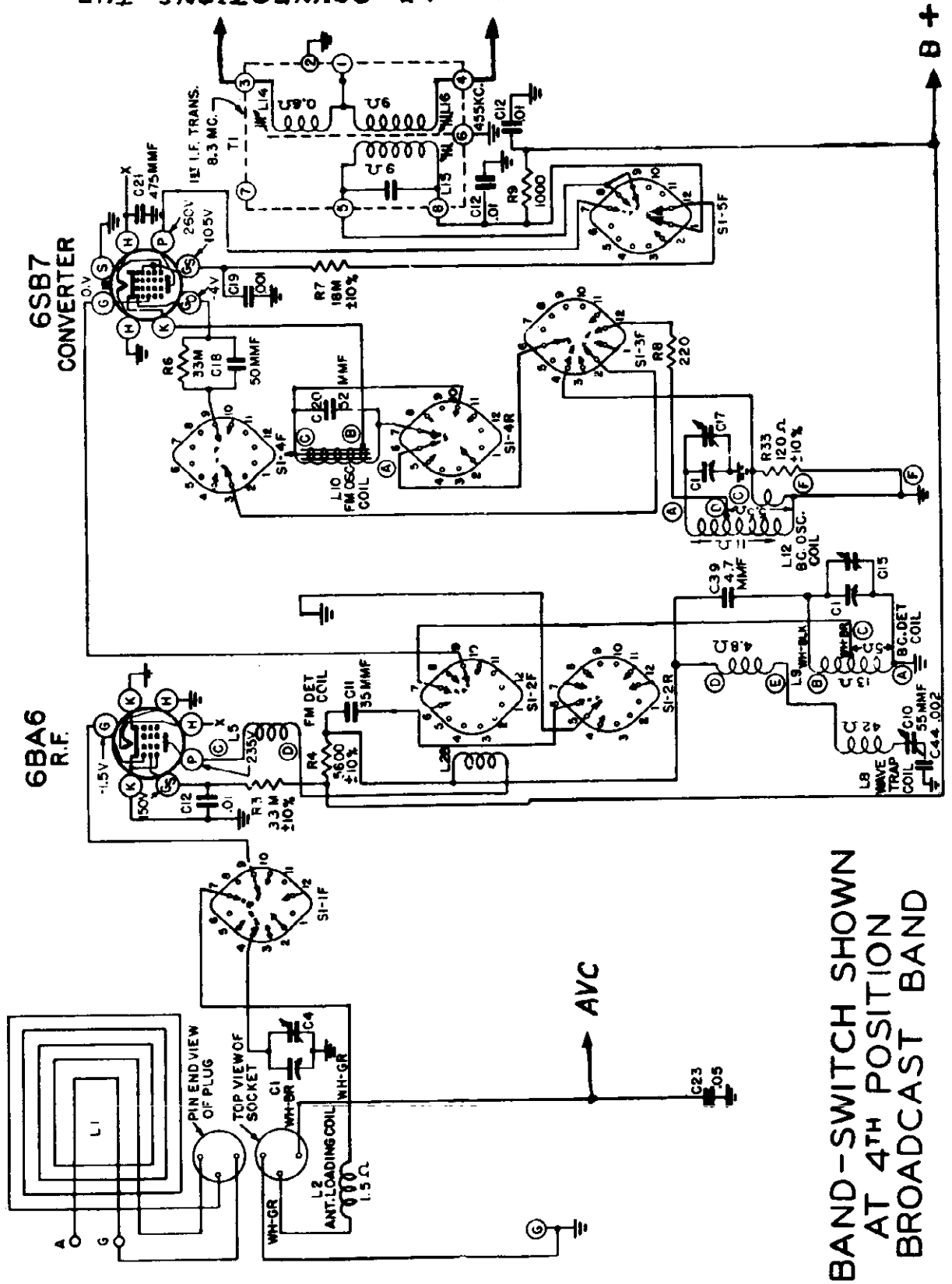

© John F. Rider

ZENITH

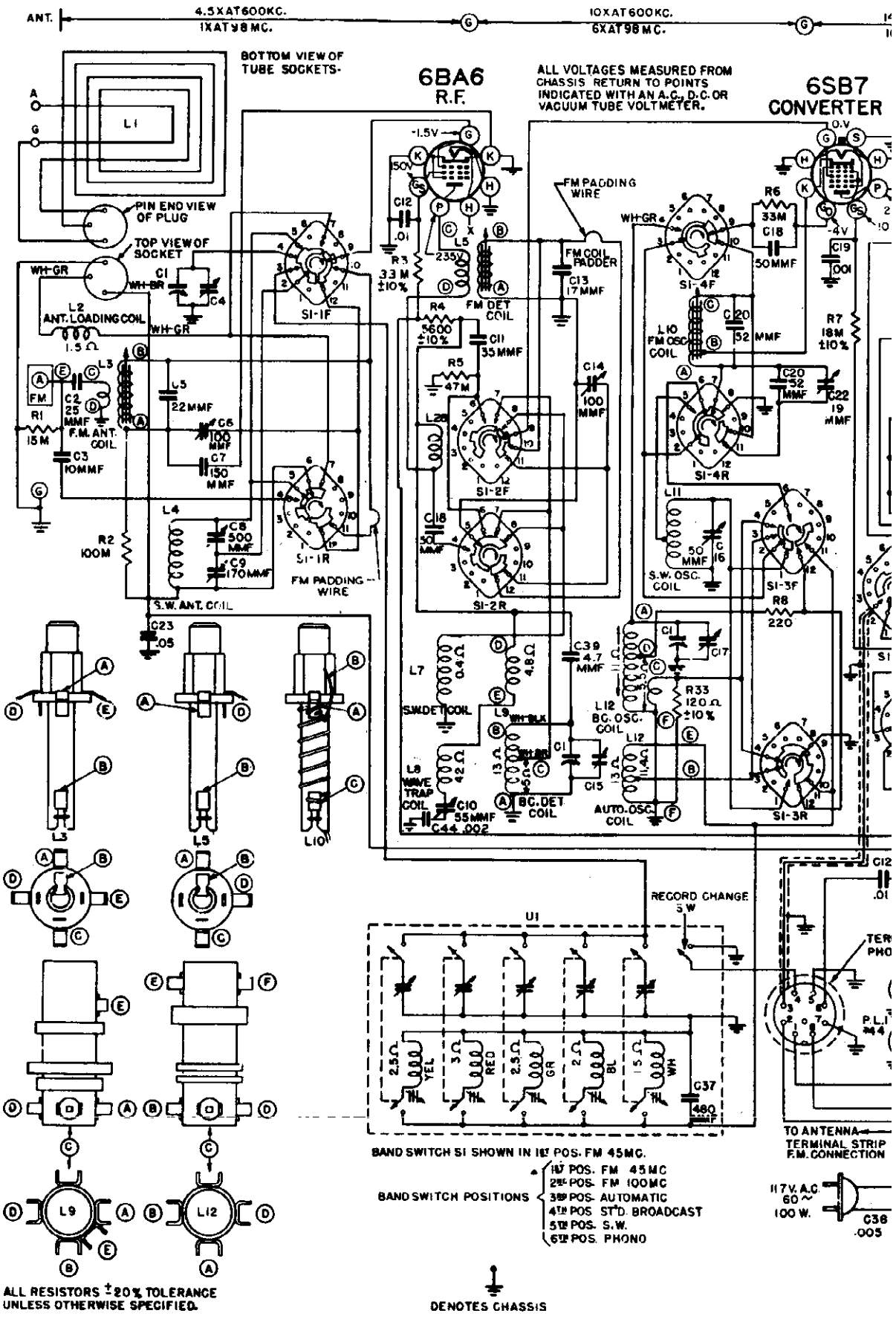

ANT.
4.5XAT600KC.
1XAT98MC.
10XAT600KC.
6XAT98MC.
BOTTOM VIEW OF TUBE SOCKETS-
6BA6
R.F.
ALL VOLTAGES MEASURED FROM CHASSIS RETURN TO POINTS INDICATED WITH AN A.C., D.C. OR VACUUM TUBE VOLTMETER.
6SB7
CONVERTER
PIN END VIEW OF PLUG
TOP VIEW OF SOCKET
L2 ANT. LOADING COIL
F.M. ANT. COIL
S.W. ANT. COIL
FM PADDING WIRE
FM DET COIL
FM COIL PADDER
FM OSC COIL
S.W. OSC. COIL
S.W. DET COIL
WAVE TRAP COIL
BC. DET COIL
BC. OSC. COIL
AUTO. OSC. COIL
RECORD CHANGE SW
U1
TO ANTENNA TERMINAL STRIP F.M. CONNECTION
117 V. A.C. 60 ~ 100 W.
BAND SWITCH S1 SHOWN IN 1ST POS. FM 45MC.
BAND SWITCH POSITIONS
1ST POS. FM 45MC
2ND POS. FM 100MC
3RD POS. AUTOMATIC
4TH POS. ST'D. BROADCAST
5TH POS. S.W.
6TH POS. PHONO
ALL RESISTORS ±20% TOLERANCE UNLESS OTHERWISE SPECIFIED.
DENOTES CHASSIS

RADIO CORP.

MODEL 14H789,
CHASSIS 13D22

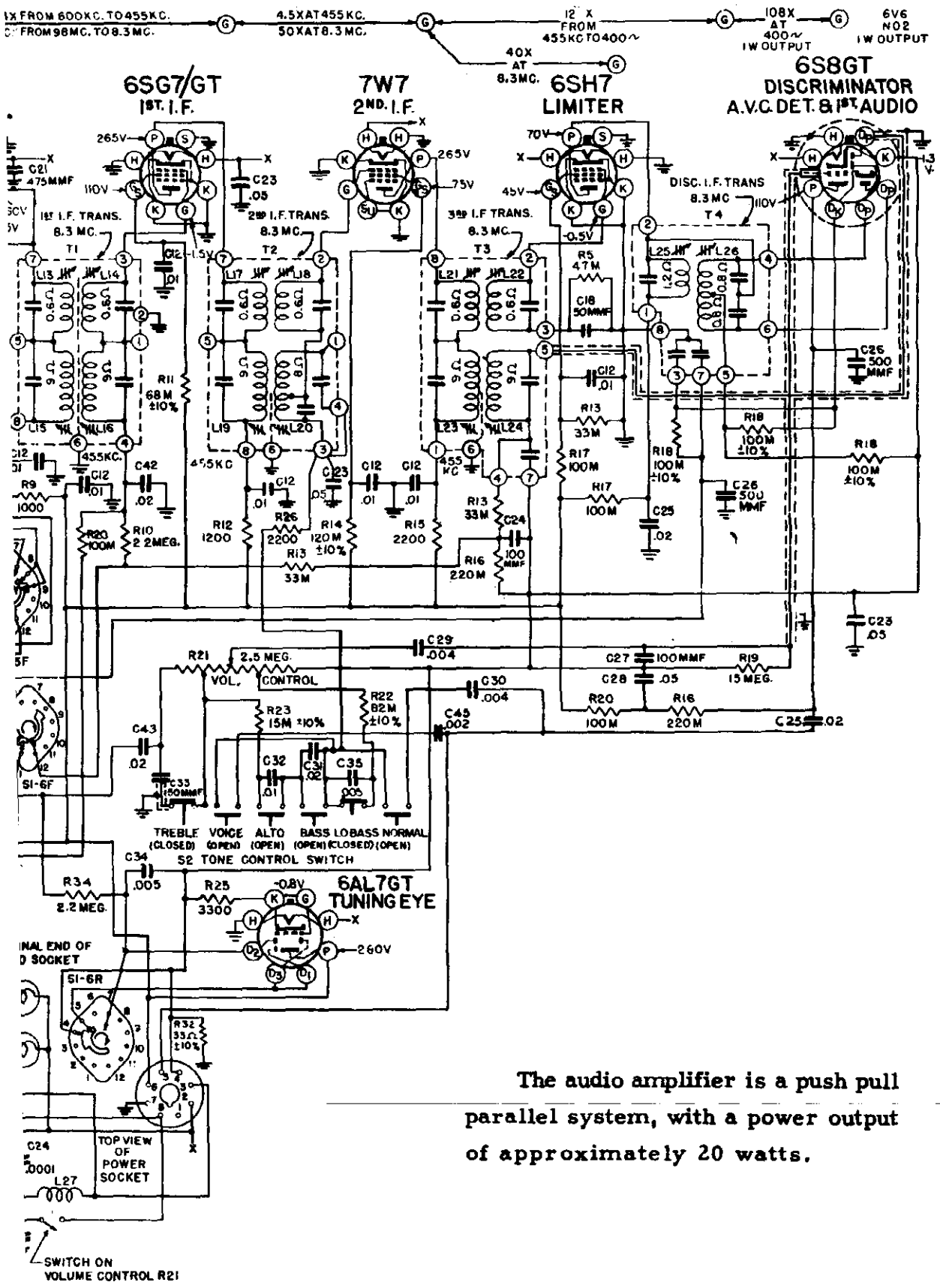

The audio amplifier is a push pull parallel system, with a power output of approximately 20 watts.

CLARI-SKEMATIX
Registered Trademark

MODEL 14H789,
CHASSIS 13D22

ZENITH RADIO CORP.

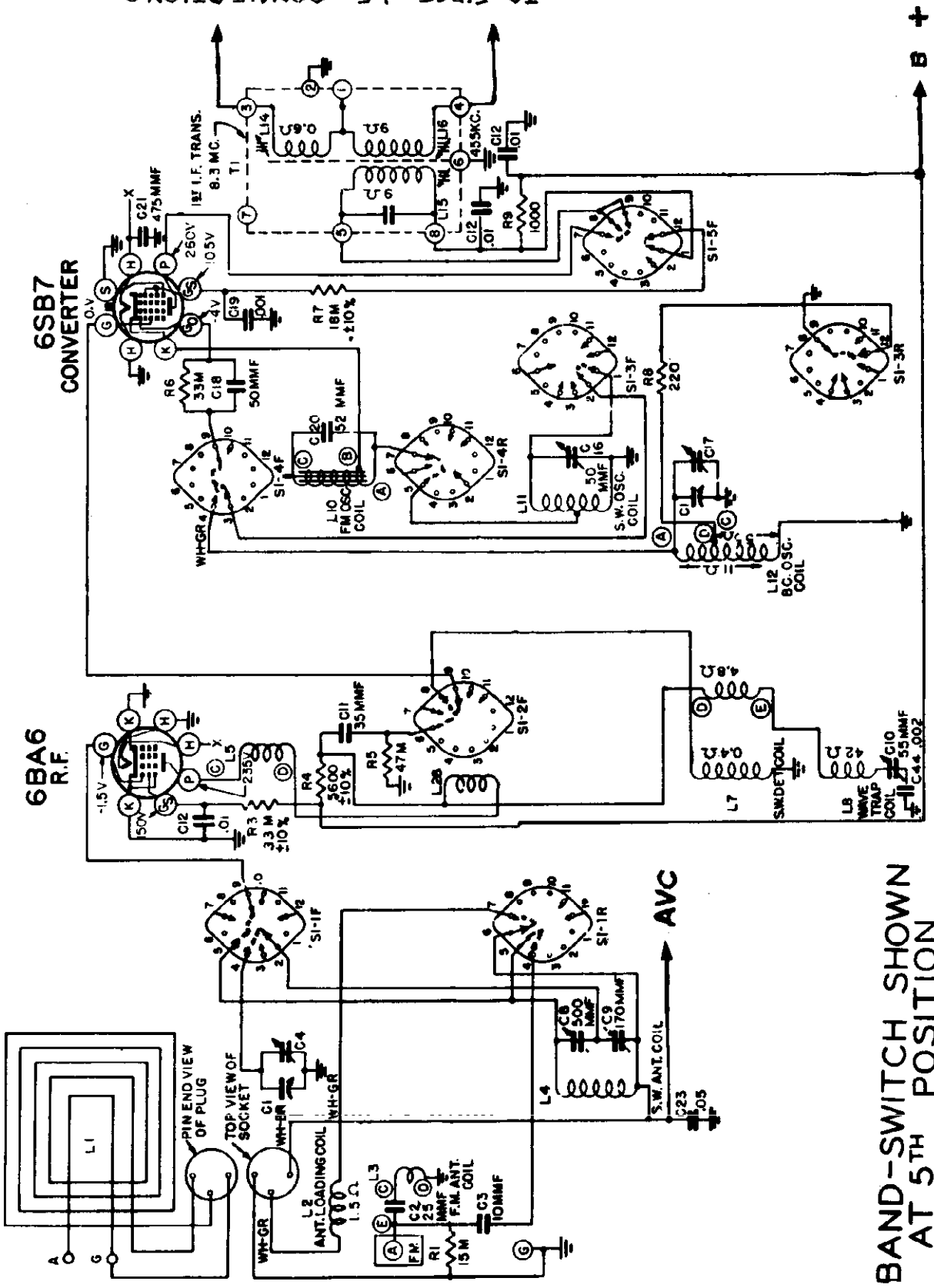

The 11C21 chassis incorporate a superheterodyne circuit with two stages of IF, and one stage of RF amplification on all bands.

AM Alignment: The alignment of this chassis on the short wave and standard broadcast band is conventional. The alignment slugs in the IF transformers are threaded and screw into the coil forms. The slugs are slotted for a small size fiber screw driver. Do not press hard on the aligning tool (fiber screw driver) or the threads in the coil forms will strip and adjustment will be impossible.

FM RF Alignment: The same coil slug arrangement which tunes the 100 MC FM band also tunes the 45 MC band. However, on 45 MC the band switch connects trimmer condensers in parallel and padding wires in series with the 100 MC coils. The tuning slugs are attached to threaded shafts and the slugs are varied in the field of the coils by turning the shafts clockwise or counter-clockwise. After adjustments the shafts must be secured with a drop of speaker cement.

FM IF Alignment: The same type of tuning slugs for aligning the AM IF Amplifier are used for the FM I.F. s. Observe the same precautions when making adjustments. The second 8.3 Mc IF stage is overcoupled. Overcoupling gives a wide band pass with good sensitivity. When an overcoupled stage is aligned with an unmodulated signal, the stage must be loaded. A 300 ohm carbon resistor soldered across the secondary of the second IF transformer provides a satisfactory load for this circuit. The resistor leads must be kept short to reduce the distributed capacity of the circuit.

When aligning a loaded stage, it will be found that considerable signal from the generator will be required, and that it will tune broadly. THE LOAD RESISTOR MUST BE REMOVED AFTER ALIGNMENT.

If the signal generator used does not have sufficient output to overcome the temporary loss caused by the load resistor, the load resistance may be increased or the signal fed into the preceding stage.

FM Discriminator Alignment: When the secondary of the discriminator is aligned (operation 9) use sufficient signal input to get a good positive and negative indication before setting the slug for zero reading. A center zero indicating meter is recommended for this adjustment, but is not absolutely necessary. Reversing the leads of a non-zero center meter, or observing closely when this meter starts to go to the left (negative) of zero will give the same results.

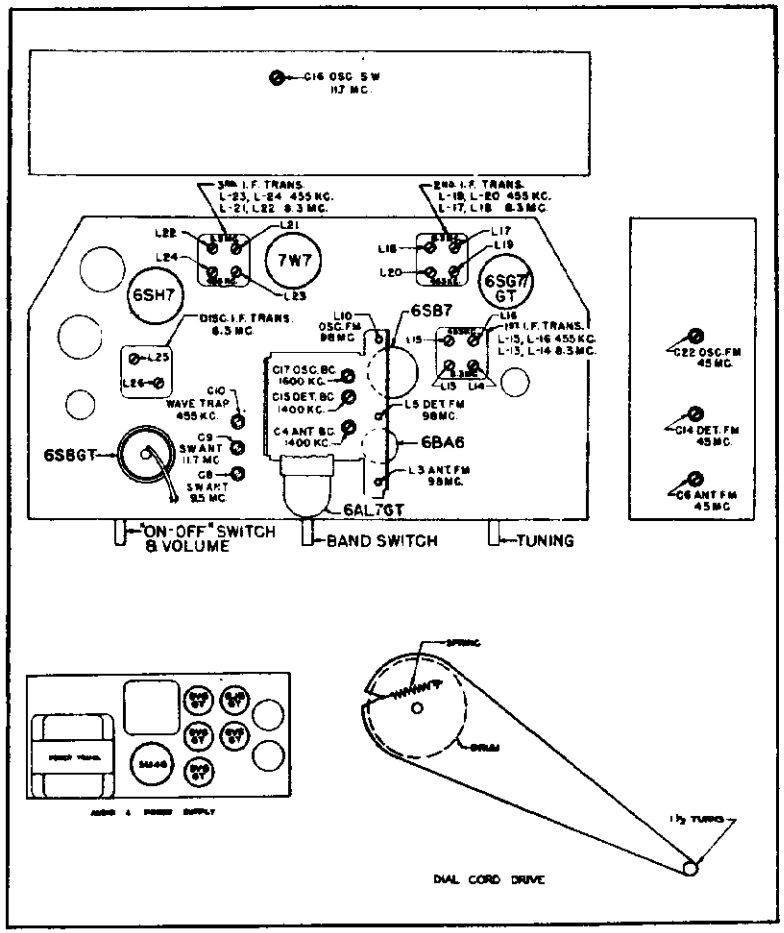

TUBE TRIMMER LOCATION AND DIAL CABLE DRAWING

ALIGNMENT PROCEDURE

Operation	Connect Oscillator to	Dummy Antenna	Input Signal Frequency	Band	Set Dial To	Adj. Trimmers	Purpose
1	Pin 8 on Converter Tube 6SB7 socket	.05 Mfd.	455 Kc. Modulated	BC	600 Kc.	L15,16,19,20,23 and 24	Align I.F. channel for maximum output
2	Pin 1 on R.F. tube 6AG5 socket	.05 Mfd.	455 Kc. Modulated	Aut.	Press any button on Auto.	C10	Adjust wavetrap to minimum
3	2 Turns loosely coupled to wavemag.		1600 Kc. Modulated	BC	1600 Kc.	C17	Set oscillator to dial scale
4	2 Turns loosely coupled to wavemag.		1400 Kc. Modulated	BC	1400 Kc.	C15 & C4	Align det. and ant. stages.
5	Antenna Post (Remove line ant.)	400 ohms	11.7 Mc. Modulated	SW	11.7 Mc.	C16	Set oscillator to dial scale
6	Antenna Post (Remove line ant.)	400 ohms	11.7 Mc. Modulated	SW	11.7 Mc.	C9	Align ant. stage
7	Antenna Post (Remove line ant.)	400 ohms	9.7 Mc. Modulated	SW	9.7 Mc.	C8	Align ant. stage Repeat Oper. 6 for maximum output
8 (a)	Pin 4 grid on 6SH7 limiter socket	.05 Mfd.	8.3 Mc. Unmodulated	FM 45		L25 coil slug primary disc.	Align primary of discriminator for maximum reading
9 (b)	Pin 4 grid on 6SH7 limiter socket	.05 Mfd.	8.3 Mc. Unmodulated	FM 45		L26 coil slug sec. of discr.	Adjust secondary of discr. for zero reading
10 (c)	Pin 6 (grid) on 7W7 2nd IF tube socket	.05 Mfd.	8.3 Mc. Unmodulated	FM 45		L21 & L22 prim. & sec. of 3rd IF transformer	Align 3rd IF transformer for maximum reading
11 (c) (d)	Pin 4 (grid) on 6SG7 1st IF tube socket	.05 Mfd.	8.3 Mc. Unmodulated	FM 45		L17 & L18 prim. & sec. of 2nd IF transformer	Align 2nd IF transformer for maximum reading
12 (c) (d)	Pin 8 (grid) on 6SB7 converter tube socket	.05 Mfd.	8.3 Mc. Unmodulated	FM 45		L13 & L14 prim. & sec. of 1st IF transformer	Align 1st IF transformer for maximum reading
13 (c)	Antenna Post (Remove line ant.)	270 ohms	98 Mc. Unmodulated	FM 100	98 Mc.	L10 Osc. coil Slug	Set oscillator to dial scale
14 (c)	Antenna Post (Remove line ant.)	270 ohms	98 Mc. Unmodulated	FM 100	98 Mc.	L5 and L3 Det. and RF coil slugs	Align det. and Ant. stage to maximum reading
15 (c)	Antenna Post (Remove line ant.)	270 ohms	45 Mc. Unmodulated	FM 45	45 Mc.	C22	Set oscillator to dial scale
16 (c)	Antenna Post (Remove line ant.)	270 ohms	45 Mc. Unmodulated	FM 45	45 Mc.	C14 and C6	Align detector and ant. stages for maximum reading

IMPORTANT: Alignment of this chassis will in most cases be unnecessary unless an IF or RF transformer is replaced or the adjustments have been tampered with.

A correct alignment can only be made if the following procedure is followed.

A vacuum tube voltmeter with an isolation resistor of 200,000 ohms in series with the hot lead will serve for FM adjustments. This lead must be shielded

An ordinary AC output meter connected across the primary or secondary of the output transformer will be satisfactory for all AM adjustments.

The signal generator output should be kept just high enough to get an indication on the meter.

(a) Vacuum Tube Voltmeter pin 5 on discriminator transformer to chassis (half discriminator load.)

(b) Vacuum Tube Voltmeter pin 7 on discriminator transformer to chassis (full discriminator load.)

(c) Vacuum Tube Voltmeter 6SH7 limiter grid (pin 4 to chassis).

(d) 300 ohm ½ watt carbon resistor soldered across the secondary L18 (pin 2 and 3 of 2nd IF trans.). The leads to the resistor must be as short as possible and the resistor removed before operation 13 is started.

ZENITH RADIO CORP.

MODEL 14H789,
CHASSIS 13D22

PARTS LIST

PART NO.	REF. NO.	DESCRIPTION
		DIAL ASSEMBLY
59-159		Dial Pointer
76-417		Band Switch Drive Shaft
76-418		Tuning Control Shaft
78-585		Dial Light Socket and Wire Assembly
78-586		Dial Light Socket and Wire Assembly
80-65		Indicator Tension Spring
80-402		Dial Cord Tension Spring
80-445		Tuner Arm Pressure Spring
80-446		Tuner Arm Tension Spring
100-36		Dial Light Bulb
188-32		Retaining Ring
S-11330		Dial Cord and Eyelet Assembly
S-12242		Idler Bracket and Shaft Assembly
S-12243		Bushing, Gear and Indicator Assembly
S-12245		Gear and Bushing Assembly
S-12246		Capacitor Pulley Bushing and Cam Assembly
S-12286		Idler Wheel and Rubber Ring Assembly
S-12294		Dial Scale and Bracing Strip Assembly (26-338)
S-12296		Tuner Arm Assembly
S-12297		Resonance Indicator Socket and Cable Assembly
		COILS AND CHOKES
S-11344	L12	Oscillator Coupler Coil Assem. (B.C. and Automatic)
S-11591		Wavemagnet Loading Coil Assem. (Used on S-12356)
S-12249	T1	1st I.F. Transformer Assembly
S-12250	T2	2nd I.F. Transformer Assembly
S-12251	T3	3rd I.F. Transformer Assembly
S-12252	T4	Discriminator Transformer Assembly
S-12256	L27	A.C. Line Choke Coil Assembly
S-12281	L8	Wavetrap Coil Assembly
S-12282	L4	S.W. Antenna Coil Assembly
S-12291	L7	S.W. Detector Coil Assembly
S-12292	L11	S.W. Oscillator Coil Assembly
S-12293	L9	Broadcast Detector Coil Assembly
S-12301	L3	F.M. Antenna Coil Assembly
S-12302	L5	F.M. Detector Coil Assembly
S-12303	L10	F.M. Oscillator Coil Assembly
S-12529	L2	Antenna Loading Coil Assembly
		CONDENSERS
22-162	C24	100 Mmfd. .600 V.
22-171	C28	.05 Mfd .600 V.
22-188		.02 Mfd .400 V.
22-196	C12	.01 Mfd .600 V.
22-242	C36	750 Mmfd. .500 V.
22-289	C33	50 Mmfd .600 V.
22-319	C34	.005 Mfd. .200 V.
22-365	C27	100 Mmfd. .600 V.
22-448	C30	.004 Mfd. .600 V.
22-829	C23	.05 Mfd .200 V.
22-830	C25	.02 Mfd .600 V.
22-912		.002 Mfd. .600 V.
22-1041	C38	.005 Mfd. .600 V.
22-1126	C32	.01 Mfd .400 V.
22-1127	C31	.02 Mfd .400 V.
22-1135	C35	.005 Mfd. .600 V.
22-1138	C26	500 Mmfd. .600 V.
22-1169	C19	.001 Mfd. .600 V.
22-1257		.005 Mfd. 1000 V.
22-1362	C29	.004 Mfd. .600 V.
22-1363	C1	Three Gang Variable
22-1367	C18	50 Mmfd. (Ceramic) .500 V.
22-1386		.02 Mfd .200 V.
22-1431		.001 Mfd. .600 V.
22-1493	C6	Trimmer (F.M. Ant.)
22-1494	C14	Trimmer (F.M. Det.)
22-1497	C-8-9-10	Trimmer (S.W. Antenna and Wave Trap
22-1502	C16	Trimmer (S.W. Osc.)
22-1503	C7	150 Mmfd. .300 V.
22-1504	C3	10 Mmfd. (Ceramic) .500 V.
22-1505	C13	17 Mmfd. (Ceramic) .500 V.
22-1506	C5	22 Mmfd. (Ceramic) .500 V.
22-1507	C2	25 Mmfd. (Ceramic) .500 V.
22-1508	C11	35 Mmfd. (Ceramic) .500 V.
22-1509	C20	52 Mmfd. (Ceramic) .500 V.
22-1514	C22	Trimmer (F.M. Osc.)
		RESISTORS
63-260	R18	100M Ohm .1/4 W.
63-296	R16	220M Ohm .1/4 W.
63-380	R17	100M Ohm. 1 W.
63-441		1 Megohm .1/4 W.
63-503	R23	15M Ohm (Insulated) .1/4 W.
63-510	R7	18M Ohm (Insulated) 2 W.
63-579	R8	220 Ohm .1/4 W.
63-585	R26	2200 Ohm. .1/4 W.
63-586	R25	3300 Ohm. .1/4 W.
63-592	R13	33M Ohm .1/4 W.
63-593	R5	47M Ohm .1/4 W.
63-595	R20	100M Ohm. .1/4 W.
63-600	R10	2.2 Megohm. .1/4 W.
63-605	R9	1M Ohm. .1/2 W.
63-607	R1	15M Ohm .1/2 W.
63-620		33 Ohm. .1/4 W.
63-626		120 Ohm .1/4 W.
63-651	R22	82M Ohm .1/4 W.
63-712	R6	33M Ohm (Insulated) .1/4 W.
63-715	R2	100M Ohm. (Insulated). .1/4 W.
63-752		1800 Ohm (Insulated). .1/4 W.
63-803	R15	2200 Ohm. .1/2 W.
63-1166	R3	33M Ohm .1/2 W.
63-960	R11	68M Ohm .1/2 W.
63-976	R19	15 Megohm .1/4 W.
63-1349	R21	Volume Control and Switch.
63-1446	R12	1200 Ohm. .1/2 W.
63-1447	R14	120 Ohm .1/2 W.
63-1448	R4	5600 Ohm. .1/2 W.
		AUDIO POWER SUPPLY
22-1128	C2	.02 Mfd .600 V.
22-1134	C1	.002 Mfd. 1000 V.
22-1515	C3, C4	Two Section Electrolytic 15 Mfd.-30 Mfd. .450 V.
58-149	P1	Moulded Plug - 7 Prong (Power Cable)
63-577	R5	100 Ohm .1/4 W.
63-648	R2	47M Ohm .1/4 W.
63-776		330M Ohm. (Insulated). .1/4 W.
63-797		2200 Ohm. .1/2 W.
63-1551		Candohm Resistor
63-1848	R8	33M Ohm .1/2 W.
63-1880		180M Ohm (Insulated). .1/2 W.
63-1883		220M Ohm (Insulated). .1/2 W.
78-274		Socket - Electrolytic Capacitor (2 used)
78-611		Socket - Octal Tube (6 used)
78-644	P.L.1.	Socket - Single Contact
78-732	S01	Socket - Speaker Plug
95-956	T1	Power Transformer
95-957	L1	Filter Choke
S-13489		Internal Cable Assembly
S-13490		External Cable Assembly
		AUTOMATIC TUNING UNIT
12-900		Automatic Tuning Unit Mtg. Brkt.
22-846		Automatic Tuning Unit Trimmer
22-847		Automatic Tuning Unit Trimmer
22-848		Automatic Tuning Unit Trimmer
22-859		Automatic Tuning Unit Trimmer
22-868	C37	480 Mmfd. Silver Mica
22-873		Automatic Tuning Unit Trimmer
24-287		Automatic Tuning Unit Cardboard Cover
85-370		Automatic Tuning Unit Switch.
112-223		Adjusting Screw and Core (4 used)
112-292		Adjusting Screw and Core (1 used)
S-6928		Automatic Tuning Coil (Red)
S-6929		Automatic Tuning Coil (Green)
S-7021		Automatic Tuning Coil (Yellow)
S-7859		Automatic Tuning Coil (Blue)
S-10100		Automatic Tuning Coil (White)
S-12331		Automatic Tuning Unit Complete
		AUTOMATIC ESCUTCHEON PARTS
46-674		Automatic Station Selector Knob (5 used)
46-681		Phono Reject Knob
57-1293		Automatic Plastic Escutcheon Plate only
76-342		Automatic Knob Retaining Shaft
83-984		Rubber Strip
83-1112		Trim Strip
S-12399		Automatic Bracket and Latch Assembly
S-13671		Automatic Tuning Knob and Escutcheon Assembly Complete

MODEL 14H789,
CHASSIS 13D22

ZENITH RADIO CORP.

PARTS LIST--Continued

PART NO.	REF. NO.	DESCRIPTION
		RADIORGAN ESCUTCHEON PARTS
57-1294		RADIORGAN ESCUTCHEON PLATE ONLY.
76-342		RADIORGAN KNOB SHAFT.
83-1112		RADIORGAN ESCUTCHEON TRIM STRIP
S-9606		RADIORGAN STRIP AND CONTACT ASSEMBLY.
S-12397		RADIORGAN ESCUTCHEON BRACKET AND LATCH ASSEMBLY.
S-13472		RADIORGAN KNOB AND EYELET ASSEMBLY - NORMAL
S-13475		RADIORGAN KNOB AND EYELET ASSEMBLY - ALTO
S-13476		RADIORGAN KNOB AND EYELET ASSEMBLY - VOICE.
S-13667		RADIORGAN ESCUTCHEON AND KNOB ASSEMBLY COMPLETE
S-13668		RADIORGAN KNOB AND EYELET ASSEMBLY - LO-BASS.
S-13669		RADIORGAN KNOB AND EYELET ASSEMBLY - BASS
S-13670		RADIORGAN KNOB AND EYELET ASSEMBLY - TREBLE
		MISCELLANEOUS
11-87		LINE CORD AND PLUG.
27-87	C21	SILVER MICA DISC (475 MMF.)
57-1054		SPARK PLATE
58-133		NINE PRONG PLUG (USED ON S-13677).
78-363		SOCKET - WAVEMAGNET PLUG.
78-376		SOCKET - OCTAL BASE TUBE (8 CONTACT).
78-580		SOCKET - NINE CONTACT (PHONO)
78-582		SOCKET - NINE CONTACT (2 USED ON S-13677)
78-684		SOCKET - OCTAL BASE TUBE (MOULDED)
78-685		SOCKET - MINIATURE TUBE
80-451		TUBE RETAINING RING
125-49		CHASSIS MTG. RUBBER GROMMET
126-379		LOKTAL TUBE SHIELD.
149-54		F.M. IRON CORE AND SPRING (3 USED)
197-15		LIGHT DIFFUSING CUP
S-12356	S1	BAND SWITCH AND SHIELD ASSEMBLY (85-340).
S-12360		FILAMENT CABLE ASSEMBLY #1.
S-12361		CABLE ASSEMBLY #2

PART NO.	REF. NO.	DESCRIPTION
		CABINET PARTS
19-123		PHONO UNIT MTG. CLIP (3 USED)
24-388		RECORD CHANGER COMPARTMENT COVER
49-600	SP1	12" P.M. SPEAKER.
		206-600 OUTPUT TRANSFORMER.
		208-600 CONE AND VOICE COIL
57-1066		DIAL ESCUTCHEON PLATE
57-1289		ORNAMENTAL PLATE (ZENITH) (USED ON S-13484)
69-193		1/4-20 x 2" R.H.M.S. (2 USED ON S-12545)
78-761		PILOT LIGHT SOCKET.
80-423		CHASSIS LIFT SPRING (2 USED).
80-463		PHONO UNIT MTG. SPRING (4 USED)
83-1244		RECORD CHANGER TRIM STRIP
90-367		PILOT LIGHT TUBE.
93-392		3-32 x 33/64 x 1/8 BROWN FELT WASHER (3 USED)
100-36		PILOT LIGHT BULB HD
112-558		#10-32 x 7/8" PHILLIPS FLAT HD. M.S. (CHASSIS MTG.) (4 USED).
112-670		RECORD CHANGER MTG. SCREW (1 USED).
112-671		RECORD CHANGER MTG. SCREW (3 USED).
114-257		#10 x 1-3/8" SLOTTED HEX HD. SELF TAPPING SCREW (2 USED ON S-13675)
171-7		PILOT LIGHT LENS.
192-96		DIAL CRYSTAL.
202-506		F.M. INSTRUCTION BOOK
202-512		PHONO INSTRUCTION BOOK.
202-514		UNPACKING INSTRUCTIONS.
202-515		INSTRUCTION BOOK.
202-517		STATION IDENTIFICATION TABS
S-12545		PHONO LIFT SPRING AND BUSHING ASSEMBLY (2 USED)
S-13058		F.M. DIPOLE AND SHORT WAVE ANTENNA ASSEMBLY.
S-13484		RECORD CHANGER SUPPORT FRAME AND ARM ASSEMBLY.
S-13672		TUNING KNOB AND RING ASSEMBLY (46-680) (3 USED)
S-13673		WAVEMAGNET AND HINGE ASSEMBLY (COMPLETE) (TYPE 36A)
S-13675		RECORD CHANGER (INTERMIXER)
S-13677		INTERCONNECTING CABLE ASSEMBLY.

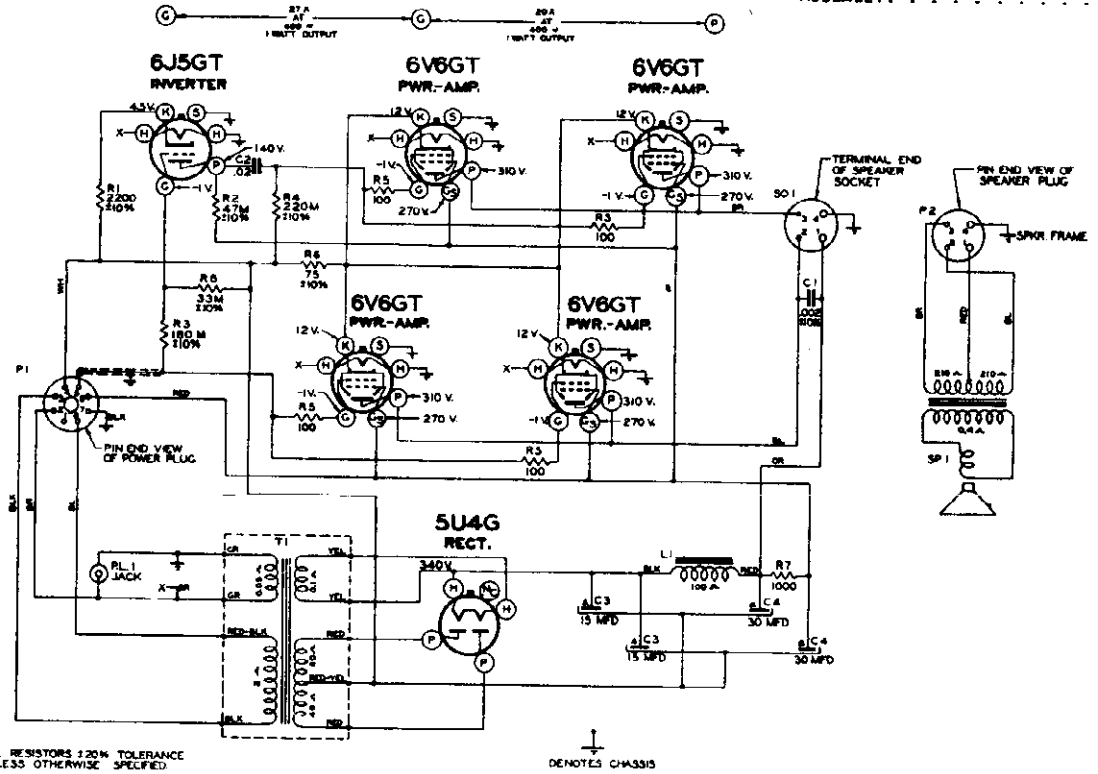

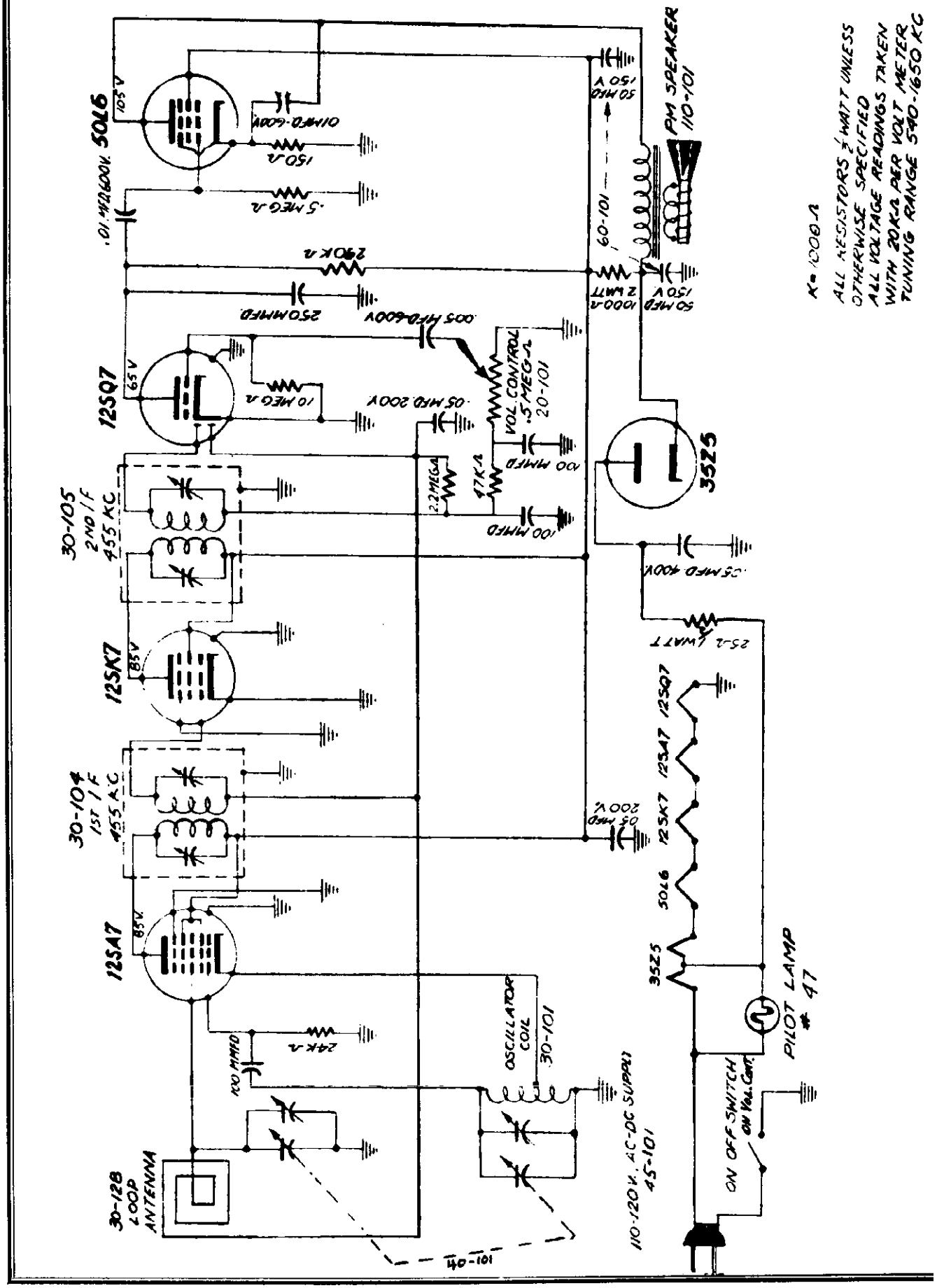
K = 1000 Ω
ALL RESISTORS ½ WATT UNLESS OTHERWISE SPECIFIED
ALL VOLTAGE READINGS TAKEN WITH 20KΩ PER VOLT METER
TUNING RANGE 540-1650 KC
PM SPEAKER 110-101
50L6
12SQ7
12SK7
12SA7
3525
30-105 2ND I.F. 455 KC
30-104 1ST I.F. 455 A.C.
30-128 LOOP ANTENNA
OSCILLATOR COIL 30-101
45-101
110-120 V. AC-DC SUPPLY
PILOT LAMP #47
ON OFF SWITCH on Vol. Cont.
VOL. CONTROL .5 MEG Ω 20-101
60-101
40-101

MODEL 701 ALLIED PURCHASING, INC.

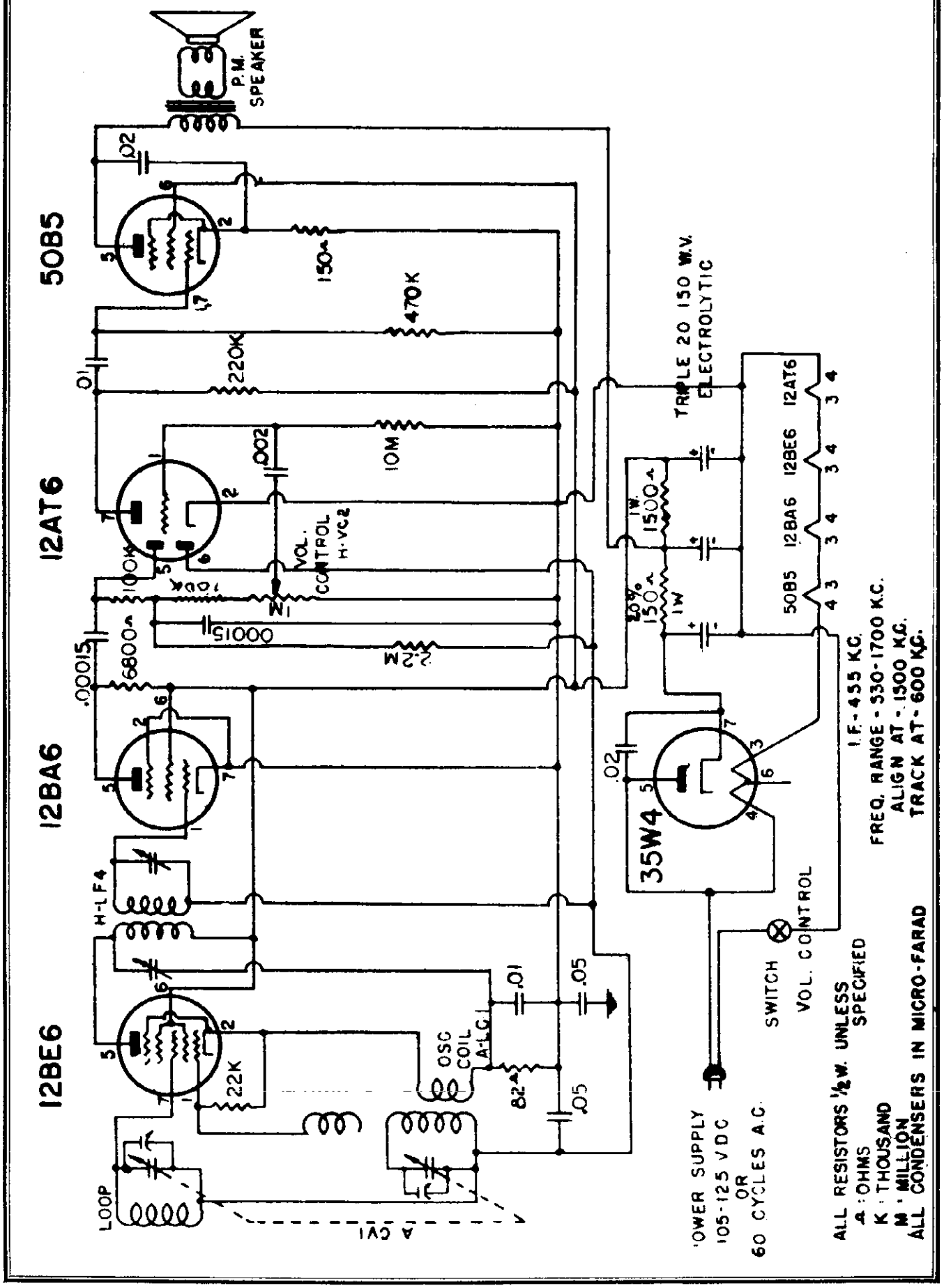

©John F. Rider

AMERICAN COMMUNICATIONS CORP. MODEL HK-2

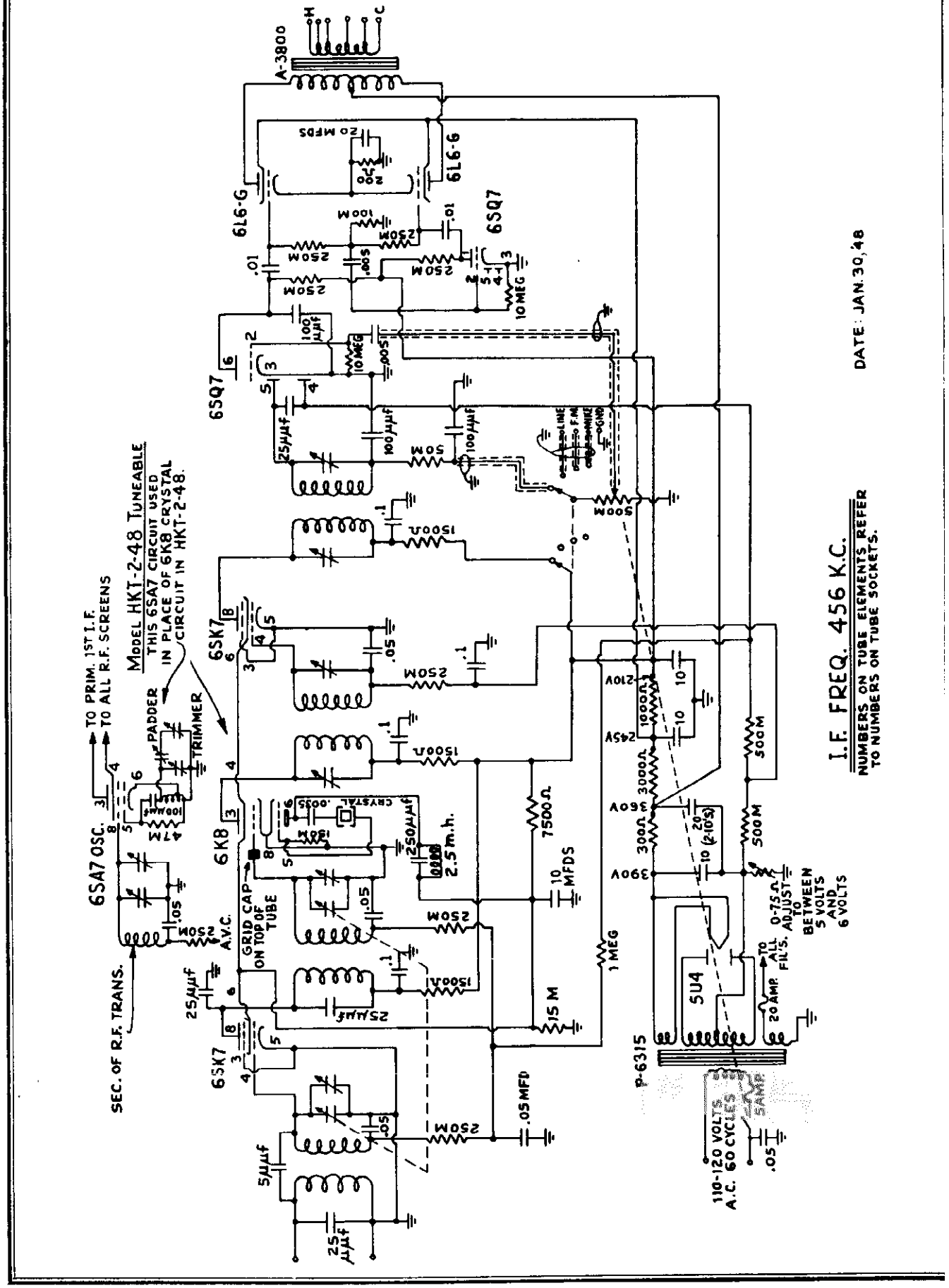

MODEL 35H5 ANDREA RADIO CORP.

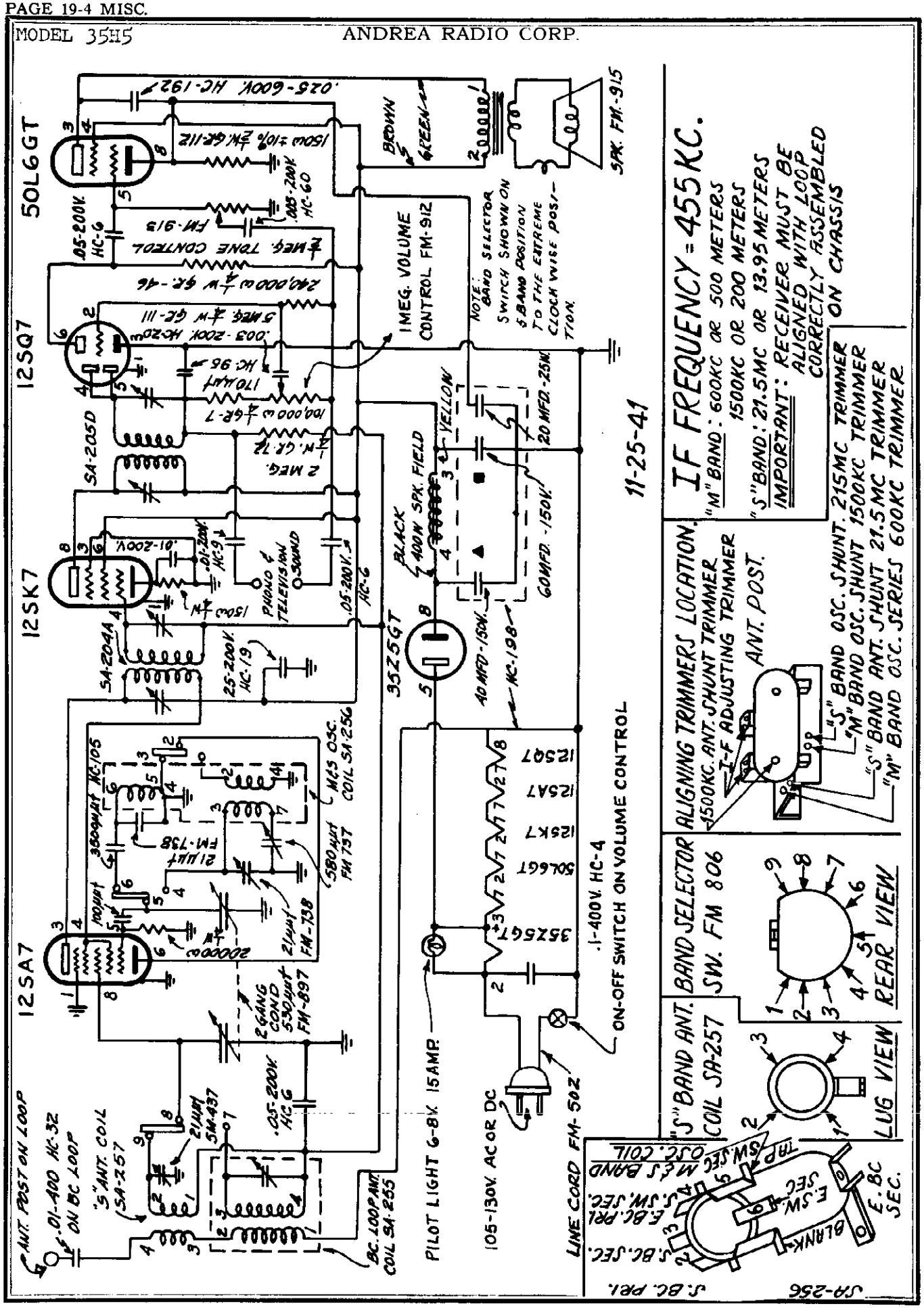

© John F. Rider

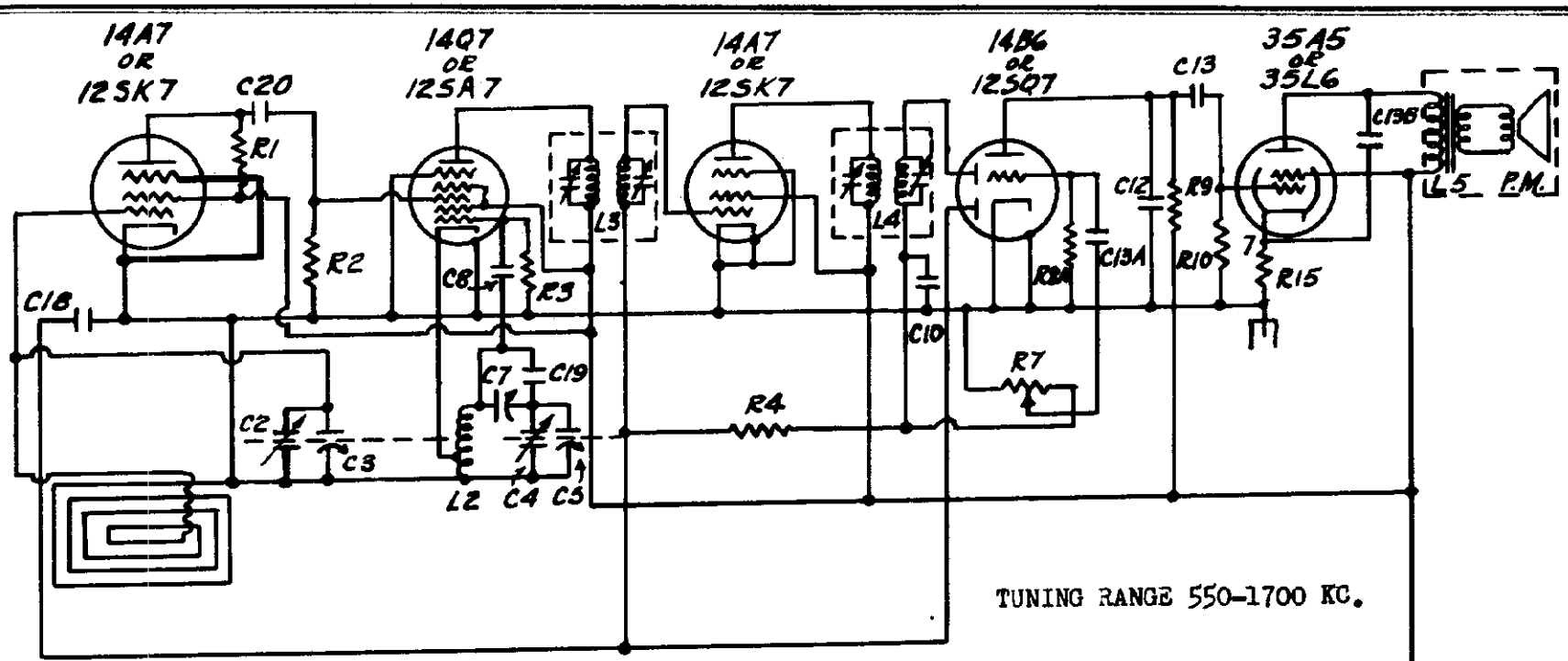

ITEM	DESCRIPTION
L 1	Antenna Loop
L 2	Oscillator Coil
L 3	Input I.F. Coil 455 K.C.
L 4	Output I.F. Coil 455 K.C.
L 5	Output Transformer
C-2	Ant. Sect. 2 Gang Cond.
C-3	Antenna Trimmer
C-4	Osc. Sect. 2 Gang Cond.
C-5	Oscillator Trimmer
C-7	Oscillator Padder
C-8	100 MMfd- Mica
C-10	250 MMfd- Mica
C-12	350 MMfd- Mica
C-13	.01 Mfd - 400 W.V.
C-13A	.01 Mfd - 400 W.V.
C-13B	.01 Mfd - 400 W.V.
C-16	40 Mfd - 150 W.V.
C-17	40 Mfd - 150 W.V.

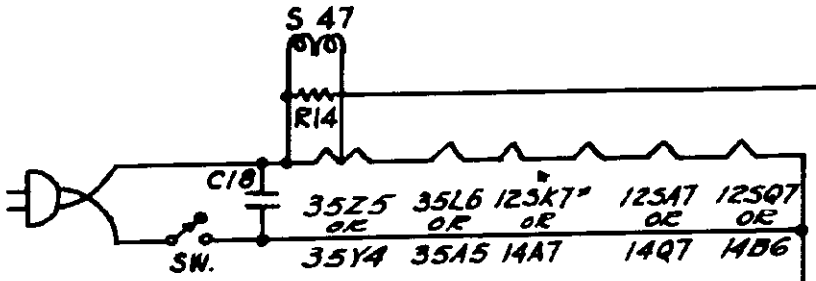

C-18	.05 Mfd - 200 W.V.	R-14	200Ω - 3 Watt
C-19	250 MMf - Mica.	R-15	175Ω - 1/2 Watt
C-20	300 MMf - Mica	R-1	2500Ω - 1/2 Watt
R-3	20,000Ω - 1/2 Watt	R-2	50,000Ω - 1/2 Watt
R-4	2 MegΩ - 1/2 Watt		
R-7	.5 MegΩ - Pot.	SW.	A.C. Switch on Volume Control
R-8A	4.7 MegΩ - 1/2 Watt		
R-9	350,000Ω - 1/2 Watt		
R-10	500,000Ω - 1/2 Watt	S-47	Brown Bead-Bayonet-150 Ma.
R-11	470Ω - 5 Watt		

= CHASSIS GROUND

ART RADIO CO. MODEL 6 tube MISC. PAGE 19-

MODEL 4 Tube
AC-DC

AVALON RADIO CO.

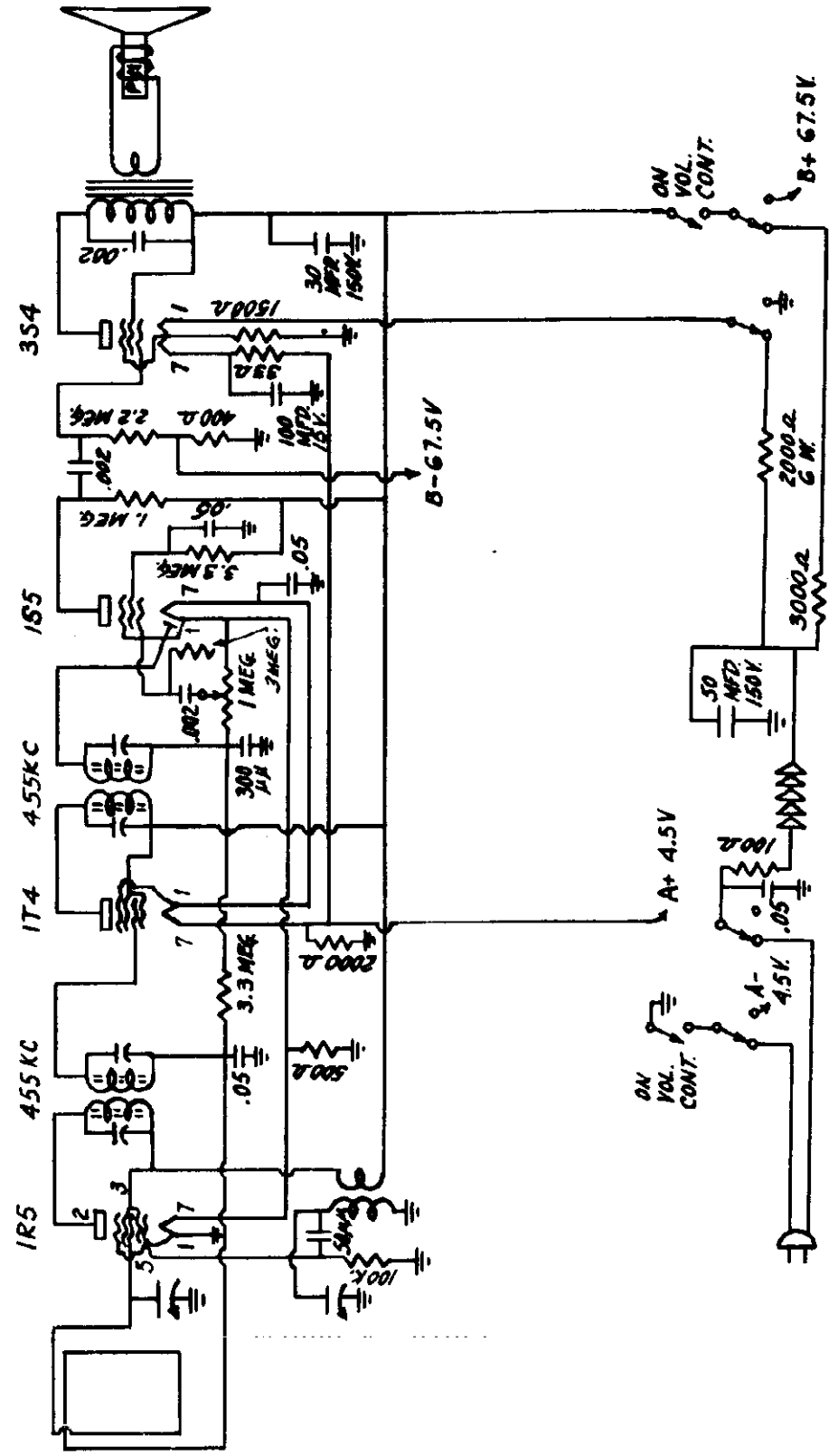

©John F. Rider

BUTLER BROTHERS

MODELS RD-292, RD-295

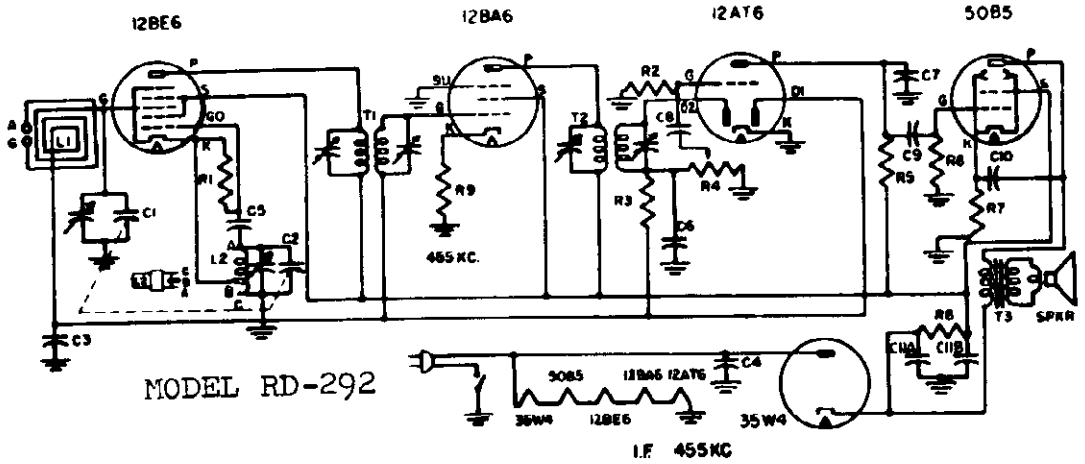

PART NO.	CIRC. SYM.	DESCRIPTION
CV-10002-E	C1, C2	Condenser - Variable Tuning with Drum
CP-14503	C3, C4	Condenser - .05 Mfd. 400 Volt
CM-15500	C5	Condenser - .00005 Mfd. Mica
CM-15251	C6, C7	Condenser - .00025 Mfd. Mica
CP-14103	C8, C9	Condenser - .01 Mfd. 400 Volt
CP-14503	C10	Condenser - .05 Mfd. 400 Volt
CL-10001	C11A, C11B	Condenser - 20/20 Mfd. 150 Volt Elect.
RC-32002	R1	Resistor-Carbon 20,000 ohms ½ watt
RC-31005	R2	Resistor-Carbon 10 Meg. ½ watt
RC-32004	R3	Resistor-Carbon 2 Meg. ½ watt
VC-10105	R4	Volume Control - 1 Meg. (with switch)

PART NO.	CIRC. SYM.	DESCRIPTION
RC-32503	R5	Resistor-Carbon 258,000 Ohms ½ watt
RC-35003	R6	Resistor-Carbon 500,000 Ohms ½ watt
RC-31500	R7	Resistor-Carbon 150 Ohms ½ watt
RC-32000	R8	Resistor-Carbon 200 Ohms ½ watt
RC-31500	R9	Resistor-Carbon 150 Ohms ½ watt
AL-10004	L1	Loop Antenna
TRC-10000-D	L2	Coil Oscillator
TS-10000	T1	Transformer 1st. I.F.
TS-10001	T2	Transformer 2nd. I.F.
TO-10000	T3	Transformer-Output for speaker
SR-10000	SPKR	Speaker, 4" P.M.

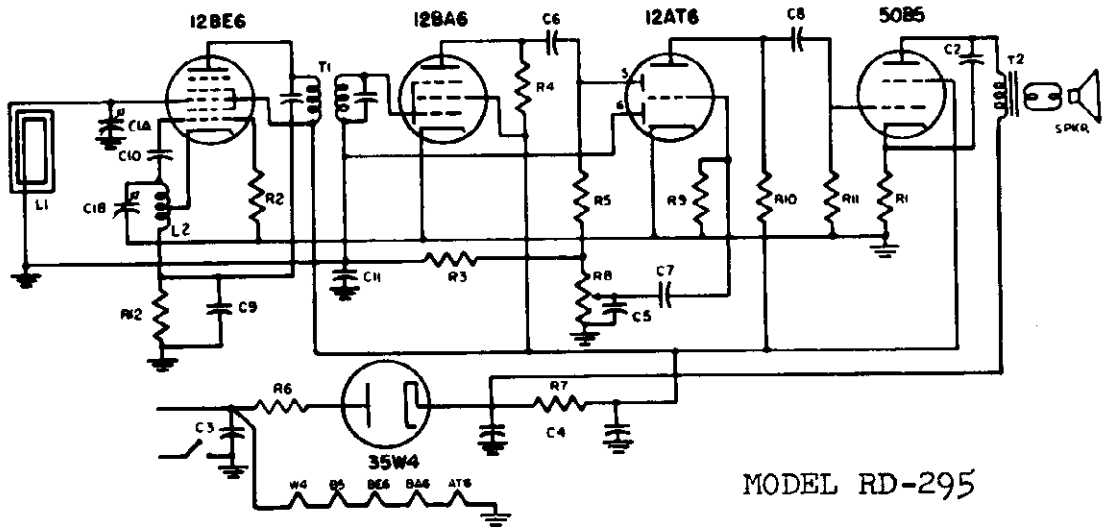

Part No.	Circuit Symbol	Description
CV-10008	C1	Variable condenser for Model 5A7
CPP-14203	C2	Condenser paper tub .02 mfd-400V
CPP-14503	C3	Condenser paper tub .05 mfd-400V
CLP-10007	C4	Condenser electrolytic 50-30 mfd-150V
CMP-15251	C5, C6	Condenser mica 250 mmf-500V
CPP-12103	C7, C8	Condenser paper tub .01 mfd-200V
CPP-11103	C9	Condenser paper tub .01 mfd-150V
CMP-15500	C10	Condenser mica 50 mmf-500V
CPP-12203	C11	Condenser paper .02 mfd-200V
RCP-31500	R1, R12	Resistor carbon 150 ohm ½ watt
RCP-31002	R2	Resistor carbon 10,000 ohm ½ watt
RCP-32204	R3	Resistor carbon 2.2 megohm ½ watt
RCP-36801	R4	Resistor carbon 6800 ohm ½ watt
RCP-31003	R5	Resistor carbon 100,000 ohm ½ watt

Part No.	Circuit Symbol	Description
RCP-30220	R6	Resistor carbon 22 ohm ½ watt
RCP-41001	R7	Resistor carbon 1000 ohm 1 watt
VCP-10105	R8	Volume control 1 megohm and switch
VCP-12105	R8	Volume control for Model 5A7- 1 megohm
RCP-31005	R9	Resistor carbon 10 megohm ½ watt
RCP-32203	R10	Resistor carbon 220,000 ohm ½ watt
RCP-34703	R11	Resistor carbon 470,000 ohm ½ watt
ALP-10013	L1	Loop antenna
TRCP-10000-D	L2	Oscillator coil
TSP-10002	T1	I.F. Transformer
TOP-10000	T2	Output transformer
SRP-10005	SPKR	Speaker P.M. 3" round for Model 5A7

MODEL 607AC ELECTROMATIC MFG. CORP.

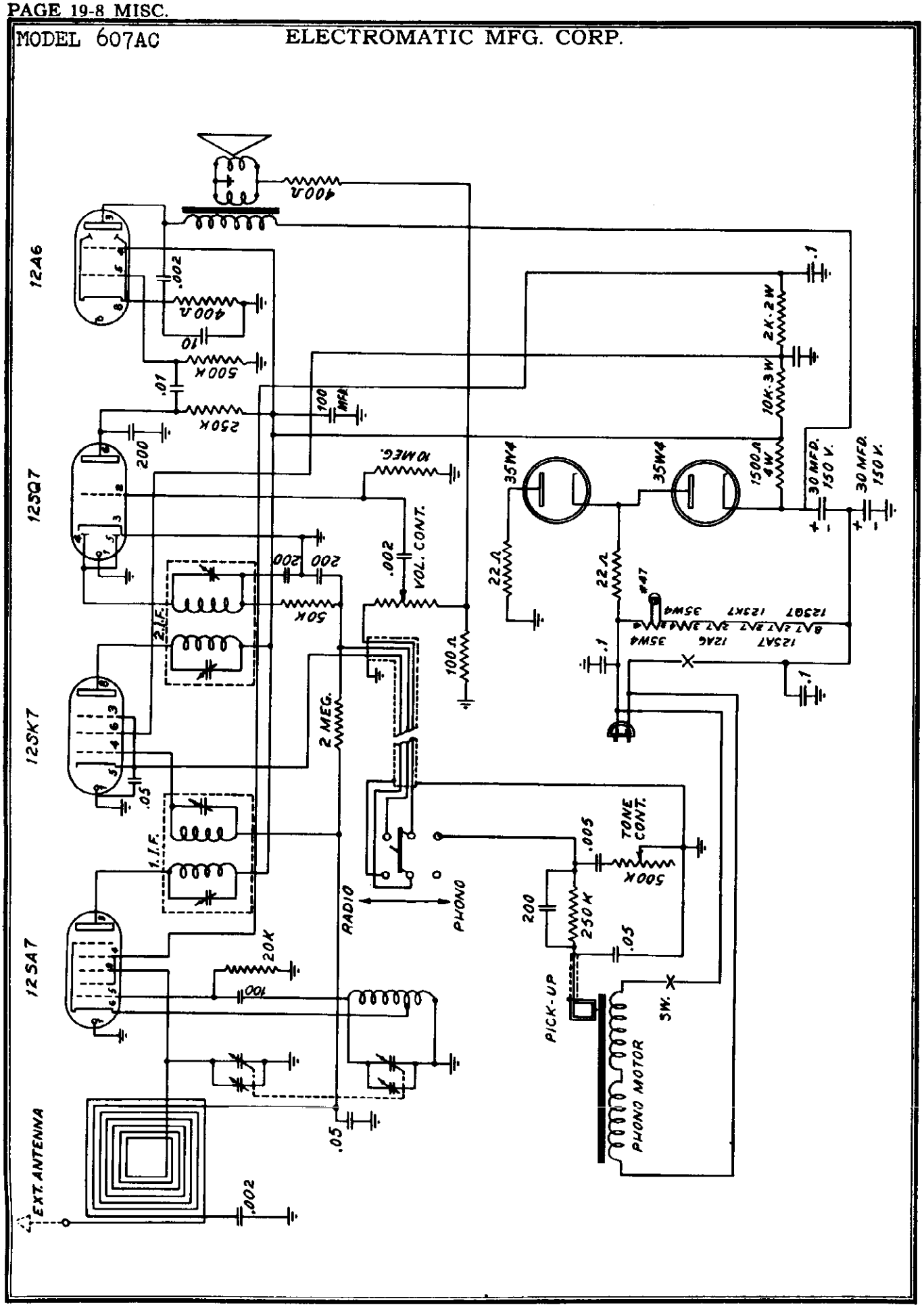

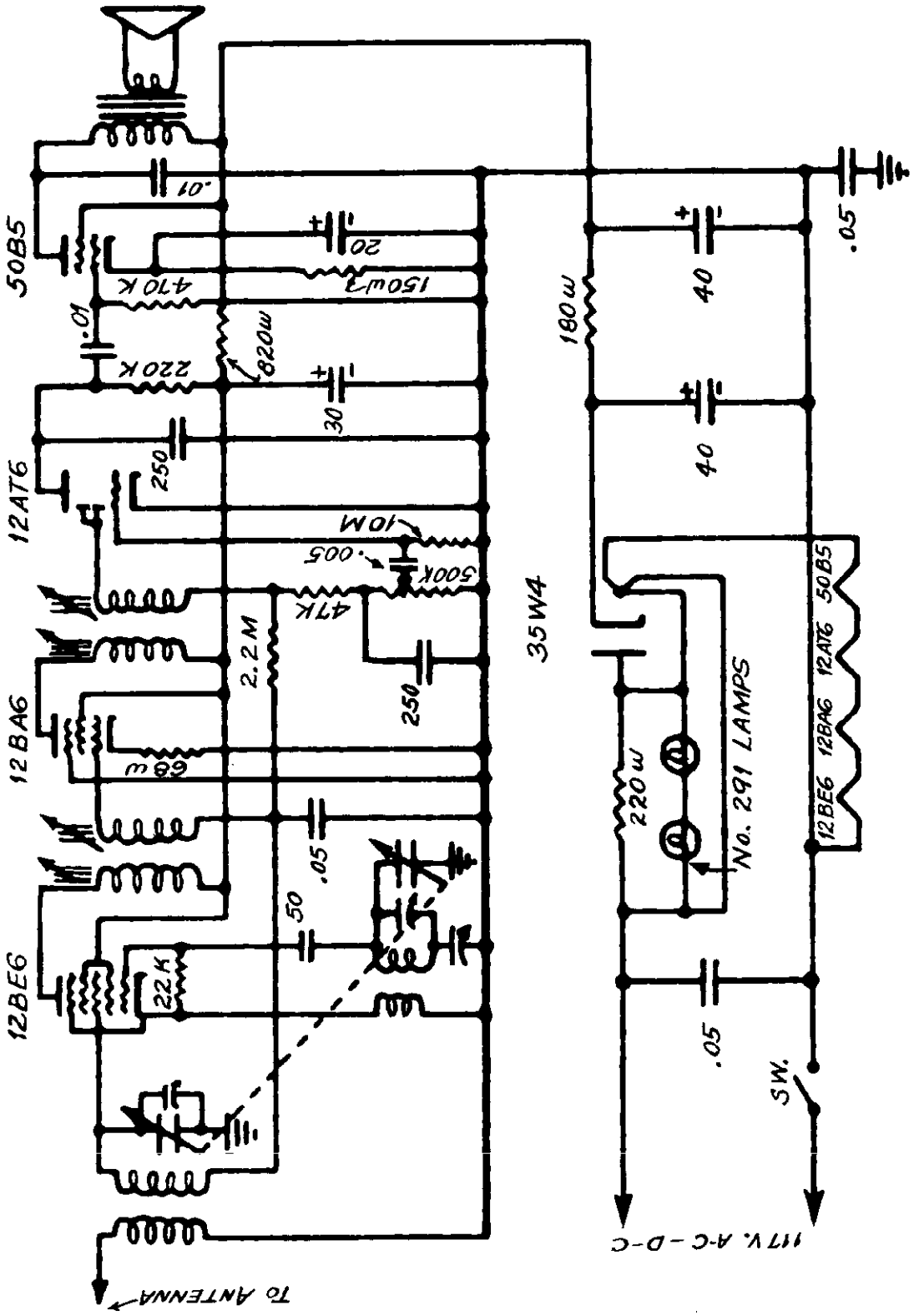
50B5
12AT6
12BA6
12BE6
.01
20
470K
150ω
.01
220K
820ω
30
250
10M
.005
500K
47K
2.2M
250
68ω
.05
50
22K
35W4
180ω
40
40
.05
220ω
No. 291 LAMPS
50B5
12AT6
12BA6
12BE6
.05
SW.
117V. A-C-D-C
To ANTENNA

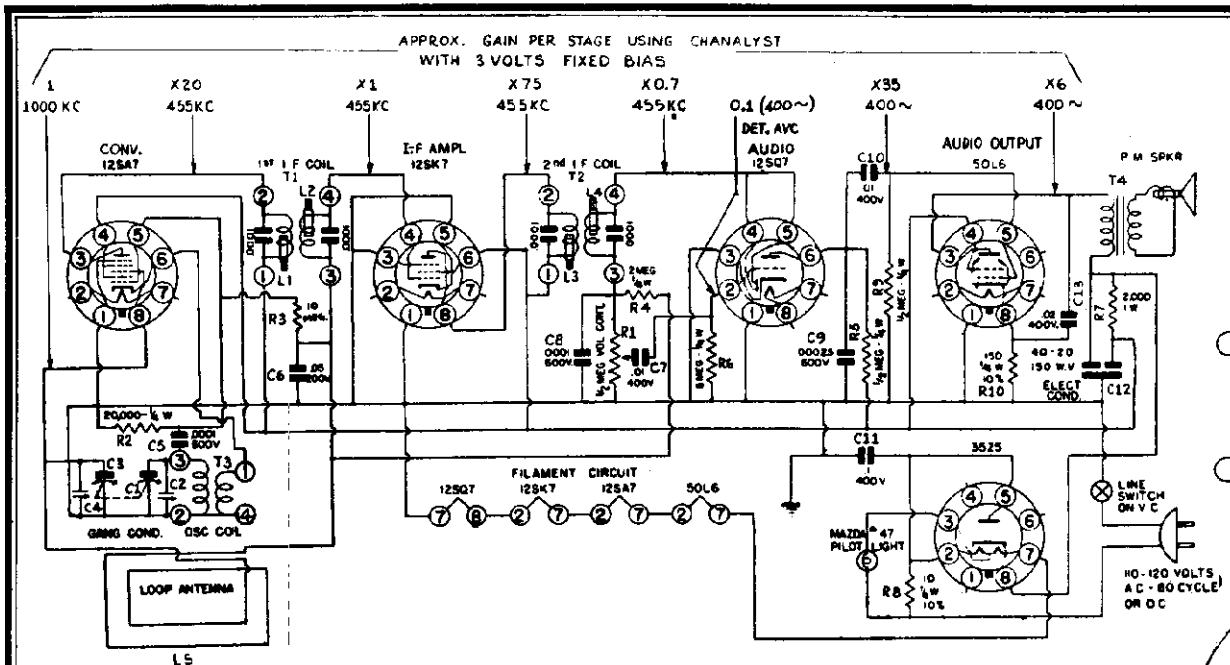

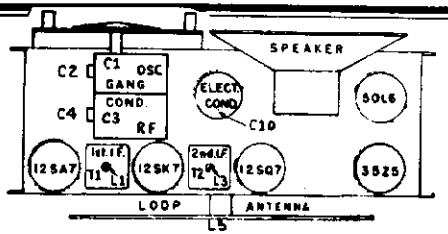

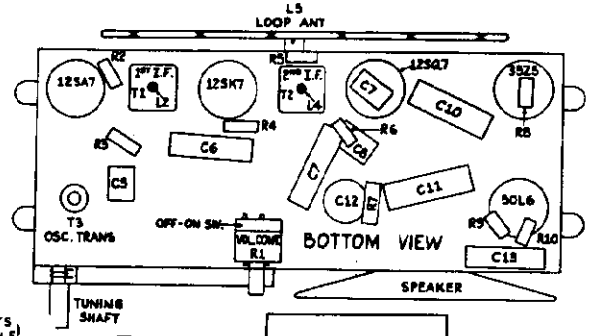

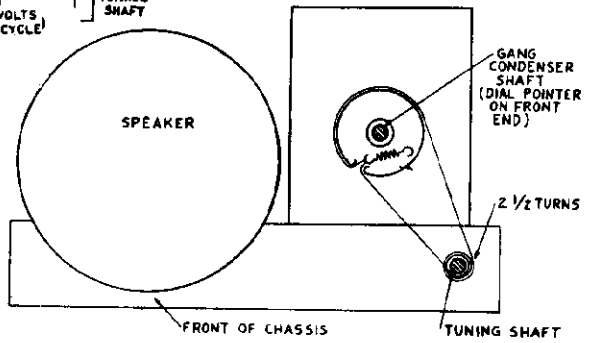

SOCKET	PIN	VTVM	20,000Ω/V DC	1,000Ω/V DC	RESISTANCE
12SA7GT	1	0	0	0	0
CONV	2	AC	AC	AC	25Ω
	3	+78	+78	+76	OVER 5 MEGS
	4	+78	+78	+76	OVER 5 MEGS
	5	-9	-8	-4.5	17K
	6	0	0	0	1Ω
	7	AC	AC	AC	60Ω
	8	-6	-2	-0.5	1.3 MEGS
12SK7GT	1	0	0	0	0
I-F AMPL.	2	AC	AC	AC	15Ω
	3	0	0	0	0
	4	-2	-0.8	-0.4	1.3 MEGS
	5	0	0	0	0
	6	+78	+78	+76	OVER 5 MEGS
	7	AC	AC	AC	25Ω
	8	+78	+78	+76	OVER 5 MEGS
12SQ7GT	1	0	0	0	0
DET. AVC	2	-1	-0.8	-0.4	600Ω
AUDIO	3	0	0	0	0
	4	-1.5	-0.4	-0.2	400K
	5	-1.5	-0.4	-0.2	400K
	6	+48	+46	+12	OVER 5 MEGS
	7	AC	AC	AC	16Ω
	8	AC	AC	AC	0
50L6GT	1	0	0	0	0
AUDIO OUTPUT	2	AC	AC	AC	40Ω
	3	+115	+115	+115	OVER 5 MEGS
	4	+75	+75	+75	OVER 5 MEGS
	5	0	0	0	550K
	6	--	--	--	--
	7	AC	AC	AC	60Ω
	8	+6	+5	+5	150Ω
3525GT	1	--	--	--	--
	2	AC	AC	AC	120Ω
	3	AC	AC	AC	110Ω
	4	--	--	--	--
	5	AC	AC	AC	120Ω
	6	AC	AC	AC	120Ω
	7	AC	AC	AC	90Ω
	8	+115	+115	+115	OVER 5 MEGS

"NOTE" ALL VOLTAGE AND RESISTANCE MEASUREMENTS MADE WITH RESPECT TO CHASSIS GROUND AND WITH A LINE VOLTAGE OF 116 V. A. C.

DIAL CORD DRIVE

ALIGNMENT

THE CHASSIS MUST BE REMOVED FROM THE CABINET IN ORDER TO ALIGN THE RECEIVER. CONNECT THE OUTPUT METER ACROSS THE VOICE COIL. CONNECT THE SIGNAL GENERATOR TO THE STANDARD HAZELTINE MODEL 1150 LOOP, AND COUPLE LOOSELY TO THE RECEIVER LOOP. SET THE RECEIVER VOLUME CONTROL AT MAXIMUM. THE TUNING CONDENSER PLATES SHOULD BE FULLY MESHED WHEN THE DIAL POINTER IS AT THE INDEX MARK AT THE LOW FREQUENCY END OF THE DIAL. THE SIGNAL GENERATOR OUTPUT SHOULD BE JUST SUFFICIENT TO OBTAIN HALF SCALE DEFLECTION ON THE LOWEST SCALE OF THE OUTPUT METER. SET THE SIGNAL GENERATOR TO 455 KC. ADJUST THE I.F. TUNING SLUGS FOR MAXIMUM OUTPUT IN THE FOLLOWING SEQUENCE: L4, L3, L2, L1. SET THE GENERATOR AND RECEIVER TO 1600 KC AND ADJUST OSCILLATOR TRIMMER C2 FOR MAXIMUM OUTPUT. SET THE GENERATOR AND RECEIVER TO 1400 KC AND ADJUST R.F. TRIMMER C4 FOR MAXIMUM OUTPUT

W. T. GRANT COMPANY CHASSIS Series H, R

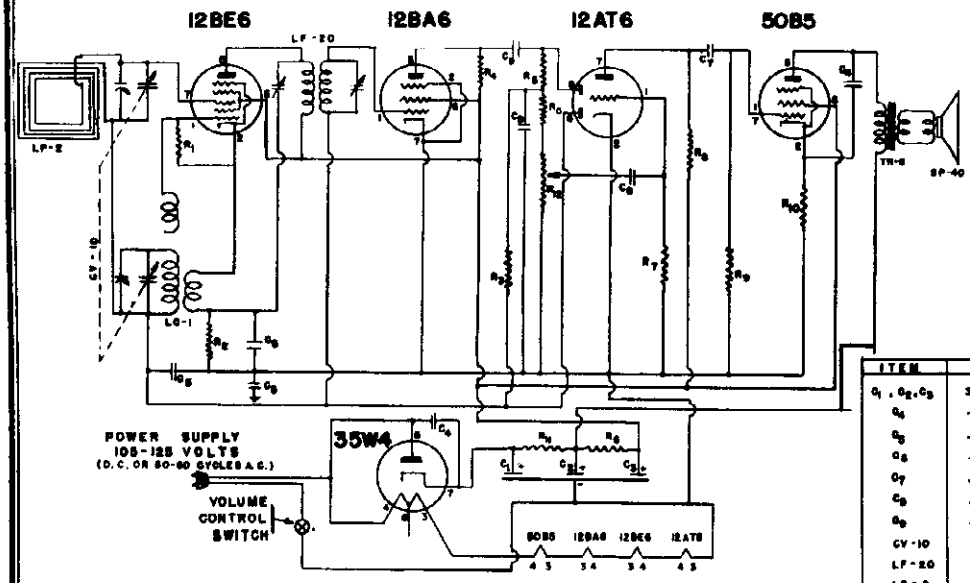

I. F. - 455 K.C.

ITEM	DESCRIPTION	PART NO.
C_1, C_2, C_3	3 X 50 MFD - 150 VOLT ELECTROLYTIC	CE - 11
C_4	.02 MFD - 400 VOLT PAPER CONDENSER	CP-503-1
C_5	.05 MFD - 200 VOLT PAPER CONDENSER	CP-505-4
C_6	.01 MFD - 400 VOLT PAPER CONDENSER	CP-103-1
C_7	.01 MFD - 150 VOLT PAPER CONDENSER	CP-103-2
C_8	.002 MFD - 400 VOLT PAPER CONDENSER	CP-202-2
C_9	.0005 MFD - 500 VOLT MICA CONDENSER	CM-151-1
CV-10	VARIABLE CONDENSER	CV-10
LF-20	I. F. TRANSFORMER	LF-20
LP-2	LOOP	LP-2
R_1	22,000 OHMS 1/2 WATT RESISTOR	RC-EE3-1
R_2	82 OHMS 1/2 WATT 10% RESISTOR	RC-520-2
R_3	2.2 MEG. 1/2 WATT RESISTOR	RC-229-1
R_4	6800 OHMS 1/2 WATT RESISTOR	RC-682-1
R_5	100,000 OHMS 1/2 WATT RESISTOR	RC-104-1
R_6	1500 OHMS 1 WATT RESISTOR	RC-152-4
R_7	10 MEG. 1/2 WATT RESISTOR	RC-106-1
R_8	220,000 OHMS 1/2 WATT RESISTOR	RC-224-1
R_9	470,000 OHMS 1/2 WATT RESISTOR	RC-474-1
R_{10}	150 OHMS 1/2 WATT RESISTOR	RC-151-1
R_{11}	150 OHMS 1 WATT RESISTOR	RC-151-4
R_{12}	VOLUME CONTROL 1 MEG. WITH S.P.S.T. SW	VC-8
SP-40	SPEAKER	SP-40
LC-1	OSCILLATOR COIL	LC-1
TR-6	OUTPUT TRANSFORMER	TR-6

CHASSIS SERIES "H"

FREQ. RANGE - 550-1700 KS.
ALIGN AT - 1500 KS.
TRACK AT - 600 KS.

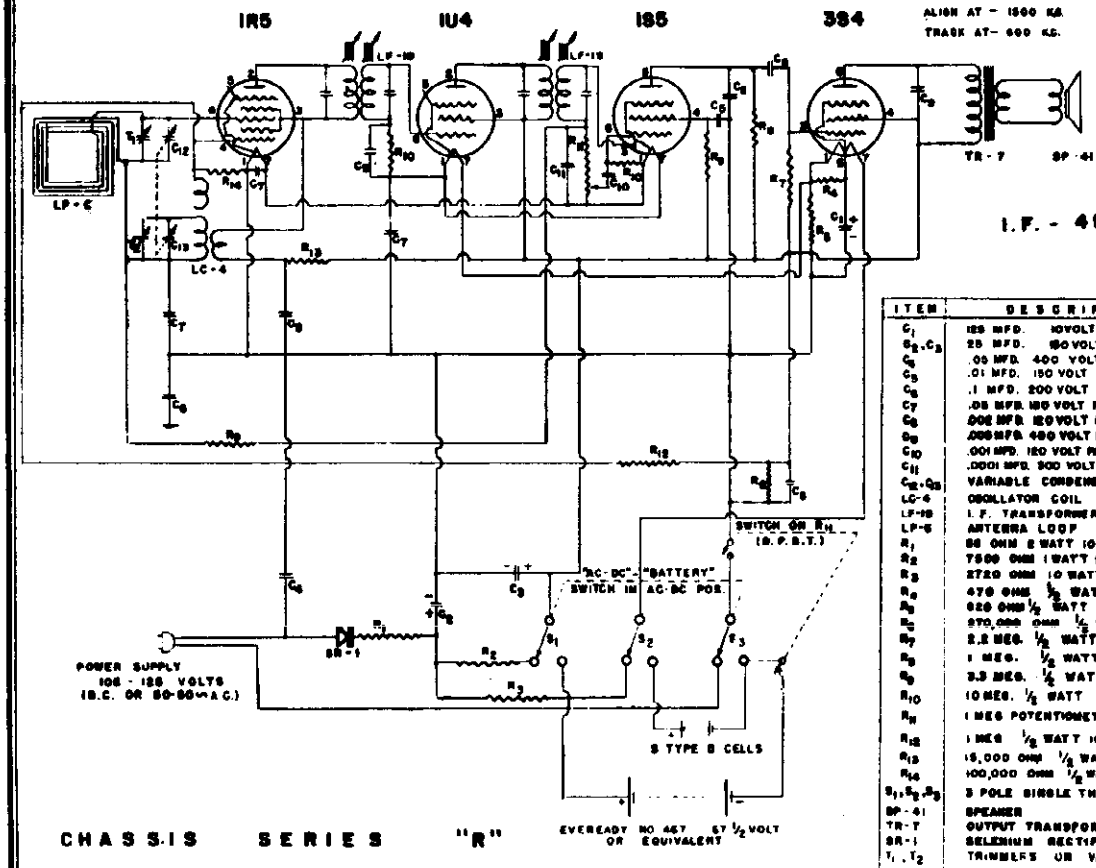

I. F. - 455 K.C.

ITEM	DESCRIPTION	PART NUMBER
C_1	125 MFD. 10 VOLT } ELECTROLYTIC	CE-12
C_2, C_3	25 MFD. 150 VOLT } CONDENSER	
C_4	.05 MFD. 400 VOLT PAPER CONDENSER	CP 503-1
C_5	.01 MFD. 150 VOLT PAPER CONDENSER	CP-103-2
C_6	.1 MFD. 200 VOLT PAPER CONDENSER	CP 104-2
C_7	.05 MFD. 150 VOLT PAPER CONDENSER	CP 503-2
C_8	.002 MFD. 150 VOLT PAPER CONDENSER	CP 202-1
C_9	.002 MFD. 400 VOLT PAPER CONDENSER	CP 502-2
C_{10}	.001 MFD. 150 VOLT PAPER CONDENSER	CP 102-1
C_{11}	.0001 MFD. 500 VOLT MICA CONDENSER	CM 101-1
C_{12}, C_{13}	VARIABLE CONDENSER	CV 10
LC-4	OSCILLATOR COIL	LC - 4
LF-18	I. F. TRANSFORMER	LF -19
LP-6	ANTENNA LOOP	LP-6
R_1	68 OHM 2 WATT 10% W.W. RESISTOR	RW 269-6
R_2	7500 OHM 1 WATT 10% RESISTOR	RC 752-8
R_3	2720 OHM 10 WATT 5% RESISTOR	RP - 1
R_4	470 OHM 1/2 WATT RESISTOR	RC 471-1
R_5	820 OHM 1/2 WATT 10 % RESISTOR	RC 821-2
R_6	270,000 OHM 1/2 WATT 10% RESISTOR	RC 274-2
R_7	2.2 MEG. 1/2 WATT RESISTOR	RC 229-1
R_8	1 MEG. 1/2 WATT RESISTOR	RC 105-1
R_9	3.3 MEG. 1/2 WATT RESISTOR	RC 338-1
R_{10}	10 MEG. 1/2 WATT RESISTOR	RC 106-1
R_{11}	1 MEG POTENTIOMETER WITH SWITCH	VC - 6
R_{12}	1 MEG 1/2 WATT 10% RESISTOR	RC 105-2
R_{13}	15,000 OHM 1/2 WATT RESISTOR	RC 153-1
R_{14}	100,000 OHM 1/2 WATT 10% RESISTOR	RC 104-2
S_1, S_2, S_3	3 POLE SINGLE THROW SWITCH	SW - 3
SP - 41	SPEAKER	SP - 41
TR - 7	OUTPUT TRANSFORMER	TR - 7
SR - 1	SELENIUM RECTIFIER	SR-1
T_1, T_2	TRIMMERS OR VARIABLE	

CHASSIS SERIES "R"

MODEL 5 tube,
AC-DC

KERNWOOD RADIO CORP.

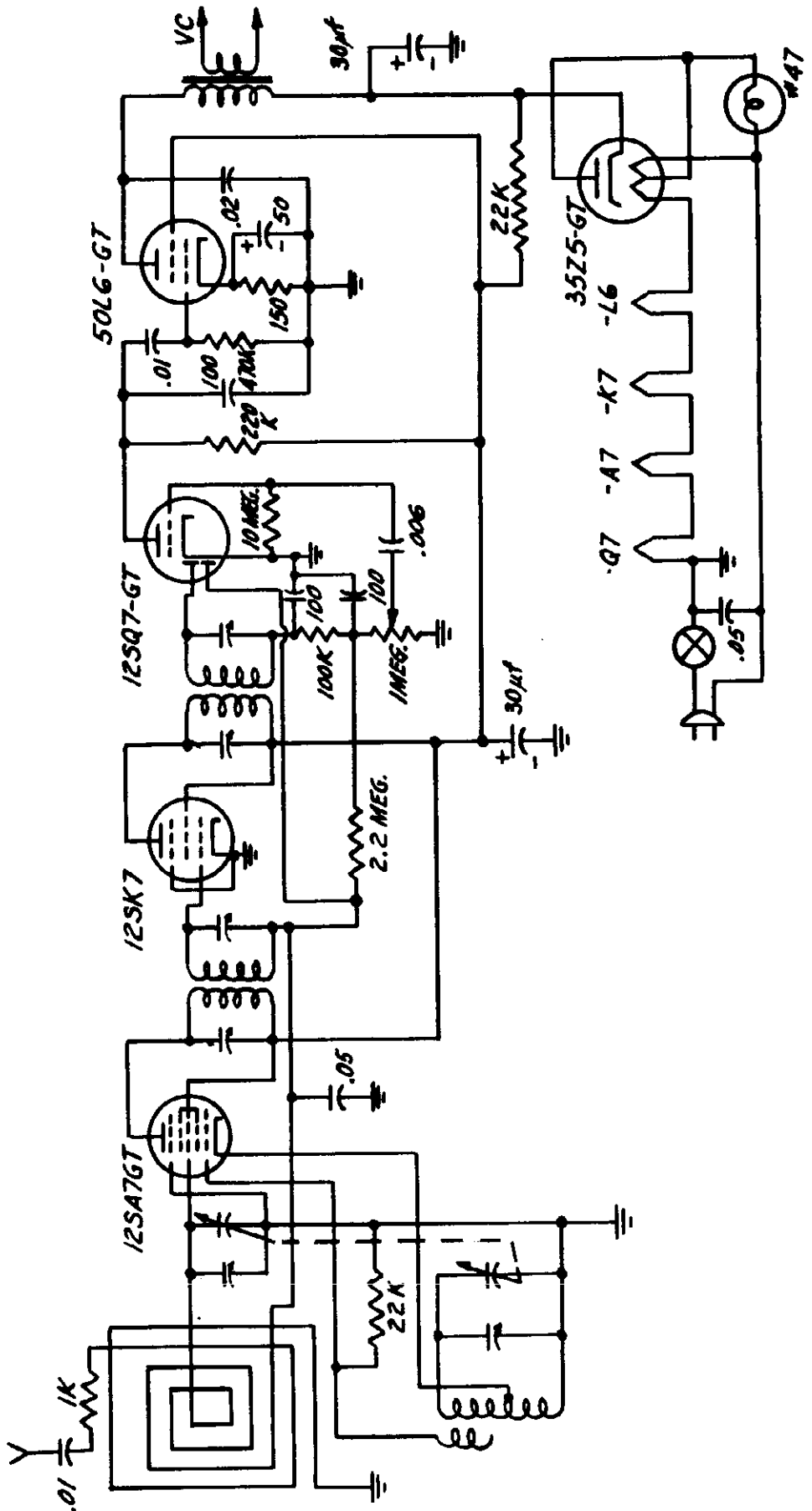

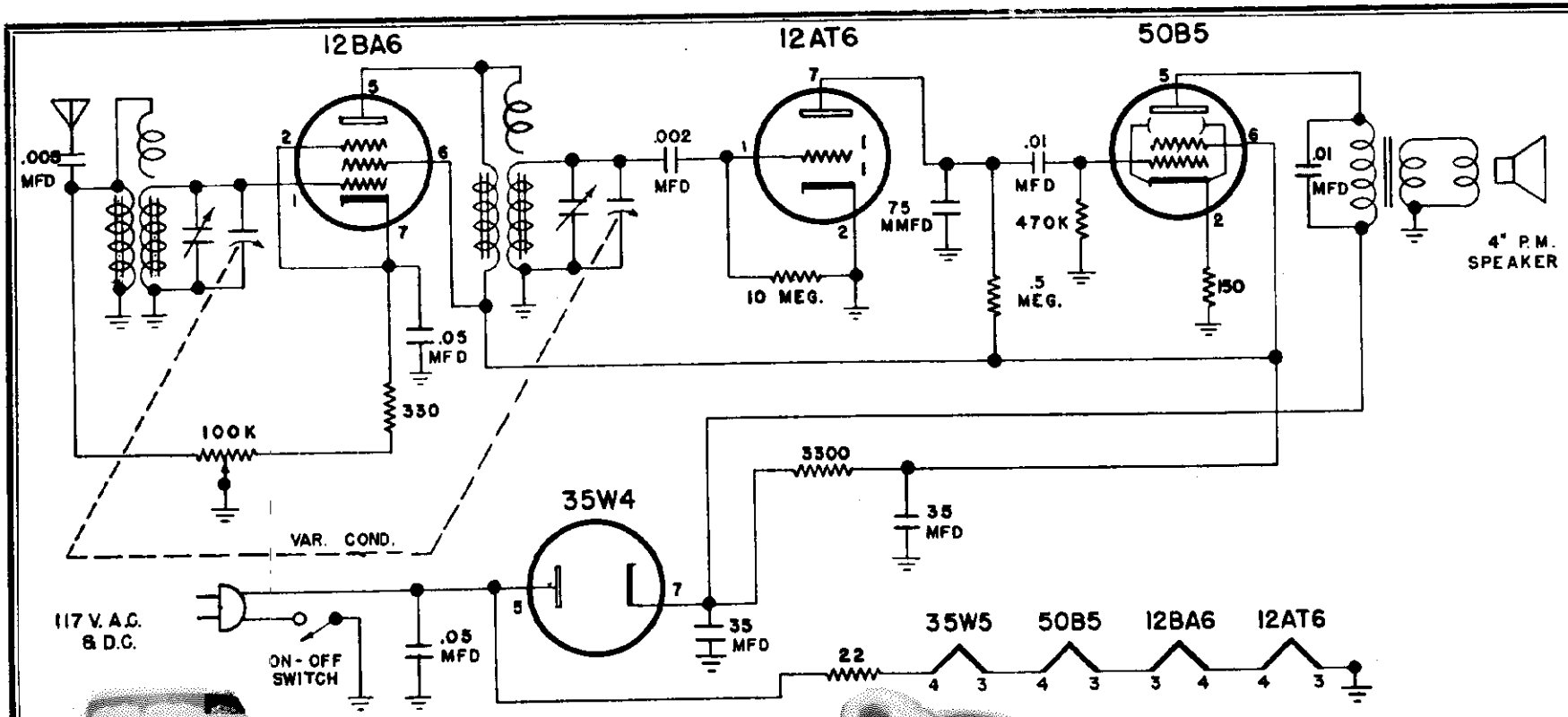



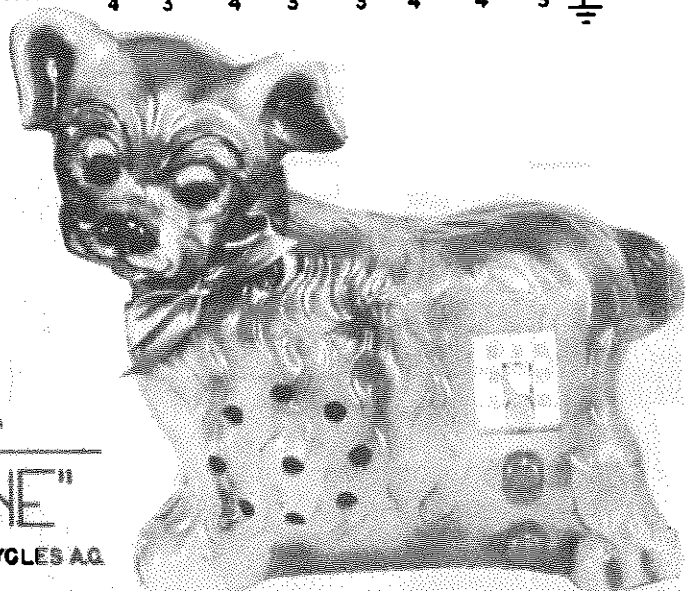

4 TUBE TRF RECEIVER
SCHEMATIC DIAGRAM

RECEIVER ALIGNED WITH
45 μμf DUMMY ANTENNA

"PUPPYTUNE"

105-125 V. D.C. OR 50-60 CYCLES A.C.
RANGE 540-1650 KC

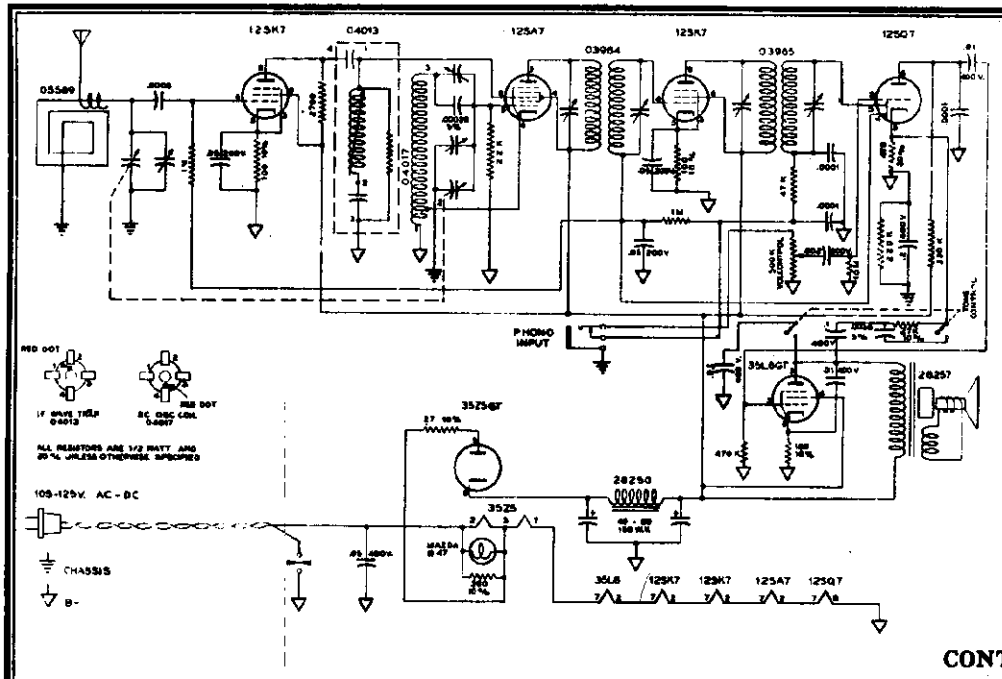

TUBE LAYOUT

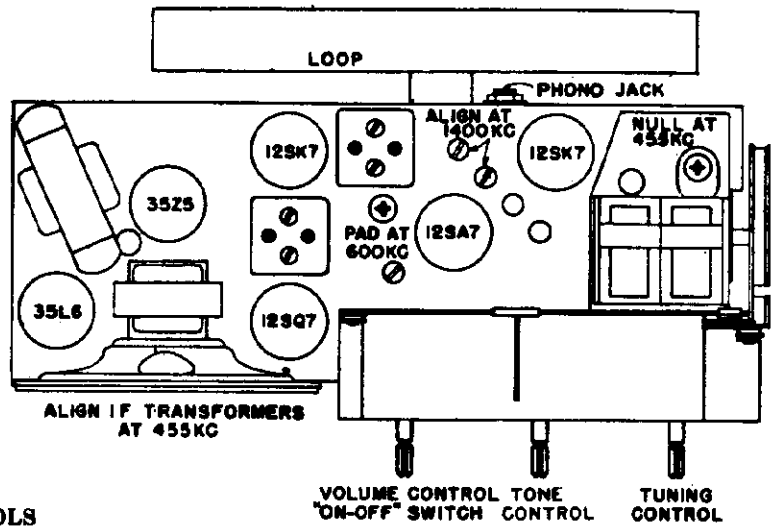

CONTROLS

TONE CONTROL: (Center knob).
Turn knob counter-clockwise for maximum bass and clockwise for maximum treble response.

VOLUME CONTROL: (Left-hand knob).
Turning knob clockwise turns the receiver on and turning further increases the volume.

TUNING CONTROL: (Right-hand knob).
This knob is used to select stations. Tune station until it is at maximum clearness. Never attempt to reduce the volume by detuning the station—always use the volume control.

OPERATION

Turn the "On-Off" switch and volume control clockwise about half its range. This supplies power to the receiver. After allowing the tubes to warm up, tune in the desired station by rotating the tuning control. For best results, tune the desired station with the volume turned low. This enables you to get the exact point where the station comes in best. Then adjust the volume control

To operate the receiver as a phonograph amplifier, insert phonograph plug in jack on rear of chassis. Turn "On-Off" switch and volume control clockwise about half its range and adjust tone control to desired position. For normal radio reception the phono plug must be withdrawn from the jack.

This is a 6-tube superheterodyne radio receiver, with provision for phonograph input, for operation on 105-125 volt AC or DC power supply. The tubes used are a 12SK7 as an R.F. amplifier, a 12SA7 as an oscillator-converter, a 12SK7 as an I.F. amplifier, a 12SQ7 as an AVC, detector, and 1st audio amplifier, a 35L6 as an output, and a 35Z5 as a power rectifier.

The broadcast band covers a frequency range from 535 to 1620 kilocycles. The dial is calibrated in kilocycles (KC) (less the final zero).

NATIONAL COOPERATIVES, INC. MODEL R-646

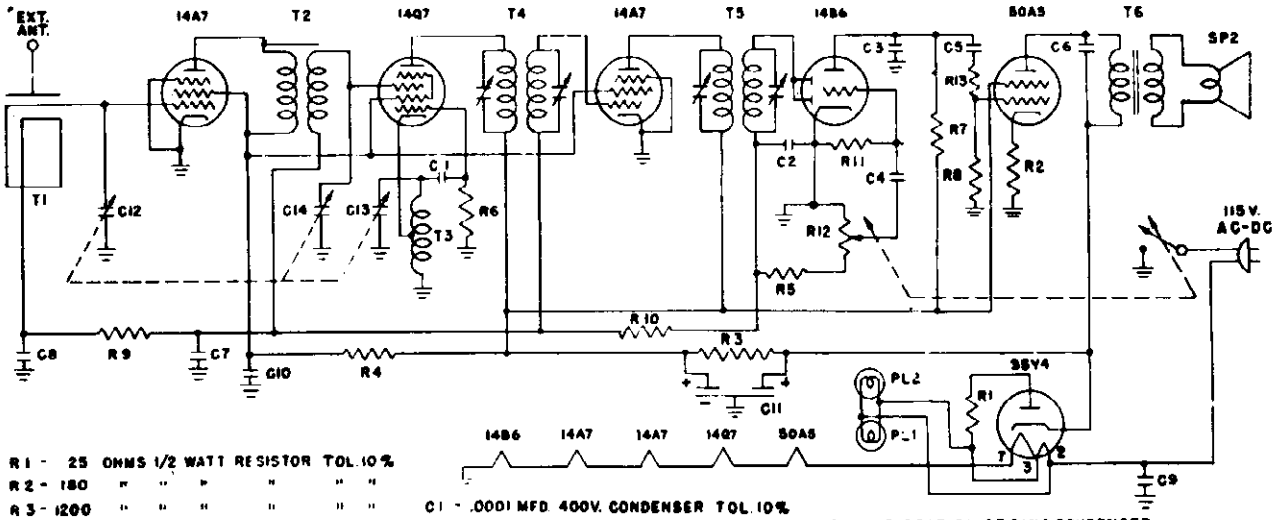

R1 - 25 OHMS 1/2 WATT RESISTOR TOL. 10%
R2 - 180 " " " " " "
R3 - 1200 " " " " " "
R4 - 15M " " " " " "
R5 - 50M " 1/3 " " " "
R6 - 50M " " " " " "
R7 - 500M " " " " " "
R8 - 1 MEG " " " " " "
R9 - 1 MEG " " " " " "
R10 - 2 MEG " " " " " "
R11 - 5 MEG " " " " " "
R12 - 500M " POT WITH SWITCH
R13 - 100M " 1/3 WATT RESISTOR TOL. 10%

C1 - .0001 MFD. 400V. CONDENSER TOL. 10%
C2 - .0001 " " " " "
C3 - .0001 " " " " "
C4 - .006 " " " " "
C5 - .01 " " " " "
C6 - .02 " " " " "
C7 - .05 " 200V " " "
C8 - .05 " " " " "
C9 - .05 " 400V " " "
C10 - .1 " 200V " " "
C11 - 50+50 " 150V " " "

C12 - ANT. SECTION OF GANG CONDENSER
C13 - OSC. " " " "
C14 - R.F. " " " "

T1 - LOOP ANTENNA
T2 - R F COIL
T3 - OSC. COIL
T4 - INPUT IF COIL 392 KC
T5 - OUTPUT IF COIL 392 KC
T6 - O P. TRANSFORMER

PL1 - NO. 47 PILOT LAMP
PL2 - " " " "
SP2 - 6" P.M. DYNAMIC SPEAKER

IF Alignment--465 KC (connect to ant. connector on loop).
Loop Alignment--1500, 1000, and 550 KC.
Dial Pointer Alignment--538 with fully closed condenser.

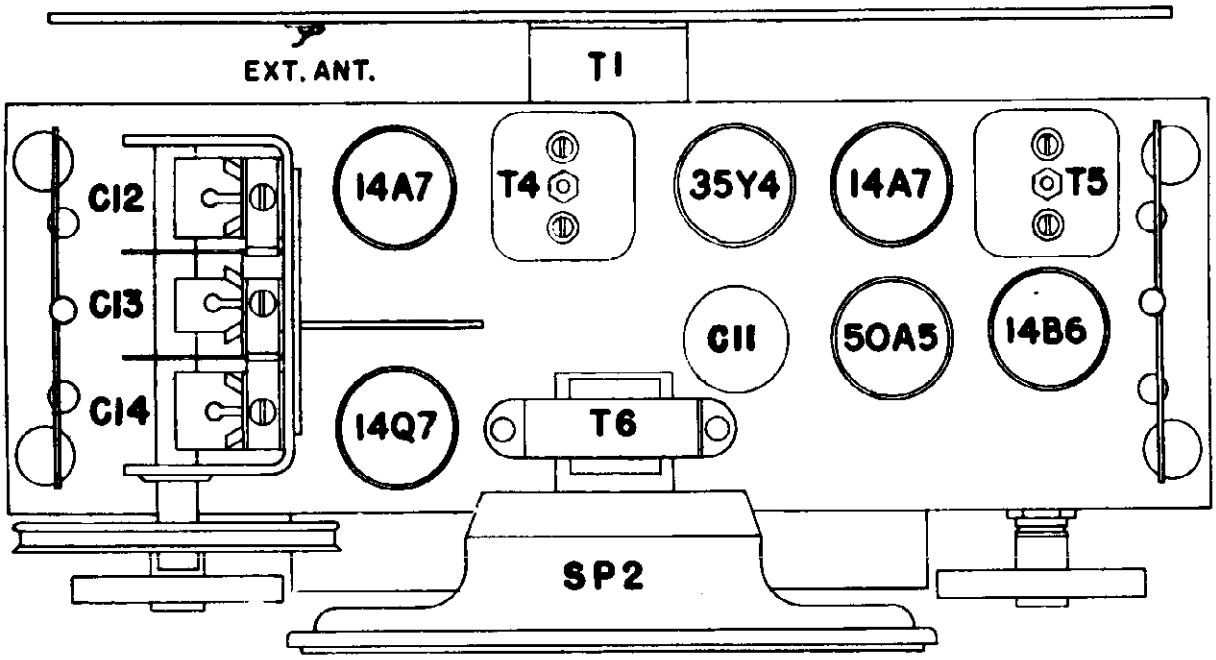

Top view of chassis showing tubes and parts

MODEL 746, Astra-Sonic

PENTRON CORPORATION

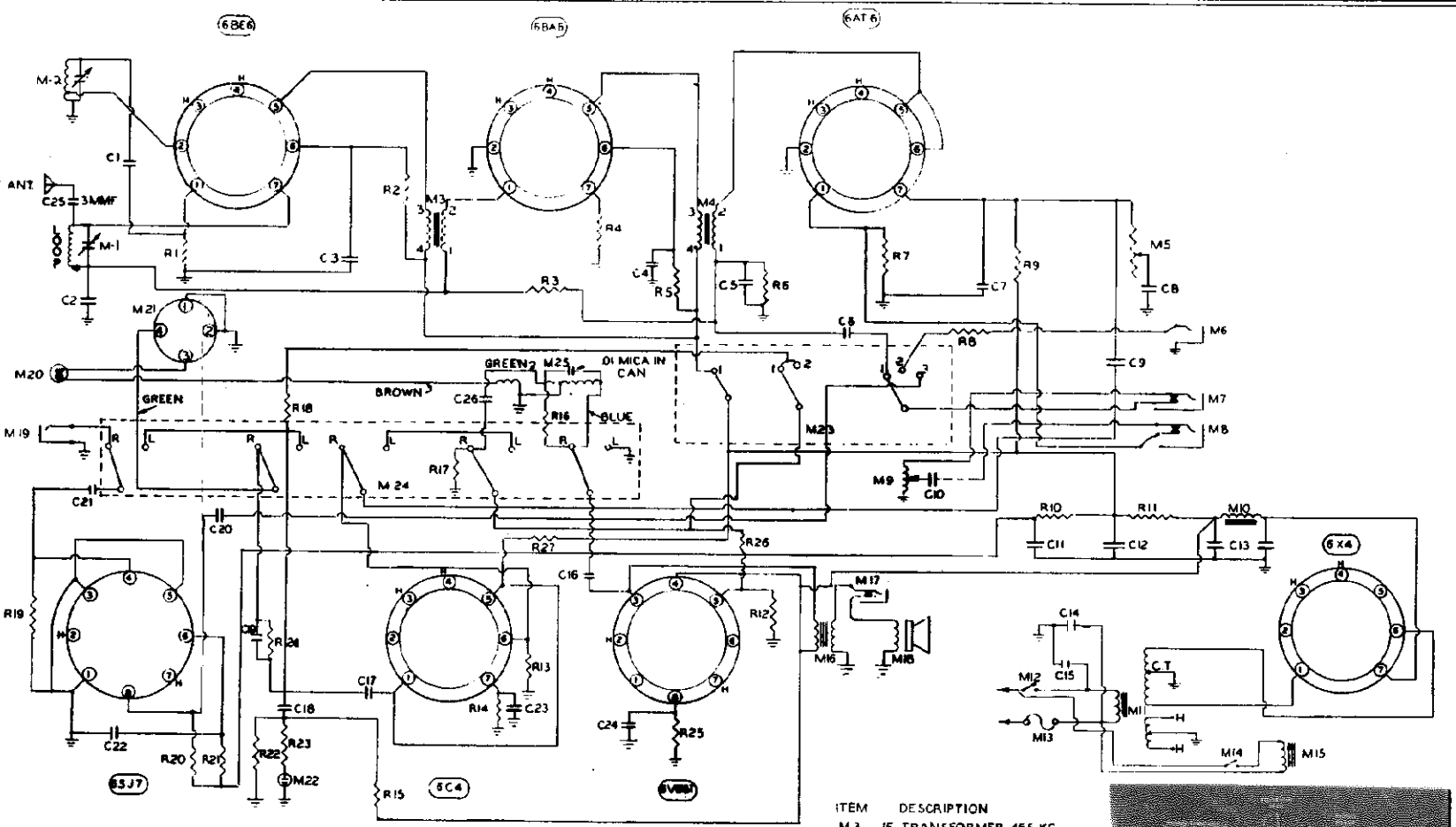

ITEM	DESCRIPTION
R1	22,000 OHM 1/2 WATT
R2	10,000 OHM 1 WATT
R3	2.2 MEG. OHM 1/2 WATT
R4	100 OHM 1/2 WATT
R5	100,000 OHM 1/2 WATT
R6	470,000 OHM 1/2 WATT
R7	10 MEG. OHM 1/2 WATT
R8	220,000 OHM 1/2 WATT
R9	100,000 OHM 1/2 WATT
R10	4700 OHM 1/2 WATT
R11	4700 OHM 2 WATT
R12	220,000 OHM 1/2 WATT
R13	470,000 OHM 1/2 WATT
R14	1500 OHM 1 WATT
R15	1 MEG. OHM 1/2 WATT
R16	10,000 OHM 1 WATT
R17	100,000 OHM 1/2 WATT
R18	470,000 OHM 1/2 WATT
R19	10 MEG. OHM 1/2 WATT
R20	470,000 OHM 1/2 WATT

ITEM	DESCRIPTION
R21	2.2 MEG. OHM 1/2 WATT
R22	220,000 OHM 1/2 WATT
R23	200,000 OHM 1/2 WATT
R24	100,000 OHM 1/2 WATT
R25	270 OHM 1 WATT
R26	4700 OHM 1/2 WATT
R27	47,000 OHM 1 WATT
C1	50 MMF 400 VOLT CONDENSER
C2	.05 MFD 200 VOLT CONDENSER
C3	.05 MFD 400 VOLT CONDENSER
C4	.05 MFD 400 VOLT CONDENSER
C5	170 MMF 400 VOLT CONDENSER
C6	.01 MFD 400 VOLT CONDENSER
C7	500 MMF 400 VOLT CONDENSER
C8	.02 MFD 400 VOLT CONDENSER
C9	.01 MFD 400 VOLT CONDENSER
C10	.01 MFD 400 VOLT CONDENSER
C11	10 MFD 350 VOLT CONDENSER

ITEM	DESCRIPTION
C12	10 MFD 350 VOLT CONDENSER
C13	DUAL 30 MFD 350 VOLT CONDENSER
C14	1 MFD 400 VOLT CONDENSER
C15	.1 MFD 400 VOLT CONDENSER
C16	MICA CONDENSER .003 MFD 400 VOLT
C17	1 MFD 400 VOLT CONDENSER
C18	.01 MFD 400 VOLT CONDENSER
C19	.001 MFD 400 VOLT CONDENSER
C20	.01 MFD 400 VOLT CONDENSER
C21	.01 MFD 400 VOLT CONDENSER
C22	.1 MFD 400 VOLT CONDENSER
C23	20 MFD 25 VOLT CONDENSER
C24	20 MFD 25 VOLT CONDENSER
C25	3 MMF CONDENSER
C26	MICA CONDENSER .003 MFD
M1	LOOP ANTENNA
M2	OSC. COIL 455 KC

ITEM	DESCRIPTION
M3	IF TRANSFORMER 455 KC
M4	IF TRANSFORMER 455 KC
M5	50,000 OHM TONE CONTROL
M6	PHONO JACK
M7	F.M. JACK
M8	EXT. AMP. JACK
M9	500,000 OHM VOLUME CONTROL
M10	200 OHM 60 MA CHOKE
M11	POWER TRANSFORMER
M12	TONE SWITCH
M13	1.5 AMP FUSE
M14	MOTOR SWITCH
M15	RECORDING MOTOR
M16	5000 OHM OUTPUT TRANSFORMER
M17	EXT. SPEAKER JACK
M18	SPEAKER (3.2 VOICE COIL)
M19	MIC. JACK
M20	RECORDER SWITCH
M21	RECORDING HEAD PLUG
M22	N.E. 51 NEON LIGHT
M23	RADIO PHONO MIC. SWITCH
M24	RECORD-LISTEN SWITCH
M25	30-40 KC OSC COIL

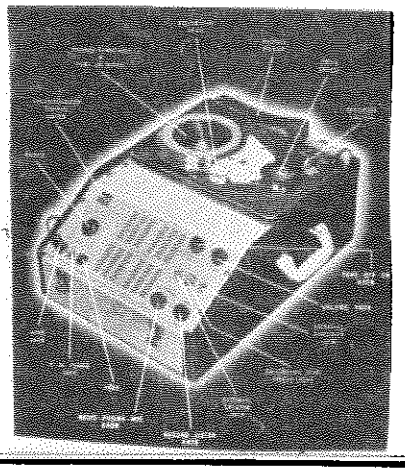

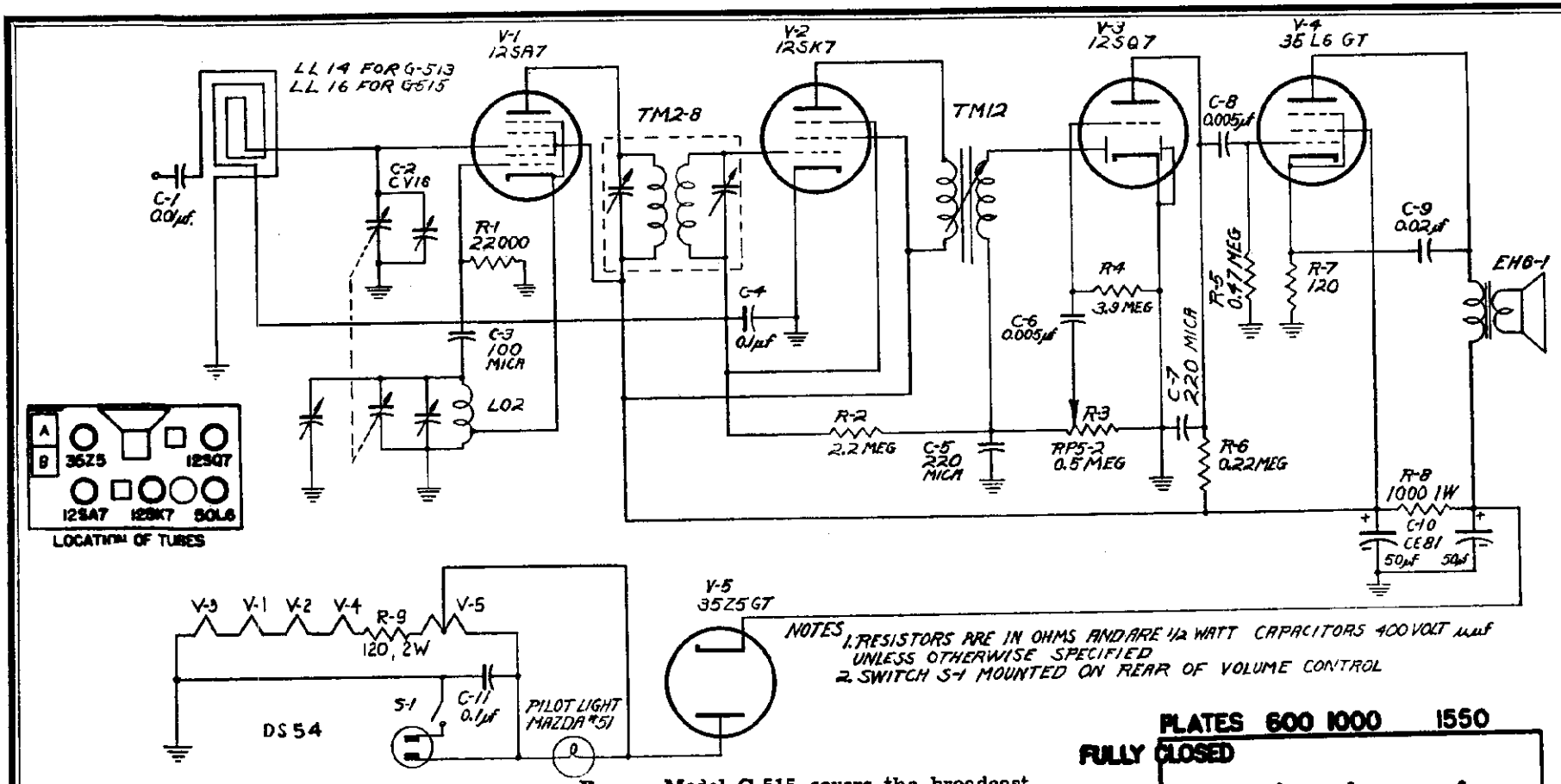

Alignment: No attempt should be made to realign this receiver until it has been determined that a poor tube, or some local condition is not responsible for faulty reception. An output meter may be clipped directly across the voice coil lugs.

The Signal Generator may be connected through a 0.01 mf capacitor (used as dummy antenna) to the lug on RF section (B) of tuning capacitor. Connect ground clip of generator directly to chassis. Align the I. F. trimmers to 455 kc, using least possible input from Signal Generator to avoid developing A.V.C. voltage which would make the tuning adjustments very broad.

Range: Model G-515 covers the broadcast band from 540 to 1620 kilocycles. Since the scale is calibrated 54 to 160, the actual frequency of the station received is obtained by adding a zero to the dial calibration.

To align RF trimmers remove the 0.01 mf capacitor and connect the Signal Generator leads or two or three turns of heavy wire, forming a self-supporting loop of about 7 or 8 inches diameter, placed about a foot away from the receiver's loop antenna. Again, use the least possible input from the Signal Generator. With the tuning capacitor plates completely out of mesh, and pointer at extreme right end of travel, adjust the oscillator trimmer (A) (on front section of tuning capacitor) to 1700 kc. Readjust both Signal Generator and tuning capacitor to 1550 kc and adjust the RF trimmer (B) (on rear section) for maximum response.. With tuning capacitor plates fully meshed, the receiver should tune to 532 kc; however, no adjustment is required at this point. For checking purposes, four fine marks are engraved on the dial plate. These represent, in order, the pointer position with capacitor plates fully meshed, and the pointer settings for 600, 1000 and 1550 kc.

MODELS 508, 900

RADIO DEVELOPMENT & RESEARCH CORP.

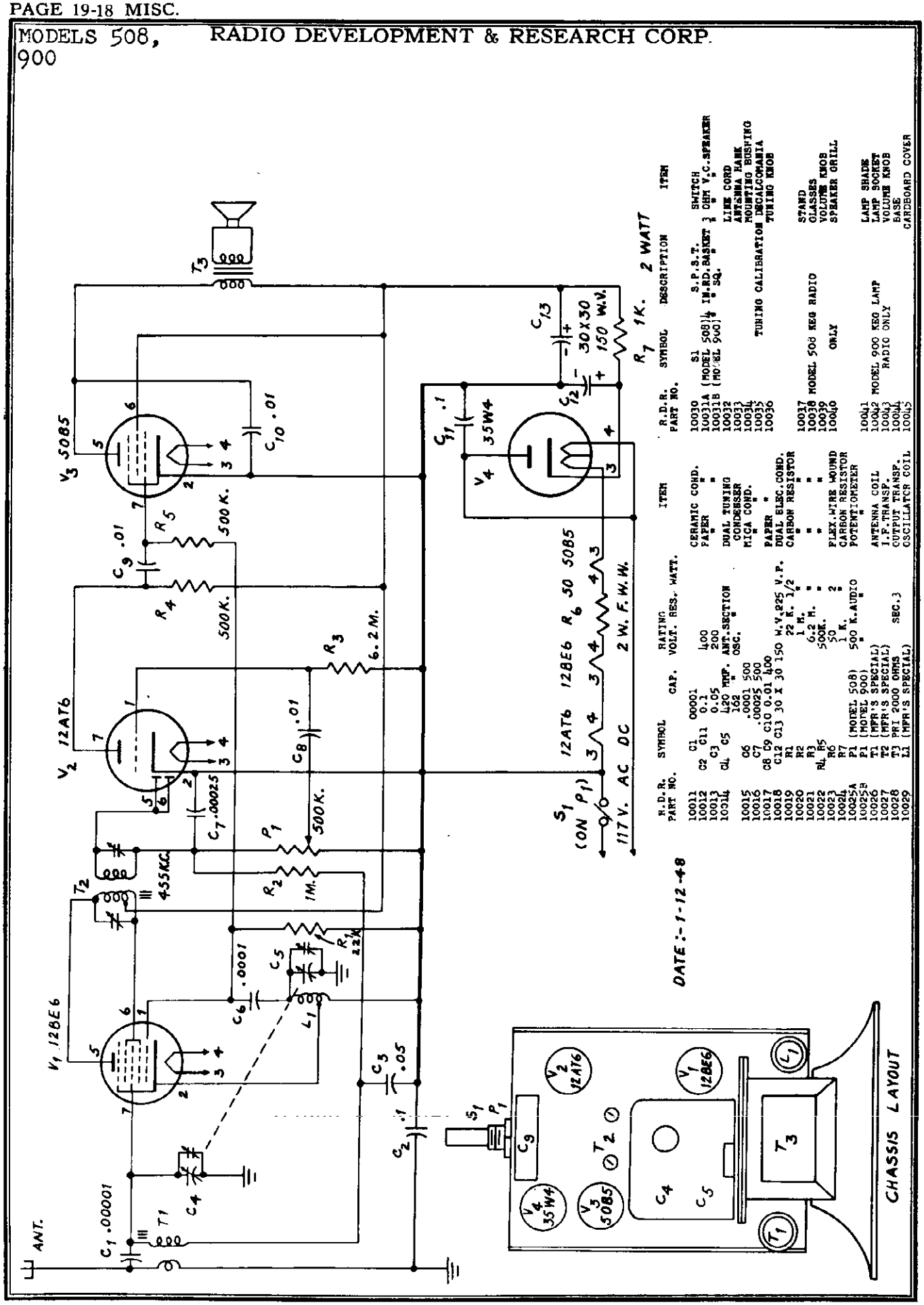

R.D.R. PART NO.	SYMBOL	CAP.	RATING VOLT. RES., WATT.	ITEM
10011	C1	.00001		CERAMIC COND.
10012	C2 C11	0.1	400	PAPER "
10013	C3	0.05	200	" "
10014	C4 C5	420 MMF.	ANT.SECTION	DUAL TUNING
		162 "	OSC. "	CONDENSER
10015	C6	.0001	500	MICA COND.
10016	C7	.00025	500	" "
10017	C8 C9 C10	0.01	400	PAPER "
10018	C12 C13	30 X 30	150 W.V.	DUAL ELEC.COND.
10019	R1		22 K. 1/2	CARBON RESISTOR
10020	R2		1 M. "	" "
10021	R3		6.2 M. "	" "
10022	R4 R5		500K. "	FLEX.WIRE WOUND
10023	R6		50 2	CARBON RESISTOR
10024	R7		1 K. 2	POTENTIOMETER
10025A	P1 (MODEL 508)		500 K.AUDIO	"
10025B	P1 (MODEL 900)		" "	"
10026	T1 (MFR'S SPECIAL)			ANTENNA COIL
10027	T2 (MFR'S SPECIAL)			I.F.TRANSF.
10028	T3 PRI 2000 OHMS		SEC.3	OUTPUT TRANSF.
10029	L1 (MFR'S SPECIAL)			OSCILLATOR COIL

R.D.R. PART NO.	SYMBOL	DESCRIPTION	ITEM
10030	S1	S.P.S.T.	SWITCH
10031A	(MODEL 508)	1/4 IN.RD.BASKET	3 OHM P.M.SPEAKER
10031B	(MODEL 900)	" SQ. "	" "
10032			LINE CORD
10033			ANTENNA HANK
10034			MOUNTING BUSHING
10035		TUNING CALIBRATION	DECALCOMANIA
10036			TUNING KNOB
10037			STAND
10038	MODEL 508 KEG RADIO		GLASSES
10039			VOLUME KNOB
10040	ONLY		SPEAKER GRILL
10041			LAMP SHADE
10042	MODEL 900 KEG LAMP		LAMP SOCKET
10043	RADIO ONLY		VOLUME KNOB
10044			BASE
10045			CARDBOARD COVER

©John F. Rider

RADIO & TELEV. PRODUCTS CO. MODEL 47-601

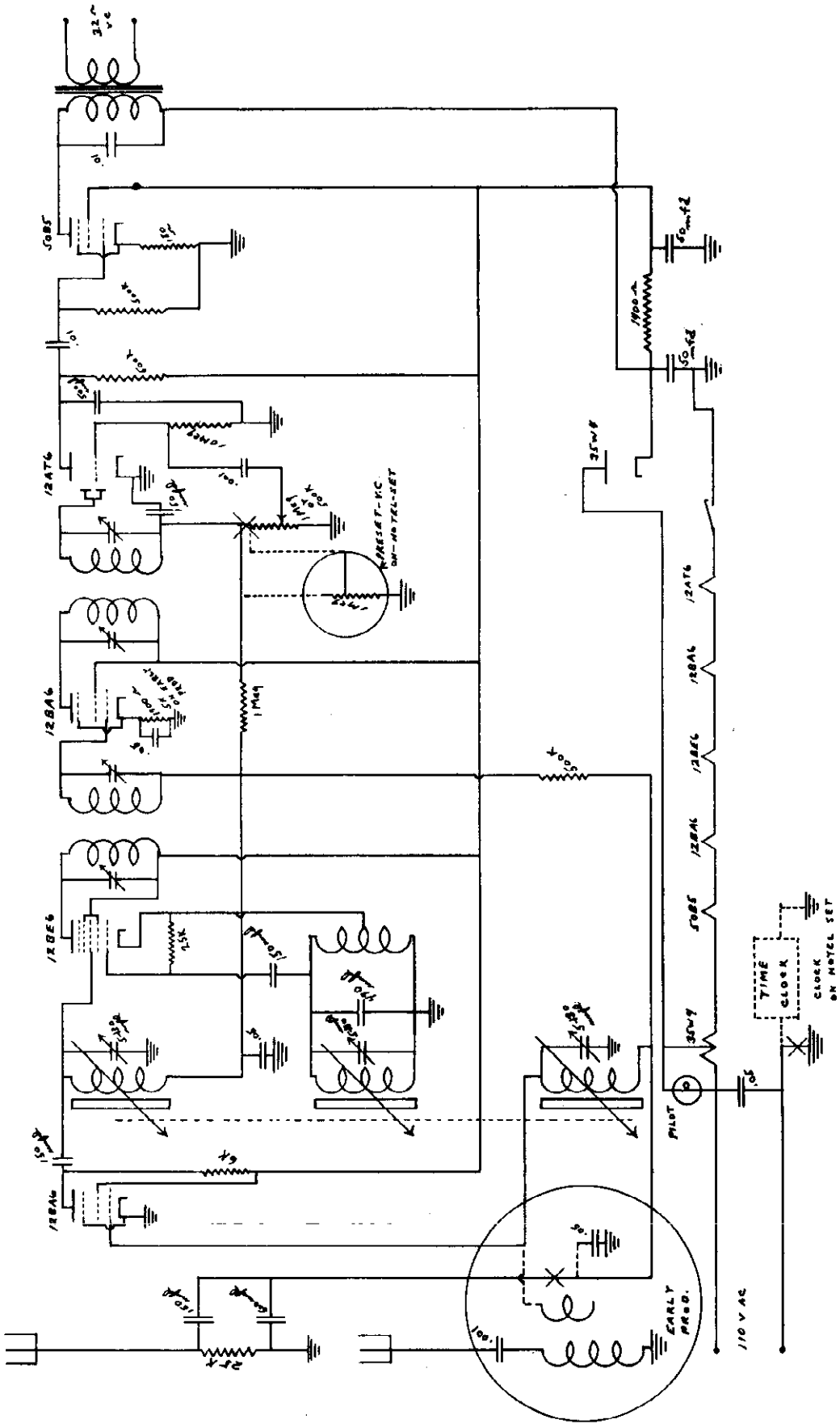

MODEL A-46 Series TAFFET RADIO & TELEV. CO.

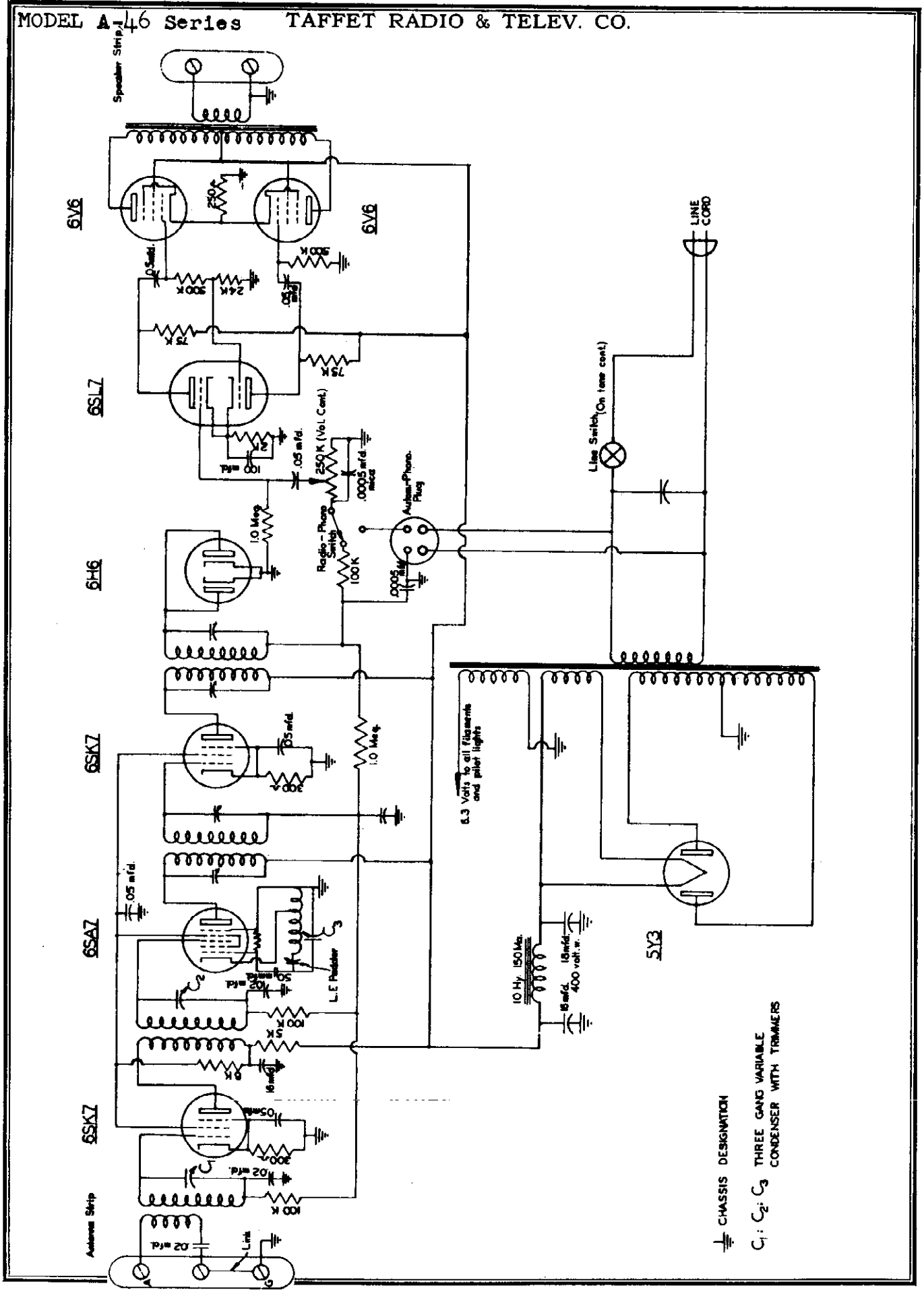

©John F. Rider

TELE-TONE RADIO CORP.

MODEL 185,
CHASSIS AH

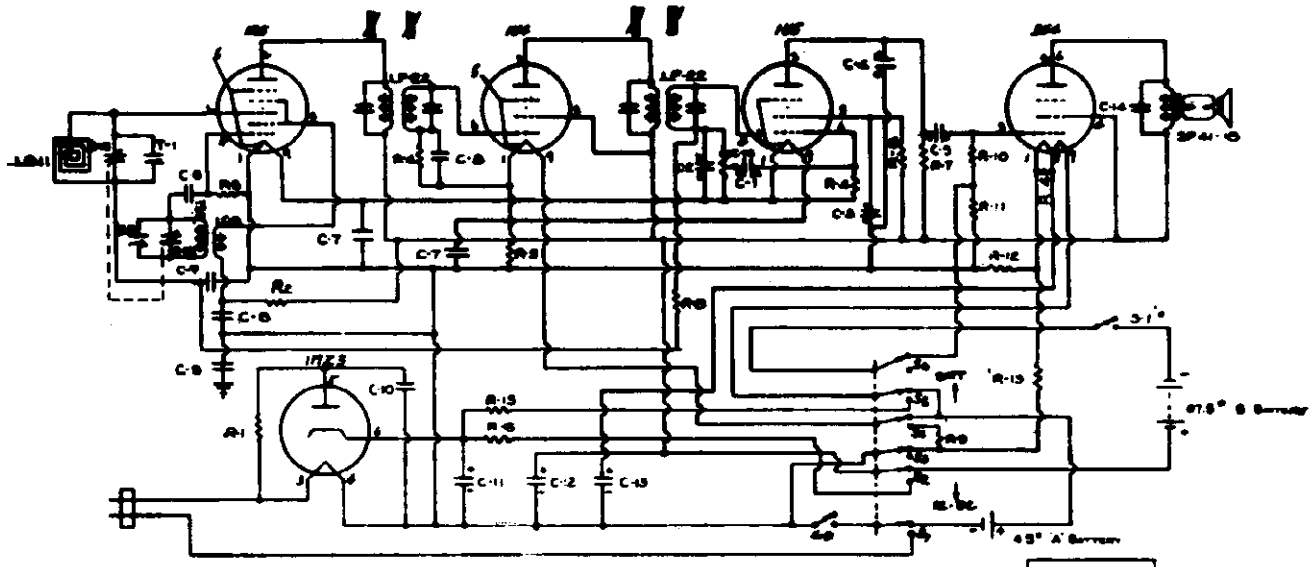

RS1 - DPST SW. ON VOLUME CONTROL
POWER SUPPLY
105-125 VDC
50-60 CYCLES AC

ALIGNMENT DATA
IF 455 KC
PEAK T2 1620 KC
T1 1600 KC
FREQ RANGE - 1620 - 532.5 KC

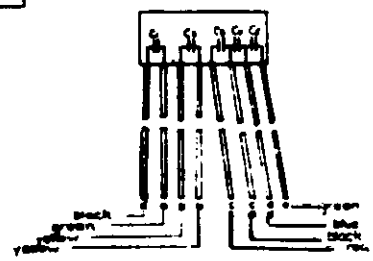

CHASSIS SERIES "AH"

ITEM	CHASSIS SERIES "AH" DESCRIPTION	PART NO.
C1 C2 C3 C4 C5	CERAMIC CONDENSER BLOCK	CC-5-1
C-6	.000047 MF MICA CONDENSER	CM 470-1
C-7	.05 MF 150 V PAPER	CP-505-2
C-8	.01 MF 150 V PAPER	CP-103-2
C-9	.1 MF 200 V PAPER	CP-104-1
C-10	.05 MF 400 V PAPER	CP-505-1
C-11	ELECT COND 40 MF 150 V	CE 17V
C-12	40 MF 150 V	
C-13	200 MF 10 V	
C-14	.005 MF 400 V PAPER	CP-502-2
C15, C16	VARIABLE CONDENSER	CV-15
T-1, T-2	TRIMMERS ON VARIABLE	
R-1	18Ω ½ W ±20% CARBON RES	RC-180-1
R-2	15,000Ω ½ W ±20% " "	RC-153-1
R-3	100,000Ω ½ W ±20% " "	RC-104-1
R-4	10 MEG ½ W ±20% " "	RC-106-1
R-5	2200Ω ½ W ±10% " "	RC-222-2
R-6	6800Ω 1 W ±10% " "	RC-682-5
R-7	1 MEG ½ W ±20% " "	RC-105-1
R-8	3.3 MEG ½ W ±20% " "	RC-335-1
R-9	39Ω ½ W ±10% " "	RC-390-2
R-10	2.2 MEG ½ W ±20% " "	RC-225-1
R-11	680Ω ½ W ±10% " "	RC-681-2
R-12	1500Ω ½ W ±10% " "	RC-152-2
R-13	27Ω ½ W ±5% " "	RC-270-3
R-14	390Ω ½ W ±10% " "	RC-391-2
R-15	CANDOHM RES 2550Ω ±5%	RP-5
VC-16	VOL CONTROL 1 MEG WITH DPST SWITCH	VC-16
SP-41-18	4" SPKR FOR MAGNET WITH OT	SP-41-18
LF-22	I F TRANSFORMER	LF-22
LP-11	ANTENNA LOOP	LP-11
LC-8	OSC. COIL	LC-8
S-2,3,4,5,6,7	BATTERY SWITCH 6 POLE DT	SW-H

Late series have C removed from ceramic condenser block, paper condenser of same paper value used.

MODEL 8-16

U.S. TELEVISION MFG. CORP.

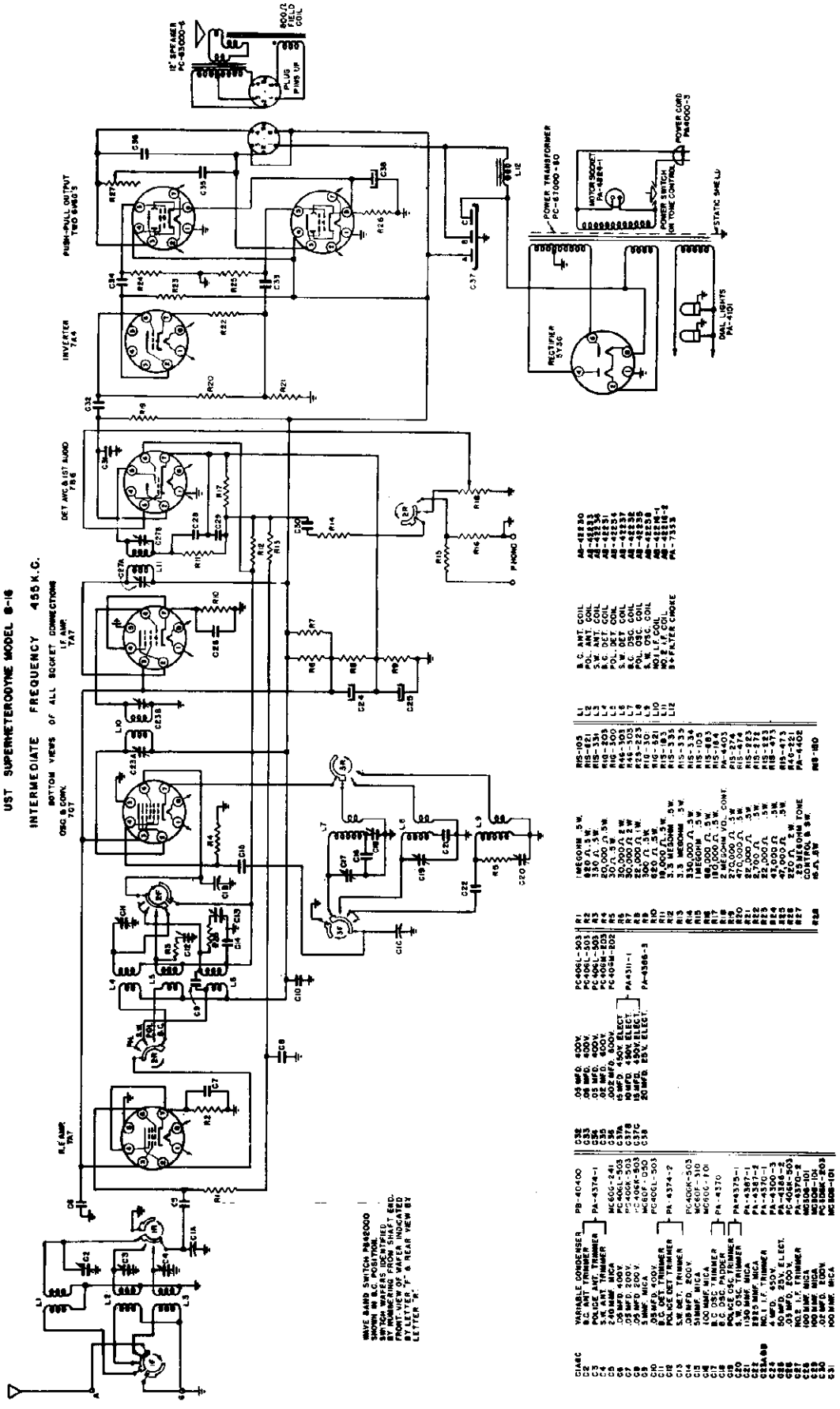

Bendix Par 80

This model appears on *pages 18-1 through 18-5 of Rider's Volume XVIII.* On late production model PAR 80 receivers, a rubber grommet has been added over the battery switch lead at the metal shield to prevent eventual wear and shorting of the lead. If servicing of this receiver indicates excessive wear of the battery switch lead, a small standard grommet of suitable size may be added at point where the lead enters the switch shield.

Bendix 110, 110W, 111, 111W, 112, 114, and 115

These models appear on *pages 18-6 through 18-8 of Rider's Volume XVIII.* On recent models of this series a circuit change has been made which adds a coupling plate, stock number AC0C00, between the first audio tube, 12SQ7, and the output tube, 50L6, in lieu of the following components used on earlier receivers:

Plate-load resistor, R5, stock no. RC1H54; grid resistor, R7, stock no. RC1H58; Plate r-f bypass capacitor, C8 stock CP4T20.

These parts are eliminated when coupling plate, stock no. AC0C00 is used, although installation is otherwise interchangeable. To use the coupling plate may cause a slight increase in the plate voltage of the 12SQ7 tube, but no adverse effect is made on the receiver. The resistance measured from the grid of the 50L6 tube to common B- is approximately 450K, while the resistance measured from the plate of the 12SQ7 tube to common B- will give a reading which increases approximately 10 megohms in magnitude, caused by the charging of the filter capacitors since the receivers have no d-c return to ground.

Bendix 626

This model appears on *pages 16-1 through 16-3 of Rider's Volume XVI.* Either of two coils may be found in this model. In some, an r-f coil making use of a small capacitor (3.3 $\mu\mu$f) between the start of the secondary winding and the finish of the primary winding is used, while in others an r-f coil with an added tertiary winding is used in lieu of the capacitor. These coils, when properly used, are interchangeable, and in the future only r-f coils with the tertiary winding will be provided as replacements.

If, in the receiver to be repaired, the coil requiring the 3.3-$\mu\mu$f capacitor is replaced with the other type, eliminate the 3.3-$\mu\mu$f capacitor from the circuit.

Bendix 646A

This model appears on *pages 15-5 and 15-6 of Rider's Volume XV.* The change involves a revision in the replacement parts list as follows:

In the cabinet components section of the parts list on *page 15-6,* substitute the stock number HZ0S04 for the existing stock number HZ0L01 which is incorrect. The nomenclature and identification of the component part is correct as listed.

Crosley 9-101

This model appears on *pages 18-1 through 18-3 of Rider's Volume XVIII.* Recently it was discovered that in some areas, the oscillator coil (Part No. 142975) developed trouble due to corrosive tape. To avoid possible complaints in the field, it is recommended that the coil be replaced with a new coil (Part No. 145105).

Bendix 847B

This model appears on *pages 17-7 through 17-14 of Rider's Volume XVII.* The replacement parts list on *page 17-13* should be revised as follows:

The r-f oscillator chassis assembly bearing the stock number AR0B00 is no longer stocked as a complete replacement assembly. This chassis can be repaired satisfactorily in the field and the necessary component parts may be obtained as separate stock items, when desired.

Crosley 9-201, 9-202M, 9-203B

These models appear on *pages 18-14 through 18-19 of Rider's Volume XVIII.* The part number of item 83 (volume control) was shown on *page 18-19* as 39368-14. This number should be 39368-18. To use the No. 39368-18 control on these models, it will be necessary also to use a No. 39-370-2 plug-in type knurled shaft.

Farnsworth GK-111, GK-112, GK-114, GK-115

These models are the same as model GK-100, appearing on *pages 17-3 through 17-10 of Rider's Volume XVII,* except that they employ the P56MP record changer instead of the P56.

The P56MP record changer is a reluctance type pickup and, therefore, additional amplification in the phono circuit is necessary. A 6SJ7 tube has been added to the phono circuit, as shown in the accompanying diagram.

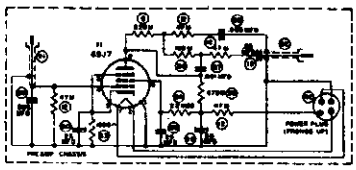

The circuit of the 6SJ7 tube that was added so that a reluctance pickup could be used in Farnsworth Models GK-111,-112, -114,-115.

The following parts should be added to the parts list:

Part No.	*Description*
78057	Volume control, 3 megohms
94204	Power transformer
94239	Output transformer
13772	Speaker
38696	Loop antenna for GK-111, GK-112
38859	Loop antenna for GK-114
26032	Loop antenna trimmer, GK-114
22169	Pickup cable
22170	Output cable
22171	Power adapter cable
25431	Capacitor, electrolytic, 20 μf, 450 v, 25 μf, 25 v
25432	Capacitor, 0.001 μf, 200 v
25433	Capacitor, 0.25 μf, 600 v
H-273	Cabinet for GK-114
H-291	Cabinet for GK-111 Mah.
H-292-1	Cabinet for GK-112 C
H-292-2	Cabinet for GK-112 Bl.

Federal 1027, 1035

Basically, these models are the same both in chassis and cabinet as model 1025 which appears on *pages 16-1 through 16-4 of Rider's Volume XVI.* However, differences exist in the exterior cabinet finish and color of these models.

Federal 1034

This model is essentially the same as model 1024 which appears on *pages 16-1 through 16-4 of Rider's Volume XVI.* The only modification has been in the cabinet

Fada 711, 740

These models appear on *pages 17-15, 17-20, and 17-24 of Rider's Volume XVII.* The socket layout on *page 17-15* applies only to model 740. The socket layout for model 711 is shown herewith. The schematic and parts list refer to both models.

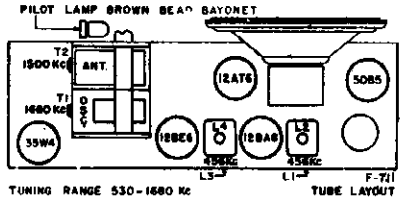

Socket layout for the Fada model 711.

Firestone R3157A

This model is the same as Model S7427-2 appearing on *pages 12-19,20, 12-21, 12-6, and C.S. 12-4 and C.S. 12-5 of Rider's Volume XII.*

General Electric P4

This model appears on *RCD. CH. Pages 17-5 through 17-9 of Rider's Volume XVII.* The sound of a metallic click and audible thump through the receiver speaker is usually traced to the operation of the velocity trip mechanism. This is caused by too much tension of the Clutch Tension Spring (reference 29 in Fig. 3 on *RCD. CH. Page 17-7*) binding the velocity trip lever. Adjustment may be made, reducing spring tension to prevent binding and still maintain normal operation.

In earlier production, a limited quantity of record changers employed a flat spring type clip fitted over the pickup arm pivot shaft. The clip was brought to bear upon the clutch tension spring, compressing the spring to the proper friction upon the velocity trip lever as was necessary for proper changer operation. To provide a more positive adjustment, later productions use a Clutch Spring Tension Collar, in lieu of the original clip, which makes a more convenient, accurate, and more permanent adjustment.

If extreme difficulty is experienced in proper adjustment of the earlier production changers, the spring clip may be replaced with the collar, Cat. No. RMX-080. A detailed view of the later version of record adjustment is shown in Fig. 6 on *RCD. CH. 17-8.*

GE 250

This model appears on *pages 15-32 through 15-36 of Rider's Volume XV.* The switch that is supplied under the number RSW-009 is of a different construction than the original flat-wafer switch. The accompanying figure shows the numbers which correspond to those in the schematic diagram.

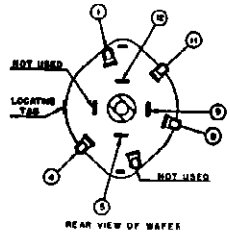

Construction of the wafer switch replacement for the General Electric 250.

GE 41, 42, 43

These models appear on *pages 17-1,2 through 17-15 of Rider's Volume XVII.* The following changes should be made. Add Cat. No. REF-003, line fuse F201, 3AG, 5 amp., 250 volts, to the parts list and add this to the schematic diagram of the Special Power Unit on *page 17-3.* The fuse should be placed in series with the power transformer primary and the power cord. Besides the addition of a fuse, the safety will be further increased by placing a sheet of asbestos underneath the power unit to cover the ventilation slots. Thus, even in the case of overload, the hot tar of the over-heated transformer is prevented from dropping on the floor.

Add Cat. No. RSV-001, Switch—power ON-OFF switch to the parts list. Replacement is readily made by merely bending the mounting taps.

To adjust for minimum hum level, turn the volume control until the audio output is zero and vary resistor R201 (which is parallel to the filaments and center-tapped to the chassis, forming an effective hum balancing circuit).

General Electric 41, 42, 43, 44, 45

These models appear on *pages 17-1,2 through 17-15 of Rider's Volume XVII.* A sliding type switch has been added in series with R67 (8200 ohms) connecting the resistor to the phonograph pickup input jack, J3. This switch is on the receiver chassis back apron with its respective label indicating High Fidelity and Normal, the open and closed positions, respectively.

In the replacement parts list under Cat. No. RSS-003, add the item: High Fidelity-Normal switch.

General Electric 50

This model will be found on *pages 15-1 through 15-4 of Rider's Volume XV.* This change covers a correction to the original parts list in the model 50 where Cat. No. RHS-001 was changed to RMX-006 for a tuning assembly and spacer.

A further correction is necessary in the item description since only the tuning shaft and drive pulley (assembled) is supplied under RMX-006. The spacer is the tuning shaft bearing, and is catalogued as a separate item under RHJ-001. The original parts listing of the drive pulley under this number has been deleted.

GE 140

This model appears on *pages 17-21 through 17-23 of Rider's Volume XVII.* The following changes should be made in the parts list: From Cat. No. RAD-027 remove the statement "(with loop connecting strips only)." Change Cat. No. RCC-075 to read RCC-080. Delete Cat. Nos. RDK-098, RHC-008, and RMX-103. Add the following parts.

RDK-106	Knob—door catch knob
RCE-002	Strap—loop contact strap
RHE-002	Eyelets—spacer eyelets for escutcheon screws RHS-016
RHE-003	Eyelet—used for loop contact strap
RHR-002	Rivets—door hinge rivets (power cord access)
RHS-015	Screw—self tapping (used for cabinet door cover)
RHS-016	Screw—Phillips, flat-head, mounts bottom of escutcheon

The following procedure is recommended for repairing broken antenna loop connecting straps.

The broken straps should be cut back flush with the inside edge of the notch on the loop. The flexible wire is then used to make connections from the loop to the inside of the receiver. Consult the accompanying diagrams for loop connecting details and wire specifications. Carefully lift the section of the loop to allow connecting the specified pieces of wire and solder

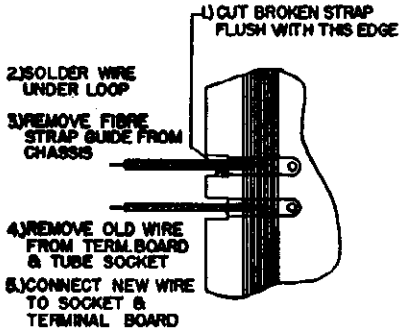

WIRE DETAILS

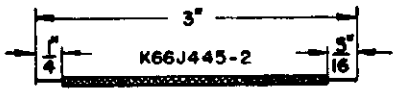

2 REQUIRED PER SET

Above, the loop connecting details of the General Electric Model 140. The wire details for the antenna loop connections are shown in the lower figure.

wires to remainder of loose straps. Remove the fibre strap guide which originally insulated the loop straps within the cabinet. Remove original wire leads and pieces of loop strap connected inside the cabinet to the chassis terminal strip and pin 6 of the 1R5 oscillator-converter tube socket. Solder the new leads from the antenna loop directly to the terminal board and tube socket. Make certain that the inside of the loop is connected to pin 6 of the 1R5 tube socket. The following procedure is recommended to replace a speaker in this model.

1—Unsolder leads on speaker, using small tip iron.
2—Unsolder 90-μf capacitor (C14) at terminal strip.
3—Without unsoldering, remove dual 40-μf capacitor (C20) from mounting clip.
4—Using long screwdriver (8 inches or longer) loosen screws holding speaker to chassis.
5—Remove nuts holding speaker to front panel.
6—Lift up left end of resistor mounting plate and then lift out speaker.

If the antenna straps which interconnect the antenna in the receiver cover with the radio chassis circuit break, the following replacement procedure is recommended:

1—Bend up insulating material covering set end of antenna strips by inserting the tip of a long-nose pliers and twisting gently so as not to tear material.
2—Unsolder wires from loop strips in receiver.
3—Remove screws holding door cover.
4—Lift loop at point midway between hinges to expose strip rivets and unsolder loop from loop strips.
5—Remove rivet or rivets as needed, taking care not to damage loop or loop back.
6—Replace broken straps by new members, Cat. No. RCE-002, and rivet it in place with eyelets, Cat. No. RHE-003.

In order to replace the rectifier disc assembly, SR, proceed as follows:

1—Remove two mounting screws from the power switch, S1 (door switch).
2—Dress power switch away from mounting plate, providing more access to underside of top chassis deck.
3—Unsolder leads to rectifier disc assembly.
4—Push aside components underneath rectifier assembly mounting screw until screw can be loosened.

General Electric 210, 211, 212

These models appear on *pages 18-21 through 18-25 of Rider's Volume XVIII.* Change the third column (Signal Input Point) of the alignment charts on *page 18-23* to read: 12BE6 grid (pin 7 of V2) See note 7.

The parts list on *page 18-25* should be changed as follows: Change catalogue number UOP-557 to UOP-558 for Speaker 5¼-inch PM. Add the reference symbol R32 to Cat. No. URD-141—Resistor—6.8 meg., ½w., carbon.

The following changes have been made in the schematic diagram on *page 18-21.* Where capacitor C38 is shown terminating at ground on this schematic, later model receivers have this ground connection removed and the capacitor is terminated at the junction of the antenna input and capacitor C14. Capacitor C36 should be added and connected from the junction point of R29, pilot lamp I1, and pin 4 of V7 to ground. Resistor R32, which has been added to replacement parts list above, is connected from the junction of R8 and C4 (AVC filter) to the cathode, pin 2, of output tube V6.

This resistor, R32, has been added to increase the converter stage gain when operating in the A-M position because of a change in performance characteristics relative to grid cut-off of the 12BE6 tube.

General Electric 230 Kaiser-Frazer

This model appears on *pages 18-26 through 18-28 of Rider's Volume XVIII.* The change involves a substitution of catalog numbers in the replacement parts list as follows:

Cat. No. URE-035 and URF-055 are catalogued for carbon-type resistors. These numbers are to be replaced for numbers specifying wirewound resistors, RRW-037 becoming the Cat. No. for R13 and RRW-036 the number for R18.

General Electric 502

This model appears on *pages 17-4 through 17-8 and pages 17-39,40 through 17-47 of Rider's Volume XVII.* The changes involve a schematic correcton and a correction in the value of a component in the replacement parts list.

The schematic diagram which shows an open circuit in the screen grids of the 6V6 tubes, V10 and V11, should be corrected to show the screen grids connected to the 260-volt B-plus line.

In the listing of Cat. No. RCW-1028, the capacitor value was mistakenly given as 22-$\mu\mu$f. The capacitors listed are actually 100-$\mu\mu$f and RCW-1028 should be changed to read 100-$\mu\mu$f.

Hallicrafters SX-42

This model appears on *pages 17-6 through 17-13 of Rider's Volume XVII.* The following service hints apply to the S-Meter operation.

SYMPTOM NO. 1:

Meter fails to zero on AM.

ANALYSIS:

Assuming that all connections and other circuits, including AVC, are normal . . .

1) The line voltage is low, or
2) The first RF tube is weak

SYMPTOM NO. 2:

Zero adjustment appears too critical. Does not hold.

ANALYSIS:

The leads to the outside terminals of the "Zero Set" potentiometer should be disconnected, reversed, and reconnected.

SYMPTOM NO. 3:

Meter fails to zero on FM

ANALYSIS:

1) Adjust meter indicator mechanically with zero set on the meter.
2) Replace 7A4 tube
3) Replace R-68 with lower resistance if indicator remains on right side of FM zero
4) Replace R-68 with higher resistance if indicator remains on left side of FM zero

REMARKS:

The internal resistance of the meters is not specified, and depends on the supplier. The resistance ranges from 12 to 50 ohms.

The meter has a range of 5 ma. on a linear scale. The FM zero is arbitrarily calibrated at 1.4 ma.

An arbitrary figure of 60 m.v. to the antenna terminal was used for S-9 on the 20 meter band. Each S-unit represents 6 db variation.

60 m.v. to the antenna terminal of the receiver represents roughly a field strength of 15 m.v. per meter.

Hoffman C504, C514

These models are the same as model B504 appearing on *pages 17-1 and pages 17-3,4 through 17-7 of Rider's Volume XVII,* except for the following. Push-pull parallel 6K6 tubes are used in the output instead of push-pull 6V6 tubes. See Fig. 1.

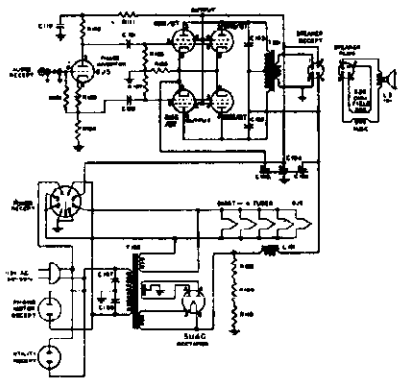

Fig. 1. Changes in the output stages of the Hoffman Models C504 and C514.

A resistance-capacitance filter (R-111 and C110) has been inserted in the B-plus line feeding the phase inverter stage in order to reduce the inherent hum level of the receiver to a satisfactory level. See Fig. 1.

An "entertainment panel" has been wired into the tuner chassis to provide microphone input, a speaker on-off switch, a pillow speaker plug, and an auxilliary phono input to be used either for television sound or wire recorder input. See Fig. 2.

On the recorder amplifier, the screen-dropping resistor (R11) has been changed from 0.1 megohm to 2.2 megohms and the cathode resistor (R2) changed from 2200

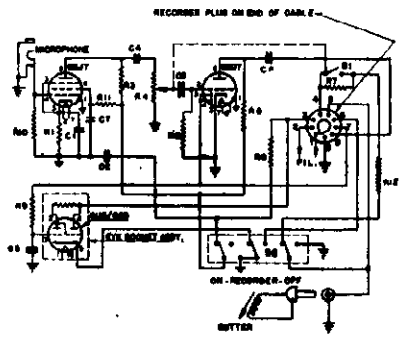

Fig. 2. Changes made to accomodate the "entertainment panel" of the Hoffman C504.

ohms to 4700 ohms. This change allows the screen current of the 6SJ7 to be self-regulating to eliminate variations in gain between various 6SJ7 tubes.

Several changes were made in the late production. A 270,000-ohm resistor was added across the phono input jack of the radio chassis. This resistor was on the record changer (960260-2) in the early production (Serial Nos. B-1001 to B-6000 and B-28,500 to B-30,000).

The location of the resistor may be checked by measuring the shunt resistance across the phono input jack of the radio chassis and across the phono output cable of the changer mechanism.

Hoffman C502 and C512, Chassis 113

These models are the same as Model B502, Chassis 113, appearing on *pages 17-1 to 17-6 of Rider's Volume XVII,* except for the following changes. Four 6K6-GT tubes are used in push-pull parallel in the output stage instead of the 6V6 tubes in push-pull.

An "entertainment panel" has been wired into the tuner chassis to provide microphone input, a speaker off-on switch, a pillow speaker plug, and an auxiliary phono input to be used either for television sound or wire recorder input. See Fig. 1.

A resistance-capacity filter R111 and C110, has been inserted in the B-plus line of the phase inverter stage in order to reduce the inherent hum level of the receiver, as shown in Fig. 2.

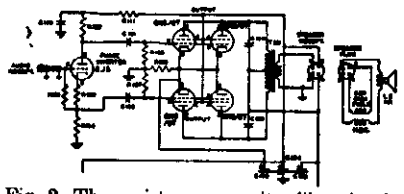

Fig. 2. The resistance-capacity filter in the Hoffman models C502 and C512.

The following changes should be made in the parts list:

Symbol	Description	Hoff. No.
C60	0.005 μf, 600 V, tubular, paper	4102
R16, R20, R50	100,000 ohms ± 20%, ½ watt	4511
R21, R48	47,000 ohms, ± 20%, ½ watt	4504
R49	10 megohms, ± 20%, ½ watt	4506
R27, R46	0.22 megohm, ± 20%, ½ watt	4500
R47, R51	0.47 megohm, ± 20%, ½ watt	4506
C110	10 μf, 450 V, electrolytic	4203
R111	10,000 ohms, ± 20%, ½ watt	4515

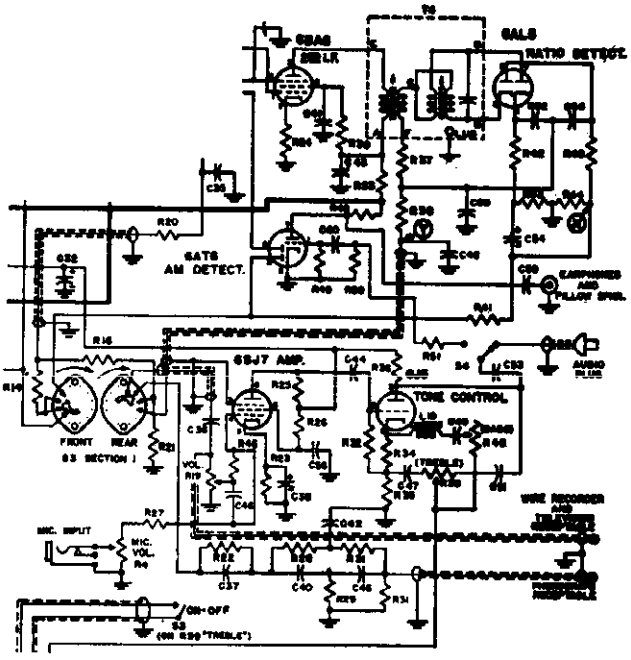

Fig. 1. The entertainment panel that is wired into the Hoffman models C502 and C512.

Majestic 5AK781

This model is the same as model 5AK731 found on *pages 17-3 and 17-4 of Rider's Volume XVII*, except for the following changes in the parts list.

Part No.	Description
S-1441	Dial cord assembly
S-1448	Output transformer
21-29	Aero record changer
115-49-1	Cabinet, (Aero cut out) Blonde, walnut, or mahogany
122-47	Escutcheon plate, metal
128-62	Knobs, tuning and volume
128-80	Knob, phono - radio
101-485	Screw, mounting chassis
106-124	Washer, mounting chassis

Majestic 7BK758

This model is the same as Model 7JK777R appearing on *pages 17-5 and 17-6 of Rider's Volume XVII*, except for the dial scale. The dial scale used is part no. 117-78.

Majestic 12FM782, Chassis 12C20E

This model is the same as Model 12FM778, Chassis 12B26E, appearing on *pages 17-27, 28 to 17-33 of Rider's Volume* XVII, except that it does not have push-buttons and indicator lights for "Records and "F.M."

The following additions should be made to the parts list.

Part #	Description
115-45-2	Cabinet—console combination
21-32	Changer, oak
22-43	Speaker, 12" including output transformer
20-27	A-m. loop antenna (less cover)
122-20	Escutcheon glass (large)
122-44	Dial grill
128-37	Knob (vol-tuning-tone)
128-85	Knob (band switch)
128-46	Spring insert for above knob

Midwest 98

This model is the same as model RM-8, appearing on *pages 18-1 through 18-3 of Rider's Volume XVIII*, except that two pilot lamps have been added. Each #46 pilot lamp is in series with a 10-ohm resistor, and each series combination is in parallel with the other. One end of the parallel combination is connected to the 6.3-volt filament line and the other end is grounded.

Noblitt-Sparks 182TFM, Chassis RE-237

This model appears in *Rider's Volume XVII, pages 17-9,10 through 17-15*. At the start of production, the glass oscillator trimmer "14" was mounted to the bracket on the variable capacitor with a brass nut and had a locking nut to hold tension on the adjusting screw. When this locking nut was tightened down enough to prevent it from working loose while adjusting the trimmer, the tension on the screw was too great for production alignment. To correct this trouble, the locking nut was tightened down to give the proper tension and then soldered to the bracket to prevent it from working loose. This was a difficult solder operation, and the trimmer screw would still work loose after being run in and out a few times, due to a cutting action between the lock nut and the threads on the screw. To correct this trouble, the locking nut was removed and the bracket revised to use a piece of No. 14 music wire to apply tension to the adjusting screw. (See Fig. 1.) The trimmer is much more stable with the new arrangement

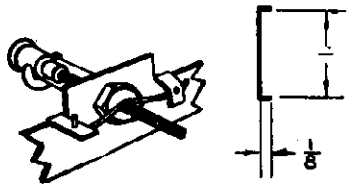

Fig. 1, left, shows the music wire spring applied to the adjusting screw.
Fig. 2, right, shows the music wire spring.

On some trimmers, the threads for the mounting nut did not go down far enough to allow the nut to tighten down against the bracket. A No. 12 lockwasher has been added under the mounting nut to assure a good tight contact between the trimmer and the bracket. If a set is found where the capacity of the oscillator trimmer changes or the trimmer is noisy, the following procedure is recommended:

See that the trimmer mounting to the bracket is tight. Since the trimmer glass is almost sure to break if an attempt is made to tighten the mounting nut after the opposite end of the trimmer has been soldered in place, it is suggested that the trimmer be soldered to the back side of the bracket before attempting to tighten the nut (use care in soldering, apply heat from soldering iron to the bracket to prevent breaking trimmer glass).

Remove the locking nut and replace it with the music wire spring, part number A21902, Fig. 3, by soldering the two metal lugs, part number A21889, Fig. 2 on the present bracket, as shown in Fig. 1.

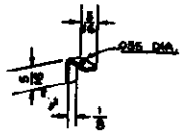

Fig. 3. Two lugs of this type are used as shown in Fig. 1 above.

AM-IF Alignment

Two peaks may be obtained with the 455 i-f slugs; one with the slug tuned almost all the way in and another with the slug tuned almost all the way out. When such is the case, the peak with the slug tuned out should be used.

Noisy F-M Reception

If the set is noisy on f.m., check the six ground leads from the variable capacitor to the chassis to make sure none of them are broken. One broken ground lead will not only make the set noisy, but can also effect the alignment of the set.

Ceramic Capacitors

Care must be taken in placement of ceramic capacitors to prevent shorts which would occur if any part of the capacitor touched other metal parts.

FADING . . . If fading occurs, check the shielded audio leads. One lead should be connected from the center lug of the volume control to the audio coupling capacitor on the stand-off insulator. The other lead should be connected from the right-hand terminal of the control to the band-change switch. If these two leads are reversed, the AVC will be ineffective.

ANTENNA . . . On some of the first sets produced, the primary and secondary windings of the antenna-coupling transformers T1, were shorted together, causing the antenna terminals on the back of the set to be grounded to the chassis. This should be carefully checked before connecting an external antenna to the set, because one position of the a-c plug in the outlet will place 110 volts between the antenna and any grounded object. This would be a shock hazard, and if the antenna became grounded the r-f choke in the a-c leads in the set would burn out.

OSCILLATION . . . If oscillation is encountered, try dressing the yellow filament leads, in the i-f section of the receiver, down against the chassis and away from the tube sockets. Also, see that all grounded leads on the variable capacitor are soldered and not broken.

Some cases of regeneration in the FM i-f circuit have been encountered. This can be detected by a high discriminator voltage, and also a high avc voltage with no signal input. Replacing the 0.005-μf 2nd i-f cathode-bypass capacitor, C32, with a 0.002-μf 350-volt ceramic capacitor will correct this in most cases.

22-OHM RESISTOR BURNS . . . Some receivers have a ¼-watt 22-ohm fusing resistor in the B-plus circuit. If this resistor burns, replace it with a 1-watt resistor. CAUTION . . . First check the B-plus current to see that it does not exceed approximately 100 milliamperes. If the current is greater than this value, some other trouble exists in the receiver and this must be corrected in order to prevent damage to other parts in the receiver.

FLOATING R-F UNIT . . . On some sets the complete r-f assembly is mounted on rubber to prevent microphonics. When servicing these sets, be sure that the ground leads between the r-f assembly and the chassis are securely soldered.

INSULATING CONTROL SHAFTS . . . Some sets have been found with the flat metal washer under the insulating fibre washer on the tone control, volume control and band switch. This would be a shock hazard if a knob was left off the shaft and should be corrected by removing the metal washer and placing it on top of the fibre washer.

The following changes should be made on the schematic diagram:

1. A B- connection was added between R10 and L15.
2. A 220-ohm resistor, R15, has been added across the antenna terminals.
3. Antenna coil L4 has been relocated. In the original schematic it was in series with C1, and the series combination was shunted by C1A. The modification consists of placing C1 and C1A in shunt with each other, and placing L4 in series with this shunt combination and the top connection of L1, the point which is connected to the AM terminal of the selector switch.

The following changes should be made in the parts list:

1. R5 should be C20060-221 resistor, 220 ohms, ¼ watt
2. P.S. — A21709 parasitic suppressor should be added
3. C10 should be C20204-500 capacitor, 0.00005-μf., 500 V, ceramic
4. R8, 22-ohm fusing resistor should be 1 watt, C20103-220
5. A19328-4 grommet, rubber, Mtg., RF Assy.
6. A19138-3 eyelet spacer, Mtg., RF Assy.

Montgomery Ward 64WG-1050B, 1050D, 74WG-1050D

These models are the same as Model 64WG-1050A on *pages 15-75 to 15-77 of Rider's Volume XV*, except for the following changes. The 0.1-μf capacitor C-11, is connected between pin 1 of the 1R5 oscillator-detector tube and the common negative circuit instead of the chassis ground.

In the D models, a 1000-ohm resistor, R-13, is connected between pin 7 of the 3S4 output tube and the common negative circuit. The following should be added to the parts list.

Ref. No.	Part No.	Description
R-13	B84102	100 ohms, 0.05 watt, carbon

Montgomery Ward 64WG-1050C

This model is the same as Model 64WG-1050A on *pages 15-75 to 15-77 of Rider's Volume XV*, except for the following changes. The 1500-ohm resistor R-3 is now connected from the center tap of the filament of the 3S4 output tube to the common negative circuit, lug 4 on the changeover switch, instead of to the positive filament lead (pin 7) of the 1S5 oscillator-detector tube, lug 9 of the changeover switch.

A 100-ohm resistor R-12 has been connected between R-11 and the selenium rectifier.

Ref. No.	Part No.	Description
R-12	D84101	100 ohms, 2.0 watt, carbon

RCA QB55X Chassis RC-563-K

This model appears on *pages 17-9 through 17-11 of Rider's Volume XVII*. In some chassis two 2000-$\mu\mu$f capacitors in parallel are used in place of the specified 3900 $\mu\mu$f capacitor C7.

RCA QB55, QB55X

Model QB55, chassis RC-563A, appears *on pages 15-27 through 15-29 of Rider's Volume XV*. Model QB55X, chassis RC-563K, appears on *pages 17-9 through 17-11 of Rider's Volume XVII*. A viscoloid damper has been added to the stator plates of the oscillator section of the tuning capacitor to reduce microphonics on short wave reception.

Some of these sets have dial back plates without the score marks which may be used as a reference during alignment. The glass dial scale may be removed from the cabinet and used as a reference during alignment, or the check points indicated in the accompanying diagram may be used.

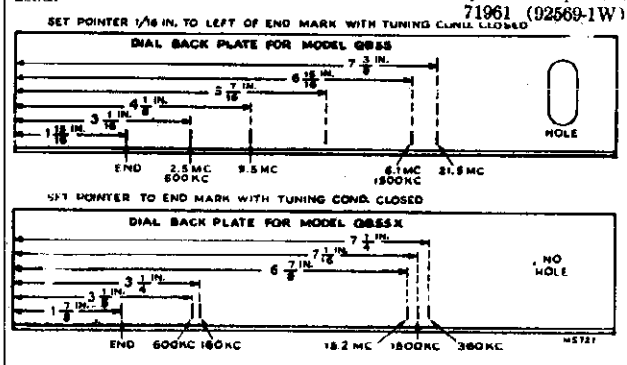

Check points to be used when aligning the RCA models QB55 and QB55X

RCA Q109 (RC-602), Q109X (RC-602A)

The following voltage-current table should be added to the service data appearing in *Rider's Manual Volume 18, pages RCA 18-3 through 18-10*.

Socket Voltages — Cathode Currents
Local-Phono-Distant Switch in Distant Position.

Tube		Plate Volts	Screen Volts	Cathode Volts	Cathode Current
1	6SG7	137	112	0	13.1 ma
2	6SA7	260	103	0	12.2
3	6SK7	235	103	1.3	13.3
4	6SQ7	86*	.....	0	0.4
5	6F6G	257	260	19.2	23.5
6	6F6G	257	260	19.2	23.5
7	6AT6	90*	.....	0	0.7
8	6U5	260	21*	0	2.1
9	5Y3G	.....	.....	355.	90.0

*Measured with Chanalyst or Voltohmyst

In LOCAL position the cathode circuit of the 6SG7, the RF amplifier, is opened ("A" Band only) and the voltages are correspondingly higher due to the absence of cathode current in this tube.

The stock number of the speaker cone should be changed to read:

No. 70972 Cone — Cone and voice coil assembly

RCA Q10, Q10A, Q10A2, Q10-2, Q10-3, Q110

This material appears in *Rider's Manual Volume 15, pages 15-5 through 15-7*. In the event that regeneration develops in the receiver, it may be due to a resonant condition due to electrolytic capacitor C21 being parallel with capacitor C11 (0.1-μf). Three methods have been used at the factory to correct this condition. These are:

(1) C11 may be 0.05-μf instead of 0.1-μf
(2) An additional 0.1-μf capacitor may be added in parallel with C11
(3) The RED and GREEN leads of the electrolytic capacitor (C21 and C22) may be interchanged

In some chassis, R1 may be 2.0 megohms instead of 2.2 megohms.

RCA 8V7, 67V1, 67AV1, 710V2

Model 8V7 appears on *pages 18-15 through 18-16 of Rider's Volume XVIII*. Models 67V1, 67AV1 appear on *pages 16-35 through 16-39 of Rider's Volume XVI*. Model 710V2 appears on *pages 18-55 through 18-60 of Rider's Volume XVIII*. An alternate Speaker (stamped 92569-1K) has been used as a substitute for the listed speaker (or speakers) in these models.

Add the following to the parts list: Under "Speaker Assemblies" add the following: 92569-1K.

70574 Cone—Cone and voice coil assembly.
31539 Plug—5 prong male plug for speaker.
37899 Transformer—Output transformer.

Replace complete speaker with Stock No. 71961 (92569-1W).

RCA 66X11, 66X12, 66X13

These models appear on *pages 17-29 through 17-30 of Rider's Volume XVII*. Some oscillator coils which were specified for the first production (RC-1046A, RC-1046, RC-1046B) of these models have been used on the second production (RC-1046C, RC-1046D, RC-1046E).

Some oscillator coils and associated coupling capacitors (C19) which were specified for the second production have been used on the first production.

If replacement is necessary — use the specified parts — the range of inductance adjustment may be insufficient if used otherwise.

RCA QU-62

This model appears on *pages 17-13,14 through 17-20 of Rider's Volume XVII*. In some instruments the speakers listed following have been used as alternates for the speakers listed in the parts list.

Speaker Assemblies 92520-1K

70574	Cone—cone and voice coil assembly
5118	Plug — 3 prong male plug for speaker
70686	Speaker—12" PM speaker complete with cone and voice coil less plug

(Used as alternate for PM speaker stamped 92469-4W)

Speaker Assemblies 92516-2K

70574	Cone—cone and voice coil assembly
5119	Plug—3 contact female plug for speaker
31539	Plug — 5 prong male plug for speaker
70573	Speaker—12" EM speaker complete with cone and voice coil less output transformer and plugs
70688	Transformer—output transformer (T4)

(Used as alternate for EM speaker stamped 92566-3W)

The alternate speakers will not fit on the mounting bolts used with the original speakers. If a replacement which differs from the original equipment speaker becomes necessary, it is suggested that the mounting bolts be cut off and the replacement speaker mounted using rubber grommets, spacers, and wood screws.

The top view of this model is shown on *page 17-18 of Rider's Volume XVII*. The tuning capacitor has six sections—C1 and C2 Ant, C14 and C15 R.F., and C11 and C31 Osc. The tube and trimmer location view shows only C1, C14 and C31, which are used on the "A" and "B" bands only.

The following change should be made in the parts list on *page 17-20*. Replace Stock No. 31970 spring with Stock No. 31418 spring—Drive or indicator cord spring.

The instrument label used on some instruments is incorrect in showing tube locations. The r-f shelf assembly should be turned 90° clockwise. The correct tube locations are illustrated in the accompanying diagram.

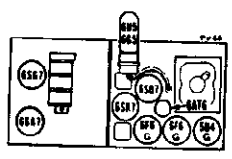

The correct tube locations for the RCA Model QU-62.

RCA QU-61

This was published in *Rider's Manual Volume 15, page 15-66.* The following pertains to the power-supply ratings for this receiver.

Only one power-supply rating (Symbol Rating D) is applicable to QU-61. As manufactured it may be operated on 100 to 260 volts, 50-60 cycles. A universal type of transformer having five voltage ranges is used. The desired range may be selected by the proper positioning of a link beneath a cover on the top of the power transformer as follows:

110 position	100 to 115 volts
125 position	115 to 135 volts
150 position	135 to 165 volts
210 position	165 to 230 volts
240 position	230 to 260 volts

The receiver is shipped with this link in the 240-volt position.

CAUTION . . . Remove the power cord from the line receptacle before changing the position of the link.

The record changer is made for operation on a 60-cycle power supply but may be converted to 50-cycle operation by the addition of a conversion spring to the motor shaft.

Change in Replacement Parts:

Stock No. 34183 Transformer
Delete "For Specification Ratings A and C"
Add "For Specification Rating "D"

Stock No. 39786 Transformer
(No phonograph motors are available to permit operation of this instrument on 25-cycle current. However, this transformer may be used for operation on 105 to 125 volts, 50-60 cycles.)

RCA 8X521, 8X522

These models appear on *pages 18-43 through 18-44 of Rider's Volume XVIII.* On late production sets, slotted holes are provided in the tuning capacitor mounting bracket, and washers (maximum of five required) are used on the tuning capacitor shaft (between dial knob and capacitor) to permit adjustment of the dial. If the cabinet or tuning capacitor should be replaced, it may be necessary to adjust the mounting of the tuning capacitor or change the number of washers to prevent rubbing of the dial on the cabinet.

The following changes should be made in the parts list:

Delete: 70601 Capacitor — tubular, 0.002 μf (C9)

Add: 74063 Capacitor — ceramic 200 $\mu\mu$f (C9)
74183 Washer — vellutex washer for dial knob clearance

RCA 54B5

This model appears on *pages 16-28 through 16-30 of Rider's Volume XVI.*

The following addition should be made to the parts list.

70708 Lead—battery lead assembly

RCA Radiola 81-10 (RC-1023A and RC-1023C)

This material appears in *Rider's Manual Volume 15, pages 15-53, 15-61, and 15-62.* In some of the 1023A chassis, two 10-$\mu\mu$f capacitors are used in parallel in place of the specified 22-$\mu\mu$f capacitor, C-15.

In the case of the 1023C chassis, service data given for the 1023A chassis will apply in toto.

RCA 711V2

This model appears on *pages 17-44 to 17-55 of Rider's Volume XVII.* Interference has been noted on the broadcast band in certain localities. This interference appears in the background of certain stations or between stations, and generally takes the form of code or amateur voice. An abnormal quantity of whistles when tuning across the band is also present. Connecting an external antenna to the set merely makes the condition worse.

A production change has been made to overcome this condition. Receivers having this change may be identified by the letter L following the serial number on the radio chassis. The antenna coil L3 has been removed and a different loop antenna installed. These changes may be made as follows.

1. Remove radio chassis.
2. Refer to illustration and remove the red lead connected from the loop loading coil L3 to terminal 8 of S4.
3. Unsolder the blue lead from loop loading coil L3 and connect this lead to terminal 8 of S4. L3 may be left in the chassis without leads connected to it.
4. Remove the loop cable from loop and from the terminal board on the rear of the cabinet.
5. Remove the lug from the end of the yellow loop lead and solder this lead to terminal 5 on the antenna terminal board on the radio chassis.
6. Re-install the radio chassis.
7. Clip off pin 5 on chassis end of the five-conductor flexible antenna cable and file the remainder of the pin smoth with surface of plug.
8. Plug the five-conductor cable into the antenna terminal board on chassis (see sketch). Note that with one pin removed, the plug can be moved one pin to the right and plugged in, making incorrect contact.
9. Carefully pull the yellow lead downward along the five-conductor cable far enough to permit taping it to the plug portion of this cable to prevent the yellow lead from breaking at the soldered joint at terminal 5 when flexed by opening of the radio door.
10. Connect the red and black loop leads to the rear terminals 4 and 5 respectively from which they were originally removed. Close link from 4 to 5 if an external antenna is not used. If an external antenna is used, it may be connected as described on *page 17-54 of Rider's Volume XVII.*
11. Remove the screw from terminal 6 in the antenna board on rear of cabinet to avoid improper connection in the future.
12. Remove the old loop and install the new loop in its place.
13. Plug the loop cable into the new loop.
14. Peak the loop trimmer on a weak station around 1400 kc.
15. If a test oscillator is available, the low-frequency oscillator core (L12) adjustment should be made while rocking the gang through 600 kc, to obtain maximum output. Repeak loop trimmer again at 1400 kc.
16. Grounding one of the the f-m antenna terminals (connect terminal 1 to 5) on the board on the rear of the cabinet may prove advantageous to reduce excess signals if an external f-m antenna is used.

NOTE: The new loop referred to above may be identified by a green paint dot on one metal mounting bracket. Also, the large coil has 20 turns of wire with only a few turns, or no turns, visible through the holes near the edge of the loop frame. The original loop contains 13 turns, all of which are visible through the holes near the edge.

The leads which are not shown in the accompanying diagrams need no change.

Delete 71863 cable from the parts list and add the following.

73250 Cable—five-conductor molded antenna lead in cable
71614 Capacitor—120 $\mu\mu$f, ceramic — in shunt with the loop primary
73480 Loop—antenna loop complete. For receivers without loop loading coil.

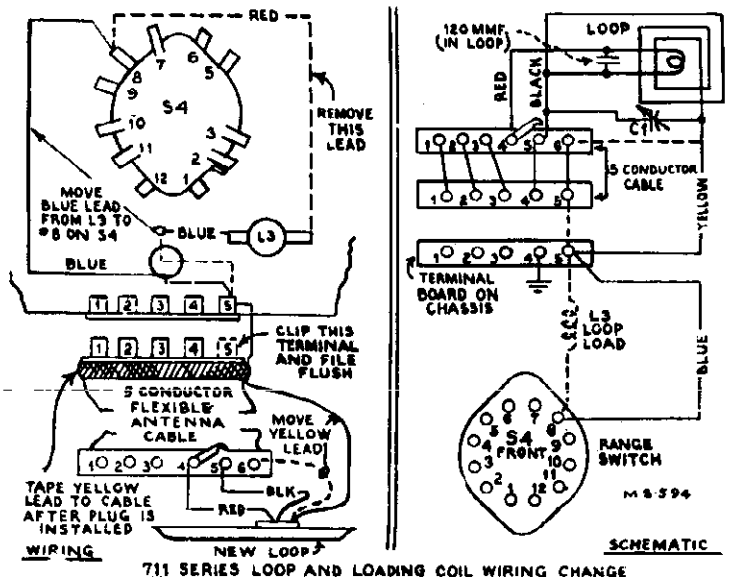

711 SERIES LOOP AND LOADING COIL WIRING CHANGE
(BROKEN LINES INDICATE ORIGINAL WIRING REMOVED)

Necessary connections for the new loop for the RCA model 711V2

RCA 66BX, Chassis RC-1040B

This model is the same as model 66BX, Chassis RC-1040 appearing *on pages 15-87 and 15-88 of Rider's Volume XV*, except for the following changes:

Chassis RC-1040B uses a 3V4 output tube and a selenium rectifier. Resistor R3 and capacitor C8 in the converter stage are omitted.

Resistor R17 in the power supply has been changed in value to 2650 ohms. Resistor R20 (2700 ohms) replaces resistor R18 in the power-supply circuit. A 33-ohm resistor (R31) has been added between the selenium rectifier and the "hot" side of capacitor C33. Capacitor C33 is now grounded. See Fig. 1.

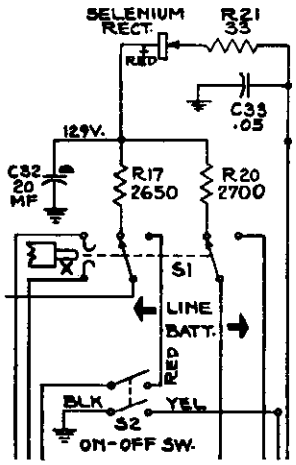

Fig. 1. Power supply of the RCA Chassis RC-1040B.

If the volume control needs replacement, the following steps should be followed. See Figs. 2 and 3.

1. Remove the 3V4 power output tube.
2. Remove the three screws holding the power cord bracket assembly. (Do not damage insulating washers.)
3. Remove the screw holding the switch assembly and remove the switch.
4. Remove the dial cord from the pulley.
5. Remove the screw holding the volume control bracket assembly.
6. Loosen the screw which maintains pressure on the expansion assembly.
7. Remove the drum.
8. Remove the expansion assembly from the volume control shaft.
9. Remove the nut holding the volume control to the bracket.

The following changes should be made in the parts list. Delete the following:

Stock No.	Description
38875	Resistor—1800 ohms, 1 watt (R18)
71038	Resistor — ballast resistor, 2300 ohms, 6 watt (R17)
30649	Resistor — 2.2 megohms, ¼ watt (R3)
70392	Cord — power cord
31709	Capacitor — ceramic 6.8-μμf (C7)

Add the following parts to the parts list.

Stock No.	Description
39043	Capacitor—Ceramic, 6.8-μμf (C7)
70022	Cord — power cord
72283	Grommet — rubber grommet to mount tuning capacitor (4 required)
72543	Rectifier — selenium rectifier
71290	Resistor—33 ohms, 1 watt (R21)
30930	Resistor — 1800 ohms, ¼ watt (R6, R15)
72760	Resistor — ballast resistor, 2650 ohms, 7 watt (R17)
14421	Resistor—2700 ohms, 1 watt (R20)
72541	Socket — tube socket - miniature - 7 prong bottom mounted with shield
72980	Side — case side — l.h. with decorative ribs at top, bottom, and both sides.
72979	Side — case side — r.h. (loop side) less capacitor assembly with decorative ribs at top, bottom, and both sides.

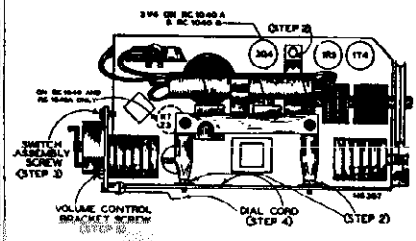

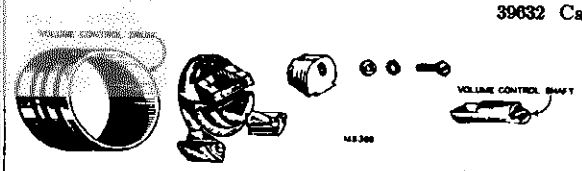

Fig. 2, above. Parts layout of RCA chassis RC-1040B. Fig. 3, left. Volume control dissassembly.

RCA Radiola 62-1 (RC-1017A)

This appeared in *Rider's Manual Volume 16, pages RCA 16-33 and 16-34*. A 270,000-ohm resistor, R12, is connected across the phono input between the center contact of the phono jack. One lead of the resistor joins the contact which goes to switch S1 and the other lead joins the jack at the point where C4 is connected to it.

RCA 65U-1

Rider's Volume 15, pages RCA 15-86 and 15-88 list models 65U and 65AU. These are the same as model 65U-1. The difference is found in the cabinets. The U and AU models have a rounded top at the front and the U-1 has a beveled top in front.

RCA 67V1, Chassis RC-606C

This model appears on *pages 16-36 through 16-39 of Rider's Volume XVI*. Resistor R18 which was originally 470,000 ohms, appears in some chassis as 330,000 ohms and in some chassis as 220,000 ohms.

RCA 67V1, 67AV1

These models appear on *pages 16-36 to 16-39 of Rider's Volume XVI*. In late production models, resistor R18 connected from the phono jack to ground has been changed from 120,000 ohms to 330,000 ohms.

RCA 75X11, 75X12 (RC-1050)

The following changes have been made in the wiring. The circuit appears in *Rider's Manual Volume 18 pages RCA 18-49 and 18-50*.

Capacitor C18 is now connected between pin #3 and pin #8 of the 35Z5GT rectifier. The service data indicates that it is connected between pin #3 of the above rectifier tube and the junction of R17 and C19.

Add to the parts list the following; under the heading of Chassis Assemblies:

39632 Capacitor-Mica 150-μμf (C13)

RCA 75X11, 75X12 (RC-1050A)

These models are the same as models 75X11 and 75X12, chassis RC-1050, appearing in *Rider's Volume 18 on pages RCA 18-49 and 18-50* except for differences in the i-f transformers. Here are the listing of the i-f transformer part numbers for the two different chassis.

Chassis RC-1050 uses:
- 1st IF trans. stamped 922246-7, Stock No. 71558
- 2nd IF trans. stamped 940351-2, Stock No. 71631

Chassis RC-1050A uses:
- 1st IF trans. stamped 922246-11, Stock No. 70128
- 2nd IF trans. stamped 922246-12, Stock No. 70129

Connections to the i-f transformers are identical for both chassis. Capacitors C8 and C9 of the 2nd i-f transformer stamped 922246-12 (RC-1050A) are 122-μμf each; the windings of this transformer have a d-c resistance of 13 ohms each.

RCA 76ZX12

This receiver is in *Rider's Manual Volume 18, pages RCA 18-51, 18-52*. The following corrections are made in the parts lists. Under the miscellaneous heading

Delete No. 36886 Knob and
Add No. 70414 Knob—control knob ivory for 76ZX12

Sears 6686, Chassis 101.851

This model appears on *page 17-1 of Rider's Volume XVII*. It has been found that the dial cord slips on some of these models. To help correct this condition, it will be necessary to replace the present dial cord with a longer dial cord to change the pointer hookup. The new cord should be cut about 40 inches long and should measure 16¾ inches folded after assembly to the dial string tension spring. See the accompanying diagram for correct hookup.

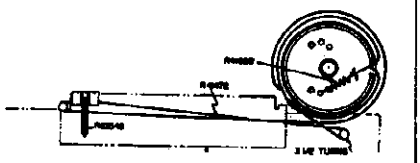

Dial cord hookup for Sears chassis 101.831

Dial slippage may be due to a tight ganged tuning capacitor. If light lubrication does not correct the condition, the thrust adjusting screw on the rear of the tuning gang may be backed off very slightly and securely locked in the new adjustment. Use great care to avoid excessive loosening as the rotor and stator plates may short. The set may require realignment after this adjustment.

If frequency shift occurs, the following change is recommended to correct the condition:

1. Remove the screw and mica and bend up the leaf of the capacitor shunted across the a-m oscillator trimmer capacitor, C23.
2. Replace this part with a 15-μμf ± 10% ceramic capacitor.
3. Realign the a-m band of the radio receiver.

This change is being incorporated in production and will be effective on all sets shipped after September 30, 1948.

Sears 6230A, Ch. 101.802-1

This model is the same as model 6230, ch. 101.802, which appears on *pages 15-15 through 15-18 of Rider's Volume XV*, except for the following change.

A phono jack has been added to the circuit. This phono jack is connected to the control grid (pin 6) of the 1LB4 output tube. Physically, the jack is located on the top of the chassis in the rear left corner near transformer T3.

Sears Roebuck 6362, 6363, 6364, Chassis 101.581

These models appear on *pages 11-64, 11-80, and 11-82 of Rider's Volume XI*. If frequency shift in the a-m band occurs, the following should be done. Remove the screw and mica and bend up the leaf of the capacitor shunted across the a-m oscillator trimmer capacitor C23. Replace this part with a 15-$\mu\mu$f, 10% ceramic capacitor. Then realign the a-m band as outlined on *page 11-82 of Rider's Volume XI*. This change is being incorporated in the present production of these models.

Sears Roebuck 7054, 8052, 8053

Models 8052 and 8053 are similar to Model 7054, but include the change shown on page 3 of the September issue of *Successful Servicing*. Model 7054 appears on *pages 16-1 through 16-3 of Rider's Volume XVI*. It has been found that some of the failures of the 35Y4 rectifier tube in these models can be prevented by adding a shunt resistor of 270 ohms across pins number 1 and 4 of the 35Y4 tube. This change was not made in production, so it is suggested that it be made in service when this type of failure is encountered.

Sears 7230, Ch. 101.802A

Basically, this model is the same as model 6230, ch. 101.802, which appears on *pages 15-15 through 15-18 of Rider's Volume XV*. However, it differs in the following respects.

A phono jack has been mounted on the top of the chassis in the left rear corner near transformer T3. This jack is connected to the grid (pin 6) of the 1LB4 output tube.

Also, the dial cord and pointer arrangement has been changed to the hookup shown in the accompanying diagram.

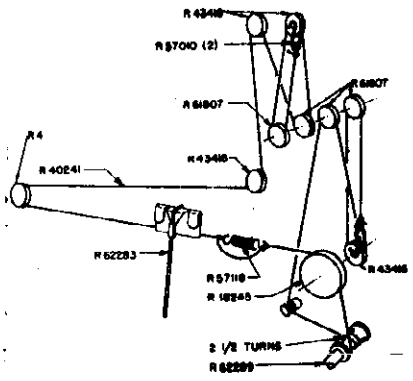

Dial cord arrangement for the Sears Model 7230

The battery supply used with this model is Cat. No. 6306 Battery Pack.

Sparks Withington 1005.6.7.8

These models appear in *Rider's Manual Volume XVIII, pages 18-3 through 18-10*. The signal generator frequency in operation 9 in the alignment chart on *page 18-5* should be changed to read 10.7 megacycles.

Sears 7100, Ch. 101.811-1

Model 7100, Ch. 101.811, appears on *pages 16-1, 16-4, 16-5, and 16-8 of Rider's Volume XVI*. A change has been made in the circuit as follows:

A tone-control network consisting of resistor R16 and capacitor C24 has been connected from the plate (pin 2) to the cathode (pin 7) of the 7C6 tube. In order to accommodate this added circuit, some rearrangement has been made in the position of parts on the bottom of the chassis.

Stromberg-Carlson 1204

This 1949 model is similar to the previously manufactured Model 1204, appearing on *pages 18-4 through 18-6 of Rider's Volume XVIII*. The following changes provide complete servicing information:

Remove C-4 and R-5 and ground the cathode of the r-f amplifier (Pin 7).

Remove C-29 and R-20 and ground the cathode of the 1st i-f amplifier (Pin 7).

Remove C-37 and R-22 and ground the cathode of the 2nd i-f amplifier (Pin 7).

Short out L-18 and R-7 in the screen of the r-f amplifier (Pin 6).

Change R-9 from 680 ohms to 2200 ohms with an r-f choke wound on the resistor and connected in parallel with it.

Remove C-30 and short out R-34 in the screen of the 1st i-f amplifier (Pin 6).

Remove C-38 and short out R-24 in the screen of the 2nd i-f amplifier (Pin 6).

Add a 0.1-μf capacitor from Pin 8 to ground and from pin 3 to ground on the 12H6 f-m detector.

Add a 10-megohm, ½-watt resistor from the grid (Pin 7) of the converter to the avc string.

Add a 220,000-ohm, ½-watt resistor from terminal 5 to terminal 7 of 1st i-f transformer.

Disconnect Pin 5 of 2nd i-f transformer from ground and insert a 0.01-μf capacitor from Pin 5 to ground. Connect Pin 5 to the avc string through a 100,000-ohm, ½-watt resistor.

Change the converter, 1st i-f amplifier, and 2nd i-f amplifier B-plus line to feed from the low side of the filter choke.

Stromberg-Carlson 1210, 1408

The information for Model 1210 appears on *pages 17-1 through 17-7 of Rider's Volume XVII*. The 1408 is the same except that it is being manufactured in two cabinet styles, the blonde 1408 M6A (108119) and the mahogany 1408 PLM (10811), both equipped with the VM-800 record changer and the 1210 radio chassis.

Now that the low-frequency f-m band is practically non-existent, these two models can be modified to give greater sensitivity on the high-frequency f-m band at the sacrifice of the low-frequency f-m sensitivity. This is done by changing the built-in f-m dipole on the back of the cabinet. Use the following procedure:

Remove the original dipole attached to the rear of the cabinet.

Cut a piece of 300-ohm transmission line to 57 inches in length. This will be the new dipole.

Short the two parallel leads together at each lend of this transmission line and solder.

At the center of *one* of the wires in the 300-ohm line, break the lead and connect another piece of 300-ohm line long enough to reach from the top of the cabinet to the dipole antenna terminals on the 1210 chassis. Solder the connection.

Attach the 57-inch length of line to the cabinet, dressing it so that it is kept away from the a-m loop and so that the center of the dipole is at the center of the cabinet at the top.

Connect the other end of the lead-in to the f-m antenna terminals of the 1210 chassis.

Stromberg-Carlson 1400, 1400 Special

These models are the same as Model 1200, appearing on *pages 18-1 through 18-3 of Rider's Volume XVIII*, except for the following changes. Omit R-9 (220 ohms) and connect the screen grid of the converter (12BA6, Pin 6) to the screen grid i-f amplifier (12BE6, Pin 6).

Omit C-2 (.05 μf). Omit the dial lamp. Omit R-14 (120 ohms 2 watt) and jumper the former terminals of the resistor to make the heater string continuous.

The difference between these models is that Model 1400 has a dial with the numbers on the curved lens while Model 1400 Special has a dial with numbers on the flat glass plate behind the curved lens.

Teletone 149, 157

These models are the same as model 135 which appears on *page Misc. 16-11 of Rider's Volume XVI*.

United Motors R-705

Add to the material on this model appearing in *Rider's Volume XVII, pages 17-1 through 17-6* (the Electro-Tuner in *Volume XVIII, pages 18-6 and 18-7*), the Service Part #7256226, Fuse Block.

Ignition interference on an R-705 recently installed in a new convertible Studebaker Commander has been suppressed through the following procedure.

To eliminate chassis pickup:

Sand edges of the case and cover the chassis unit and install additional cinch clips to insure a tight cover to case fit. Bond motor to firewall with part #6022 Braid. Bond heater control wire sheath to firewall at entrance point of firewall. Use one-inch braid. Soldering the braid to control wire sheath is not recommended. A mechanical connection is more desirable since there is less danger of soldering the control wire and sheath together.

To eliminate antenna pickup:

Bond antenna base to instrument panel using as short a length of braid as possible. Install a choke coil in antenna circuit. This may be accomplished by wiring choke part #1214382 into the chassis at the antenna connector or using part #555382 adapter. This latter part is available only through the Oldsmobile Lansing Parts Department Stores "A", Lansing, Michigan.

Westinghouse H-124

This model is the same as Model H-125 which appears on *pages 15-8 through 15-10 of Rider's Volume XV*, except that the side panels of the H-124 cabinet are a darker shade of green. The following items have been added to the parts list:

Part No.	Description
V-3461-3	Cover, left hand
V-3459-3	Cover, right hand

Westinghouse H-186, H-187

This model appears on *pages 18-26 through 18-30 of Rider's Volume XVIII*. The 0.1-μf resonant-type capacitor (C33) is not used on late production chassis. This capacitor is shown connected between the B-plus line and ground in the schematic diagram on *page 18-26*.

© John F. Rider

Westinghouse H-164, H-166, H-166A, H-167

These models appear on *pages 18-12 through 18-19 of Rider's Volume XVIII*. The changes are as follows:

The notes under Figs. 1 and 4 should be revised to read: "All V-2119 chassis have 1st and 2nd i-f transformer adjustments as shown by the dotted line." The dotted-line adjusting points apply to current production chassis as well as to early models. The adjusting points shown in Fig. 3 apply to the V-2119-1 chassis which was also used in the above models.

Early models of the V-2119 chassis used a V-3295 power transformer which required a voltage-dropping resistor (R50) between the rectifier tube and the filter input to provide the correct voltage at the input to the filter. The V-2119-1 chassis and late models of the V-2119 chassis use a different power transformer (stock numbered V-4761) and the voltage-dropping resistor, R50, is no longer required.

Capacitor C76, which is shown connected between the B-plus line and ground in the schematic diagram on page 18-13, is not being used on late production chassis.

The items listed below are incorrectly listed in the replacement parts list. They should be changed to read as follows:

RC30AE332K	Resistor, 3,300 ohms, 1 w. (R31)
V-4886-1	Choke, filament (L2, L3)

Westinghouse H-165

This model appears on *pages 17-12 through 17-14 of Rider's Volume XVII*. The switch for this model was listed as a complete assembly including a wafer section (SW1) and an a-c switch section (SW2). In cases where the a-c switch is defective, but the remainder of the switch is not damaged, repairs can most easily be made by replacing the a-c section only. For this reason, the a-c section of the switch assembly is listed below as an addition to the parts list.

Part No.	Description
V-4803-1	Switch, a-c (SW2) and mounting plate

Westinghouse H-185 and H-195

These models appear on *pages 18-23 through 18-26 of Rider's Volume XVIII*. The changes are as follows:

The value of R3 on the schematic diagram should read 220 ohms instead of 220K ohms as shown.

The 220K resistor, R7, which was previously connected between the common negative line and the chassis, is not being used in late production chassis. Also in later production chassis, the value of R9 was changed from 3,300 ohms to 1,800 ohms.

In later production receivers, an adjustment hole was provided in the right side of the model H-185 cabinet. It is recommended that the r-f trimmer (C6) be adjusted with the chassis in the cabinet and the rear cover closed. The plug that fits this hole is listed below.

The following items should be added to the parts lists:

RC20AE182K	Resistor, 1,800 ohms, ½ w. (R9)
V-1157-4	Cabinet, plastic (H-185 grey)
V-4836-6	Plug, button (H-185 grey cabinet)
V-4836-5	Plug, button (H-185 maroon cabinet)

Westinghouse H-153, H-155, H-156, H-171, H-171A, H-171C, H-184

These models are electrically the same as Model H-122, appearing on *pages 15-5 through 15-7 of Rider's Volume XV*. The cabinets differ from that of Model H-122.

The parts list should be changed to include the following:

Item	Part No.	Description
31	V-3360	Loop, antenna (H-171 Mah., H-171A, H-171C, H-184)
31	V-4364	Loop, antenna (H-153, H-171 Blonde and Limed Oak)
31	V-4373	Loop, antenna (H-156)
35	V-4079	Receptacle (H-153, H-171)
65	V-5405	Socket, molded power (H-171, H-171C)
65	V-3393-1	Socket, receiver, a-c power (H-153)
	V-3412	Background, dial (H-153, H-171, H-171A, H-171C, H-184)
	V-4376	Background, dial (H-156)
	V-4891	Baffle and grill cloth assembly (H-155)
	V-3677	Baffle, cardboard (H-156)
	V-3532	Bar, flat, record changer mounting (H-153, H-171, H-171C)
	V-3489S-1	Bumper (cabinet foot for H-153, H-155, H-156)
	V-6021-1	Bumper, ⅜" dia., self-adhering (H-184)
	V-6021-2	Bumper, ½" x 2", self-adhering (H-184)
	V-5725	Bumper, bottom cover mounting (H-184)
	V-1125-1	Cabinet (radio section – H-153, H-171 Blonde and Limed Oak)
	V-1126	Cabinet (H-155)
	V-1128	Cabinet (H-156)
	V-1158-1	Cabinet, less radio section (H-184)
	V-5036	Catch, bullet (H-171 Blonde and Limed Oak)
	V-5286	Catch, bullet (H-171 Mah., H-171A, H-171C)
	V-32195-1	Cord, dial drive (spool)
	V-5047	Cover, back (H-171 Blonde and Limed Oak)
	V-5287	Cover, back (H-171 Mahogeny)
	V-5734	Cover, bottom (H-184)
	V-3663	Decal, radio-phono (H-155, H-156)
	V-3662	Decal, stations (H-155, H-156)
	V-3660	Decal, tone (H-155, H-156)
	V-3661	Decal, volume (H-155, H-156)
	V-3665	Decal, Westinghouse (H-155, H-156)
	V-3647	Dial (H-155)
	V-4344	Dial (H-156)
	V-7009-1	Door, front (H-171 Limed Oak)
	V-7009-2	Door, front (H-171 Blonde)
	V-7011	Door, front (H-171 Mah., H-171A, H-171C)
	V-3829	Felt Strip, ¼" x 1/16" x 8⅛" (H-153, H-171, H-171A, H-171C, H-184)
	V-4902	Glide, furniture (H-171, H-171A, H-171C)
	V-4228	Grille Cloth (H-156)
	V-3345-5	Grommet, variable capacitor mounting.
	V-4973	Hinge, door (H-171 Blonde and Limed Oak)
	V-5355-1	Hinge, door (H-171 Mah., H-171A, H-171C)
	V-3510	Hinge, lid (H-171 Mah., H-171A, H-171C)
	V-4321	Hinge, lid (H-153, H-171 Blonde and Limed Oak)
	V-5836	Knob, door (H-171A, H-171C)
	V-4362-2	Knob, radio-phono (H-153, H-171 Blonde and Limed Oak)
	V-4371-2	Knob, radio-phono (H-156)
	V-4361	Knob, tuning and tone (H-153, H-171 Blonde and Limed Oak)
	V-3697-3	Knob, tuning and tone (H-156)
	V-4362-1	Knob, volume (H-153, H-171 Blonde and Limed Oak)
	V-4371-1	Knob, volume (H-156)
	V-3333S-2	Medallion (H-153, H-155, H-171 Blonde and Limed Oak)
	V-3894	Nameplate, Westinghouse (H-153, H-171, H-171A, H-171C)
	V-6024-1	Plate, hinge (H-184)
	V-4365	Pointer, (H-153, H-171 Blonde and Limed Oak)
	V-4384	Pointer (H-156)
	V-3836-1	Pointer assembly, including pointer, mount and slide (H-171 Mah., H-171A, H-171C, H-184)
	V-3836-2	Pointer assembly, including pointer, mount and slide (H-155)
	V-3370	Pointer slide assembly, including pointer mount and pointer slide (H-153, H-171 Blonde and Limed Oak)
	V-3166S	Pulley, 7/16" dia.
	V-4379	Rail assembly, pointer (H-156)
	RC20AE334M	Resistor, 330K ½ w.(part of record changer)
	V-3322	Shaft, tuning
	V-3530	Spacer, felt, 1/16" x ⅜" x 1" (H-171A, H-171C)
	V-4323	Spacer, felt, 1/16" x ⅜" x 1" (H-153, H-171 Blonde and Limed Oak)
	V-5057	Strike, bullet catch (H-171 Blonde and Limed Oak)
	V-5290	Strike, bullet catch (H-171 Mah., H-171A, H-171C)
	V-4324	Support, lid (H-153, H-171 Blonde and Limed Oak)
	V-5291	Support, lid (H-171 Mah., H-171A, H-171C)
	V-3752S	Washer, felt, for small knobs (H-171 Mah., H-171A, H-171C, H-184)
	V-4366	Washer, felt, for small knobs (H-153, H-171 Blonde and Limed Oak)
	V-3668S	Washer, felt, for knobs (H-155)
	V-5277-1	Washer, felt, for knobs (H-156)
	V-5762	Washer, fibre, phono mounting (H-171A, H-184)
	V-3267S-4	Washer, flat, chassis mounting
	V-3215S	Washer, spring
	V-3356	Window, dial (H-153, H-171, H-171A, H-171C, H-184)

Wilcox-Gay 8J10

This model appears on *pages 18-1 and 18-2 of Rider's Volume XVIII*. Several changes have been made in late production receivers. For receivers with serial numbers 14,940 and up, the grid of the 6B36 tube is grounded when the function switch is set in the "RECORD MIKE" position. This helps eliminate high-frequency noise disturbances when recording from the microphone. On receivers with serial numbers 14,939 and below, the yellow wire connected to pin #2 on the 6B36 socket should be moved to pin #7.

The output transformer (81-2106) on all receivers with serial numbers 25,001 and up, has been replaced by a tapped primary transformer (81-2109-1) with a neon limiter lamp (45-2023) connected across the yellow and red primary leads, as shown in Fig. 1.

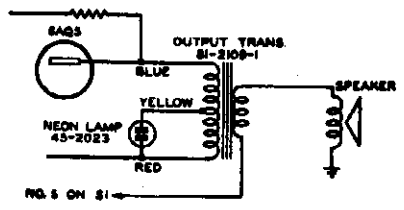

Fig. 1. New output transformer and limiter circuit of the Wilcox-Gay 8J10.

This supersedes the previous limiting circuit using two neon lamps across the secondary leads of the output transformer.

The single neon lamp limits the amount of voltage to the crystal so that the crystal will not be damaged by the application of excessively strong signals.

Several cases have been reported where the coupling capacitor C13 has shorted due to excessive peak voltages. The shorting of this capacitor places the d-c plate voltage directly across the crystal record-playback head, resulting in "burned-out" or cracked crystals.

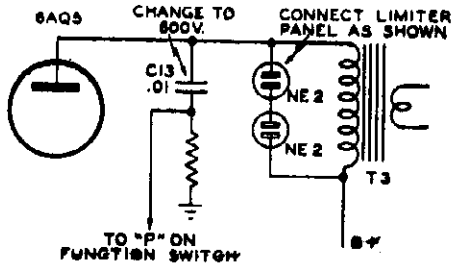

Fig. 2. To eliminate crystal failure, these changes should be made.

To eliminate crystal failure from this source, on all chassis having the double neon bulb limiter panel and the 400-volt coupling capacitor, the capacitor should be changed to one having a 600-volt rating and the dual limiter panel should be connected directly across the primary of the output transformer. See Fig. 2. Every set with the dual limiter that is returned for service should have this change made. Failure of C13 is eliminated on late models by using the tapped-primary transformer described previously.

Wilcox-Gay 6B10, 6B20, 6B30, 6B40, and 6B42

These models are the same as Model 6B10, Late, *on page 15-4 of Rider's Volume XV*, except for the following changes. a 0.00005-μf capacitor (C34) has been connected across R38.

A 6E5 tube has been substituted for the 6U5; the socket connections are the same. A 6SJ7GT tube has been substituted for the 6J7GT formerly used. The socket connections for the 6SJ7GT are:

1 No connection	5 Cathode
2 Heater	6 Screen Grid
3 Suppressor Grid	7 Heater
4 Grid	8 Plate

Tie points are utilized for voltage measurements, see the accompanying voltage chart.

Zenith S 13200

This model is the same as Model S-11468 on *RCD. CH. Pages 15-1 through 15-8 of Rider's Volume XV*, except that the Model S 13200 has a Cobra tone arm and a muting switch.

Zenith 6R886, Chassis 6E02

This model appears on *pages 17-16 and 17-17 of Rider's Volume XVII*. In some cases when microphonics are encountered, replacing the 6C4 tube mounted at the top of the chassis alleviates this condition. The 6C4 tube is easily accessible after the screen in the record changer compartment is removed.

Zenith 7R887, Chassis 7E22

This model appears on *pages 18-33,34 through 18-36 of Rider's Volume XVIII*. When replacing defective or burned out tubes in this receiver, care must be taken that the 6SK7 i-f amplifier tube be replaced only with another 6SK7. Use of a 6SK7GT or G tube will result in extreme oscillation which can be controlled only by the use of the 6SK7 metal tube.

TYPICAL VOLTAGE CHART

TUBE	VOLTAGE TO GROUND PIN NO.							
	1	2	3	4	5	6	7	8
6A8	0	13	240	80	-10	156	13	2.6
6SK7	0	13	3.3		3.3	80	13	240
6SN7	0	232	6.5	0	55	1.6	13	13
6SQ7	0	0	1.5	0	0	68	13	13
6V6	0	13	225	240	0	240	13	13
6SJ7	0	13	0	0	0	3.3	13	80
5Y3	0	280		275AC		275AC		280
6E5	13	6	0	240	1	13		

MEASURED WITH 1000 OHMS PER VOLT METER.
SCALES USED -3-30-150-300

ALL PLUNGERS IN RELEASED POSITION.

Typical voltage chart for the Wilcox-Gay 6B10, 6B20, 6B30, 6B40, and 6B42.

SETTING UP CHANGER FOR OPERATION

Section 2

UNPACKING

Before operating the record changer, the following procedure should be followed:

Remove all packing material and pieces of tape from changer compartment.

Remove locking screw from back side of changer compartment.

Remove the cardboard spacers between turntable and cabinet shelf.

Remove shipping bolts from floating panel.

See that changer and mounting panel float upon the spring mountings.

See that gears and cam tracks are lubricated (can be checked by observation while in cabinet).

See that levers have not been displaced during transit.

Check needle and pickup for damage.

Run changer by hand through cycle to discover any binding.

See that the changer is level.

CHECKING THE CHANGER

Check the needle landing with full stack of records, intermixed. This is done by loading the spindle shelf with 10 records, both 10" and 12" and pressing the control button to reject a record and put the changer into operation. The stabilizer arms must be moved into the recess in the spindle to prevent interference in loading the records. Allow the first record to play through and trip, observing the needle landing on several 10" and 12" records, then trip records up to and including nine. Allow the ninth record to play through and feed number ten automatically, observe needle landing, automatic trip and automatic shut-off.

Check electrical operation by turning radio program switch to phono position and playing a record. The noise eliminator should be checked in each position by listening to reproduction. As a rule, old worn records should be played while the switch is in the No. 1 position. Position 2 is for normal records, while No. 3 gives wide-range reproduction from the new high-fidelity recordings.

DEFECTIVE RECORDS

This record changer is adjusted to operate with standard records. Records that are undersized, too thick, or with deformed center holes, cannot be expected to operate properly on this or any other changer. Trip grooves that are not standard may result in erratic tripping. Records should be examined for faults before making adjustments to the changer.

DESCRIPTION AND OPERATION OF THE CHANGER

Section 3

RECORD LOADING

The record spindle shelf is to be loaded to a maximum of 12 ten inch, 10 twelve inch, or to the red line on the spindle with both sizes, intermixed. The stabilizer arms must be moved into the recess of the spindle to prevent interference in loading the records.

The tone arm set-down is always in 10" position unless a 12" record has just been dropped from the spindle shelf. In dropping to the turntable, the 12" record strikes the intercepter lever #58698, contacting the tone arm swing lever #58698, imparting movement to the tone arm lift lever #58694 and causing the tone arm to be set down to 12" position.

RECORD CHANGING

After the changer is loaded with records, the control button is pressed to start the record change cycle. Rotation of the main cam will actuate the compression lever causing the compression rod to depress the inner-spindle assembly. The four-prong spring support (spindle shelf) has receded into the outer spindle and the rubber sleeve on the spindle, being compressed, has expanded, and therefore holds all but the bottom record which descends to the turntable. Then the tone arm return lever moves the tone arm into position to be lowered to the record by following the cam track. The tone arm moves across the record until the selection is finished and the trip mechanism functions. Finally, the tone arm is lifted and carried over the record until clear of the record stack and the next record is released, completing one change cycle. In this manner all the records in the stack are played.

AUTOMATIC STOP

The weight of the records on the spindle allows the record lift lever to follow the contour of the main cam. When the last selection is played, a spring lifts the record lift lever into position to move the automatic stop pawl inward. The main cam carries the stop pawl into engagement with the switch lever, thus stopping the changer.

MODEL P71, FARNSWORTH TELEV. & RADIO CORP.
Capehart

SPRING MOUNTING

The changer is solidly mounted on a panel which is floated upon spring mountings. These spring mountings eliminate rumble or feedback and insulate the changer from any cabinet vibration occasioned by the sound waves emanating from the speaker. This vibration, if transmitted through the tone arm to the pickup, would be amplified in the audio system of the radio and passed into the speaker again. The spring mountings also cushion the changer from sudden jars or shocks.

To remove the changer from the cabinet, remove four acorn nuts located on the corners of the mounting panel and lift panel out of cabinet. In some cases it is necessary to remove the cabinet drawer before removing the mounting panel.

On the underside of changer loosen screw next to spindle (paragraph B, section 7), and turn lock so that turntable may be removed from changer. Remove three screws and lift changer out of mounting panel.

CYCLE OF OPERATION

Section 4

STUDYING THE CYCLE

The record change cycle consists of the sequence of motions required to move the pickup into position on a record, play the record, remove the pickup and place a record into position. Since movements of various parts are being performed simultaneously, it is impossible to follow all of the actions at one time. A suggested method is to select one certain cycle of operation. For example the raising of the tone arm, moving it over the record and the replacement on the record may be studied while running the changer slowly by hand. After the motions associated with the tone arm are understood, another portion of the changer may be observed.

TRIP ASSEMBLY

Motion of the tone arm is transmitted through the tone arm crank to the tone arm lever and pin assembly #15194 which is secured to the tone arm support tube with lever #58695. When the needle enters the trip grooves of a record, the increased velocity of movement impels the tone arm lever against the starting reset lever #58853. The starting reset lever then engages the starting pawl on the turntable hub.

THE CHANGE CYCLE

The turntable is driven through an idler pulley by the electric motor, the turntable being free on the spindle. A gear on the turntable hub meshes with the main cam gear. Several teeth are left off the main cam to stop it in playing position. After a selection has been played, the trip mechanism moves the starting reset lever, which is part of the main cam assembly #13672, forward at the right speed and correct distance to permit it to mesh properly with the starting pawl on the turntable hub. As the main cam rotates, the tone arm lift lever #58694 lifts the tone arm upward and the tone arm return lever moves the tone arm over the record. The compression lever #57240 will actuate the compression rod #55424, which will in turn depress the inner-spindle assembly #11379. During this cycle the rubber sleeve #62152 has expanded and is holding all but the bottom record. At the same time the spindle shelf recedes into the outer spindle #55334, dropping the bottom record to the turntable. By following the cam track the tone arm return lever moves the tone arm into position to lower the pickup needle to the starting groove in the record. The main cam is now in playing position, disengaged from the turntable hub gear. One change cycle has been completed.

PICTORIAL REPRESENTATION

The following series of photographs, with a corresponding brief explanation of each phase, are inserted to illustrate the movements of pertinent parts of the changer during a change of record cycle.

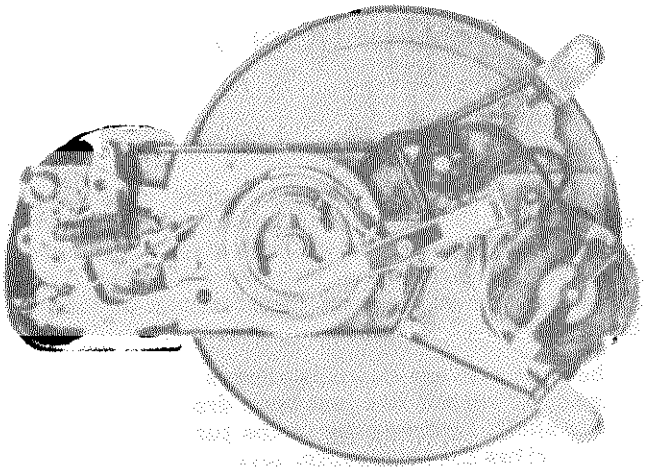

FIGURE A

The main cam is driven through the gear on the turntable hub. When a change cycle is completed, the main cam disengages from the turntable gear because several teeth are left off the main cam gear. The tone arm is in position on the record and free to follow the playing groove. This phase of cycle is called the playing position.

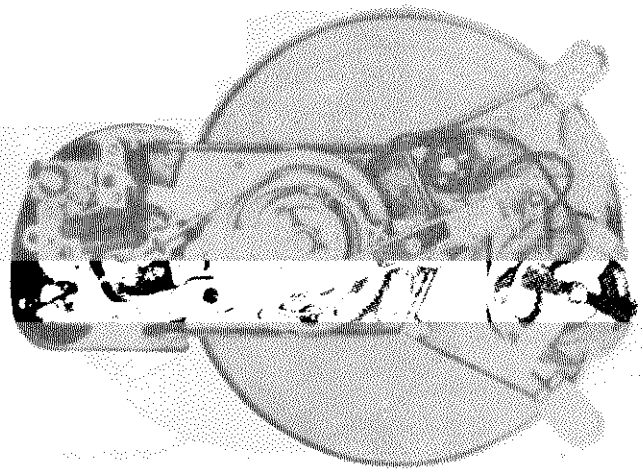

FIGURE B

The change cycle has just begun. The tone arm lift lever has raised the tone arm from the record and the tone arm return lever has started to move the tone arm away from the turntable. The compression lever assembly has started to pull the compression rod, thus beginning to recede the spindle shelf into the outer spindle and expanding the rubber sleeve on the spindle.

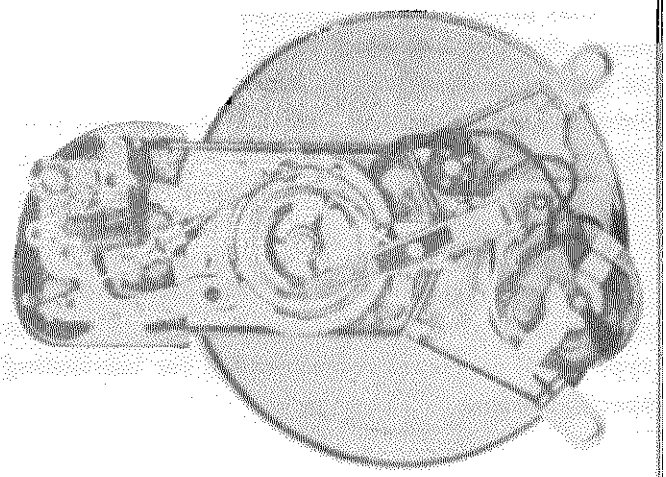

FIGURE C

The tone arm has moved outward, clear of the turntable, and the spindle shelf has fully receded into the outer spindle, dropping the bottom record to the turntable. The rest of the record stack is held by the expanded rubber sleeve. The spindle shelf has started to return to its former position.

CHANGER LUBRICATION

Section 5

The record changer should be lubricated and cleaned periodically or when a major part or assembly is replaced. Dirt, old oil, or grease may be removed with carbon tetrachloride or other similar cleaning fluid.

Use only a good grade of electric motor oil.

Care should be exercised to prevent an excess of oil being used on any part and that no oil gets on the velocity trip assembly, motor pulley, idler pulley or turntable rim. There is a self-lubricating type bearing in the turntable with an oil reservoir which may be filled through the four holes in the turntable hub.

Once a year a thin coat of light grease of the vaseline type may be applied to all surfaces of the main cam that contact lift levers and record lift lever roller. Also grease all working parts on the main cam and oil other moving parts (see figures D & E) except those that rely upon friction, i.e., contact surfaces being dry.

PRECAUTIONS

With mechanical devices, much information pertinent to lubrication can be obtained by observation. Obviously, it will be seen that certain parts of rotating or sliding machinery must be lubricated,

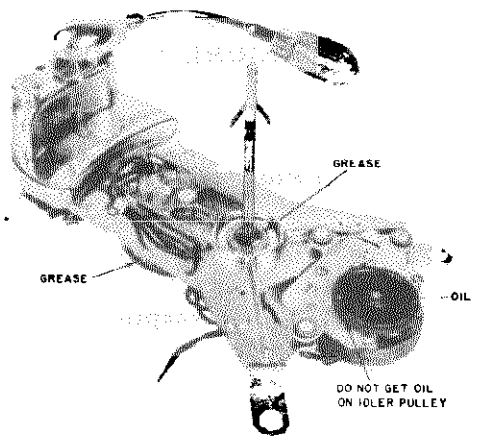

FIGURE D

MODEL P71, FARNSWORTH TELEV. & RADIO CORP.
Capehart

but that other parts depend upon contact surfaces being dry and free from foreign substances, such as grease, so that proper friction exists. Where lubrication is indicated, it should be applied judiciously, avoiding any excess lubricant that may be transferred or thrown to some part designed for dry operation.

Inspect parts not requiring lubrication to make certain they are clean. Always be sure to use the type of oil or grease recommended for lubricating specified items.

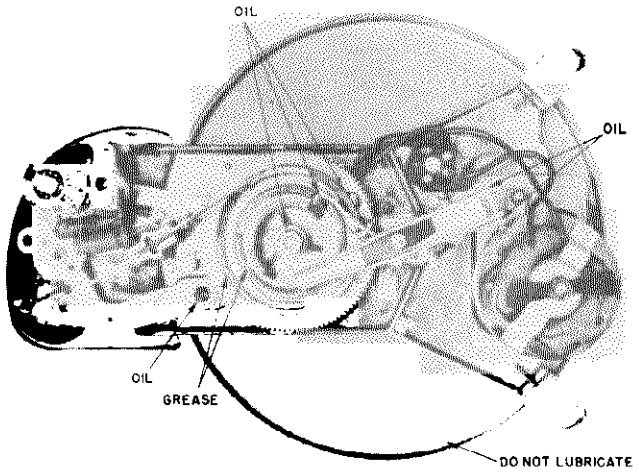

FIGURE E

PARTS IDENTIFICATION

Section 6

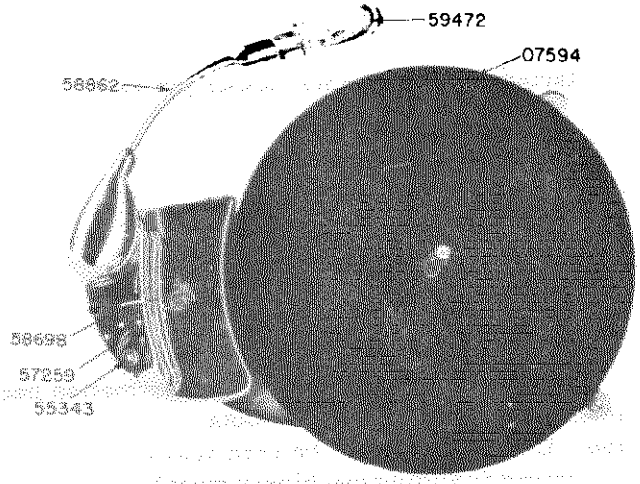

FIGURE 1—Top View

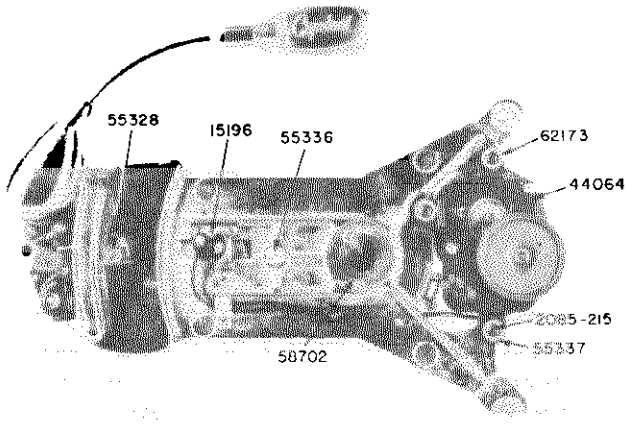

FIGURE 2—Top View with Turntable Removed

FIGURE 1

Part No.	*Description*
55343	— Reject Plunger.
57259	— Noise Eliminator Knob.
58698	— Tone Arm Interceptor Lever.
58862	— Tone Arm Tube only.
59472	— Plastic Pickup Housing only.

FIGURE 2

Part No.	*Description*
15196	— Automatic Stop Switch Assy.
44064	— Phono Motor.
55328	— Tone Arm Adjusting Stud.
55336	— Mounting Bolt For Main Cam.
55337	— Motor Mounting Spacer.
58702	— Bearing Support Washer.
62173	— Rubber Motor Mounting Grommets.
2085-215	— Motor Mounting Bolt (#6-32 x 5/8")

FARNSWORTH TELEV. & RADIO CORP. MODEL P71, Capehart

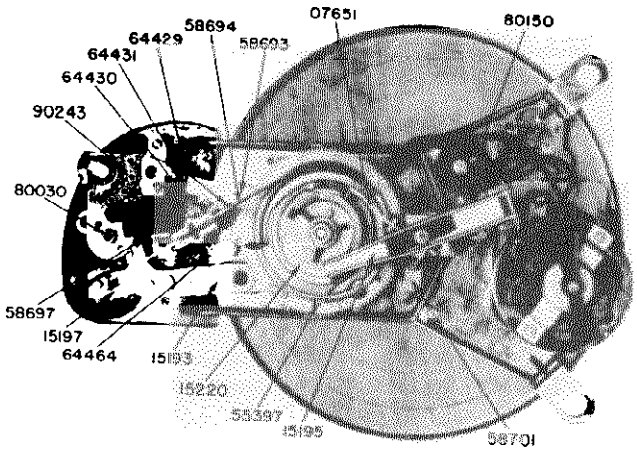

FIGURE 3—Bottom View

FIGURE 3

Part No.	Description
07651	— Record Lift Lever Assy.
15193	— Tone Arm Swing Lever Assy.
15195	— Compression Lever Assy.
15197	— Tone Arm Crank and Pin Assy.
15220	— Main Cam.
55397	— Trip Adjustment Screw.
58693	— Switch and Reject Lever.
58694	— Tone Arm Lift Lever.
58697	— Tone Arm Adjusting Lever.
58701	— Turntable Hold-Down.
64429	— Reset Spring.
64430	— Reject Spring.
64431	— Lift Lever Spring.
64464	— Switch Release Spring.
80030	— Phono Output Jack.
80150	— 4 Prong Motor Plug (Male).
90243	— Tone Switch.

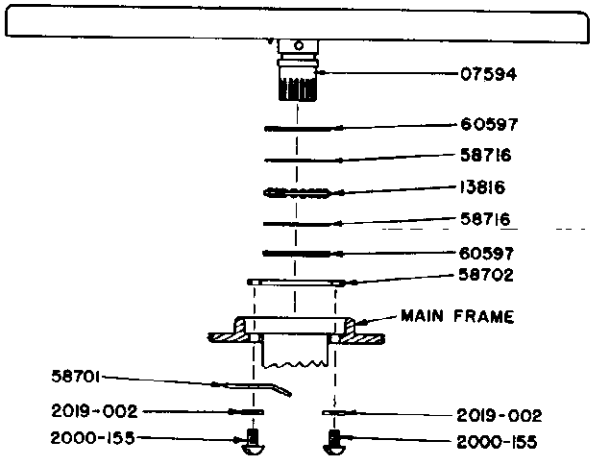

FIGURE 4—Turntable and Bearing Assembly

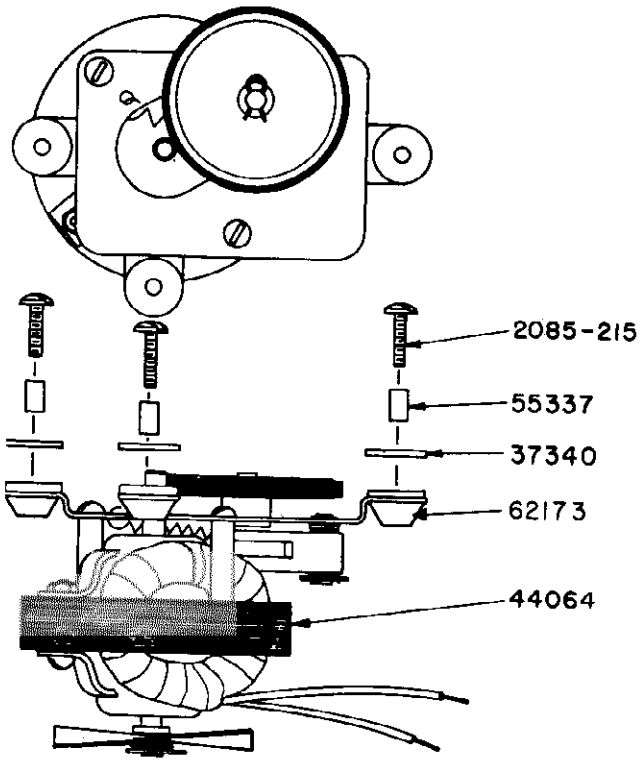

FIGURE 5—Phono Motor Assembly

FIGURE 5

Part No.	Description
37340	— Brass Washer.
44064	— Phono Motor.
55337	— Motor Mtg. Spacer.
62173	— Rubber Motor Mtg. Grommet.
2085-215	— Motor Mtg. Bolt (#6-32 x 5/8").
11437	— Phono Motor Assy. Complete.
13819	— Idler Pulley.
15237	— Idler Brkt. and stud assy.
37421	— "E" washer (to mount idler pulley, idler pulley brkt., and ventilator fan).
54308	— Fibre thrust washer (to mount idler pulley and idler pulley brkt.)
54309	— Fibre thrust washer (to mount ventilator fan).
64471	— Spring for idler pulley.
80150	— 4 prong motor A. C. plug (male).
92335	— Felt washer (for ventilator fan).
62190	— Alternate rubber motor mounting.

FIGURE 4

Part No.	Description
07594	— Turntable Assy.
13816	— Ball Bearing and Retainer.
58701	— Turntable Hold Down.
58702	— Bearing Support Washer.
58716	— Bearing Race Washer.
60597	— Cork Washer for Turntable Bearing.

MODEL P71,. FARNSWORTH TELEV. & RADIO CORP.
Capehart

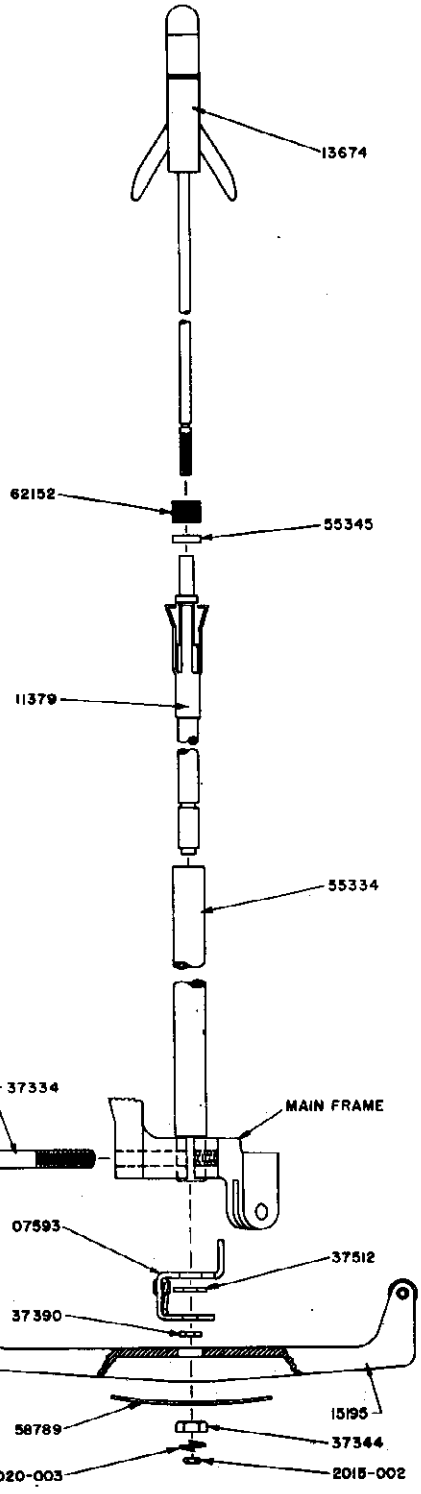

FIGURE 6—Spindle Assembly

FIGURE 6

Part No.	*Description*
07593	— Record Lift Lever Bracket Assy.
11379	— Inner Spindle Assy.
13674	— Upper Spindle Assy.
15195	— Compression Lever Assy.
37334	— H. H. Bolt (#10-32 x 7/8").

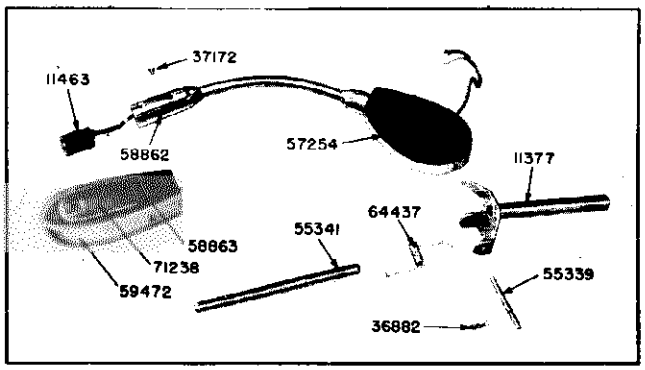

FIGURE 7—Tone Arm Assembly

FIGURE 7

Part No.	*Description*
11377	— Tone Arm Tube & Bracket Assy.
11463	— Pickup Lead Assy.
36882	— H.P. Cotter.
37172	— #4-36 x 1/8" Special Flat H.M.S.
55339	— Hinge Pin.
55341	— Tone Arm Lift Rod.
57254	— Tone Arm End.
58862	— Tone Arm Tube Assy.
58863	— Spring Clip.
59472	— Pickup Housing.
64437	— Tone Arm Spring.
71238	— Variable Reluctance Pickup.

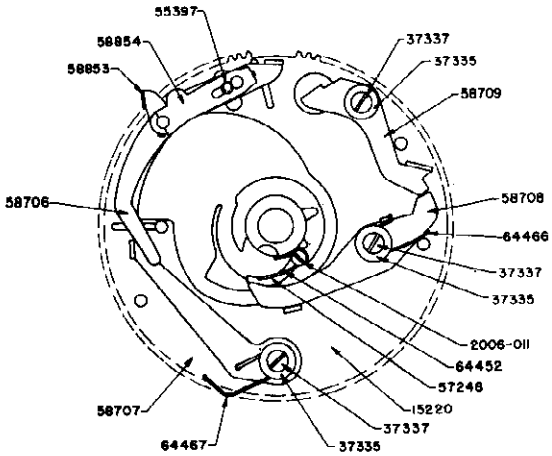

FIGURE 8—Main Cam Assembly

37344	— Special Hex Nut (#3-48).
37390	— "E" Washer (small) for Record Spindle.
37512	— "E" Washer (large) for Record Spindle.
55334	— Outer Spindle.
55345	— Sleeve Support Washer.
58789	— Compression Spring.
62152	— Rubber Sleeve for Record Spindle
2015-002	— Hex Nut (#3-48).
2020-003	— Split Lockwasher (#3)

©John F. Rider

FIGURE 8

Part No.	*Description*
15220	— Main Cam and Pin Assy.
37335	— Washer (#4 x 3/8" o.d).
37337	— Mtg. Screw for Levers (H.M.S #4-36 x 1/4").
55397	— Trip Adjustment Screw.
57248	— Main Cam Switch.
58706	— Starting Lever.
58707	— Reject Lever.
58708	— Tone Arm Hold Out Lever.
58709	— Hold Out Locking Lever.
58853	— Starting Reset Lever.
58854	— Starting Lever Spring.
64452	— Cam Switch Spring.
64466	— Spring for Hold Out Lever.
64467	— Trip Spring.
2006-011	— #2-56 x 7/16" Fil. M.M.S.

FIGURE 10

Part No.	*Description*
36857	— 1/4-28 Hex. Nut (To Mount Main Cam)
37338	— Shim Washer.
37339	— Flat Washer (1/4" i.d. x 5/8" o.d. x 1/16" thick).
55335	— Cam Spacer (Inside Main Cam Hub).
55336	— Mtg. Bolt for Main Cam.
2019-007	— 1/4" S.P. Int. Lockwasher.

Inspect parts not requiring lubrication to make certain they are clean. Always be sure to use the type of oil or grease recommended for lubricating specified items.

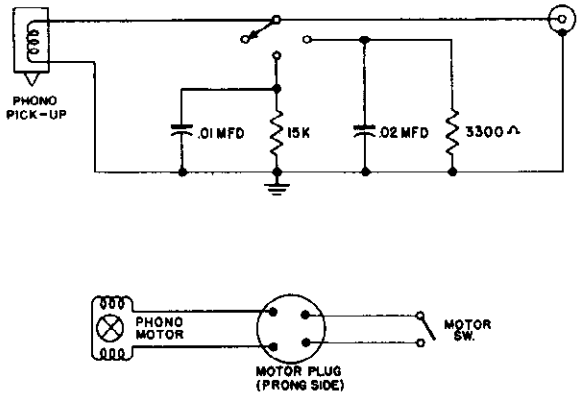

FIGURE 9—Circuit Diagrams

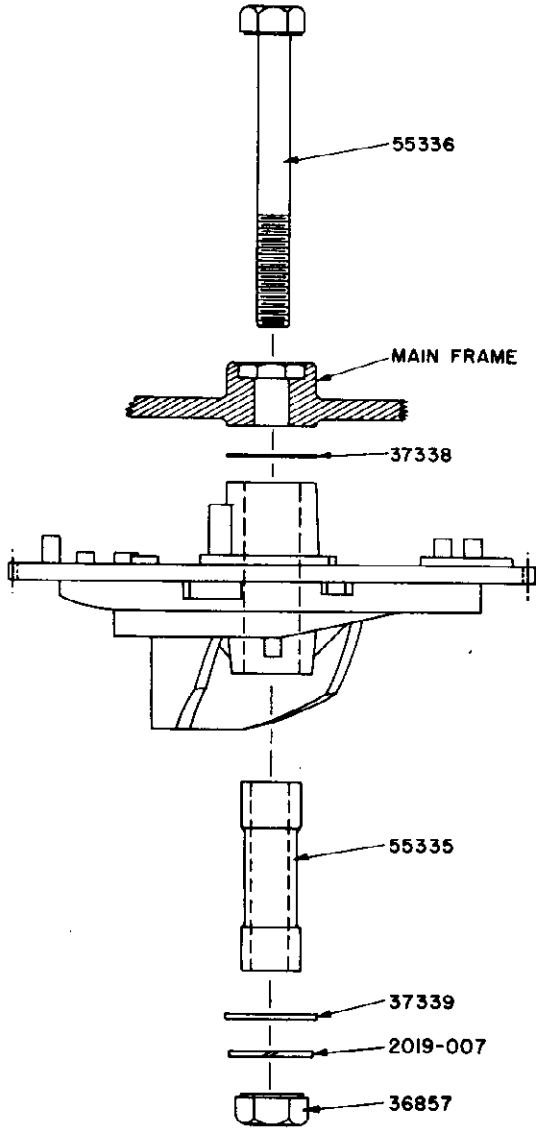

FIGURE 10—Cam Mounting Assembly

PARTS REPLACEMENT

Section 7

A. REASSEMBLING PARTS

When repairs are being made, a careful check should be made of all moving parts in order to make sure that no binding occurs. Check all moving parts for binding before springs are connected.

All levers which operate on shoulder studs should be assembled with the burred side of the retaining washer away from the lever to prevent the washer from binding on the lever.

B. TO REMOVE AND REPLACE TURNTABLE

Remove the changer from the cabinet, and from the bottom side of the main frame (near the spindle) loosen the screw which holds the turntable down, so that it is clear of the pinion gear. The turntable may then be raised from the top side of the changer. Care must be taken not to damage the cork washers next to the bearing.

MODEL P71, FARNSWORTH TELEV. & RADIO CORP.
Capehart

When replacing the turntable, see that the cork washer 60597, then the bearing race 58716, bearing retainer 13816, and another bearing race and cork washer are installed in this sequence (see Figure 1). Align these parts with the center spindle. When pushing the turntable over the spring assembly, push firmly but cautiously, avoiding too much pressure which may damage the springs. When the turntable is in place, move hold-down into groove in turntable hub and tighten screw.

C. TO REMOVE IDLER PULLEY

After the turntable has been removed, the idler pulley can be removed by slipping off the small hairpin cotter on the end of the idler pulley shaft.

When replacing the pulley a single drop of oil should be used on the pulley shaft.

CAUTION:

Do not allow oil to get on either the idler pulley or the turntable rim.

D. TO REMOVE AND REPLACE SPINDLE ASSEMBLY

Remove nuts from bottom of compression rod. Lift compression lever 57240 out of position. Remove E washers and record lift bracket 58700. Pull spindle assembly out from top side. Do not attempt to repair assemblies but replace with new parts. To reassemble, push assembly inside of outer spindle from the top. Put record lift bracket in place and install E washers. Swing compression lever into position and install flat spring 58789, nuts 37344 and 2015-002 and No. 3 lockwasher. Tighten nuts on compression lever until rubber sleeve on spindle reaches .330" to .337" diameter when fully compressed. Use Glyptal to secure lock nuts.

E. TO REMOVE AND INSTALL MAIN CAM ASSEMBLY (Fig. 1)

Remove turntable (paragraph B). Remove nuts from bottom of spindle and turn compression lever back to clear cam. Disconnect spring from tone arm lift lever 58694. Remove nut 36857 from under side of cam and withdraw bolt 55336 from top side of changer. Slide cam out carefully so as not to bend any levers on baseplate side. Adjust screw 55397 so that tension on starting reset lever 58853 is 6 to 8 grams. Use Glyptal on bottom side of screw. To reinstall the cam replace cam shim 37338, slide bolt through from top side of changer and slide cam into place being sure that spacing shim 37338 is not lost. Cam should have insert spacer 55335. Use flat washer 37339, lockwasher 2019-007 and hex nut 36857. Reinstall tone arm lift lever 58694 and attach spring 64431. Swing compression lever into place and install flat spring, two nuts and lockwasher. Secure these nuts with Glyptal after spindle assembly has been adjusted. Reassemble turntable (paragraph B.)

F. TO REMOVE AND INSTALL TONE SWITCH & BRACKET ASS'Y 13825

Disconnect pickup lead wires from socket 80030. Remove two screws which hold bracket to baseplate. Lift bracket from assembly.

To reinstall, insert tone switch coupling 64464 between rejects plunger 55420 and switch 90243. Replace screws 2000-157 and lock washers 2019-004. Resolder pickup wires to socket; the black wire should be connected to the center terminal.

G. TO REMOVE AND REPLACE TONE KNOB & PLUNGER ASSEMBLY 09353

Remove Tone Switch and bracket assembly 13825 (paragraph F). Lift plunger assembly out from top side. Unscrew reject knob 59486 while holding shaft 55420 rigid. Remove spring 64474 and knob 57262 by lifting over top of shaft. To reassemble, place knob 57262 on shaft. Drop spring into knob and screw reject knob onto shaft. Push assembly in from top side of changer so that pointer is on markings on baseplate. Reinstall tone switch and bracket assembly (paragraph F).

H. SHIPPING CHANGER

The changer is solidly mounted on a mounting board. The mounting board is mounted upon free-floating springs.

When shipping the changer, a hold-down bolt should always be used on each side of the changer mounting board to hold the changer securely in the cabinet. A cardboard spacer ⅛" thick should be placed adjacent to the shipping bolts between the mounting board and the cabinet. The tone arm may be held securely to the outer edge of the turntable by arranging a cardboard strip to fit over the spindle and hold the tone arm down.

I. INSERTING PHONO PLUG

The phono input plug must be inserted into the phono socket as far as possible to avoid "grid hum". If hum presists, check ground connection of socket.

OPERATIONAL ADJUSTMENTS

Section 8

J. TONE ARM HEIGHT ADJUSTMENT

Load a 10" record on the spindle and turn the turntable by hand through cycle until the tone arm is at its highest point. From bottom side of changer, loosen hex nut 2015-007 and adjust screw 37511 to tone arm height desired. Tighten locknut on lift lever.

To remove lift lever 58694, release spring 54431 and withdraw lever from slot. To reinstall, insert pin 55325 in lift lever. Insert lift lever in slot and connect spring.

FARNSWORTH TELEV. & RADIO CORP. MODEL P71, Capehart

K. NEEDLE LANDING ADJUSTMENT

Place a 10" record on spindle and press reject button. Changer should continue in cycle until coming into playing position. Observe whether or not the needle lands in starting groove (about 3/32" from outside edge of record). If needle lands too close to outer edge of record, turn top tone arm adjusting screw 55328 with coin in direction indicated on baseplate. If needle landing was too far from outer edge of record, turn adjusting screw in opposite direction. Hold top of spindle down and press reject button to check needle landing.

12" needle landing will usually not require adjustment. If required, it should be made only after 10" adjustment has been corrected. For erratic needle landing, check the wire leads to see that they do not bind or interfer with the tone arm.

L. VELOCITY TRIP ADJUSTMENT

Break the seal on the adjustment screw 55397 which is located in hole in bottom of cam near spindle. Turn to the left to tighten until the tone arm will trip on the record. To check adjustment lever 58706 on cam should contact both lugs on turntable hub when tone arm is in last playing grooves of record before tripping. Seal screw thread with Glyptal to prevent screw from coming out of adjustment.

M. RECORD FEED

1. DOES NOT DROP RECORDS

a. See that stabilizer arms are not down under the record stack.
b. Check vertical clearance in spindle. Should be approx. 1/64".
c. Check the records to see that the label is not extended into the center hole.

2. DROPS MORE THAN ONE RECORD

a. Check center hole of record for being chipped or oversized. (This changer will not chip or break records).
b. If 12" record hangs on interceptor lever 58698, check slot in changer head for burrs. This lever should move freely with a slight drag on the side of the slot.

3. CHANGER DOES NOT START

a. If changer does not start immediately, press reject button a second time.

N. REPRODUCTION

1. No response.
   a. Audio system. Check with radio reception.
   b. Pickup leads shorted.
   c. Pickup cartridge dead. Try new cartridge.
2. Distorted tone.
   a. Worn needle.
   b. "WOWS" or variance in speed.
      (1) Oil on idler pulley and turntable rim.
   c. Warped records.
   d. Defective pickup cartridge.
      1. Use of badly chipped records or records with breaks.
      2. Dropping tone arm on record.
3. Thumping noise.
   a. Groove in idler pulley worn by motor drive pulley. Result of idler pulley being held stationary with motor running.
      1. Sand idler pulley smooth or replace pulley.
4. "Grid Hum".
   a. Insert phono input plug into phono socket as far as possible.
   b. Check electrical ground connection of phono socket.
5. Mechanical Hum.
   Check alignment of turntable motor armature.
   b. Check if phono plug and line cord are in their respective sockets.
   c. If further trouble, turn turntable several revolutions to be sure that changer was not shut off during cycle. Press reject button to start.

4. CHANGER SHUT-OFF

Changer should shut off after last record is played. Spindle should have approx. 3/32" vertical motion when no records are on spindle. One 10" record should be sufficient weight to depress spindle so that changer will not shut off. If changer does not shut off or if it shuts off before last record is played, see that spindle is not sticking. It should have a free vertical motion. Also check stop pawl for binding.

PARTS

Part No.	Description	Part No.	Description
57262	Noise Eliminator Selector knob	13816	Ball Bearing & Retainer (for turntable)
07593	Record Lift Lever Bracket Assy.	13819	Idler Pulley
07594	Turntable Assembly	13825	Tone Switch & Brkt. Assy. Complete
07651	Record Lift Lever Assy.	15193	Tone Arm Swing Lever Assy.
09271	Mtg. Spring Assy. for 21P-4, 24P-4, 26P-4, 29P-4 and 30P-4	15194	Tone Arm Lever & Pin Assy.
09362	Mtg. Spring Assy. (used on late 31P-4 and all other not previously listed)	15195	Compression Lever Assy.
09365	Mtg. Spring Assy. (used on early 31P-4	15196	Automatic Stop Switch Assy.
11377	Tone Arm Support Tube & Brkt. Assy.	15197	Tone Arm Crank & Pin Assy.
11378	Magnetic Pickup and Housing Assy. Complete	15220	Main Cam (casting only)
11379	Inner Spindle Assy.	15237	Idler Brkt. and Stud Assy. (on phono motor)
11437	Phono Motor Assy.	25112	.01 mfd. 200 volt Condenser
11463	Pickup Lead Assy.	25276	.02 mfd. 200 volt Condenser
13674	Upper Spindle Assy.	36857	¼-28 Hex Nut (to mount main cam)
		36882	H. P. Cotter
		37066	Acorn Palnut

MODEL P71, FARNSWORTH TELEV. & RADIO CORP.
Capehart

Part No.	Description
37155	Spade Lug (for tone arm lift lever spring)
37332	#6 Special Flat Washer (to mount reject lever Assy.)
37333	"E" Washer (for tone arm adjusting stud)
37334	#10-32 x 7/8" H. H. Bolt (to mount outer spindle)
37335	#4 x 3/8" o.d. washer (for mounting levers on main cam)
37337	#4-36 x 1¼" bdg. H.M.S. (mtg. screws for levers on main cam—reject, tone arm hold out)
37338	Shim Washer (to mount Main Cam)
37339	Flat Washer ¼" i.d. x 5/8" o.d. x 1/16 thick To Mount Main Cam)
37340	Brass Washer (to Mount Motor)
37341	#8-32 x 7/8" Hex Head Bolt (for tone arm crank assy.)
37343	#3 x 5/16" o.d. flat washer (on bottom of record spindle)
37344	#3-48 Special Hex Nut (Spindle Height Adj. nut)
37390	"E" Washer (small) for record spindle
37421	"E" Washer (to mount idler pulley, idler pulley Brkt. and Ventilator Fan)
37511	#10-32 x 5/8" H.H.M.S. (on tone arm lift lever)
37512	"E" Washer (large) for record spindle
37646	Mounting Bolt (for mtg. changer to mtg. board) (two required)
54308	Thrust Washer for Idler Pulley and Idler pulley Brkt.
54309	Thrust Washer for Motor Ventilator Fan
55325	Lift Lever Pin
55328	Tone Arm Set Down Adjustment Stud
55329	Pin For Tone Arm Interceptor Lever
55332	Pin For Compression Lever
55333	Pin For Record Lift Lever
55334	Outer Spindle
55335	Cam Spacer (inside Main Cam Hub)
55336	Mounting Bolt for Main Cam
55337	Motor Mtg. Spacer
55339	Tone Arm Hinge Pin
55341	Tone Arm Lift Rod
55345	Sleeve Support Washer For Record Spindle
55395	Hinge Pin for Reject Link
55396	Mounting Pin For Starting Lever
55397	Trip Adjustment Screw
55416	Mounting Bolt (One required to mount changer to mounting board)
55420	Manual Reject Plunger Rod
57248	Main Cam Switch
57254	Tone arm end housing
58863	Retainer Spring for Pickup
58692	Interceptor Reset Lever
58693	Switch & Reject Lever
58694	Tone Arm Lift Lever
58697	Tone arm adjustment lever
58698	Tone Arm Interceptor lever
58701	Turntable Hold Down Brkt.
58702	Bearing Support Washer (Under Turntable Bearing)
58706	Starting Lever
58707	Reject lever (on main cam)
58708	Tone Arm Hold Out Lever
58709	Hold Out Locking Lever
58716	Bearing Race Washer (for turntable)
58789	Compression Spring
58851	Tone Switch Bracket
58852	Manual Reject Link
58853	Starting Reset Lever
58854	Starting Lever Spring
58862	Tone Arm Tube Only (Chrome)
58971	Ventilator Fan for phono motor
59486	Reject Button for P-71
60597	Cork Washer for Turntable Bearing (for turntable)
62152	Rubber Sleeve for Record Spindle
62173	Rubber Motor Mtg. Grommets
64429	Reset Spring
64430	Reject Spring
64431	Lift Lever Spring
64433	Spring For Tone Arm Adjusjtmnet
64434	Spring For Tone Arm Interceptor Lever
64437	Tone Arm Counterbalance Spring
64452	Cam switch spring
64464	Switch Release Spring
64465	Tone Switch Coupling Link
64466	Spring For Tone Arm Hold Out Lever
64467	Trip Spring
64471	Spring For Idler Pulley
64474	Spring For Reject Button
64476	Lead-in Spring
71238	Magnetic Pickup (Less Housing)
77240	3300 ohm ½ watt resistor
77426	15K ohm ½ watt resistor
80030	Phono Output Jack
80150	4 Prong Motor Plug (male)
80327	2 Prong Molded Pickup Socket
90243	Tone Selector Switch
92256	Felt Washer For Turntable Bearing
92335	Felt Washer For Motor Ventilator Fan
2003-155	#6-32 x ¼" F H.M.S. (to mount tone arm adjusting lever)
2006-011	#2-56 x 7/16 Fil. H.M.S. (to mount cam switch)
2015-001	#2-56 Std. Hex nut (to mount cam switch)
2015-002	#3-48 Std. Hex nut (lock nut for spindle height adj.)
2015-007	#10-32 Std. Hex Nut
2017-004	#8 i.d. x 3/8" o.d. flat washer (for tone arm crank assy.)
2019-007	¼" S.P. Int. Lockwasher (to mount main cam)
2085-205	#6-32 x ¼" Truss H.M.S. (for mtg. reject lever)
2085-215	Motor Mtg. Bolt #6-32 x 5/8"

SPECIFICATIONS

Power Consumption at 117 volts .....18 watts Type of Pickup.....Variable Reluctance

Voltage Rating .....105 to 125 volts at 60 cycles Type of Needle .....Permanent Osmium Point

MOUNTING HARDWARE FOR P-71 RECORD CHANGER

09271	Mtg. spring assy. for 21P-4, 24P-4, 26P-4, 29P-4 and 30P-4
09362	Mtg. spring assy. (used on late 31P-4 and all other not previously listed)
09365	Mtg. spring assy. (used on early 31P-4)
37066	Acorn palnut (four required)
37646	Mounting bolt (for mtg. changer to mtg. board) two required
55416	Mounting bolt (for mtg. changer to mtg. board) one required

©John F. Rider

FARNSWORTH TELEV. & RADIO CORP. MODEL 16-E, Capehart

ELECTRICAL CIRCUIT

Most service men working on Capehart instruments have had considerable experience with radio and phono radio combinations and can handle both. However, some service men have asked for an explanation of the electrical-mechanical trip system of the 16-E, so a schematic diagram of the changer circuit as used on the 400M is given on page 5.

In the 400M series when the Phono Button on the tuner is pushed, the "Off-On" Relay is actuated as is the "Selector Motor" Relay. These relays are located in the tuner. The "Off-On" Relay holds itself closed until the "Off" button is pushed, this operates the "locking" Relay which opens the "Off-On" Relay Coil Circuit. In the 100 series, the "Off-On" Switch is mechanically operated and is ganged with the volume control shaft.

In the 400M the "Off-On" Relay is used to turn on the power for the entire instrument: except for the 18V transformer in the tuner chassis, which is always connected to the 117 Volt line, so the relays can be operated at will. One set of the "Off-On" relay contacts is used to keep its coil energized until the "Off" button is pressed, at which time the holding circuit is opened and the relay restored to normal. Another set of contacts is used for the 6.3 Volts for the heaters and pilot lights in the tuner. Another set of contacts completes the 117 volt supply for the Amplifiers, Phono Motor (if phono is selected) and the "Reject" Relay (located in the Junction Box). In the 100 series instruments, the AC phono switch is ganged with the program switch. When the program switch is turned to phono position, 117 VAC is supplied to the phono motor and reject relay (located in cabinet junction box). Due to the fact that the contacts of this Relay are closed until the coil is energized, the 117 volts are applied to the clutch Solenoid in the Record Changer. This causes the Record Changer to go through its cycle, unless the Automatic Switch is in "Off" position, before playing a record, thus the tubes are given time to reach operating temperature.

In the 400M models, the "Selector Motor" relay controls the Phono-Radio indicator lights as well as the Dial Scale lights, the "Phono" Relay (in the Junction Box), the Selector Motor and "Mutes" the signal when the program service is changed by a push button.

In the Record Changer the Clutch Solenoid is energized by the Phono Button (the program switch phono position on all 100 K. & M. series), the Reject Button, or the Automatic Trip Switch.

When the Reject Button is pressed, the Clutch Solenoid is energized by the "Remote Reject" Relay (in the Junction Box).

When the needle enters the trip or change groove in the record, the motion of the Tone Arm actuates the Automatic Trip Switch which energizes the Clutch Solenoid.

Whenever the Clutch Solenoid is energized, the changer goes into cycle. As soon as the cycle is started, the solenoid circuit is opened by breaking the top and center contacts of the motor solenoid switch. If the instrument is turned off during the cycle the changer continues to complete the cycle due to the center and bottom contacts of the Motor Solenoid switch by passing the motor switch contacts of the Phono Relay and Off-On Relay.

The Automatic Trip Switch, located under the Turntable, is actuated by the movement of the Stop Trip Lever being transferred by the Tone Arm. On the underside of the turntable there is a fibre pin which moves the Stop Trip Lever back. During each revolution of the turntable, the fibre pin hits the lever, thus resetting the stop trip lever until the needle enters the change groove; this causes the Clutch Solenoid to be energized by closing the Automatic Trip Switch. The automatic "Off-On" switch is used to open the Clutch Solenoid circuit, in the event it is desirable to use the instrument manually.

MODEL 16-E, FARNSWORTH TELEV. & RADIO CORP.
Capehart

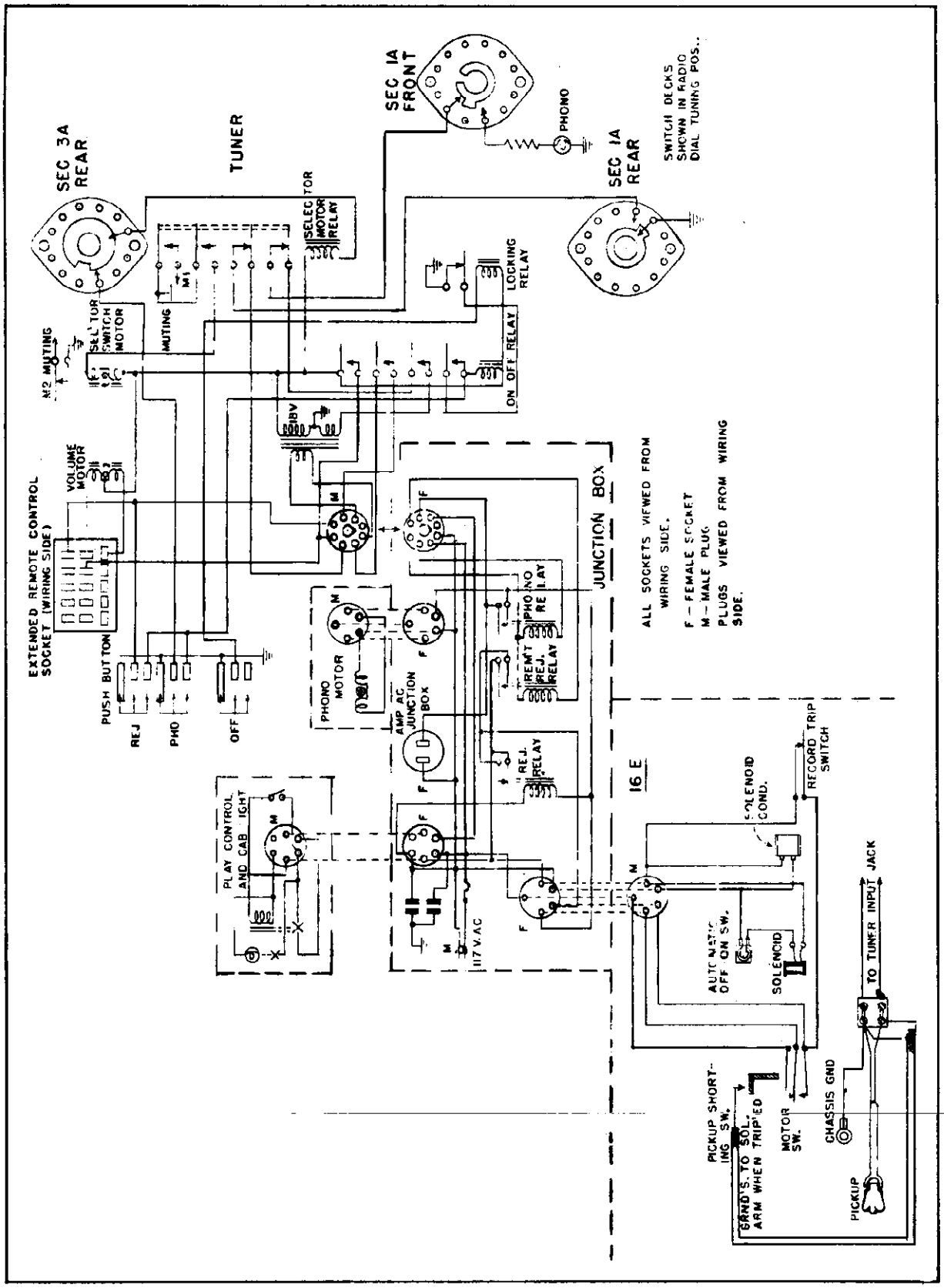

FIGURE 8. COMPLETE RECORD REPRODUCING CONTROL CIRCUIT DIAGRAM FOR 400M

FARNSWORTH TELEV. & RADIO CORP.

MODEL 16-E,
Capehart

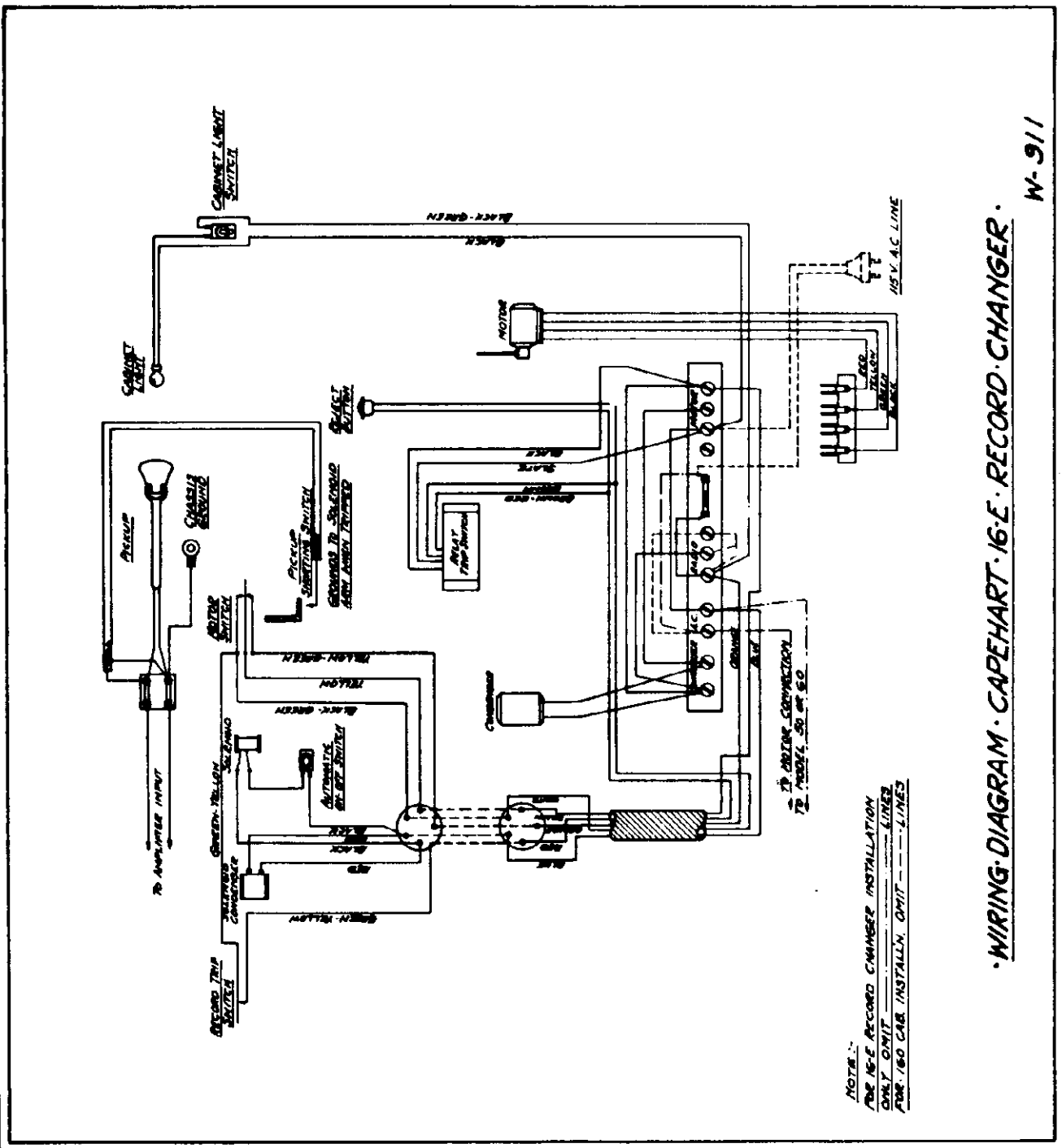

·WIRING DIAGRAM · CAPEHART · 16-E · RECORD · CHANGER ·

W-911

MODEL 16-E, Capehart

FARNSWORTH TELEV. & RADIO CORP.

MECHANICAL OPERATION

The best approach to a knowledge of the 16-E changer is to accept it on the basis that it is really "Four Changers in One". A study of each of the four fundamentals will enable a quick analysis of trouble.

The first operation, (Manual), is accomplished by placing the Automatic Switch in the "Off" position, thus opening the Clutch Solenoid circuit so the changer mechanism is not connected to the Drive Shaft at the end of a record.

The second operation, (Repeat), is accomplished by throwing the Automatic Switch to "On" position and the Selector Lever to the "Repeat" Position. Then, at the completion of a record, the Automatic Trip Switch actuates the Clutch Solenoid, thus connecting the changer mechanism to the motor. The steps that follow are:

1. Pickup Arm is elevated.
2. Pickup Arm is swung clear of the Record Tray.
3. The Record Magazine tilts but does not discharge a record.
4. The Record Magazine starts to return, as does the Pickup Arm.
5. While the Record Magazine is completing its return the Pickup Arm engages the Stop Arm, the needle is lowered to the record, and the cycle is complete.
6. No record is released from the record magazine during the repeat cycle since the record release lever has been pulled away from the Main Cam by the Selector Lever.

During the change cycle the Pickup is short-circuited by a muting switch.

The third operation, (Play one side).

1. Pickup Arm is elevated.
2. Pickup Arm swings clear of Record Tray.
3. Record Tray lifts to deliver record to Magazine.
4. As record in Record Tray strikes Record Support Pins, another record is discharged from the Magazine.
5. After record is expelled from the Magazine, the Record Tray returns part way and pauses.
6. Magazine tilts, and waits to deliver record to Record Tray, which starts down again.
7. Record Tray again pauses to allow record to settle over Spindle.
8. Magazine returns to normal position as does Record Tray.
9. Pickup Arm swings in and engages Stop Arm. This positions pickup over record and then needle is lowered to record.

The fourth operation, (Play both sides).

1. Pickup Arm is elevated and swings clear of the Record Tray.
2. The Record Reverse Arm and Guide swing around in front of the magazine.
3. The Record Tray places the record against the Reversing Arm and starts back to normal position, pausing midway.
4. The Magazine tilts to slide the reversed record onto the Record Tray, pauses in its return until the record touches the front of the Tray, and then returns to normal position.
5. The record settles over the spindle.
6. The Tray returns to normal position.
7. Pickup Arm swings against Stop Arm.
8. Needle is lowered on record.

STEP BY STEP DESCRIPTION

REPEAT CYCLE. At the completion of the record the needle enters the change groove, swinging the Pickup Arm, thus closing the Automatic Trip Switch, and energizing the Clutch Solenoid. Energizing of the Clutch Solenoid engages the two clutch sections, starting the change cycle. At the time the Clutch sections are engaged, the Clutch Solenoid Circuit is opened by breaking top and center contacts of the motor solenoid switch. Cycle is completed even though main switch is turned off since the center and bottom contacts of the Motor Solenoid Switch by-passes the motor contacts of the phono-motor relay and main on-off Relay causing the motor to run until cycle is completed.

The Pickup elevation is accomplished by the Pickup Lift Cam raising the Pickup Lift Shaft. As soon as the Pickup is fully elevated, the Pickup Arm is swung clear of the record by the Pickup Swing Cam rotating the Pickup Arm Swing Lever. Due to the fact that the mechanism is in cycle, the Magazine is tilted by the Main Cam operating the Magazine Slide Arm. Just after the Magazine starts to return to the normal position, the Pickup Arm starts to lower and swing into playing position. When moving in, the Pickup Arm Lever Hook engages with the Pickup Arm Stop Lever. With 12" records the Rubber Roller at the end of the Stop Lever touches the edge of the record and stops the inward motion of the Pickup Arm. On 10 inch records this is done by an adjustable machine screw striking a stop which is a part of the baseplate casting. The Pickup Arm is swung against the Stop Lever by the Pickup Arm Friction Cam. The Pickup Arm Stop Lever swings back out of the way after the needle has touched the record, but before the full weight of the pick-up is on the needle.

ONE SIDE CYCLE

To play one side of the record, the Selector Lever is moved to the One Side position (middle). This engages the Clutch to allow the Record Tray to be lifted by the Main Cam through the Record Tray Cam Follower. When this Clutch en-

©John F. Rider

gages, the Record Separator Hook Arm and Roller Assembly swings over the periphery of the Main Cam.

After playing the record, the needle enters the change groove, thereby closing the Automatic Trip Switch and energizes the Clutch Solenoid. This action engages the Driving Clutch, and the change cycle starts with the Pickup Arm being elevated and swung clear of the Record Tray, which lifts the record off the Turntable and delivers it to the Magazine. Just before the tray with the record reaches the point where the record touches the sloping face of the Record Support Pins, a record is ejected from the Magazine by the Record Separator. When the changer is in cycle, the Main Cam revolves; on its periphery is a raised portion that lifts the Record Separator Hook Arm and Roller Assembly, drawing the Record Separator Hook down, thereby raising the Record Separator and three records. One record is lifted to the shoulder of the Lower Record Support Assembly and the Hook which is part of the Record Separator, and located on the center line of the Lower Record Support Assembly, engages the two bottom records of the stack and lifts them slightly. This assists in the discharge of the record from the Magazine by forcing the second and third record back against the first record, thereby helping to push it off the separator knife into the record well. The record drops to the Rubber Bumpers in the well while the Record Tray is delivering a record to the Magazine. The tray starts downward and its curved tailpiece lifts the record as the Magazine starts to tilt. The Record Tray pauses midway on its downward trip until the Magazine moves to the highest horizontal point, thus allowing the record to slide out; the Magazine then remains stationary until the record slides against the front of the Record Tray which has resumed its downward movement, only pausing to allow the Magazine to lower the center hole of the record over the Spindle. The Record Tray returns to normal position as does the Magazine, the Pickup Arm swings in and is lowered, as in the repeat cycle, and the Clutch is disengaged by the Clutch Throwout Cam striking the Clutch Throwout Lever.

BOTH SIDES CYCLE

To play Both Sides, the Record Reverse Cam Shaft Lever moves the Record Reverse Cam so that it engages with the Record Reverse Cam Pin in the Reverse Cam Shaft. In the other positions, the Reverse Cam floats on the Cam Shaft and does not rotate with the Shaft. The Record Reverse Arm and Roller rides over the face of the reverse cam and operates the reverse arm assembly thru an adjustable drive rod.

After the Pickup is elevated, the Record Reverse Arm and Guide Assembly swings around in front of the Magazine. When it gets to the reversing position and the Tone Arm is clear of the Record Tray, the Tray raises. As the Tray raises, the record slides back against the Rear Rubber Bumpers, and the Tray compresses the spring arms of the Record Reversing Guide. The record hits the slanting face of the Support Pins while the Tray continues up, and the record slides up these faces to the top surface of the Support Pins. When the Record Tray starts to return, the spring tension of the Record Guide pushes the bottom edge of the record off the support pins and as the record Tray pauses midway to the normal or playing position, the Magazine tilts, causing the record to slide down the Record Guide. The Magazine reaches its furthest excursion and returns part way, where it pauses, and the Record Tray continues downward to nearly the normal position. About the time the record hits the front of the Tray, the Magazine returns to the normal position after the record has dropped over the Spindle. The Record Tray then returns to normal, and the Pickup Arm is returned as in the repeat and one side conditions.

If one carefully watches the Magazine in the Both Sides Position, it will be noted the travel of the Magazine is shorter in the "Reversing" cycle than in the change cycle. On the side of the Main Cam, away from the rear of the instrument, there are two cam tracks. On the Magazine Slide Arm there are two rollers on a rocker arm, and when the Repeat, Play One Side and the change cycle of play Both Sides are in use, the outer cam track is engaged. On one side of the Record Reverse Cam is a pin which shifts the arm and moves the rocker so the inner cam track is used to change the Magazine travel. On the arm is another pin, which is struck by the Magazine Slide Arm Cam, changing the roller in use, also the cam track. Due to the fact that the Reverse Cam Shaft runs half as fast as the Main Shaft, the above action occurs every two cycles. The Record Reverse Cam, making only one-half turn per cycle, raises the Reverse Arm and Roller every other cycle, and in raising it, the Reversing Arm and Guide are swung around in front of the Magazine. When the Reversing Arm and Guide swing in front of the Magazine, the Record Separator Hook Arm and Roller are swung away from the Main Cam to prevent discharge of a record from the Magazine in the "Reversing" cycle.

Due to the impossibility of covering the action of each part in the changer in the brief description above, it is essential that every service man spend considerable time observing the action of each part of the changer under each of the four conditions outlined above.

MODEL 16-E, Capehart

FARNSWORTH TELEV. & RADIO CORP.

MOTOR DRIVE
GEAR REDUCTION – DRIVE SHAFT ALIGNMENT

A silent and smooth operating drive motor and gear reduction unit, properly coupled to the record changer, is of utmost importance for perfect reproduction of records. Unless these parts are all functioning properly, there is a possibility that waver or wows may be noticed in the sound reproduction from records. It is also possible that an objectionable hum or rumble may be discernible during low passages in records or the change cycle. If such conditions are apparent, we suggest a careful check and adjustment in accordance with the procedures which follow.

After freeing the record changer by removing the four hold down bolts used in shipment, make certain that the record changer is floating freely on its rubber mounting supports, and that it does not touch the record changer mounting shelf at any point. There should be a feeling of entirely free floating motion when the changer is shaken slightly. If such is the case, it is a good indication of full free floating action. By making sure that the record changer is "Free floating" the possibility of acoustic feed-back, hum, or rumble is eliminated.

Because of the importance for positioning the record changer into a free floating position, it is always advisable to check the alignment of the record changer drive shaft with respect to the gear reduction unit and between this unit and the drive motor. Unless the correct relationship is maintained, excessive hum or rumble may be present as well as the possibility of uneven turntable speed causing waver or wows in the record reproduction.

If the above conditions are apparent with record changer in free floating position, shift the gear reduction unit and motor assembly slightly until a position is found where the difficulty is eliminated or negligible. It may be necessary to enlarge mounting holes in the motor and gear unit assembly mounting board.

NOTE: Drive motors and gear reduction units are "run-in" and aligned on the mounting board at the factory, and will seldom, if ever, require adjustment in the field unless they have been tampered with, or in the event the motor has shifted due to rough handling in transit. If hum or rumble persists after trying previous suggestions, loosen the motor and shift slightly locking it in place when minimum hum position is located.

SAFETY CLUTCH—PURPOSE AND ADJUSTMENT

The purpose of this feature is to uncouple the record changer from the gear reduction unit in the event a faulty record or improper operation of the machine causes the record changer to jam during some portion of the change cycle.

Essentially, this device consists of two metal discs with a leather washer between. The driving power is transmitted from the lower to the upper disc through the leather washer because of the pressure developed by the nut, part 368-2, controlling the pressure of the spring, part 3938. Pressure of the spring determines the amount of back pressure, and by its adjustment, it may be set so as to cause the clutch to slip if more than normal drive tension or load develops somewhere in the record changer during its change cycle, thereby acting as a "safety" feature.

The proper method of checking the adjustment of the safety clutch follows. With the record changer in cycle and the record magazine fully loaded, apply a slight downward pressure on the bottom of the record magazine, while the magazine is tilting backward. When such pressure is applied, it should cause the safety clutch to slip and the turntable should stop revolving. In the event the action of the safety clutch is not as described, loosen nut, part 368-2, thereby releasing pressure on spring, 3938, this will permit safety clutch to unload sooner. After this adjustment is made, the changer should be put through a number of cycles to make certain that the clutch does not slip at any point in the normal change cycle as this would cause the changer to stall.

The action of this safety clutch should always be checked when the instrument is permanently set up in the customer's home since it acts as a safety device to prevent record breakage or damage to changer in the event of a jam because of reasons previously mentioned. CAUTION: The leather clutch facing should be kept free from oil or grease.

NOTE: The Safety Clutch is locked together by use of a "C" washer in the end of the shaft. If unable to make proper adjustment after clutch has been slipping, remove clutch assembly and examine to determine if washer is out of position. If the washer is lost and none is at hand, the end of the shaft may be drilled and a small cotter key used to hold assembly together.

GEAR REDUCTION UNIT

At least once a year the gear reduction unit should be checked to make certain it contains the proper amount of oil. It should contain one-half ounce, No. 10 S.A.E. oil. Stock No. 1315-1.

LUBRICATION

At least every six months a few drops of oil should be applied to the drive motor oil cups. See illustration. For this purpose, use the special electrical motor oil which is carried by most all oil companies for electric fans, sewing machine motor, etc.

FARNSWORTH TELEV. & RADIO CORP. MODEL 16-E, Capehart

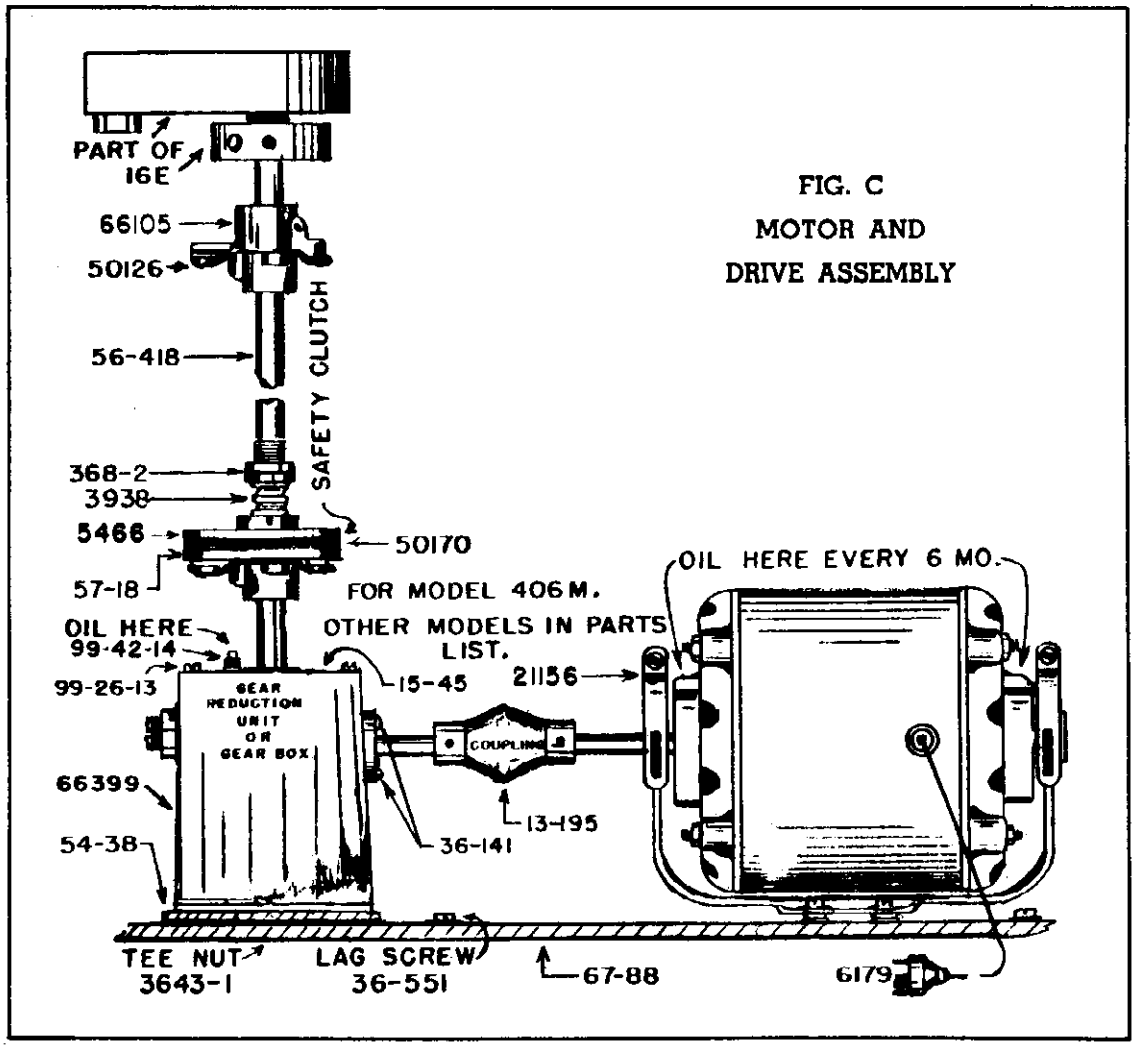

FIG. C
MOTOR AND
DRIVE ASSEMBLY

MOTOR DRIVE PARTS LIST

Part No.	Description
21156	Motor, 60 cycle
21157	Motor, 50 cycle
35107	Gear Box Worm Gear
3938	Spring, Safety Clutch
4067	Bearing
50126	Leather Disc
50170	406M Drive Facing (Leather)
50225	Gear Box Cover Gasket
5466	406M Upper Friction Drive Disc
6019	1/4" Allen Wrench
6179	5 Prong Motor Plug
66105	Flexible Coupling
66399	Gear Box 60 cycle
66435	Gear Box 50 cycle
99-26-13	10/24 x 3/8" H. H. M. S.
99-28-13	1/4 x 20 x 1/4" Allen Set Screw
99-34-7	406M Cotter Pin
99-42-13	1/4" Steel Ball
99-42-14	1/8" Pipe Plug
13-148	411M Friction Drive Assembly
13-150	412M Friction Drive Assembly
13-141	406M Friction Drive Assembly
99-28-13	Flexible Coupling Set Screw
13-151	410M Friction Drive Assembly
13-195	Motor Coupling & Set Screw
15-45	Gear Box, Cover, Pinion & Bearing Assembly
36-136	No. 10 Plain Washer
36-141	6/32 x 1/4" R. H. M. S.
36-258	Spacers
36-501	"C" Washers for Friction Drive
36-550	No. 10/32 x 3/4" Slotted H. H. M. S.
36-551	Lag Screw
41-89	"C" Washer Pkg. 12
54-38	Reduction Unit Shim
56-419	410M Shaft for Friction Drive
56-415	411M Shaft for Friction Drive
56-417	412M Shaft for Friction Drive
56-418	406M Shaft
57-18	Lower Friction Drive Disc (all models)
60-144	Fibre Washer
62-46	Motor Grommet
67-88	Mtg. Board
368-2	406M 3/8 x 32" Hex Nut
1315-1	Reduct. Unit Oil S.A.E. 10, 1/2 oz.
3611-4	No. 10 S. P. Lock Washer
3643-1	No. 10/32 Tee Nut

MODEL 16-E, Capehart

FARNSWORTH TELEV. & RADIO CORP.

ELECTRIC PLAY CONTROL ADJUSTMENTS AND MAINTENANCE M Series

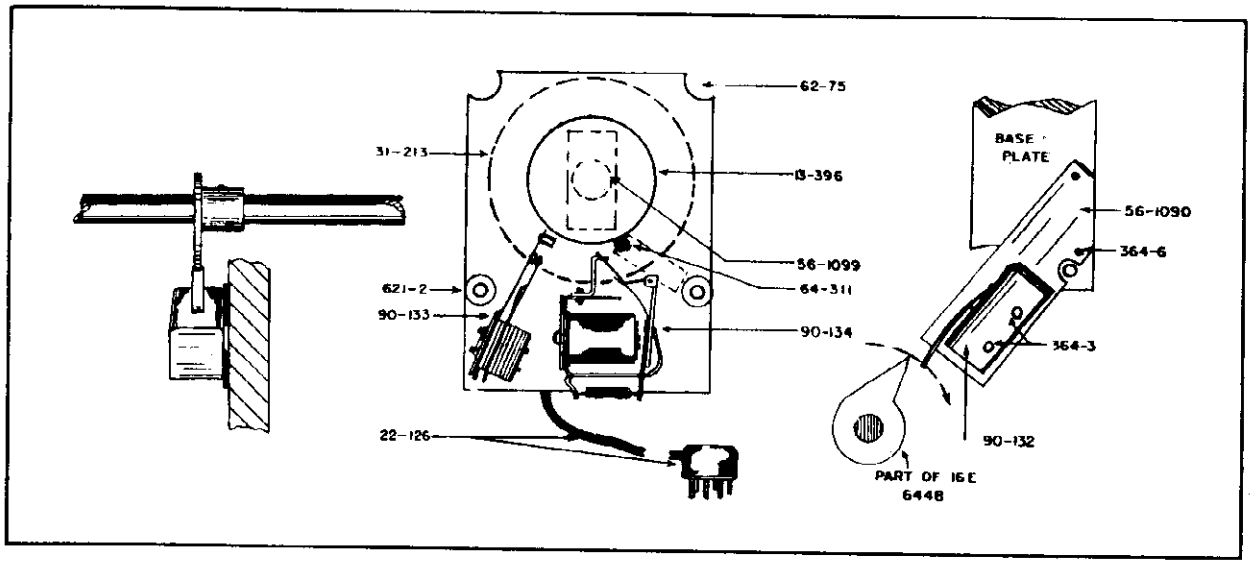

FIGURE D. M SERIES PLAY CONTROL

PARTS LIST

Stock No.	Description
13-368	Play Control & Cabinet Light Assembly, Complete
13-396	Ratchet Assembly
22-126	Cable and Plug Assembly
31-213	Dial Scale
56-1099	Shaft
56-1100	Steel Ball Bearing
59-142	Knob
59-143	Housing
62-75	Rubber Grommet
64-311	Dog Spring
90-125	Light Switch
90-132	Acro Switch
90-133	Relay (Complete)
90-134	Master Switch
92-140	Back Cushion
621-2	Rubber Grommet
61163	Light Bulb

FARNSWORTH TELEV. & RADIO CORP. MODEL 16-E, Capehart

ELECTRIC PLAY CONTROL—M SERIES—Cont.

1. The following parts comprise a complete play control installation. Play control with cables, plug and switch, compartment light, mounting bracket, two bracket mounting screws, two switch mounting bolts, and four wood screws. Check packing material so no parts are overlooked.

2. The mounting bracket should be installed on the record changer first, see illustration.

3. The bracket is mounted on the boss which supports the clutch fork shaft and the reverse cam shaft, on the side of the boss away from the main cam, so the clutch fork shaft sets in the cutout. Pass the two screws that fit the tapped holes in the switch bracket through the old play control bracket holes when mounting the bracket.

4. Remove the plug button from the partition between radio and changer, put the six prong plug, the switch and the cables through the holes in the partition. Fasten the play control on the partition by means of the wood screws being careful not to crack the plastic case by drawing the screws too tight or driving the screws in crooked. Also be sure the record tray clears the play control housing before driving any screws.

5. Fasten the switch to the bracket by means of the two bolts. See illustration. This puts the switch in such a position that the throwout cam can actuate the switch. Of course, the switch goes on the bracket with the leads at the bottom and pointing toward the left (when looking in the back of the cabinet), this brings the spring finger in line with the throwout cam.

6. Remove play control shorting plug (six prong) from junction box and plug in cable from play control. Set play control at any number except zero (off) and run changer through several cycles. If the switch is too close to the throwout cam, the relay in the play control will buzz; if not close enough, the action will be erratic. Be sure the bolts holding the switch and the screws holding the bracket are properly tightened.

MECHANICAL PLAY CONTROL MODELS PRIOR TO M SERIES

TO ADJUST THE PLAY CONTROL

When setting a play control, the counter should reset at Zero just as the needle touches the record. That is, the play control cam, on the record changer main shaft, should be from 1/4" to 1/2", beyond the plunger after the main clutch has disengaged. The control cable is put in the hole in the plunger and the set screw tightened, then the cable housing should be held in place by the set screw—do not set the screw tight. Turn the bar knob pointer back and forth over the play control dial, if the pointer catches or binds, slip the cable housing away from the bracket slightly, until the pointer runs free, then run the changer through a cycle to see that the play control resets properly, then tighten the screw.

When adjusting the play control, which is in the record compartment, after removing the wood screws which mount the control to the shelf, remove the clips holding the 110-volt leads to the switch. Then remove the pointer and the two round head machine screws from the back. The stop spring of the stop spring and ball assembly, No. 66324, should be tangent to the gear and the ball should be in the space between the last and the next to the last tooth, before the blank space in the gear tooth. With the ball in this position, the set screw in the collar at the rear of the unit should be firmly against the stop pin. To make this adjustment, loosen the set screw, while holding the gear, move the collar, then tighten the set screw. In this position, the switch pin, No. 48202, should hold the switch open and permit the switch to close when the gear is advanced one tooth. The stop bracket, No. 4450, for the resetting dog, should allow the dog to advance only one tooth at a time, if it picks up more than one tooth, move the stop toward the dog until it advances only one tooth at a time.

The resetting dog, No. 3839, should not ride on the gear tooth, as this will prevent turning the pointer toward one hundred. Shift the stud, No. 4354, until the dog clears the tooth, then check the alignment of the plunger tube and the cable housing stud, for if the cable is bent here, the play control may fail to function.

When replacing the pointer, No. 6062, turn the shaft to the position, where the switch is open, then turn the shaft ONE notch or stop toward the one hundred, at this point, set the indicator on ZERO and set up the set screw, checking to see that the pointer does not ride on the dial at any point.

If trouble is experienced examine the cable for kinks or rust spots, in any case do not substitute music wire as it does not have the proper hardness and probably will not be the correct diameter, if it is too large, it will bind; if too small, it will kink.

Powdered graphite blown in cable or mixed with light oil and run in cable will improve operation.

MODEL 16-E, Capehart

FARNSWORTH TELEV. & RADIO CORP.

MECHANICAL PLAY CONTROL

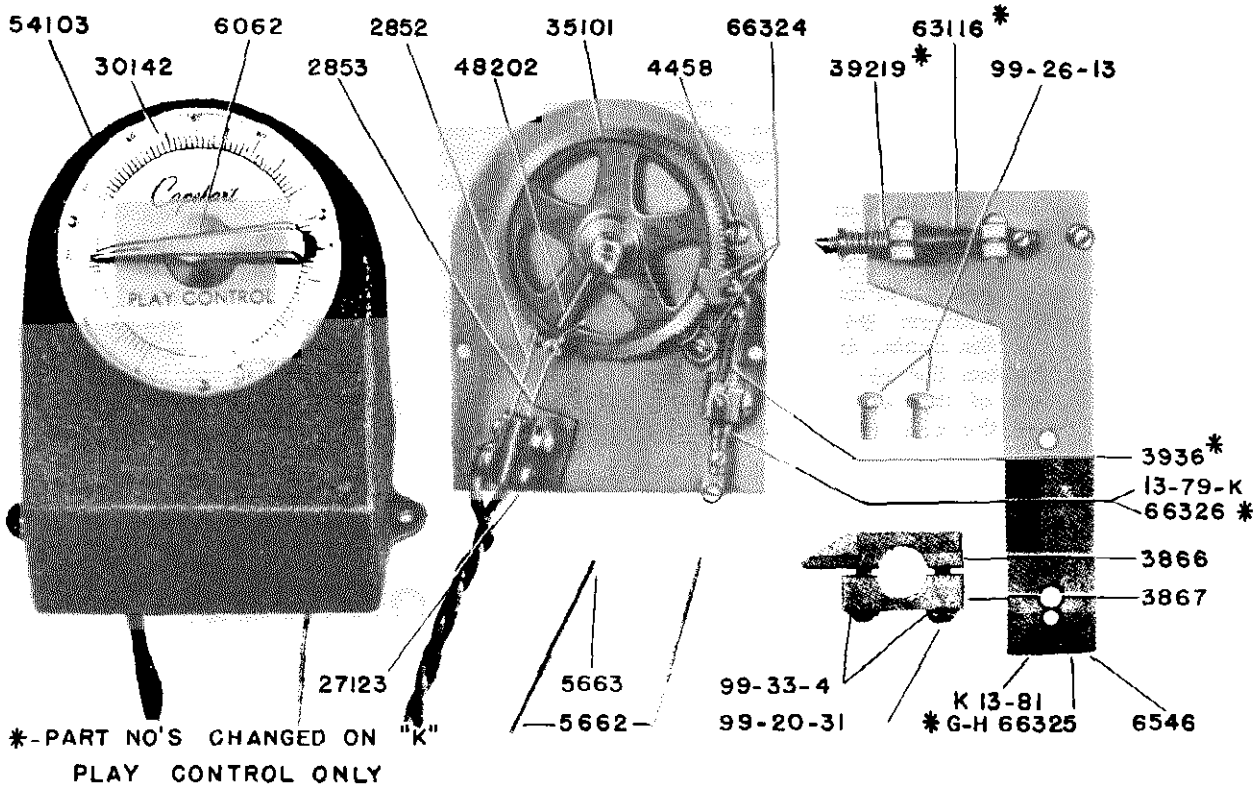

FIGURE E. 16-E MECHANICAL PLAY CONTROL

PARTS LIST

Part No.	Description
27123	Switch Assembly
2852	Switch Arm "Straight"
30142	Play Control Dial
35101	Gear
3866	Play Control Split Cam, Long
3867	Play Control Split Cam, Short
3936	Spring, Dog
64-32	Spring, Dog, "K" only
39219	Plunger Return Spring
64-31	Plunger Return Spring, "K" only
4458	Dog, Stop Bracket
48202	Switch Pin
54103	Play Control Housing
5662	Cable Housing
5663	Control Cable
6062	Bar Knob—Pointer
63116	Plunger Tube Assembly
5654	Plunger Tube Assembly, "K" only
6546	Complete Play Control Bracket for Field Assembly
66324	Stop Spring and Ball Assembly
66325	Bracket Assembly for 16E Chassis, "K" only
66326	Dog Plunger Assembly
13-79	Dog Plunger Assembly, "K" only
99-20-31	10-32 x 3/8" R. H. M. Screw
99-26-13	10-24 x 3/8" Hex Head
99-33-4	No. 10 Special Shakeproof Washer

FARNSWORTH TELEV. & RADIO CORP. MODEL 16-E, Capehart

QUESTIONS AND ANSWERS

To assist the service men, who have not had the advantage of factory training nor experience servicing the Capehart 16E Record Changer, we have prepared this section, which covers the more common complaints reported by users, dealer's service departments, our salesmen and field engineers.

Of course, there are many factors responsible for the troubles encountered. Below we are listing some of them.

1. Customers—Failure to properly load or operate the instrument. Friends who drop in and think they know all about everything. Owner not having been properly instructed or their general inability nor desire to learn.

2. Records—Variations from standards, rough edges, thickness, warped, etc.

3. Adjustments—Not proper due to:

A. Improper operation of instrument.

B. Misuse and neglect.

C. Wear, due to lack of oil and grease.

D. Improper inter-relation of parts due to adjustments of one section without complete follow through on other related parts.

Below are listed some of the more common complaints, along with some of the possible causes, and reference to the service notes where adjustments may be found. These are not complete as it is impossible to cover every case but we believe they will help the service man over the rough spots.

1. Waver and Wow, poor tone. May be caused by any one or all of the following: Refer motor drive—Gear Reduction Unit—Drive Shaft Alignment section.

A. Loose set screws in motor to turntable shaft and couplings.

B. Loose rivets in flexible couplings.

C. Leather coupling oil soaked and/or soft.

D. Improper alignment of gear reduction shaft with turntable shaft. Must be within 1/4 inch. Remove top universal and use shaft for aligning.

E. Lack and grade of oil in gear reduction unit.

F. Defective crystal pickup.

2. Needle drops off edge of record or fails to feed in at times.

A. Instrument not level. Check and level at base plate near tone arm—not cabinet.

B. Pickup brush gone, worn or improperly adjusted. Must extend 1/32 inch below standard length needle and no other length needle should be used.

C. Pickup arm stop lever and/or stop lever hook improperly adjusted. Refer Fig. 9A and 13A.

D. Improper adjustment of Tone Arm feed in cam. Refer Fig. 8.
Clearance between cam and tone arm lift level should be about 1/32 inch when changer is in play position.

E. Tension too great on pickup stop lever spring. Refer Part No. 3984.

F. Pickup stop lever rubber roller worn or out of round. See Part No. 5044.

G. Rough edges on 12" records causing pickup and tone arm to jerk and jump as rubber roller on stop lever comes in contact with record.

3. Failure to trip properly. (Too soon or too late).

A. Not sufficient tension or too much tension on trip lever friction joint.

B. Movable trip switch arm bearing stuck. This occurs near salt water and in humid climates.

C. Check for dirt and corrosion between trip lever arm and base plate at friction contact mounting. Clean and apply drop of light oil.

D. Check complete adjustment.

4. Excessive amount of tick at end of record.

A. Tension too great on trip arm lever friction. Back off adjusting screw, clean and oil between base plate and lever at point of mounting.

B. Place piece of rubber tubing or tape on end of trip lever where contact is made with tone arm trip bracket.

5. Excessive record wear.

A. Worn needles.

B. Friction on trip switch lever too great causing wear near end of record.

C. Improper adjustment and alignment of True Tangent Tone Arm. Pickup should be in straight alignment with tone arm

MODEL 16-E, FARNSWORTH TELEV. & RADIO CORP.
Capehart

QUESTIONS AND ANSWERS—Cont.

when needle is 1½ inches from center spindle of turntable shaft.

D. Tone arm binding in mounting or resting on tone arm feed in cam due to improper adjustment of cam. Refer Fig. 8.

6. Clutch disengages before completion of cycle.

A. Insufficient tension on Solenoid wedge spring. Refer Fig. 12B.

B. Solenoid Torsion spring in wrong hole for action desired.

C. Improper adjustment motor solenoid switch—Excessive upward tension on clutch lever. Refer Fig. 10.

D. Clearance between drive and driven sections of clutch. Refer Fig. 7.

E. Excessive upward tension from muting switch on clutch lever.

F. Improper adjustment of Clutch Throwout lever. Clutch only partly engaging. Refer Fig. 10.

G. Any binding of clutch action causing clutch to not completely engage or disengage.

7. Changer continues to cycle without playing record.

A. Improper adjustment of clutch throwout lever. Spring part No. 3990, holding clutch throwout lever too high—misses clutch throwout cam.

B. Solenoid Torsion spring in top hole instead of center or bottom. Refer Fig. 10.

C. If buzzing sound is heard at end of cycle look for reject button stuck, trip switch contacts stuck or reject relay contacts closed (should be open during phonograph operation).

8. Record breakage.

A. Clean with oil soaked cloth all polished surfaces on magazine and record tray with which records come in contact.

B. Check adjustment of magazine, especially back stop. Refer "B" Fig. 3.

C. Improper adjustment of vertical bumper guide. Refer Fig. 2.

D. Note—If record break is half moon shape record has stuck on slide rails and came out late. If crack from edge toward center hole, magazine is adjusted too far forward. If chipped on edges, including V shape breaks, damage is caused in turn over position and requires complete cleaning of record tray near lower rubber bumpers and cleaning of reverse arm upright polished surfaces. Also polish and check adjustment record support pins. Refer Fig. 2.

9. Noise when 12" records drop.

A. Record caught between record reverse arm and record tray prohibiting return of reverse arm.

B. Record reverse arm jammed or out of position with reverse arm crank. Refer Fig. G.

C. Excessive records in magazine—not more than 18.

D. Bent reverse arm and roller. Refer Fig. 4.

10. Records fail to unload from magazine occasionally.

A. Insufficient records. Should be 6 or more. Six to fifteen records for best operation.

B. Warped records and/or chips on edges.

C. Improper adjustment of record separator—adjusted too low. Refer Fig. 2.

©John F. Rider

FARNSWORTH TELEV. & RADIO CORP. MODEL 16-E, Capehart

MECHANICAL ADJUSTMENTS 16-E RECORD CHANGER

Due to the fact that certain critical shortages have developed in the metals used in the 16-E Record Changer, we are listing in the parts lists the standard parts, which have been used in the past, as well as those parts consisting of the newer metals. Beginning with the Serial Number 20,000, a new base of cast iron was incorporated. A new magazine is now being used, as well as a zinc record tray. With the new tray, because of its extra weight, a counterbalance spring and the necessary fittings are required, these fittings are shown on page 35. A list of these parts is included in the parts price list and these parts are marked with an *.

In making all adjustments of the assemblies on the top of the record changer the turntable is the datum point.

Before attempting any adjustments the service man should learn to disengage clutch while changer is in cycle by placing thumb of left hand on top of clutch fork and forefinger under fork. Lift with finger to disengage clutch and press with thumb to engage clutch. This makes it possible to stop changer in any desired position while motor is running.

ADJUSTMENTS

1. TO LOCATE AND ADJUST THE RECORD TRAY (6687) (Fig. F).

If it becomes necessary to replace a record tray, the first tooth of the driver quadrant (6257) (Fig. F) should mesh with the second tooth of the driven quadrant of the record tray (3515) (Fig. F). This is to permit proper adjustment of the tray height, which adjustment is covered below.

An easy way to locate tray and match with gears is to place selector lever in repeat position. This releases quadrant gear (6257) (Fig. F). Then place selector lever in one side position and lift quadrant until it snaps in male and female clutch position. The tray may then simply be placed around turntable and pins inserted. Place selector lever again in repeat position and lift tray for examination. Teeth should then be properly meshed. Changer should be in play position when this adjustment is made.

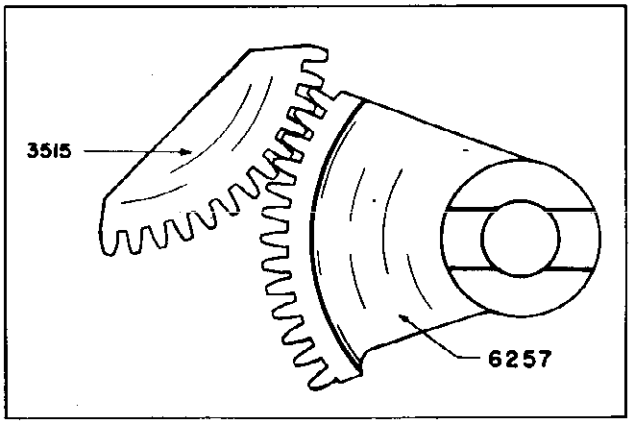

FIGURE F. RECORD TRAY GEARS

After the gears are properly meshed, the record tray should be adjusted sidewise until the turntable is uniformly spaced within the tray at the time when the record tray is raised until the front end of the 10" felts are level with the turntable felt. After the tray has been properly positioned sidewise, tighten the two Allen set screws holding the record tray pivot pins, then check to see that no side play exists.

TO ADJUST THE RECORD TRAY ELEVATION:

With the record control lever (6231) (Fig. 9B) in the "One Side" position, run the record changer thru a cycle until the large hole in the main cam is exactly half way past the upper edge of the record tray cam follower as shown at "A" in Fig. 5. In this position the front points of the 10 inch felts in the record tray should be level with the turntable felt (a straight edge should be used). If the level is not the same, loosen the nut on the back of the eccentric screw (3237) (Fig. 5). Adjust this screw until the felts are the same heights, then while holding the screw to prevent its turning, tighten the nut.

Unless this adjustment is carefully made, the record center hole will miss the spindle, for if the tray is too low the records will slide over the 10" stop in the tray, while if the tray is too high they will land with the spindle hole behind the spindle.

2. TO LOCATE AND ADJUST THE RECORD MAGAZINE (6686) (Fig. 1).

Before attempting any adjustment of the record magazine, make certain that the center of the right hand magazine pivot pin (34132) (Fig. 2) is exactly 8 3/8" above the base plate. This is shown in Fig. 2. This height is very critical and may be the cause of records not being properly delivered to the record tray. If this height is found to be incorrect, it can be adjusted by striking the buckhorn with a rubber hammer. Strike the underside if the height is less than 8 3/8". If more, strike the upper side of the buckhorn.

MODEL 16-E, FARNSWORTH TELEV. & RADIO CORP.
Capehart

MECHANICAL ADJUSTMENTS—Cont.

TO POSITION RECORD MAGAZINE:

The record magazine may be moved sideways by loosening the two set screws located underneath the magazine pivot pins in the magazine support assembly (Buckhorn) (6684) (Fig. 1). The correct position of the record magazine is determined by the position of the pin in the Record Reverse Crank with respect to the slot in the Record Reverse Fork. The illustration Fig. G, below, shows this clearly. After this position has been reached, the magazine should be securely fastened by the Allen set screws which are located in the Magazine Support Assembly.

Swing the Record Reverse Arm around in front of the magazine to determine if the Record Guide strikes either of the Record Support Pins (34138) (Fig. 12A). If the guide strikes either of the support pins, it will be necessary to bend the interfering pin so that clearance is secured.

Next move the Record Selector Arm to the Repeat Position. This disengages the Record Repeat Sliding Clutch and permits lifting the Record Tray. After placing a 10" record on the turntable and slowly raising the tray by hand, the record should hit the pins simultaneously about halfway between top and bottom of the angle surface of the pins. If it does not, it will be necessary to bend the pins until the record does. This adjustment is predicated upon the fact that the rear record bumpers are in good shape (not unequally worn). If an adjustment of the pins is made, see that clearance is maintained between the Support Pins and the Record Reversing Arm and Guide, as well as the holes in the Record Tray.

If the magazine has been replaced or moved, the Magazine Stop Screw, "B" Fig. 5, may need readjustment. The correct adjustment is made when the changer is in the playing position. The record separator must be engaged by hook—and should just touch the vertical portion of it. In this position the record reverse arm should rest against the stop tubing, and the record reverse crank should be in the fork of the record reverse arm as shown in the accompanying illustration. This view is shown with reverse arm in Reverse Position and looking down.

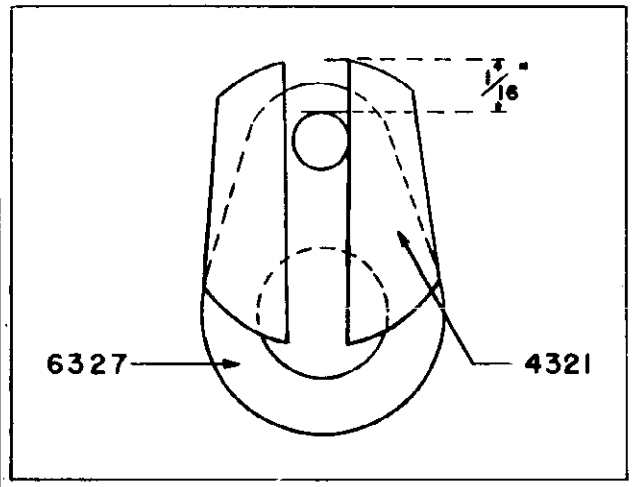

FIGURE G. REVERSE PINION CRANK AND PIN ASSEMBLY

If it is necessary to shift the magazine, the final check should be to determine that the Record Separator Hook (4323) (Fig. 2) does not bind in the slot at the end of the Record Separator Arm, (6445) (Fig. 1). The adjustment of this separator arm is covered in part 5 of this section.

3. MAGAZINE LINK ADJUSTING SCREWS ("A") (Fig. 2).

The Record Magazine should always return snugly against the Magazine Stop Screw ("B") (Fig. 5). If it does not, it is necessary to place selector lever in repeat position and loosen the two adjusting screws on the magazine actuating link to a sliding tension, and run the changer thru its cycle until the magazine attains the position shown in Fig. 2. Stop the cycle either by disengaging the turntable clutch, or by disconnecting the A. C. line cord. Press downward on the lower part of the magazine thus lengthening the Magazine Link Assembly. Now resume the cycle, and when the magazine touches the Magazine Stop Screw, the Magazine Link will adjust itself, after which the adjusting screws on the link assembly should be tightened securely.

4. TO ADJUST AND POSITION THE RECORD REVERSE GUIDE (6444) (Fig. 1).

When a 12" record is placed in the Magazine, the Record Reverse Guide should be parallel to this record at the time when the guide is swung from its normal resting position to a position in front of the magazine, snugly against the rubber bumper as shown in Fig. 2. This is known as the Reversing Position.

If the guide is parallel with the 12" record, it should return and rest against the rubber bumper on the Magazine Support Assembly, in such a position as is shown in Fig. 1. If the Eccentric Cam (3825) (Fig. 11) is properly adjusted, the guide will rest against the rubber bumper; however, if the Record Reverse Guide does not properly return, loosen the screw holding the Eccentric Cam and rotate the Cam slightly until the correct position is secured.

If the Reverse Guide does not return to the rubber bumper, check the position of the Crank Pin in the Record Reverse Fork (under Magazine Adjustments and Fig. "B").

If the Eccentric Cam is turned too far, the Reverse Guide will not swing around far enough to rest easily on the rubber bumper (5043) (Fig. 1) while in the playing position.

MECHANICAL ADJUSTMENTS—Cont.

With the Record Selector Lever in the Both Sides position, run the changer thru a cycle until the point is reached where the Record Reverse Guide swings in front of the magazine. In this position the Crank Pin should touch the side of the Record Reverse Fork, that is, toward the magazine without binding. To adjust the position of the Crank Pin, while the Record Reverse Guide is in the reversing position, loosen the lock nut marked "D" Fig. 11. Next, remove the shoulder screw that holds the Reverse Assembly Link Rod to the gear quadrant, (3550) (Fig. 11) and adjust the length of the Link Rod by turning the end which has just been disconnected. After correctly positioning the Crank Pin tighten the lock nut.

5. TO ADJUST RECORD SEPARATOR (Figs. 1 & 2).

With a 10" record in the magazine, the upper edge of the Record Separator (6445) (Fig. 1) should be flush with the top of the Lower Support. To adjust the position of the Record Separator, move the Record Separator Stop to the position desired by loosening the two screws holding this stop. This stop (4520) is shown clearly in Fig. 2 and is located at the bottom of the right hand side of the magazine. The Record Separator Hook should then be adjusted.

6. TO ADJUST THE RECORD SEPARATOR HOOK (4323) (Fig. 2).

As the Record Separator Hook should enter the slot in the end of the Record Separator without binding, it will be necessary to readjust the Record Separator Hook in the event it has been necessary to adjust the Separator Stop. To adjust the Hook, loosen Nut (99-12-3) (Fig. 2) and turn the Hook, which is threaded, until it enters the slot in the Record Separator freely.

NOTE: IF IT IS EVER NECESSARY TO RE-ADJUST THE HOOK, BE SURE TO CHECK THE HEIGHT OF MAGAZINE PIVOT PIN (SEC. 2).

Be sure the screw marked "E" in Fig. 11 is screwed all the way in and locked with the nut. This prevents the Separator Hook from ejecting a record from the magazine during the Reverse Cycle, allowing the record to be caught under the returning magazine, due to its inability to reach the turntable while another record is being reversed.

7. TO ADJUST TONE ARM HEIGHT

When an unwarped 12" record is placed on the turntable, the outer edges of this record should coincide with the center of the rubber roller at the end of the Stop Lever (64197) (Fig. 9A). Run the changer through a cycle until the Tone Arm Lever Hook just touches the Stop Lever. The correct tone arm height is secured when the center of the Tone Arm Hook is the same height as the top of the Stop Lever. To effect this adjustment, lift the tone arm by hand, thus making accessible two Allen set screws, normally covered by the Tone Arm Base. After adjustment, and before finally tightening these set screws, check the clearance between the Pickup Head and the Record Tray. This should be 5/8" while the tray is in the process of raising or lowering with the Pickup Arm swung back by the swing cam, i. e., during either the One Side or Both Sides cycle. The tone arm lever hook should clear through the slot in the stop lever when changer is in play position.

8. TO ADJUST THE PICKUP ELEVATION

After the Pickup Arm Lever Hook has moved the Stop Lever in to the needle landing position, the Hook moves down the Stop Lever. In its downward journey, it pauses momentarily before the Hook, and then enters the Slot in the Stop Lever, thus permitting the Stop Lever to swing to its normal position. If the record changer is stopped at this point in its cycle, it will be found that the ball at the end of the pickup arm lift shaft is at the point marked "F" on the Lift Cam (6449) (Fig. 8).

With the needle, which is to be used in the Pickup, and the Lift Shaft at "F", lift the Pickup and allow the needle to drop off the edge of the Record. The needle point should extend below the playing surface a distance equal to half the thickness of the record.

To make this adjustment, turn screw 99-22-29 (Fig. 13A) until the correct position of the needle is reached. Be sure to retighten the lock nut.

THIS ADJUSTMENT IS IMPORTANT, DUE TO THE VARIOUS LENGTHS OF DIFFERENT BRANDS OF NEEDLES. UNLESS THIS ADJUSTMENT IS CHECKED, IT MAY CAUSE THE NEEDLE TO FALL OFF THE RECORD BEFORE ENTERING THE PLAYING GROOVES.

9. TO ADJUST PICKUP FEED-IN

An examination of the Pickup Friction Cam will disclose the fact that there is a flat leather portion that applies friction to hold the Pickup Arm Lever Hook against the Stop Lever until the weight of the pickup is transferred to the needle. This friction should be applied long enough to prevent the needle falling off the record, but if maintained too long, the needle may skip across the first few playing grooves, and thus miss playing the first portion of the record.

Before adjusting tone arm feed-in cam, be

MODEL 16-E, FARNSWORTH TELEV. & RADIO CORP.
Capehart

MECHANICAL ADJUSTMENTS—Cont.

sure no end play exists in main shaft, otherwise position will vary as main shaft shifts position.

In the earlier model changers this Friction Cam is held on the shaft by a taper pin as well as two Allen set screws. However, later models employed the Allen screws only. If it is necessary to advance or retard this Friction Cam, do not tighten BOTH screws until the proper position is secured, as the set screws have cup points, and after being set up tightly, leave an imprint in the shaft and thus have a tendency to "pull back" into the old position. On instruments where the set screws have been tightened, it might be well to remove the main shaft, and smooth out the old screw marks before attempting to reset this cam. Rotating the cam in the direction of its normal rotation relieves the pressure on the pick-up arm earlier.

10. TO ADJUST THE MAGNETIC PICKUP

Remove the Pickup Cover and check the location of the Stylus with respect to the Pole Pieces (569) (Fig. 6). This stylus should be centrally located in respect to these poles. To adjust the stylus the spool assembly may be shifted, after the set screws (99-28-3) have been loosened. When tightening the set screws, exercise care not to crack the bakelite bobbin. When checking the pickup, carefully examine the rubbers as they harden and split. Due to age, the majority of complaints are traceable to this fact. It should not be necessary to caution against steel chips getting into the assembly.

11. TO ADJUST NEEDLE LANDING

The 12″ landing should be adjusted first. In Figs. 5 and 13A the Stop Lever Hook (5658) is shown. In the normal or playing position its flat face is parallel with the bottom of the slot in the Stop Lever, and when engaged with the Stop Lever, the adjacent faces of the Stop Lever and the Lever Hook are parallel. The Lever Hook is adjusted by loosening the Bristol Set Screw No. 99-28-31 (Fig. 6 & 13A) located in the bottom of the Center Bolt, which is the pivot for the Pickup Head Bracket. The Lever Hook should be adjusted to allow the needle to land 3/32″ from the edge of a 12″ record. Be sure the Bristol set screw is retightened. Next, place a 10″ record on the turntable and adjust screw 99-18-20, which is located in the Stop Lever (Fig. 9A) until the needle lands 3/32″ from the edge of the 10″ record.

CAUTION—The Lever Hook should not bind when going through the slot in the stop lever.

12. TO ADJUST CLUTCH THROWOUT LEVER & CAM (6460) (Fig. 10).

The Clutch Throwout Lever & Cam is adjusted by loosening the shoulder screw holding the cam to the lever, and adjusting the cam until it just clears the point of the Clutch Throwout Cam which is located on the main shaft. This adjustment must be made with the changer in the playing position, i. e., when the Pickup Arm Lift Shaft is in its lowest position, as shown in Fig. 8. Unless sufficient clearance is secured, the changer may jam; excess clearance will cause the changer to cycle without playing records.

The wire spring (3990) (Fig. 10) must lift the cam far enough to clear the Clutch Throwout Cam, otherwise the changer will jam; if it holds the cam too high the changer will continue to cycle.

13. TO ADJUST SOLENOID WEDGE SPRING (39132) (Fig. 12B).

The Wedge Spring is located on one of the three spacers used to mount the solenoid plate and is directly over the solenoid coil. Its purpose is to prevent clutch bounce or chatter when the clutch engages. It may be bent to proper tension by means of a long screwdriver. If the clutch disengages before a change cycle is completed, it is advisable to increase the tension of this spring.

14. TO ADJUST REVERSE CAM SHIFT LEVER (5326) (Fig. 3).

When the Record Selector Lever (Fig. 9B) is moved to the "Both Sides" position, the Record Control Rod Pin (34145) (Fig. 9B) moves the Record Control Shaft, which in turn moves the Reverse Cam Shift Lever. This causes the Reverse Cam (6325) (Fig. 4) to engage with the Reverse Cam Pin (34144) (Fig. 4). The Shift Lever should be positioned on the Control Shaft so that the Reverse Cam is free of the Reverse Cam Pin in the "Repeat" and "One Side" cycles, but is firmly engaged in the "Both Sides" cycles. Under no circumstances should the Shift Lever be positioned so as to bind the Reverse Cam.

15. TO ADJUST RECORD REPEAT LOCK LEVER (5334) (Fig. 3).

This lever is to prevent accidental shifting of the Record Selector Lever during the change cycle. In the playing position, the tip of this lever should clear the Clutch to Solenoid Lever by 3/16″ while moving under it. In the "Repeat" cycle, this lever is on the side of the Clutch Solenoid Lever away from the Main Cam. In the other two cycles it encloses the Clutch Solenoid Lever.

16. TO ADJUST REVERSE CAM LOCK LEVER (5339) (Fig. 3).

This lever serves the same purpose as the Record Repeat Lock Lever and should clear the Clutch Solenoid Lever by 1/16″ while moving

MECHANICAL ADJUSTMENTS—Cont.

under it in the playing position. During the "Both Sides" cycle, it is on the side of the Clutch Solenoid Lever, towards the Main Cam, and in the other two cycles it encloses the Clutch Solenoid Lever.

17. TO ADJUST RECORD REPEAT CLUTCH LEVER (5332) (Fig. 3).

The Sliding Clutch permits disengagement of the Record Tray Driving Quadrant during the "Repeat" Cycle, when the same record is used. The Clutch Lever should allow the clutch to engage firmly in the "One Side" and "Both Sides" cycles, but be entirely disengaged in the Repeat Cycle. The Clutch Lever is secured to its shaft by means of an Allen Set Screw.

18. TO LOCATE MAIN CAM SHAFT

Both end bushings of the Main Cam Shaft are movable, and are used to position the Main Cam Shaft. To position this shaft, loosen the H. H. Cap Screws (99-26-9) (Fig. 11) holding the bushings, then move the shaft until the ball in the end of the Tone Arm Lift Rod is exactly centered on the Lift Cam as shown in Fig. 8. When tightening the Cap Screws, be careful not to crush the Durex Bushings or crack the split bearings located near the turntable shaft.

19. TO ADJUST AUTOMATIC TRIP SWITCH (2792) (Fig. 9B)

This switch is located underneath the turntable and is actuated by the motion of the Tone Arm being transmitted to the Trip Arms thru their associated Friction Joint.

To adjust this switch, remove the long trip arm from the Switch Cover and the two F. H. M. S. holding this cover. There should be 1/32" clearance between the switch points. Replace the turntable on its spindle, and move the tone arm toward the turntable spindle so that the trip quadrant moves the trip arm about ¼", then turn the turntable one complete revolution. This rotation is for the purpose of having the Fibre Trip Pin, at the bottom of the turntable, reset the Trip Arm. Remove the turntable, and check the position of the trip arm in respect to the movable contact arm which should be equidistant from both bakelite insulators. In order to position the trip arm, loosen both screws holding the switch and adjust it until there is approximately 1/32" clearance between each bakelite insulator and the trip arm. Recheck this position before replacing the cover. When replacing the trip arm through the slot in the cover, be sure that it is between the bakelite insulators, otherwise it may make contact with one side of the A. C. line and cause a fuse to blow.

A single strand of wire is soldered from one side of the A. C. line to the movable arm of the switch for the purpose of preventing chattering, which may occur if the current flows only through the bearings to the arm.

20. TO ADJUST SOLENOID MOTOR SWITCH (Fig. 10).

The Solenoid Motor Switch is located underneath the cast cover (5226) (Fig. 3) and is used to disconnect the Solenoid Coil during the change cycle and to shunt the phono relay contacts in order to keep the motor running until the change cycle is completed, even though the instrument is turned off. This switch is actuated by the Clutch to Solenoid Lever.

The cover (5226) is secured by a bolt at one end, and a screw at the other. When the clutch is disengaged, the upper contacts should make good electrical contact, and there should be approximately 3/32" clearance between the bottom contacts. When the clutch engages, the upper contacts should remain closed until the bottom contacts close, after which they should open. When the clutch is fully engaged, the bottom contacts should be closed, and there should be approximately 3/32" clearance between the upper contacts. To adjust the switch, loosen the screw (or screws) holding the bakelite insulator to the solenoid plate.

21. TO ADJUST AUTOMATIC TRIP SWITCH FRICTION JOINT

This friction joint is located underneath the record tray, and is used to transmit the motion of the tone arm to the Automatic Trip Switch by means of the two Trip Arms.

Place the Selector Lever (9B) in the Repeat position and raise the record tray. A flat spring, which can be adjusted by a screw, holds the two trip arms together against a cork washer. The tension of the flat spring determines the friction between the two trip arms. If the tension is too great, the changer will cycle before completing a record, and if not great enough, the changer may not trip at the completion of a record.

On some instruments a "Thump" may be heard through the speakers during each revolution at the time when the Turntable Fibre Pin strikes the Trip Arm. This motion is transmitted to the needle point, and may be reduced or eliminated by proper adjustment of the Friction Joint. In some stubborn cases it may be necessary to place a small piece of surgical rubber tubing over, or to wrap several layers of cellophane tape around the Trip Quadrant where it touches the Trip Arm, which will effectively kill the thump.

MODEL 16-E, FARNSWORTH TELEV. & RADIO CORP.
Capehart

MECHANICAL ADJUSTMENTS—Cont.

22. TO ADJUST VERTICAL BUMPER GUIDE (6693) (Fig. 1).

This Guide, located behind the Lower Support Assembly, is used to guide the record when it drops to the rubber bumpers and also when the record is being raised by the rear of the record tray (elevating hook). The guide should be just far enough back from the lower record support to allow a 12" record to drop freely upon the rubber bumpers, and the lower points of this guide should be far enough forward to tilt a 12" record sufficiently to go freely behind the two points of the upper record support. If the lower points of the guide do not extend forward enough, there is danger of the record bouncing against the points of the upper record support and being chipped. When adjusting the Vertical Bumper Guide, make certain that the elevating hook (rear portion of the record tray) has clearance, otherwise the record tray will not return to its correct position.

23. TO ADJUST CLUTCH CLEARANCE.

In order to insure proper disengagement of the Driven Clutch (6326) (Fig. 7) and the Driving Clutch 3630, the clearance should be .020" when the changer is in the playing position. This clearance is obtained by loosening screw marked "G" Fig. 10 and moving the Clutch Fork. Be sure screw "G" is tightened after correct clearance is obtained.

24. OILING INSTRUCTIONS.

Due to careful design and precision workmanship the Capehart 16-E Record Changer requires a minimum of oiling or mechanical adjustment.

Some 16-E Record Changers produced in the past have had all cams, gears and sliding surfaces coated with graphite grease. These coated surfaces should be greased with white vaseline, which will replace the oil that has been used up during operation.

An occasional LIGHT coat of vaseline should be applied to all faces of the magazine at the points where the records come in sliding contact during the cycle, apply vaseline then wipe off with the fingers.

A good grade of light machine oil should be used on the sliding clutches (except motor slip clutch) reverse cam shaft, and eccentric shoulder screws.

DO NOT OIL DUREX BUSHINGS. DO NOT USE AN EXCESS OF LUBRICANT.

Later production changers used Lubriplate instead of Graphite.

On these, all surfaces of the main cam, the reverse cam, and the tone arm lift cam that come into contact with rollers should be coated with a film of Lubriplate. Lubriplate can be purchased at almost any electrical supply or hardware store.

The drive motor should have its oil cup filled every six months.

The Gear Reduction unit used with the Emerson motor should be checked to make certain it contains the proper amount of No. 10 S.A.E. oil. (Amount required—1/2 oz.).

In the Gear Box of the Bodine Motor, the grease should be replaced each year. This grease may be 75% Vaseline and 25% S.A.E. 40 Motor Oil.

25. TO REPLACE RECORD REVERSE CAM.

There are two methods used in removing a broken Record Reverse Cam, the first being to remove the Turntable Drive Shaft, the second, to drop the Main Cam Shaft.

To remove the Turntable Drive Shaft see Fig. 7.

1. Mark the Drive and Driven Gears in order that they can be again meshed in the same position. (This should be done regardless of which ever method is used).

2. Remove turntable shaft.

3. Knock out the taper pin from the Driven Gear (on Reverse Cam Shaft) also the Reverse Cam Pin.

4. Move the Reverse Cam Shaft away from the Main Cam until the Reverse Cam drops off the shaft.

5. When replacing the Reverse Cam, make certain that the Reverse Cam Shift Lever is properly engaged in the slot in the Reverse Cam, before pinning the Driven Gear to the Shaft. Remember this is a taper pin and only goes in one way. Consequently, the shaft has to be properly aligned or the pin will not enter. Next replace the Reverse Cam Pin. Replace the Turntable Drive Shaft and check. If the Reverse Cam Shaft is only partly withdrawn, the gears will remain properly meshed.

6. Check in order to determine that the Reverse Arm and Roller Assembly does not ride on the Reverse Cam; about 1/16" clearance should be maintained. The shaft of the Reverse Arm may be shifted by loosening the set screw that holds the end of the shaft nearest the Main Cam.

TO REMOVE THE MAIN SHAFT

Put the instrument in playing position. Remove the Eccentric Shoulder Screw holding the Magazine Slide Arm, and the screw holding the recoil slide arm. Loosen the single H. H. Cap Screw

MECHANICAL ADJUSTMENTS—Cont.

holding the front Durex Bushing; remove this Bushing, and the bearing cap that holds the rear Durex bushing. Work the shaft backwards out of the front bearing hole.

Knock the taper pin out of the Driven Gear, and remove the collar from the front end of the Reverse Cam Shaft. Move this shaft toward the rear until the Reverse Cam drops off the Shaft. Replace with a new cam, put gear on shaft, push shaft through Durex bushing and replace collar. Replace taper pin in gear.

Replace the Main Shaft and put Durex bushing on front end, after which mesh the driver and driven gears in accordance with the guide marks previously made. If the gears are properly meshed, the Reverse Cam will slide under the Reverse Arm and Roller Assembly without binding at the time the selector arm is moved into the "Both Sides" position. Rotate the Reverse Cam 180° with the fingers, and again move the Selector Arm to the "Both Sides" position. It should go in without binding. Replace the rear bushing and bearing cap. Replace the Magazine and Record Tray Slide Arms, and adjust the Record Tray height.

26. TO REMOVE RECORD CHANGER FROM CABINET

As the new series (beginning at 20,000) are equipped with cast iron bases, heavier magazines, and record trays, exceptional care must be exercised when removing a changer to prevent marring the cabinet.

After disconnecting the pickup and shorting leads, the play control cable and the drive shaft, remove the middle screw of the three holding the upper record support, and the shoulder screw 3239 (Fig. 1). Removal of the shoulder screw permits the magazine to be swung parallel with the base. Next, swing the Record Reverse Arm around in front of the magazine by raising the Record Reverse Arm Lock until the Reverse Arm is in front of the magazine. Then, release the Lock which will hold the Record Reverse Arm in place.

Lift the changer up and tilt it to clear the shelf, then remove it through the back of the cabinet.

As it is possible to mar the cabinet; the shelf, the top, and side of the cabinet, should be protected in some manner while removing and installing the changer.

27. ALIGNMENT OF TRUE TANGENT PICKUP

When properly aligned, the pickup head and the tone arm for a straight line when the needle is 1 1/2" from the center of the turntable drive shaft. To adjust, loosen the nut (43160) (Fig. 14A) and turn the steering rod (43148) until the correct adjustment is secured. After adjusting, determine that there is still 5/8" clearance between the Record Tray and the Pickup Head.

NEVER USE STEERING ARM TO ADJUST NEEDLE LANDING.

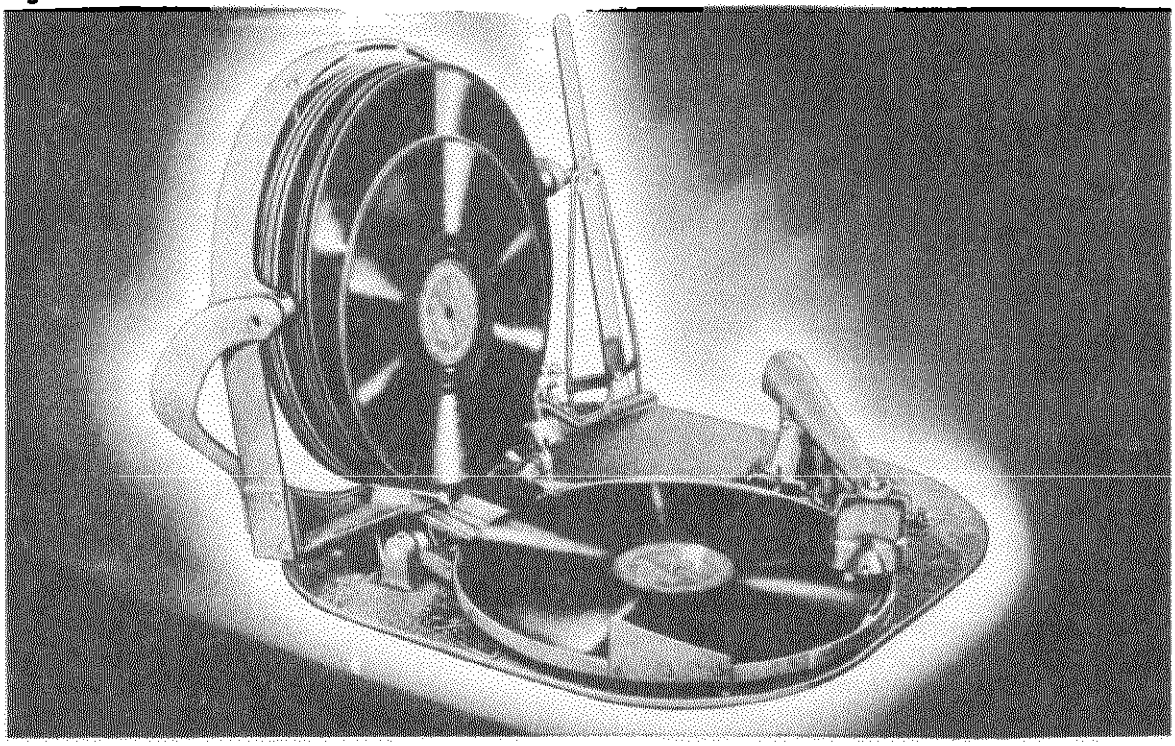

MODEL 16-E, Capehart

FARNSWORTH TELEV. & RADIO CORP.

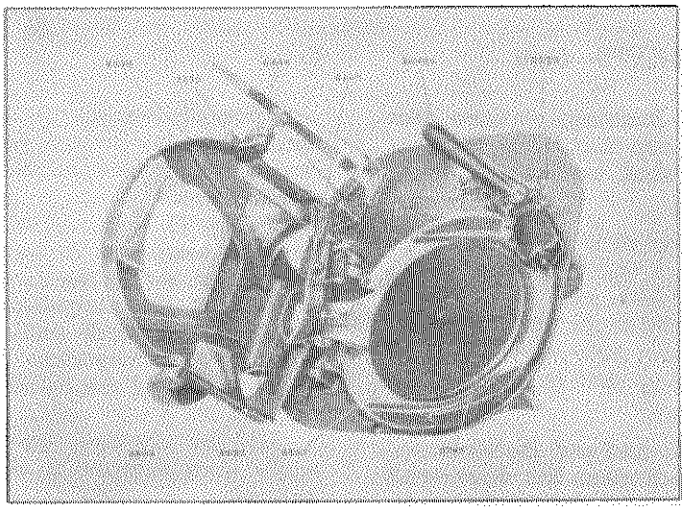

PARTS LIST FIGURE 1

Part No.	Description
3059	Automatic Switch Escutcheon
5745	Complete Turntable Assembly
4911	Turntable Felt
34176	Turntable Trip Pin, Fibre
6684	Record Magazine Support Assembly
34134	Reverse Guide Stop Pin
5043	Reverse Guide Pin Tubing
99-20-63	10-20 x 1 1/2" R. H. M. S.
	—MOUNTING PARTS—
99-26-5	1/4-20 x 5/8 H. P. Cap Screws
6686	Complete Record Magazine Assy.
	—MOUNTING PARTS—
34132	Magazine Pivot Pins
4020	Magazine Bushings, Durex
5517	Upper Record Support
	—MOUNTING PARTS—
99-20-6	10-24 x 1/4 R.H.M.S.
6685	Lower Record Support Assy.
4916	Felt
34138	Record Support Pin
6445	Record Separator & Hub Assembly
	—MOUNTING PARTS—
3242	Shoulder Screw
4520	Record Separator Stop
3982	Record Separator Spring
34157	Pin for 3982 Spring
5042	Reverse Arm Bumper, Rubber
6228	Record Reversing Arm & Fork
4321	Record Reversing Fork
5330	Record Reverse Lever
5615	Record Reverse Guide
99-35-5	00 x 1/2" Taper Pin
6444	Record Reverse Guide Assy.
39130	Record Reverse Guide Spring
99-41-11	1/8" x 1/4" Eyelet
	—MOUNTING PARTS—
99-18-6	6-32 x 1/4" R. H. M. S.
4659	Record Reversing Arm Lock
	—MOUNTING PARTS—
3318	Pivot Set Screw
3982	Spring
34157	Pin for 3982 Spring
4923	Magazine Felt—Side
4915	Magazine Felt—Face
6687	Complete Record Tray & Gear Assy.
4021	Record Tray Bushing, Durex
4665	Record Tray Shield
99-17-20	4-36 x 1/8 R.H.M.S.
4925	Felt
4912	Record Tray Felt 12" Record
4913	Record Tray Felt 10" Record
5036	Record Tray Bumper, Rubber, Front
5037	Record Tray Bumper, Rubber, Rear
34133	Record Tray Pivot Pin
6693	Record Bumper Guide Assembly
4917	Bumper Guide Felt
66424	Complete Tone Arm & Crystal Pickup Assembly
2333	Complete Crystal Pickup Assy.
	FOR BREAKDOWN OF PARTS SEE FIG. 6
5769	Tone Arm Assembly
3653	Ball Bearing
42129	Spacer
43147	Pickup Center Bolt
43159	1/4-28 Cap Nut
4431	Auto Stop Trip Quadrant Bracket
5484	Pickup Arm Bracket
5658	Pickup Lever Hook
99-28-31	6-32 x 3/16" Bristol Set Screw
66254	Ball Crank & Steering Rod Assy.
43151	Spring Plunger
39210	Spring
43192	5/16" Set Screw
36-144	Pivot Screw, Pickup
68285	Pickup Lead Assy.

FARNSWORTH TELEV. & RADIO CORP. MODEL 16-E, Capehart

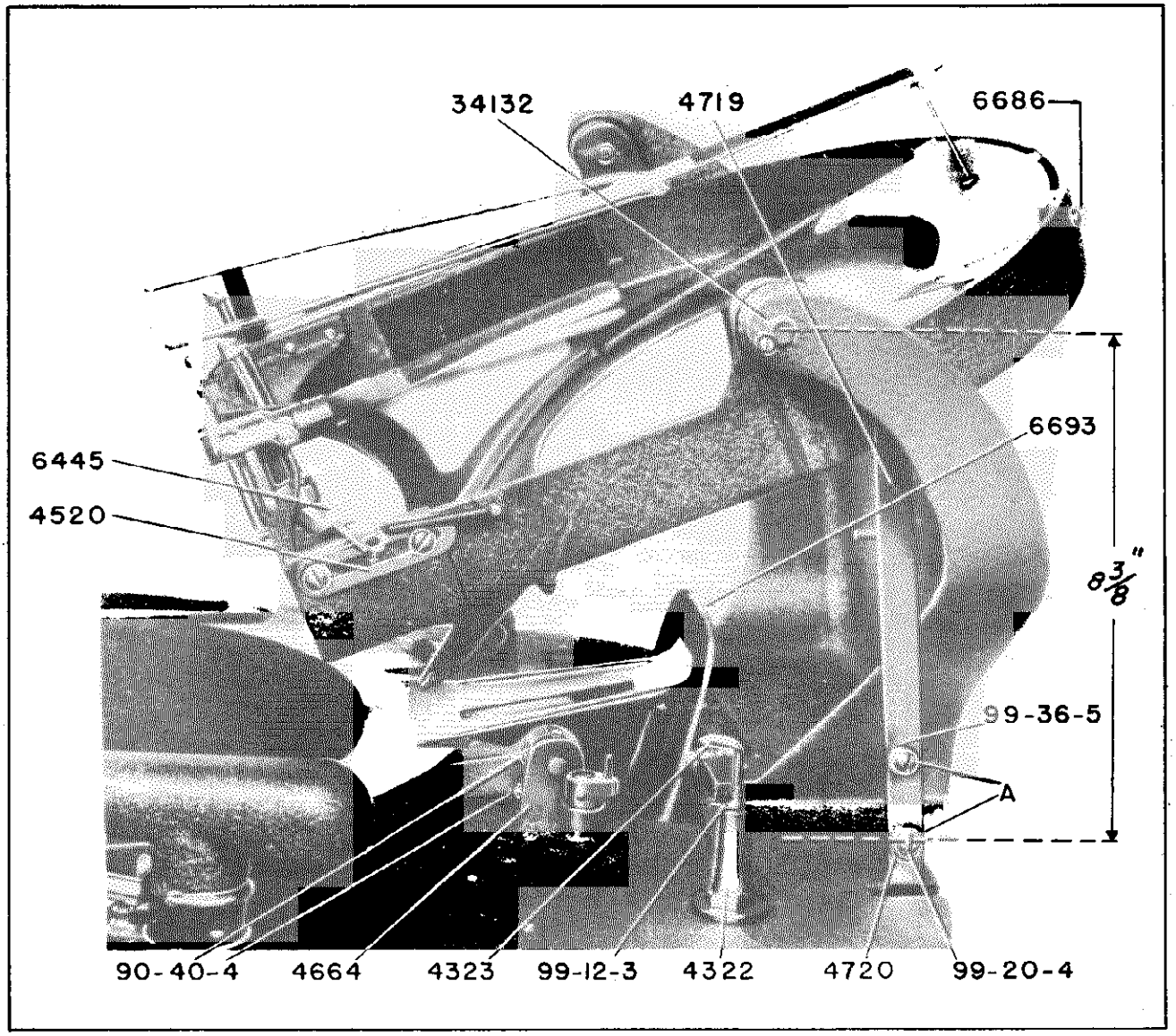

FIGURE 2

PARTS LIST

Part No.	Description
3983	Record Separator Hook Spring
4322	Record Separator Hook Post
4323	Record Separator Hook
99-12-3	8-32 Hex Nut for 4323
4664	Record Reversing Arm Lock Stop
99-40-4	No. 4 x 1/4" Drive Screw for 4664
4719	Magazine Link, Upper
4720	Magazine Link, Lower
99-20-4	10-24 x 3/8" R. H. M. S.
99-36-5	Flat Washer
3239	Magazine Link -Shoulder Screw, See Fig. 1.
4520	Record Separator Stop
6230	Reverse Pinion & Crank Assembly
3552	Reverse Pinion
6327	Reverse Pinion Crank & Pin Assembly
99-35-5	00 x 1/2" Taper Pin
6686	Complete Magazine Assembly—See Fig. 1.
6693	Record Bumper Guide Assembly—See Fig. 1.
62-26	Rubber Record Bumper—Left
62-27	Rubber Record Bumper—Right

MODEL 16-E, FARNSWORTH TELEV. & RADIO CORP.
Capehart

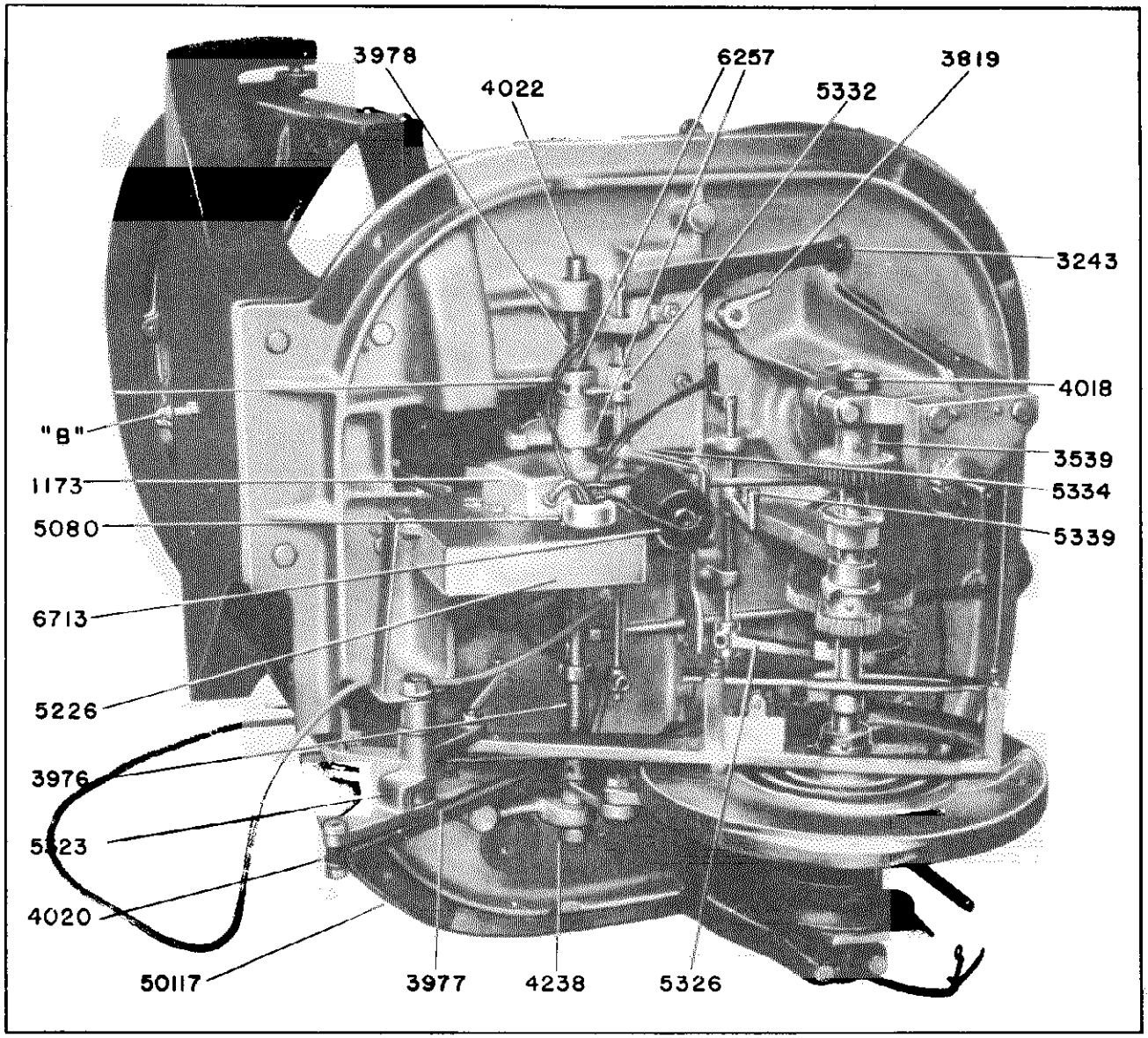

FIGURE 3

PARTS LIST

Part No.	Description	Part No.	Description
1173	Condenser 1 Mfd.—400 Volt	5080	Porcelain Bushing and Nut
3243	Repeat Lever Shoulder Screw	50117	Frame Pad, Rubber
3539	Worm Gear	5226	Solenoid Plate Cover
3819	Record Repeat Throwout Cam	5323	Magazine Slide Arm Lever
3976	Record Separator Hook Lever Spring	5326	Record Reverse Cam Shift Lever
3977	Magazine Slide Arm Spring	5332	Record Repeat Clutch Lever
3978	Record Repeat Clutch Spring	5334	Record Repeat Lock Lever
4018	Main Shaft Bushing Durex	5339	Reverse Cam Lock Lever
4020	Record Magazine Bushing Durex	6257	Record Tray Gear & Sliding Clutch
4022	Record Tray Shaft Bushing	6713	Solenoid Assembly
4238	7/16" Collar for Taper Pin		

FARNSWORTH TELEV. & RADIO CORP. MODEL 16-E, Capehart

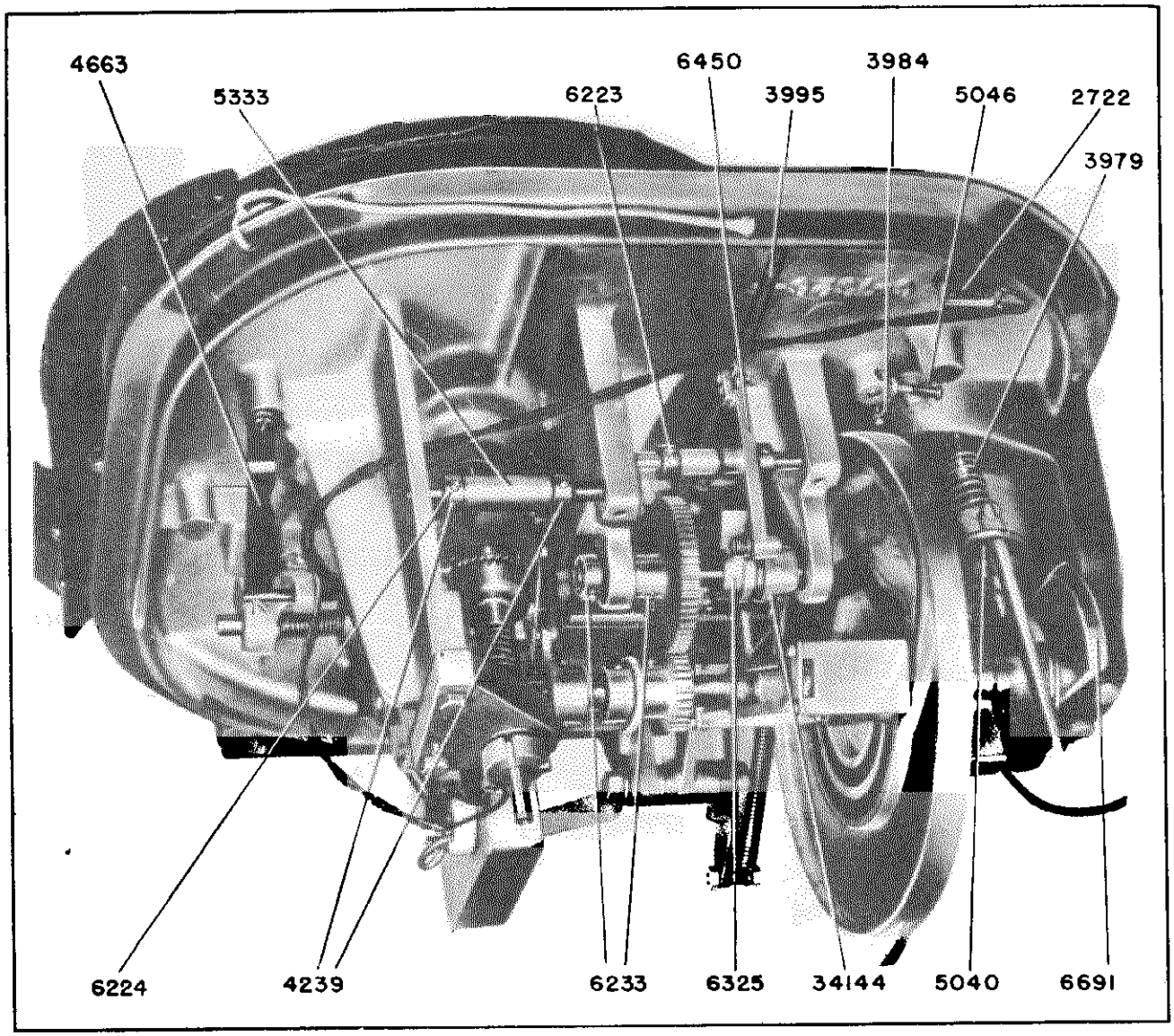

FIGURE 4

PARTS LIST

Part No.	Description
2722	Toggle Switch
3979	Pickup Arm Brake Spring
3984	Tone Arm Stop Lever Spring
3995	Reverse Arm Spring
4663	Record Repeat Throwout Lever
5040	Pickup Arm Brake Facing, Cork
5046	Tone Arm Stop Lever Sleeve, Rubber
5333	Main Clutch Fork Lever
6223	Record Reverse Arm Shaft & Collar Assembly
6224	Solenoid Lever Shaft & Collar Assy.
3239	5/16" Collar for Taper Pin
6233	Record Reverse Cam Shaft Gear & Collar Assembly
6325	Record Reverse Cam & Pin
34144	Record Reverse Cam Pin
6450	Reverse Cam Arm & Roller Assembly
6691	Pickup Arm Friction Cam Assembly
5041	Pickup Arm Friction Cam Facing, Leather

MODEL 16-E, Capehart

FARNSWORTH TELEV. & RADIO CORP.

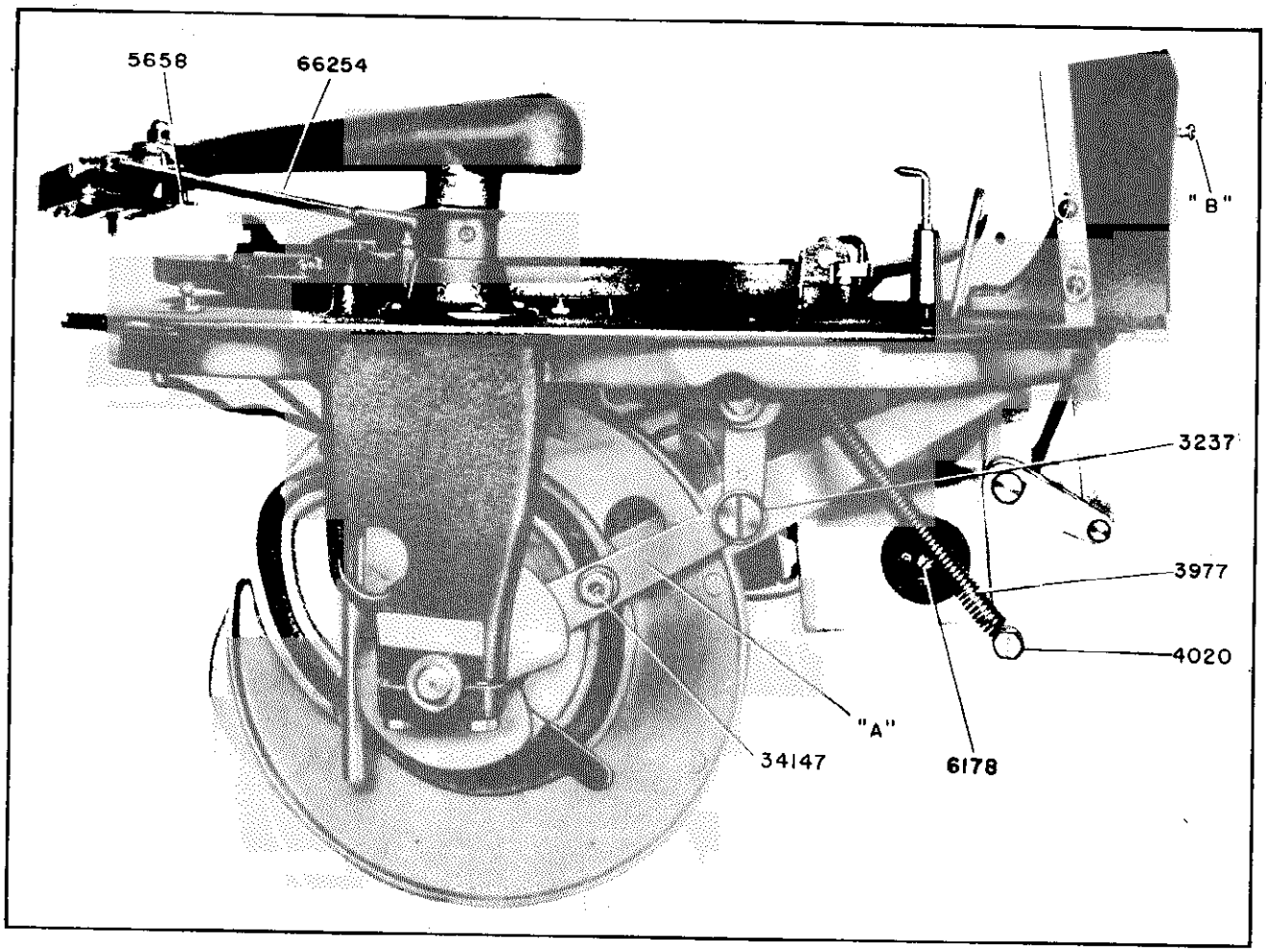

FIGURE 5

PARTS LIST

Part No.	Description
3237	Shoulder Screw, Record Tray Adjusting
34147	Record Tray Slide Pin
3977	Magazine Slide Arm Spring
4020	Record Magazine Bushing
6178	Chassis Plug—5 Prong Male
66254	Steering Arm Assembly—See Fig. 13A

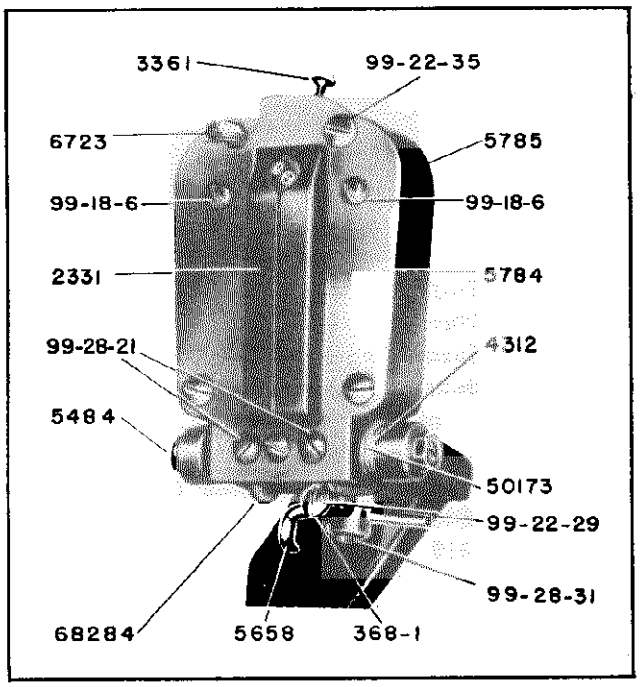

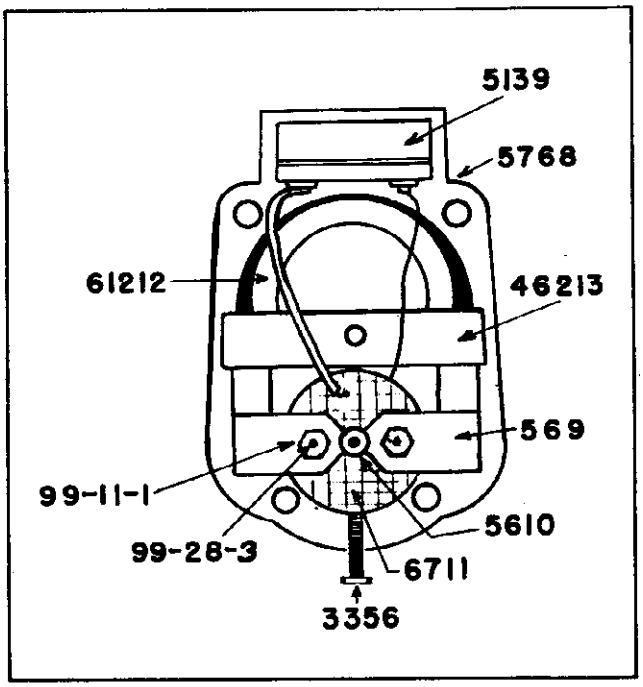

FIGURE 6 PICKUP, CRYSTAL AND MAGNETIC

PARTS FOR CRYSTAL PICKUP

Part No.	Description
2331	Crystal Cartridge
3361	Needle Screw
4312	Bushing
50173	Tone Arm Bushing
5484	Pickup Arm Bracket
5658	Pickup Lever Hook
5784	Pickup Back Crystal
5785	Cover Crystal
6723	Brush Assembly
68285	Pickup Lead
99-18-6	6-32 x 1/4" R. H. M. S.
99-22-29	6-32 x 3/8" B. H. M. S.
99-22-35	6-32 x 1/4" Mch. Screw Oval Hd. Nickel
99-28-21	6-32 x 1/8" Headless Set Screw
99-28-31	6-32 x 3/16" Bristol Set Screw
368-1	Adjusting Screw Nut

PARTS FOR MAGNETIC PICKUP

Part No.	Description
3323	Screw, Pickup Hole Piece
3356	Screw, Pickup Pole
46213	Magnet Holder
5033	Rubber Insulating Bushing
5058	Rubber Bumper
5059	Rubber Bearing (2)
5060	Dust Rubber
5139	Terminal Block
569	Pole Piece
5610	Stylus
5765	Pickup Cover
5768	Pickup Back
61212	Pickup Magnet
6711	Spool Assembly
6723	Brush Assembly
68285	Pickup Cord
99-11-1	6-32 Hex Nut
99-18-21	6-32 x 3/8" R. H. M. S.
99-28-3	6-32 x 1/4" Headless Set Screw
99-28-21	6-32 x 1/8" Headless Set Screw

MODEL 16-E, FARNSWORTH TELEV. & RADIO CORP.
Capehart

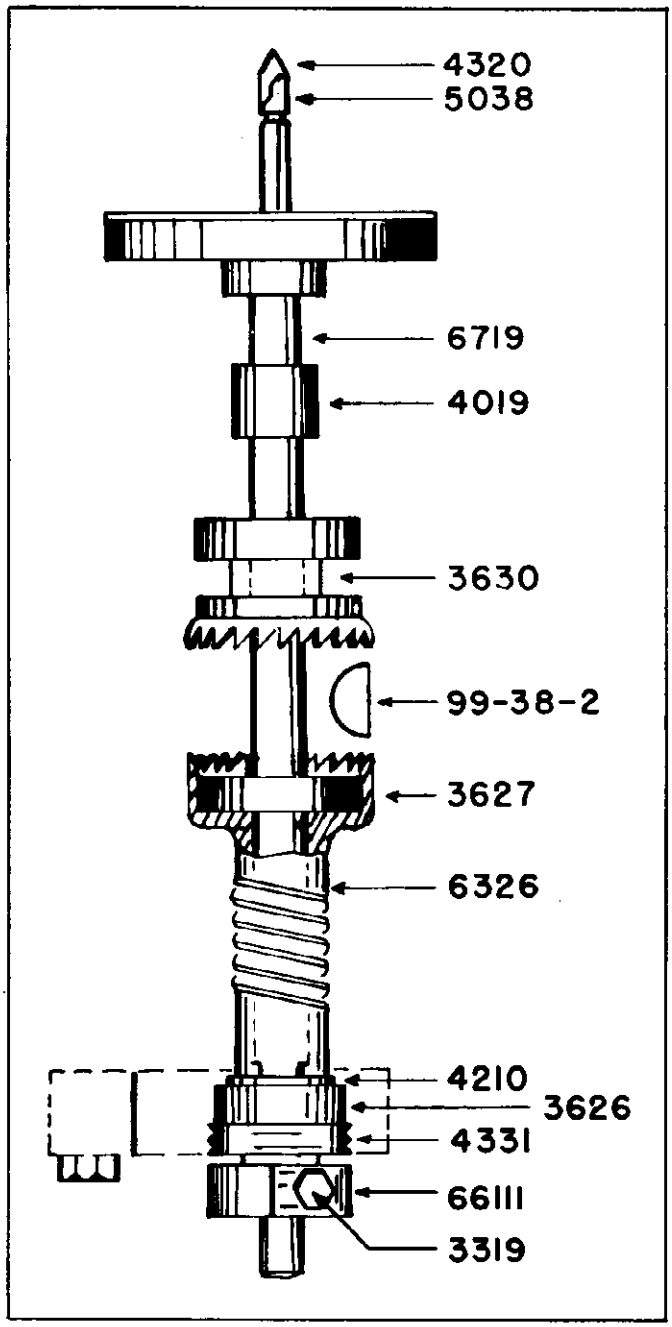

FIGURE 7—TURNTABLE DRIVE SHAFT

PARTS LIST FIGURE 7

Part No.	Description
3626	Ball Bearing
3627	Ball Bearing
3630	Turntable Shaft Clutch
4019	Turntable Shaft Bushing, Durex
4210	Thrust Washer
4320	Turntable Drive Shaft Cap
4331	Bearing Retainer Plug
5038	Turntable Drive Shaft Cap Tubing
6326	Worm & Bushing Assembly
66111	Turntable Shaft Collar & Screw
	4244 Turntable Shaft Collar
	3319 Turntable Shaft Collar Screw
6719	Turntable Shaft Assembly
99-38-2	No. 2 Woodruff Key

TURNTABLE DRIVE SHAFT

When it becomes necessary to remove the turntable drive shaft, it is necessary to remove the upper flexible coupling and the Turntable Collar No. 66111. After the collar is removed, the shaft may be raised until the Woodruff Key (99-38-2) is exposed. Grasp the upper end of the key in a pair of pliers and roll the key out of the driven clutch. After the key is removed, the shaft may be lifted out of the changer. If the Clutch is disassembled, be sure the thrust washer (4210) is not lost.

FARNSWORTH TELEV. & RADIO CORP. MODEL 16-E, Capehart

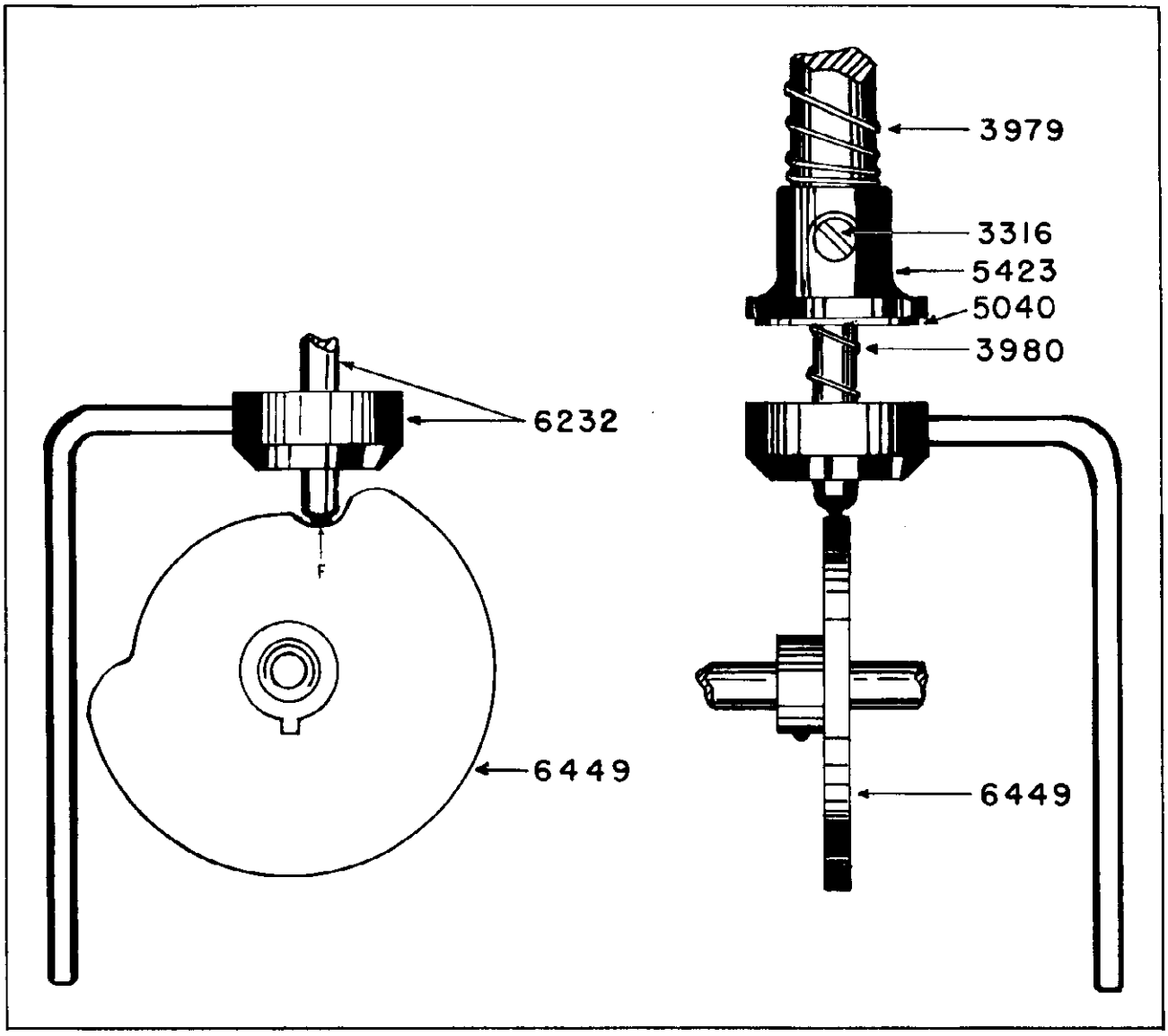

FIGURE 8. TONE ARM LIFT CAM AND LIFT ROD

PARTS LIST

Part No.	Description
3316	10-24 Screw
3979	Pickup Arm Brake Spring
3980	Pickup Arm Lift Spring
5040	Pickup Arm Brake Facing
5423	Pickup Arm Brake
6232	Pickup Swing Lever & Collar Assy.
6449	Pickup Arm Lift Cam & Hub Assy.

MODEL 16-E, Capehart

FARNSWORTH TELEV. & RADIO CORP.

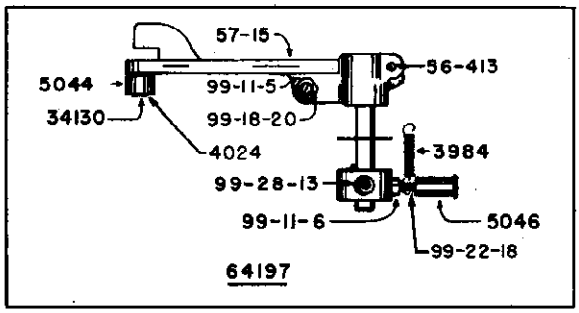

FIGURE 9A—TONE ARM STOP LEVER

PARTS LIST

Part No.	Description
64197	Pickup Arm Stop Lever Assembly
5044	Stop Lever Roller Tubing
34130	Pin Stop Lever Roller Tubing
4024	Stop Lever Roller Bushing
64201	Stop Lever & Bracket Assy.
56-413	Stop Lever Pin
99-11-5	6-32 Hex Nut
99-18-20	6-32 x 5/8" R. H. M. S.
66107	Stop Lever Collar Assembly
3984	Tone Arm Stop Lever Spring
5046	Bumper—Rubber
99-28-13	1/4-20 x 1/4" Allen Set Screw
99-11-6	6-32 Hex Nut
99-22-18	6-32 x 1 1/4" R. H. M. S.

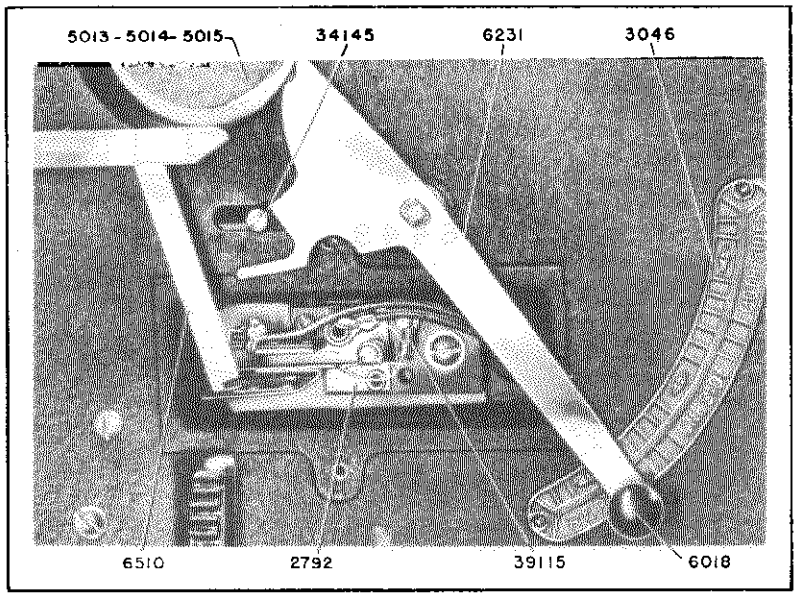

FIGURE 9B. AUTOMATIC TRIP SWITCH

PARTS LIST

Part No.	Description
2792	Record Trip Switch Assembly
3046	Selector Lever Escutcheon
99-40-1	Escutcheon Pin
39115	Trip Switch Spring
2831	Stationary Switch Finger
2846	Movable Switch Finger
6510	Automatic Trip Lever Long Assy.
4533	Automatic Trip Lever Short
3988	Automatic Trip Lever Spring
5013	Heavy, Turntable Drive Facing, Cork
5014	Medium, Turntable Drive Facing, Cork
5015	Light, Turntable Drive Facing, Cork
5051	Automatic Trip Lever Washer
6231	Record Control Lever & Stud Assembly
6018	Record Control Lever Knob
34145	Record Control Rod Pin

FARNSWORTH TELEV. & RADIO CORP. MODEL 16-E
Capehart

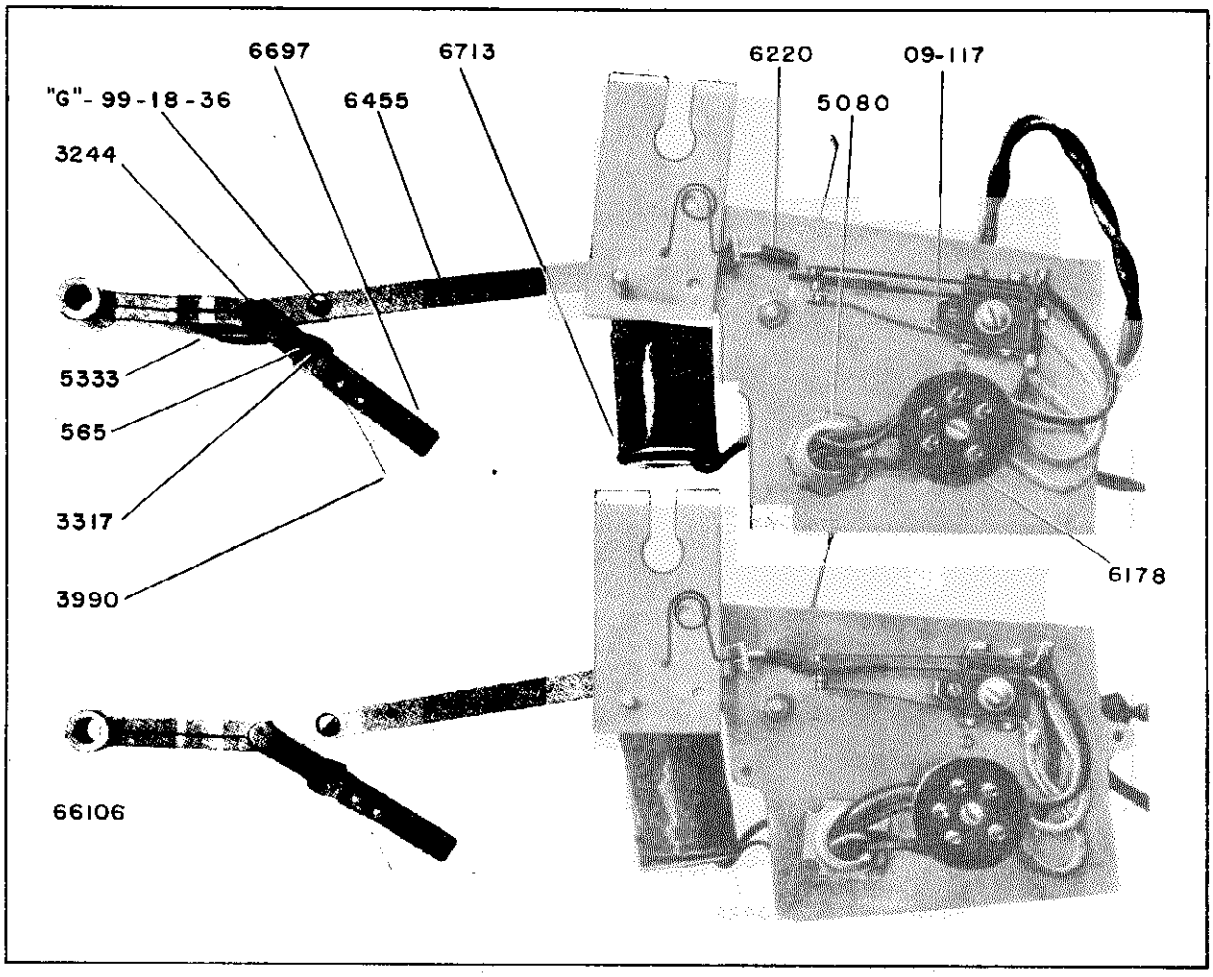

FIGURE 10 SOLENOID CLUTCH LEVER AND MOTOR SOLENOID SWITCH

PARTS LIST

Part No.	Description
6178	Chassis Plug
09-117	Solenoid-Motor Switch
6713	Solenoid Assembly
3986	Solenoid Lever Torsion Spring
66106	Main Clutch Fork & Lever Assembly
3244	Clutch Throwout Lever Throwout Screw
5333	Main Clutch Fork Lever
6455	Solenoid to Clutch Lever
62-20	Lever Bumper—Rubber
6697	Clutch Throwout Lever & Cam Assembly
3317	Clutch Throwout Cam Screw
3990	Clutch Throwout Spring
565	Clutch Throwout Cam

MODEL 16-E, Capehart

FARNSWORTH TELEV. & RADIO CORP.

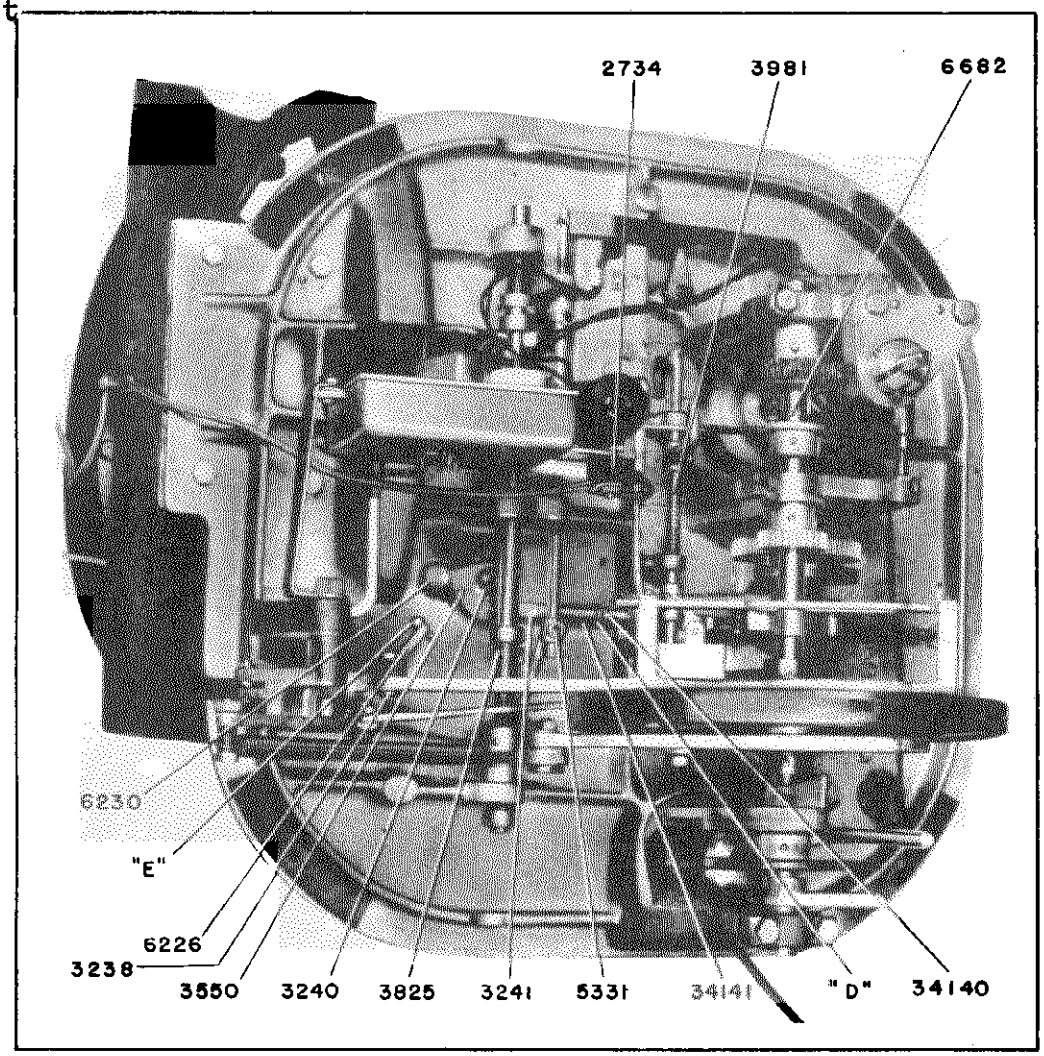

FIGURE 11 BOTTOM VIEW 16-E CHANGER

PARTS LIST

Part No.	Description
2734	Pickup Shorting Switch
3238	Magazine Slide Arm Shoulder Screw
3240	Shoulder Screw, Reverse Segment
3241	Reverse Segment Link Shoulder Screw
34140	Reverse Segment Pin, Long
34141	Reverse Segment Pin, Short
3550	Record Reverse Pinion Segment
3825	Reverse Segment Stop Cam
3981	Record Reverse Cam Control Spring
5331	Record Repeat Throwout Hook Lever
6230	Reverse Pinion & Crank Assembly
6226	Separator Hook & Arm Assembly
6682	Main Shaft Assembly
99-26-9	1/4-20 x 1 1/8" H. H. Cap Screw

Record Support Pins set 19° angle so as to match angle of record.

1. Record being released.
2. Next Record in line.
3. Second and Third Records being forced against first record, pushing first off record knife.

©John F. Rider

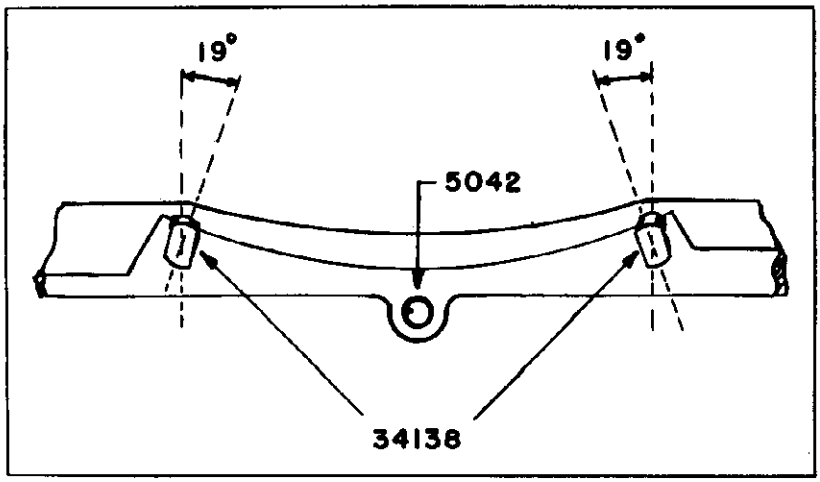

FIGURE 12A LOCATION RECORD SUPPORT PINS

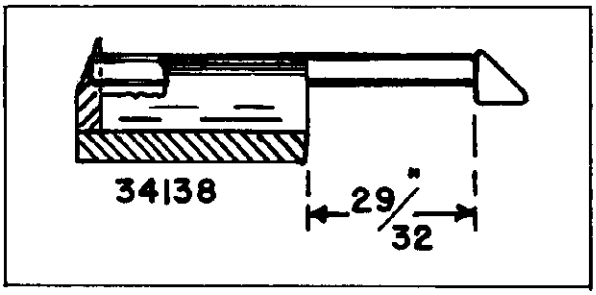

FIGURE 12AA LOCATION RECORD SUPPORT PINS

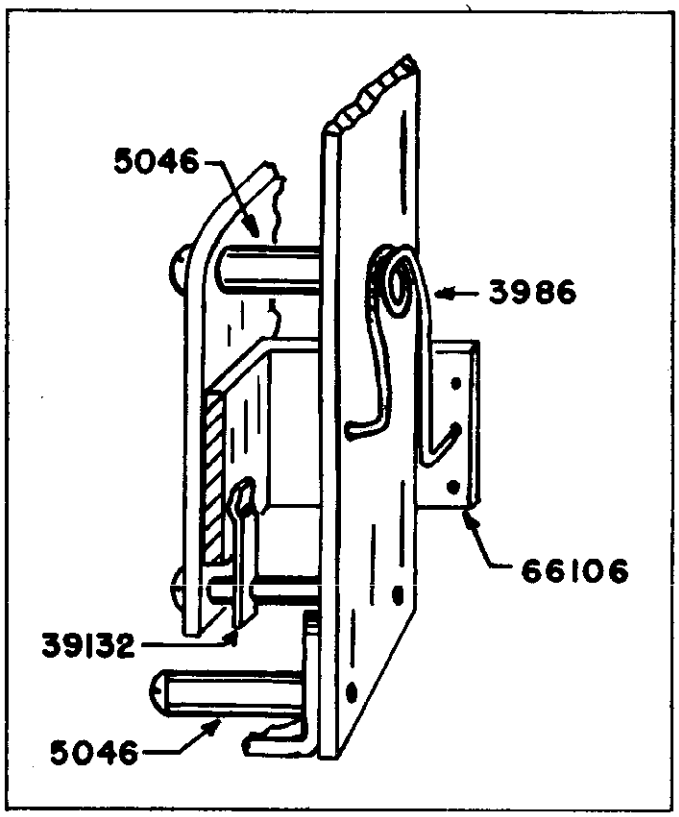

FIGURE 12B SOLENOID TORSION AND WEDGE SPRINGS

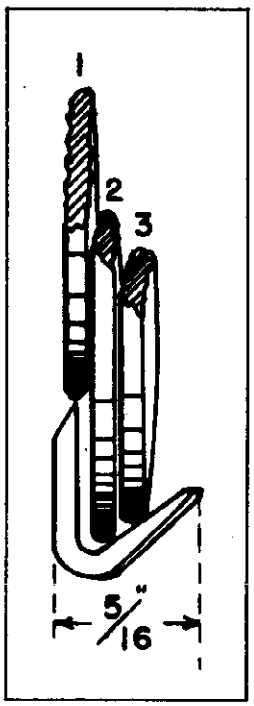

FIGURE 12C RECORD SEPARATOR AND RECORDS EDGE VIEW

MODEL 16-E, Capehart

FARNSWORTH TELEV. & RADIO CORP.

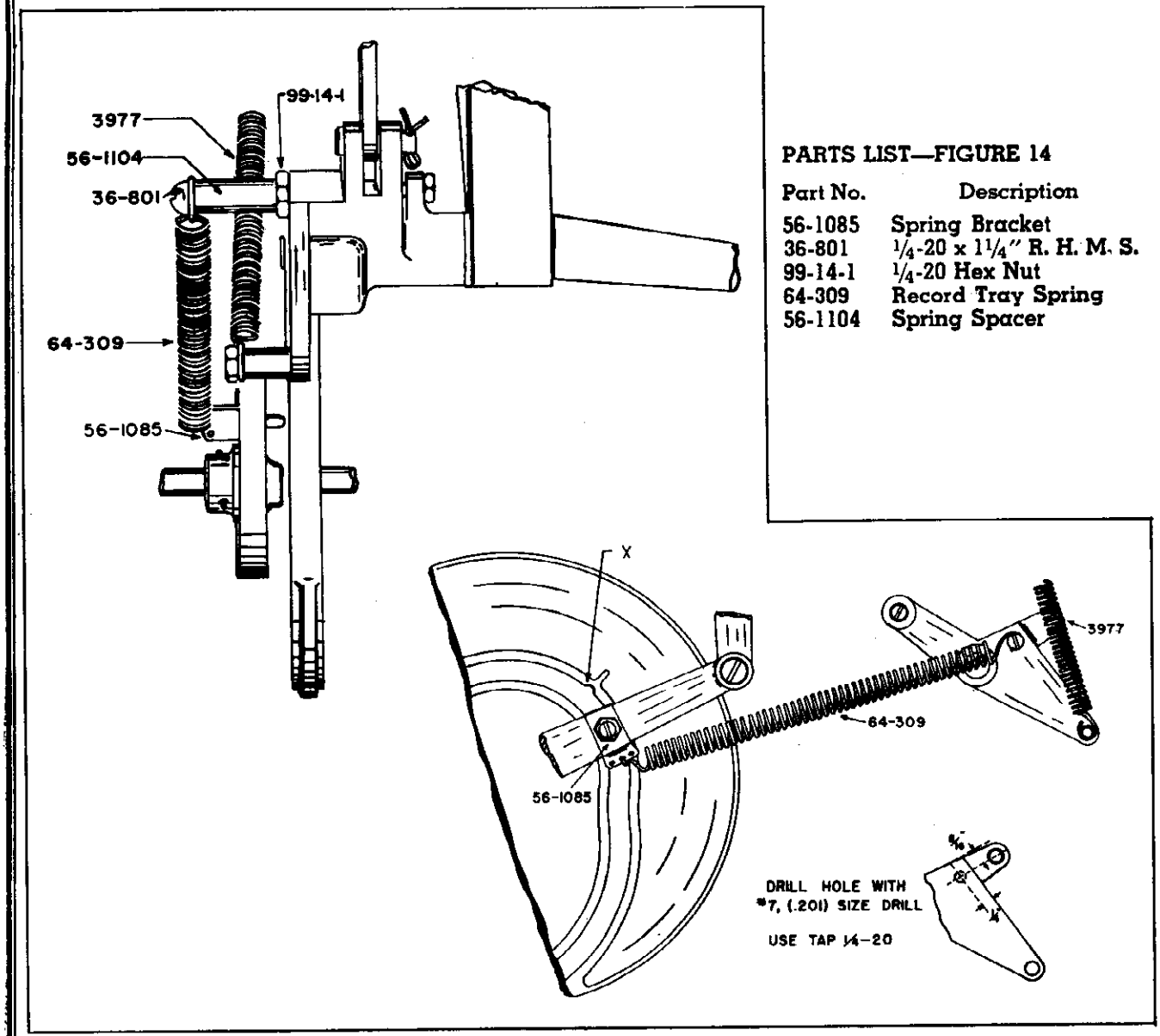

PARTS LIST—FIGURE 14

Part No.	Description
56-1085	Spring Bracket
36-801	1/4-20 x 1 1/4" R. H. M. S.
99-14-1	1/4-20 Hex Nut
64-309	Record Tray Spring
56-1104	Spring Spacer

FIGURE 14—ADDITIONAL PARTS REQUIRED FOR ZINC TRAY

If it is necessary to replace the aluminum tray used on changers having a serial number below 20,000, it is necessary to add the above parts, which are necessary due to the additional weight of the zinc tray which is now available.

The bell crank which is used to swing the magazine must have a 1/4-20 hole tapped in the location shown; 1/4" from one edge and 5/16" from the other edge. A No. 7 drill is used for the hole, and a plug tap should be used for threading the hole.

When assembling the screw (36-801), nut (99-14-1) and spacer (56-1104), 1/16" space should be left between the spacer and screw head to allow free motion of the tray spring (64-309).

Assemble spring bracket (56-1085) under the nut holding the tray slide arm roller, as shown in the illustration above. The spring should be used in the middle hole of the bracket.

At the point marked "X" in the illustration there is a guide mark and a semi-circular spot has been milled in the cam track. It is necessary that this track be bent so the semi-circular spot is flush with the remainder of the cam wall. This can be done best by means of an iron block and heavy hammer. Hit the block with the hammer until the track is straight. This is necessary to prevent the spring holding the tray lift shaft so the sliding clutch cannot be properly engaged when changing from Repeat to One or Both Sides.

FARNSWORTH TELEV. & RADIO CORP.

MODEL 16-E, Capehart

GENERAL PARTS LIST

Part No.	Description
565	Clutch Throwout Cam
569	Pole Piece
5610	Stylus
5615	Record Reverse Guide Fork Only
5658	Pickup Lever Hook
5662	Cable Housing
5663	Control Cable
5745	Complete Turntable Assembly
5765	Pickup Cover
5768	Pickup Back
5769	Tone Arm Assembly Less Pickup
5784	Pickup Back-Crystal
5785	Cover-Crystal
6018	Record Control Lever Knob
6019	1/4" Allen Wrench
6062	Bar Knob-Painter
6178	Chassis Plug—5 prong male
6179	5 prong Motor Plug
61163	Light Bulb
61212	Pickup Magnet
6223	Record Reverse Arm Shaft & Collar Assembly
6224	Solenoid Lever Shaft & Collar Assembly
6226	Separator Hook & Arm Assembly
6228	Record Reversing Arm & Fork
6230	Reverse Pinion & Crank Assembly
6231	Record Control Lever & Stud Assembly
6232	Pickup Swing Lever & Collar Assembly
6233	Record Reverse Cam Shaft Gear & Collar Assembly
6257	Record Tray Gear & Sliding Clutch
6325	Record Reverse Cam & Pin
6326	Worm & Bushing Assembly
63116	Plunger Tube Assembly
6444	Record Reverse Guide Assembly
6445	Record Separator & Hub Assembly
6449	Pickup Arm Lift Cam & Hub Assembly
6450	Reverse Cam Arm & Roller Assembly
6455	Solenoid to Clutch Lever
6460	Clutch Throwout Lever & Spring Assembly
64197	Pickup Arm Stop Lever Assembly
6510	Automatic Trip Lever—Long
6682	Main Shaft Assembly
6684	Record Magazine Support Assembly
6685	Lower Record Support Assembly
6686	Complete Record Magazine Assembly
6687	Complete Record Tray & Gear Assembly
6691	Pickup Arm Friction Cam Assembly
6693	Record Bumper Guide Assembly
6697	Clutch Throwout Lever & Cam Assembly
66105	Flexible Coupling—Set Screw No. 99-28-13
66106	Main Clutch Fork & Lever Assembly
66107	Stop Lever Collar Assembly
66111	Turntable Shaft Collar and Screw
66254	Ball Crank & Steering Rod Assembly
66324	Stop Spring and Ball Assembly
66325	Bracket Assembly for 16-E Chassis
66326	Dog Plunger Assembly
66389	Motor Coupling and Set Screw (New No. 13-195)
66399	Gear Box, 60 cycle
66435	Gear Box, 50 cycle
6711	Spool Assembly
6713	Solenoid Assembly
6719	Turntable Shaft Assembly
6723	Brush Assembly
68285	Pickup Lead Assembly
99-11-1	No. 6-32 Hex Nut
99-11-6	No. 6-32 Hex Nut
99-12-3	No. 8-32 Hex Nut for 4323
99-14-1	*No. 1/4-20 Hex Nut
99-18-6	No. 6-32 x 1/4" R. H. M. S.
99-18-21	No. 6-32 x 3/8" R. H. M. S.
99-20-4	No. 10 24 x 3/8" R. H. M. S.
99-20-31	No. 10 32 x 3/8" R. H. M. S.
99-22-29	Screw—Pickup Stop
99-22-35	No. 6-35 x 1/4" M. S. O. H. Nickel
99-26-9	No. 3/4-20 x 1 1/8" H. H. Cap Screw
99-26-13	No. 10/24 x 3/8" H. H. M. S.
99-28-3	No. 6-32 x 1/4" Headless Set Screw
99-28-13	1/4 x 20 1/4" Allen Set Screw
99-28-21	No. 6-32 x 1/8" Headless Set Screw
99-28-31	No. 6-32 x 3/16" Bristol Set Screw
99-33-4	No. 10 Special Shakeproof Washer
99-34-7	Cotter Pin
99-35-5	00 x 1/2" Taper Pin
99-38-2	No. 2 Woodruff Key
99-41-11	1/8" x 1/4" Eyelet
99-42-13	1/4" Steel Ball
99-42-14	1/8" Pipe Plug
13-79	Dog Plunger Assembly—"K" only
13-81	Bracket Assembly for 16E Chassis—"K" only
13-141	406M Friction Drive Assembly
13-148	411M Friction Drive Assembly
13-150	412M Friction Drive Assembly
13-151	410M Friction Drive Assembly
13-195	Flexible Coupling & Set Screw
13-368	Play Control Cabinet & Cabinet Assy., Complete
13-396	Ratchet Assembly
15-45	Gear Box, Cover, Pinion & Bearing Assembly
22-126	Cable and Plug Assembly
31-213	Dial Scale
36-136	No. 10 Plain Washer
36-141	6/32 x 1/4" R. H. M. S.
36-258	Spacers
36-501	"C" Washer for Friction Drive
36-550	No. 10/32 x 3/4" Slotted H. H. M. S.
36-801	*1/4-20 x 1 1/4" R. H. M. S.
41-89	"C" Washer—Package 12
54-38	Reduction Unit Shim
56-415	411M Shaft for Friction Drive
56-416	Shaft for Friction Drive 111 & 112
56-417	412M Shaft for Friction Drive
56-418	406M Shaft
56 1085	*Spring Bracket
56-1099	Shaft
56-1100	Steel Ball Bearing
56-1104	*Spring Spacer
57-18	Lower Friction Drive Disc
59-142	Knob, M Play Control
59-143	Housing, M Play Control
60-144	Fibre Washer
62-26	Rubber Record Bumper—Left
62-27	Rubber Record Bumper, Right
62-46	Motor Grommet
62-75	Rubber Grommet
64-31	Plunger Return Spring, "K" only
64-32	Spring, Dog—"K" only
64-309	*Record Tray Spring
64-311	Dog Spring
67-88	Mounting Board
90-125	Light Switch
90-132	Acro Switch
90-133	Relay (Complete)
90-134	Master Switch
92-140	Back Cushion
368-1	Adjusting Screw Net
368-2	406M 3/8 x 32" Hex Nut
621-2	Rubber Grommet
1315-1	Reduction Unit Oil S.A.E. 10. 1/2 oz.
3611-4	No. 10 S. P. Lockwasher
3643-1	No. 10/32 Tee Nut

MODEL 16-E, Capehart

FARNSWORTH TELEV. & RADIO CORP.

GENERAL PARTS LIST

Part No.	Description
1173	Condenser, 1 mfd.—400 volt
21156	Motor, 60 cycle
21157	Motor, 50 cycle
2331	Crystal Cartridge
2333	Complete Crystal Pickup Assembly
2722	Toggle Switch
2734	Pickup Shorting Switch
2792	Record Trip Switch Assembly
27123	Switch Assembly
2852	Switch Arm—Straight
2853	Switch Arm—Bent
3046	Selector Lever Escutcheon
3059	Automatic Switch Escutcheon
30142	Play Control Dial
3237	Shoulder Screw, Record Tray Adjusting
3238	Magazine Slide Arm Shoulder Arm
3239	Magazine Link
3240	Shoulder Screw, Reverse Segment
3241	Reverse Segment, Link Shoulder Screw
3242	Shoulder Screw
3243	Repeat Lever Shoulder Screw
3244	Clutch Throwout Lever (Throwout Screw)
3316	No. 10-24 Screw
3317	Clutch Throwout Cam Screw
3318	Pivot Set Screw Pole
3323	Screw Pickup Hole Piece
3356	Screw, Pickup Needle
3361	Needle Screw
34130	Stop Lever Roller Pin
34132	Magazine Pivot Pin
34133	Record Tray Pivot Pin
34134	Reverse Guide Stop Pin
34138	Record Support Pin
34140	Reverse Segment Pin, Long
34141	Reverse Segment Pin, Short
34145	Record Control Rod Pin
34147	Record Tray Slide Pin
34157	Pin for 3982 Spring
34176	Turntable Trip Pin, Fibre
3539	Worm Gear
3550	Record Reverse Pinion Segment
35101	Gear
35107	Gear Box Worm Gear
3626	Ball Bearing
3627	Ball Bearing
3630	Turntable Shift Clutch
3653	Ball Bearing
3819	Record Repeat Throwout Cam
3825	Reverse Segment Stop Cam
3866	Play Control Split Cam, Long
3867	Play Control, Split Cam Short
3936	Spring, Dog
3938	Spring, Safety Clutch
3976	Record Separator Hook Lever Spring
3977	Magazine Slide Arm Spring
3978	Record Repeat Clutch Spring
3979	Pickup Arm Brake Spring
3980	Pickup Arm Lift Spring
3981	Record Reverse Cam Control Spring
3982	Record Separator Spring
3983	Record Separator Hook Spring
3984	Tone Arm Stop Lever Torsion Spring
3986	Solenoid Lever Torsion Spring
3988	Automatic Trip Lever Spring
3990	Clutch Throwout Spring
3995	Reverse Arm Spring
39115	Trip Switch Spring
39130	Record Reverse Guide Spring
39210	Spring for Ball Crank
39219	Plunger Return Spring
4018	Main Shaft Bushing, Durex
4019	Turntable Shaft Bushing, Durex

Part No.	Description
4020	Magazine Bushings, Durex
4021	Record Tray Bushing, Durex
4024	Stop Lever Roller Bushing (Metal)
4067	Bearing, Gear Box
4210	Thrust Washer, Worm Shaft
4238	7/16" Collar for Taper Pin
42129	Spacer, Pickup
4312	Bushing, Tone Arm Pivot
4320	Turntable Drive Shaft Cap
4321	Record Reverse Fork
4322	Record Separator Hook Post
4323	Record Separator Hook
4331	Bearing Retainer Plug
43147	Pickup Center Bolts
43159	1/4-28 Cap Nut
4431	Auto Stop Trip Quadrant Bracket
4458	Dog, Stop Bracket
4520	Record Separator Stop
4533	Automatic Trip Lever Short
4659	Record Reversing Arm Lock
4663	Record Repeat Throwout Lever
4664	Record Reversing Arm Lock Stop
46213	Magnet Holder
4719	Magazine Link, Upper
4720	Magazine Link, Lower
48202	Switch Pin, Play Control
4911	Turntable Felt
4912	Record Tray Felt 12" Record
4913	Record Tray Felt, 10" Record
4915	Magazine Felt—Face
4916	Felt, Lower Record Support
4917	Bumper Guide Felt
4923	Magazine Felt—Side
4925	Felt, Outer Record Way
5013	Turntable Drive Facing, Heavy
5014	Turntable Drive Facing, Medium
5015	Turntable Drive Facing, Light
5033	Rubber Insulating Bushing, Tone Arm
5036	Record Tray Bumper, Rubber, Front
5037	Record Tray Bumper, Rubber, Rear
5038	Turntable Drive Shaft Cap Tubing
5040	Pickup Arm Brake Facing, Cork
5041	Pickup Arm Friction Cam Facing, Leather
5042	Reverse Arm Bumper, Rubber
5043	Reverse Guide Pin Tubing
5044	Stop Lever, Roller Tubing, Rubber
5046	Tone Arm Stop Lever Sleeve, Rubber
5051	Automatic Trip Lever Washer
5058	Rubber Bumper
5059	Rubber Bearing (2)
5060	Dust Rubber
5080	Porcelain Bushing and Nut
50117	Frame Pad, Rubber
50126	Leather Disc
50170	Clutch Drive Facing (Leather)
50173	Tone Arm Bushing
50225	Gear Box Cover Gasket
5139	Terminal Block
5226	Solenoid Plate Cover
5323	Magazine Slide Arm Lever
5326	Record Reverse Cam Shift Lever
5330	Record Reverse Arm
5331	Record Repeat Throwout Hook Lever
5332	Record Repeat Clutch Lever
5333	Main Clutch Fork Lever
5334	Record Repeat Lock Lever
5339	Reverse Cam Lock Lever
5423	Pickup Arm Brake
5466	Upper Friction Drive Disc
5484	Pickup Arm Bracket
54103	Play Control Housing
5517	Upper Record Support

GARRARD ENG. & MFG. CO. LTD. MODEL 65

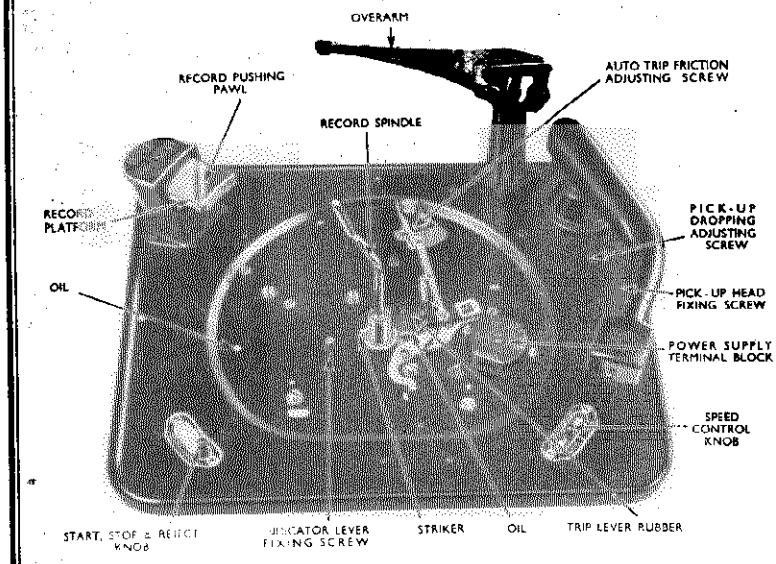

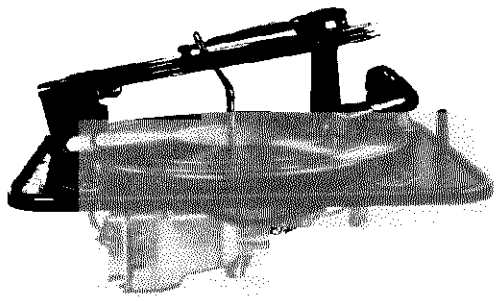

Diagram 1

OPERATING INSTRUCTIONS

The "GARRARD" Record Changer will play any number of records up to eight 10″ and 12″ mixed in any order.

To operate, proceed in the following order:—

1. If a permanent needle is not used insert a needle—the type that will play 10 or more records—in the pick-up; lift the Pick-up Arm to do this.
2. Place the record spindle in position, the sloping part leaning towards the record platform, raise overarm, and place any number up to eight records on the record spindle, their lower edge resting on the record platform, then lower overarm.
3. Move the left-hand knob to "Start." The motor will start and the Changer operate.
   When the last record has been played, the Changer will automatically stop.
   To remove records, raise overarm and withdraw the record spindle.
   To reject a record, move the left-hand knob to the reject position.
   The Changer can be stopped by moving the left-hand knob to the "Stop" position.

If the Changer is switched off while a record is playing, that record will be automatically rejected, and the next record commence when switching on again.

If desired a 10″ record may be repeated any number of times by placing the record on the turntable, raising the overarm and switching on with no records on the record spindle. When it is desired to stop the record, lower the overarm, and the Changer will automatically switch off at the end of the record.

This cannot be done with 12″ records as the pick-up arm will automatically come to the 10″ position when there are no records on the platform.

Should the Record Changer be stopped with the pick-up arm not on its rest, the pick-up should not be handled, but the left-hand knob moved to "Start," the pick-up will then return to its rest.

When the Changer is fitted with a High Fidelity Pick-up of any type, extra care should be taken to avoid accidental damage to the pick-up, and attention should be given to the following points:—

The Changer should not be switched off either by the switch on the Changer, the switch on the set, or the house switch during its changing cycle, as this may lead to the pick-up being lowered on to the turntable covering when the Changer is next used.

If it is suspected that the Changer has been switched off in the wrong position, place a 12″ record on the Turntable before switching on.

Do not use badly warped records, they may not drop and the pick-up will lower on the Turntable covering, also badly warped records will give trouble by slipping during playing. Care should be taken in storing records to prevent contact with dirt and dust which sets up abrasive action and causes rapid wear.

NEEDLES.

It is emphasized that if for any reason the needle, whether of the permanent or semi-permanent type, is taken out of the pick-up head after it has played even only a part of a record, it should be discarded and not used again, as a small flat is worn on the side of the needle tip which rests on the record and as the needle cannot be put back into the pick-up without turning it slightly the flat will not rest on the record in its original position, and will form a cutting edge to tear up the record groove.

MODEL 65 GARRARD ENG. & MFG. CO. LTD.

INSTALLATION

DIMENSIONS.

The cabinet space required for fitting is 15½in. long by 13½in. with 5½in. clearance above and 4½in. clearance below unit plate.

FITTING TO CABINET.

(i) The "GARRARD" Automatic Record Changer is supplied with Spring Suspension to prevent acoustic feedback occurring between the loud speaker and the pick-up. Ample clearance should be left between the edges of the unit plate and the cabinet to allow the Record Changer to float freely. Diagram 2 illustrates the assembly of the spring suspension.

In cases where there is no possibility of acoustic feed-back occurring such as where the loud speaker is in a separate cabinet, the spring suspension is not necessary and the Changer can be screwed down to the motor board with four of the wood screws supplied for the spring suspension.

Two additional holes will be found in the unit plate, these are for transit fixing screws which should be used to fix the Changer rigid to the cabinet during transit, and removed on final installation. These are only necessary when using the spring suspension.

(ii) If desired, a template for cutting the motor board when fitting the Record Changer into the cabinet may be obtained on application to The Garrard Eng. & Mfg. Co. Ltd. After installation see that the Changer is level by placing a spirit level on a record on the turntable. If not level, adjust by means of the spring suspension fixing nuts. Finally, the nuts and threads of the spring suspension fixing screws should be coated with a locking paint such as shellac varnish to prevent the nuts working loose due to vibration.

SPEED SETTING.

Due to the wide voltage range of the motors it may be necessary on some power supplies when installing the unit to make a slight re-adjustment of the speed Indicator Lever so that the speed of the Turntable corresponds with that shown on the Indicator scale.

To set the speed on alternating current power supply of 50 or 60 cycles use the "GARRARD" Stroboscopic Speed Indicator enclosed with each Record Changer. To set speed on direct current power supply or supplies having frequencies other than those covered by the stroboscope, the turntable should be checked with a watch. Set speed so that turntable revolves at 78 r.p.m., remove the turntable and carefully loosen the screw holding the indicator lever to the vertical brake shaft, move the indicator lever to the centre position on the indicator plate and tighten up the screw (diagram 3). On some models the screw is not accessible from the top of the unit. In this case lift the changer from the cabinet and adjust the screw from underneath the unit plate. The speed should now be correct.

One side of the stroboscopic speed indicator is designed for use in adjusting speed on a 50 cycle, and the other side a 60 cycle power supply.

VOLTAGE.

The "GARRARD" Model R.C.65 Record Changer is made in two types:—

R.C.65/D.16 Dual Voltage Range 100/130 and 200/250 volts 40/60 cycles.

R.C.65/U.16 Universal Voltage Range 100/130 and 200/250 volts D.C. and A.C. 25/60 cycles.

On installation, the links in the terminal block should be set to the correct position to correspond with the voltage of the power supply, as shown in diagrams 4 to 7.

A red terminal block cover is fitted to the Universal type (R.C. 65/U.16).

A brown terminal block cover is fitted to the A.C. type (R.C. 65/D.16).

The motor should be earthed by connecting a lead from the earthing tag, located under one of the motor end cover screws and a good earth connection.

When adapting an A.C./D.C. (Universal) Radio Receiver, Amplifier or one using a D.C. Power Pack for the reproduction of gramophone records, a pick-up transformer or condensers in series with the pick-up leads should be fitted, otherwise the pick-up circuit becomes alive. Also, the leads from the radio set or amplifier to the pick-up should be as short as possible to prevent picking up mains hum.

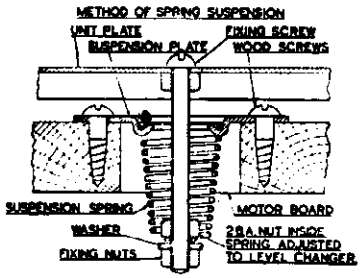

Diagram 2.

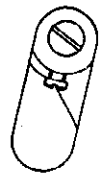

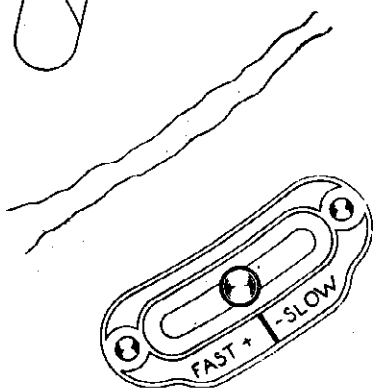

Diagram 3.

CONNECT BOTH BARS THUS FOR 200/250 VOLTS.

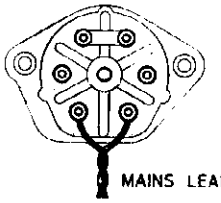

Diagram 4.

Link Connections, RC 65 D 16

CONNECT BARS THUS FOR 100/130 VOLTS.

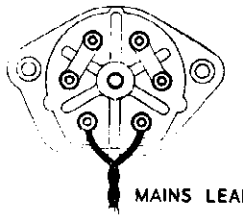

Diagram 5.

CONNECT BOTH BARS THUS FOR 200/250 VOLTS.

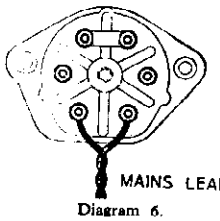

Diagram 6.

Link Connections, RC 65 U 16

CONNECT BOTH BARS THUS FOR 100/130 VOLTS.

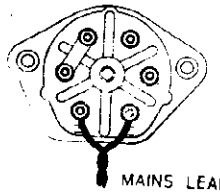

Diagram 7.

©John F. Rider

SERVICE ADJUSTMENTS

MOTORS.

The R.C. 65/D.16 is fitted with a governor controlled Induction Motor for use on A.C. only. The stator coils are connected in series on the high voltage range and in parallel on the low voltage range.

The R.C. 65/U.16 is fitted with a governor controlled series wound universal motor for use on A.C. or D.C., and in this case the windings are connected in series with a voltage dropping resistance, a portion of which is shorted out when the motor is used on the low voltage range. A condenser is connected across a section of the resistance to keep the motor torque constant over the frequency range when on A.C.

OILING.

Due to the oil retaining bearings, the motor only requires oiling at intervals depending upon the length of time the Record Changer is used. Lift off the Turntable and the oil holes (diagram 1) are accessable. A few drops of "GARRARD" or thin lubricating oil are sufficient.

Wavy or watery reproduction of the record is often due to dry governor pads. These should be lubricated by saturating the felt pads with a thin oil. Occasionally the governor will rattle badly and the reproduction will be distorted. This is caused by the surface of the governor spindle, on which the governor sleeve slides as the balls fly outwards, becoming dry, and it should be lubricated with a thick oil.

Thick oil should on no account be used for the motor bearings.

STARTING FAILURES.

If the motor fails to start when the control knob is turned to the Start position, first check the power supply and ascertain that the current is reaching the motor terminals. Give the turntable a turn by hand to help it round, in case, when the Record Changer was last used, the motor was switched off during the changing cycle, in which case it is possible for the motor to be unable to start under the full load of the Record Changing Mechanism.

Disconnect the mains supply and examine the terminal block to see that the leads and nuts are tight, also examine the switch contacts, clean and adjust if necessary. If a thick oil has been used to lubricate the motor bearings, the motor will appear weak, and possibly not start. It will be necessary to dismantle the motor, and clean away all traces of the thick oil, it is, therefore, essential to lubricate the motor bearings with a good quality thin machine oil.

In the case of the U.16 Motor periodical examination of the carbon brushes should be made. If they are allowed to become dirty or worn, brush noises will occur, and occasionally the motor may run unsteadily or stop. The brushes can be cleaned by lightly scraping the contact surface with a penknife. The brushes should be a perfectly free sliding fit in the brush tubes. It is essential the brushes should be replaced in the same holder and in the same way round as originally found.

New brushes are $\frac{9}{16}$" long under the Springs. When worn down to $\frac{3}{8}$", they should be replaced. To remove the brushes unscrew the brush caps and the brushes can be withdrawn. If the copper Commutator upon which the brushes rest has become corroded, dirty or greasy, it should be cleaned with a rag damped with petrol or lighter fuel. When finally replacing the brushes always ensure that the brush caps are screwed up tight. Should the motor get too hot first see that the voltage changeover links are set correctly to correspond with the voltage of the power supply. To check the motor windings insert a milliameter in either motor lead. The maximum current should not exceed:—

R.C. 65/D.16	High Range	0.11 amp.
	Low Range 50 cycles	0.22 amp.
	Low Range 60 cycles	0.24 amp.
R.C. 65/U.16	High Range A.C.	0.15 amp.
	Low Range A.C.	0.14 amp.
	High Range D.C.	0.16 amp.
	Low Range D.C.	0.19 amp.

If readings in excess of the above figures are obtained, the motor units or coils should be returned to our Service Department for examination.

If the motor has to be removed from the Record Changer, disconnect the switch leads from the switch and remove the clips holding the leads, then remove the motor fixing screws and the motor can be withdrawn. When withdrawing the motor note carefully how the divided speed control lever parts in two, so that it may be correctly re-assembled when the motor is replaced.

Now refit this screw in an adjacent hole according to the adjustment required. Moving the screw to a hole nearer the platform lengthens the link and increases the inward movement of the platform. By moving the screw in the opposite direction the link is shortened and the outward movement of the platform increased. The permissible adjustment is one hole in either side of existing position of the screw.

RECORDS FAILING TO DROP.

If the records fail to drop correctly, the angle of the record spindle should be checked from the template printed at the end of this manual and corrected if necessary, using great care in doing this as the thin neck of the spindle is very easily broken if unduly bent. If the spindle is correct slide off the name plate on the record platform cover and examine the record pushing pawl (diagram 8). It will be noted that the lower rear tail of this pawl engages a stop at the back of the platform as the platform moves back when a 10" record is to be played. When a 12" record holds the pawl down the lower tip passes over the stop. When the platform is in the playing position, that is, when the changing cycle has finished and the needle is playing the record there should be a gap of approximately $\frac{1}{8}$" between the rear of the pushing pawl and the front of the stop. If this gap is incorrect, the stop can be adjusted by releasing its two fixing screws and moving it backwards or forwards as necessary, finally re-tightening the screws.

OVERARM.

Note that when a batch of records is on the record spindle and the overarm is lowered thereon, only the pad nearest to the platform should rest on the records. There should be a gap of approximately $\frac{1}{4}$" between the other pad and the surface of the top record. This side of the overarm only comes into action when the last record is a 10". It then prevents the record tipping as the platform moves back leaving the record balanced on the record spindle.

RECORD SPINDLE.

Should an intermittent squeak develop it is probably due to the anti-slip sleeve on the spindle having become dry and may be cured by putting a spot of thin oil between the sleeve and the spindle.

TEMPLATE FOR R.C.65 RECORD SPINDLE.

Should the record spindle be accidentally bent out of position through being dropped or other reasons, the record dropping will be affected. If trouble is experienced with erratic record dropping, lay the record spindle on template and check that it conforms to the shape thereof.

MODEL 65

GARRARD ENG. & MFG. CO. LTD.

PICK-UP DROPPING POSITION.

The pick-up arm has been finely adjusted so that the needle comes on to 10in. records in a 9⅝in. diameter circle and 12in. records in a 11⅝in. diameter circle. These positions were arrived at after checking a very wide selection of records of various makes.

There may be a few records where the record track starts further away from the centre, (i.e., nearer the edge), and in these exceptional cases the needle may alight on the record a few grooves from the start. If the pick-up dropping position were set for these exceptional discs it would not be suitable for average records.

Should the dropping position of the pick-up require adjustment the pick-up adjusting screw — accessible through a hole in the unit plate (diagram 1)—should be turned with the Changer in its start position; that is, with the pick-up arm on its rest.

The pick-up adjusting screw should be turned either to the right or left, according to requirements. A quarter of a turn in either direction will give you the maximum adjustment. After adjustment, switch on, check the dropping position and re-adjust if necessary.

PICK-UP HEIGHT.

The Pick-up should lift sufficiently high for a long needle to just clear the surface of the eighth record on the turntable when the pick-up returns to its rest. If it is necessary to adjust the amount of lift look for the "Adjustment for pick-up lift" shown on diagram 3.

When viewing from back of the Record Changer, this adjustment is immediately underneath the pick-up arm pivot spindle and appears as two similar screw heads. The left-hand head is the locking screw and the right-hand head is the eccentric adjustment screw. To adjust this, first operate the changer and stop when the pick-up arm is moving back across the record to its rest. Loosen the two nuts on the back of the screws, then turn the eccentric adjustment screw as necessary to give the correct height. One half a turn of this screw will give the maximum amount of adjustment. After making the necessary correction, re-tighten the nuts on the back of the screws.

AUTO-TRIP MECHANISM.

The satisfactory operation of the Record Changer depends upon the operation of the auto trip. Occasional adjustment of the auto trip friction spring may, therefore be necessary.

If, at the end of a record, the auto trip does not operate—that is, the pick-up remains at the end of a record—first see that the record has a run-off groove in its centre (as only records with run-off grooves can be played automatically on Record Changers). If the record is in order in this respect see that the trip lever is clear of the unit plate, since any added friction here will prevent it moving in towards the striker. If it is quite free, increase the tension of the friction spring by turning the auto trip friction adjustment screw (see diagram 1) in a counter-clockwise direction; about half a turn is all that should be necessary. This screw is accessible on removing the turntable. Should the changer operate before the end of a record, or a bumping or tapping noise be audible, first examine the trip lever rubber and if it is worn, give it half a turn to present a new surface to the striker. If badly worn, renew. If trip lever rubber is in good condition, reduce the tension of the friction spring by giving the auto trip friction adjusting screw (see diagram 1) half a turn in a clockwise direction.

RECORD PLATFORM ADJUSTMENT.

When despatched from our Works the record platform is set to accomodate records of average dimensions. Occasionally, however, records may be found outside the normal limits; if necessary, therefore, the platform may be adjusted to take them.

To control the platform movement are two adjustable links, each fitted with two screws. One link, with its pivot at the bottom of the platform lever, controls the platform tilt, whilst the other controls the distance the platform pushes inward (see diagram 8).

It is this latter link which may be adjusted to accept records differing from the normal in diameter. To do this, loosen the screw further away from the platform and remove the other screw.

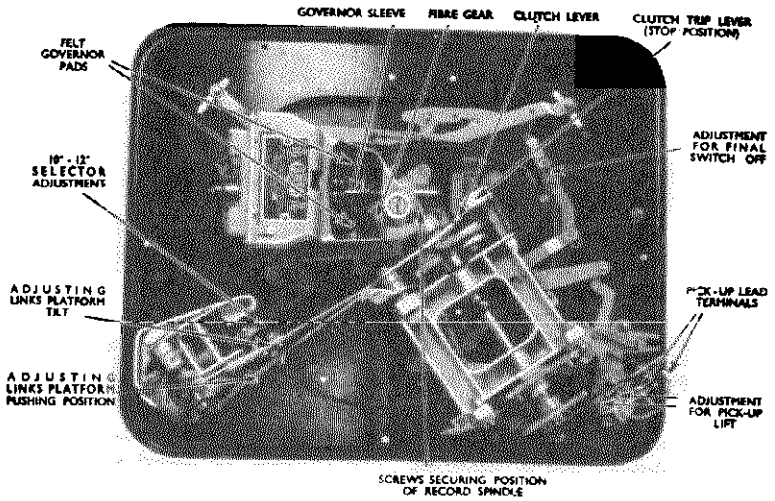

Diagram 8.

©John F. Rider

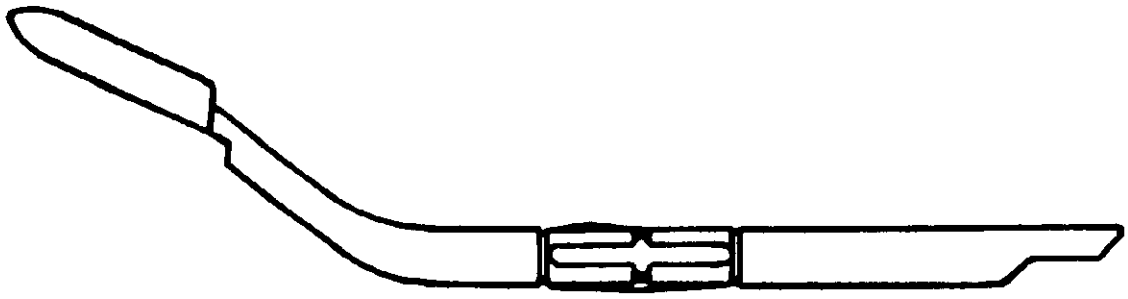

Diagram 9.

ADJUSTMENT TO PICK-UP

"GARRARD" Magnetic types of pick-up are interchangeable with the Crystal type or vice-versa without alteration to the pick-up arm on these Record Changers, provided the pick-up is fitted in a "GARRARD" Head.

All "GARRARD" pick-up heads are of the plug-in type, connections being made by two plugs and sockets at the back of pick-up head.

To remove the pick-up head, unscrew the pick-up fixing screw, withdraw the pick-up, easing the pick-up lead under the arm, and remove the two plug connections from back of pick-up.

If reproduction ceases, or becomes distorted when fitted with a "GARRARD" standard magnetic pick-up, first make sure that the amplifier is in order. Should this be found satisfactory, a slight adjustment to the pick-up may be necessary or the damping rubber may need renewing.

To examine the pick-up proceed as follows: Unscrew the two screws to be found underneath the head, (do not touch the two screws located on each side of the needle), and remove the pick-up unit from the head, then, viewing the front of the pick-up examine the armature to see that it is in the centre of the gap between the pole pieces.

If it is touching one of the pole pieces it must be re-centred. To do this, loosen the two screws holding the adjusting plate, sliding the latter until the armature is in the centre, then retighten the screws.

If the armature will not retain its centre position, it will be necessary to renew the damping rubber. This can be done by removing the adjusting plate, replacing the rubber and re-assembling the plate.

Adjust the plate until the armature is centred before tightening the screws.

The top damping rubber tends to perish in time. It should, therefore, be replaced whenever it appears that the needle stiffness has increased, otherwise excessive record wear may occur.

Distortion may be caused by dirt or foreign matter in the gap between the pole pieces. To remedy, remove the adjusting plate and damping rubber and clean gap.

The pick-up coil winding can be checked for continuity with an ohmmeter.

If a Crystal or High Fidelity Pick-up is suspect, the pick-up head should be returned for examination. A continuity test cannot be carried out on Crystal pick-ups with an ohmmeter.

Crystal Cartridges or High Fidelity Pick-ups must not be opened or the manufacturers will disclaim all responsibility.

SPARE PARTS LIST FOR R.C.65

NAME OF PART	NUMBER
Record Spindle	A.45380A
Turntable	A.45390
Turntable Cover	A.45395
Main Spindle with Fibre Gear	A.45348
Pick-up Arm	B.47654
Overarm Bracket	B.47597
Pick-up Connector Assembly	A.47592
Pick-up Lead D.16	A.47786
Pick-up Lead U.16	A.47787
Platform Bracket	B.47438
Platform	A.45150
Governor Spring D.16	A.41520
Governor Spring U.16	A.41572
Motor Stator Coils D.16	A.47750
Motor Field Coils U.16	A.47775
Change Over Block Cover D.16 Brown	B.45473
Change Over Block Cover U.16 Red	A.46806
Motor Resistance complete U.16	A.47778
Spring Trip Lever	A.41602
Auto Trip Friction Spring	A.41513
Auto Trip Lever Rubber Bush	A.47247
Switch Contact Spring	A.41597
Pick-up Top Damping Rubber	A.45303
Rotor Spindle with Rotor	A.45337
Screw securing Pick-up Head	A.40241
Carbon Brush and Spring U.16	A.46319
Brush Cap U.16	A.46409

© John F. Rider

MODEL 70

GARRARD ENG. & MFG. CO. LTD.

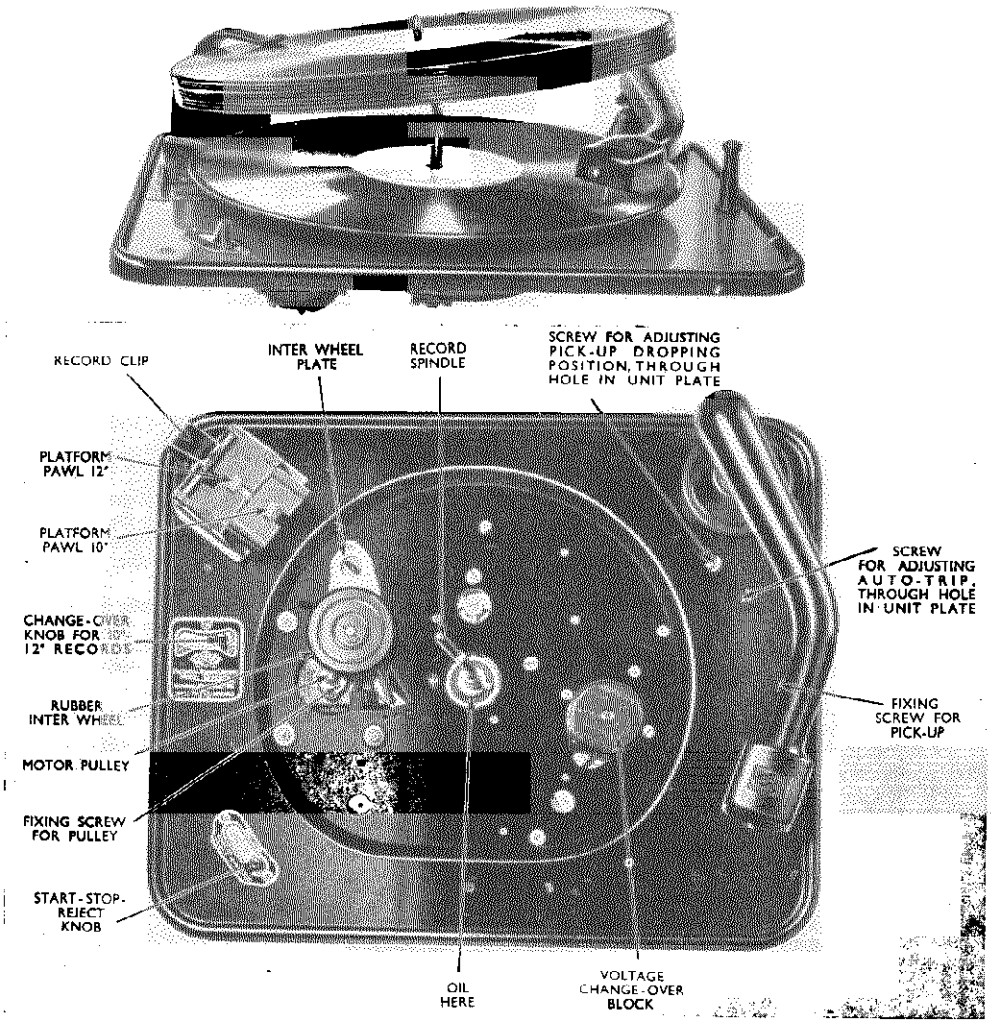

Diagram 1.

OPERATING INSTRUCTIONS

The "GARRARD" Model R.C.70 Automatic Record Changer will play any number of records up to ten 10" records or ten 12", not mixed.

To operate the Record Changer proceed in the following order:—

1. If a permanent needle is not used, lift the pick-up head and insert a needle of the type that will play ten or more records. On some models the pick-up head will turn to facilitate needle changing.
2. Place the record spindle in position, the sloping part leaning toward the record platform. Set the record selector knob to 10" or 12" according to the size of the records it is desired to play, raise the record clip and place any number up to ten records on the record spindle, their lower edge resting on the record platform, then lower the record clip.
3. Move the front left-hand knob to "Start." The motor will commence to run and the changer operate. When the last record has played, the changer will automatically switch off. To remove the records, raise the record clip and withdraw the record spindle.

To reject a record, move the left-hand knob to the "Reject" position.

The changer can be switched off by moving the left-hand knob to the "Stop" position. If this is done while a record is playing, that record will be automatically rejected and the next record commenced when switching on again.

If desired, one record may be repeated any number of times by placing the record on the turntable, setting the Selector Knob to the size of the record, and switching on with no records on the record spindle and the record clip raised.

When it is desired to stop the record, lower the Record Clip and the changer will automatically switch off at the end of the record.

NOTE.

Should the record changer be stopped with the Pick-up Arm not on its rest, the pick-up should not be handled but the left-hand knob moved to "Start." The Pick-up Arm will then return to its rest.

When the Changer is fitted with a High Fidelity Pick-up of any type, extra care should be taken to avoid accidental damage to the Pick-up and attention should be given to the following points:—

The Changer should not be switched off, either by the switch on the changer, the switch on the set, or the house switch during its changing cycle as this may lead to the pick-up being lowered on the turntable felt when the changer is next used. If it is suspected that the changer has been switched off in the wrong position, place a 12" record on the turntable before switching on.

Do not use badly warped records, they may not drop and the pick-up would lower on the turntable felt, also badly warped records will give trouble by slipping during playing.

Care should be taken in storing records to prevent contact with dirt and dust which sets up abrasive action and causes rapid wear.

MAINTENANCE.

The motor and intermediate wheel bearings being the oil retaining type will rarely need lubricating. When the need for oil is apparent a few drops of fine machine oil is all that is necessary.

The rubber rim on the intermediate wheel must be kept free of oil.

© John F. Rider

INSTALLATION

DIMENSIONS.

The Cabinet space required for fitting is 15½ ins. long by 13 ins. wide with 5¼ ins clearance above and 2½ ins. clearance below the plate.

loudspeaker and pick-up. Ample clearance should be left between the edges of the unit plate and the cabinet to allow the Record Changer to float freely. Diagram 2 illustrates the assembly of the spring suspension.

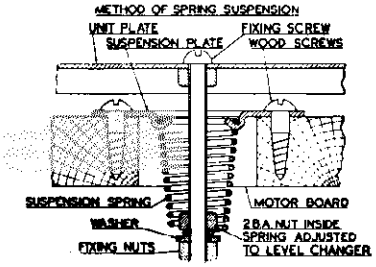

Diagram 2.

In cases where there is no possibility of acoustic feed back occurring, such as where the loud speaker is in a separate cabinet, the spring suspension is not necessary and the changer can be screwed down to the motor board with four of the wood screws supplied for the spring suspension.

Two additional holes will be found in the unit plate; these are for transit fixing screws which should be used to fix the changer rigid to the cabinet during transit and removed on final installation. These are only necessary when using the spring suspension.

If desired, a template for cutting the motor board when fitting the record changer into a cabinet may be obtained on application to The Garrard Engineering & Manufacturing Co. Ltd.

After installation see that the Changer is level by placing a spirit level on a record on the turntable. If not level, adiust by means of the spring suspension fixing nuts. Finally, the nuts and threads of the spring suspension fixing screws should be coated with a locking paint such as shellac varnish to prevent the nuts working loose due to vibration.

FITTING TO CABINET.

The "GARRARD" Model R.C.70 Automatic Record Changer is supplied with spring suspensions to prevent acoustic feed back occurring between the

VOLTAGE.

The "GARRARD" Model R.C.70 Record Changer is suitable for use on 100/130 and 200/250 volts 50 cycles.

A motor driving pulley can be supplied for 40 or 60 cycle mains if desired.

On installation, the links on the terminal block should be set to the correct position to correspond to the voltage of the power supply as shown in diagrams 3 and 4.

The links are set for operating on the 200/250 volts range when the changer leaves the factory, and need only be altered if it is required for use on the 100/130 volt range.

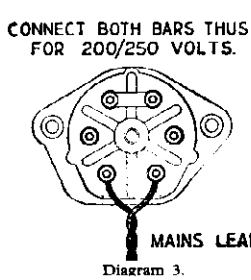

Diagram 3.

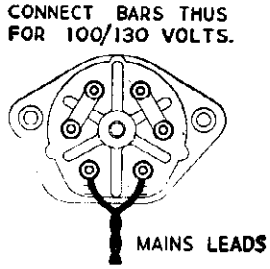

Diagram 4.

The motor should be earthed by connecting a lead from the earthing tag, located under one of the motor end cover screws and a good earth connection.

When adapting an A.C./D.C. (Universal) Radio Receiver, Amplifier or one using a A.C./D.C. Power Pack for the reproduction of gramophone records, a pick-up transformer or condensers in series with the pick-up leads should be fitted, otherwise the pick-up circuit becomes alive. Also the leads from the radio set or amplifier to the pick-up should be as short as possible.

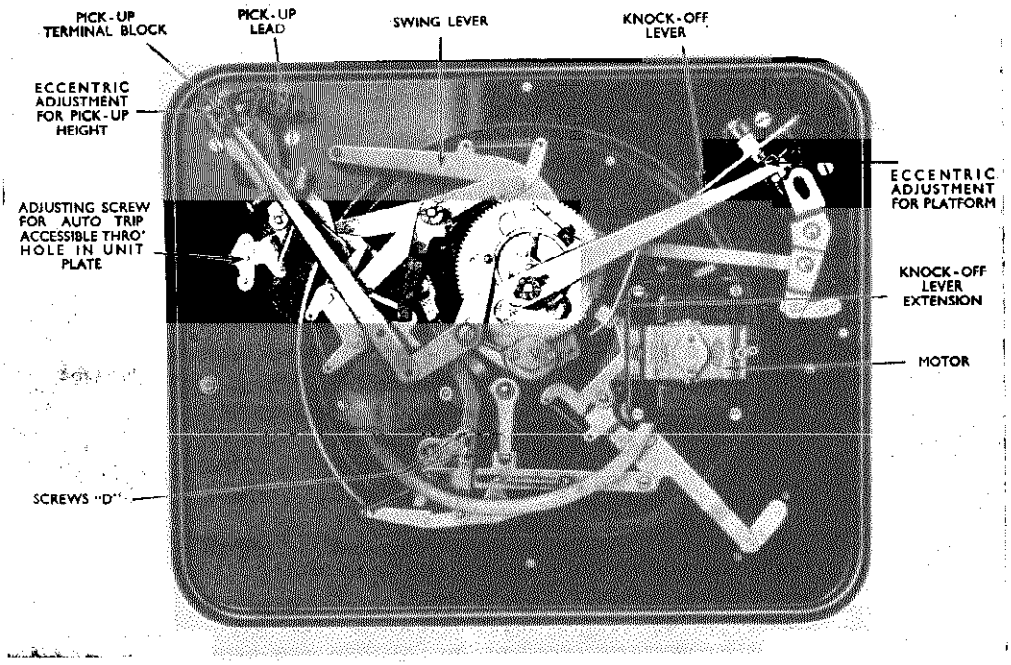

Diagram 5.

SERVICE ADJUSTMENTS

SPEED.

No adjustment for speed is provided on this model, there being no governor, and the motor being of the constant speeed induction type, maintains the turntable at 78 r.p.m.

It is essential that the driving surface of the small brass pulley on the motor spindle, the rubber tyred pulley and the drum of the turntable, be kept absolutely free from all oil or grease. If the speed should become slow or varying, this is the first point that should be checked, and the pulley drum and Intermediate wheel should be cleaned with a rag and a few spots of petrol or lighter fuel.

MOTORS.

If the motor fails to start when the control knob is turned to "start," first check the power supply and ascertain if current is reaching the motor terminals.

Next disconnect the mains supply and examine the terminal block and see that the leads and screws are tight, also examine the switch contacts accessible underneath, clean and adjust if necessary.

If a thick oil has been used to lubricate the motor bearings the motor will appear weak or will not start. It will be necessary to dismantle the motor and clean away all traces of the thick oil. It is, therefore, essential to lubricate the motor bearings with a good quality thin oil.

Should the motor get too hot, see that the voltage change over links are set correctly to correspond with the voltage of the power supply. If correct, check the motor windings by inserting an A.C. milli-ammeter in either motor lead. The maximum current consumption should not exceed 100/130 volts, 50 cycles, 0.26 amp., 200/250 volts, 50 cycles, 0.13 amp.

If readings in excess of the above figures are obtained, the motor unit should be returned for examination.

To remove the motor, first make sure the electricity supply is disconnected, then remove the insulated plate on the underside of the terminal block, underneath the plate will be disclosed the nuts on the screws securing the terminal block to the unit plate—these should be unscrewed and the screws lifted out. The terminal block will then be free from the unit plate and only attached to the motor leads.

Next, while supporting the motor underneath, unscrew the nuts on the three suspension screws, which secure the motor to the unit plate. Before drawing the motor away from the unit plate, make a careful note of the sequence of steel and rubber washers on each suspension screw in order to reassemble correctly when refitting the motor. This is important as the height of the motor in relation to the intermediate wheel is critical.

PICK-UP DROPPING POSITION.

The Pick-up Arm has been finely adjusted so that the needle comes on to 10 in. records in a 9⅜ in. diameter circle and 12 in. records in a 11⅝ in. diameter circle. These positions were arrived at after checking a very wide selection of records of various makes.

There may be a few records where the record track starts further away from the centre (i.e., nearer the edge), and in these exceptional cases the needle may alight on the record a few grooves from the start of the record. If the pick-up dropping position were set for these exceptional records it would not be suitable for average records.

Should the dropping position of the pick-up require adjustment, the pick-up adjusting screw — accessible through a hole in the unit plate, see Diagram 1, should be turned with the changer in its start position, that is, with the pick-up arm on its rest.

The pick-up adjusting screw should be turned either to the right or left, according to requirements. A quarter of a turn in either direction will give you the maximum adjustment. After adjustment, switch on, check the dropping position and re-adjust if necessary.

PICK-UP HEIGHT.

If desired the pick-up height can be adjusted by loosening the nut securing the "Eccentric adjustment for pick-up height," Diagram 5, and adjust the eccentric pivot with screwdriver in slot at back. Finally re-tighten locking nut.

CAUTION.

When making any adjustments to the Pick-up Arm, it should NEVER on any account be forced into position. If the turntable is turned by hand it should NOT be turned backwards.

If the pick-up does not run into the record grooves after alighting on the record edge, see that the record changer is level by placing a spirit level on a record on the turntable. Also make sure that the flexible wire leading to the pick-up is not twisted or held in such a manner as to prevent the free movement of the pick-up arm; also see that the associated levers are free.

AUTO TRIP MECHANISM.

The auto trip mechanism is set to operate when the needle reaches a 1⅛ in. radius, or if it oscillates in an eccentric groove.

Occasionally records having a smaller or larger radius at the end of the playing grooves, are encountered. If it is desired to adjust the mechanism to take these exceptional records, the screw visible through hole in unit plate (Diagram 1) should be adjusted.

To make the trip operate earlier for larger radius records loosen the screw, and holding the pick-up arm steady, move the screw a shade towards the turntable. To make the trip operate later for small radius records, move the screw away from the turntable.

After each adjustment check with record, and re-adjust if necessary. Finally retighten the screw.

It is emphasised that this screw should be moved a barely visible amount at each adjustment.

RECORD PLATFORM ADJUSTMENT.

When despatched from our Works the record platform is set to accommodate records of average dimensions. Occasionally, however, records may be found outside the normal limits; if necessary, therefore, the platform may be adjusted to take them.

To set the platform, the nut locking the "Eccentric adjustment" for Platform, Diagram 5, should be loosened, and with the mechanism set for 12 inch records, the pick-up arm in the playing position, and the largest 12 inch record available loaded on the platform, turn the "Eccentric Adjustment" until there is a gap of not more than ⅛" between the edge of the record and the front edge of the platform pawl. Finally retighten the locking nut.

If the changer fails to drop either 10" or 12" records, the above adjustment should be carried out.

AUTO STOP.

When the last record on the platform drops on to the turntable, it allows the record clip to fall and this unlocks the auto stop which should switch off the motor at the end of the record. If when the last record has been played and the record clip has fallen the mechanism does not automatically stop, the following procedure should be carried out.

1. Compare the underside of the record changer with diagram in the Service Manual and find the "Swing Lever" and the "Knock-off Lever." Note that in the upper edge of the knock-off lever there is a step. With the record clip lowered and the needle removed from the pick-up head, start the changer with a hand on the turntable, slow it down to the slowest possible speed at which the mechanism will operate. Move the control lever to the "Reject" position. The swing lever should now move outwards until it engages the step on the knock-off lever and should remain engaged until the record changer switches off. If the swing lever does not engage the step but passes over it, proceed as at (a) to correct. If the swing lever engages in the step, set as at (b) following.

(a) Load two records on the platform spindle in the usual way. Lower the record clip and start the changer The first record will now drop on to the turntable leaving one remaining on the platform. Again, with the hand operating as a brake to slow down the turntable, move the control lever to the "Reject" position. The tip of the step on the knock-off lever should now clear the surface of the swing lever in its outward movement by 1/64". If this dimension is incorrect, stop the changer when the swing lever is directly over the step in the knock-off lever. The knock-off lever is divided into two parts which are held together by a screw

©John F. Rider

and a rivet. Loosen the screw to adjust the height of the lever until the 1/64" clearance is obtained, then retighten the screw. Finally re-check the changer with the record clip lowered to ensure that the swing lever engages the step. Should the auto stop still fail to operate, set as at (b) below.

(b) Loosen the screws at D (Diagram 5) and bring the two parts of the lever together in order to shorten slightly the effective length and retighten the screws. Check and repeat the adjustment if necessary until changer operates correctly.

PICK-UP.

"GARRARD" Magnetic types of pick-ups are interchangeable with the Crystal type or vice-versa without alteration to the pick-up arm on these Record Changers, provided the pick-up is fitted in a "GARRARD" head.

All "GARRARD" pick-up heads are of the plug-in type, connections being made by two plugs and sockets at the back of the pick-up head.

To remove the pick-up head, unscrew the pick-up fixing screw, withdraw the pick-up, easing the pick-up lead under the arm, and remove the two plug connections from back of pick-up.

If reproduction ceases, or becomes distorted when fitted with a "GARRARD" standard magnetic pick-up, first make sure that the amplifier is in order. Should this be found satisfactory, a slight adjustment to the pick-up may be necessary or the damping rubber may need renewing.

To examine the pick-up proceed as follows:—

Unscrew the two screws located underneath the Base Plate of the Pick-up Head, when the plate carrying the pick-up unit can be removed from the cover. Be careful not to loosen or disturb the two screws located one each side of the needle holder on the inclined portion of the base plate, otherwise the adiustment of the pole pieces will be upset. By viewing the pick-up unit from the front, examine the armature to see that it is in the centre of the gap between the pole pieces.

If it is touching one of the pole pieces, it must be re-centred.

To do this, loosen the two screws holding the adjusting plate, sliding the latter until the armature is in the centre, then tighten the screws.

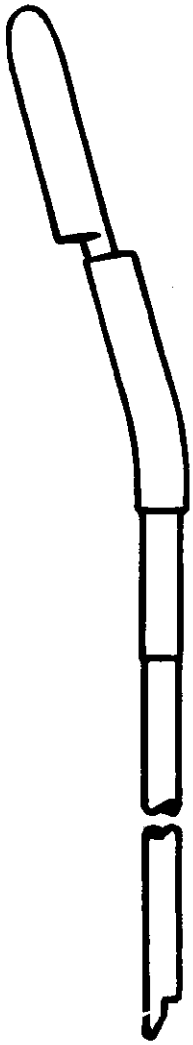

Diagram 6.

If the armature will not retain its centre position, it will be necessary to renew the damping rubber. This can be done by removing the adjusting plate, replacing the rubber and re-assembling of the plate.

Adjust the plate until the armature is centred before tightening the screws.

The top damping rubber tends to perish in time. It should, therefore, be replaced whenever it appears that the needle stiffness has increased, otherwise excessive record wear may occur.

The pick-up coil winding can be checked for continuity with an ohmmeter.

If a Crystal or High Fidelity pick-up is suspect, the pick-up head should be returned for examination. A continuity test cannot be carried out on Crystal pick-ups with an ohmmeter.

Crystal Cartridges or High Fidelity Pick-ups must not be opened or the manufacturers will disclaim all responsibility.

TEMPLATE FOR RC 70 RECORD SPINDLE.

Should the record spindle be accidentally bent out of position through being dropped or other reasons, the record dropping will be affected. If trouble is experienced with erratic record dropping, lay the record spindle on the template and check that it conforms to the shape thereof.

SPARE PARTS LIST FOR RC 70

Name of Part.	Ref. No.	Name of Part.	Ref. No.
Record Spindle	A.47408	Pulley (50 cycles)	A.47216
Turntable	B.46744	Pulley (60 cycles)	A.47226
Turntable Cover	A.45395	Cover for Change Over Block	B.45473
Main Spindle Unit	A.46509	Screw for Cover	A.40045
Pick-up Arm	B.47654	P.U. Needle Screw	A.40048
Record Clip	A.46582	Trip Pawl	A.47273
Pick-up Spindle Unit	A.46584	Spring for Trip Pawl	A.41602
Pick-up Lead	A.47786	Switch Contact Spring	A.41597
Platform Housing	A.46572	Pick-up Top Damping Rubber	A.45303
Platform	B.46564	Rotor Spindle with Rotor	A.47168
Inter Wheel Unit	A.46529		

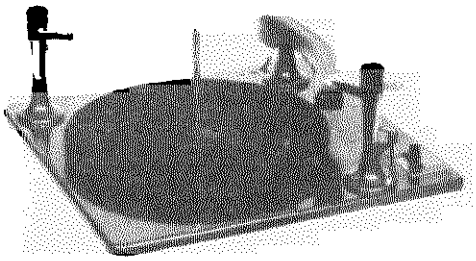

GENERAL

This record changer is designed to operate from a power supply of 105-125 volts a-c, 60 cps. It will automatically play twelve 10-inch records or ten 12-inch records at a single loading.

MANUAL OPERATION

1. Turn selector arm knobs so that the blades will permit a record to slip down the spindle onto the turntable.
2. Move the control knob to the MANUAL position.
3. Gently place tone arm on the first groove of record and when finished playing return the tone arm to its rest position.
4. Stop turntable rotation by moving switch plate knob to the OFF position.

AUTOMATIC OPERATION

1. Lift and rotate the selector knobs and position them for 10-inch or 12-inch records, as desired. The arrow should point directly at the spindle.
2. Place up to either twelve 10-inch or ten 12-inch records on selector arms. Do not intermix 10- and 12-inch records.
3. Move control knob on switch plate to REJECT position and release it. The changer will now play the entire stack and repeat the last record.
4. To shut off the record changer before or after all records are played, move control knob to OFF and lift the tone arm and move out to the rest position.
5. If you wish to reject a record before it has finished playing, move the control knob to REJECT and release it. The changer will reject the record and then continue to play the remainder of the stack.
6. To unload records, turn the control knob to OFF. Remove any remaining records on the selector arms. Lift and turn selector arm knob until arm clears records, then remove records from turntable.

OPERATION PRECAUTIONS

1. Use only unwarped records for automatic operation. For warped, odd-size or home-recorded records, play as for manual operation.
2. Never use force to start or stop the motor or any part of the record changing mechanism.
3. Do not store the records on the record post or on the turntable as they may warp, especially if the temperature is high.
4. Do not allow oil or grease to come in contact with the drive wheels or any rubber part.

LUBRICATION

Use light grease (Lubriplate or equivalent) on the following:
1. Cam surfaces.
2. Gear teeth.

Use light machine oil on the following:
1. All shafts.
2. Turntable spindle.

Do not lubricate:
1. Clutch engagement lever (6).
2. Idler wheel rim.
3. Turntable rim.

PICK-UP

A special General Electric magnetic pick-up is used with this changer which will give superior results from the standpoint of high fidelity, low surface noise, and negligible record wear. This pick-up is not replaceable with a crystal pick-up as the ratio of output levels of the two types is at least 70 to 1, the pick-up supplied having an extremely low output.

The pick-up is supplied with a semi-permanent type stylus. Dust and foreign matter should be removed with a soft brush. Make sure the stylus arm is centered between stops. The clearance should be maintained on both sides at 9 to 11 mils.

CYCLE OF OPERATION

***NOTE*—All reference numbers used in this explanation are shown on an illustration.**

INITIATING THE CYCLE:

Pushing the *control button* (50) from OFF to REJECT positions turns the power ON and starts the changer into automatic operation. This movement transferred to the *control slide* (1) causes the *power switch* (2) to be actuated by its arm which rides in the eccentric groove (A) in the control slide. Simultaneously, the *control slide* (1) moves the *reject slide* (4) towards the center of the record changer, which moves the *trip lever* (5) sufficiently to disengage it from the *clutch engagement lever* (6). This *clutch engagement lever* (6) and *trip lever* (5) are mounted on the *drive gear* (8). When the *control knob* is released, it returns from REJECT to AUTO position.

CYCLING:

The release of the *clutch engagement lever* (6) caused the *lug* (D) on the rotating *pinion gear* (7) to strike the extended portion of the *clutch engagement lever* (6) so as to push the *drive gear* (8) sufficiently so that its teeth enmesh with the *pinion gear* (7). (The open section of the *drive gear* (8) permits the pinion gear to rotate freely, except during the change cycle.) The rotation of the *drive gear* (8) results in the following cam actions:

1. The vertical *cam* (E) moves the tone arm *lift pin* (9), thus raising the tone arm.

2. The *cam* (J) actuates the *drive link* (10) that induces a quarter turn by which the *selector arms* (42) release a record.

3. Surface (H) on the locked *tone arm lever* (11) resets the trip by latching the *clutch engagement lever* (6) to the *trip lever* (5).

4. Cam surface (G) moves the tone arm *latch lever* (21) so as to unlatch the *tone arm lever* (11) at the point of latching. Thereafter the *stud* (K) on the *tone arm lever* (11) follows the receding *cam* (F).

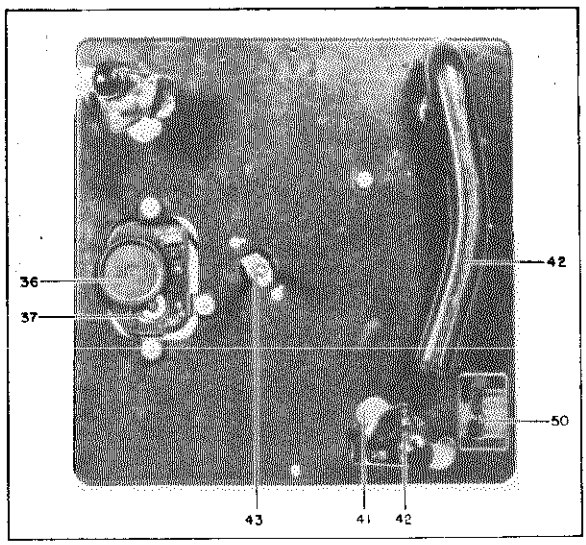

Top View of Record Changer

GENERAL ELECTRIC CO.

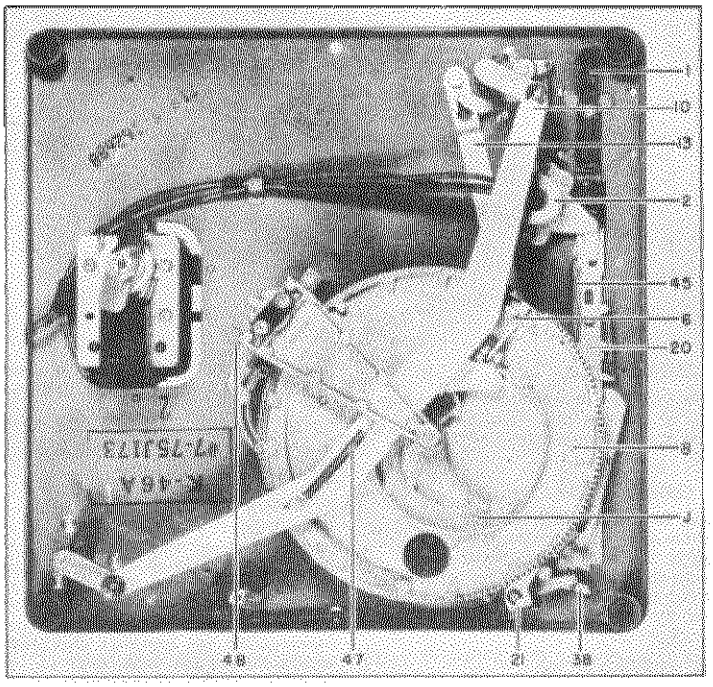

Bottom View of Record Changer

5. Spring pressure from the *tone arm locator* (12) moves the *tone arm lever* (11) and tone arm toward the record. Selector arm settings determine the point at which the *tone arm locator* (12) stops at the surface on the *reset slide* (13).

6. *Stud* (K) is contacted by the *retard lever* (14) holding it in position during the time of the lowering of the needle on the record.

7. *Tone arm lift pin* (9) follows the vertical *cam* (E) on the *drive gear* (8) and lowers the tone arm to the record. After the needle has touched the record, the *booster spring* (15) exerts a slight pressure, causing the needle to enter the starting groove of the record.

8. As the needle starts in the groove, *drive gear* (8) completes its rotation and is locked in open-tooth position by the drive gear *stop lever* (16) in the detent in the *cam* (G).

TRIP ACTION:

When the record has finished playing, the needle enters a center spiral groove of the record. This starts a new change cycle by either of two actions releasing the *clutch engagement lever* (6).

1. Minimum diameter cut-off occurs when the *trip shoe* (17) strikes the *trip lever* (5).

2. Eccentric groove cut-off occurs when the tone arm is moved away from the *spindle* (43). The sawtooth edge of the *trip plate* (fastened to tone arm lever, 11) engages and moves the *trip dog*, causing the *trip lever* (5) to function.

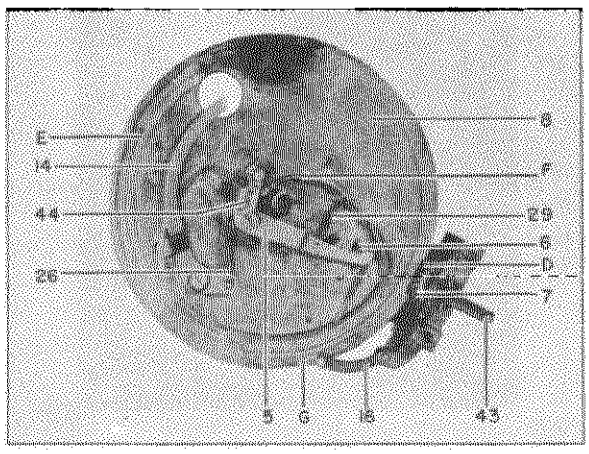

Drive Gear Assembly

MANUAL OPERATION:

With the control knob in the MAN position, the *control slide* (1) causes four conditions to exist.

1. The *motor switch* (2) is turned ON.

2. The end of the *control slide* (1) acting through the manual *latch lock* (38) partially disengages the *tone arm latch lever* (21) from its locked position. It now serves as a detent for the tone arm while in rest position and prevents its movement due to accidental bumping.

3. The *manual lockout* (20) on the *control slide* prevents the *tone arm locator* (12) from moving inward, thereby permitting free movement of the tone arm by hand.

4. The *reject slide* (4) is in position so that the *clutch engagement lever* (6) is held, preventing tripping.

SERVICE ADJUSTMENTS

A. SELECTOR ARM AND BLADE (41) (42):

The leading edge of the *blades* (41) must be smoothly rounded and well polished. The *blades* (41) must be very free in their mounting so that they will return to normal position by their own weight. The *selector arms* (42) must be parallel with each other, and must be synchronized so that a record will drop evenly onto the turntable.

If the blades need adjustment, place a 10-inch record of average thickness (.074 in.) on the selector arms and manually rotate the turntable clockwise until the selector blade contacts the record. The blade must rise after it first contacts the edge of the record. This rising action results whenever pressure is applied to the leading edge of the *selector blade* (41). The blade may be adjusted by bending, very slightly, to correct position (use pliers with tape-lined jaws). The height to which blades are set must be less than the minimum record thickness, otherwise the blade will attempt to change two records at a time, due to the cam action which *always* operates in an *up direction*. When necessary, make the same adjustment on the 12-inch selector blades, using a 12-inch record (approx. .090 in. thick).

B. INCORRECT LOCATOR SPRING TENSION (33):

Insufficient tension in the *locator spring* (33) will produce erratic or incorrect tone arm landing since the *locator* (12) will not seat in the fixed 10-inch or 12-inch indexing position. It will also result in jerky action of the *tone arm* (42), since the *tone arm lever* (11) will not accurately follow the cam surface of the *drive gear* (8).

©John F. Rider

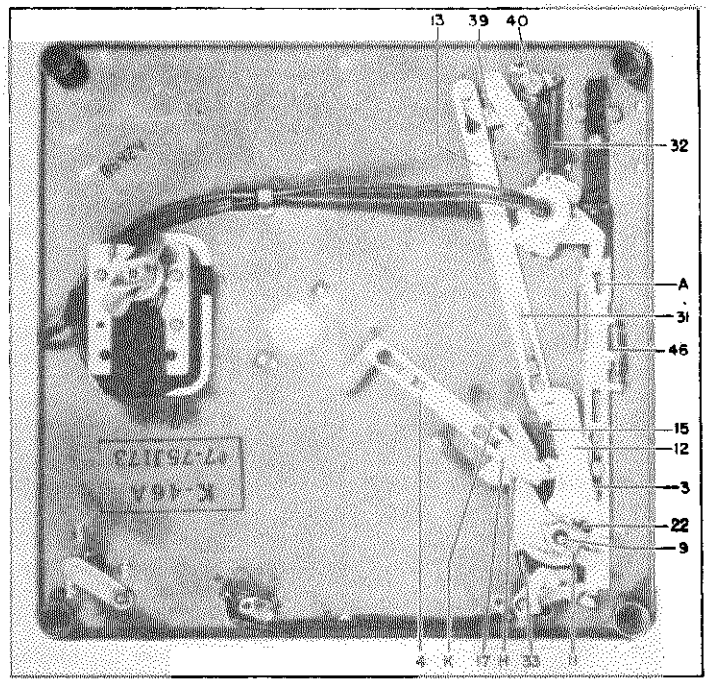

Bottom View of Record Changer Less Drive Gear

Excessive tension in the *locator spring* (33) will result in a stiff, heavily loaded "feel" as the tone arm is moved into rest position. It may also produce a stiff action of the *control slide* (1) and cause increased wear of the moving parts.

C. TONE ARM HEIGHT:

The height to which the *tone arm* (42) rises is correct when there is an approximate $\frac{1}{16}$-inch clearance between it and the bottom of a 10-inch record on the *selector arms* (42). This clearance is regulated by the tone arm *adjusting screw* (23), see Figure 5.

The down position of the tone arm is fixed by *lug* (R) on the tone arm hinge assembly. The correct height is that which will allow the bottom edge of the tone arm and cartridge to clear the turntable surface by approximately $\frac{1}{16}$ inch. This adjustment may be corrected by a slight bend of the *lug* (R).

D. TONE ARM POSITIONING:

If the tone arm landing is not corrected by adjustment B, the following procedure may be used: Set the *control knob* (50) in the OFF position with power plug out and place a 10-inch record on the turntable. Set the selector arms (10-inch) so the arrows point directly at the spindle. Loosen the Allen socket *cap screw* (22) just enough to allow the *tone arm lever* (11) to still hold its position. Line up the tone arm's outer edge evenly with the panel edge. This gives the tone arm an approximate setting. Push the control knob to REJECT and release it. Rotate the turntable clockwise and observe where the needle first touches the record. This should be about one-eighth inch from the edge. Variations should be corrected by slipping the *tone arm lever* (11) in the correct direction. *Caution*—Before tightening the Allen screw, make certain that there is enough vertical clearance in the tone arm shaft to avoid binding while the tone arm swings.

E. STYLUS PRESSURE:

The stylus pressure on the record is controlled by the *counter-balance spring* (24) in back of the tone arm. The pressure is variable through the counter-balance adjusting *slide* (25). The needle pressure should be 1–1½ ozs.

F. TRIP SHOE (17):

The *trip shoe* (17) located on *tone arm lever* (11) is movable and loosening its holding screw permits it to be adjusted as required. This adjustment is correct when the needle is 1⅞ inches from the record center and the trip shoe pushes the *trip lever* (5) which releases the *clutch engagement lever* (6).

G. TURNTABLE REMOVAL:

The turntable should be removed by lifting carefully, tapping spindle *lightly* if necessary. This will expose top spindle bearing. When replacing turntable, the slot in hub must seat properly over the spindle pin. (Rotate 180 deg for best fit.) Push idler wheel in while lowering, so rubber rim will not be damaged by turntable edge.

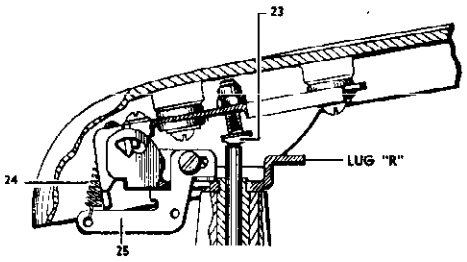

Tone Arm Adjustments

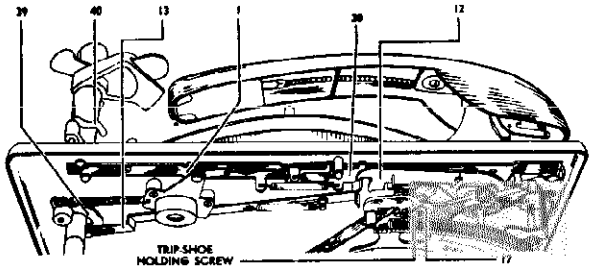

Bottom View of Record Changer

MODEL P2 GENERAL ELECTRIC CO.

TROUBLE SHOOTING CHART

SYMPTOMS	REMEDIES OR CAUSES
RECORD SELECTION	
1. Record jams, prevents changer from working.	1. (a) Check adjustment A. (b) Odd-sized, warped, or damaged records. Play in "MAN" position.
2. Record drops from one side only.	2. (a) Check center hole in records—probably too large. (b) Check adjustment A.
3. Records drop more than one at a time.	3. (a) Check adjustment A.
TONE ARM MOVEMENT	
1. Needle lands incorrectly.	1. (a) Check adjustment B. (b) Tone arm *retard lever* (14) binds; check spring. (c) Check adjustment D.
2. Needle fails to feed in after landing.	2. (a) Check *booster spring* (15)—probably too weak.
3. Needle lands properly on record but slides in on record.	3. (a) Check for broken stylus in pick-up. (b) *Booster spring* (15) too strong. (c) Check adjustment C.
4. Tone arm hits bottom record on selector arms during cycling.	4. (a) Check adjustment C.
TRIPPING-CYCLING	
1. Changer fails to trip.	1. (a) Check adjustment F. (b) Tight tone arm lead wire. (c) *Clutch engagement lever* (6) not unlatching. Clean, do not lubricate. (d) *Trip lever* (5) binding at pivot point and failing to unlatch *engagement lever* (6).
2. Changer repeats tripping.	2. (a) *Clutch engagement lever* (6) fails to latch. Examine *trip lever* (5) for bind or weak *trip lever spring* (29). (b) Control knob binding in REJECT position. Check *control slide* (1) or its associated assembly. (c) Failure of *stop lever* (16) to properly detent drive gear.
MOTOR	
1. Change is sluggish or motor overheats.	1. (a) Check lubrication—oil old or gummy. (b) Incorrect line voltage. (c) Defective motor winding. (d) Check binding of moving parts.
2. Motor rumble or "wow" heard in record reproduction.	2. (a) Worn rubber rim on drive wheel. (b) Shipping bolts not removed from motor board. (c) Check for binding of spindle. Oil sparingly if necessary.

REPLACEMENT PARTS LIST

Cat. No.	Symbol	Description
RAC-017		COVER—Switch cover
RAX-009		SELECTOR ARM AND BLADE ASSEMBLY—left rear
RAX-010		BLADE—10-in. selector blade and arm assembly No. 2
RBH-005		MOTOR—Phonomotor, 60 cycle
RDE-023		ESCUTCHEON—Control escutcheon
RDX-029		KNOB—Selector arm knob assembly
RDX-030	50	KNOB—Control knob assembly
RHM-029		BUMPER—Trip dog bumper (rubber)
RHM-030		BUMPER—Trip lever bumper (rubber)
RHS-001	22	SCREW—Allen socket cap screw
RHS-002	23	SCREW—Tone arm adjusting screw
RHX-006	34	HINGE—Tone arm hinge assembly
RHX-007		BUMPER—Retard lever bumper (rubber)
RMC-015		HUB—Tone arm locator hub
RMG-001	8	GEAR—Drive gear
RMG-002	7	GEAR—Pinion gear
RML-001	6	LEVER—Clutch engagement lever
RML-002	21	LEVER—Tone arm latch lever
RML-003	3	LINK—Connecting link
RML-004	14	LEVER—Tone arm retard lever
RML-005	38	LOCK—Manual latch lock
RMM-018	4	SLIDE—Reject slide
RMM-019	13	SLIDE—12-in. reset slide
RMM-020	17	SHOE—Trip shoe
RMM-021	25	SLIDE—Counter-balance adjusting slide
RMM-022	30	SHAFT—Tone arm shaft
RMO-002	41	BLADE—Selector blade and arm assembly
RMO-003	2	SWITCH—Power switch
RMP-006	9	PIN—Tone arm lift pin
RMP-007		PIN—Stop lever pivot pin
RMS-057	24	SPRING—Counter-balance spring
RMS-058	47	SPRING—Drive link spring
RMS-059	46	SPRING—Manual lockout spring (outer)
RMS-060	45	SPRING—Manual lockout spring (inner)
RMS-061	32	SPRING—12-in. reset lever spring
RMS-062	33	SPRING—Tone arm locator and latch spring
RMS-063	15	SPRING—Tone arm booster spring
RMS-064	31	SPRING—12-in. reset slide spring
RMS-065	48	SPRING—Stop lever spring
RMS-066	44	SPRING—Trip dog spring
RMS-067	29	SPRING—Trip lever spring
RMS-068	26	SPRING—Retard lever spring
RMS-071	37	SPRING—Idler wheel spring
RMT-007	49	TURNTABLE—Turntable assembly
RMU-017		SHAFT—Selector shaft assembly
RMU-018	40	ROD—12-in. reset rod
RMU-019		SHAFT—Drive gear shaft
RMW-024	36	WHEEL—Idler wheel
RMX-060	10	LINK—Drive link assembly
RMX-061		ASSEMBLY—Power switch plate assembly
RMX-062		LEVER—Reset lever assembly
RMX-063	12	LOCATOR—Tone arm locator assembly
RMX-064		CRANK—Drive crank assembly
RMX-065	20	LOCKOUT—Manual lockout assembly
RMX-066	11	LEVER—Tone arm lever assembly
RMX-067	16	LEVER—Drive gear stop lever assembly
RMX-068		ASSEMBLY—Spindle and housing assembly
RMX-069	5	LEVER—Trip lever assembly
RMX-070	43	SPINDLE—Turntable spindle assembly
RPX-010		PICK-UP—Magnetic pick-up

MODEL 700R

GENERAL

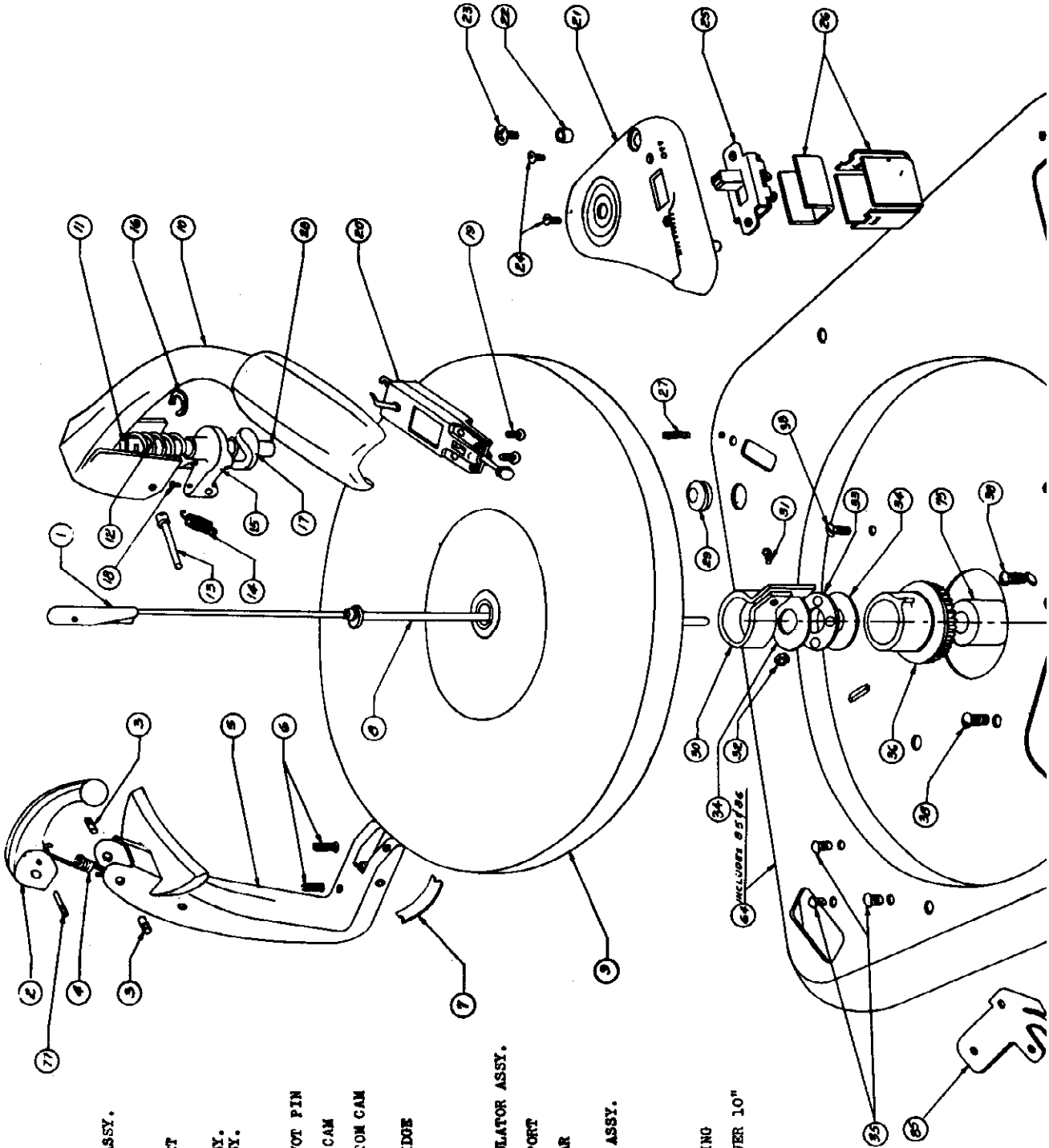

ITEM NO.	PART NO.	DESCRIPTION
1	21A73601	SPINDLE CAP ASSY.
2	55-73613	STABILIZER
3	12-73057	STUD
4	33-73349	SPRING
5	62-73620	RECORD SUPPORT
6	2087-S	SET SCREW
7	33-74543	SPRING LOCK
8	43A72960	ECCENTRIC ASSY.
9	66A75025	TURNTABLE ASSY.
10	69-73657	TONE ARM
11	32-74055	WASHER
12	33-73340	SPRING
13	12-75361	ECCENTRIC PIVOT PIN
14	33-74053	SPRING
15	43-73113	TONE ARM TOP CAM
16	32-18893	"C" WASHER
17	43-73069	TONE ARM BOTTOM CAM
18	1417-A	SCREW
19	1338-A	SCREW
20	PER ORDER	PICKUP CARTRIDGE
21	10-74366	SWITCH PLATE
22	65-73144	SLEEVE
23	1399-Y	SCREW
24	1398-Y	SCREW
25	58-73096	SWITCH
26	7A73831	SHIELD & INSULATOR ASSY.
27	2073-7	SET SCREW
28	12-72975	TONE ARM SUPPORT
29	37-73772	GROMMET
30	65-73595	DRIVING COLLAR
31	2011-A	SCREW
32	1022-A	NUT
33	30A72491	BALL BEARING ASSY.
34	32-72485	WASHER
35	2209-B	RIVET
36	28A73704	PINION ASSY.
37	1906-C	LOCKWASHER
38	1333-A	SCREW
39	33-73408	MOUNTING SPRING
40	12-73007	PIN
41	55-73884	ACTUATING LEVER 10"
42	33-73889	SPRING
43	33-73881	SPRING
44	1612-A	WASHER
45	32-16901	"C" WASHER

©John F. Rider

ITEM NO.	PART NO.	DESCRIPTION
1	21A73601	SPINDLE CAP ASSEMBLY
2	55-73613	STABILIZER
3	12-73057	STUD
4	33-73349	SPRING
5	62-74536	RECORD SUPPORT
6	2087-S	SET SCREW
7	33-74543	SPRING LOCK
8	43A72960	ECCENTRIC ASSEMBLY
9	66A75025	TURNTABLE ASSEMBLY
10	69-73657	TONE ARM
11	32-74055	WASHER
12	33-73340	SPRING
13	12-75361	ECCENTRIC PIVOT PIN
14	33-74053	SPRING
15	43-73113	TONE ARM TOP CAM
16	32-18893	"C" WASHER
17	43-73069	TONE ARM BOTTOM CAM
18	1417-A	SCREW
19	1338-A	PICKUP MOUNTING SCREW
20	PER ORDER	PICKUP
21	10-74368	SWITCH PLATE
22	65-73144	SLEEVE
23	1399-Y	SCREW
24	1398-Y	SCREW
25	58-73096	SWITCH
26	7A73831	SHIELD & INSUL. ASSY.
27	2073-Z	SET SCREW
28	12-72975	TONE ARM SUPPORT
29	37-73772	GROMMET
30	65-73595	DRIVING COLLAR

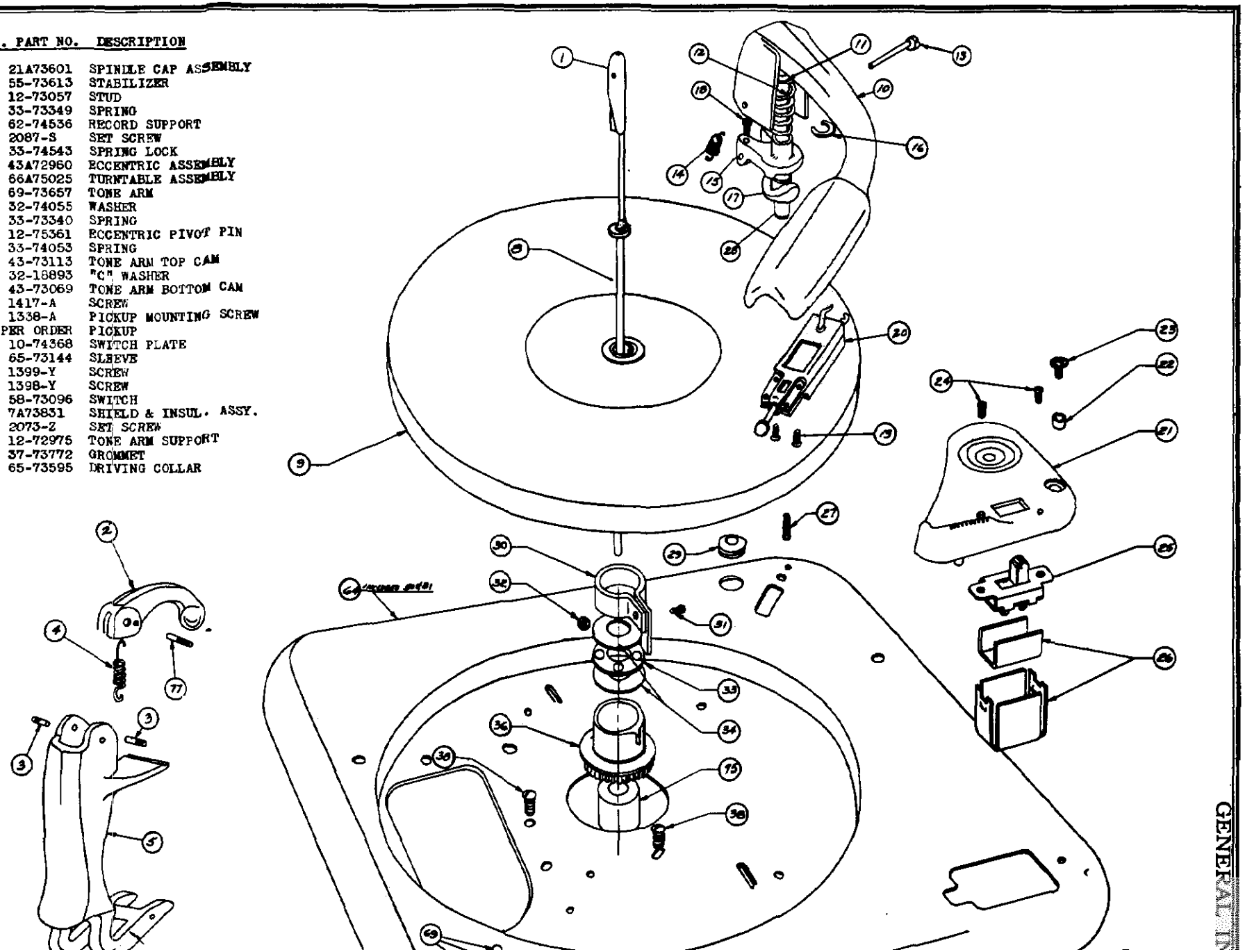

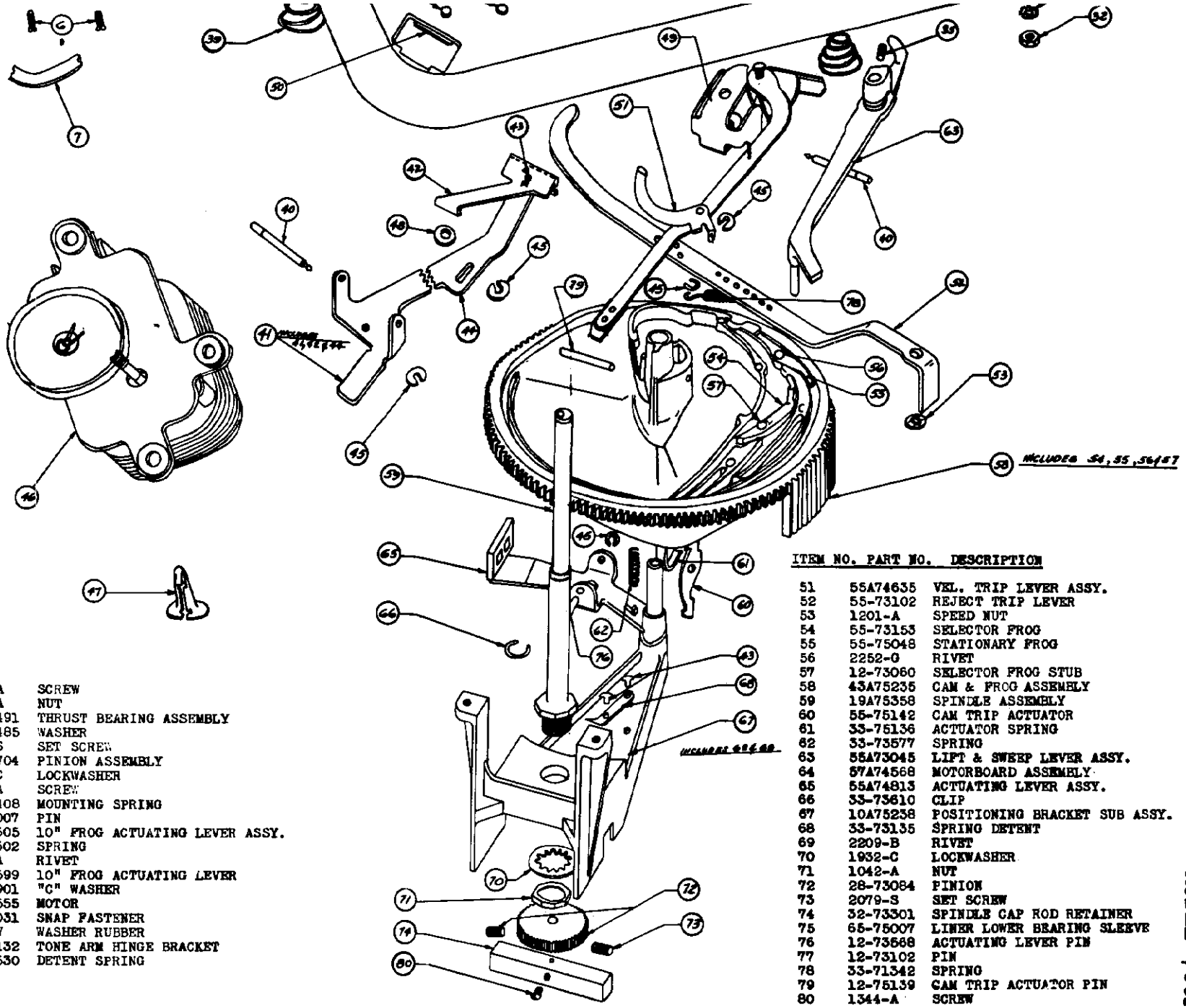

ITEM NO.	PART NO.	DESCRIPTION
51	55A74635	VEL. TRIP LEVER ASSY.
52	55-73102	REJECT TRIP LEVER
53	1201-A	SPEED NUT
54	55-73153	SELECTOR FROG
55	55-75048	STATIONARY FROG
56	2252-G	RIVET
57	12-73060	SELECTOR FROG STUB
58	43A75235	CAM & FROG ASSEMBLY
59	19A75358	SPINDLE ASSEMBLY
60	55-75142	CAM TRIP ACTUATOR
61	33-75136	ACTUATOR SPRING
62	33-73577	SPRING
63	55A73045	LIFT & SWEEP LEVER ASSY.
64	57A74568	MOTORBOARD ASSEMBLY
65	55A74813	ACTUATING LEVER ASSY.
66	33-73610	CLIP
67	10A75238	POSITIONING BRACKET SUB ASSY.
68	33-73135	SPRING DETENT
69	2209-B	RIVET
70	1932-C	LOCKWASHER
71	1042-A	NUT
72	28-73084	PINION
73	2079-S	SET SCREW
74	32-73301	SPINDLE CAP ROD RETAINER
75	65-75007	LINER LOWER BEARING SLEEVE
76	12-73568	ACTUATING LEVER PIN
77	12-73102	PIN
78	33-71342	SPRING
79	12-75139	CAM TRIP ACTUATOR PIN
80	1344-A	SCREW

31	2011-A	SCREW
32	1022-A	NUT
33	30A72491	THRUST BEARING ASSEMBLY
34	32-72485	WASHER
35	2089-S	SET SCREW
36	28A73704	PINION ASSEMBLY
37	1906-C	LOCKWASHER
38	1333-A	SCREW
39	33-73408	MOUNTING SPRING
40	12-73007	PIN
41	55A74605	10" FROG ACTUATING LEVER ASSY.
42	33-74602	SPRING
43	2211-A	RIVET
44	55-74599	10" FROG ACTUATING LEVER
45	32-16901	"C" WASHER
46	56-73555	MOTOR
47	37-73031	SNAP FASTENER
48	1695-V	WASHER RUBBER
49	10-73132	TONE ARM HINGE BRACKET
50	33-74530	DETENT SPRING

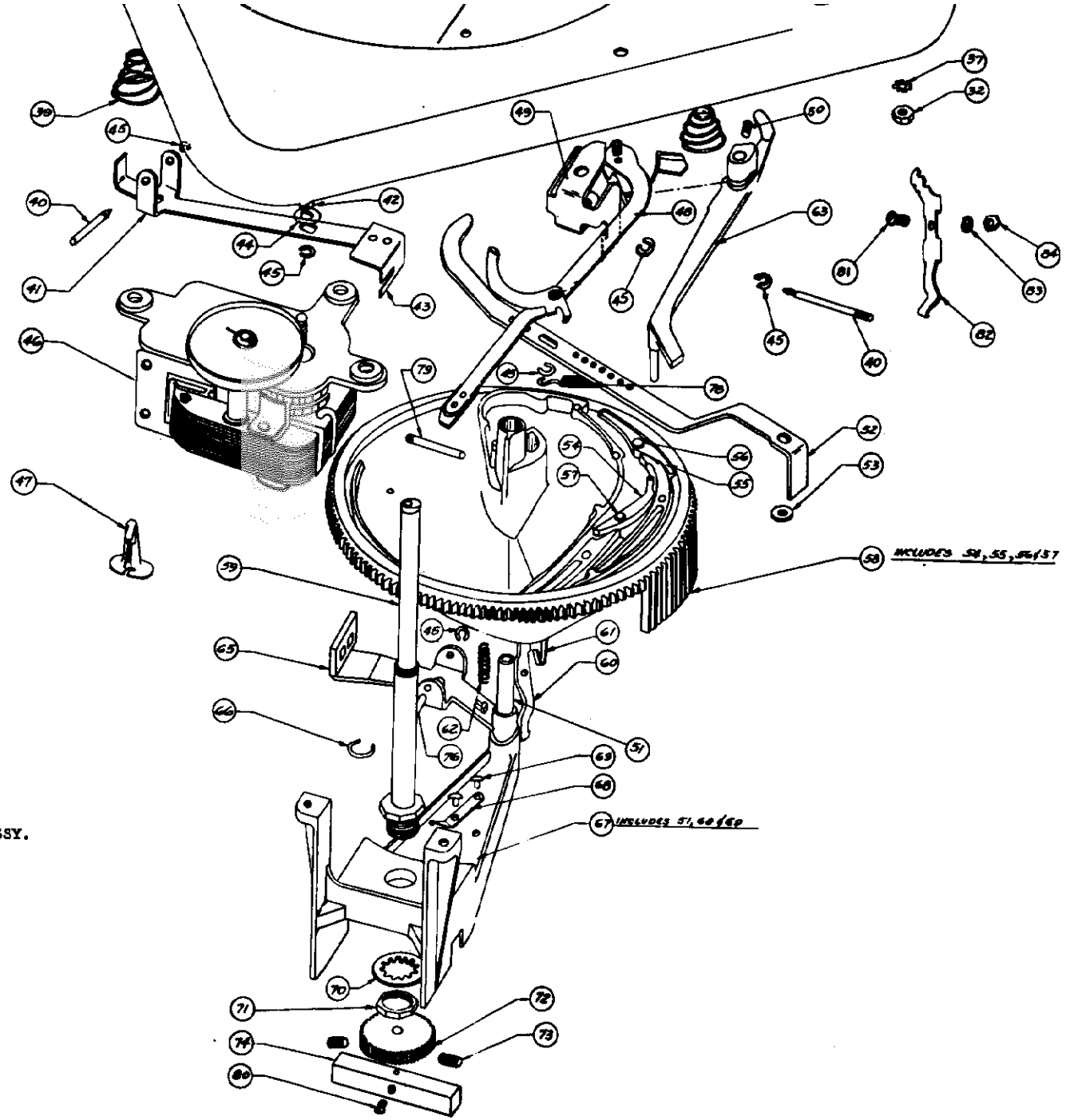

ITEM NO.	PART NO.	DESCRIPTION
46	56-73555	MOTOR
47	37-73031	SNAP FASTENER
48	55A74635	VELOCITY TRIP ASSY.
49	10-73132	TONE ARM HINGE BRACKET
50	2089-S	SET SCREW
51	12-72987	CAM PIVOT STUD
52	55-73102	REJECT TRIP LEVER
53	1602-A	WASHER
54	55-73153	SELECTOR FROG
55	55-75048	STATIONARY FROG
56	2252-G	RIVET
57	12-73060	STUD
58	43A75411	CAM & FROG ASSY.
59	19A73025	SPINDLE ASSY.
60	55-75142	CAM TRIP ACTUATOR
61	33-75136	SPRING
62	33-73577	SPRING
63	55A73045	LIFT & SWEEP LEVER ASSY.
64	57A73290	MOTORBOARD ASSEMBLY
65	55A74813	ACTUATING LEVER ASSY.
66	33-73610	CLIP
67	10A75238	POSITIONING BRACKET SUB ASSY.
68	33-73135	SPRING - DETENT
69	2211-A	RIVET
70	1932-C	LOCKWASHER
71	1042-A	NUT
72	28-73084	PINION
73	2079-S	SCREW
74	32-73301	SPINDLE CAP ROD RETAINER
75	65-75007	LINER
76	12-73568	ACTUATING LEVER PIN
77	12-73120	PIN
78	33-71342	SPRING
79	12-75139	CAM TRIP ACTUATING PIN
80	1344-A	SCREW
81	1311-A	SCREW
82	33-72963	GROUND SPRING
83	1900-A	LOCKWASHER
84	1028-A	NUT
85	33-74530	DETENT SPRING

All Series 700 Record Changers are of the single post, fully automatic drop type, featuring single button control and eccentric spindle cam record selection. The series 700R Record Changer has the record support platform in the left rear corner. Series 700F has the record support platform in the left front corner.

OPERATION

Starting - when the switch Button (58-73096) is moved to the "ON" position, power is connected to the Motor (56-73555) causing the Turntable Assy. (66A74682) to rotate, and automatic cycling, which is required to drop the first record, is accomplished by pulling the Switch Plate (10-74368) in the direction indicated by the arrow. When automatic cycling is started the Manual Trip Lever (55-73102) is advanced until it contacts the Cam Trip Lever (55A74833) mounted on the Main Cam (43-73159) which moved sufficiently to permit the spring loaded Pinion Actuating Lever (55A74813) to function, which, in turn, lifts the floating brass Pinion Assy. (28A73704) directly beneath the spindle so that a projection on this floating Brass Pinion is caused to engage a finger on the adjustable collar (65-73595) fastened to the Turntable Hub.

The combination of the foregoing causes the turntable to become connected with the Main Cam which through its single revolution performs all of the required change cycle functions. It is to be noted that, except during the change cycle, the motor power is used only to revolve the Turntable.

Cycling - As the Main Cam rotates, the spring loaded lever which actuates the Floating Pinion is automatically depressed and thus reset for the next change cycle.

At the end of the change cycle the Motor power is disconnected from the change mechanism when the Plastic Washer mounted on the Floating Brass Pinion drops into a depression on the top edge of the rim of the Main Cam. This position, called home position of the Main Cam, is retained by a Leaf Spring (33-72963) detented in the cam hub.

Record Selection - Record Selection is accomplished during one complete revolution of the Eccentric Cam Assy (43A72960) at the top of the lower section of the spindle. This portion of the change cycle is accomplished when the extended section of teeth of the Main Cam engages and rotates the Spindle Cam Pinion (28-73084). The home, or in line position of the Record Selection Eccentric Cam is retained by a Leaf Spring (33-73135) which detents into a slot in the underside of the Spindle Cam Pinion. Successive record drops are accomplished by a repetition of this action.

Pickup Arm Movement - The movement of the Tone Arm Assy. (69A73087) during cycle is controlled entirely by the surface and grooving of the Main Cam. These movements are picked up by the Sweep Lever Assy. (55A73045). After a record has been played or when it is rejected, the Trip mechanism causes the Main Cam to rotate which, in turn, lifts the Tone Arm off the records sweeping it clear to permit a record to drop and returning it to the edge of the record. The Tone Arm Support mechanism is so designed to permit the Tone Arm to be handled during any part of the change cycle without damage to the mechanism. This is accomplished by two spring loaded Mating Cams (43-73069) (43-73113) which disengage when any restraint prevents it from following the motions of the Sweep Lever. The Tone Arm is also vertically spring loaded allowing it to be lifted upward to an almost vertical position to permit ready changing of needles or cartridge.

Automatic Trip - This trip is so designed that it will start the automatic cycling mechanism when the Tone Arm moves toward the Spindle at a rate of speed greater than 1/8" per revolution of the Turntable. This Trip, therefore, is practically universal as it will operate on any center leading groove or center eccentric circle groove records conformin g to RMA specifications. However, the Trip does not become operative except within a distance of approximately 3" from the Spindle. Thus, manual resetting of the Tone Arm is possible at distances greater than 3" from the Spindle.

The Velocity Trip is composed of three major elements: The Trip Lever Assy (55A73042), the "V" Lever (55-72966) and the Crescent Lever (55-73066). The Trip Lever and "V" Lever work together through a Friction Clutch (10-72953), the tension for which is maintained by a Coil Spring (33-73334) which is one of the elements in the assembly of these two parts. As the Tone Arm moves toward the spindle center, the sickle shaped section of the Sweep Lever comes into contact with one leg of the "V" lever causing the tip of the Trip Lever to move toward the center of the Turntable by energy transmitted through the Friction Clutch. This movement continues until the tip of the Trip Lever is in the range of the Finger of the adjustable Collar mounted on the Turntable H ub. Once this position is attained and so long as the movement of the needle toward the Spindle is less than 1/8" per revolution the tip of the Trip Lever will be retarded from further movement by being pushed away once during each revolution of the Turntable. This retarding movement means that the Friction Clutch slips a corresponding amount. When the needle moves into a fast spiral or an eccentric center groove of the record, the tip of the Trip Lever will move so rapidly toward the center of the Spindle it will allow the tip of the Crescent Lever to slide off the flat surface of the Cam Trip Lever and engage itself behind the Lever. In the next revolution of the Turntable the finger on the adjustable Collar will force the Trip Lever outward causing the Crescent Lever to move the Cam Trip Lever far enough to unlatch the Floating Pinion Actuating Lever, thus setting up the change cycle as previously described.

10" and 12" Operation - The 10" and 12" indexing is determined by the main cam by allowing the sweep lever pin to enter either the 10" or 12" indexing track. This switching is controlled by means of a Frog (12-73060) which is moved from one side to another by the Frog Actuating Lever Assy. (55A73886 Rear) or (55A74605 Front) extending from the Record Support Assy. (62A73129 Rear) or 62A74720 Front). This lever shunts the sweep lever pin into the indexing track dependent upon whether the record support is pushed toward or away from the spindle for 10" or 12" records.

ADJUSTMENTS

Tone Arm Index - The tone arm should be indexed at the start of every record approximately 1/8" from the edge for both the 10" and 12". If the needle index is too far in or out, this this may be corrected by loosening one of the two set screws found in the lower cam located in the bottom of the tone arm approximately $\frac{1}{2}$" above the top of the motorboard, and advancing the other set screw sufficiently to bring about proper indexing. The proper setting having been obtained, both screws should be locked tightly. This action is accomplished by means of the two screws contacting a flat on the vertical shaft at an angle that will cause the shaft to turn with any movement of either screw.

Adjustment of Record Support - When the record is centralized with the lower part of the spindle, the record support platform in both 10" and 12" position should clear the edge of the record by approximately .015" (1/64). To move this setting for the 12" record, it is necessary to advance or retract the set screw nearest the spindle on the upper part of the support beneath the motorboard. The screw farthest away from the spindle will adjust the 12" position in a similar manner.

Spindle Alignment - If the spindle eccentric cam is not lined up perfectly with the lower part of the spindle while out of cycle, the main cam should be moved to its home position as determined by its detent spring and the spindle pinion gear should also be moved to its home position as determined by its detent spring. Loosen the set screws in the hub of the spindle pinion gear and line up the eccentric with the spindle, then tighten set screws.

The spindle cap should be positioned so that the slide is pointing towards the center of the record support. This may be positioned by loosening the screws on the square retaining bar found in the lower bracket. There should be approximately .005 total vertical play in the spindle assembly after both adjustments to prevent binding.

Main Cam Frog Movement - When the record support is in the 12" position, the phosphor bronze spring that actuates the 10" or 12" selector Frog pin should be high enough to clear the frog pin. When the record support is in the 10" position this spring should cause an interference with the frog pin enough to move it into position to shunt the sweep lever pin into the 10" indexing track. This spring is slit for the purpose of easy adjustment. If this spring does not move the frog enough, it should be rebent to do this. It should be remembered that the frog is so constructed that as the sweep lever pin goes past it, it will automatically reset the frog in the 12" position, and to play a 10" record this pin must be reset by the spring everytime.

Removing Turntable - To remove the turntable for any reason, remove the small horseshoe-like spring found around the spindle near the turntable top. Then make sure that the trip lever is moved far enough away from the turntable center to allow it to clear the extremities of the bakelite washer of the floating pinion. The turnable may then be removed by lifting up. In replacing the turntable care should be taken to see that the idler tire is properly positioned within the I.D. of the turntable and that the trip lever is also out of the way so that it will not be bent by the bakelite pinion gear washer.

Adjustment of Tone Arm Height - If tone arm needle does not clear a stack of records, loosen the set screw securing the vertical tone arm shaft underneath the motorboard and raise the shaft up. In some extreme cases the zinc sweep lever itself may be bent. If the needle is set too high to play the first record, retract the set screw found on the top of the motorboard directly behind the tone arm.

DIFFICULTIES

Failure to Feed Record - This could be caused by the spindle eccentric cam not lining up with the lower spindle sleeve at the end of its cycle. First determine whether the detent spring is in the pinion depression. If this is so, and it is still out of alignment, loosen the screw and adjust as previously explained under SPINDLE ALIGNMENT. Secondly, check the position of the record support as previously explained. Check the record thickness for a maximum of .10" at center hole (RMA maximum thickness).

Drops two or more Records at Once.- Check thickness of record at center hole. Record should be not less than .070" at this point. If the records are within this RMA minimum, check the spindle slide. It should be flush to .020" below the bottom of the spindle cap. If it is too low file it off, if it is too high remove the pin in the cap and file the slot to get the proper dimension. This pin is held in the cap by a light knurl fit and can be easily replaced. Be careful not to bend the spindle rod during this process.

If two records still drop, check the record support setting (see above). N ote: Proper record diamenter for all settings of the record support should be:

9-7/8" ± 1/32 for the 10" record
11-7/8" ± 1/32 for the 12" record (RMA STANDARDS)

Continuous Trip - This is caused by the floating pinion not dropping far enough away from the projection of the collar on the turntable hub. Make sure the main cam is in home position and that the floating pinion falls in the depression of the cam edge and remains there until the record is completed. Rotate the turntable to make sure that the collar clears it by approximately 1/32. Reject the changer and check to insure approximately 3/64 or better engagement with the collar finger. Check the manual trip lever to make sure it clears the cam trip lever.

No Tripping - If the changer wont trip manually, check the manual trip lever to make sure it moves the cam trip lever enough to unlatch the pinion actuating lever. This action should occur before the switch plate reaches its maximum allowable rotation.

No Automatic Trip - Check the pickup lead to make sure it is not binding the tone arm movement, particularly as the needle approaches the spindle. Check the V lever to make sure it rotates freely and the clutch has movement. Put the cam in home position and make sure the crescent trip lever is free and contacts the flat side of the cam trip lever. Move the V lever and make sure the clutch imparts enough force to the trip lever to allow the crescent lever to move along the flat and drop behind the trip lever. There should be no friction or binds in any of these mechanisms. Non-tripping can be caused by any binds or by too tight or light a spring load on the crescent. This spring load is adjustable by anchoring the crescent lever spring in any one of three holes.

©John F. Rider

MOTOROLA INC.

MODELS RC-30-A, RC-34, RC-35

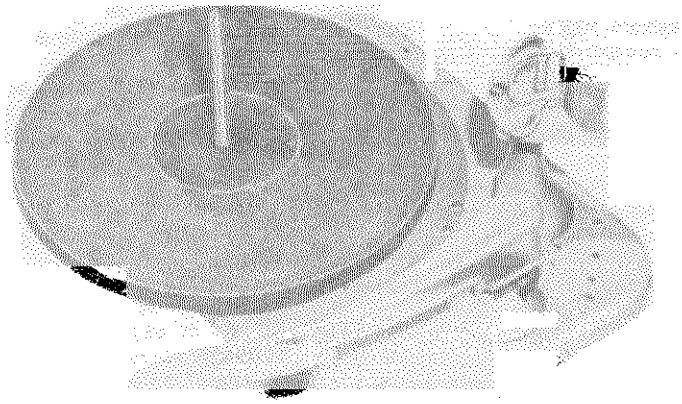

GENERAL INFORMATION

RECORD CHANGER RC-30-A. Record Changer RC-30-A is a single-post changer designed to play automatically, 10 ten-inch or 8 twelve-inch records, not intermixed. The "motor" and "reject" switches required to operate this changer are part of the radio receiver. Pushing the "R" button will energize an electro-magnet and start the changing cycle. However, from then on, at the end of each record, the cycle is started mechanically and the trip coil is no longer required.

That method of rejecting records is the essential difference between the RC-30 and the RC-30-A changers. The RC-30 used an electrical solenoid coil each time a record was dropped.

The top appearance of the two changers is identical, but the RC-30-A can easily be identified on the under side by the position of the rejecting coil. The coil is near the gear arm on the RC-30, but it is close to the outer edge of the mounting plate on the RC-30-A.

RECORD CHANGER RC-34. Same as RC-30-A except all painted parts are red mahogany (instead of green) and rubber shock mounts are used in place of spring cushions for mounting changer in radio cabinet.

RECORD CHANGER RC-35. Same as RC-30-A except all painted parts are red mahogany instead of green.

IMPORTANT POINTS TO REMEMBER WHEN SERVICING RECORD CHANGERS

WARNING: Do not lift the record changer by record post or record support platform. Always lift the changer by its base only.

IMPORTANT: Final adjustments on record changer are to be made with the changer horizontal and supported by its 4 corners. AVOID DISTORTING THE BASE WHEN MAKING FINAL ADJUSTMENTS.

CHECK THE RECORD FIRST

Before attempting to service or adjust the record changer, check the records first to make sure they are not causing the trouble. This instrument will handle most of the 10 or 12 inch records available on the market, but it is not guaranteed to handle all of them. Records must be in good mechanical condition and should not be chipped, particularly around the center hole. Do not try to play automatically, records that are too thick, too thin, or that are oversized or undersized, in regard to the diameter of record or center hole. Do not mix 10 and 12 inch records on the changer.

Warped records can slip on the turntable and introduce "WOWS". Such records may be flattened by placing between the two pieces of flat plate glass and then heating in the sun or oven. Do not overheat. Allow record to cool for several hours before removing glass.

Old records, made before the days of automatic record changers, may not change automatically, due to the difference in thickness, or to lack of the proper groove at the finish. Most of the old records, however, may be played one at a time.

RECORD CHANGER OPERATION

(Throughout the following instructions, refer to Figure 1).

WHICH RECORDS CAN BE PLAYED

As many as 10 ten-inch or 8 twelve-inch records may be placed on the record changer which will play them all in sequence, repeating the last record until the instrument is turned "OFF". Do not overload the instrument by attempting to stack more records on it at one time.

This record changer will accommodate most 10 and 12 inch records now available on the market, but is not guaranteed to handle all of them. Records must be in good condition, as no record changer will operate properly with chipped or warped records. Records in which the center hole is worn or chipped should not be played automatically on this changer.

Occasionally, a new record may fit tightly over the center spindle due to the label attached to the record not being properly centered. This condition may be readily remedied by reaming out the center hole with a hexagonal lead pencil.

When operating this automatic record changer, play only the size record for which the adjustment on the record support plate indicates. Do not inter-mix 10 and 12 inch records.

MODELS RC-30-A, RC-34, RC-35

MOTOROLA INC.

TO LOAD RECORDS

1. Adjust the Record Support Plate

The turning of the record support plate automatically adjusts the changer for either ten or twelve-inch records. For playing ten-inch records the numeral (10) will be nearest the record post.

2. Adjust the Record Clamp

This clamp is mounted on the record support plate, and serves to steady the stack of records. Flip it away from the turntable.

3. Turn the record post cap so it is out of line with the record post.

4. Load the Records

Place the records over the record post so they rest on the record support plate and on the small ledge formed by the record release eccentric offset in the spindle. Records may be loaded and played one at a time, or as many as 10 ten-inch or 8 twelve inch records may be loaded at one time. Do not try to play a larger quantity.

5. Readjust the Record Holding Clamp

Flip the record holding clamp back over the record support so it rests on the rim of the top record and holds the stack of records steady.

TO PLAY RECORDS AUTOMATICALLY

1. Turn radio "ON" and set the PHONO-RADIO selector control to PHONO position.

2. Push the "M" button in. The button will lock in and the turntable will now revolve.

3. Momentarily push the "R" button. The first record of the stack will drop to the turntable and be played. After all records have been played in turn, the instrument will repeat the last record until it is turned off. Pushing in the "M" button will now stop the turntable. The "R" button may be pushed in to reject a record before it has been completely played.

NOTE: Never touch the pickup arm when the instrument is in a changing cycle. Should you move it out of adjustment, stop the changer and gently move the pickup arm from side to side until you hear it "snap" back into position.

TO UNLOAD RECORDS

1. Allow the instrument to go through its complete cycle and start to play the last record over.

2. As soon as this occurs, push the "M" button to stop turntable. (Alternate pushes start and stop the motor).

3. Lift the pickup arm off the record and place it on its resting post.

4. Turn the record post cap so it is in line with the record post.

5. Lift the records off.

HOW TO REPLACE NEEDLE

This record player is equipped with a permanent point long-life needle that is good for several thousand plays unless damaged by mishandling. To replace phonograph needle, loosen the small knurled nut that holds the needle in place. The nut is accessible from the bottom of pickup arm. Use a pair of long nose pliers or tweezers to avoid damaging the crystal cartridge. Recommended replacement needle is Motorola Part No. 47K471596.

CAUTION: Standard type needles will not work.

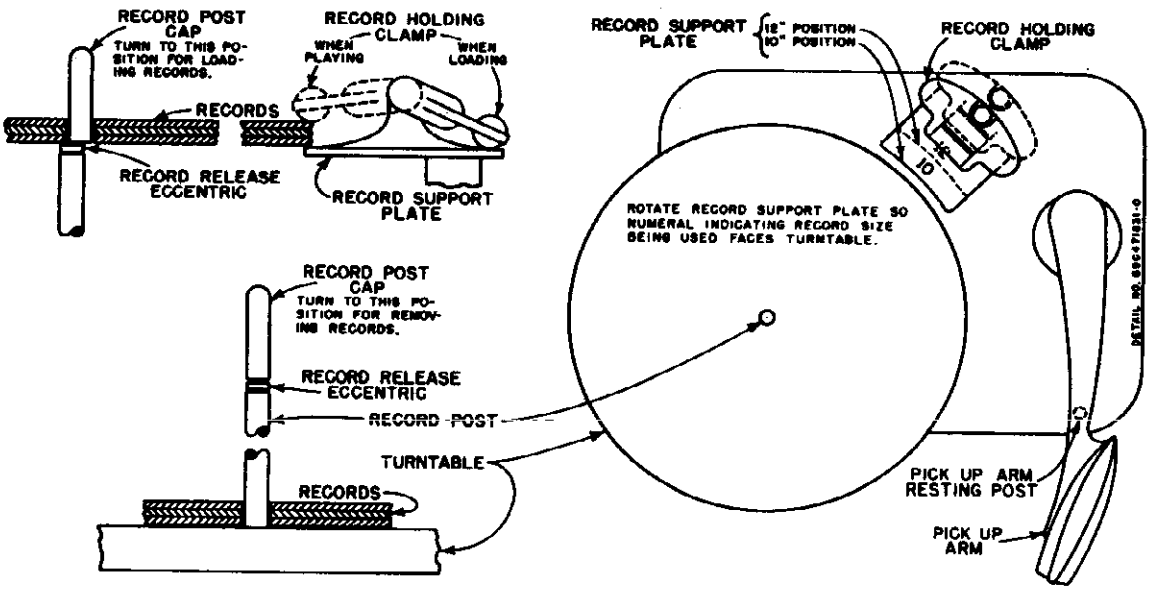

FIGURE 1. OPERATING INSTRUCTION DETAIL

©John F. Rider

MOTOROLA INC. MODELS RC-30-A, RC-34, RC-35

THEORY OF OPERATION

NOTE: *Numbers in parenthesis ( ) refer to parts shown in Figures 2, 3, 4, 5 & 6.*

The turntable is rim driven. Power is transmitted to it from the motor shaft by means of a rubber-tired drive wheel (84). The record post (48) does not revolve; it is fixed to the record changer base.

The heart of the record changer is the cam wheel (11). On it are cast all the cams, extrusions, etc., required to perform all the operations during the changing cycle. See Figure 2.

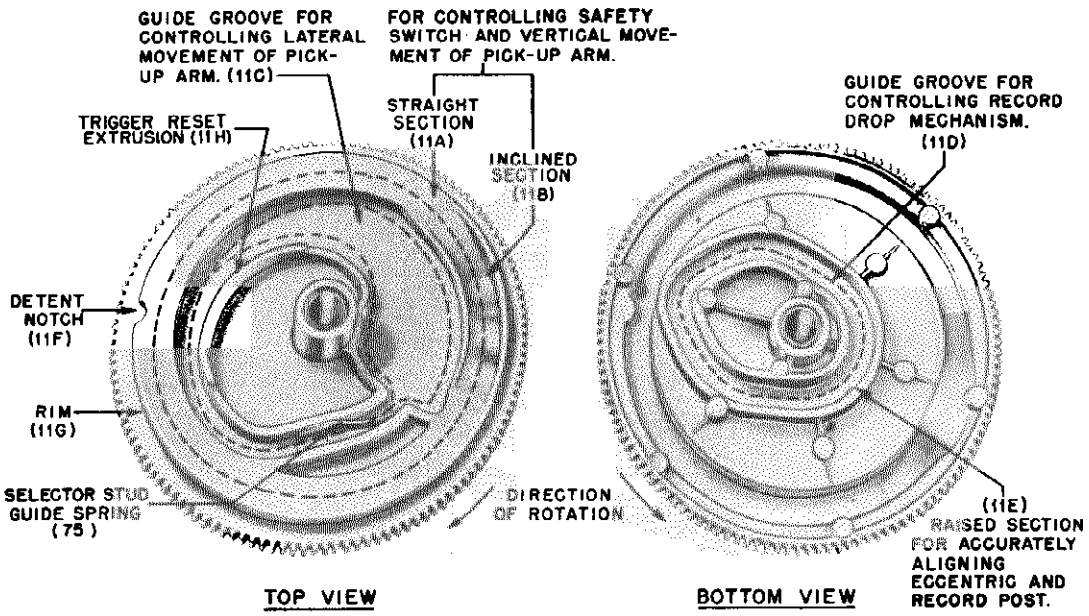

FIGURE 2. CAM WHEEL

The only mechanism that operates during the playing of a record, is the motor and turntable. The changing mechanism is disengaged until the change cycle starts.

The change cycle starts when the phono pickup needle comes within 1-7/8" of the record post. This causes screw (55) on trip arm (82) to actuate trip link (97) which trips the trigger by moving the latch arm (96) and allowing the small trip arm (105) to slip from its notch. Now spring (103) through bell crank lever (94) moves the drive arm (22) so that drive pulley (23) comes in contact with the inside rim of the revolving turntable, starting the change cycle.

With the same motion of the bell crank lever, its roller (94A) leaves the detent notch (11F) in the rim of the cam wheel and the cam wheel revolves. The roller (94A) now rides on the rim (11G) of the cam wheel and in this manner, holds the drive pulley (23) firmly against the turntable. The pressure with which the drive pulley bears against the turntable is adjusted by means of eccentric stud (94B).

As the cam wheel revolves, the pickup lift rod (54) rides up the inclined section (11B), lifting the pickup arm off the record. After the pickup arm is elevated, continued rotation of the cam wheel swings the pickup arm outward. The lateral movement of the arm is controlled by the selector stud (82A) which rides in a specially shaped groove (11C) in the cam wheel.

The gear arm roller (25A), riding in the specially shaped groove (11D) located on the bottom of the cam wheel, controls the dropping of records. Movement of the gear arm (25) causes the eccentric (24) to turn through 180°. When the eccentric (24) is in line with cap (12), it picks up a record and when it rotates back into line with the record post (48), the record is dropped onto the turntable.

Continued rotation of the cam wheel swings the pickup arm (by action of the selector stud (82A) riding in groove 11C) back over the first groove in the record and the arm is gently lowered onto the record when the inclined section (11B) reaches the pickup lift rod (54).

As the cam wheel approaches the full 360 degree point of its rotation, the trigger reset extrusion (11H) pushes against the trigger reset roller (105A) of the small trip arm, causing the trigger to be "cocked" ready for the next cycle, and in the same motion applies spring tension through the torsion spring (103) to the bell crank lever (109) so that when the cam wheel detent notch (11F) reaches the bell crank lever roller (94A), the roller falls into it pulling the cycle drive pulley (23) away from the turntable rim and the cam wheel stops, ending the cycle.

After the drive pulley is pulled away from the turntable, its motion is arrested immediately by a brake (See Figure 3) to prevent re-cycling.

MODELS RC-30A, RC-34, RC-35

MOTOROLA INC.

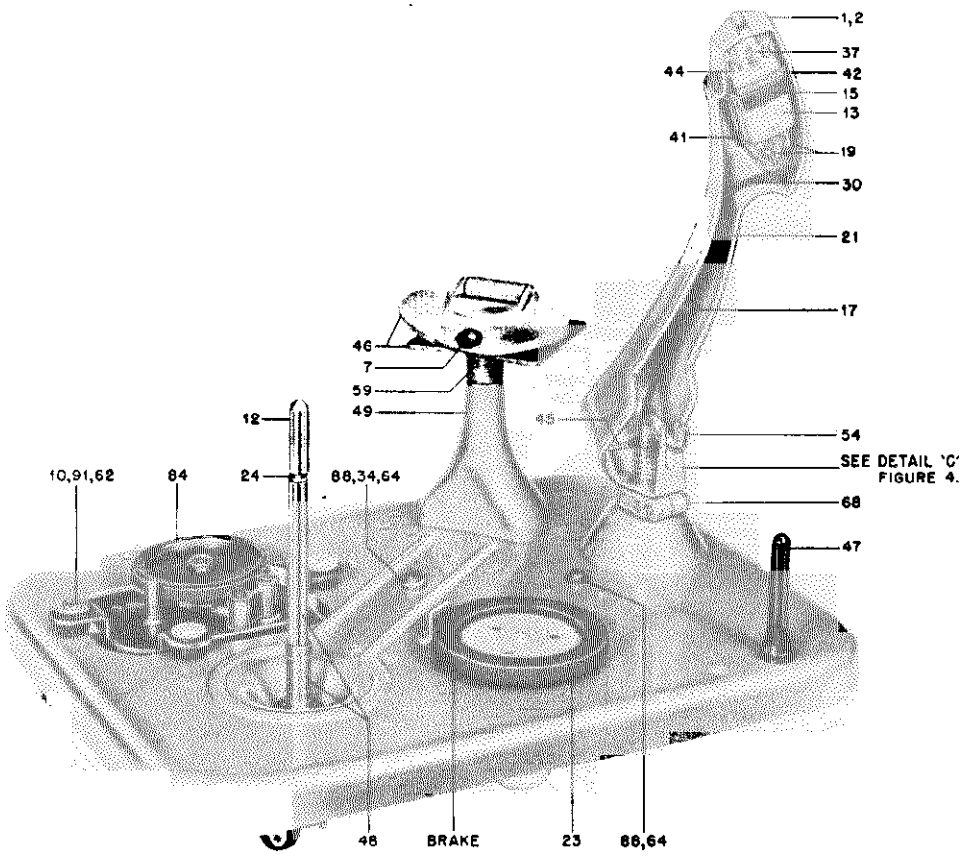

FIGURE 3. PARTS LOCATION - TOP VIEW

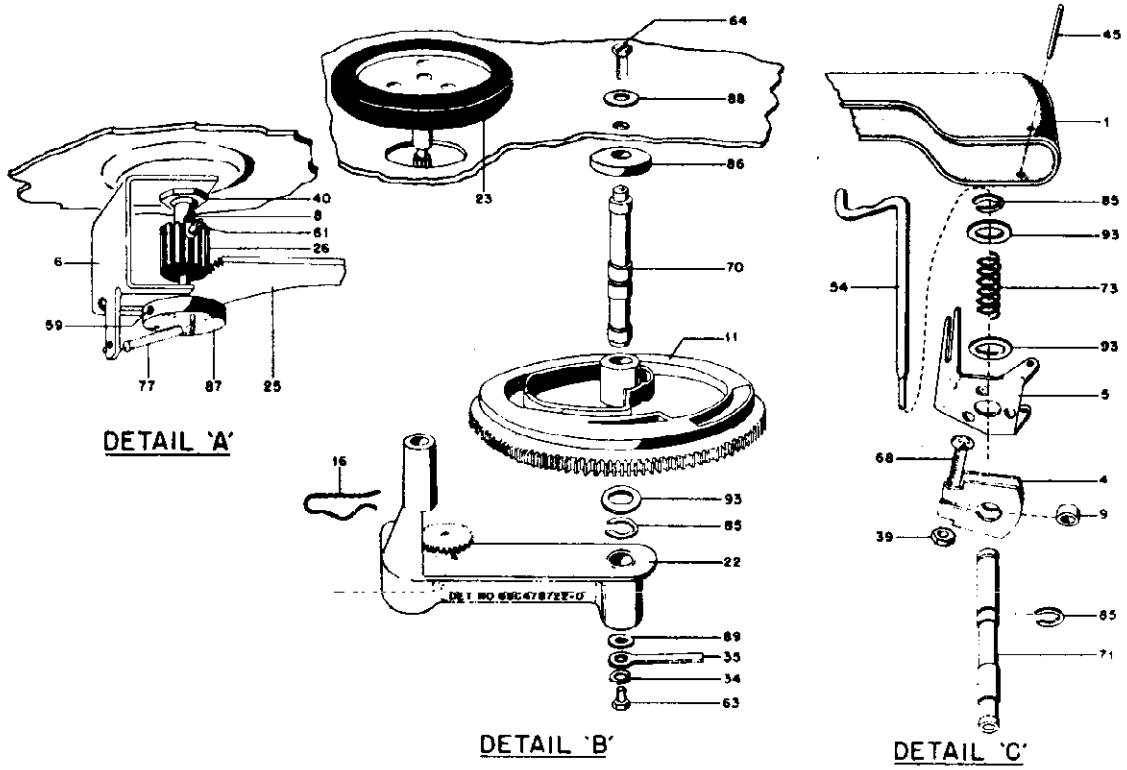

FIGURE 4. PARTS LOCATION - DETAILED ASSEMBLIES

©John F. Rider

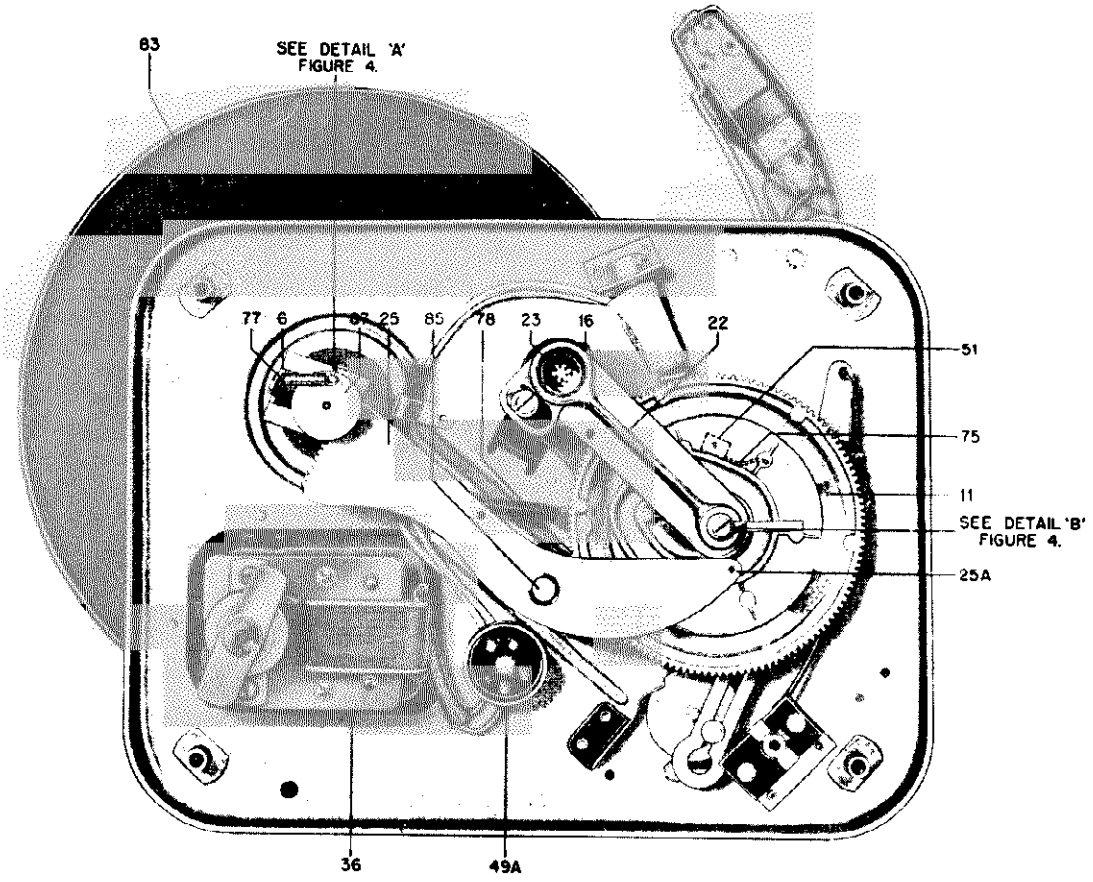

FIGURE 5. PARTS LOCATION - BOTTOM - COMPLETE

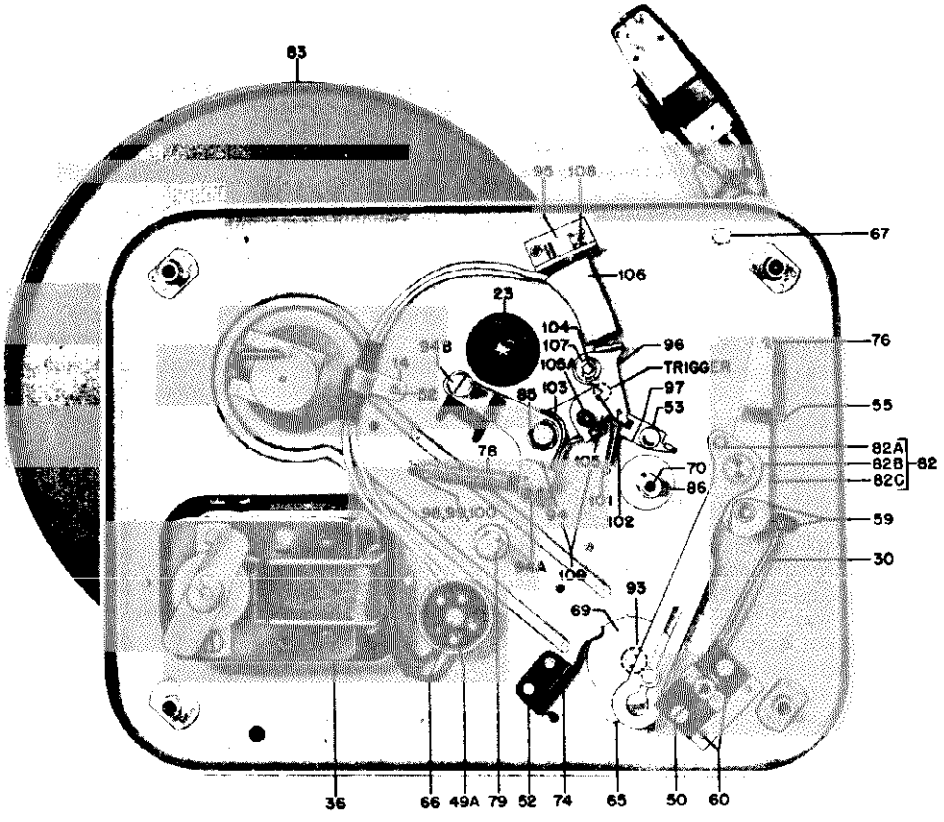

FIGURE 6. PARTS LOCATION - BOTTOM - PARTLY DISASSEMBLED

Turning the record support plate (46), to accommodate the size record being used, automatically sets the mechanism so the needle set-down point will be correct for the size records being played. Selector lever (82B) is moved by the stud on selector plate (69), changing the angle between trip arm (82C) and selector lever (82B).

An external momentary contact (REJECT) switch is used to manually start the change cycle or to reject a record before it has been completely played. Pushing the "R" button will energize the trip coil (106) and will move the latch arm (96), allowing the changer to cycle as previously described.

A special clutch device, built into the base of the pickup arm, prevents damage to the mechanism should the arm be accidentally touched while the instrument is in cycle. Should the arm be accidentally moved out of adjustment, stop the changer and move the arm from side to side until you hear it snap back into position.

USE OF TEST CORD

To operate this record changer independently of the radio receiver, it will be necessary to obtain or construct a test cord. Figure 8 shows the hookup and parts required.

A ready-made cord can be obtained from Motorola -Order Part No. 1X471448 - List $2.70. It will only be necessary to attach a wall outlet plug to the red and gray leads to prepare this cord for use. The black lead is not used and can be cut off. (This cord is the same as used on some 1947 Motorola home sets).

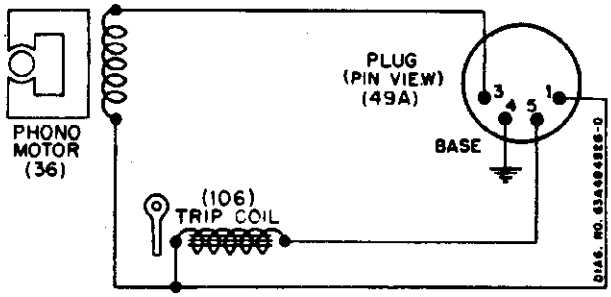

FIGURE 7. RC-30-A WIRING DIAGRAM

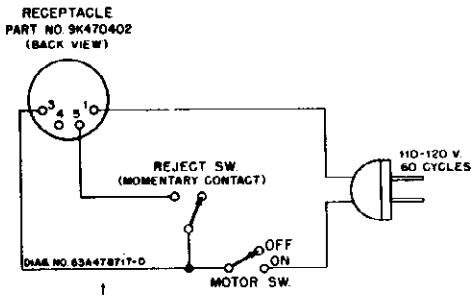

FIGURE 8. TEST CORD WIRING DIAGRAM

ADJUSTMENTS

NOTE: *Reference numbers in parenthesis refer to Figures 3, 4, 5 & 6.*

ECCENTRIC STUD ADJUSTMENT

This adjustment is one of the most important for dependable cycling of the record changer. It must be followed closely, as too tight an adjustment will cause slow cycling and undue motor wear, or the changer may keep cycling continuously; a loose adjustment may prevent changer from cycling at all.

1. Set changer in cycle and stop turntable when pickup arm comes back to within one inch of right of turntable (almost the set-down position.)

2. Loosen eccentric stud (94B) completely, so drive pulley (23) moves completely free of the turntable.

3. Rotate turntable by hand (counterclockwise) 90° (1/4 turn) and back (clockwise). Pickup arm should not move.

4. With a screwdriver, turn eccentric stud until pickup arm begins to move when rotating turntable by hand clockwise. Do not hold screwdriver on eccentric stud while checking adjustment.

5. When pickup arm moves down with the clockwise rotation of turntable without slipping, but not up with counterclockwise rotation, the critical position of the adjustment has been reached.

6. Then tighten the eccentric just far enough to pick up the pickup arm when rotating the turntable counterclockwise and setting is complete.

7. To check for too tight adjustment, complete cycle of changer with motor operating. Complete change cycle should not take more than 7 seconds; if it takes longer, eccentric stud should be readjusted.

RECORD SUPPORT PLATFORM ADJUSTMENT

It is important that all points on the "lip" of the record support platform be equi-distant from the center point of the spindle. This will assure that all points of the record will leave the platform at the same time. If the record support is too far out of alignment, the record would actually hang on the point nearest the spindle and fail to drop properly from the record post.

1. Turn the spindle cap (12) so it is in line with record post (48). Turn record support platform (46) to the 10" position, making sure it is turned so that the selector spring (74) falls into the detent notch.

2. Place a standard 10" record on the record spindle and hold it in line with the record support platform (46) and eccentric (24).

3. If parts are adjusted and aligned correctly, the record should clear the lip of the record support platform equally at all points and the gap between record and record support platform should be just large enough to let the record clear the platform.

NOTE: The 10" record used should have a diameter of 9-7/8" ± 1/64".

4. If one point of the record support platform (46) is nearer the record than the other, the position of the platform may be adjusted after loosening the two Allen head screws (59) located directly under record support platform (46). (Use a #6 Allen head driver -Motorola Part No. 66X10704).

5. Spacing between the record post (48) and record support platform (46) can be varied by loosening the two screws (65) located underneath record support post (49). Correct spacing is indicated as in Step 3 above.

NOTE: A "standard gauge" (Motorola Part Number 66A75278) can be used in place of a record when adjusting the platform.

6. **TEST:** After tightening the setscrews, test the adjustment by running a ten-inch record through a complete cycle and check the point where the needle falls. If the needle misses the record by one inch, the record support platform (46) is 180 degrees out of line with the detent plate (69) and should be turned one-half turn without turning the detent plate.

NEEDLE SET-DOWN POINT

1. Turn the record support to the twelve-inch position.

2. Place a standard twelve-inch record on the turntable.

3. Start the changer and allow it to go through its cycle.

4. Note the point at which the needle contacts the record. It should contact the record in the middle of the area between the first groove and the edge of the record.

5. If the needle doesn't come down at the proper point, cycle the changer and stop it just as the pickup arm is coming down on the record.

6. Place a full stack (eight) of twelve-inch records on the turntable.

IMPORTANT: It is imperative to make this adjustment while the selector stud (82A) is still riding in the groove of the cam wheel (11). If the record player is stopped <u>just</u> before the needle contacts the top record of a full stack of records, the selector stud (82A) will still be in the cam wheel groove and the pickup arm will not be free to move annoyingly about while the adjustment is being made. This is the reason for using a full stack of records on the turntable. If excessive pickup arm side play is noted at this point, check selector stud guide spring (75) on cam wheel. Excessive play between the selector stud (82A) and cam wheel groove will prevent needle from coming down at exactly the same spot on the record each time.

7. Loosen the adjustment lockscrew (68) and then move the pickup arm until phono needle is positioned correctly over the middle of the area between the edge and the first groove in the record.

8. After adjustment, tighten the adjustment lockscrew.

9. Check the adjustment by putting the changer through its cycle.

10. If necessary, repeat above steps.

11. Check adjustment, using a 10 inch record. If necessary, make minor compromise adjustments so needle will come down properly on both ten and twelve-inch records.

TRIP ADJUSTMENT

This adjustment must be made after the needle set-down point has been adjusted.

1. Draw a 3-3/4" diameter circle on a piece of paper, punch out a 1/4" diameter hole in exact center of the circle and slip the paper over the record post.

2. Turn the support platform to 12 inch record position.

3. Cycle the changer once; at end of cycle, pickup arm will rest along side turntable. Do not turn off changer.

4. Grasp the pickup arm and slowly move it towards the record post. As the pickup needle crosses the circle line, a click should be heard, indicating start of change cycle.

5. If change cycle start does not occur as needle crosses circle line, adjust screw (55) on trip arm (52) till cycle starts at correct point. Turn adjustment screw (55) clockwise if change cycle starts after needle crosses circle line, and counterclockwise if change cycle starts too soon.

RECORD DROP MECHANISM

Cycle the record changer once. At the end of the change cycle, stop the changer and carefully observe the position of the eccentric (24) with respect to record post (48). They should line up perfectly. If not, re-adjust as described below:

1. Put the record changer in cycle and slowly revolve the turntable by hand until the gear arm roller (25A) is resting on the raised section (11E) of the record drop groove on the cam wheel. The raised section of the groove is very small and resembles what is often taken for "flash" on castings. It serves to narrow down the groove at this point and in this manner, insures closer alignment of the eccentric (24) and record post (48).

2. Loosen the slab head setscrew (61) in the spindle gear (26). The eccentric (24) will now turn freely.

3. Turn the eccentric (24) so it is in perfect alignment with the record post (48).

4. Tighten slab head setscrew (61) in spindle gear (26). WARNING: DO NOT USE EXCESSIVE PRESSURE WHEN TIGHTENING SLAB HEAD SETSCREW. EXCESSIVE PRESSURE MAY DENT THE ECCENTRIC TUBE AND CAUSE BINDING.

VERTICAL ADJUSTMENT OF PICK-UP ARM

The pickup lift rod (54) controls the vertical movement of the pickup arm. If this adjustment is not correct, the needle may not rest properly on the first record, the needle may not clear a full stack of records, or the pickup arm may rub against the bottom record on the support post.

MODELS RC-30A, RC-34, RC-35 — MOTOROLA INC.

1. After the changer has completed its cycle and pickup arm is resting in playing position, stop the changer. The pickup lift rod (54) will now be resting on the bottom of the inclined section (11B) of the cam wheel (11) and the pickup arm will be at its lowest point of vertical travel.

2. The pickup now should be resting by the side of the turntable and the needle should be exactly level with the top of the turntable. If it isn't, lift the pickup arm straight up, exposing the pickup lift rod (54). With long nose pliers, bend the pickup lift rod (along its flat portion) in the required direction till the pickup needle point is exactly level with the top of the turntable.

LUBRICATION

Factory lubrication should be sufficient for a long period of service. However, if the record changer is subjected to severe operation conditions, it is best to clean and re-lubricate all moving parts.

Use Univis P-48 oil (Motorola Part Number 11M2340) on the eccentric and tube assembly (24) and Stay-Put grease (Motorola Part No. 11M476047) on all other moving parts. Use grease and oil sparingly; do not overlubricate.

CAUTION: Do not allow grease or oil to come in contact with any rubber parts. The motor spindle and inside rim of turntable must be perfectly clean of grease. If grease gets on any of these surfaces, it should be removed immediately with carbon-tetrachloride.

SERVICE INFORMATION

MECHANISM IS SLOW IN STARTING OR MOTOR HEATS UP

1. Check lubrication.

2. Dirt in bearings. Wash dirt out with carbon tetrachloride or similar solvent and re-lubricate. Use Univis P-48 oil in the phono motor and turntable bearings and Stay-Put grease on all other bearings and moving parts.

3. Check line voltage and frequency.

4. Motor damaged. Replace motor.

5. Room temperature abnormally low.

6. Eccentric stud adjustment (94B) set at maximum throw, causing cycle drive wheel to drag on turntable rim. Correct by setting eccentric stud per instructions under ECCENTRIC STUD ADJUSTMENT.

7. Slow motor. Replace motor.

8. Grease on rubber rim idler wheel and/or inner rim of turntable. Clean off with carbon tetrachloride.

MOTOR FAILS TO RUN

1. Check to see that power is being supplied to motor.

2. Trouble in motor winding. If easily seen, repair; otherwise, replace.

3. Damaged or frozen bearings. Replace motor.

4. Gummed oil or foreign material between armature and pole-piece. Clean out.

SQUEAKS OR OTHER NOISES DURING PLAYING OF RECORDS

1. Check lubrication (if squeaks are heard, they will usually be found to come from the records - not from mechanism.)

2. Compare the squeaks with and without a load of records. If squeak disappears when records are removed, then noise is obviously from records. Correct by rubbing a little wax on the record post.

CHANGER IS NOISY WHEN IN CYCLE

1. Check lubrication.

2. See if any part has become loose or bent and is rubbing against a moving part.

3. Check center post eccentric tube (24) lubrication.

"WOW" IN RECORD REPRODUCTION

1. Record is warped or otherwise defective, or the instrument is not being operated at normal room temperature (70°F). See CHECK THE RECORD FIRST.

2. May be caused by slippage due to grease on idler wheel or inside rim of turntable.

PICK-UP ARM TRIPS OUT OF GROOVES

1. Record changer not level.

2. Pickup arm shaft (71) binding in bearing.

   (A) Ream out the hole.

(B) Sometimes the trip arm (82) may be too close to the base, causing a bind. To remedy, loosen its two setscrews (59) and space slightly.

3. Selector lever (82B) may be bent out of shape and binding against detent plate (69). Straighten.

4. Selector lever (82B) slot or retaining rivet on detent plate (69) may be undersize or oversize, respectively, effectively causing a binding feeling on the pickup arm. Correct by spreading slot in selector lever (82B).

5. Needle defective. Replace.

CHANGER KEEPS CYCLING

1. Eccentric stud adjustment (94B) set too tight. Correct per instructions found under ECCENTRIC STUD ADJUSTMENT.

2. Defective reject switch on radio. Repair or replace.

3. Bell crank arm (94) or drive arm (22) binding on their shafts.

RECORD WILL NOT DROP WHILE CYCLING

1. Eccentric (24) out of line with record post (48). Correct as shown in ADJUSTMENT OF RECORD DROP MECHANISM.

2. Setscrew (61) loose on spindle gear. Tighten after readjusting.

3. Record platform (46) not set correctly. See RECORD SUPPORT PLATFORM ADJUSTMENT.

CHANGER WILL NOT CYCLE

1. Open trip coil (106). Replace.

2. Defective wiring.

3. Binding drive arm (22), bell crank arm (94) or cam wheel (11) on shafts. Replace parts or remove burrs.

4. Eccentric adjustment stud (94B) set at minimum throw. Cycling drive wheel (23) is not against inner rim of turntable. Correct by setting up as shown under ECCENTRIC STUD ADJUSTMENT.

5. Record finish groove may be too far from center. Trip switch will not be actuated until needle comes within 1-7/8" of record post. Use standard records.

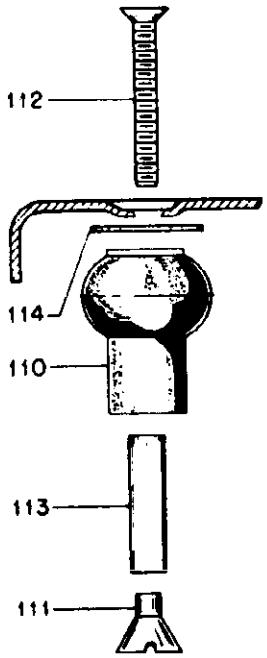

FIGURE 9. RC-34 SHOCK MOUNT ASSEMBLY

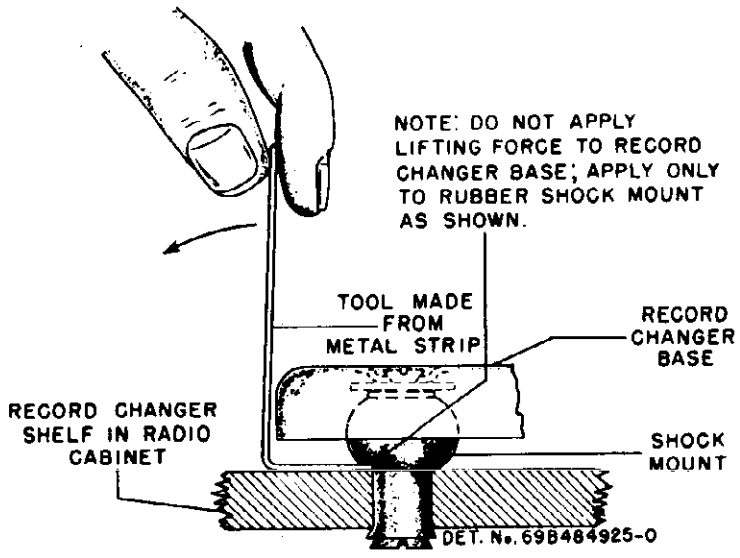

FIGURE 10. HOW TO REMOVE RECORD CHANGER RC-34 FROM RECORD CHANGER SHELF

MODELS RC-30A, RC-34, RC-35

MOTOROLA INC.

REF. NO.	PART NO.	DESCRIPTION
1	45K470538	Arm, pickup: arm only; painted green (RC-30-A)
	45K482820	Arm, pickup: arm only; painted red mahogany (RC-34 & RC-35)
2	1X470570	Arm, pickup: complete; includes crystal cartridge, needle, connecting lead and shaft assembly; arm painted green (RC-30-A
	1X484398	Arm, pickup: complete; includes crystal cartridge, needle, connecting lead and shaft assembly; arm painted red mahogany (RC-34 & RC-35
4	1X478181	Bracket, adjustment: includes screw and nut
5	7B471467	Bracket, pickup arm & guide
6	7B470266	Bracket, spindle
7	35A470831	Bumper, rubber
8	43K4780	Bushing: .250 x .171 x .187
9	43A478167	Bushing, shaft pickup
10	43K71249	Bushing, spacer
11	1X471999	Cam Wheel & Spring Assembly
12	1B470509	Cap & Spindle Assembly
13	59A471595	Cartridge, crystal: needle included
14	42K13135	Clamp, cable: 1/2"
15	42A75809	Clip, cartridge retainer
16	42A76484	Clip, drive wheel retainer
17	42A72314	Clip, retainer: 7/8"; blued
19	9A72670	Contact, pin terminal
21	35A72628	Cushion, pickup arm: 3/8" x 1/2" sponge rubber
22	1X470584	Drive Arm Assembly: complete with bearing and idler gear
23	1X71795	Drive Pulley & Shaft
24	1B470524	Eccentric & Tube Assembly
25	1X470593	Gear Arm & Bushing Assembly
26	44B71634	Gear, spindle
30	1X470582	Lead, pickup connecting
33	4S7657	Lockwasher: #8 external; cadmium plated
34	4S7671	Lockwasher: #8 split; cadmium plated
35	29R5239	Lug, soldering: #8, long tab
36	59K470458	Motor, phono: 105-120V, 60C; complete with rubber tired idler pulley
37	47K471596	Needle, phono: long-life
39	2S1375	Nut: 8-32 x 11/32 hex; cadmium plated
40	2S7004	Nut: 3/8-32 x 9/16 hex; cadmium plated
41	35A74664	Pad, cartridge (large): rubber
42	35A74665	Pad, cartridge (small)
44	47A74666	Pin, cartridge locating: rubber
45	47A71685	Pin, pickup arm support
46	1X470535	Plate & Clamp Assembly; painted green (RC-30-A)
	1X482826	Plate & Clamp Assembly; painted red mahogany (RC-34 & RC-35)
47	46K470827	Post, pickup resting: green plastic (RC-30-A)
	46K482816	Post, pickup resting: red mahogany plastic (RC-34 & RC-35)
48	47B470276	Post, record & bushing
49	46B470931	Post, record support: painted green (RC-30-A)
	46K482817	Post, record support: painted red mahogany (RC-34 & RC-35)
49A	28A470634	Plug, 4 pin
50	9A470260	Receptacle, phono output
51	6S2834	Rivet: .062 x 9/64 brass; nickel plated.
52	5S2824	Rivet: .122 x 5/32 steel; burnished brass finish
53	5K21337	Rivet, shoulder: .130 x .230
54	47A471481	Rod, pickup lift
55	3S2697	Screw: #2 x 5/8 PKZ plain hex head sheet metal screw; cadmium plated
59	3S9700	Setscrew: 6-32 x 3/16 Allen head; cadmium plated
60	3S3376	Screw: #6 x 1/4 PKZ slotted hex head sheet metal screw; cadmium plated
61	3S7109	Screw: 6-32 x 5/16 slab head setscrew; cadmium plated (trip coil)
62	3S7342	Screw: 6-32 x 5/8 slotted binderhead machine screw; cadmium plated
63	3S7374	Screw: 8-32 x 5/16 slotted hex head machine screw; cadmium plated
64	3S2291	Screw: 8-32 x 5/16 slotted hex head machine screw; antique copper finish
65	3S8177	Screw: #8 x 3/8 PKZ slotted hex head sheet metal screw; cadmium plated
66	3S2957	Screw: 8-32 x 1/2 slotted hex head machine screw; cadmium plated
67	3S2678	Screw: #8 x 5/8 plain locking hex head sheet metal screw; cadmium plated
68	3S476110	Screw: 8-32 x 3/4 Phillips round head machine screw; cadmium plated
69	1X470480	Selector Shaft & Plate Assembly
70	47B470269	Shaft, cam
71	47A471471	Shaft, pickup
73	41A471469	Spring, compression
74	41A71635	Spring, selector
75	41A471995	Spring, selector stud guide
76	41A471681	Spring, tension coil
77	41A14244	Spring, tension coil: 1/8 x 23/32
78	41A470592	Spring, tension coil: 1/4" x 1"
79	46A470257	Stud, gear arm
82	1X470539	Trip Arm & Selector Lever Assembly
83	59C470590	Turntable, phono: includes oilite bearing; green (RC-30-A)
	59K482840	Turntable, phono: includes oilite bearing; brown (RC-34 & RC-35)
84		Tire, phono motor idler pulley
85	4A21941	Washer, "C"
86	4A470946	Washer, cam shaft
87	49A470239	Wheel, spindle stop & pin
88	4S7623	Washer: 3/8 x 11/64 x .033 thick; antique copper finish
89	4S7597	Washer: 7/16 x .171 x .033 thick; cadmium plated
91	4S1765	Washer: 1/2 x .147 x 1/64 thick; cadmium plated
92	4K76609	Washer: 9/16 x .315 x .010 thick; brass.
93	4A21491	Washer: 9/16 x .315 x .020 thick; brass.
94	1X481432	Bell Crank Lever Assembly
95	1A481442	Bracket & Bushing; coil mounting
96	1X481447	Latch Arm & Bushing Assembly
97	45A74582	Link, trip
98	4S7695	Lockwasher: #5 internal; cadmium plated (soldering lug)
99	29R3004	Lug, soldering: #6, bent
100	5S7716	Rivet: .122 x 5/32 steel; antique copper (soldering lug)
101	3S2689	Screw: #4 x 5/16; PKZ Phillips binderhead; antique copper
102	41A76681	Spring, ratchet
103	41A71676	Spring, torsion
104	46A71610	Stud, shoulder (latch arm)
105	1X76787	Trip arm, small
106	24B481418	Trip coil & core
107	4K24125	Washer, "C" (latch arm)
108	3S7109	Setscrew: 6-32 x 5/16 slab head, cup point machine screw
109	1X481431	Bell Crank Lever & Arm Assembly: includes 94, 103 & 105
110	35A481870	Mount, shock: rubber
111	2A484296	Nut, shock mount tapered tee
112	3S488108	Screw: 10-32 x 1-3/8 Phillips flathead machine screw; antique copper finish
113	43A484295	Sleeve, shock mount: rolled
114	4S8214	Washer: 7/8 x .203 x .067; cad. pl

DESCRIPTION OF OPERATING CYCLE

Power for the motor is applied through the on-off switch. The turntable is rim-driven by a rubber-tired idler wheel mounted between the motor shaft and the turntable rim.

The turntable hub is a combined shaft and gear (figure 1). This small hub gear engages a large cam gear (figure 2) when the retractable segment of the cam gear is brought into position by the action of the trip mechanism; the cam gear, in turn, operates the changer mechanism.

The tone arm is operated by two link assemblies attached to actuator levers (figure 3) which are in contact with the cam surface of the cam gear.

The record-shelf push-off mechanism is connected, through a series of bars (figure 4), to a push-off actuator; the mechanism is operated when a roller on the cam gear comes in contact with the actuator.

The trip mechanism is operated by a trip finger, riding over a ratchet screw (figure 5), which starts the change cycle when the needle is traveling in the eccentric finish groove of the record. The trip mechanism is locked in a disengaged position when the control button is in the manual position.

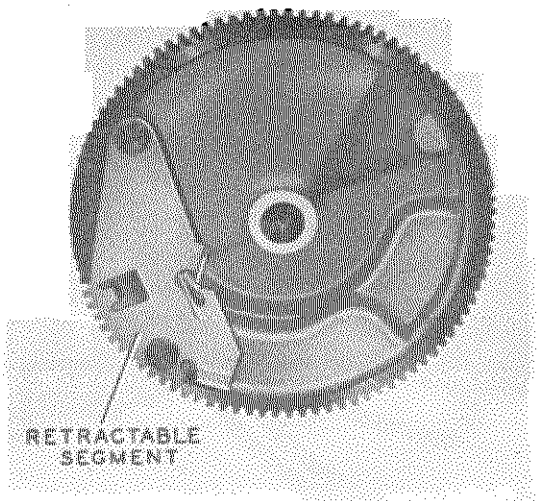

TP-4182

Figure 2—CAM GEAR, SHOWING RETRACTABLE SEGMENT

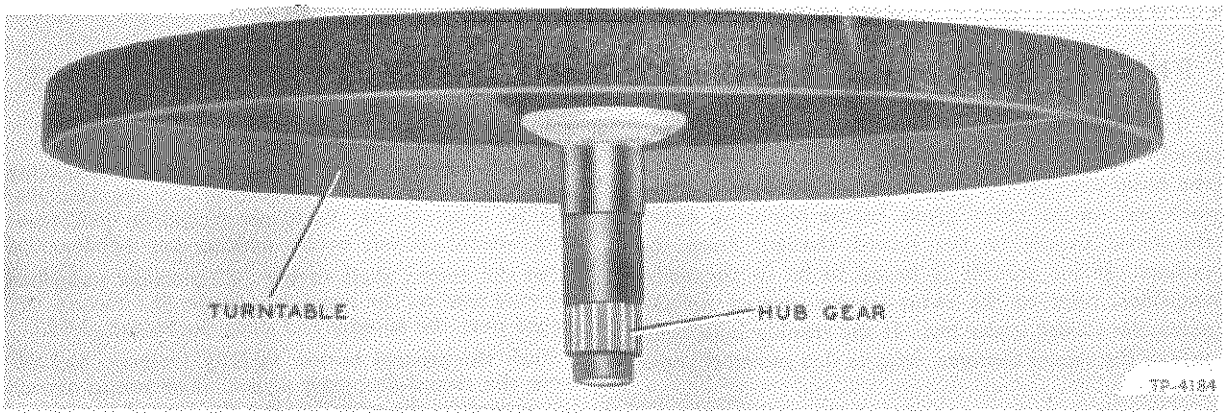

TP-4184

TP-4101

TP-4181

Figure 1—TURNTABLE AND HUB GEAR

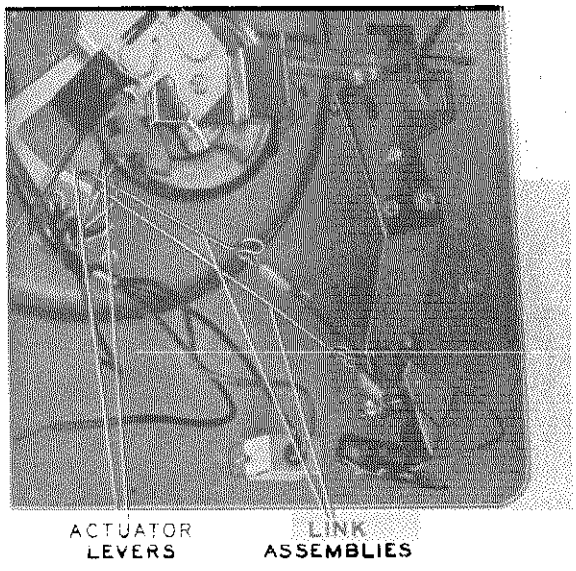

Figure 3—LINK ASSEMBLIES AND ACTUATOR LEVERS

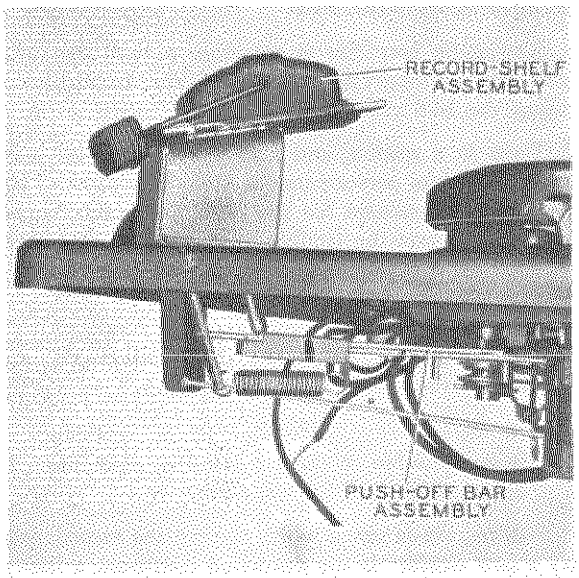

Figure 4—RECORD-SHELF AND PUSH-OFF ASSEMBLIES

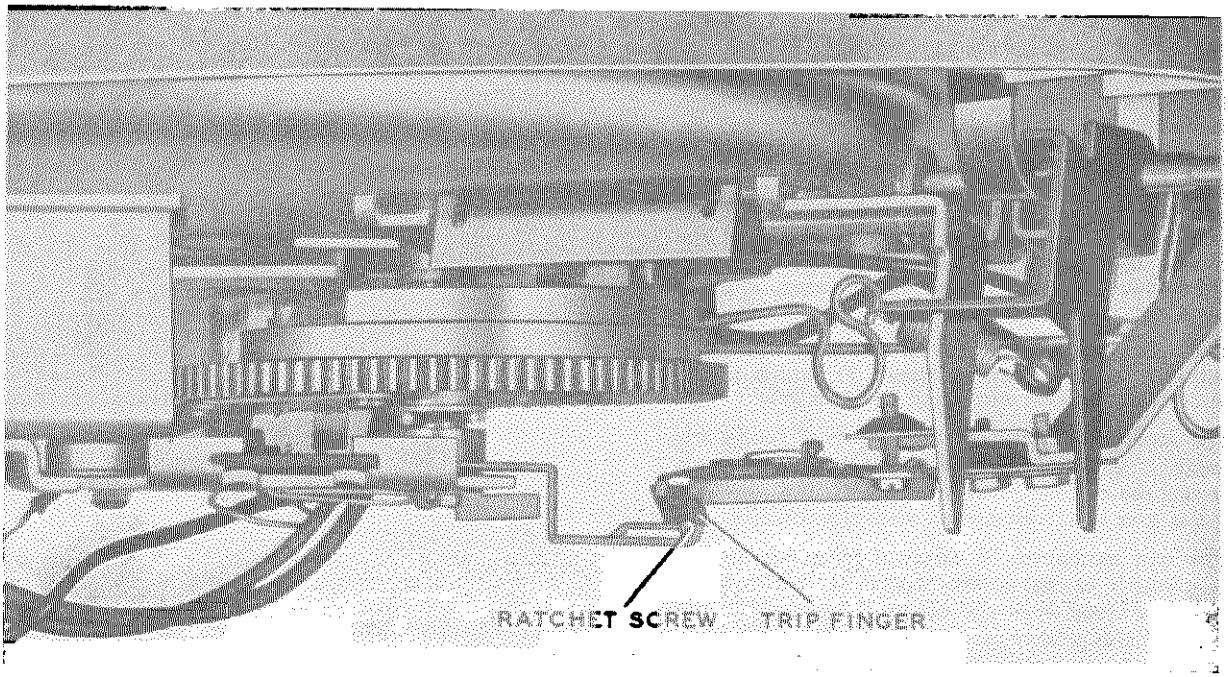

Figure 5—TRIP FINGER AND RATCHET SCREW TP-4135

PHILCO RADIO-PHONOGRAPH TROUBLE-SHOOTING PROCEDURE

The following tests are given for quickly localizing trouble in either the radio or phonograph section of the radio-phonograph combination. Be sure to make each test, in the order given, before removing either the radio chassis or the record changer from the cabinet. If the trouble is found to be in the audio amplifier, refer to the radio service manual for the particular model under test. If the trouble is in some part of the record changer, refer to this record-changer manual.

Audio-Amplifier Test

The audio amplifier is common to both the radio and the phonograph sections of the combinations using the M-8 changer.

Tune in a station, and note the volume and tone quality. If the performance is abnormal, refer to the radio service manual for the particular model under test, and correct the trouble.

Pickup Test

Play a familiar record on the phonograph, and again note the volume and tone quality.

NOTE

It is advisable to carry a familiar record as a part of the service test equipment.

If distortion is noted when playing the record, first try a new needle. If the distortion continues, a faulty crystal pickup is indicated.

Changer-Mechanism Test

The following series of record-changer operating tests is given for quickly locating any troubles that may be encountered. Each test should be performed with several records before making any adjustments.

Set the record shelf to the 10" position and place the tone arm on the rest post (figure 6). Place a 10" record over the spindle and onto the record shelf.

Push the control button to REJ (reject), and observe the record-dropping action. The record should fall smoothly, the edge leaving the lips of the record shelf *after* the center has started to fall.

TP-4103

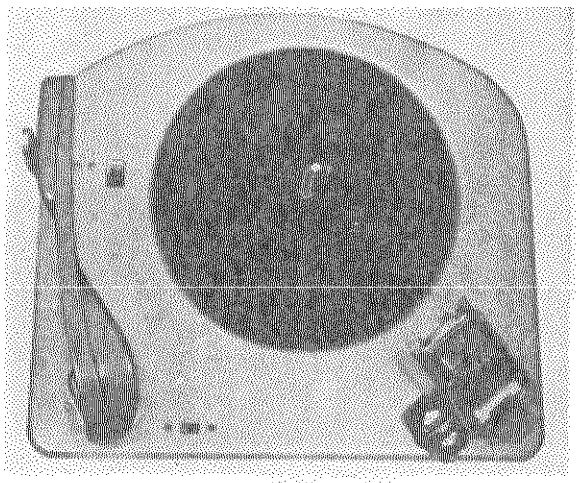

Figure 6—CHANGER, RECORD SHELF IN 10" POSITION

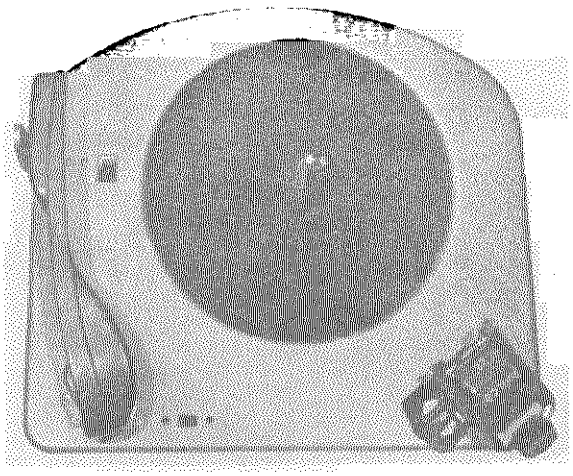

TP-4105

Figure 7—CHANGER, RECORD SHELF IN 12" POSITION

The tone arm should rise from the rest post, and the needle should come down on the record, starting about 1/8" from the outer edge.

Play the record through and observe the tripping action; the trip mechanism should operate within the first two or three revolutions after the needle has entered the eccentric finish groove.

Remove the record from the turntable and set the record shelf to the 12" position (figure 7). Place a 12" record over the spindle and onto the record shelf. Push the control button to REJ., and observe the record-dropping action. The record should leave the lips of the record shelf *after* the center has started to fall. Refer to - - - - - - the record-shelf adjustment, if needed. The tone arm should rise from the rest post, and the needle should come down on the record, starting about 1/8" from the outer edge.

Play the record through and observe the tripping action. Trip adjustments are given on page 10.

Observe whether the lower edge of the tone arm, during a change cycle, clears the top of the hook on the tone-arm rest post by a minimum of 1/8". Take the tone arm off the rest post, and place the pickup over the changer base plate; the needle point should clear the base plate by at least 1/16", and should be no higher than the turntable top.

Turntable and Motor Test

NOTE

Before making this test, warm up the motor by allowing it to run for at least ten minutes.

Set the control button to MAN. (manual), load the turntable with ten 12" records, and place the tone arm on the top record.

Place a stroboscope disc, such as Philco Part No. 45-2900, on the record, and illuminate the disc with a lamp (preferably a neon bulb) operated on 60-cycle a.c. The dots in the row calibrated for 78 r.p.m. should appear to remain stationary, or drift *very* slowly, but smoothly, backward or forward.

If the turntable speed is steady, but is appreciably below 78 r.p.m., refer to the lubrication data on the turntable upper bearing, motor bearings, and motor idler plate, given under CLEANING AND LUBRICATION, - - - - if the lubrication appears to be adequate, the motor is probably defective.

Unsteady drift of the dots on the stroboscope disc indicates uneven turntable speed, the cause of wows; see UNEVEN TURNTABLE SPEED (WOWS),

CLEANING AND LUBRICATION

The M-8 record changer, like any other mechanism, requires lubrication after long periods of use. Whenever a major part or assembly is to be replaced, the changer should be cleaned and lubricated. Carbon tetrachloride or other similar cleaning fluids may be used to remove old gease, oil, and dirt. Apply lubricants sparingly. All lubrication points are shown in figures 8 and 9. It may be necessary to remove some parts and assemblies in order to lubricate their bearings—for example, the actuator and cam gear must be removed to lubricate the actuator stud and the cam-gear spindle.

PARTS NOT TO BE LUBRICATED

The following parts should not be lubricated at any time: Trip receiver; trip finger; ratchet screw on trip plate; selector.

PARTS TO BE GREASED

The following parts are to be lubricated with a grease having the consistency of vaseline:

Record-Shelf Assembly (point A of figure 9)
Four protruding dimples.

Bridge Assembly and Slider Control Bar (point B of figure 8)
Three dimples and four upturned ears.

Cam Gear (point C of figure 8)
Cam-gear teeth, cam surfaces, and cam-gear spindle.

Main Assembly (points D, figures 8, 9, and 13)
Trip-plate ear where contact is made with gear segment.
Actuator stud.
All parts with ears sliding on changer base plate.
Index-lever surface which slides on base plate.
Push-off-actuator dimples which slide on base plate.
Turntable shaft (upper bearing).
Tone-arm shaft.

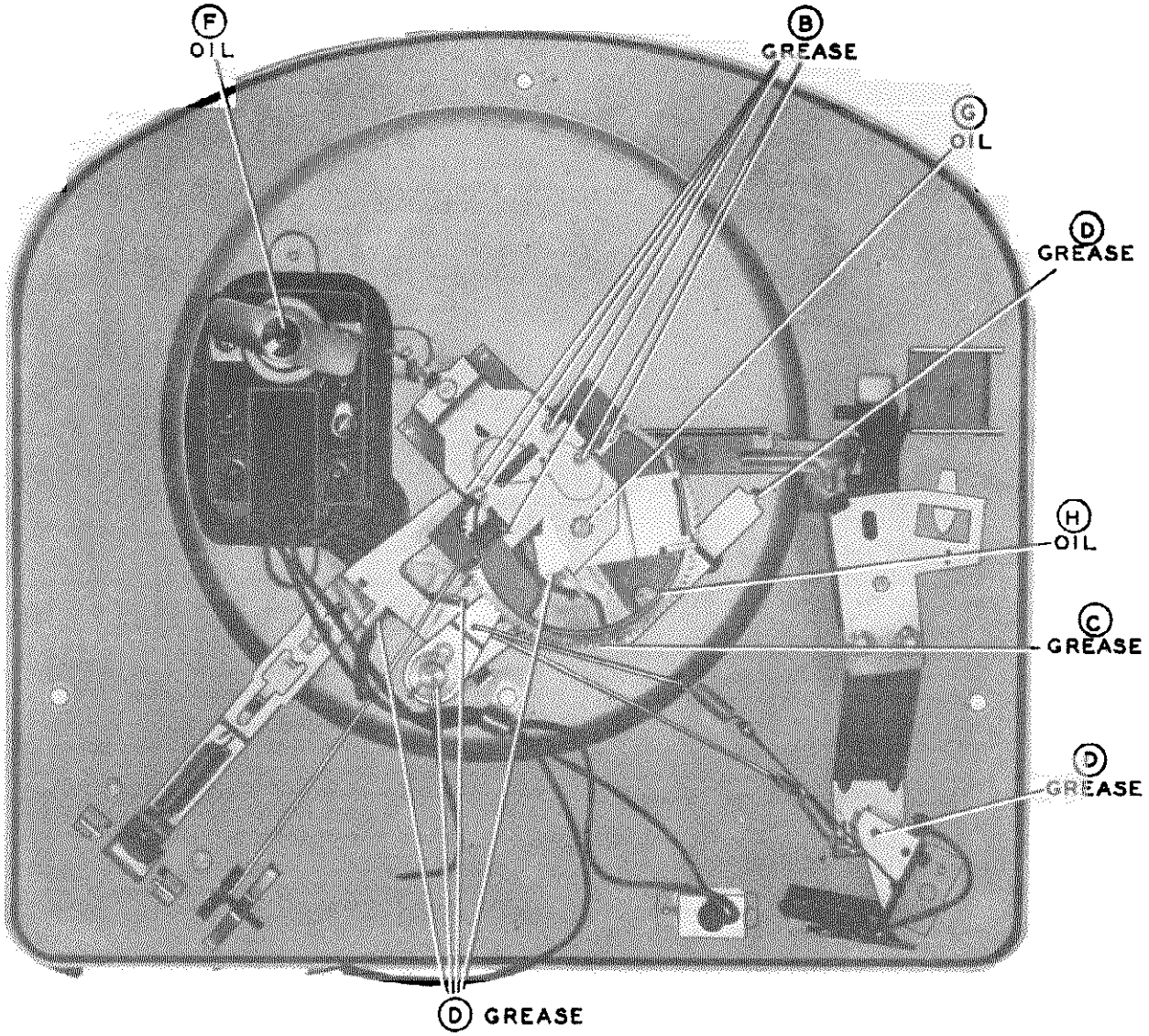

TP-4107

Figure 8—BOTTOM VIEW OF CHANGER, SHOWING LUBRICATION POINTS

PARTS TO BE OILED

The following parts are to be lubricated with S.A.E. 20 oil:

Tone Arm (point E of figure 9)

Tone-arm pivot pin where pin rides in elongated hole of tone arm—apply one drop with a pointed rod.

Motor (points F, figures 8 and 9)

Motor idler plate—one or two drops in each dimple.

Motor bearings.

Trip-Plate Bushings (point G of figure 8)

Cam-Gear Roller (point H of figure 8)

CAUTION

Do not get any oil or grease on the motor shaft or the idler-wheel tire. Should this occur, remove the oil or grease immediately with carbon tetrachloride.

©John F. Rider

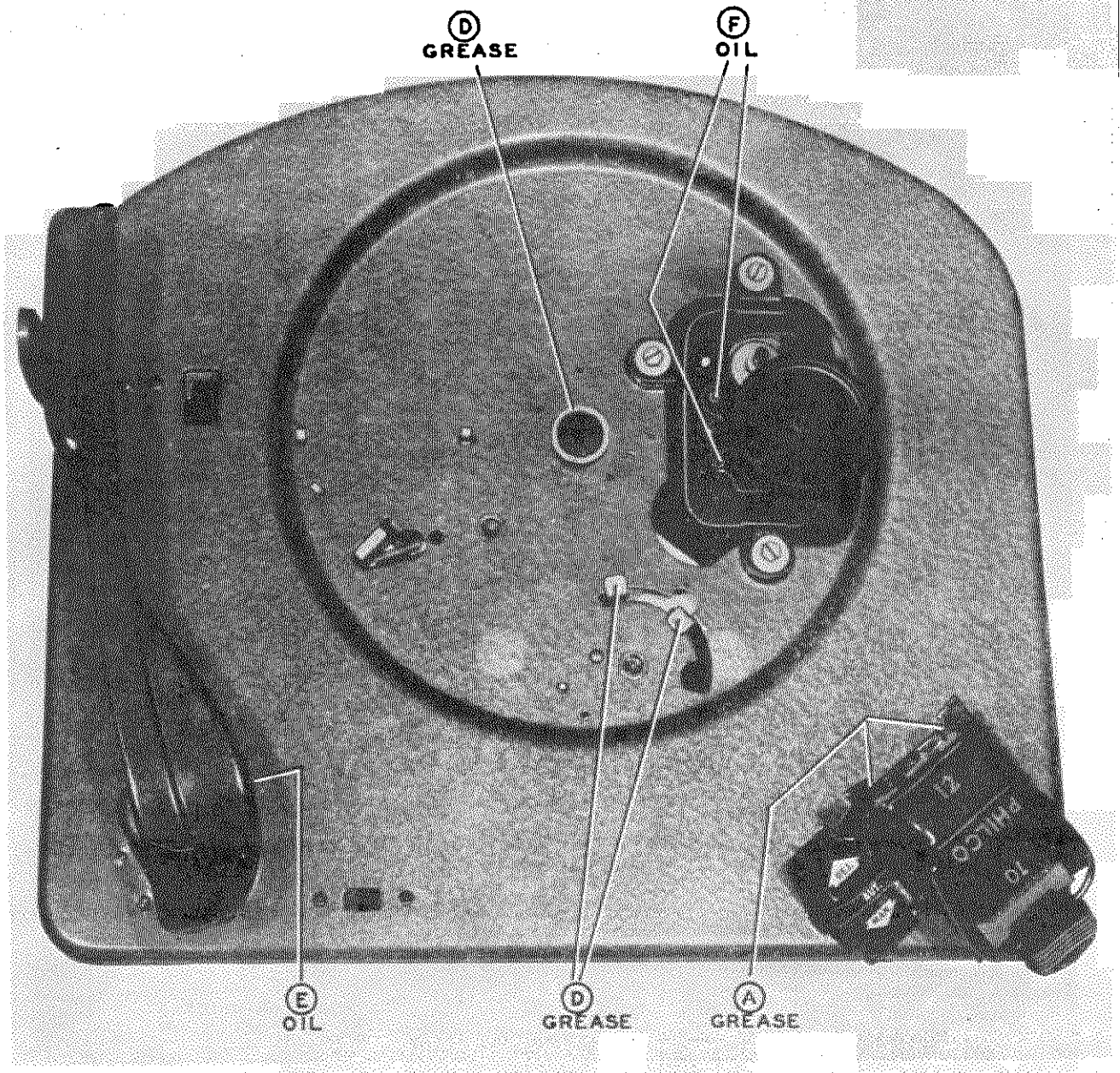

Figure 9—TOP VIEW OF CHANGER, SHOWING LUBRICATION POINTS TP-4106

ADJUSTMENTS

10″ Index Adjustment

Set a 10″ record on the turntable; push the control button to REJ., and rotate the turntable 4½ turns by hand. The tone arm should then be approximately ½″ above the record.

Loosen the clamp screw on the trip arm (figure 10). Hold the tone arm (steady) ⅛″ in from the edge of the record, and set the trip arm so that the trip-arm stop is in contact with the selector hinge. See figure 10.

Tighten the clamp screw, leaving 1/32″ vertical play, or clearance, between the trip arm and the base plate.

12″ Index Adjustment

Make the 10″ index adjustment first. The 12″ indexing will ordinarily be satisfactory after the 10″ adjustment is made; if not, bend the selector, 56-4618FA3, slightly to the right or left as required for proper indexing of the needle on the record, as shown in figure 11.

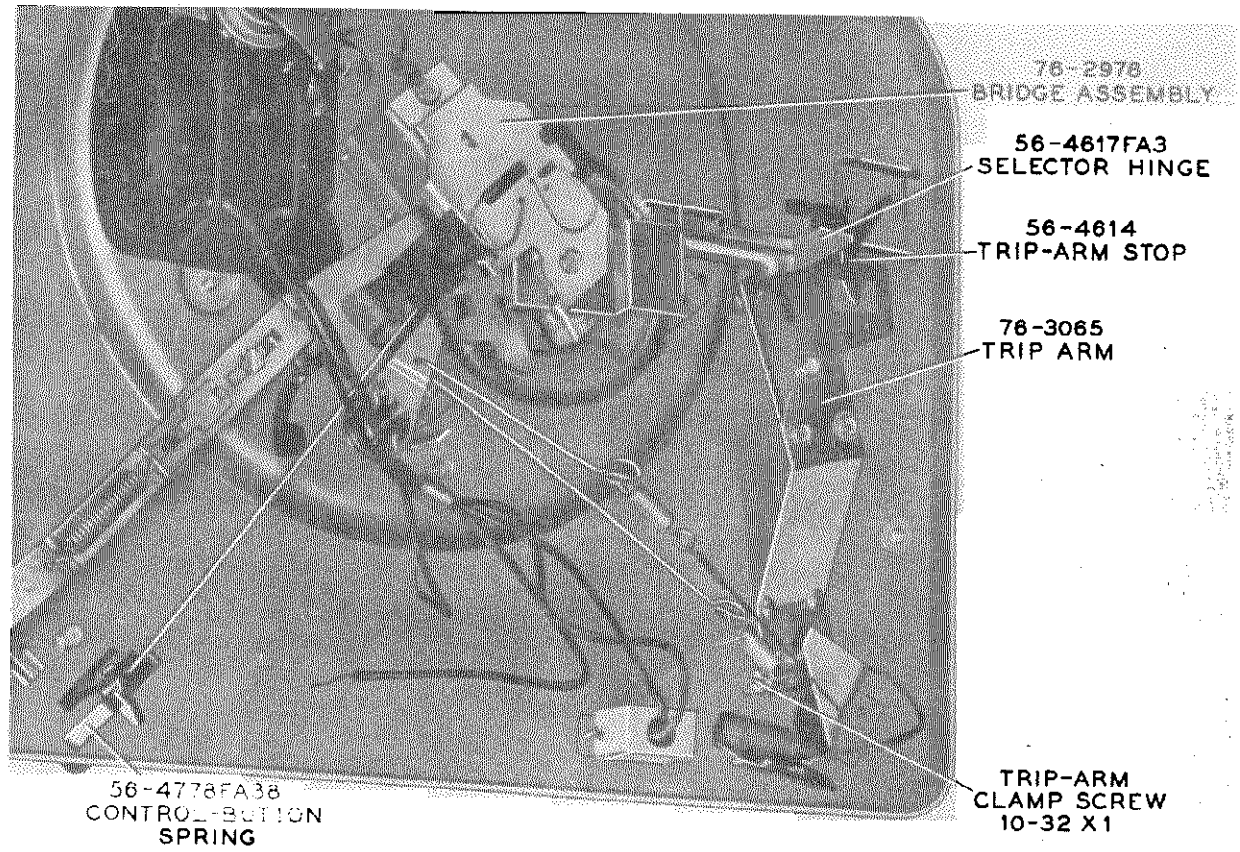

Figure 10—10″ INDEXING ADJUSTMENT TP-4101

Figure 11—12″ INDEXING AND TRIP-RECEIVER ADJUSTMENTS TP-4104

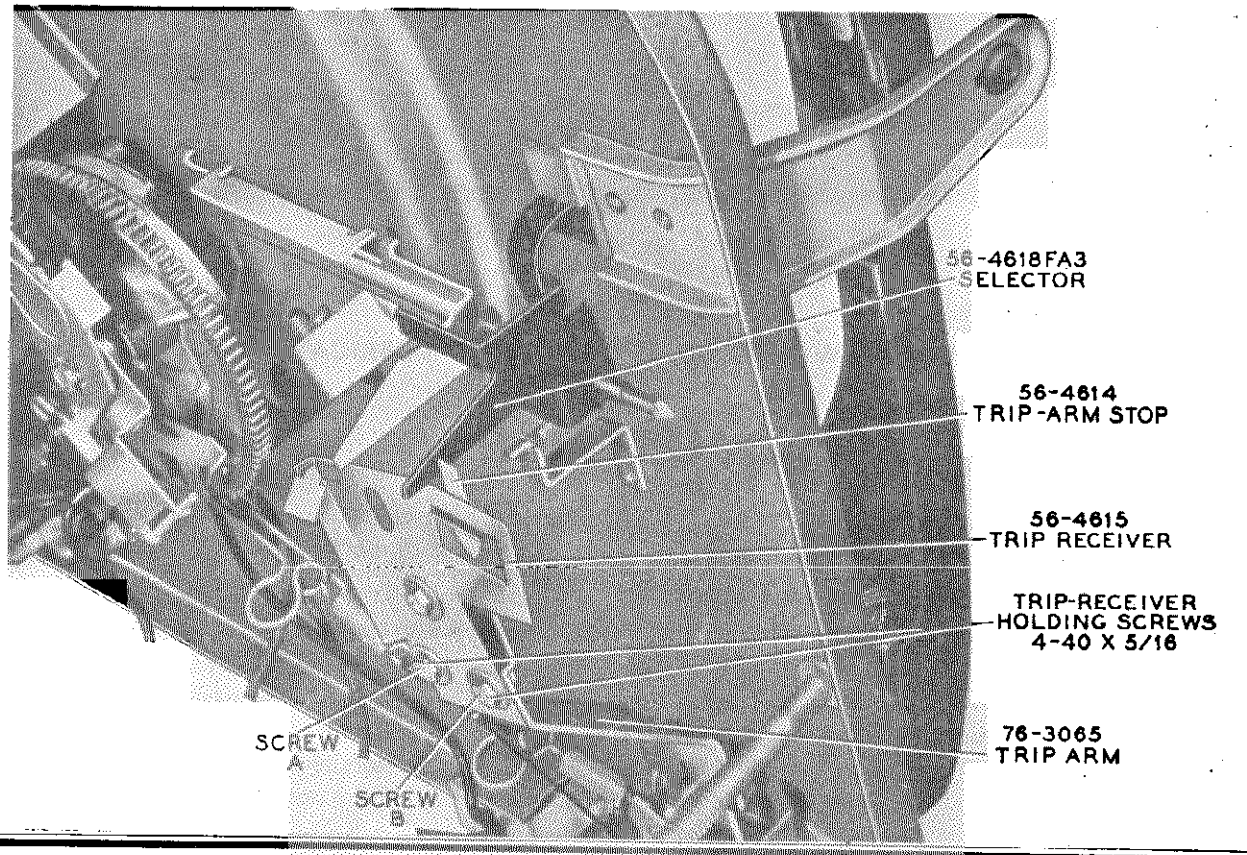

©John F. Rider

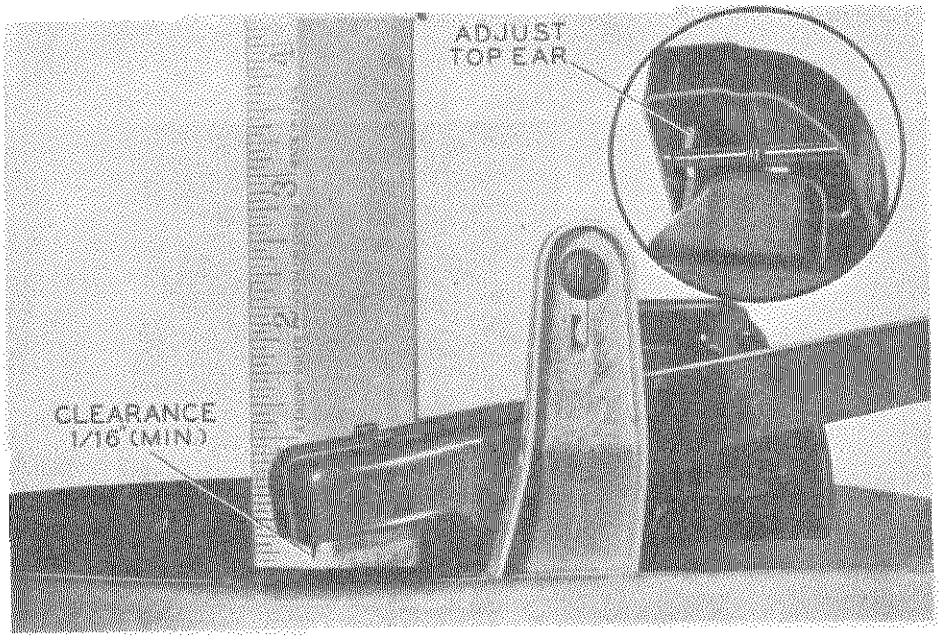

TP-4000

Figure 12—TONE-ARM HEIGHT ADJUSTMENT

Tone-Arm Height and Lift Adjustments

With the changer out of cycle (change cycle completed; tone arm lowered), and the tone arm off the rest post, the needle point should clear the changer base plate by at least 1/16", and should not be higher than the turntable top. See figure 12. To adjust the height, shape the *top* ear of the tone-arm swivel, shown in figure 12 (bending the ear downward raises the tone arm).

To adjust the lift, take the tone arm off the rest post, push the control button to REJ., and rotate the turntable (approximately 1½ turns) by hand until the tone arm comes against the rest post. See figure 13; the lower edge of the tone arm should clear the top of the protruding hook on the rest post by not less than ⅛", and not more than ¼". Adjust by shaping the *lower* ear of the tone-arm swivel (bending the ear downward raises the tone arm).

Tone-Arm Vertical and Horizontal Timing Adjustments

NOTE

Before making these adjustments, make the tone-arm height and lift adjustments given above.

For the vertical adjustment, start with the changer out of cycle, push the control button to REJ., and rotate the turntable, by hand, three-quarters of a revolution; this setting can be obtained more accurately by making a mark on the turntable to coincide with some starting point. At the three-quarter-revolution point, the leading edge of the cam surface is approximately ¼" from the end of the lift actuator lever; this is the lower actuator lever, shown in figure 14. Adjust the wire loop of the short link (link, cord, and spring assembly), attached to the tone-arm lift pin, by squeezing or opening the loop until the tone-arm lift pin makes contact with the lower ear of the tone-arm swivel (figure 13).

Figure 13—TONE-ARM LIFT ADJUSTMENT

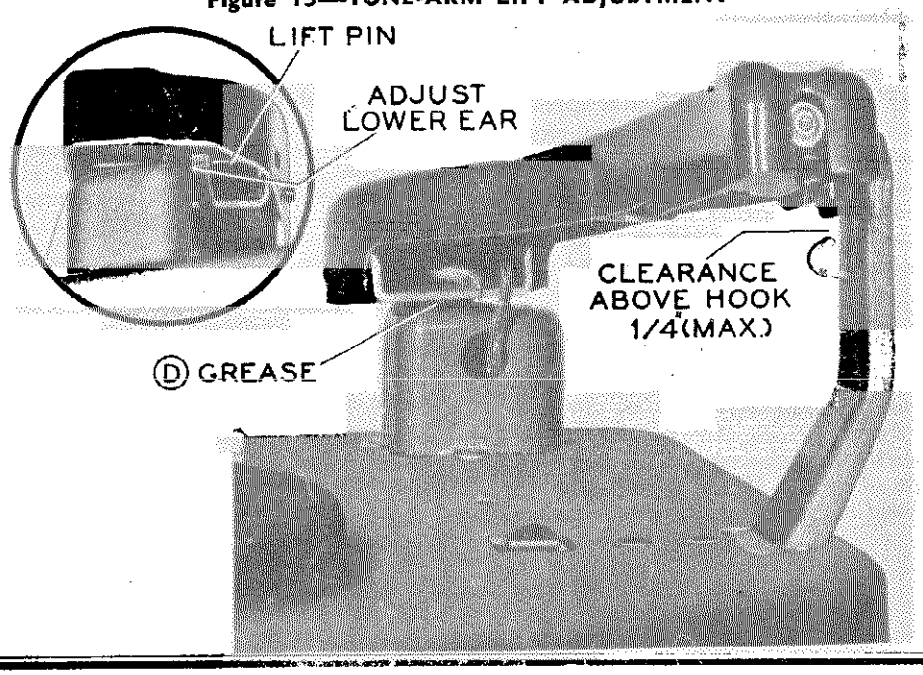

TP-4102

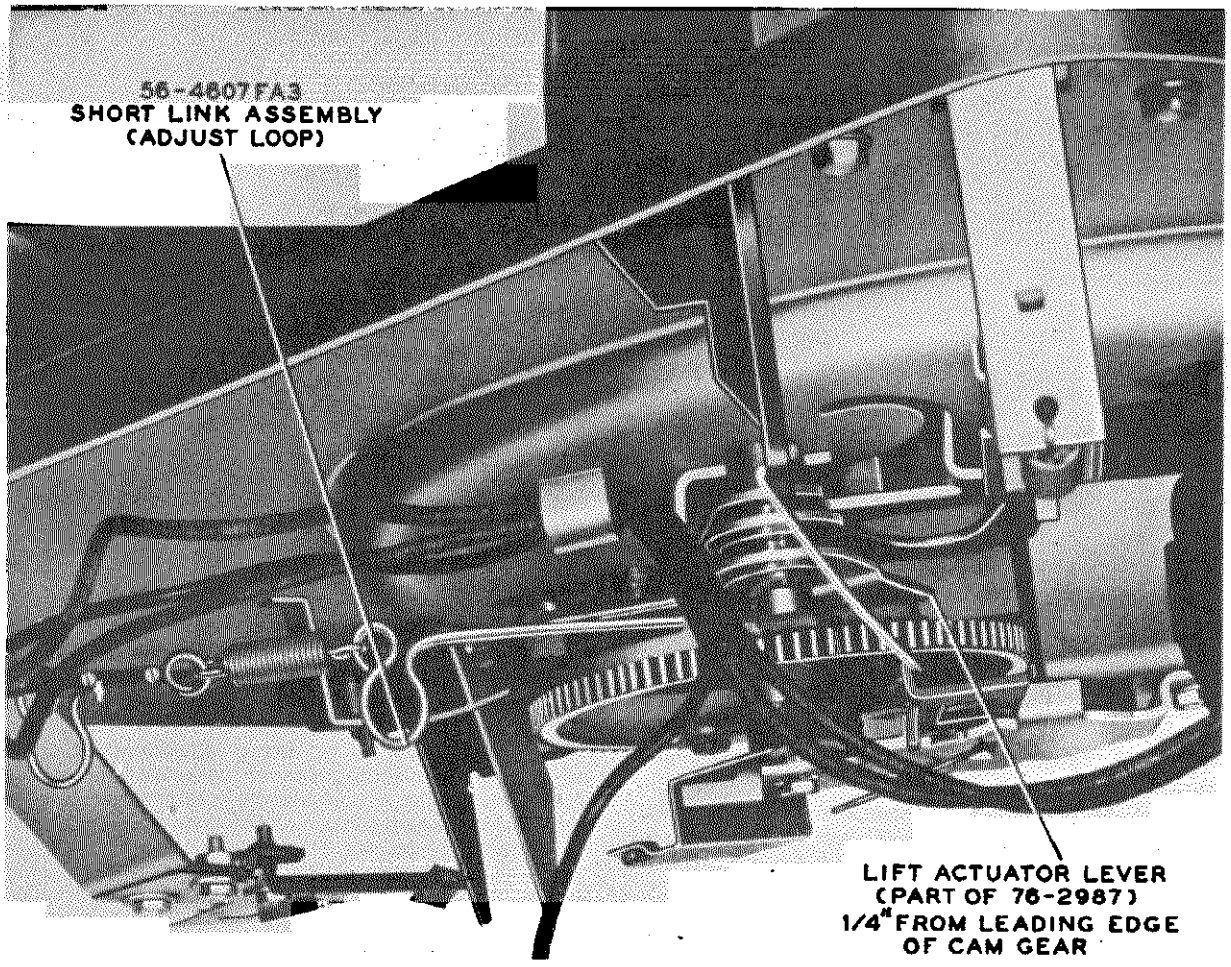

Figure 14—TONE-ARM VERTICAL TIMING ADJUSTMENT TP-4116

For the horizontal adjustment, rotate the turntable another three-quarter revolution from the point at which the vertical adjustment was made. At this point, the leading edge of the cam surface is approximately ¼" from the end of the horizontal-return actuator lever; this is the upper actuator lever, shown in figure 15. Adjust the wire loop of the long link and spring assembly, attached to the trip arm, by squeezing or opening the loop until the tone arm makes contact with the rubber bumper on the tone-arm rest post.

Trip-Finger and Trip-Receiver Adjustments

For the trip-finger adjustment, move the tone arm toward the spindle. Adjust the screw on the trip-receiver plate (figure 16) so that the trip finger, when riding over the ratchet screw on the trip plate, assumes an angle of 25° to 30° with respect to the screw. Do *not* bend the trip finger to obtain the correct angle.

For the trip-receiver adjustment, place the tone arm on a record with the needle resting in the eccentric finish groove. The vertical center line of the trip finger should coincide with the center line of the ratchet screw. To adjust the centering of the trip finger over the ratchet screw, loosen screw B slightly, and screw A completely (see figure 11). Rotate the trip receiver about screw B, as a center, to obtain the correct adjustment (see figure 16). Tighten the screws.

Approximately ⅛" of the trip-arm stop should engage the selector (see figure 11). To adjust the engagement of the trip-arm stop, loosen screw A slightly, and screw B completely (see figure 11). Rotate the trip receiver about screw A, as a center, to obtain the correct adjustment. Tighten the screws.

The above adjustments will affect each other slightly; therefore, it may be necessary to repeat each adjustment until both are correct.

After making the above adjustments, it will be necessary to correct the index adjustments.

©John F. Rider

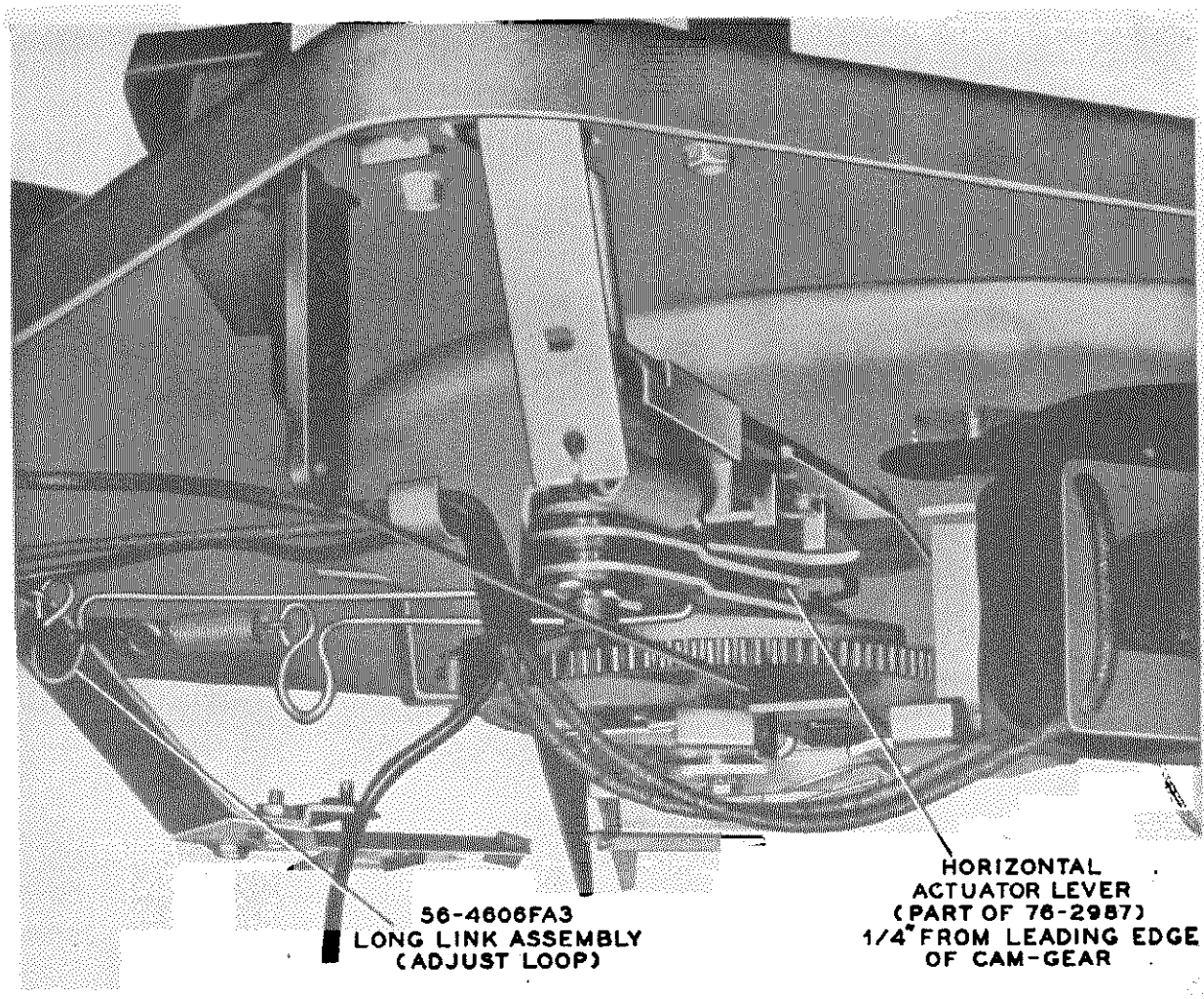

Figure 15—TONE-ARM HORIZONTAL TIMING ADJUSTMENT TP-4129

Record-Shelf Adjustment

Place the shelf in the 10" position, and the changer out of cycle. Place the Philco record-shelf gauge, 45-1470 (also used for M-4), over the spindle and onto the record shelf, as shown in figure 17. Loosen the two hex-head screws which hold the record-shelf assembly to the changer base plate (figure 18). Move the record-shelf assembly away from the record spindle until the large curved part of the gauge drops even with the record-shelf lips, as shown in figure 17. Now push the record shelf and gauge lightly against the spindle, taking out all play toward the spindle; keep the lips of the record shelf in even contact with the edge of the gauge. Tighten the two hex-head screws.

Push-Off Adjustment

Push the control button to REJ., and rotate the turntable 2½ revolutions, by hand; at this point, the push-off actuator is in its most forward position, in contact with the roller on the cam gear (see figure 19). Loosen the push-off-bar locking screw, shown in figure 18. Squeeze the push-off-bar ears toward each other to the point where the slider blade on the record shelf extends 1/32" beyond the lips of the shelf. Tighten the hex-head locking screw.

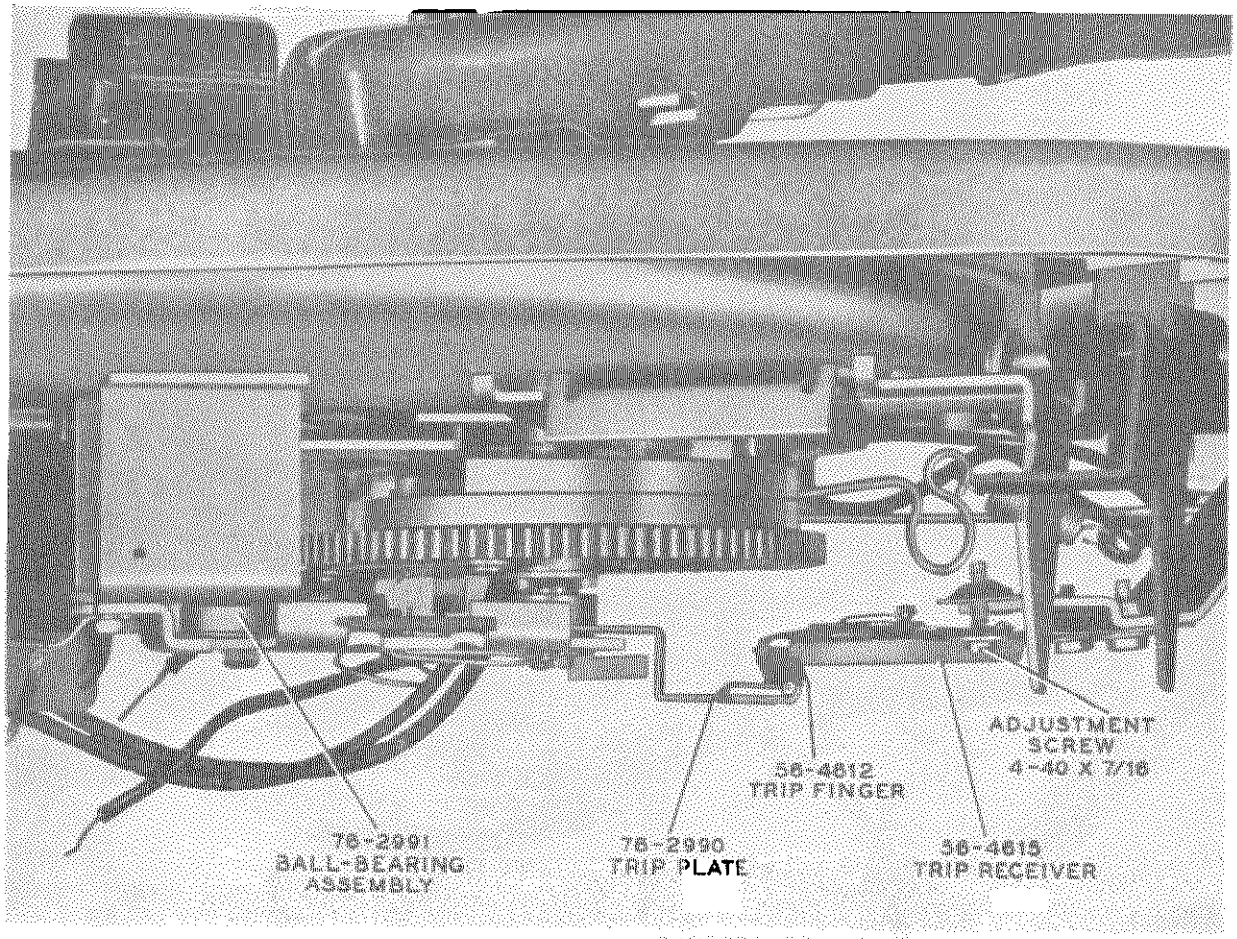

Figure 16—TRIP-FINGER ADJUSTMENT TP-4135

Figure 17—SPECIAL GAUGE, SHOWN IN CORRECT POSITION ON RECORD SHELF AND SPINDLE

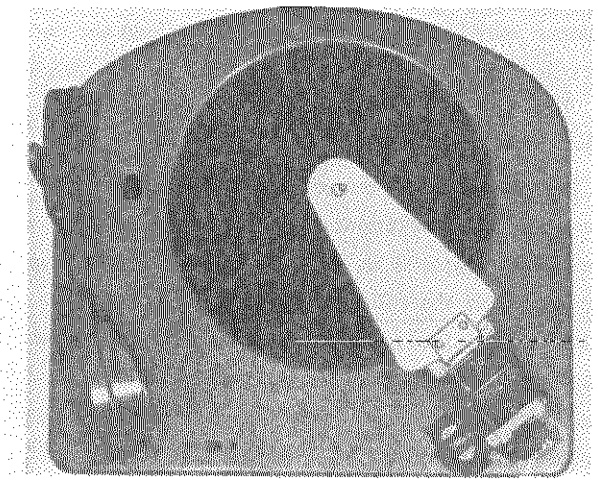

Uneven Turntable Speed (Wows)

Uneven turntable speed (wows) may be caused by the following:

Dirt under and around the turntable or idler-wheel assembly. Remove the turntable and clean out the dirt. Be careful to lift the turntable straight up. When replacing the turntable, be sure the idler is behind the turntable rim before the turntable is fully lowered (the spindle may be used to hold the idler back).

Flat or worn spots, or grease, on the rubber tire of the idler wheel.

Defective turntable shaft or bearing assembly.

Replace the defective parts as directed under REPLACEMENT OF PARTS AND ASSEMBLIES.

Lack of lubrication on idler-wheel assembly. Follow the directions under CLEANING AND LUBRICATION

©John F. Rider

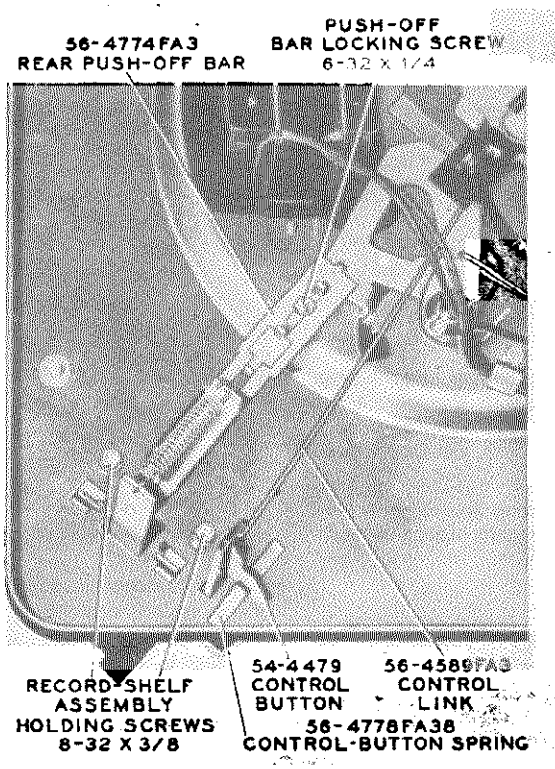

Figure 18—PUSH-OFF-LEVER ADJUSTMENT

Figure 19—PUSH-OFF ACTUATOR AGAINST CAM ROLLER TP-4134

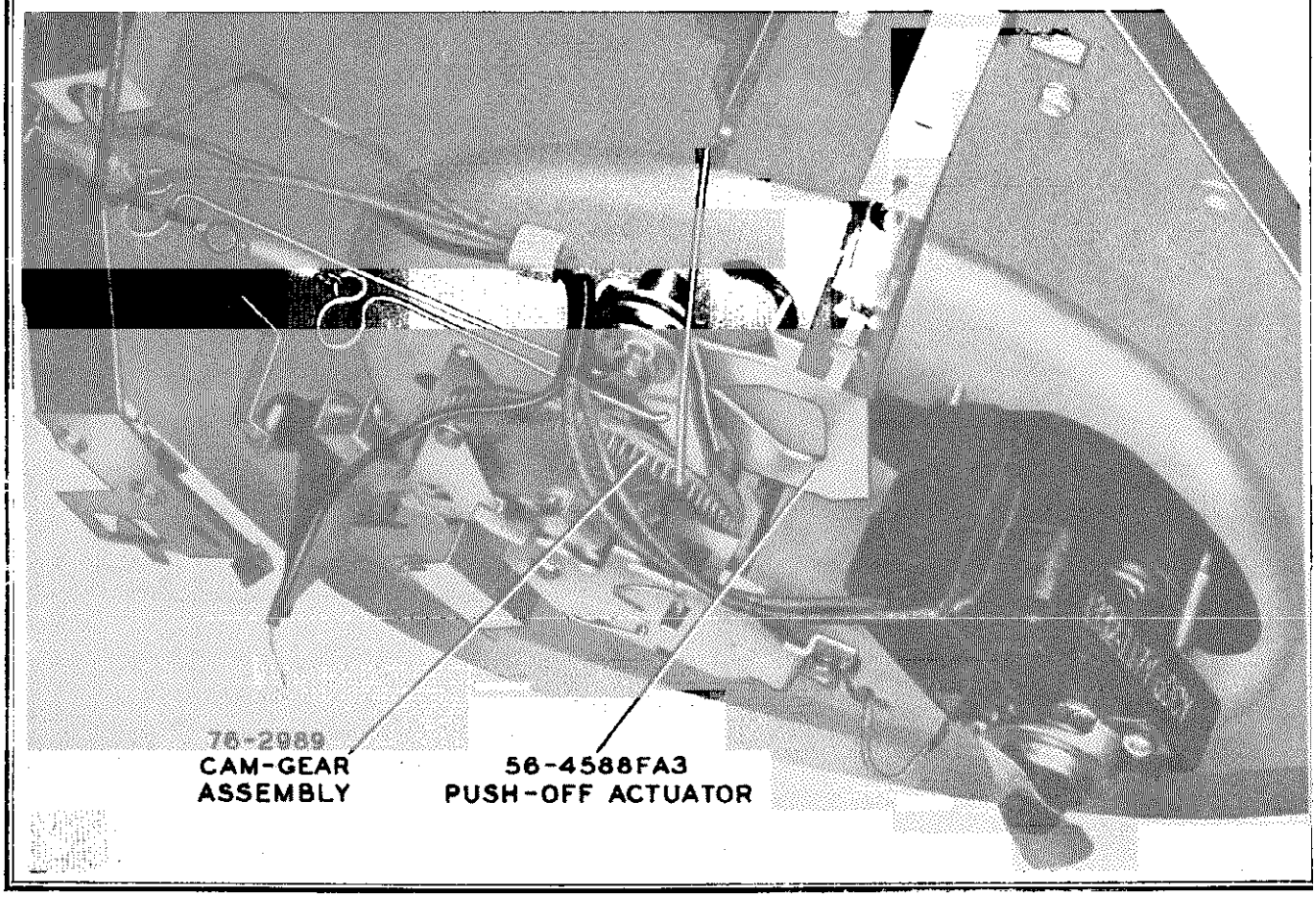

REPLACEMENT OF PARTS AND ASSEMBLIES

The following procedures are recommended for correct replacement of parts and assemblies. The part should be replaced by reversing the order of removal, and adjusted according to the directions given in the ADJUSTMENTS section of this manual.

When any part is to be removed, the control button should be in the AUT. (automatic) position, and the changer should be out of cycle.

1. Needle

There are two types of needle chucks, depending upon the type of pickup cartridge in the tone arm. One type of chuck has a setscrew, for vertical needle insertion; the other has a knurled nut, for horizontal needle insertion.

To remove needle from tone arm, loosen setscrew or knurled nut in front of crystal cartridge, and pull needle out.

2. Crystal-Pickup Cartridge

At the present time, the pickup cartridge may be either of two types, one identified by vertical needle insertion, and the other by horizontal needle insertion. The cartridge type may be identified by the part number stamped on the bottom of the cartridge. Since the loading circuit in the radio differs for each type of pickup, the two cartridges are not interchangeable.

a. Bring tone arm toward center of turntable.

b. Remove the two screws, nuts, lock washers, and spacers which hold cartridge to tone arm.

c. Drop cartridge below tone arm sufficiently to allow removal of the two clips from cartridge, as shown in figure 20. If pickup leads are shielded, unsolder shield.

NOTE

When mounting cartridge, be sure to insert long spacer in side toward spindle. For cartridge 35-2643, use mounting spacers 56-4601 and 56-4601-1; for cartridge 35-2671-1, use mounting spacers 56-4601-2 and 56-4601-3.

3. Motor

a. Push control button to MAN. position.

b. Remove spindle. Remove turntable by pulling straight out.

c. Remove switch cover, and unsolder motor lead from switch contact.

d. Loosen screw of clamp which holds wire against base plate, and pull wire through clamp.

e. Unsolder second motor lead from power plug or disconnect at splice from chassis power lead, whichever is used.

f. Remove ground lead from lug on motor.

g. Remove the three screws, washers, and bushings from motor frame (figure 21), and lift motor out.

Figure 20—TONE ARM (35-2663), CRYSTAL CARTRIDGE (35-2643) REMOVED

TP-4130

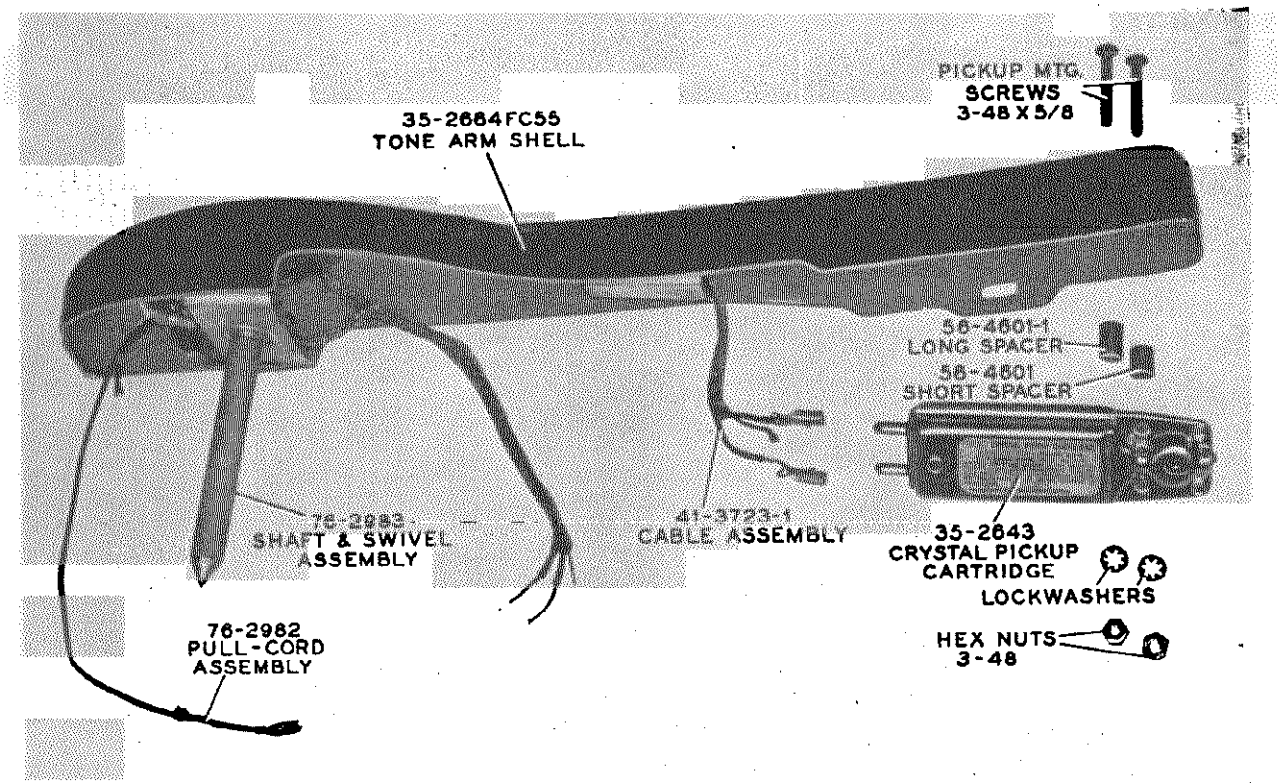

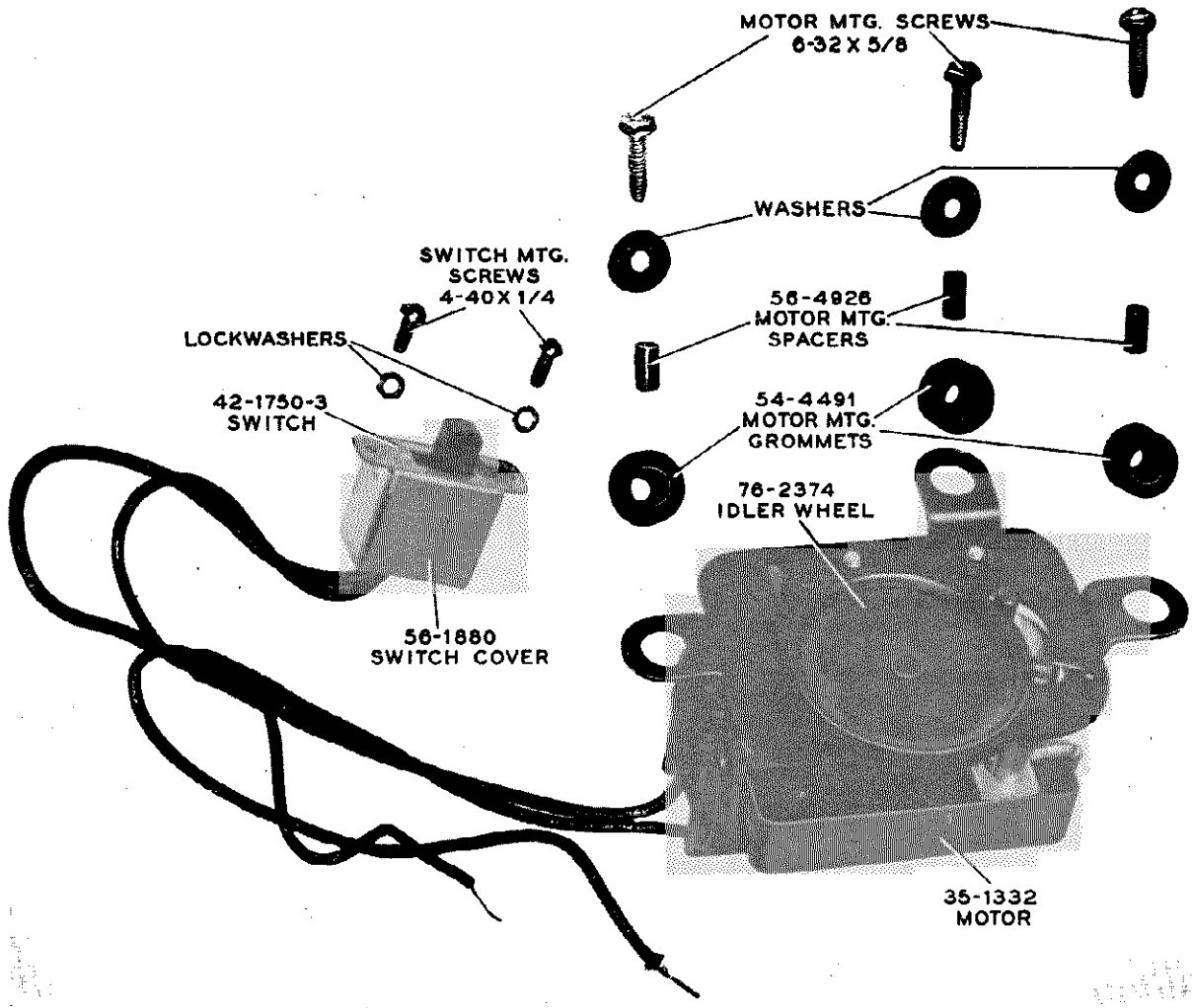

Figure 21—MOTOR, SWITCH, AND MOUNTING HARDWARE TP-4133

4. Tone-Arm Assembly

a. Unsolder tone-arm lead wires from terminal panel on underside of changer base plate.

b. Remove pull cord from spring and short link, 56-4607FA3.

c. Loosen clamp screw which holds trip arm to tone-arm shaft, 76-2983 (figure 22). Lift out tone arm and shaft.

5. Bridge Assembly

a. Remove the two hex-head screws from bridge plate.

b. Remove link rod, 56-4589FA3, from slider control bar. Complete assembly of bridge is shown in figure 23.

6. Trip Plate

a. Remove bridge assembly, 76-2978, as directed in paragraph 5.

b. Slide trip plate, 76-2990, off cam-gear spindle.

7. Cam-Gear Assembly

a. Remove bridge assembly and trip plate, as directed in paragraphs 5 and 6.

b. Remove ball-bearing assembly, 76-2991 (figure 16), by pulling it off.

c. Remove large hairpin, 1W42706FA1, from cam-gear spindle, and slide washer off.

d. Slide cam gear off spindle. Figure 24 shows cam-gear assembly.

8. Tone-Arm Actuator Levers

a. Remove large hairpin, 1W42706FA1, from actuator stud.

b. Slide lower actuator lever from stud, and remove short link, 56-4607FA3.

c. Remove upper actuator lever from stud, and disengage long link, 56-4606FA3. Figure 24 shows actuator-lever assembly.

9. Push-Off Actuator

a. Remove two motor-mounting screws, and loosen the third one; swing motor to one side.

b. Remove tone-arm actuator levers, 76-2987, as directed in paragraph 8.

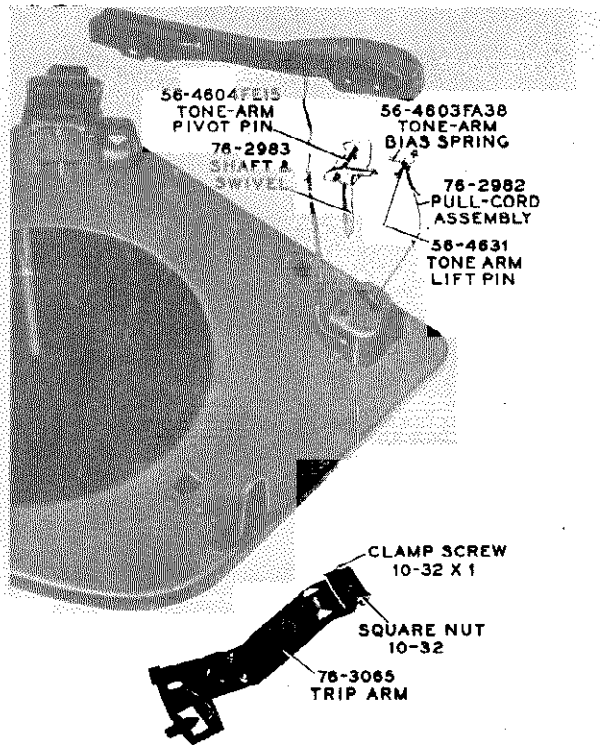

TP-4132

Figure 22—TONE ARM AND TRIP ARM, REMOVED

c. Press push-off rod, 56-4595FA3, and push-off hanger bar, 56-4596FA3, together, and pull downward, releasing the entire assembly.

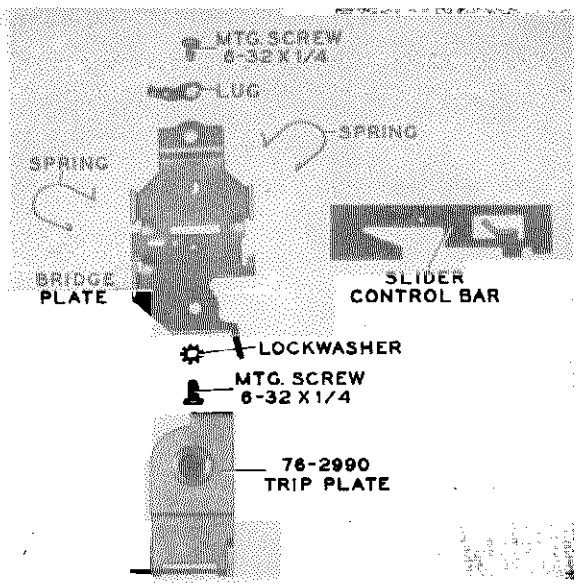

Figure 23—BRIDGE ASSEMBLY TP-4180

d. Slide push-off actuator, 56-4588FA3, over, to align upturned ears with cutout in base plate. Slide actuator off stud.

NOTE

After removing the push-off actuator and push-off-bar assembly, the slider blade on the record shelf may slide out of the assembly. When reassembling, this blade should be inserted in the record-shelf assembly with the elongated hole toward the 12″ position of the record shelf. The push-off assembly is shown in figure 25.

Figure 24—CAM GEAR, PUSH-OFF ACTUATOR AND TONE-ARM ACTUATOR LEVERS TP-4187

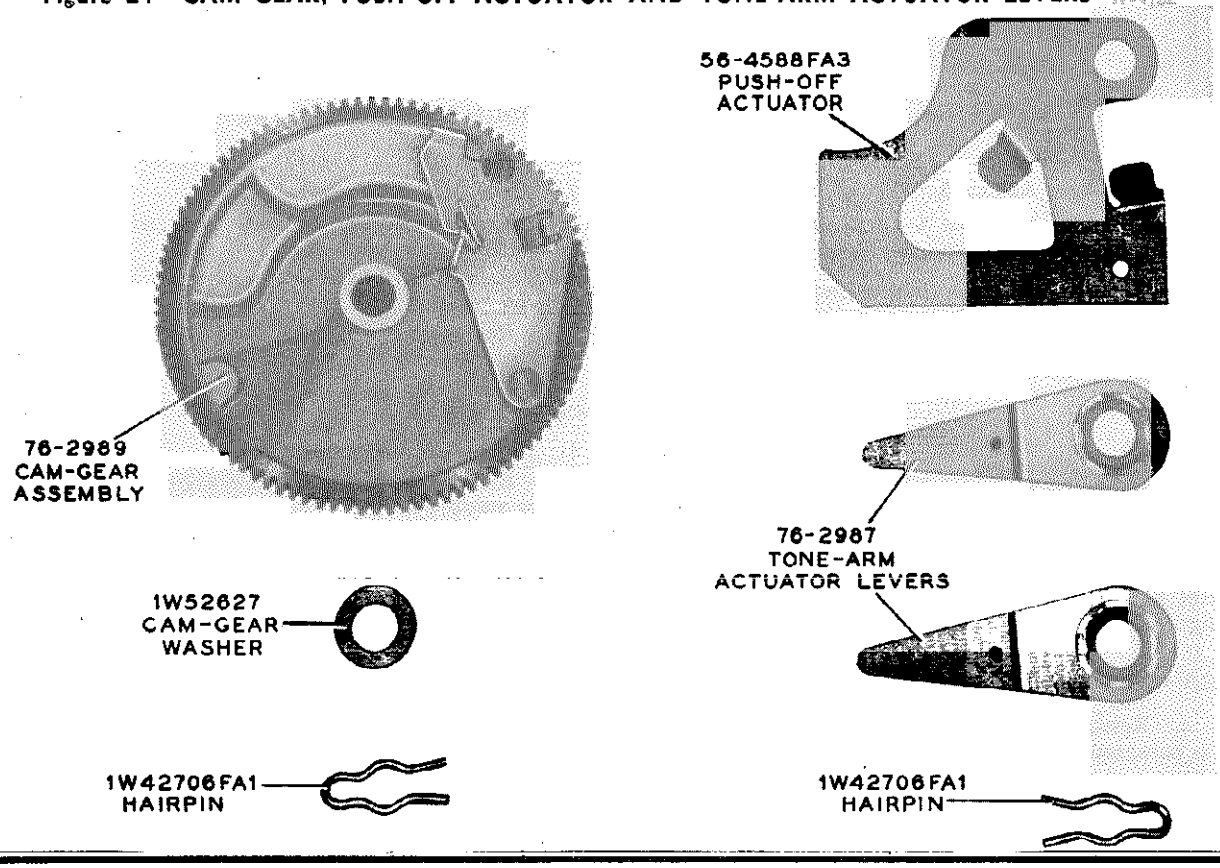

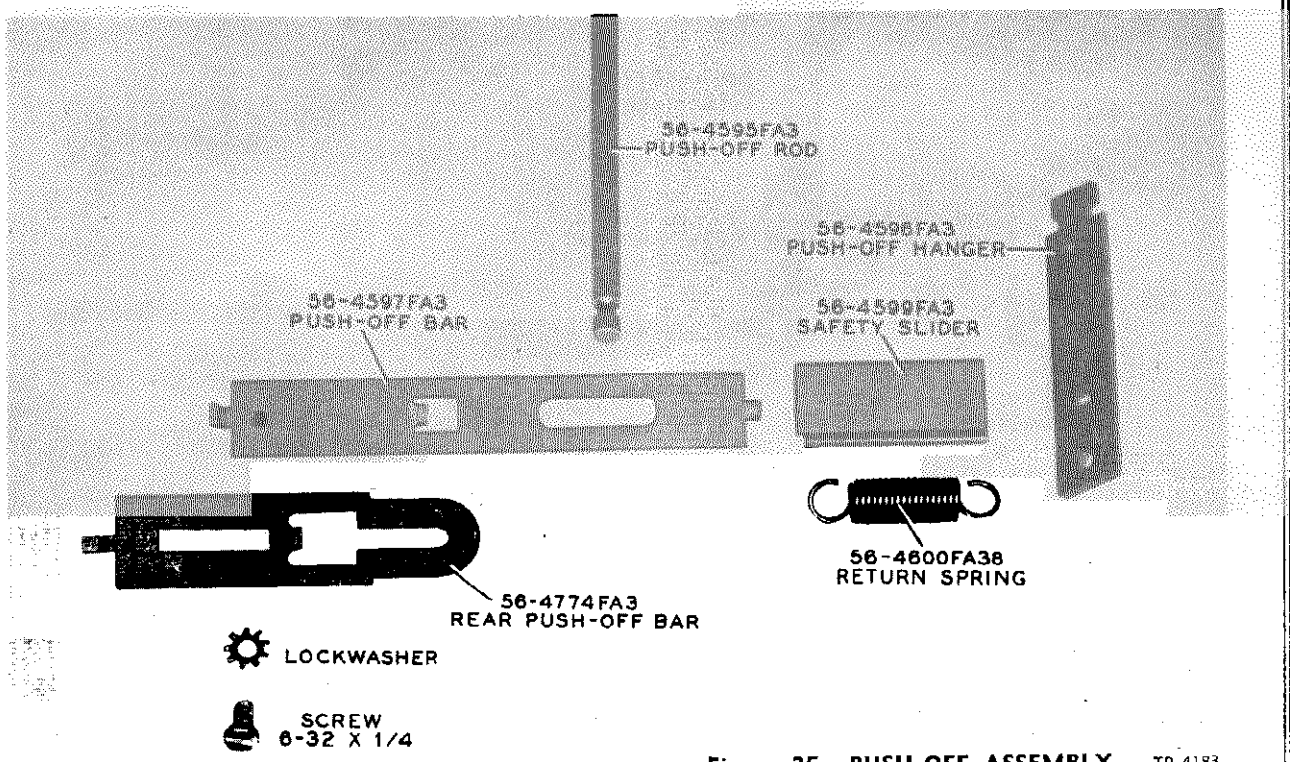

Figure 25—PUSH-OFF ASSEMBLY TP-4183

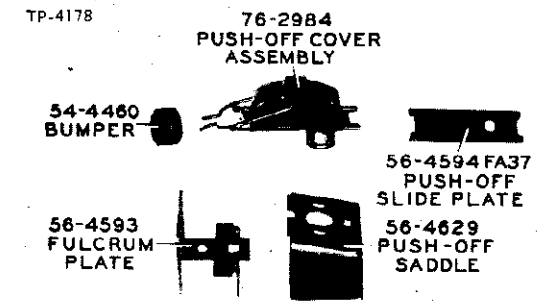

Figure 26—RECORD-SHELF AND PUSH-OFF ASSEMBLIES REMOVED

10. Record-Shelf Assembly

a. Remove push-off actuator assembly as directed in paragraph 9.

b. Remove the two hex-head screws which hold record-shelf assembly to base plate (figure 18).

c. Align ears on record-shelf assembly with cut-out on base plate. Lift out record-shelf assembly. Record-shelf assembly is shown in figure 26.

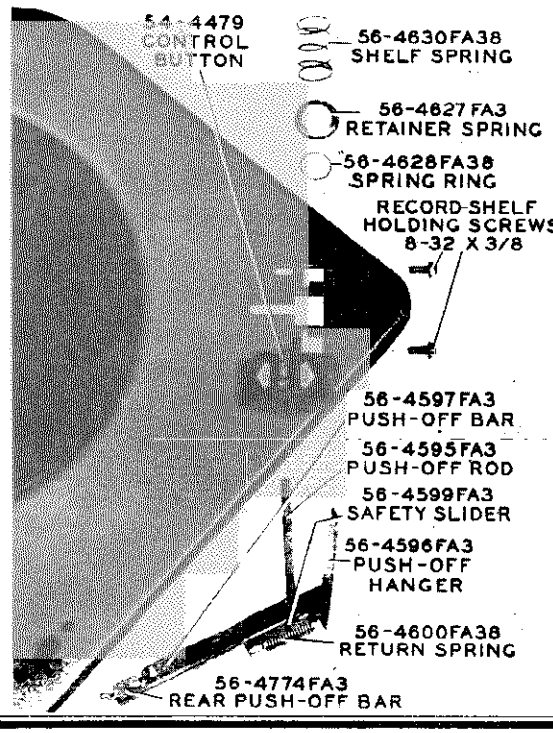

Figure 27—TRIP-ARM AND TRIP-RECEIVER ASSEMBLIES TP-4227

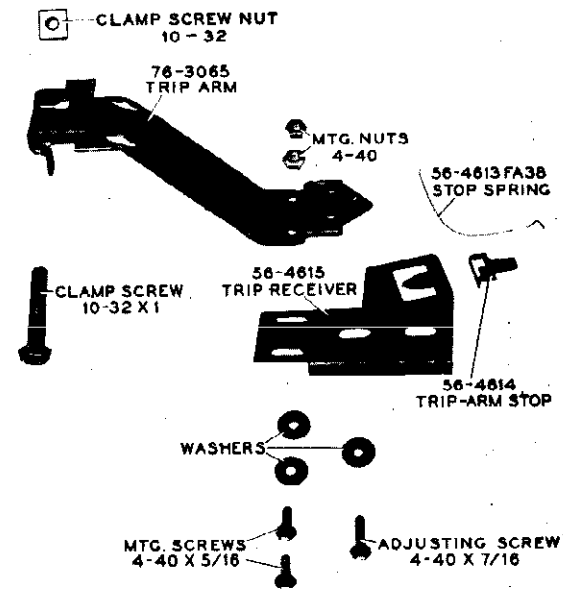

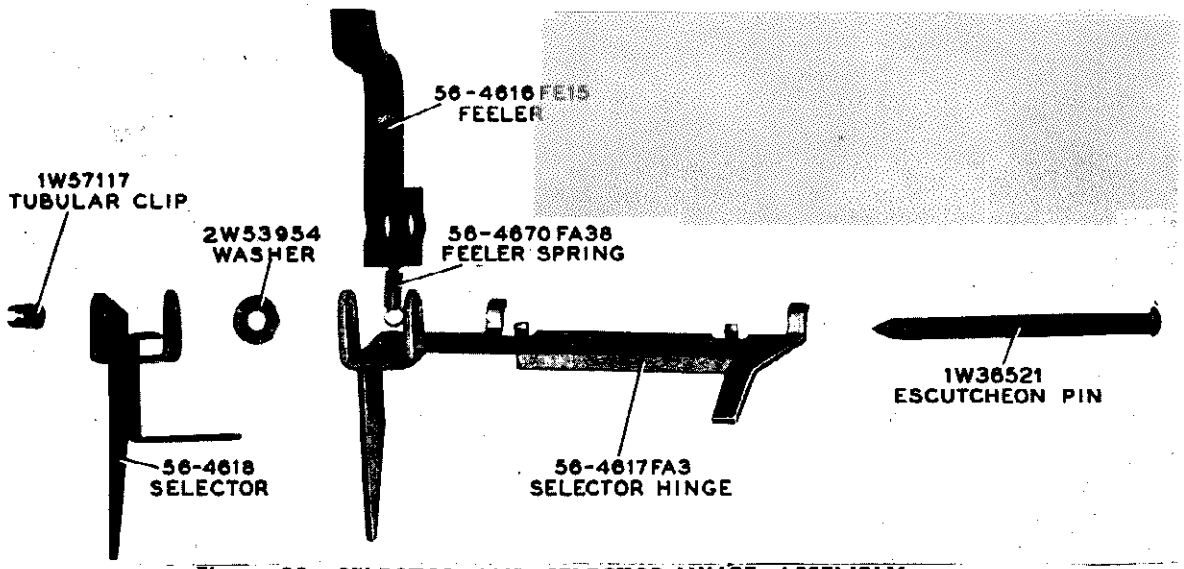

Figure 28—SELECTOR AND SELECTOR-HINGE ASSEMBLY TP-4123

11. Control-Button Assembly

a. Remove flat spring, 56-4778FA38, by sliding it laterally through underside of button (figures 10 and 18).

b. Remove the two hex-head screws and drop bridge assembly, 76-2978 (shown in figure 10).

c. Disengage control link, 56-4589FA3, from underside of control button. Lift out control button.

12. Trip-Arm Assembly

a. Loosen clamp screw on trip arm, 76-3065 (figure 27).

b. Raise tone arm and shaft sufficiently to clear trip arm. Remove trip arm.

NOTE

When assembling, maintain $\frac{1}{32}$" vertical play (clearance between trip arm and base plate) in tone-arm shaft.

Figure 29—BOTTOM VIEW OF CHANGER, WITH PARTS IDENTIFICATION TP-4107

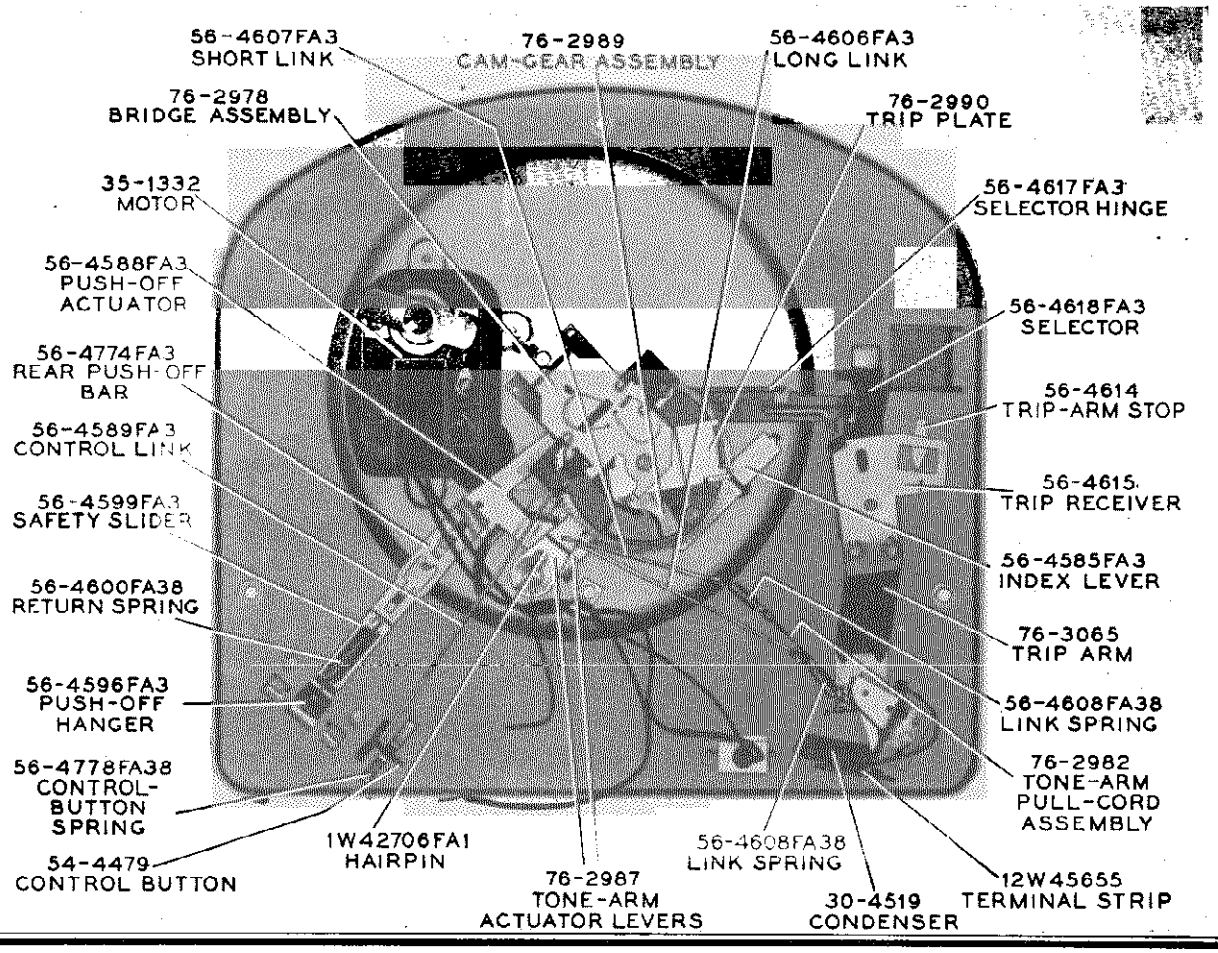

©John F. Rider

13. Trip-Receiver Assembly

Remove the three screws, washers, and nuts from trip arm (figure 27).

Remove trip receiver.

14. Selector Assembly

Remove cam gear as directed in paragraph 7. Remove feeler spring from attachment point on motor board. Tilt selector assembly, and remove from base plate.

NOTE

When assembling selector assembly, be sure to maintain .005" clearance between selector hinge, 56-4617FA3, and washer, 2W53954. For correct assembly refer to figures 28 and 11.

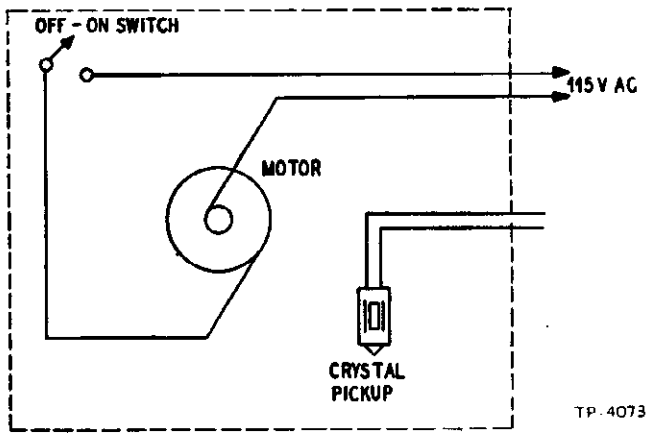

Figure 30—CHANGER WIRING DIAGRAM

REPLACEMENT PARTS LIST

SERVICE PART NO.	DESCRIPTION
35-1332	Motor
35-2643	Crystal - pickup cartridge (vertical needle insertion)
35-2663	Tone-arm assembly (for cartridge 35-2643)
35-2663-2	Tone-arm assembly (for cartridge 35-2671-1)
35-2669	Needle (for pickup cartridge 35-2643)
35-2670	Needle (for pickup cartridge 35-2671-1)
35-2671-1	Crystal - pickup cartridge (horizontal needle insertion)
35-2672	Tone-arm shell
35-3066	Turntable assembly
41-3704	Cable assembly, shielded, tone arm (M-8 console)
42-1750-3	Switch
54-4460	Bumper
54-4479	Button, control
54-4491	Grommet, motor mtg.
56-1880	Cover, switch
56-2027	Plug
56-2071-2	Cover, plug, motor-assembly cable (M-8 console)
56-4585FA3	Lever, index
56-4587FA8	Spindle
56-4588FA3	Actuator, push-off
56-4589FA3	Link, control
56-4593	Plate, fulcrum
56-4594FA37	Plate, push-off slide
56-4595FA3	Rod, push-off
56-4596FA3	Hanger, push-off
56-4597FA3	Bar, push-off
56-4599FA3	Slider, safety
56-4600FA38	Spring, return
56-4601	Spacer, 7/32" (for cartridge 35-2643)
56-4601-1	Spacer, 9/32" (for cartridge 35-2643)
56-4601-2	Spacer, 3/8" (for cartridge 35-2671-1)
56-4601-3	Spacer, 7/16" (for cartridge 35-2671-1)
56-4603FA38	Spring, tone-arm bias
56-4604FE15	Pin, tone-arm pivot
56-4606FA3	Link, long
56-4607FA3	Link, short
56-4608FA38	Spring, link
56-4612	Finger, trip
56-4613FA38	Spring, stop
56-4614	Stop, trip-arm
56-4615	Trip receiver
56-4616FE15	Feeler
56-4617FA3	Hinge, selector
56-4618FA3	Selector
56-4627FA3	Spring, retainer
56-4628FA38	Spring ring
56-4629	Saddle, push-off
56-4630FA38	Spring, shelf
56-4631	Tone-arm lift pin
56-4670FA38	Spring, feeler
56-4774FA3	Push-off bar, rear
56-4778FA38	Spring, control-button
56-4926	Spacer, motor mtg.
76-1794-1	Plug (M-8 console)
76-2172	Cable, motor assembly
76-2374	Idler wheel (for motor 35-1332)
76-2978	Bridge assembly
76-2982	Pull-cord assembly, tone arm
76-2983	Shaft-and-swivel assembly
76-2984	Push-off cover assembly
76-2987	Levers, tone-arm actuator
76-2988	Base-plate assembly
76-2989	Cam-gear assembly
76-2990	Trip plate
76-2991	Ball-bearing assembly
76-3065	Trip arm
76-3556	Idler wheel (for motor 35-1339)
76-3557	Idler wheel (for motor 35-1341)
1W36521	Escutcheon pin
1W42706FA1	Hairpin
1W52627	Cam-gear washer
1W57117	Clip, tubular
2W53954	Washer, selector
12W45655	Terminal strip

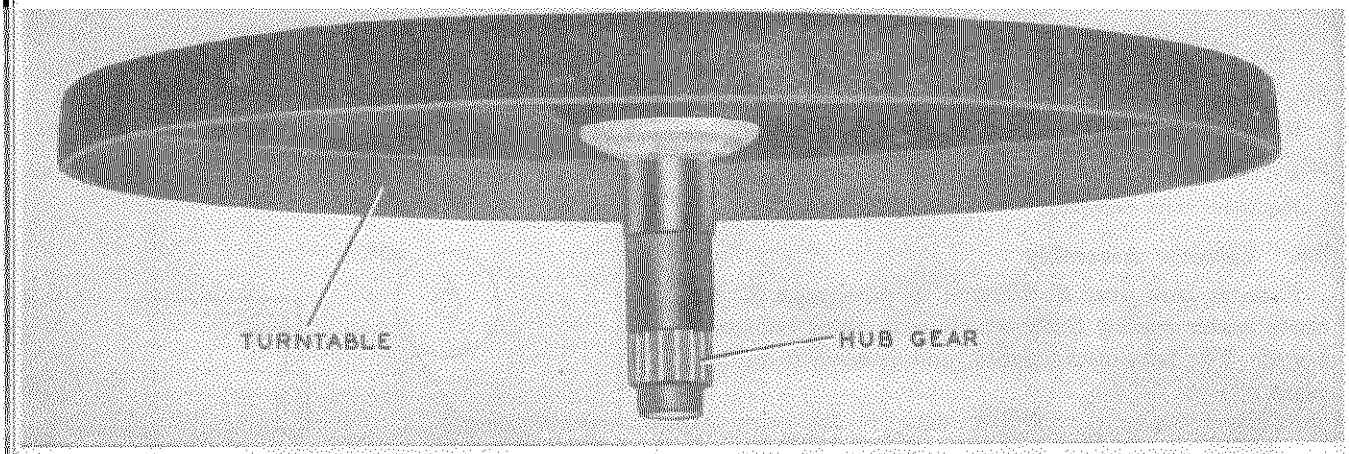

Figure 1—TURNTABLE AND HUB GEAR TP-4184

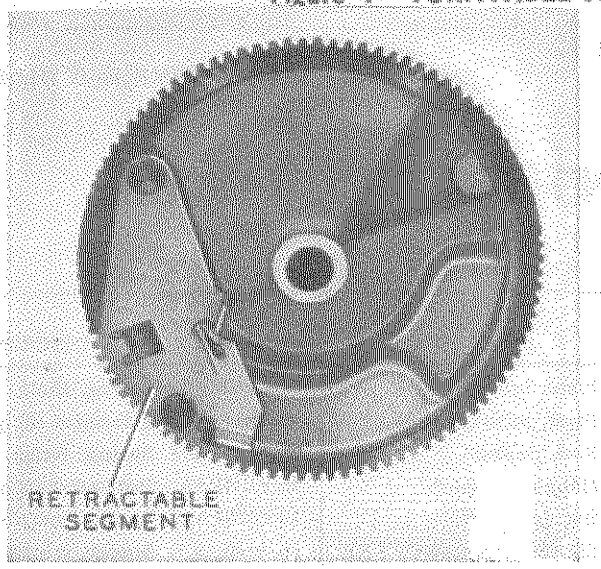

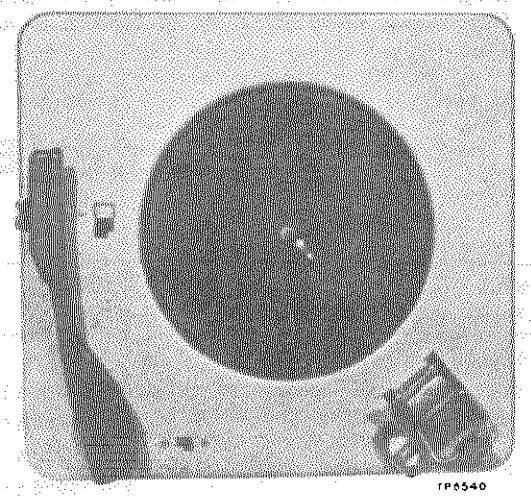

TP-4182

Figure 2—CAM GEAR, SHOWING RETRACTABLE SEGMENT
TP-4101A TP-4181

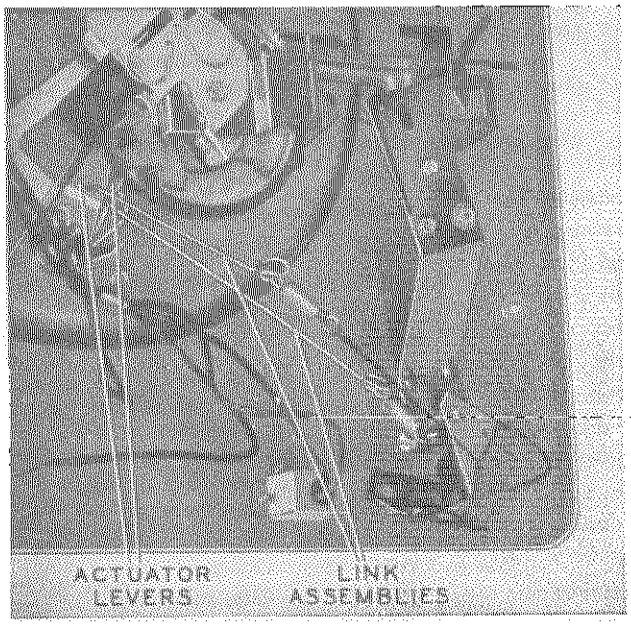

Figure 3—LINK ASSEMBLIES AND ACTUATOR LEVERS

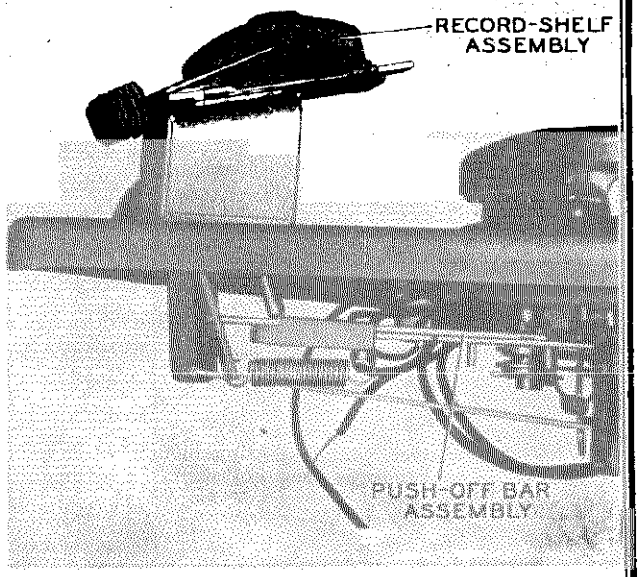

Figure 4—RECORD-SHELF AND PUSH-OFF ASSEMBLIES

© John F. Rider

DESCRIPTION OF OPERATING CYCLE

Power for the motor is applied through the on-off switch. The turntable is rim-driven by a rubber-tired idler wheel mounted between the motor shaft and the turntable rim.

The turntable hub is a combined shaft and gear (figure 1). This small hub gear engages a large cam gear (figure 2) when the retractable segment of the cam gear is brought into position by the action of the trip mechanism; the cam gear, in turn, operates the changer mechanism.

The tone arm is operated by two link assemblies attached to actuator levers (figure 3) which are in contact with the cam surface of the cam gear.

The record-shelf push-off mechanism is connected, through a series of bars (figure 4), to a push-off actuator; the mechanism is operated when a roller on the cam gear comes in contact with the actuator.

The trip mechanism is operated by a trip finger, riding over a ratchet screw (figure 5), which starts the change cycle when the needle is traveling in the eccentric finish groove of the record. The trip mechanism is locked in a disengaged position when the control button is in the manual position.

PHILCO RADIO-PHONOGRAPH TROUBLE-SHOOTING PROCEDURE

The following tests are given for quickly localizing trouble in either the radio or phonograph section of the radio-phonograph combination. Be sure to make each test, in the order given, before removing either the radio chassis or the record changer from the cabinet. If the trouble is found to be in the audio amplifier, refer to the radio service manual for the particular model under test. If the trouble is in some part of the record changer, refer to this record-changer manual.

Audio-Amplifier Test

The audio amplifier is common to both the radio and the phonograph sections of the combinations using the M-9 changer.

Tune in a station, and note the volume and tone quality. If the performance is abnormal, refer to the radio service manual for the particular model under test, and correct the trouble.

Pickup Test

Play a familiar record on the phonograph, and again note the volume and tone quality.

NOTE

It is advisable to carry a familiar record as a part of the service test equipment.

If distortion is noted when playing the record, first try a new needle. If the distortion continues, a faulty crystal pickup is indicated.

Changer-Mechanism Test

The following series of record-changer operating tests is given for quickly locating any troubles that may be encountered. Each test should be performed with several records before making any adjustments.

Set the record shelf to the 10″ position and place the tone arm on the rest post. Place a 10″ record over the spindle and onto the record shelf.

Push the control button to REJ. (reject), and observe the record-dropping action. The record should fall smoothly, the edge leaving the lips of the record shelf *after* the center has started to fall.

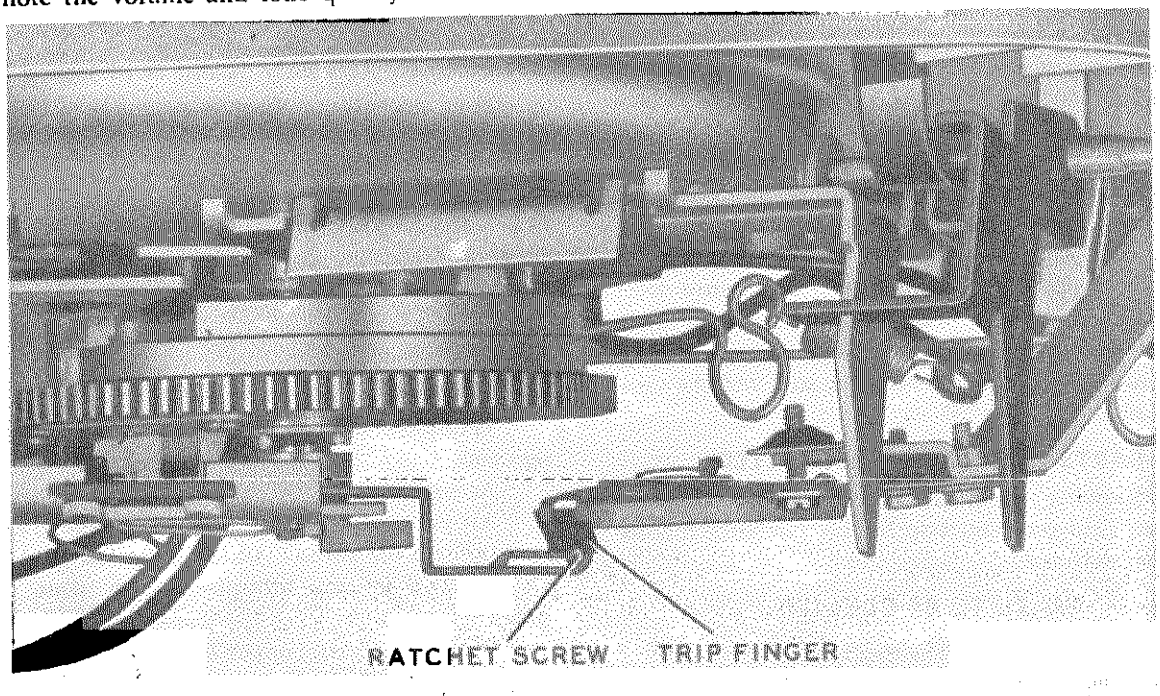

TP-4135-1

Figure 5—TRIP FINGER AND RATCHET SCREW

The tone arm should rise from the rest post, and the needle should come down on the record, starting about ⅛" from the outer edge.

Play the record through and observe the tripping action; the trip mechanism should operate within the first two or three revolutions after the needle has entered the eccentric finish groove.

Remove the record from the turntable and turn the record shelf to the 12" position. Place a 12" record over the spindle and onto the record shelf. Push the control button to REJ., and observe the record-dropping action. The record should leave the lips of the record shelf *after* the center has started to fall. Refer to page 11 for the record-shelf adjustment, if needed. The tone arm should rise from the rest post, and the needle should come down on the record, starting about ⅛" from the outer edge.

Play the record through and observe the tripping action.

Observe whether the lower edge of the tone arm, during a change cycle, clears the top of the hook on the tone-arm rest post by a minimum of ⅛". Take the tone arm off the rest post, and place the pickup over the changer base plate; the needle point should clear the base plate by at least 1/16", and should be no higher than the turntable top.

Turntable and Motor Test

NOTE

Before making this test, warm up the motor by allowing it to run for at least ten minutes.

Set the control button to MAN. (manual), load the turntable with ten 12" records, and place the tone arm on the top record.

Place a stroboscope disc, such as Philco Part No. 45-2900, on the record, and illuminate the disc with a lamp (preferably a neon bulb) operated on 60-cycle a.c. The dots in the row calibrated for 78 r.p.m. should appear to remain stationary, or drift *very* slowly, but smoothly, backward or forward.

If the turntable speed is steady, but is appreciably below 78 r.p.m., refer to the lubrication data on the turntable upper bearing, motor bearings, and motor idler plate, given under CLEANING AND LUBRICATION, — — — — if the lubrication appears to be adequate, the motor is probably defective.

Unsteady drift of the dots on the stroboscope disc indicates uneven turntable speed, the cause of wows; see UNEVEN TURNTABLE SPEED (WOWS).

CLEANING AND LUBRICATION

The M-9 record changer, like any other mechanism, requires lubrication after long periods of use. Whenever a major part or assembly is to be replaced, the changer should be cleaned and lubricated. Carbon tetrachloride or other similar cleaning fluids may be used to remove old grease, oil, and dirt. Apply lubricants sparingly. All lubrication points are shown in figures 6 and 7. It may be necessary to remove some parts and assemblies in order to lubricate their bearings—for example, the actuator and cam gear must be removed to lubricate the actuator stud and the cam-gear spindle.

PARTS NOT TO BE LUBRICATED

The following parts should not be lubricated at any time: Trip receiver; trip finger; ratchet screw on trip plate; selector.

PARTS TO BE GREASED

The following parts are to be lubricated with a grease having the consistency of vaseline:

Record-Shelf Assembly (point A of figure 7)

Four protruding dimples.

Bridge Assembly and Slider Control Bar (point B of figure 6)

Three dimples and four upturned ears.

Cam Gear (point C of figure 6)

Cam-gear teeth, cam surfaces, and cam-gear spindle.

Main Assembly (points D, figures 6, 7, and 11)

Trip-plate ear where contact is made with gear segment.

Actuator stud.

All parts with ears sliding on changer base plate.

Index-lever surface which slides on base plate.

Push-off-actuator dimples which slide on base plate.

Turntable shaft (upper bearing).

Tone-arm shaft.

© John F. Rider

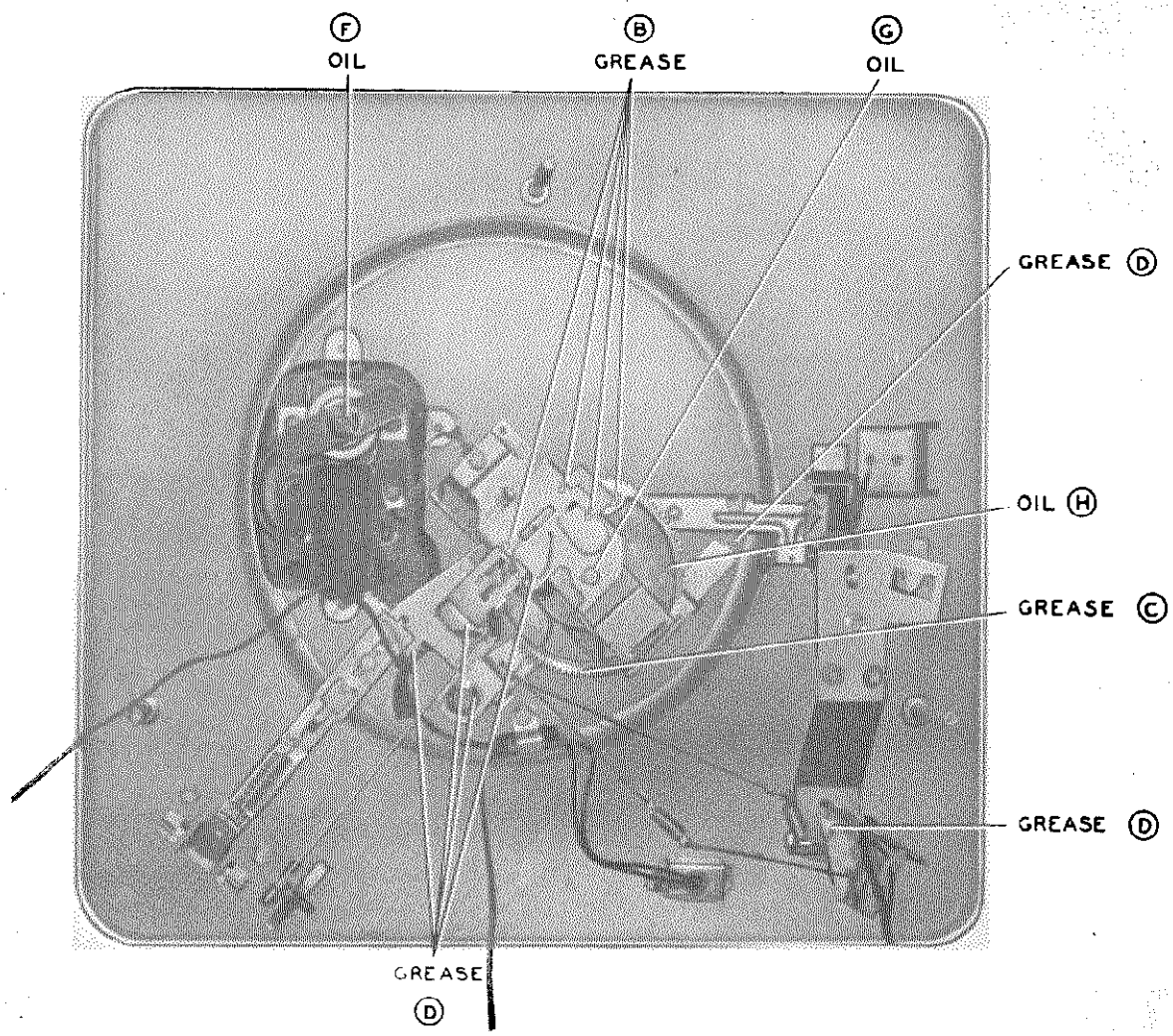

Figure 6—BOTTOM VIEW OF CHANGER, SHOWING LUBRICATION POINTS

PARTS TO BE OILED

The following parts are to be lubricated with S.A.E. 20 oil:

Tone Arm (point E of figure 7)

Tone-arm pivot pin where pin rides in elongated hole of tone arm—apply one drop with a pointed rod.

Motor (points F, figures 6 and 7)

Motor idler plate—one or two drops in each dimple.

Motor bearings.

Trip-Plate Bushings (point G of figure 6)

Cam-Gear Roller (point H of figure 6)

CAUTION

Do not get any oil or grease on the motor shaft or the idler-wheel tire. Should this occur, remove the oil or grease immediately with carbon tetrachloride.

© John F. Rider

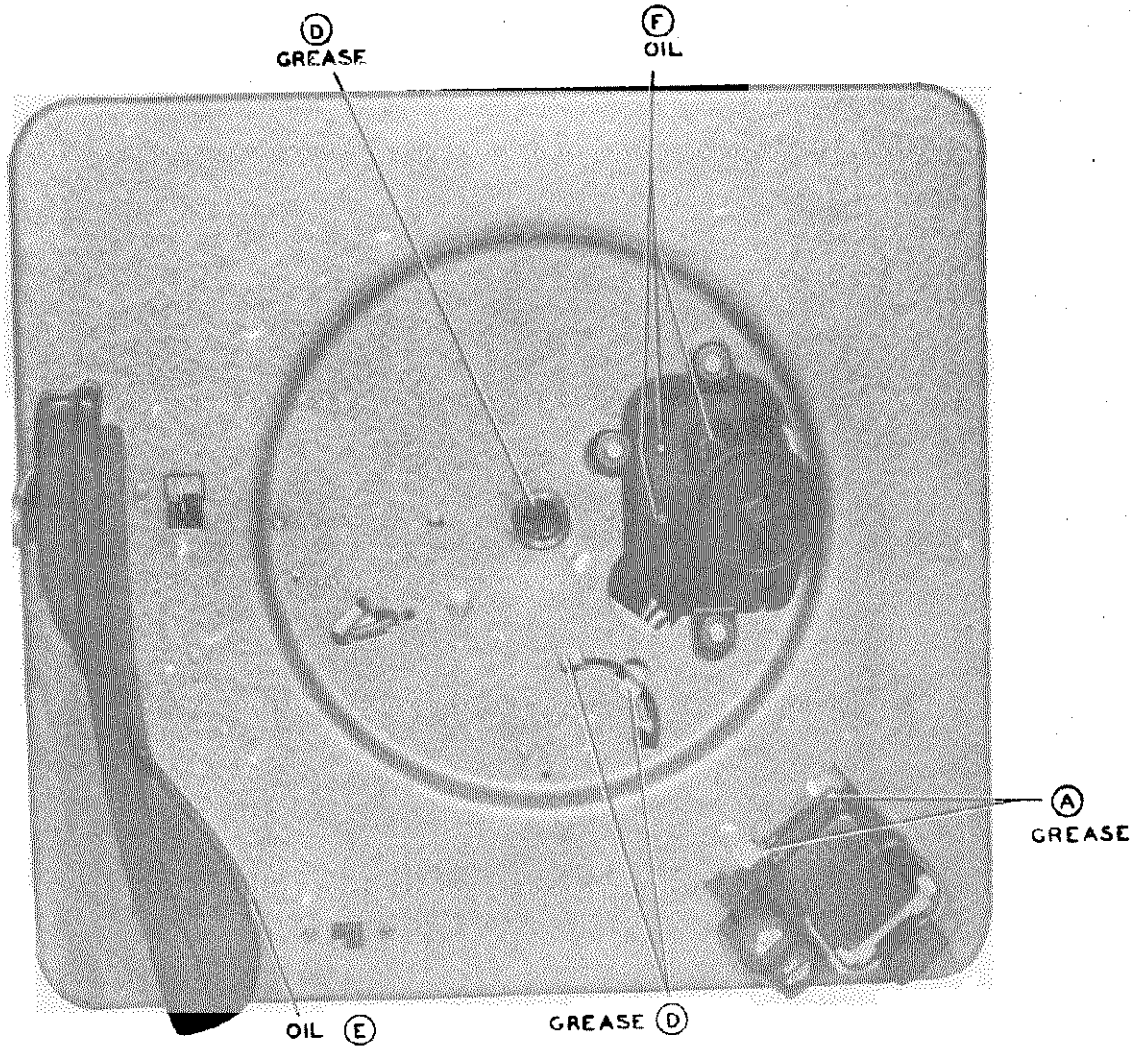

Figure 7—TOP VIEW OF CHANGER, SHOWING LUBRICATION POINTS

ADJUSTMENTS

10″ Index Adjustment

Set a 10″ record on the turntable; push the control button to REJ., and rotate the turntable 4½ turns by hand. The tone arm should then be approximately ½″ above the record.

Loosen the clamp screw on the trip arm (figure 8). Hold the tone arm (steady) ⅛″ in from the edge of the record, and set the trip arm so that the trip-arm stop is in contact with the selector hinge. See figure 8.

Tighten the clamp screw, leaving 1/32″ vertical play, or clearance, between the trip arm and the base plate.

12″ Index Adjustment

Make the 10″ index adjustment first. The 12″ indexing will ordinarily be satisfactory after the 10″ adjustment is made; if not, bend the selector, 56-4618FA3, slightly to the right or left as required for proper indexing of the needle on the record, as shown in figure 9.

© John F. Rider

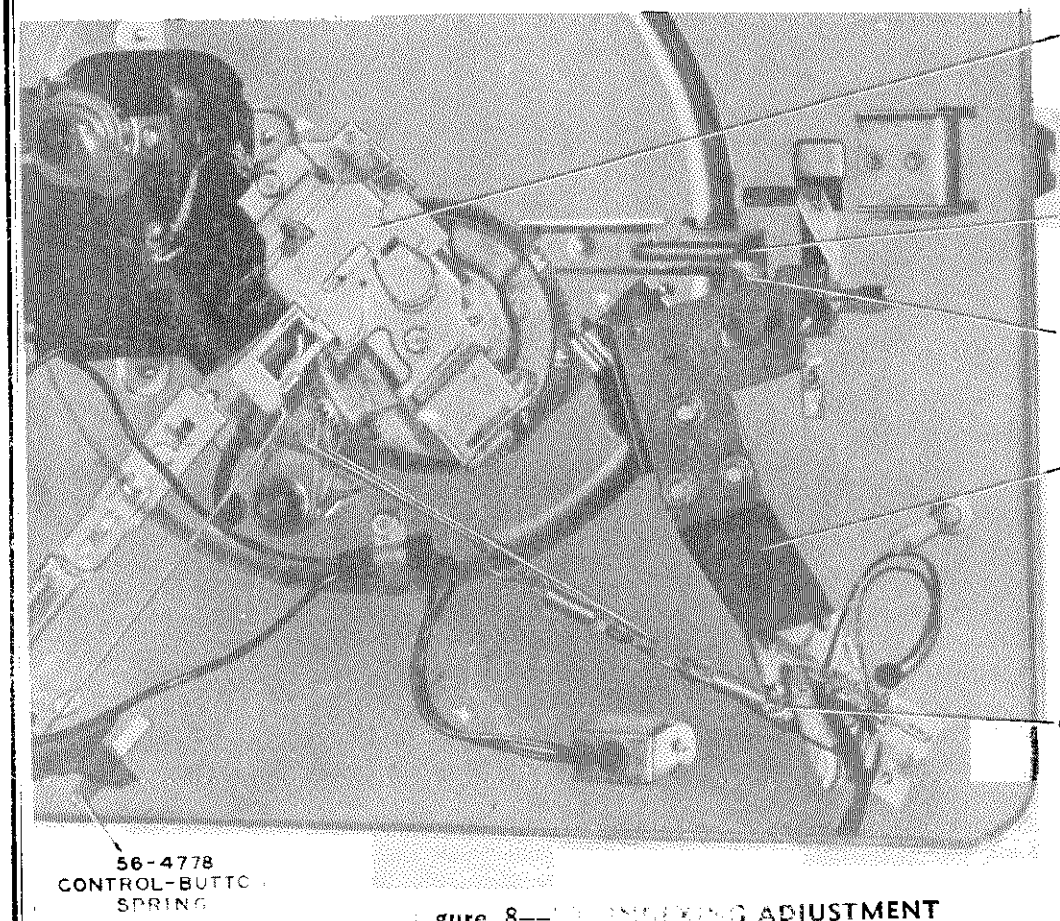

gure 8— ADJUSTMENT TP6534

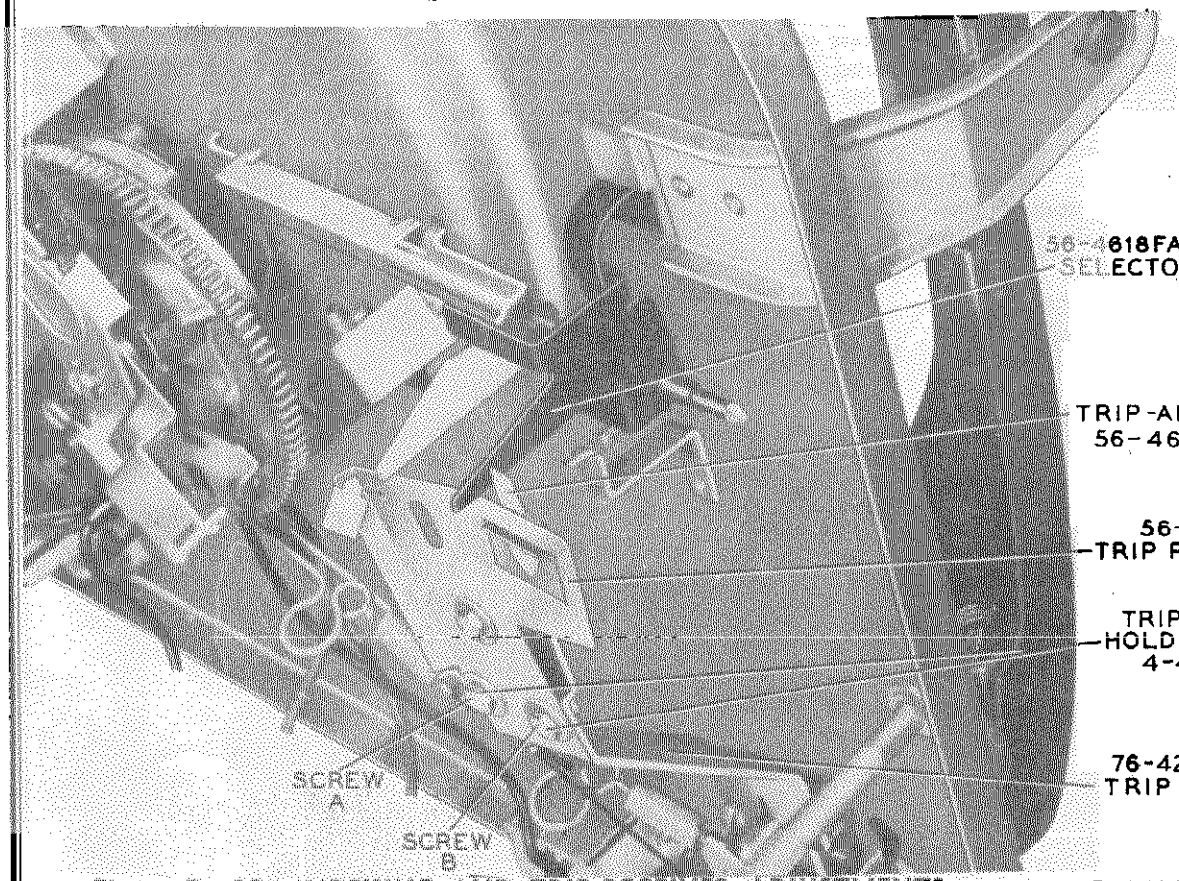

Figure 9—12" INDEXING AND TRIP-RECEIVER ADJUSTMENTS TP-4104-1

© John F. Rider

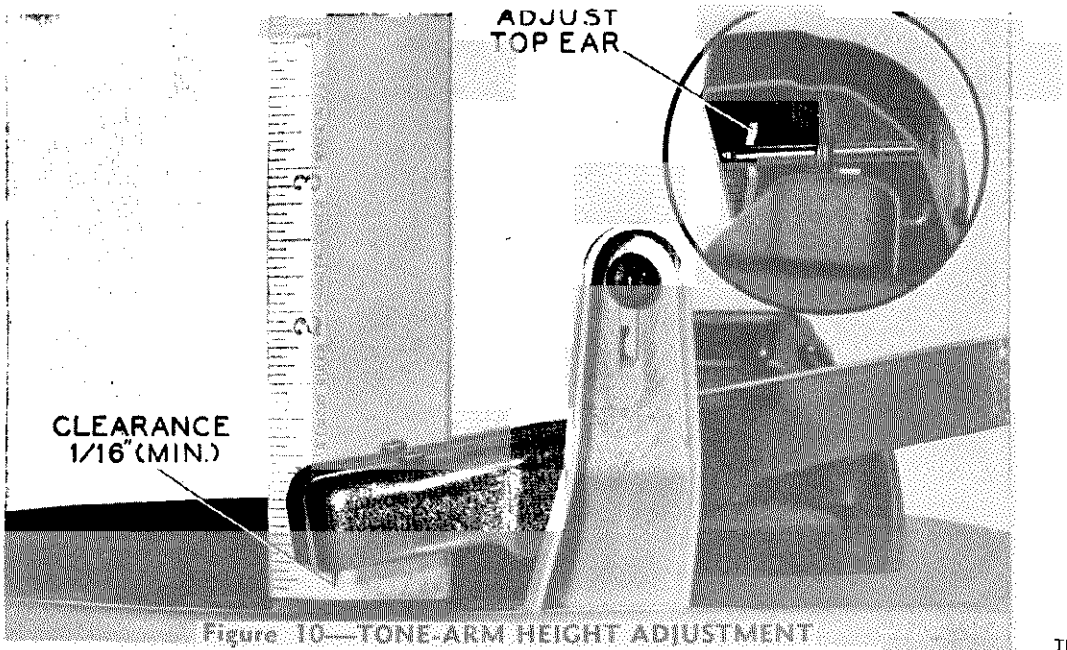

Figure 10—TONE-ARM HEIGHT ADJUSTMENT

TP-4000

Tone-Arm Height and Lift Adjustments

With the changer out of cycle (change cycle completed; tone arm lowered), and the tone arm off the rest post, the needle point should clear the changer base plate by at least $\frac{1}{16}$", and should not be higher than the turntable top. See figure 10. To adjust the height, shape the *top* ear of the tone-arm swivel. shown in figure 10 (bending the ear downward raises the tone arm).

To adjust the lift, take the tone arm off the rest post, push the control button to REJ., and rotate the turntable (approximately $1\frac{1}{2}$ turns) by hand until the tone arm comes against the rest post. See figure 11; the lower edge of the tone arm should clear the top of the protruding hook on the rest post by not less than $\frac{1}{8}$", and not more than $\frac{1}{4}$". Adjust by shaping the *lower* ear of the tone-arm swivel (bending the ear downward raises the tone arm).

Tone-Arm Vertical and Horizontal Timing Adjustments

NOTE

Before making these adjustments, make the tone-arm height and lift adjustments given above.

For the vertical adjustment, start with the changer out of cycle, push the control button to REJ., and rotate the turntable, by hand, three-quarters of a revolution; this setting can be obtained more accurately by making a mark on the turntable to coincide with some starting point. At the three-quarter-revolution point, the leading edge of the cam surface is approximately $\frac{1}{4}$" from the end of the lift actuator lever; this is the lower actuator lever, shown in figure 12. Adjust the wire loop of the short link (link, cord, and spring assembly), attached to the tone-arm lift pin, by squeezing or opening the loop until the tone-arm lift pin makes contact with the lower ear of the tone-arm swivel (figure 11).

TP-4102

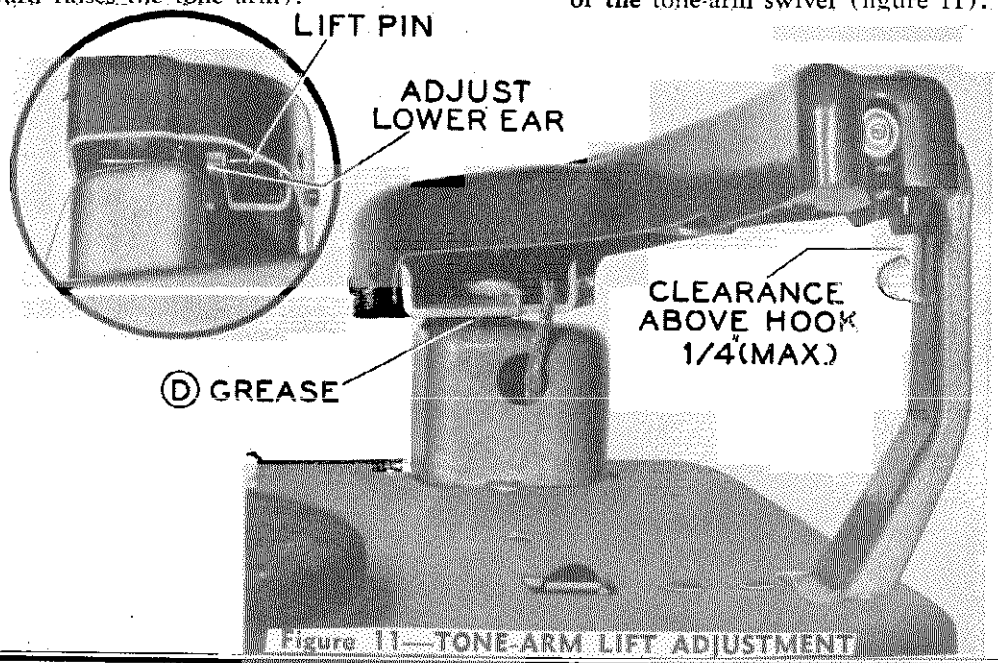

Figure 11—TONE-ARM LIFT ADJUSTMENT

© John F. Rider

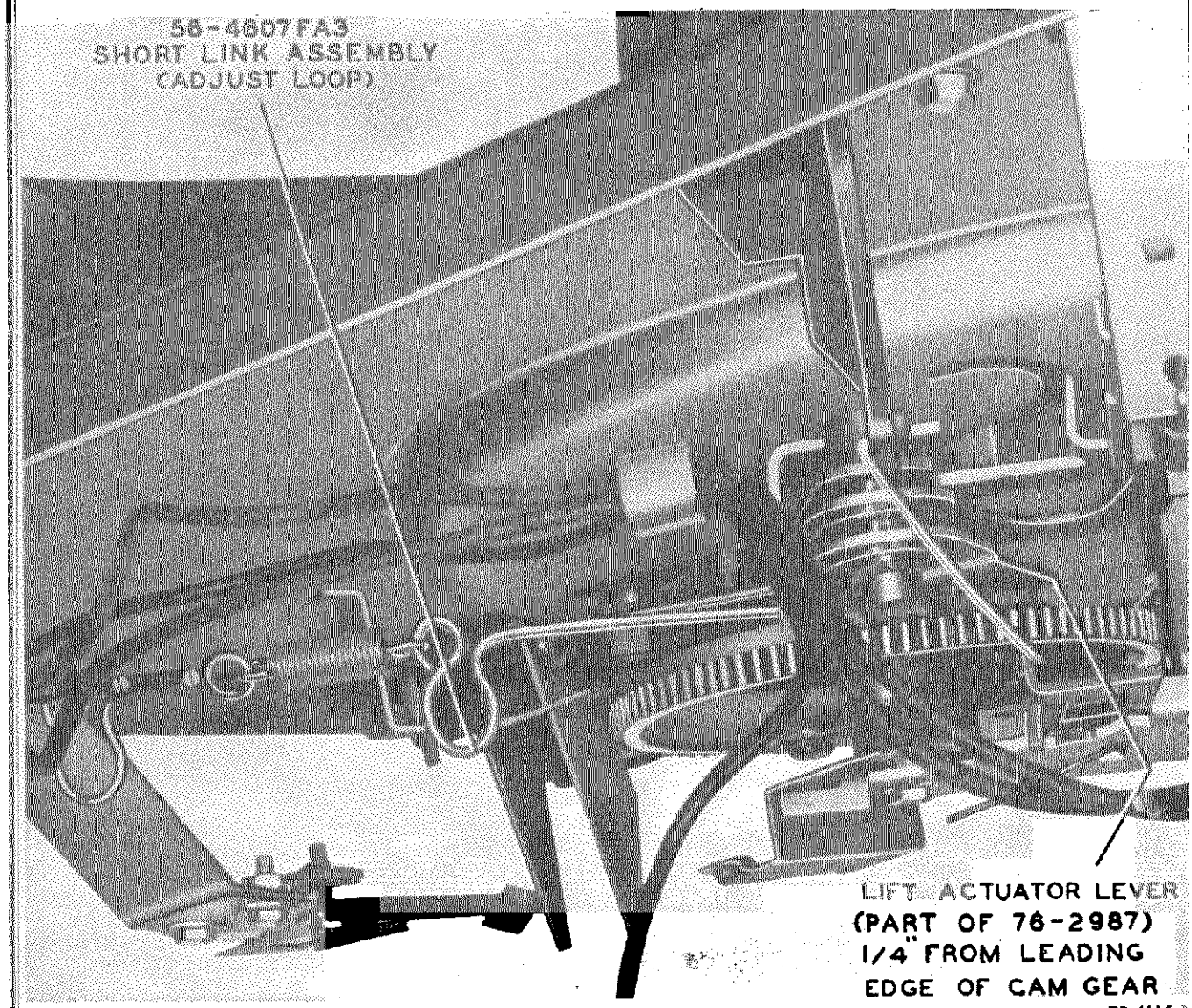

Figure 12—TONE-ARM VERTICAL TIMING ADJUSTMENT TP-4116-1

For the horizontal adjustment, rotate the turntable another three-quarter revolution from the point at which the vertical adjustment was made. At this point, the leading edge of the cam surface is approximately ¼" from the end of the horizontal-return actuator lever; this is the upper actuator lever, shown in figure 13. Adjust the wire loop of the long link and spring assembly, attached to the trip arm, by squeezing or opening the loop until the tone arm makes contact with the rubber bumper on the tone-arm rest post.

Trip-Finger and Trip-Receiver Adjustments

For the trip-finger adjustment, move the tone arm toward the spindle. Adjust the screw on the trip-receiver plate (figure 14) so that the trip finger, when riding over the ratchet screw on the trip plate, assumes an angle of 25° to 30° with respect to the screw. Do *not* bend the trip finger to obtain the correct angle.

For the trip-receiver adjustment, place the tone arm on a record with the needle resting in the eccentric finish groove. The vertical center line of the trip finger should coincide with the center line of the ratchet screw. To adjust the centering of the trip finger over the ratchet screw, loosen screw B slightly, and screw A completely (see figure 9). Rotate the trip receiver about screw B, as a center, to obtain the correct adjustment (see figure 14). Tighten the screws.

Approximately ⅛" of the trip-arm stop should engage the selector (see figure 9). To adjust the engagement of the trip-arm stop, loosen screw A slightly, and screw B completely (see figure 9). Rotate the trip receiver about screw A, as a center, to obtain the correct adjustment. Tighten the screws.

The above adjustments will affect each other slightly; therefore, it may be necessary to repeat each adjustment until both are correct.

After making the above adjustments, it will be necessary to correct the index adjustments.

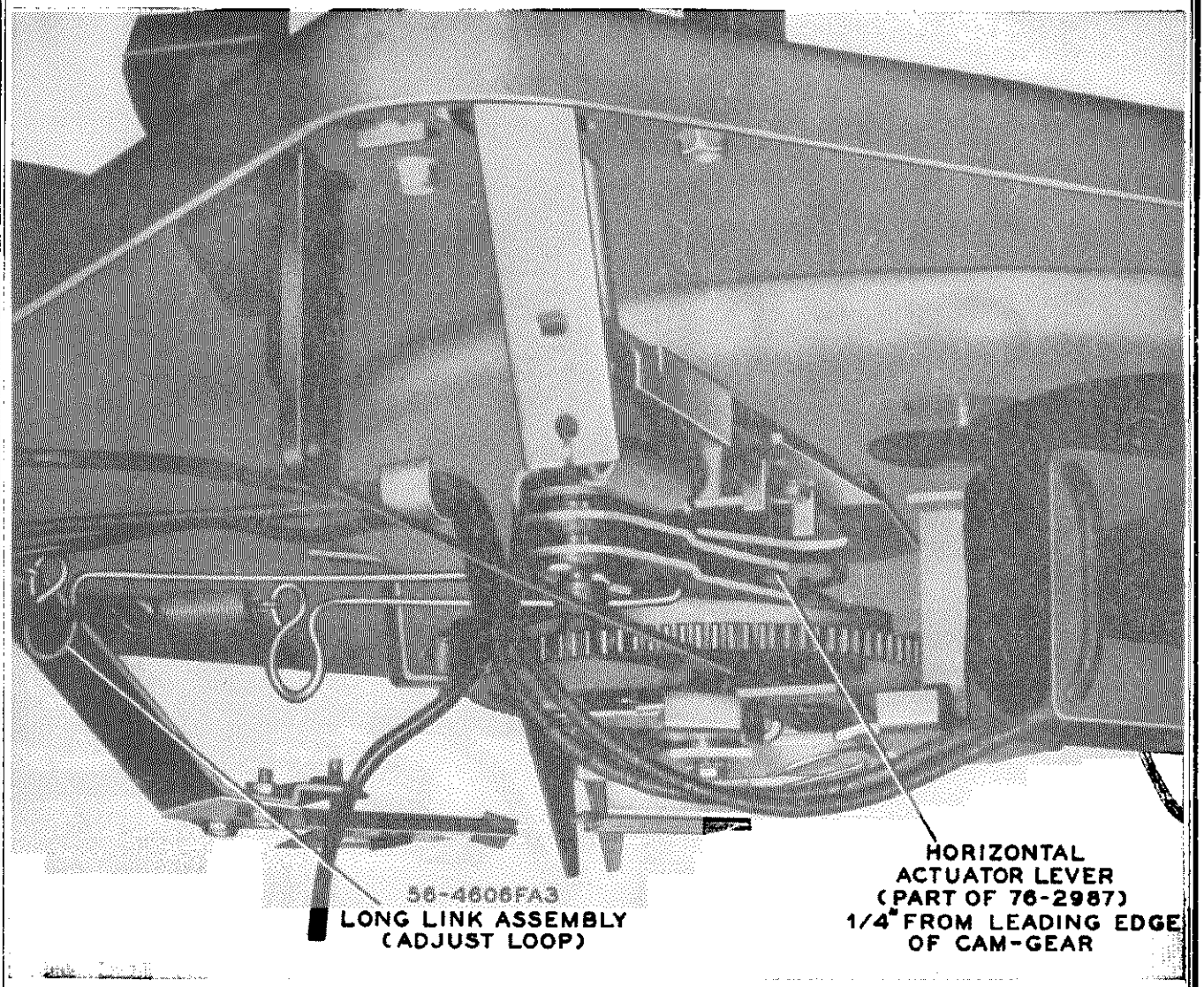

Figure 13—TONE-ARM HORIZONTAL TIMING ADJUSTMENT TP-4129

Record-Shelf Adjustment

Place the shelf in the 10″ position, and the changer out of cycle. Place the Philco record-shelf gauge, 45-1470 (also used for M-4), over the spindle and onto the record shelf, as shown in figure 15. Loosen the two hex-head screws which hold the record-shelf assembly to the changer base plate (figure 16). Move the record-shelf assembly away from the record spindle until the large curved part of the gauge drops even with the record-shelf lips, as shown in figure 15. Now push the record shelf and gauge lightly against the spindle, taking out all play toward the spindle; keep the lips of the record shelf in even contact with the edge of the gauge. Tighten the two hex-head screws.

Push-Off Adjustment

Push the control button to REJ., and rotate the turntable 2½ revolutions, by hand; at this point, the push-off actuator is in its most forward position, in contact with the roller on the cam gear (see figure 17). Loosen the push-off-bar locking screw, shown in figure 16. Squeeze the push-off-bar ears toward each other to the point where the slider blade on the record shelf extends $\frac{1}{32}$″ beyond the lips of the shelf. Tighten the hex-head locking screw.

© John F. Rider

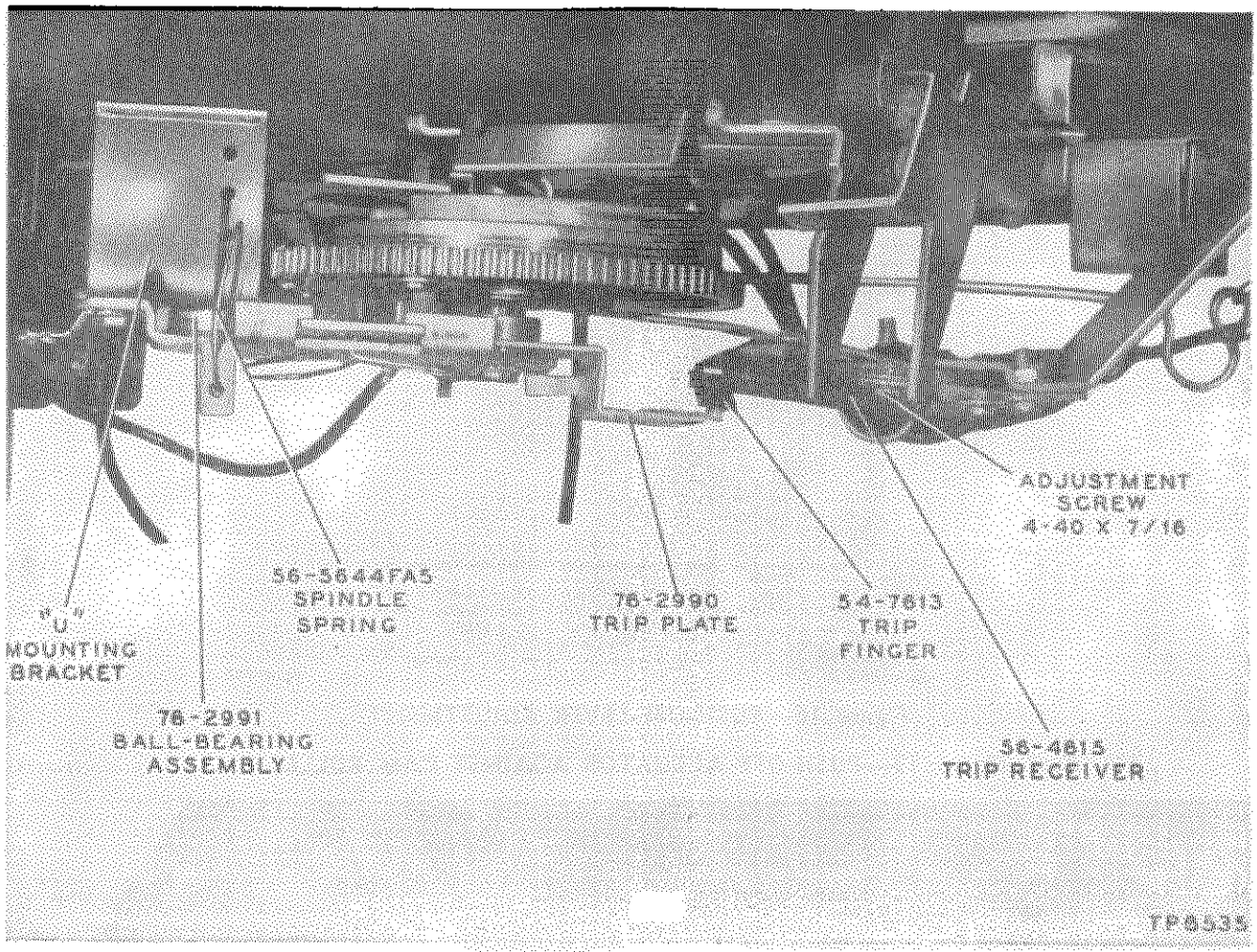

Figure 14—TRIP-FINGER ADJUSTMENT

Figure 15—SPECIAL GAUGE, SHOWN IN CORRECT POSITION ON RECORD SHELF AND SPINDLE

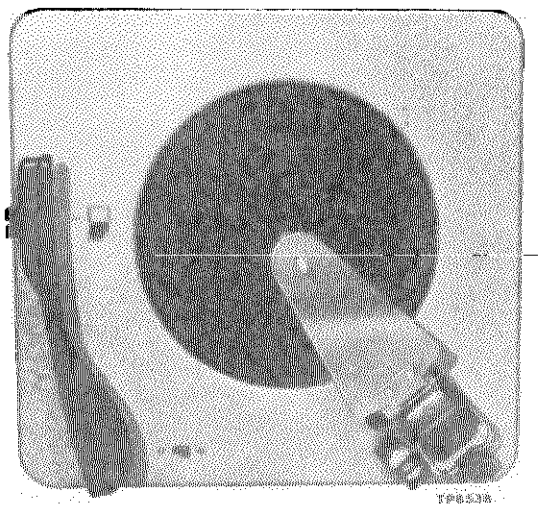

Uneven Turntable Speed (Wows)

Uneven turntable speed (wows) may be caused by the following:

Dirt under and around the turntable or idler-wheel assembly. Remove the turntable (see Spindle and Turntable) and clean out the dirt. Be careful to lift the turntable straight up. When replacing the turntable, be sure the idler is behind the turntable rim before the turntable is fully lowered.

Flat or worn spots, or grease, on the rubber tire of the idler wheel.

Defective turntable shaft or bearing assembly.

Replace the defective parts as directed under REPLACEMENT OF PARTS AND ASSEMBLIES.

Lack of lubrication on idler-wheel assembly. Follow the directions under CLEANING AND LUBRICATION.

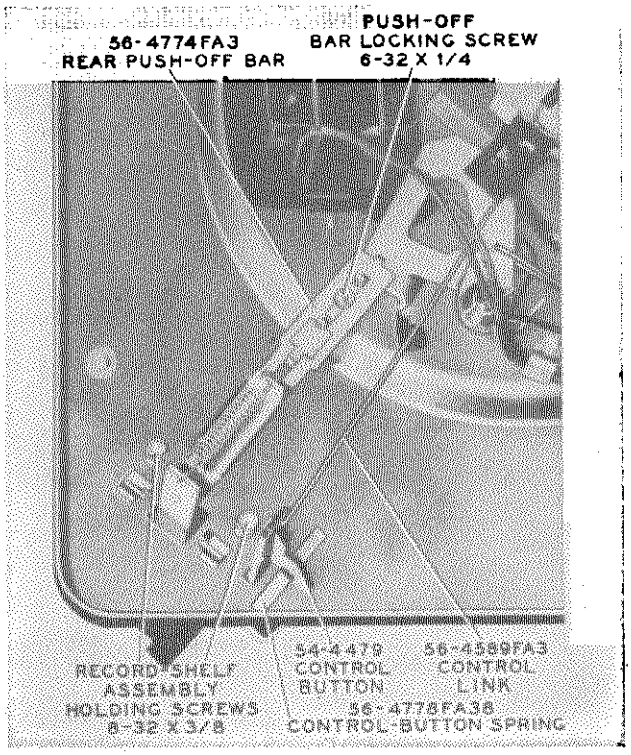

TP-4117A

Figure 16—PUSH-OFF-LEVER ADJUSTMENT

Figure 17—PUSH-OFF ACTUATOR AGAINST CAM ROLLER

TP-4134

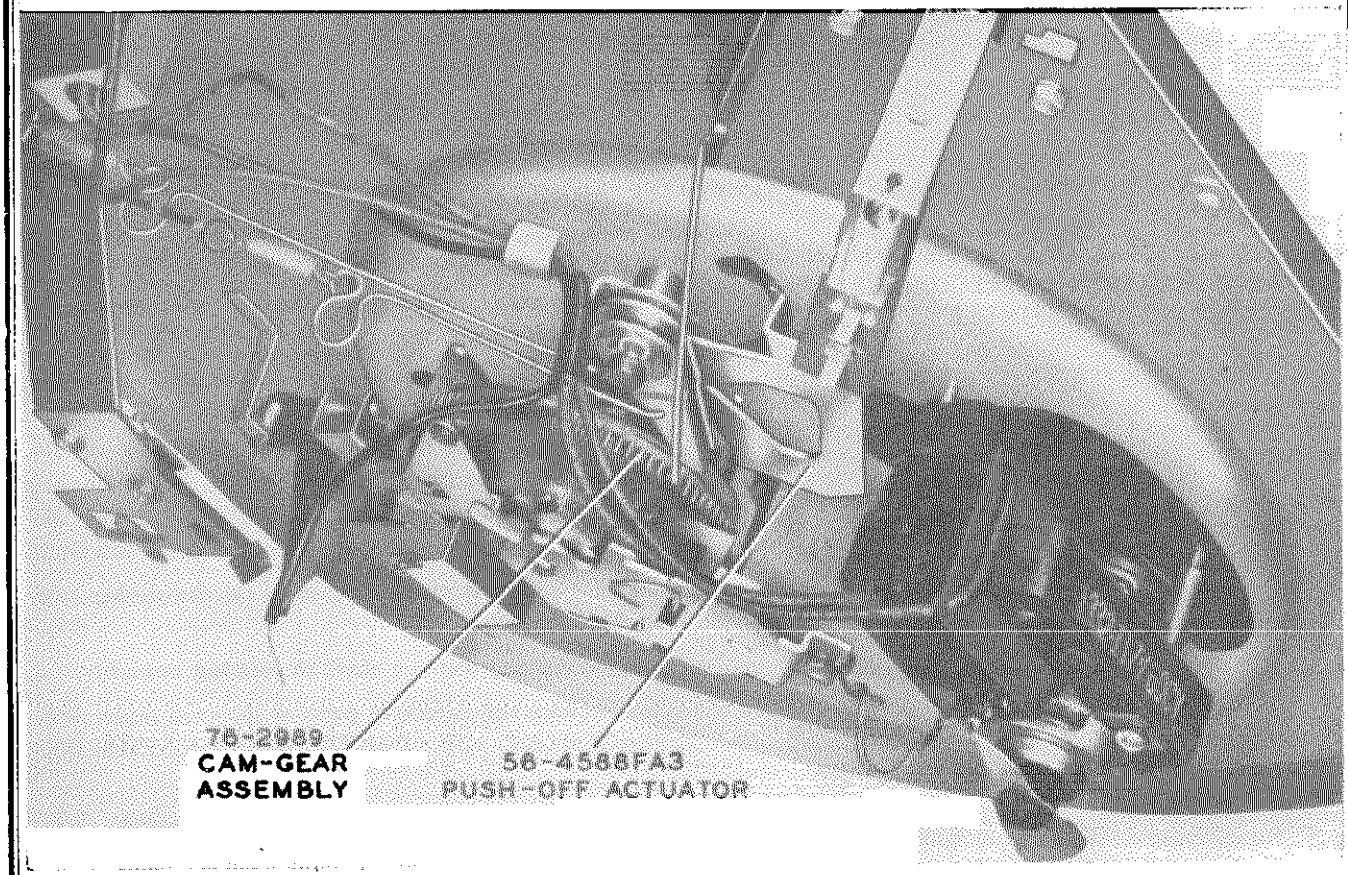

© John F. Rider

REPLACEMENT OF PARTS AND ASSEMBLIES

The following procedures are recommended for correct replacement of parts and assemblies. The part should be replaced by reversing the order of removal, and adjusted according to the directions given in the ADJUSTMENTS section of this manual.

When any part is to be removed, the control button should be in the AUT. (automatic) position, and the changer should be out of cycle.

1. Needle

To remove the needle, loosen knurled nut from under front end of crystal cartridge, and slide needle out horizontally.

When replacing needle, tighten thumb nut and add a dab of cement in thumb-nut hole to prevent nut from loosening due to vibration.

2. Crystal Pickup Cartridge

a. Bring tone arm toward center of turntable.

b. Remove the two screws, nuts, lock washers, and spacers which hold cartridge to tone arm.

c. Drop cartridge below tone arm sufficiently to allow removal of the two clips from cartridge, as shown in figure 18. If pickup leads are shielded, unsolder shield.

NOTE

When mounting cartridge, be sure to insert long spacer in side toward spindle.

2A. Spindle and Turntable

a. Unhook both ends of spindle spring from "V" mounting bracket (figure 14).

b. Uncoil spring wire through spindle hole.

c. Pull out spindle.

d. Remove turntable by pulling straight up.

3. Motor

a. Push control button to MAN. position.

b. Remove spindle and turntable, as directed in paragraph 2A.

c. Remove switch cover, and unsolder motor lead from switch contact.

d. Loosen screw of clamp which holds wire against base plate, and pull wire through clamp.

e. Unsolder second motor lead from power plug or disconnect at splice from chassis power lead, whichever is used.

f. Remove ground lead from lug on motor.

g. Remove the three screws, washers, and bushings from motor frame (figure 19), and lift motor out.

Figure 18—TONE ARM (35-2663-2), CRYSTAL CARTRIDGE REMOVED

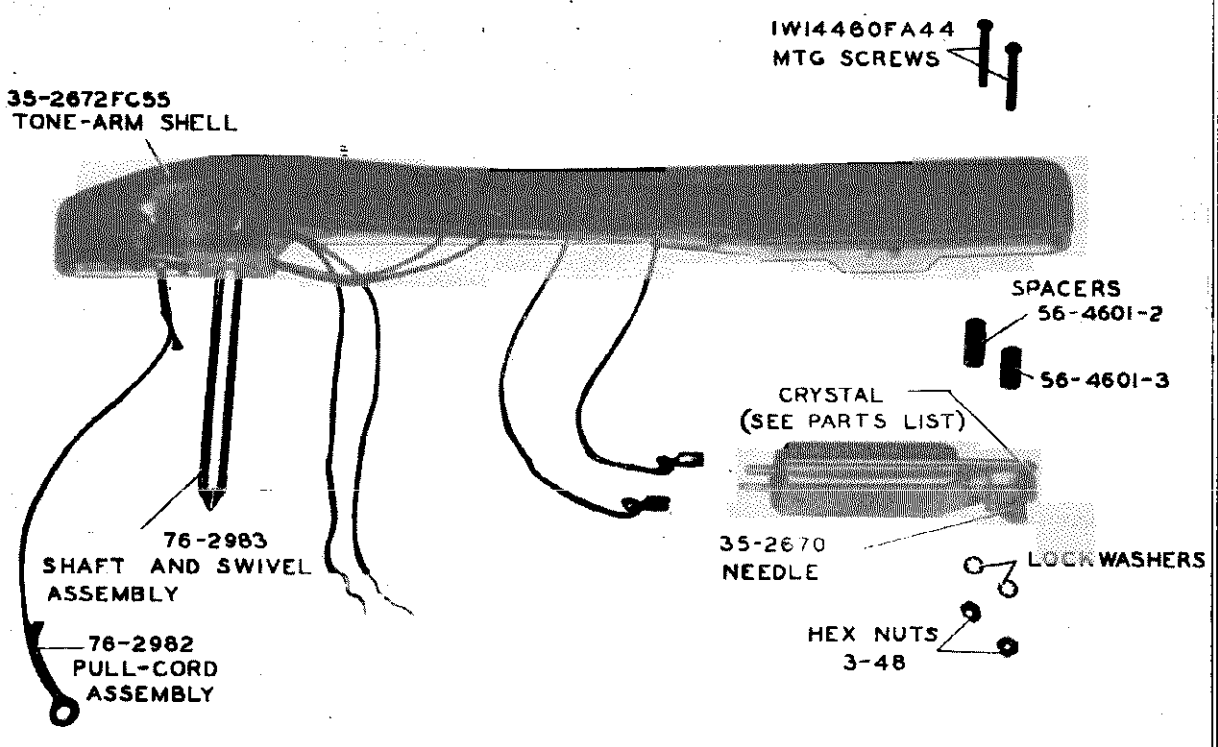

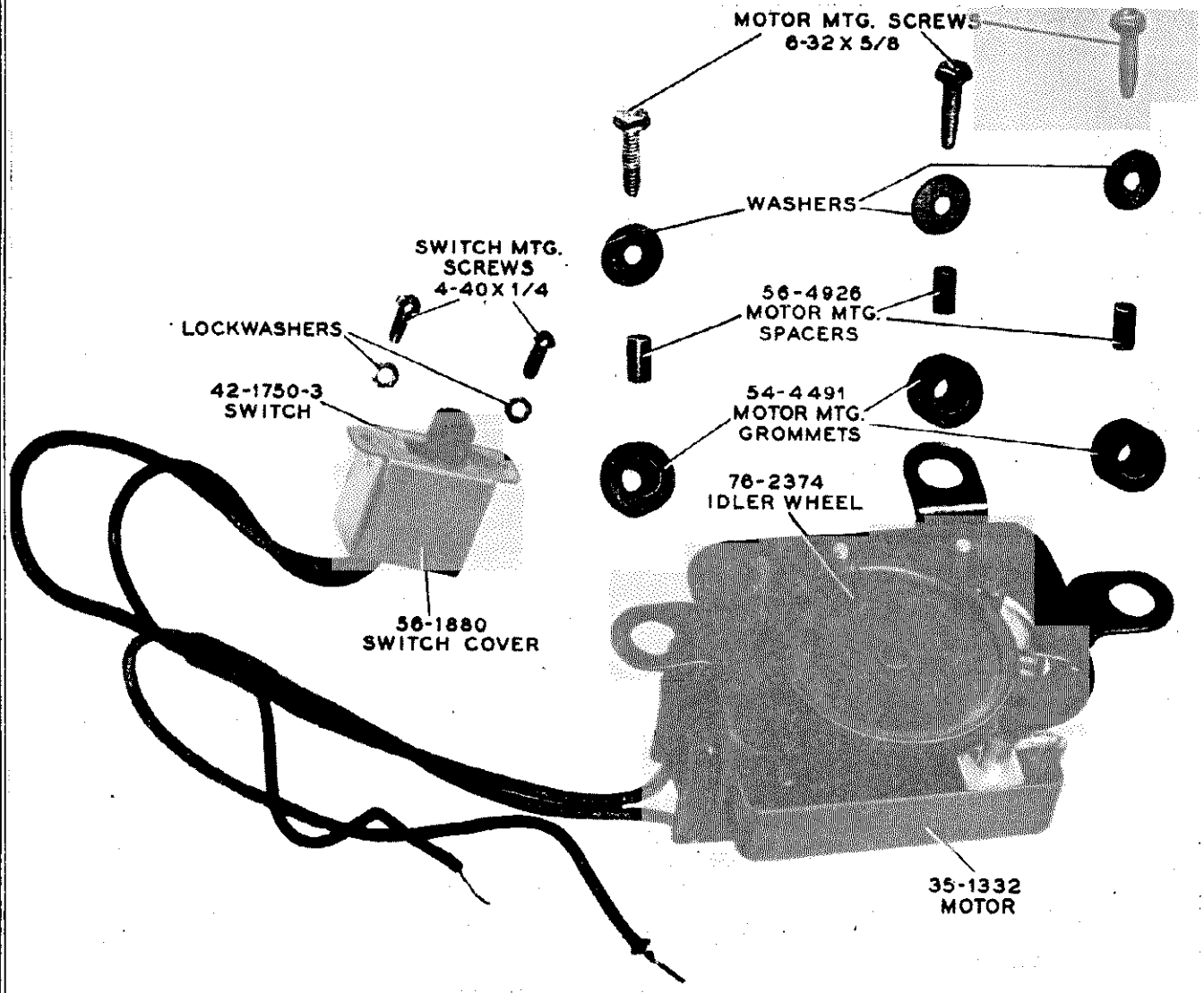

Figure 19—MOTOR, SWITCH, AND MOUNTING HARDWARE TP-4133

4. Tone-Arm Assembly

a. Unsolder tone-arm lead wires from terminal panel on underside of changer base plate.

b. Remove pull cord from spring and short link, 56-4607FA3.

c. Loosen clamp screw which holds trip arm to tone-arm shaft, 76-2983 (figure 20). Lift out tone arm and shaft.

5. Bridge Assembly

a. Remove spindle spring; then remove the two hex-head screws from bridge plate.

b. Remove link rod, 56-4589FA3, from slider control bar. Complete assembly of bridge is shown in figure 21.

6. Trip Plate

a. Remove bridge assembly, 76-2978, as directed in paragraph 5.

b. Slide trip plate, 76-2990, off cam-gear spindle.

7. Cam-Gear Assembly

a. Remove bridge assembly and trip plate, as directed in paragraphs 5 and 6.

b. Remove ball-bearing assembly, 76-2991 (figure 16), by pulling it off.

c. Remove "E" washer, 1W60980FE5.

d. Slide cam gear off spindle. Figure 22 shows cam-gear assembly.

8. Tone-Arm Actuator Levers

a. Remove "E" washer, 1W60980FE5.

b. Slide lower actuator lever from stud, and remove short link, 56-4607FA3.

c. Remove upper actuator lever from stud, and disengage long link, 56-4606FA3. Figure 22 shows actuator-lever assembly.

9. Push-Off Actuator

a. Remove two motor-mounting screws, and loosen the third one; swing motor to one side.

b. Remove tone-arm actuator levers, 76-2987, as directed in paragraph 8.

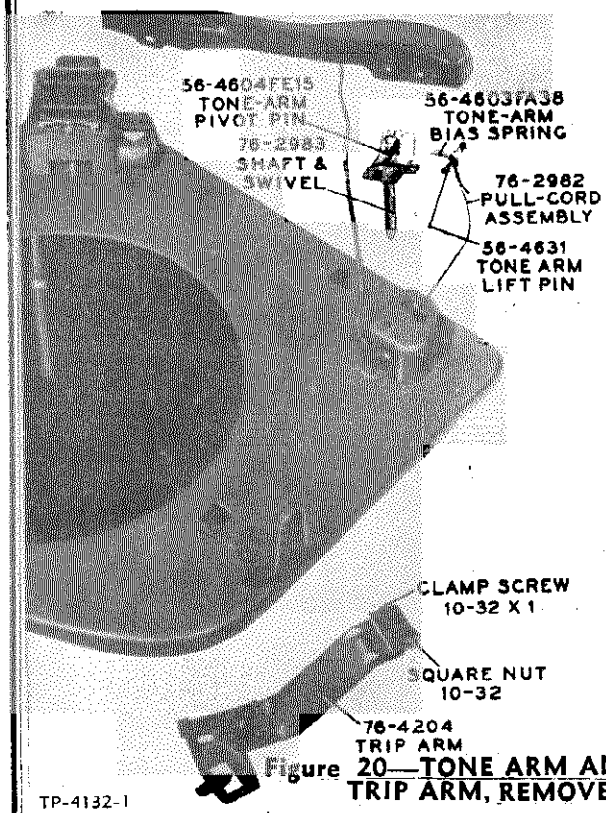

Figure 20—TONE ARM AND TRIP ARM, REMOVED

TP-4132-1

c. Press push-off rod, 56-4595FA3, and push-off hanger bar, 56-4596FA3, together, and pull downward, releasing the entire assembly.

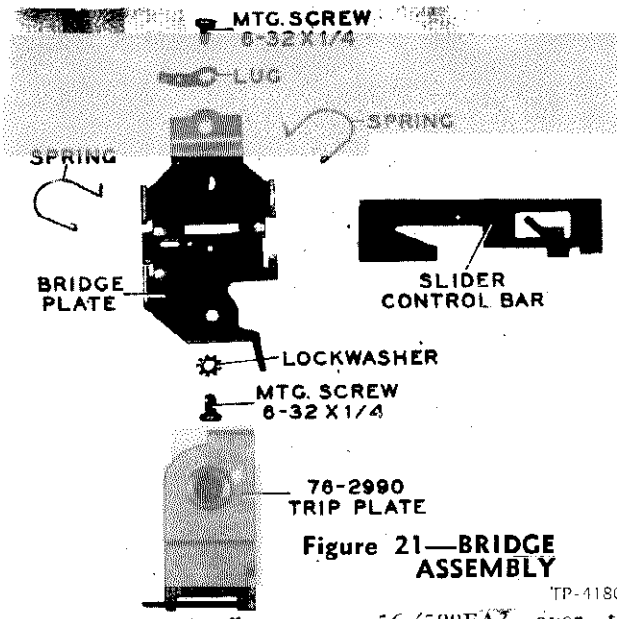

Figure 21—BRIDGE ASSEMBLY

TP-4180

d. Slide push-off actuator, 56-4588FA3, over, t align upturned ears with cutout in base plate. Slid actuator off stud.

NOTE After removing the push-off actuator and push-off-bar assembly, the slider blade on the record shelf may slide out of the assembly When reassembling, this blade should be inserted in the record-shelf assembly with the elongated hole toward the 12″ position o the record shelf. The push-off assembly i shown in figure 23.

Figure 22—CAM GEAR, PUSH-OFF ACTUATOR AND TONE-ARM ACTUATOR LEVERS

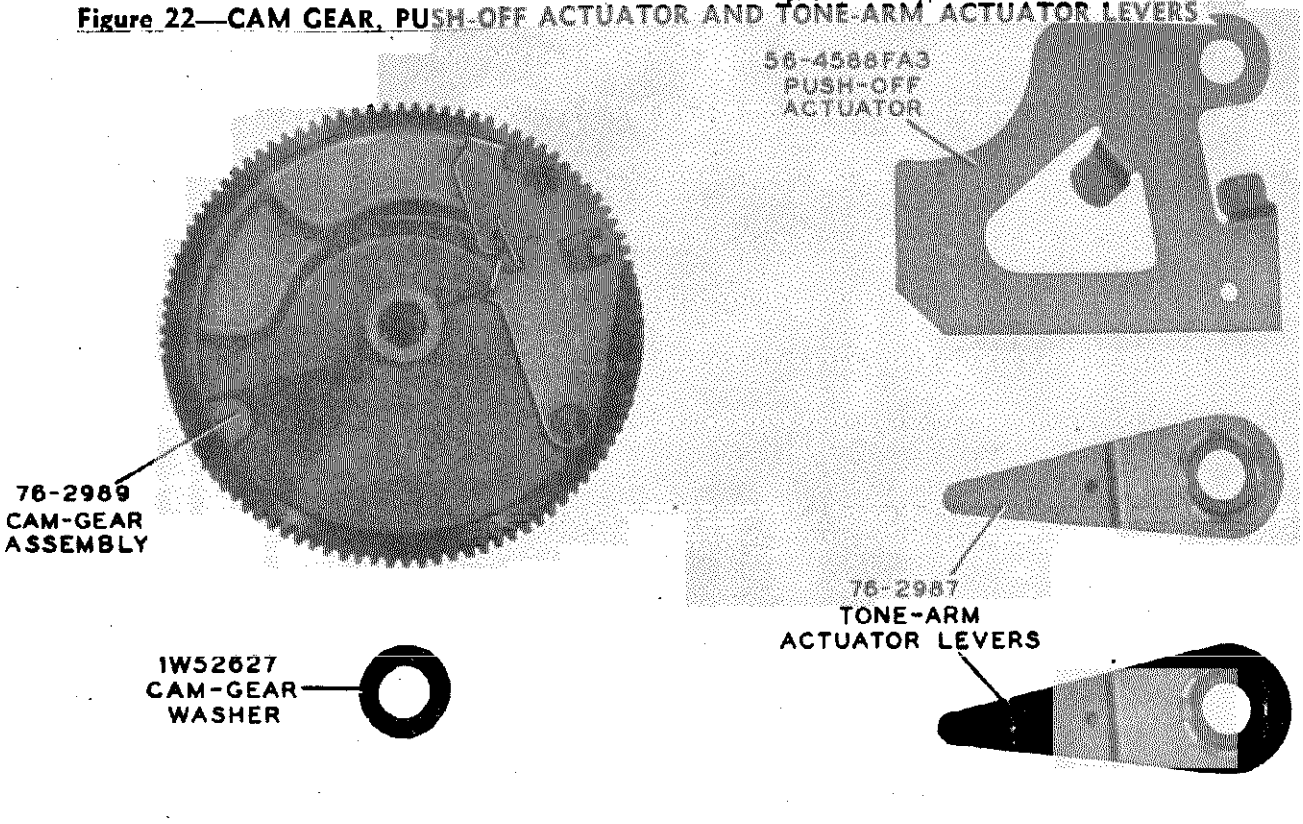

TP4182

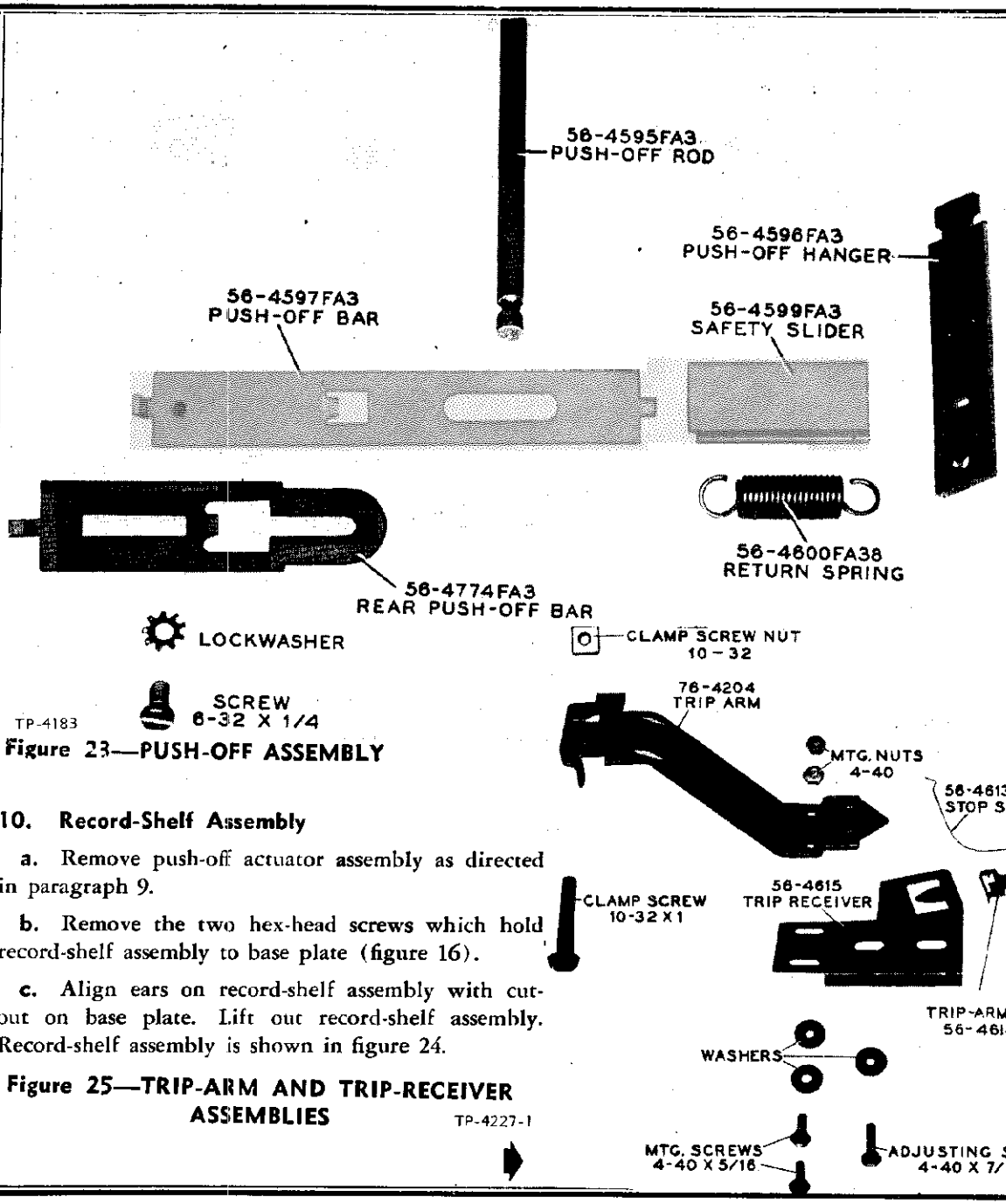

Figure 23—PUSH-OFF ASSEMBLY

10. Record-Shelf Assembly

a. Remove push-off actuator assembly as directed in paragraph 9.

b. Remove the two hex-head screws which hold record-shelf assembly to base plate (figure 16).

c. Align ears on record-shelf assembly with cut-out on base plate. Lift out record-shelf assembly. Record-shelf assembly is shown in figure 24.

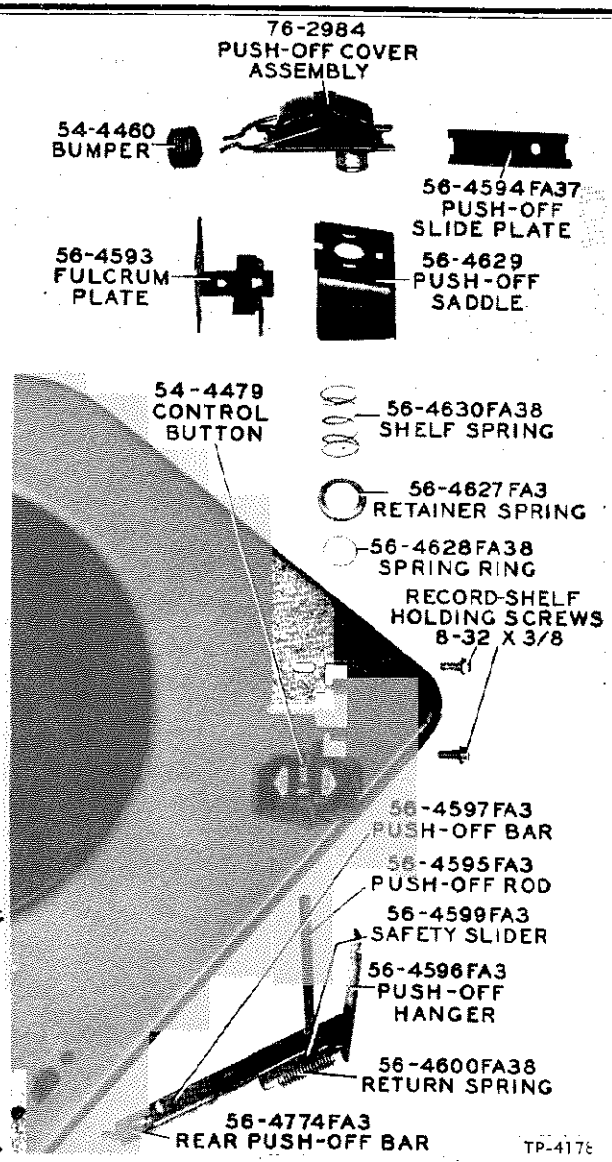

Figure 24—RECORD-SHELF AND PUSH-OFF ASSEMBLIES, REMOVED

Figure 25—TRIP-ARM AND TRIP-RECEIVER ASSEMBLIES

TP-4227-1

© John F. Rider

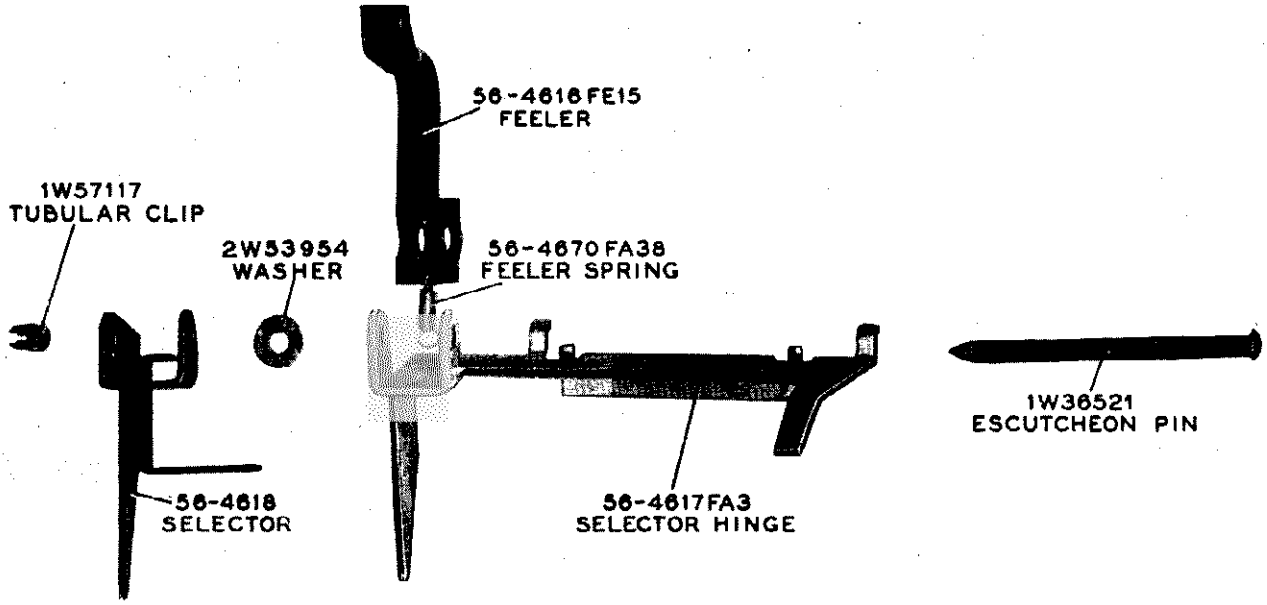

Figure 26—SELECTOR AND SELECTOR-HINGE ASSEMBLY TP-4123

Figure 27—BOTTOM VIEW OF CHANGER, WITH PARTS IDENTIFICATION

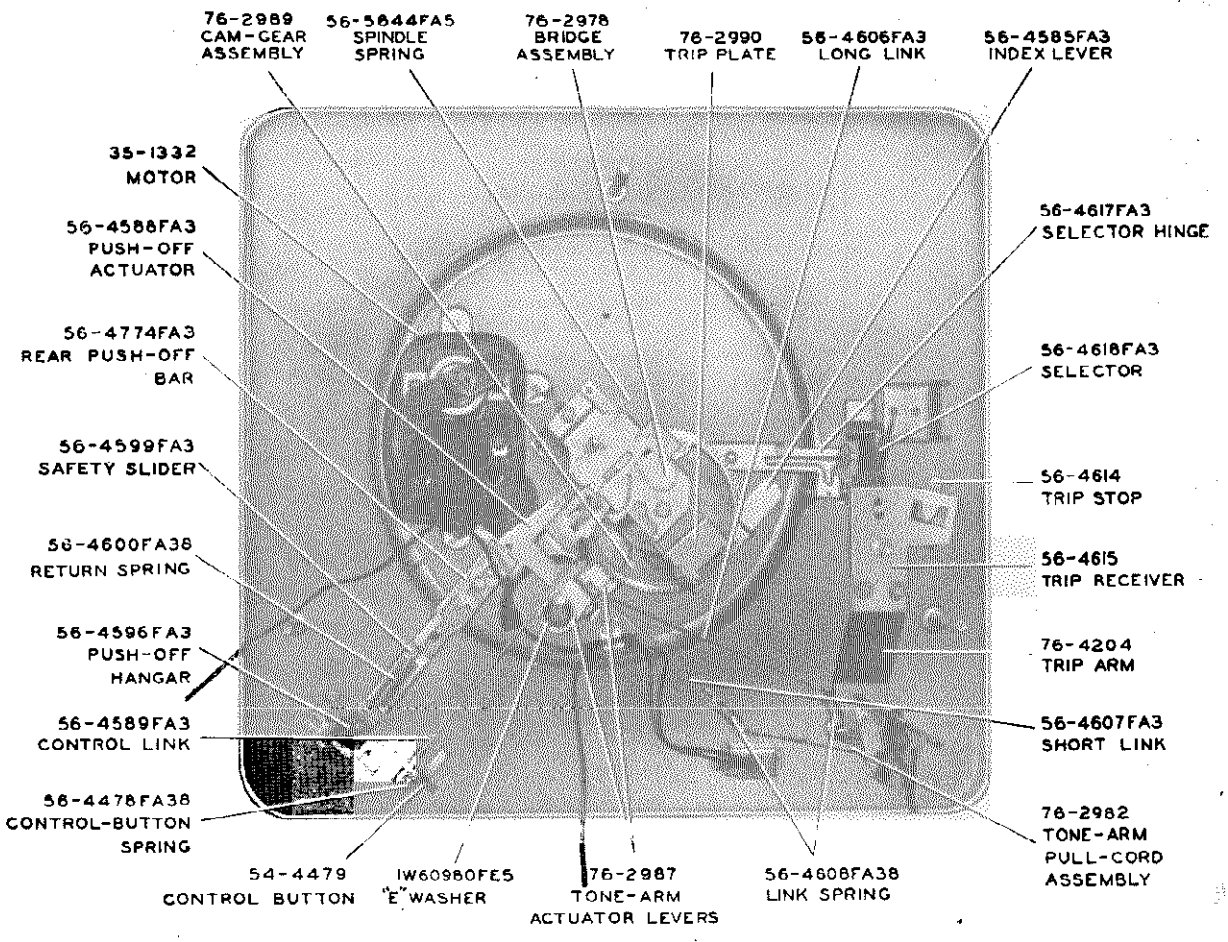

TP6539

© John F. Rider

11. Control-Button Assembly

a. Remove flat spring, 56-4778FA38, by sliding it laterally through underside of button (figures 8 and 16).

b. Remove the two hex-head screws and drop bridge assembly, 76-2978 (shown in figure 8).

c. Disengage control link, 56-4589FA3, from underside of control button. Lift out control button.

12. Trip-Arm Assembly

a. Loosen clamp screw on trip arm, 76-4204 (figure 25).

b. Raise tone arm and shaft sufficiently to clear trip arm. Remove trip arm.

NOTE

When assembling, maintain 1/32" vertical play (clearance between trip arm and base plate) in tone-arm shaft.

13. Trip-Receiver Assembly

Remove the three screws, washers, and nuts from trip arm (figure 25).

Remove trip receiver.

14. Selector Assembly

Remove cam gear as directed in paragraph 7. Remove feeler spring from attachment point on motor board. Tilt selector assembly, and remove from base plate.

NOTE

When assembling selector assembly, be sure to maintain .005" clearance between selector hinge, 56-4617FA3, and washer, 2W53954. For correct assembly refer to figures 26 and 9.

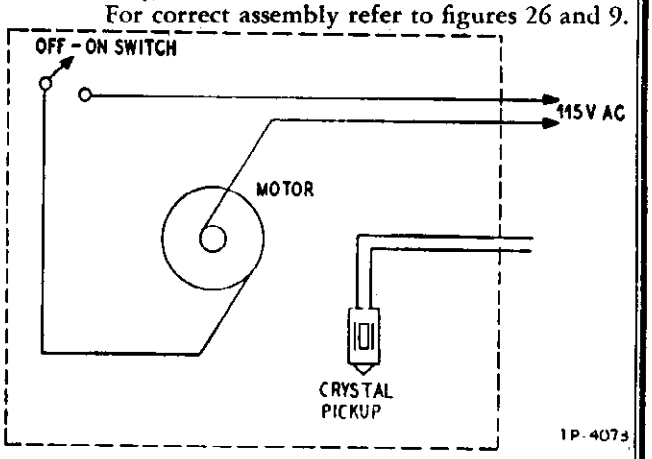

Figure 28—CHANGER WIRING DIAGRAM

REPLACEMENT PARTS LIST

SERVICE PART NO.	DESCRIPTION
27-4787	Plug
35-1332	Motor, 60 cycles
35-1332-2	Motor, 50/60 cycles
35-2663-2	Tone arm
35-2670	Needle
35-2671-1	Crystal
35-2672FC55	Tone-arm shell
35-2674	Crystal (for tropic use only)
35-3066-2	Turntable
41-3869	Cable
41-3869-1	Cable
42-1750-3	Switch, motor, 50 cycles
54-4479-1	Control button
54-7613	Trip finger
56-1146	Cover (plug)
56-1880	Switch cover, 50 cycles
56-2832FA3	Cable clamp
56-3630	Motor conversion spring, 50 cycles (for 35-1332-2 only)
56-4460	Bumper
56-4585FA3	Index lever
56-4588FA3	Actuator, push-off
56-4589FA3	Link, control
56-4593	Fulcrum plate
56-4594FA37	Plate, push-off slide
56-4595FA3	Rod, push-off-link assembly
56-4596FA3	Hanger, push-off-link assembly
56-4597FA3	Bar, push-off-link assembly
56-4599FA3	Slider, safety, push-off-link assembly
56-4600FA38	Spring, return, push-off-link assembly
56-4601-2	Spacer, tone arm
56-4601-3	Spacer, tone arm
56-4603FA38	Spring, index and tone-arm bias
56-4604FE15	Pin, tone-arm pivot
56-4606FA3	Link, long
56-4607FA3	Link, short
56-4608FA38	Spring
56-4613FA38	Spring, stop
56-4614	Stop, trip arm
56-4615	Trip receiver
56-4616FE15	Feeler, selector assembly
56-4617FA3	Hinge, selector assembly
56-4618FA3	Selector
56-4626-1FA7	Record shelf
56-4627FA3	Retainer, spring, record-shelf assembly
56-4628FA38	Spring ring, record-shelf assembly
56-4629	Push-off saddle, record-shelf assembly
56-4630FA38	Spring, record shelf
56-4631FE15	Pin, tone-arm lift
56-4670FA38	Spring, feeler, selector assembly
56-4774FA3	Bar, rear, push-off-link assembly
56-4778FA38	Spring, control knob
56-5644FA5	Spring, spindle
76-2978	Bridge assembly
76-2982	Pull-cord assembly
76-2983FA3	Shaft and swivel
76-2984	Push-off, record-shelf assembly
76-2987	Actuator assembly, tone arm
76-2988-3	Base plate assembly
76-2989	Cam-gear assembly
76-2990	Trip-plate assembly
76-2991	Bearing assembly
76-3556	Idler wheel
76-3926	Spindle
76-4204	Trip arm
1W14460FA44	Screw, crystal mtg.
1W29126FA3	Spacer, selector assembly
1W36521FA3	Pin, escutcheon, selector assembly
1W60980FE5	"E" washer

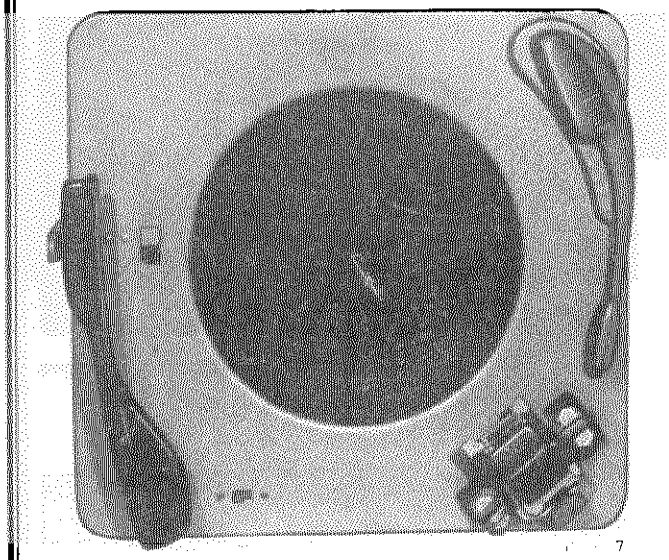

Figure 1. Philco Record Changer and Record Player Combination, Model M-9C

INTRODUCTION

The Philco Automatic Record Changer and Record Player Model M-9C, figure 1, which is used in several 1949 Philco radio-phonograph combinations, incorporates the use of two tone arms. One tone arm is used in conjunction with the record-changer mechanism, which plays ten 12″ records or twelve 10″ records automatically at the standard speed of 78 r.p.m. The other tone arm is used manually, to play the new Columbia Long Playing Records at a speed of 33-1/3 r.p.m.; the record player shuts off automatically at the end of the Long Playing Record.

DESCRIPTION OF OPERATING CYCLES

Power is applied to the motor through an off-on switch and a mercury switch which is controlled by the position of the record-player tone arm. The two switches are connected in series.

A control is mounted on each side of the record-shelf assembly. The REJ.—AUT.—MAN. control controls the record-changer section of the combination. The STD. PLAY—LONG PLAY control has two functions. When it is pushed to LONG PLAY, a link underneath the base plate pulls a selector lever mounted on the base plate. The selector lever is connected to a shift lever which is part of the motor. On this shift lever is mounted a pulley which is connected by a belt to the motor shaft, as shown in figure 2. When the control is in LONG PLAY position, this pulley, which is larger in diameter than the motor shaft, engages and drives the idler wheel, which in turn drives the turntable at the slow speed of 33-1/3 r.p.m. When the control is at STD. PLAY, the larger pulley is retracted and the motor shaft engages the idler wheel, to provide a turntable speed of 78 r.p.m. By action of the STD. PLAY—LONG PLAY control, the double-pole, single-throw switch, mounted on the base plate under the turntable, is actuated. To this switch are connected the output leads of the two tone arms. When the control is at LONG PLAY position,

John F. Rider

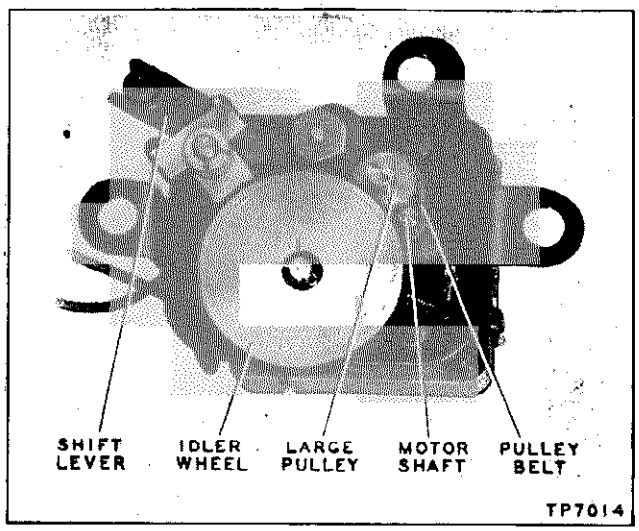

Figure 2. Motor, Showing Pulley, Bolt, and Shift Lever

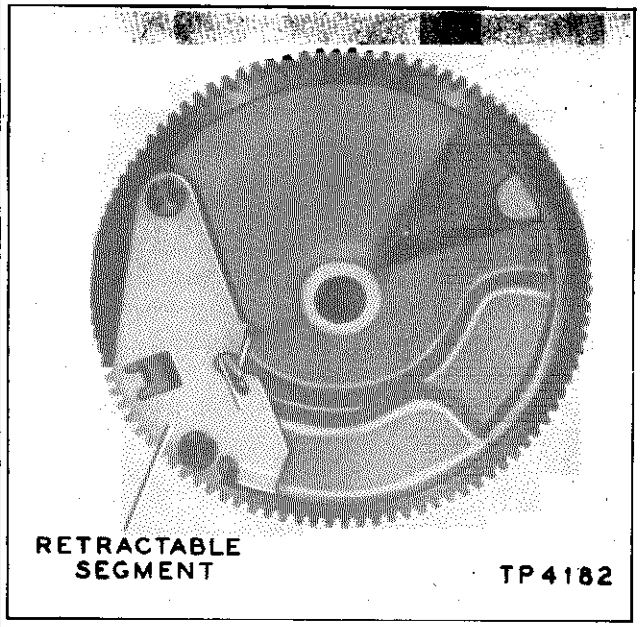

Figure 3. Cam Gear, Showing Retractable Segment

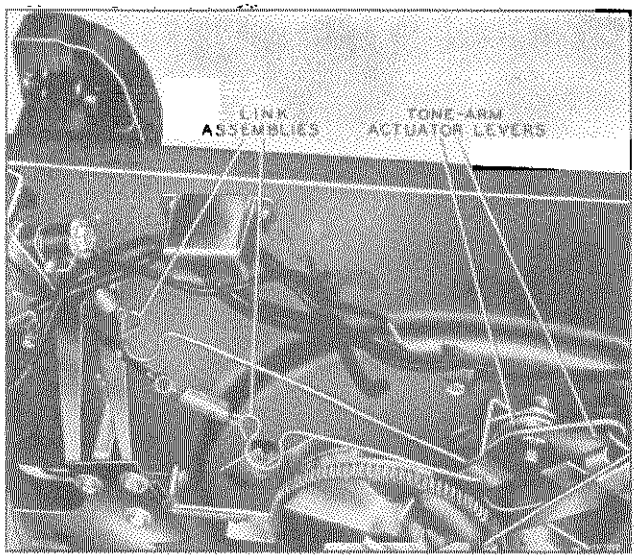

Figure 4. Link Assemblies and Actuator Levers

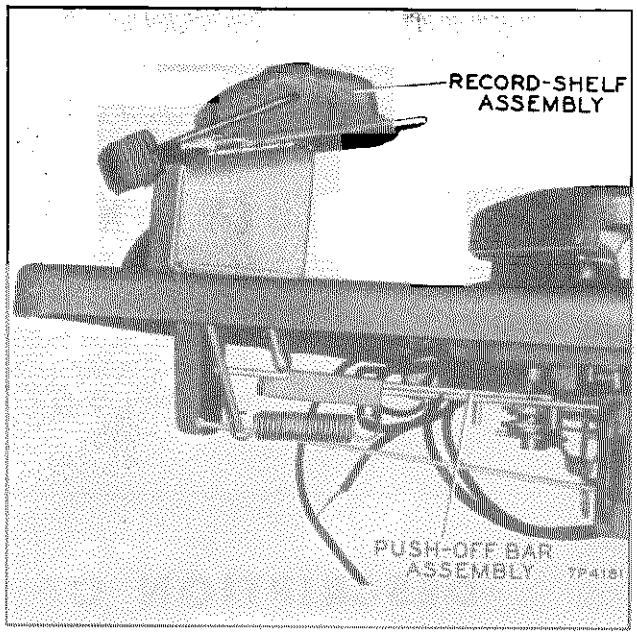

Figure 5. Record-Shelf and Push-Off Assemblies

the switch cuts out the output from the record-changer tone arm and closes the circuit for the record-player tone arm. When the control is at STD. PLAY, the reverse action takes place.

The record-changer change cycle takes place when the turntable hub gear, which is part of the turntable shaft, engages the cam gear through a retractable segment mounted on the cam gear; see figure 3. This retractable segment is brought into position by the action of the trip mechanism. The cam then operates the changer mechanism.

The record-changer tone arm is operated by two link assemblies (figure 4) attached to actuator levers, which are in contact with the cam surface of the cam gear. The record-shelf push-off mechanism is connected through a series of bars, to a push-off actuator (figure 5). The mechanism is operated when a roller, mounted on the cam gear, comes in contact with the actuator. The trip mechanism is operated by a trip finger riding over a ratchet screw (figure 6), which starts the change cycle when the needle is traveling in the eccentric finish groove of the record. The trip mechanism is locked in a disengaged position when the REJ.—AUT.—MAN. control is in the MAN. position.

© John F. Rider

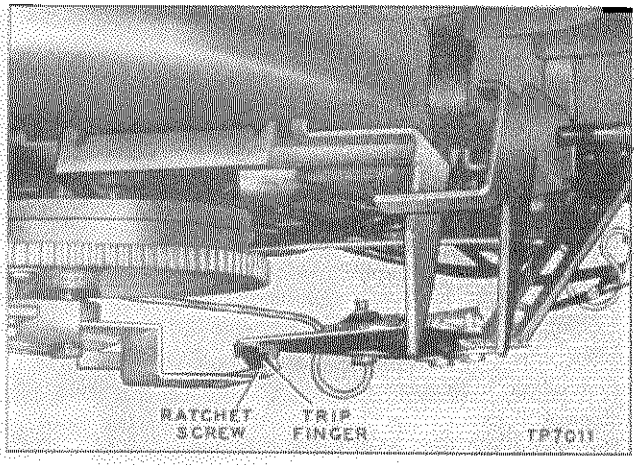

Figure 6. Trip Finger and Ratchet Screw

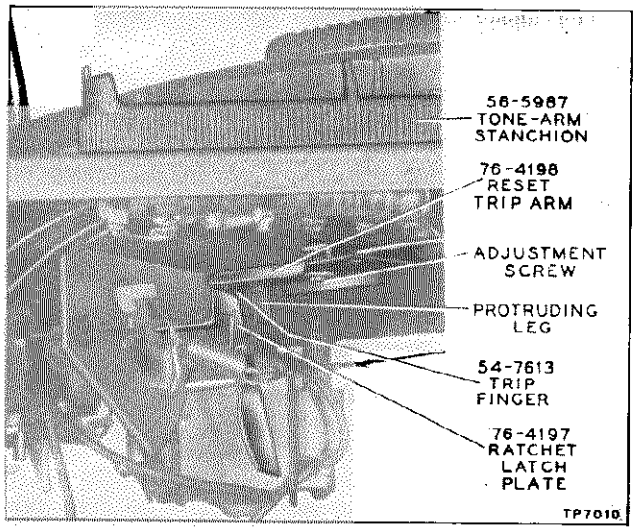

Figure 7. Trip Assembly, Showing Trip Finger Riding Over Ratchet Plate

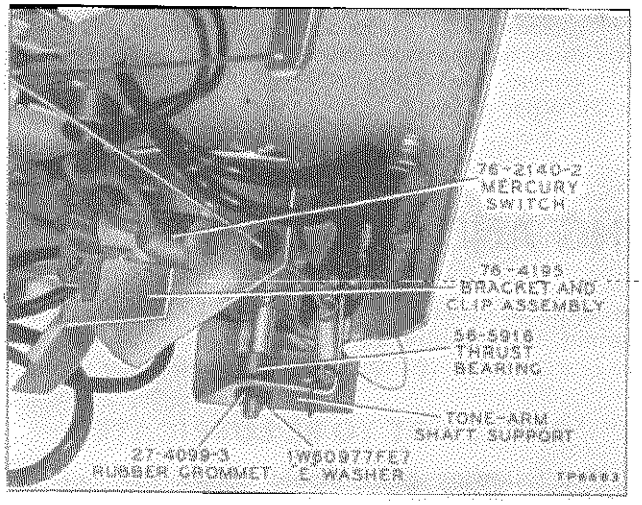

Figure 8. Mercury Switch, Shown in ON Position

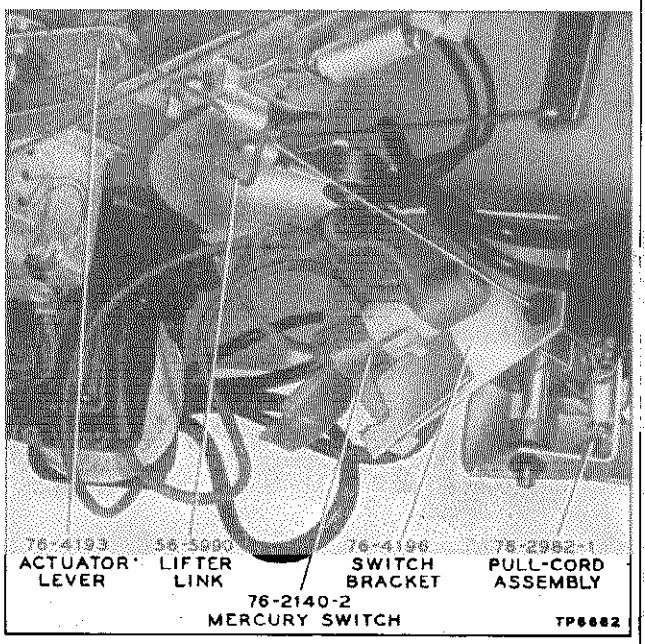

Figure 9. Mercury Switch, Shown in OFF Position

The record-player section contains a separate tone arm. Attached to this tone arm is a reset and trip-arm assembly, which has a protruding leg and trip finger (figure 7). When the tone arm of the record player is resting on the rest post, the leg on the reset trip arm contacts an ear of the bracket-clip assembly (mounted on the switch bracket), and this tips the mercury switch mounted on it to the ON position, (figure 8). The motor circuit is now controlled only by the on-off switch.

When the record-player tone-arm needle is traveling in the eccentric finish groove of the record, the trip finger, which is mounted on the reset trip arm, rides over a ratchet on the ratchet latch plate. The ratchet latch plate is mounted on the switch assembly (figure 7), and trips the latch, causing the bracket-clip assembly to drop and tip the mercury switch to the OFF position (figure 9). This opens the motor circuit and stops the turntable.

A pull cord and link assembly is attached to the record-player tone arm, and is connected to a link-actuator lever. This permits the tone arm to be lifted and set on its rest post if the record changer is put into a change cycle. The pull-cord assembly, Part No. 76-2982-1, and the link-actuator lever, Part No. 76-4193, are shown in figure 9.

© John F. Rider

RECORD-CHANGER TESTING AND TROUBLE-SHOOTING PROCEDURE

Pickup Test

Play a familiar record on the phonograph and note the volume and tone quality.

NOTE

It is advisable to carry a familiar record as a part of the service test equipment.

If distortion is noted, try a new needle. If the distortion persists, a faulty crystal pickup is indicated; refer to page 12.

Changer-Mechanism Test

The following series of record-changer operating tests is given for quickly locating any trouble that may be encountered. Each test should be performed with several records before making any adjustments.

Set the record shelf to the 10" position and place the tone arm on the rest post. Place a 10" record over the spindle and onto the record shelf. Push the STD. PLAY—LONG PLAY control to STD. PLAY.

Push the REJ.—AUT.—MAN. control to REJ. and observe the record-dropping action. The record should fall smoothly, with the edge of the record leaving the lips of the record shelf *after* the center has started to fall. Adjustment of the record shelf is given on page 9.

The tone arm should rise from the rest post, and the needle should come down on the record, about 1/8" from the outer edge. The index adjustment is given on page 7.

Play the record through and observe the tripping action; the trip mechanism should operate within the first two or three revolutions after the needle has entered the eccentric finish groove. Trip adjustments are given on page 9.

Remove the record from the turntable and set the record shelf to the 12" position. Place a 12" record over the spindle and onto the record shelf. Push the REJ.—AUT.—MAN. control to REJ., and observe the record-dropping action. The edge of the record should leave the lips of the record shelf *after* the center has started to fall. (Refer to page 9 for the record-shelf adjustment, if needed.) The tone arm should rise from the rest post and the needle should come down on the record, about 1/8" from the outer edge. If the index adjustment is required, refer to page 7.

Observe whether the lower edge of the tone arm, during a change cycle, clears the top of the hook on the tone-arm rest post by a minimum of 1/8". Take the tone arm off the rest post, and place the pickup over the changer base plate; the needle point should clear the base plate by at least 1/16", and should be no higher than the turntable top. Lift and height adjustments are given on page 7.

Turntable and Motor Test

NOTE

Before making this test, warm up the motor by allowing it to run for at least ten minutes.

Set the REJ.—AUT.—MAN. control to MAN., and set the STD. PLAY—LONG PLAY control to STD. PLAY. Load the turntable with ten 12" records, and place the tone arm on the top record.

Place a stroboscope disc, such as Philco Part No. 45-1614, on the record, and illuminate the disc with a lamp (preferably a neon bulb) operated on 60-cycle a.c. The dots in the row calibrated for 78 r.p.m. should appear to remain stationary, or to drift very slowly, but smoothly, backward or forward.

If the turntable speed is steady, but is appreciably below 78 r.p.m., refer to the lubrication date on the turntable upper bearing, and check the idler wheel, idler spring, wiring, etc.

Unsteady drift of the dots on the stroboscope disc indicates uneven turntable speed, which is the cause of wows; see UNEVEN TURNTABLE SPEED (WOWS), page 11.

RECORD-CHANGER CLEANING AND LUBRICATION

The Model M-9C record changer, like any other mechanism, requires lubrication after long periods of use. Whenever a major part or an assembly is to be replaced, the changer should be cleaned and lubricated. Carbon tetrachloride or other similar cleaning fluids may be used to remove old grease, oil, and dirt. Apply lubricants sparingly.

All lubrication points are shown in figures 10 and 11. It may be necessary to remove some parts and assemblies in order to lubricate their bearings—for example, the actuator and cam gear must be removed to lubricate the actuator stud and the cam-gear spindle.

PARTS NOT TO BE LUBRICATED

The following parts should not be lubricated at any time: Trip receiver, trip finger, ratchet screw on trip plate, selector, and all parts of the record-player section.

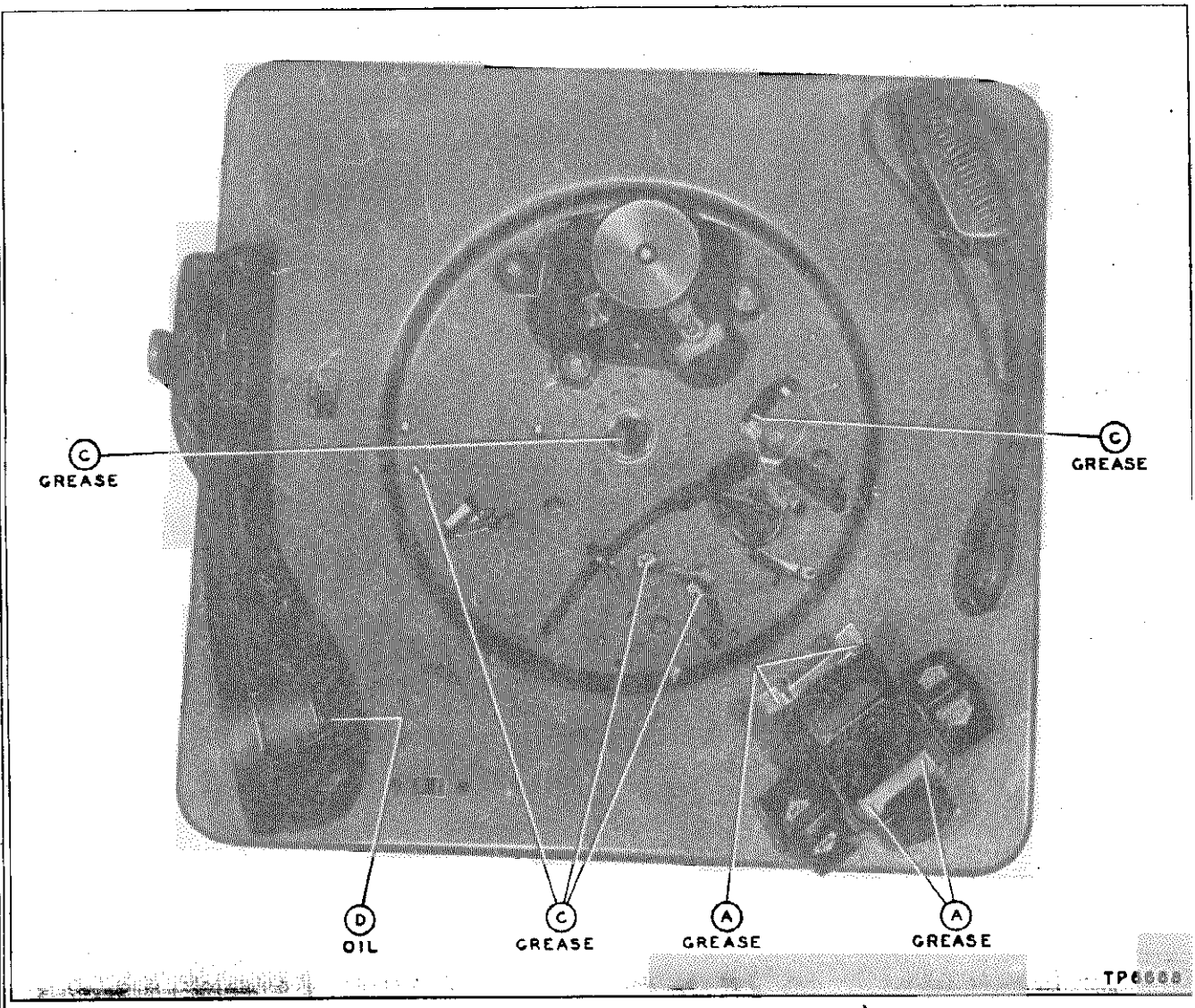

Figure 10. Top View, Showing Lubrication Points

PARTS TO BE GREASED

The following parts are to be lubricated with a grease having the consistency of vaseline:

Record-Shelf Assembly (Point A of Figure 10)
Four protruding dimples.

Bridge Assembly and Slider Control Bar (Point B of Figure 11)
Three dimples and four upturned ears.

Cam Gear (Point C of Figure 11)
Cam-gear teeth, cam surfaces, and cam-gear spindle.

Main Assembly (Points C of Figures 10 and 11)
Trip-plate ear where contact is made with gear segment.
Actuator stud.
All parts with ears sliding on changer base plate.
Index-lever surface which slides on base plate.
Push-off-actuator dimples which slide on base plate.
Turntable shaft (upper bearing).
Tone-arm shaft.

PARTS TO BE OILED

The following parts are to be lubricated with S.A.E. 20 oil:

Tone Arm (Point D of Figure 10)
Tone-arm pivot pin where pin rides in elongated hole of tone arm—apply one drop with a pointed rod.

Trip-Plate Bushings (Point E of Figure 11)

Spindle (Point E of Figure 11)

Cam-Gear Roller (Point E of Figure 11)

CAUTION

Do not get any oil or grease on the motor shaft or the idler-wheel tire. Should this occur, remove the oil or grease immediately with carbon tetrachloride.

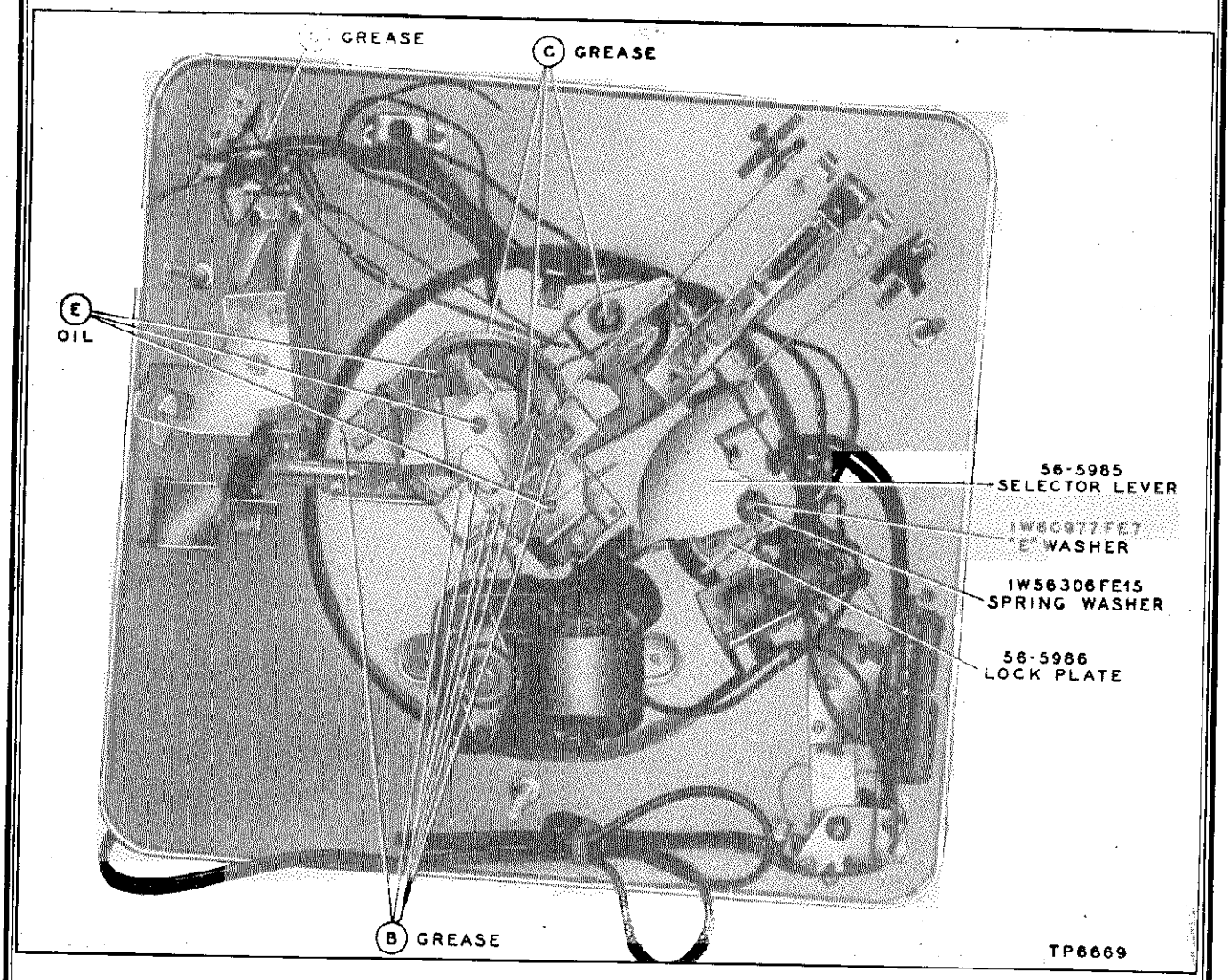

Figure 11. Bottom View, Showing Lubrication Points

RECORD-CHANGER ADJUSTMENTS

10" Index Adjustment

Place a 10" record on the turntable, push the REJ.—AUT.—MAN. control to REJ., and rotate the turntable 4½ turns by hand. The tone arm should then be approximately ½" above the record.

Loosen the clamp screw on the trip arm (figure 12). Hold the tone arm (steady) ⅛" in from the edge of the record, and set the trip arm so that the trip-arm stop is in contact with the selector hinge (Part No. 56-4617FA3). See figure 13.

Tighten the clamp screw, leaving $\frac{1}{32}$" vertical play, or clearance, between the trip arm and the base plate.

12" Index Adjustment

Make the 10" index adjustment first. The 12" indexing will ordinarily be satisfactory after the 10" adjustment is made; if not, bend the selector, Part No. 56-4618FE15, slightly to the right or left as required for proper indexing of the needle on the record, as shown in figure 14.

Tone-Arm Height and Lift Adjustments

With the changer out of cycle (change cycle completed; tone arm lowered), and the tone arm off the rest post, the needle point should clear the changer base plate by at least $\frac{1}{16}$", and should not be higher than the turntable top. To adjust the height, shape the top ear of the tone-arm swivel, shown in figure 15 (bending the ear downward raises the tone arm).

To adjust the lift, take the tone arm off the rest post, push the REJ.—AUT.—MAN. control to REJ., and rotate the turntable approximately 1½ turns by

© John F. Rider

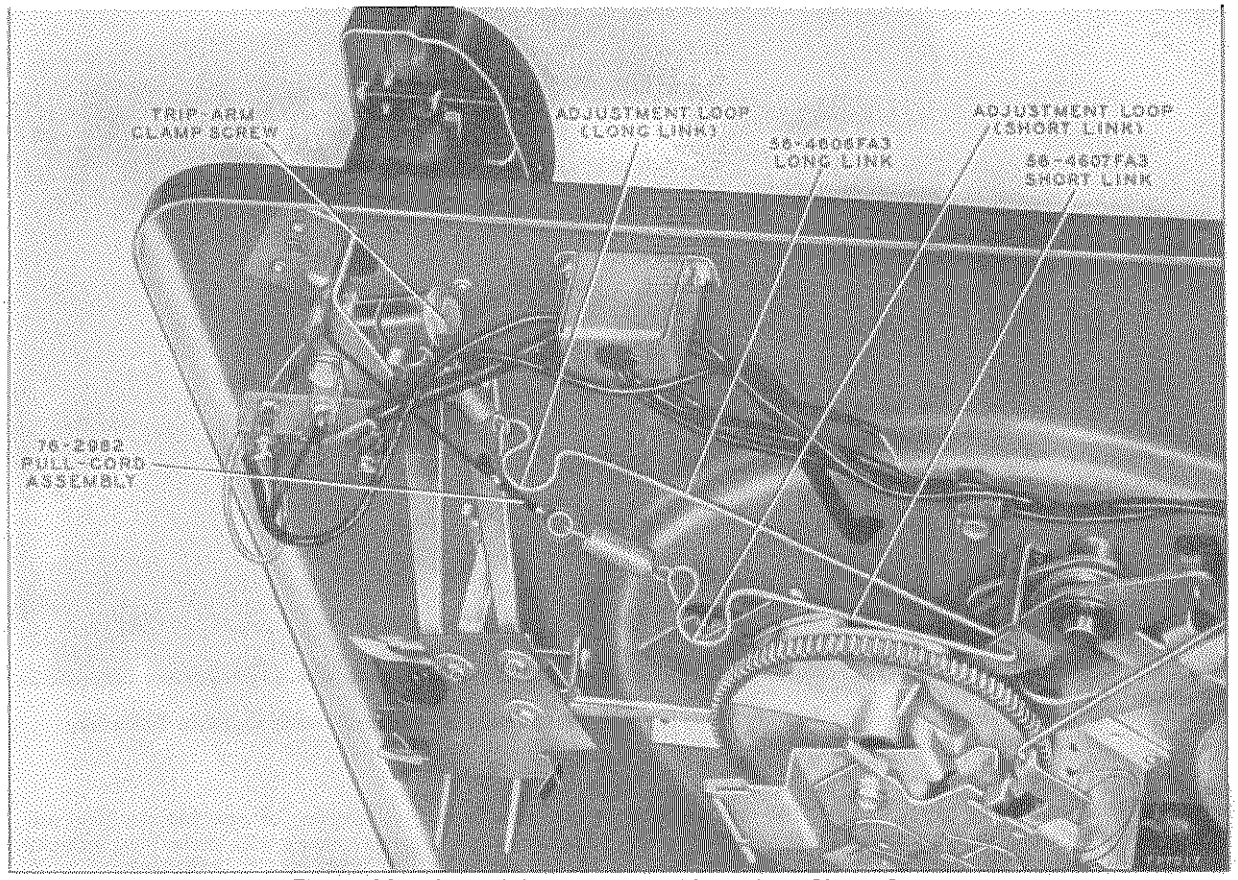

Figure 12. Loop Adjustments and Trip-Arm Clamp Screw

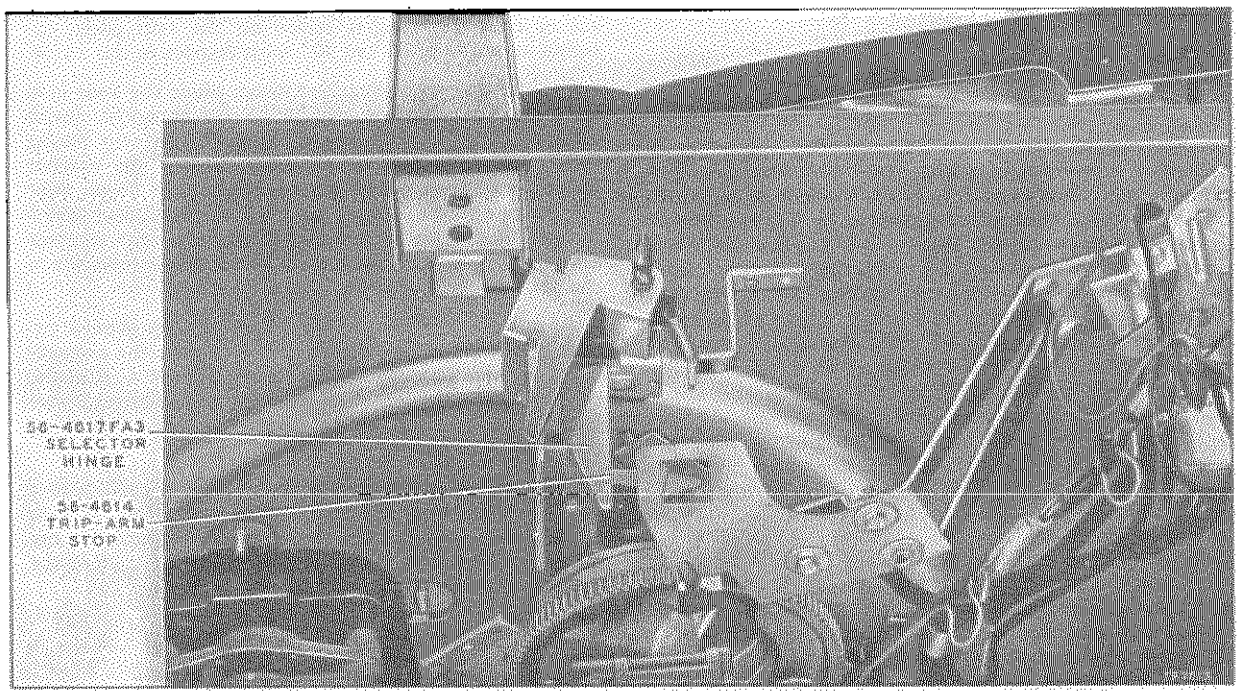

Figure 13. 10" Indexing Adjustment

© John F. Rider

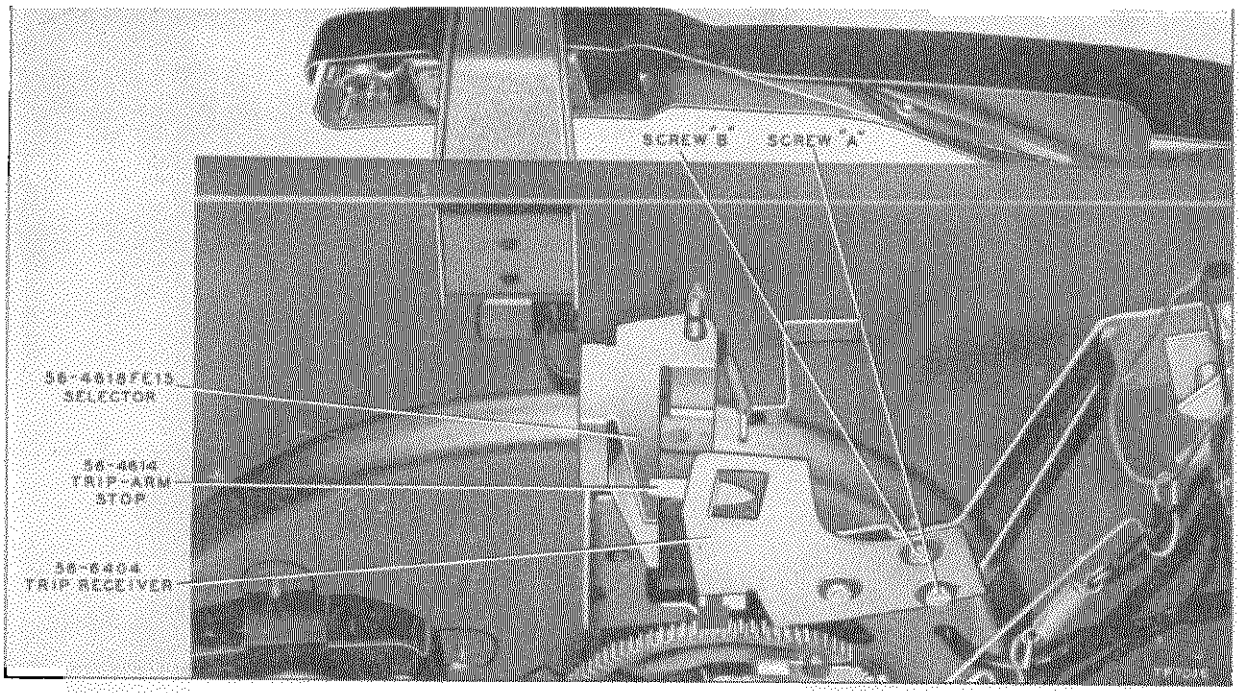

Figure 14. **12" Indexing Adjustment, Showing Trip Stop Arm in Contact with Outside Selector**

hand until the tone arm comes against the rest post. The lower edge of the tone arm should clear the top of the protruding hook on the rest post by not less than ⅛", and not more than ¼". Adjust by shaping the lower ear of the tone-arm swivel, shown in figure 16 (bending the ear downward raises the tone arm).

Tone-Arm Vertical and Horizontal Timing Adjustments

NOTE

Before making these adjustments, make the tone-arm height and lift adjustments given above.

For the vertical adjustment, start with the changer out of cycle. Push the REJ.—AUT.—MAN. control to REJ., and rotate the turntable, by hand, three-quarters of a revolution; this setting can be obtained more accurately by making a mark on the turntable to coincide with some starting point. At the three-quarter-revolution point, the leading edge of the cam surface is approximately ¼" from the end of the lift actuator lever, Part No. 76-4193; this is the lower actuator lever, shown in figure 17. Adjust the wire loop of the short link, cord, and spring assembly (figure 12), attached to the tone-arm lift pin, by squeezing or opening the loop until the tone-arm lift pin makes contact with the lower ear of the tone-arm swivel.

For the horizontal adjustment, rotate the turntable another three-quarters revolution from the point at which the vertical adjustment was made. At this point, the leading edge of the cam surface is approximately ¼" from the end of the horizontal-return actuator lever; this is the upper actuator lever, Part No. 76-2987, shown in figure 18. Adjust the wire loop of the long link and spring assembly (figure 12), attached to the trip arm, by squeezing or opening the loop until the tone arm makes contact with the rubber bumper on the tone-arm rest post.

Trip-Finger and Trip-Receiver Adjustments

For the trip-finger adjustment, move the tone arm toward the spindle. Adjust the screw on the trip-receiver plate (figure 19) so that the trip finger, when riding over the ratchet screw on the trip plate, assumes an angle of 25° to 30° with respect to the screw.

For the trip-receiver adjustment, place the tone arm on a record with the needle in the eccentric finish groove. The vertical center line of the trip finger should coincide with the center line of the ratchet screw. To adjust the centering of the trip finger over the ratchet screw, loosen screw B slightly, and screw A completely; see figure 19. Rotate the trip receiver about screw B, as a center. Tighten the screws when the trip finger is centered.

Approximately ⅛" of the trip-arm stop should engage the selector; see figure 19. To adjust the engagement of the trip-arm stop, loosen screw A slightly, and screw B completely. Rotate the trip receiver about screw A, as a center, to obtain the correct adjustment. Tighten the screws.

The above adjustments will affect each other slightly; therefore, it may be necessary to repeat each adjustment until both are correct. After making the above adjustments, it will be necessary to correct the index adjustments.

Record-Shelf Adjustment

Place the shelf in the 10" position, and the changer out of cycle. Place the Philco record-shelf gauge, Part No. 45-1470 (also used for M-4), over the spindle and

© John F. Rider

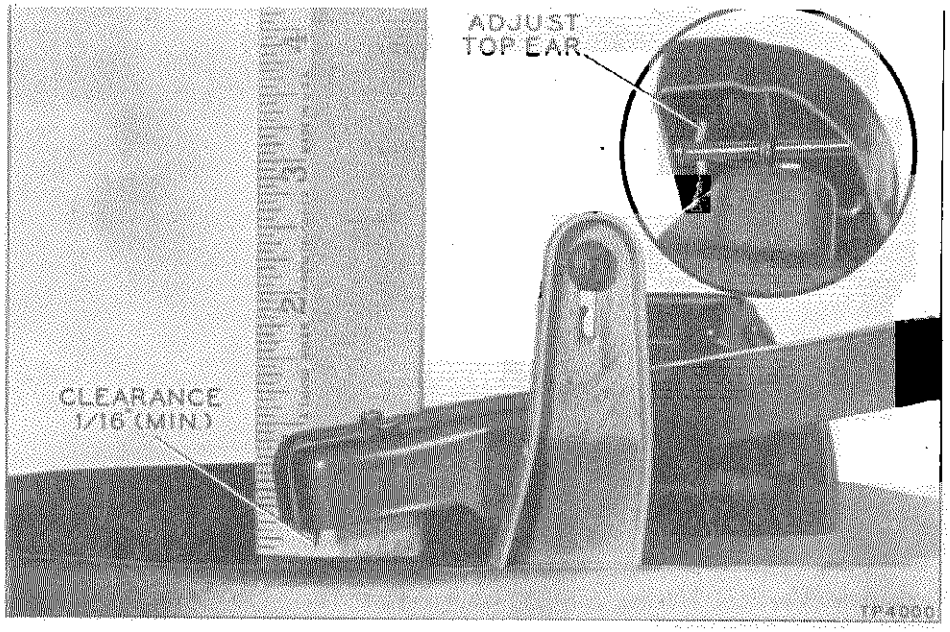

Figure 15. Tone-Arm Height Adjustment

onto the record shelf, as shown in figure 20. Loosen the two hex-head screws which hold the record-shelf assembly to the changer base plate. Move the record-shelf assembly away from the record spindle until the large curved part of the gauge drops even with the record-shelf lips, as shown in figure 20. Now push the record shelf and gauge lightly against the spindle, taking out all play toward the spindle; keep the lips of the record shelf in even contact with the edge of the gauge. Tighten the two hex-head screws.

Push-Off Adjustment

Push the REJ.—AUT.—MAN. control to REJ., and rotate the turntable 2½ revolutions, by hand; at this point, the push-off actuator, Part No. 56-4588FA3, is in its most forward position, in contact with the roller on the cam gear; see figure 21. Loosen the push-off-bar locking screw, shown in figure 21. Squeeze the push-off-bar ears toward each other to the point where the slider blade on the record shelf extends $\frac{1}{32}$" beyond the lips of the shelf. Tighten the hex-head locking screw.

Figure 16. Tone-Arm Lift Adjustment

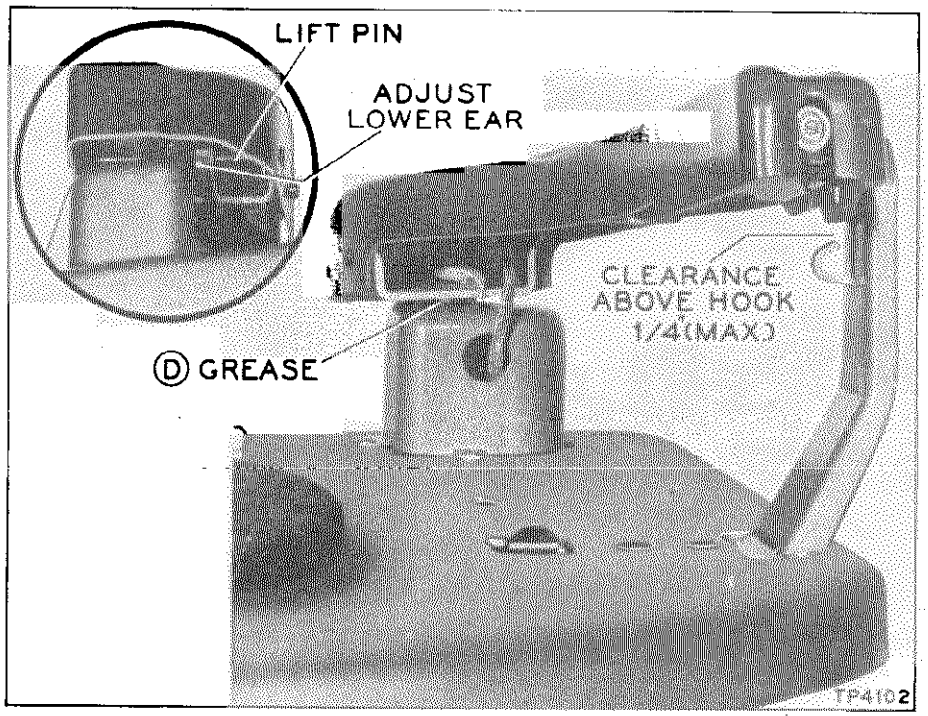

© John F. Rider

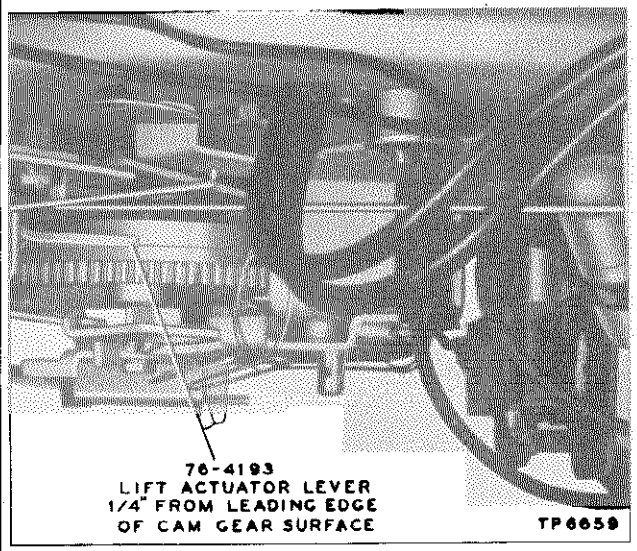

Figure 17. Tone-Arm Vertical Timing Adjustment, Showing Lower Actuator Lever in Contact with Cam Gear

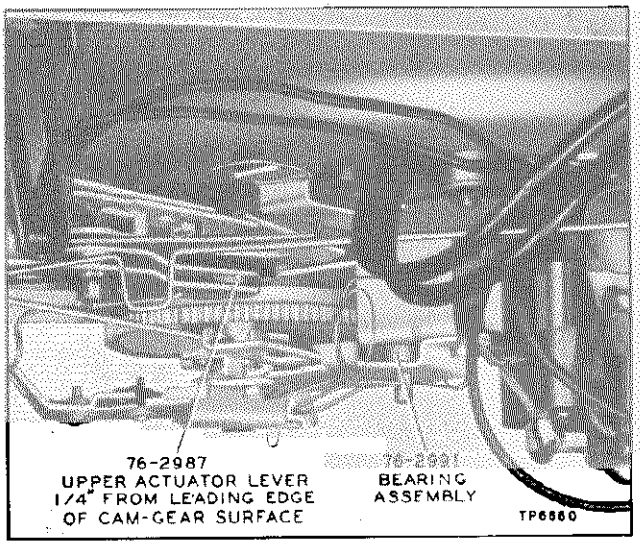

Figure 18. Tone-Arm Horizontal Timing Adjustment, Showing Upper Actuator Lever in Contact with Cam Gear

Uneven Turntable Speed (Wows)

Uneven turntable speed (wows) may be caused by the following:

Dirt under and around the turntable or idler-wheel assembly. Remove the turntable and clean out the dirt. Be careful to lift the turntable straight up after removing the spindle first (see page 12). When replacing the turntable, be sure that the idler is behind the turntable rim before the turntable is fully lowered (the spindle may be used to hold the idler back).

Flat or worn spots, or grease, on the rubber tire of the idler wheel.

Defective turntable shaft or bearing assembly.

Replace the defective parts as directed under REPLACEMENT OF PARTS AND ASSEMBLIES, page 12. If the 33-1/3 r.p.m. speed is incorrect, replace pulley belt, Part No. 45-6479 (remove idler wheel to replace belt).

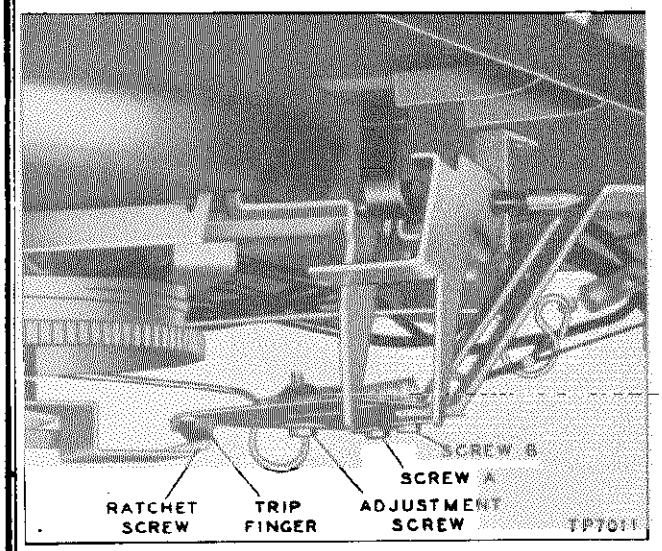

Figure 19. Trip-Finger and Trip-Receiver Adjustments

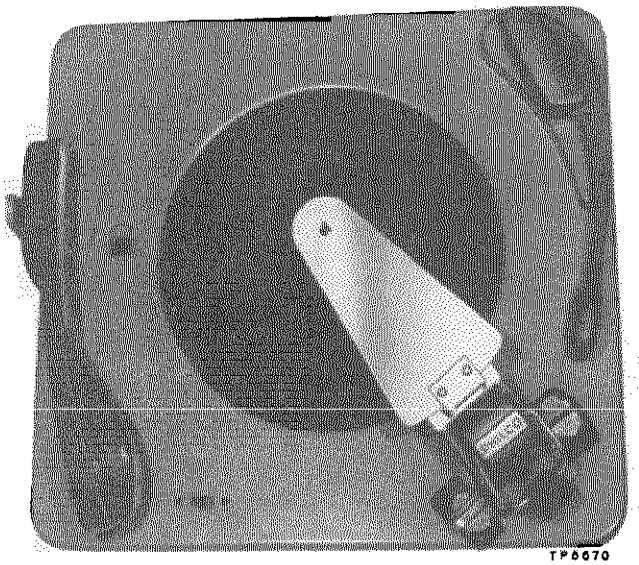

Figure 20. Shelf Gauge, Shown in Correct Position on Record Shelf and Spindle

© John F. Rider

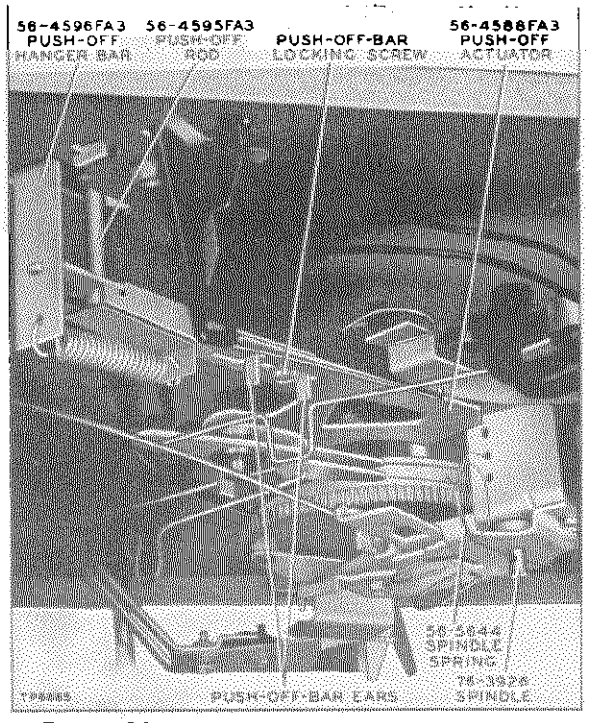

Figure 21. Push-Off Adjustment, Showing Push-Off Actuator in Contact with Roller on Cam Gear

REPLACEMENT OF PARTS AND ASSEMBLIES ON RECORD CHANGER

The following procedures are recommended for correct replacement of parts and assemblies on the record changer. The part should be replaced by reversing the order of removal, and adjusted according to the directions given in the RECORD-CHANGER ADJUSTMENTS section of this manual.

When any part is to be removed, the REJ.—AUT.—MAN. control should be in the AUT. position, and the changer should be out of cycle.

1. Needle, Part No. 45-1597

To remove needle, loosen knurled nut under crystal cartridge, and pull needle out.

2. Crystal-Pickup Cartridge, Part No. 35-2671-1

a. Bring tone arm toward center of turntable.

b. Remove the two screws, nuts, lock washers, and spacers which hold cartridge to tone arm.

c. Drop cartridge below tone arm sufficiently to allow removal of the two clips from cartridge, as shown in figure 22. If pickup leads are shielded, unsolder shield.

NOTE

When mounting cartridge, be sure to insert long spacer in side toward spindle.

3. Spindle, Part No. 76-3926

a. Unhook both ends of spindle spring, Part No. 56-5644, from "U"-shaped bracket mounted under changer base plate (figure 21).

b. Uncoil ends of spring through spindle.

c. Pull out spindle.

4. Motor, Part No. 35-1371

a. Push REJ.—AUT.—MAN. control to MAN. position.

b. Remove spindle as directed in paragraph 3 above.

c. Unsolder motor lead from mercury switch.

d. Disconnect second motor lead by unsoldering it at splice from switch lead. The motor assembly is shown in figure 23.

e. Remove ground lead from lug on motor.

f. Remove the three screws, washers, and bushings from motor frame (figure 23), and lift out motor.

5. Tone-Arm Assembly, Part No. 35-2663-2

a. Unsolder tone-arm leads from terminal panel on underside of changer base plate.

b. Loosen clamp screw which holds trip arm to tone-arm shaft, Part No. 76-2983FA2 (figure 12). Lift out tone arm and shaft. The tone-arm assembly is shown in figure 22.

6. Bridge Assembly, Part No. 76-2978

a. Remove the two hex-head screws from bridge plate.

b. Remove link rod, Part No. 56-4589FA3, from slider control bar. Complete assembly of bridge is shown in figure 24.

7. Trip Plate, Part No. 76-2990

a. Remove bridge assembly, Part No. 76-2978, as directed in paragraph 6 above.

b. Slide trip plate, Part No. 76-2990, off cam-gear spindle.

© John F. Rider

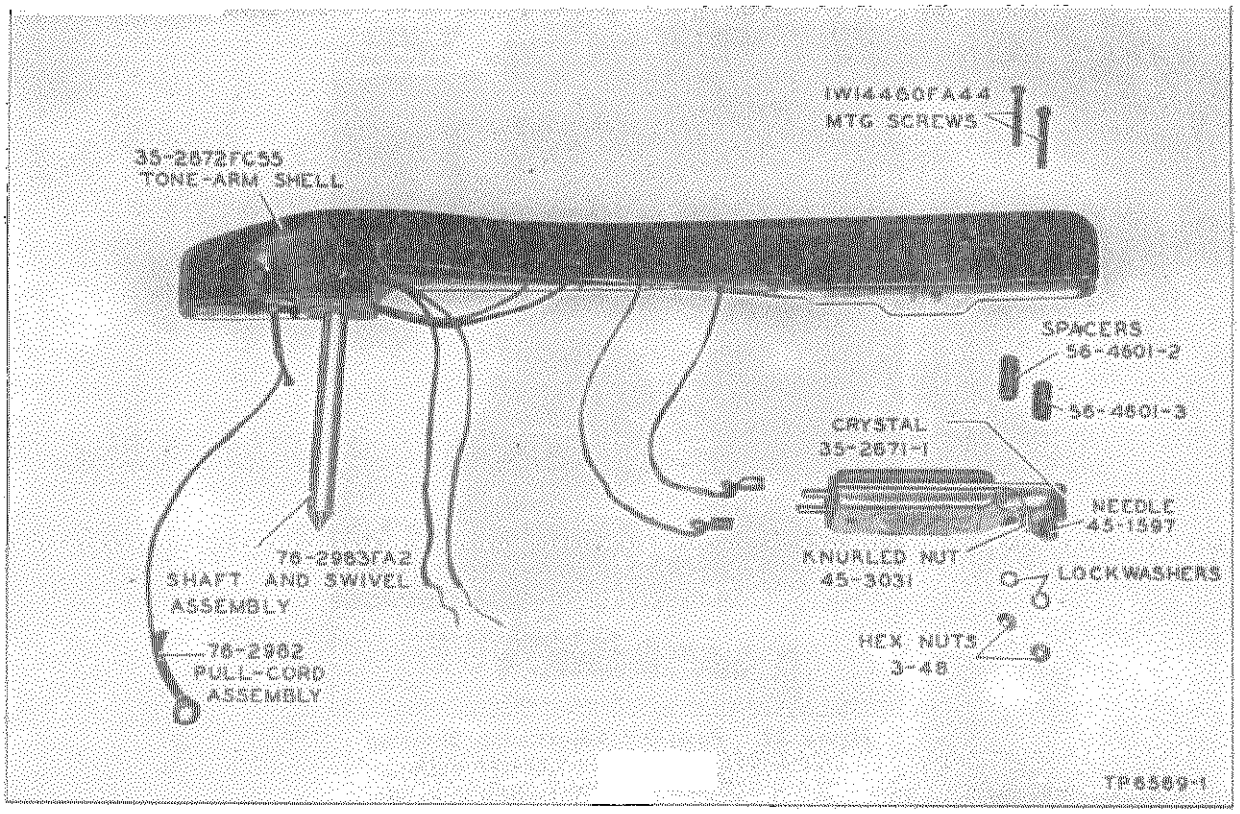

Figure 22. Record-Changer Tone-Arm Assembly, Part No. 35-2663-2

8. Cam-Gear Assembly, Part No. 76-2989

a. Remove bridge assembly and trip plate as directed in paragraphs 6 and 7 above.

b. Remove ball-bearing assembly, Part No. 76-2991 (figure 18), by pulling it off.

c. Remove large "E" washer, Part No. 1W60980FE5, from cam-gear spindle, and slide off cam washer, Part No. 1W52627.

d. Slide cam gear off spindle. The cam-gear assembly is shown in figure 25.

9. Tone-Arm-Actuator Levers, Part No. 76-2987

a. Remove "E" washer, Part No. 1W60980FE5, from actuator stud.

b. Disengage short link, Part No. 56-4607FA3, from link spring.

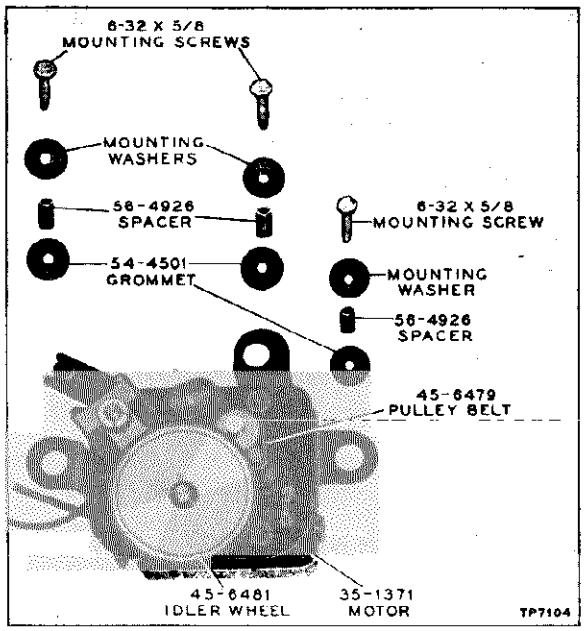

Figure 23. Motor Assembly

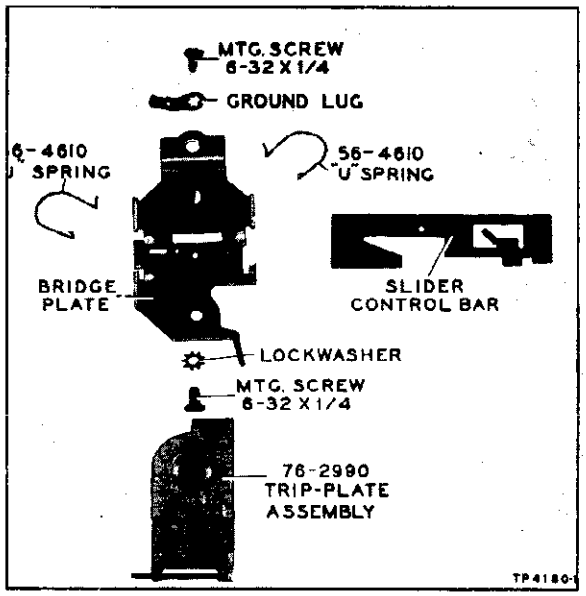

Figure 24. Bridge Assembly

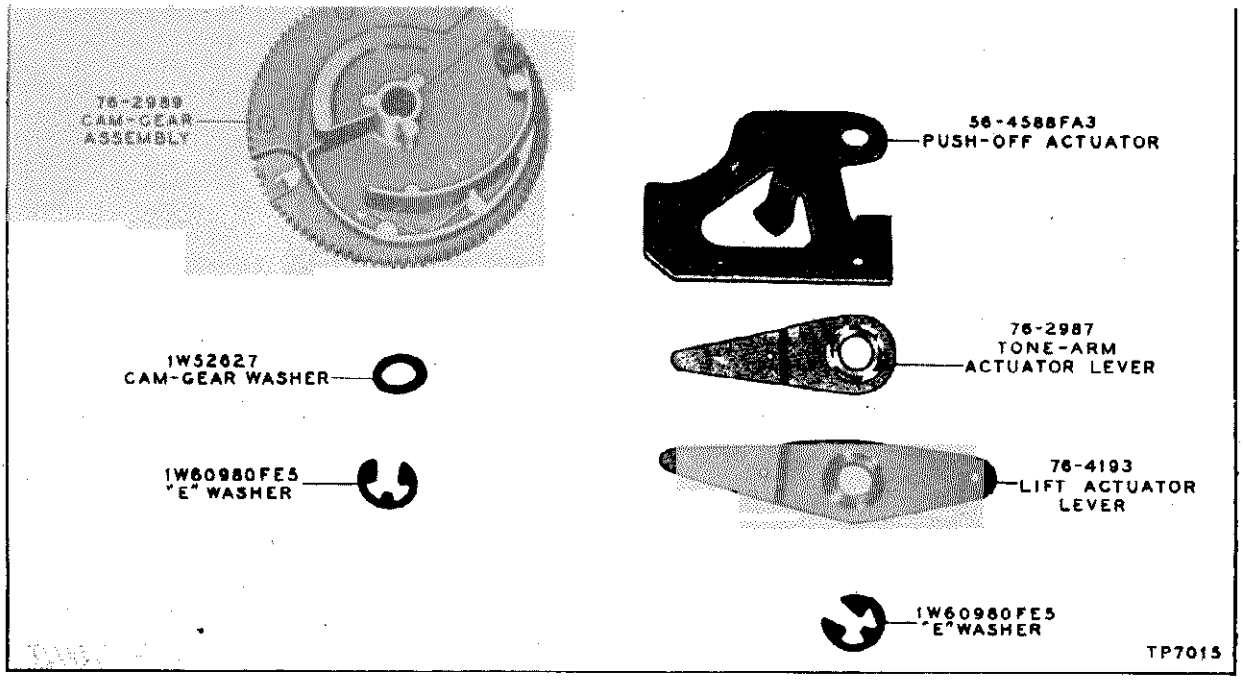

Figure 25. Cam-Gear Assembly and Actuator Levers

c. Slide lower actuator lever from stud.

d. Disengage lifter link, Part No. 56-5990, from actuator lever.

e. Remove upper actuator lever from stud, and disengage long link, Part No. 56-4606FA3. The actuator-lever assembly is shown in figure 25.

10. Push-Off Actuator, Part No. 56-4588FA3

a. Remove selector lever, Part No. 56-5985, as directed on page 20, paragraph 8.

b. Remove tone-arm actuator levers as directed in paragraph 9 above.

c. Press push-off rod, Part No. 56-4595FA3, and push-off hanger bar, Part No. 56-4596FA3 (figure 21), together and pull downward, to release the entire assembly.

d. Slide push-off actuator, Part No. 56-4588FA3, over, to align upturned ears with cut out in base plate. Slide actuator off stud.

Figure 26. Push-Off Assembly

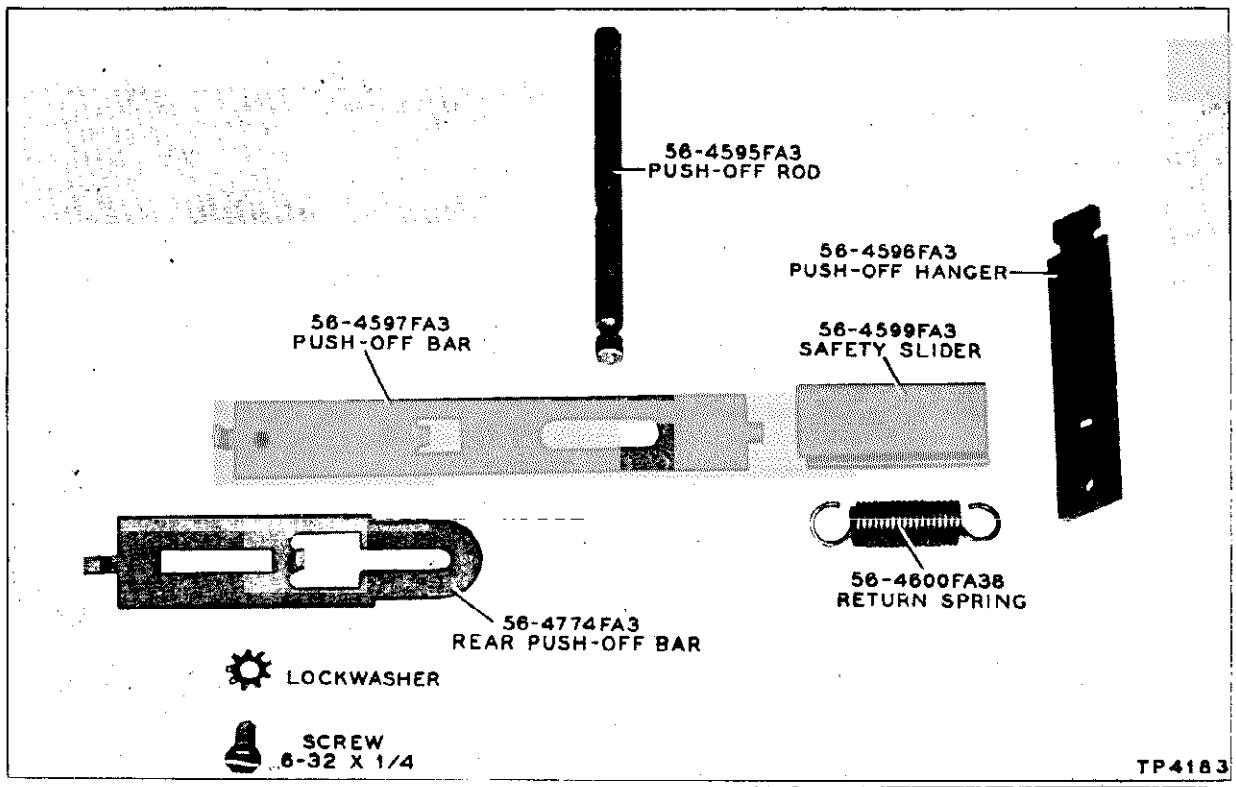

NOTE

After removing the push-off actuator and push-off-bar assembly, the slider blade on the record shelf may slide out of the assembly. When reassembling, this blade should be inserted in the record-shelf assembly, with the elongated hole toward the 12″ position of the record shelf. The push-off assembly is shown in figure 26.

11. Record-Shelf Assembly

a. Remove push-off assembly as directed in step c of paragraph 10.

b. Remove the two hex-head screws which hold record-shelf assembly to base plate.

c. Align ears on record-shelf assembly with cut out on base plate. Lift out record-shelf assembly. The record-shelf assembly is shown in figure 27.

12. REJ.—AUT.—MAN. Control Assembly, Part No. 54-4479-1

a. Remove flat spring, Part No. 56-4778FA38, by sliding it laterally through underside of button (figure 21).

b. Remove the two hex-head screws, and drop bridge assembly, Part No. 76-2978.

c. Disengage control link, Part No. 56-4589FA3, from underside of control button (figure 8). Lift out control button.

13. STD. PLAY—LONG PLAY Control, Part No. 54-4634

a. Remove flat spring, Part No. 56-4778FA38, by sliding it laterally through underside of button.

b. Remove selector lever, Part No. 56-5985, as directed in paragraph 8, page 20.

c. Disengage selector link, Part No. 56-5991, from selector lever (figure 8).

d. Lift out control button.

14. Trip-Arm Assembly

a. Loosen clamp screw on trip arm, Part No. 76-4204 (figure 12).

b. Raise tone arm and shaft sufficiently to clear trip arm. Remove trip arm, and disengage link spring.

NOTE

When assembling, maintain 1/32″ vertical play (clearance between trip arm and base plate) in tone-arm shaft.

15. Trip-Receiver Assembly, Part No. 56-6404

a. Remove the three screws, washers, and nuts from trip arm (figure 28).

b. Remove trip receiver.

16. Selector Assembly

Remove cam gear as directed in paragraph 8. Remove feeler spring from attachment point on motor board. Tilt selector assembly, and remove from base plate.

NOTE

When assembling selector assembly, be sure to maintain .005″ clearance between selector hinge, Part No. 56-4617FA3, and washer, Part No. 2W53954. For correct assembly, refer to figure 29.

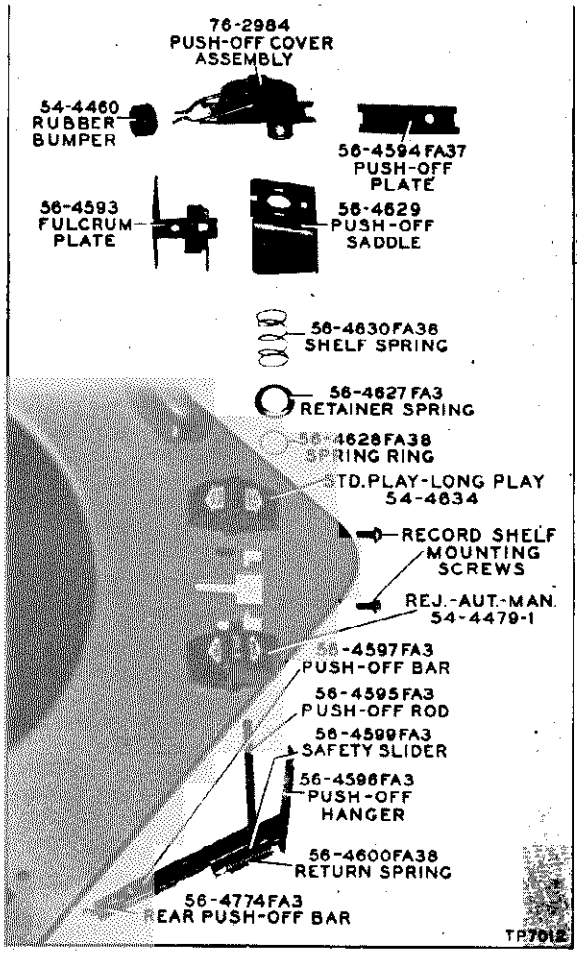

Figure 27. Record-Shelf Assembly

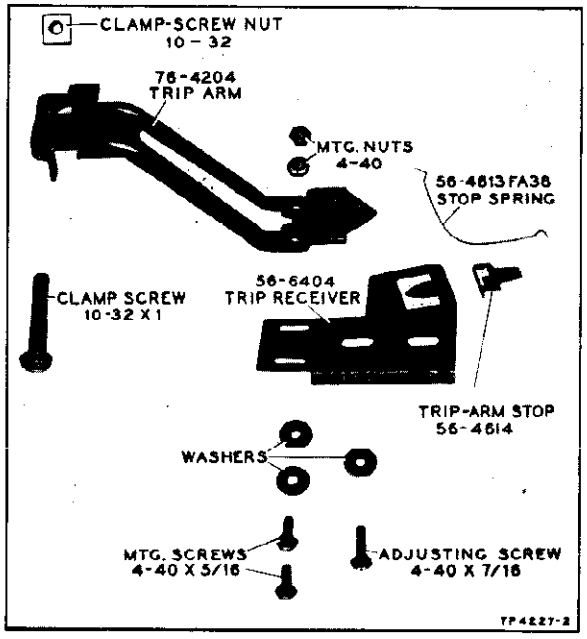

Figure 28. Trip-Arm and Trip-Receiver Assemblies

©John F. Rider

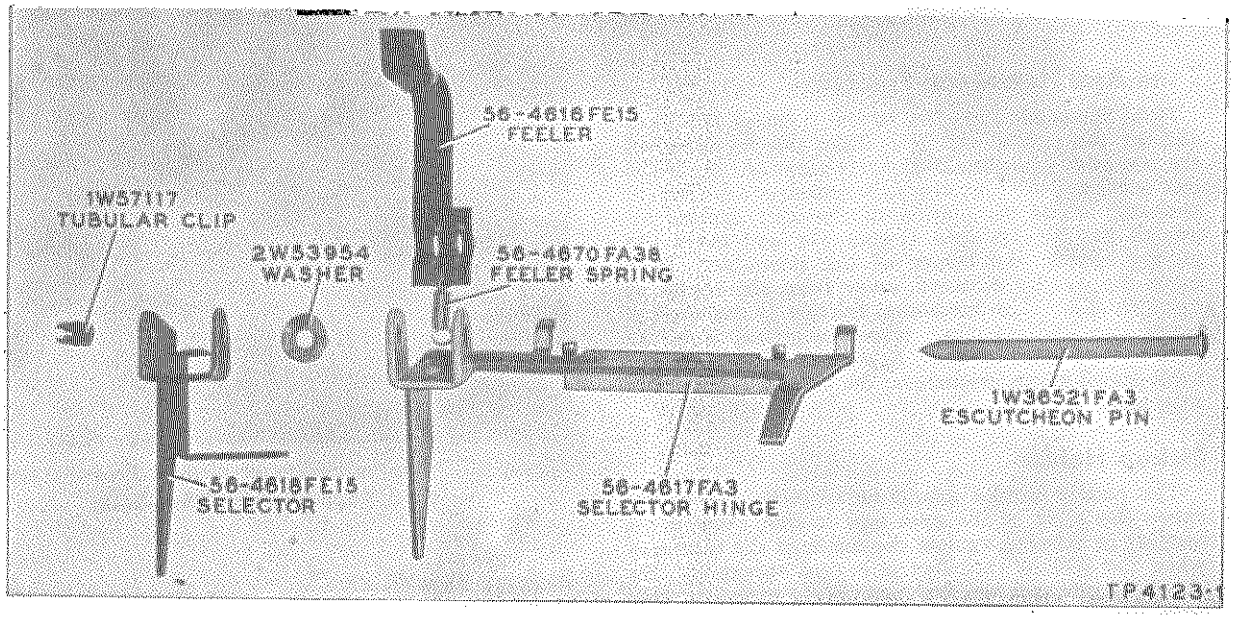

Figure 29. Selector Assembly

RECORD-PLAYER TESTING AND TROUBLE-SHOOTING PROCEDURE

Pick-Up and Needle Test

Place a 12" Columbia Long Playing Record on the turntable, lift the tone arm from the rest post, and place it on the starting groove of the record. Listen to the tone of the record. If distortion is noted, replace crystal cartridge as directed on page 12. If trouble persists, check for loose wiring, bad contact points, etc.

Shut-Off Test

Place the tone arm in the finish groove of the record and observe the shut-off action. The record player should shut off within three revolutions of the turntable, after the pickup needle has entered the finish groove of the record. The trip adjustments are shown on page 9.

Clearance Test

Remove the record from the turntable and place the tone arm over the base plate. Observe whether there is a minimum of $\frac{1}{16}$" clearance between the needle point and base plate. Refer to page 7 for adjustment.

Turntable and Motor Test

Allow the motor to run for at least five minutes; then place a stroboscope, such as Philco Part No. 45-1614, on the turntable, and illuminate the disc with a lamp operating on 60-cycle a.c. The dots in the row calibrated for 33⅓ r.p.m. should appear to remain stationary or to drift very slowly, but smoothly, forward and backward. If the dots are moving in either direction very fast or with a jerky motion, refer to UNEVEN TURNTABLE SPEED (WOWS), page 11.

RECORD-PLAYER ADJUSTMENTS

Tone-Arm Needle Pressure and Vertical Friction

Hold the Philco Gram Scale, Part No. 45-9531, on its side and set the pointer to the center line of the scale. This is the 0 point, and each small division on either side of 0 is equal to one gram. After the scale has been set to 0, place it on the turntable with the guard on the scale in an open position, at right angles to the scale, as shown in figure 30. Now set the needle of the tone arm into the hole at the end of the pointer and observe the reading on the scale. This reading is the needle pressure; the correct needle pressure is 6 to 7½ grams.

To determine the vertical friction proceed as follows: Press down on the head of the pickup, then let it return to its normal position, and note the reading. Raise the pickup slightly, then gently lower it to the normal position, and again note the reading. The vertical friction is the difference between the two readings obtained. For example: if the scale reading is 7¼ grams after the pickup is depressed and released, and is 6¾ grams after the pickup is raised and lowered, the vertical friction is 7¼ minus 6¾ or ½ gram. The vertical friction should not exceed 2 grams.

Tone-Arm Horizontal Friction

Hold the gram scale flat in the palm of the hand and set the pointer to "0". Take the tone-arm off the rest post, and place a counterweight on top of the rear end until the tone arm is balanced in a horizontal position. Place the pointer of the scale against the side of the pickup head (figure 31) and move the pickup toward the center of the turntable. Then move the pickup outward, away from the center of the turntable. The horizontal friction is the average of the two readings taken, when the pickup is moved both inward and outward. At no time should it take more than 2 grams pressure on the pointer to move the tone arm.

Pickup Holder

The pickup holder should be centrally spaced between the walls of the tone arm so that there is no binding or rubbing against the inside of the tone arm when the pickup cartridge is moved vertically. To obtain proper spacing, first remove the tone arm (see page 19); loosen the screw which holds the pickup bracket mounting. Move the mounting until it is centrally spaced between the walls of the tone arm, and maintain $\frac{1}{32}$" clearance between the tip of the ears on the holder and the inside surface at the front end of the tone arm, as shown in figure 33.

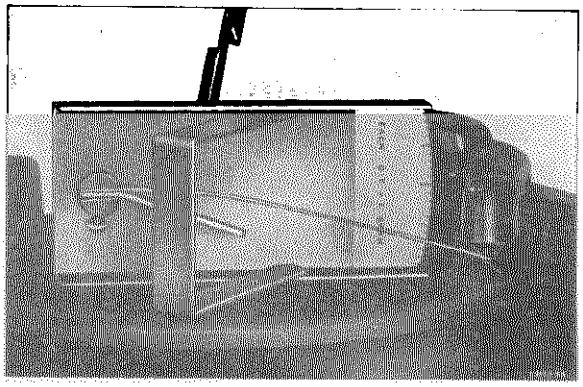

Figure 30. Measurement of Needle Pressure and Vertical Friction with Gram Scale

Pickup-Base-Plate Clearance and Height Adjustment

With the tone arm off the rest post and resting over the base plate, the needle should be at least $\frac{1}{16}$" and not more than $\frac{3}{16}$" above the base plate, as shown in figure 34. To adjust, grasp the tone arm and raise or lower (whichever is required) with a little pressure

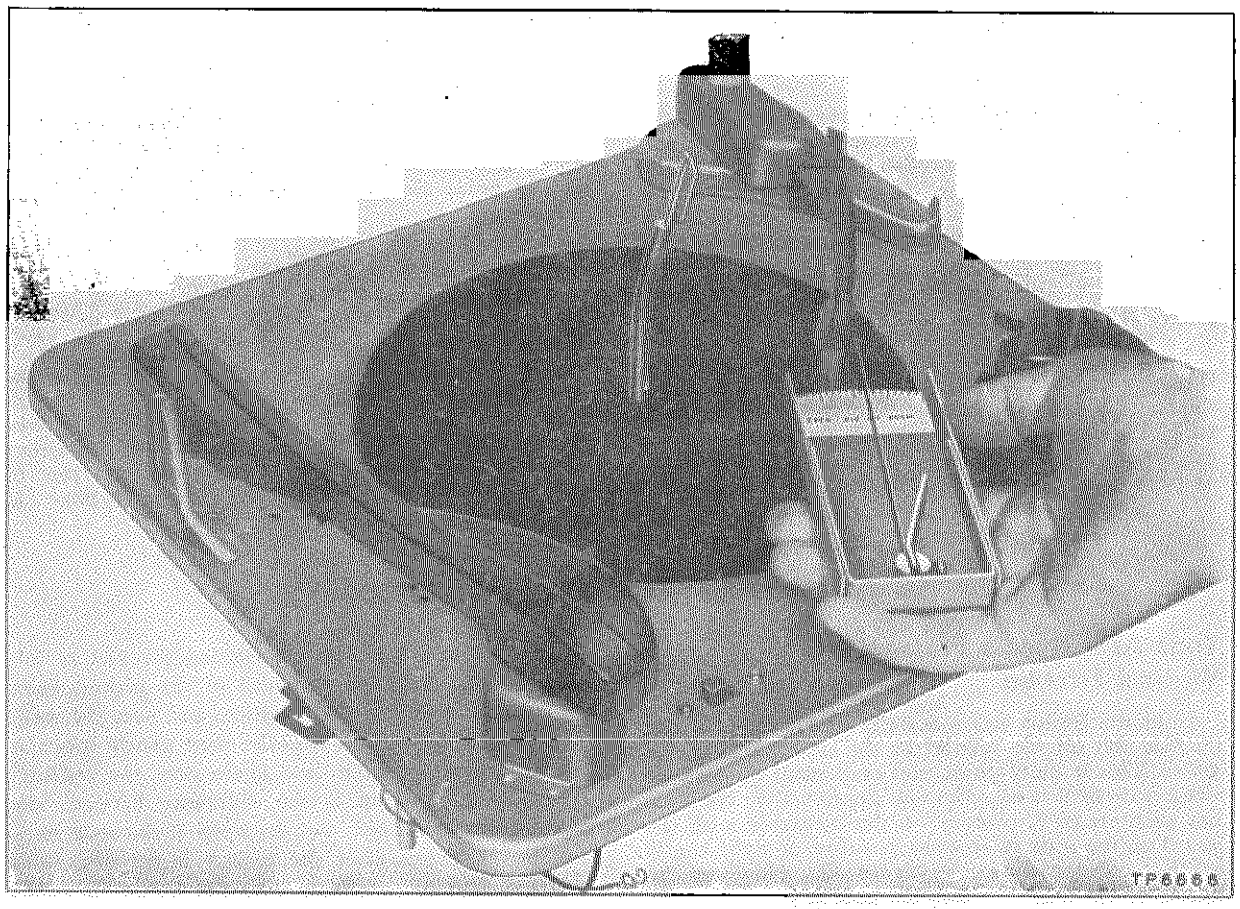

Figure 31. Measurement of Horizontal Pressure

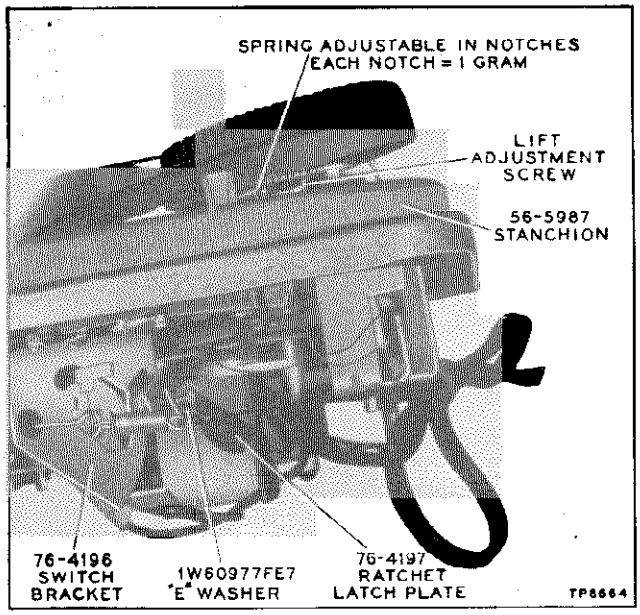

Figure 32. Needle-Pressure Adjustment

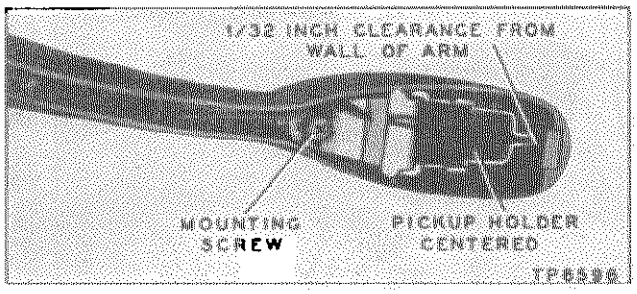

Figure 33. Pickup-Holder Adjustment

to obtain the correct clearance. Then adjust the screw on the pivot assembly (figure 32) so that the tone arm will clear the rest hook on the stanchion, Part No. 56-5987.

Trip-Switch Adjustments

With the tone-arm on the rest post, the mercury switch attached to the bracket-and-clip assembly, Part No. 76-4195, should be in a horizontal or ON position, as shown in figure 8. To adjust, loosen the reset-trip-arm clamp screw (figure 35), and while holding the tone arm on the rest post, move the trip arm until the leg on the reset trip arm engages the bracket-and-clip ear, and at the same time, the long ear of the bracket and clip is approximately $\frac{1}{32}$" above the cut-out notch on the ratchet-plate assembly, Part No. 76-4197, as shown in figure 35.

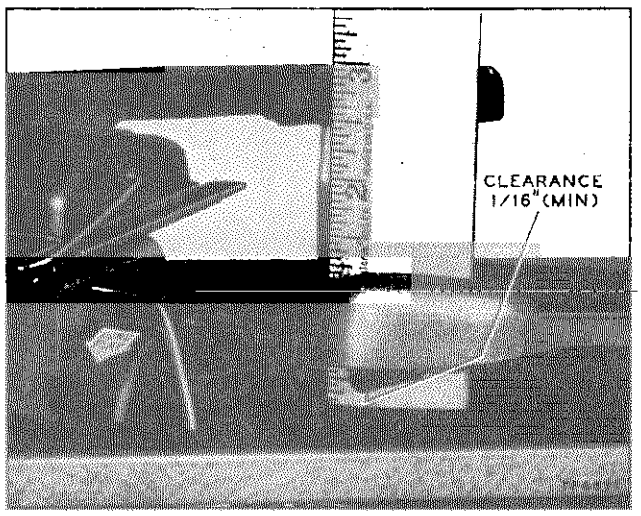

Figure 34. Tone-Arm Height Adjustment

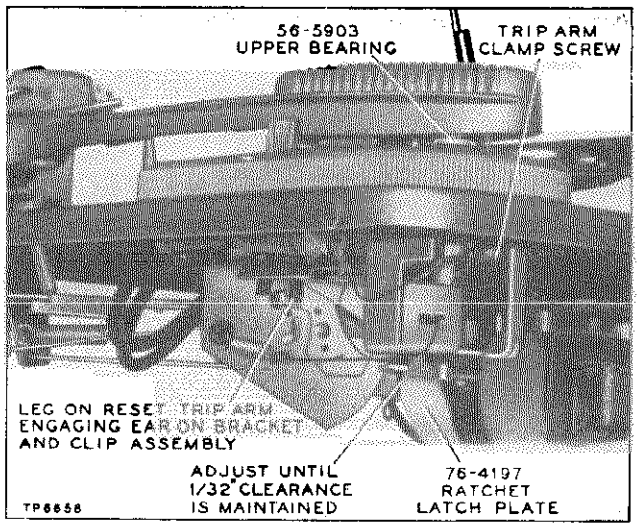

Figure 35. Trip-Switch Adjustment

Trip-Finger Adjustments

Place the tone-arm needle in the finish groove of a record, and observe the trip finger riding over the ratchet on the ratchet-plate assembly, Part No. 76-4197. The trip finger should assume an angle of 25° to 30° while riding over the ratchet, as shown in figure 7. Adjust the screw on the trip-arm receiver to obtain the proper angle.

Selector-Lever Stop Adjustment

The selector-lever "throw" is adjusted by loosening the screw in the lock plate, Part No. 56-5986 (figure 11), and centering the lock plate so that when the STD. PLAY—LONG PLAY control is in either position, the shift lever on the motor will not bind against either side.

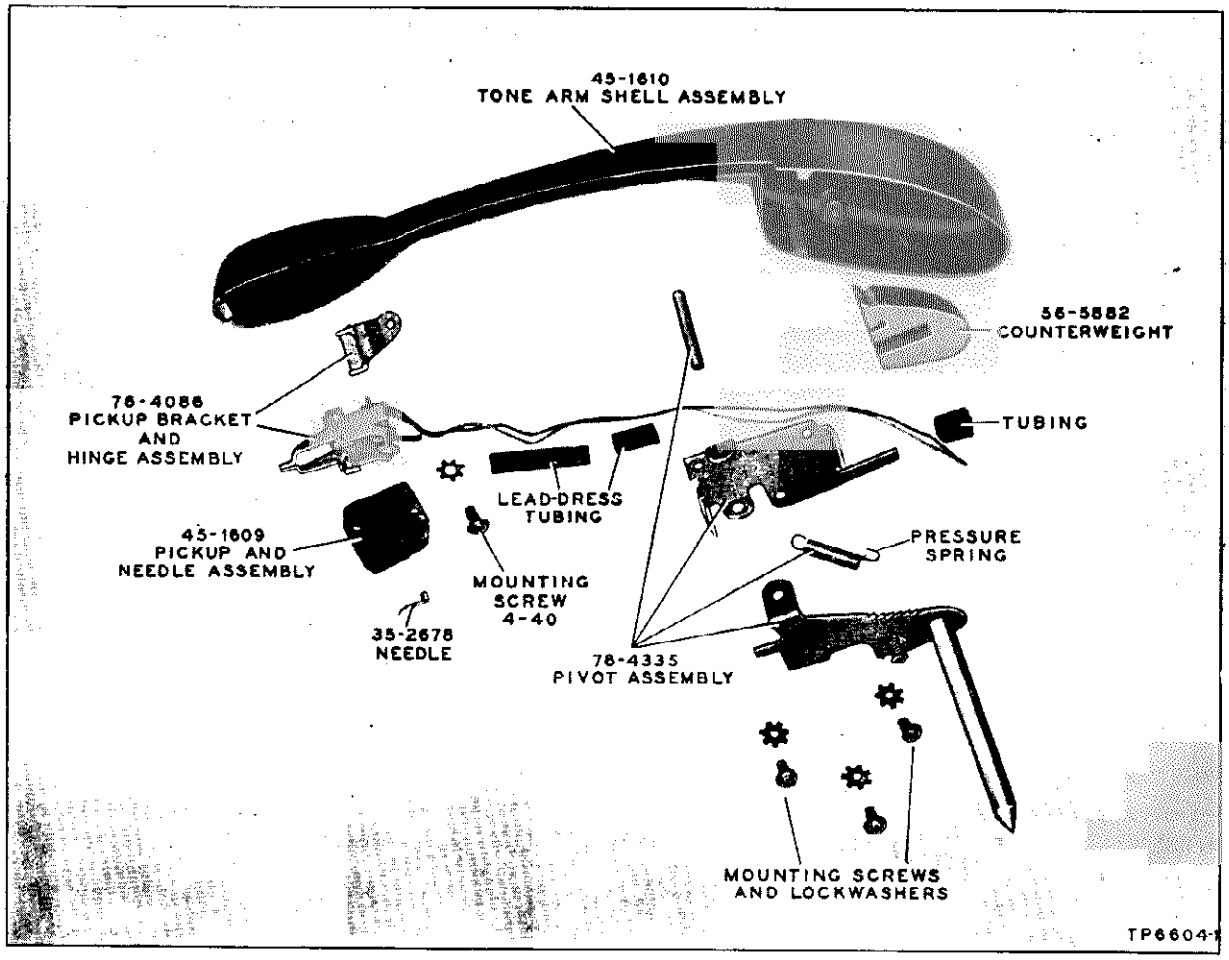

Figure 36. Record-Player Tone-Arm Assembly, Part No. 35-2686

REPLACEMENT OF PARTS AND ASSEMBLIES ON RECORD PLAYER

1. Crystal-Cartridge Assembly, Part No. 45-1609

To remove the crystal cartridge, grasp the crystal by its sides, and pull it down and out. When replacing the cartridge, push it up into the head of the tone arm, until it is seated in position.

2. Tone-Arm Assembly, Part No. 35-2686

a. Unsolder tone-arm leads from terminal panel on underside of changer base plate. The tone-arm assembly is shown in figure 36.

b. Unhook pull cord, Part No. 76-2982-1, from spring and link assembly, Part No. 56-5990 (figure 9).

c. Loosen clamp screw which holds reset trip arm to tone-arm shaft.

d. Lift out tone arm.

3. Tone-Arm Thrust Bearing, Part No. 56-5916

a. Remove tone arm as directed in paragraph 2 above.

©John F. Rider

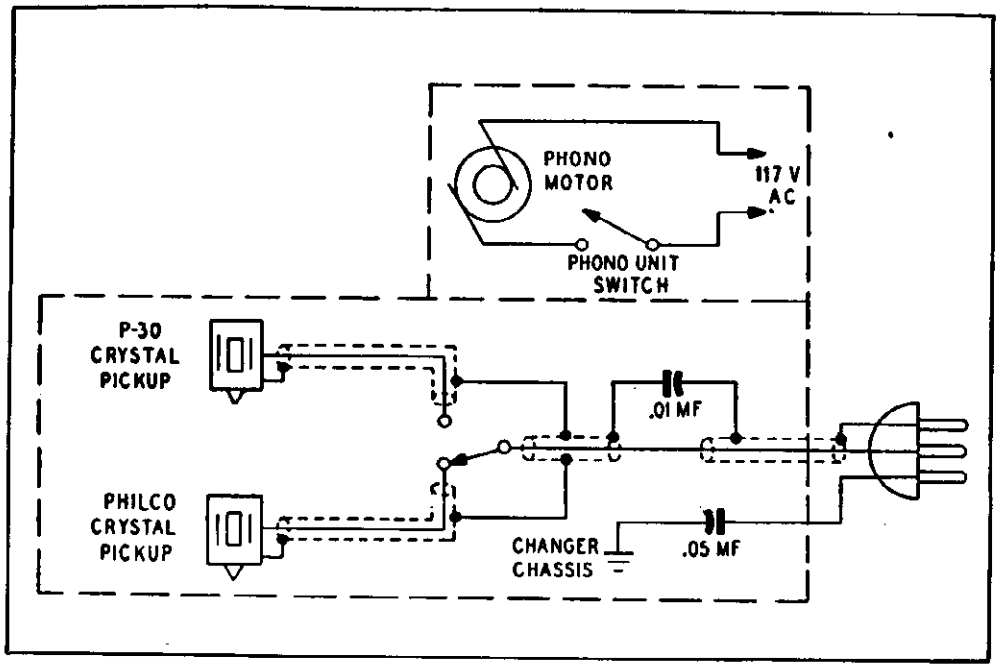

Figure 37. Model M-9C, Wiring Diagram

b. Remove "E" washer, Part No. 1W60977FE7, from bearing shaft (figure 8).

c. Lift bearing out of rubber grommet, Part No. 27-4099-3, mounted on tone-arm-shaft support.

4. Tone-Arm Stanchion, Part No. 56-5987

a. Remove tone arm as directed in paragraph 2 above.

b. Remove hex-head screw from each end of tone-arm stanchion, under changer base plate.

c. Lift out stanchion (figure 7).

5. Tone-Arm Upper Bearing, Part No. 56-5903

a. Remove tone-arm stanchion, Part No. 56-5987, as directed in paragraph 4 above.

b. Remove "E" washer, Part No. 1W60981FE7, from bearing shaft mounted on tone-arm stanchion (figure 35).

c. Remove bearing from grommet, Part No. 54-4624, by sliding it out from underside of stanchion.

6. Ratchet Latch Plate, Part No. 76-4197

a. Remove "E" washer, Part No. 1W60977FE7, from switch bracket, Part No. 76-4196 (figure 32).

b. Slide ratchet plate off switch bracket.

7. Switch Bracket, Part No. 76-4196

a. Remove mercury switch, Part No. 76-2140-2, from clip.

b. Unhook pull-cord spring, Part No. 76-2982-1, from link.

c. Remove two hex-head screws which hold switch bracket to base plate.

d. Unhook link from actuator.

8. Selector Lever, Part No. 56-5985

a. Remove "E" washer, Part No. 1W60977FE7, from stud which mounts selector lever, Part No. 56-5985, underneath base plate (figure 11).

b. Remove spring washer, Part No. 1W56306FE15, from stud.

c. Remove "U"-shaped spring, Part No. 56-5995, between selector lever and base plate.

d. Loosen lock-plate screw (figure 11).

e. Loosen motor-mounting screws and cock motor to one side.

f. Set STD. PLAY—LONG PLAY control to STD. PLAY position.

g. Align ears of selector lever with cut out on base plate, and pull out selector lever from stud on underside of base plate.

h. Disengage selector lever from control-button link.

MODEL M-9C PHILCO CORP.

REPLACEMENT PARTS LIST

Service Part No.	Description
35-1371	Motor
35-2663-2	Tone-arm assembly, record changer
35-2671-1	Crystal, standard
35-2672FC55	Tone-arm shell
35-2678	Needle for special crystal
35-2686	Tone-arm assembly, record player
35-3066-2	Turntable
41-3869-2	Cable and plug
42-1750-3	Switch, motor
42-1873	Switch
45-1597	Needle
45-1609	Pickup-and-needle assembly
45-1610	Tone-arm assembly (shell)
45-3031	Nut, knurled
45-6479	Pulley belt
45-6481	Idler wheel
54-4479-1	Control, REJ.—AUT.—MAN.
54-4460	Bumper
54-4501	Motor-mounting grommet
54-4634	Control, STD. PLAY—LONG PLAY
54-7613	Trip finger
56-1880	Cover, switch
56-2832FA3	Clamp, cable
56-4585FA3	Index lever
56-4588FA3	Actuator, push-off
56-4589FA3	Link, control
56-4593	Plate, fulcrum
56-4594FA37	Plate, push-off slide
56-4595FA3	Rod, push-off
56-4596FA3	Hanger, push-off
56-4597FA3	Bar, push-off
56-4599FA3	Slider, safety
56-4600FA38	Spring, return
56-4601-2	Spacer
56-4601-3	Spacer
56-4603FA38	Index spring
56-4604FE15	Pin, tone-arm pivot
56-4606FA3	Link, long
56-4607FA3	Link, short
56-4608FA38	Spring
56-4610	Spring, "U" (bridge assembly)
56-4613FA38	Stop spring
56-4614	Trip-arm stop
56-4616FE15	Feeler (selector assembly)
56-4617FA3	Hinge (selector assembly)
56-4618FE15	Selector
56-4626-1FA7	Record shelf
56-4627FA3	Retainer, spring (record-shelf assembly)
56-4628FA38	Spring, ring
56-4629	Saddle, push-off (record-shelf assembly)
56-4630FA38	Spring, record shelf
56-4631FA15	Pin, tone-arm lift
56-4670FA38	Spring, feeler (selector assembly)
56-4774FA3	Bar, push-off (rear)
56-4778FA38	Spring, control knob
56-4926	Spacer, motor
56-5644	Spring, spindle
56-5882	Counterweight
56-5903	Bearing, upper
56-5916	Thrust bearing
56-5981	Trip receiver, record-player tone arm
56-5985	Lever, selector
56-5986	Plate, lock
56-5987	Stanchion, record-changer tone arm
56-5990	Link, lifter
56-5991	Link, selector
56-5995	Spring, "U" (selector lever)
56-6404	Trip receiver, record-player tone arm
76-2140-2	Switch, mercury
76-2978	Bridge assembly
76-2982	Pull-cord assembly, record-changer tone arm
76-2982-1	Pull-cord assembly, record-player tone arm
76-2983FA2	Shaft and swivel, record-changer tone arm
76-2984	Push-off, cover
76-2987	Actuator lever, record-changer tone arm
76-2989	Cam-gear assembly
76-2990	Trip-plate assembly
76-2991	Bearing assembly
76-3926	Spindle
76-4086	Bracket (pickup and hinge)
76-4192	Base plate
76-4193	Actuator, lift lever
76-4194	Trip-switch assembly
76-4195	Bracket-and-clip assembly
76-4196	Switch-bracket assembly
76-4197	Ratchet latch plate
76-4198	Reset trip arm
76-4204	Trip arm (subassembly)
76-4335	Pivot assembly, record-player tone arm
1W14460FA44	Screw (3-48x5/8"), crystal mounting
1W36521FA3	Pin, escutcheon
1W52627	Cam-gear washer
1W56306FE15	Spring washer, selector-lever assembly
1W57117	Tubular clip
1W60977FE7	"E" washer (for selector lever, ratchet plate, and thrust bearing)
1W60980FE5	"E" washer (for cam and actuator stud)
1W60981FE7	"E" washer (for upper bearing)
2W53954	Washer, selector assembly

© John F. Rider

© John F Rider

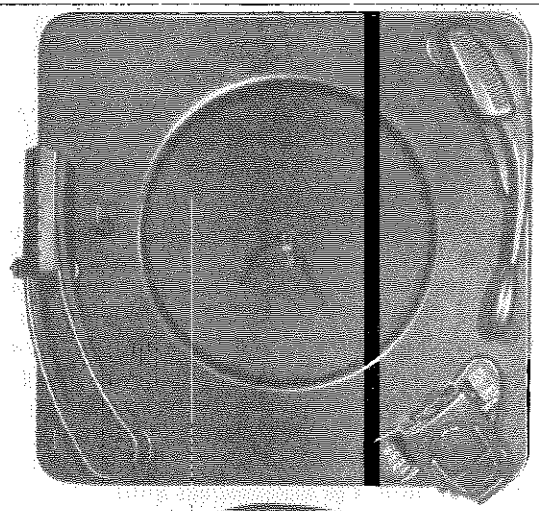

INTRODUCTION

The Philco DeLuxe Automatic Record Changer and Record Player Combination, Model M-12C, is used in several Philco Radio-Phonograph combinations. It incorporates two tone arms. The changer tone arm is used with the record-changer mechanism to play ten 12" records or twelve 10" records, automatically, at the standard speed of 78 r.p.m. The long-play tone arm is used with the manual record player, which plays the new Columbia Long-Playing Records (33⅓ r.p.m.). This tone arm employs the new Philco Balanced-Fidelity Reproducer, which applies the extremely low needle pressure of ⅕ ounce. The motor is shut off automatically at the end of the record.

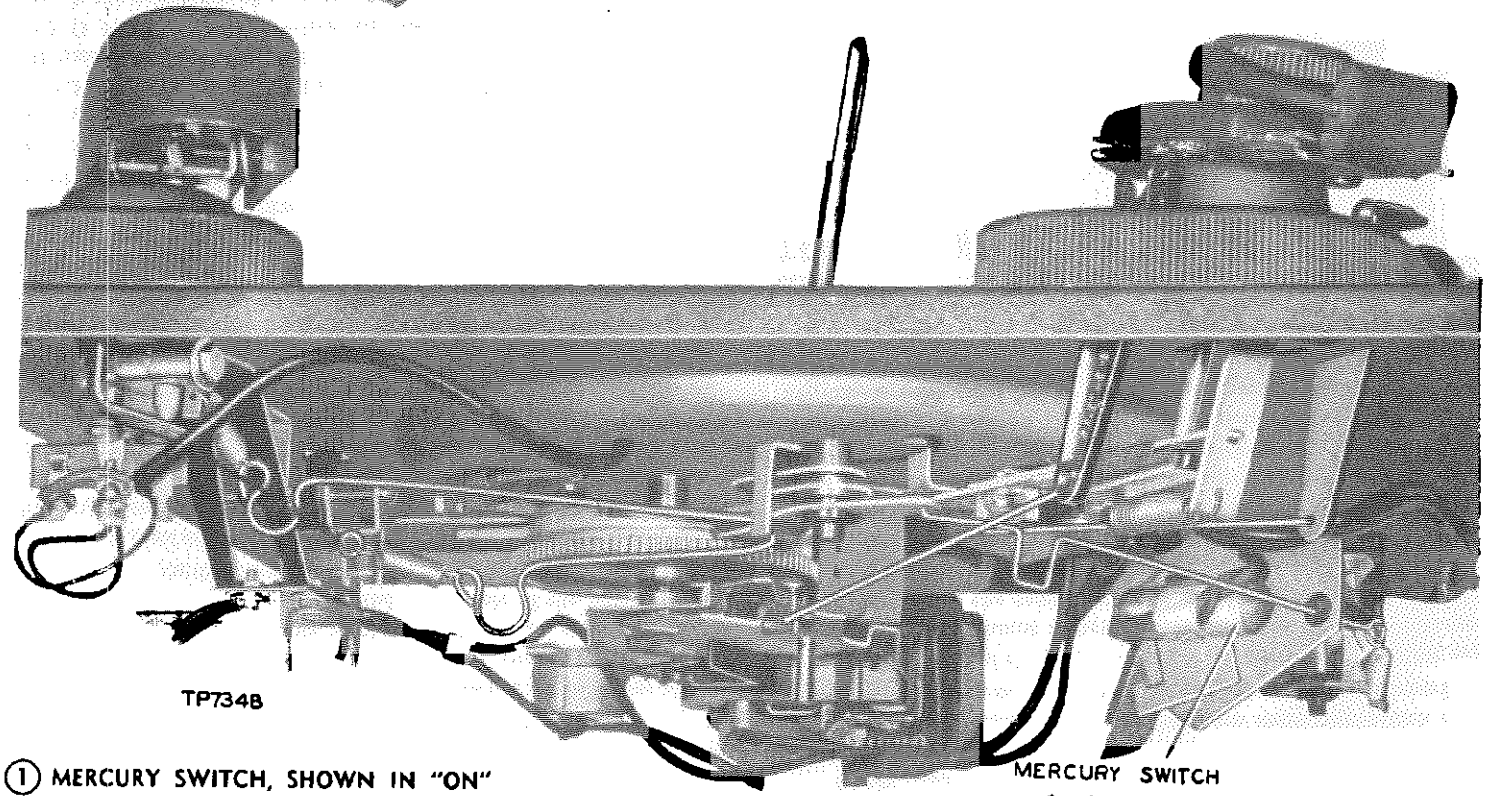

FIGURE (1) MERCURY SWITCH, SHOWN IN "ON" POSITION

©John F. Rider

DESCRIPTION OF OPERATING CYCLES

Power for the motor is obtained through two switches connected in series electrically. One is an on-off switch mounted on the bridge assembly, Part No. 76-3998 (figure 7), and is operated manually by the control button with positions OFF, MAN, AUT, and REJ. This button is located to the left of the record-shelf assembly on the top of the record changer.

The other switch is a mercury-type switch, mounted on a switch bracket, and is operated by the long-play tone arm. When the tone arm is on the rest post, a leg on the reset trip arm, connected to the tone-arm shaft, is in contact with an ear on the bracket-and-clip assembly to which the mercury switch is attached, and the switch is set in the "on" position (figure 1); when the switch is in this position, the motor circuit is controlled by the OFF-MAN-AUT-REJ control.

When the long-play tone arm is placed on a record, the mercury switch is held in the "on" position by a ratchet latch plate mounted on the switch-bracket assembly (figure 20); this ratchet plate has a cutout, in which rests a protruding ear of the bracket-and-clip assembly which contains the mercury switch. As the tone arm enters the finish groove of a record, a trip finger (attached to the reset trip arm) rides over the ratchet latch plate and trips it; this releases the bracket-and-clip assembly, causing the mercury switch to tip into the "off" position (see figure 2), thus opening the motor circuit and stopping the turntable.

The record changer has two speeds, controlled by the play control button, with positions ST'D PLAY and LONG PLAY. This button is located to the right of the record-shelf assembly on the top of the record changer. When the play control is set to ST'D PLAY, the idler wheel on the motor engages the motor shaft directly, driving the turntable at a speed of 78 r.p.m. When the play control is set to LONG PLAY, a selector link, one end of which is attached to the base of the control under the changer, actuates a selector lever mounted on the changer base plate. This selector lever engages a shift lever mounted on the motor (figure 3). A large pulley on the shift lever is connected to the motor shaft by means of a small rubber belt. The idler wheel engages this large pulley, driving the turntable at a speed of 33⅓ r.p.m. The play control also actuates a single-pole, double-throw switch, which is mounted on the base plate under the turntable (figure 3). The output leads of the two tone arms are connected to this switch. When the play control is set to the LONG PLAY position, the switch cuts off the output of the changer tone arm, and closes the circuit for the long-play tone arm. The reverse of this action takes place when the play control is set to the ST'D PLAY position.

The changer mechanism of the record changer is brought into action when a small retractable gear segment, mounted on the cam gear, is released, and engages the hub gear of the turntable shaft, causing the cam gear to be driven. While a record is playing, the retractable gear segment is held in the retracted position by the trip-plate ear; the segment is released either manually, by pushing the OFF-MAN-AUT-REJ control to REJ, or automatically, when the changer tone arm follows the finish groove of a record; automatic tripping is initiated by the trip arm, which is attached to the tone-arm shaft, and which rides over the trip-plate ratchet screw, causing the cam-gear segment to be released.

The tone arm of the record changer is operated by two link assemblies (figure 12) attached to actuator levers, which are in contact with the cam surface of the cam gear. When the cam gear starts, the lower actuator lever is pushed outward first, and the short link assembly attached to it raises the tone arm off the record. (The same action also raises the long-play tone arm, at the end of a record, by means of the long link assembly, which is also attached to the lower actuator lever.) As the cam gear continues to turn, the upper actuator lever is pushed outward, and its link assembly pulls the tone arm out against the rest post; at this instant, a roller on the cam gear makes contact with the push-off actuator (which is connected to the record-shelf assembly through a series of push-off bars), and operates the record-dropping mechanism.

TESTING AND TROUBLE-SHOOTING PROCEDURE

The following series of operating tests is given to aid in localizing troubles. Each test should be performed with several good records before making any adjustments.

With both tone arms on their rest posts, set the record shelf to the 10″ position, and place a 10″ record over the spindle and onto the record shelf. Set the play control to ST'D PLAY, and push the OFF-MAN-AUT-REJ control knob to REJ. Observe the record-dropping action; the record should fall smoothly onto the turntable. The tone arm should rise from the rest post, and the needle should come down on the record at about ⅛″ from the outer edge. Play the record through, and observe the tripping action; the trip mechanism should operate within the first two or three revolutions after the needle has entered the eccentric finish groove of the record.

Remove the record from the turntable, turn the record shelf to the 12″ position, place a 12″ record on the spindle and record shelf, and repeat the above testing procedure.

During a change cycle, the lower edge of the tone arm should clear the top of the rest-post hook by a minimum of ⅛″.

Remove the record from the turntable, place the changer tone arm over the changer base plate, and observe the clearance between the needle point and the base plate; the clearance should be not less than 1/16″; however, the needle should be no higher than the top of the turntable.

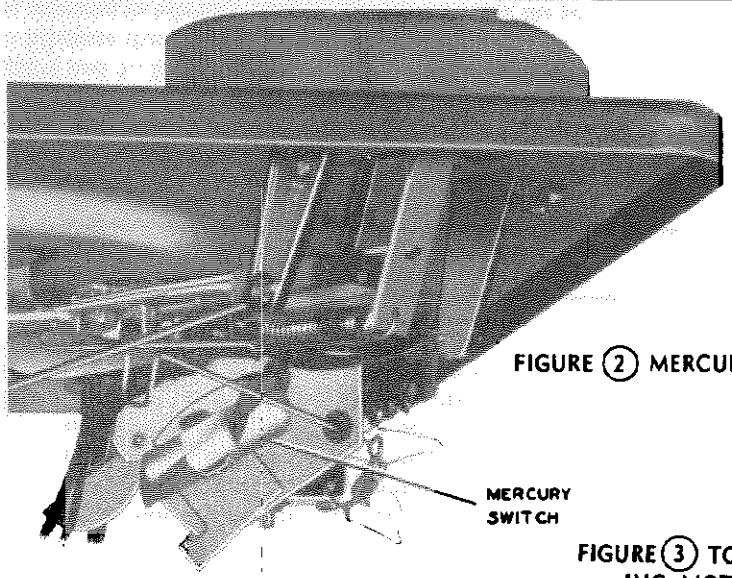

FIGURE (2) MERCURY SWITCH, SHOWN IN "OFF" POSITION

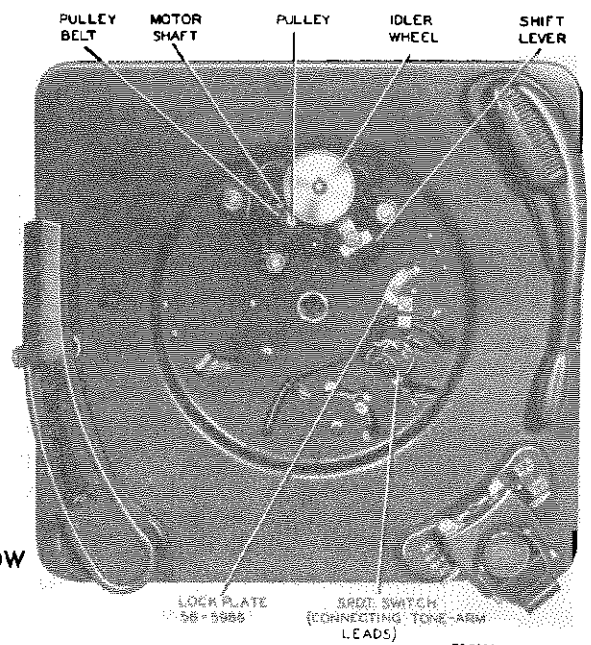

FIGURE (3) TOP VIEW, TURNTABLE REMOVED, SHOWING MOTOR ASSEMBLY AND SPDT SWITCH

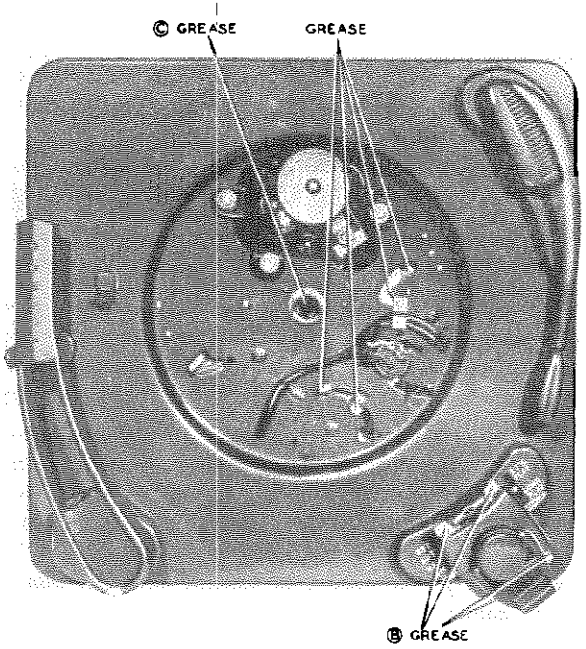

FIGURE (4) TOP VIEW, SHOWING LUBRICATION POINTS

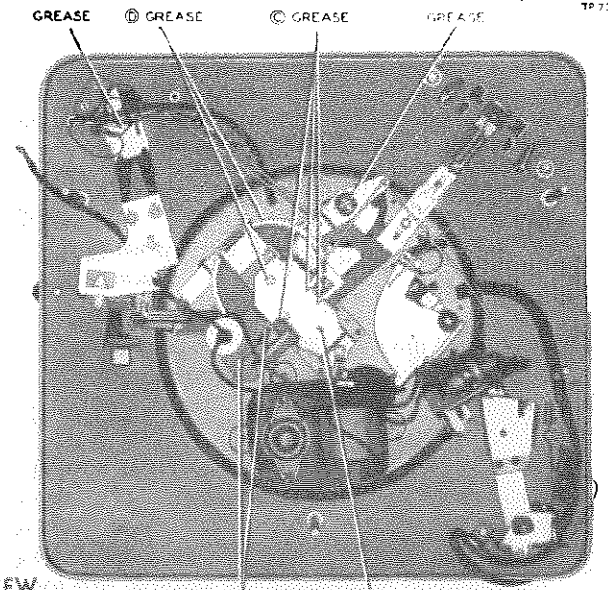

FIGURE (5) BOTTOM VIEW, SHOWING LUBRICATION POINTS

TESTING AND TROUBLE-SHOOTING PROCEDURE (Continued)

Place the tone arm on the rest post, set the OFF-MAN-AUT-REJ control to MAN, and the play control to LONG PLAY. Place a 12" Columbia Long-Playing (micro-groove) record on the turntable, and set the long-play tone arm on the record. Play the record for a few minutes and listen to its tone, then place the tone arm in the finish groove of the record, and observe the shut-off action. The turntable should stop within three revolutions after the tone arm has entered the finish groove.

Remove the record from the turntable, place the tone arm over the base plate, and observe the clearance between the needle point and the base plate; the clearance should be not less than 1/16". Now raise the tone arm over the rest post; it should clear the post by a maximum of 1/32".

TURNTABLE AND MOTOR TEST

Place a stroboscope disc, such as the Philco Part No. 45-1614, on the turntable, and illuminate the disc with a lamp operating on 60-cycle a.c. Set the OFF-MAN-AUT-REJ control to MAN, and the play control to LONG PLAY, and observe the dots in the row calibrated for 33⅓ r.p.m. on the stroboscope disc. The dots should appear to remain stationary, or have very little drift, either to the right or to the left.

Remove the stroboscope disc from the turntable, place a stack of ten 12" records onto the turntable, and place the stroboscope disc on the top record. Set the play control to ST'D PLAY, set the OFF-MAN-AUT-REJ control to MAN, and illuminate the stroboscope with a lamp operating on 60-cycle a.c. Observe the dots in the row calibrated for 78 r.p.m.; they, too, should appear to remain stationary, or have very little drift to the right or left.

CLEANING AND LUBRICATION

When the record changer is brought in for service, it should be well cleaned, by using carbon tetrachloride. Remove all dirt and all grease and oil. When applying new grease and oil, use it sparingly. All lubrication points are shown in figures 4 and 5. It may be necessary to remove some parts and assemblies in order to lubricate them properly. For example, the cam gear and actuator levers should be removed to lubricate the cam-gear spindle and the actuator stud.

PARTS NOT TO BE LUBRICATED

The following parts should not be lubricated at any time:

Both trip receivers and trip fingers.
Ratchet screw on trip plate.
Selector assembly.
All parts of long-play tone arm and its subassemblies
All parts of trip-switch assembly.

PARTS TO BE GREASED

Record-Shelf Assembly

Each of four dimples, and both sides of slide plate (point B of figure 4).

Bridge Assembly

Three dimples (points C of figure 5).

Cam Gear

Cam-gear teeth and all outer surfaces of gear (points D of figure 5).

Main Assembly

Cam-gear spindle.
Actuator stud.
Turntable-shaft upper bearing (point C of figure 4).
Changer tone-arm-shaft base (fill dimple with grease).
All assemblies that have ears, and dimples that slide on the main base plate.

PARTS TO BE OILED

Use S.A.E. 20 oil on the following parts:

Trip-Plate Bushing

Apply one or two drops to inside of bushing.

Spindle

Apply one or two drops to base of spindle where it slides vertically in the bridge plate (point E of figure 5).

SERVICING THE RECORD CHANGER

Some of the record-changer troubles that may be encountered, also the methods of servicing, are given below. The serviceman should become thoroughly familiar with the operation of all parts in the mechanisms before attempting to service the record changer. Some troubles may be caused by a lack of lubrication or an accumulation of dirt. Before making the final tests and adjustments, make sure that the changer is well cleaned and lubricated.

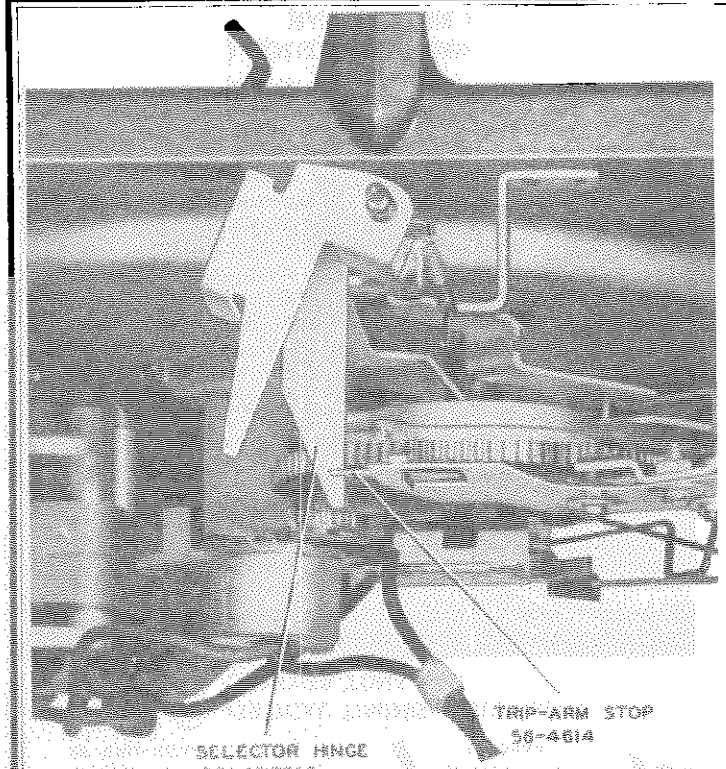

FIGURE (6) 10" INDEX SET-DOWN ADJUSTMENT

FIGURE (7) 12" INDEX SET-DOWN ADJUSTMENT

FIGURE (8) TRIP-FINGER AND TRIP-RECEIVER ADJUSTMENTS

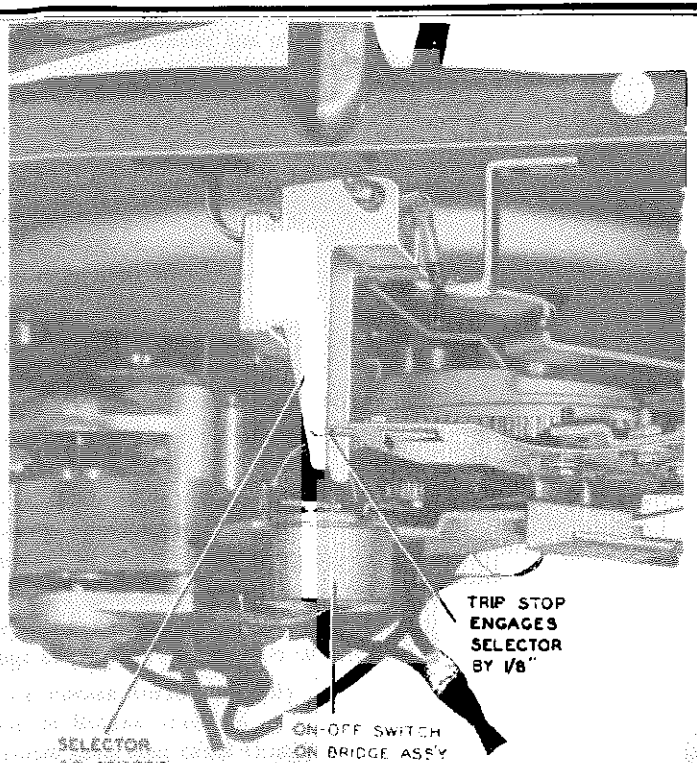

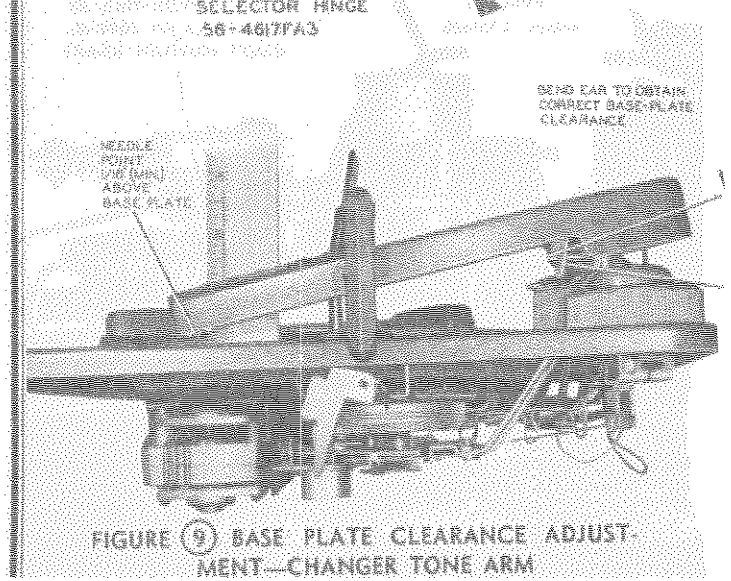

FIGURE (9) BASE PLATE CLEARANCE ADJUSTMENT—CHANGER TONE ARM

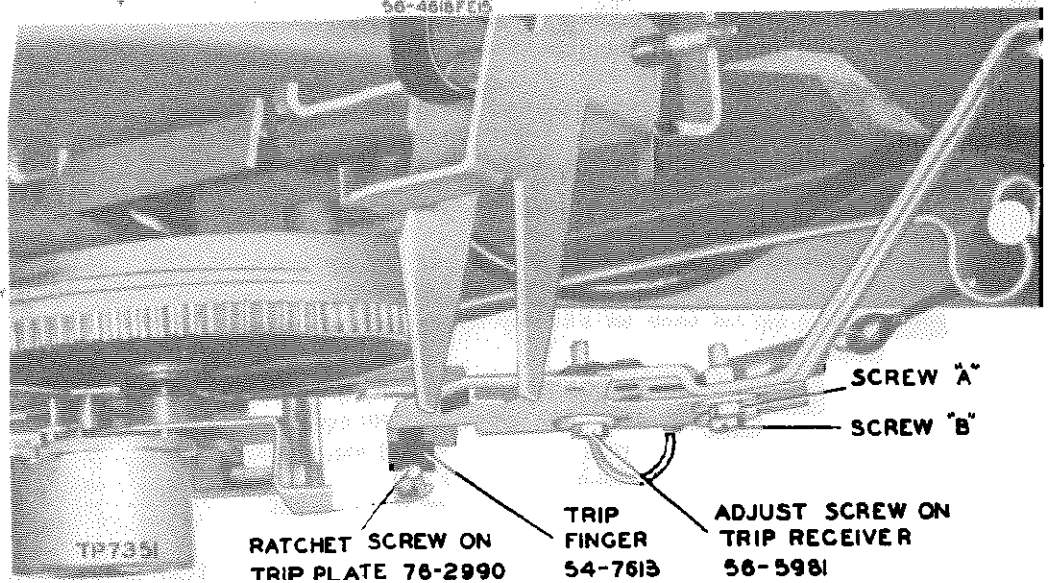

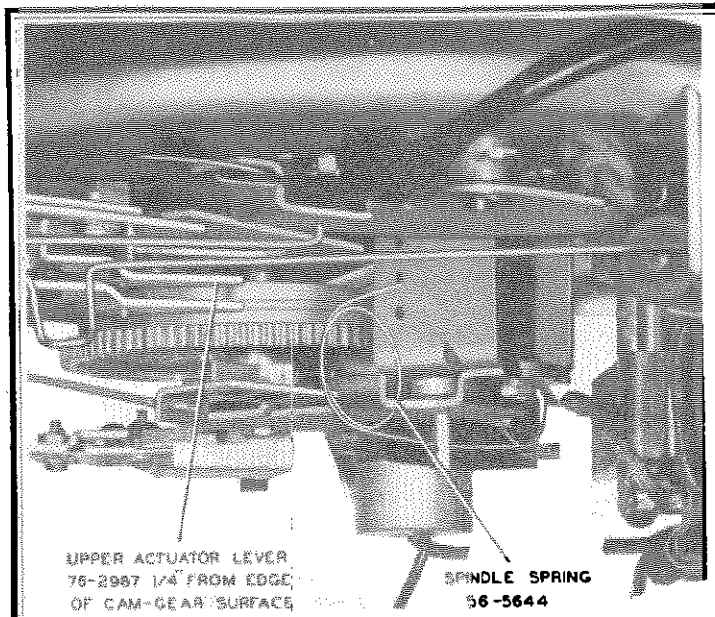

FIGURE (10) VERTICAL TIMING ADJUSTMENT—CHANGER TONE ARM

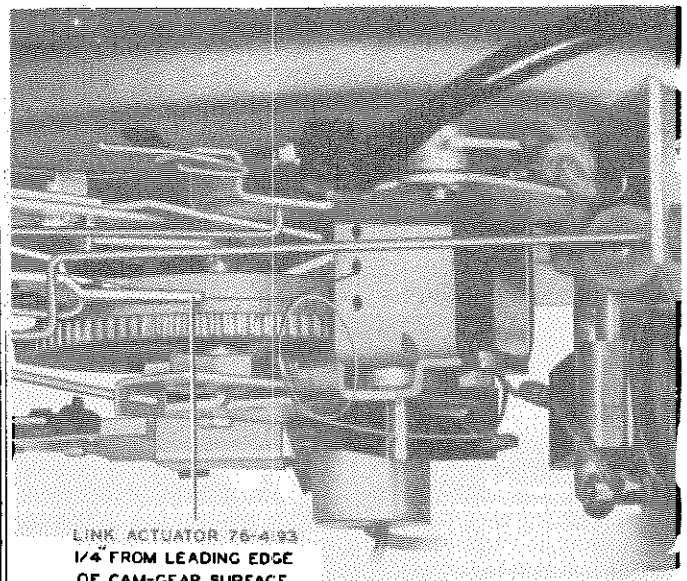

FIGURE (11) HORIZONTAL TIMING ADJUSTMENT—CHANGER TONE ARM

CORRECTION OF TROUBLES

1. **Changer tone arm fails to rise off the rest post when the OFF-MAN-AUT-REJ control is set to REJ.**
   Changer tone arm does not clear the top record when a full stack of records (ten 12", or twelve 10") is on the turntable.
   Check the tone-arm height and lift adjustments, as directed on page 15, and the tone-arm vertical and horizontal timing adjustments, as directed

2. **Changer tone-arm needle does not set down on the record properly. Changer tone arm sets on the record, then falls off.**
   Check the 10" and 12" index and set-down adjustments.

   Check to determine whether the changer is level.

3. **Sound is distorted, weak, or intermittent, on the changer tone arm.**
   Replace the needle Make sure that the knurled thumb nut on the chuck is tightened securely.
   Replace the crystal
   Check for bad wiring connections.
   Check the tone arm for binding. Absence of vertical end play in the tone-arm shaft will cause excessive horizontal drag, resulting in distortion or groove jumping.
   Check for uneven turntable speed

4. **Changer fails to cycle at the end of a record.**
   Check the trip-finger adjustment Observe whether the records being used contain an eccentric finish groove in the center.

5. **Changer fails to drop the record automatically. Record holes becoming enlarged.**
   Check the record-shelf and push-off adjustments.

6. **Long-play tone arm does not raise and lower on the rest post when the changer is put into cycle, or does not clear the rest post when lifted off the record.**
   Check the tone-arm height clearance and the raise adjustment.

7. **Sound is distorted, weak, or intermittent, on the long-play tone arm.**
   Try a new needle and cartridge
   Check all wiring.
   Make sure that only long-playing records are being used at the slow speed.
   Check the speed with a stroboscope disc, as directed
   Check the selector-lever throw adjustment.
   Check the pulley belt on the motor, as direct
   Check the needle pressure, the horizontal friction, and the pickup holder adjustments.

CORRECTION OF TROUBLES (Continued)

8. **Record changer fails to shut off when the long-play tone arm rides the eccentric finish groove of a long-play record.**

Check the trip-finger and the trip-switch adjustments (page 21).

Check the mercury switch; when it is properly set in the clip assembly, the red dot on the switch should be on top.

ADJUSTMENTS FOR THE RECORD CHANGER

10" Index or Set Down

Set a 10" record on the turntable, push the OFF-MAN-AUT-REJ control to REJ, and rotate the turntable by hand approximately 4½ turns. The tone-arm needle should be ½" above the record at this point. Loosen the clamp screw on the trip arm slightly (figure 12); then hold the tone arm steady, ⅛" in from the edge of the record, and set the trip arm so that the trip-arm stop, 56-4614, is in contact with the inside selector hinge, 56-4617FA3, as shown in figure 6.

Tighten the clamp screw, leaving $\frac{1}{32}$" vertical play, or clearance, between the trip arm and the base plate.

12" Index or Set Down

Make the 10" index adjustment first, then remove the 10" record from the turntable and place a 12" record in its place. Reject the changer, and rotate the turntable until the needle point is ½" above the record. The trip-arm stop should be against the outside selector, 56-4618FE15, as shown in figure 7.

Ordinarily, the 12" index is satisfactory after the 10" index adjustment is made; if not, bend the selector slightly to the right or left, as required, for the proper set-down of the needle on the record (⅛" in from the edge of the record).

Trip Finger

With a record on the turntable, place the tone arm in the finish groove of the record. The trip finger, 54-7613, is now riding over the ratchet screw of the trip plate, 76-2990, as shown in figure 8. The trip finger should assume an angle of 25° to 30° with respect to the ratchet screw. To obtain the correct angle, adjust the screw on the trip receiver, 56-5981, as indicated in figure 8. Make certain that the vertical center line of the trip finger coincides with the center line of the ratchet screw. To obtain this alignment, loosen screw "A" slightly, and screw "B" completely, on the trip receiver, 56-5981, and swing the trip receiver to the right or left until the trip finger is centered over the ratchet screw; then tighten the screws

When this adjustment is made, care should be taken to prevent the trip receiver from being pulled in toward the trip arm too far, as this will prevent the trip-arm stop, 56-4614, from engaging the selector hinge by a minimum of ⅛", as shown in figure 7. A happy medium between the above adjustments should be reached.

Also, the index, or set-down, adjustment may be slightly affected when making the above adjustments, so it is well to remember that these three adjustments are interrelated, and that, when any one of them is made, the other two should be rechecked.

Tone-Arm Height and Lift

With the changer out of cycle, and the tone arm free, set the arm over the base plate. The needle point should be approximately $\frac{1}{16}$" above the base plate. To adjust, bend the protruding ear of the swivel post (bending the ear upward increases the clearance), shown in figure 9. Now raise the tone arm to its maximum height, and place it against the rest post. There should be a minimum of ⅛" clearance between the lower edge of the tone arm and the top of the rest-post hook. Adjust the ear on the swivel post until a compromise is reached between the correct rest-post clearance and base-plate clearance.

Tone-Arm Vertical and Horizontal Timing

Before making these adjustments, make the tone-arm height and lift adjustments described above.

For the vertical adjustment, start with the changer out of cycle, push the OFF-MAN-AUT-REJ control to REJ, and rotate the turntable ¾ of a revolution by hand. At this point, the leading edge of the cam is approximately ¼" from the end of the link actuator, 76-4193 (this is the lower actuator lever shown in figure 10). Adjust the wire loop of the *short* link (56-4607FA3 in figure 12) until the ear of the tone-arm swivel post makes contact with the lower end of the cutout on the tone-arm pivot assembly.

For the horizontal adjustment, start with the changer out of cycle, and rotate the turntable 1½ revolutions by hand. At this point, the upper leading edge of the cam gear is approximately ¼" from the upper actuator lever, 76-2987 (shown in figure 11). Adjust the wire loop of the *long* link (56-4606FA3 in figure 12) by squeezing or spreading it until the tone arm is up against the rubber bumper on the rest post.

Record Shelf

Set the record shelf to the 10" position, with the changer out of cycle. Place the Philco record-shelf gauge, 45-1470, over the spindle and onto the record shelf, as shown in figure 13. Loosen the two hex-head screws that hold the record-shelf assembly to the changer base plate. Move the record-

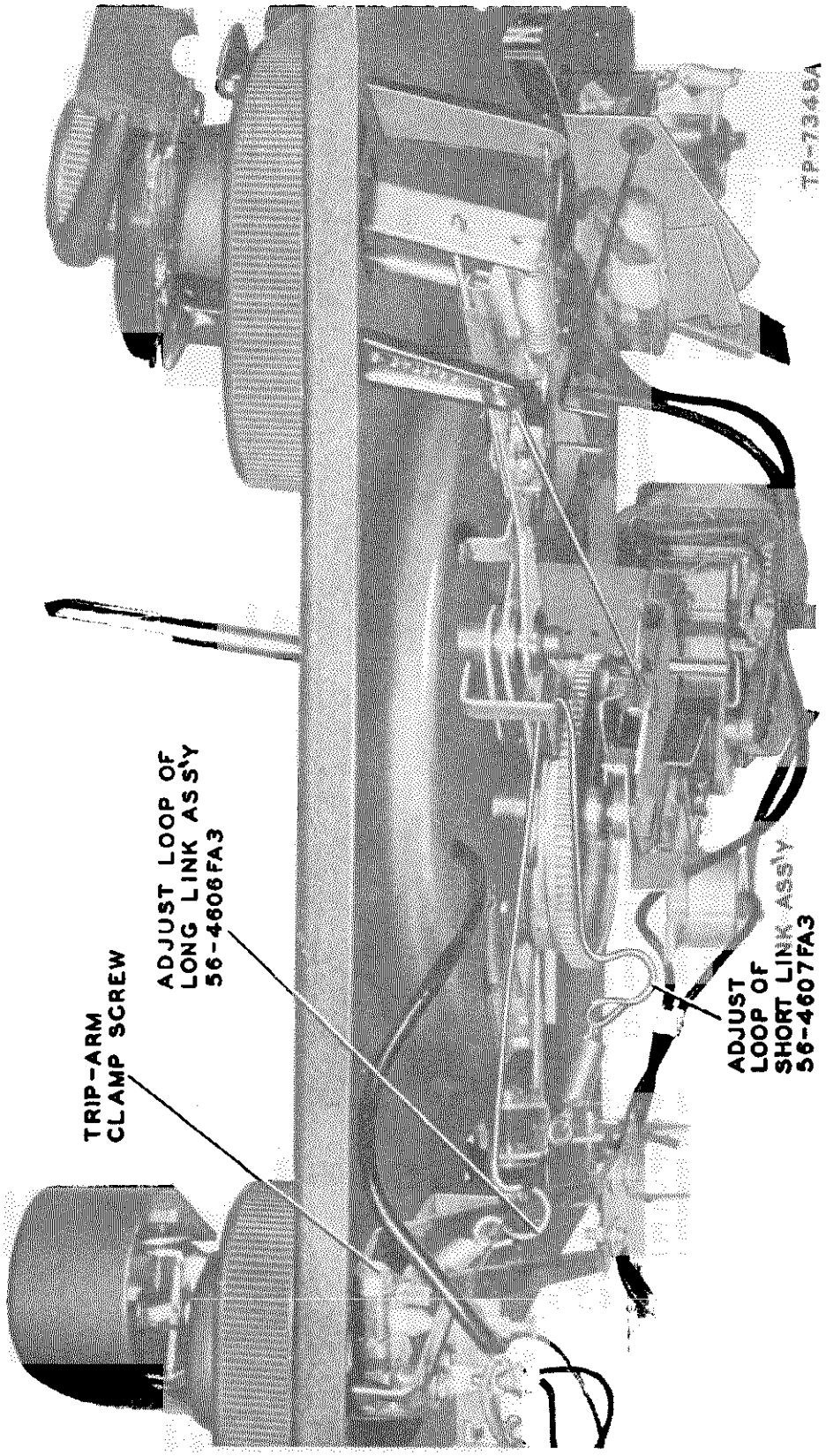

FIGURE (12) LOOP ADJUSTMENTS FOR TONE-ARM VERTICAL AND HORIZONTAL TIMING

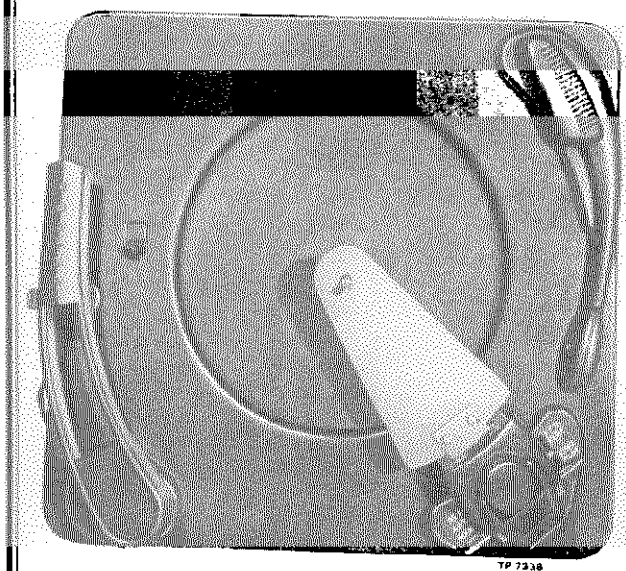

FIGURE (13) SPECIAL PHILCO RECORD-SHELF GAUGE, SHOWN IN CORRECT POSITION

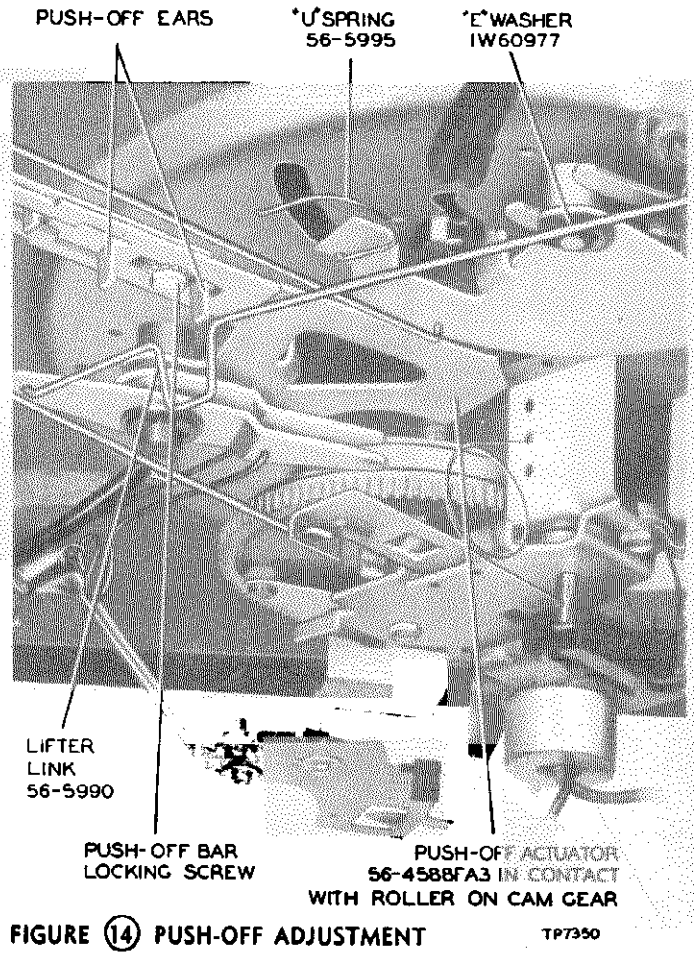

FIGURE (14) PUSH-OFF ADJUSTMENT

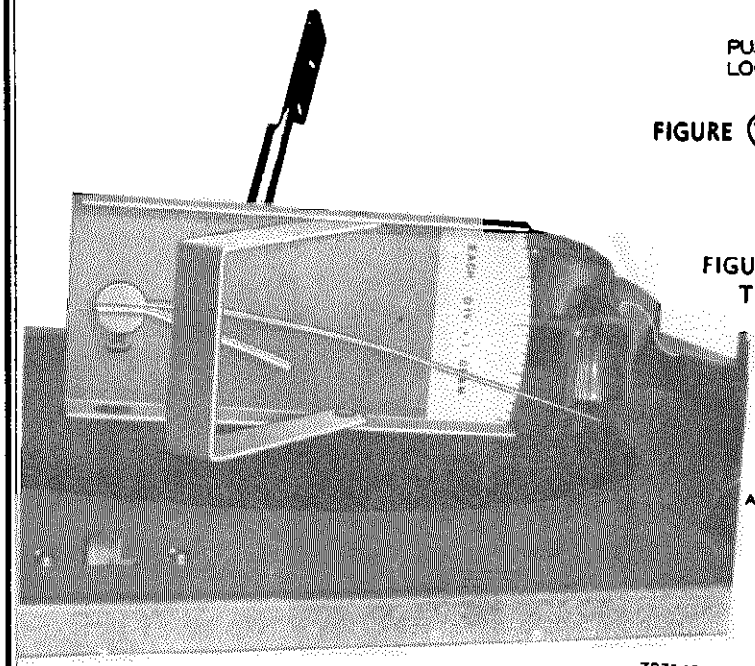

FIGURE (15) PHILCO GRAM SCALE, SHOWN IN POSITION FOR MEASURING NEEDLE PRESSURE AND VERTICAL FRICTION

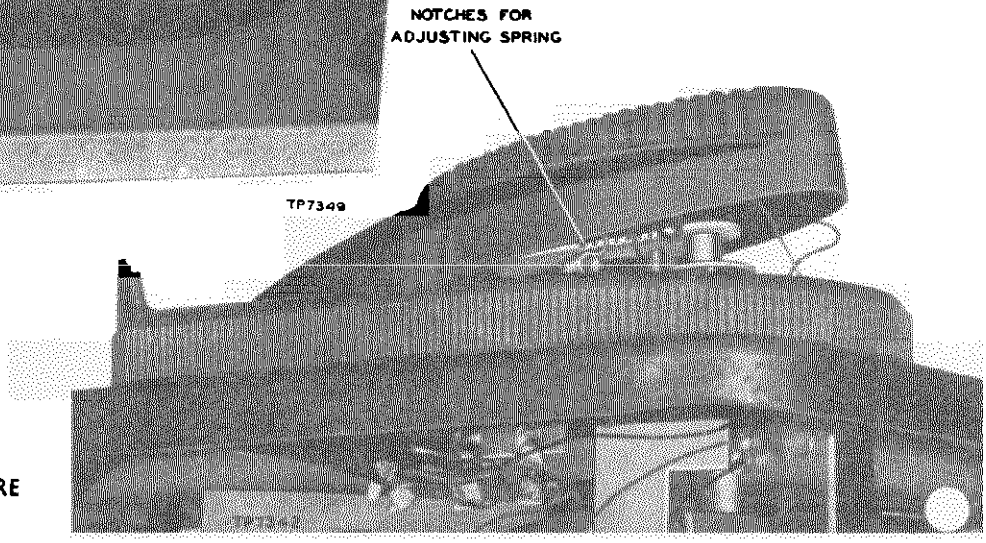

FIGURE (16) NEEDLE-PRESSURE ADJUSTMENT

MODEL M-12C

PHILCO CORP.

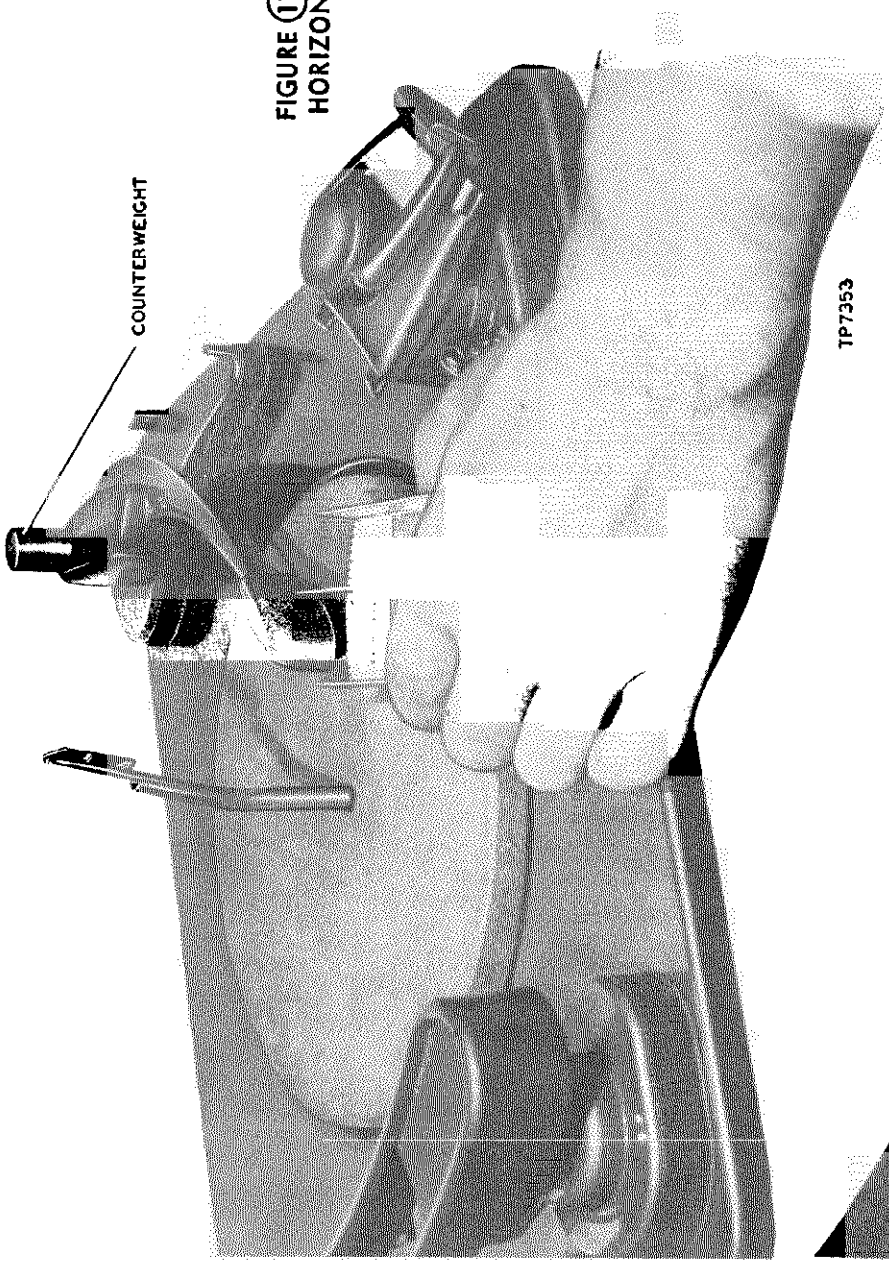

FIGURE (17) MEASURING HORIZONTAL FRICTION

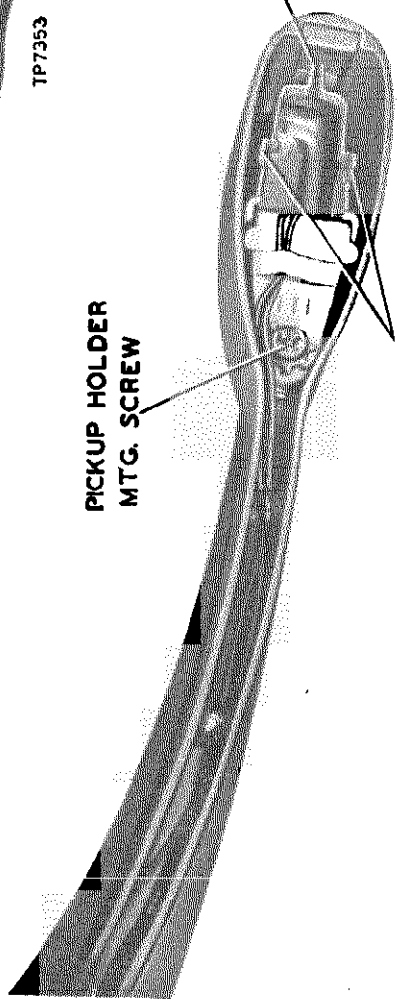

FIGURE (18) PICKUP-HOLDER ADJUSTMENT

©John F. Rider

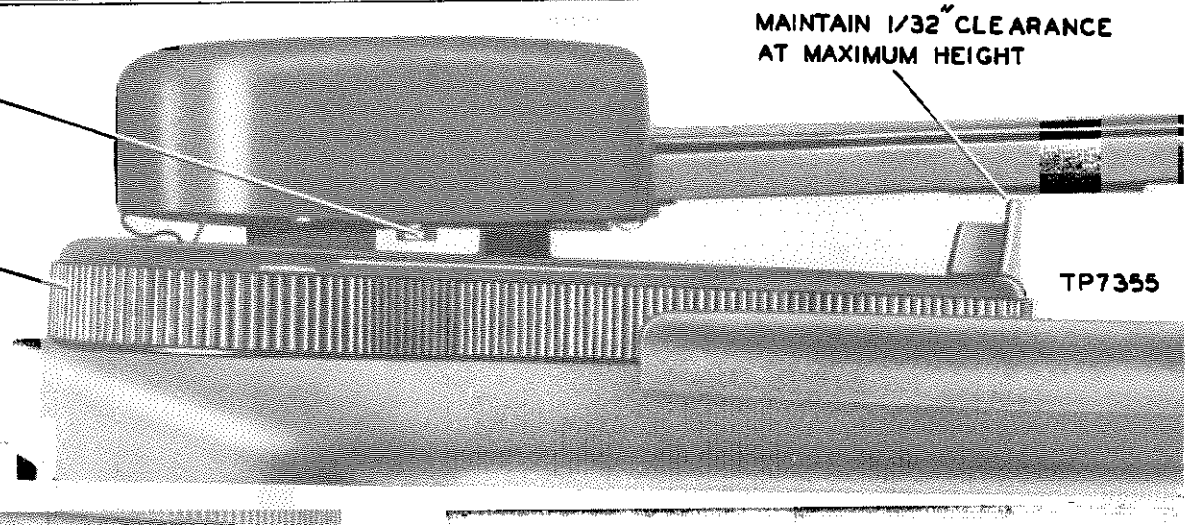

FIGURE (19) HEIGHT ADJUSTMENT—LONG-PLAY TONE ARM

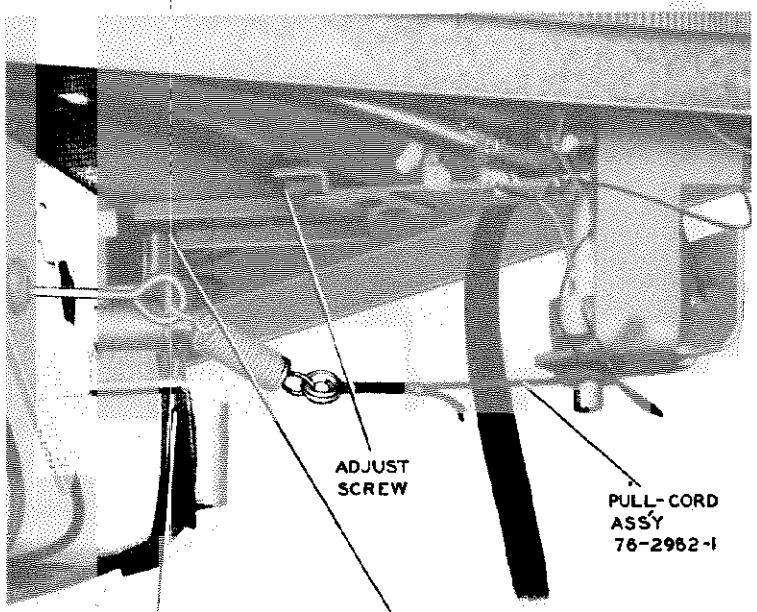

FIGURE (20) TRIP-FINGER ADJUSTMENT

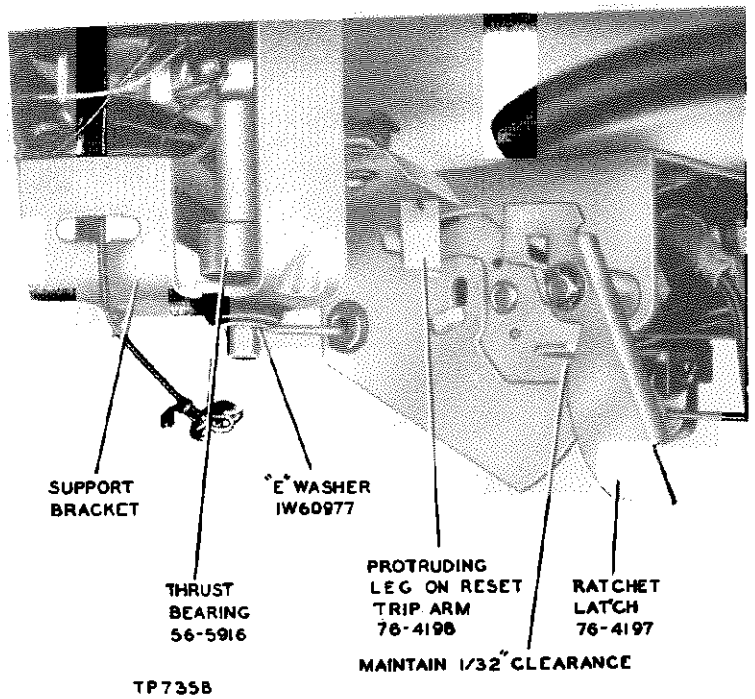

FIGURE (21) TRIP-SWITCH ADJUSTMENT

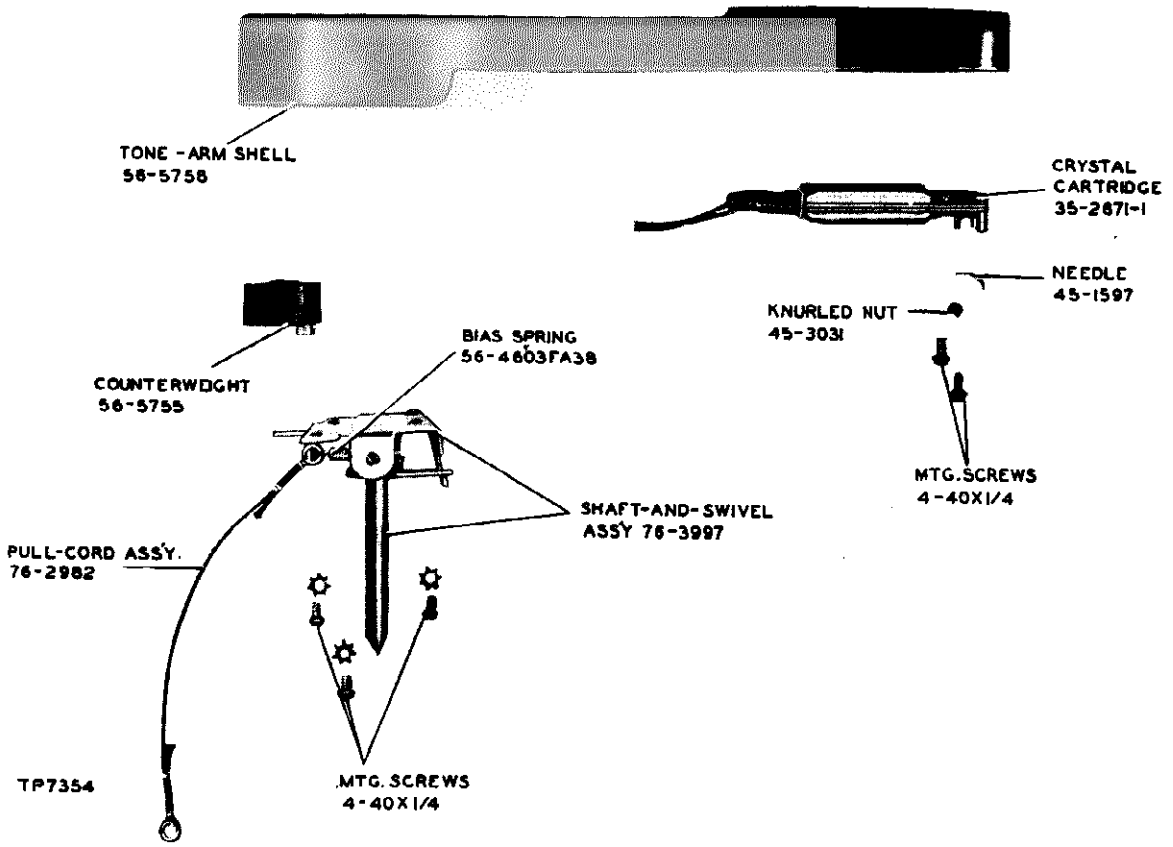

FIGURE (22) CHANGER TONE-ARM ASSEMBLY (35-2675)

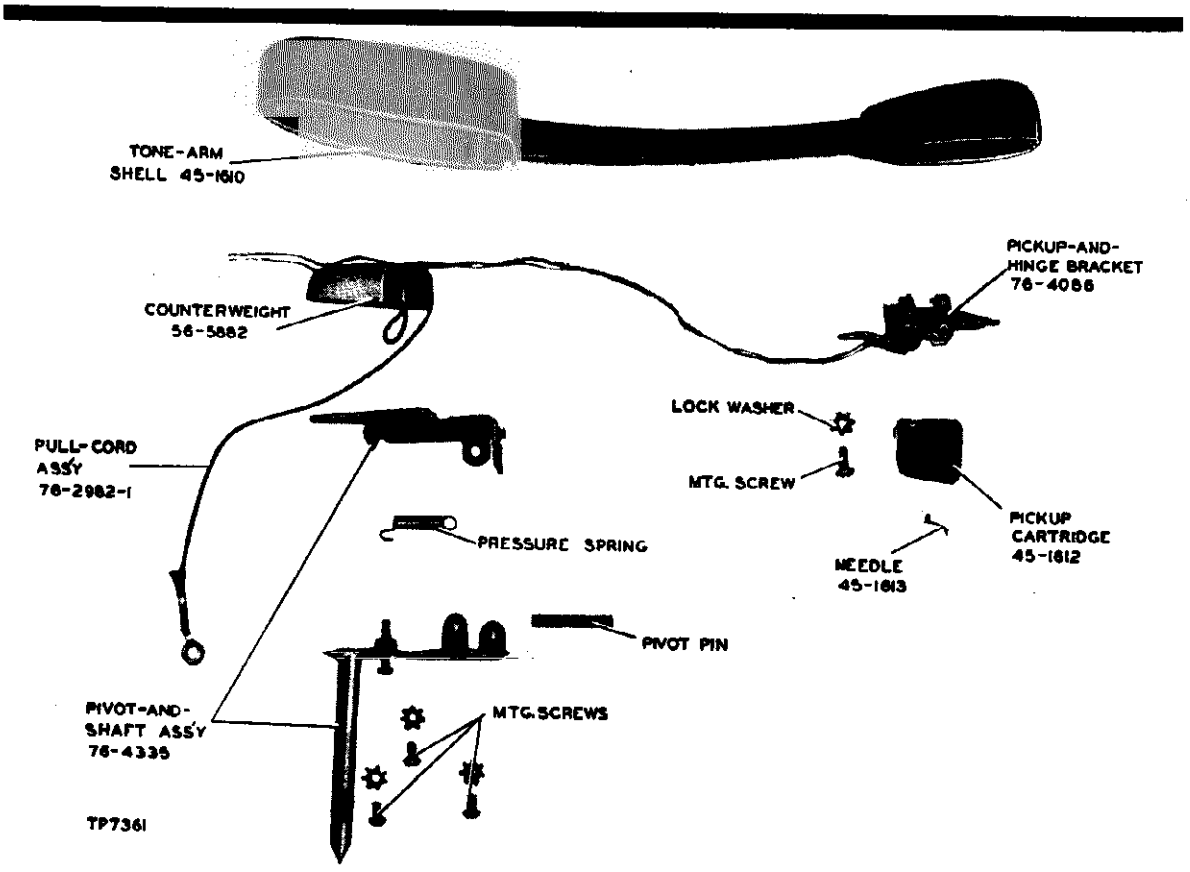

FIGURE (23) LONG-PLAY TONE-ARM ASSEMBLY (35-2686)

ADJUSTMENTS FOR THE RECORD CHANGER (Continued)

shelf assembly away from the spindle until the large curved part of the gauge drops even with the record-shelf lips. Now push the record shelf and gauge lightly against the spindle, taking out all play toward the spindle; keep the lips of the record shelf in even contact with the edge of the gauge. Tighten the two hex-head screws.

Push-Off

With the changer out of cycle, push the OFF-MAN-AUT-REJ control to REJ, and rotate the turntable 2½ revolutions by hand; at this point, the push-off actuator, 56-4588FA3, is in its most forward position, in contact with the roller on the cam gear, as shown in figure 14. Loosen the push-off-bar locking screw and squeeze the push-off ears toward each other until the slide plate on the record shelf extends 1/32" beyond the lips of the shelf. Tighten the hex-head push-off-bar screw.

LONG-PLAY TONE ARM ADJUSTMENTS

Vertical Friction

Use the Philco gram scale, 45-9531. Calibrate the scale to zero by holding it on its side and setting the pointer to the center line of the scale. The center is the "0" point, and each small division on either side of "0" is equal to one gram.

After the scale has been calibrated to zero, place the scale on the changer base, with the guard on the scale in an open position, at right angles to the scale, as shown in figure 15. Set the needle of the long-play tone arm into the hole at the end of the pointer. Press down on the head of the pickup, and let it spring back; then note the reading on the scale. Raise the pickup, let it return slowly, and note the reading on the scale. The average of the two readings taken is the needle pressure; the difference between the two readings is the vertical friction. The correct needle pressure is between 6 and 7½ grams. The vertical friction should not exceed 2 grams.

Needle Pressure

To adjust the needle pressure, move the tone arm toward the center of the turntable; unhook the spring from the notch on the pivot assembly (below the rear end of the tone arm), and place the spring into a different notch. Each notch represents a change of one gram in needle pressure. After changing the spring into a different notch, measure the needle pressure again with the gram scale. Figure 16 shows the notches on the pivot assembly.

Horizontal Friction

Calibrate the gram scale by laying it flat, face-up. Set the pointer to zero with the scale in this position.

Place a counterweight on top of the rear end of the tone arm; move the counterweight until the tone arm is balanced horizontally, and the needle point clears the turntable. Hold the gram scale face-up, place its pointer against the side of the pick-up, and push the tone arm horizontally, as shown in figure 17. Note the reading on the gram scale while moving the tone arm throughout its entire travel (outside of the trip range). At no time should it require more than 2 grams of pressure to move the tone arm.

Pickup Holder

The pickup cartridge holder should be centrally spaced between the walls of the tone arm, so that there is no binding or rubbing against the inside of the tone arm when the cartridge is moved vertically.

To obtain the proper spacing, first remove the tone arm, as directed on page 24; loosen the screw which holds the pickup-bracket mounting. Move the mounting until it is centrally spaced between the walls of the tone arm; maintain a 1/32" clearance between the tip of the ears on the holder and the inside surface at the front end of the tone arm, as shown in figure 18.

Tone-Arm Base-Plate Clearance

With the tone arm off the rest post and over the base plate, the needle should be at least 1/16", and not more than 3/16", above the base plate. To adjust, grasp the tone arm and raise or lower it (whichever is required) with a little pressure, to obtain the correct clearance. To lower the tone arm, it may be necessary to remove the turntable and bring the pickup toward the center; this position affords sufficient leverage to permit bending the tone arm downward. (See page 23 for removal of the spindle; remove the turntable by pulling it straight up.)

Tone-Arm Height Clearance

The tone arm should clear the rest-post hook at its highest point by a maximum of 1/32". This clearance can be obtained by adjusting the hex-head screw on the pivot assembly, shown in figure 19.

Tone-Arm Raise

Should the record changer be put through a change cycle with the long-play tone arm set on a record, the tone arm should lift from the record automatically, and set down on the rest post; during any further changer cycling, this tone arm should merely raise and lower on its rest post. To obtain the correct action, adjust the square loop of the lifter link, 56-5990, shown in figure 14, so that the tone arm is lifted firmly against the height-adjustment screw when the pickup is at its maximum height over the rest post.

When the changer is out of cycle, the pull-cord assembly, 76-2982-1 (figure 20), should be slack, allowing the tone arm to be freely moved, manually, anywhere on the record.

MODEL M-12C PHILCO CORP.

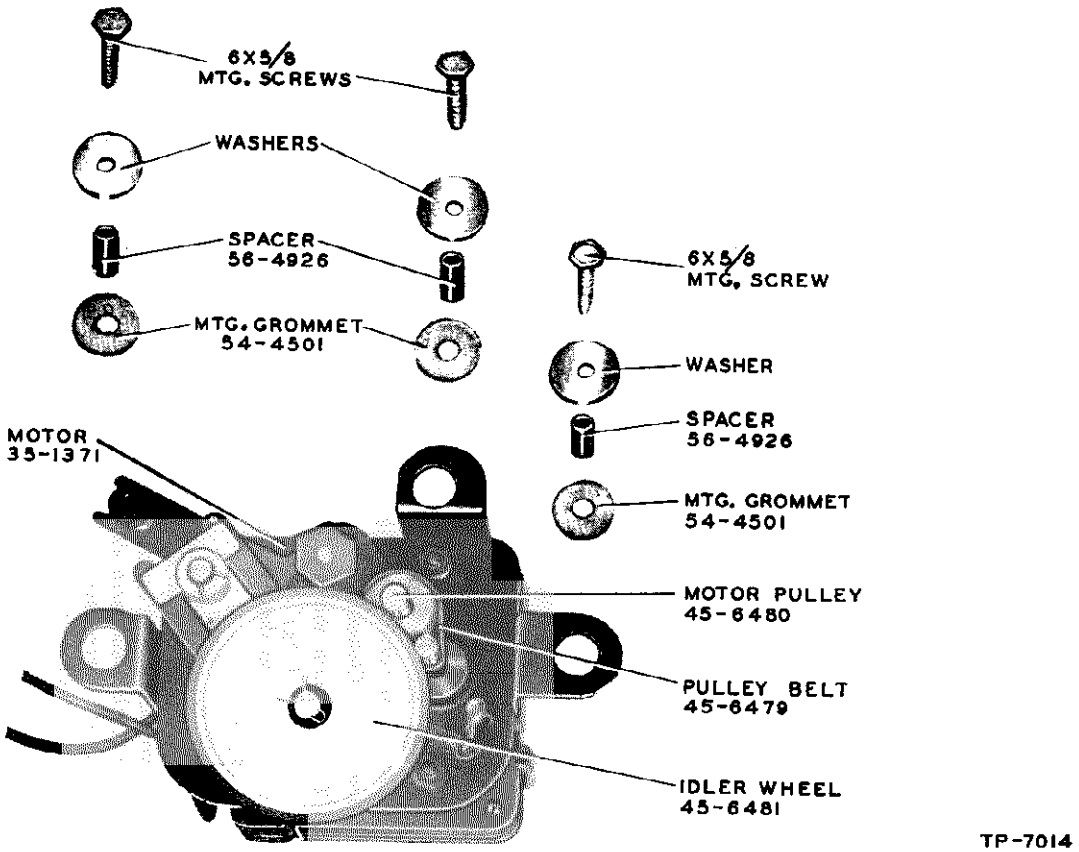

FIGURE (24) MOTOR ASSEMBLY (35-1371)

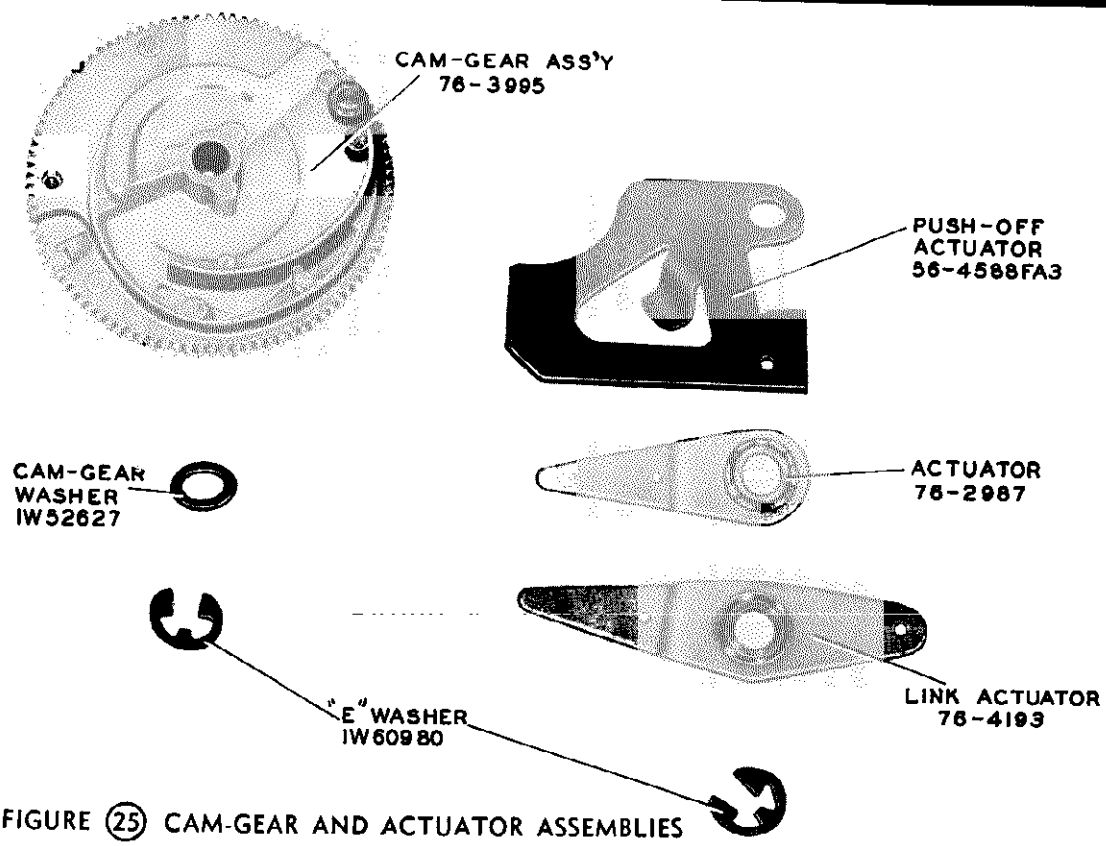

FIGURE (25) CAM-GEAR AND ACTUATOR ASSEMBLIES

©John F. Rider

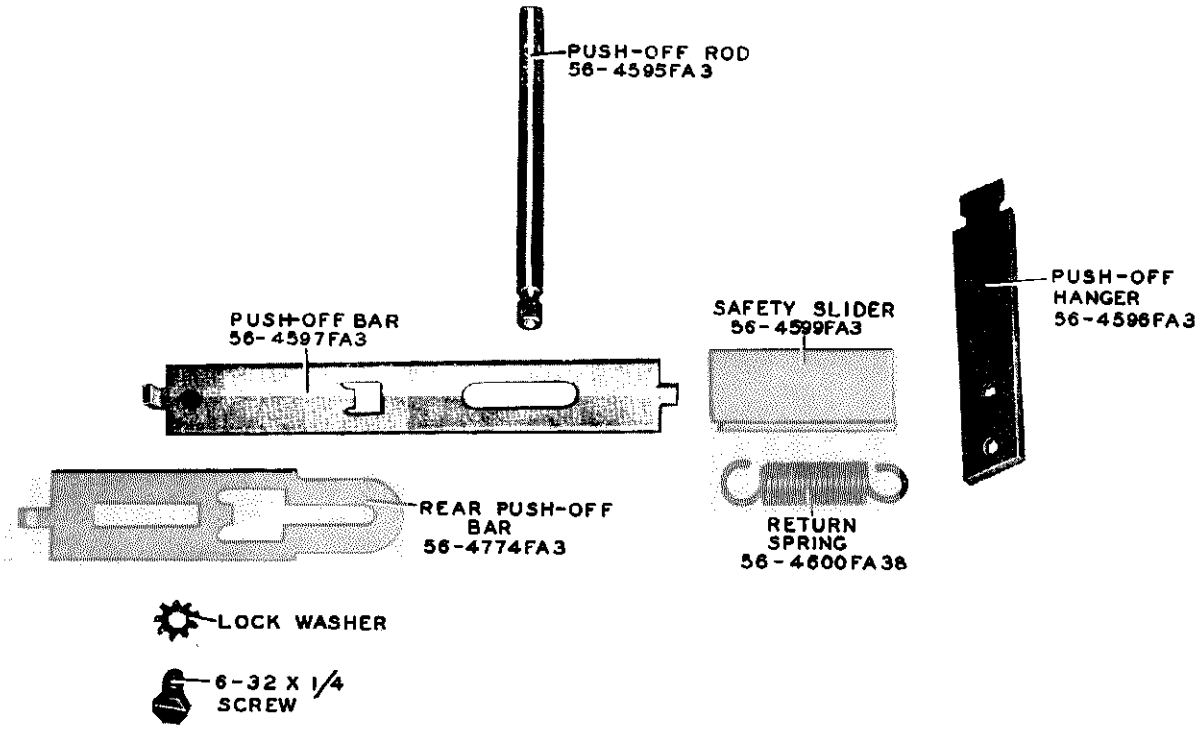

FIGURE (26) PUSH-OFF ASSEMBLY

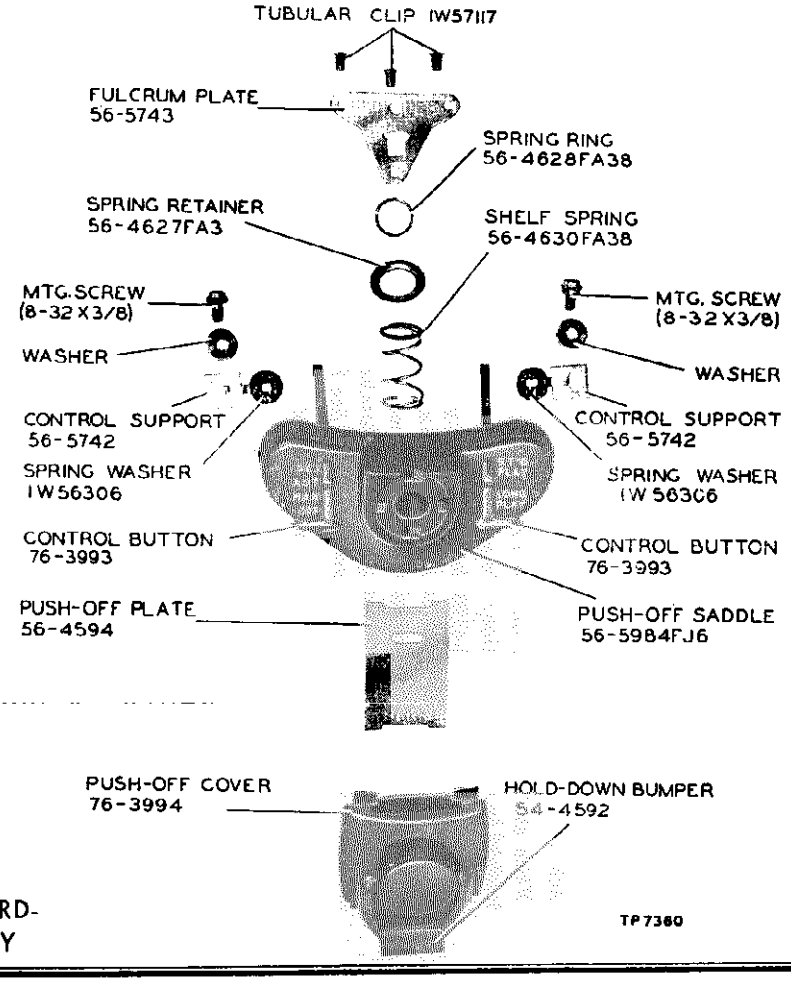

FIGURE (27) RECORD-SHELF ASSEMBLY

©John F. Rider

TRIP ADJUSTMENTS

Trip Finger

When the pickup needle is in the eccentric groove of a long-playing record, the trip finger should be riding over the ratchet latch, 76-4197, at an angle of 25° to 30°. To obtain the correct angle, adjust the screw shown in figure 20.

Trip Switch

When the pickup is set on the rest post, the mercury switch should be latched in the "on" position. To adjust the switch, loosen the clamp screw on the reset trip arm, 76-4198, hold the pickup on the rest post, and move the reset trip arm outward until its protruding leg contacts the short ear on the bracket-and-clip assembly, 76-4195; there should be a maximum of 1/32" clearance between the long ear on the bracket-and-clip assembly and the cutout shelf on the ratchet latch, 76-4197. See figure 21.

When tightening the clamp screw, maintain 1/32" vertical end play in the tone-arm shaft.

Selector-Lever Throw

The lock plate, 56-5986 (figure 3), is adjusted by loosening the hex-head screw under the base plate and moving the lock plate so that, when the play control is set to either position, the selector-lever throw does not cause the shift-speed lever on the motor to bind against the mechanical stop on the motor.

UNEVEN TURNTABLE SPEED (WOWS)

Uneven turntable speed can be caused by the following conditions:

a. Dirt under and around the idler-wheel assembly.

b. Idler-wheel spring loose or missing.

c. Flat spot on idler-wheel tire.

(For the 33⅓ r.p.m. speed, a loose or worn pulley belt can result in a slow speed. To replace the pulley belt, push the idler-wheel assembly aside.)

REPLACEMENT OF PARTS AND ASSEMBLIES

The following procedures are recommended for the correct removal of parts and assemblies. The parts should be replaced by reversing the order of removal. Adjustments should be made according to the directions given in the Adjustment section of the manual.

1. Needles

To remove the needle from the standard crystal on the changer tone arm, loosen the knurled nut under the crystal and pull the needle out.

To remove the needle from the special cartridge of the long-play tone arm, grasp the sides of the cartridge with the fingernails and pull it out; then pry out the needle with the fingernail or knife point. When replacing this needle, align the keyway on the needle shaft with the slot in the chuck on the cartridge, then push the needle into the cartridge. Replace the cartridge by pushing it until it is firmly seated.

2. Crystal Cartridge, 35-2671-1

a. Bring changer tone arm toward center of turntable

b. Remove the two screws and lock washers that hold cartridge to tone arm.

c. Drop cartridge below tone arm sufficiently to allow the removal of the two clips from cartridge. Figure 22 shows the cartridge assembly.

3. Spindle, 76-3926

a. Unhook both ends of spindle spring, 56-5644, from the "U"-shaped bracket mounted under changer base. See figure 11.

b. Uncoil spring through spindle and remove spring.

c. Pull out spindle.

4. Changer-Tone-Arm Assembly, 35-2675

a. Unsolder tone-arm wires from terminal panel on under side of changer base plate.

b. Remove pull cord from link spring.

c. Loosen clamp screw that holds trip arm to tone-arm shaft (figure 12).

d. Lift out tone arm. Figure 22 shows the tone-arm assembly.

Note: When the tone arm is replaced on the changer, be sure to maintain 1/32" vertical end play between the trip arm and the changer base plate.

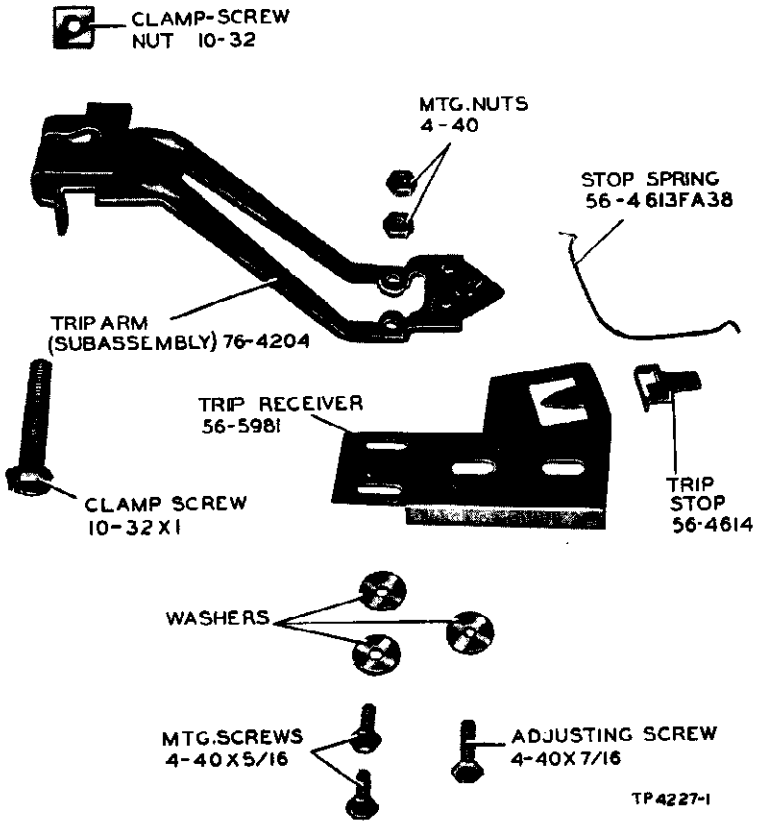

FIGURE (28) TRIP-ARM AND TRIP-RECEIVER ASSEMBLIES

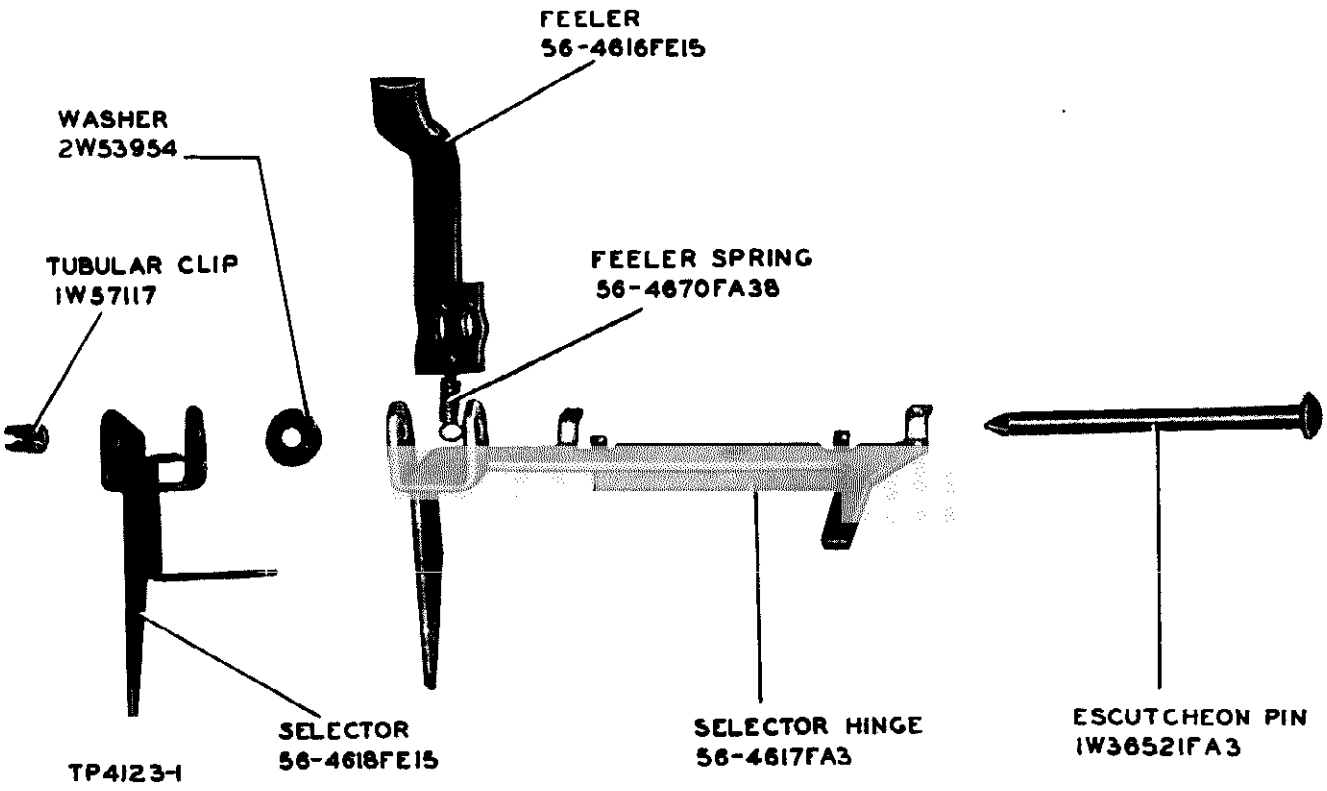

FIGURE (29) SELECTOR ASSEMBLY

©John F. Rider

REPLACEMENT OF PARTS AND ASSEMBLIES (Continued)

5. Long-Play-Tone-Arm Assembly, 35-2686

a. Unsolder tone-arm leads from terminal panel on underside of changer base plate.
b. Remove pull cord from lifter-link spring.
c. Loosen the clamp screw that holds the reset trip arm to the tone-arm pivot shaft.
d. Lift out tone arm. Figure 23 shows the tone-arm assembly.

6. Motor Assembly, 35-1371

a. Remove spindle as directed in paragraph 3
b. Unsolder motor lead from mercury switch.
c. Unsolder motor lead from switch mounted on bridge assembly.
d. Remove ground lead from one side of bridge assembly.
e. Remove the three screws, washers, and spacers from motor frame. Figure 24 shows the correct assembly.
f. Lift motor out.

7. Bridge Asembly, 76-3998

a. Remove the two hex-head screws from bridge plate.
b. Disengage the link control rod, 56-4589FA3, from the slider control bar.

8. Cam-Gear Assembly, 76-3995

a. Remove bridge assembly as directed in paragraph 7.
b. Slide trip plate off cam-gear spindle.
c. Remove turntable lower bearing, 76-2991, from "U"-shaped mounting bracket by pulling it off.
d. Remove large "E" washer, 1W60980, from cam-gear spindle.
e. Slide cam washer, 1W52627, off cam spindle.
f. Slide cam gear off spindle.

9. Tone-Arm Actuator Levers

a. Remove short link, 56-4607FA3, from link spring.
b. Remove "E" washer, 1W60980, from actuator stud.
c. Slide link actuator, 76-4193, from stud.
d. Disengage lifter link, 56-5990, from link actuator.
e. Remove long link, 56-4606FA3, from link spring.
f. Slide actuator lever, 76-2987, from stud. Figure 25 shows the actuator levers.

10. Push-Off Actuator, 56-4588FA3

a. Remove actuator levers as directed in paragraph 9.
b. Remove selector lever, 56-5985, as directed in paragraph 19.
c. Press push-off rod, 56-4595FA3, and push-off hanger bar, 56-4596FA3, together and pull downward to release the entire assembly.
d. Slide push-off actuator over to align upturned ears with cutout in base plate.
e. Slide actuator off stud.

Note: When removing the push-off assembly, the slide plate, 56-4594, on the record shelf may slide out of the assembly. When reassembling, this blade should be inserted in the record-shelf assembly with the elongated hole toward the 12-inch position of the record shelf. The push-off assembly is shown in figure 26.

11. Control Button (OFF-MAN-AUT-REJ), 76-3993

a. Remove bridge assembly, 76-3998, as directed in paragraph 7.
b. Disengage control link rod, 56-4589FA3, from control button.
c. Remove hex-head screw that holds record shelf to changer base plate.
d. Remove control-button support, 56-5742, from control button.
e. Lift control button out through record-shelf saddle.

12. Control Button (Play), 76-3993

a. Remove selector lever, 56-5985, as directed in paragraph 19.
b. Disengage selector link, 56-5991, from control button.
c. Remove the hex-head screw that holds the record-shelf assembly to the changer base plate.
d. Remove control-button support, 56-5742, from control button.
e. Lift control button out through record-shelf saddle.

13. Record-Shelf Assembly

a. Remove both control buttons as directed in paragraphs 11 and 12.
b. Lift out entire record-shelf assembly through top of changer base plate. Figure 27 shows the assembly of the record shelf

14. Trip-Arm Assembly, 76-4204

a. Loosen clamp screw on trip arm, 76,4204. See figure 12.
b. Raise tone arm and shaft sufficiently to clear trip arm.
c. Remove trip arm and disengage link spring. Figure 28 shows the trip-arm and trip-receiver assembly.

Note: When assembling the trip-arm assembly, maintain $\frac{1}{32}$" vertical end play between the trip arm and the changer base plate.

15. Selector Assembly

a. Remove cam gear as directed in paragraph 8.
b. Remove feeler spring, 56-4670FA38, from bracket on changer base plate.
c. Tilt selector assembly and remove it from changer base plate. Figure 29 shows the assembly.

16. Long-Play-Tone-Arm Thrust Bearing, 56-5916

a. Remove long-play-tone-arm assembly, 35-2686, as directed in paragraph 5.
b. Remove "E" washer, 1W60977, from thrust-bearing shaft.
c. Lift thrust bearing out of the rubber grommet mounted on the long-play-tone-arm-shaft-support bracket. See figure 21.

17. Long-Play-Tone-Arm Stanchion, 56-5987

a. Remove long-play-tone-arm assembly, 35-2686, as directed in paragraph 5.
b. Remove the hex-head screws that hold stanchion to changer base plate.
c. Lift stanchion off base plate. See figure 19.

REPLACEMENT OF PARTS AND ASSEMBLIES (Concluded)

18. Long-Play-Tone-Arm Upper Bearing, 56-5903

a. Remove long-play-tone-arm stanchion, 56-5987, as directed in paragraph 17.
b. Remove "E" washer, 1W60981, from upper-bearing shaft mounted on long-play-tone-arm stanchion (figure 19).
c. Remove upper bearing from rubber grommet mounted on long-play-tone-arm stanchion.

19. Selector Lever, 56-5985

a. Remove "E" washer, 1W60977, from stud which mounts selector lever on changer base plate. See figure 14.
b. Remove spring washer, 1W56306, from stud.
c. Remove "U"-shaped detent spring, 56-5995, between selector lever and changer base plate.
d. Loosen lock-plate screw.
e. Align ears of selector lever with cutout slots on changer base plate.
f. Remove selector lever from stud.
g. Disengage selector link, 56-5991, from selector lever

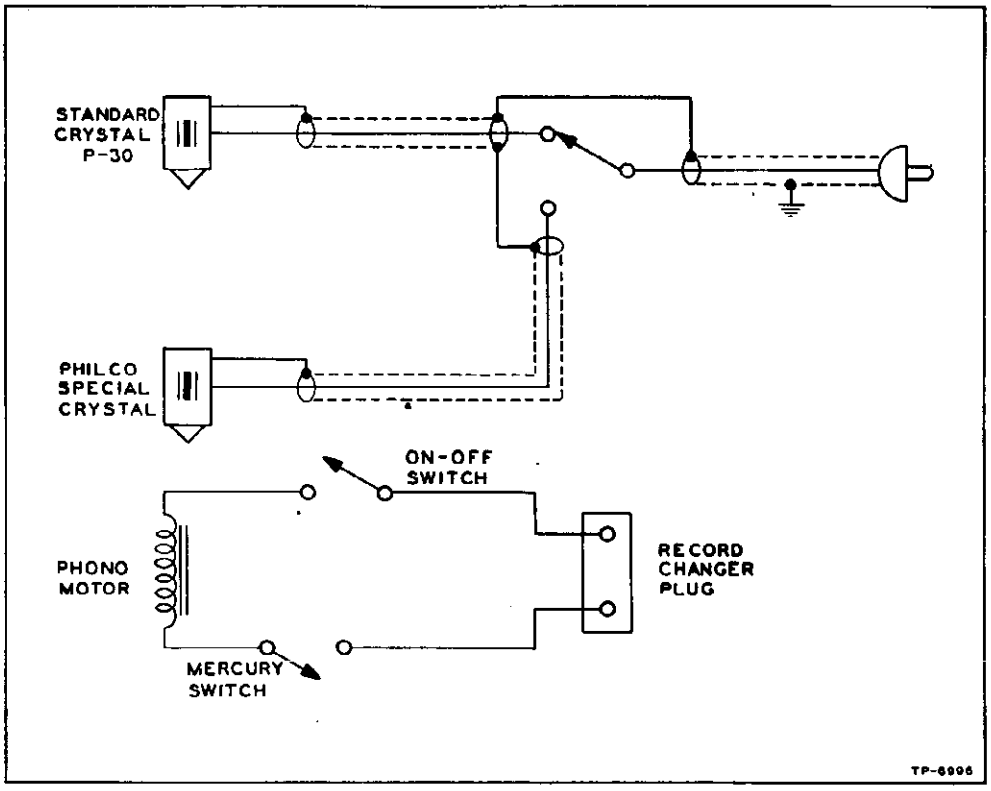

FIGURE (30) WIRING DIAGRAM OF MODEL M-12C

MODEL M-12C

PHILCO CORP.

REPLACEMENT PARTS LIST

SERVICE PART NO.	DESCRIPTION
35-1371	Motor
35-2671-1	Crystal pickup (changer)
35-2675	Tone-arm assembly (changer)
35-2686	Tone-arm assembly (long play)
35-3066-1	Turntable
41-3869-2	Cable and plug
42-1873	Switch
45-1597	Needle (changer)
45-1609	Pickup-and-needle assembly (long play)
45-1610	Tone-arm shell (long play)
45-1612	Pickup cartridge
45-1613	Needle (long play)
45-3031	Knurled thumb nut
45-6479	Pulley belt
45-6480	Motor pulley
45-6481	Idler wheel
54-4501	Grommet, motor mtg.
54-4592	Bumper (record-shelf hold-down)
54-7613	Trip finger
56-2832FA3	Cable clamp
56-4585FA3	Lever, index
56-4588FA3	Actuator, push-off
56-4589FA3	Link, control
56-4594	Plate (push-off slide)
56-4595FA3	Rod, push-off
56-4596FA3	Hanger, push-off
56-4597FA3	Bar, push-off
56-4599FA3	Slider, safety
56-4600FA38	Spring, return
56-4603FA38	Spring, index
56-4606FA3	Link, long
56-4607FA3	Link, short
56-4608FA38	Spring
56-4613FA38	Spring, stop
56-4614	Trip-arm stop
56-4616FE15	Feeler (selector assembly)
56-4617FA3	Hinge, selector
56-4618FE15	Selector
56-4627FA3	Retainer, spring
56-4628FA38	Spring ring
56-4630FA38	Spring (record shelf)
56-4647	Retainer, spring
56-4670FA38	Spring (feeler)
56-4774FA3	Bar, push-off (rear)
56-4926	Spacer, motor mtg.
56-5644	Spring, spindle
56-5742	Support (control button)
56-5743	Plate, fulcrum
56-5744	Tone-arm rest (changer)
56-5753	Push-off saddle

SERVICE PART NO.	DESCRIPTION
56-5754	Pivot pin (changer tone arm)
56-5755	Counterweight (changer tone arm)
56-5758	Tone-arm shell (changer)
56-5882	Counterweight (long-play tone arm)
56-5903	Bearing (long-play tone arm)
56-5912	Stop (long-play tone arm)
56-5916	Bearing, thrust
56-5981	Trip receiver (trip arm)
56-5984FJ6	Saddle, push-off
56-5985	Lever, selector
56-5986	Plate, lock
56-5987	Stanchion (long-play tone arm)
56-5990	Link, lifter
56-5991	Link, selector
56-5995	Spring, detent ("U" shaped)
56-6404	Trip receiver (reset trip)
76-2140-2	Switch, mercury
76-2982	Pull-cord assembly (changer tone arm)
76-2982-1	Pull-cord assembly (long-play tone arm)
76-2987	Actuator assembly (changer tone arm)
76-2990	Trip plate
76-2991	Bearing assembly
76-3926	Spindle
76-3993	Control button
76-3994	Push-off cover (record shelf)
76-3995	Cam gear
76-3997	Shaft and swivel (changer tone arm)
76-3998	Bridge assembly
76-4008	Base-plate assembly
76-4010	Cover assembly (switch)
76-4086	Bracket (pickup and hinge)
76-4193	Link, actuator
76-4194	Trip switch
76-4195	Bracket-and-clip assembly
76-4196	Switch bracket
76-4197	Latch assembly
76-4198	Reset and trip
76-4201	Base-plate assembly
76-4204	Trip arm (subassembly)
76-4335	Pivot assembly
1W14460	Screw, 4-40 x ¼, crystal mtg.
1W36521FA3	Pin (escutcheon)
1W52627	Cam-gear washer
1W56306	Spring washer
1W57117	Tubular clip
1W60977	"E" washer, small
1W60980	"E" washer, medium
1W60981	"E" washer, large
2W53954	Washer, selector assembly

© John F. Rider

DESCRIPTION OF OPERATION

Power for the motor circuit is controlled by two mercury switches. These switches are inserted into clips; one of these clips is a part of a latch-plate-and-clip assembly, Part No. 76-4237, and the other is a part of a reset-plate-and-clip assembly, Part No. 76-4238. These two plate-and-clip assemblies are mounted on a switch-bracket assembly, Part No. 76-4235, which is located underneath the base plate, as shown in figure 1.

The tipping of the mercury switches to the OFF and ON position is accomplished by the trip arm, which is attached to the tone-arm shaft, and therefore is controlled by the tone arm.

When the tone arm is pulled back and set on its rest post, a protruding leg on the trip arm contacts the reset-plate-and-clip assembly, Part No. 76-4238, and raises it upward and tips the mercury switch mounted on it to the OFF position, as shown in figure 1. By the same action, the reset plate contacts an ear on the latch-plate-and-clip assembly, Part No. 76-4237, and holds it in an up, or horizontal, position. This tips the mercury switch mounted on it to the ON position, as shown in figure 1.

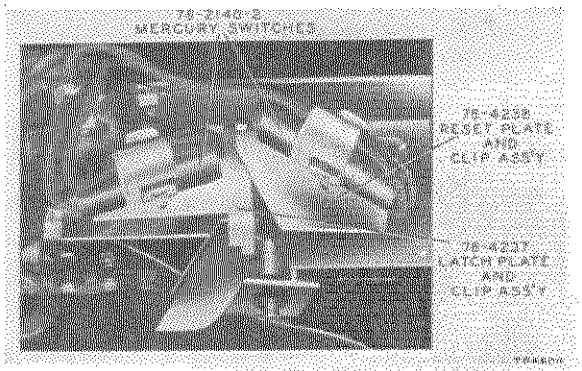

Figure 1

The two mercury switches are electrically connected in series. Since one of them is in the OFF position when the tone arm is on the rest post, the motor circuit is open and no power is supplied to the motor. When the tone arm is taken off the rest post and placed on a record, the reset-plate-and-clip assembly is permitted to drop down, tipping its mercury switch to the ON position. See figure 2. The motor circuit is now closed, and the record player is turned on.

During the playing of a record, a trip finger mounted on the trip arm rides over a ratchet on the latch-and-bushing assembly, Part No. 76-4197; see figure 3. When the pick-up needle enters the eccentric finish groove at the end of the record, the trip arm, which is connected to the tone arm through the tone-arm shaft, will oscillate in a forward and backward motion, causing the trip finger to trip the latch-and-bushing assembly, Part. No. 76-4197. This permits the latch-plate-and-clip assembly to drop down, and tip its mercury switch to the OFF position. The motor circuit is now open, and the record player is turned off.

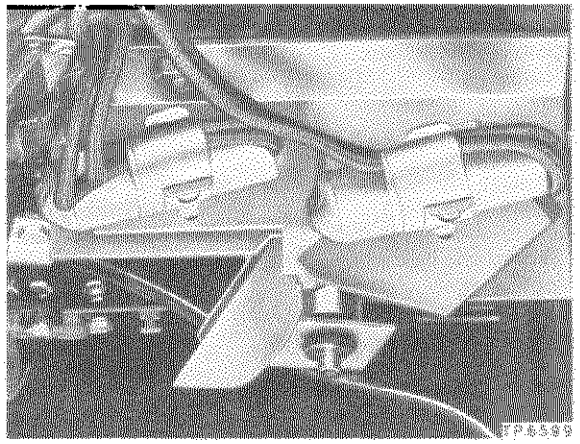

Figure 2

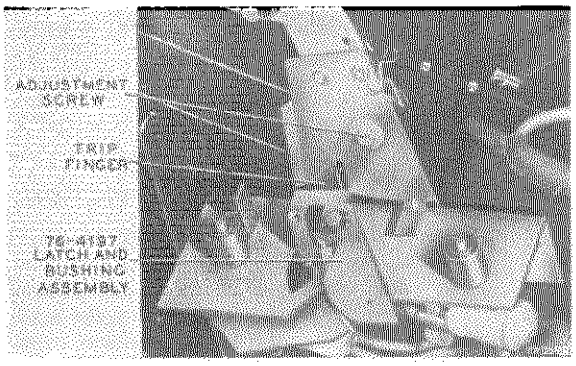

Figure 3

TESTS

STARTING

With the tone arm on the rest post, place a 12-inch Columbia Long Playing Record on the turntable, lift the tone arm from the rest post, and place it on the starting groove of the record. The turntable should start immediately after the tone arm is off the rest post. If not, refer to page for the adjustment of the switches.

PICKUP AND NEEDLE

After the tone arm has been placed on the record, listen to its tone. If distortion is noted, replace the crystal cartridge as directed on page . If the trouble continues, check for loose wiring leads, bad contacts, etc.

SHUTOFF

Place the tone arm in the finish groove of the record, and observe the shutoff action. The record player should shut off within three revolutions of the turntable, after the pickup needle has entered the finish groove of the record. Refer to page for trip-finger adjustments.

BASE-PLATE CLEARANCE

Remove the record from the turntable, and place the tone arm over the base plate. Note whether there is a minimum of ⅛-inch clearance between the needle point and the base plate. Refer to page for the base-plate-clearance adjustment.

TURNTABLE AND MOTOR

Allow the motor to run for at least 10 minutes, then place a stroboscope disc such as Philco Part No. 45-9531 on the turntable, and illuminate the disc with a lamp operating on 60-cycle a.c. The dots in the row calibrated for 33⅓ r.p.m. should appear to remain stationary or drift very slowly, but smoothly, forward or backward. If the dots are moving in either direction very fast or in a jerky motion, refer to "Uneven Turntable Speed and Rumble."

ADJUSTMENTS

NEEDLE PRESSURE AND VERTICAL FRICTION

Needle pressure and vertical friction can be measured by means of the Philco Gram Scale, Part No. 45-9532. The scale consists of a long, flat pointer spring set in a movable pivot. The end of the scale has a number of divisions, with each division equal to one gram. The center line is zero.

Hold the scale on its edge, with the setscrew up, and set the pointer spring to the midpoint, or zero, position. Lift the tone arm slightly off the rest post and place the needle point in the dimple in the pointer spring. Lift the tone arm approximately ½ inch with the scale, as shown in figure 4, and note the reading. Then lower the scale ½ inch again and note the reading; see figure 4A. The midpoint between the two readings is the needle pressure, and the difference between the two readings is the vertical friction. The needle pressure should be not less than 5 grams and not more than 7 grams, and the vertical friction should be not more than 2 grams.

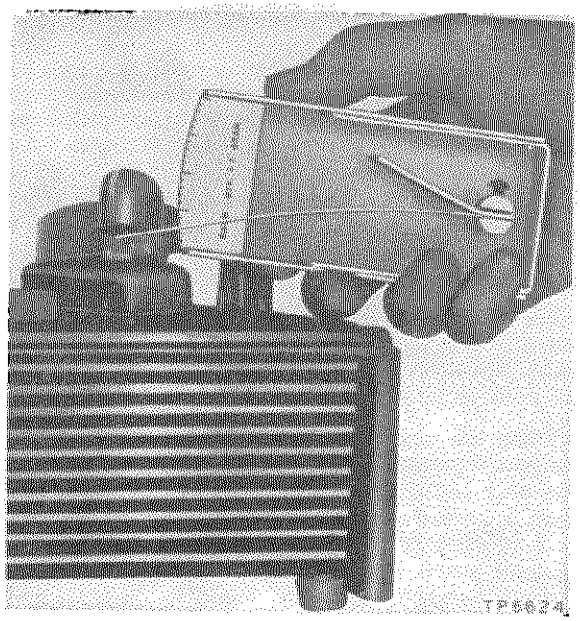

Figure 4

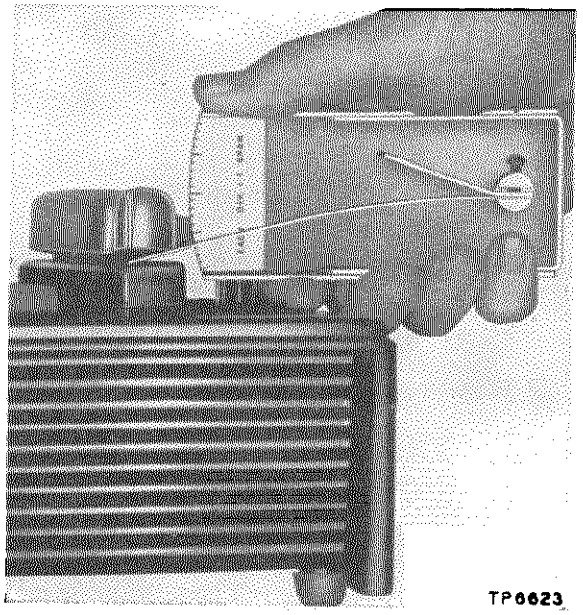

Figure 4A

Example:

With the scale attached and the tone arm raised ½ inch, the reading is 7 grams. With the tone arm lowered, the reading is 6¼ grams. The midpoint between the two readings, or the needle pressure, is approximately 6⅝ grams. The differ-

ence between the two readings, or the vertical friction, is ¾ gram.

To obtain the correct needle pressure, bring the tone arm to the center of the turntable and unhook the spring, shown in figure 6, from the notch of the pivot-and-shaft assembly, Part No. 76-4092. Place the spring in different notches until the correct needle pressure is obtained.

HORIZONTAL FRICTION

Lay the Philco Gram Scale, Part No. 45-9532, flat with the scale divisions up, and set the pointer spring to the midpoint, or zero, position.

Take the tone arm off the rest post and place a weight on top of the back section of the tone arm. Move the weight until the tone arm is balanced in a horizontal position.

Hold the scale so that the pointer spring bears against the side of the tone-arm head as shown in figure 5; move the tone arm with the spring toward the center of the turntable, and note the reading while the tone arm is being moved horizontally.

At no time should the reading be more than 3 grams.

PICKUP HOLDER

The pickup holder should be centrally spaced between the walls of the tone arm so that the pickup cartridge does not bind or rub against the inside of the tone-arm wall when the cartridge is move vertically.

To obtain the proper spacing, first remove the tone arm (see page); loosen the screw which holds the pickup-bracket mounting. Move the mounting until it is centrally spaced between the walls of the tone arm; maintain a $\frac{1}{32}$-inch clearance between the tip of the ears on the holder and the inside surface at the front end of the tone arm, as shown in figure 7.

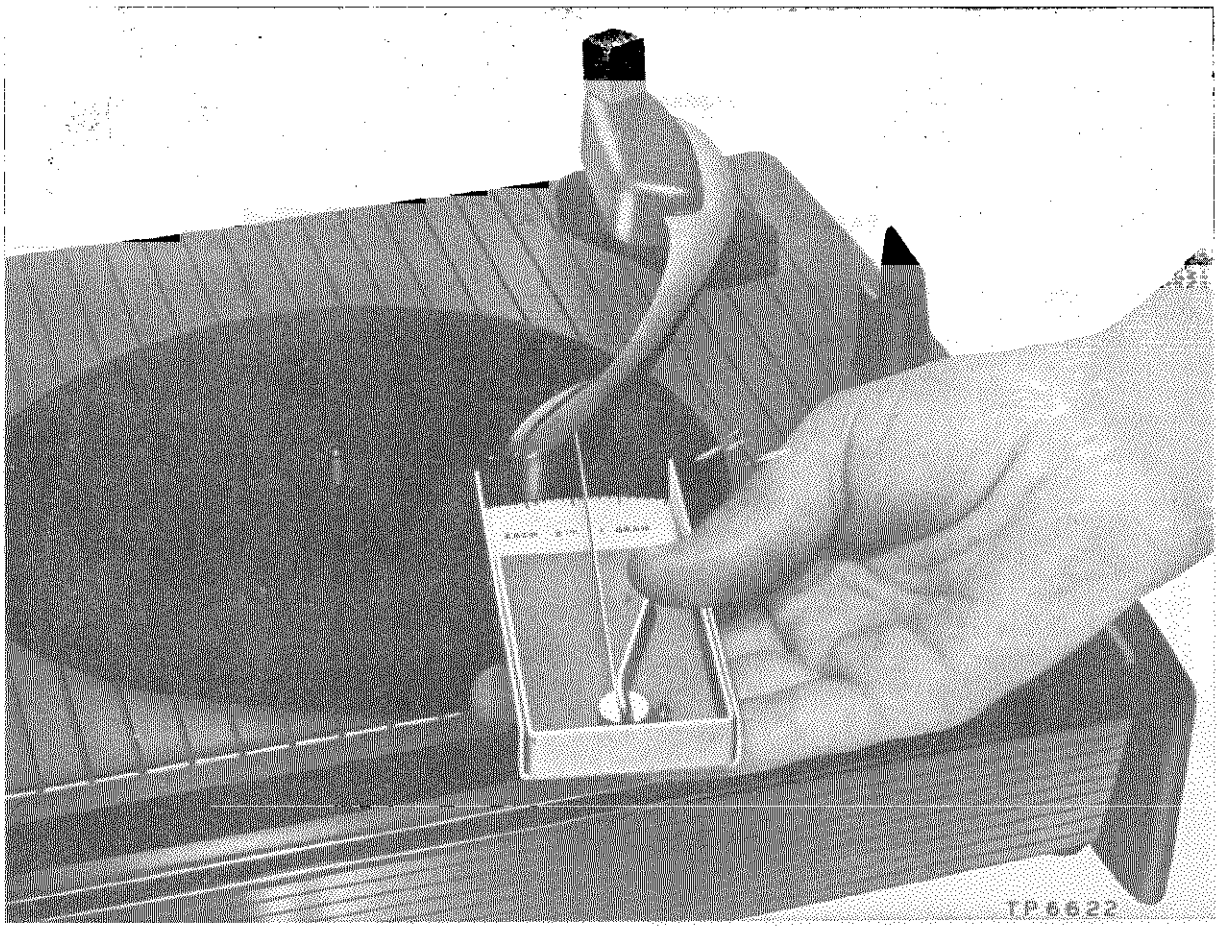

Figure 5

IDLER PULL CORD

The idler wheel should be disengaged from the motor shaft when the tone arm is on the rest post. It should re-engage when the needle is approximately 1/16-inch from the edge of a 12-inch record. To adjust, tighten or spread the loop of the pull cord attached to the trip arm. See figure 7.

UNEVEN TURNTABLE SPEED AND RUMBLE

Remove the turntable by removing the E washer from the spindle and pulling the turntable up. Clean all dirt from the idler-wheel assembly and the inside rim of the turntable. Examine the idler wheel and the rim of the turntable for bumps. Replace the idler wheel or turntable if any bumps are found. Some rumble can be caused by looseness of one or more of the motor mounting screws, or by hardening of the rubber grommets on the motor frame.

REPLACEMENT OF PARTS AND ASSEMBLIES

The following procedures are recommended for the correct replacement of parts and assemblies. The part should be replaced by reversing the order of removal, and should be adjusted as directed in the "Adjustments" section of this manual.

CRYSTAL-CARTRIDGE ASSEMBLY, PART No. 45-1609

To remove the crystal cartridge, grasp the crystal by its sides and pull it down and out. When replacing the cartridge, push it up into the head of the tone arm until it is completely seated.

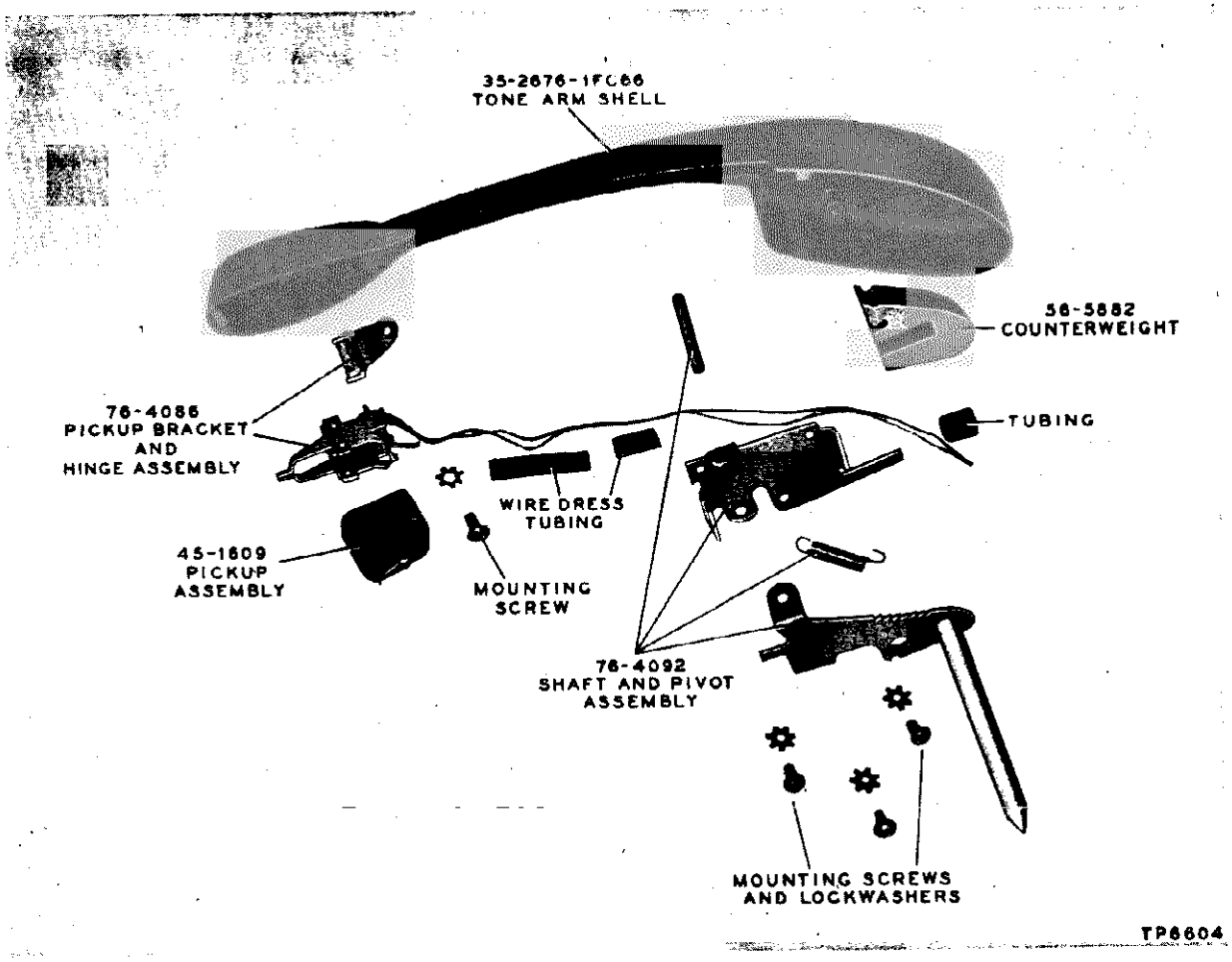

Figure 10

MOTOR, PART No. 35-1359 OR 35-1361

1. Remove E washer from spindle.
2. Lift out turntable.
3. Remove idler pull cord from idler bracket.
4. Unsolder motor leads.
5. Remove the three mounting screws.
6. Lift out motor.

TONE-ARM ASSEMBLY, PART No. 35-2681

1. Unsolder tone-arm lead wires from terminal panel on underside of record-player base plate.
2. Loosen clamp screw which holds trip arm to tone-arm shaft.
3. Lift out tone arm. Be careful not to lose fiber spacer on tone-arm shaft. Refer to figure 10 for correct assembly of tone arm.

TONE-ARM THRUST BEARING, PART No. 56-5916

1. Remove tone-arm assembly as directed under "Tone-Arm Assembly, Part No. 35-2681."
2. Remove E washer, Part No. 1W60977FE7, from bearing shaft; see figure 11.
3. Lift bearing out of grommet, Part No. 27-4099-3, mounted on tone-arm-shaft support, Part No. 56-5827.

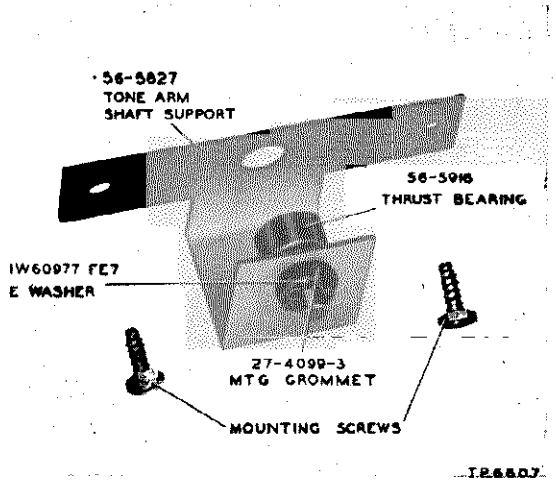

Figure 11

TONE-ARM UPPER BEARING, PART No. 56-5903

1. Remove tone-arm assembly as directed under "Tone-Arm Assembly, Part No. 35-2681."
2. Remove E washer, Part No. 1W60981FE7, from upper bearing at top of tone-arm housing.
3. Lift out bearing from underneath base plate.

TONE-ARM-SHAFT SUPPORT, PART No. 56-5827

1. Remove tone-arm assembly as directed under "Tone-Arm Assembly, Part No. 35-2681."
2. Remove the two mounting screws from underneath base plate.

RESET-PLATE-AND-CLIP ASSEMBLY, PART No. 76-4238

1. Remove mercury switch from clip.
2. Remove E washer, Part No. 1W60971FE7, from shaft of reset plate mounted on switch assembly; see figure 12.
3. Slide reset plate out of brass bushing from switch assembly.

LATCH-PLATE-AND-CLIP ASSEMBLY, PART No. 76-4237

1. Remove reset plate, Part No. 76-4238, as directed in paragraph above.
2. Remove E washer, Part No. 1W60971FE7, from latch-plate shaft.
3. Slide latch plate out of brass bushing from switch assembly.

RATCHET-LATCH ASSEMBLY, PART No. 76-4197

1. Remove E washer, Part No. 1W60977FE7; see figure 12.
2. Slide ratchet-latch assembly off switch assembly.

SWITCH ASSEMBLY, PART No. 76-4235

1. Remove mercury switch from latch-plate clip.
2. Remove the two hex-head nuts which hold switch assembly to base plate.

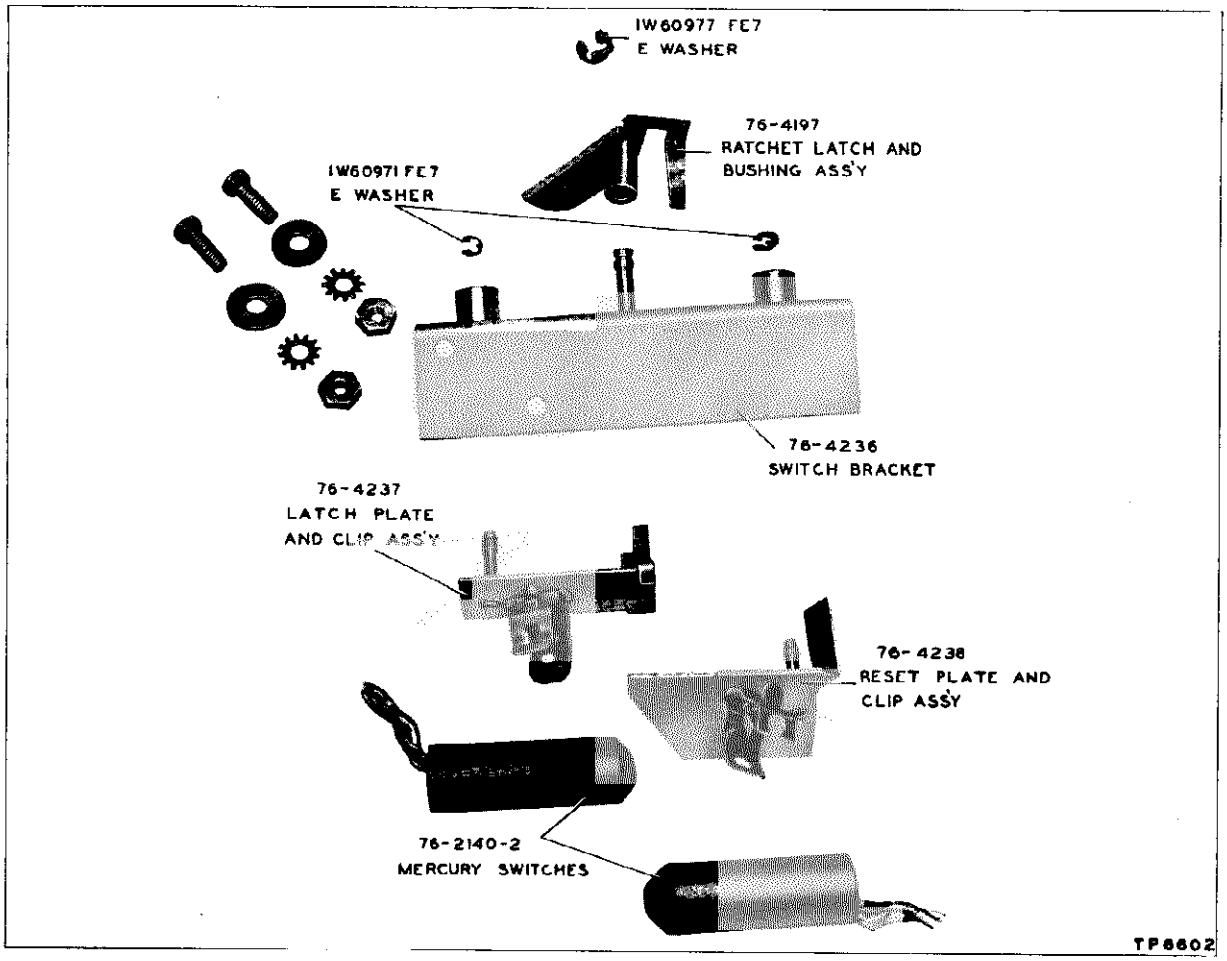

Figure 12

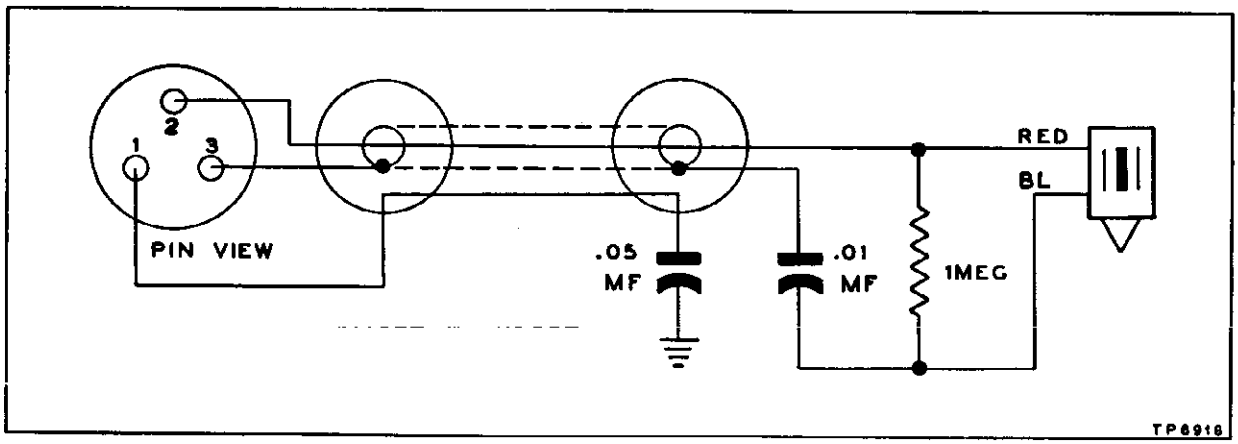

Model M-15, Schematic Diagr ,m

©John T. Rider

MODEL M-15 PHILCO CORP.

REPLACEMENT PARTS LIST



Part No.	*Description*
10720	Cabinet, less scale
10720A	Cabinet, less scale
27-4099-3	Grommet
28-2345	Cable clamp
28-2669FA43	Plug (for FM Adaption)
35-1359	Motor (Alliance)
35-1361	Motor (G.I.)
35-2676-1FC66	Tone-arm shell
35-2681	Tone arm
35-2683	Turntable (Alliance)
35-2685	Turntable (G.I.)
41-3821-6	Line cord
41-3869	Cable
45-1609	Pickup-and-needle assembly
54-4604	Cabinet base
54-4605	Cabinet top
54-4624	Grommet
54-4638	Tone-arm rest
54-4645	Rubber foot
54-7665	Bottom cover
55-0890	Bumper
56-2832FA3	Cable clamp, pickup
56-4584FA3	Loop, cord
56-5827FA3	Support, shaft
56-5882	Counterweight
56-5903	Bearing, upper
56-2912FA3	Stop
56-5916	Thrust bearing
56-6295	Lid support
56-6296	Binder post
56-6305	Hinge

Part No.	*Description*
76-2140-2	Mercury switch
76-4086	Bracket assembly, pickup and hinge
76-4092	Pivot, tone arm
76-4189	Reset and trip
76-4197	Latch assembly
76-4235	Switch assembly
76-4236	Switch bracket
76-4237	Latch plate
76-4238	Reset plate
W2537-3	Screw, hinge
1W10796FA9	Screw, binder post
1W56920FE7	Speed clip, tone-arm rest
1W60971FE7	E washer, switch assembly
1W60977FE7	E washer, thrust bearing
1W60981FE7	E washer, upper bearing
11W52604	Fiber washer

©John F. Rider

RADIO CORP. OF AMERICA

MODEL RP-168, Series

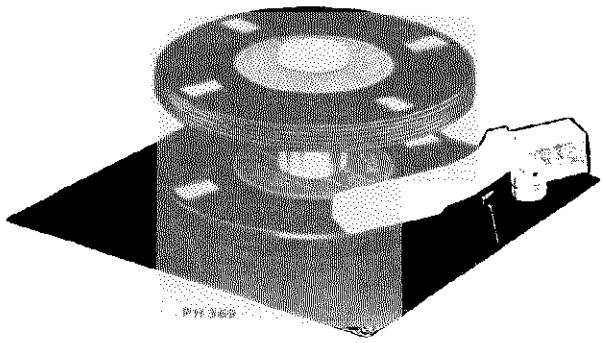

The basic RP168 mechanism includes the metal sub-panel and all necessary operating parts except the tone arm and trip lever assemblies. Instruments using the cabinet as the motor board will have additional items (other than the tone arm and trip lever assemblies) listed in the Service Data issued for the individual models.

RP-168-1: Record changer mechanism plus tone arm assembly RMP-129-1; instrument cabinet is used as record changer motor board. Used in Models 9JY and 9EY3.

RP-168A-1: Record changer mechanism plus tone arm assembly RMP-129-1 and metal motor board. Used in Models 9W101, 9W103, 9W105, 9TW333, 9TW390 and 9Y7.

Complete record changer parts listing (except output cable), included in this Service Data. Different types and lengths of output cables are used—listed in Service Data of Individual Instruments.

RP-168A-2: Record changer mechanism plus tone arm assembly RMP-130-1 and metal motor board. Used in Berkshire Models.

AUTOMATIC OPERATION

1. Place a stack of records over the center post, with the desired selections upward the last record to be played on top.
2. Apply power to drive motor.
3. Push the "start-reject" knob to "start" and let go. The mechanism will automatically play in sequence one side of each record stacked on the separator shelves.
4. To reject a record being played push the "start-reject" knob to "reject."
5. At conclusion of playing and as the last record is being repeated, lift tone arm and place on rest. Push "on-off" knob to the "off" position.

SPECIFICATIONS

This mechanism is designed to play automatically a series of eight new RCA seven-inch fine groove records.

RPM	45
Pickup	Crystal
Sapphire dia.	.0009 inches
Pickup voltage output	Medium
Pickup force	5 grams

CAUTION

1. Avoid handling the tone arm when the mechanism is in cycle.
2. Do not use force to release a jam.
3. Do not try to remove the records on the turntable if the turntable is stopped in cycle.
4. Do not try to operate the mechanism if the separator knives protrude from the center post when the mechanism is out of cycle.

   Turn Power control on. The turntable revolves. Press finger gently against protruding discs until they disappear inside the holder. Do not do this during a change cycle.

LUBRICATION

A light machine oil (SAE No. 10) should be used to oil the bearings of the drive motor.

On all bearing surfaces, excepting the motor bearings, Houghton STA-PUT No. 320, or equivalent, should be used. On all other sliding surfaces, STA-PUT No. 512, or equivalent, is recommended. STA-PUT can be purchased from E. F. Houghton & Co., 303 W. Lehigh Ave., Philadelphia, Pa.

(Do not oil or grease record separator shelves.)

It is important that the drive motor spindle and the rubber tire on the idler wheel be kept clean and free from oil or grease, dirt, or any foreign material at all times. Carbon tetrachloride or naphtha is satisfactory for cleaning these parts.

MODEL RP-168,.
Series

RADIO CORP. OF AMERICA

CYCLE OF OPERATION RP-168

	Function	Explanation
	Place records over the center post and turn the power on	1. Records rest on separator shelves protruding from either side of the center post.
Operator	Push start-reject knob	1. Start-reject knob which is linked to start-reject slide (45A) moves trip pawl (37) into tripping position. 2. As the turntable rotates the small projection (8A) extending from the underside of the turntable contacts end of trip pawl.
Automatic Cycle	Tone arm rises	1. As the turntable continues to rotate it carries the trip pawl (37) along for a short distance. 2. The stud (37A) on trip pawl applies force against director lever (41) in opposition to tension spring (42). This force continues to be applied until the stud (41B) on the director lever has been forced through the slot and into the cycling cam (8B). 3. The end (41C) of the director lever extending below the motor board moves away allowing the muting switch (63) to close. 4. At the same time the stud (41A) pushes the tone arm lift lever (35) which in turn raises the tone arm.
	Tone arm moves out	1. The end (41E) of the director lever (41) contacts stud (58A) on trip lever (58), starting the tone arm on its outward movement. 2 The stud (58A) on trip lever contacts tone arm return lever (50), pushing it outward against the tension spring (51). 3. As the tone arm reaches its outermost position, it is locked in position by the latch (50A) clamping the stud (58A) on the end of the tone arm return lever.

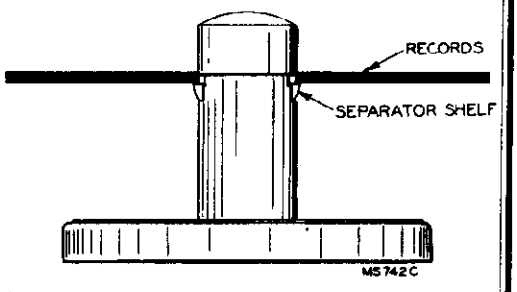

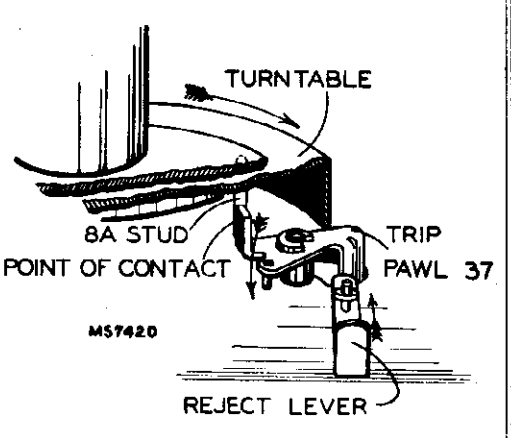

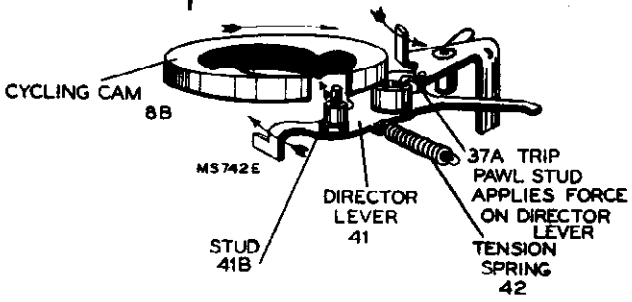

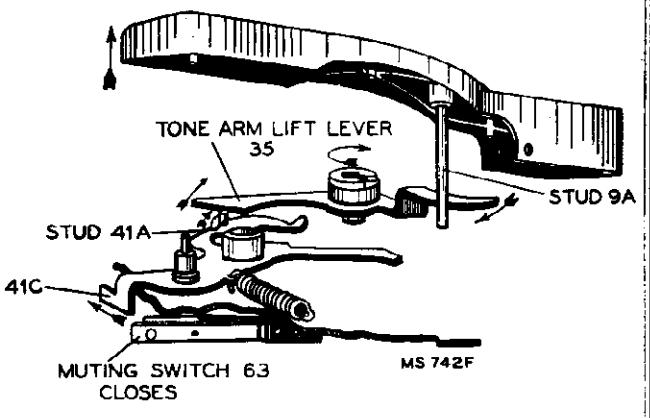

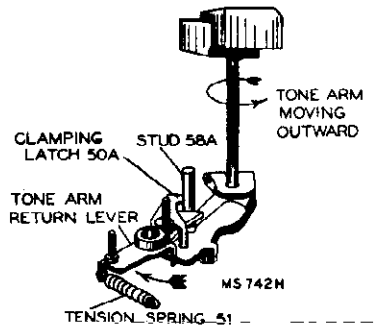

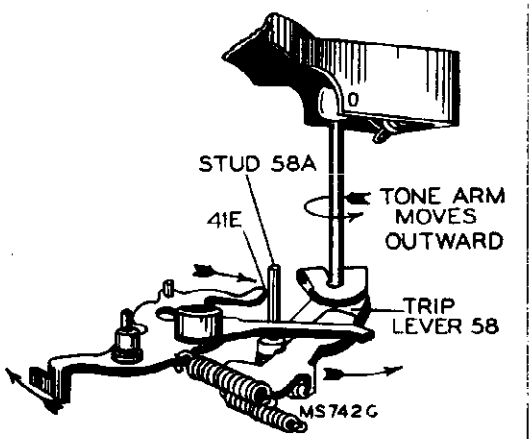

© John F. Rider

RADIO CORP. OF AMERICA

MODEL RP-168, Series

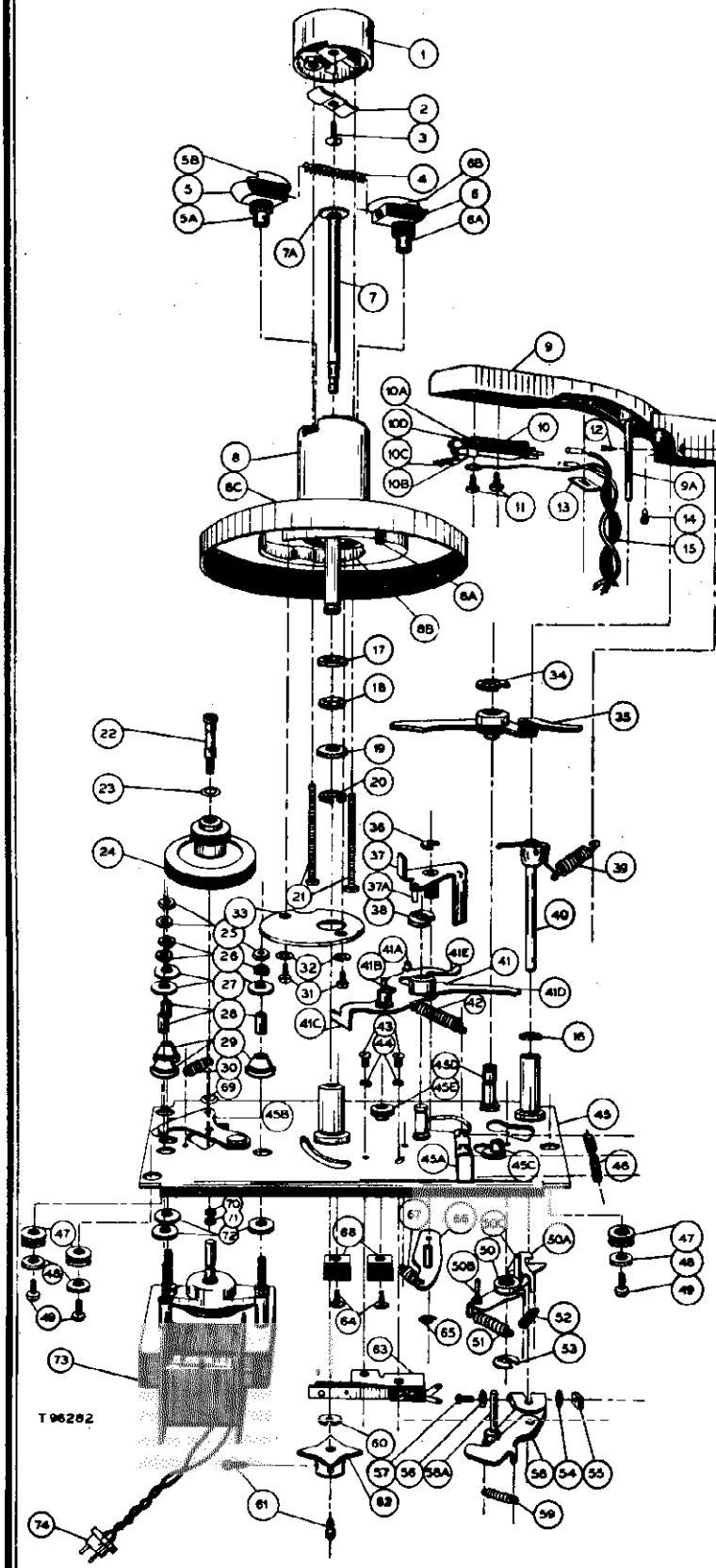

Fig. 1

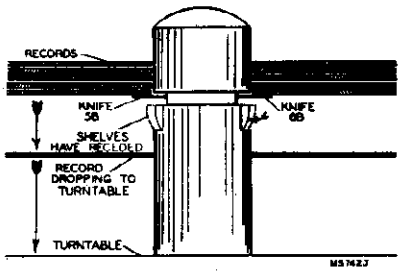

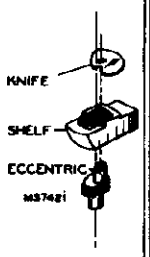

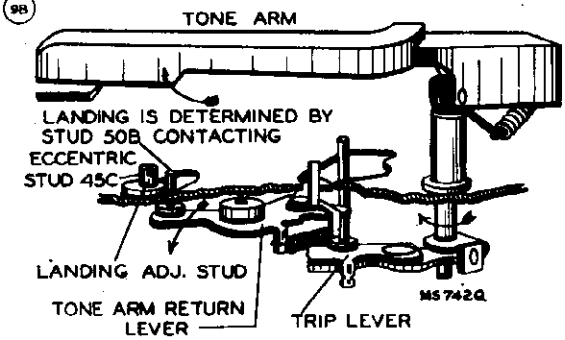

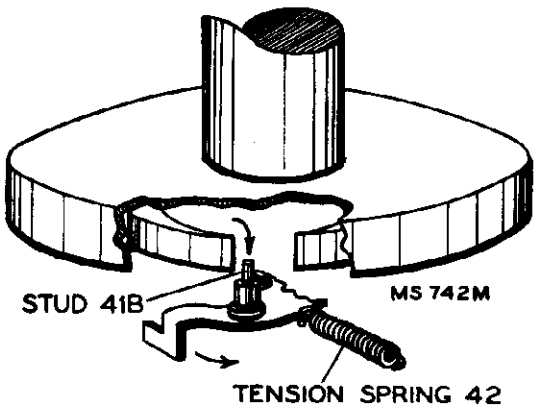

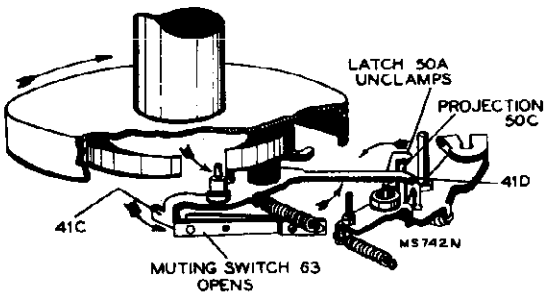

©John F. Rider

MODEL RP-168, Series

RADIO CORP. OF AMERICA

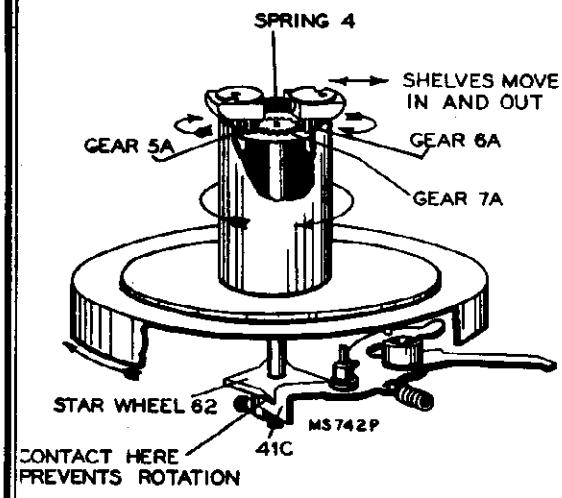

Separator knives separate the lower record from the stack and allows the record to drop to the turntable

1. While the tone arm is moving outward the end (41C) of the director lever (41) extending below the motor board, contacts and prevents the star wheel (62) from rotating.
2. Since the turntable continues to rotate and the star wheel and shaft remain stationary. The two small gears (5A and 6A) embedded in the upper section of the center post rotate around the gear (7A) on the upper end of the star wheel shaft (7).
3. The eccentric extending from the upper end of the two embedded gears runs in a slot in the separator shelves (5 and 6). This produces the necessary action which causes the shelves to move in against the tension of spring (4).
4. As the shelves recede the separator knives (5B and 6B mounted above each separator shelf, separate the lower record of the stack and support the remaining stack while the lower record drops to the turntable.

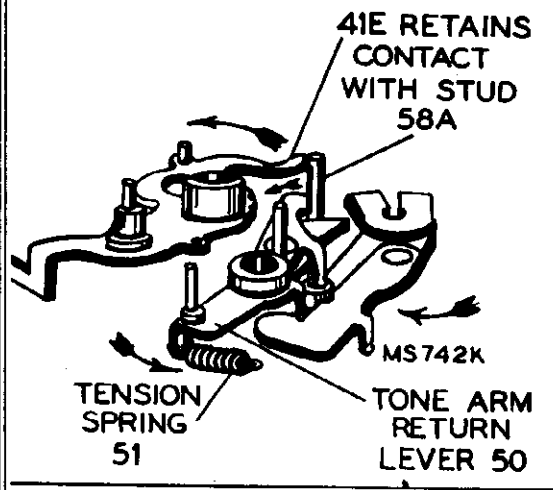

Tone arm moves in for landing

1. As the locator lever (41) continues to move toward the out of cycle position the end of the locator lever (41E) retains contact with the stud (58A) on the trip lever (58). This contact stabilizes the inward movement of the tone arm which is being pushed in by the tone arm return lever (50).
2. The inward movement of the tone arm is stopped directly above the landing position due to the stud (50B) on tone arm return lever coming in contact with the eccentric stud (45C).

Tone arm lowers sapphire to the record

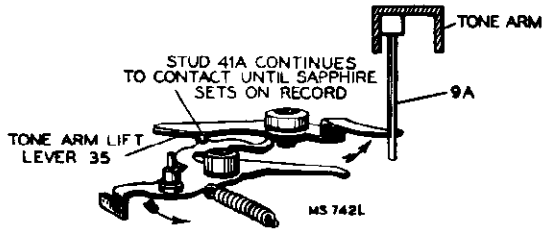

1. The stud (41A) on director lever (41) continues to contact tone arm elevating lever (35) and lowers the sapphire on the start of the record.
2. As the turntable completes on revolution the stud (41B) on director lever is pulled through the slot in the cycling cam by the force produced by tension spring (42).
3. While the stud (41B) on director lever slides through the slot in the cam and assumes the out of cycle position, the end of the director lever (41D) contacts projection (50C) and unlatches the tone arm return lever (50).
4. The end (41C) of the director lever below the motor board moves away from the star wheel and opens muting switch.

Record plays

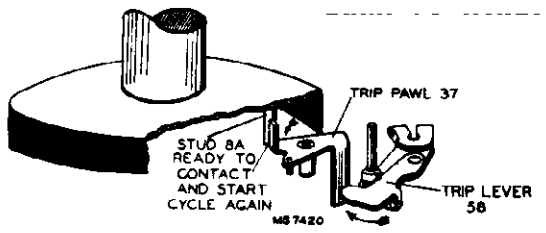

1. After the selection has been completed the sapphire moves into the tripping groove. At this time the trip lever (58) pushes the trip pawl (37) into position for engagement with the stud (8A) on the under side of the turntable.
2. This contact between stud (8A) and the trip pawl (37) starts another change cycle and the next record is moved into position for playing.

©John F. Rider

RADIO CORP. OF AMERICA

MODEL RP-168, Series

REPLACEMENT PARTS

STOCK No.	ILL. No.	DESCRIPTION
		MODEL RP-168
*74090	1	Nose—Spindle nose
*74091	2	Spring—Spindle nose spring (formed)
	3	Screw—No. 6-32 round head machine screw for spindle nose spring
*74095	4	Spring—Separator shelf return spring (.180" O.D. x 1-1 16"—10 turns)
*74096	5	Separator—Separator knife, shelf and gear assembly
*74096	6	Separator—Separator knife, shelf and gear assembly
*74092	7	Gear—Star wheel shaft and gear assembly
*74042	8	Turntable—Turntable and shaft complete with mat
*74094	8A	Mat—Turntable mat
*74080	17	Washer—Washer for turntable assembly
72349	18	Bearing—Turntable thrust bearing
72688	20	Washer—"C" washer for turntable assembly
	21	Screw—No. 6-32 x 1¾" fillister head machine screw for turntable assembly (2 required)
*74079	22	Stud—Idler wheel mounting stud
*74078	23	Washer—Dampening washer for idler wheel (top)
*74077	24	Wheel—Idler wheel
*74132		Hardware—Motor mounting hardware consisting of
	25	Three (3) hex nuts
	26	Three (3) lockwashers
	27-72	Six (6) flat washers
	28	Three (3) spacers
*74087	29	Grommet—Rubber grommet to mount motor (3 required)
*74089	30	Spring—Idler wheel spring (.195" O.D. x .593"—14 turns)
*74231	33	Cam—Follower cam
35969	34	Washer—"C" washer for tone arm lift lever
*74073	35	Lever—Tone arm lift lever
33726	36	Washer—"C" washer for trip pawl
*74072	37	Pawl—Trip pawl
35969	38	Washer—"C" washer for director lever
*74076	41	Lever—Director lever
*74084	42	Spring—Director lever spring (.195" O.D. x .732"—23¼ turns)
	43	Screw—No. 6-32 screw to mount muting switch
	44	Lockwasher—No. 6 lockwasher (external) to mount muting switch
*74070	45	Base—Sub-base assembly complete with all staked and riveted parts including idler lever and reject lever
*74082	45E	Washer—Felt washer (½" O.D. x ¼" I.D. x 3/16" thick)
*74086	46	Spring—Reject lever spring (.203" O.D. x 13/16"—34¾ turns)
*74074	50	Lever—Return lever (includes spring No. 51)
*74085	51	Spring—Return lever actuating spring (.195" O.D. x 29/32"—37½ turns)
*74075	52	Spring—Return lever latch spring (.180" O.D. x .535"—21½ turns)
35969	53	Washer—"C" washer for tone arm return lever
33726	60	Washer—"C" washer for star wheel shaft
*74083	61	Screw—No. 6-32 x .281" cone point set screw for star wheel (2 required)
*74081	62	Wheel—Star wheel

STOCK No.	ILL. No.	DESCRIPTION
*74088	63	Switch—Muting switch
33726	65	Washer—"C" washer for trip pawl lever
*74245	66	Lever—Trip pawl lever
*74100	67	Spring—Trip pawl take-up spring (.195" O.D. x 5/8"—20½ turns)
*74102	69	Washer—Dampening washer for idler wheel (bottom)
	70	Lockwasher—No. 4 lockwasher for idler wheel mounting stud
	71	Nut—No. 4-40 hex nut for idler wheel mounting stud
*74071	73	Motor—105/125 volts, 60 cycles
		MODEL RP-168A-1
		NOTE: Parts listed for mechanism RP-168 plus the following are those parts for the above Record Changer. (For Pickup and Arm Assembly RMP-129-1, see separate listing.)
*74256	16	Washer—Vellutex washer
*74099	58	Lever—Trip lever (includes spring No. 59)
74060	59	Spring—Trip lever spring (.171" O.D. x .695"—43 turns)
73549		Emblem—"RCA-Victor" emblem
*74210		Knob—Reject control knob
*74211		Lever—Reject lever actuating lever
*74184		Motorboard—Motorboard complete with welded brackets and stud—less rest and operating parts
*74212		Nut—Speed nut for reject control knob
*74185		Rest—Pickup arm rest
33726		Washer—"C" washer for mounting reject lever actuating lever
		MODEL RMP-129-1 Pickup and Arm Assembly (Used with 9EY3, 9JY and RP-168A)
*74041	9	Arm—Pickup arm shell and stud less cystal, cable and rear pivot arm
*74061	9B	Pivot—Tone arm pivot
*74067	10	Crystal—Crystal cartridge complete including sapphire and guard
*74065	10A	Screw—No. 2-56 x 3/16" fillister head screw to mount crystal (2 required) or needle guard (2 required)
*74069	10B	Guard—Needle guard
*74068	10C	Sapphire—Sapphire and holder
*74230	10D	Washer—Washer and nut to mount sapphire and holder
74065	11	Screw—No. 2-56 x 3/16" fillister head screw to mount crystal (2 required) or needle guard (2 required)
*74062	12	Screw—No. 8-32 x 13/32" cone point pivot adjusting screw
38458	13	Nut—Speed nut to hold pickup cable
74410	14	Screw—No. 4-40 x 3/16" fillister head set screw to lock pivot screw 74062
*74066	15	Cable—Twisted pickup cable (12") complete with connectors
*74060	39	Spring—Pivot arm spring (.171" O.D. x 695"—43 turns)
*74059	40	Arm—Pivot arm and shaft

TRIPPING ADJUSTMENT

The tripping should occur after the sapphire leaves the last playing groove. This point of tripping should be when the sapphire is 1⅜ inches from the side of the centerpost. Bend end of trip pawl as required.

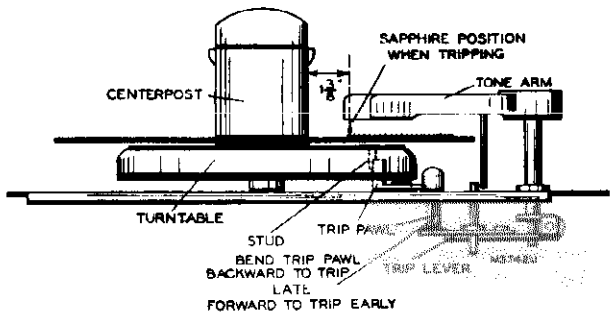

©John F. Rider

TIMING OF SEPARATOR KNIVES

1. Make certain the two embedded gears (5 and 6) are meshed with gear (7A) on the upper end of the star wheel shaft so the action of the separator knives are synchronized.
2. Loosen the two set screws (61) sufficiently to permit the star wheel to rotate without disturbing the shaft (7).
3. Position the separator knives as indicated in figure (3).
4. Push reject lever and rotate the turntable slowly by hand until the end (41C) of the director lever moves in far enough, so when the star wheel is rotated it contacts by the amount as indicated in figure (2).
5. Tighten the two set screws (61) and rotate the mechanism through a complete cycle.
   The separator knives must rotate 360° and return to the starting position as indicated in figure (3).

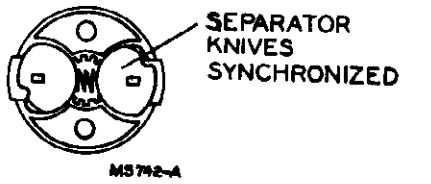

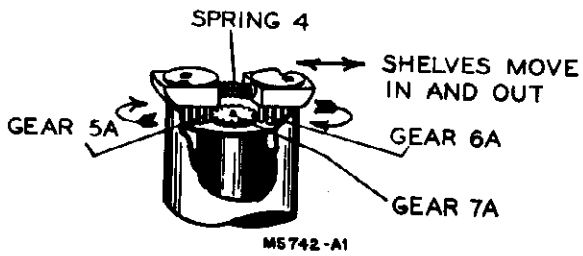

Fig. 3

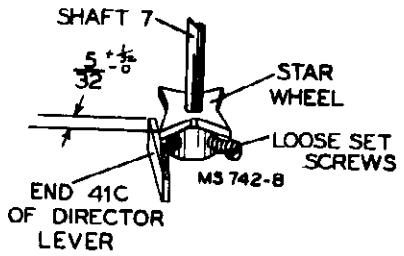

Fig. 2

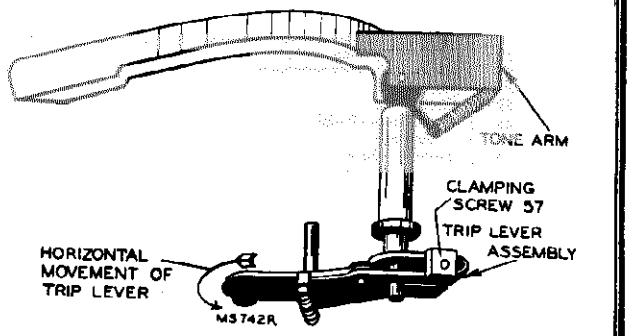

Fig. 4

PICKUP LANDING ADJUSTMENT

1. Assemble the tone arm and trip lever assemblies as shown in figure (4). Leave the clamping screw (57) loose enough to permit horizontal movement of the trip lever on the shaft. (Allow approx. .010 inch vertical end play.)
2. Turn the eccentric landing adjustment stud (45C) to determine the inward and outward limit of adjustment, then turn it to a setting half way between the limits. Fig. 6. (Screwdriver slot approx. 30° from parallel with front edge of subpanel, in a counter-clockwise direction.)
3. Place a record on the turntable, push the reject lever and slowly rotate the turntable until the sapphire is just ready to set on the start of the record.
4. Hold the trip lever and move the tone arm by hand until sapphire is in position halfway between the music grooves and the edge of the record.
5. Tighten clamp screw (57), apply power and run the mechanism through cycle. (Note the sapphire landing position.)
6. The exact landing position of the sapphire can be adjusted by turning the eccentric landing adjustment screw (45C). (Do not attempt to correct a landing error of more than ± 1/32", with the eccentric screw driver adjustment stud.)

   Sapphire landing position should be (2⅝") ± 1/64" from the side of the center post as shown in figure (5).

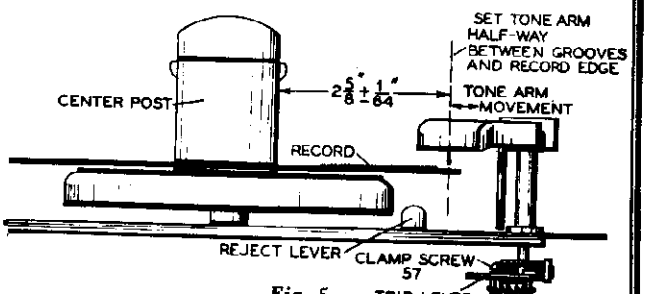

Fig. 5

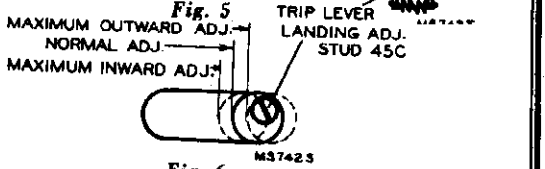

Fig. 6

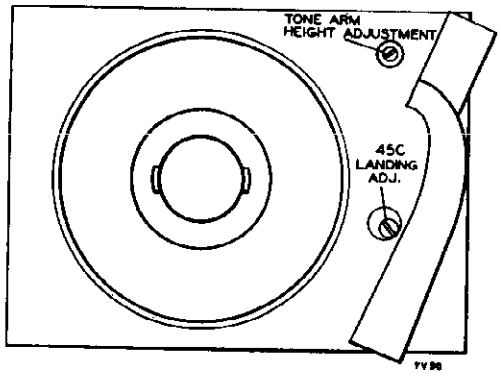

Fig. 7

©John F. Rider

RADIO CORP. OF AMERICA MODEL RP-168, Series

OUT OF CYCLE HEIGHT OF TONE ARM

Bend tone arm lug so the sapphire point is approximately 1/16" above the motor board as shown in the sketch.

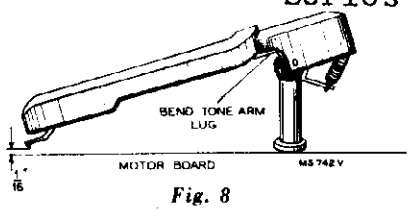

Fig. 8

TONE ARM IN CYCLE HEIGHT ADJUSTMENT

Set the mechanism in cycle. Turn the turntable by hand, until the tone arm has reached its maximum height. By means of a screwdriver turn the height adjustment stud until the distance between the top of the turntable and the sapphire point is 3/4". Turning the stud clockwise will raise the arm and counter-clockwise will lower the arm.

Fig. 9

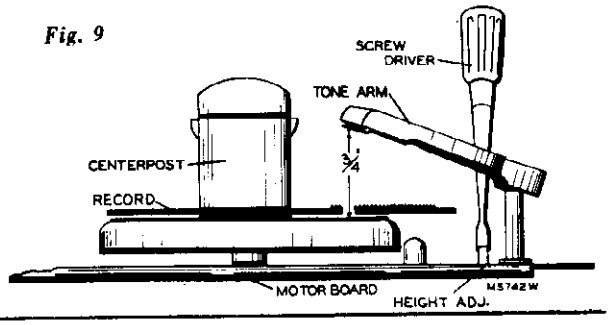

IMPROPER RECORD SEPARATION

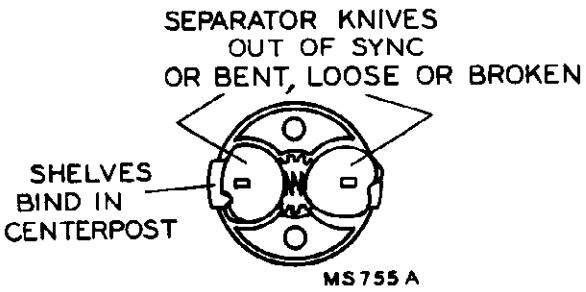

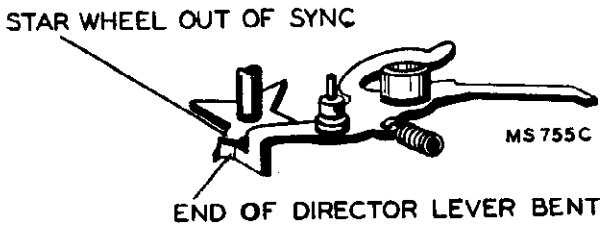

To insure proper dropping of records and avoid tilting of stack. It is important that the separator shelves move in and out freely. It is therefore essential that the shelves be free from burrs, grease, grit or dirt in general.

FAILS TO TRIP

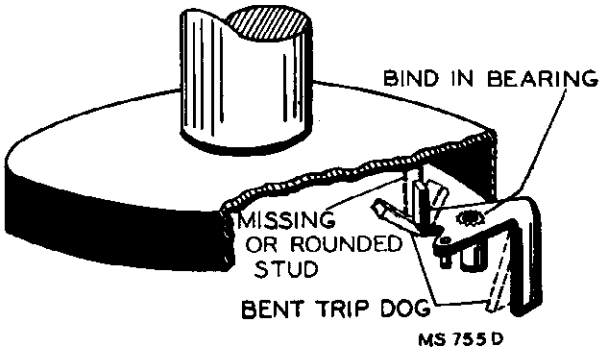

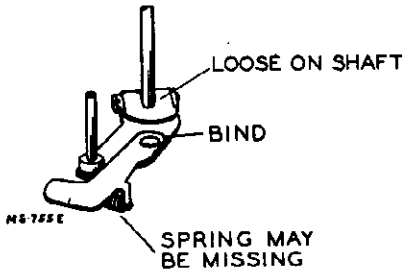

FAILS TO GO INTO CYCLE

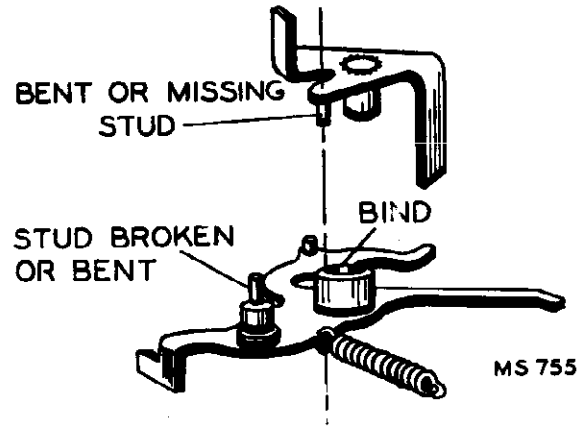

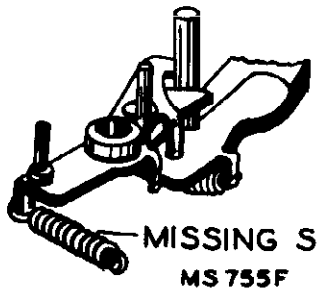

MODEL RP-168, Series

RADIO CORP. OF AMERICA

WOW (Speed Variation)

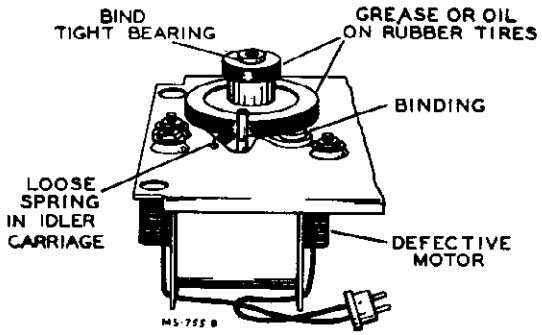

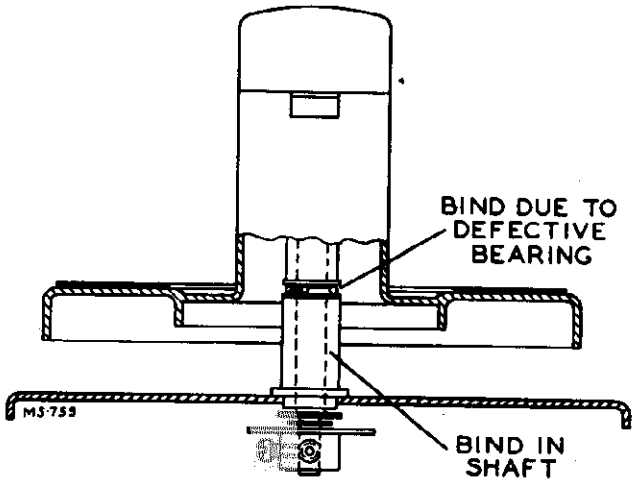

REPEATS GROOVES

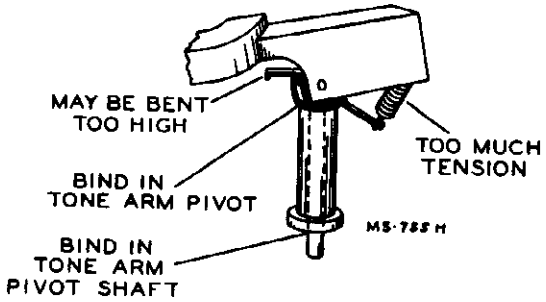

CONTINUOUS TRIPPING

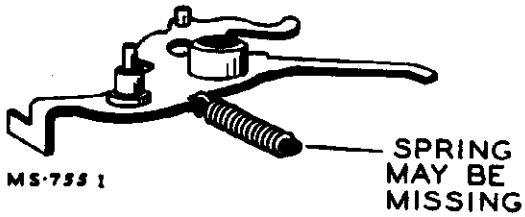

RECORD DROP ON OR HIT TONE ARM

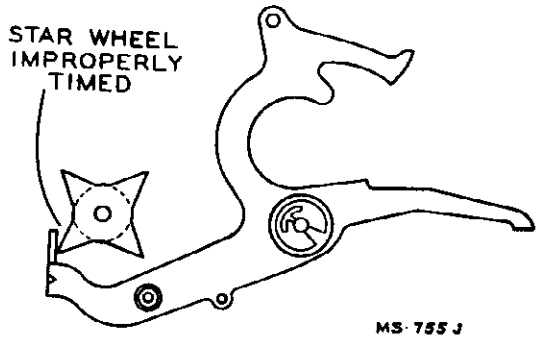

ERRATIC PICKUP LANDING

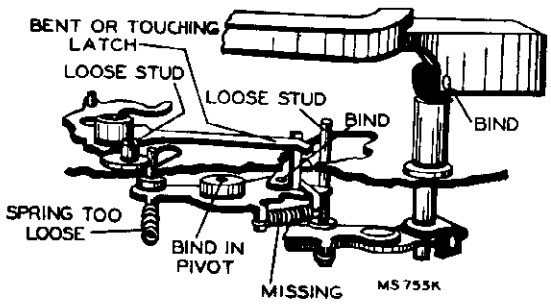

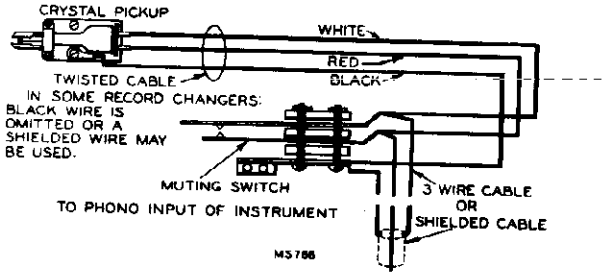

Fig. 10

A BENT SAPPHIRE SUPPORT

CHIPPED SAPPHIRE

SAPPHIRE TOUCHING TONE GUARD

LINT OR FOREIGN MATERIAL IN GUARD

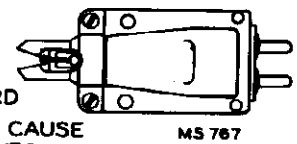

A CHIPPED SAPPHIRE MAY CAUSE SKIPPING OF GROOVES

A CHIPPED SAPPHIRE MAY CAUSE FAILURE TO TRIP

© John F. Rider

RADIO CORP. OF AMERICA

MODEL 9EY3,
CHASSIS RS-132

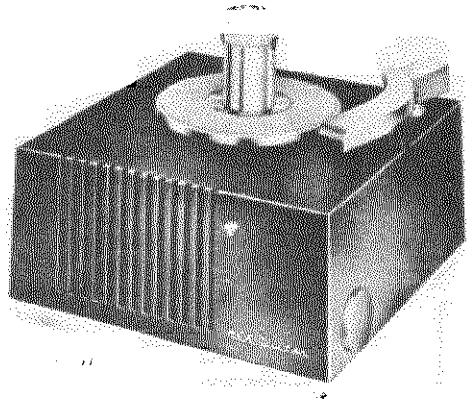

Specifications

Tube Complement

1. RCA 12AV6 ..... Amplifier
2. RCA 50C5 ..... Output
3. RCA 35W4 ..... Rectifier

Loudspeaker (92577-6W)

Size and type ..... 4 in. P.M.
Voice coil impedance ..... 3.2 ohms at 400 cycles

Dimensions (overall)

Height, 7⅜" Width, 9 11/16" Depth, 9⅝"

Power Supply Rating

115 volts, 60 cycles A.C. ..... 45 watts

Power Output

Undistorted ..... 1.0 watt Maximum ..... 1.25 watts

Record Changer (RP-168-1)

Turntable speed ..... 45 r.p.m.
Records used ..... Long playing—7 in.
Record capacity ..... 8 records
Pickup ..... Crystal (medium output)

REPLACEMENT PARTS

STOCK No.	DESCRIPTION
	AMPLIFIER ASSEMBLIES RS-132
39648	Capacitor—Mica, 680 mmf. (C1)
72839	Capacitor—Moulded paper, .002 mfd., 400 volts (C4)
73961	Capacitor—Tubular, .003 mfd., 200 volts (C2)
71923	Capacitor—Tubular, .01 mfd., 200 volts (C3)
56871	Capacitor—Moulded paper, .02 mfd., 400 volts (C6)
71702	Capacitor—Moulded paper, .05 mfd., 400 volts (C7, C8)
72281	Capacitor—Electrolytic, comprising 1 section of 80 mfd., 150 volts; 1 section of 40 mfd., 150 volts; and 1 section of 20 mfd., 25 volts (C5A, C5B, C5C)
*74133	Control—Volume control and power switch (R3, S1)
28451	Cover—Insulating cover for electrolytic capacitor
*73693	Grommet—Strain relief grommet (1 set) for power cord
70391	Insulator—Phono input socket insulator
30868	Plug—2 contact female plug for motor cable
73237	Resistor—Wire wound, 33 ohms, 150 ma. (R11)
72314	Resistor—Wire wound, 120 ohms, 5 watts (R7)
	Resistor—Fixed, composition, 150 ohms ±10%, ½ watt (R9)
	Resistor—Fixed, composition, 2700 ohms ±10%, ½ watt (R10)
	Resistor—Fixed, composition, 120,000 ohms ±10%, ½ watt (R4)
	Resistor—Fixed, composition, 180,000 ohms ±10%, ½ watt (R2)
	Resistor—Fixed, composition, 270,000 ohms ±10%, ½ watt (R6)
	Resistor—Fixed, composition, 470,000 ohms ±20%, ½ watt (R8)
	Resistor—Fixed, composition, 470,000 ohms ±10%, ½ watt (R1)
	Resistor—Fixed, composition, 4.7 megohms ±20%, ½ watt (R5)
73117	Socket—Tube socket
36422	Socket—3 contact socket for phono input cable
72535	Transformer—Output transformer (T1)
	SPEAKER ASSEMBLIES 92577-6W—RL 108B4
*74165	Speaker—4" P.M. speaker complete with cone and voice coil
	MISCELLANEOUS
*74135	Baffle—Speaker baffle
*74134	Bottom—Cabinet bottom cover
*74137	Bracket—Mounting bracket for reject button and shaft
*74136	Bracket—Speaker mounting bracket
*74138	Button—Reject button and shaft
Y2071	Cabinet—Plastic cabinet—maroon—less bottom cover
*74190	Cable—Shielded pickup cable complete with 3 prong male plug
*74193	Clamp—Spring clamp for reject button and shaft
73549	Emblem—"RCA-Victor" emblem
74087	Grommet—Rubber grommet to mount record changer (3 required)
73490	Knob—Volume control and power switch knob—maroon
*74192	Plug—3 prong male plug for pickup cable
*74191	Spacer—Metal spacer (eyelet) to mount record changer (3 required)
14270	Spring—Retaining spring for knob
*74139	Spring—Reject button and shaft return spring (.203" dia. x 1½"—21" turns)
2917	Washer—"C" washer for reject button and shaft

* This is the first time that this Stock No. has appeared in Service Data.

MODEL 9EY3,
CHASSIS RS-132

RADIO CORP. OF AMERICA

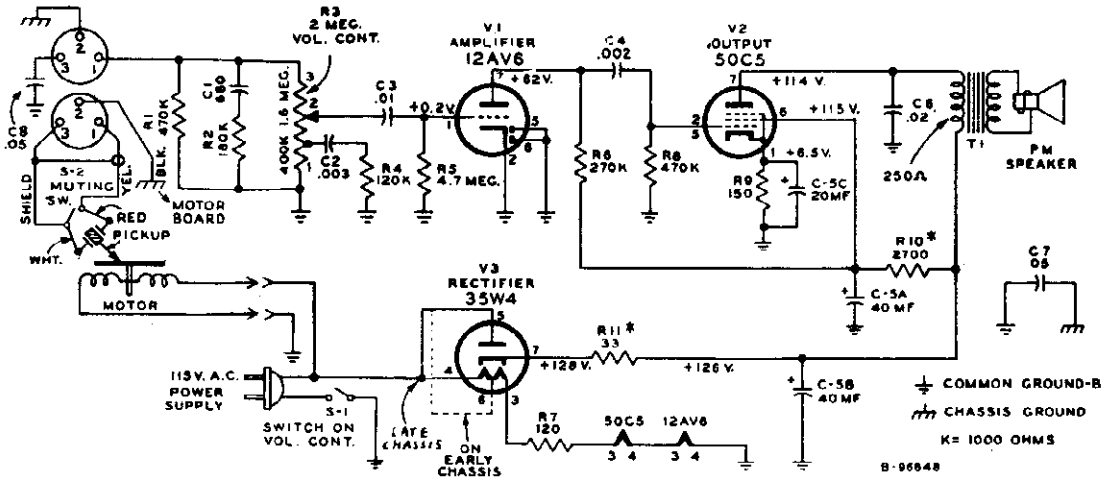

VOLTAGES MEASURED TO COMMON WIRING WITH "VOLTOHMYST" — SHOULD HOLD WITHIN ± 20%
* IN SOME CHASSIS R10 IS 5600 OHMS, R11 IS NOT USED, RECTIFIER CIRCUIT AS SHOWN BY DOTTED LINE.

Schematic Diagram

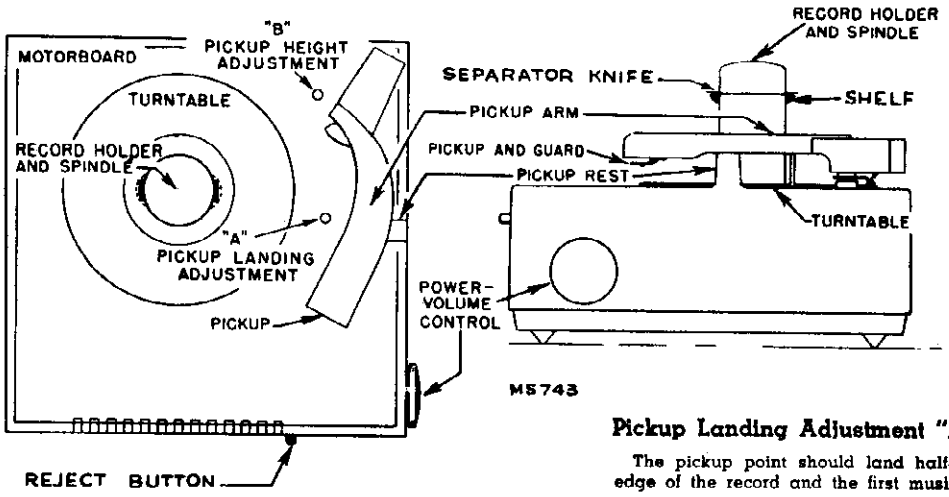

Top and Side Views

Record Separators

In the out of cycle position the record separator knives or discs are normally concealed inside the center post. During service the position of the star wheel on the underside of the record changer may be accidently shifted; this may cause the separator knives to be extended when they should be concealed.

If the separator knives are thus extended turn the power on so that the turntable is revolving, gently press fingers against the extended knives until they disappear inside the center post—DO THIS ONLY WHILE MECHANISM IS OUT OF CYCLE.

Record Changer Mounting

The cabinet is used as the motor board of the record changer. The record changer is attached to the cabinet with three screws, grommets and spacers. THE PICKUP ARM MUST BE REMOVED BEFORE THE RECORD CHANGER CAN BE REMOVED—REFER TO RP-168 SERIES SERVICE DATA.

To Remove Chassis

Remove the four screws at the corners of the bottom cover, separate the motor power plug and socket and remove the pickup cable from its socket on the amplifier chassis.

Elongated holes permit the speaker position to be adjusted. If the speaker should be replaced or its mounting bracket loosened, the speaker mounting bracket screws should not be tightened until after the bottom cover is assembled to the cabinet.

Pickup Landing Adjustment "A"

The pickup point should land half-way between the outer edge of the record and the first music groove.

If the pickup lands inside the starting grooves—turn screw "A" slightly clockwise. If pickup lands outside the starting grooves—turn screw "A" slightly counterclockwise.

Pickup Height Adjustment "B"

During cycle the pickup arm must rise high enough to clear a stack of eight records on the turntable, but not high enough to cause the top of the arm to touch records resting on the record supports.

If pickup does not clear a stack of eight records—turn screw "B" slightly clockwise. If pickup arm touches records on record supports—turn screw "B" slightly counterclockwise.

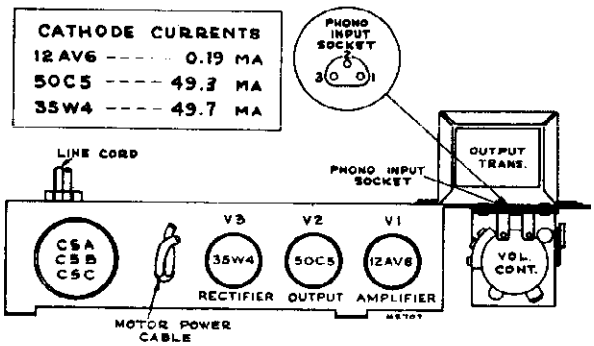

Amplifier Top View

© John F. Rider

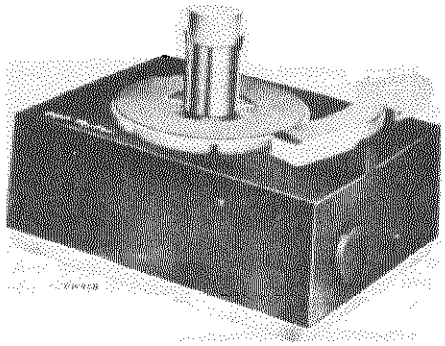

Specifications

Record Changer (RP-168-1)

Turntable speed ..... 45 r.p.m.
Records used ..... Long playing—7 in.
Record capacity ..... 8 records
Pickup ..... Crystal (medium output)

Power Supply Rating

115 volts, 60 cycles A.C. ..... 15 watts

Dimensions (overall)

Height 6⅜" Width 9⅛" Depth 6⅞"

Record Separator

In the out of cycle position the record separator knives or discs are normally concealed inside the center post. During service, the position of the star wheel on the underside of the record changer may be accidently shifted; this may cause the separator knives to be extended when they should be concealed.

If the separator knives are thus extended—turn the power on so that the turntable is revolving, gently press fingers against the extended knives until they disappear inside the center post—**DO THIS ONLY WHILE MECHANISM IS OUT OF CYCLE.**

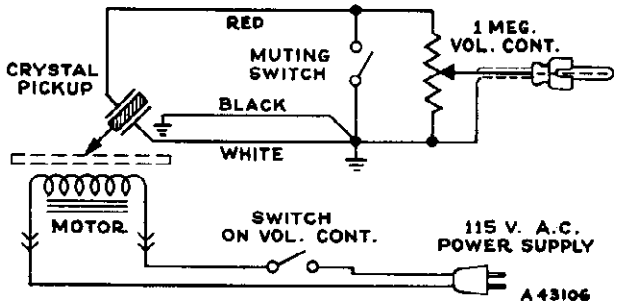

In some instruments: Black wire is omitted or a shielded wire is used in place of the red-black-white cable.

Schematic Diagram

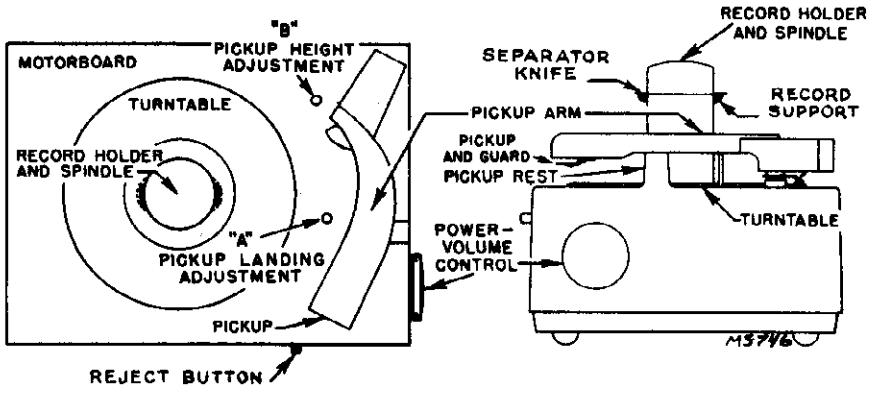

Top and Side Views

Record Changer Mounting

The cabinet is used as the motorboard of the record changer. The record changer is attached with three screws and bushings. THE PICKUP ARM MUST BE REMOVED BEFORE THE RECORD CHANGER CAN BE REMOVED—REFER TO RP-168 SERIES SERVICE DATA.

FOR RECORD CHANGER SERVICE INFORMATION—REFER TO RP-168 SERIES SERVICE DATA.

Pickup Landing Adjustment "A"

The pickup point should land half-way between the outer edge of the record and the first music groove.

If the pickup lands inside the starting grooves—turn screw "A" slightly clockwise. If pickup lands outside the starting grooves—turn screw "A" slightly counterclockwise.

Pickup Height Adjustment "B"

During cycle the pickup arm must rise high enough to clear a stack of eight records on the turntable, but not high enough to cause the top of the arm to touch records resting on the record supports.

If pickup does not clear a stack of eight records—turn screw "B" slightly clockwise. If pickup arm touches records on record supports—turn screw "B" slightly counterclockwise.

REPLACEMENT PARTS

STOCK No.	DESCRIPTION
*74097	Bottom—Cabinet bottom cover
*74189	Bushing—Shoulder bushing to mount record changer in cabinet (3 required)
*74098	Button—Reject button
Y2062	Cabinet—Moulded cabinet less bottom cover
39386	Cable—Shielded pickup cable complete with pin plug
*74101	Control—Volume control and power switch
73549	Emblem—"RCA-Victor" emblem
31051	Foot—Rubber foot (4 required)
73490	Knob—Volume control and power switch knob—maroon
14270	Spring—Retaining spring for knob

* This is the first time that this Stock No. has appeared in Service Data.

Connecting Record Changer Attachment to Radio Receivers

RCA Radios with Phono Jack

Plug male connector on the end of the "Phono" lead into the female connector on the receiver chassis. If set is provided with a phono switch, push or turn the "Phono" switch to "Phono" position, and operate the Record Changer Attachment according to instructions. If no switch is provided, use maximum setting of volume control on attachment, and minimum setting of radio volume control which will give acceptable volume, and tune receiver off frequency from any very strong station. In some instances the radio volume control will have the effect of a tone control.

RCA Type No. 202W1 Record Player Selector

This selector switch may be used for combined operation of two record players through one phono input jack. A choice of two types of input jacks and output cable plugs are provided.

Radio-Phonograph Combinations

Most radio-phonograph combinations use resistors and/or capacitors for tone compensation in the phono input circuit.

Where unsatisfactory reproduction is obtained with Model 9JY connected into the phono jack of such instruments, we suggest that Model 9JY be connected as indicated for radios which do not have a phono jack.

Radios Without Phono Jack

Methods of connecting the Record Changer Attachment to various types of audio systems are given in the accompanying text and illustrations. The data given requires that an RCA Type No. 240X1 (Formerly Stock No. 240) Radio-Phono switch be used for switching from radio to phonograph, as desired. For ease in connecting the "phono" lead to the switch, the male plug on the end of the lead matches the phono jack on the switch.

In general, the Record Changer Attachment must be used with radio receivers having at least two stages of high-gain audio amplification. The output of the Record Changer Attachment should be connected to the input of the first audio tube, and at the same time the output of the radio receiver portion of the chassis should be shorted or opened, to prevent radio signals being heard while the Record Changer Attachment is in operation.

Installation of Switch

Fasten the bracket to the cabinet in such a position that the switch may be easily reached. For wooden cabinets, a suggested place is the upper rear edge of the cabinet. If the radio has a plastic cabinet, the bracket may be fastened to the chassis by self-tapping screws or soldering. **In the case of a.c.-d.c sets, the bracket should not be fastened to the chassis.** In such cases, a wooden block may be fastened to the chassis and the bracket screwed to the wooden block, care being exercised that there is no metallic path from the bracket to the chassis.

Connect the braided shield extension to the radio chassis by either soldering or placing the spade lug under a mounting screw.

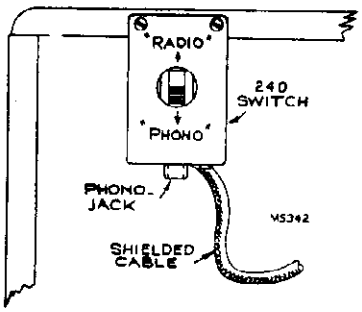

On a.c.-d.c. sets it is necessary to isolate the cable shield from the chassis. This is best done by connecting the shield to the chassis through a .25 mfd 300-volt condenser. Care should be taken that the shield braiding and switch bracket do not come in contact with the chassis.

If the common-negative wiring in the a.c.-d.c. set is isolated from the set chassis, connect the cable shield, through a .25 mfd. capacitor, to the common-negative wiring, and not to the chassis.

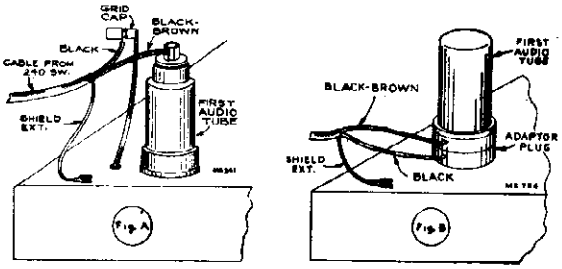

For radio receivers in which the 1st-audio tube has a top grid cap—see Fig. A:

1. Disconnect the grid lead from the first audio tube.
2. Connect the cap on the black lead to the clip on the grid lead, as shown above.
3. Connect the clip on the black-brown lead to the grid cap at the top of the first audio tube, bending the terminal if necessary to proper size for a metal tube cap.
4. Insert the plug on the end of the record player lead into the jack on the bracket.
5. Secure or position the connection cable assembly so that the cap and clip terminals are well separated from each other and other metal parts.

For radio receivers in which the 1st-audio tube is type 6SQ7, 6SR7, 12SQ7 or 12SR7—see Fig. B:

1. Use adaptor plug RCA Stock No. 37798.
2. Remove the 1st audio tube.
3. Solder the switch leads to the adaptor plug terminals—black to bottom lug—black-brown to top lug.
4. Tape terminals to prevent short circuits when installed in set.
5. Insert the adaptor into the 1st audio tube socket.
6. Insert the 1st audio tube into the adaptor.
7. Insert the plug on the end of the record player lead into the jack on the bracket.

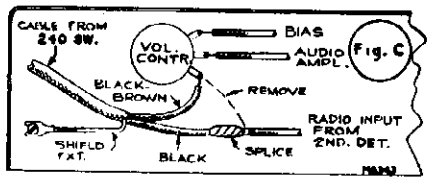

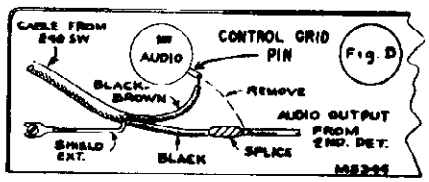

For other radio receivers in which the 1st-audio tube does not have a grid cap; connection to volume control input—see Fig. C, connection to 1st-audio tube control grid—see Fig. D:

1. Unsolder the lead from the volume control lug indicated in Fig. C or from the control grid pin indicated in Fig. D. It is usually necessary to remove the chassis from the cabinet to do this.
2. Solder the black-brown lead (remove clip) to the lug or pin disconnected in Step 1.
3. Solder the black lead (remove plug) to the lead disconnected in Step 1. Tape the joint to prevent short circuits.
4. Insert the plug on the end of the record player lead into the jack on the bracket.

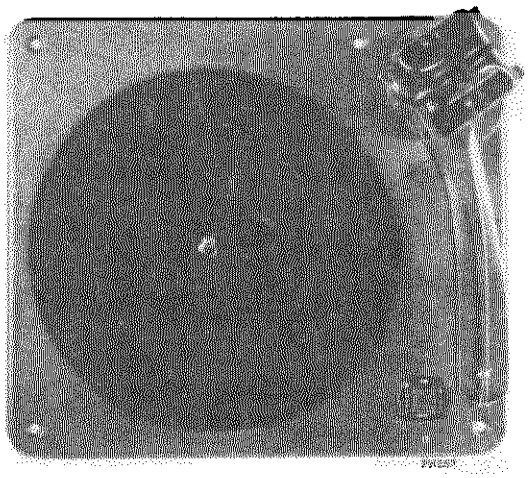

Manual Operation

1. Rotate the record separator shelf clockwise for 10-inch or counterclockwise for 12-inch position (numerals 10 or 12 pointing towards center post).
2. Place the record to be played on the turntable and turn the power switch on.
3. Move the control knob to manual and to the on position.
4. Press down firmly but momentarily on the end of the tone arm and let go. The pickup will land automatically on the start of the record. When the selection is completed the pickup will ride the eccentric groove until the pickup is placed on the rest manually.
5. Turn power switch off manually.
6. Remove the record by raising straight up without tilting.

Automatic Operation

1. With the power switch in the off position rotate the record support shelf as required for 10- or 12-inch records until the record size indicated on the support cover is pointing toward the center post. (Rotate clockwise for 10-inch and counterclockwise for 12-inch records).
2. Place the records to be played in a stack with desired selections upward and in proper sequence with the last record on top. Load them on the changer by placing them over the center post and resting on the record support shelf. Place record stabilizing clip on top of the record stack.
3. Push the control knob to automatic and to the on position.
4. Press down firmly but momentarily on the end of the tone arm and let go. The changer will continue to play one side of each record of the entire stack automatically.
   The tone arm can be moved to the rest position any time the mechanism is not in cycle.
5. Turn the power switch off and remove the stack from the turntable by placing fingers of both hands directly opposite and under the stack. Then lift straight up—"don't tilt" or squeeze stack. Turning the support shelf one-fourth turn facilitates removal of records.

Cautions

1. Avoid handling the tone arm or rotating record support assembly while mechanism is in cycle.
2. Never turn the power switch off, leaving the mechanism in cycle for an extended period of time.
3. Do not allow the records to remain on supports when not in use.
4. Do not allow oil or grease to come in contact with any rubber parts.
5. Do not install instrument near source of heat. Excessive heat may damage the pickup cartridge.

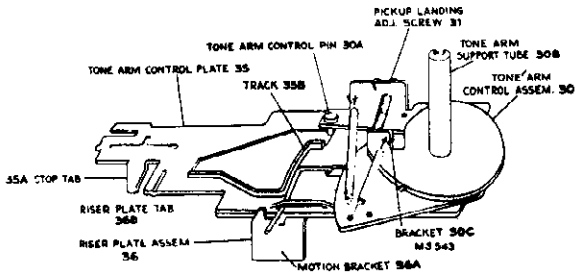

FIG. 2

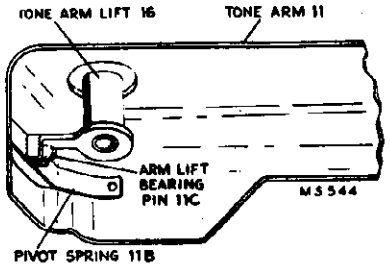

FIG. 3

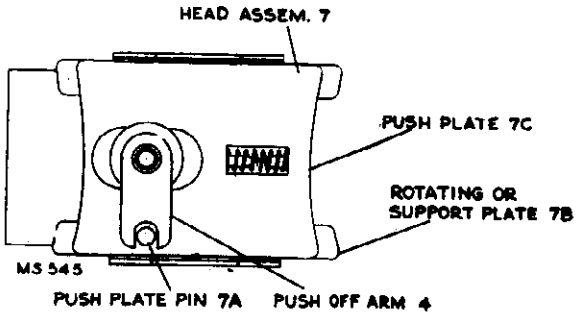

FIG. 4

FUNCTIONS OF PRINCIPAL PARTS

Head Assembly—7, 7A, 7B, 7C
Supports outer edge of record stack and pushes the record off notch in center post and allows it to drop to the turntable while the mechanism is going through cycle.

Center Post—53
Supports the entire stack of records, and together with the offset notch and latch in the center post, provides a means for separating records.

Tone Arm Lift Assembly—16
Couples tone arm to riser plate 36 through arm lift shaft 47, thereby transferring the action for the vertical motion of the tone arm during change cycle.

Arm Control Assembly—30
Provides a tie between tube 30B, bracket 30C and tone arm support bracket 18, thereby directing the horizontal movement of the tone arm during change cycle. Arm control pin 30A slides along track in arm control plate 35, and in so doing, determines the point of landing of the pickup and the point of trip of the mechanism. It also incorporates landing adjusting screw 31.

Arm Control Plate Assembly 35, 35A, 35B, 35C
Incorporates a track 35B which controls the pickup landing and the tripping of the mechanism.
Stop tab 35A functions as portion of the tripping device, stud 35C, contacting push-off cam 47A controls, the point of landing for both 10- and 12-inch records.

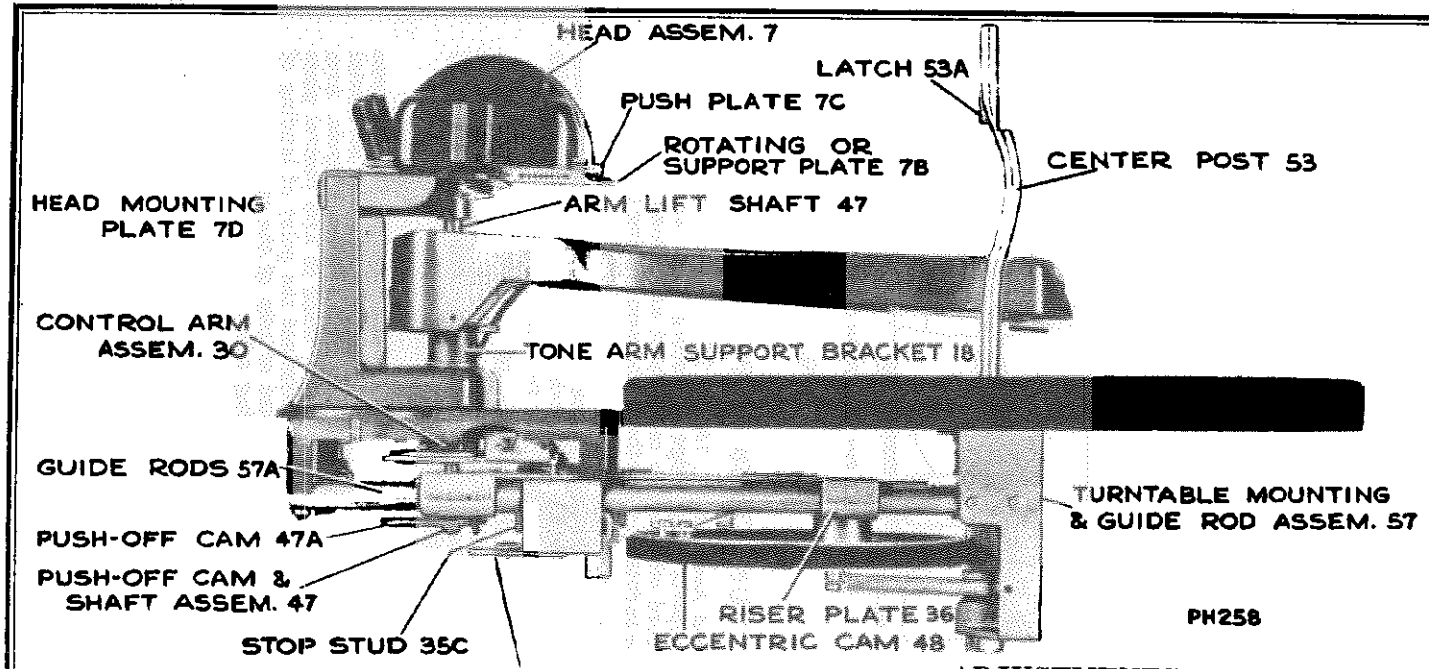

FIG. 1

Riser Plate Assembly—36, 36A, 36B, 36C
Provides mounting for eccentric cam 48, and incorporates an inclined track 36C, which controls the vertical movement of the tone arm.
Riser plate tab 36B pushes against curved portion of cam on arm control assembly 30, providing a control for the horizontal movement of tone arm during change cycle. Riser plate bracket 36A contacting push-off cam 47A provides the necessary motion for push plate 7C.

Eccentric Cam—48
Transfers motion from turntable to riser plate 36 while cycling.

Push-Off Cam and Shaft Assembly—47, 47A
Provides a means of mechanically coupling tone arm lift 16 and push plate 7 assemblies to main cycling mechanism. Cam 47A contacting stud 35C controls the position of arm control plate while in cycle, which determines the landing point of the pickup on 10- or 12-inch records.

Turntable Mounting and Guide Rod Assembly—57, 57A
Incorporates the main bearings for the turntable and provides a mounting for guide rods 57A.

Manual Lockout Lever—59
Consists of a small lever which forms a stop for stud 35C. This prevents arm control plate 35 from moving forward and disengaging stop catch 45 when the mechanism is operated in the manual position.

ADJUSTMENTS

Tone Arm Adjustment
The tone arm height should be so adjusted as to permit the sapphire to engage and ride in the grooves of one record placed on the turntable, but at the same time prevent the tone arm from touching the records on the supports while the mechanism is going through cycle, fig. 5.

1. With the mechanism out of cycle, lift tone arm and check, and make certain tone arm lift 16 engages pin 11C as shown in fig. 6.
2. With the pickup near the edge of the record, loosen the set screw, holding collar 10, fig. 9, and moving it up or down on shaft 47, so as to have the conditions indicated in sketch, fig. 5.

Preliminary Landing Adjustments
An accessible landing adjustment screw 31 is provided, but if for any reason the tone arm support bracket has become loose or removed, proceed as follows:

1. With the mechanism out of cycle turn adjustment screw 31, fig. 8, clockwise as far as it will go, then turn counterclockwise two or three full turns.
2. Set head assembly for 12-inch position; place a 12-inch record on turntable.
3. Press down on the reject button and rotate the turntable by hand, causing the mechanism to cycle until the pickup is about to land on the record. In this position, the arm control pin 30A is in a position on track 35B as indicated by "s" and adjustment screw 31 remains against bracket 30C as indicated in fig. 8.

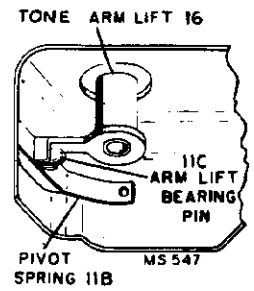

FIG. 6

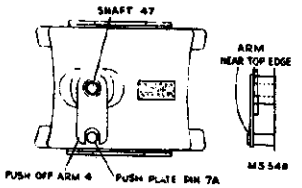

FIG. 7

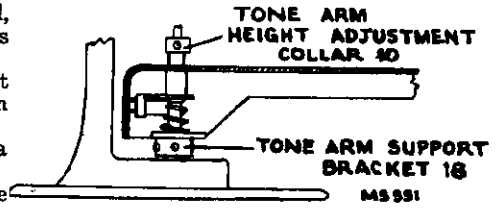

FIG. 9

4. Loosen the two set screws holding the tone arm support bracket.
5. While holding this position, indicated in step 2, place the sapphire in the starting groove of the record and tighten the two set screws in the tone arm support bracket.

Final Landing Adjustment

The exact landing adjustment can be made by pressing the reject button and rotating the turntable by hand until the pickup is about to land. Then turn adjustment screw 31, fig. 8, until the sapphire is directly above the starting groove of the record. If the mechanism continues to land incorrectly after this adjustment has been made, compensate the difference by turning the screw 31 slightly. Turning screw counter-clockwise will move the landing towards the center post.

Positioning Push-Off Arm

1. With the mechanism out of cycle, turn the push-off cam 47A so that its arm makes a 90° angle with the slide bars as shown in fig. 10. Make certain the large radius side of cam is toward the stud 35C when the support post is in the 12-inch position.
2. Place push-off arm 4 over push-off cam shaft 47, and engage push-off plate pin 7A near the top edge, fig. 7. Tighten set screws.
3. Press down on reject button and rotate the turntable slowly by hand, making certain push plate does not reach its limit before riser plate motion bracket has reached the end of its outward travel. If the push plate should reach its limit, deviate slightly from the 90° angle but make certain that the mechanism operates satisfactorily on both 10" and 12" records.
4. Check this for 10- and 12-inch setting.

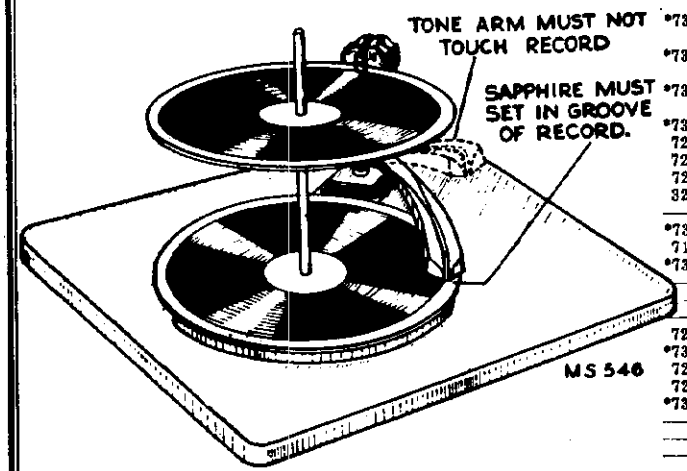

FIG. 5

Replacement Parts

STOCK No.	ILL. No.	DESCRIPTION
*73338	1	Cover—
*73337	2	Pad—Hold down pad and arm
71232	3	Spring—Hold down spring
72468	4	Arm—Push off arm
37458	5	Screw—#6-32 x ⅛" set screw
*73339	6	Plate—Hold down plate
71177	6A	Spring—Hairpin spring
*73340	7	Head—Head assembly including
———	7A	Push pin }
———	7B	Rotating plate } Part of 7
———	7C	Push plate }
71209	8	Spring—Push plate spring
71201	9	Screw—#6-32 x 3/16" Bristo head set screw
72461	10	Collar—Lift adjusting collar
*73342	11	Arm—Pickup arm shell complete with
———	11A	—Arm mounting rivets }
———	11B	—Pivot mounting spring } Part of 11
———	11C	—Lift stud }
———	11D	—Plastic button }
73190	11D	Button—Plastic button for pickup arm
71169	12	Clip-Pickup arm spring clip
70338	13	Crystal—Crystal cartridge complete with guard and sapphire
72345	13A	Sapphire—Sapphire and holder assembly
38452	13B	Guard—Sapphire guard
70341	13C	Nut—Mounting nut and washer for sapphire
37763	13D	Screw—#2-56 x ⅛" screw for sapphire guard
70912	14	Screw—#4-40 screw to mount crystal (2 required)
71240	15	Cable—Shielded pickup cable complete with pin plug
31048	15A	Plug—Pin plug for shielded cable
72462	16	Lift—Pickup arm lift
72463	17	Spring—Brake spring
72465	18	Support—Pickup arm support
———	†19	Screw—To mount pickup arm support (two required) one Allen or Bristo #6-32 x ⅛" cone point set screw one Allen or Bristo #6-32 x 3/16" blunt set screw
*73341	21	Screw—#6 x 5/16" Phillips flat head type Z screw
*73343	22	Base—Operating mechanism mounting base less all removable parts
*73362	22A	Washer—Faston washer to mount mechanism base to motorboard
*73356	23	Knob—Control knob
72466	24	Washer—Spring washer
72469	25	Spring—Safety spring
72470	26	Spring—Set down spring
32119	27	Switch—"On-Off" switch
———	†27A	Cover—Switch cover
*73358	28	Trigger—Manual control trigger (wire)
71225	29	Washer—Spring washer
*73344	30	Control—Arm control assembly including
———	30A	—Arm control pin }
———	30B	—Arm control tube } Part of 30
———	30C	—Bracket }
72472	31	Screw—Landing adjustment screw
*73345	32	Spring—Set down adjustment lock spring
72474	33	Spring—Cushion spring
72475	34	Spring—Trip spring
*73346	35	Control—Arm control plate including
———	35A	—Stop tab }
———	35B	—Track } Part of 35
———	35C	—Size change stop }

STOCK No.	ILL. No.	DESCRIPTION
*73347	36	Riser—Riser plate including
———	36A	—Motion bracket }
———	36B	—Riser plate tab } Part of 36
———	36C	—Inclined track }
71191	37	Spring—Recoil spring
*73353	38	Rest—Pickup arm rest and start-reject button
*73354	39	Lever—Reject lever
71228	40	Spring—Reject lever spring
———	†41	Screw—self tapping screws for mounting item 39
*73355	42	Trigger—Reject trigger (wire)
———	43	Terminal—Terminal strip
71177	44	Spring—Hair pin spring
*73352	45	Catch—Reject catch
72486	46	Spring—Reject catch support spring
72478	47	Cam—Push off cam including
———	47A	—Shaft (part of 47)
72479	48	Cam—Eccentric cam and tire
71198	48A	Tire—Rubber tire for eccentric cam
72480	49	Spring—Eccentric cam spring
———	†50	Washer—Washer used to mount eccentric cam (#8 washer approx. 9/16" O.D.)
———	†51	Washer—Lock washer (#8)
———	†52	Screw—Eccentric cam mounting screw (#8 x 32 x ¼" binder head)
71235	53	Centerpost—
*73348	54	Turntable—
71239	55	Washer—One set of cork washers for turntable
71238	56	Bearing—Turntable thrust bearing (including 2 steel washers)
*73349	57	Support—Turntable mounting support including guide rods
*73350	58	Screw—#6 x ⅝" fillister head set screw to mount turntable support (4 required)
*73351	59	Control—Reject manual control including
———	59A	—Arm (Part of 59)
71228	60	Spring—Reject arm spring
72926	61	Roller—Turntable shaft knurled roller
71200	62	Screw—#8-32 x ¼" bristo head set screw to fastern knurled roller (2 required)
———	†63	Washer—lockwasher for mounting centerpost
71236	64	Nut—Hex nut for centerpost
———	†65	Screw—#8 R.H. ¼" screw to mount turntable support
71183	66	Motor—Motor (117 volt, 60 cycle) complete with drive idler, tension spring, mounting grommets, shaft bushing and mounting bracket—less power cord
71413	66A	Wheel—Drive idler wheel for motor stamped 407B9
71177	66B	Pin—Cotter pin (hairpin spring) for drive idler wheel
71414	66C	Spring—Drive idler wheel tension spring for motor stamped 407B9
*71244	66D	Grommets—Motor mounting grommets
*73359	67	Fastener—Snap fastener to mount motor (3 required)
*73360	68	Grommet—Rubber grommet to mount record changer (4 required)
*73361	69	Stud—Record changer mounting stud (4 required)
———	†70	Washer—#10 Flat washer (OD ½")
———	71	Screw—Phillips #10 x 32 x ½" flat head counter sunk screw used to connect shock mounts to motor board
30870	72	Plug—2 prong male AC plug

* This is the first time this Stock Number has appeared in Service Data.
† These parts are not stocked.

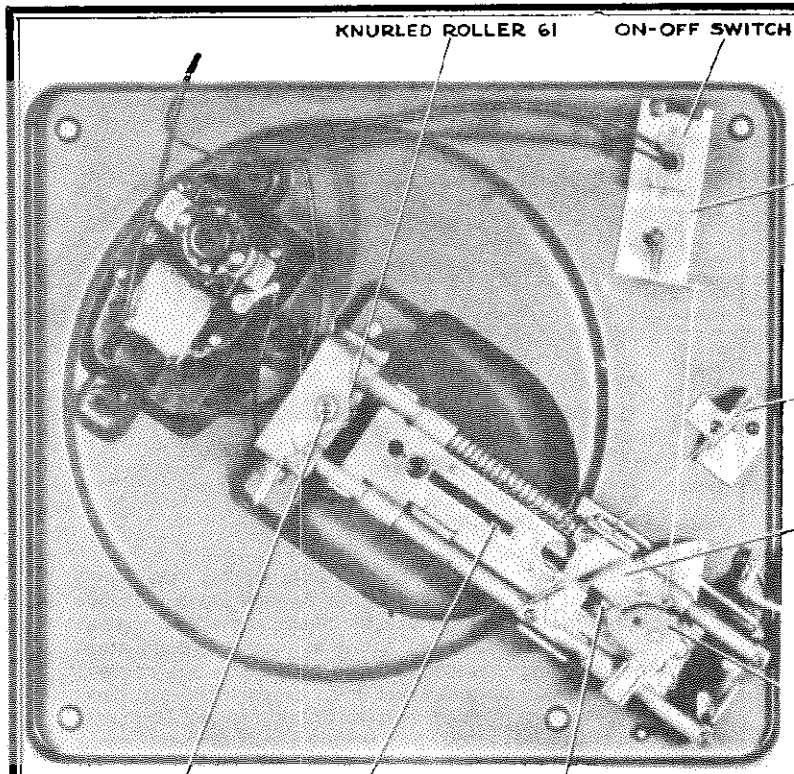

FIG. 11

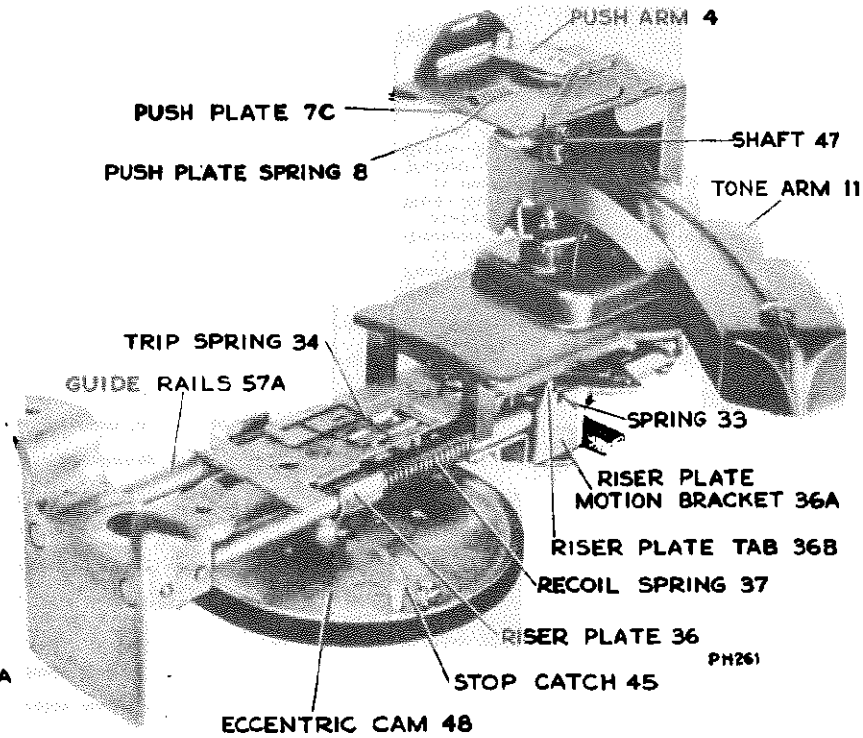

FIG. 12

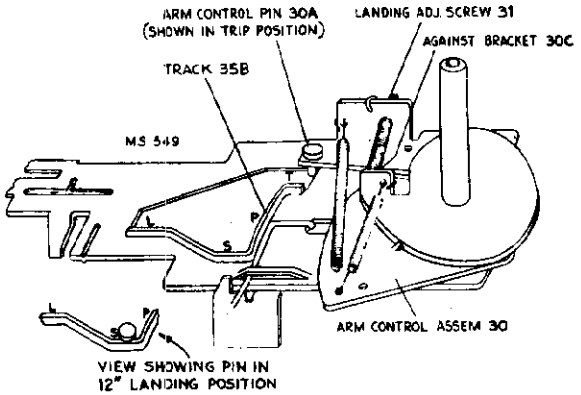

FIG. 8

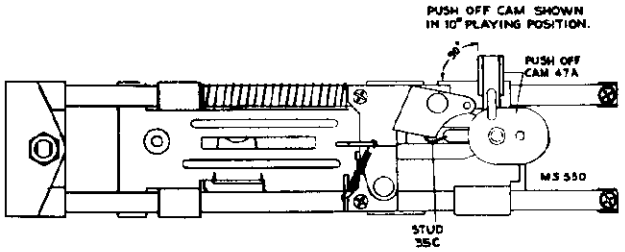

FIG. 10

RADIO CORP. OF AMERICA

MODEL 960276

CYCLE OF OPERATION

Turn record support to 10- or 12-inch position as desired and place a stack of records on supports.	1. Turning the record support positions the push-off cam 47A through the linkage of push-off arm 4 and push-off shaft 47. In so doing it determines the amount of movement of control plate 35 which in turn governs pickup landing.
Start-reject button.	1. Press down on tone arm; this actuates button on which it is resting. 2. Start-reject button actuates reject lever. 3. Reject lever transfers action to reject latch 59A through coupling wire 42. 4. The unlatching of reject latch allows eccentric cam 48 to be pulled against rotating knurled roller 61 which starts cycle.
Record plays.	1. While the record is being played and the tone arm moves towards the center of the record, the arm control pin 30A on arm control assembly 30 moves along track 35B as designated by "P," fig. 13. 2. As pickup moves into trip groove on record, tone arm control pin 30A moves into recess in control plate 35 at point indicated by "T," fig. 13. 3. Trip spring 34 pulls arm control plate 35 towards center post 53, and in so doing allows stop tab 35A on arm control plate 35 to disengage stop catch 45 on eccentric arm 48. **(In manual operation the manual lockout lever holds stud 35C thereby preventing arm control plate from moving forward and starting cycle.)**
Cycling starts.	1. Spring 49 pulls eccentric cam 48, causing rubber tire 48A to engage rotating knurled roller 61. 2. Eccentric cam 48 mounted on riser plate forces the riser plate assembly back along the guide rails 57A away from center post 53. 3. As riser plate moves, the push-off cam and shaft assembly 47 rides along the inclined track 36C of the riser plate 36. 4. This action results in the push-off cam and shaft assembly 47 being pulled down.
Tone arm raises and moves out.	1. The tone arm lift 16 sliding on shaft 47 is pulled downward, contacting lift bearing pin 11C, and causing tone arm to raise and clear record. 2. The riser plate tab 36B contacting curved portion of arm control assembly 30, which is coupled to tone arm support bracket assembly, causes the tone arm to be moved outward away from, and clear of the edge of the records. Arm control plate is also being carried along by tab 36B contacting spring 33.
Record is separated and drops to turntable.	1. As riser plate 36 continues to travel further along guide rods 57A, the riser plate motion bracket 36A contacts and rotates the push-off cam and shaft assembly 47. 2. Push-off arm 3, being coupled to push-off cam and shaft assembly 47, is rotated, causing push plate 7C to push record off of projection on center-post and dropping it to the turntable. Note: The small separator latch in the end of the center post functions as a thickness gauge, allowing only one record to be pushed off the projection at one time.
Tone arm is returned and is positioned for landing.	1. As eccentric cam 48 is returning to minimum diameter (out of cycle position), riser plate is being pushed back to normal position by recoil spring 37. At the same time, the push plate spring 8 is pushing the push plate 7C and push-off arm 4 back to normal position. 2. The portion of arm control assembly mounting the control pin, and the control bracket 30C, are hinged on the plate forming part of assembly 30. Since the pin 30A has followed the track 35B and the curved portion of bracket 30C was forced out by motion of tab 36B, the tension of spring 26 is tending to pull them together as the riser plate is returning to normal position. The governing factor in determining how far the bracket will be pulled in, is the setting of the landing adjustment screw 31.
Pickup lands.	1. During part of the change cycle when riser plate is in the outermost position, and carrying arm control plate along by tab 36B contacting spring 33, the stud 35C is stopped by cam 47A. This acts as a gauge to determine the point of contact of pin 30A on arm control track 35B. This cam having two different radii will govern the distance arm control plate can travel since this is set when the record size change is made. If the smaller radius side of cam 47A is toward stud 35C, the arm control pin 30A will ride portion of track 35B designated by "L," causing the pickup to land on 10-inch records. On the other hand, if the larger radius portion of cam is toward the stud, the pin will ride along track designated by "S," which determines landing point on 12-inch records.

FIG. 13

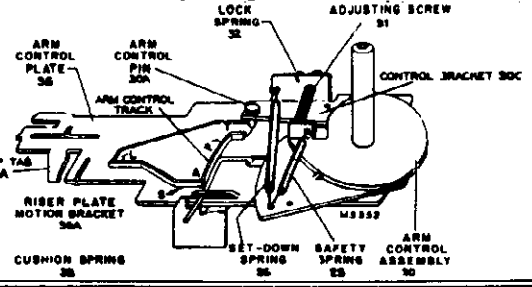

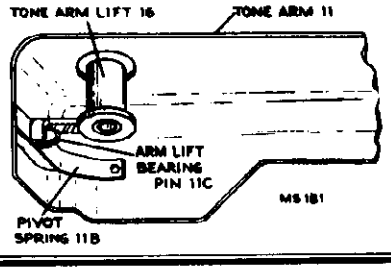

FIG. 14

MODEL 960276

RADIO CORP. OF AMERICA

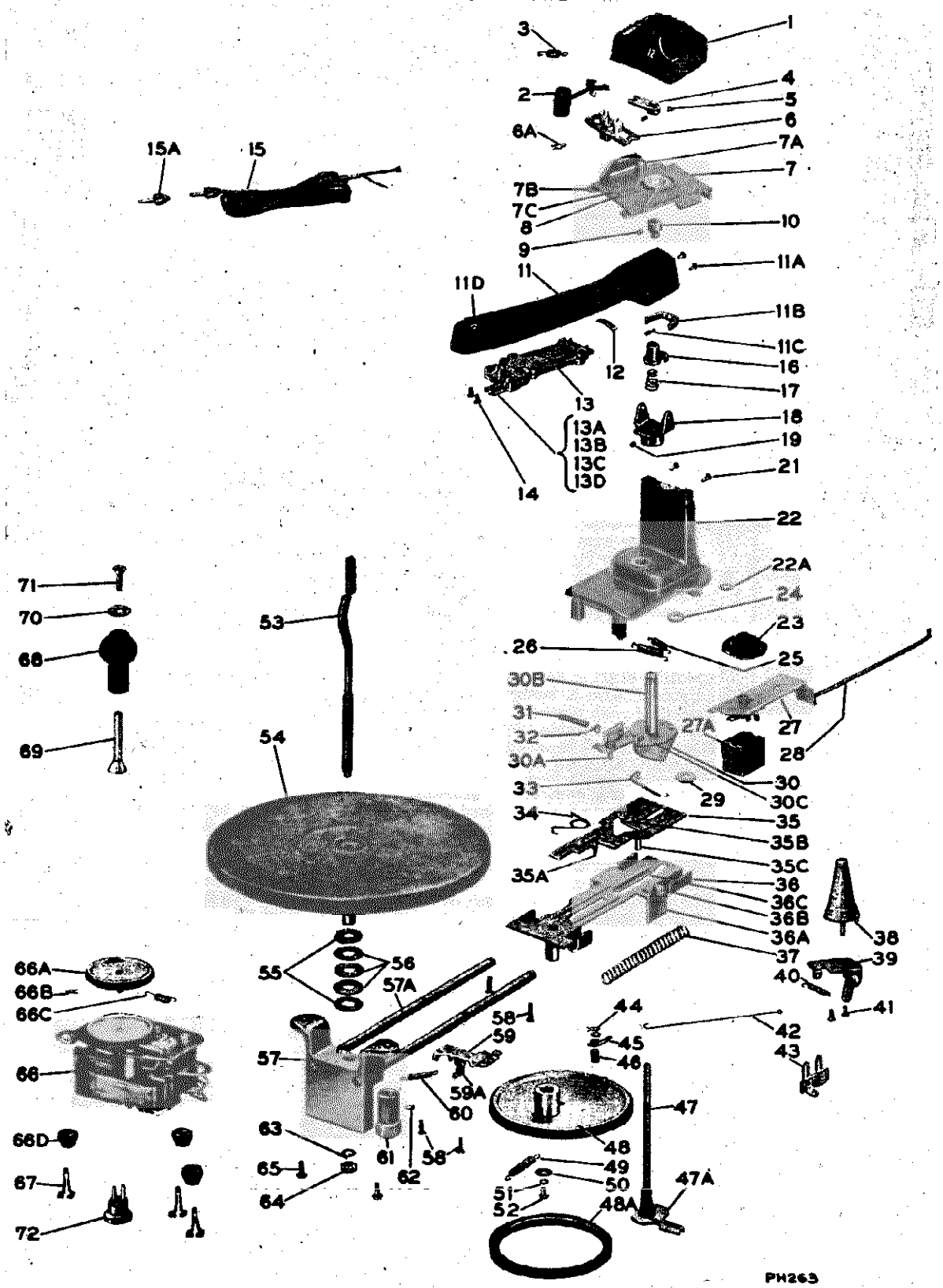

PHOTOGRAPH OF PARTS

FIG. 15

RADIO CORP. OF AMERICA MODEL 960276

CHANGER WILL NOT COMPLETE CYCLE

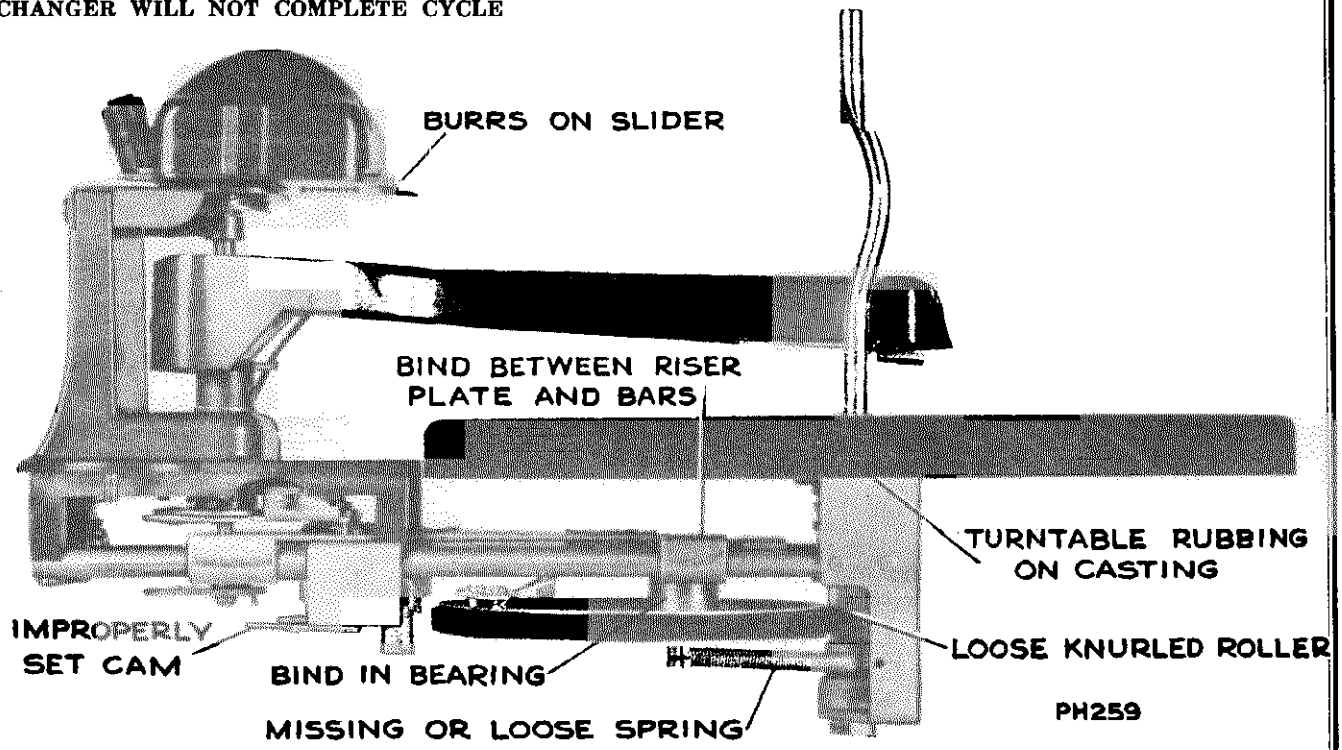

FIG. 16

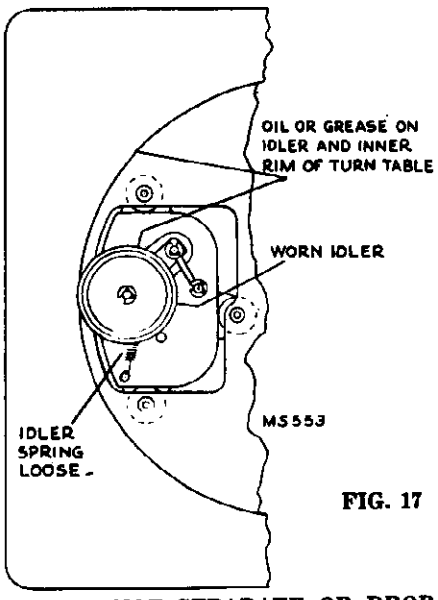

FIG. 17

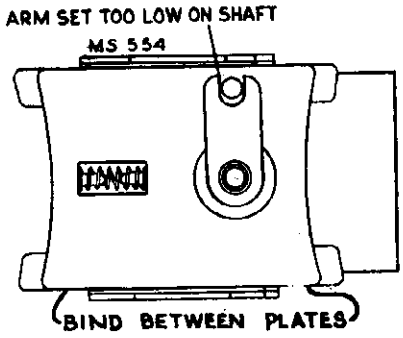

FIG. 18

RECORDS DO NOT SEPARATE OR DROP PROPERLY

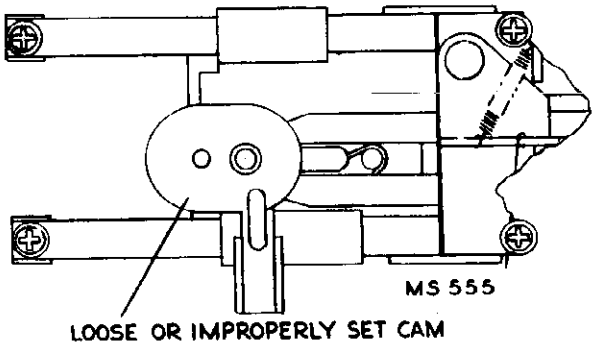

FIG. 19

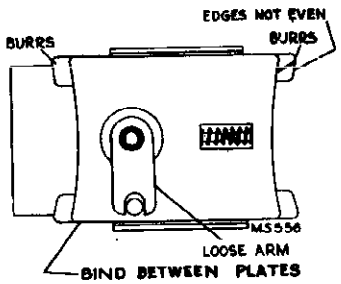

FIG. 20

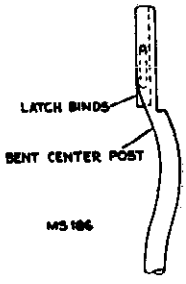

FIG. 21

MODEL 960276

RADIO CORP. OF AMERICA

PICKUP REPEATS GROOVES

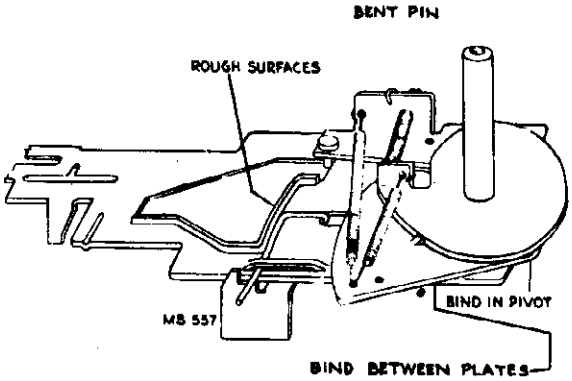

FIG. 22

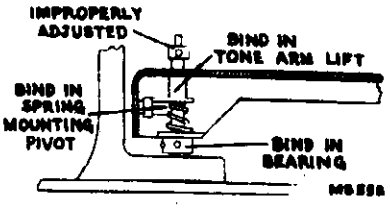

FIG. 23

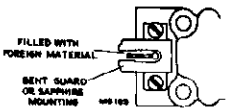

FIG. 24

"WOW" OR SLOW TURNTABLE SPEED

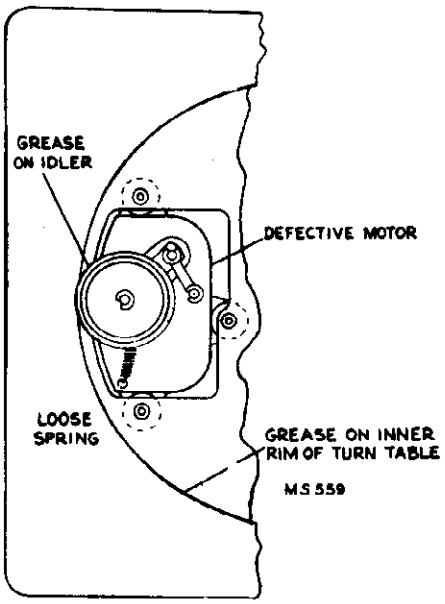

FIG. 25

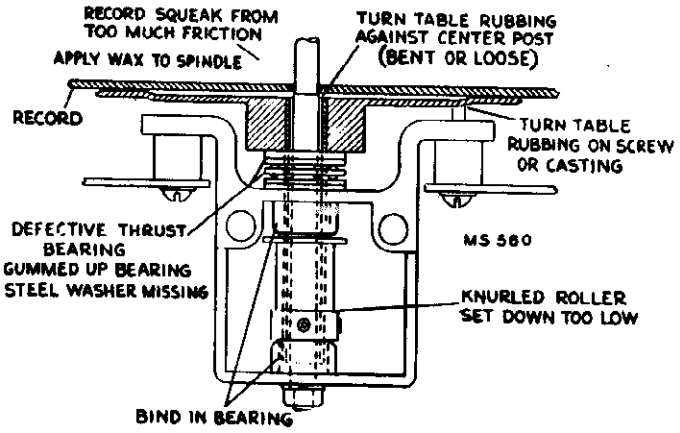

FIG. 26

CONTINUOUS TRIPPING

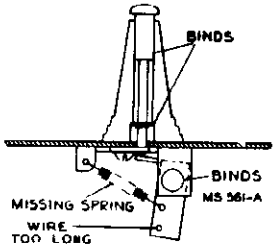

FIG. 27

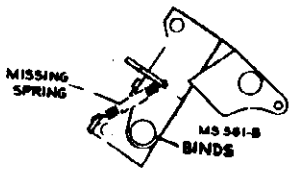

FIG. 28

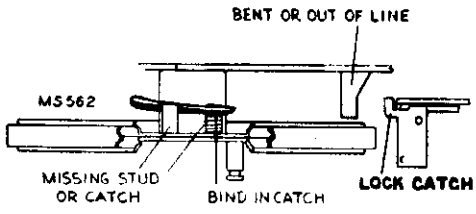

FIG. 29

RADIO CORP. OF AMERICA MODEL 960276

IMPROPER PICKUP LANDING

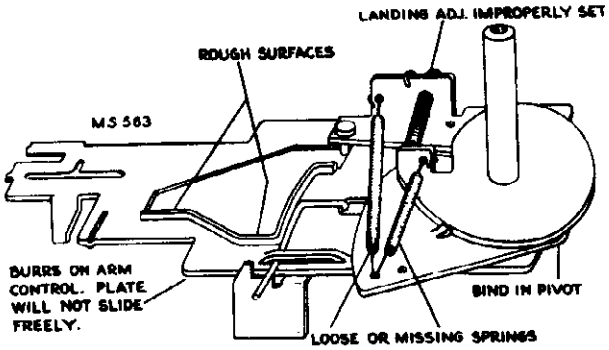

FIG. 30

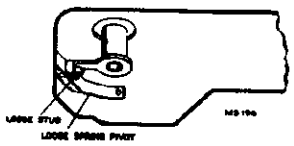

FIG. 32

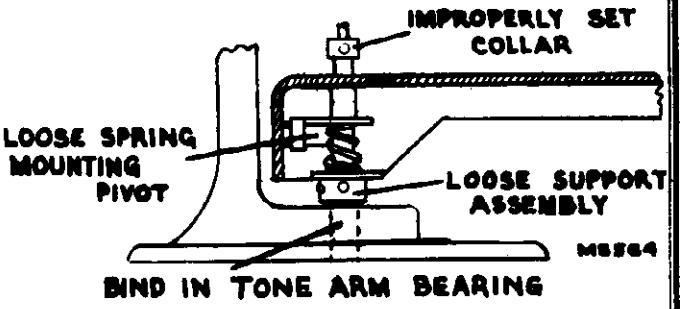

FIG. 31

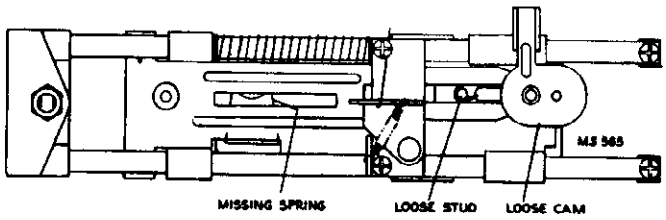

FIG. 33

FAILURE TO TRIP OR GO INTO CYCLE

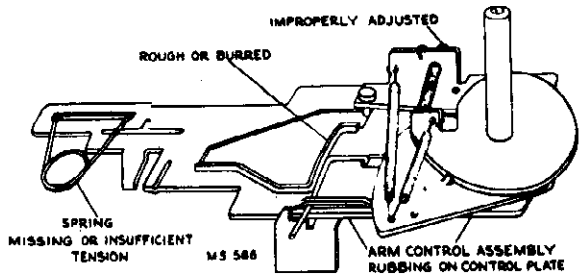

FIG. 34

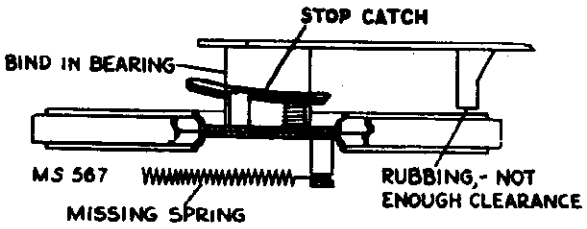

FIG. 35

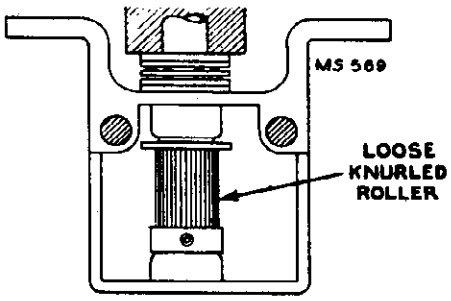

FIG. 37

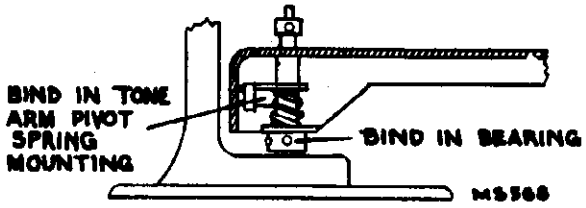

FIG. 36

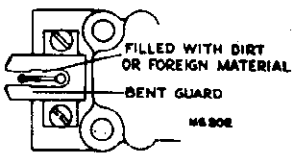

FIG. 38

Distorted or No Output

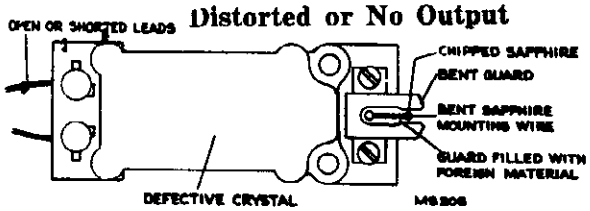

PREMATURE TRIPPING

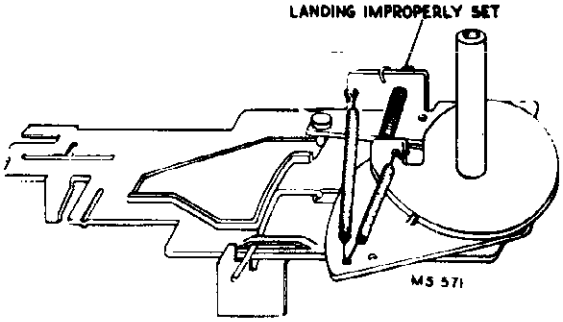

FIG. 40

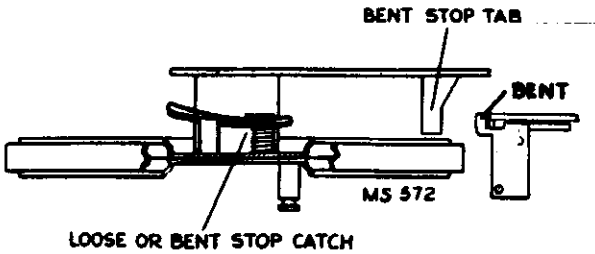

FIG. 41

MODEL 960276 RADIO CORP. OF AMERICA

RUMBLE OR HOWL

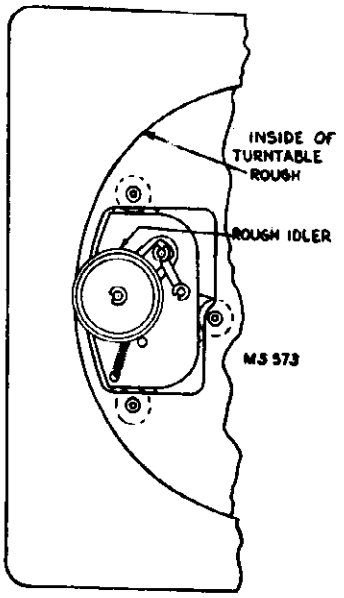

FIG. 42

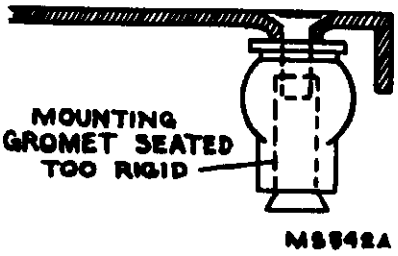

FIG. 43

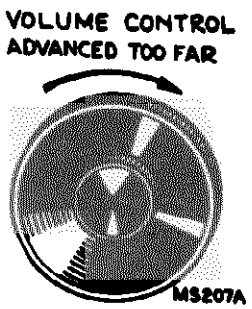

FIG. 44

TONE ARM

FAILS TO LEAVE REST

AUTOMATICALLY

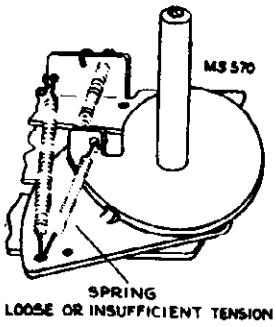

FIG. 45

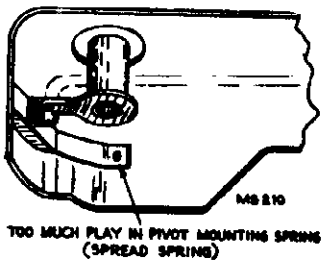

FIG. 46

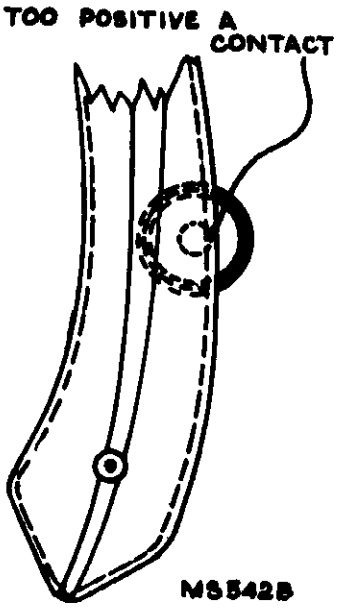

FIG. 47

RECORD DAMAGE

The spindle shelf and the top of spindle shaft should be free from burrs or rough edges to avoid scratching records or damaging record center holes. The record shelf edge should be smooth and be rounded only to a minute radius. Never round the bottom edge of the record separator latch.

A slight application of wax on the spindle shaft will prevent "squeal" of a stack of records.

LUBRICATION

Motor

Motor is lubricated at factory to provide normal operation for a long period of time.

If it becomes necessary to lubricate, use SAE #10 motor oil to saturate the felt wicks on the motor bearings.

Main Bearing

Use STA-PUT #512 or SAE #30 motor oil.

Slides and Levers

Use STA-PUT #512.

STA-PUT can be purchased from E. F. Houghton & Co., 303 W. Lehigh Ave., Phila., Pa.

REPLACEMENT OF SAPPHIRE

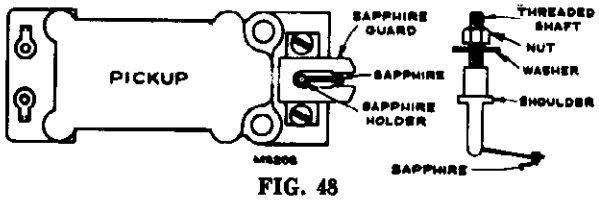

FIG. 48

Caution: Never bend the sapphire support wire. Extreme care should be used when loosening the nut so that the twisting motion does not break the crystal. Remove the two screws holding the sapphire guard in place and remove guard. Remove the small nut and washer on the threaded shaft of the sapphire holder and gently push the shaft through the hole in the armature shaft until the sapphire holder assembly comes free. Do not use force or the crystal may be broken.

Insert threaded shaft of replacement sapphire holder through armature shaft and replace the washer and nut. Make sure that the sapphire is in the correct position. Take hold at the lower end of the shaft with a pair of pliers while tightening the nut, being very careful so as not to strip the threads or break the crystal. Replace the sapphire guard, positioning it by means of the oversize screw slots. Make certain that the sapphire and its supporting wire are centered in the guard. Tighten the guard screws. Before using, check to see that the sapphire projects far enough (approx. .020) beyond the guard so that the guard will not strike the record. If necessary, bend the guard a little.

SEARS, ROEBUCK & CO. MODELS 101.211, 101.211-1, 101.211-2, 101.211-3, 101.211-4

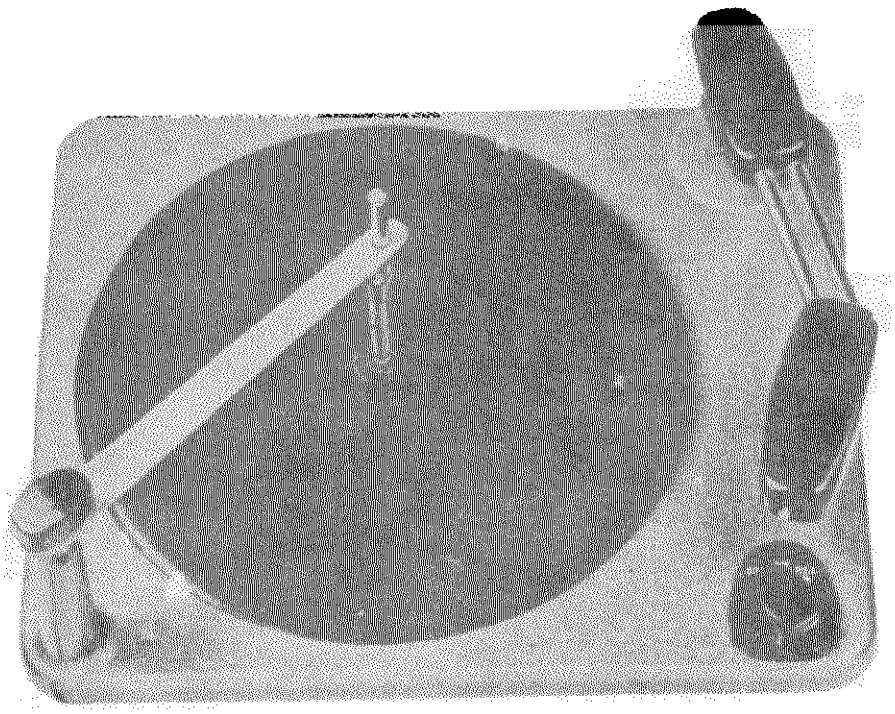

The Models 101.211-1 and 101.211-1 are designed to automatically change as many as ten 12-inch, twelve 10-inch or ten intermixed records of standard commercial dimension with a minimum of record wear and to manually play any standard record up to twelve inches in diameter and to automatically shut off after last record has been played.

Model Differences:

Both Record Changers are similar, however, plastic parts on the 101.211-1 are finished in dark brown.

Chassis 101.211-2 same as 101.211-1 except uses ungrounded Syntronic pickup cartridge in pick-up arm with adapter plate.

101.211-3 - Chassis same as 101.211-1 except uses new style pickup arm with ungrounded Syntronic pickup cartridge.

101.211-4 - Chassis same as 101.211-3 except uses grounded Syntronic pickup cartridge.

Power Requirments

These changers have been designed to operate on 110 Volt 60 Cycle A. C. current unless otherwise indicated.

LOCATION NUMBER	PART NUMBER	DESCRIPTION
1	R57700	Knob - (101.211)
1	R57786	Knob - (101.211-1)
2	R49655	Russell Drive Wheel Assembly
3	R57701	Record Support Assembly
4	R57702	Speed Nut
5	R57703	Turntable Assembly
	R57704	Turntable Washer
	R57705	Turntable Bearing
	R57706	Retainer Spring - Turntable
6	R57707	Shipping Bolt
7 Part of	Item 14	Trip Lever
8	R57708	Adjusting Ring Spring
9	R57709	Set Screw
10	R57710	Adjusting Screw
11	R57711	Adjusting Ring
12	R57712	Hinge Pin
13	R57713	Lift Bed Screw
14	R57714	Hinge Body Assembly
15 Part of	Item 11	Adjusting Screw
16 Part of	Item 14	Catch
17	R57715	Catch Spring
18 Part of	Item 14	Hinge Cam
19	R57716	Cable & Clip Assembly

MODELS 101.211, 101.211-1, 101.211-2, 101.211-3, 101.211-4

SEARS, ROEBUCK & CO.

LOCATION NUMBER	PART NUMBER	DESCRIPTION
20	R52826	Crystal Cartridge
21	R57718	Pickup Arm - (101.211)
21	R57788	Pickup Arm - (101.211-1)
22	R57719	Screw - #4 Type "2"
23	R57720	Escutcheon - (101.211)
23	R57787	Escutcheon - (101.211-1)
24	R57721	"C" Washer
25	R57700	Knob - (101.211)
25	R57786	Knob - (101.211-1)
26	R57722	Ratchet Arm Assembly
27	R57723	Pawl Spring
28	Part of Item 26	Drive Pin
29	Part of Item 26	Ratchet Pawl
30	R57724	Trip Rod Bearing
31	R57725	Screw - #6 x 1/4 Type "2"
32	R57726	"C" Washer
33	R57727	Fiber Washer
34	R57728	Ratchet Assembly
35	Do Not Stock	Control Shaft
36	R57729	Fiber Washer
36	R57730	"C" Washer
37	R57731	Switch Cover
38	R57725	Screw - #6 x 1/4 Type "2"
39	R57732	Reject Spring
40	R57733	Switch Assembly
41	R57734	Control Link
42	R57735	Cutoff Lever
43	R57736	Set Down Locater
44	R57737	Control Lever
44	R57744	Tubular Rivet
45	R57719	Screw - #4 x 1/4" Type "Z"
46	R57738	Lever - Spring
47	Do Not Stock	Screw - #8-32 x 3/8"
48	R57739	Lift Arm Assembly
49	Part of Item 51	Pawl Spring
50	Do Not Stock	Cam Bearing
51	R57740	Cam Assembly
52	R57741	"C" Washer
52	R57742	Fiber Washer
53	Do Not Stock	Roller
54	R57743	Cam Stud Sleeve
55	R419	Cam Locater Spring
56	R57744	Tubular Rivet
57	R57745	Control Crank
58	R57746	Speed Nut
59	R57747	Lift Arm Washer
59	R57748	Fiber Washer - 1/64" Thick
59	R57749	Fiber Washer - 3/64" Thick
60	R57728	Ratchet Assembly
61	R57750	Trip Rod Bearing
62	R133	Trip Spring
63	Part of Item 51	Clutch Pawl
64	R57751	"C" Washer
65	R57752	Screw - #6 x 5/8 Type "Z"
66	R57753	Grommet Spacer (Russell)
67	R57754	Grommet (Russell)
68	R57755	Motor Assembly - 110 Volt - 60 Cycle (Russell)
68	R62360	Motor Assembly - 110 Volt - 50 Cycle (Russell)
69	R57756	"C" Washer
70	R57757	Spindle Assembly
70	R57758	Spindle Shaft & Base Assembly
71	R57759	Record Pusher
72	R57760	Pusher Pin
73	R57761	Pusher Spring
74	Part of Item 78	Pusher Shaft
75	Part of Item 5	Turntable Hub
76	R57705	Turntable Bearing
77	R57763	Spindle Set Screw
78	R57764	Pusher and Roller Assembly
79	Part of Item 78	Spindle Roller
80	Do Not Stock	Roller Plunger
81	Part of Item 78	Roller Spring
82	R57765	Turntable Bearing Washer
83	R57766	Fiber Washer
84	R57767	Pinion Gear
85	R57768	Pusher Shaft Spring
86	R57769	Guide
87	R57770	Spindle Guide Spring
88	R57771	Spindle Pin
89	R57772	Bearing Cone
90	R57773	Bearing Ball
91	R57774	Fiber Washer
92	R57775	"C" Washer
93	R57776	Safety Spring
94	R57777	Left Rod
95	R57778	Left Rod Spring
96	R57779	Lock Spring
97	R57780	Hinge Bearing Assembly
98	R57781	Pickup Arm Locater Assembly
99	R57782	Bearing Spacer
100	R57783	Return Spring
101	R57736	Set Down Locater
102	R57722	Ratchet Arm Assembly
103	R57784	Pinion Spring
104	R57706	Retainer Spring

Chassis 101.211-2

20	R65100	Cartridge - Syntronic Pickup (grounded)
	R57881	Plate - Adaptor - Syntronic Pickup Attaching
	R57888	Screw - Syntronic Pickup Attaching

SEARS, ROEBUCK & CO. MODELS 101.211, 101.211-1, 101.211-2, 101.211-3, 101.211-4

RECORDS

The mechanism will operate automatically on all standard records. In case of records not having the standard "trip groove" (a spiral groove near the center of record) when tone arm reaches end of record, turn control knob to "REJ" to bring next record to playing position.

Warped, worn, dished or dirty records will cause poor reproduction. Records should be stored away from heat in a record album or laid flat. Clean records periodically with a soft, lint-free cloth.

AUTOMATIC OPERATION

Loading:

(1) Pull straight up on record support knob (1) until record support (3) clears spindle.
(2) Swing record support in either direction until pin in shaft drops into locating groove. As many as ten 12-inch, twelve 10-inch or ten intermixed records may be loaded at one time.
(3) Carefully place records on spindle and lower to offset shoulder.
(4) Steady records with one hand and replace record support over spindle. Gently press down on record support knob until records are held parallel with turntable.

Starting:

To start operation of record changer, turn control knob (25) clockwise to "REJ" and release. Changer will operate automatically until last record has been played. Control knob then turns to "OFF" position, pickup arm (21) returns to rest and machine automatically stops.

Reject:

To reject a record at any time while it is playing, turn control knob to "REJ" and release.

Manual Stopping:

To turn off changer before last record has been played, turn control knob to "OFF", lift pickup arm from record and replace on rest.

Unloading:

To remove records from turntable, lift up on record support knob and swing record support in either direction until pin in shaft drops in locating groove. Carefully lift entire stack of records straight up.

CAUTION: When loading or unloading changer, use care to prevent bending spindle. Records should never be left on the offset portion of the spindle as they may warp. If changer is turned off before all records have been played, remove unplayed records from spindle or operate "Reject" until all records have dropped to turntable.

MANUAL OPERATION

Starting:

(1) To play single records or home recordings, pull straight up on record support knob until record support clears spindle. Swing record support in either direction until pin in shaft drops into locating groove.
(2) Lower record to offset shoulder of spindle and tilt toward back of tone arm. Carefully work record past offset shoulder.
(3) Turn control knob to "ON" and push down on trip lever (51) located near back of tone arm. Machine will then operate independently of cycling mechanism - PROVIDED - tone arm is moved all the way in to the spindle before it is returned to the rest after the record is played. When playing "inside out" records, move tone arm all the way in to spindle before setting it down on first playing grooves of the record.

Repeating:

(1) To repeat a 10-inch record, remove any records remaining above offset shoulder of spindle.
(2) Pull straight up on record support knob until record support clears spindle.
(3) Swing record support in either direction until pin in shaft drops into locating groove.
(4) Carefully lift records from spindle. Do not replace record support over spindle. Changer will repeat the record on the turntable until control knob is turned to "OFF".

MODELS 101.211, 101.211-1, 101.211-2, 101.211-3, 101.211-4 SEARS, ROEBUCK & CO.

LUBRICATION

No lubrication should be necessary for the life of the changer, but in cases of unusual use or high operating temperature, the changer should be lubricated as follows:
(1) Hinge bearing (97).
(2) Ratchet arm (102) and set down locater plate (101).
(3) Cam faces on lift arm (48), lift arm bearing, and lift arm cutoff rod bearings.
(4) Between lever spring (46) and cutoff rod (42).
(5) Heart shaped cam track on cam (51) and cam bearing (50).
(6) Spindle, between roller plunger (80) and roller spring housing (78) and between the roller spring housing and the spindle body.
(7) Turntable ball bearing (76).

Apply a small quantity of light machine oil to:
(1) Pickup arm locater assembly bearing (98) and ball bearing in pickup arm post (90).
(2) Ratchet pawl bearing (28).
(3) Trip rod bearings (30) and (61).
(4) Control lever bearing (35).

ADJUSTMENTS

NEEDLE SET DOWN: The set down position of the needle is adjusted by means of the two adjusting screws (10) & (15). If the needle is setting down too far out on the record, loosen the back screw (10) about 1/4 turn and tighten the front screw (15) to lock the adjustment in place. If the needle is setting down too far in on the record, loosen the front screw and tighten the back screw.

PICKUP ARM HEIGHT: The pickup arm height is adjusted by the screw (13) located on top of the tone arm lift rod. Turn the screw out or in until the underneath side of the tone arm clears the rest by 1/8" to 3/16".

SERVICE INFORMATION

CONTROL KNOB CANNOT BE TURNED TO "ON" POSITION

Machine stalled in cycle. Turn turntable carefully by hand until the control knob is free.

TURNTABLE DOES NOT REVOLVE WHEN CONTROL KNOB IS TURNED TO "ON" POSITION:

1. Machine stalled in cycle. Turn turntable carefully by hand until it starts rotating under its own power.
2. No current at motor:
   (a) Check to determine if current is reaching A. C. leads of changer.
   (b) Check switch to determine if it is closing.
   (c) Check wiring and soldered terminals in changer.
3. Motor defective:
   Remove turntable to allow motor to operate without load. If current is reaching the motor and pulley does not rotate, the motor is defective. Repair or replace.
4. Motor idler wheel not engaging turntable rim.
   If motor pulley is turning but turntable is not:
   (a) Check motor idler assembly to determine if it is free to contact the motor pulley and the turntable.
   (b) Wipe off the inside rim of the turntable to remove flock or if oily, clean turntable rim and rubber tire of idler wheel with carbon tetrachloride.
5. Turntable bearing tight:
   Hold idler away from turntable or remove idler wheel and rotate turntable by hand to see if it is free. If binding occurs, remove turntable, clean out foreign matter and lubricate with light oil.

CHANGER DOES NOT CYCLE WHEN CONTROL KNOB IS TURNED TO "REJ" POSITION:

1. Changer stalled or motor not driving turntable. See "TURNTABLE DOES NOT REVOLVE WHEN CONTROL KNOB IS TURNED TO "ON" POSITION".
2. Manual reject not actuating trip:
   Turn control knob to "REJ" position, hold and see if leg on control lever (44) is contacting the stud on the bottom of the ratchet casting (34) and turning the trip rod (60) sufficiently to allow the trip rod to disengage the trip.

3. Trip not actuating clutch:
When the trip rod (60) is turned, if the clutch pawl (63) does not move forward, engaging the pinion teeth, check for a loose pawl spring (49) or binding between the clutch pawl and the cam. If binding occurs, clean out foreign matter and check for freedom but do not oil.

RECORD DOES NOT DROP WHEN CHANGER CYCLES:

1. Spindle pusher shaft broken:
If the pusher shaft (74) is broken, the roller assembly (78) will drop out of the spindle (70). To replace the roller assembly, loosen the spindle screw (77) and remove the spindle. Slip the pusher shaft return spring (85) over the pusher shaft and insert the roller assembly in the spindle. Turn the milled flat section at the top of the pusher shaft until it faces out of the milled opening in the spindle. Press up on the roller until it raises about 1/8". Hook the pusher (71) around the pusher pin (72) and press the pusher back until it touches the spindle body. Push down and back on the pusher and slightly up on the bottom of the roller assembly until the pusher snaps into place.
2. Pusher in spindle not moving far enough forward to eject a record:
The pusher (71) should move up inside the spindle body, then move forward until it has reached a point flush with, or a maximum of .010" beyond the spindle body. To assure tha the pusher is all the way forward, the spindle roller should be raised high enough by the lift arm (48) at the top of the cam face to slightly compress the roller spring (81). See "TURNTABLE STALLS DURING CYCLE" - 7. If the roller spring is compressed and the pusher does not move far enough forward to eject a record, the spindle should be replaced. If a record is not pushed completely off the ledge, it may hang up on the spindle momentarily, then drop on the pickup arm when it moves in over the turntable.
3. Lift arm screw loose:
Check screw (47) to determine if it is turned all the way in.
4. Pusher raises outside spindle body:
When the changer cycles, the pusher (71) should first rise up inside the spindle body, then move forward inside the center hole in the record. If the pusher rises outside the spindle body, it will raise the record instead of pushing it off the spindle ledge. Check the pusher shaft (74) to see if it is straight. If the shaft is bent, it will force the pusher forward prematurely.
5. Lift arm roller broken off:
If the lift arm roller (53) is broken off, the lift arm (48) will not turn when the cam (51) revolves.

TWO RECORDS DROP AT ONCE:

1. Hole in record too large:
Check the diameter of the hole in the record. An oversize hole will cause two records to drop at once.
2. Spindle slide not fully down:
If the spindle slide is not all the way down, more than one record may be dropped at a time.
   (a) Check the slide to be sure it is free and does not bind at any point. Clean out foreign matter or straighten if necessary. Do not oil.
   (b) When records are placed on the spindle, be sure the slide is all the way down. The slide will normally raise slightly as a record is being dropped but it should return to place immediately.
3. Record support binding on spindle or bent out of square with the shaft.
The record support must be able to slide freely by gravity down the spindle. If the support does not follow the records down as they are being ejected, two or more records may be ejected at once.
If binding occurs:
   (a) Check the spindle to determine if it is straight. Bend carefully with the fingers if necessary.
   (b) Straighten the record support (3) if it is not square with the record support shaft.
   (c) If the hole in the record support is not centered over the spindle after checking (a) and (b), bend the support shaft post on the base plate until the hole in the record support is centered over the spindle.
   (d) When the pin in the record support shaft has just entered the slot in the record support shaft post on the base plate, the play in the record support as it is swung from one side to the other should be equal on both sides of the spindle. To correct bent position, hold the support shaft and carefully force the record support into the proper position. If the support is loose on the shaft, remove the knob and re-stake with hammer and punch.
4. Record pusher defective:
The record pusher (71) may be deformed, etc. This may cause two records to drop at once. Replace the pusher.

©John F. Rider

MODELS 101.211, 101.211-1, 101.211-2, 101.211-3, 101.211-4 SEARS, ROEBUCK & CO.

RECORD HITS PICKUP ARM:

1. Pusher in spindle not moving far enough forward to eject record. See "RECORD DOES NOT DROP WHEN CHANGER CYCLES". - 2.
2. Lift arm screw loose:
   Tighten lift arm screw (47).
3. Pusher extending beyond outside diameter of spindle:
   Cycle changer by hand until roller assembly (78) is at the top of its travel. Using new record as a gauge pass it over spindle to see if it binds at any point. File off high points on pusher (71) with a fine file until record will pass freely over spindle.
4. Pickup arm not adjusted properly:
   The adjustment procedure for the needle set down point is given under "ADJUSTMENTS" If the hinge bearing (97) has been removed or the hinge bearing set screw (9) has been loosened, the relationship between the hinge bearing and the pickup arm locater assembly (98) must be reset. The procedure is as follows:
   Loosen the set screw (9) sufficiently to allow the hinge bearing to slide on the pickup arm locater assembly shaft. The set screw may be adjusted with an Allen wrench through the hole in the adjusting ring (11) located between the two adjusting screws (10) and (15). Place a 1/32" shim between the set down locater (101)and the ratchet arm (102). Turn the control knob to the "OFF" position. Place the pickup arm on the rest. In this position the arm extending from the set down locater should be engaged by the turned up leg on the control lever (44). Take up all the play between the parts by pressing up on the bottom of the ratchet arm and down on the top of the hinge bearing. Tighten the hinge body set screw (9) and remove the shim.

NEEDLE DOES NOT SET DOWN ON 10" RECORD IN PROPER POSITION:

1. Pickup arm not adjusted properly, See "RECORD HITS PICKUP ARM" - 4.
2. Hinge catch does not return to 10" record position when changer cycles.
   (a) Stop the machine in mid cycle when the lift arm (48) has moved as far out as it will go and is about to move back to its starting position. Lift the pickup arm and see if there is a gap of at least 1/64" between the end of the leg on the catch (16) and outside step on the adjusting ring (11). The catch should be free to allow it to be pulled forward against the stop at the end of the leg on the adjusting ring. If there is not enough gap, check the setting of the hinge body and the pickup arm locater, see "RECORD HITS PICKUP ARM" - 4. If the setting is correct, the cam face on the lift arm (48) which contacts the round stud on the bottom of the ratchet arm (26) may be bent. The ratchet arm should be forced around far enough to bring the pickup arm out until the stop on the bottom of the hinge casting meets the stop in the base plate; then, to assure that the pickup arm is out as far as it will go, the lift arm should move the ratchet arm a few degrees further around, which will slightly compress the safety spring (93) and hold the pickup arm out firmly against the stop.
   (b) Lubricate the hinge bearing with lubriplate. Do not use heavy grease. If the bearing between the hinge bearing and hinge body binds, the safety spring will compress instead of bringing the hinge body around firmly against the stop.
3. Binding between safety spring and ratchet arm:
   If the safety spring (93) binds against the ratchet arm and does not hold the casting on the bottom of the pickup arm locater assembly (98) against the stop inside the ratchet arm, irregular needle set down will result. Disassemble the pickup arm locater assembly (98) by removing the lift arm (48), loosening the hinge bearing set screw (9) and pulling the ratchet arm and pickup arm locater assemblies down from the bottom of the changer. Hold the pickup arm locater shaft in one hand, turn the ratchet arm assembly to slightly compress the safety spring, release, and see if the safety spring returns the pickup locater casting firmly against the stop surface in the ratchet arm assembly. If binding occurs, remove the safety spring, see if the pickup arm locater casting turns freely in the ratchet arm casting. Remove burrs or sharp edge on end of safety spring, stretch safety spring a little to increase tension and replace.
4. Hinge catch does not disengage from the hinge cam:
   When the trip lever (7) has been depressed, it is held in the position until the catch (16) is disengaged, see "NEEDLE DOES NOT SET DOWN ON 12" RECORD IN PROPER POSITION" - 6. When the cycle is completed, if the catch does not disengage from the hinge cam (18):
   (a) Check to determine if the leg on the catch (16) is sliding down the incline on the leg on the adjusting ring (11), see "NEEDLE DOES NOT SET DOWN ON 12" RECORD IN PROPER POSITION" - 7.
   (b) The catch (16) and the hinge cam (18) are not disengaging when the catch leg is resting on the inside step on the adjusting ring. If this occurs, file the edge of the catch which contacts the hinge cam until the two parts have a clearance between them of about 1/64" when the leg on the catch is on the inside step on the adjusting ring.

©John F. Rider

SEARS, ROEBUCK & CO. MODELS 101.211, 101.211-1, 101.211-2, 101.211-3, 101.211-4

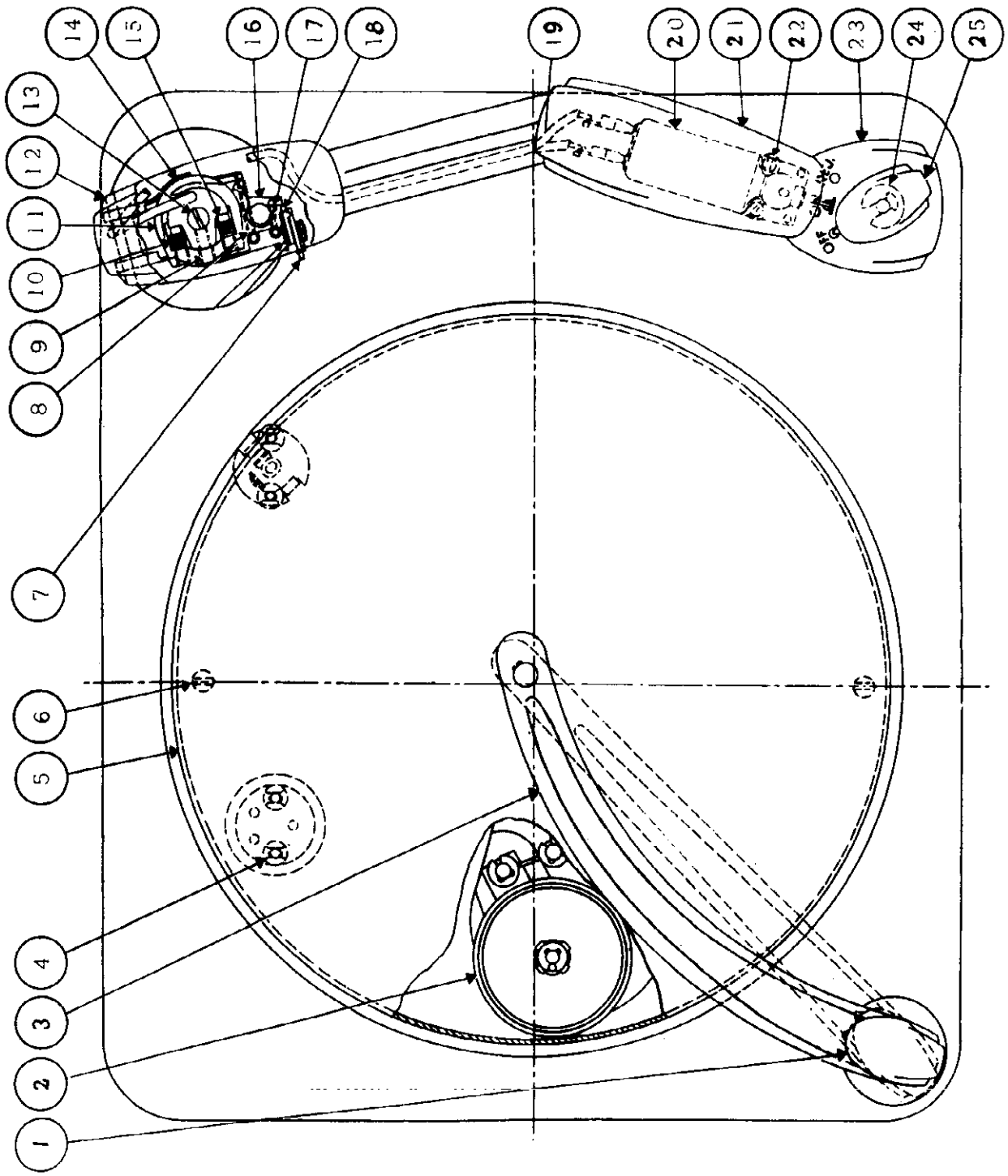

Figure 1

©John F. Rider

MODELS 101.211,
101.211-1, 101.211-2,
101.211-3, 101.211-4

SEARS, ROEBUCK & CO.

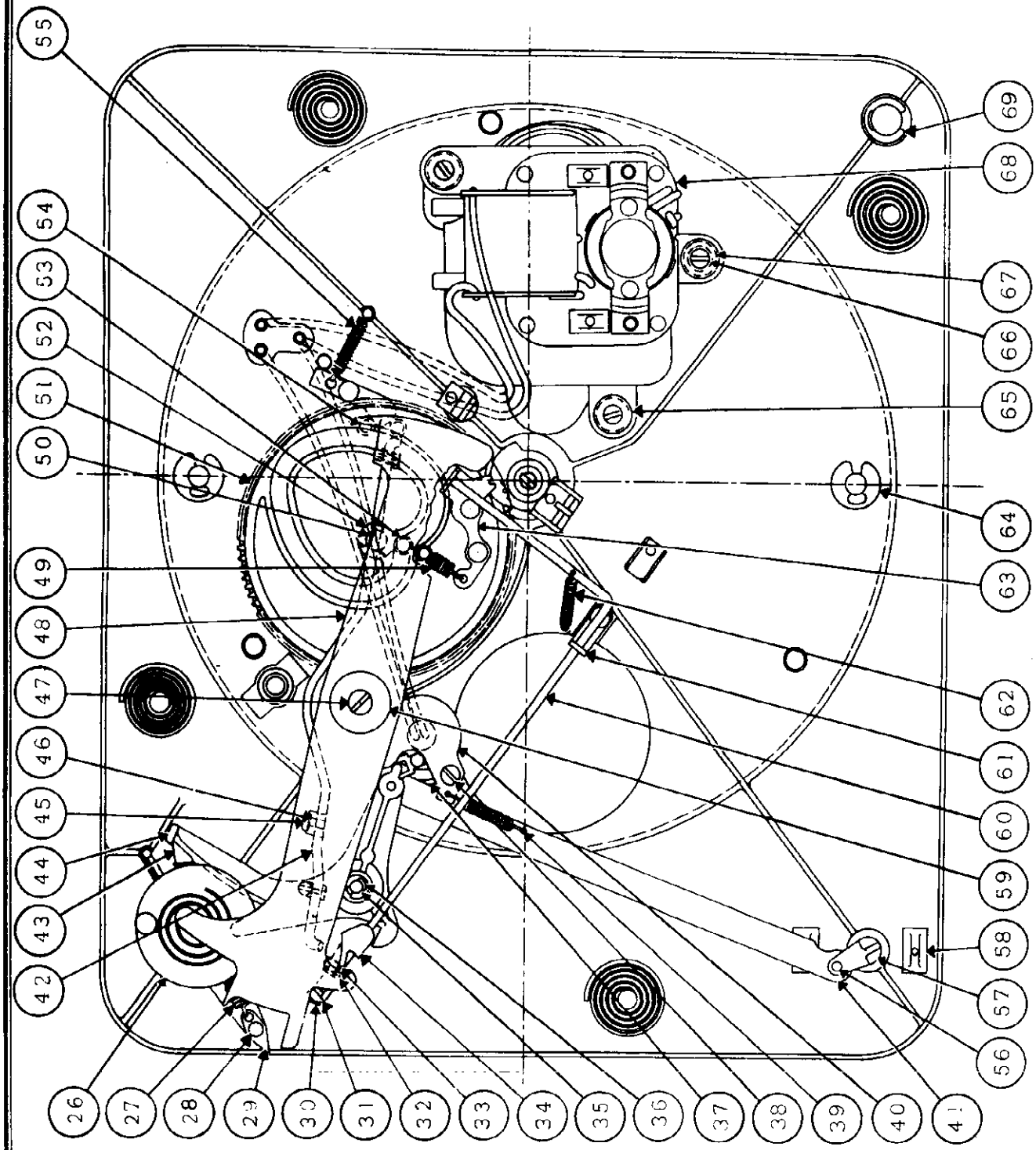

Figure 2

©John F. Rider

SEARS, ROEBUCK & CO. MODELS 101.211, 101.211-1, 101.211-2, 101.211-3, 101.211-4

NEEDLE DOES NOT SET DOWN ON 12" RECORD IN PROPER POSITION:

1. Diameter of 12" record undersize:
   The set down position of the needle for 12" records is determined by the edge of the record striking the trip lever (7). If a 12" record has a diameter of less than the standard size of 11 7/8" plus or minus 1/32", it may fail to depress the trip lever far enough.
2. Enlarged center hole in record:
   An enlarged center hole might fail to set the trip lever because it could produce the same effect as a small record.
3. Pickup arm not adjusted properly:
   See "RECORD HITS PICKUP ARM" - 4.
4. Binding between safety spring and ratchet arm:
   See "NEEDLE DOES NOT SET DOWN ON 10" RECORD IN PROPER POSITION" - 3.
5. Trip lever does not cock when 12" record drops:
   Allow a 12" record to drop to the turntable and shut off the changer just after it falls, before the pickup arm has a chance to move in over the record. The trip lever (7) should be forced down until the step on the hinge cam (18) passes the edge of the catch (16), preventing the hinge cam and the trip lever from returning to their original position. If the trip lever does not stay down in a depressed position:
   (a) Check the catch (16) to see if it is free to move forward and engage the hinge cam.
   (b) If the stop on the hinge body (14) is defective, it might allow the pickup arm to move too far out, thus moving the trip lever away from the spindle. This will produce the same effect as an undersized record.
6. Hinge catch does not go into inside step on adjusting ring when trip lever is depressed:
   When the trip lever (7) is tripped by a falling 12" record, the leg on the catch (16) should be moved out over the incline between the inside and outside steps on the adjusting ring leg and held in that position by the shoulder on the hinge cam (18) until the pickup arm starts to move in over the record. When this occurs, the leg on the catch should contact the incline and be moved out as it slides down the incline until the catch is disengaged and the trip lever can snap back up to a horizontal position. If the leg on the catch is not moved out far enough to enable it to slide down the incline, file about the 1/64" chamfer on the edge of the catch leg which contacts the incline.
   Check for binding between hinge body (14) and hinge bearing (97). Burrs on the bearing surfaces or lack of lubrication may prevent the hinge bearing from turning freely.

NEEDLE DOES NOT TRACK ACROSS RECORD PROPERLY:

1. Ratchet arm does not disengage from the set down locater when a cycle is completed.
   (a) There should be a 1/32" gap between the ratchet arm and the set down locater when the machine is not in cycle. If the gap is small enough to allow the parts to touch and bind as the needle moves across the record, the hinge bearing must be reset. See "RECORD HITS PICKUP ARM" - 4.
2. Hinge bearing binds.
   Place a block under the back end of the tone arm to prevent the needle from touching the turntable. With sensitive gram scale, check the amount of force required to move the pickup arm across the turntable. The force required should not exceed 2 grams. If the pressure required is excessive:
   (a) Check the ratchet arm and set down locater for binding. See 1, above.
   (b) Check the bearing in the pickup arm post for binding. The bearing is located below the hinge bearing (97). To inspect it, loosen the set screw (9) in the hinge bearing. Un-solder the pickup leads and pull them out through the hole in the hinge bearing. Pull up on the hinge and pickup assemblies. Clean foreign matter or corrosion from the bearings; Lubricate with light oil. To reset position, see "RECORD HITS PICKUP ARM" - 4.

CHANGER TRIPS BEFORE NEEDLE REACHES END OF RECORD:

1. Hole in record too large:
   If hole in record is too large, the grooves may turn eccentric with the spindle and cause premature tripping.
2. Binding in trip rod bearings:
   With the trip released, check the trip rod for play in the bearings. It should be free to turn without binding.

CHANGER DOES NOT CYCLE WHEN RECORD HAS BEEN PLAYED:

1. Binding in trip rod bearings. See "CHANGER TRIPS BEFORE NEEDLE REACHES END OF RECORD" - 4.
2. No eccentric trip groove on record:
   All standard records made today have an eccentric trip groove, but some records made in the past did not have this groove. When records of this type are being played the control knob must be turned to "REJ" at the end of the record.

MODELS 101.211,
101.211-1, 101.211-2,
101.211-3, 101.211-4

SEARS, ROEBUCK & CO.

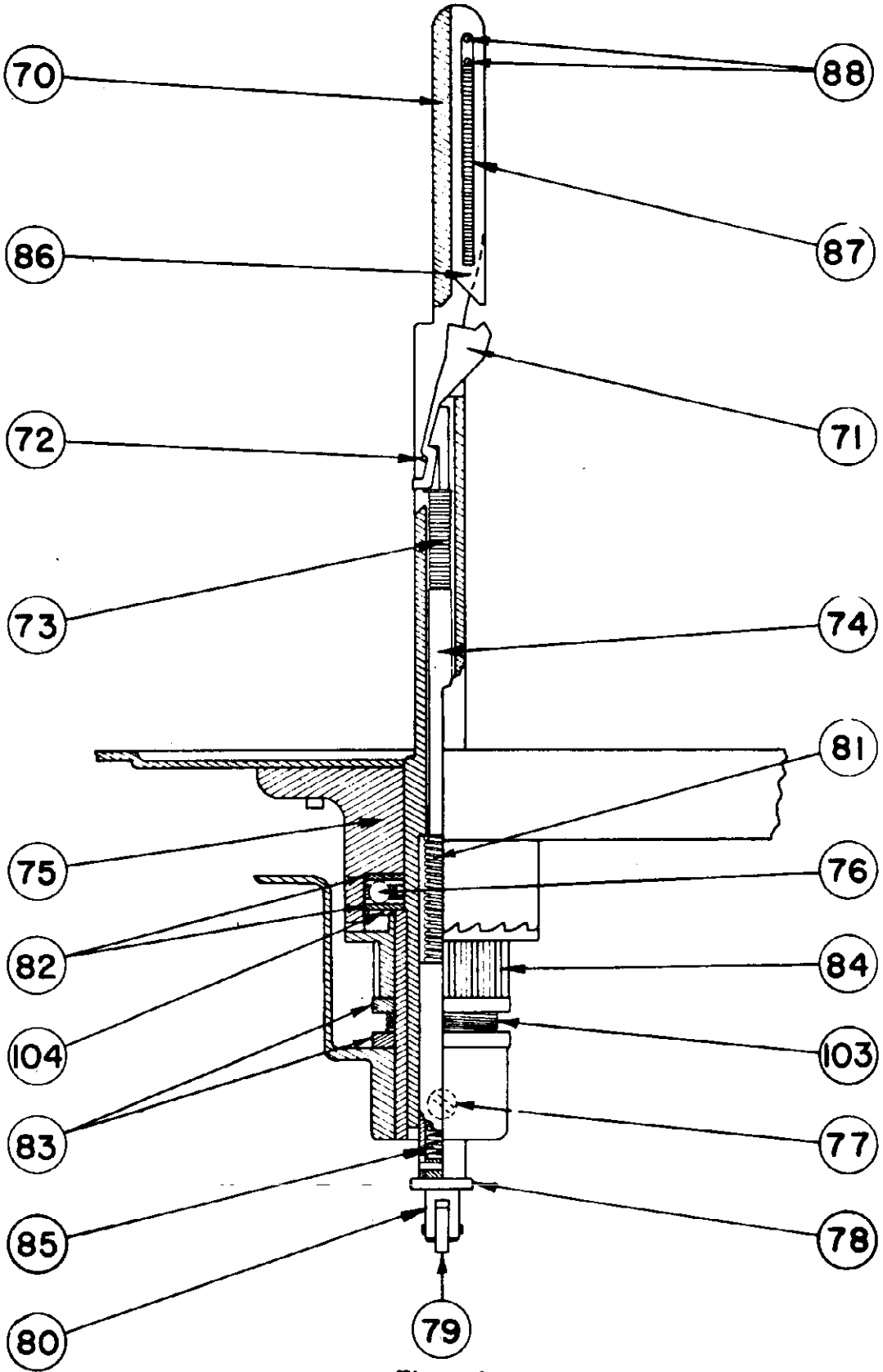

Figure 3

3. Ratchet pawl not engaging the ratchet sector:
The ratchet pawl (29) must press against the ratchet sector forcing it back when the motion of the pickup arm is reversed. If the pawl does not contact the ratchet sector or slides over it:
   (a) Check the pawl (29) for burrs around the hole.
   (b) Be sure the pawl is free to turn on the bearing. If the drive pin (28) is driven down too far causing binding, the pin may be relieved by tapping up on the shank.
   (c) Check the pawl spring (27) for insufficient tension.
   (d) Check the point on the pawl. It should be sharp to enable it to dig into the ratchet teeth. Sharpen with stone if necessary.
4. Ratchet sector too far away from ratchet pawl:
If the ratchet sector (34) is too far away from the pawl (29), the eccentric motion required to operate the trip will be excessive. If necessary, bend the trip bracket slightly to reduce this distance. If the sector is too close to the pawl, excessive trip pressure will result.
5. Needle jumps out of eccentric groove in record:
   (a) Check trip pressure, it should not exceed 8 grams for the trip shown in Fig. 2. If the pressure is excessive, see "CHANGER TRIPS BEFORE NEEDLE REACHES END OF RECORD" - 4 above.
   (b) The record may be defective. The trip groove is often too shallow. Check with a record which is known to be good.
   (c) The point on the needle may be bad. Check for a worn point.
   (d) There may be binding in the pickup bearing or ratchet arm. See 1 and 2, "NEEDLE DOES NOT TRACK ACROSS RECORD PROPERLY".
6. Clutch pawl binding on cam face:
On the trip mechanism shown in Fig. 2 the clutch pawl (63) must be free to move forward and engage the pinion gear teeth when the trip rod releases it. Check for burrs or foreign matter lodged between the pawl and the cam. Do not oil as this might collect dirt and gum up the pawl.

PICKUP ARM STRIKES RECORDS ON SPINDLE WHEN IT RAISES OR PICKUP ARM REST WHEN IT MOVES OUT:

Pickup arm height not adjusted properly. See instructions for adjusting the pickup arm height under "ADJUSTMENTS".

TURNTABLE SPEED TOO SLOW:

1. Binding in turntable bearing: Check the turntable bearing for freedom. Hold the motor idler wheel (2) out of engagement with the turntable and spin the turntable by hand to see if it turns readily and coasts for a long time. Clean out the bearings to remove foreign matter and lubricate with light oil.
2. Motor pulley too small in diameter: Replace the motor pulley with one having a greater diameter.
3. Line voltage too low: The line voltage should not be less than 100 volts or the turntable may be too slow.
4. Operating temperature too low. If the machine has been stored in a cold place or operated in surroundings at a temperature of less than 60° F., the turntable speed may be too slow.

TURNTABLE SPEED TOO FAST:

Motor pulley too large in diameter. Replace the pulley with one having a smaller diameter or grind one or two thousandths off the pulley.

TURNTABLE STALLS DURING CYCLE:

1. Motor idler not engaging turntable. See "TURNTABLE DOES NOT REVOLVE WHEN CONTROL KNOB IS TURNED TO "ON" POSITION" - 4.
2. Turntable bearing tight. See "TURNTABLE DOES NOT REVOLVE WHEN CONTROL KNOB IS TURNED TO "ON" POSITION" - 5.
3. Operating temperature too low. See "TURNTABLE SPEED TOO SLOW" - 4.
4. Line voltage too low: The line voltage should not be less than 100 volts.
5. Binding in drive mechanism:
   (a) Remove lift arm (48) and hold idler (2) away from turntable or remove idler wheel. Cycle machine, turning turntable slowly by hand. The cam should turn freely for the complete revolution without binding at any point. If binding occurs check for foreign matter in the gear teeth, a bent cam bearing or bent spindle bushing.
   (b) Replace lift arm, loosen spindle screw (77) and raise spindle high enough to clear the lift arm cam when the machine cycles. Hold the pickup arm lift rod (94) up so the end of the lift rod does not contact the lift arm cam. Cycle the machine by hand. The entire cycle should be free, without binding at any point. If binding occurs, check the lift arm bearing for freedom and the lift arm roller to be sure it is not bent causing binding in the cam track.

©John F. Rider

6. Binding between pickup arm lift rod and lift arm cam face: Cycle machine stopping it halfway through the cycle just as the lift arm is about to return. Lift pickup arm and raise lift rod (94) by pulling up on the adjusting screw (13) as high as it will go. Feel the lift arm (48) for play. The lift rod may still touch the lift arm cam face, but it should not bind. If binding occurs, the lift arm bearing may be bent or the fiber washer (59) under the lift arm should be removed to lower the lift arm.
7. Spindle roller spring compressed too far. Cycle the changer and watch the relationship between the bottom of the roller spring housing (78) and the roller (79). Just before the top of the lift arm cam raise is reached, the roller spring housing should stop its upward motion and the roller should continue up .005" to .047" more, slightly compressing the roller spring (81). If the spring compresses too much, the changer may stall on the shut off cycle. Check the lift arm bearing to determine if it is square with the base plate. It should be 90° to the base plate within 1/4°. If it is bent, carefully pound into place with a soft mallet. If it is straight and the roller spring is being compressed too much, remove the fiber washer (59) between the lift arm and the steel washer under it. The dimension on the spindle between the shoulder on which it rests and the bottom of the roller should be 1 7/8" plus or minus .010". An oversize spindle could also cause a binding condition.
8. Motor weak. In cases where everything checks all right but the changer still stalls in cycle, the motor may be weak.

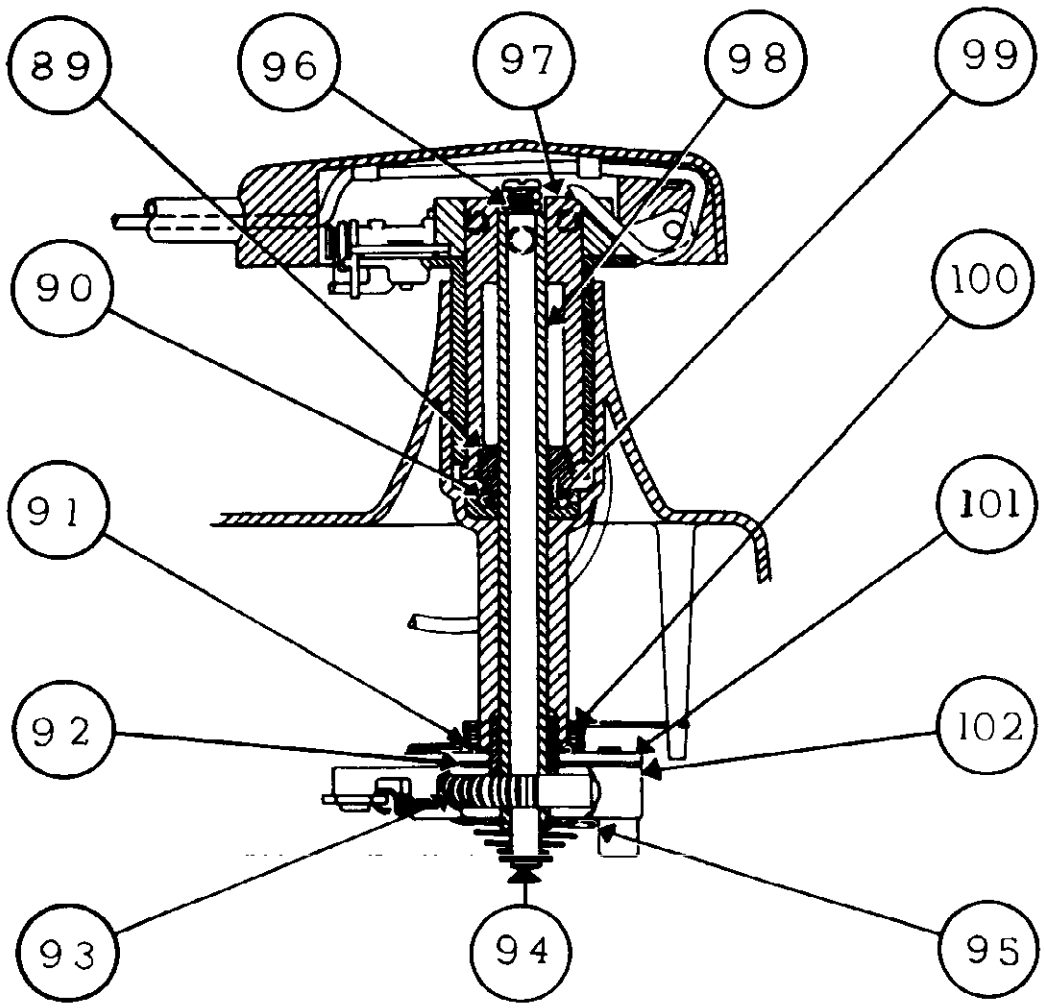

Figure 4

SEARS, ROEBUCK & CO. MODELS 101.211, 101.211-1, 101.211-2, 101.211-3, 101.211-4

CHANGER CONTINUES TO CYCLE:

1. Trip catch not engaging properly. See 2, "CHANGER TRIPS BEFORE NEEDLE REACHES END OF RECORD".
2. Insufficient tension on trip spring. See 3, same as above.
3. Binding in trip rod bearings. See 4, same as above.
4. Defective trip catch. See 5, "CHANGER DOES NOT CYCLE WHEN RECORD HAS BEEN PLAYED".
5. Reject control holding trip open. Check the control knob (25), control link (41), and control lever (44) for binding to determine if the control assembly is holding the trip in a disengaged position.
6. Trip rod not holding clutch pawl out of engagement with pinion teeth. On changers having the trip shown in Fig. 2, the end of the trip rod (60) should contact the bent up section of the clutch pawl (63) and push the pawl out of engagement with the pinion teeth. If the trip rod is not free to meet the clutch pawl, continuous cycling will result.
   (a) See if the trip spring (62) is in place.
   (b) Check the trip rod (60) for freedom in its bearings.

NOISE DURING PLAYING OF RECORD:

1. Rumble:
   (a) From motor: If a low pitched rumbling sound comes from the loud speaker while a record is being played, check the motor grommets (67) to be sure the motor is freely suspended on them. The motor lead wires should have slack to allow the motor to float. Motor rumble may also come from an out of balance motor rotor. In this case, the motor should be replaced.
   (b) From bearings: Defective turntable bearings can cause rumble. Check for foreign matter in the bearings, defective balls, binding between balls and ball retainer. Rough surface on washers. Clean ball bearing, sleeve bearing and washers, lubricate with lubriplate or light oil.
2. Defective motor idler wheel:
   A rapid thumping sound while the motor is running may indicate a flat spot on the motor idler wheel (2). Remove the turntable and check the rubber tire on the idler. If the surface of the rubber tire is not smooth and even, replace the idler.
3. Defective needle:
   A bad needle will cause loud needle scratch or hiss through both the speaker and the air directly from the needle. For reduced needle scratch and "needle talk" use a needle with high vertical compliance such as an offset "dog leg" type needle.
4. Defective record:
   Worn or defective records cause needle scratch and distortion of the recorded sound. If the record is warped, it may slip on the other records causing "wow", a waver in the recorded sound. An enlarged hole in the record can also cause "wow".
5. Turntable scrapes:
   If a scraping sound occurs as the turntable revolves, check:
   (a) Turntable warped, causing outer rim to rise and fall.
   (b) Motor idler (2) bent.
   (c) Wires beneath turntable rubbing.
6. Squeaks:
   Squeaking sound as changer operates indicates lack of oil. Lubricate points indicated under "LUBRICATION".

NOISE DURING CYCLING:

1. Squeaks: See "LUBRICATION".
2. Grinding sound indicates lack of lubrication or worn parts:
   Lubricate spindle roller assembly in bearing between it and spindle body.

DISTORTION OF RECORDED SOUND:

1. Defective needle. See 3, "NOISE DURING PLAYING OF RECORD".
2. Defective record. See 4, "NOISE DURING PLAYING OF RECORD".
3. Defective pickup cartridge:
   When the cartridge is defective, the recorded sound may be distorted, weak or stop entirely.
4. Defective amplifier:
   Check phonograph, amplifier and speaker.

MODELS 101.211, 101.211-1, 101.211-2, 101.211-3, 101.211-4 SEARS, ROEBUCK & CO.

NO SOUND DURING PLAYING:

1. Defective cartridge. See 3, "DISTORTION OF RECORDED SOUND" - 4.
2. Defective wiring:
   Check pickup leads for a shorted or open lead.
3. Defective amplifier. See "DISTORTION OF RECORDED SOUND" - 4.

EXCESSIVE RECORD WEAR:

1. Binding in pickup arm. See 1 and 2, "NEEDLE DOES NOT TRACK ACROSS RECORD PROPERLY".
2. Defective needle. See 3, "NOISE DURING PLAYING OF RECORD".
3. Excessive needle pressure:
   The pickup arm is designed to give the proper needle pressure when an aluminum cased cartridge is used. If a cartridge with a die-cast housing is used, a compensating spring must be used to bring the needle pressure down to the usual standard of 1 oz. to $1\frac{1}{2}$ oz. If the needle pressure is too great on a compensating spring, bend the long end of the spring.

CHANGER DOES NOT SHUT OFF AFTER LAST RECORD HAS BEEN PLAYED:

1. Record support binding on spindle:
   The record support (3) must rest on the offset shoulder of the spindle or the changer will not shut off.
   See 3, "TWO RECORDS DROP AT ONCE".
2. Changer stalls during shut off cycle.
   See "TURNTABLE SECTIONS: under "SERVICE INFORMATION.
3. Cutoff rod not engaging shoulder on spindle roller spring housing.
   On the shut off cycle, the end of the cutoff rod (42) should contact the shoulder on the bottom of the spindle roller spring housing (78) and turn the cutoff rod over 90°. If the end of the cutoff rod passes under the roller spring housing as the machine cycles, on the shut off cycle, check:
   (a) The record support to be sure it is resting on the spindle shoulder, see 1, above.
   (b) The spindle to see if it is being held down in place by the spindle screw (77).
   (c) The lift arm screw (47) to be sure it is tight.
   (d) The bent up end of the cutoff rod (42) may be short. Replace if necessary.

PICKUP ARM DOES NOT SET DOWN ON REST AFTER LAST RECORD HAS BEEN PLAYED:

Control lever does not engage set down locater.
On the shut off cycle, one leg of the control lever (44) should catch the set down locater (43) holding it to prevent the return spring (100) from pulling the pickup arm in. The pickup arm should be held against the stop in the base plate. In this position, the nest in the pickup arm should be directly above the pickup rest.

CHANGER SHUTS OFF PREMATURELY:

1. Spindle roller spring compressed too far. See 7, "TURNTABLE STALLS DURING CYCLE".
2. Roller spring in spindle too weak:
   When the bottom record of a stack of ten 12" records is being ejected from the spindle ledge, the roller spring (81) should not compress until just before the roller reaches the top of the cam incline on the lift arm. If the roller spring is compressed under the load of a full stack of records it may cause premature shut off. Replace the roller assembly (78) if necessary.
3. Record too thick:
   The changer is designed to play standard records. If an old style 1/8" thick record is used, the changer will shut off instead of dropping the record.
4. Cutoff rod not being reset:
   After the shut off cycle, when the cutoff rod (42) has been turned to throw the switch to the "OFF" position, it should be returned to its original position the next time the machine cycles by the bent up end of the cutoff rod, contacting the round stud on one leg of the control lever (44). The flat spring (46) acting against the cutoff rod should throw the rod against its stop on the lift arm (48) and hold it there. If the cutoff rod is not fully turned, the bent up end next to the spindle may stick up high enough to prematurely contact the shoulder on the roller spring housing (78).
   (a) Check the lever spring (46) for tension. Remove and bend slightly to increase tension if necessary.
   (b) Lubricate the cutoff rod bearings and around the lever spring with lubriplate or oil.
   (c) Check the clearance between the end of the cutoff rod (42) which passes under the control lever (44) and the bottom of the round stud on the control lever. When the cutoff rod is in its normal operating position, it should not clear the bottom of the round stud by more than enough to completely turn the end of the cutoff rod from a vertical position back to a horizontal position.

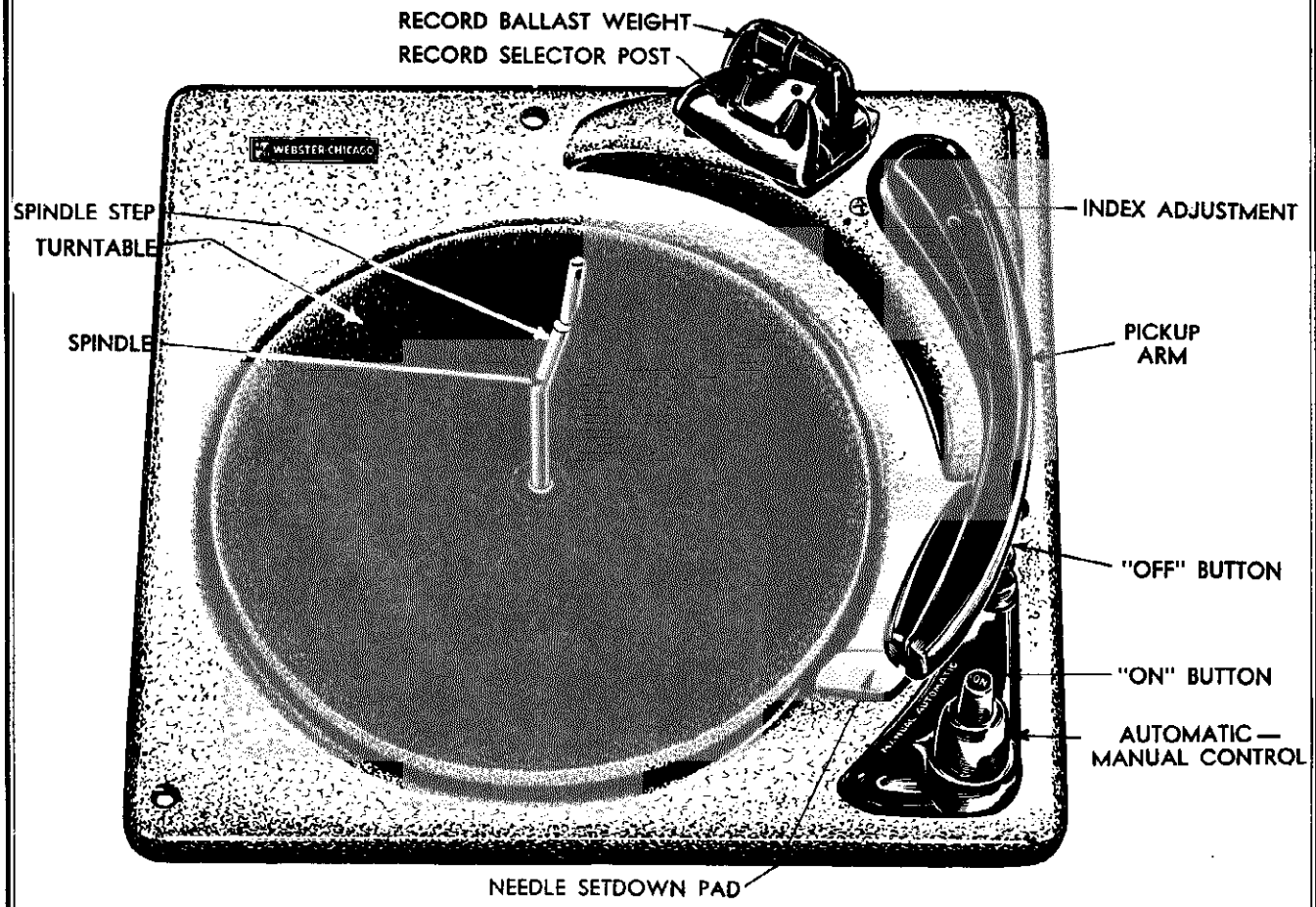

OPERATION

MOTOR

Connect the motor cord to a source of 105-115 volt 60 cycle current only. If it is desired to operate the changer on 50 cycle current, a special motor pulley (Part No. 17X412-11) must be used in place of the one supplied with the changer in order to drive the turntable at the required speed of 78 R.P.M.

Do not under any circumstances connect the motor to a source of direct current or alternating current of any other frequencies.

PICKUP

The high impedance crystal cartridge supplied may be of the fixed permanent point or removable needle type. If it is the latter, use a needle which is not more than $^{11}/_{16}$ inches long for most satisfactory results.

Some desirable qualities of a good needle are faithful reproduction, low surface scratch or hiss, long wearing qualities, minimum record wear and rugged construction.

The Webster-Chicago Nylon Needles are particularly adaptable for use with your Webster "156". The "Knee-action" of the nylon knee permits the needle to ride the record groove in a gentle, floating motion, protects valuable records from unnecessary wear . . . virtually eliminates breakage of the sapphire tip if accidentally dropped . . . greatly lengthens needle life . . . produces a pleasing harmonious tonal balance and delivers remarkably authentic reproduction. DO NOT USE SINGLE PLAY OR CACTUS NEEDLES FOR AUTOMATIC OPERATION.

OPERATION — AUTOMATIC

1. Turn the Record Selector Post to "10" or "12" for ten or twelve inch records.
2. Turn the Selector Control (sleeve of ON button) to AUTOMATIC.
3. With the Record Ballast Weight turned back, place up to ten 12" records, or twelve 10" records on the spindle so that the bottom record rests on the step of the spindle and the shelf of the Record Selector Post.
4. Turn the Record Ballast Weight forward to rest on the top record.
5. Press the ON button.

To "reject" any record while playing in the AUTOMATIC position, press the ON button.

NOTE: The OFF button may be pressed during any portion of the change cycle. The Pickup Arm may be moved manually at any time without damage to the mechanism. However, after

the last record has been played, the Pickup Arm is automatically locked in position and should not be handled until it has come to rest on the OFF button.

6. After the last record has been played, the entire stack may be removed from the turntable at one time. The simplest procedure is as follows:
   a. Turn the Record Ballast Weight out of position.
   b. Place the fingers of both hands under opposite edges of the bottom record.
   c. Do not apply pressure to the top record. (Keep your thumbs free.)
   d. Lift the stack of records straight up, following the contours of the spindle. This permits the stack of records to follow the curve of the spindle without binding and greatly facilitates the removal of the stack.

OPERATION — MANUAL

1. Turn the Record Selector Post to the 12" position. (This is not essential but permits more clearance in loading and unloading records.)
2. Turn the Selector Switch (sleeve of ON button) to MANUAL.
3. Place a record on the Turntable. It may facilitate this operation if the record is placed over the spindle at an angle, with the edge of the record held below the level of the Record Selector Post Shelf. Records may be removed in this same manner.
4. Press the ON button.
5. Place the needle gently on the edge of the record. Do not lift the Pickup Arm too high as this will cause it to catch in the Automatic Stop Lock position. Particular care should be exercised if your pickup has a sapphire point needle. Although the sapphire is very hard and long wearing, it is extremely brittle and may be fractured or chipped if dropped on the record.
6. To stop the mechanism at any time, press the OFF button.

SERVICE INFORMATION AND ADJUSTMENTS

All units are accurately adjusted, lubricated and tested at the factory. However service repairs and adjustments sometimes become necessary. This bulletin should be studied carefully before making any adjustments or replacing parts.

Service parts are available from your Webster-Chicago distributor. All parts must be ordered by piece part number and also record changer model and production number, stamped on the under side of the main plate.

The functions and most probably misadjustments of the main assemblies are as follows (reference numbers refer to the exploded view)

THE AUTOMATIC TRIP FAILS TO FUNCTION

The Main Cam Assembly (38) and Actuating Gear (36) are the heart of the record changer. The Main Cam Assembly drives the mechanisms associated with the action of the Pickup Arm (5) and the Record Selector assemblies. It, in turn, is driven by the gear train (29, 30, 31) and the Turntable which is rim driven by the phonograph motor.

The Main Cam Assembly and Actuating Gear is put in motion or "tripped" by means of the "automatic" trip or by the manually operated "reject" trip. When the movement of the Pickup Arm toward the spindle is greater than ⅛" in ½ revolution of the Turntable, the Automatic Trip Arm (33) trips the Velocity Trip and Roller Assembly (37). This releases the Actuating Pawl on the Main Cam Assembly (38), allowing it to engage the Main Cam Actuating Gear (36) and driving it through the change cycle. The pressure from the Automatic Trip Arm required to actuate the trip mechanism is negligible.

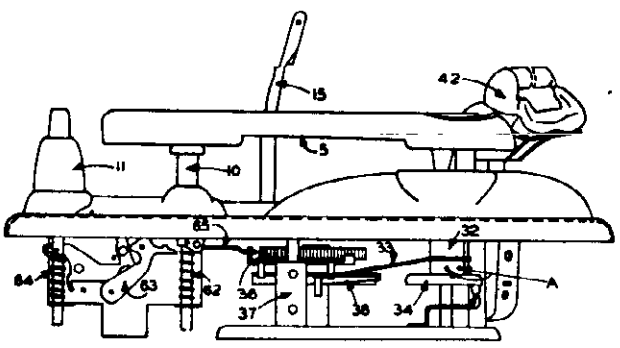

Fig. 1

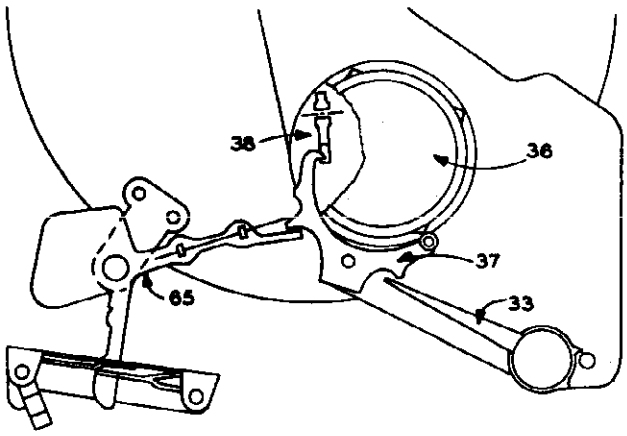

Fig. 2

The Automatic Trip Arm (33) follows the movement of the Pickup Arm through a weighted friction clutch (32). This clutch must be kept free of oil and grease. Should it become necessary, clean the clutch parts with carbon tetrachloride. This clutch should operate the trip mechanism without placing undue drag on the movement of the pickup arm.

Also check for:

1. Velocity Trip and Roller Assembly binding.
2. Slight burr on end of the actuating pawl or on the underside of the Velocity Trip hook.
3. Actuating Pawl stuck (part of Main Cam Assembly (38) engaged by the hook end of the Velocity Trip and Roller Assembly (37).
4. Automatic Trip Arm (33) bent and not hitting the Velocity Trip and Roller Assembly (37).
5. Automatic Trip Arm (33) fails to touch the Velocity Trip and Roller Assembly.
6. Velocity Trip and Roller Assembly (37) rubbing on the underside of the Main Cam Actuating Gear (36).
7. No velocity lead-in groove or eccentric groove in the center of record.
8. Foreign matter in record groove.
9. Badly worn record.
10. Badly bent or worn needle.

IF THE "REJECT" TRIP FAILS TO FUNCTION

When the "On" button is pressed, the hair spring of the "reject" trip lever arm (65), actuates the Velocity Trip and Arm Assembly, putting the change mechanism in cycle.

Check for:

1. "Reject" trip hair spring of Lever (65) bent or broken.
2. Velocity Trip and Roller Assembly (37) binding.
3. Actuating Pawl (part of Main Cam Assembly 38) stuck.

IF THE MECHANISM CONTINUES TO CYCLE

At the completion of the change cycle, the Actuating Pawl is disengaged from the Main Cam Assembly Actuating Gear (36) by the hook end of the Velocity Trip and Roller Assembly (37) which has been returned to its normal position by the reset points on the Main Cam Drive Gear (Fig. 3). This hook should be adjusted for about 1/64" clearance from the bottom of the Main Cam Drive Gear (36), Fig. 1. Greater clearance may permit the pawl to bounce past the hook and reengage, causing the mechanism to continue to cycle.

If the clearance between the lip on the Velocity Trip Lever and the edge of the Main Cam is too small, it will prevent the hook end of the Velocity Trip Lever from engaging the trigger. Adjust the clearance between the lip (D, Figs. 3 and 5) on the Velocity Trip Lever of the Main Cam to be within 1/64" when the roller is contacting the point of one of the protrusions on the Actuating Gear.

Also check for:

1. Velocity Trip and Roller Assembly (37) rubbing on Main Cam Actuating Gear (36).
2. Manual Trip Lever (65) binding.
3. "Disengage Roller" broken on Velocity Trip and Roller Assembly (37).

PICKUP ARM LIFT TOO HIGH OR TOO LOW

The vertical movement of the pickup arm is controlled by the angle of the Pickup Arm Raising Lever (40), Fig. 4. The needle should approach the top record of a full stack of 10" records on the turntable with approximately 1/8" clearance.

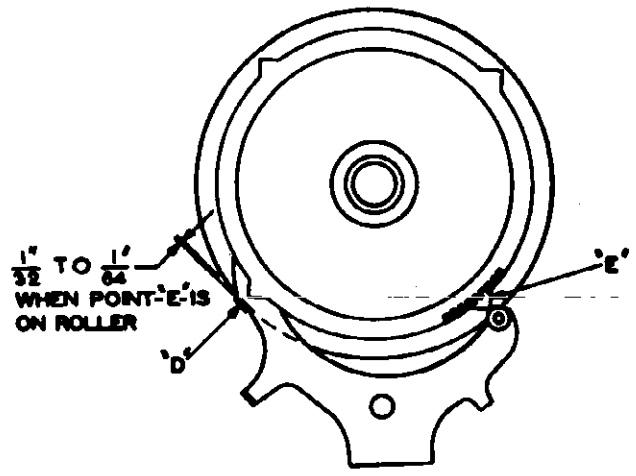

ADJUST IF NECESSARY BY BENDING AT POINT "D".

Fig. 3

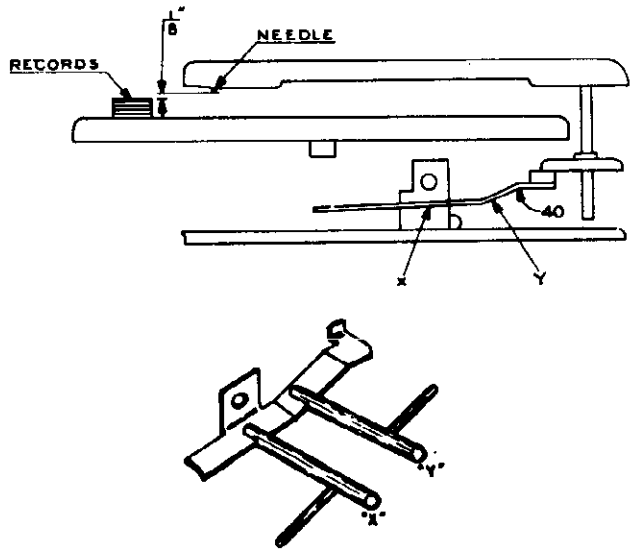

Fig. 4

To adjust:

1. Put a full stack of 10" records ON THE TURNTABLE.
2. Press the "On" button and rotate the Turntable clockwise until the needle clears the top record of the stack by about 1/8".
3. Be sure the notch in the Pickup Arm raising disc (34) engages the pickup arm raising lever (40).
4. If the needle does not clear the top record or if it raises too high, adjust by bending the pickup arm raising lever at the point indicated in Fig. 4.

CAUTION: All adjusting bends should be made slowly, using slight but firm, easy pressure.

Be sure the set screws of (A of Fig. 1) of the pickup arm raising disc are not loose and are properly positioned in the alignment holes as explained in the paragraph on Needle Setdown Indexing.

NEEDLE SET DOWN INDEXING INCORRECT

The horizontal movement of the pickup arm (5) is controlled by the eccentric excursion of the Pickup Arm Raising Lever (40) moving the Pickup Arm Raising Disc (34) when actuated by the Main Cam Assembly (38). The eccentric screw (part of 6), accessible through the top of the pickup arm (5), should take care of any normal position adjustment. Turn this screw clockwise to index the needle in toward the spindle and counter-clockwise to index the needle out away from the spindle.

Should further adjustment be necessary, proceed as follows:

1. Set the eccentric screw, just mentioned, to a middle position.
2. Set the Record Selector Post (42) to the 10" position.
3. Operate the mechanism by revolving the Turntable manually until the needle drops to within 1/8" of a 10" record on the turntable.
4. Be sure the notch in the Pickup Arm Raising Disc (34) engages the Pickup Arm Raising Lever (40).
5. With a No. 8 Bristol wrench in each of the set screws of the Pickup Arm Raising Disc (35) as indicated in A, Fig. 1, alternately loosen one screw and tighten the other until the needle rests above the record lead-in groove at the desired point.
6. Complete the change cycle of the mechanism and position the Pickup Arm on the "off" button (10). If necessary, bend the tongue of the Pickup Arm Raising Disc closer to or away from the Base Plate Post until the Pickup Arm is correctly seated on the "off" button when the tongue is touching the Base Plate Post.

NOTE: All adjusting bends should be slight but firm, easy bends.

7. Be sure that both set screws are tight when this adjustment is completed.
8. Turn the Record Selector Post to 12" and check the needle drop on a 12" record. Make any additional adjustments with the eccentric screw mentioned previously.

PICKUP ARM DROPS OFF THE "OFF" BUTTON

The upturned end of the pickup arm pivot shaft bracket (35) prevents the pickup arm from falling off the "off" button. There should be approximately 1/64" clearance between the tongue of the Pickup Arm Raising Disc (34) and the bottom of the groove formed by the bracket and the Base Plate Post. Bend the Bracket end up or down to secure proper positioning of the disc tongue and the Pivot bracket. Be careful to bend the end only or the Bracket will bind on the Pickup Arm Pivot Shaft (7).

The Bracket should not be too high or the disc tongue will rub on it when the needle approaches the edge of a 12" record, causing "glide in" on the first few grooves of the record.

CHANGE CYCLE STARTS BEFORE END OF RECORD

If the trip assembly chatters while the changer is running, or if the changer cycles before the entire record is played, there is probably insufficient clearance between the hook end of the Velocity Trip and Roller Assembly (37) and the Actuating Gear (36). This clearance should be adjusted to be within 1/32" to 1/64" by bending the lever at point "C" shown in Fig. 5.

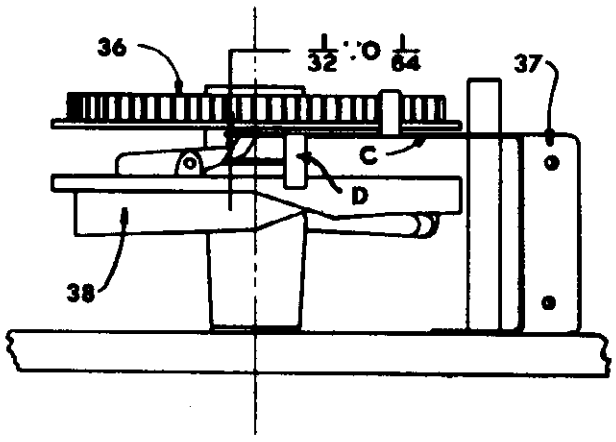

Fig. 5

MORE THAN ONE RECORD IS DROPPED DURING A CHANGE CYCLE

The floating latch at the top of the Record Spindle is so spaced that only one record at a time can slide between the heel of the latch and the step of the spindle. The hole in the latch is elongated

so that the latch can slip into the spindle recess when records are being removed.
If more than one record is dropped at a time, it will be found to be due to:

1. Foreign matter in spindle recess causing the latch to stick.
2. Exceptionally thin records. Standard records are .075" - .090" thick.

RECORD DROPS ON PICKUP ARM

As the change cycle is started, the first motion of the inclined outer bottom surface of the Main Cam (38) causes the Record Selector Post (42) to move toward the Spindle about $\frac{3}{32}$ inch. This position is maintained until the Pickup Arm has made its full outward lateral excursion at which time the Record Selector Post again moves toward the spindle, causing the bottom record to drop into playing position.

If the Record Selector Post (42) has been bent back, away from the Record Spindle, it is possible for a standard record to rest on the spindle step with its edge just over the edge of the Record Selector Post shelf. Then as the change cycle is started, the record is pushed off the spindle by the initial movement of the Record Selector Post, so that it drops on the Pickup Arm.

To correct this condition, the Rocker Arm Assembly must be adjusted so that the Record Selector Post is brought nearer to the spindle. This adjustment is made in the following manner:

1. With the mechanism at rest, remove the Turntable and replace the Record Spindle. Set the Record Selector Post to the position for playing 12-inch records and place a 12-inch record on the Record Spindle.
2. Insert a short screwdriver through the motorboard opening into the screw slot as shown at "A" in Fig. 6. Clockwise rotation of the screw will increase the distance between the Record Spindle and the Record Selector Post; counterclockwise rotation will decrease it.

It is recommended that the distance between the edge of the record and the step of the Rcord Slector Post be held to just over $\frac{1}{32}$ of an inch so that records with rough or sharply beveled edges will not catch on the outer edge of the Record Selector Post.

CAUTION: Be certain that a standard size record is used in making this adjustment. A standard 10" record measures $9\frac{7}{8}$" $\pm$ $\frac{1}{32}$" diameter. A standard 12" record measures $11\frac{7}{8}$" $\pm$ $\frac{1}{32}$" diameter.

PUSH OFF POST ANGLE INCORRECT

The Record Selector Post should be adjusted so that the curve of the shelf matches the curve of the record. See Fig. 7.

To adjust this angle:

1. Turn the Record Selector Post to the "10" position.
2. Place a ten-inch record on the Spindle in the normal position for automatic playing.
3. With a No. 8 Bristol wrench in each of the set screws (point A, Fig. 7), alternately loosen one and tighten the other until the Record Selector post angle is correct. Be sure that both set screws are tight at the completion of this adjustment.

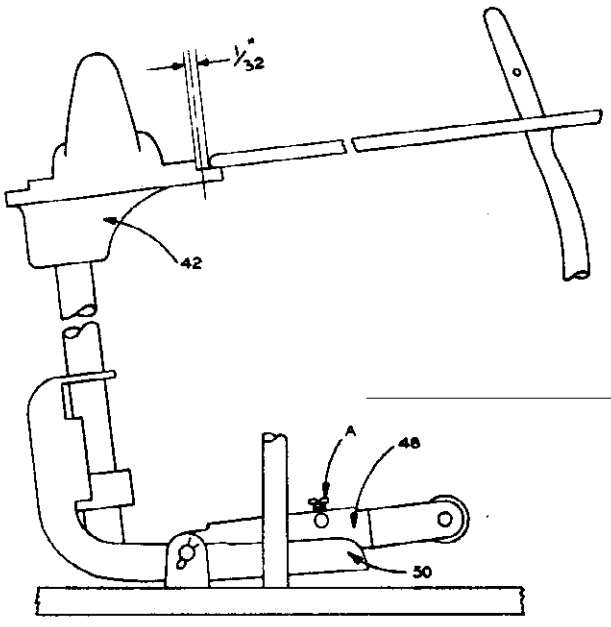

Fig. 6

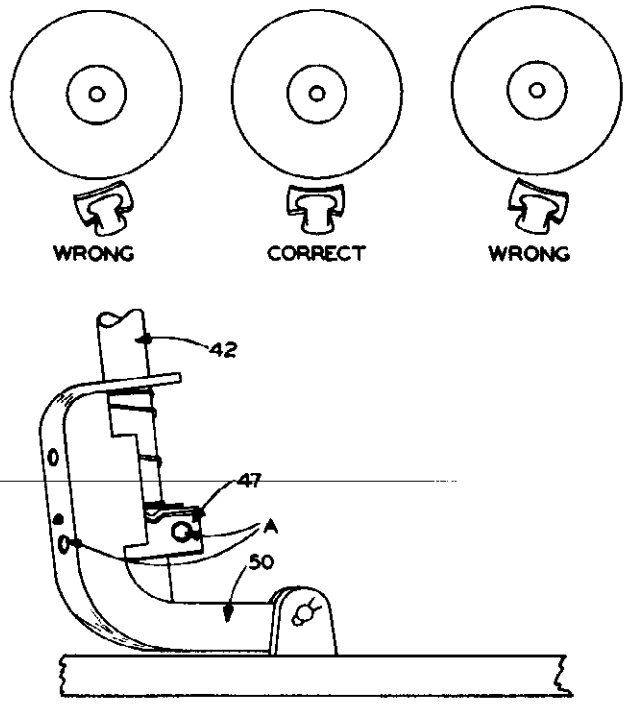

Fig. 7

ERRATIC INDEXING

Indexing in the 10" or the 12" position is controlled through the presence or absence of pressure from the Compression Spring (47A) on the Pickup Arm Raising Lever (40). The compression on this spring is changed as the Record Selector Post (42) is changed to the 10" or 12" position. Improper adjustment of the spring tension will result in erratic indexing. In the 12" position, the spring should be just free. In the 10" position, the compression of the spring holds the stud of the Pickup Arm Raising Lever (40) against the outside edge of the groove, forcing the stud to travel the inside edge or the outside edge of the groove in the bottom of the Main Cam (38).

To adjust:

Bend the slotted arm (part of 40) for proper tension and smooth clearance of the spring guide arm (47).

GLIDE IN ON 12" RECORDS

1. Check tension of compression spring (47A) as explained above. Spring should be free in 12" position.
2. Remove any cause of friction in Index Lever (47).
3. Tongue of Pickup Arm Raising Disc (34) should not touch beveled edge of pickup arm pivot shaft bracket (35) when the needle is on the edge of a 12" record. Bend the end of the bracket if necessary.

"WOW"

If the speed of the Turntable varies during each revolution, check:

1. Defective Idler wheel (24).
2. Dirt or foreign matter inside the rim of the Turntable.

LAST RECORD CONTINUES TO PLAY

1. Check the record spindle to be sure that it moves up and down freely.
2. With no records on the spindle, check the Automatic Shut Off Lock Lever (44). The lower hook end of this arm ("C") shoud catch the Pickup Arm Raising Disc (34) at the beginning of the cycle to prevent travel of the Pickup Arm, causing it to drop on the OFF button. With no records on the Spindle and with the mechanism at rest, this hook should clear the top of the Pickup Arm Raising Disc by 1/32". Adjust. if necessary, by inserting a screw driver in the hole in the bottom base plate and bending lip "D". Never attempt to move the Pickup Arm Raising Disc up or down.
3. The elevated hook "A" on the Automatic Shut Off Lock Lever will sometimes lock with the bracket "B" on the Record Selector Post (50) if the drop of the record is delayed. More clearance can be obtained by bending the elevated hook "A" away from the bracket.

LAST RECORD DOES NOT PLAY

The weight of the records on the Spindle keeps the Automatic Shut Off Lock Lever (44) from dropping and engaging the Pickup Arm Raising Disc (38), thus permitting the mechanism to continue to cycle.

The Push Off Post (50) moves forward slightly at the beginning of each change cycle. The bracket "B" on this post is then underneath the elevated hook "A" on the Automatic Shut Off Lock Lever (44). This forward movement takes place before the last record drops so the change cycle should continue. However the dropping of the last record releases the Automatic Shut Off Lock Lever, permitting it to drop and shut off the mechanism when the change cycle starts after the last record.

If the last record does not play:

1. Bend the elevated hook "A", Fig. 8 forward so that it will overlap the Push Off Post bracket "H" about 1/32" with a record on the spindle.

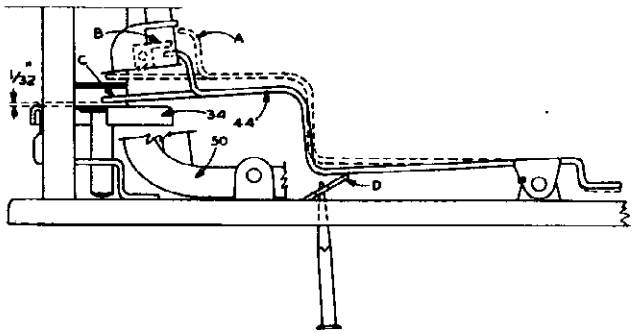

Fig. 8

MOTOR DOES NOT SHUT OFF

1. OFF button stuck.
2. Defective switch.
3. OFF button Shaft Spring (62) has too much tension.
4. Roller on Switch Lever binding.
5. Switch Lever binding on switch frame.
6. Excessive counterbalancing on Pickup Arm.

REPLACEMENT OF PARTS

REPLACE PICKUP CARTRIDGE

1. Press upward on the clip fastener at the forward end of the Pickup Mounting Bracket and raise the Pickup Arm to a vertical position.
2. Remove the screws holding the cartridge in place and replace the cartridge.

REPLACE PICKUP ARM

1. Press upward on the clip fastener at the forward end of the Pickup Arm Mounting Bracket.
2. Raise arm to vertical position.
3. Remove screws holding arm and bracket.
4. After the new Pickup Arm has been installed, press the arm and the Mounting Bracket together until the clip latches.

REMOVE THE SUB-PLATE ASSEMBLY

In the event that it becomes necessary to replace any of the major parts in the sub-plate assembly, the entire assembly should first be removed from the motorboard.

1. Remove the Record Spindle which is held in by a clip under the sub-plate.
2. Remove the Turntable.
3. Remove the Pickup Arm in the manner outlined previously.
4. Unhook the Rocker Arm Return spring.
5. Remove the Rocker Arm Pivot Pin.
6. Remove the five No. 8-32 x 3/4 R.H. screws holding the sub-plate studs and the No. 8-32 x 3/8 R.H. screw holding the center post to the motorboard. Note that one of the 8-32 x 1/4 R.H. screws is accessible through the Pickup Arm hole in the Crescent Assembly.

It should not be necessary to remove the Crescent Assembly except for replacement or to remove the complete Rocker Arm Assembly.

REPLACING THE SUB-PLATE ASSEMBLY

1. Reverse the above procedure making certain that all parts fall into their proper positions.
2. Particularly note the Selector Lever and Selector Lever Compression Spring to see that they are in position with the lever through the slot in the Pickup Arm Raising Lever Bracket.

REPLACE PICKUP ARM BRACKET AND SHAFT ASSEMBLY

1. Loosen Bristol screws in Pickup Arm Raising Disc.
2. Remove Disc and Clutch parts by sliding them off the bottom of the Pickup Arm Shaft and pull shaft out of changer from above.

To replace, reverse the procedure and adjust the Pickup Arm Raising Disc for proper operation.

REPLACE RECORD POST AND ROCKER ARM ASSEMBLY

1. Remove the Pickup Arm Assembly.
2. Remove the four nuts under the main plate which hold the Crescent Assembly.
3. Unhook the Rocker Arm Return Spring.
4. Remove the Rocker Arm Pivot Pin.
5. Lift out the Record Selector Post, Rocker Arm and Crescent Assembly as a unit.
6. In replacing the Rocker Arm Assembly, note paragraph "Replacing the Sub-Plate Assembly."

LUBRICATION

Model 156 Record Changers leave the factory completely oiled and lubricated. Under normal conditions this should be sufficient for approximately one year or 1,000 hours of operation. When operated under extreme conditions of dust or heat, this operation should be performed more frequently as required.

NOTE: AVOID EXCESSIVE LUBRICATION.

Do not permit any oil or grease to get on the rubber idler drive wheel or the Motor Sleeve (Illus. 11 and 21, Fig. 4), on turntable drive rim or on the automatic trip arm clutch. Any oil or grease on these points should be removed using carbon tetrachloride.

The recommended lubricants and points of lubrication are as follows:

A — No. 10 OIL (Apply With Small Oil Can Or Medicine Dropper)

1. Motor Bearings. Saturate top and bottom felts.
2. Pickup Arm Shaft (Illus. 22, Fig. 6). Apply one drop each to bottom bearing point, bracket hole and hole through Main Base Plate.
3. Ball Bearing Assembly (Illus. 7, Fig. 4).
4. Idler Wheel Felt (Illus. 13, Fig. 4).

B — LUBRIPLATE (Apply With Small Brush)

1. Idler Wheel Link (Illus. 16, Fig. 4).
2. Turntable Shaft Stud.
3. Pickup Arm Hinge Pins.
4. Knife edge of Raising Lever (Illus. 33, Fig. 7).
5. Main Cam Bearing. (It is necessary to remove the sub-plate Assembly to lubriplate this bearing. See paragraph Mechanical Repairs "C" To Remove the Sub-Plate Assembly.)

C — STA-PUT (Apply With Small Brush)

1. Teeth of Main Cam Actuating Gear (Illus. 43, Fig. 7).
2. Track of Main Cam Gear (Illus. 42, Fig. 7).
3. Teeth of Large and Small idler gears (Illus. 9, Fig. 4).
4. Raising lever Bracket bearing surfaces (Illus. 33, Fig. 7).

MODEL 156

WEBSTER CHICAGO CORP.

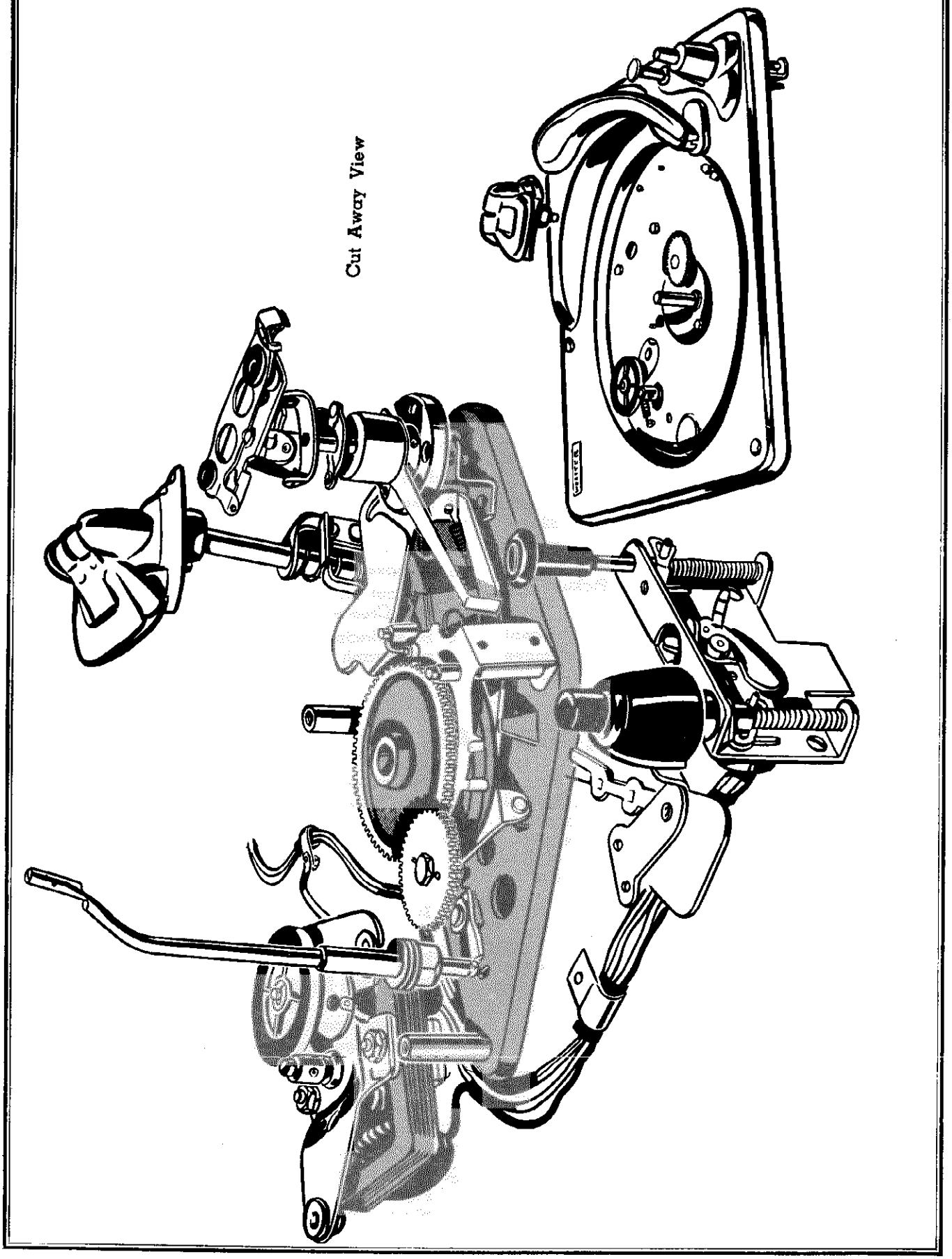

©John F. Rider

WEBSTER CHICAGO CORP. MODEL 156

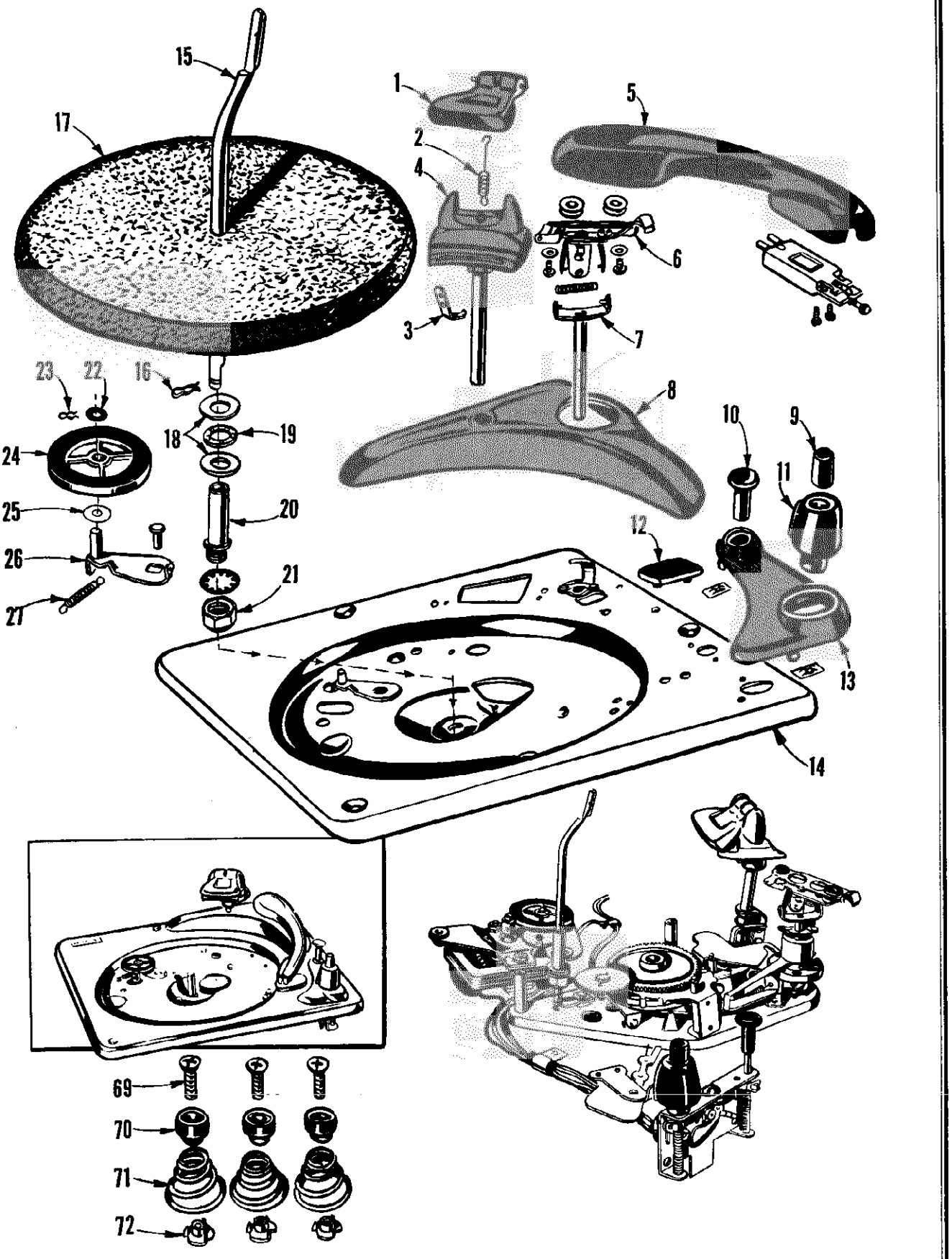

Exploded View

MODEL 156

WEBSTER CHICAGO CORP.

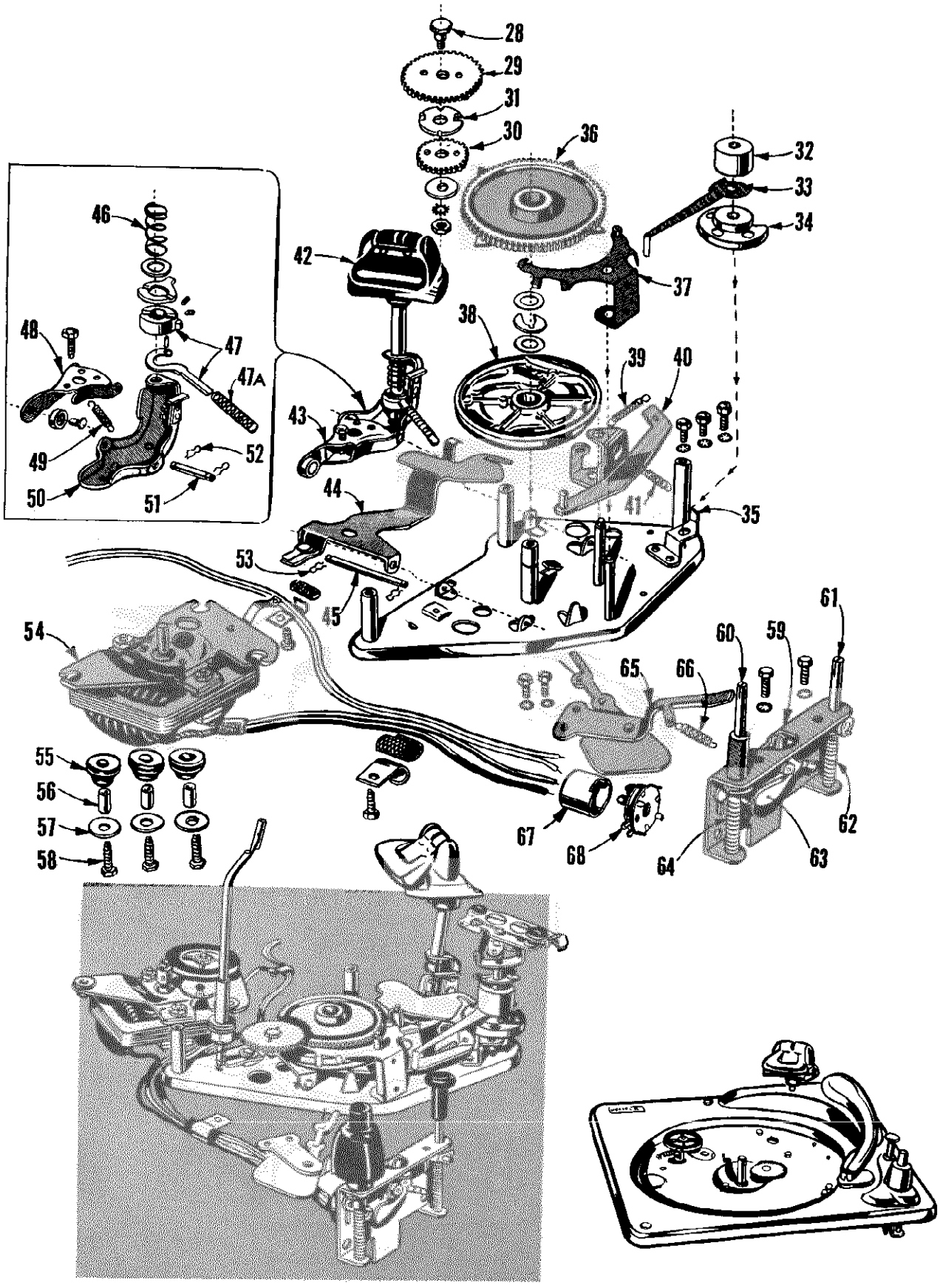

Exploded View

REPLACEMENT PARTS LIST

Illustration No.	Part No.	Part Name and Description
1	49P074	Record Stabilizer Weight
2	46P126	Stabilizer Weight Tension Spring
3	45P464	Stabilizer Spring Retaining Bracket
4	49X029	Record Selector (Pushoff) Post
5	49X068	Pickup Arm Less Hardware and Cartridge
6	21X180	Pickup Arm Mounting Hinge
7	11X136	Pickup Arm Base Shaft Assembly
8	*	Pickup Arm — Record Post Base Crescent Assembly
9	49P026	"ON" Button
10	49P050	"OFF" Button
11	11X139	"Automatic - Manual" Knob
12	24P014	Rubber Needle Set Down Pad
13	49P027	Control Escutcheon
14	*	Main Base Plate
15	11X133	Spindle Assembly Including Pawl
16	50P160	Spindle Retaining Clip
17	11X138	Turntable Including Gear
18	25P269	Bearing Race Washer
19	11X058	Bearing Race Assembly
20	41P414	Steel Turntable Bearing
21	26P587	Turntable Bearing Nut
22	25P030	Idler Wheel Felt Washer
23	50P125	Idler Retaining Clip
24	11X003	Idler Drive Wheel
25	25P046	Fibre Idler Washer
26	11X068	Idler Link Assembly
27	46P112	Idler Tension Spring

*Not stocked for service.

REPLACEMENT PARTS LIST

Illustration No.	Part No.	Part Name and Description
28	41P333	Shoulder Screw
29	47P024	Large Fibre Gear
30	47P023	Small Fibre Gear
31	45P342	Idler Gear Coupler
32	41P576	Clutch Tension Weight
33	46P568	Automatic Trip Arm
34	11X227	Pickup Arm Raising Disc and Hub Assembly
35	45P347	Tone Arm Lift Stop Bracket
36	11X032	Main Cam Actuating Gear
37	11X047	Velocity Trip and Roller Assembly
38	11X033	Main Cam Assembly
39	46P044	Raising Lever Tension Spring
40	11X046	Pickup Arm Raising Lever
41	46P139	Pickup Arm Raising Lever Tension Spring
43	45P583	Rocker Arm Lever Assembly
44	11X079	Automatic Shut-Off Lock Lever
45	41P443	Automatic Shut-Off Lock Lever Pin
46	46P012	Automatic Shut-Off Lock Compression Spring
47	11X049	Selector Lever and Collar Assembly
48	11X141	Rocker Arm Lever Assembly
49	46P017	Rocker Arm Lever Assembly Compression Spring
50	11X142	Rocker Arm Lever Assembly
51	41P421	Rocker Arm Lever Assembly Pin
52	50P125	Rocker Arm Lever Assembly Clip
53	50P125	Rocker Arm Lever Assembly Clip
54	50X090	Motor Assembly 60 Cycle, 105 - 120 Volt
54A	17X412-11	Motor Shaft Sleeve — 50 Cycle
55	25P363	Rubber Shock Motor Mounts
56	41P592	Motor Mounting Sleeve
57	25P367	Motor Mounting Washer
58	26P312	Motor Mounting Bolt
59	11X145	Switch Assembly Complete Less Buttons
60	41P444	Switch Assembly "ON" Post
61	41P588	Switch Assembly "OFF" Post
62	46P138	Switch Assembly "OFF" Spring
63	45P570	Switch Assembly Release Lever
64	46P123	Switch Assembly "ON" Spring
65	11X158	Trip Lever and Wire Assembly
66	46P117	Trip Lever Tension Spring
67	32X039	A. C. Switch Cover
68	32X044	A. C. Switch

WILCOX-GAY CORP. MODELS 7E40, 7E44

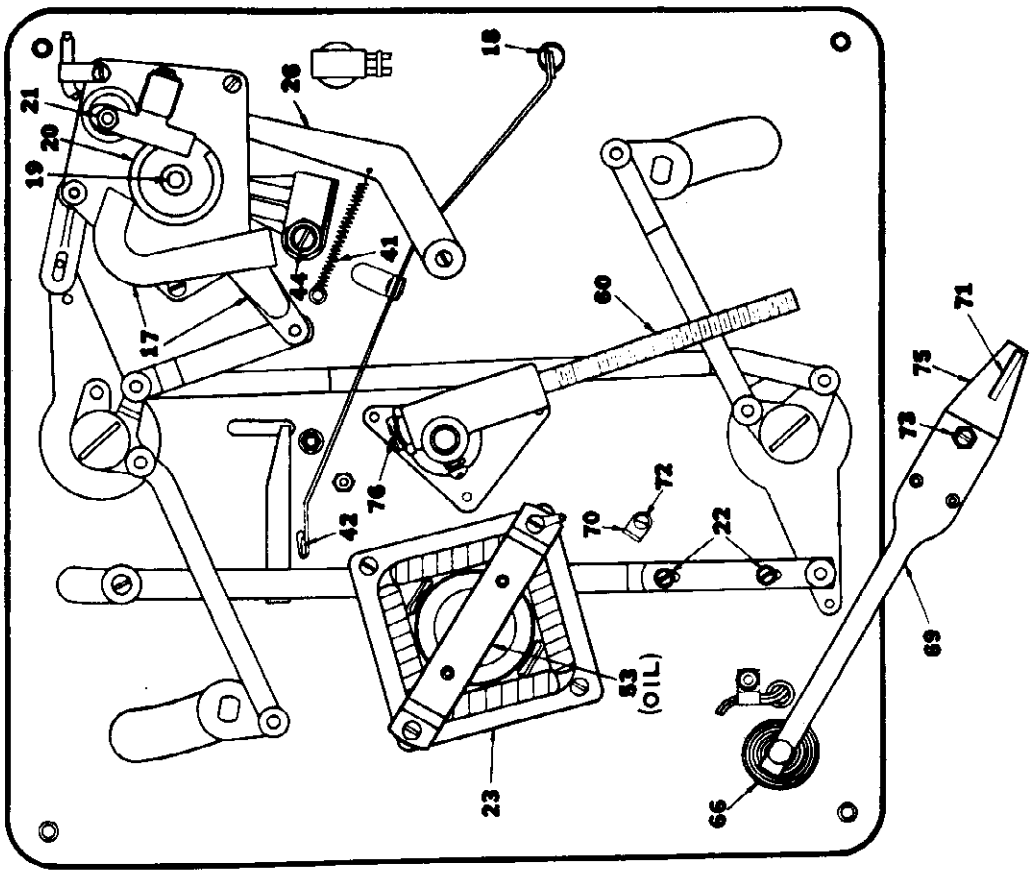

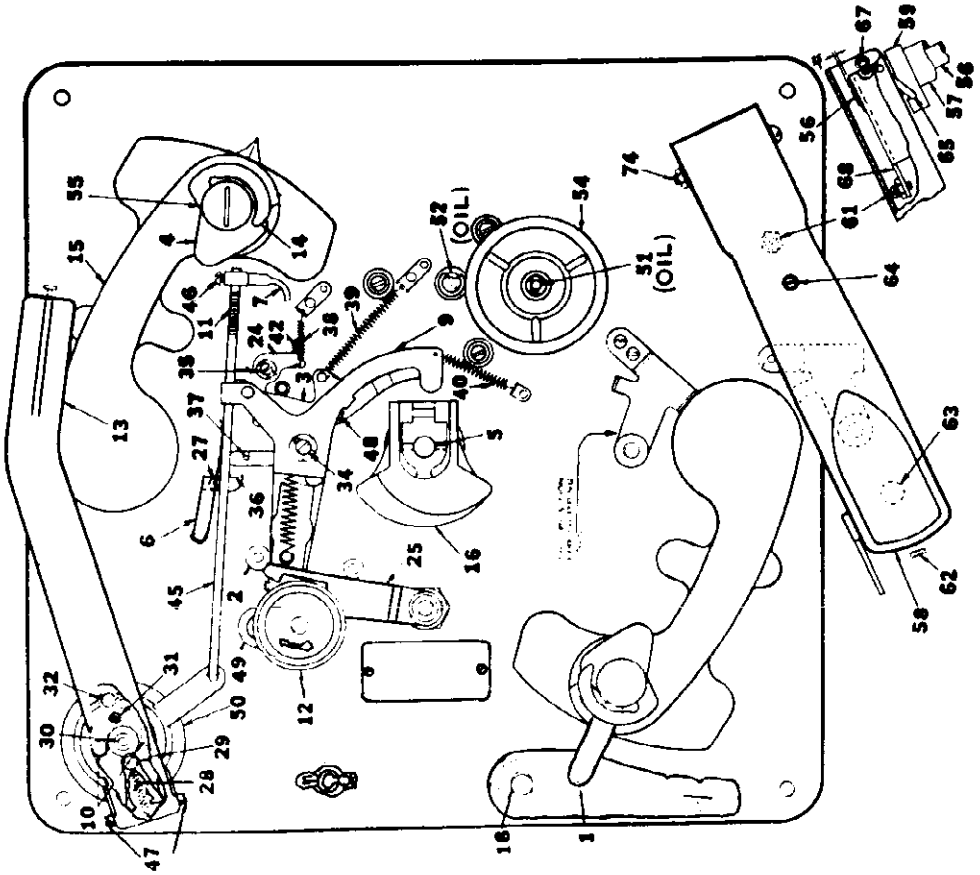

©John F. Rider

DRAWING NO.	PART NO.	NAME
1	11419	10" and 12" link pin handle assembly
2	11562	Sleeve for pulley control lever stop post
3	11475	Cam lift lever assembly
4	11402	Record shelf
5	11144	Turntable shaft
6	12969	Trip rod tension spring
7	11523	Spiral trip dog
8	Not used	
9	11677	Pulley control lever assembly
10	11616	Adjusting screw for tone arm and mounting bracket
11	11480	Trip rod
12	12870	Change mechanism drive pulley
13	13612	Tone arm complete (Less cartridge)
14	11406	Record divide support
*15	12811	Rear record support bracket complete
16	11529	Trip cam assembly complete
17	11632	Record shelf turning lever assembly
18	13396	Reject button
19	11499	Gear shaft
20	11685	Tone arm lift cam assembly
21	21184	Lift pin platform lock nut
22	11611	Connecting link adjustment screw
	5017	Screw for assembly #12812 and #12814
	1194	Lock washer for mtg. screw
23	22105	Motor 115 volt A C 60 cycles
24	12974	Latch and trip lever assembly
25	11533	Latch lever
26	11413	Cam follower lever
27	12143	Screw for attaching #12144 clip, also for #11523
28	13603	Tone arm lift spring
29	13236	Tone arm spring pin
30	11098	Tone arm lift pin
31	Not separate part	
32	11616	Adjusting screw for tone arm and mounting bracket and
	11573	Nut for #11616 screw
	Not used	
33	11657	Pulley control lever stud
34	21914	Clip for shift cam stud and for holding drive disc and
	11663	Washer for #11657
35	11588	Washer for #11559 screw
	11559	Screw for cam lift lever and latch lever
	and	
	21841	Clip for cam lift lever and latch lever
36	Part of #12969	
	Not separate part	
38	12963	Latch lever spring
39	12964	Cam lift lever spring
40	11581	Pulley Control spring
41	11581	Latch lever spring
42	Not separate part	
44	31049	End thrust screw
45	11430	Trip rod
46	12143	Screw for attaching #12144 clip and also for #11523
47	11509	Tone arm pivot screw
48	16207	Nut for #11509 screw
	21841	Clip for cam lift lever and latch lever
	11588	Washer for #11559 screw
	11559	Screw for cam lift lever and latch lever
49	Not separate part	
50	11093	Tone arm base assembly
51	12817	Drive disc mtg. bracket
	21844	Drive disc stud washer
	21914	Clip for holding drive wheel
52	22899	Rotor shaft pulley
	22903	Pulley set screw
53	Part of motor	
54	22076	Turntable drive wheel
55	11094	Record shelf spindle spacer
	11565	Record divide spacer washer
	11414	Record divide clamping screw
56	13109	Follower arm complete
57	12157	Washer for follower arm shaft
58	13924	Cutter arm complete (less cutting crystal)
59	12140	Straddle plate assembly
60	12902	Lead screw and gear assembly
61	9228	Nut for #12129 screw
	12129	Saddle plate adjusting screw
62	49009	Needle set screw for cutting crystal
63	Not separate part	
64	Not separate part	
65	12121	Lift lever
66	22375	Follower arm spring
	1208	Hex nut for pivot post bushing
	12153	Lock washer for pivot post bushing
	12157	Washer for follower arm shaft
67	12128	Set screw for saddle bushing
68	12133	Saddle plate assembly
69	13109	Follower arm complete
70	12852	Follower arm stop
71	Part of #13109	
72	11569	Mounting screw for follower arm stop
73	9934	Nut for #5871 screw
	5871	Follower arm adjusting screw
74	12173	Cutter arm mounting screw
	12172	Cutter arm mounting screw nut
	7217	Lock washer for cutter arm mounting screw
75	Part of #13109	
76	21934	End thrust screw
	13823	Nut for #21934 screw
	13178	Crystal cutting head
	12836	10" weighted turntable
	23-2135-2	Crystal play back
	49-2032	Replaceable osmium tipped needle

* The other record support bracket is part #12809 and is described as the front bracket. It is not numbered on the drawing but part #1 on the drawing is part of it.

ZENITH RADIO CORP. MODELS S-13675, S-14002, S-14006, S-14008

GENERAL

Service notes for models S-13675, S-14002, S-14006, and S-14008 have been combined in this manual. Except for slight mechanical, electrical and color variations, these models are alike. The adjustments that the serviceman will be called to make will be the same for all models.

Models S-13675 (maroon) and S-14006 (black) have the automatic shut-off feature and are identical mechanically. Models S-14002 (maroon) and S-14008 (black) have slight electrical differences.

For convenience, the Operating Instructions supplied with each Record Changer are summarized as follows: The Record Changer will automatically play up to fourteen 10 inch or twelve 12 inch records at one loading, or up to twelve 10 and 12 inch records intermixed. The Record Stack rests on the Spindle and the Record Shelf. The Selector Sprocket drives the Ejector Cam which pushes the records off the Shelf and Spindle allowing them to drop on the Turntable. To load for automatic operation, swing the Pressure Bar to the right, place the stack of records on the Spindle, swing the Pressure Bar to the left until it rests on the record stack, set the OFF-MAN-AUTO switch to AUTO and press the Record Change button. Models S-14002 and S-14008 will play the entire selection of records and repeat the last record until turned off. Models S-13675 and S-14006 will automatically shut off after the last record is played.

For manual operation set the OFF-MAN-AUTO switch to MAN and play the records singly as on a non-automatic record player.

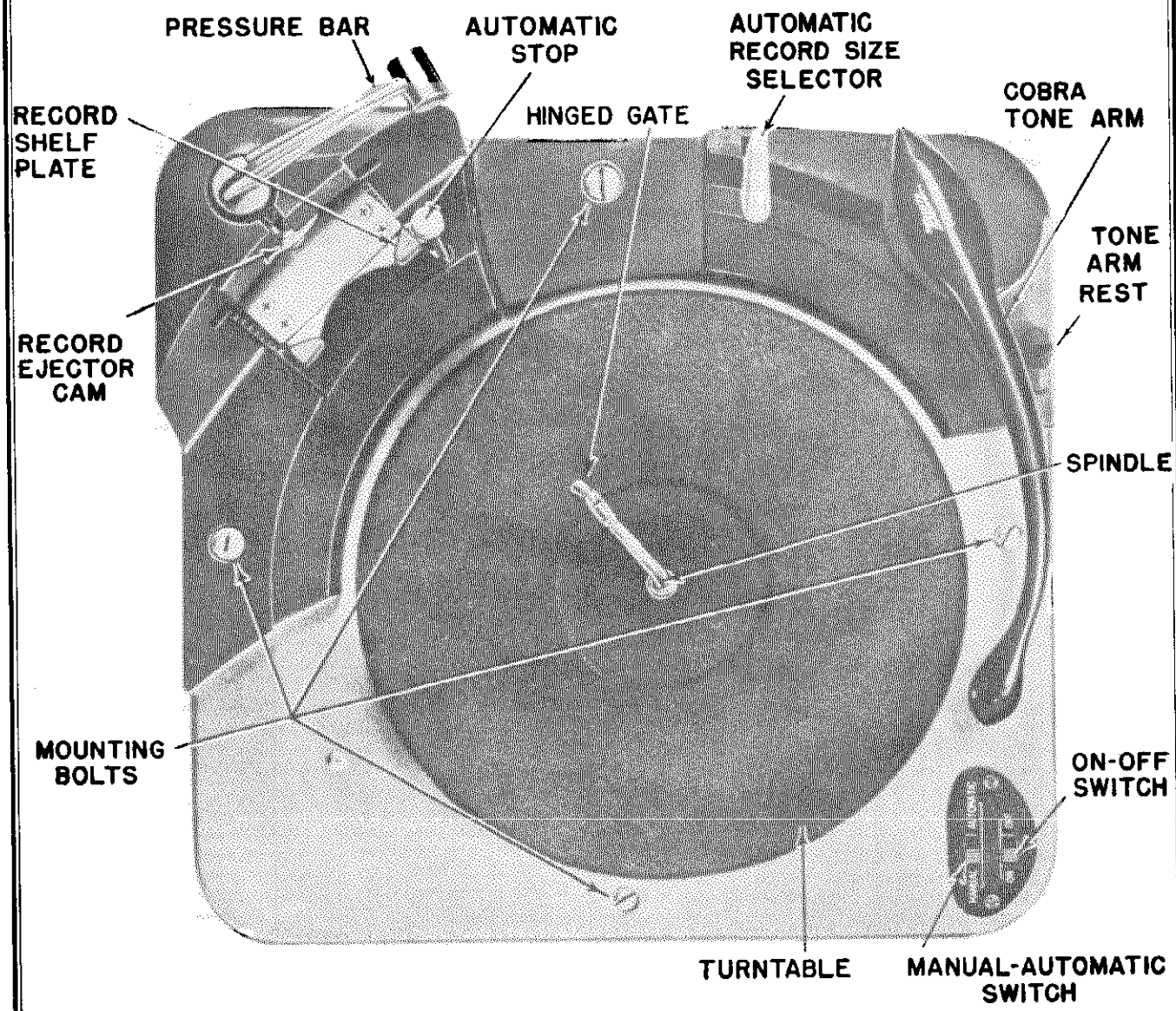

Fig. 1. Top View S-13675 and S-14006 Record Changers.

MODELS S-13675, S-14002, S-14006, S-14008

ZENITH RADIO CORP.

DESCRIPTION OF CYCLING

The phono motor friction drives the idler wheel. The idler wheel rim drives the turntable, and the turntable shaft. To the turntable shaft is attached the segmented clutch drive plate. The pawl on the clutch drive sprocket assembly engages the drive plate, causing the sprocket to rotate. The pawl pusher lever on the clutch release arm assembly causes the clutch to engage or disengage.

Closing either the trip switch or the record change switch energizes the solenoid. The magnetic flux of the solenoid attracts the clutch release lever causing the mechanism to trip and move the pawl pusher lever away from the clutch pawl. This action allows the clutch pawl spring to pull the pawl into position for the drive plate segment to engage and start the clutch sprocket rotating. The clutch sprocket is meshed with the chain drive sprocket and the chain drives the selector and timing sprockets.

The timing sprocket completes 7 functions through 360° rotation. These functions are as follows: 1. Applies the tone arm brake. The brake lever is actuated by the brake stud on the timing sprocket. The brake prevents coasting and erratic landing of the needle. 2. The inclined groove pushes the lift pin upward. The lift pin raises and lowers the tone arm. 3. The locating pin laterally swings the tone arm off the record stack. 4. The locating pin or bushing swings the tone arm over the starting groove of the record. With 12" records, the locating pin swings the tone arm in while the locating bushing swings the tone arm with 10" records. The locating bushing is pushed upward by the discriminator trip plate. 5. The reset stud resets the clutch trip mechanism and moves the pawl pusher lever in the path of the clutch pawl. 6. The lift pin lowers the tone arm over the starting groove of the record. 7. The brake stud releases the brake. When the clutch pawl hits the pawl pusher lever, the clutch is disengaged.

The selector sprocket actuates the record ejector cam, and must be timed with the timing sprocket to drop the records on the turntable when the tone arm is at its greatest outward swing. This occurs immediately after the No. 3 function of the timing sprocket.

As the record is played, the tone arm gradually moves toward the center. The ratchet on the tone arm control lever moves toward the pawl on the trip switch lever. As the ratchet comes in contact with the pawl, the oscillating action produced by the eccentric groove on the record causes the trip switch to close, complete the solenoid circuit and repeat the cycle. If the record does not have an eccentric groove, the position trip will close the trip switch and start the next cycle.

Noise and microphonics are eliminated by muting the phono pre-amplifier during the record change cycle. The tone arm brake lever actuates the muting switch. When the contacts are closed, a low reactance capacitor is connected across the audio output making the amplifier inoperative during the change cycle.

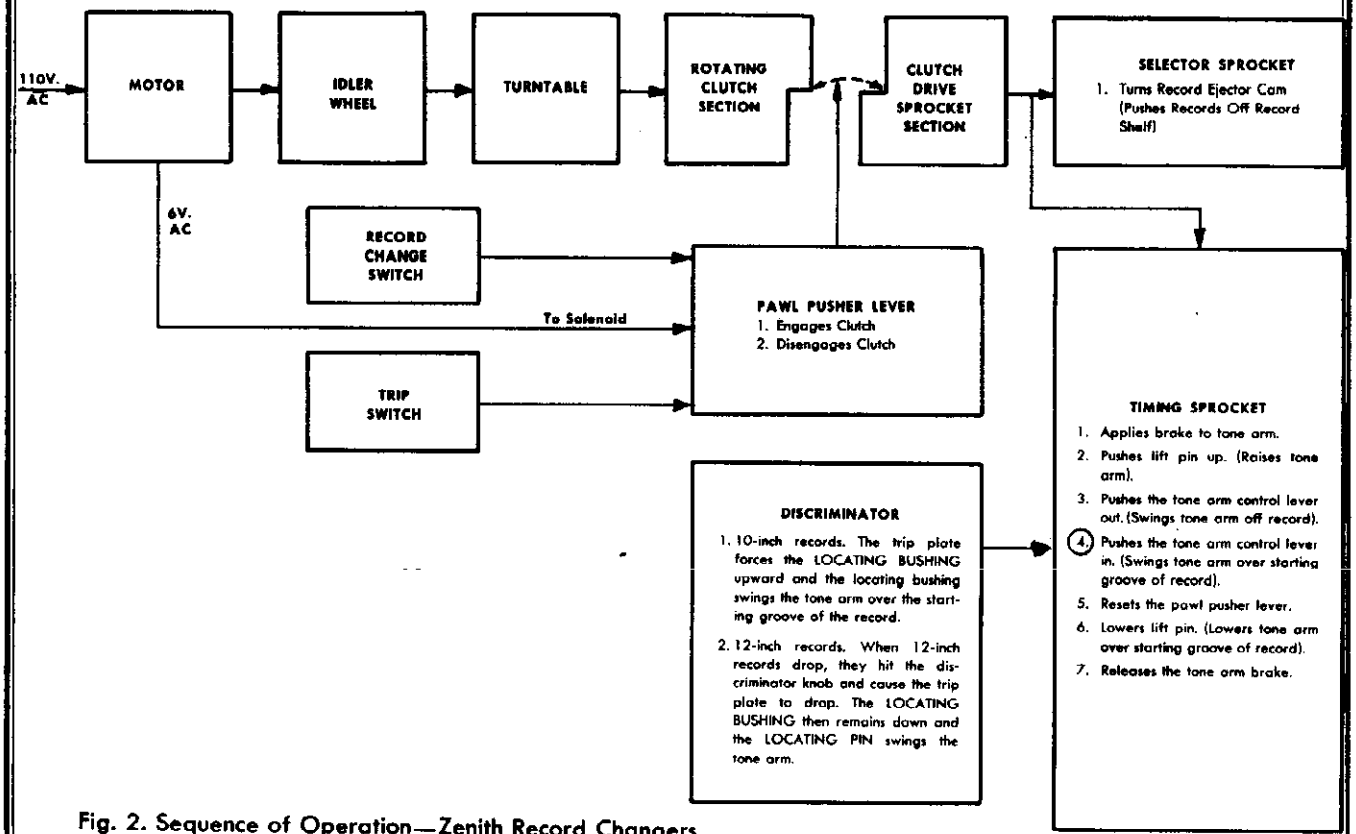

Fig. 2. Sequence of Operation—Zenith Record Changers.

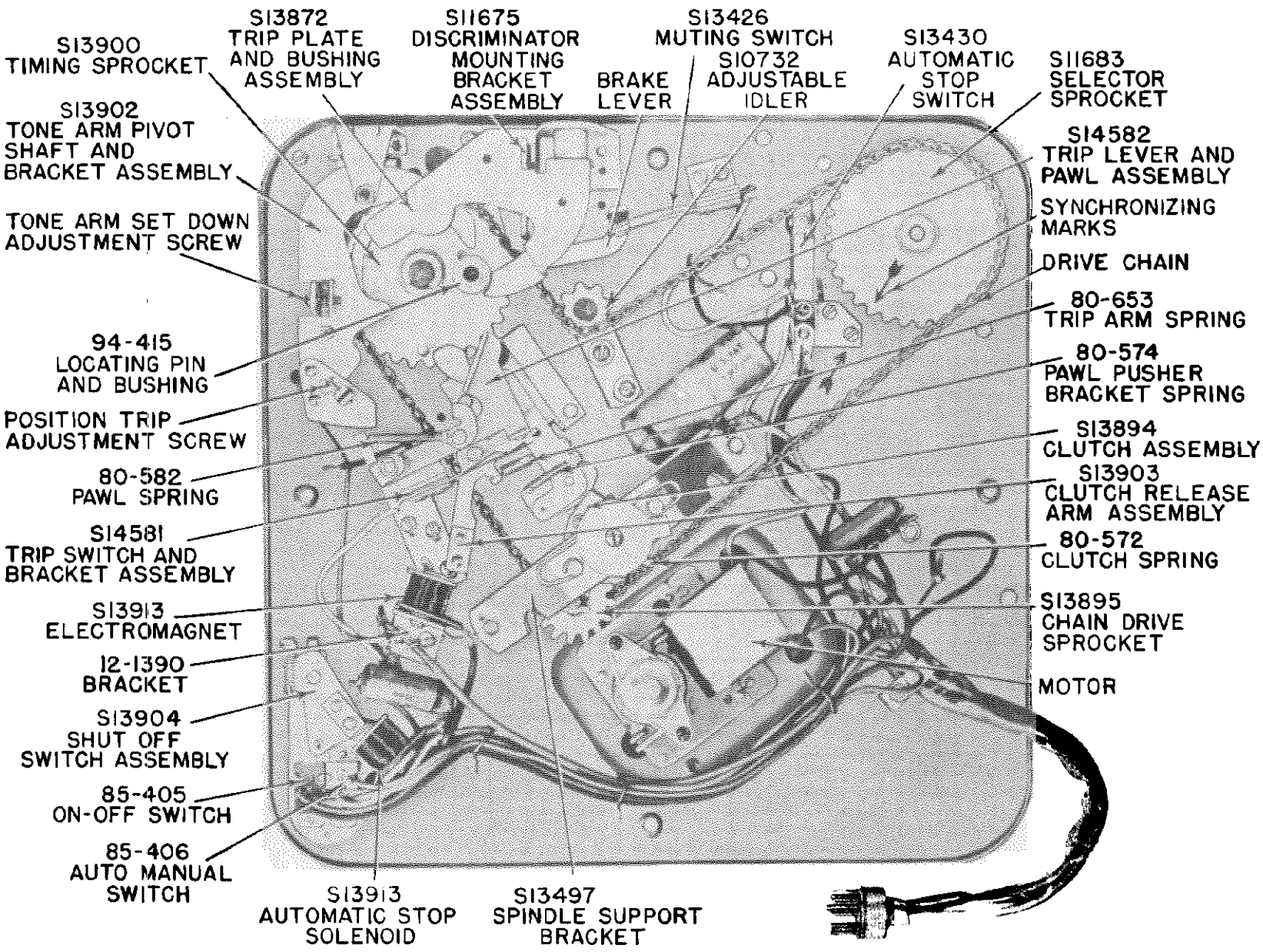

Fig. 5. Bottom View of S-13675 and S-14006 Record Changers.

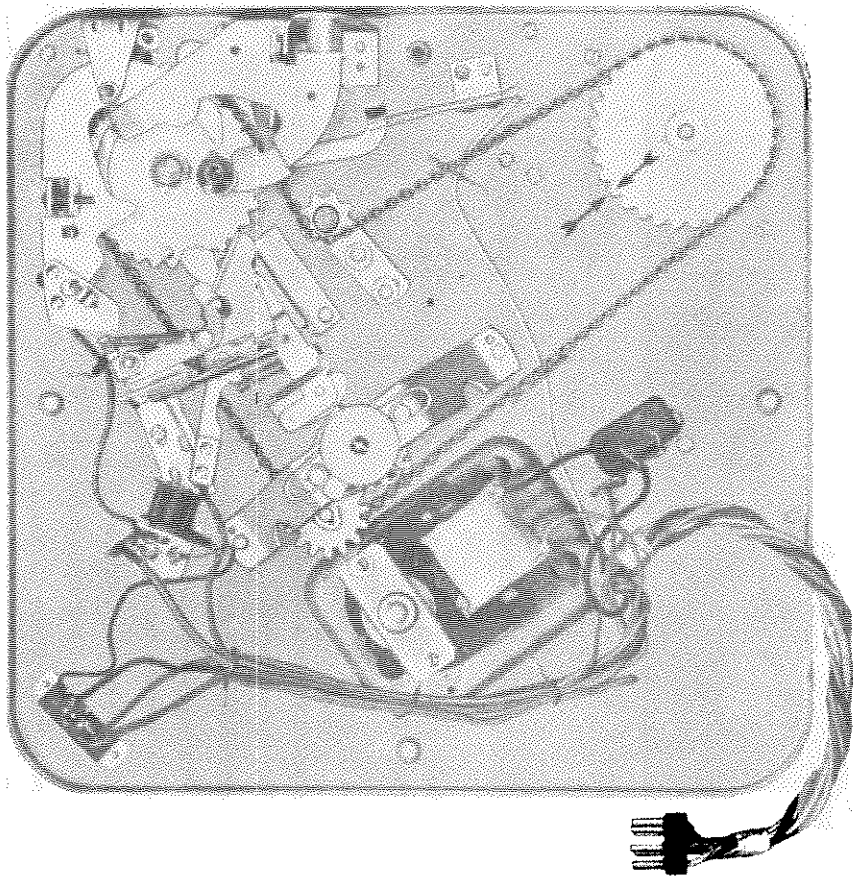

Fig. 4. Bottom View S-14002 and S-14008 Record Changers.

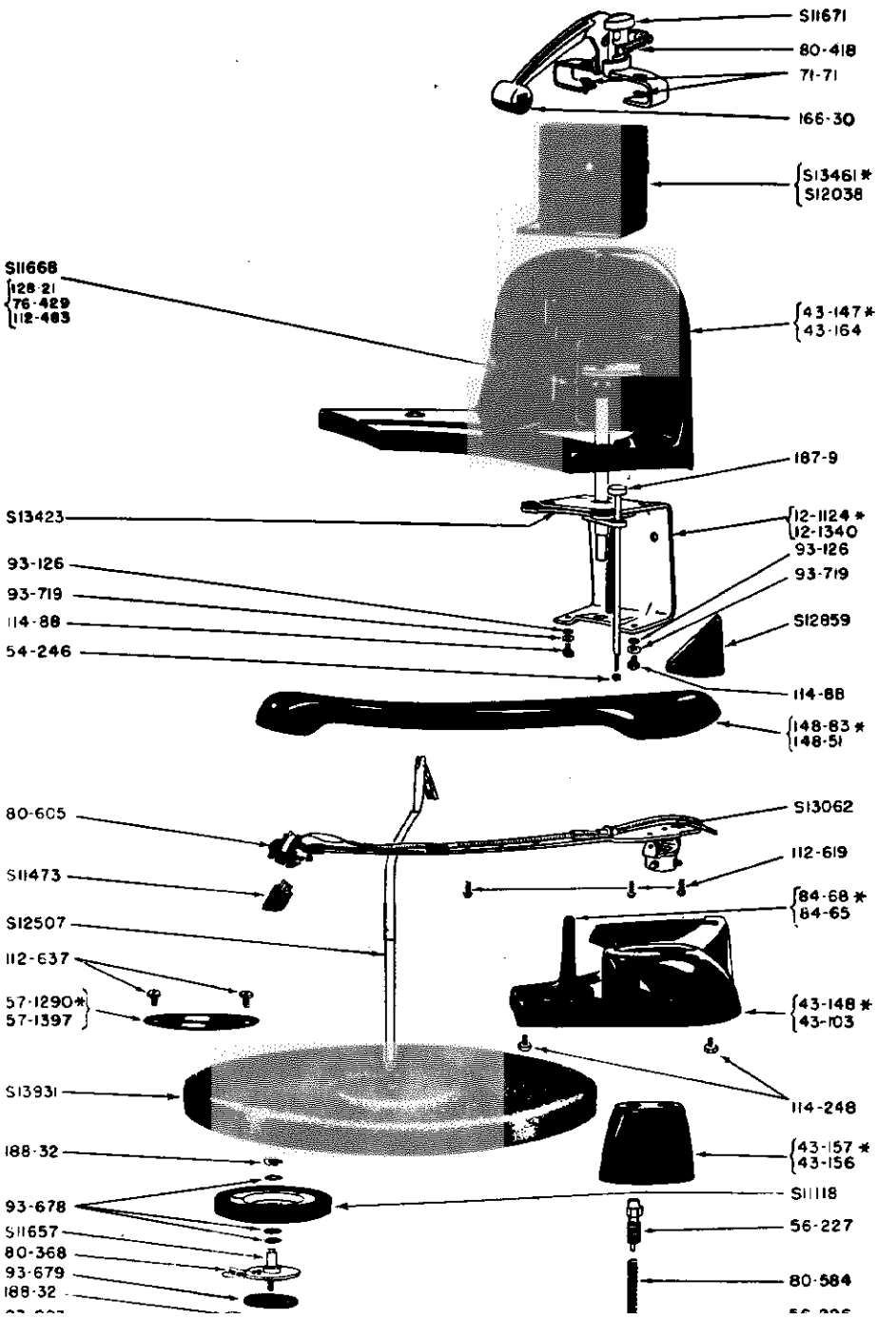

ZENITH RADIO CORP.

MODELS S-13675, S-14002, S-14006, S-14008

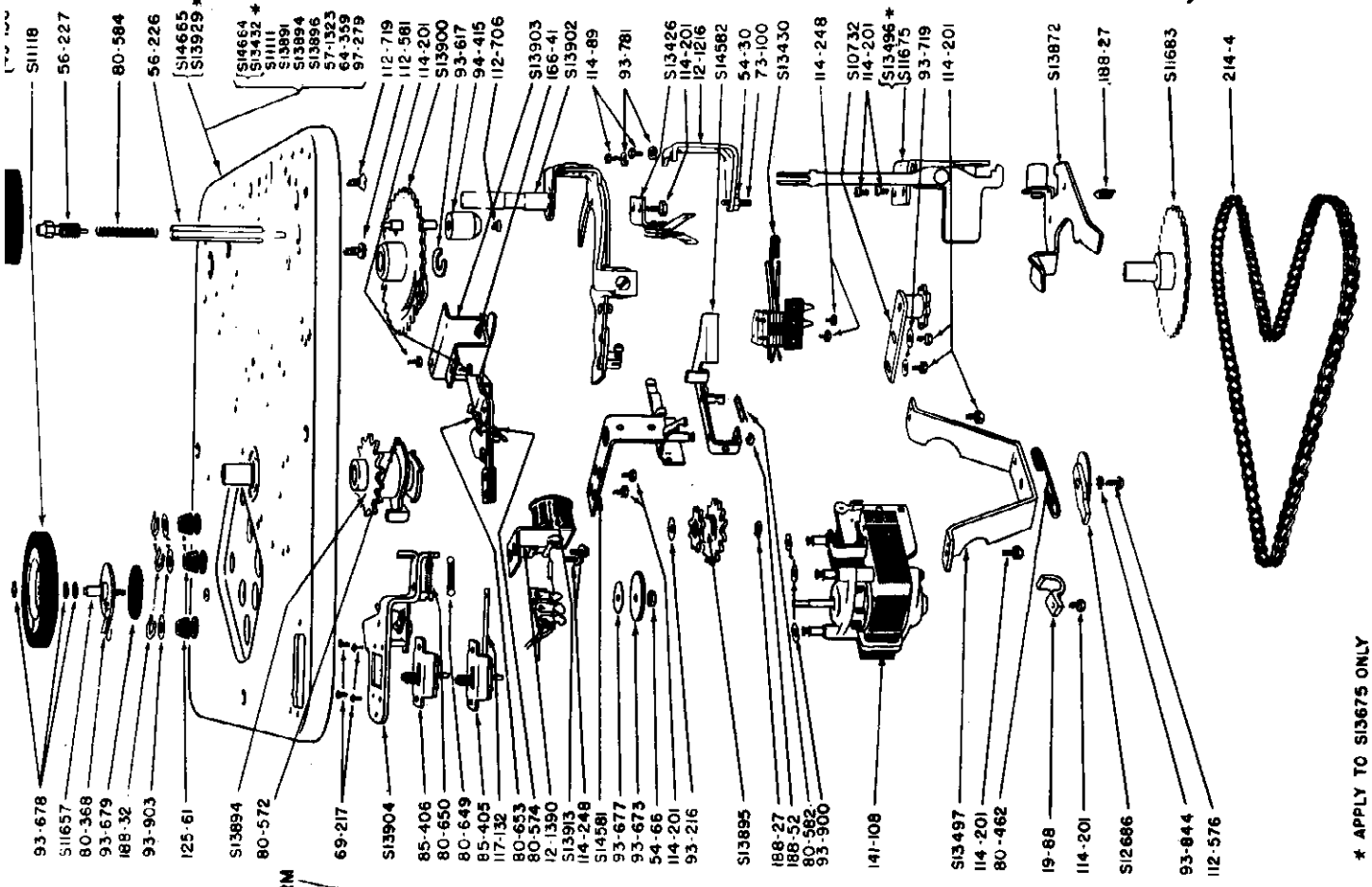

* APPLY TO S13675 ONLY

Fig. 21. Exploded View of Record Changer.

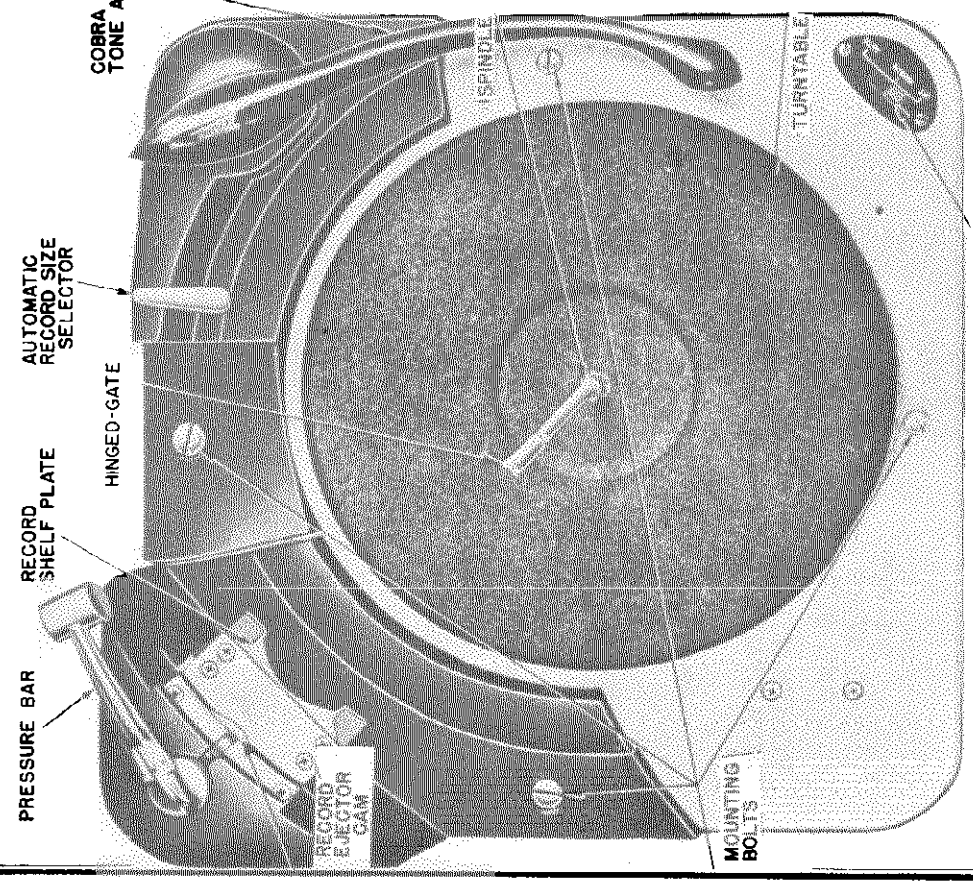

Fig. 3. Top View S-14002 and S-14008 Record Changers.

MODELS S-13675, S-14002, S-14006, S-14008

ZENITH RADIO CORP.

LUBRICATION

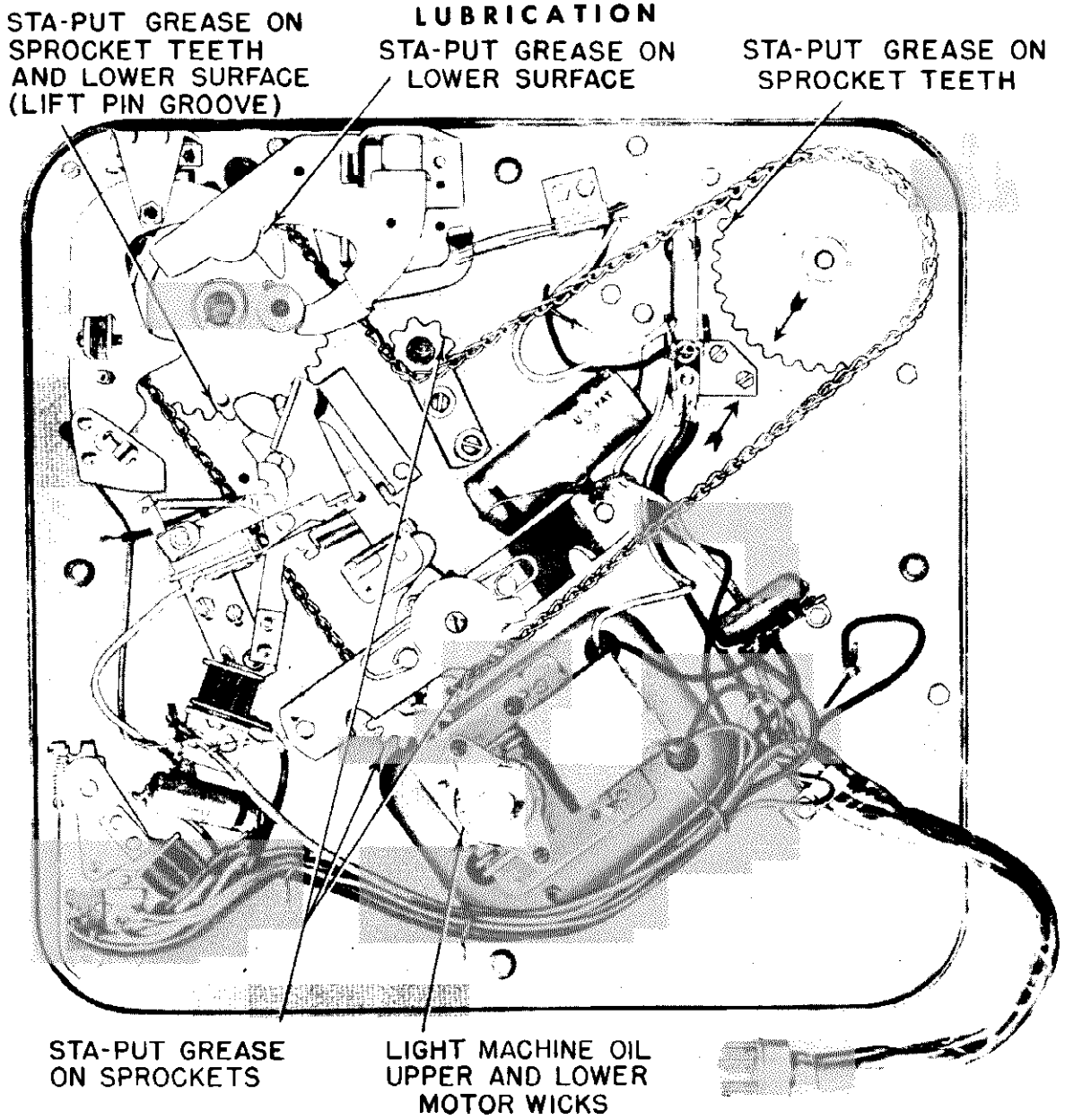

Fig. 6. Lubrication Bottom of Record Changer.

Sta-Put grease No. 512 (light grease of the vaseline type) and light machine oil of No. 10 consistency are used for lubrication throughout.

Figures 6 and 7 indicate the points to be lubricated and the type of lubricant to use. The Motor has two oil wicks, which should be saturated with oil. The Record Spindle Guide Bearing, Idler Wheel Bearing, Lower Drive Shaft Bearing, Drive Shaft Thrust Bearing and the Motor Bearings are of the OILITE type and require very little attention. If squeaks develop, be certain that they are not caused by friction between the Spindle and records on the Turntable. A thin coat of wax on the Spindle will remedy this condition.

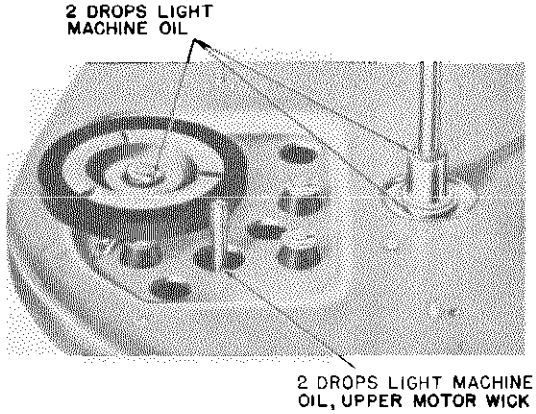

Fig. 7. Lubrication Top of Record Changer.

THEORY OF THE COBRA RADIONIC PICKUP

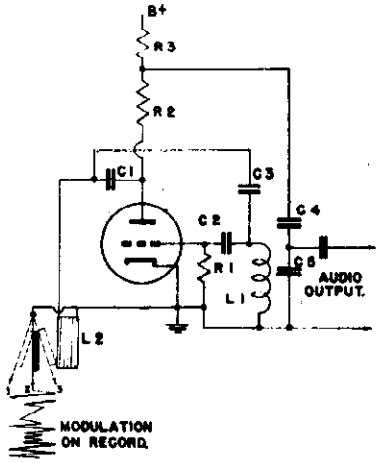

Fig. 8. Simplified Circuit of Oscillator.

The operation of the Cobra pickup is considerably different from Crystal and Dynamic pickups. These pickups generate audio power, while the Cobra controls power generated by a radio frequency oscillator. The triode tube is a modulated oscillator, detector and audio amplifier. The oscillator operates at a frequency of 2.5 Mc. Modulation is accomplished by changing the energy losses in a tuned circuit. These losses may be represented by an equivalent resistance in series with the reactance of the coil. The ratio of the resistance to the reactance determines the efficiency or Q of the coil. The amplitude of the RF voltage developed across this coil by the oscillator will vary with changes in Q.

The grid coil L_1 and other components of the oscillator are mounted in the receiver chassis, while the plate coil L_2 is in the Needle Cartridge with the vane and needle assembly. The coil is fixed and has 40 turns of No. 40 wire (approximate DC resistance 2½ ohms). The stainless steel vane, which is in the field of the coil, is spot welded to the osmium-iridium tipped stylus. Any movement of the stylus will cause a corresponding movement of the vane. As the stylus and vane follow the modulations in the record, changes in the mutual inductance between the vane and coil occur (see Fig. 8). In position 2 the vane is at rest, and a constant RF voltage appears across the plate coil. As the vane is set in motion and reaches position 1, it is at its greatest outward swing from the coil, resulting in low mutual inductance, low reflected resistance, higher Q, and a higher RF voltage across the coil. In position 3 it is at its greatest inward swing; resulting in a high mutual inductance, high reflected resistance, lower Q and a lower RF voltage. It can be seen that the amplitude of the RF voltage which appears across the coil will vary with changes in Q, satisfying the condition for amplitude modulation. The position of the vane changes both the Q and L of the coil. Changes in L shift the frequency slightly, and a certain amount of frequency modulation is present, but since there is no frequency discrimination it remains undetected.

Since the grid and plate coils are part of a single tuned circuit any variations of amplitude of the RF voltage brought about by the changes in Q across the plate coil will also appear across the grid Coil L_1 causing a shift in the average plate current through the plate load resistor across which the audio output voltage is developed. Plate bend detection takes place since only the positive half of the grid swing causes an increase in the average plate current. These changes in the average plate current appear as audio voltage across the plate load resistor.

The 2.5 Mc. RF voltage and the audio voltage both appear at the plate of the oscillator triode. R_2, C_4 and C_5 filter out the RF voltage allowing only the audio component to the grid of the pre-amplifier where it is amplified and reproduced by the loud-speaker.

ADJUSTMENTS

1. Tone Arm Set Down Adjustment.

The Tone Arm Set Down Adjustment determines the landing position of the needle on the starting groove of the record. The adjustment screw can be reached with a screwdriver (Fig. 10). The tone arm must be held in the rest position while the adjustment is made. Clockwise rotation of the screw moves the tone arm in, while counter-clockwise rotation moves it out.

2. Tone Arm Height Adjustment.

The Tone Arm vertical rise is governed by the Lift Pin. The Lift Pin is adjustable (see Fig. 9). Too long a Lift Pin will cause the Tone Arm to hit the underside of the records on the Spindle. If the Lift Pin is short, the needle will not clear fourteen records on the Turntable. To make the proper adjustment, trip the Clutch by hand and rotate the Turntable clockwise until the Tone Arm starts to swing toward the Spindle. Gently push the Tone Arm as close to the Spindle as it will go, place a record on the Spindle and observe the spacing between it and the Tone Arm. The spacing "A" (Fig. 11), should be approximately the thickness of a record.



Fig. 9. Lift Pin.

If the spacing is incorrect, lift the Tone Arm, remove the Lift Pin, and adjust the Lift Pin to the proper length.

3. Trip Switch Adjustment.

As the record is played, the ratchet on the tone arm pivot shaft engages the trip pawl. The oscillating action developed by the eccentric groove on the record closes the trip switch contacts and allows the solenoid to become energized. The magnetic flux attracts the trip lever which moves the pawl pusher lever from the path of the clutch pawl. This allows the clutch to engage and start the next cycle.

The gap between the trip switch contacts should be approximately 1/16". If the spacing is incorrect, bend the contact spring. If the contact spring tension is too great, the needle may not follow the oscillating groove on the record. To adjust the spring tension, insert a screwdriver between the contact and guide springs and bend the contact spring (Fig. 10) until an approximate pressure of one ounce is necessary to move the contact spring from the guide spring. Be certain that the contact spring exerts some pressure on the guide spring after adjustment.

The spacing between the trip magnet and trip lever should be approximately 3/32".

MODELS S-13675, S-14002,
S-14006, S-14008

ZENITH RADIO CORP.

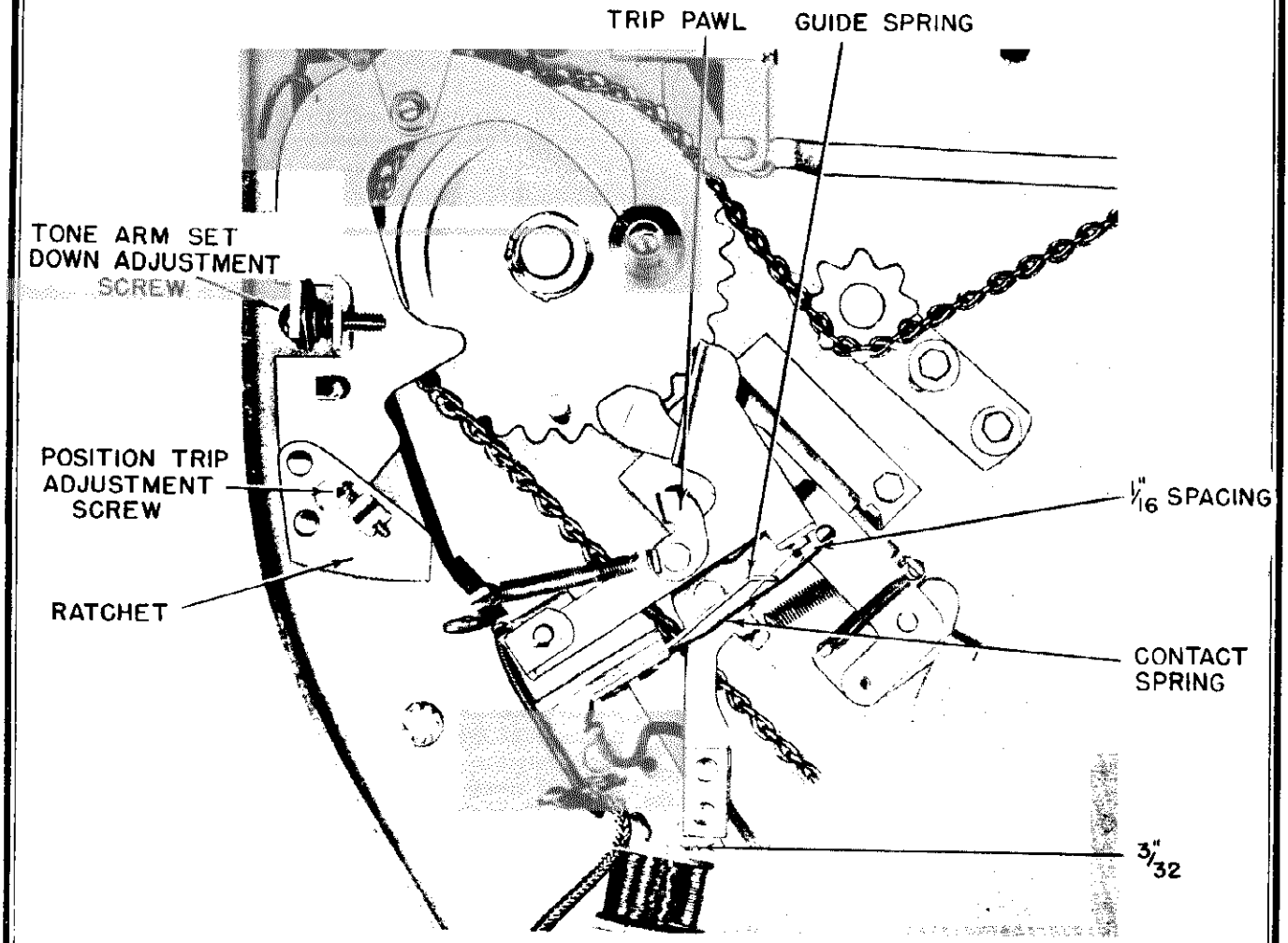

Fig. 10. Tone Arm Set Down, Position Trip and Trip Switch Adjustments.

4. Position Trip Adjustment.

The Position Trip does not depend on an eccentric groove in the record to start the record change cycle, but will trip the mechanism whenever the needle comes within a pre-determined distance from the Spindle. Older type records that do not have an eccentric groove can in most cases be played automatically by the proper adjustment of the Position Trip. Under normal conditions with the needle approximately 1⅞" from the center of the Spindle, adjust the Position Trip Adjustment Screw (Fig. 10) until the Trip Switch contacts close. This distance is generally satisfactory since no modern record will be cut off before it has completed its play, and none will fail to trip the mechanism at the end. In special cases, screw the Position Trip Adjustment Screw clockwise for earlier tripping and counter-clockwise for later tripping as the individual case may be.

It may be impossible to find an adjustment that will always trip the mechanism and never cut off on all type records, and in these special cases the record must be played manually.

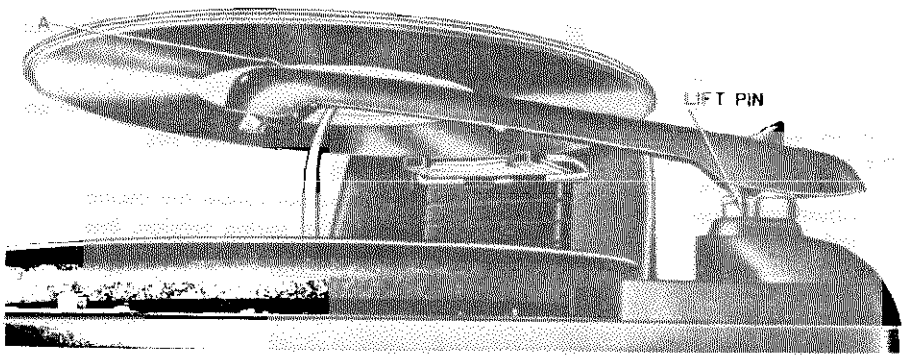

Fig. 11. Tone Arm Height Adjustment.

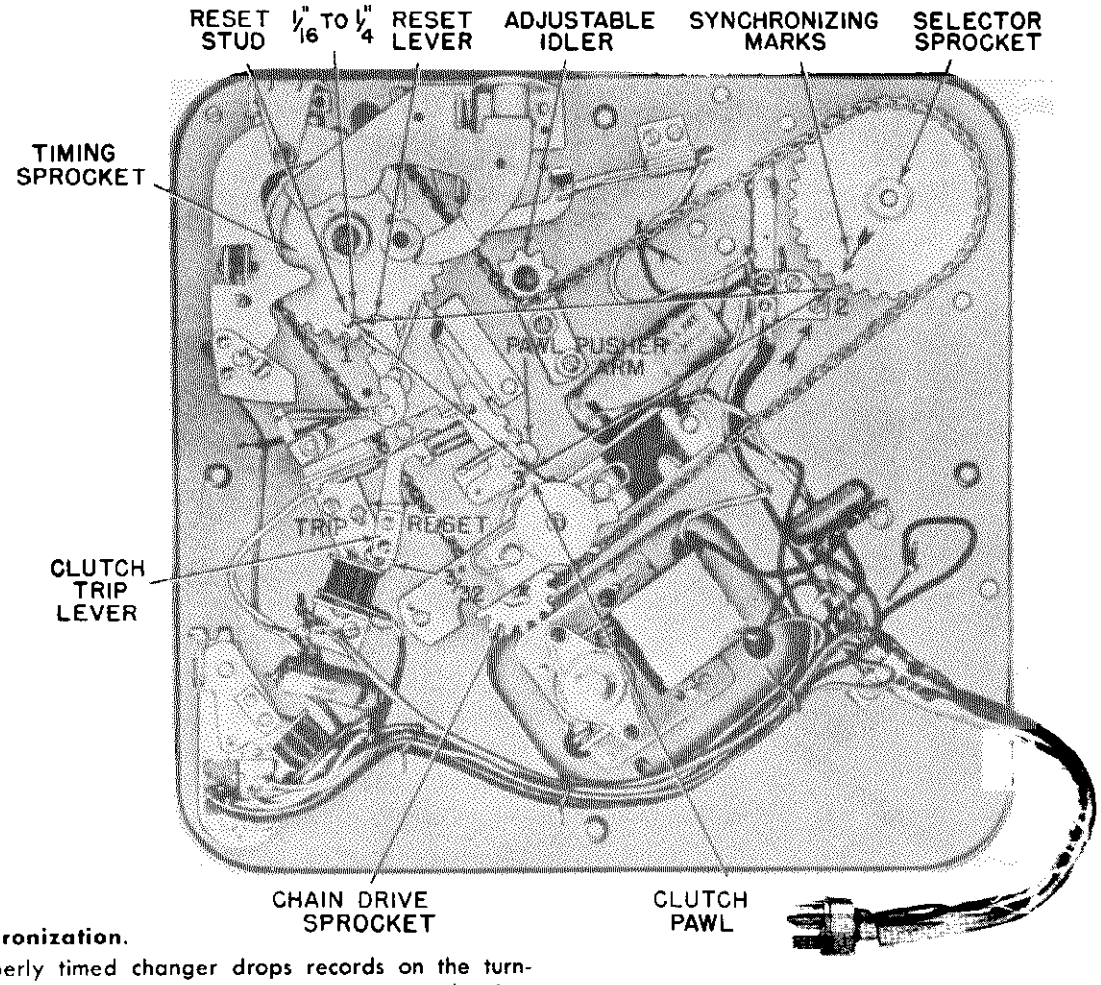

Fig. 12. Synchronization.

5. Synchronization.

A properly timed changer drops records on the turntable when the tone arm is at its greatest outward swing. Improper timing results in the records hitting the tone arm. The record changer is kept in time by the drive chain. If the chain is removed, the changer must be synchronized.

Fig. 12 indicates the correct position of the timing sprocket, selector sprocket and the clutch. To synchronize, study Fig. 12 and proceed as follows:

1. Reset the clutch trip lever.

2. Turn the timing sprocket until the reset stud is approximately 1/16" from the reset lever (1). Turn the selector sprocket until the synchronizing mark lines up with the mark on the base plate (2). THESE POSITIONS MUST BE MAINTAINED DURING THE NEXT OPERATION.

3. Thread the chain over the timing sprocket, chain drive sprocket, adjustable idler, selector sprocket and set the adjustable idler for medium tension of the chain. Check the position of the synchronizing marks and the reset stud.

4. Remove the retaining washer and lift the chain drive sprocket until the gears disengage.

5. Turn the clutch until the clutch pawl touches the pawl pusher lever (3).

6. Lower the chain drive sprocket until it engages the clutch gears and reinsert the retaining washer.

REMOVING THE TURNTABLE

Hold the clutch by inserting a wide blade screwdriver against the spindle bracket and a segment of the drive plate. Apply a twisting, pulling force to the turntable.

Before seating the turntable, be certain that the idler wheel is pushed inside the turntable rim.

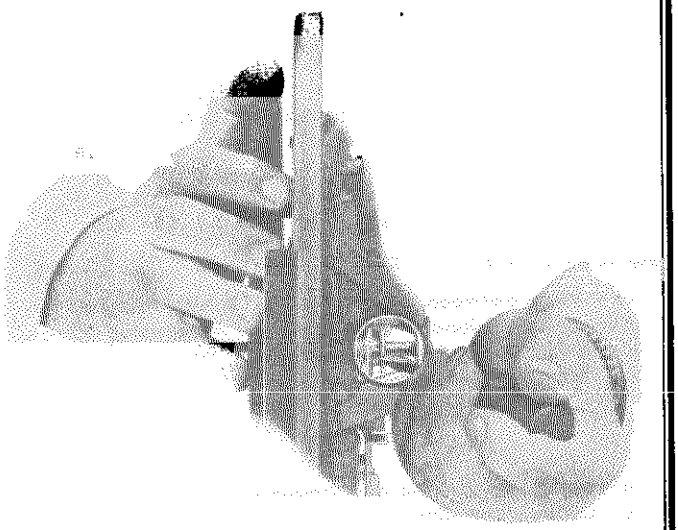

Fig. 13. Removing the Turntable.

MODELS S-13675, S-14002, S-14006, S-14008

ZENITH RADIO CORP.

REPLACING THE MOTOR

When a replacement Motor is ordered, include the line voltage and frequency of the receiver.

To replace the Motor, unsolder the connecting leads, remove the Turntable, the three retaining washers and allow the Motor to drop out. When the Motor is installed do not draw the connecting leads tight as this will prevent the Motor from "floating" on its mounts. Be certain that the retaining washers are crimped and the leads securely soldered and taped.

REPLACING THE CHAIN

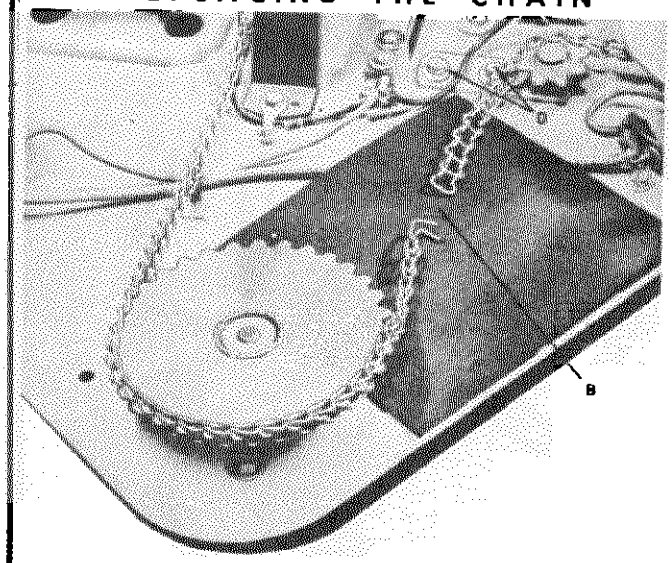

Fig. 14. Replacing the Chain.

The chain may be removed by loosening the adjustable idler (Screws "D," Fig. 14), and opening one of the links (B). It will be noted that on some models the open ends of the links face inward while on others outward as in Fig. 14. The reason for this is to get the quietest operation. Normally the open ends of the links will face outward with all replacement chains.

After the chain is threaded in place, carefully close the open link and be certain that there is no stiffness in its action. Read the paragraph on Synchronization before the chain is permanently installed.

TROUBLE SHOOTING

SQUEAKS OR NOISES DURING PLAYING OF RECORDS.

a. Friction between the records on the turntable and the spindle will occasionally cause squeaks. A thin coat of wax applied to the spindle will remedy this condition.
b. Check lubrication.

MECHANISM STARTS SLOWLY AND MOTOR GETS HOT.

a. Check line voltage and frequency.
b. Check lubrication.
c. Motor windings damaged.
d. Room temperature abnormally low.

PRESSING RECORD CHANGE BUTTON ON RECEIVER PANEL DOES NOT START THE RECORD CHANGE CYCLE.

a. See that the OFF-MAN-AUTO switch is set to AUTO.
b. Check Record Change Switch.
c. Check electrical continuity of solenoid circuit.
d. Check the solenoid energizing voltage.

MOTOR FAILS TO RUN EVEN WHEN IT IS DISCONNECTED FROM CHANGER AND PROPER VOLTAGE AND FREQUENCY APPLIED DIRECTLY TO THE TWO INPUT LEADS OF THE WINDING.

a. Open windings.
b. Damaged or frozen bearings.
c. Lower Bearing Support Bracket bent. Remove and straighten bracket—Re-center armature.

RUMBLE AND MICROPHONICS DURING REPRODUCTION.

a. Changer not "floated" properly. Loosen mounting bolts.
b. Motor retaining rings rubbing on the idler wheel.
c. Motor leads pulled too tight preventing motor from "floating" freely.
d. Noisy Phono Oscillator tube.
e. Impression on Idler Wheel.

NEEDLE SETS DOWN PROPERLY ON RECORD BUT SLIDES OVER THE RECORD GROOVES.

a. Cabinet tilted.
b. Badly worn or broken needle cartridge.

NEEDLE FAILS TO CLEAR MAXIMUM LOAD OF RECORDS ON THE TURNTABLE.

a. Check Tone Arm height adjustment. (Adjustment 2.)

CHANGER CYCLES WITH OFF-MAN-AUTO SWITCH ON MAN.

a. Check OFF-MAN-AUTO switch.
b. Reset stud does not engage clutch reset lever.

TONE ARM FALLS OFF RECORD.

a. Check Tone Arm set down adjustment. (Adjustment 1.)
b. Check Tone Arm Pivot Bracket.
c. Changer not level.

TONE ARM SET-DOWN POSITION VARIES.

a. Check Tone Arm Brake and Spring.
b. Tight Tone Arm Connecting Leads.

RECORD IS NOT HEARD ALTHOUGH CHANGER OPERATES.

a. See that the Phono Radio switch is on Phono.
b. Check receiver audio by listening to radio.
c. Check the phono oscillator tube.
d. Check Needle Cartridge.
e. Check Tone Arm Housing for broken leads.

TONE ARM SETS DOWN TOO FAR IN OR OUT ON RECORD.

a. Check Tone Arm set down adjustment. (Adjustment 1.)

CHANGER CONTINUES TO CYCLE.

a. Check Trip switch adjustment. (Adjustment 3.)
b. Check Record Change switch.
c. Clutch release mechanism sticks.
d. Pawl pusher lever not reset by reset stud.

CHANGER WILL NOT CYCLE UPON COMPLETION OF RECORD.

a. See that the OFF-MAN-AUTO switch is set to AUTO.
b. Be certain the record has an eccentric center groove.
c. Check Trip switch.

© John F. Rider

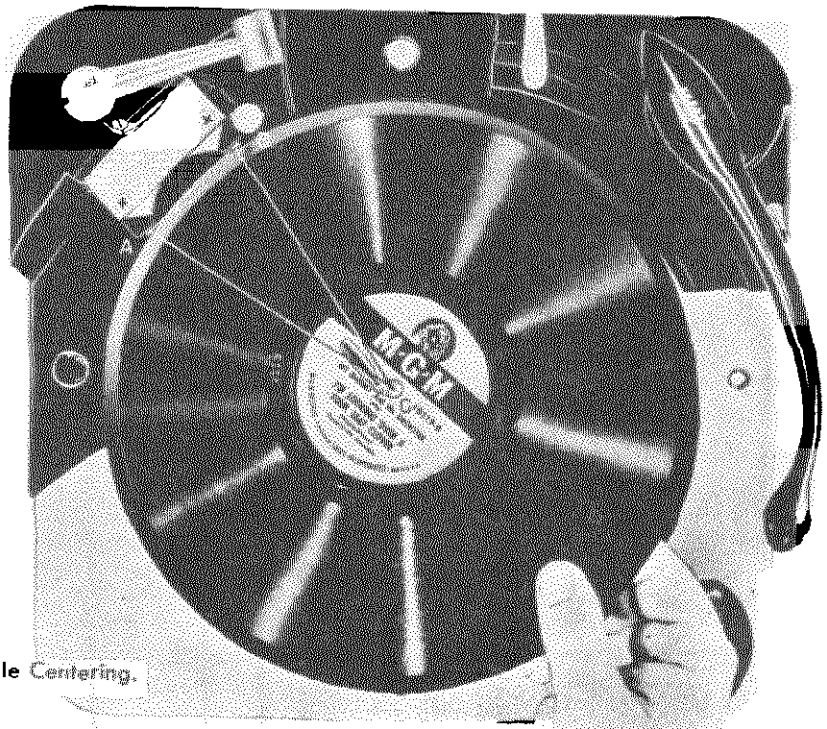

Fig. 15. Checking Spindle Centering.

RECORD CENTER HOLE WEAR.

a. Record centers oversize.

b. A bent spindle will cause center hole wear due to impeded record injection. To check the spindle position, place a 10" record as shown in Fig. 15. If the spindle is properly centered, a triangle will be formed with the metal ends of the record shelf plate.

SQUEAKS WHEN CHANGER IS IN CYCLE.

a. Friction between Lift Pin and Timing Sprocket. Apply a thin coat of Sta-Put.

MOTOR RUNS BUT TURNTABLE SLIPS OR STOPS.

a. Turntable not fully seated. Tap gently.

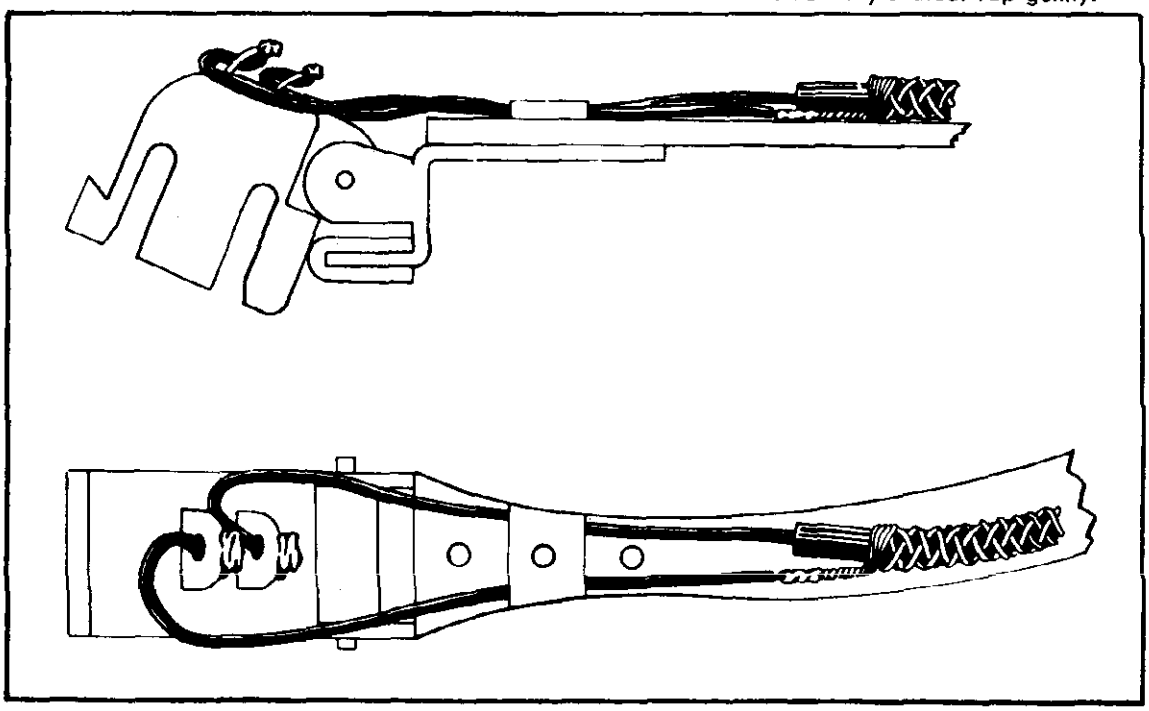

Fig. 16. Needle Cartridge Socket Connection.

Fig. 16 shows how the leads are connected to the Needle Cartridge Socket. The lead and insulation are run through the hole in the contact and the lead is soldered with a light soldering iron. Great care must be exercised, and very little heat applied as the socket is made of lucite and will burn easily. The complete lead and socket are supplied as S-12633.

© John F. Rider

MODEL S-14002

ZENITH RADIO CORP.

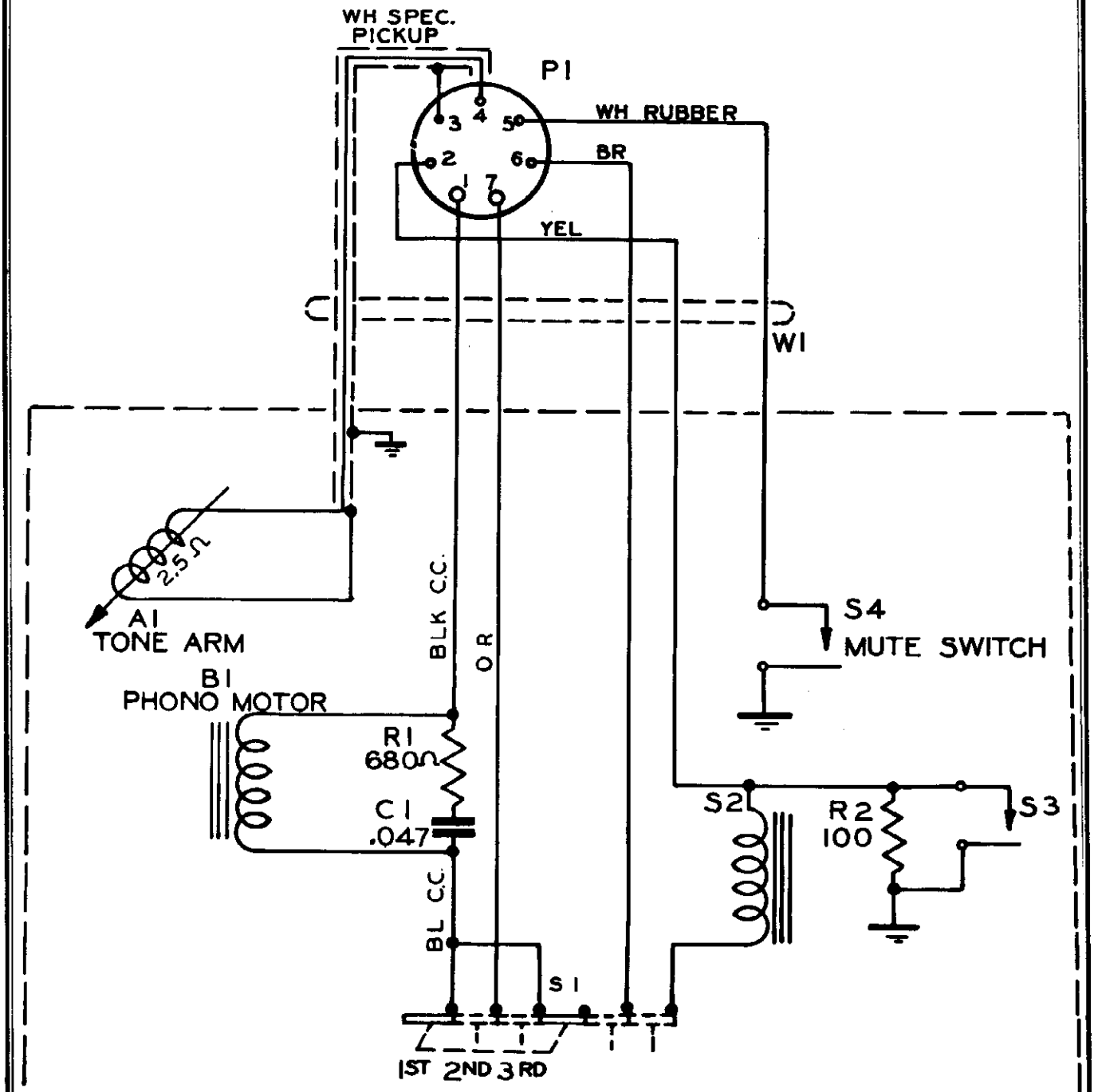

Fig. 17. S-14002 Schematic Diagram.

©John F. Rider

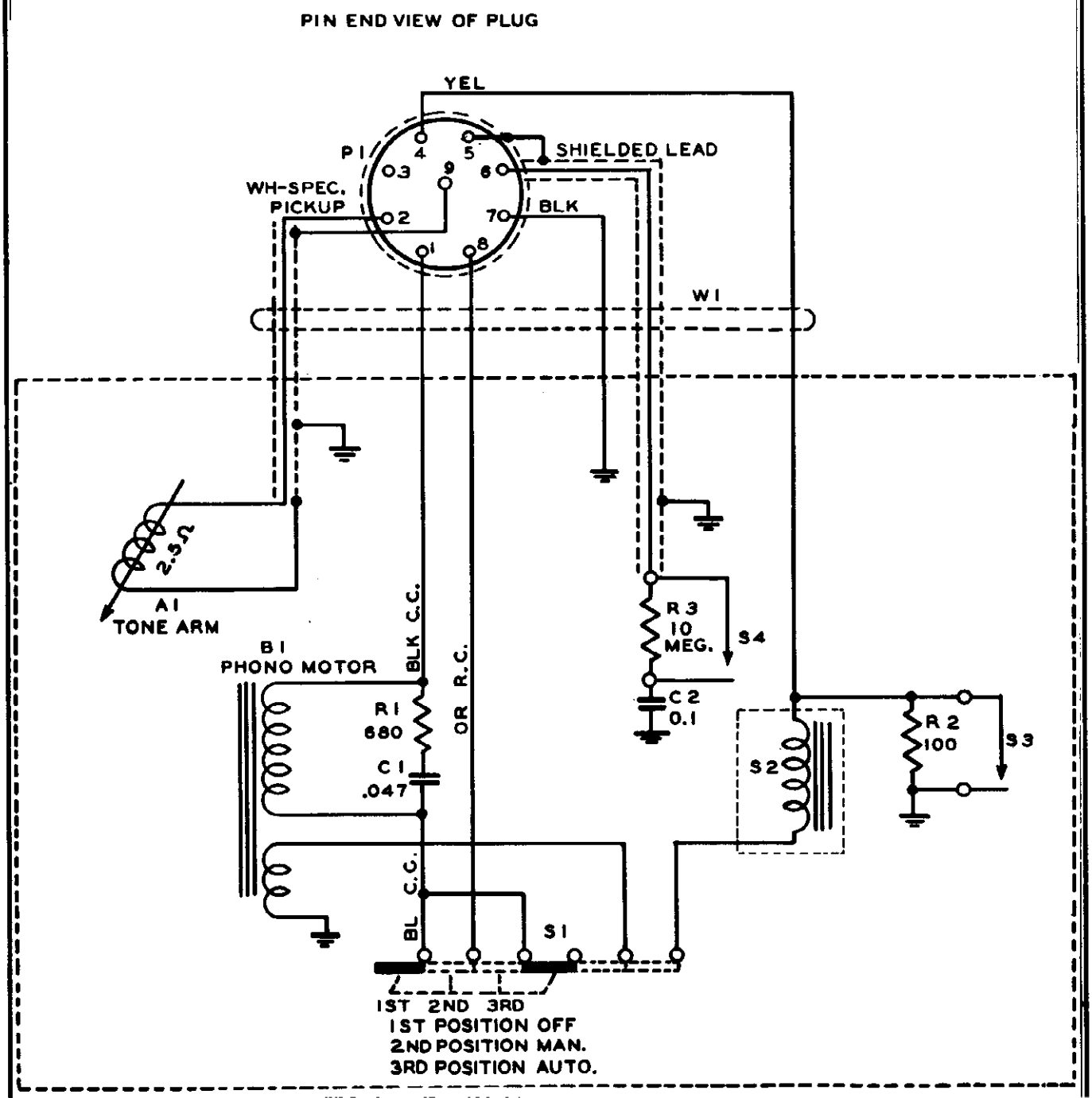

Fig. 18. S-14008 Schematic Diagram.

MODELS S-13675, S-14006

ZENITH RADIO CORP.

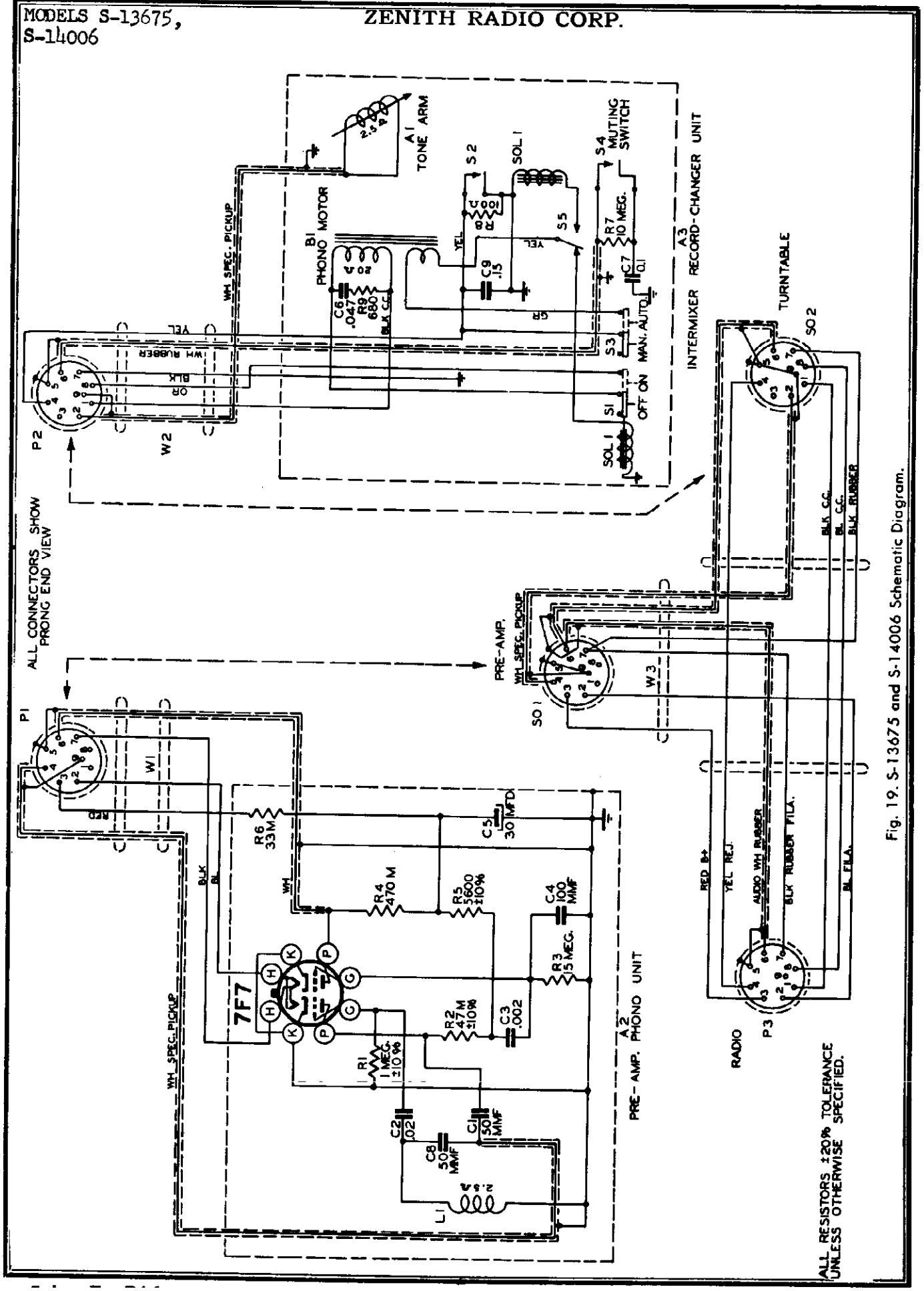

Fig. 19. S-13675 and S-14006 Schematic Diagram.

ZENITH RADIO CORP.

MODELS S-13675, S-14002, S-14006, S-14008

NUMERICAL PARTS LIST

12-1124	Record Ejector Plate Mounting Bracket (S-13675, S-14006)
12-1216	Tone Arm Pivot Bracket
12-1340	Record Ejector Plate Mounting Bracket (S-11674)
12-1390	Solenoid Mounting Bracket
15-64	Plug Cap and Insulator
19-88	Cable Clip
19-150	Housing Cover Clip
22-417	.1 Mfd. Paper Dielectric Capacitor 600 V.
22-1570	.05 Mfd. Paper Dielectric Capacitor 400 V.
24-354	Record Ejector Housing Cover (S-14006, S-14008)
24-432	Record Ejector Housing Cover (S-13675, S-14002)
43-103	Tone Arm Housing (S-14006, S-14008)
43-147	Record Ejector Housing (S-13675, S-14002)
43-148	Tone Arm Housing (S-13675, S-14002)
43-156	Tone Arm Support Housing (S-14006, S-14008)
43-157	Tone Arm Support Housing (S-13675, S-14002)
43-164	Record Ejector Housing (S-14006, S-14008)
54-30	No. 8-32 x 5/16" x 7/64" Hex Nut—Steel N.P.
54-66	No. 10-32 x 5/16" Hex Nut—Steel N.P.
54-246	No. 4-40 x 3/16" x 3/32" Hex Nut (S-13675, S-14006)
56-146	Spring Retaining Pin (Pressure Arm)
56-226	Tone Arm Lift Pin—Lower
56-227	Tone Arm Lift Pin—Upper
57-1290	Switch Escutcheon (S-13675)
57-1323	Turntable Shaft Plate
57-1324	Clutch Drive Plate
57-1355	Switch Plate (S-14002, S-14008)
57-1397	Switch Escutcheon (S-14006)
58-133	Phono Plug (S-13675, S-14006, S-14008)
58-169	Phono Plug (S-14002)
63-1744	100 Ohm Carbon Resistor ½ W. ±20%—Insulated
63-1779	680 Ohm Carbon Resistor ½ W. ±20%—Insulated
63-1954	10 Megohm Carbon Resistor ½ W. ±20%—Insulated (S-13675, S-14006, S-14008)
69-38	No. 8-32 x ¾" R.H.M.S.—Steel N.P.
69-43	No. 8-32 x 3/8" R.H.M.S.—Steel N.P.
69-217	No. 4-40 x 3/16" R.H.M.S. (S-13675, S-14006)
69-238	No. 4-40 x 5/8" R.H.M.S.—Steel Cad.
71-70	No. 6-32 x 3/16" Phillips Flat Hd. M.S.—Steel—Bright N.P.
71-71	No. 6-32 x ¼" Phillips Flat Hd. M.S.—Steel N.P.
71-81	No. 8-32 x 2¾" Flat Hd. M.S.—Steel N.P.
73-99	No. 8-32 x ¼" Slab Hd. Set Screw—Steel—Conepoint
73-100	No. 8-32 x ½" Slab Hd. Set Screw—Steel—Conepoint
80-368	Idler Wheel Tension Spring
80-418	Tension Spring (Pressure Arm)
80-462	Cam Spring
80-479	Spring (Spindle Dog)
80-531	Brake Spring
80-538	Landing Adjustment Spring (S-13902)
80-544	Contact Spring
80-545	Contact Spring
80-572	Clutch Spring (S-13894)
80-574	Pawl Pusher Bracket Spring (S-13903)
80-582	Pawl Spring (S-13901)
80-584	Tone Arm Lift Pin Spring
80-605	Cobra Cartridge Socket Tension Spring (S-13675, S-14006)
80-649	Shut-Off Lever Spring (S-13675, S-14006)
80-650	Shut-Off Pawl Spring
80-653	Trip Arm Spring (S-13903)
83-343	Three Lug Terminal Strip
83-1106	Two Lug Terminal Strip
83-1301	Two Lug Terminal Strip
83-1349	Tone Arm Shipping Strip
83-1423	Cobra Needle Guard Strip
84-65	Tone Arm Rest (S-14006, S-14008)
84-68	Tone Arm Rest (S-13675, S-14002)
85-372	Three Position Slide Switch (S-14002, S-14008)
85-405	On-Off Switch (S-13675, S-14006)
85-406	Auto-Man Switch (S-13675, S-14006)
86-81	Shakeproof Terminal No. 2101-8
86-190	Terminal—Cinch No. 1483
93 125	No. 6 Int. Shakeproof Lockwasher No. 1206
93-126	No. 8 Int. Shakeproof Lockwasher No. 1208
93-216	.015 x .255 x 7/16" Steel Washer—Cad.
93-415	No. 6 Ext. Shakeproof Lockwasher No. 1106
93-536	5/8" x 5/16" x .031 Steel Washer—Cad. Pl.
93-617	Sprocket Shaft Retaining Washer
93-655	.012 x .098 x 3/32" Steel Washer—N.P.
93-672	Idler Wheel Stud Washer—Large
93-673	Idler Wheel Stud Washer—Small
93-677	Idler Wheel Stud Fishpaper Washer—Large
93-678	Idler Wheel Stud Fishpaper Washer—Small
93-679	Idler Wheel Stud Felt Washer
93-719	7/16" x 3/16" x .031 Flat Washer—Cad.
93-764	Spring Washer—Shakeproof No. 3759-14
93-767	Cam Spacer Washer (.020 x .385 x 5/8" Stee—Cad. Pl.)
93-769	Steel Washer—Cad. Pl.
93-844	No. 5 External Shakeproof Lockwasher
93-876	Fibre Washer
93-900	Fibre Washer
93-903	Steel Washer
94-415	Tone Arm Locating Bushing
94-416	Timing Sprocket Bushing
112-56	No. 6 x ¼" Hex. Hd. Self Tapping Screw—Type Z—Cadmium
112-483	No. 6-32 x 3/8" B.H.M.S.—Steel N.P.
112-576	No. 5-40 x ¼" Oval B.H.M.S.—Steel N.P.

MODELS S-13675, S-14002; S-14006, S-14008

ZENITH RADIO CORP.

NUMERICAL PARTS LIST—Continued

112-581	No. 6 x 3/8" R.H. Self Tapping Screw—Shakeproof Type 25—Cadmium
112-585	No. 6 x 3/8" R.H. Self Tapping Screw—Type FZ—Cadmium
112-619	Cobra Tone Arm Housing Mounting Screws
112-637	No. 4-40 x 1/4" B.H.M.S.—Steel N.P.
112-706	No. 4-40 x 3/16" R.H.M.S.—Steel N.P. (SEMS)
112-719	No. 6 x 3/8" Flat Hd. Self Tapping Screw—Shakeproof Type 25—Steel Cad. Pl.
114-88	No. 8-32 x 1/2" Hex. Acorn Hd. M.S.—Steel N.P.
114-89	No. 8-32 x 5/16" Hex. Acorn Hd. M.S.—Steel N.P.
114-201	No. 8 x 5/16" Hex. Hd. Slotted Self Tapping Screw—STAN-TAP—Cad. Pl.
114-248	No. 6-20 x 5/16" Hex. Hd. Slotted Self Tapping Screw—Shakeproof Type 25—Steel Cad. Pl.
114-262	No. 8 x 7/16" Hex. Hd. Slotted Self Tapping Screw—STAN-TAP—Cadmium
117-132	Shut-Off Switch Lever (S-13675, S-14006)
125-61	Rubber Grommet—Motor Mtg.
128-21	Record Ejector Cam (S-11668)
141-108	A.C. Phono Motor—60 Cycles
141-109	A.C. Phono Motor—60 Cycles (S-14002)
148-83	Cobra Tone Arm Housing (S-13675, S-14006)
148-51	Bakelite Housing
166-30	Rubber Bumper
166-41	Rubber Bumper
187-9	Push Rod (Automatic Stop S-13675, S-14006)
188-27	Retaining Ring
188-32	Retaining Ring
188-52	Retaining Ring
214-4	Sprocket Drive Chain
S-10732	Idler Assembly
S-11111	Turntable Shaft and Bearing Assembly
S-11118	Idler Wheel Assembly
S-11473	Cobra Needle Cartridge
S-11657	Idler Wheel Stud and Washer Assembly
S-11668	Record Ejector Cam and Shaft Assembly
S-11671	Pressure Arm and Bracket Assembly
S-11672	Record Support Plate Assembly
S-11674	Record Support Plate Mounting Bracket Assembly
S-11675	Discriminator Mtg. Bkt. Assembly (S-14002, S-14006 and S-14008)
S-11683	Selector Sprocket and Bushing Assembly
S-11983	Idler Wheel and Rubber Drive Ring Assembly
S-12038	Record Ejector Housing Cover Assembly (S-14006, S-14008)
S-12507	Record Spindle Assembly
S-12633	Needle Cartridge Socket and Cable Assembly
S-12686	Cam and Washer Assembly
S-12859	Discriminator Knob and Plate Assembly
S-13060	Cobra Tone Arm Hinge Plate and Swivel Bracket Assembly
S-13062	Cobra Tone Arm Hinge Plate, Swivel Bracket, Needle Cartridge Socket and Cable Assembly
S-13063	Cobra Tone Arm Assembly (S-14006, S-14008)
S-13423	Record Support Plate and Bracket Assembly (S-13675)
S-13426	Muting Switch Assembly (S-13675, S-14006, S-14008)
S-13430	Automatic Stop Switch Assembly (S-13675, S-14006).
S-13461	Record Ejector Housing Cover Assembly (S-13675, S-14002)
S-13466	Cobra Tone Arm Assembly (S-13675, S-14002)
S-13494	Record Support Plate Mounting Bracket Assembly (S-13675)
S-13496	Discriminator Mounting Bracket Assembly (S-13675)
S-13497	Bracket and Spring Assembly
S-13872	Trip Plate and Bushing Assembly
S-13894	Clutch Pawl Assembly
S-13895	Drive Sprocket and Bushing Assembly
S-13896	Turntable Drive Shaft Bearing Assembly
S-13900	Timing Sprocket Assembly
S-13901	Trip Switch Assembly
S-13902	Tone Arm Pivot Shaft and Bracket Assembly
S-13903	Clutch Release Arm Assembly
S-13904	Shut-Off Switch Assembly (S-13675, S-14006)
S-13913	Magnet Assembly
S-13915	Cable Assembly (S-13675, S-14006, S-14008)
S-13929	Main Base Plate Assembly (S-13675)
S-13931	Turntable Assembly
S-14229	Cable Assembly (S-14002)
S-14312	Main Base Plate Assembly
S-14313	Muting Switch Assembly (S-14002)
S-14314	Main Base Plate Assembly (S-14008)
S-14581	Trip Lever Mounting Bracket Assembly
S-14582	Trip Lever and Pawl Assembly
S-14665	Main Base Plate Assembly (S-14006)
S-14666	Record Support Plate Mounting Bracket Assembly (S-14006)

Unless Specified, Parts Apply to All Models.

© John F. Rider

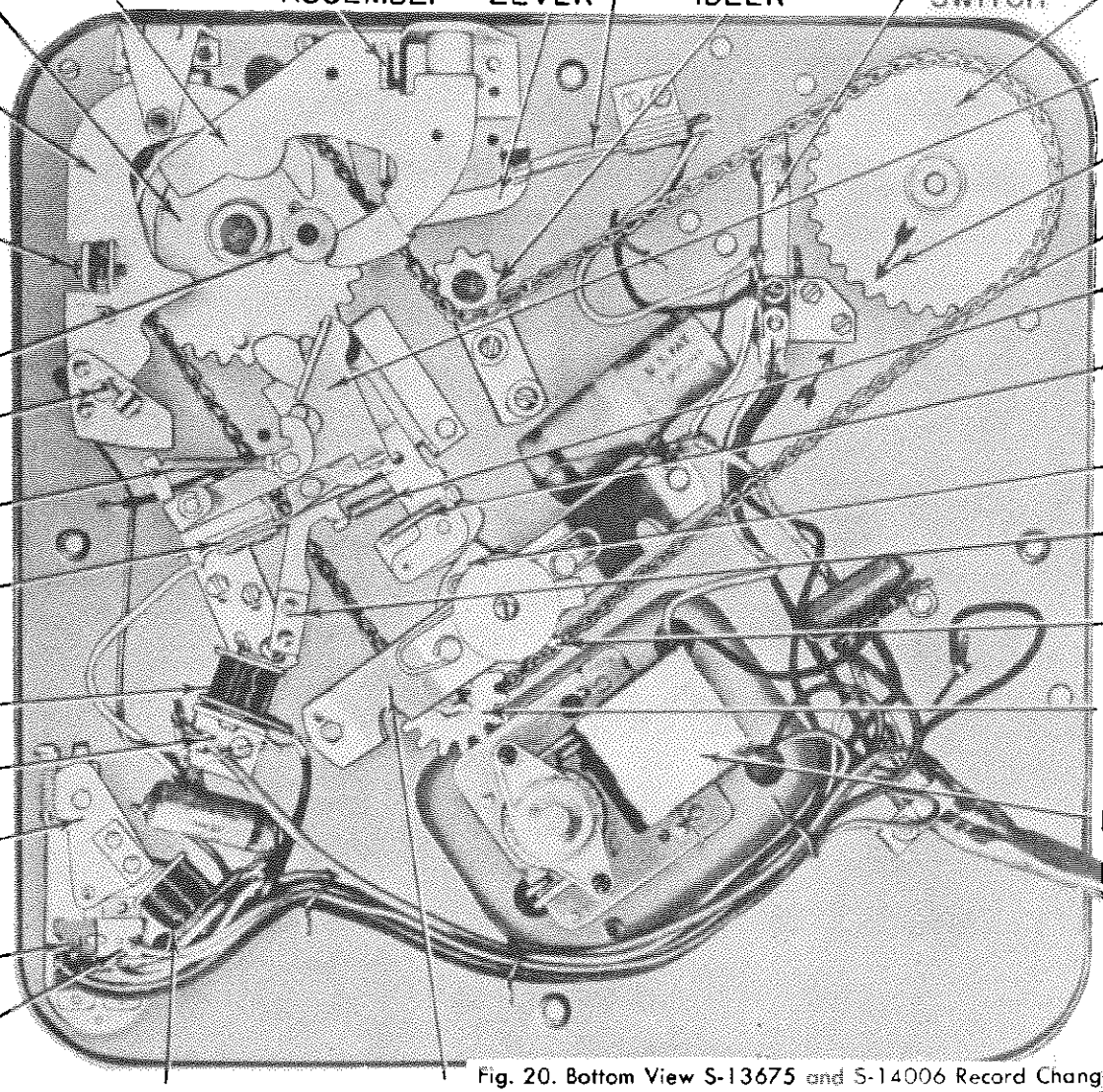

Fig. 20. Bottom View S-13675 and S-14006 Record Changers.