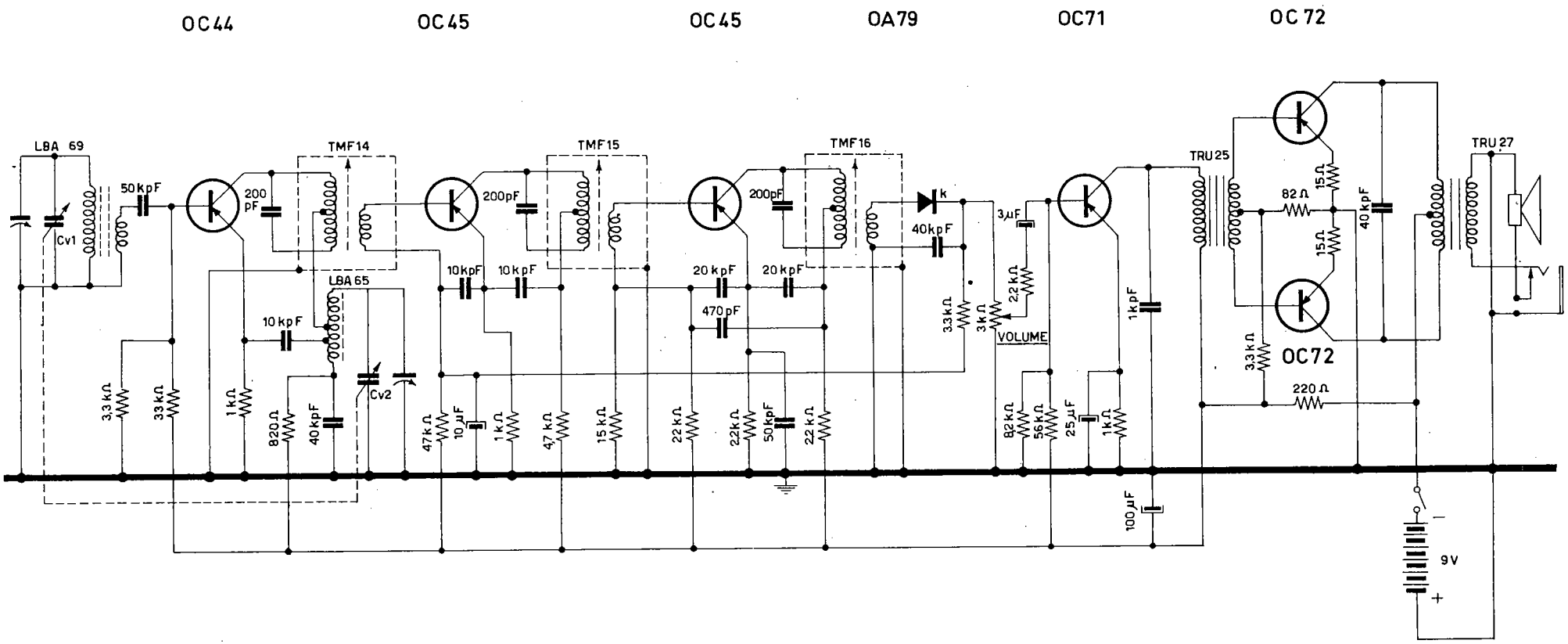

VEGA MOD. TRS 203A