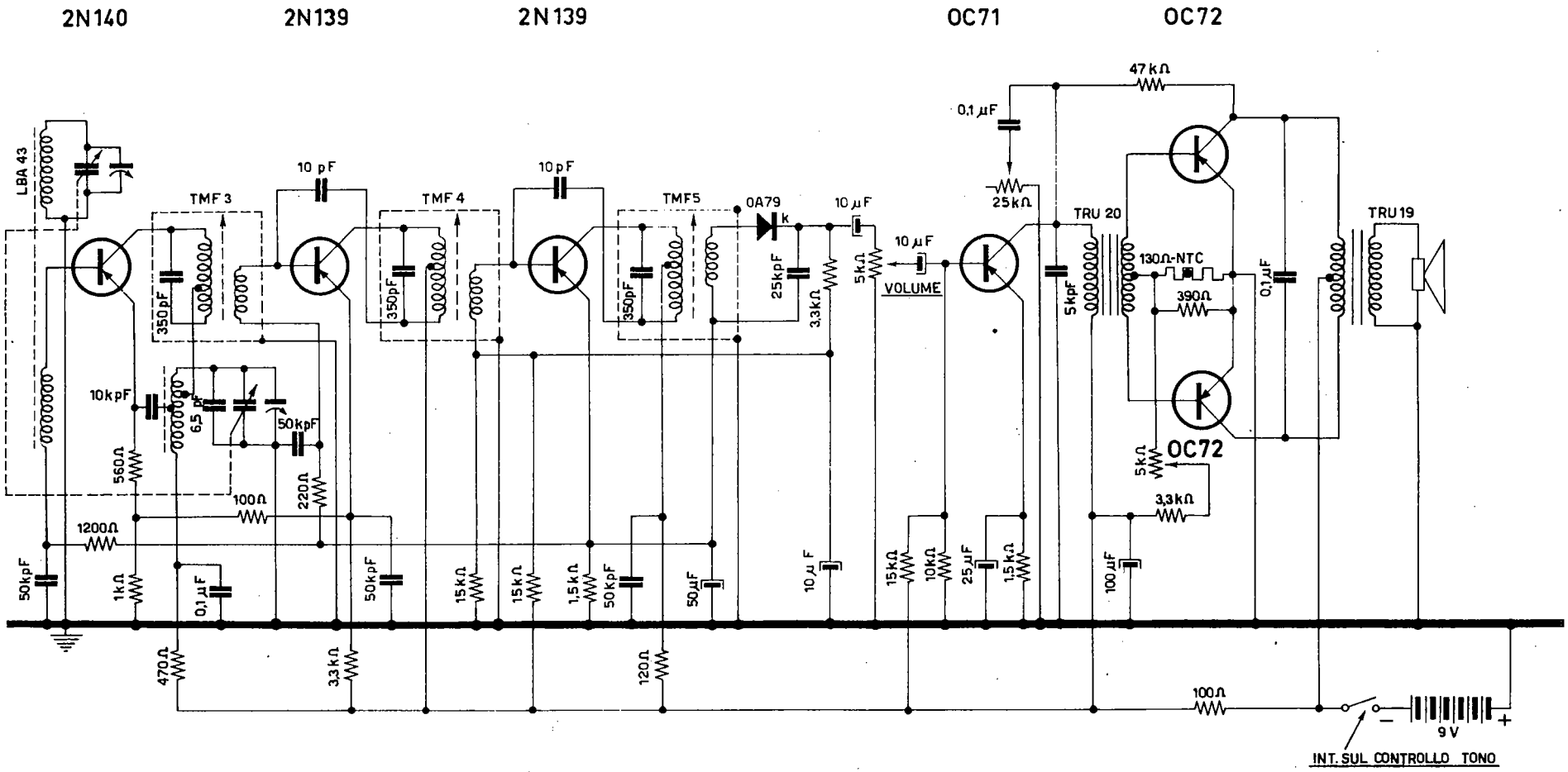

VEGA MOD. TRS 201