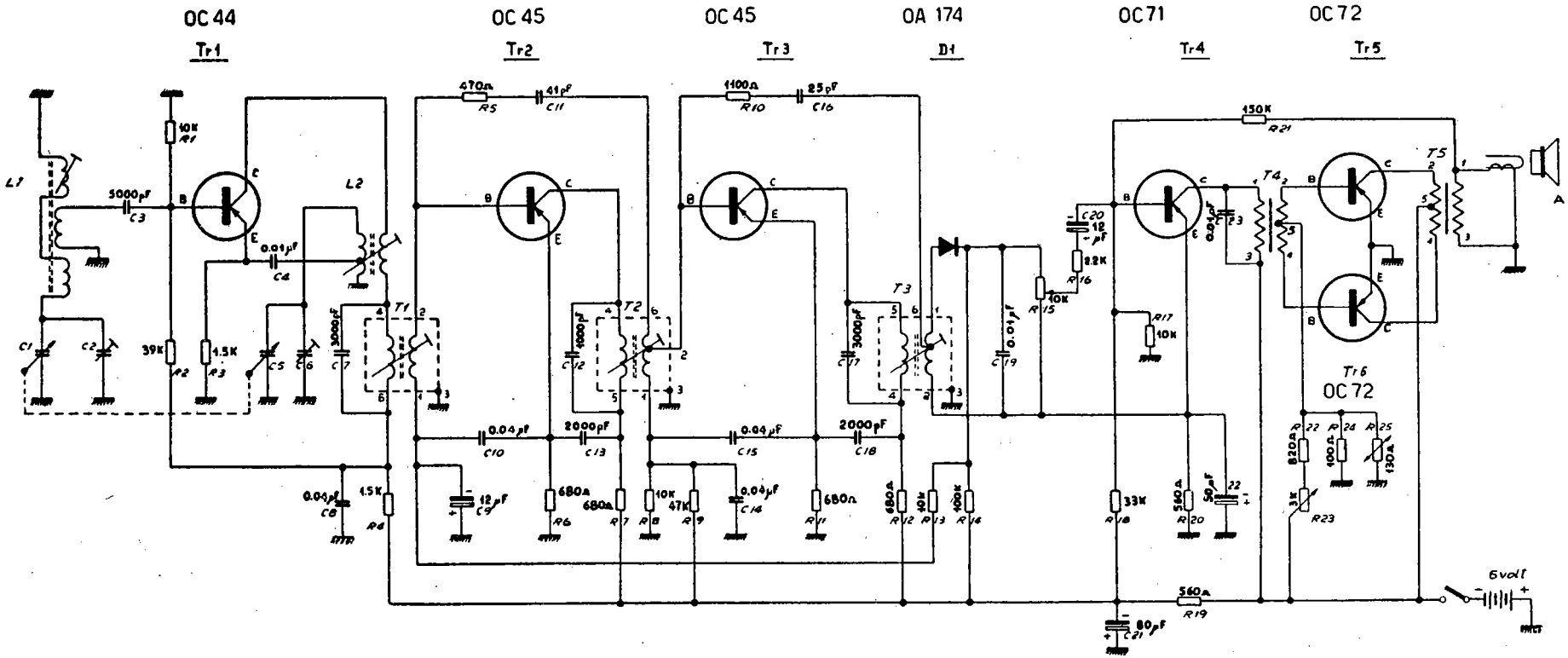# TELEFUNKEN MOD. PARTNER B (R190)