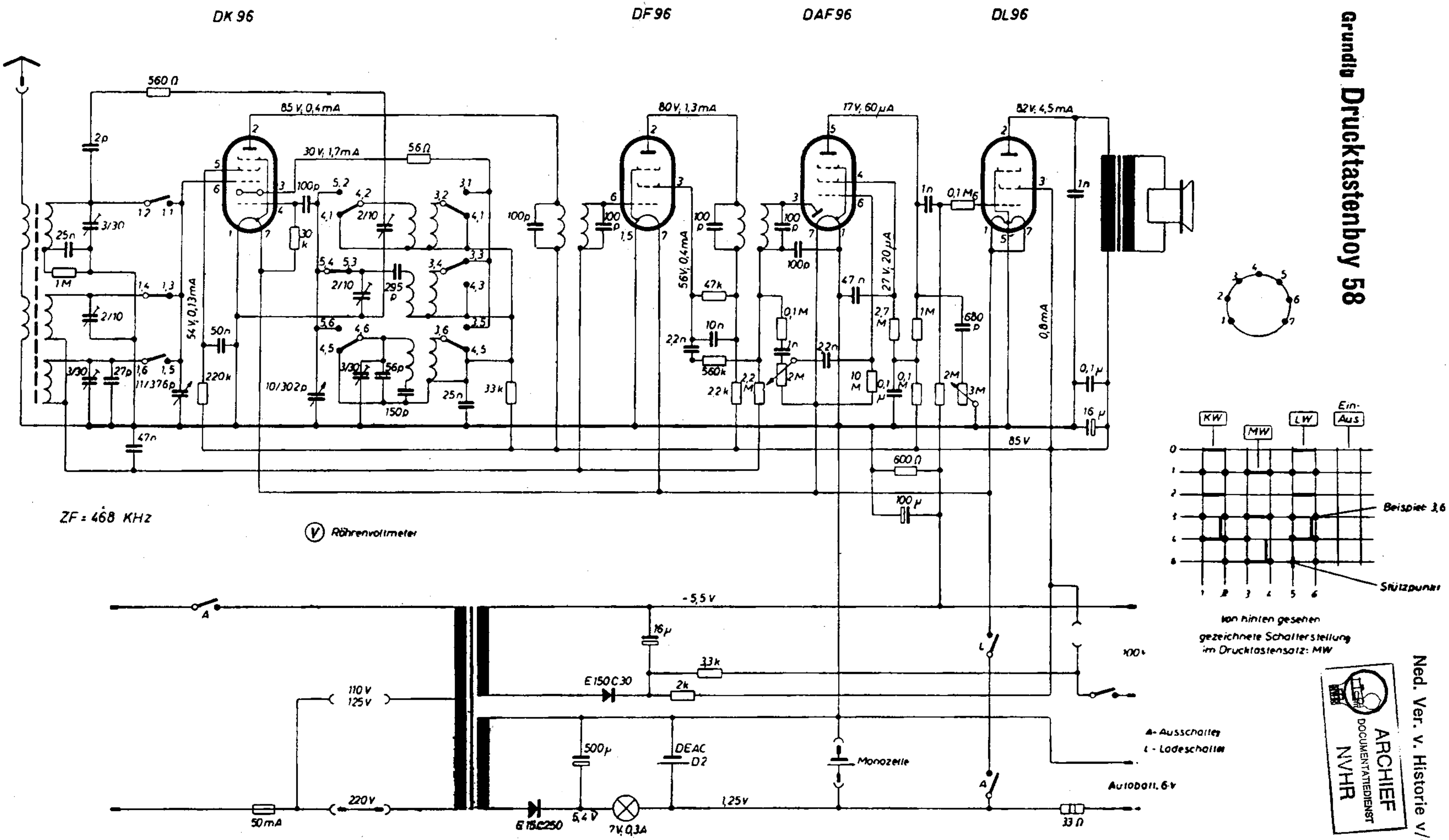

Grundig Drucktastenboy 58

ARCHIEF DOCUMENTATIEDIENST NVHR

Ned. Ver. v. Historie v/d R