Schaltplan 90 RL 114

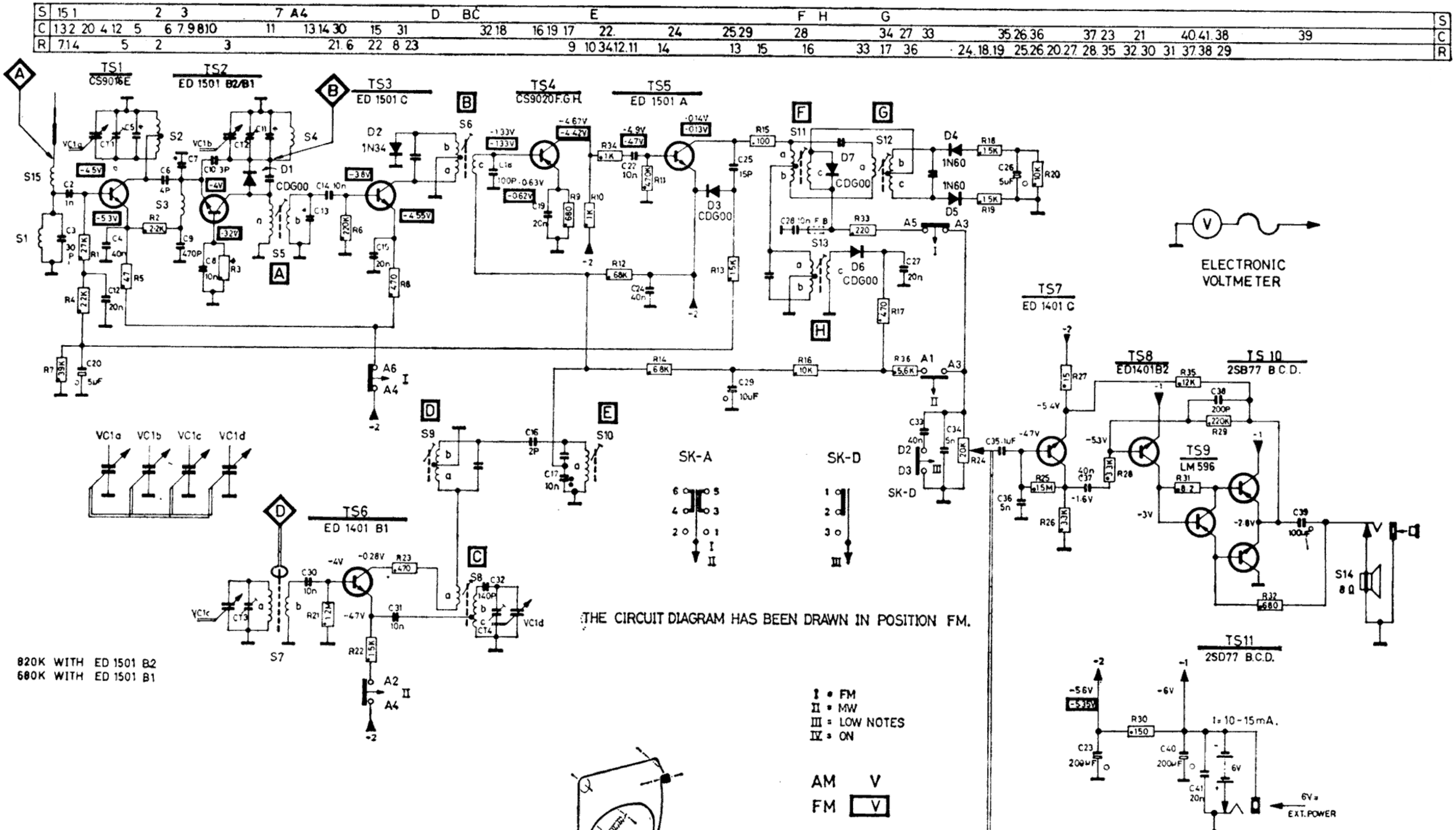

	104 to hi	104 to lo	109 to hi	109 to lo
*C	00	03	07	43
5	27P	27P	23 P	23P
7	15 P	35 P	25P	35P
11	27P	15 P	18 P	10P
13	200P	500P	200P	500P

- Carbon resistor E12 series 0.25W < 2.2M 5%.
- Ceramic capacitor
- Flat-foil polyester capacitor
- Miniature electrolytic capacitor