Model TFM95L: Nine-transistor, three-waveband (M.W. 535–1605 kc/s.; L.W. 150–350 kc/s.; V.H.F. 85–108 Mc/s.), A.M./F.M. portable using four 1·5-volt cells (6-volts). No-signal current about 18 mA. F.M., 16 mA. A.M., 200 mA. at 500 mW. output. Telescopic aerial for F.M. I.F. 455 kc/s. A.M., 10·7 Mc/s. F.M. All transistors except X6, X7 are *p–n–p* types. X6, X7 *n–p–n*. (X1) 2SA124; (X2) 2SA124; (X3) 2SA122; (X4) 2SA122; (X5) 2SA122; (X6) 2SD64; (X7) 2SD65; (X8, X9) 2SB51. Diodes (D1–3) 1T23; (D4–5) 1T26. Thermistor (Th) S90. Automatic frequency control is provided in the F.M. mixer stage, but in locations where several F.M. stations are close together this may result in the set being pulled into the most powerful station. An AFC control (R29) is therefore provided to vary the AFC current. Output sockets: (J1) detector output; (J2) Multiplex output (for use with pilot-tone stereo adaptor); (J3) audio input; (J4, 5) earphone jacks.

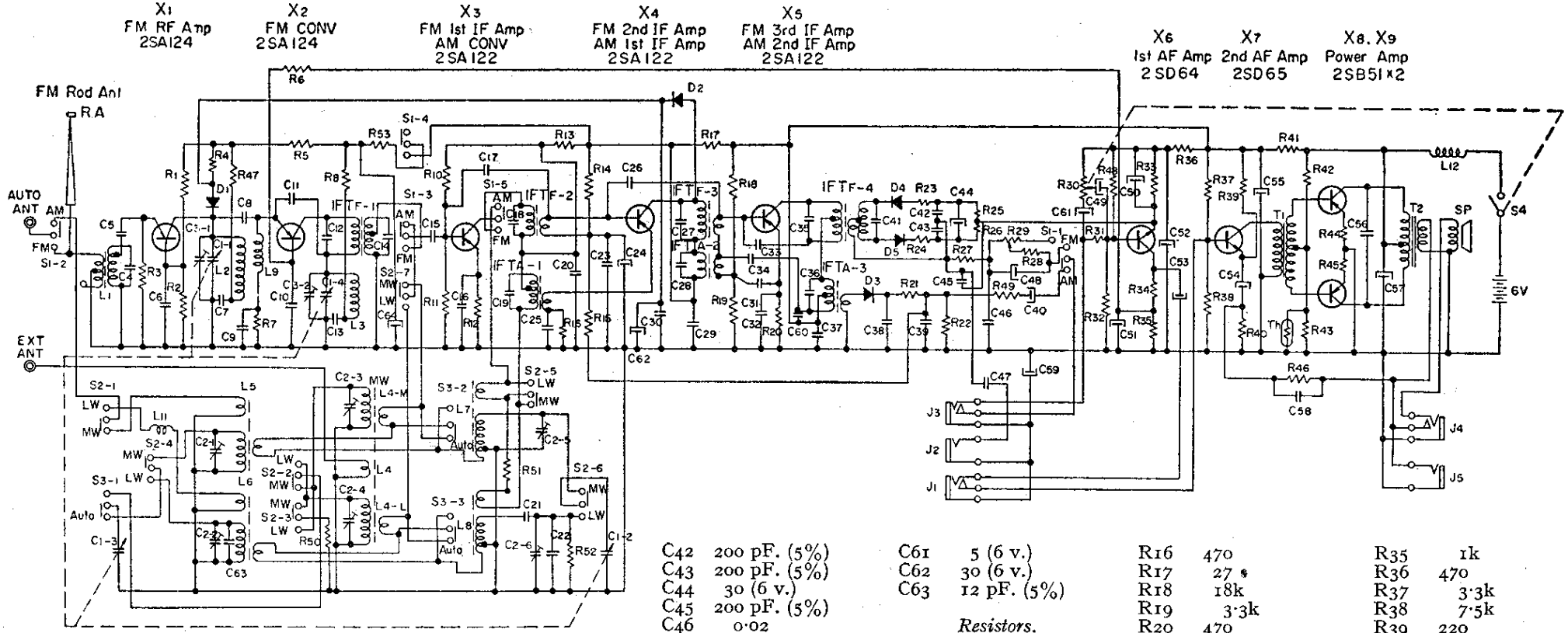

	Capacitors.	C16	0·01	C29	0·01	C42	200 pF. (5%)	C61	5 (6 v.)	R16	470
C4	30 pF.	C17	3 pF.	C30	0·01	C43	200 pF. (5%)	C62	30 (6 v.)	R17	27
C5	0·005	C18	80 pF. (5%)	C31	0·01	C44	30 (6 v.)	C63	12 pF. (5%)	R18	18k
C6	0·005	C19	180 pF.	C32	0·01	C45	200 pF. (5%)			R19	3·3k
C7	0·005	C20	0·01	C33	1 pF.	C46	0·02		*Resistors.*	R20	470
C8	3 pF.	C21	170 pF.	C34	2 pF.	C47	1 (6 v.)	R1	3·9k	R21	2·2k
C9	500 pF.	C22	15 pF.	C35	80 pF. (5%)	C48	3 (3 v.)	R2	2·2k	R22	5·6k
C10	0·005	C23	0·01	C36	100 pF.	C49	10 (6 v.)	R3	1k	R23	330
C11	5 pF.	C24	10 (6 v.)	C37	0·01	C50	100 (6 v.)	R4	1·5k	R24	330
C12	30 pF. (5%)	C25	0·01	C38	0·02	C51	100 (6 v.)	R5	27	R25	1k
C13	0·005	C26	1 pF.	C39	0·02	C52	200 (6 v.)	R6	470	R26	1k
C14	60 pF. (5%)	C27	15 pF.	C40	5 (6 v.)	C53	5 (6 v.)	R7	470	R27	1k
C15	0·005	C28	180 pF.	C41	80 pF. (5%)	C54	100 (6 v.)	R8	330	R28	1·5k
						C55	200 (6 v.)	R10	39k	R29	500k (pot.)
						C56	0·1	R11	10k	R30	5k (pot.)
						C57	100 (6 v.)	R12	2·2k	R31	22k
						C58	0·04	R13	220	R32*	39k
						C59	100 (6 v.)	R14*	91k	R33	680
						C60	300 pF. (5%)	R15	5·6k	R34	2·2k

R35	1k	R41	75
R36	470	R42	1·8k
R37	3·3k	R43	82
R38	7·5k	R44	3
R39	220	R45	3
R40	5·1k	R46	220
		R47	330
		R48	5·1k
		R49	2·2k
		R50	10
		R51	100

* Adjustable.
All ¼-W., 5%.