This model of the Cossor Melody Maker series of Receivers incorporates all those features of design, such as metallised valves, independently screened coils, all metal chassis, etc., that have been developed as the result of the experience gained during the merchandising of over 350,000 Kits.

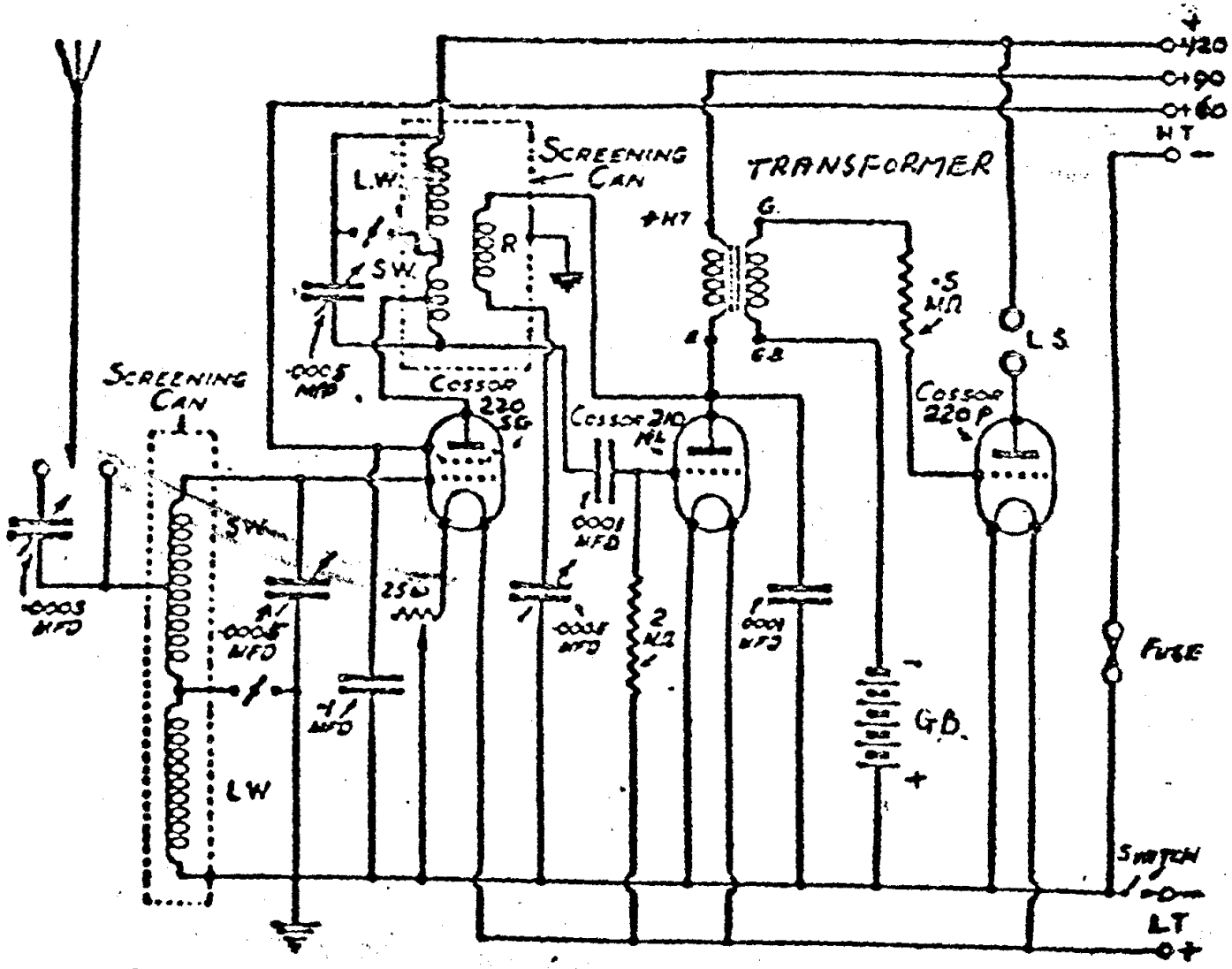


*The New Cossor Empire Melody Maker (Model 234)*