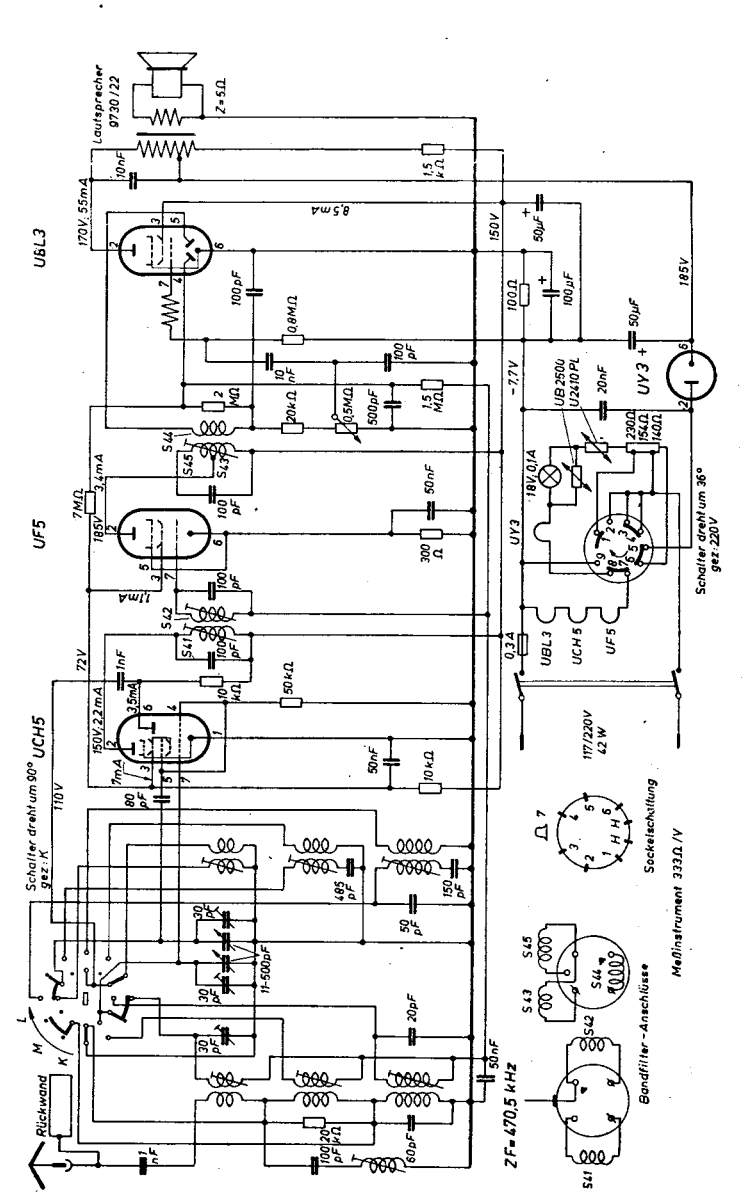Philips Philetta A BD 294 U