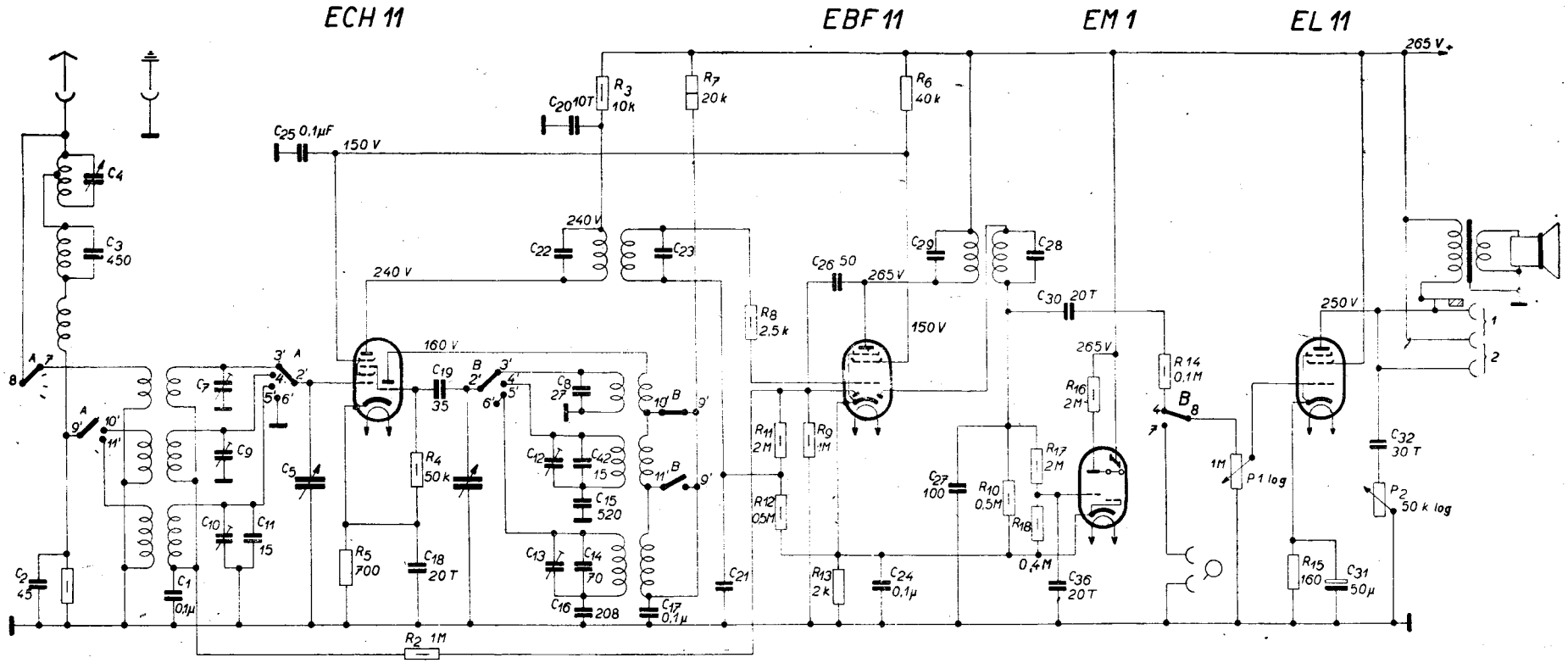

	A		B		
16 ÷ 50 m	7 - 8	2' - 3'	4 - 8	2' - 3'	9' - 10'
185 ÷ 600 m	9' - 10'	2' - 4'	4 - 8	2' - 4'	9' - 11'
720 ÷ 2000 m	9' - 11'	2' - 5'	4 - 8	2' - 5'	
○		2' - 6'	7 - 8	2' - 6'	

R_{VOLTM} = 1000Ω/V /300 000Ω/

TELEGRAFIA T 33

1939/40 MF = 470 kHz