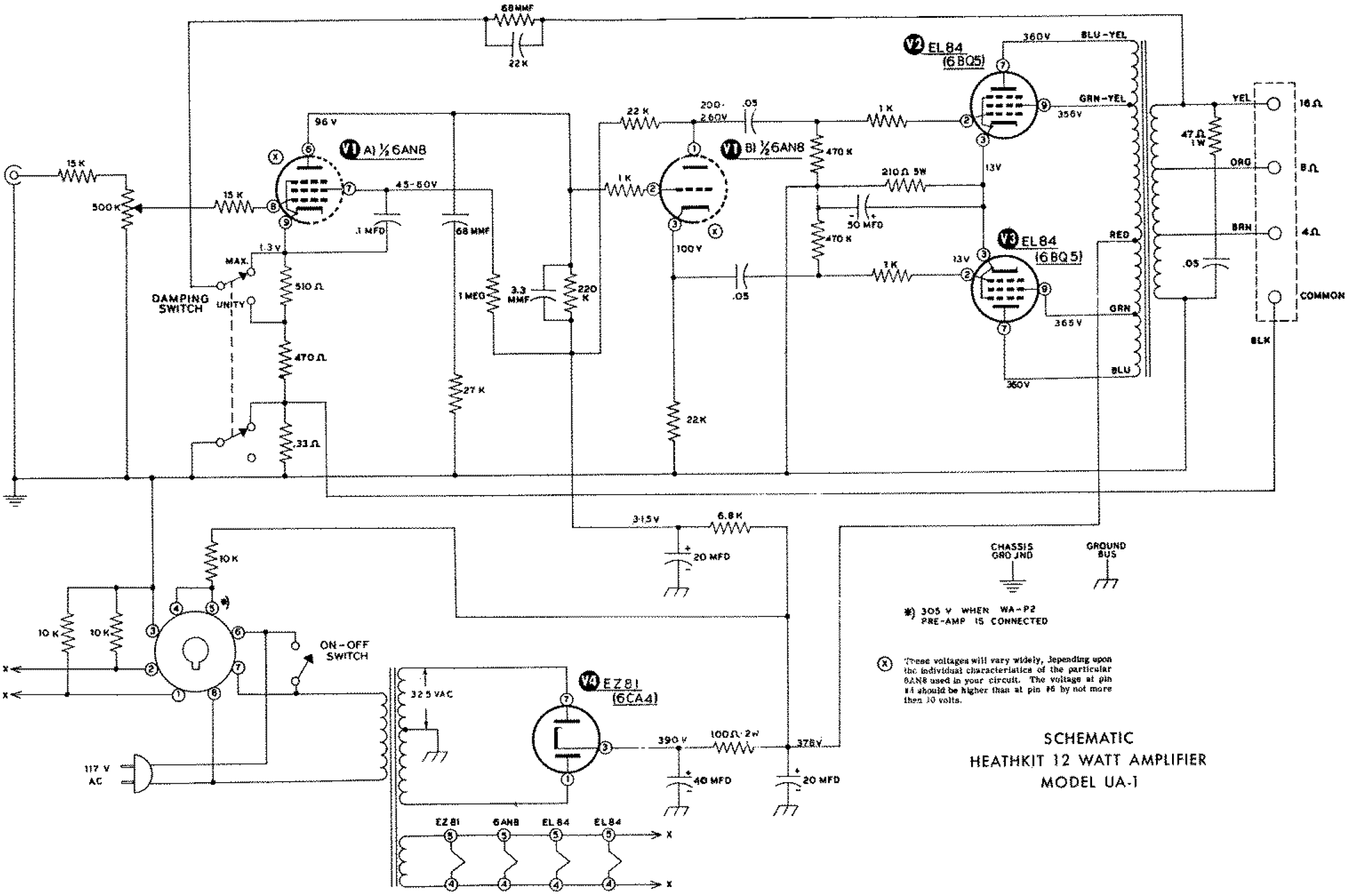

SCHEMATIC
HEATHKIT 12 WATT AMPLIFIER
MODEL UA-1