DeWald Radio Mfg. Corp.

	Model: 537LW	Chassis:	Year: Pre August 1939
	Power:	Circuit:	IF:
	Tubes:		
	Bands:		

Resources
Riders Volume 10 - DEWALD 10-4

Courtesy Nostalgia Air

MODELS 537,537LW,538,
538L,538LW,539,539LW
Schematic,Notes·

DEWALD RADIO MFG. CORP.

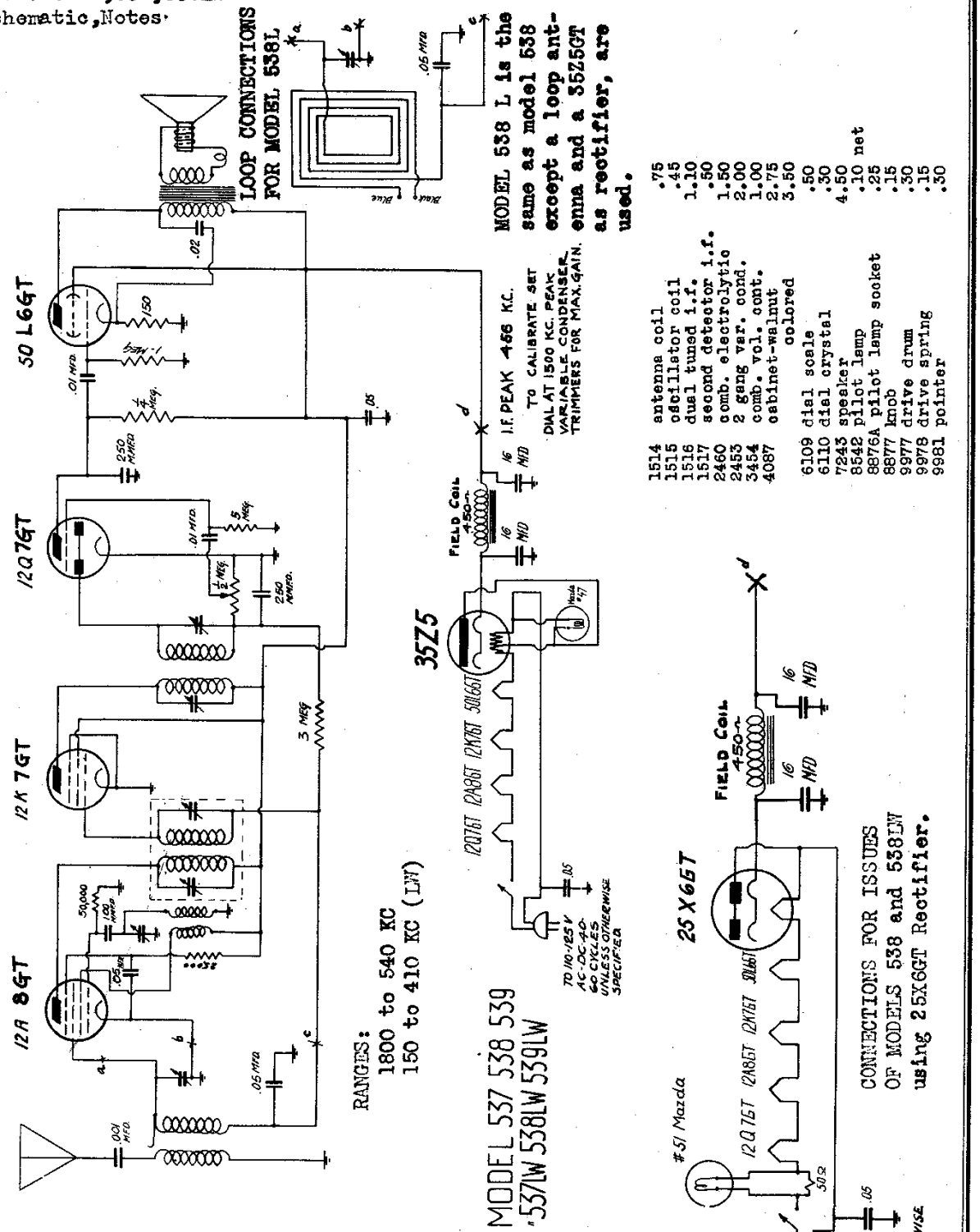

These models are five tube superheterodyne receivers with full automatic volume control. The range coverage of the model 538 is 1800 l.c. to 540 k.c. The model 538 L.W. has a long wave band added (150 k.c.-410 k.c.) They have been designed to operate on 105-125 volts, 40-60 cycles AC or DC unless otherwise specified.

©John F. Rider, Publisher

Courtesy Nostalgia Air