©John F. Rider
Courtesy Nostalgia Air

DEWALD RADIO MFG. CORP.

MODELS A500, A501, A502, A503

This model is a five tube superheterodyne receiver with full automatic volume control. A self-contained loop is incorporated which makes the use of an antenna unnecessary. The range coverage is 525-1720 kilocycles. The receiver has been designed to operate at 105-125 volts, 40-60 cycles A.C.-D.C. unless otherwise specified.

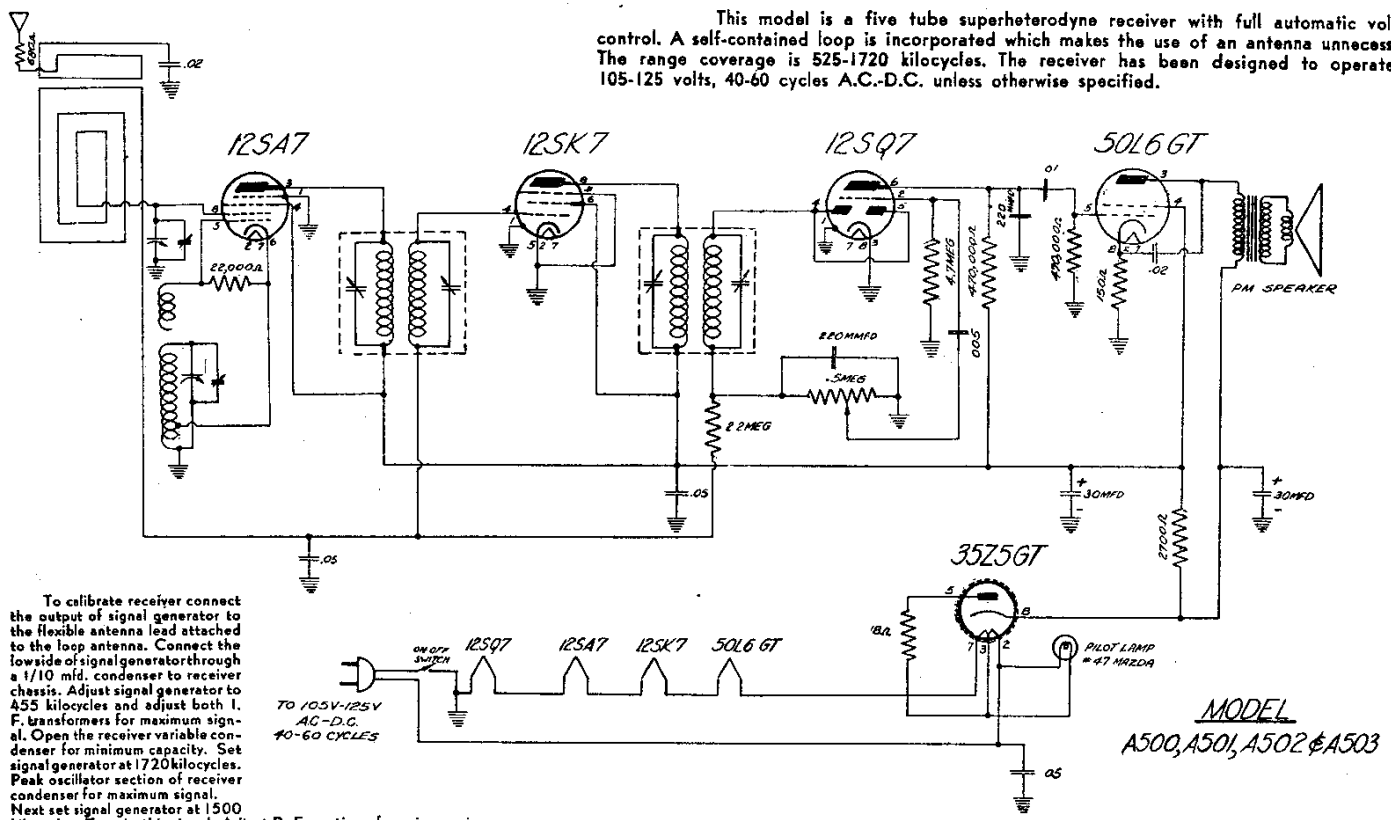

MODEL
A500, A501, A502 & A503

To calibrate receiver connect the output of signal generator to the flexible antenna lead attached to the loop antenna. Connect the lowside of signal generator through a 1/10 mfd. condenser to receiver chassis. Adjust signal generator to 455 kilocycles and adjust both I. F. transformers for maximum signal. Open the receiver variable condenser for minimum capacity. Set signal generator at 1720 kilocycles. Peak oscillator section of receiver condenser for maximum signal. Next set signal generator at 1500 kilocycles. Tune in this signal. Adjust R. F. section of receiver variable condenser for maximum signal strength. Keep the signal generator output as low as possible when making all of these measurements.

IF PEAK 455 KC

REPLACEMENT PARTS

1001 ant. loop
1003 oscillator coil
1000 1st I.F. coil
1002 2nd detector coil
2000 paper condensers
2001 mica condensers
2002 comb. electrolytic
2003 var. condenser
3000 1/4 W. resistors
3001 2 W. resistors
3002 vol. cont. and switch
5000 line cord
6000 dial scale
7000 speaker
8001 pilot lamp socket
9000 shaft
9002 bushing
9762 drive spring
#20 dial cord
#47 pilot lamp

	A-500	A-501	A-502	A-503
CABINET	4004	4281B	4000	4016
KNOB	4017	4010	4003	4017
BACK	4018	4013	4019	4020