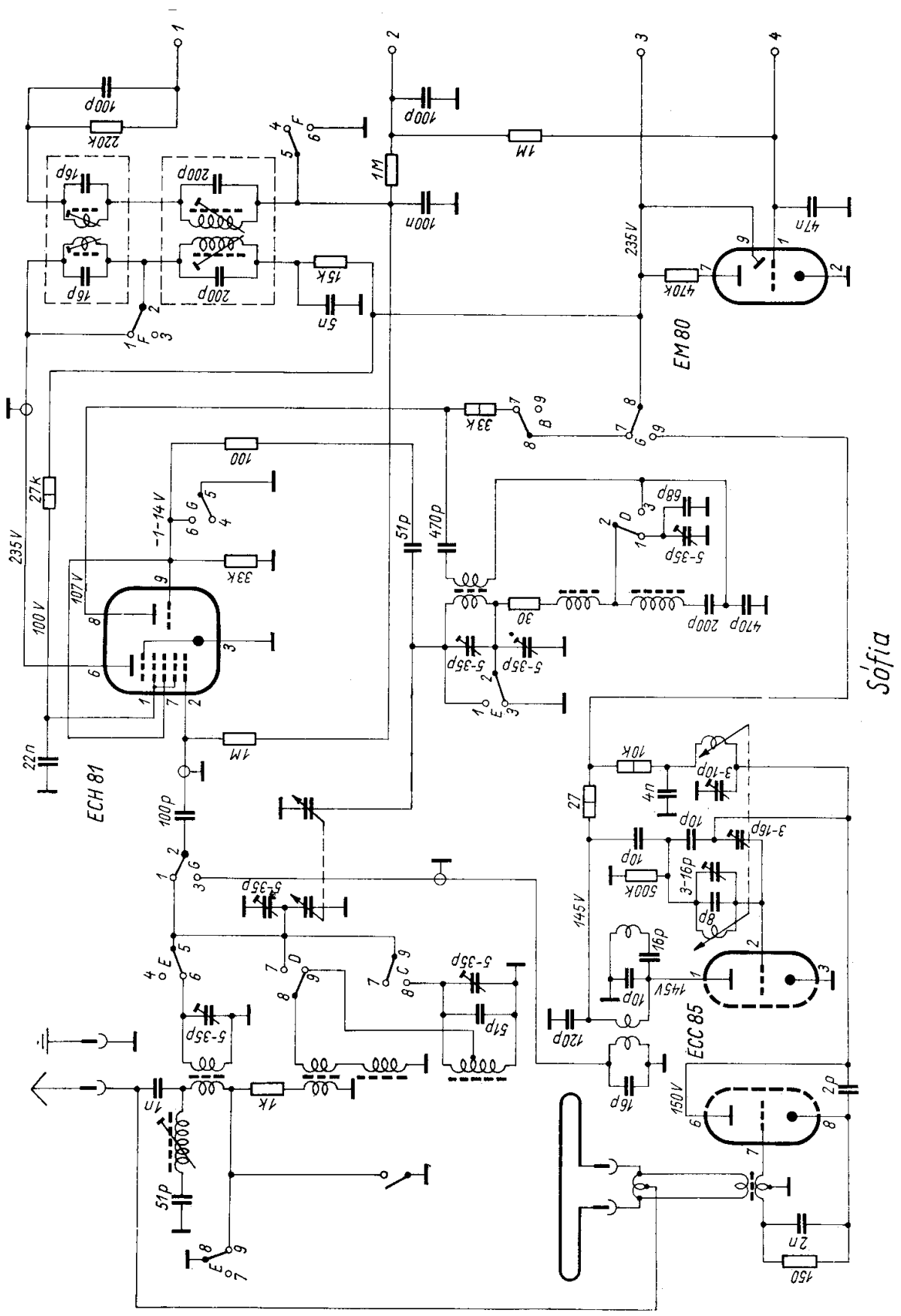
Sofia
EM 80
ECH 81
ECC 85
235 V
100 V
107 V
-1-14 V
145 V
150 V
1M
100p
100n
470k
47n
220k
16p
200p
15k
5n
33k
100
27k
22n
51p
470p
68p
5-35p
30
470p
200p
10k
3-10p
4n
27
10p
3-16p
500k
8p
16p
120p
2p
2n
150
1k
1n

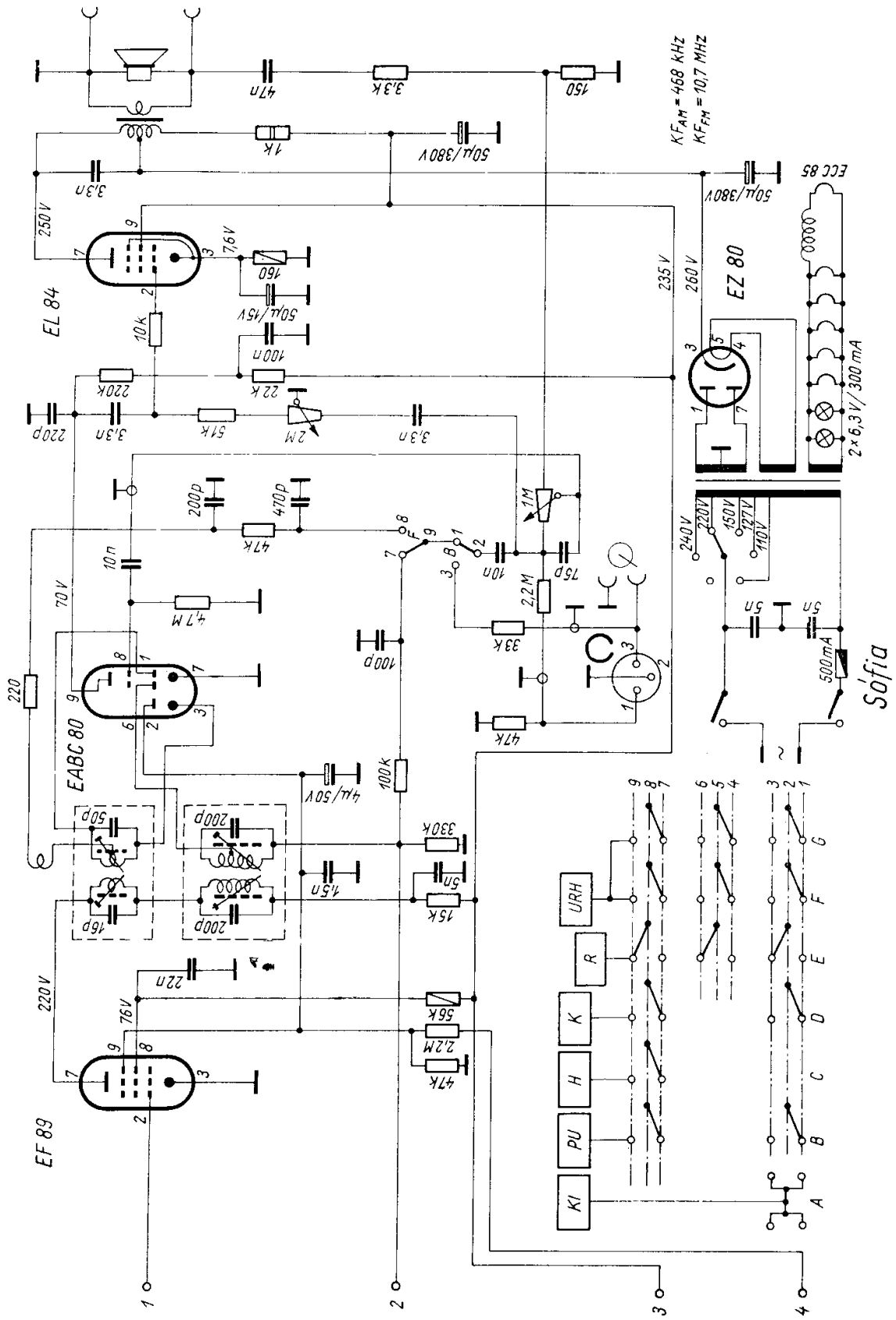
KF_AM = 468 KHz
KF_FM = 10,7 MHz
EL 84
EABC 80
EF 89
EZ 80
ECC 85
Sofia
URH
R
K
H
PU
KI
2×6,3 V/300 mA
220 V
240 V
150 V
127 V
110 V
500 mA