RADIO Service GUIDE



1946 • 1956

SCHEMATICS • PART LISTS

Progress Is Our Most Important Product

GENERAL ELECTRIC

FOREWORD

This guide has been compiled and prepared to provide the Radio Service Technician with a single source of reference for all G-E radio receiver schematics and parts lists for the period from 1946 to 1956. Each electrical item (condensers, transformers, etc.) on the schematic is marked with a symbol number which can readily be identified on the parts list for value and catalog number, thereby assuring correct replacement of all parts.

RADIO RECEIVER DEPARTMENT
TECHNICAL PUBLICATIONS
PRODUCT SERVICE
UTICA, NEW YORK

TABLE OF CONTENTS

MODEL	PAGE SCHEMATIC	PARTS
12	1	2
14	3	4
15	5	6
41,42,43,	7	8
44,45	7	8
41(Power Unit)	277	8
50	9	10
60,62	11	12
64,65	13	14
66,67	15	16
100,101	17	18
102,102W	19	20
103,105	17	18
106	21	22
107,107W	19	20
110,111	23	24
112	25	26
113	27	28
114,114W	19	20
115,115W	19	20
118,119M,119W	29	30
123,124,125	31	32
129,131	33	34
135,136	35	36
140	37	38
141	39	40
143	41	42
145	43	44
150	45	46
160	47	48
165	49	50
180	51	52
200,201,202	53	54
203,205	53	54
210,211,212	55	56
218	57	58
218H	59	60
219,220,221	61	62
226	63	64
230	65	66
231	67	68
233	69	70
250	71	72
254	73	74
260	75	76
280	77	78
303	79	80
304	81	82
321	83	84

MODEL	PAGE SCHEMATIC	PARTS
324	85	86
326,327	87	88
328	85	86
329,330	89	90
354,355	91	92
356,357,358	93	94
376,377,378	95	96
400,401	97	98
402	99	100
404,405	101	102
408	103	104
409	105	106
410	101	102
411	97	98
412	107	108
412F	109	110
414	111	112
414F	109	110
415	111	112
415F,416F	109	110
416	111	112
417,417A	113	114
419	115	116
422,423	117	118
424,425	119	120
427,428,429	121	122
430	111	112
431,431A	123	124
431B,431C	125	126
432,432A	123	124
432B,433B,432C	125	126
433C	125	126
436	127	128
440	129	130
442,443,444	131	132
446,447,448	133	134
450,451,452	135	136
453	137	138
455,455A	139	140
455S	141	142
456	139	140
456S	141	142
457	139	140
457S	141	142
465,466,467	143	144
470,471,472	145	146
475,476,477	147,	148
480	149	150
495	151	152

CONT'D. TABLE OF CONTENTS

MODEL	PAGE SCHEMATIC	PAGE PARTS
500,501	153	154
502	155	156
505,506,507	157	158
508	157	158
509	159	160
510	161	162
510F,511F	163	164
511	161	162
512F,513F	163	164
514	165	166
515	167	168
515F	163	164
516	167	168
516F	163	164
517	167	168
517F	163	164
518	167	168
518F	163	164
521	169	170
521F	163	164
522	169	170
522F	163	164
530	159	160
535	171	172
542,543	165	166
546,547,548	173	174
549	173	174
551,552	175	176
555,556	177	178
557,558,559	179	180
560,561	181	182
564,565,566	183	184
572,573,574	185	186
575	185	186
577,578	187	188
580,581,582	189	190
590	191	192
600	193	194
601,603,604	195	196
605,606	197	198
607,608	199	200
610,611	201	202
612,613	203	204
614,615	205	206
620,621,622	207	208
625,626	209	210
630,631,632	211	212
635,636,637	213	214
640,641	215	216
645,646,647	217	218
648	217	218
650	219	220
660,661	221	222
665,666,667	223	224
670,671	225	226
672,673	225	226
675,676	227	228
677,678	227	228
680,681,682	229	230
740	231	232
741	233	234
752,753	235	236
754	237	238
755	239	240
756	237	238
757	241	242
850	243	244
860,861,862	245	246
870,871	247	248
875,876,877	249	250
895	251	252
900	253	254
900D	255	256
902	253	254
902D	255	256
903	253	254
903D	255	256
905,906,907	257	258
911	259	260
911D	261	262
912	259	260
912D	261	262
913	259	260
913D	261	262
914D	261	262
915,916	257	258
920,921	263	264
930	265	266
935,936	267	268
940,941,942	269	270
P715,P716	271	272
P720,P721	273	274
YRB67-1	275	276
YRB67-2	275	276
YRB82-1	275	276

These pages were torn from the manual.

Model 12

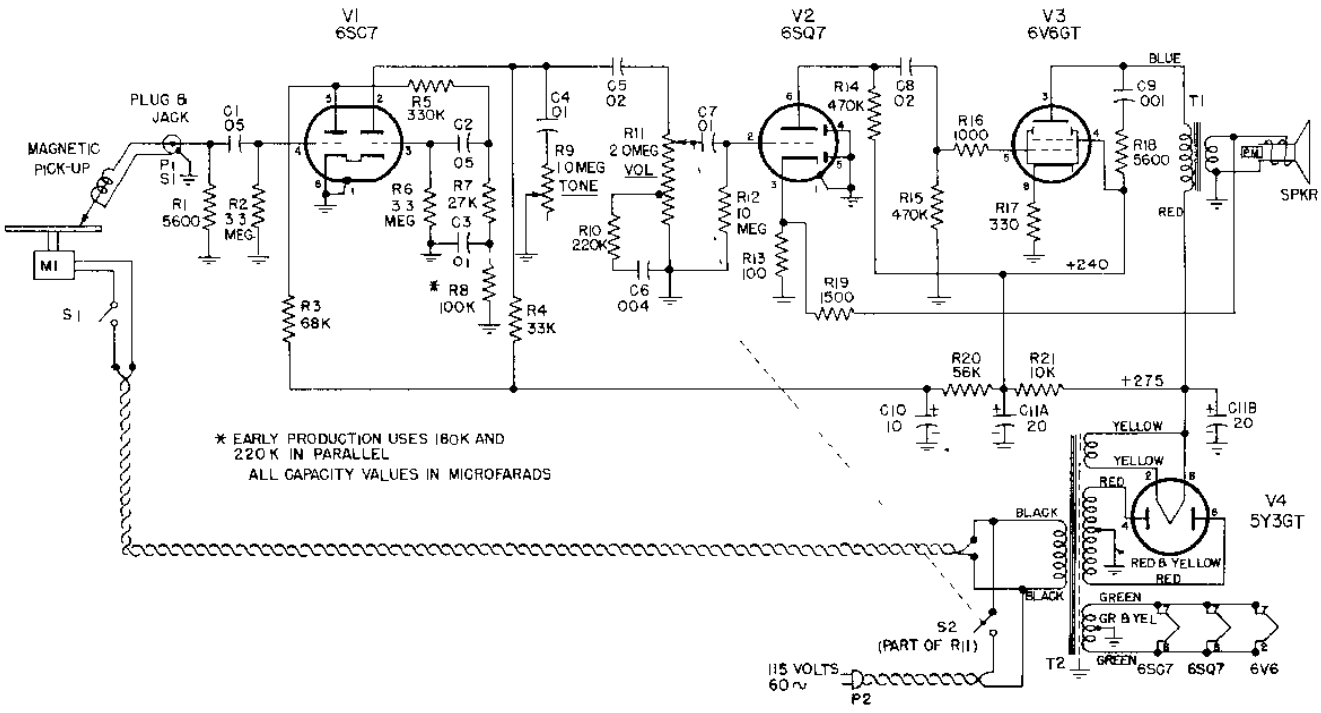
V1
6SC7
V2
6SQ7
V3
6V6GT
V4
5Y3GT
PLUG & JACK
MAGNETIC PICK-UP
P1
S1
MI
S1
C1 05
R1 5600
R2 3.3 MEG
R3 68K
R4 33K
R5 330K
C2 05
R6 3.3 MEG
R7 27K
C3 01
* R8 100K
C4 01
R9 1.0MEG TONE
C5 02
R10 220K
R11 2.0MEG VOL
C6 004
C7 01
R12 10 MEG
R13 100
R14 470K
C8 02
R15 470K
R16 1000
R17 330
R18 5600
C9 001
T1
BLUE
RED
SPKR
+240
R19 1500
R20 56K
R21 10K
+275
C10 10
C11A 20
C11B 20
YELLOW
YELLOW
RED
RED & YELLOW
RED
BLACK
BLACK
GREEN
GR & YEL
GREEN
T2
6SC7
6SQ7
6V6
S2
(PART OF R11)
115 VOLTS 60 ~
P2
* EARLY PRODUCTION USES 180K AND 220K IN PARALLEL
ALL CAPACITY VALUES IN MICROFARADS

REPLACEMENT PARTS LIST

Model 12

PART NO	SYMBOL	DESCRIPTION
		UNIVERSAL REPLACEMENT PARTS
UOP-800		SPEAKER—8-inch PM Speaker
UOX-004		ASSEMBLY—Voice coil and spider cone, gasket, and dust cap assembly
URD-025	R13	RESISTOR—100 ohms, ½ w, carbon
URD-049	R16	RESISTOR—1000 ohms, ½ w, carbon
URD-053	R19	RESISTOR—1500 ohms, ½ w, carbon
URD-067	R1, 18	RESISTOR—5600 ohms, ½ w, carbon
URD-083	R7	RESISTOR—27,000 ohms, ½ w, carbon
URD-085	R4	RESISTOR—33,000 ohms, ½ w, carbon
URD-093	R3	RESISTOR—68,000 ohms, ½ w, carbon
URD-097	R8	RESISTOR—100,000 ohms, ½ w, carbon
URD-105	R10	RESISTOR—220,000 ohms, ½ w, carbon
URD-109	R5	RESISTOR—330,000 ohms, ½ w, carbon
URD-113	R14, 15	RESISTOR—470,000 ohms, ½ w, carbon
URD-133	R2, 6	RESISTOR—3.3 meg., ½ w, carbon
URD-145	R12	RESISTOR—10 meg., ½ w, carbon
URE-037	R17	RESISTOR—330 ohms, 1 w, carbon
URE-073	R21	RESISTOR—10,000 ohms, 1 w, carbon
URE-091	R20	RESISTOR—56 000 ohms, 1 w, carbon
		SPECIALIZED REPLACEMENT PARTS
RAI-003		ARM—Support arm attached to cover
RAV-032		CABINET—Model 12 cabinet and cover

PART NO	SYMBOL	DESCRIPTION
		SPECIALIZED REPLACEMENT PARTS (Cont'd)
RBH 002		ASSEMBLY—Phono motor, drive wheel and mounting plate assembly
RCC 047	C1, 3, 4, 7	CAPACITOR—.01 mfd, 600 v, paper
RCC-048	C5, 8	CAPACITOR—.02 mfd, 600 v, paper
RCC-049	C2	CAPACITOR—.05 mfd, 600 v, paper
RCC-050	C6	CAPACITOR—.004 mfd, 400 v, paper
RCC-055	C9	CAPACITOR—.001 mfd, 1600 v, paper
RCE-041	C11A, 11B	CAPACITOR—20 mfd, 350 v, electrolytic
RCE-042	C10	CAPACITOR—10 mfd, 250 v, electrolytic
RDK-038		KNOBS—Volume and tone control knobs
RJS-062		SOCKET—Octal tube socket
RJX-007		PLUG AND SOCKET—Phono input plug and socket
RMS-055		SPRING—Inside the tone arm
RMT-006		TURNTABLE—9 in. diameter turntable
RMX-059		ASSEMBLY—Tone arm pivot assembly
RPA-001		ARM—Tone arm assembly
RPX-010		PICK UP—Magnetic pick-up cartridge
RRC-038	R11	VOLUME CONTROL—2 meg potentiometer
RRC-039	R9	TONE CONTROL—1 meg potentiometer
RSX-001		ASSEMBLY—Phono motor switch assembly
RSX-002		ASSEMBLY—Switch arm assembly
RTO-004	T1	TRANSFORMER—Output transformer
RTP-029	T2	TRANSFORMER—Power transformer
RWL-004	P2	CORD—Power cord and plug

MODEL 14

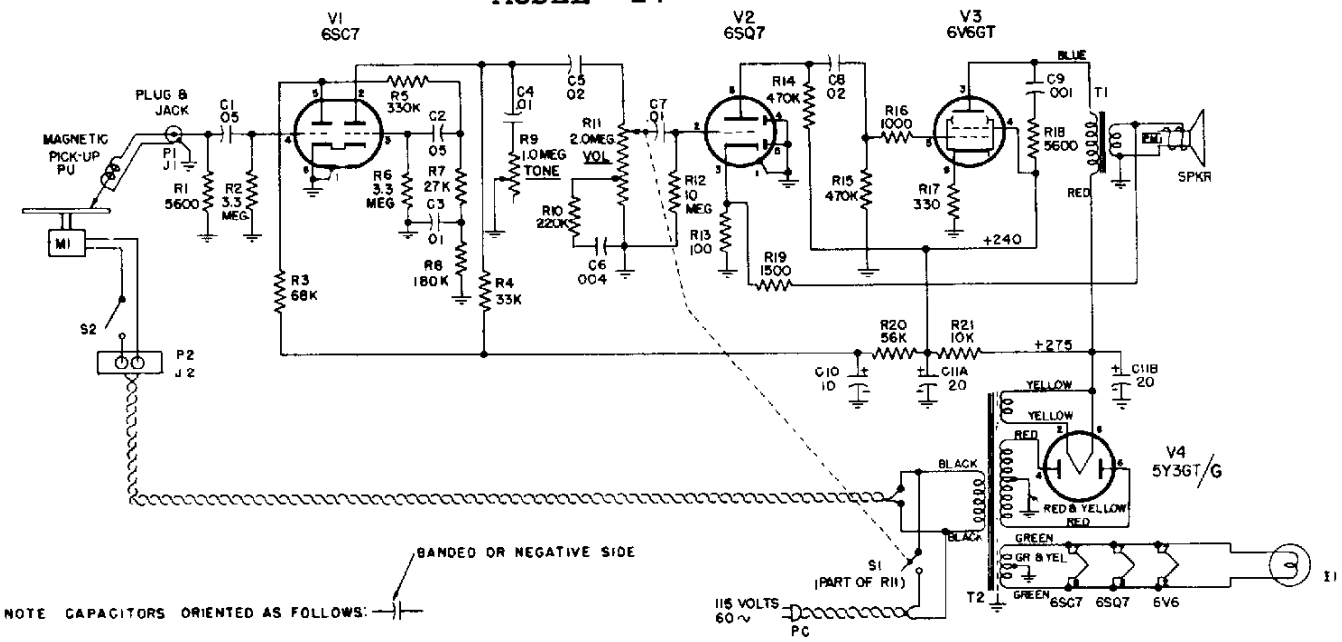
V1
6SC7
V2
6SQ7
V3
6V6GT
V4
5Y3GT/G
PLUG & JACK
MAGNETIC PICK-UP PU
P1
J1
C1 05
R1 5600
R2 3.3 MEG
R3 68K
R4 33K
R5 330K
C2 05
R6 3.3 MEG
R7 27K
C3 01
R8 180K
C4 01
R9 1.0MEG TONE
C5 02
R11 2.0MEG VOL
R10 220K
C6 004
C7 01
R12 10 MEG
R13 100
R14 470K
C8 02
R15 470K
R16 1000
R17 330
R18 5600
C9 001
T1
SPKR
BLUE
RED
+240
R19 1500
R20 56K
R21 10K
+275
C10 10
C11A 20
C11B 20
M1
S2
P2
J2
YELLOW
YELLOW
RED
BLACK
RED & YELLOW
RED
BLACK
GREEN
GR & YEL
GREEN
T2
6SC7
6SQ7
6V6
I1
S1 (PART OF R11)
115 VOLTS 60~
PC
BANDED OR NEGATIVE SIDE
NOTE CAPACITORS ORIENTED AS FOLLOWS:

REPLACEMENT PARTS LIST

Model 14

CAT. NO	SYMBOL	DESCRIPTION
		UNIVERSAL REPLACEMENT PARTS
UCC-040	C3, 4, 7	CAPACITOR—.01 mf., 600 v., paper
UCC-041	C5, 8	CAPACITOR .02 mf., 600 v., paper
UCC-045	C1, 2	CAPACITOR .05 mf., 600 v., paper
UDL-008		PILOT LAMP—Mazda #47
UOP-800		SPEAKER—8-inch speaker
UOX-004		SPEAKER CONE ASSEMBLY—Voice coil and spider, and dust cap assembly
URD-025	R13	RESISTOR 100 ohms, ½ w., carbon
URD-049	R15	RESISTOR—1000 ohms, ½ w., carbon
URD-053	R19	RESISTOR 15,000 ohms, ½ w., carbon
URD-067	R1 20	RESISTOR—5600 ohms, ½ w., carbon
URD-083	R7	RESISTOR—27,000 ohms, ½ w., carbon
URD-085	R4	RESISTOR 33,000 ohms, ½ w., carbon
URD-093	R3 *	RESISTOR—68,000 ohms, ½ w., carbon
URD-103	R8	RESISTOR—180,000 ohms, ½ w., carbon
URD-105	R10	RESISTOR—220,000 ohms, ½ w., carbon
URD-109	R5	RESISTOR—330,000 ohms, ½ w., carbon
URD-113	R14, 15	RESISTOR—470,000 ohms, ½ w., carbon
URD-133	R2, 6	RESISTOR 1.5 meg., ½ w., carbon
URD-145	R12	RESISTOR—10 meg., ½ w., carbon
URE-037	R17	RESISTOR—330 ohms, 1 w., carbon
URE-073	R21	RESISTOR—10,000 ohms, 1 w., carbon
URE-091	R18	RESISTOR—56,008 ohms, 1 w., carbon
		SPECIALIZED REPLACEMENT PARTS
RAL-002		BEZEL—Pilot lamp bezel
RAV-039		CABINET—Replacement cabinet
RAX-015		BRACKET AND SHAFT ASSEMBLY—For tone arm
RBH-002*	M1	MOTOR ASSEMBLY—Phono motor, drive wheel and mounting plate assembly (60 cycles)
RBX-014**	M1	MOTOR ASSEMBLY Phono motor, drive wheel and mounting plate assembly (50 cycles)
RCC-038	C6	CAPACITOR .004 mf., 600 v., paper
RCC-079	C9	CAPACITOR—.001 mf., 1000 v., paper
RCE-041	C11A, B	CAPACITOR 20 mf., 350 v. 20 mf., 350 v.; electrolytic
RCE-042	C10	CAPACITOR 10 mfd., 250 v., electrolytic
RDK-038		KNOB—Volume and tone control
RHM-035		CLIP Spring clip in tone arm nearest pivot
RHM-036		CLIP—Spring clip in tone arm nearest pick-up cartridge
RHN-005		NUT—Hex nut for pivot bushing
RHS-011		SCREW—Special #6 used with clamp for pivot arm assembly
RHS-012		SCREW Fillister head #6 for switch arm assembly
RHW-009		LOCKWASHER—For pivot bushing
RJP-004		PLUG Phono plug on pick-up lead
RJP-010		JACK Phono input
RJS-052		SOCKET—Tube socket (6SQ7, 6V6, 5Y3)
RJS-085		SOCKET—Tube socket (6SC7)
RJS-094		SOCKET—Pilot lamp socket
RMB-010		PIVOT BUSHING—For tone arm shaft pivot
RMC 019		CLAMP—Holds pivot arm assembly to tone arm shaft and bracket
RMM 047		SPACER For pivot bushing
RMS-055		SPRING Coil spring in tone arm assembly
RMT-001		TURNTABLE—Turntable for RBX-014 motor**
RMT-006		TURNTABLE—Turntable for RBH-002 motor*
RMX-050		PIVOT ARM ASSEMBLY—Bracket and cushion for tone arm vertical pivot
RPA-001		TONE ARM Tone arm less pickup
RPX-010		PICK-UP CARTRIDGE—Magnetic
RPX-022		TONE ARM ASSEMBLY—Complete tone arm with pick-up cartridge wired and mounted on bracket and shaft
RRC-038	E1, S1	VOLUME CONTROL—2.0 meg volume control includes power switch
RRC-039	R9	TONE CONTROL—1.0 megohm potentiometer
RSS-001		SWITCH Tone arm switch
RSX-001		SWITCH ASSEMBLY—For phono motor (bracket and switch)
RSX-002		SWITCH ARM ASSEMBLY Operates phono motor switch assembly
RTO-004	T1	TRANSFORMER—Output transformer
RTP-029	T2	TRANSFORMER—Power transformer
RWL-004		CORD—Power cord and plug
RWX-009		MOTOR CABLE ASSEMBLY With female plug
RWX-010		MOTOR CABLE ASSEMBLY With male plug

* RBH-002 motor has triangular shaped mounting plate

** RBX-014 motor has rectangular shaped mounting plate

MODEL 15

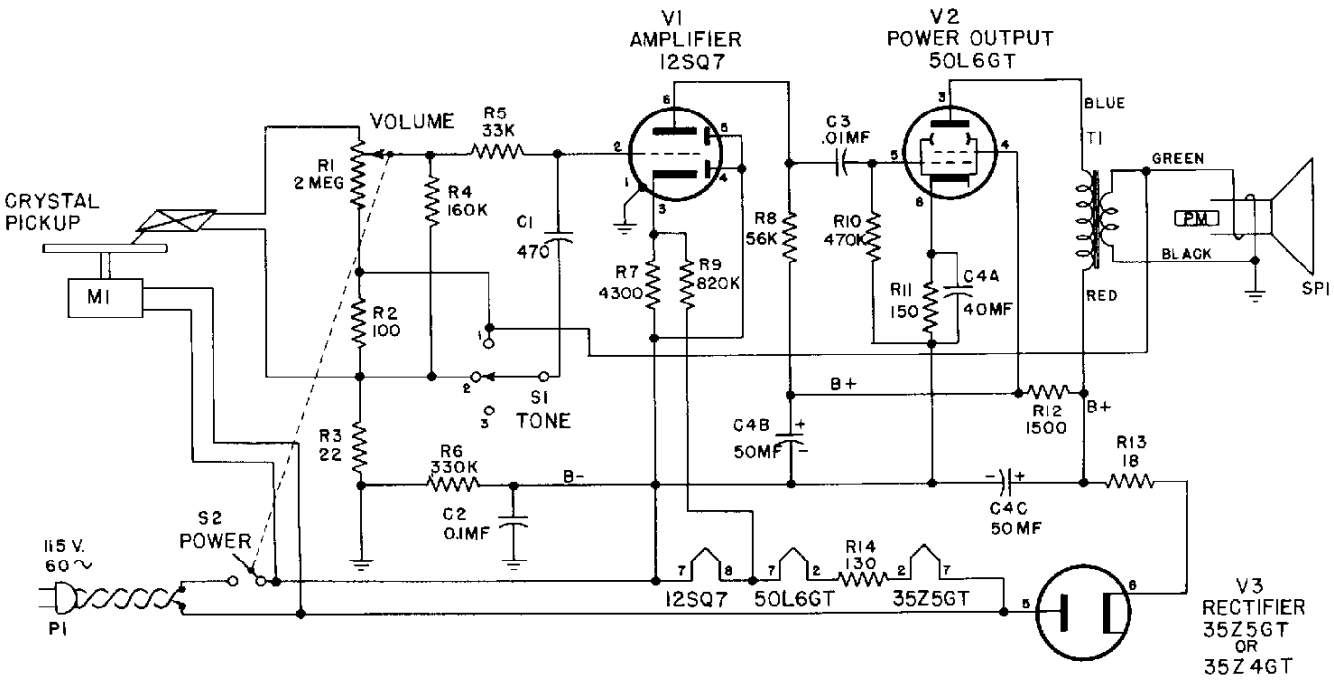
V1
AMPLIFIER
12SQ7
V2
POWER OUTPUT
50L6GT
VOLUME
R5
33K
R1
2 MEG
R4
160K
C1
470
CRYSTAL
PICKUP
M1
R2
100
R3
22
R6
330K
C2
0.1MF
S1
TONE
S2
POWER
115 V.
60 ~
P1
R7
4300
R9
820K
R8
56K
C3
.01MF
R10
470K
R11
150
C4A
40MF
C4B
50MF
C4C
50MF
R12
1500
R13
18
R14
130
B+
B-
12SQ7
50L6GT
35Z5GT
T1
BLUE
GREEN
BLACK
RED
PM
SP1
V3
RECTIFIER
35Z5GT
OR
35Z4GT

REPLACEMENT PARTS LIST MODEL 15

PART NO	SYMBOL	DESCRIPTION
UNIVERSAL REPLACEMENT PARTS		
UCC-040	C8	CAPACITOR .01 mfd, 600 v, paper
UCC-044	C1	CAPACITOR 470 mmf, 600 v, mica
UCC-048	C2	CAPACITOR 10 mfd, 600 v, paper
UOP-550	SPKR	SPEAKER 6½ inch
UOX-011		VOICE COIL SPIDER, CONE GASKET AND DUST CAP ASSEMBLY
URD-509	R3	RESISTOR 22 ohms, ½ w, carbon
URD-025	R2	RESISTOR 100 ohms, ½ w, carbon
URD-029	R11	RESISTOR 150 ohms, ½ w, carbon
URD-053	R12	RESISTOR 1500 ohms, ½ w, carbon
URD-085	R6	RESISTOR 33,000 ohms, ½ w carbon
URD-091	R5	RESISTOR 56,000 ohms, ½ w, carbon
URD-109	R8	RESISTOR 330,000 ohms, ½ w, carbon
URD-113	R10	RESISTOR- 470,000 ohms, ½ w, carbon
URD-119	R9	RESISTOR- 820,000 ohms, ½ w, carbon
URD-1064	R7	RESISTOR 6800 ohms, ½ w, carbon
URD-1102	R4	RESISTOR- 160,000 ohms, ½ w, carbon
SPECIALIZED REPLACEMENT PARTS		
RAT-001		CABINET Black
RAT-007		CABINET Blue
RAT-003		CABINET - Brown
RBH-001	M1	MOTOR—Phono motor (Type A), 50 or 60 cycles (use spring RMS-082 for 50 cycles
RBH-800	M1	MOTOR—Phono motor (Type R 60 cycles only

PART NO	SYMBOL	DESCRIPTION
SPECIALIZED REPLACEMENT PARTS (Cont'd)		
RBH-006	M1	MOTOR Phono motor Type G 60 cycles only
RCE-027	C4 A B C	CAPACITOR 40 mfd 50 mfd, 50 mfd, 150 v, dry electrolytic
RDK-076		KNOB Control knob
RJC-001		PIN Speaker contact pin
RJS-004		PLATE Electrolytic mounting plate
RJS-025		SOCKET Octal base tube socket
RMS-006		SPRING Idler wheel spring (Type A motor)
RMS-079		SPRING Idler wheel spring (Type G motor)
RMS-081		SPRING Idler wheel spring Type R motor)
RMS-082		SPRING 50 cycle adapter spring (use with Type A motor only
RMT-001		TURNTABLE Phono turntable (Type A motor)
RMT-006		TURNTABLE Phono turntable (Type R motor)
RMT-010		TURNTABLE—Phono turntable (Type G motor)
RMW-008		WHEEL Idler wheel (Type A motor)
RMW-028		WHEEL - Idler wheel (Type G motor)
RMW-029		WHEEL- Idler wheel (Type R motor)
RPA-002		TONE ARM —Tone arm (less crystal pick up
RPC-016		PICK-UP Crystal pick-up
RRC-038	R1, S2	VOLUME CONTROL—2 megohm potentiometer (includes power switch
RRW-008	R13	RESISTOR—18 ohms, 1 w,
RRW-014	R14	RESISTOR—130 ohms, 5 w, w w
RSW-027	S1	SWITCH —Tone control switch
RTO-031	T1	TRANSFORMER —Speaker output transformer
RWL-001		CORD - power cord

MODELS 41, 42, 43, 44, 45

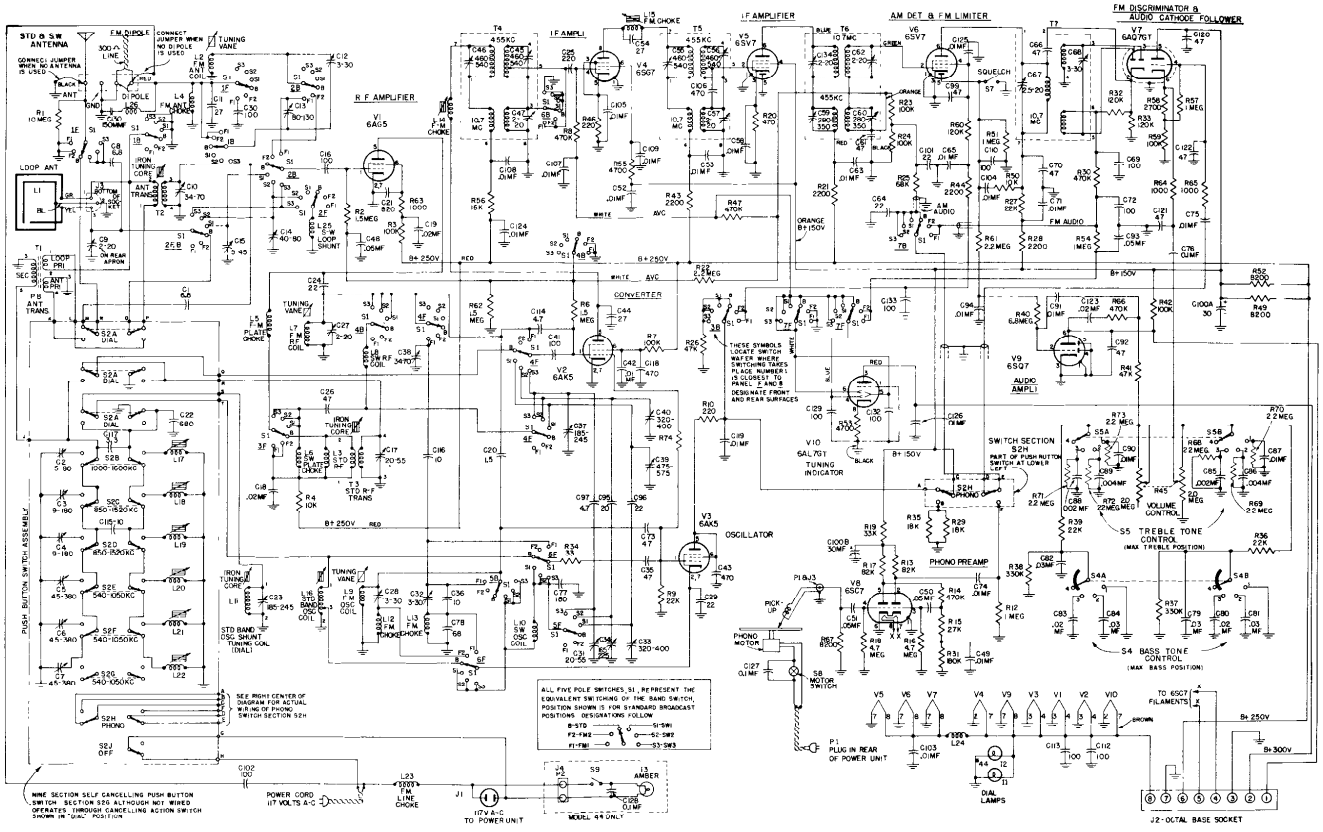

REPLACEMENT PARTS LIST
MODELS 41, 42, 43, 44, AND 45

UNIVERSAL REPLACEMENT PARTS

Part No.	Symbol	Description
RJP-004	P1	PLUG—Male phono input, from preamplifier
RJP-006		SHELL—For loop plug
RJP-007	J1	RECEPTACLE—117 v. a-c output to SPU chassis
RJP-008		PLUG—On power cable
RJP-009	J201	RECEPTACLE—Special power unit a-c
RJP-015	J202	RECEPTACLE—For pilot light and speaker cable plug
RJS-012		MOUNTING PLATE—For mounting electrolytic on SPU chassis
RJS-017	J203	TUBE SOCKET—Octal base socket on SPU chassis
RJS-030		SOCKET—For tubes V4, V5, V6, and V7
RJS-044		TUBE SOCKET—Tube socket for V1, V2, and V3
RJS-052		SOCKET—Tube socket for V9, V201, V202, V203, V204, V205, and V206
RJS-065		SOCKET—Pilot light socket and leads
RJS-066		MOUNTING PLATE—Electrolytic mounting plate, on SPU chassis
RJS-073		SOCKET—Phono-lite socket
RJS-085		SOCKET—Tube socket for V8
RJX-003	J3	RECEPTACLE—Phono input
RJX-005	P202	PLUG—4-pin amphenol for pilot light and speaker cable
RJX-006		OCTAL PLUG RECEPTACLE AND LOCK RING—For power receptacle on main chassis
RLA-006	T1	B.C.P.B. ANTENNA TRANSFORMER
RLA-009	T2	COIL—Broadcast band antenna coil
RLA-012	L4, 13, 28	COIL—FM antenna choke, FM1 oscillator cathode choke, oscillator cathode choke
RLB-006	T3	COIL—Broadcast band RF coil
RLB-008	L6	COIL—SW band RF plate choke coil
RLB-009	L3	COIL—Broadcast RF primary dummy
RLC-015	L10	COIL—SW oscillator loading coil
RLC-016	L16	COIL—Broadcast band oscillator shunt coil
RLC-017	L8	COIL—SW band RF loading coil
RLF-003	L24	CHOKE—IF filament choke
RLF-010	L201	CHOKE—Filter for power supply
RLI-005	L23	CHOKE—FM power line choke
RLI-002	L12	CHOKE—FM oscillator cathode choke
RLI-018	L25	COIL—SW2 loop shunt coil
RLP-005	L14, 15	CHOKE—IF plate choke
RLP-008	L5, 26	COIL—FM choke; RF plate and IF wavetrap
RLP-018	L5	COIL—FM RF plate choke
RLX-002		COIL AND MOUNTING BRACKET ASSEMBLY—For push buttons
RLX-003		TRIMMER STRIP BRACKET AND COIL ASSEMBLY—For push buttons
RMC-012		CLAMP—For holding cover on RF unit
RMC-013		CLIP—Support for clamp, holding cover on RF unit
RMF-093		CLIP—For tube shield on 6AQ7GT
RMM-009		SPACER—Metal sleeve on hoist pulley shaft
RMM-010		VANE—Tuner vane for FM coils L2 and L7
RMM-011		VANE—Tuner vane for FM oscillator coil L9
RMM-034		SHIELD—Lite shield for bezel
RMM-035		SHIELD—Tube shield for 6AQ7GT
RMM-036		SUPPORT—Fibre support for push-button coils
RMM-037		DRAWER SLIDES—Cabinet drawer slides
RMR-002		ROLLER—Presses against hoist shaft
RMS-039		WASHER—"C" washer for idler pulley shaft
RMS-040		SPRING—Flat spring against hoist pulley shaft
RMS-041		SPRING—Wire spring against hoist pulley shaft
RMS-042		SPRING—Hoist cord tension spring
RMS-043		SCREW—Iron core adjusting screw
RMS-044		SPRING—Guide wire connecting tuning vanes to adjustment screws
RMS-076		SCREW—For tuning vane adjustment
RMS-078		SPRING—Type 2 dial cord spring (late production)
RMU-030		SHAFT—For mounting push-button keys
RMU-031		SHAFT—Tuning shaft
RMW-013		FLYWHEEL—Less setscrew
RMW-016		PULLEY—Main tuning drum
RMW-018		PULLEY—Hoist
RMW-032		PULLEY—Idler pulley for dial cord
RMX-006		CABLE ASSEMBLY—For tuning eye
RMX-018		FLYWHEEL—With setscrew
RMX-019		PULLEY—Hoist pulley and shaft
RMX-021		TUNER TOP PLATE AND SHAFT ASSEMBLY
RMX-094		BRACKET AND SPRING ASSEMBLY—For push buttons
RRC-026		TONE CONTROL ASSEMBLY—Bass
RRC-027		TONE CONTROL ASSEMBLY—Treble
RRC-050	R45A, B	RESISTOR—2 meg., dual potentiometer
RRT-001	R202A, B	RESISTOR—900 ohms, 6 w., 150 ohms, 6 w., wirewound
RRW-016	R201	RESISTOR—100 ohms, 2 w., variable resistor
RSP-004		SWITCH—Push-button switch
RSP-006		PLUG—Loop plug
RSS-003	S7	SWITCH—Squelch switch
RSW-029	S1	SWITCH—Band change switch
RSX-010		SWITCH ASSEMBLY—Phono-lite
RTD-001	T7	FM DISCRIMINATOR TRANSFORMER
RTL-017	T4	BC 1st IF TRANSFORMER
RTL-022	T5	BC 2nd IF TRANSFORMER
RTL-043	T6	BROADCAST 3rd IF TRANSFORMER
RTO-026	T202	TRANSFORMER—Audio output to speakers
RTP-035	T201	TRANSFORMER—Power transformer, 60 cycles
RTP-036	T201	TRANSFORMER—Power transformer, 50 cycles
RWL-004		CORD AND PLUG—For 117 v. a-c to main chassis
RWM-001	P201	CORD—Cord and plug for 117 v. a-c to special power unit, Model 41 and 42
RWM-003	P201	CORD—Cord and plug for 117 v. a-c to special power unit, Model 43

SPECIALIZED REPLACEMENT PARTS

Part No.	Symbol	Description
RAB-028	L1	LOOP AND BACK ASSEMBLY—Model 41, Walnut
RAB-029	L1	LOOP AND BACK ASSEMBLY—Model 41, Mahogany
RAB-030	L1	LOOP AND BACK ASSEMBLY—Model 41, Blonde Mahogany
RAB-031	L1	LOOP AND BACK ASSEMBLY—Model 42, Mahogany
RAB-037	L1	LOOP AND BACK ASSEMBLY—Model 43, Knotty Pine
RAB-033	L1	LOOP AND BACK ASSEMBLY—Model 44, Walnut
RAB-034	L1	LOOP AND BACK ASSEMBLY—Model 44, Mahogany
RAB-035	L1	LOOP AND BACK ASSEMBLY—Model 44, Champagne Finish Mahogany
RAB-042	L1	LOOP AND BACK ASSEMBLY—Model 42, Mahogany, 50 cycles
RAB-044	L1	BACK AND LOOP ASSEMBLY—Model 45
RAD-018		BRACKET—Band switch (front)
RAD-019		BRACKET—Band switch (rear)
RAD-020		BRACKET—For coil on rear bracket of band switch
RAD-023		MOUNTING BRACKET—Dial scale
RAL-001		BEZEL—Dark
RAL-002		BEZEL—Light
RAX-014		BRACKET AND ROLLER FORK ASSEMBLY—For tuning hoist
RCC-038	C86, 89	CAPACITOR—.004 mfd., 600 v., paper
RCE-019	C201A, B, C, D	CAPACITOR—30 mfd., 15 mfd., 30 mfd., 30 mfd., electrolytic
RCE-032	C100A, C100B	CAPACITOR—30 mfd., 400 v., electrolytic CAPACITOR—30 mfd., 350 v., electrolytic
RCM-001	C127	CAPACITOR—.01 mfd., metal cased
RCM-002	C128	CAPACITOR—.01 mfd., metal cased
RCW-024	C29	CAPACITOR—44 mmf., orramic
RCW-025	C73, 114	CAPACITOR—4.7 mmf., ceramic
RCW-1028	C11, 16, 41, 113, 129, 132	CAPACITOR—100 mmf., ceramic
RCX-017	C2, 3, 4, 5, 6	TRIMMER STRIP—Push button
RCX-024	C12, 13	TRIMMER STRIP—3-30 mmf., 80-130 mmf., trimmer capacitor
RCX-025	C23, 31, 33, 34	TRIMMER STRIP—185-245 mmf., 20-55 mmf., 320-400 mmf., 165-225 mmf., trimmer capacitor
RCX-026	C17, 39, 40	TRIMMER STRIP—20-55 mmf., 475-575 mmf., 320-400 mmf., trimmer capacitor
RCX-027	C27, 37, 38	TRIMMER STRIP—2-20 mmf., 185-245 mmf., 34-70 mmf., trimmer capacitor
RCX-028	C10, 14, 15	TRIMMER STRIP—34-70 mmf., 40-80 mmf., 5-45 mmf., trimmer capacitor
RCY-011	C9	CAPACITOR—2-20 mmf., trimmer
RCY-017	C28, 32	TRIMMER STRIP—3-30 mmf., 3-30 mmf., trimmer capacitor
RDB-006		KEY—Push-button key (brown)
RDB-007		KEY—Push-button key (tan)
RDC-019		CORD—Hoist cord, 6½ inches long
RDC-025		DRIVE CORD ASSEMBLY
RDF-003		FELT WASHER—(Dark), for control knobs
RDF-006		FELT WASHER—(Light), for control knobs
RDF-008		FELT STRIP—Dial scale
RDK-042		KNOB—(Plain) Pine, Blonde Mahogany, and Champagne
RDK-043		KNOB—(Plain) Mahogany
RDK-044		KNOB—(Plain) Walnut
RDK-045		KNOB—(Arrow) Pine, Blonde Mahogany, and Champagne
RDK-046		KNOB—(Arrow) Mahogany
RDK-047		KNOB—(Arrow) Walnut
RDK-092		KNOB—(Plain) for Model 45 only
RDK-080		KNOB—(Arrow) for Model 45 only
RDP-025		POINTER ASSEMBLY—Model 43 only
RDP-026		POINTER ASSEMBLY—Models 41, 42, 44, 45
RDS-023		DIAL SCALE ASSEMBLY
RDS-045		SCALE—Dial scale
RDX-020	S6, L17, 18, L19, 20, 21, L22	PUSH-BUTTON SWITCH ASSEMBLY
REI-006		IRON CORE—AM tuning
RHE-001		EYELET—For connecting FM coil links
RHG-007		GROMMET—Rubber grommet for tuning eye cable
RHG-008		GROMMET—Rubber grommet for tuner plate
RHG-009		GROMMET—Rubber grommet for tuner plate near tuning shaft
RHG-010		GROMMET—For 6SC7 tube socket
RHM-012		CUSHION—Dial scale
RHM-024		LINK—Hoist link, holding end of hoist cord
RHM-025		RING—Retaining ring for shaft, mounting push-button keys
RHN-004		NUT—Hex nut for tuning vane adjustment
RJC-001		CONTACT PIN—For speaker connection
RJJ-001		RECEPTACLE—Receptacle for octal plug on receiver chassis
RJJ-002	J3	RECEPTACLE—For loop
RJJ-003		RECEPTACLE—6AL7 tuning eye socket
RWM-004	P201	CORD—Cord and plug for 117 v. a-c to special power unit, Model 44
RWM-005	P201	CORD—Cord and plug for 117 v. a-c to special power unit, Model 45
RYC-006		TAB—Push-button key tab (phono)
RYC-007		STATION CALL LETTERS—For push-button keys
RYC-008		TAB—Push-button key tab (OFF)
RSW-016		Treble Switch
RSW-017		Bias Switch

MODEL 50

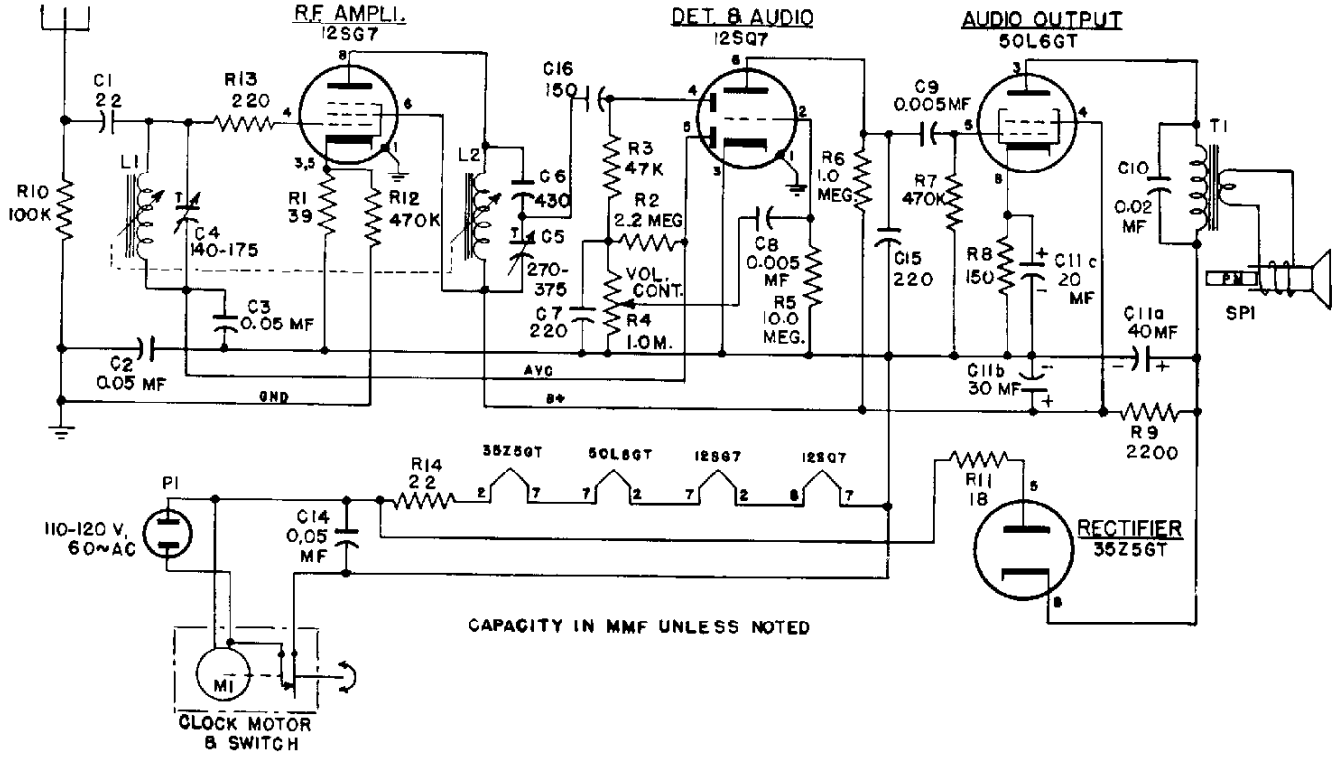
R.F. AMPLI.
12SG7
DET. & AUDIO
12SQ7
AUDIO OUTPUT
50L6GT
C1
22
R13
220
C16
150
C9
0.005MF
T1
L1
L2
C6
430
C5
270-
375
R3
47K
R2
2.2 MEG
R6
1.0
MEG
C10
0.02
MF
R10
100K
C4
140-175
R1
39
R12
470K
R7
470K
C8
0.005
MF
C15
220
R8
150
C11c
20
MF
SP1
C3
0.05 MF
C7
220
VOL.
CONT.
R4
1.0M.
R5
10.0
MEG.
C11a
40MF
C2
0.05 MF
AVC
GND
B+
C11b
30 MF
R9
2200
35Z5GT
50L6GT
12SG7
12SQ7
R14
22
R11
18
P1
110-120 V,
60~AC
C14
0,05
MF
RECTIFIER
35Z5GT
CAPACITY IN MMF UNLESS NOTED
M1
CLOCK MOTOR
& SWITCH

RADIO REPLACEMENT PARTS LIST—MODEL 50

CAT. NO	SYMBOL	DESCRIPTION
		UNIVERSAL G-E RADIO REPLACEMENT PARTS
UCC-039	C8	CAPACITOR 0.005 mfd., 600 v., paper
UCC-045	C2, 3	CAPACITOR 0.05 mfd., 600 v., paper
UCG-543	C6	CAPACITOR 430 mmf., silver mica
UCU-512	C1	CAPACITOR 22 mmf., mica
UCU-532	C16	CAPACITOR 150 mmf., mica
UCU-536	C7, 15	CAPACITOR—220 mmf., mica
UIC-001		CEMENT—Speaker cement
UOP-405	SP1	LOUDSPEAKER 4-inch PM speaker
UOX-009		CONE Speaker replacement cone
URD-015	R1	RESISTOR 39 ohms, ½ w., carbon
URD-029	R8	RESISTOR 150 ohms, ½ w., carbon
URD-033	R15	RESISTOR 220 ohms, ½ w., carbon
URD-089	R3	RESISTOR 47,000 ohms ½ w., carbon
URD-097	R10	RESISTOR 100,000 ohms, ½ w., carbon
URD-113	R7, 12	RESISTOR 470,000 ohms, ½ w., carbon
URD-121	R6	RESISTOR 1.0 megohm, ½ w., carbon
URD-129	R2	RESISTOR 2.2 megohms, ½ w., carbon
URD-145	R5	RESISTOR 10.0 megohms, ½ w., carbon
URE-057	R9	RESISTOR 2,200 ohms 1 w., carbon
		SPECIALIZED G-E REPLACEMENT PARTS
RAB-016		COVER Cabinet back cover

CAT NO	SYMBOL	DESCRIPTION
		SPECIALIZED G-E REPLACEMENT PARTS
RAU-009		CABINET Plastic cabinet
RCC-039	C9	CAPACITOR 0.005 mfd., 600 v., paper
RCC-041	C10	CAPACITOR—0.02 mfd., 600 v., paper
RCC-045	C14	CAPACITOR—0.05 mfd., 600 v., paper
RCE-031	C11A, B, C	CAPACITOR 40 mfd., 150 v.; 30 mfd., 150 v.; 20 mfd., 25 v.; electrolytic
RCY-007	C4	TRIMMER—140-175 mmf., antenna trimmer
RCY-008	C5	TRIMMER—270-375 mmf., r-f trimmer
RDC-015		CORD—Tuning drive cord (bulk)
RDK-028		KNOB Volume or tuning knob
REI-004		CORE—Powdered iron tuning core
RHJ-001		ASSEMBLY—Tuning shaft assembly and spacer
RIT-005		COVER—Electrolytic cardboard cover (inner and outer)
RJS-003		SOCKET—Tube socket
RLA-005	L1, 2	COIL Antenna or R-F coil
RMB-003		BUSHING—Drive shaft bushing
RMS-034		SPRING—Drive cord tension spring
RMX-006		PULLEY—Drive pulley
RRW-003	R14	RESISTOR 22 ohms, 1 w., wirewound
RRW-008	R11	RESISTOR 18 ohms, 1 w.,
RWL-009		CORD Power cord
RZC-001		CLOCK Clock assembly
RRC 013	R4	Volume Control

MODELS 60, 62

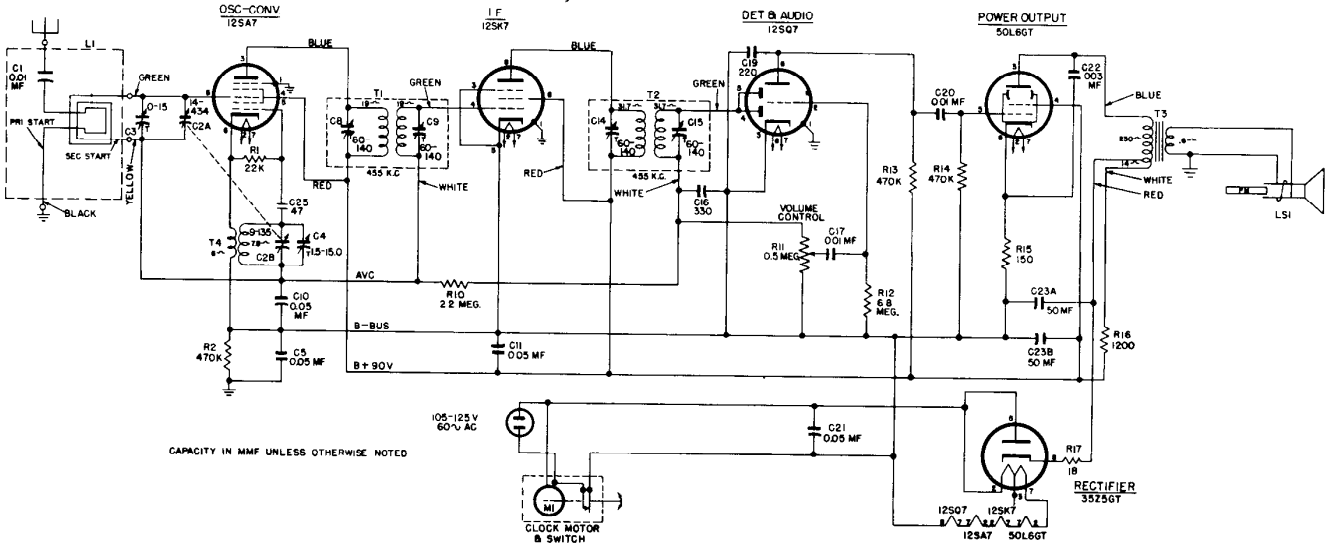
OSC-CONV
12SA7
I.F.
12SK7
DET & AUDIO
12SQ7
POWER OUTPUT
50L6GT
L1
C1
0.01 MF
PRI START
SEC START
C3
YELLOW
BLACK
GREEN
0-15
14-434
C2A
R1
22K
C2B
T4
9-135
78
C4
7.5-15.0
C25
47
RED
T1
C8
60-140
C9
60-140
455 K.C.
WHITE
BLUE
RED
T2
C14
60-140
C15
60-140
455 K.C.
WHITE
GREEN
C16
330
C19
220
VOLUME CONTROL
R11
0.5 MEG.
C17
0.01 MF
R13
470K
R14
470K
C20
0.01 MF
C22
.003 MF
BLUE
T3
WHITE
RED
LSI
R15
150
C23A
50 MF
C23B
50 MF
R16
1200
R12
6.8 MEG.
AVC
R10
2.2 MEG.
C10
0.05 MF
B-BUS
C11
0.05 MF
R2
470K
C5
0.05 MF
B+ 90V
105-125 V
60~ AC
C21
0.05 MF
R17
18
RECTIFIER
35Z5GT
M1
CLOCK MOTOR
& SWITCH
12SQ7
12SK7
12SA7
50L6GT
CAPACITY IN MMF UNLESS OTHERWISE NOTED

MODELS 60 AND 62

RADIO REPLACEMENT PARTS LIST

Cat. No.	Symbol	Description
UNIVERSAL G-E REPLACEMENT PARTS		
UCC-623	C22	CAPACITOR—.003 mf., 600 v., paper
UCC-630	C1, 17, 20	CAPACITOR—.01 mf., 600 v., paper
UCC-635	C5, 10, 11, 21	CAPACITOR—.05 mf., 600 v.
UCU-036	C19	CAPACITOR—220 mmf., mica
UCU-040	C16	CAPACITOR—330 mmf., mica
UCW-020	C25	CAPACITOR—47 mmf., ceramic
UOP-418	LS1	SPEAKER—4-inch PM speaker
URD-029	R15	RESISTOR—150 ohms, ½ w., carbon
URD-081	R1	RESISTOR—22,600 ohms, ½ w., carbon
URD-113	R2, 13, 14	RESISTOR—470,000 ohms, ½ w., carbon
URD-129	R10	RESISTOR—2.2 meg., ½ w., carbon
URD-141	R12	RESISTOR—6.8 meg., ½ w., carbon
URF-051	R16	RESISTOR—1200 ohms, 2 w., carbon
SPECIALIZED G-E REPLACEMENT PARTS		
RAB-054	L1	BACK—Cabinet bark cover (includes loop antenna)
RAU-020		CABINET—Mahogany plastic cabinet (Model 60)
RAU-021		CABINET—Ivory plastic cabinet (Model 62)
RCE-050	C23A, B	CAPACITOR—50 mfd., 150 v.; 50 mfd., 150 v., dry electrolytic
RCT-021	C2A, B	CONDENSER—Tuning condenser, oscillator, and r-f section
RDK-028		KNOB—Volume control knob (Models 60 or 62)
RDK-094		KNOB—Tuning dial wheel (Models 60 or 62)
RDS-047		SCALE—Dial scale (Model 60)
RDS-050		SCALE—Dial scale (Model 62)
RJS-003		SOCKET—Octal tube socket (Type 12SA7)
RJS-006		SOCKET—Octal tube socket
RLC-051	T4	COIL—Oscillator coil
RRC-054	R11	POTENTIOMETER—0.5 megohm, volume control
RRW-008	R17	RESISTOR—18 ohms, 1 watt, wirewound
RTL-050	T1	TRANSFORMER—1st I-F transformer
RTL-051	T2	TRANSFORMER—2nd I-F transformer
RTO-036	T3	TRANSFORMER—Output transformer
RWL-009		CORD—Power cord, brown (Model 60)
RWL-014		CORD—Power cord, white (Model 62)
RZC-005	M1	CLOCK—60 cycle, 105-125 v., clock assembly
RZC-006	M1	CLOCK—50 cycle, 105-125 v., clock assembly

MODELS 64 AND 65

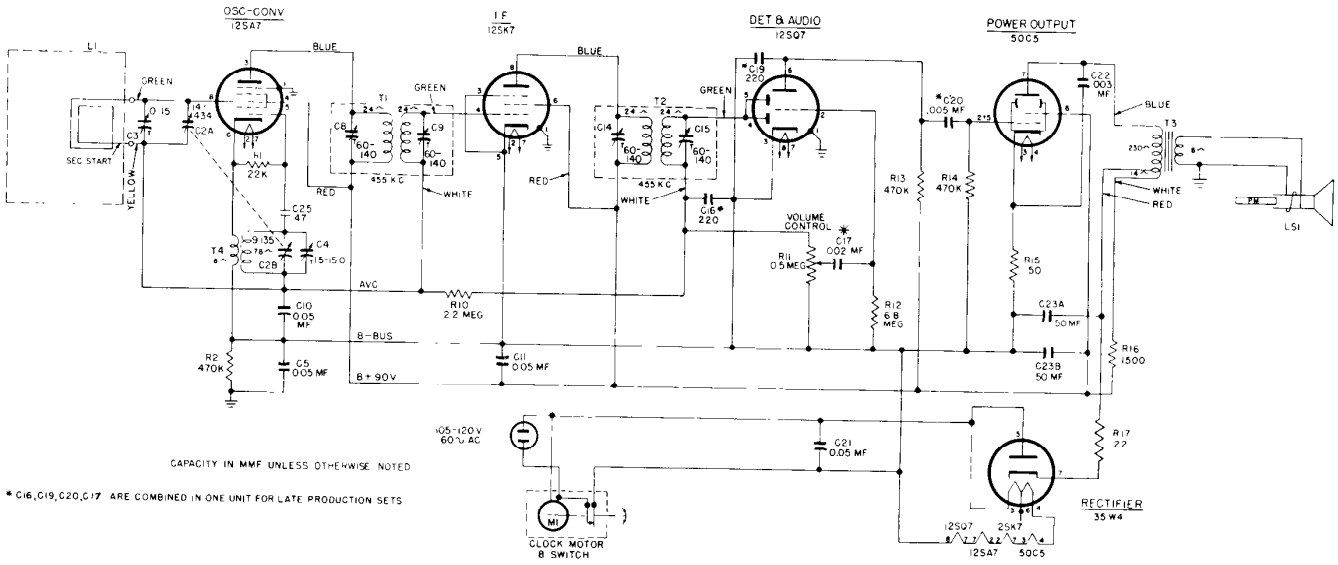

CAPACITY IN MMF UNLESS OTHERWISE NOTED

* C16, C19, C20, C17 ARE COMBINED IN ONE UNIT FOR LATE PRODUCTION SETS

MODELS 64 AND 65

RADIO REPLACEMENT PARTS LIST

UNIVERSAL REPLACEMENT PARTS

Cat. No.	Symbol	Description	Suggested Unit List Price
UCC-028	C5, 10, 11	CAPACITOR—.05 mf., 400 v., paper	$0 25
UCC-036	C17	CAPACITOR—.002 mf., 600 v., paper, see production change	.30
UCC-039	C20	CAPACITOR—.005 mf., 600 v., paper, see production change	.30
UCU-1036	C16, I9	CAPACITOR—220 mmf., mica, see production change	.30
UOP-421	LS1	SPEAKER—PM loudspeaker	4 95
URD-009	R17	RESISTOR—22 ohms, ½ w., carbon	13
URD-029	R15	RESISTOR—150 ohms, ½ w., carbon	.13
URD-081	R1	RESISTOR—22,000 ohms, ½ w., carbon	.13
URD-113	R2, 13, 14	RESISTOR—470,000 ohms, ½ w., carbon	.13
URD-129	R10	RESISTOR—2.2 meg., ½ w., carbon	.13
URD-141	R12	RESISTOR—6.8 meg., ½ w., carbon	.13
URF-053	R16	RESISTOR—1500 ohms, 2 w., carbon	17

SPECIALIZED REPLACEMENT PARTS

Cat. No.	Symbol	Description	Suggested Unit List Price
RAB-054	L1	BACK—Cabinet back cover (includes loop L1 and antenna primary)	$1 80
RAB-097	L1	BACK—Cabinet back cover (includes loop L1 (antenna primary omitted)	1.80
RAC-060		SHIELD PLATE—Metal plate covers bottom of chassis	35
RAC-073		MOUNTING BRACKET—Metal back cover holds clock to cabinet	.45
RAU-304		CABINET—Brown plastic (Model 64)	$4.95
RAU-305		CABINET—White plastic (Model 65)	4.95
RCC-045	C21	CAPACITOR—.05 mf., 600 v., paper	.30
RCC-074	C22	CAPACITOR—.003 mf., 600 v., paper	.25
RCE-050	C23A, 23B	CAPACITOR—50 mf., 150 v.; 50 mf., 150 v., dry electrolytic	2.10
RCT-021	C2A, 2B	CAPACITOR—Tuning capacitor (oscillator and r-f section)	4 70
RCW-1043	C25	CAPACITOR—47 mmf., ceramic	60
RCW-3013	C16, 17, I9, 20	CAPACITOR—220 mmf., .002 mf., 220 mmf., .085 mf., (4 section ceramic)	1 00
RDK-028		KNOB—Volume control knob	10
RDK-094		KNOB—Tuning dial wheel	.45
RDS-082		SCALE—Dial scale	30
RHC-018		SNAP FASTENER—For cabinet back	05
RJC-004		CLIP—Loop connector clip	.02
RJS-092		SOCKET—Tube socket for 50C5, 35W4	.20
RJS-116		SOCKET—Tube socket for 12SA7	.15
RJS-117		SOCKET—Tube socket for 12SK7, 12SQ7	15
RLC-600	T4	COIL—Oscillator coil	.90
RRC-054	R11	POTENTIOMETER—0 5 meg., volume control	1.25
RTL-094	T1	TRANSFORMER—1st I-F transformer	1 90
RTL-095	T2	TRANSFORMER—2nd I-F transformer	1.90
RTO-030	T3	TRANSFORMER—Output transformer	2 85
RWL-009		CORD—Power cord (brown) for Model 64	70
RWL-010		CORD—Power cord (white) for Model 65	75
RZC-009	M1	CLOCK—60 cycle, 105-125 v., clock assembly	11 50

MODELS 66,67

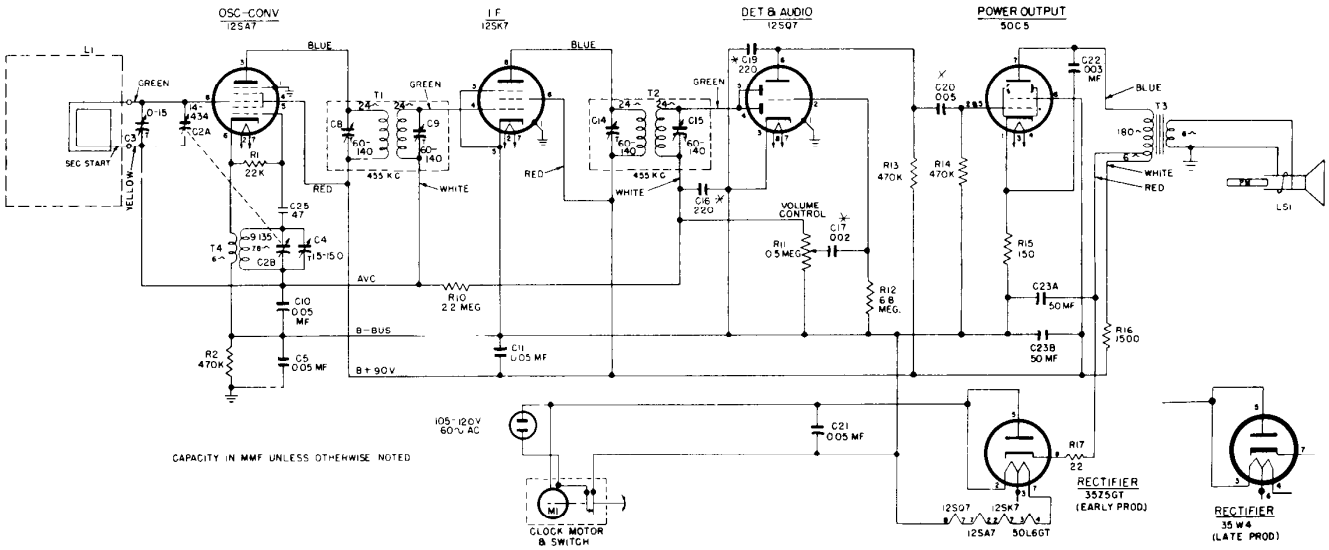

OSC-CONV
12SA7
I F
12SK7
DET & AUDIO
12SQ7
POWER OUTPUT
50C5
L1
SEC START
GREEN
YELLOW
BLUE
RED
WHITE
T1
T2
T3
T4
455 KC
VOLUME CONTROL
AVC
B-BUS
B+90V
R1 22K
R2 470K
R10 2.2 MEG
R11 0.5 MEG
R12 6.8 MEG.
R13 470K
R14 470K
R15 150
R16 1500
R17 22
C10 0.05 MF
C5 0.05 MF
C11 0.05 MF
C16 220
C17 .002
C19 220
C20 .005
C21 0.05 MF
C22 .003 MF
C23A 50 MF
C23B 50 MF
105-120V 60~ AC
CLOCK MOTOR & SWITCH
RECTIFIER
35Z5GT
(EARLY PROD)
RECTIFIER
35W4
(LATE PROD)
LS1
CAPACITY IN MMF UNLESS OTHERWISE NOTED

MODEL 66 AND 67 REPLACEMENT PARTS

Cat. No.	Symbol	Description	Unit List Price
UNIVERSAL REPLACEMENT PARTS			
UCC-028	C5, 10, 11	CAPACITOR—.05 mf., 400 v., paper	$0.25
UCC-630	C17, 20	CAPACITOR—.01 mf., 600 v., paper (used in early production) (may replace respective sections of RCW-3013)	.30
UCU-036	C16, 19	CAPACITOR—220 mmf., mica (used in early production) (may replace respective sections of RCW-3013)	.30
UOP-421	LS1	SPEAKER—PM loudspeaker	4.95
URD-009	R17	RESISTOR—22 ohms, ½ w., carbon	.13
URD-029	R15	RESISTOR—150 ohms, ½ w., carbon	.13
URD-081	R1	RESISTOR—22,000 ohms, ½ w., carbon	.13
URD-113	R2,13,14	RESISTOR—470,000 ohms, ½ w., carbon	.13
URD-129	R10	RESISTOR—2.2 meg., ½ w., carbon	.13
URD-141	R12	RESISTOR—6.8 meg., ½ w., carbon	.13
URE-053	R16	RESISTOR—1500 ohms, 2 w., carbon	.17
SPECIALIZED REPLACEMENT PARTS			
RAB-054	L1	BACK—Cabinet back cover (includes loop L1)	$1.80
RAC-074		MOUNTING BRACKET—Metal back cover holds clock to cabinet	.75
RAU-020		CABINET—Brown plastic (Model 66)	4.25
RAU-021		CABINET—White plastic (Model 67)	6.95
RCC-045	C21	CAPACITOR—.05 mf., 600 v., paper	.30
RCC-074	C22	CAPACITOR—.003 mf., 600 v., paper	.25

Cat. No.	Symbol	Description	Unit List Price
SPECIALIZED REPLACEMENT PARTS (Cont'd)			
RCE-050	C23A, 23B	CAPACITOR—50 mf., 150 v., 50 mf., 150 v., dry electrolytic	$2.10
RCT-021	C2A, 2B	CAPACITOR—Tuning capacitor (oscillator and r-f section)	4.70
RCW-1043	C25	CAPACITOR—47 mmf., ceramic	.60
RCW-3013	C16, 17, 19, 20	CAPACITOR—220 mmf., .002 mf., 220 mmf, .005 mf., (4 section ceramic) (see UCC-630 UCU-036)	1.00
RDK-028		KNOB—Volume control knob	.10
RDK-094		KNOB—Tuning dial wheel	.45
RDS-047		SCALE—Dial scale (Model 66)	.30
RDS-050		SCALE—Dial scale (Model 67)	.10
RJC-004		CLIP—Loop connector clip	.02
RJS-092		SOCKET—Tube socket for 50C5, 35W4	.20
RJS-116		SOCKET—Tube socket for 12SA7	.15
RJS-117		SOCKET—Tube socket for 12SK7, 12SQ7, 35Z5-GT	.15
RLC-051	T4	COIL—Oscillator coil	1.85
RHH-004		SNAP FASTENER—For cabinet back	.30
RRC-054	R11	POTENTIOMETER—0.5 meg., volume control	1.25
RTL-094	T1	TRANSFORMER—1st I-F transformer	1.90
RTL-095	T2	TRANSFORMER—2nd I-F transformer	1.90
RTO-036	T3	TRANSFORMER—Output transformer	2.85
RWL-009		CORD—Power cord (brown) for Model 66	.70
RWL-016		CORD—Power cord (white) for Model 67	.75
RZC-005	M1	CLOCK—60 cycle, 105-125 v., clock assembly	11.50

MODELS 100, 101, 103 & 105

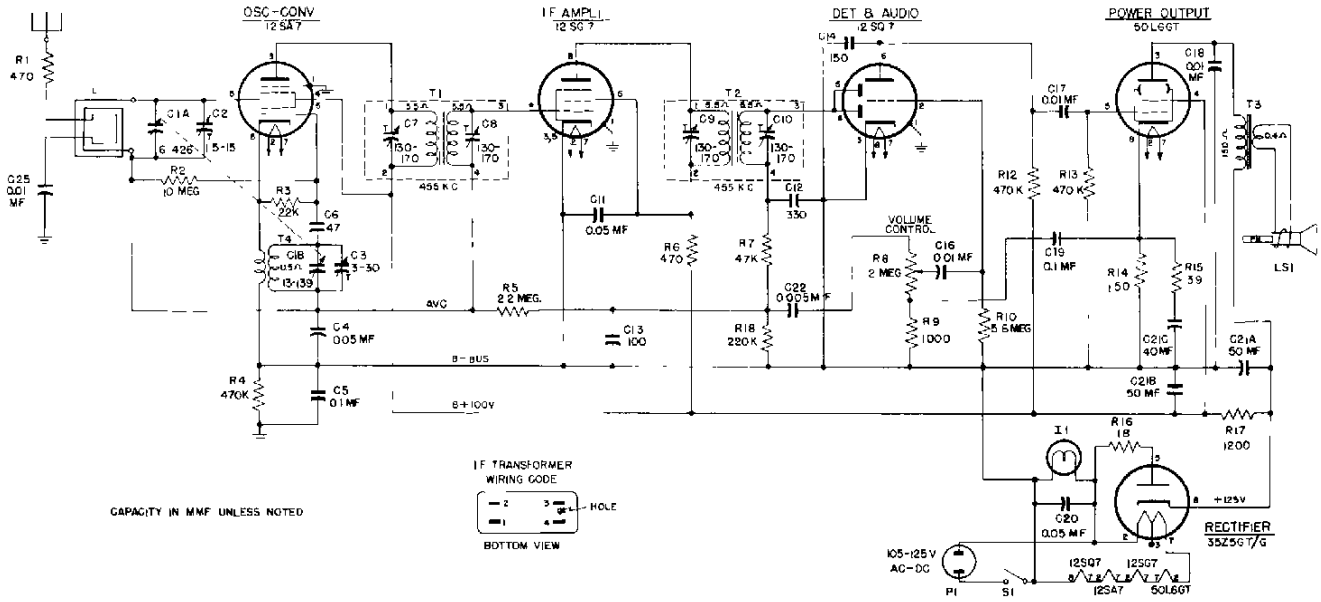

REPLACEMENT PARTS LIST MODELS 100, 101, 103 & 105

PART NO	SYMBOL	DESCRIPTION
UNIVERSAL G-E REPLACEMENT PARTS		
UCC-013	C19	CAPACITOR—0.1 mfd., 200 v., paper
UCC-039	C22	CAPACITOR—0.005 mfd., 600 v., paper
UCC-040	C25	CAPACITOR—0.01 mfd., 600 v., paper
UCC-045	C4, 11	CAPACITOR—0.05 mfd., 600 v., paper
UCC-048	C5	CAPACITOR—0.1 mfd., 600 v., paper
UDL-018	I1	PILOT LAMP—115 v., 10 watt, candelabra base
URD-015	R15	RESISTOR—39 ohms, ½ w., carbon
URD-009	R14	RESISTOR—150 ohms, ½ w., carbon
URD-041	R6	RESISTOR—470 ohms, ½ w., carbon
URD-049	R20	RESISTOR—1,000 ohms, ½ w., carbon
URD-001	R3	RESISTOR—22,600 ohms, ½ w., carbon
URD-089	R7	RESISTOR—47,000 ohms, ½ w., carbon
URD-105	R18	RESISTOR—220,600 ohms, ½ w., carbon
URD-113	R4, 12, 13	RESISTOR—470,600 ohms, ½ w., carbon
URD-129	R5	RESISTOR—2.2 megohms, ½ w., carbon
URD-130	R19	RESISTOR—5.6 megohms, ½ w., carbon
URD-145	R2	RESISTOR—10 megohms, ½ w., carbon
URE-007	R16	RESISTOR—18 ohms, 1 w., carbon
URF-051	R17	RESISTOR—1200 ohms, 2 w., carbon
SPECIALIZED G-E REPLACEMENT PARTS		
RAB-001		BACK—Cabinet Back Cover (Models 103, 105)
RAB-002		BACK—Cabinet Back Cover, white (Model 101)
RAB 600		BACK—Cabinet Back Cover, brown (Model 100)
RAD-001		BRACKET—Antenna Bracket, right rear
RAD-002		BRACKET—Antenna Bracket, left rear
RAU-002		CABINET—Brown Plastic, with grille assembly (Model 100)
RAU-003		CABINET—Ivory Plastic, with grille assembly (Model 101)
RAX-001		ASSEMBLY—Idler pulley assembly
RCC-049	C16, 17, 18	CAPACITOR—0.01 mfd., 600 v., paper
RCC-045	C20	CAPACITOR—0.05 mfd., 600 v., paper
RCE-001	C21A, 21B, 21C	CAPACITOR—50 mf., 150 v., 50 mf., 150 v., 40 mf., 25 v., dry electrolytic
RCT-001	C1A, C1B C2, C3	CAPACITOR—Tuning capacitor assembly
RCU 510	C6	CAPACITOR 47 mmf., 000 v., mica

PART NO.	SYMBOL	DESCRIPTION
SPECIALIZED G-E REPLACEMENT PARTS (CONT'D)		
RCU-112	C13	CAPACITOR 100 mmf., 500 v., mica
RCU-113	C14	CAPACITOR—150 mmf., 500 v., mica
RCU-115	C12	CAPACITOR—330 mmf., 500 v. mica
RDC-001		ASSEMBLY—Dial drive cord
RDD-001		DRUM—Dial drive drum
RDE-001		ESCUTCHEON—Dial scale escutcheon (Models 103, 105)
RDF-001		WASHER—Felt washer for controls (Model 101)
RDF-003		WASHER—Felt washer for controls (Models 100, 103, 105)
RDK-001		KNOB—Control knob (Model 101)
RDK-004		KNOB—Control knob (Models 103, 105)
RDK-004		KNOB—Control knob (Model 100)
RDP-002		POINTER—Dial scale pointer
RDS-001		SCALE—Dial scale (Models 100, 101)
RDS-002		SCALE—Dial scale (Models 103, 105)
RDX-001		ASSEMBLY—Dial scale back plate assembly
RHG-001		GROMMET—Tuning capacitor mounting grommet
RHM-001		RING—Pointer shaft retainer ring
RHM-002		CLIP—Speaker mounting clip
RHM 004		CLIP—Dial scale mounting clip (Models 100, 101)
RHM-005		CLIP—Dial scale mounting clip (Models 103, 105)
RHU-001		SPACER—Scale back plate spacer
RHU-002		SPACER—Tuning capacitor mounting spacer
RLC-001	T4	COIL—Oscillator coil assembly
RLL-001	L1	BEAM-A-SCOPE—Loop antenna assembly
RMM-001		SHIELD—Tube shield
RMS-001		SPRING—Drive cord tension spring
RMU-001		SHAFT—Tuning control shaft
ROP-005	LS1	LOUDSPEAKER—5¼-inch permanent magnet
RRC-002	R2, S1	VOLUME CONTROL—2.0 megohm potentiometer (includes power switch)
RTL-001	T1	TRANSFORMER—1st i-f transformer
RTL-002	T2	TRANSFORMER—2nd i-f transformer
RTO-001	T3	TRANSFORMER Output transformer
RTS-001		SOCKET—Pilot lamp socket
RTS-003		SOCKET—Octal base tube socket
RTS-004		SOCKET—Electrolytic capacitor mounting socket
RWL-001	P1	CORD—Power cord and plug

MODELS 102, 102W, 107, 107W, 114, 114W, 115, 115W

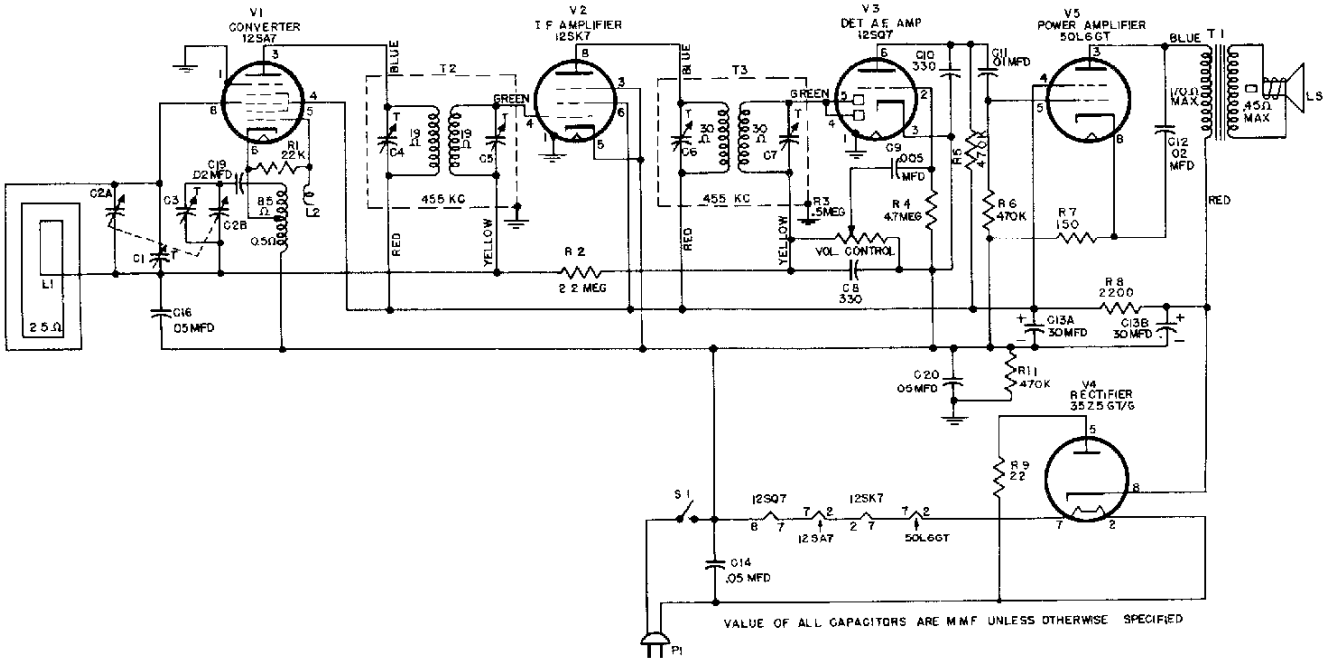

MODELS 102, 102W, 107, 107W, 114, 114W, 115 AND 115W
REPLACEMENT PARTS LIST

UNIVERSAL REPLACEMENT PARTS

Cat. No	Symbol	Description	Suggested Unit List Price
UCC 625	C9	CAPACITOR—.005 mf., 600 v., paper	$0.25
UCC-630	C11, 17	CAPACITOR—.01 mf., 600 v., paper	.30
UCC-631	C12, 19	CAPACITOR—.02 mf., 600 v., paper	.30
UCC-635	C14, 16, 20	CAPACITOR—.05 mf., 600 v., paper	.40
UCU-040	C8, 10	CAPACITOR—330 mmf., mica	30
UOP-487		SPEAKER—4-inch PM speaker, same as S403D7	3.75
UOX 009		SPEAKER REPAIR KIT	1.25
URD-009	R9	RESISTOR—22 ohms, ½ w., carbon	.13
URD-029	R7	RESISTOR—150 ohms, ½ w., carbon	.13
URD-081	R1	RESISTOR—22,000 ohms, ½ w., carbon	13
URD-123	R5, 6, 11	RESISTOR—470,000 ohms, ½ w., carbon	.13
URD-129	R3	RESISTOR—2.2 meg., ½ w., carbon	.13
URD-137	R4	RESISTOR—4.7 meg., ½ w., carbon	.13
URF-037	R8	RESISTOR—330 ohms, 2 w., carbon	.25

SPECIALIZED REPLACEMENT PARTS

Cat. No	Symbol	Description	Suggested Unit List Price
RAB 070	L1	BACK—Cabinet back with loop	$1.70
RAU-028		CABINET—Brown (Model 102)	6.90
RAU-029		CABINET—Brown (Model 107)	6.90
RAU-030		CABINET—Brown (Model 115)	6.90
RAU-031		CABINET—Ivory (Model 115W)	9.40
RAU-032		CABINET—Ivory (Model 114W)	9.40
RAU-033		CABINET—Brown (Model 114)	6.90
RAU-034		CABINET—Ivory (Model 107W)	9.40
RAU-035		CABINET—Ivory (Model 102W)	9.40
RCT-029	C1, 2A, 2B, C3	CAPACITOR—2-section tuning capacitor	4.10
RDC-033		CORD—Dial drive cord, 10 yds min	.10 /yd
RDK-020		KNOB—Control knob, Models 102W, 107W, 114W for knurled shaft	$0 15
RDK-031		KNOB—Control knob for 102, 107, and 114 for knurled shaft	20
RDK-121		KNOB—Control knob for Model 115 for knurled shaft	15
RDK-122		KNOB—Control knob for Model 115W for knurled shaft	.25
RDS-063		SCALE—Dial scale for Models 115 and 115W	.90
RHG-017		GROMMET—(3 used for mounting tuning capacitor)	.05
RHH 004		SNAP FASTENER—For mounting cabinet back to cabinet	02
RHJ-005		SPACER—For mounting tuning capacitor	.02
RHM 046		CLIP—For mounting dial scale	.02
RJS 003		SOCKET—Octal tube socket	20
RMW-040		PULLEY—Idler pulley for dial cord	05
RRC 077	R3, S1	CONTROL—Volume control, includes power switch with knurled shaft	1 65
SCE-001	C13A, B	CAPACITOR—30 mf., 150 v 30 mf., 150 v., dry electrolytic	1 60
SDK-011		KNOB—White, for flat shaft	30
SDP-001		POINTER—Dial scale pointer	15
SDS 019		SCALE—Dial scale for Models 102, 102W, 107, 107W, 114, and 114W	1.10
SLC-020	L4	COIL—Oscillator coil	90
SMS-013		SPRING—Dial cord tension spring	05
SRC-003	R3, S1	VOLUME CONTROL and switch with flat shaft	1 65
STL 007	T2	TRANSFORMER—1st IF trans former	2 25
STL 008	T3	TRANSFORMER—2nd IF trans former	2 20
STO-005	T1	TRANSFORMER—Output trans former	2 75
SWL-001		CORD—Power cord	75

MODEL 106

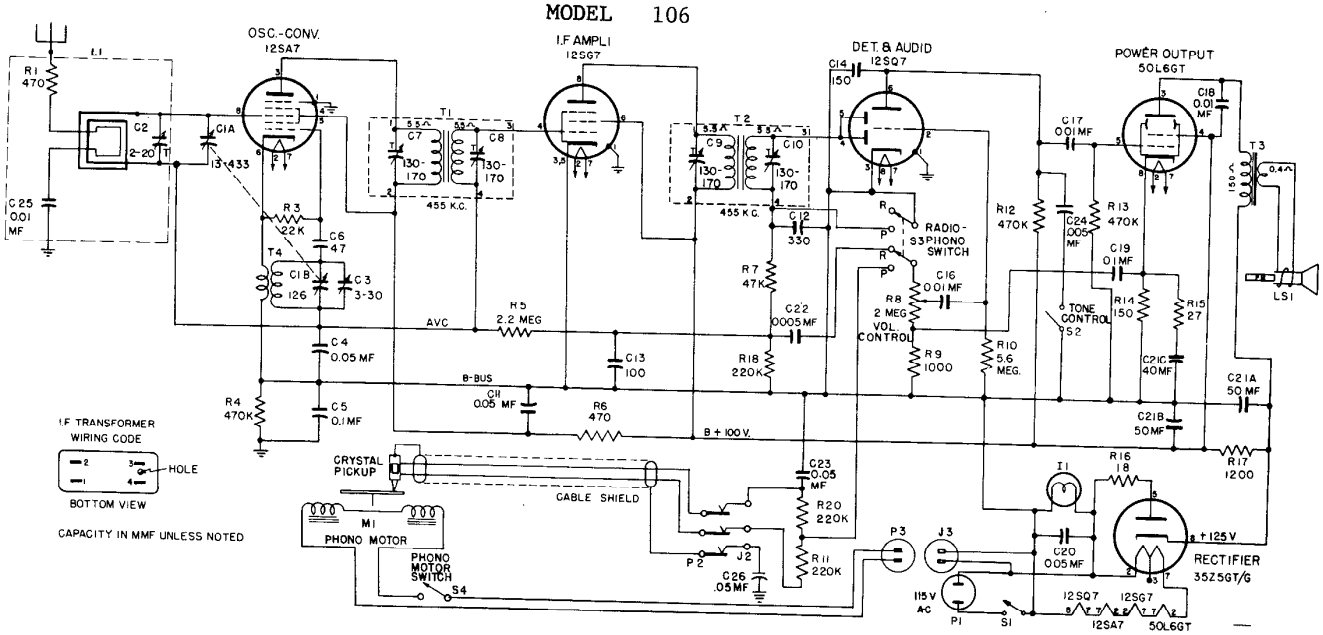
OSC.-CONV.
12SA7
I.F AMPLI
12SG7
DET. & AUDIO
12SQ7
POWER OUTPUT
50L6GT
RADIO-PHONO SWITCH
TONE CONTROL
VOL. CONTROL
AVC
B-BUS
B + 100 V.
455 KC.
CRYSTAL PICKUP
CABLE SHIELD
PHONO MOTOR
PHONO MOTOR SWITCH
RECTIFIER
35Z5GT/G
I.F TRANSFORMER WIRING CODE
HOLE
BOTTOM VIEW
CAPACITY IN MMF UNLESS NOTED
115 V AC
12SQ7
12SG7
12SA7
50L6GT

REPLACEMENT PARTS LIST – MODEL 106

PART NO.	SYMBOL	DESCRIPTION
UNIVERSAL G-E REPLACEMENT PARTS		
UCC-039	C22	CAPACITOR—0.005 mfd., 600 v., paper
UCC-040	C25	CAPACITOR—0.01 mfd., 600 v., paper
UCC-045	C4, 12, 23, 26	CAPACITOR—0.05 mfd., 600 v., paper
UCC-048	C5	CAPACITOR—0.1 mfd., 600 v., paper
UDL-018	I1	PILOT LAMP –115 v., 10 watt, candelabra base
UIC-001		CEMENT—Thermoplastic Cement
UOP-625	LS1	LOUDSPEAKER—6½" PM Speaker
URD-011	R15	RESISTOR—27 ohms, ½ w., carbon
URD-029	R14	RESISTOR—150 ohms, ½ w., carbon
URD-041	R1, 6	RESISTOR—470 ohms, ½ w., carbon
URD-049	R9	RESISTOR—1000 ohms, ½ w., carbon
URD-081	R3	RESISTOR—22,000 ohms, ½ w., carbon
URD-089	R7	RESISTOR—47,000 ohms, ½ w., carbon
URD-105	R16, 11, 20	RESISTOR—220,000 ohms, ½ w., carbon
URD-113	R4, 12, 13	RESISTOR—470,000 ohms, ½ w., carbon
URD-129	R5	RESISTOR—2.2 megohms, ½ w., carbon
URD-139	R10	RESISTOR—3.6 megohms, ½ w., carbon
URE-007	R16	RESISTOR—18 ohms, 1 w., carbon
URF-051	R17	RESISTOR—1200 ohms, 2 w., carbon
SPECIALIZED G-E REPLACEMENT PARTS		
RAA-002		ARM—Switch Arm
RAA-003		ARM—Tone Control Switch Arm
RAD-003		BRACKET—Top Bracket Support for Back Plate
RAD-003		BRACKET—Bottom Bracket Support for Back Plate
RAX-002		ASSEMBLY—Idler Pulley Assembly
RAX-003		BRACKET ASSEMBLY—Dial Drum Support
RBH-001	M1	ASSEMBLY—Phono-motor Assembly
RBK-004		ARMATURE—Motor Armature
RBX-001		ASSEMBLY—Phono-motor, Drive Wheel, and Mounting Plate Assembly
RCC-013	C19	CAPACITOR—0.1 mfd., 200 v., paper
RCC-039	C24	CAPACITOR—0.005 mfd., 003 v., paper
RCC-040	C16, 17, 18	CAPACITOR—.01 mfd., 003 v., paper
RCC-045	C20	CAPACITOR—.05 mfd., 600 v., paper
RCE-001	C21A, 21B, 21C	CAPACITOR—50 mfd., 150 v., 50 mfd., 150 v., 40 mfd., 25 v., dry electrolytic
RCT-002	C1A, 1B, 3	CAPACITOR—Tuning Capacitor
RCU-110	C6	CAPACITOR—47 mmf., 500 v., mica
RCU-112	C13	CAPACITOR—100 mmf., 500 v., mica
RCU-113	C14	CAPACITOR—150 mmf., 500 v., mica
RCU-115	C12	CAPACITOR—330 mmf., 500 v., mica
RCY-005	C2	CAPACITOR—2-20 mmf. trimmer
RDC-002		CORD—Dial Drive Cord and Spring
RDD-002		DRUM—Dial Drive Drum
RDB-002		ESCUTCHEON—Dial Scale Escutcheon

PART NO	SYMBOL	DESCRIPTION
SPECIALIZED G-E REPLACEMENT PARTS (CONT'D)		
RDF-002		WASHER—Felt Washer for Control Knob
RDK-002		KNOB—Radio-phono Knob
RDK-003		KNOB—Volume Control Knob
RDK-005		KNOB—Tone Switch Wafer Knob
RDK-006		KNOB—Tuning Knob
RDP-001		POINTER—Dial Scale Pointer
RDS-003		SCALE—Dial Scale
RDX-025		ASSEMBLY—Back Plate Weld Assembly
RHC-003		PIN—Hairpin Cotter (Fan)
RHC-004		PIN—Hairpin Cotter (Spindle)
RHG-001		GROMMET—Tuning Capacitor Mounting Grommet
RHM-001		RING—Pointer Shaft Retaining Ring
RHM-006		CLIP—Speed Clip (Motor Board)
RHQ-001		TIRE—Rubber Tire (Phono-motor Idler)
RHU-001		SPACER—Scale Back Plate Spacer
RHU-002		SPACER—Tuning Capacitor Mounting Spacer
RIT-001		COVER—Electrolytic Capacitor Cover
RJP-003	P3	PLUG—Phono Power Plug
RJS-002		SOCKET—Pilot Light Socket
RJS-003		SOCKET—Octal Tube Socket
RJS-004		SOCKET—Electrolytic Capacitor Mounting Socket
RJS-049	J3	SOCKET—Phono Power Socket
RJX-005	P2	PLUG AND SOCKET—Phono Plug and Socket
RLC-018	T4	COIL—Oscillator Coil Assembly
RLL-002	L1	BEAM-A-SCOPE—Loop Antenna Assembly
RMM-008		SHIELD—Pilot Lamp Shield
RMS-006		SPRING—Idler Wheel Spring
RMT-001		TURNTABLE—9-inch diameter Turntable
RMU-002		SHAFT—Tuning Shaft
RMU-007		SPINDLE—Turntable Spindle
RMW-005		WHEEL—Phono Idler Wheel (with Rubber Gasket)
ROP-003	LS1	LOUDSPEAKER –6½ inch Permanent Magnet
RPC-014		PICK UP—Crystal Cartridge Pick-up
RPX-012		ARM—Tone Arm Assembly with Pick-up
RRC-001	R8, S1	VOLUME CONTROL—2.0 megohm Potentiometer (includes power switch)
RSS-001	S4	SWITCH—Phono Motor Switch
RSX-001		ASSEMBLY—Phono-motor Switch Assembly
RSX-002		ASSEMBLY—Phono-switch Arm Assembly
RSW-001	S3	SWITCH—Phono radio Switch
RSW-002	S2	SWITCH—Tone Control Switch
RTL-001	T1	TRANSFORMER—1st I-f Transformer
RTL-002	T2	TRANSFORMER—2nd I-f Transformer
RTO-001	T3	TRANSFORMER—Output Transformer
RWL-003		CORD—Power Cord and Plug

MODELS 110, 111

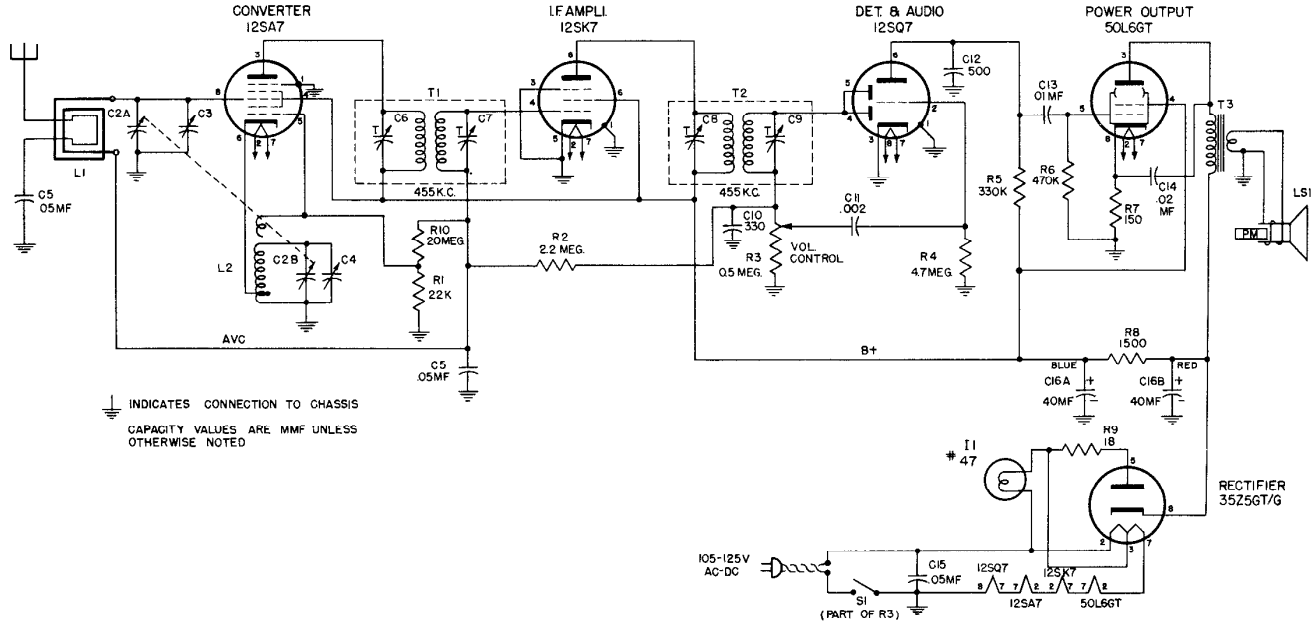

REPLACEMENT PARTS LIST MODELS 110 & 111

UNIVERSAL REPLACEMENT PARTS

CAT NO	SYMBOL	DESCRIPTION
UCC-010	C1, 11	CAPACITOR—0.002 mfd., 400 v., paper
UCC-025	C13	CAPACITOR—0.01 mfd., 400 v., paper
UCC-026	C14	CAPACITOR—0.02 mfd., 400 v., paper
UCC-028	C5, 15	CAPACITOR—0.05 mfd., 400 v., paper
UCU-1040	C10	CAPACITOR—330 mmf., mica
UCU-2045	C12	CAPACITOR—510 mmf., mica
UOP-407	LS1	LOUDSPEAKER—4-in. P.M. speaker
UOX-009		CONE—Replacement speaker cone
URD-029	R7	RESISTOR—150 ohms, ½ w., carbon
URD-081	R1	RESISTOR—22,000 ohms, ½ w., carbon
URD-109	R5	RESISTOR—330,000 ohms, ½ w., carbon
URD-129	R2	RESISTOR—2.2 meg., ½ w., carbon
URD-137	R4	RESISTOR—4.7 meg., ½ w., carbon
URD-153	R10	RESISTOR—20 meg., ½ w., carbon
URE-007	R9	RESISTOR—18 ohms, 1 w., carbon
URE-053	R8	RESISTOR—1500 ohms, 2 w., carbon

SPECIALIZED REPLACEMENT PARTS

CAT NO	SYMBOL	DESCRIPTION
RAB 043	L1	BEAM A-SCOPE—Back cover and beam a scope assembly
RAU-014		CABINET—Walnut cabinet (Model 110)
RAU-015		CABINET—Ivory cabinet (Model 111)
RCE-040	C16a, b	CAPACITOR—40 mfd., 40 mfd., 150 v electrolytic
RCT-017	C2a, 2b	CONDENSER—Variable tuning condenser
RDC-022		CORD—Drive cord and spring
RDK-015		KNOB—Control knob (ivory)
RDK 077		KNOB—Control knob (walnut)
RDP-024		POINTER—Dial pointer
RDS 035		SCALE—Dial scale assembly
RDW-002		WINDOW—Celluloid dial window
RHX 005		HARDWARE—Tuning condenser mounting hardware
RJF-002		CLIP—Beam a scope and back cover clip
RJS-006		SOCKET—Octal base socket
RJS-061		SOCKET—Pilot lamp socket assembly
RLC-031	L2	COIL—Oscillator coil
RMS-054		SPRING—Drive cord spring
RMX-054		SHAFT—Drive shaft assembly
RRC 037	R3, S1	VOLUME CONTROL—0.5 meg potentiometer and switch
RTL-035	T1	TRANSFORMER—1st IF transformer
RTL-036	T2	TRANSFORMER—2nd IF transformer
RTO-023	T3	TRANSFORMER—Output transformer
RWL-004		CORD—Power cord assembly

MODEL 112

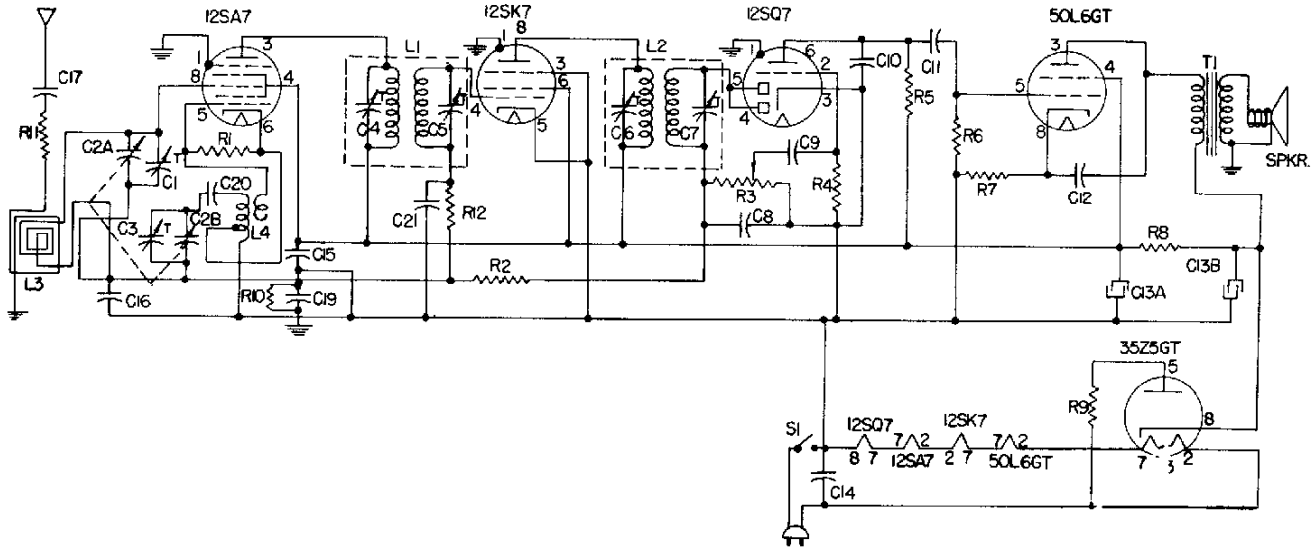
12SA7
12SK7
12SQ7
50L6GT
35Z5GT
L1
L2
L3
L4
T1
SPKR.
S1
C1
C2A
C2B
C3
C4
C5
C6
C7
C8
C9
C10
C11
C12
C13A
C13B
C14
C15
C16
C17
C19
C20
C21
R1
R2
R3
R4
R5
R6
R7
R8
R9
R10
R11
R12

MODEL 112

REPLACEMENT PARTS LIST

Cat. No.	Symbol	Description	Suggested Unit List Price
UNIVERSAL REPLACEMENT PARTS			
UCC-040	C11,17	CAPACITOR - .01 mf., 600 v., paper	$0.25
UCC-041	C12,20	CAPACITOR - .02 mf., 600 v., paper	.25
UCC-044	C9,21	CAPACITOR - .005 mf., 600 v., paper	.30
UCC-045	C14,15, 16	CAPACITOR - .05 mf., 600 v., paper	.30
UCC-048	C19	CAPACITOR - .1 mf., 600 v., paper	.45
UCU-036	C8,10	CAPACITOR - 220 mef., mica	.30
URD-007	R9	RESISTOR - 18 ohms, 1/2 w., carbon	.13
URD-029	R7	RESISTOR - 150 ohms, 1/2 w., carbon	.13
URD-041	R11	RESISTOR - 470 ohms, 1/2 w., carbon	.13
URD-081	R1	RESISTOR - 22,000 ohms, 1/2 w., carbon	.13
URD-113	R5,6, 10,12	RESISTOR - 470,000 ohms, 1/2 w., carbon	.13
URD-129	R2	RESISTOR - 2.2 meg., 1/2 w., carbon	.13
URD-137	R4	RESISTOR - 4.7 meg., 1/2 w., carbon	$0.13
URP-059	R8	RESISTOR - 2700 ohms, 1/2 w., carbon	.17
SPECIALIZED REPLACEMENT PARTS			
SCE-001	C13A,B	CAPACITOR - Electrolytic capacitor	$1.60
SCT-013	C2A,B	CAPACITOR - Tuning capacitor	5.25
SJS-003		SOCKET - Tube socket	.20
SLC-001	L4	COIL - Oscillator coil	.90
SLL-006	L3	LOOP - Antenna loop	1.75
SOP-003		SPEAKER	5.00
SRC-070	R3,S1	VOLUME CONTROL	1.65
STL-007	L1	TRANSFORMER - 1st I-F transformer	2.25
STL-015	L2	TRANSFORMER - 2nd I-F transformer	2.50
STO-004	T1	TRANSFORMER - Output transformer	2.75
SWL-001		CORD - Power cord	.75

RAB 061 Cab Back

RAU 026 Cabinet

Prices subject to change without notice.

MODEL 113

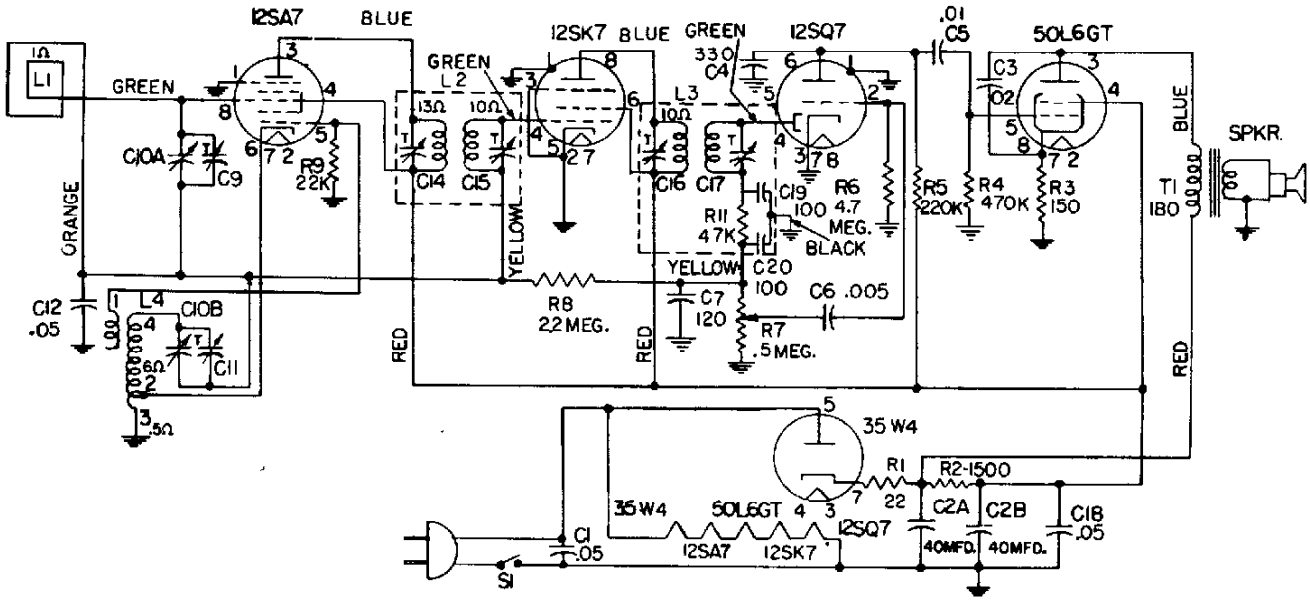

12SA7
BLUE
12SK7
BLUE
GREEN
330
C4
12SQ7
.01
C5
50L6GT
1Ω
L1
GREEN
GREEN
L2
13Ω
10Ω
L3
10Ω
C3
.02
BLUE
SPKR.
C10A
C9
R9
22K
C14
C15
C16
C17
C19
100
R6
4.7
MEG.
R5
220K
R4
470K
R3
150
T1
180
ORANGE
YELLOW
R11
47K
BLACK
YELLOW
C20
100
C12
.05
L4
C10B
C11
R8
2.2 MEG.
C7
120
C6 .005
R7
.5 MEG.
RED
RED
RED
35 W4
R1
22
R2-1500
35 W4
50L6GT
12SQ7
C2A
40MFD.
C2B
40MFD.
C18
.05
C1
.05
12SA7
12SK7
S1

MODEL 113—REPLACEMENT PARTS LIST

UNIVERSAL REPLACEMENT PARTS

Cat No	Symbol	Description	Suggested Unit List Price
UCC-625	C6	CAPACITOR - .005 mf., 600 v , paper	$0.25
UCC-630	C5	CAPACITOR— .01 mf., 600 v , paper	.30
UCC-631	C3	CAPACITOR—.02 mf., 600 v , paper	.30
UCC-635	C1, 12, 18	CAPACITOR—.05 mf , 400 v., paper	.40
UCU-036		CAPACITOR—220 mmf., mica	.30
UCU-1030*	C7	CAPACITOR—120 mmf., mica	.25
UOP-487	SPKR	SPEAKER—4-inch PM speaker	3.75
URD-009	R1	RESISTOR—22 ohms, ½ w., carbon	.13
URD-029	R3	RESISTOR 150 ohms, ½ w., carbon	.13
URD-081	R9	RESISTOR 22,000 ohms, ½ w , carbon	.13
URD-105	R5	RESISTOR - 220,000 ohms, ½ w., carbon	.13
URD-113	R4	RESISTOR—470,000 ohms, ½ w., carbon	.13
URD-129	R8	RESISTOR 2.2 meg., ½ w., carbon	.13
URD-137	R6	RESISTOR -4.7 meg., ½ w., carbon	.13
URF-053	R2	RESISTOR— 1500 ohms, 2 w , carbon	25

SPECIALIZED REPLACEMENT PARTS

Cat No	Symbol	Description	Suggested Unit List Price
RCW-2032	C4	CAPACITOR—330 mmf., mica	$0 60
RDK-008		KNOB—Volume control (Mahogany)	.25
RDK-041		KNOB—Tuning knob with set screw	15
RDK-144		KNOB Tuning knob (Mahogany) for plain shaft	40
RJS-003		SOCKET - Tube socket (octal)	.20
RJS-092		SOCKET - Tube socket	.20
RWL-009		POWER CORD	70
SAR-001		RACK—Cabinet back	.15
SAU-022		CABINET— Plastic	4.95
SCE-009	C2A, B	CAPACITOR—40 x 40 mf , electrolytic	1 70
SCT-005	C10A, B	CAPACITOR—Tuning capacitor (knurled with split shaft)	5 25
SDK-005**		KNOB - Tuning knob, for knurled shaft	30
SDK-007		KNOB Knob for volume control	20
SLC-020	L4	COIL—Oscillator coil	.90
SLL-002	L1	LOOP Loop antenna	1.55
SRC-004	R7	VOLUME CONTROL AND SWITCH	1 65
STL-007	L2	I-F TRANSFORMER 1st i-f transformer	2 25
STL-008	L3	I-F TRANSFORMER -2nd i-f transformer	2.20
STO-004	T1	OUTPUT TRANSFORMER	2 75

* To be used with STL-008.

**To be used with SCT-005

NOTE Prices subject to change without notice

MODELS 118, 119W, 119M

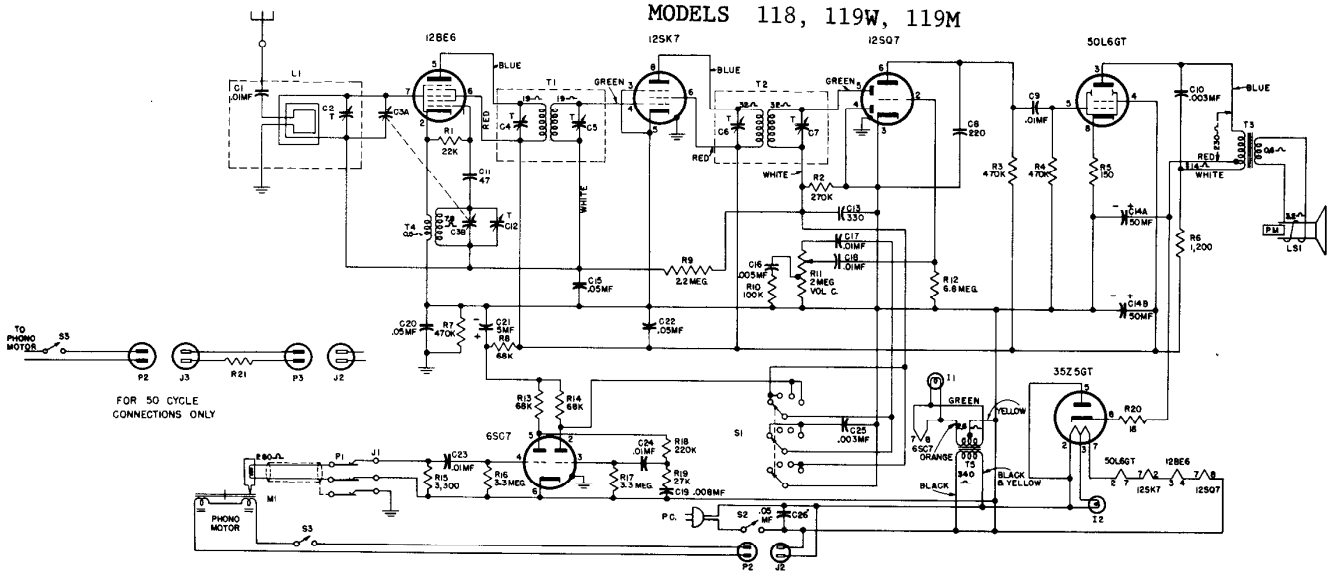

REPLACEMENT PARTS LIST—MODELS 118, 119W AND 119M

Cat. No.	Symbol	Description	Suggested Unit List Price
UNIVERSAL REPLACEMENT PARTS			
UCC-008	C23	CAPACITOR—.01 mf., 200 v., paper	$0.25
UCC-025	C17	CAPACITOR—.01 mf., 400 v., paper	.25
UCC-028	C15, C20, C22	CAPACITOR—.05 mf., 400 v., paper	.25
UCC-040	C1, C24	CAPACITOR—.01 mf., 600 v., paper	.25
UCC-045	C26	CAPACITOR—.05 mf., 600 v., paper, Model 119	.30
UCC-623	C25	CAPACITOR—.003 mf., 400 v., paper	.25
UCU-020	C11	CAPACITOR—47 mmf., mica	.25
UCU-036	C8	CAPACITOR—220 mmf., mica	.30
UCU-040	C13	CAPACITOR—330 mmf., mica	.30
UOP-557		SPEAKER—Model 118. Same as S525D-7	4.75
UOP-1247		SPEAKER—Model 119. Same as S1200D7	16.50
UOX-005		SPEAKER REPAIR KIT—For Model 119	1.55
UOX-008		SPEAKER REPAIR KIT—For Model 118	....
URD-029	R5	RESISTOR—150 ohms, ½ w., carbon	.13
URD-061	R15	RESISTOR—3300 ohms, ½ w., carbon	.13
URD-081	R1	RESISTOR—22,000 ohms, ½ w., carbon	.13
URD-083	R19	RESISTOR—27,000 ohms, ½ w., carbon	.13
URD-093	R8, R13, R14	RESISTOR—68,000 ohms, ½ w., carbon	.13
URD-097	R16	RESISTOR—100,000 ohms, ½ w., carbon	.13
URD-105	R18	RESISTOR—220,000 ohms, ½ w., carbon	.13
URD-107	R2	RESISTOR—270,000 ohms, ½ w., carbon	.13
URD-113	R3, R4, R7	RESISTOR—470,000 ohms, ½ w., carbon	.13
URD-129	R9	RESISTOR—2.2 meg., ½ w., carbon	.13
URD-133	R16, R17	RESISTOR—3.3 meg., ½ w., carbon	.13
URF-051	R6	RESISTOR—1200 ohms, 2 w., carbon	.25
SPECIALIZED REPLACEMENT PARTS			
RAC-050		LID—For Model 119 walnut	$9.70
RAC-051		LID—For Model 119 mahogany	9.70
RAL-001		BEZEL—For pilot light	.10
RAM-002		BASE—2 for Model 119 walnut	6.25
RAM-003		BASE—2 for Model 119 mahogany	6.25
RAV-044		CABINET—Walnut Model 119W	76.00
RAV-045		CABINET—Mahogany Model 119M	78.00
RAV-054		CABINET—Model 118	30.00
RCC-040	C9	CAPACITOR—.01 mf., 600 v., paper	.30
RCC-074	C10	CAPACITOR—.003 mf., 600 v., paper	.25
RCC-082	C18	CAPACITOR—.01 mf., 200 v., paper	.25
RCC-084	C19	CAPACITOR—.008 mf., 400 v., paper	.25
RCC-085	C16	CAPACITOR—.005 mf., 200 v., paper	.25
RCE-050	C14A, C14B	CAPACITOR—50-50 mfd., electrolytic, 150 v.	2.10
RCE-056	C21	CAPACITOR—5 mf., 150 v., electrolytic	$0.90
RCN-014	C26	CAPACITOR—Phenolic capacitor for Model 118	.45
RCT-026	C3A, C3B	CAPACITOR—Tuning capacitor	3.95
RCY-005	C2	CAPACITOR—Trimmer for Model 118	.40
RCY-034	C2	CAPACITOR—Trimmer for Model 119	.45
RDC-032		CORD—Dial cord (10 yds. min.)	.10/yd
RDK-036		KNOB—Plain	.15
RDK-039		KNOB—With arrow	.15
RDS-055		SCALE—Dial scale	.85
RDX-033		POINTER—Dial scale pointer assembly	.30
RHC-008		CLIP—For mounting filter capacitor	.10
RHG-015		GROMMET—Rubber grommet for mounting tuning capacitor	.05
RHJ-005		SPACER—For mounting tuning capacitor	.02
RHM-001		RING—Tuner shaft retaining ring	.05
RHM-014		STUD—For dial idler pulley	.01
RHM-016		CLIP—Oscillator coil clip	.02
RHM-037		CLIP—For mounting dial scale	.02
RHR-003		STUD—For mounting scale	.25
RHS-004		SPACER—Between loop and cabinet	.05
RJP-003	P3	PLUG—Phono power plug	.15
RJS-003		SOCKET—Octal tube socket	.20
RJS-027		SOCKET—For dial light	.50
RJS-031		SOCKET—Tube socket for 6SC7	.25
RJS-033		SOCKET—Bezel pilot light socket	.45
RJS-049	J2, J3	SOCKET—Phono power	.25
RJS-092		SOCKET—Miniature for 12BE6	.10
RJS-097	J1	SOCKET—Phono pickup	.20
RLC-031	T4	COIL—Oscillator coil	1.85
RLL-026	L1	LOOP ASSEMBLY—Model 119	1.95
RLL-028	L1	LOOP ASSEMBLY—Model 118	1.95
RMM-034		HOOD—Hood for dial light	.35
RMM-054		SUPPORT—Lid support	.90
RMS-118		SPRING—Dial cord tension spring	.10
RMU-036		SHAFT—Tuning shaft	.20
RMW-037		PULLEY—Dial cord idler pulley	.05
RRC-000	R11	VOLUME CONTROL—2 meg	1.25
RRW-005	R21	RESISTOR—70 ohms, wirewound, for 50-cycle operation of phono motor	1.15
RRW-008	R20	RESISTOR—18 ohms, 1 w., wirewound	.35
RSW-043	S1	SWITCH—Radio phono switch	1.35
RTF-001	T5	TRANSFORMER—Filament transformer for 6SC7	3.40
RTL-050	T1	TRANSFORMER—1st I-F transformer	3.50
RTL-051	T2	TRANSFORMER—2nd I-F transformer	3.25
RTO-038	T3	TRANSFORMER—Output transformer	3.05
RWL-009		CORD—Power cord	.70

MODELS 123, 124, 125

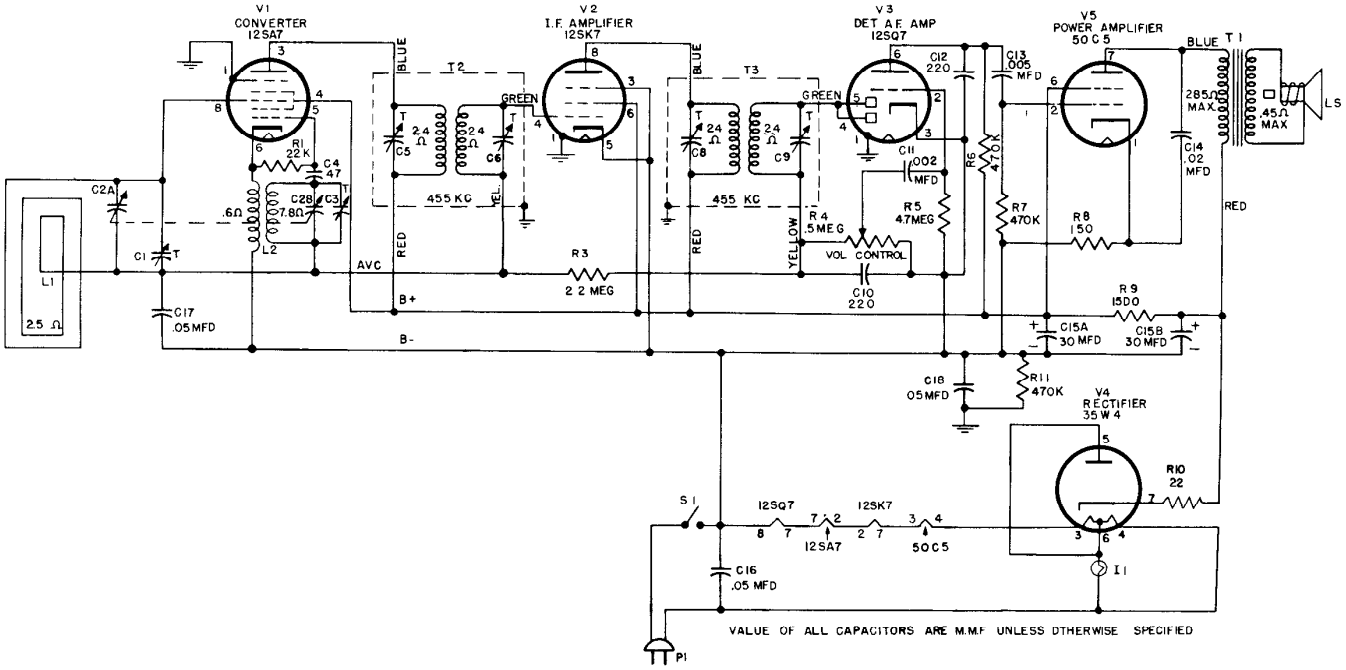

CAT. NO.	SYMBOL	DESCRIPTION	SUGGESTED UNIT LIST PRICE
UNIVERSAL REPLACEMENT PARTS			
UCC-028	C17, 18	CAPACITOR—05. mf., 400 v., paper	$0.25
UCC-041	C14	CAPACITOR—.02 mf., 600 v., paper	.25
UCC-045	C16	CAPACITOR—.05 mf., 600 v., paper	.30
UCU-020	C4	CAPACITOR—47 mmf, ceramic	.25
UOP-487	LS1	LOUDSPEAKER	3.75
URD-009	R10	RESISTOR—22 ohms, ½ w, carbon	.13
URD-029	R8	RESISTOR—150 ohms, ½ w, carbon	.13
URD-081	R1	RESISTOR—22,000 ohms, ½ w., carbon	.13
URD-113	R6, 7, 11	RESISTOR - 470,000 ohms, ½ w., carbon	.13
URD-127	R5	RESISTOR—4.7 meg., ½ w., carbon	.13
URD-129	R3	RESISTOR—2.2 meg., ½ w., carbon	.13
URF-053	R9	RESISTOR—1500 ohms, 2 w., carbon	.25
SPECIALIZED REPLACEMENT PARTS			
RAB-095	L1	LOOP AND BACK —Cabinet back and antenna loop	$1.55
RAU-307		CABINET—Model 124 plastic cabinet (ivory)	7.95
RAU 344		CABINET—Model 123 plastic cabinet (brown)	5.95
RCE 097	C15A, E	CAPACITOR—30-30 mf., 150 volt, dual section electrolytic	2.60
RCT-037	C2A, B	CAPACITOR —Tuning capacitor	3 60
RCW-3025	C10, 11, 12, 13	CAPACITOR—220 mmf., .002 mf., 220 mmf., .005 mf., four-section ceramic	1 00
RDC-032		DIAL CORD—Bulk dial cord	2.50
RDK-174		KNOB—Off-volume or tuning control knob (Model 123)	.15
RAU 321		Cab , 125	

CAT. NO.	SYMBOL	DESCRIPTION	SUGGESTED UNIT LIST PRICE
SPECIALIZED REPLACEMENT PARTS (CONT'D)			
RDK-175		KNOB—Off-volume or tuning control knob (Model 124)	$0.15
RDP-048		POINTER—Dial scale pointer	.25
RDS-083		DIAL SCALE—	.85
RDW-021		DIAL SCALE WINDOW—	.60
RHC-017		CLIP—Mounting clip for oscillator coil, L2	.02
RHG-018		GROMMET—Cushion grommet for mounting tuning capacitor	.05
RHH-002		FASTENER —For mounting dial scale window to cabinet	.005
RHJ-005		SPACER WASHER —Used with cushion grommet to mount tuning capacitor	.02
RHM-001		SPEED NUT—Clip holds loudspeaker to Model 124 cabinet	.02
RJC-004		CONNECTOR—For loudspeaker or antenna loop leads	.02
RJS-003		SOCKET—Tube socket for 12SA7, 12SK7, or 12SG7	.20
RJS-092		SOCKET—Tube socket for 50C5 or 35W4	.20
RJX-031		SOCKET ASSEMBLY—Pilot light socket and bracket	.40
RLC-600		COIL—Oscillator coil, L2	.90
RMS-118		SPRING—Dial cord tension spring on tuning drive drum	10
RRC-106	R4, S1	POTENTIOMETER—500,600 ohm volume control and switch	1.65
RTL-094	T2	TRANSFORMER—1st i-f transformer	1.90
RTL-095	T3	TRANSFORMER—2nd i-f transformer	1.90
RTO-069	T1	TRANSFORMER—Output transformer	1.75
RWL-009		POWER CORD—	.70

MODELS 129, 131

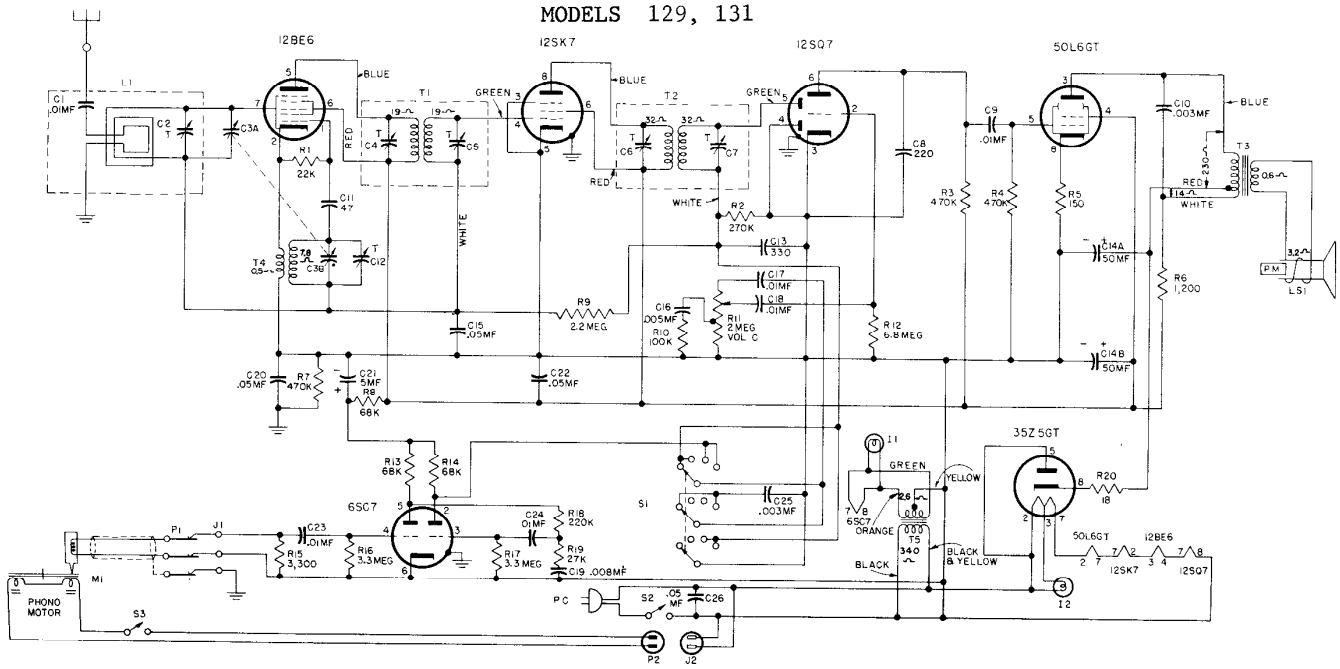

REPLACEMENT PARTS LIST—MODELS 129, 131

UNIVERSAL REPLACEMENT PARTS

Cat. No.	Symbol	Description	Suggested Unit List Price
*UCC-008	C23	CAPACITOR—.01 mf., 200 v., paper	$0 25
*UCC-020	C25	CAPACITOR—.003 mfd., 400 v., paper	.25
*UCC-025	C17	CAPACITOR—.01 mf., 400 v., paper	.25
*UCC-028	C15, 20, 22	CAPACITOR—.05 mf., 400 v., paper	.25
*UCC-040	C1, 24	CAPACITOR—.01 mf., 600 v., paper	.25
*UCC-045	C26	CAPACITOR—.05 mf., 600 v., paper	.30
*UCU-020	C11	CAPACITOR—47 mmf., mica	.25
*UCU-036	C8	CAPACITOR—220 mmf., mica	.30
*UCU-040	C13	CAPACITOR—330 mmf., mica	.30
*UOP-557		SPEAKER—Model 129. Same as 8525D-7	4.75
*UOP-1241		SPEAKER—Model 131 Same as 81200D-7	16 50
*UOX 005		SPEAKER REPAIR KIT—For Model 131	1.65
*UOX-008		SPEAKER REPAIR KIT—For Model 129	1 50
*URD 029	R5	RESISTOR—150 ohms, ½ w., carbon	13
*URD 051	R15	RESISTOR—3300 ohms, ½ w., carbon	.13
*URD-081	R1	RESISTOR—22,000 ohms, ½ w., carbon	13
*URD 083	R19	RESISTOR—27,000 ohms, ½ w., carbon	13
*URD-003	R8, 13, 14	RESISTOR 68,000 ohms, ½ w., carbon	13
*URD-097	R10	RESISTOR—100,000 ohms ½ w., carbon	.13
*URD 105	R18	RESISTOR—220,000 ohms, ½ w., carbon	.13
*URD 107	R2	RESISTOR—270,000 ohms, ½ w., carbon	.13
*URD-113	R3, 4, 7	RESISTOR—470,000 ohms, ½ w., carbon	13
*URD-129	R9	RESISTOR—2.2 meg ½ w., carbon	.13
*URD-133	R16, 17	RESISTOR—3 3 meg., ½ w., corbon	.13
*URD-141	R11	RESISTOR—6.8 meg., ½ w., carbon	.13
*URF-051	R6	RESISTOR—1200 ohms, 2 w., carbon	25

SPECIALIZED REPLACEMENT PARTS

*RAC-051		LID—For Model 131 (mahogany)	$9 70
*RAC-058		LID—For Model 129	9.90
*RAL-001		BEZEL—For pilot light	.19
*RAM-003		BASE—2 for Model 131 (mahogany)	6 25
*RAV-045		CABINET—For Model 131 (mahogany)	78 00
*RAV-054		CABINET—Model 129	30 00
*RCC-040	C9	CAPACITOR—.01 mf., 600 v., paper	30
*RCC-074	C10	CAPACITOR—.003 mf., 600 v., paper	.25
*RCC-082	C18	CAPACITOR—.01 mf., 200 v., paper	25
*RCC-084	C19	CAPACITOR—.008 mf., 400 v., paper	.25
*RCC-085	C16	CAPACITOR—.005 mf., 200 v., paper	.25

Cat No	Symbol	Description	Suggested Unit List Price
*RCE-050	C14A, 14B	CAPACITOR—50-50 mfd., 150 v., electrolytic	$2.10
*RCE 056	C21	CAPACITOR—5 mf., 150 v., electrolytic	.90
*RCT-026	C3A, 3B	CAPACITOR—Tuning capacitor	3.95
*RCV 005	C2	CAPACITOR—Trimmer for Model 129	.40
*RCV 034	C2	CAPACITOR—Trimmer for Model 131	.45
*RDC 032		CORD—Dial cord (10 yds min.)	10/yd.
*RDK-036		KNOB—Plain	.15
*RDK-039		KNOB—With arrow	.15
*RDS-055		SCALE—Dial scale	.85
*RDX-033		POINTER—Dial scale pointer assembly	.30
*RHC 008		CLIP—For mounting filter capacitor	.10
*RHG 015		GROMMET—Rubber grommet for mounting tuning capacitor	.05
*RHJ 005		SPACER—For mounting tuning capacitor	.02
*RHM 001		RING—Tuner shaft retaining ring	.05
*RHM 014		STUD—For dial idler pulley	.01
*RHM-016		CLIP—Oscillator coil clip	.02
*RHM-037		CLIP—For mounting dial scale	.02
*RHR 003		STUD—For mounting scale	.25
*RHS-004		SPACER—Between loop and cabinet	05
*RJP-003	P2, 3	PLUG—Phono power	.15
*RJS-006		SOCKET—Octal tube socket	20
*RJS 027		SOCKET—For dial light	.50
*RJS 031		SOCKET—Tube socket for 6SC7	.25
*RJS-034		SOCKET—Bezel pilot light socket	.45
*RJS-049	J2, 3	SOCKET—Phono power	25
*RJS 092		SOCKET—Miniature for 12BE6	.20
*RJS-097	J1	SOCKET—Phono pickup socket	.20
*RJX-007	P1	—Phono plug	.10
*RLC-061	T4	COIL—Oscillator coil	1 85
*RLL-026	L1	LOOP ASSEMBLY—Model 131	1.95
*RLL-028	L1	LOOP ASSEMBLY—Model 129	1.95
*RMM 034		HOOD—Hood for dial light	.35
*RMM-054		SUPPORT—Lid supperr	.90
*RMS 116		SPRING—Dial cord tension spring	.10
*RMU-036		SHAFT—Tuning shaft	.20
*RMW 037		PULLEY—Dial cord idler pulley	.05
*RRC 600	R11	VOLUME CONTROL—2 meg	1.25
*RRW 005	R21	RESISTOR—70 ohms, wirewound, for 50-cycle operation of phono motor	1.15
*RRW 008	R20	RESISTOR—10 ohms, 1 w., wire wound	.35
*RSW-065	S1	SWITCH—Radio phono switch	1.35
*RTF-081	T5	TRANSFORMER—Filament transformer for 6SC7	3.40
*RTL 050	T1	TRANSFORMER—1st I F transformer	3 50
*RTL-051	T2	TRANSFORMER—2nd I-F transformer	3 25
*RTO-038	T3	TRANSFORMER—Output transformer	3 05
*RWL-009		CORD—Power cord	.70

* Used on previous production receivers

MODELS 135, 136

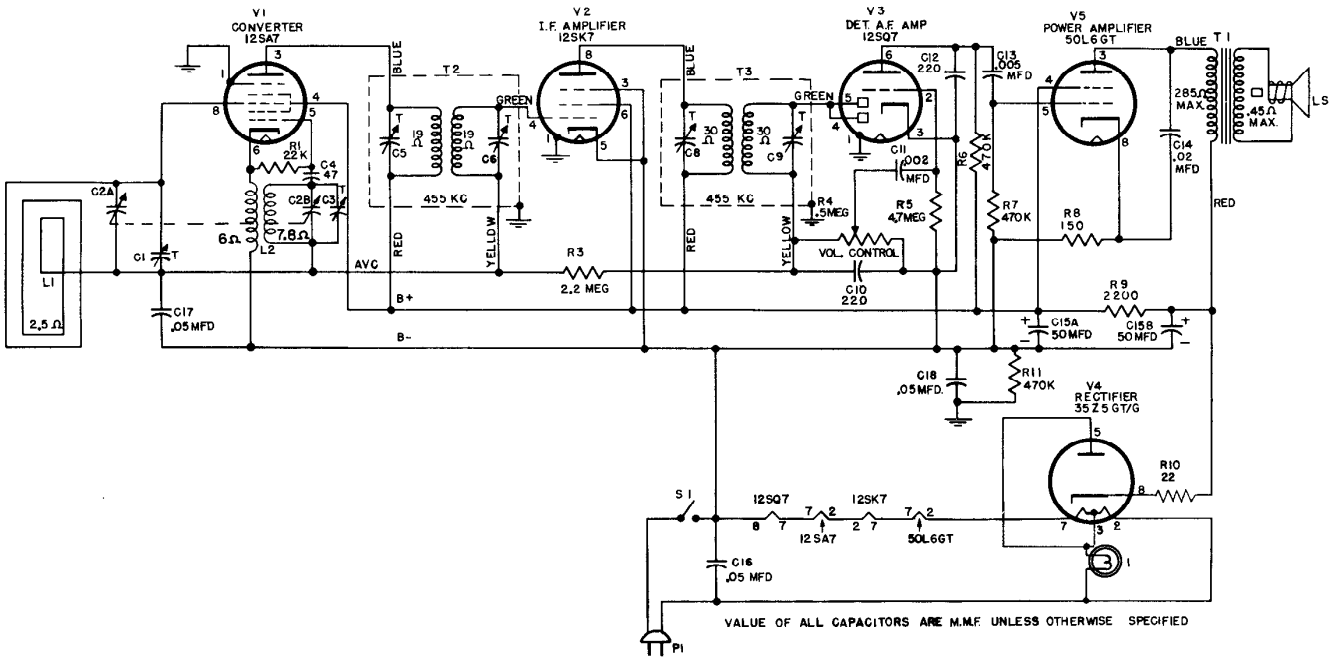

MODELS 135, 136 REPLACEMENT PARTS LIST

CAT. NO.	SYMBOL	DESCRIPTION	PRICE
		UNIVERSAL REPLACEMENT PARTS	
UCC-028	C17, 18	CAPACITOR .05 mf., 400 v., paper	$0.30
UCC-036	C11	CAPACITOR—.002 mf., 600 v., paper (alternate replacement for RCW-3013)	.30
UCC-039	C13	CAPACITOR—.005 mf., 600 v., paper (alternate replacement for RCW-3013)	.30
UCC-045	C16	CAPACITOR—.05 mf., 600 v., paper	.30
UCC-631	C14	CAPACITOR —.02 mf., 600 v., paper	.25
UCU-020	C4	CAPACITOR—47 mmf, ceramic	.60
UCU-1036	C10, 12	CAPACITOR—220 mmf., mica (alternate replacement for RCW-3013)	.30
UOP-487	LS	LOUDSPEAKER	3.75
URD-609	R10	RESISTOR—22 ohms, ½ w, carbon	.13
URD-029	R8	RESISTOR —150 ohms, ½ w, carbon	.13
URD-081	R1	RESISTOR—22,000 ohms, ½ w., carbon	.13
URD-113	R6, 7, 11	RESISTOR —470,000 ohms, ½ w, carbon	.13
URD-129	R3	RESISTOR—2.2 meg., ½ w, carbon	.13
URD-137	R5	RESISTOR—4.7 meg., ½ w., carbon	.13
URF-057	R9	RESISTOR—2200 ohms, 2 w., carbon	.25
		SPECIALIZED REPLACEMENT PARTS	
RAB-070	L1	LOOP AND BACK—Antenna loop and cabinet back	$1.70
RAC-059		COVER—Cover shield for bottom of chassis	.85
RAU-302		CABINET—Brown, plastic cabinet with dial scale (Model 135)	6.95
RAU-303		CABINET - Ivory, plastic cabinet with dial scale (Model 136)	8 95
RAX-026		BACK PLATE—Dial scale back plate	1.10
RCE-050	C15A, B	CAPACITOR—50 mf., 150 v.; 50 mf., 150 v.; electrolytic	2.10
RCT-036	C2A, B C1, C3	TUNING CAPACITOR—(2)-section gang with trimmers, C1 and C3	3.95

CAT. NO	SYMBOL	DESCRIPTION	PRICE
		SPECIALIZED REPLACEMENT PARTS (CONT'D)	
RCW-3013	C10, 11, 12, 13	CAPACITOR—220 mmf., .002 mf., 220 mmf .005 mf., four-section ceramic (see UCC-036, UCC-039, UCU-1036)	$1.00
RDC-032		CORD—Bulk dial cord	2.50
RDK-020		KNOB—Volume or tuning control knob (Model 136)	.15
RDK-031		KNOB—Volume or tuning control knob (Model 135)	.10
RDP-045		POINTER—Dial scale pointer	.40
RHC-017		CLIP—Mounting clip for oscillator coil L2	.02
RHG-018		GROMMET—Cushion mounting for tuning capacitor C2A, B	.05
RHH-004		SNAP FASTENER—Holds loop back to cabinet	.02
RHJ-005		SPACER—Spacer bushing for mounting tuning capacitor C2A, B	.02
RHM-039		CLIP—Clip for pilot light	.10
RHM-063		SPEED NUT—Speed nut clip fastening speaker to cabinet bosses	.01
RJC-004		CONNECTOR—Antenna loop lead connecting clip	.02
RJS-003		SOCKET—Tube socket	.20
RJS-096		SOCKET—Pilot light socket and leads	35
RLC-090	L2	COIL—Oscillator coil	.90
RMM-093		SHIELD Light shield for pilot light	.15
RMS-118		SPRING—Dial cord tension spring	.10
RMU-051		SHAFT—Tuning shaft	.60
RRC-100	R4, S1	POTENTIOMETER—500,600 ohms, volume control and switch S1	1.65
RTL-092	T2	TRANSFORMER—First i-f transformer	2.10
RTL-093	T3	TRANSFORMER—Second i-f transformer	2 10
RTO-063	T1	TRANSFORMER—Audio output transformer	1.80
RWL-009		POWER CORD—A-C power cord and plug	70

MODEL 140

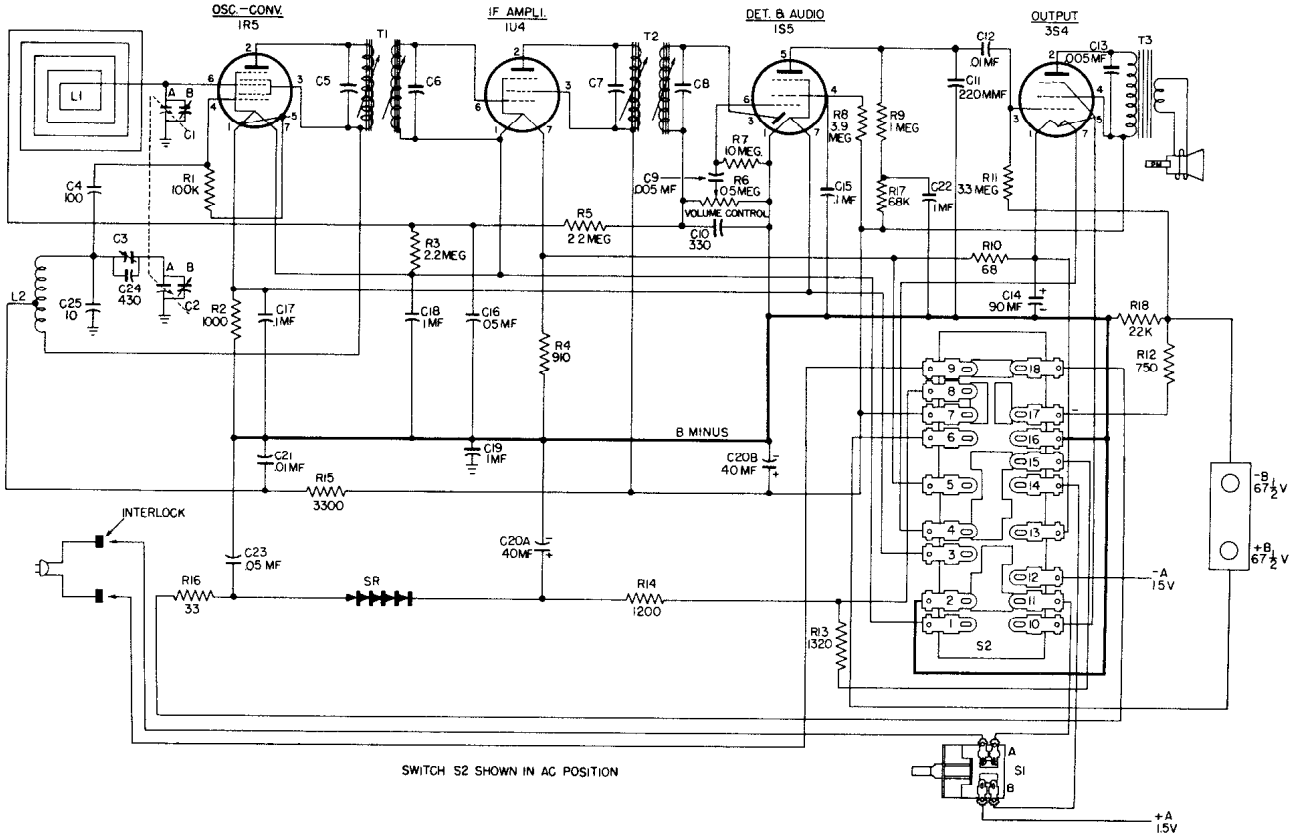

SWITCH S2 SHOWN IN AC POSITION

MODEL 140—REPLACEMENT PARTS LIST

Cat. No.	Symbol	Description
		UNIVERSAL REPLACEMENT PARTS
UCC-028	C23	CAPACITOR—.05 mf., 400 v., paper
UCC-048	C19	CAPACITOR—.1 mf., 600 v., paper
UCG-543	C24	CAPACITOR—430 mmf., silver mica
UCU-528	C4	CAPACITOR—100 mmf., mica
UCU-536	C11	CAPACITOR—220 mmf., mica
UCU-540	C10	CAPACITOR—330 mmf., mica
URD-1146	R10	RESISTOR—68 ohms, ½ w., carbon
		SPECIALIZED REPLACEMENT PARTS
RAC-046		COVER—(Plastic) for cabinet door
RAD-027		DOOR—For cabinet (with loop connecting strips only)
RAD-028		DOOR—Door access to power cord, (less hinge)
RAT-007		CABINET ASSEMBLY—Complete with handle assembly, handle retainers, interlock receptacle, and trim
RAX-016		DOOR ASSEMBLY—With loop L1
RAX-017		DOOR ASSEMBLY—Door access to power cord, with hinge and tab
RCC-075	C12, 21	CAPACITOR—.01 mf., 400 v., paper
RCC-076	C9, 13	CAPACITOR—.005 mf., paper
RCC-077	C15, 17, 18	CAPACITOR—.1 mf., paper
RCC-078	C16	CAPACITOR—.05 mf., paper
RCE-051	C20A, B	CAPACITOR—40 mf., electrolytic
RCE-052	C14	CAPACITOR—90 mf., electrolytic
RCT-023	C1, 2	CAPACITOR—Tuning capacitor
RCW-020	C25	CAPACITOR—10 mmf., ceramic
RCY-030	C3	CAPACITOR—Oscillator padder
RDE-026		ESCUTCHEON
RDK-098		KNOB ASSEMBLY—Door knob and lock spring
RDK-099		KNOB ASSEMBLY—Knob with spring for volume or tuning control
REC-001		CONNECTOR—Contact strip for "B" battery
REX-004		RECTIFIER ASSEMBLY
RHC-008		CLIP—For mounting C20A, B, 40 mf. dual electrolytic capacitor
RHC-013		COTTER PIN—(Hair pin type) inserted in tube socket shield
RHF-002		FELT FOOT—On bottom of receiver
RHG-014		GROMMET—Fibre grommet for power cord
RHH-007		RETAINER—Plastic handle retainer (right)
RHH-008		RETAINER—Plastic handle retainer (left)
RHI-002		HINGE—Cabinet door top hinge
RHI-003		HINGE—Cabinet door bottom hinge
RHI-004		HINGE—For door to cord access
RHS-010		SHIELD—Tube shield for 1S5 tube
RHY-006		HANDLE ASSEMBLY—With retainers and cover
RII-002		BARRIER—Fibre strip insulator between switch S2 and chassis
RII-003		SHIELD—Fibre strip insulator between switch S2 and escutcheon
RII-004		STRIP—Insulating strip (insulates right side of chassis from cabinet)
RII-005		STRIP—Insulating strip (insulates left side of chassis from cabinet)
RII-007		BARRIER—Fibre insulating barrier insulating rectifier from chassis
RJJ-006		RECEPTACLE ASSEMBLY—Female interlock mounted on cabinet
RJP-017		PLUG ASSEMBLY—Male interlock plug, fits into female interlock receptacle
RJS-090		SOCKET—Tube socket for 1R5, 1U4 and 3S4
RJS-091		SOCKET—Tube socket for 1S5 (rubber mounted)
RLC-054	L2	COIL—Oscillator
RLL-024	L1	LOOP—Antenna loop only
RMC-018		BATTERY CUP ASSEMBLY—"A" battery negative connector
RMX-103		BRACKET ASSEMBLY—(With shield barrier) for mounting volume control and tuning capacitor
RMX-104		BATTERY CONNECTOR ASSEMBLY—Consists of one copper and two fibre strips ("A" positive)
ROP-012		LOUDSPEAKER
RRC-055	R6	RESISTOR—.5 meg., volume control
RRH-061	R15	RESISTOR—3300 ohms, ½ w., carbon
RRH-081	R18	RESISTOR—22,000 ohms, ½ w., carbon
RRH-093	R17	RESISTOR—68,000 ohms, ½ w., carbon
RRH-097	R1	RESISTOR—100,000 ohms, ½ w., carbon
RRH-121	R9	RESISTOR—1 meg., ½ w., carbon
RRH-129	R3, 5	RESISTOR—2.2 meg., ½ w., carbon
RRH-133	R11	RESISTOR—3.3 meg., ½ w., carbon
RRH-135	R8	RESISTOR—3.9 meg., ½ w., carbon
RRH-145	R7	RESISTOR—10 meg., ½ w., carbon
RRH-1046	R12	RESISTOR—750 ohms, ½ w., carbon
RRH-1048	R4	RESISTOR—910 ohms, ½ w., carbon
RRH-1049	R2	RESISTOR—1000 ohms, ½ w., carbon
RRM-001	R16	RESISTOR—33 ohms, 3 w., carbon
RRW-019	R14	RESISTOR—1200 ohms, w.w.
RRW-020	R13	RESISTOR—1320 ohms, w.w.
RSW-034	S2	SWITCH—AC-DC battery switch
RSW-035	S1A, B	SWITCH—Power switch
RTL-052	T1, 3	TRANSFORMER—I-F transformer
RTO-034	T3	TRANSFORMER—Output transformer
RWL-015		CORD—Power cord

SPECIALIZED REPLACEMENT PARTS (Cont.)

MODEL 141

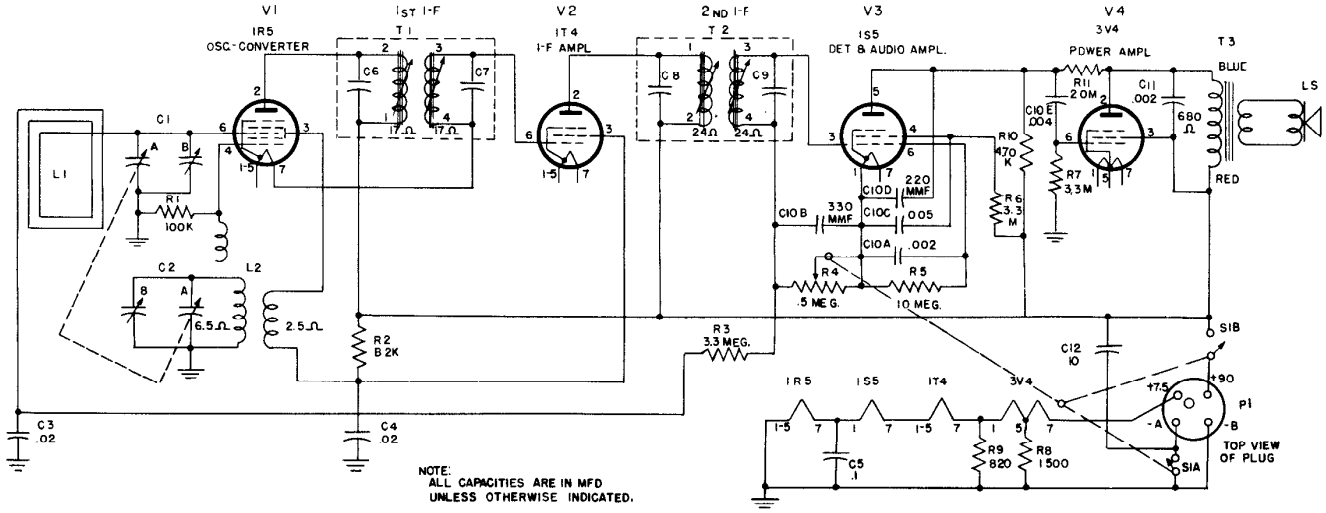

NOTE:
ALL CAPACITIES ARE IN MFD
UNLESS OTHERWISE INDICATED.

MODEL 141

REPLACEMENT PARTS LIST

Cat. No	Symbol	Description	Suggested Unit List Price
UNIVERSAL REPLACEMENT PARTS			
UCC-002	C11	CAPACITOR—.002 mf, 200 v, paper	$0.25
UCC-009	C3, 4	CAPACITOR—.02 mfd, 200 v, paper	.25
UCC-028	C14	CAPACITOR—.05 mfd, 400 v, paper	.25
UCC-042	C13	CAPACITOR—.03 mfd, 400 v, paper	.30
UCC-048	C5	CAPACITOR—.1 mfd, 400 v, paper	.45
URD-045	R9**	RESISTOR 680 ohms, ½ w, carbon	.13
URD-047	R9*	RESISTOR 820 ohms, ½ w, carbon	.13
URD-053	R8	RESISTOR 1500 ohms, ½ w, carbon	.13
URD-071	R2	RESISTOR—8200 ohms, ½ w, carbon	.13
URD-097	R1	RESISTOR 100,000 ohms, ½w, carbon	.13
URD-113	R10**, 14**	RESISTOR 470,000 ohms, ½ w, carbon	.13
URD-133	R3, 6, 7	RESISTOR 3.3 meg, ½ w, carbon	.13
URD-145	R5	RESISTOR—10 meg, ½ w, carbon	.13
URE-021	R12**	RESISTOR—68 ohms, 1 w, carbon	.17
URE-057	R13**	RESISTOR—2200 ohms, 1 w, carbon	.17
UOP-457		SPEAKER—PA speaker, 4 inches	4.25
RHJ-005**		SPACER—For tuning capacitor	.02
RHM-061		CLIP—Speaker clip	.02
RHY-010		HANDLE—Handle for cabinet	1.00
RJC-016		TERMINAL—Speed nut	.05
RJS-024**		MOUNTING PLATE—For electrolytic capacitor	10
RJS-100		SOCKET—Tube socket for IR5	.20
RJS-124		SOCKET Tube socket for IS5 & 3V4	.20
RJS-125		SOCKET Tube socket for 1T4 tube	.20
RHC-015		CLIP—Oscillator coil clip	.02
RJC-016		TERMINAL—Speed nut	.05
RLC-089	L2	COIL—Oscillator coil	.90
RLL-035	L1	LOOP—Loop antenna	1 00
RMC-040		CATCH—Spring catch	.65
RMS-118		SPRING—Dial spring	.10
RMU-049		SHAFT—Tuning shaft	.30
RRC-107	R4, S1	VOLUME CONTROL—Volume control and switch	$1.65
RRD-1015	R11*	RESISTOR—20 meg, ½w, carbon	.13
RRW-042	R11**	RESISTOR—2300 ohms, 10 w, w.w.	.85
RSW-058	S2**	SWITCH Power plug switch	.85
RTL-052	T1**	TRANSFORMER—I-F transformer	2.75
RTL-051	T2*	TRANSFORMER—I-F transformer	3.25
RTL-079	T1*, 2**	TRANSFORMER—I-F transformer	2.75
RTO-070	T3	TRANSFORMER—Output transformer	1.55
RWL-005**		POWER CORD	1.25
SPECIALIZED REPLACEMENT PARTS			
RAB-096		BACK—Cabinet back	$2.10
RAU-308		CABINET—Plastic cabinet	5.75
RCE-095**	C12A, B, C	CAPACITOR—Electrolytic capacitor 40 mf, 150 v; 40 mf, 250 v; 200 mf, 20 v	2.95
RCE-098*	C12	CAPACITOR—Electrolytic capacitor 10 mf	.95
RCE 099	C5	CAPACITOR—Electrolytic capacitor, 100 mfd	1.00
RCT-036	C1, 2	CAPACITOR—Tuning capacitor	3.95
RCW-3015	C10A, B, 10C, D, E	CAPACITOR—Ceramic combination 220 mmf, .002 mf, .005, 220 mmf, .004 mf	1.10
RDC-032		DIAL CORD	2.50 /25 yd
RDK 136		KNOB	.15
RDP 047		POINTER Dial pointer	.10
REX-005	SR	RECTIFIER Selenium rectifier	2.50
RHB-006		BUTTON Plug button	.10
RHC-015		CLIP—Oscillator coil clip	.02
RHC-016		COTTER PIN—For drive axle	.01
RHC-020		COTTER PIN—Cotter pin for handle	.01
RHE-009		EYELET—Eyelet for cabinet	.03
RHG-006**		GROMMET—For power cord	.05
RHG-018**		GROMMET—For tuning capacitor	.05
RHI-009		HINGE—Hinge for cabinet	.25

*For Model 141 only.
**For Model 143 only.

MODEL 143

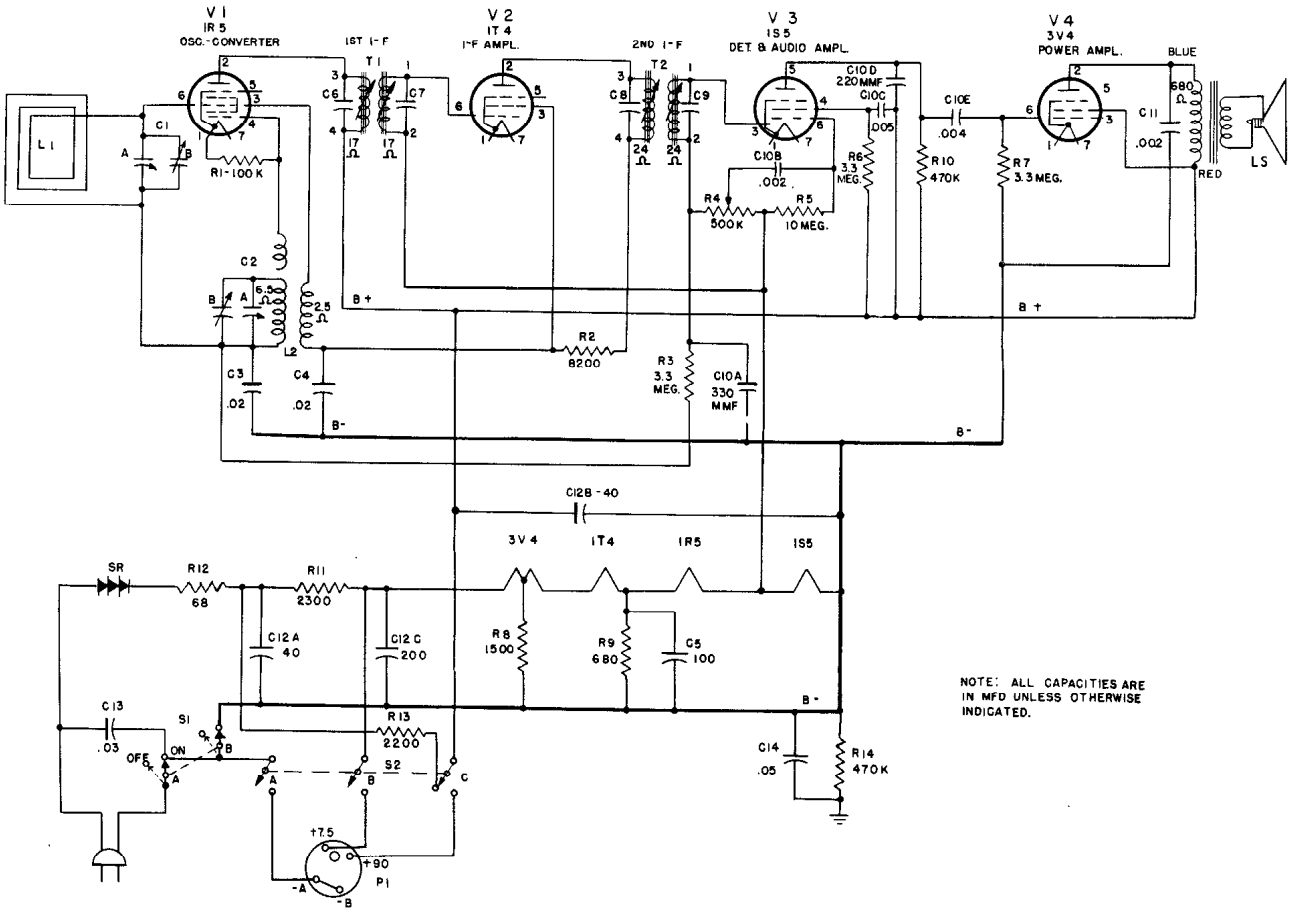

NOTE: ALL CAPACITIES ARE IN MFD UNLESS OTHERWISE INDICATED.

REPLACEMENT PARTS LIST MODEL 143

Cat. No.	Symbol	Description	Suggested Unit List Price
UNIVERSAL REPLACEMENT PARTS			
UCC-002	C11	CAPACITOR—.002 mf, 200 v, paper	$0.25
UCC-009	C3, 4	CAPACITOR—.02 mfd, 200 v, paper	.25
UCC-028	C14	CAPACITOR—.05 mfd, 400 v, paper	.25
UCC-042	C13	CAPACITOR—.03 mfd, 400 v, paper	.30
UCC-048	C5	CAPACITOR—.1 mfd, 400 v, paper	.45
URD-045	R9**	RESISTOR—680 ohms, ½ w, carbon	.13
URD-047	R9*	RESISTOR—820 ohms, ½ w, carbon	.13
URD-053	R8	RESISTOR—1500 ohms, ½ w, carbon	.13
URD-071	R2	RESISTOR—8200 ohms, ½ w, carbon	.13
URD-097	R1	RESISTOR—100,000 ohms, ½w, carbon	.13
URD-113	R10**, 14**	RESISTOR—470,000 ohms, ½ w, carbon	.13
URD-133	R3, 6, 7	RESISTOR—3.3 meg, ½ w, carbon	.13
URD-145	R5	RESISTOR—10 meg, ½ w, carbon	.13
URE-021	R12**	RESISTOR—68 ohms, 1 w, carbon	.17
URE-057	R13**	RESISTOR—2200 ohms, 1 w, carbon	.17
UOP-457		SPEAKER – PA speaker, 4 inches	4.25
RHJ-005**		SPACER—For tuning capacitor	.02
RHM-061		CLIP—Speaker clip	.02
RHY-010		HANDLE—Handle for cabinet	1.00
RJC-016		TERMINAL—Speed nut	.05
RJS-024**		MOUNTING PLATE—For electrolytic capacitor	.10
RJS-100		SOCKET—Tube socket for 1R5	.20
RJS-124		SOCKET—Tube socket for 1S5 & 3V4	.20
RJS-125		SOCKET—Tube socket for 1T4 tube	.20
RHC-015		CLIP—Oscillator coil clip	.02
RJC-016		TERMINAL—Speed nut	.05
RLC-089	L2	COIL—Oscillator coil	.90
RLL-035	L1	LOOP—Loop antenna	1.00
RMC-040		CATCH—Spring catch	.65
RMS-118		SPRING—Dial spring	.10
RMU-049		SHAFT—Tuning shaft	.30
RRC-107	R4, S1	VOLUME CONTROL—Volume control and switch	$1.65
RRD-1015	R11*	RESISTOR—20 meg, ½w, carbon	.13
RRW-042	R11**	RESISTOR—2300 ohms, 10 w, w.w.	.85
RSW-058	S2**	SWITCH—Power plug switch	.85
RTL-052	T1**	TRANSFORMER—I-F transformer	2.75
RTL-051	T2*	TRANSFORMER—I-F transformer	3.25
RTL-079	T1*, 2**	TRANSFORMER- I-F transformer	2.75
RTO-070	T3	TRANSFORMER—Output transformer	1.55
RWL-005**		POWER CORD	1.25
SPECIALIZED REPLACEMENT PARTS			
RAB-096		BACK—Cabinet back	$2.10
RAU-308		CABINET—Plastic cabinet	5.75
RCE-095**	C12A, B, C	CAPACITOR—Electrolytic capacitor 40 mf, 150 v; 40 mf, 250 v; 200 mf, 20 v	2.95
RCE-098*	C12	CAPACITOR—Electrolytic capacitor 10 mf	.95
RCE-099	C5	CAPACITOR—Electrolytic capacitor, 100 mfd	1.00
RCT-036	C1, 2	CAPACITOR—Tuning capacitor	3.95
RCW-3015	C10A, B, 10C, D, E	CAPACITOR—Ceramic combination 220 mmf, .002 mf, .005, 220 mmf, .004 mf	1.10
RDC-032		DIAL CORD	2.50 /25 yd
RDK-136		KNOB	.15
RDP-047		POINTER—Dial pointer	.10
REX-005	SR	RECTIFIER—Selenium rectifier	2.50
RHB-006		BUTTON—Plug button	.10
RHC-015		CLIP—Oscillator coil clip	.02
RHC-016		COTTER PIN—For drive axle	.01
RHC-020		COTTER PIN—Cotter pin for handle	.01
RHE-009		EYELET—Eyelet for cabinet	.03
RHG-006**		GROMMET—For power cord	.05
RHG-018**		GROMMET—For tuning capacitor	.05
RHI-009		HINGE—Hinge for cabinet	.25

*For Model 141 only.
**For Model 143 only.

MODEL 145

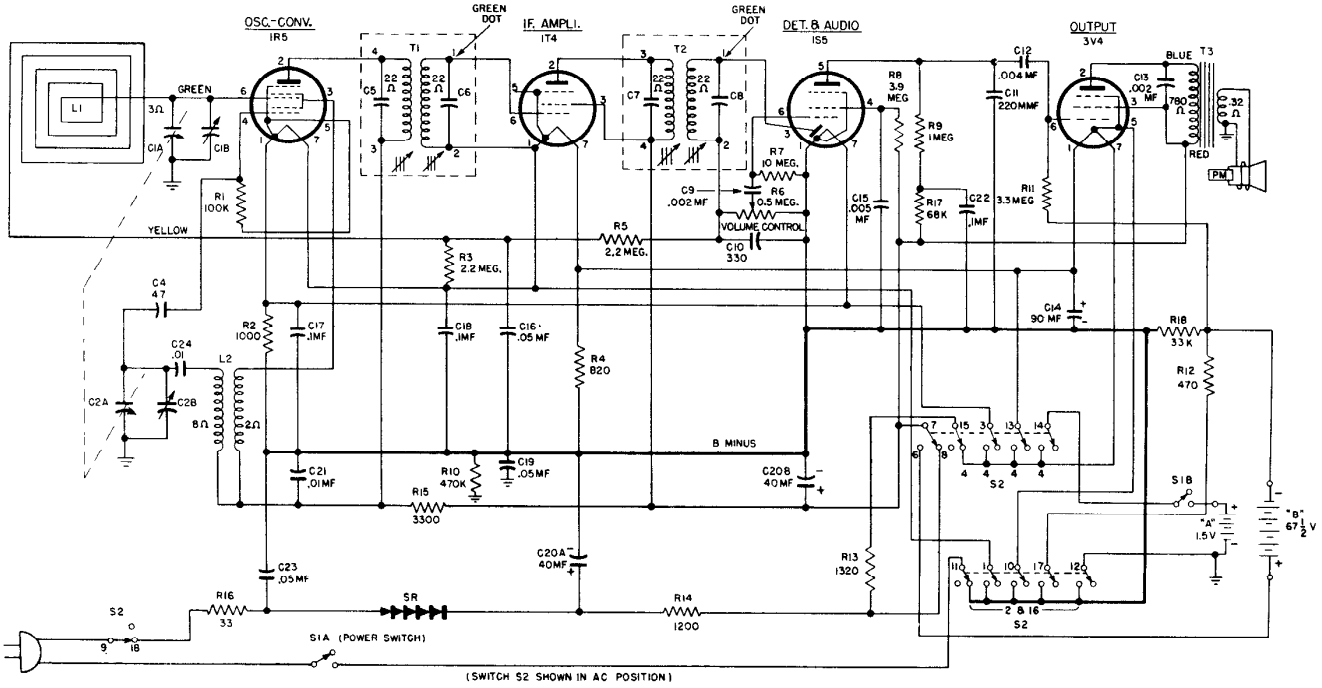

OSC.-CONV.
1R5
IF. AMPLI.
1T4
DET. & AUDIO
1S5
OUTPUT
3V4
GREEN DOT
GREEN DOT
T1
T2
T3
L1
L2
GREEN
YELLOW
BLUE
RED
PM
R1 100K
R2 1000
R3 2.2 MEG.
R4 820
R5 2.2 MEG.
R6 0.5 MEG.
R7 10 MEG.
R8 3.9 MEG
R9 1MEG
R10 470K
R11 3.3MEG
R12 470
R13 1320
R14 1200
R15 3300
R16 33
R17 68K
R18 33K
C4 47
C5 22 Ω
C6 22 Ω
C7 22 Ω
C8 22 Ω
C9 .002 MF
C10 330
C11 220MMF
C12 .004 MF
C13 .002 MF
C14 90 MF
C15 .005 MF
C16 .05 MF
C17 .1MF
C18 .1MF
C19 .05MF
C20A 40MF
C20B 40MF
C21 .01MF
C22 .1MF
C23 .05MF
C24 .01
C1A
C1B
C2A
C2B
3Ω
8Ω
2Ω
VOLUME CONTROL
B MINUS
S1A (POWER SWITCH)
S1B
S2
SR
"A" 1.5V
"B" 67½ V
2 & 16
(SWITCH S2 SHOWN IN AC POSITION)

MODEL 145—REPLACEMENT PARTS LIST

Cat. No.	Symbol	Description	Suggested Unit List Price
UNIVERSAL REPLACEMENT PARTS			
UCC-028	C23	CAPACITOR—.05 mfd., 400 v.	$0.25
UCU-020	C4	CAPACITOR—47 mmf. ±20%, mica	.25
UOP-489		SPEAKER	4.75
URD-041	R12	RESISTOR—470 ohms, ½ w., carbon	.13
URD-047	R4	RESISTOR—820 ohms, ½ w., carbon	.13
URD-049	R2	RESISTOR—1000 ohms, ½ w., carbon	.13
URD-061	R15	RESISTOR—3300 ohms, ½ w., carbon	.13
URD-081	R18	RESISTOR—33,000 ohms, ½ w., carbon	.13
URD-093	R17	RESISTOR—68,000 ohms, ½ w., carbon	.13
URD-097	R1	RESISTOR—100,000 ohms, ½ w., carbon	.13
URD-113	R10	RESISTOR—470,000 ohms, ½ w., carbon	.13
URD-121	R9	RESISTOR—1 meg., ½ w., carbon	.13
URD-129	R3, 5	RESISTOR—2.2 meg., ½ w., carbon	.13
URD-133	R11	RESISTOR—3.3 meg., ½ w., carbon	.13
URD-135	R8	RESISTOR—3.9 meg., ½ w., carbon	.13
URD-145	R7	RESISTOR—10.0 meg., ½ w., carbon	.13
SPECIALIZED REPLACEMENT PARTS			
RAB-082		CABINET BACK COVER	$2.30
RAC-055		CABINET FRONT COVER ASSEMBLY—Includes two hinges (RHI-007) and four screws (RHS-023)	2.25
RAC-056		CABINET BODY ASSEMBLY—Includes back cover hinges (RHI-008) and four screws (RHS-023)	3.90
RAC-057		LOOP COVER	——
RCC-075	C21	CAPACITOR—.01 mfd., 400 v., paper	.35
RCC-077	C17, 18, 22	CAPACITOR—.1 mfd., 400 v., paper	.50
RCC-078	C16, 19	CAPACITOR—.05 mfd., 400 v., paper	.40
RCE-051	C20A, B	CAPACITOR—40-40 mfd., 150 v., electrolytic	2.05
RCE-052	C14	CAPACITOR—90 mfd., 10 v., electrolytic	1.25
RCT-035	C1A, B; 2A, B	CAPACITOR—Tuning	4.60
RCW-3018	C13	CAPACITOR—.002 mfd., ceramic	.60
RCW-3015	C9, 10, 11, 12, 15	CAPACITOR—Ceramic	1.10
RDC-032		CORD—Dial drive cord, 25 yd.	2.50/25 yd.
RDE-034		ESCUTCHEON	8.40
RDE-035		ESCUTCHEON—Brass for fastening handle to the cabinet	.60

Cat. No.	Symbol	Description	Suggested Unit List Price
SPECIALIZED REPLACEMENT PARTS (Cont.)			
RDK-149		KNOB and Clip	$0.15
RDP-044		POINTER—Dial pointer assembly	.20
RDS-080		SCALE—Dial scale	.30
REC-001		CONNECTOR—For "B" battery	.40
REC-004		CONTACT—For "A" battery	.10
REX-005	SR	RECTIFIER—Selenium	2.50
RHI-007		HINGE—Front cover hinge	.25
RHI-008		HINGE—Back cover hinge	.20
RHJ-009		SPACER—For switch S2 (four req.)	——
RHM-055		SPEED NUT—$\frac{3}{4}$"	.01
RHR-002		RIVET—.121 dia. x $\frac{1}{8}$" long	.01
RHR-006		RIVET—.121" dia. x $\frac{5}{16}$" long for mounting RDE-035	.01
RHS-015		SCREW—Self-tapping screw for mounting loop assembly door	.01
RHS-022		SCREW—Self-tapping for mounting the brass latch plate	.03
RHS-023		SCREW—Self-tapping for mounting hinges	.01
RHY-008		HANDLE	1.10
RII-019		INSULATOR—For "A" battery contact	——
RII-020		BARRIER—Shield around "A" battery	——
RJS-100		SOCKET—For 1R5, 1S5, and 3V4 tube	.20
RJS-125		SOCKET—For 1T4 tube	.20
RLC-080	L2	COIL—Oscillator coil	.90
RLL-037	L1	LOOP	——
RMC-028		KNOB—Catch knob	.10
RMC-029		LATCH PLATE—On front cover, fastened by screws RHS-022	.30
		CATCH—Front cover catch	.55
RMC-031		CATCH COVER—Front cover, fastened with screws RHS-022	.40
RMC-032		LATCH PLATE—On back cover, fastened with screws RHS-022	.25
RMC-033		LATCH—Back cover latch	——
RMC-036		NAMEPLATE AND CATCH	.10
RMC-037		CLIP—For "A" battery	——
RMM-085		BARRIER	.10
RMS-130		SPRING—Dial cord tension spring	.15
RMW-042		PULLEY—½-in. pulley for dial cord	.05
RRC-094	R6, S1	VOLUME CONTROL AND SWITCH	1.50
RRW-030	R16	RESISTOR—33 ohms, 3 w., w.w.	.25
RRW-031	R13	RESISTOR—1320 ohms, w.w.	.80
RRW-032	R14	RESISTOR—1200 ohms, w.w.	.80
RSW-061	S2	SWITCH—AC-DC Batt. switch	2.55
RTL-052	T1, T2	TRANSFORMER—1st and 2nd I-F transformer	2.75
RTO-057	T3	TRANSFORMER—Output	1.80
RWL-009		CORD—Power cord	.70

MODEL 150

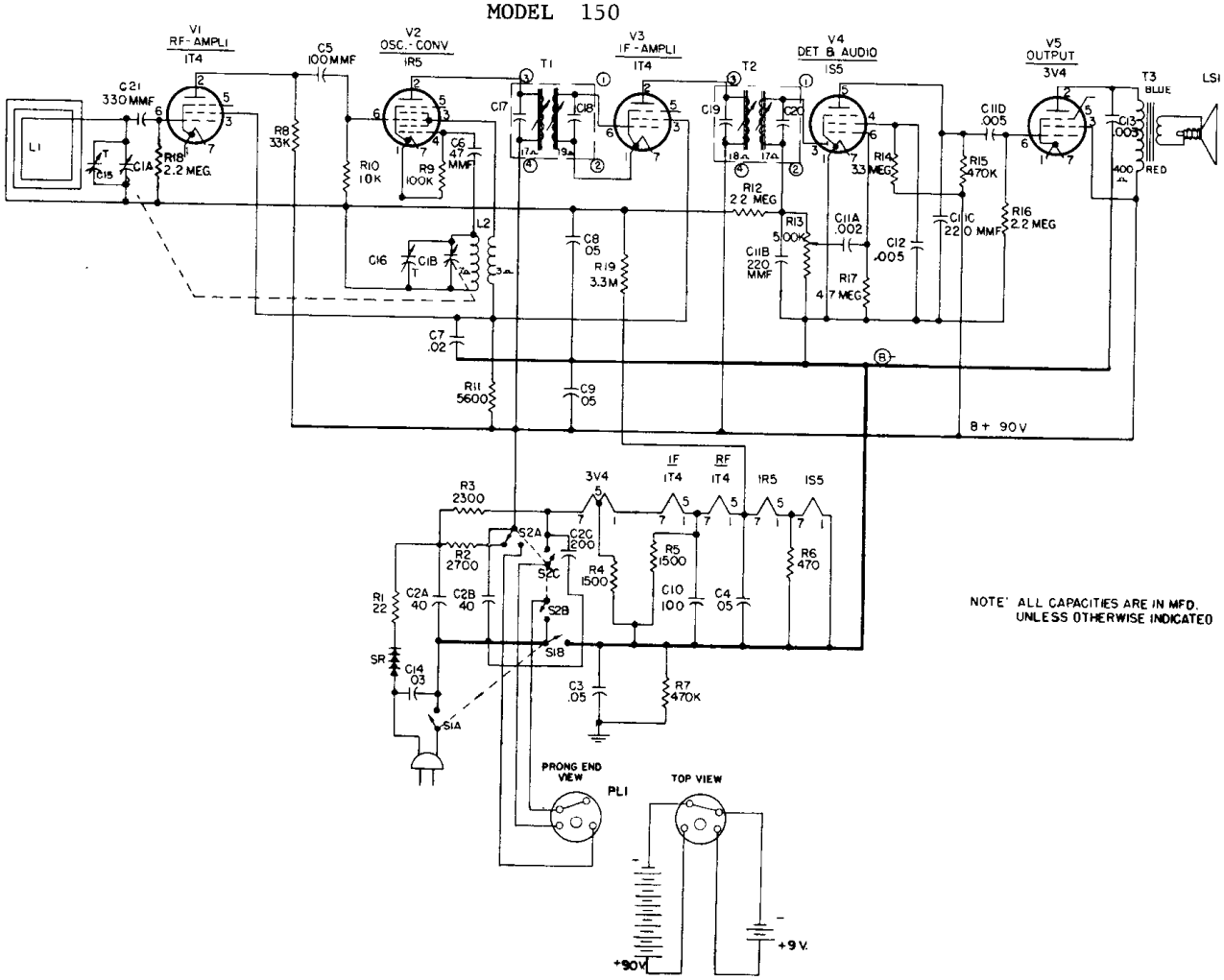

NOTE' ALL CAPACITIES ARE IN MFD. UNLESS OTHERWISE INDICATED

MODEL 150—REPLACEMENT PARTS LIST

UNIVERSAL REPLACEMENT PARTS

Cat. No.	Symbol	Description	Suggested Unit List Price
UCC-623	C13	CAPACITOR - .003 mf., 600 v., paper	$0 25
UCC-625	C12*	CAPACITOR .005 mf., 600 v., paper	.25
UCC-631	C7	CAPACITOR .02 mf., 600 v.	.30
UCC-633	C14	CAPACITOR .03 mf , 600 v., paper	.35
UCC-635	C3, 8, 9	CAPACITOR .05 mf., 600 v., paper	.40
UCE-067	C10	CAPACITOR 100 mf., 6 v., electrolytic	1.55
UOP-488	LS1	LOUDSPEAKER 4-in. permanent magnet	4.75
URD-009	R1	RESISTOR 22 ohms, ½ w., carbon	.13
URD-041	R6	RESISTOR 470 ohms, ½ w., carbon	.13
URD-053	R4, 5	RESISTOR 1500 ohms, ½ w., carbon	.13
URD-067	R11	RESISTOR 5600 ohms, ½ w , carbon	.13
URD-073	R10	RESISTOR 10,000 ohms, ½ w., carbon	.13
URD-085	R8	RESISTOR - 33,000 ohms, ½ w , carbon	.13
URD-097	R9	RESISTOR -100,000 ohms, ½ w., carbon	.13
URD-113	R7, 15	RESISTOR - 470,000 ohms, ½ w., carbon	.13
URD-129	R12, 16, 18	RESISTOR 2.2 meg., ½ w., carbon	.13
URD-133	R14, 19	RESISTOR 3.3 meg , ½ w., carbon	.13
URD-137	R17	RESISTOR 4.7 megs, ½ w , carbon	.13
URE-059	R2	RESISTOR 2700 ohms, 1 w , carbon	17

SPECIALIZED REPLACEMENT PARTS

RAB-076		CABINET BACK Plastic cabinet back (maroon)	$2 95
RAB-080		CABINET BACK —Plastic (mahogany and gray)	3.40
RAS-001		STRAP Battery strap	30
RAU-038		CABINET — Plastic cabinet (maroon)	5.95
RAU-041		CABINET - Plastic cabinet (mahogany)	6.95
RAU-042		CABINET Plastic cabinet (gray)	6.95
RCE-069	C2A, B, C	CAPACITOR—200 mf., 25 v., electrolytic; 50-50 mfd., 150 v., electrolytic	2 25
RCT-032	C1	CAPACITOR—Tuning capacitor	3.95
RCW-177	C21	CAPACITOR—330 mmf., ceramic	.60
RCW-1073	C6	CAPACITOR—47 mmf., ceramic	.60
RCW-1074	C5	CAPACITOR —100 mmf., ceramic	$0 60
RCW-3013	C11A,B,C,D	CAPACITOR — 002-220-220-.005, ceramic	1 00
RDC-032		DIAL CORD Roll of 25 yards	2.50
RDK-136		KNOB —Maroon knob	.15
RDK-148		KNOB —Mahogany knob	.15
RDP-040		POINTER -Dial pointer	.30
RDS-072		SCALE — Dial scale	.35
RER-001	SR	SELENIUM RECTIFIER	2.85
RHB-004		BUTTON - Monogram button	.65
RHC-015		CLIP -Clip for oscillator coil	.02
RHC-016		HAIRPIN COTTER	.01
RHG-018		GROMMET Grommet for tuning condenser	.05
RHI-005		HINGE - Hinge for back	.15
RHJ-005		SPACER —For tuning condenser	.02
RHM-052		CLIP - For loop antenna	.02
RHM-053		BOSS CAP FOR HANDLE	.45
RHR-005		RIVET Tubular rivet for door hinge	.01
RHS-010		SHIELD - -Tube shield	.20
RHX-013		HANDLE—Handle assembly	.80
RJP-025		PLUG —Battery plug	.15
RJS-024		MOUNTING PLATE For electrolytic capacitor	.10
RJS-068			
RJS-100		SOCKET —Tube socket	.20
RLC-068	L2	COIL —Oscillator coil	1.15
RLL-029	L1	LOOP —Loop antenna	1.30
RMS-039		CLIP -"C" clip	.02
RMS-118		SPRING —Dial spring	.10
RMS-154		SPRING CATCH	.10
RMW-009		PULLEY —Idler pulley	.10
RRC-083	R13, S1, AB	VOLUME CONTROL Volume control and switch	1.65
RRW-027	R3	RESISTOR —2300 ohms, 10 w.	1.00
RSW-058	S2A, B	SWITCH —Power switch	.47
RTL-052	T1	TRANSFORMER 1st I-F transformer	2 75
RTL-079	T2	TRANSFORMER 2nd I-F transformer	2.75
RTO-050	T3	TRANSFORMER Output transformer	2.25
RWL-005		CORD - Power cord	1.25
SJS-068		CONNECTING PIN FOR LOOP ANTENNA	.05

SPECIALIZED REPLACEMENT PARTS (CONT'D)

*Some receivers have UCC-635 instead.

MODEL 160

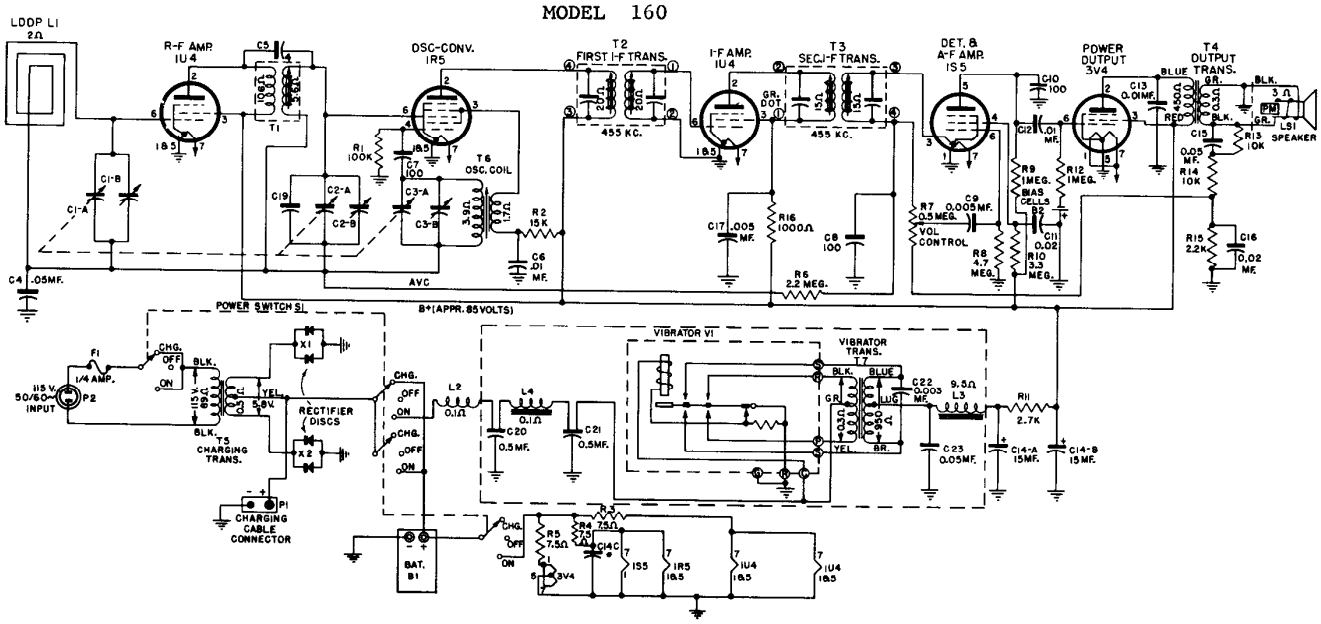
LOOP L1
2Ω
R-F AMP.
1U4
C5
T1
OSC-CONV.
1R5
T2
FIRST I-F TRANS.
455 KC.
I-F AMP.
1U4
T3
SEC.I-F TRANS.
455 KC.
DET. &
A-F AMP.
1S5
POWER
OUTPUT
3V4
T4
OUTPUT
TRANS.
LS1
SPEAKER
C1-A
C1-B
C4 .05MF.
C19
C2-A
C2-B
C3-A
C3-B
R1
100K
C7
100
T6
OSC. COIL
R2
15K
C6
.01
MF.
AVC
C17 .005
MF.
R16
1000Ω
C8
100
R6
2.2 MEG.
R7
0.5 MEG.
VOL
CONTROL
C9
0.005MF.
R8
4.7
MEG.
R9
1MEG.
BIAS
CELLS
B2
C11
0.02
R10
3.3
MEG.
C10
100
C12
.01
MF.
R12
1MEG.
C13
0.01MF.
C15
0.05
MF.
R13
10K
R14
10K
R15
2.2K
C16
0.02
MF.
POWER SWITCH S1
B+(APPR. 85 VOLTS)
F1
1/4 AMP.
115 V.
50/60~
INPUT
P2
CHG.
OFF
ON
BLK.
YEL.
5.8V.
T5
CHARGING
TRANS.
RECTIFIER
DISCS
X1
X2
P1
CHARGING
CABLE
CONNECTOR
L2
0.1Ω
L4
0.1Ω
C20
0.5MF.
C21
0.5MF.
VIBRATOR V1
VIBRATOR
TRANS.
T7
BLUE
GR.
LUG
BR.
C22
0.003
MF.
9.5Ω
L3
C23
0.05MF.
R11
2.7K
C14-A
15MF.
C14-B
15MF.
BAT.
B1
R5
7.5Ω
R4
7.5Ω
R3
7.5Ω
C14C
3V4
1S5
1R5
1U4
1U4

MODEL 160—REPLACEMENT PARTS LIST

UNIVERSAL REPLACEMENT PARTS

CAT. NO.	SYMBOL	DESCRIPTION	SUGGESTED UNIT LIST PRICE
UCC-625	C9, 17	CAPACITOR—.005 mf., 400 v., paper	$0.25
UCC-630	C6, 12, 13	CAPACITOR—.01 mf., 600 v., paper	.30
UCC-631	C11, 16	CAPACITOR—.02 mf., 400 v., paper	.30
UCC-635	C4, 15, 23	CAPACITOR—.05 mf., 400 v., paper	.40
UCU-028	C7, 8, 10	CAPACITOR—100 mmf., mica	.25
UOP-611		SPEAKER—PM speaker	5.50
URD-049	R16	RESISTOR—1000 ohms, ½ w., carbon	.13
URD-057	R15	RESISTOR—2200 ohms, ½ w., carbon	.13
URD-073	R13, 14	RESISTOR—10,000 ohms, ½ w., carbon	.13
URD-077	R2	RESISTOR—15,000 ohms, ½ w., carbon	.13
URD-097	R1	RESISTOR—100,000 ohms, ½ w., carbon	.13
URD-121	R9, 12	RESISTOR—1 meg., ½ w., carbon	.13
URD-129	R6	RESISTOR—2.2 meg., ½ w., carbon	.13
URD-133	R10	RESISTOR—3.3 meg., ½ w., carbon	.13
URD-137	R8	RESISTOR—4.7 meg., ½ w., carbon	.13
URE-059	R11	RESISTOR—2,700 ohms, ½ w., carbon	.17

SPECIALIZED REPLACEMENT PARTS

RAC-053		COVER—Battery box cover	$1.15
RAD-033		DOOR—Cabinet door	4.00
RAG-017		GRILLE—Loudspeaker grille	4.50
RAU-040		CABINET—Maroon	7.50
RBC-001	B2	CELL—Bias cell	1.65
RCC-068	C20, 21	CAPACITOR—.05 mf., 120 v., paper	.75
RCC-090	C22	CAPACITOR—.003 mf., 1500 v., paper	.35
RCE-007	C14A, B, C	CAPACITOR—Electrolytic	2.55
RCT-034		CAPACITOR—Tuning capacitor	6.87
RCW-1060	C19	CAPACITOR—10 mmf., ceramic	.60
RCW-1075	C5	CAPACITOR—4 mmf., ceramic	.60
RDC-032		DRIVE CORD—25 yards	2.50
RDK-142		KNOB—Tuning knob	.45
RDK-143		KNOB—Knob volume and switch	.50
RDP-041		ASSEMBLY—Slider and pointer assembly	
RDS-075		SCALE—Dial scale	1.30
REF-001	F1	FUSE—¼ ampere	.15
REV-001	V1	VIBRATOR—Vibrator unit	8.75
REX-001		RECTIFIER—Disc rectifier	2.15
RHC-013		HAIRPIN COTTER	.01
RHE-006		EYELET—For handle	.03
RHG-018		GROMMET—Rubber grommet	.05

SPECIALIZED REPLACEMENT PARTS

CAT. NO.	SYMBOL	DESCRIPTION	SUGGESTED UNIT LIST PRICE
RHG-019		GROMMET—For battery box	$0.05
RHI-006		HINGE—Door hinge	.25
RHQ-002		VENT TUBE—For battery	.20
RHS-010		TUBE SHIELD—For 1S5 tube	.20
RHS-018		SHIELD—Spiral shield	.05
RHY-007		HANDLE—Cabinet handle	1.00
RJP-014		PLUG—Battery plug	.35
RJP-026		PLUG BUTTON	.10
RJS-091		SOCKET—Tube socket shock mounting	.45
RJS-105		SOCKET—Tube socket	.20
RJS-019		SOCKET—Vibrator socket	.20
RJW-002		HOLDER—Fuse holder	.90
RLB-028	T1	TRANSFORMER—R-F transformer	3.50
RLC-078	T6	TRANSFORMER—Oscillator transformer	1.80
RLF-014	L3	CHOKE—B + filter choke	1.00
RLF-015	L4	CHOKE—A + filter choke	1.15
RLI-026	L2	CHOKE—Hash filter choke	.55
RLL-032	L1	LOOP—Antenna loop	1.10
RMA-006		ARM—Switch arm	.20
RMC-022		CATCH—Catch for cabinet door	.10
RMC-023		CATCH—Battery box catch	.05
RMC-025		CLAMP—Clamp for bias cell	.30
RML-019		LINK—Link for lever	.20
RML-020		LEVER—Lever for switch control shaft	.15
RML-021		LEVER—Lever for volume control	.25
RMM-082		RUBBER CUSHION—For battery box cover	.05
RMP-017		PIN—Handle retaining pin	.02
RMS-120		SPRING—Drive cord spring	.15
RMS-156		SPRING—For handle	.05
RMU-044		SHAFT—Shaft for switch	.10
RMU-045		SHAFT—Tuning shaft	.20
RMW-027		PULLEY	.05
RMW-077		WINDLASS	.05
RRC-092	R7	VOLUME CONTROL—.5 meg.	1.25
RRW-018	R3, 4, 5	RESISTOR—7.5 ohms, wirewound	.13
RSW-060	S1	SWITCH—Power switch	1.50
RTL-052	T2	TRANSFORMER—1st I-F transformer	2.75
RTL-054	T3	TRANSFORMER—2nd I-F transformer	2.40
RTC-003	T5	TRANSFORMER—Charging transformer	3.80
RTO-055	T4	TRANSFORMER—Output transformer	2.85
RTV-003	T7	TRANSFORMER—Vibrator transformer	5.80
RWL-009		POWER CORD	.70

Notice: Prices are subject to change without notice.

MODEL 165

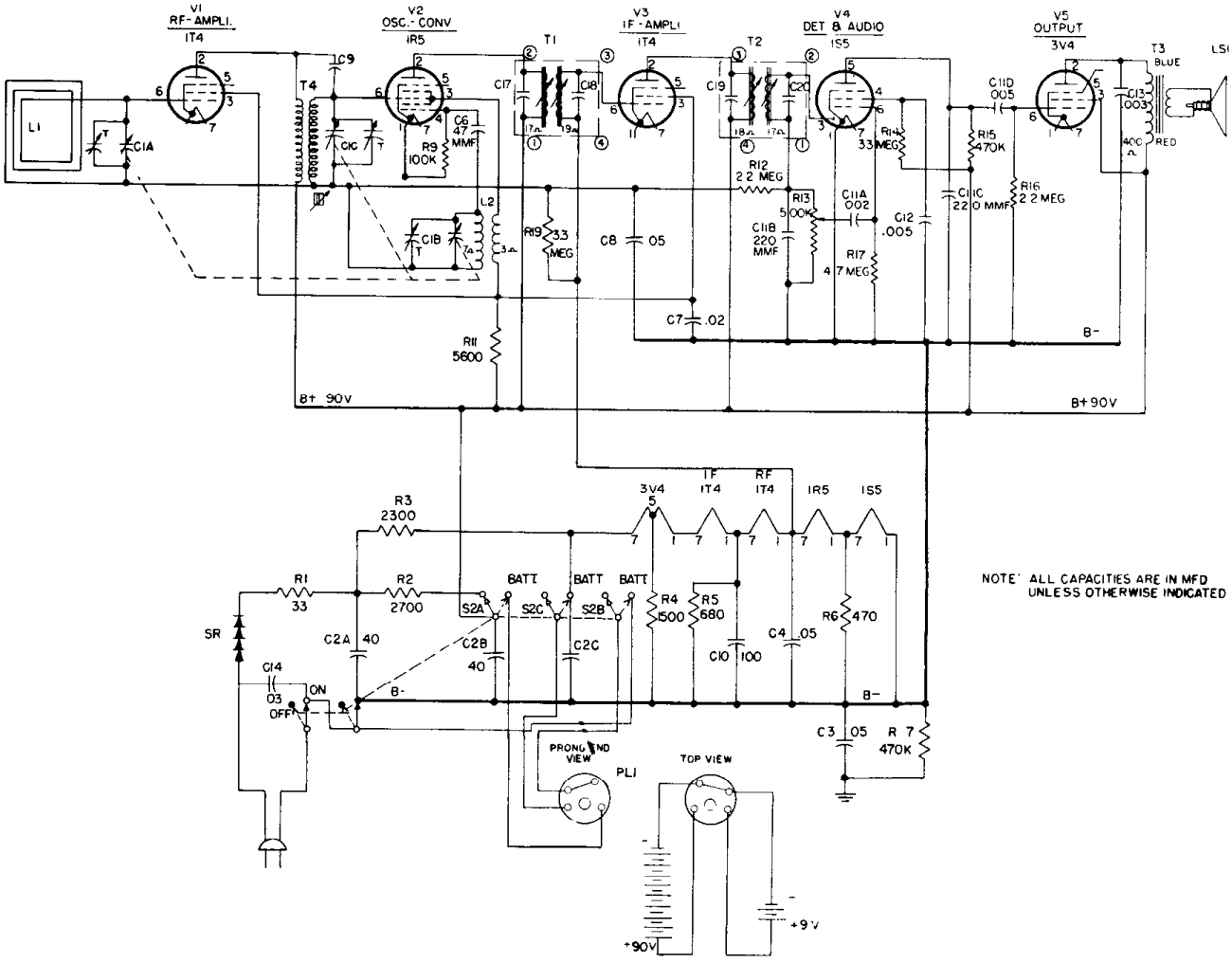

NOTE: ALL CAPACITIES ARE IN MFD UNLESS OTHERWISE INDICATED

MODEL 165

REPLACEMENT PARTS LIST

UNIVERSAL REPLACEMENT PARTS LIST

Cat. No.	Symbol	Description	Suggested Unit List Price
UCC-623	C13	CAPACITOR—.003 mf., 600 v., paper	$0.25
UCC-631	C7	CAPACITOR—.02 mf., 600 v., paper	.30
UCC-633	C14	CAPACITOR—.03 mf., 600 v., paper	.35
UCC-635	C3, 4, 8	CAPACITOR—.05 mf., 600 v., paper	.40
UCE-067	C10	CAPACITOR—100 mf., 10 v., electrolytic	1.55
UOP-457	LS1	SPEAKER—4-inch PM	4.25
URD-041	R6	RESISTOR—470 ohms, ½ w., carbon	.13
URD-045	R5	RESISTOR—680 ohms, ½ w., carbon	.13
URD-053	R4	RESISTOR—1500 ohms, ½ w., carbon	.13
URD-067	R11	RESISTOR—5600 ohms, ½ w., carbon	.13
URD-097	R9	RESISTOR—100,000 ohms, ½ w., carbon	.13
URD-113	R7, 15	RESISTOR—470,000 ohms, ½ w., carbon	.13
URD-129	R12, 16	RESISTOR—2.2 meg., ½ w., carbon	.13
URD-133	R14, 19	RESISTOR—3.3 meg., ½ w., carbon	.13
URD-137	R17	RESISTOR—4.7 meg., ½ w., carbon	.13
URE-013	R1	RESISTOR—33 ohms, 1 w., carbon	.17
URE-059	R2	CAPACITOR—2700 ohms, 1 w., carbon	.17

SPECIALIZED REPLACEMENT PARTS

RAB-107		BACK—Cabinet back	$2.95
RAS-001		STRAP—Battery strap	.30
RAU-310		ASSEMBLY—Cabinet assembly	
RCE-095	C2, A, B, C	CAPACITOR—40 mf.-40 mf., 150 v., 20 mmf., 25 v., electrolytic	2.95
RCT-039	C1, A, B, C	CAPACITOR—Tuning capacitor	4.50
RCW-1073	C6	CAPACITOR—47 mmf., ceramic	.60
RCW-1075	C9	CAPACITOR—4 mmf., ceramic	.60
RCW-3015	C11, A, B, C, D C12	CAPACITOR—.002 mf.—220 mmf.—.005 mmf.— 220 mmf.—.005 mmf.	1.10
RDC-032		DIAL CORD—Roll of 25 yards	2.50
RAG-028		Grille	

SPECIALIZED REPLACEMENT PARTS (Cont'd)

Cat. No.	Symbol	Description	Suggested Unit List Price
RDK-136		KNOB—Volume or tuning control knob	$0.15
RDP-040		POINTER—Dial pointer	.30
RDS-088		SCALE—Dial scale	.35
RER-001	SR	RECTIFIER—Selenium rectifier	2.85
RHB-006		BUTTON—Plug button	.10
RHC-015		CLIP—Clip for oscillator coil	.02
RHC-016		HAIRPIN COTTER	.01
RHG-018		GROMMET—Grommet for tuning condenser	.05
RHJ-005		SPACER—For tuning condenser	.02
RHM-052		CLIP—For loop antenna	.02
RHM-065		CLIP—For grille	.02
RHR-005		RIVET—Tubular rivet for door hinge	.01
RHX-013		ASSEMBLY—Handle assembly	.80
RJC-016		CONTACT—For speaker lead	.05
RJP-025	PL1	PLUG—Battery plug	.15
RJS-024		MOUNTING PLATE—For electrolytic capacitor	.10
RJS-100		SOCKET—Tube socket for 1R5 tube	.20
RJS-124		SOCKET—Tube socket	.20
RJS-125		SOCKET—Tube socket for 1T4 tube	.20
RLC-068	L2	COIL—Oscillator coil	1.15
RLL-038	L1	LOOP—Loop antenna	1.00
RMS-039		CLIP—"C" clip	.02
RMS-118		SPRING—Dial spring	.10
RMS-191		SPRING CATCH—For cabinet back	.15
RMW-009		PULLEY—Idler pulley	.10
RRC-083	R13, S1A, B	VOLUME CONTROL—Volume control, 500,000 ohms, and switch	1.65
RRW-027	R3	RESISTOR—2300 ohms, 10 w.	1.00
RSW-058	S2A, B, C	SWITCH—Power switch	.47
RLB-030	T4	TRANSFORMER—R-F transformer	1.25
RTL-052	T1	TRANSFORMER—1st I-F transformer	2.75
RTL-079	T2	TRANSFORMER—2nd I-F transformer	2.75
RTO-050	T3	TRANSFORMER—Output transformer	2.25
RWL-005		CORD—Power cord	1.25

MODEL 180

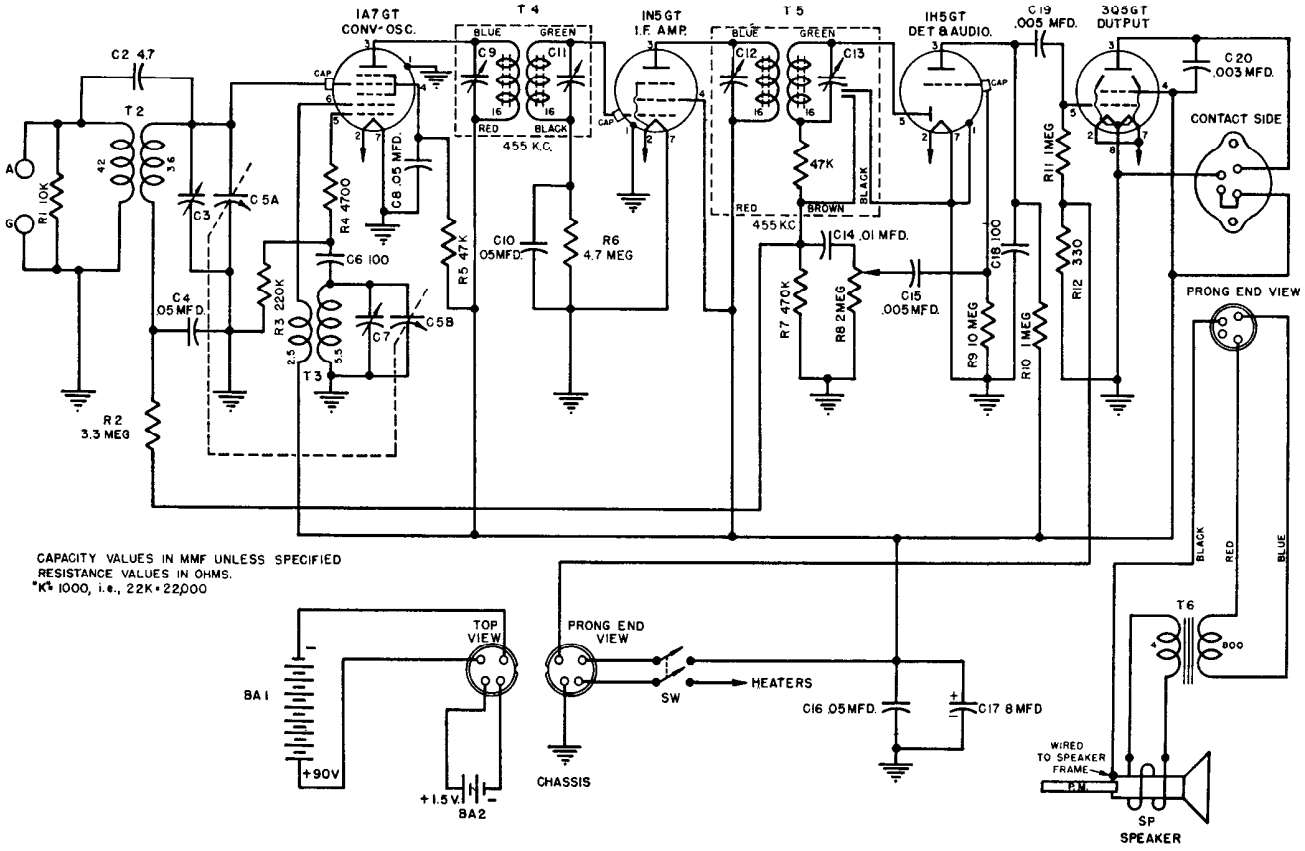
1A7GT
CONV-OSC.
T4
BLUE
GREEN
C9
C11
RED
BLACK
455 K.C.
1N5GT
I.F. AMP.
T5
C12
C13
1H5GT
DET & AUDIO.
C19
.005 MFD.
3Q5GT
OUTPUT
C20
.003 MFD.
CONTACT SIDE
PRONG END VIEW
C2 47
T2
A
G
R1 10K
C3
C5A
C4
.05 MFD.
R2
3.3 MEG
R3 220K
T3
C7
C5B
R4 4700
C8 .05 MFD.
C6 100
R5 47K
C10
.05MFD.
R6
4.7 MEG
47K
BROWN
BLACK
RED
455 KC
C14 .01 MFD.
C15
.005 MFD.
R7 470K
R8 2MEG
C18 100
R9 .10 MEG
R10 1MEG
R11 1MEG
R12 330
BLACK
RED
BLUE
T6
800
CAPACITY VALUES IN MMF UNLESS SPECIFIED
RESISTANCE VALUES IN OHMS.
"K" = 1000, i.e., 22K = 22,000
TOP
VIEW
BA1
+90V
+1.5V.
BA2
PRONG END
VIEW
CHASSIS
SW
HEATERS
C16 .05 MFD.
C17 8 MFD
WIRED
TO SPEAKER
FRAME
SP
SPEAKER

MODEL 180

UNIVERSAL REPLACEMENT PARTS

PART NO.	SYMBOL	DESCRIPTION
UCC-011	C4, 8, 10	CAPACITOR—.05 mfd., 200 v., paper
UCC-028	C16	CAPACITOR—.05 mfd., 400 v., paper
UCC-037	C20	CAPACITOR—.003 mfd., 600 v., paper
UCC-039	C15, 19	CAPACITOR—.005 mfd., 600 v., paper
UCC-040	C14	CAPACITOR—.01 mfd., 600 v., paper
UCU-1028	C6, 18	CAPACITOR—100 mmf., mica
UOP-629	SP	SPEAKER—6½ in. permanent magnet
UOX-001		CONE—Replacement speaker cone
URD-037	R12	RESISTOR—330 ohm, ⅓ w., carbon
URD-065	R4	RESISTOR—4700 ohm, ⅓ w., carbon
URD-073	R1	RESISTOR—10,000 ohm, ⅓ w., carbon
URD-089	R5	RESISTOR—47,000 ohm, ⅓ w., carbon
URD-105	R3	RESISTOR—220,000 ohm, ⅓ w., carbon
URD-113	R7	RESISTOR—470,000 ohm, ⅓ w., carbon
URD-121	R10, 11	RESISTOR—1 meg., ⅓ w., carbon
URD-133	R2	RESISTOR—3.3 meg., ⅓ w., carbon
URD-137	R6	RESISTOR—4.7 meg., ⅓ w., carbon
URD-145	R9	RESISTOR—10 meg., ⅓ w., carbon

SPECIALIZED REPLACEMENT PARTS

PART NO.	SYMBOL	DESCRIPTION
RAB-5001		BACK—Cabinet back
RAV-5001		CABINET—Model 180 cabinet
RCE-5001	C17	CAPACITOR—8 mfd., 150 v., electrolytic
RCT-5001	C5A, 5B	CAPACITOR—Tuning condenser
RCU-5002	C2	CAPACITOR—4.7 mmf., mica
RDC-5001		CORD—Drive cord
RDE-5001		ESCUTCHEON—Dial escutcheon assembly
RDF-5001		WASHER—Felt washer for knobs
RDK-5001		KNOB—Volume or tuning knob
RDM-5001		FLAG—Off-On indicator flag
RDP-5001		POINTER—Plastic dial pointer
RDW-5001		GLASS—Dial glass
RDX-5001		BRACKET—Dial bracket and pulley assembly
RHC-5001		CLIP—Off-On indicator retaining clip
RJS-500		SOCKET—Octal tube socket
RJS-5002		SOCKET—Speaker socket
RLA-5001	T2	COIL—Antenna coil
RLC-5001	T3	COIL—Oscillator coil
RMB-5001		BEARING—Dial drive shaft supporting bearing
RMC-5001		CAM—Off-On indicator cam
RMU-5001		SHAFT—Dial drive shaft
RRC-5001	R8, S3	VOLUME CONTROL—2 meg. vol. control and switch
RTL-5001	T5	TRANSFORMER—2nd i-f transformer
RTL-5002	T4	TRANSFORMER—1st i-f transformer
RTO-5001	T6	TRANSFORMER—Output transformer
RWX-5501		CABLE ASSEMBLY—Battery cable
RYM-5001		CHART—Dial calibration chart

MODELS 200, 201, 202, 203, 205

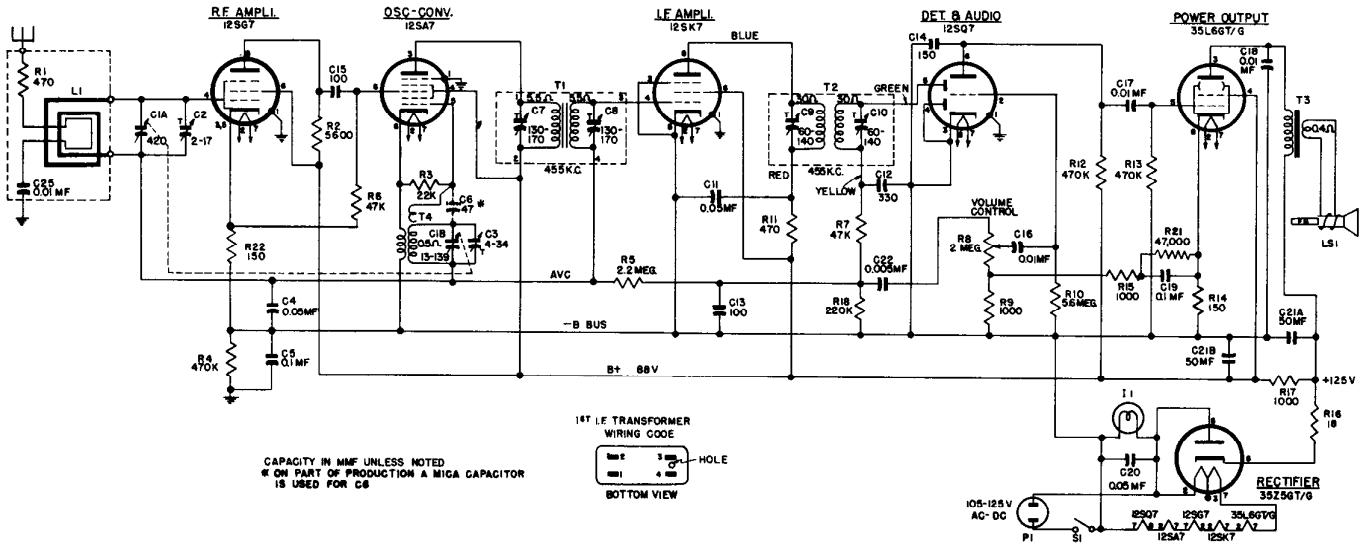

REPLACEMENT PARTS LIST—MODELS 200, 203, & 205, 201, 202

PART NO.	SYMBOL	DESCRIPTION
		UNIVERSAL REPLACEMENT PARTS
UCC-039	C22	CAPACITOR—.005 mfd, 600 v, paper
UCC-040	C25	CAPACITOR—.01 mfd, 600 v, paper
UCC-048	C5	CAPACITOR—0.1 mfd, 600 v, paper
UCU-020	C6	CAPACITOR—47 mmf, 500 v, mica
UCU-028	C13, 15	CAPACITOR—100 mmf, 500 v, mica
UCU-032	C14	CAPACITOR—150 mmf, 500 v, mica
UCU-040	C12	CAPACITOR—330 mmf, 500 v, mica
UIC-001		CEMENT—Loudspeaker cone cement
UIC-002		THINNER—Cone cement thinner
UOP-528	LS1	SPEAKER—5 1/4 in. PM
UOX-001		CONE—Replacement cone kit
URD-029	R14, 22	RESISTOR—150 ohms, 1/2 w, carbon
URD-041	R1, 11	RESISTOR—470 ohms, 1/2 w, carbon
URD-057	R9, 15	RESISTOR—1000 ohms, 1/2 w, carbon
URD-067	R2	RESISTOR—5600 ohms, 1/2 w, carbon
URD-081	R3	RESISTOR—22,000 ohms, 1/2 w, carbon
URD-089	R6, 7, 21	RESISTOR—47,000 ohms, 1/2 w, carbon
URD-105	R18	RESISTOR—220,000 ohms, 1/2 w, carbon
URD-113	R4, 12, 13	RESISTOR—470,000 ohms, 1/2 w, carbon
URD-129	R5	RESISTOR—2.2 meg, 1/2 w, carbon
URD-139	R10	RESISTOR—5.6 meg, 1/2 w, carbon
URF-049	R17	RESISTOR—1000 ohms, 2 w, carbon
		SPECIALIZED REPLACEMENT PARTS
RAB-001		BEAM-A-SCOPE—Cabinet back and loop assembly (Models 203, 205)
RAB-003		BEAM-A-SCOPE—Cabinet back and loop assembly (Model 200)
RAU-002		CABINET—Brown plastic (Model 200)
RAV-025		CABINET—Walnut wood (Model 203)
RAV-026		CABINET—Blonde wood (Model 205)
RAV-027		CABINET—Maple wood (Model 205)
RAU-371		Cabinet (202)
RAU-003		Cabinet (201)

PART NO.	SYMBOL	DESCRIPTION
		SPECIALIZED REPLACEMENT PARTS (Cont'd)
RAX-001		PULLEY—Idler pulley assembly
RCC-013	C19	CAPACITOR—0.1 mfd, 200 v, paper
RCC-040	C16, 17, 18	CAPACITOR—.01 mfd, 600 v, paper
RCC-045	C4, 11, 20	CAPACITOR—.05 mfd, 600 v, paper
RCE-037	C21A, 21B	CAPACITOR—50-50 mfd, 150 v, dry electrolytic
RCT-015	C1A, 1B	CONDENSER—Tuning condenser (includes C2 and C3)
RDC-001		CORD—Drive cord assembly
RDD-001		DRUM—Drive drum and shaft assembly
RDE-001		ESCUTCHEON—Dial escutcheon (Models 203, 205)
RDG-002		PLATE—Dial back plate assembly
RDK-006		KNOB—Control knob
RDS-030		SCALE—Dial scale (Models 203, 205)
RDS-031		SCALE—Dial scale (Models 200, 201)
RHM-004		CLIP—Speed clip for dial scale (Model 200)
RHM-005		CLIP—Speed clip for dial scale (Models 203, 205)
RHM-016		CLIP—Osc. coil mtg. clip
RJS-003		TUBE SOCKET—Octal base tube socket (12SA7)
RJS-006		TUBE SOCKET—Octal base tube socket
RJS-053		SOCKET—Pilot lamp socket
RLC-021	T4	COIL—Oscillator coil
RRC-002	R8, S1	VOLUME CONTROL—2.0 meg potentiometer, includes power switch
RRW-008	R16	RESISTOR—18 ohms, 1 w, wirewound
RTL-001	T1	TRANSFORMER—1st I.F. transformer
RTL-029	T2	TRANSFORMER—2nd I.F. transformer
RTO-003	T3	TRANSFORMER—Output transformer
RWL-009	P1	CORD—Power cord and plug
RDP-002		Dial Pointer

MODELS 210, 212, 211

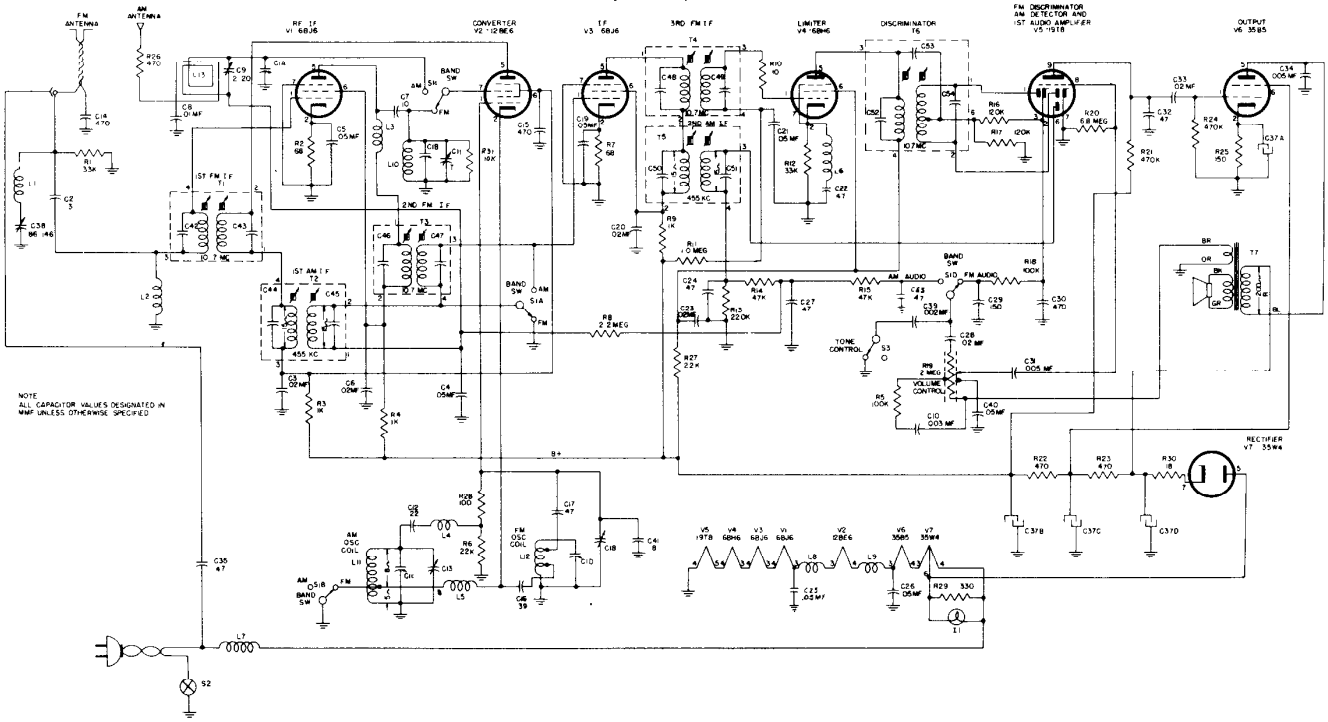

MODELS 210, 211, 212—REPLACEMENT PARTS LIST

Cat. No.	Symbol	Description	Suggested Unit List Price
UNIVERSAL REPLACEMENT PARTS			
UCC-621	C39	CAPACITOR—.002 mfd., 600 v., paper	$0.25
UCC-623	C10	CAPACITOR—.003 mfd., 600 v., paper	.25
UCC-625	C31, 34	CAPACITOR—.005 mfd., 600 v., paper	.25
UCC-630	C8	CAPACITOR—.01 mfd., 600 v., paper	.30
UCC-631	C3, 6, 20, 23, 28, 33	CAPACITOR—.02 mfd., 600 v., paper	.30
UCC-635	C4, 5, 19, 25, 26, 21, 36, 40	CAPACITOR—.05 mfd., 600 v., paper	.40
UCU-020	C24, 27, 32, 35	CAPACITOR—47 mmf., ±20%, mica	.25
UCU-032	C29	CAPACITOR—150 mmf., ±20%, mica	.25
UCU-044	C30	CAPACITOR—470 mmf., ±20%, mica	.30
UOP-557		SPEAKER—5¼-inch PM speaker	4.75
URD-001	R10	RESISTOR—10 ohms, ½ w., carbon	.13
URD-025	R2, 7, 28	RESISTOR—100 ohms, ½ w., carbon	.13
URD-037	R29	RESISTOR—330 ohms, ½ w., carbon	.13
URD-041	R26	RESISTOR—470 ohms, ½ w., carbon	.13
URD-049	R3, 4, 9	RESISTOR—1000 ohms, ½ w., carbon	.13
URD-057	R27	RESISTOR—2200 ohms, ½ w., carbon	.13
URD-081	R6	RESISTOR—22,000 ohms, ½ w., carbon	.13
URD-085	R1, 12	RESISTOR—33,000 ohms, ½ w., carbon	.13
URD-089	R14, 15	RESISTOR—47,000 ohms, ½ w., carbon	.13
URD-097	R5, 18	RESISTOR—100,000 ohms, ½ w., carbon	.13
URD-099	R16, 17	RESISTOR—120,000 ohms, ½ w., carbon	.13
URD-105	R13	RESISTOR—220,000 ohms, ½ w., carbon	.13
URD-113	R21, 24	RESISTOR—470,000 ohms, ½ w., carbon	.13
URD-121	R11	RESISTOR—1.0 meg., ½ w., carbon	.13
URD-129	R8	RESISTOR—2.2 meg., ½ w., carbon	.13
URD-141	R20	RESISTOR—6.8 meg., ½ w., carbon	.13
URE-029	R25	RESISTOR—150 ohms, 1 w., carbon	.17
URE-041	R22, 23	RESISTOR—470 ohms, 1 w., carbon	.17
SPECIALIZED REPLACEMENT PARTS			
RAA-007		ARM—Switch arm for tone control	$0.50
RAB-074	L13	LOOP AND BACK ASSEMBLY FOR MODELS 210 AND 211	2.15
RAB-075	L13	LOOP AND BACK ASSEMBLY FOR MODEL 212	2.25
RAU-036		CABINET—White plastic cabinet for Model 211	10.50
RAU-037		CABINET—Brown plastic cabinet for Model 210	8.50
RAV-057		CABINET—Wood cabinet for Model 212	17.50
RCE-065	C37A, B, C, D	CAPACITOR—Electrolytic capacitor	3.45
RCT-031	C1A, B, C, D, C11, 13	CAPACITOR—Tuning capacitor	7.25
RCW-176	C14, 15	CAPACITOR—470 mmf., ±20%, max. neg., ceramic	.60
RCW-1052	C17	CAPACITOR—47 mmf., ±20%, max. neg., ceramic	.60
RCW-1057	C16	CAPACITOR—39 mmf., ±10%, max. neg., ceramic	.60
RCW-1060	C7	CAPACITOR—10 mmf., ±20%, zero temp. coef., ceramic	.60

Cat. No.	Symbol	Description	Suggested Unit List Price
SPECIALIZED REPLACEMENT PARTS (Cont'd)			
RCW-2010	C22	CAPACITOR—47 mmf., ±5%, zero temp. coef., ceramic	$0.60
RCW-2033	C41	CAPACITOR—8 mmf., ±10%, max. neg., ceramic	.60
RCW-3004	C2	CAPACITOR—3 mmf., ±20%, zero temp. coef., ceramic	.60
RCW-3016	C12	CAPACITOR—20 mmf., ±5%, max. neg., ceramic	.60
RCY-016	C9	CAPACITOR—2-20 mmf., trimmer capacitor	.35
RCY-029	C18	CAPACITOR—FM oscillator trimmer	1.00
RCY-044	C38	CAPACITOR—86-146 mmf., trimmer capacitor	.55
RDE-031		ESCUTCHEON	.65
RDK-130		KNOB—Fawn for Model 210 tone control	.30
RKD-131		KNOB—Fawn for Model 210 tuning control	.30
RDK-132		KNOB—Fawn for Model 210 volume control and band switch	.20
RDK-133		KNOB—Maroon for volume control and band switch on Models 211, 212	.20
RDK-134		KNOB—Maroon for tone control on Models 211, 212	.30
RDK-135		KNOB—Maroon for tuning on Models 211, 212	.30
RDP-039		POINTER ASSEMBLY	.15
RDS-071		SCALE, DIAL SCALE	2.05
RDW-009		WINDOW	.20
RHG-015		GROMMET—Rubber grommet	.05
RJS-033		SOCKET—For dial light	.45
RJS-105		SOCKET—7-prong tube socket	.20
RJS-118		SOCKET—9-prong tube socket	.35
RJX-019		SOCKET—Female interlock socket on power cord	.40
RLA-012	L4	CHOKE—FM oscillator grid choke	1.05
RLB-026	L10	COIL—FM R-F coil	.65
RLC-066	L11	COIL—AM oscillator coil	.90
RLC-067	L12	COIL—FM oscillator coil (length of 300-ohm line between tuning condenser and terminal board tapped at the converter tube)	.30
RLI-005	L3, 8, 9	CHOKE—FM choke	1.00
RLI-044	L7	CHOKE—Power line choke	.75
RLI-056	L2	CHOKE—FM antenna choke	.65
RLI-057	L5	CHOKE—FM oscillator cathode choke	.70
RLI-058	L6	CHOKE—Limiter cathode choke	.65
RLI-062	L1	CHOKE—FM Choke	1.00
RMG-009		GEAR SEGMENT—For tone control	.30
RMS-004		SPRING—Dial cord tension spring	.05
RRC-082	R19, S2	VOLUME CONTROL AND POWER SWITCH	1.65
RRW-008	R30	RESISTOR—Flexible resistor, 18 ohms, 1 w., ±10%	.35
RSI-003		SOCKET—Male interlock on chassis	.15
RSW-056	S1	SWITCH—Bandchange switch	1.85
RSW-057	S3	SWITCH—Tone control switch	1.05
RTD-006	T6	TRANSFORMER—Discriminator transformer	4.95
RTL-054	T5	TRANSFORMER—AM-2nd I-F transformer	2.40
RTL-077	T1, 3, 4	TRANSFORMER—1st, 2nd and 3rd FM I-F transformer	2.50
RTL-078	T2	TRANSFORMER—AM 1st I-F transformer	2.45
RTO-049	T7	TRANSFORMER—Output transformer	2.60
RHB-008		Emblem Button	

PRICES SUBJECT TO CHANGE WITHOUT NOTICE

MODEL 218

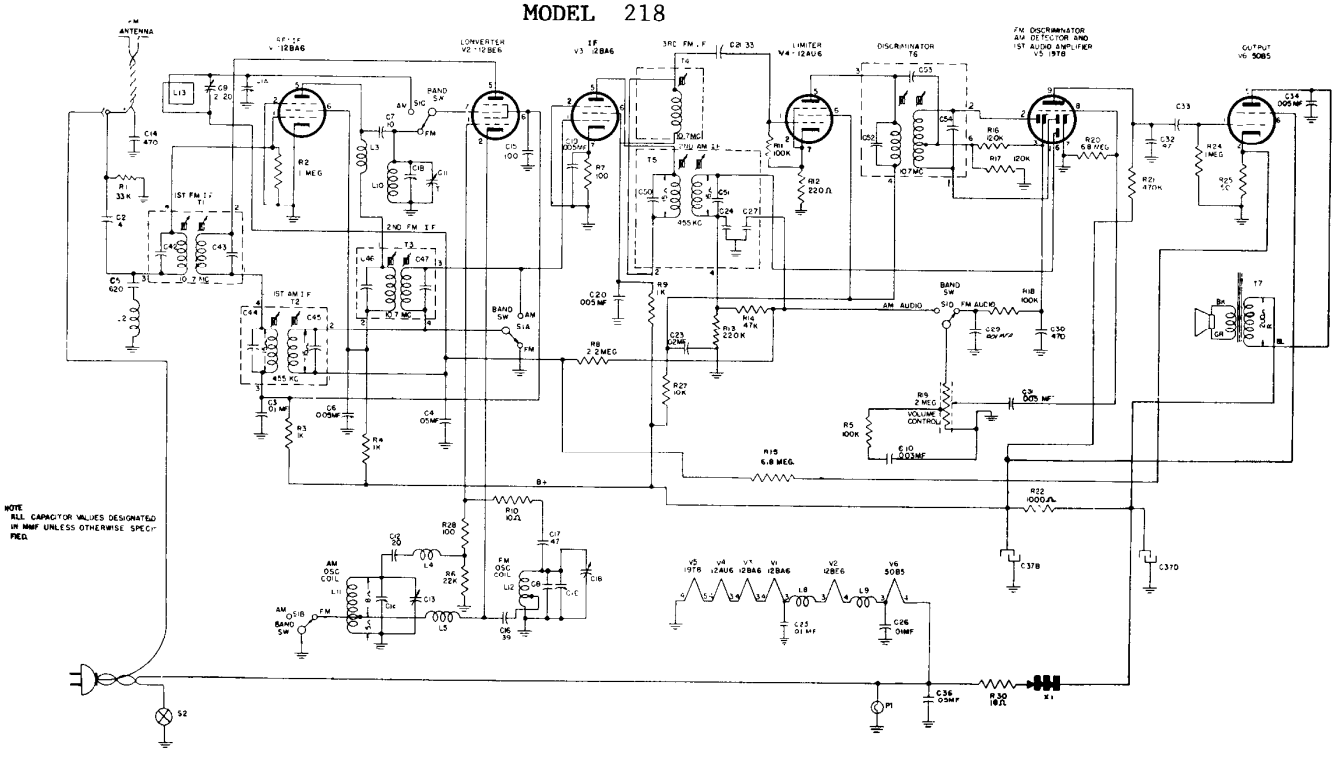

FM ANTENNA
CONVERTER V2 12BE6
IF V3 12BA6
LIMITER V4 12AU6
DISCRIMINATOR T6
FM DISCRIMINATOR AM DETECTOR AND 1ST AUDIO AMPLIFIER V5 19T8
OUTPUT V6 50B5
1ST FM I F T1
2ND FM I F T3
1ST AM I F T2
3RD FM I F T4
2ND AM I F T5
BAND SW
AM AUDIO
FM AUDIO
VOLUME CONTROL
AM OSC COIL
FM OSC COIL
B+
NOTE
ALL CAPACITOR VALUES DESIGNATED IN MMF UNLESS OTHERWISE SPECIFIED.

MODEL 218
REPLACEMENT PARTS LIST

UNIVERSAL REPLACEMENT PARTS

Cat. No.	Symbol	Description	Suggested Unit List Price
UCC-037	C10	CAPACITOR—.003 mfd., 600 v., paper	$0.25
UCC-039	C6, 19, 20, 31, 34	CAPACITOR—.005 mfd:, 600 v., paper	.25
UCC-040	C3, 23, 25, 26, 33	CAPACITOR—.01 mfd., 600 v., paper	.25
UCC-045	C4, 36	CAPACITOR—.05 mfd., 600 v., paper	.30
UCU-001	C2	CAPACITOR—4 mmf., 500 v., mica	.25
UCU-020	C32	CAPACITOR—47 mmf., 500 v., mica	.25
UCU-028	C15	CAPACITOR—100 mmf., 500 v., mica	.25
UCU-044	C29, 30	CAPACITOR—470 mmf., 500 v., mica	.30
UCU-516	C21	CAPACITOR—33 mmf., 500 v., mica	.30
UCU-2047	C5	CAPACITOR—620 mmf., 500 v., mica	.30
UOP-577		SPEAKER	4.00
URD-001	R10	RESISTOR—10 ohms, ½ w., carbon	.13
URD-007	R30	RESISTOR—18 ohms, ½ w., carbon	.13
URD-025	R7, 28	RESISTOR—100 ohms, ½ w., carbon	.13
URD-033	R12	RESISTOR—220 ohms, ½ w., carbon	$0.13
URD-049	R3, 4, 9	RESISTOR—1000 ohms, ½ w., carbon	.13
URD-073	R27	RESISTOR—10,000 ohms, ½ w., carbon	.13
URD-081	R6	RESISTOR—22,000 ohms, ½ w., carbon	.13
URD-085	R1	RESISTOR—33,000 ohms, ½ w., carbon	.13
URD-089	R14	RESISTOR—47,000 ohms, ½ w., carbon	.13
URD-097	R5, 11, 18	RESISTOR—100,000 ohms, ½ w., carbon	.13
URD-099	R16, 17	RESISTOR—120,000 ohms, ½ w., carbon	.13
URD-105	R13	RESISTOR—220,000 ohms, ½ w., carbon	.13
URD-113	R21, 24	RESISTOR—470,000 ohms, ½ w., carbon	.13
URD-121	R2	RESISTOR—1 meg., ½ w., carbon	.13
URD-129	R8	RESISTOR—2.2 meg., ½ w., carbon	.13
URD-141	R15, 20	RESISTOR—6.8 meg., ½ w., carbon	.13
URE-029	R25	RESISTOR—150 ohms, 1 w., carbon	.17
URF-049	R22	RESISTOR—1000 ohms, 2 w., carbon	.25

SPECIALIZED REPLACEMENT PARTS

RAB-104	L13	LOOP AND BACK ASSEMBLY	$1.50
RAU-309		CABINET—Brown	7.95
RCE-101	C37A, 37B	CAPACITOR—80 mfd.-40 mfd., 150 v., electrolytic	2.00
RCT-038	C1A, 1B, 1C, 1D, C11, 13	CAPACITOR—Tuning capacitor	6.95
*RCW-176	C14	CAPACITOR—470 mmf., Hi-K	.60
*RCW-1043	C17	CAPACITOR—47 mmf.	.60
*RCW-1057	C16	CAPACITOR—39 mmf.	.60
*RCW-1060	C7	CAPACITOR—10 mmf.	.60
*RCW-1070	C12	CAPACITOR—20 mmf., ceramic	.60
*RCW-1075	C8	CAPACITOR—4 mmf., ceramic	.60
RCY-055	C18	CAPACITOR—Trimmer	.65
RCY-056	C9	CAPACITOR—2-20 mmf., trimmer	.40
*RDC-032		CORD—Dial cord	2.50/spool
RDK-177		KNOB AND BEZEL ASSEMBLY	.45
*RDP-048		POINTER	.25
RDS-086		PLATE—Dial scale back plate	1.10
RDW-029		WINDOW—For dial scale	.50
*RER-001	X1	RECTIFIER—Selenium rectifier	.66
*RHF-006		CHASSIS FOOT	.15
*RHH-002		STUD—Tri-mount	.10
RHH-004		SNAP FASTENER	.02
RII-028		INSULATOR—Pointer insulator	.15
RIX-001		BRACKET—Tuning shaft bracket and insulating strip	.10
*RJS-118		SOCKET—9 prong tube socket for V5	$0.35
*RJS-125		SOCKET—7 prong tube socket for V1, V2, V3, V4, V6	.20
RJX-033		SOCKET ASSEMBLY—For pilot light	.60
RJX-034		INTERLOCK ASSEMBLY—Female	.45
*RLB-029	L10	COIL—FM r-f choke coil	.15
RLC-092	L11	COIL—B-C oscillator coil	.90
RLC-093	L12	COIL—FM oscillator coil	.90
*RLI-085	L4, 8, 9	COIL—2 mmh. choke	.25
RLI-087	L3, 5	COIL—.5 mmh. choke	.20
RLI-088	L2	COIL—FM antenna choke	.13
*RMS-035		SPRING—Dial cord tension	.05
RUM-054		SHAFT—Tuning	.30
RRC-111	R19, S2	VOLUME CONTROL	1.60
*RSI-003		INTERLOCK ASSEMBLY—Male	.15
*RSW-072	S1	BAND SWITCH	1.75
*RTD-006	T6	TRANSFORMER—Discriminator	4.95
RTL-097	T2	TRANSFORMER—1st BC i-f	1.90
RTL-098	T5	TRANSFORMER—2nd BC i-f	2.10
RTL-099	T1, 3	TRANSFORMER—1st and 2nd FM i-f	2.45
RTL-100	T4	TRANSFORMER—3rd FM i-f	1.10
*RTO-039	T7	TRANSFORMER—Output	2.90
RWL-022		POWER CORD—3 wire	1.25

MODEL 218H

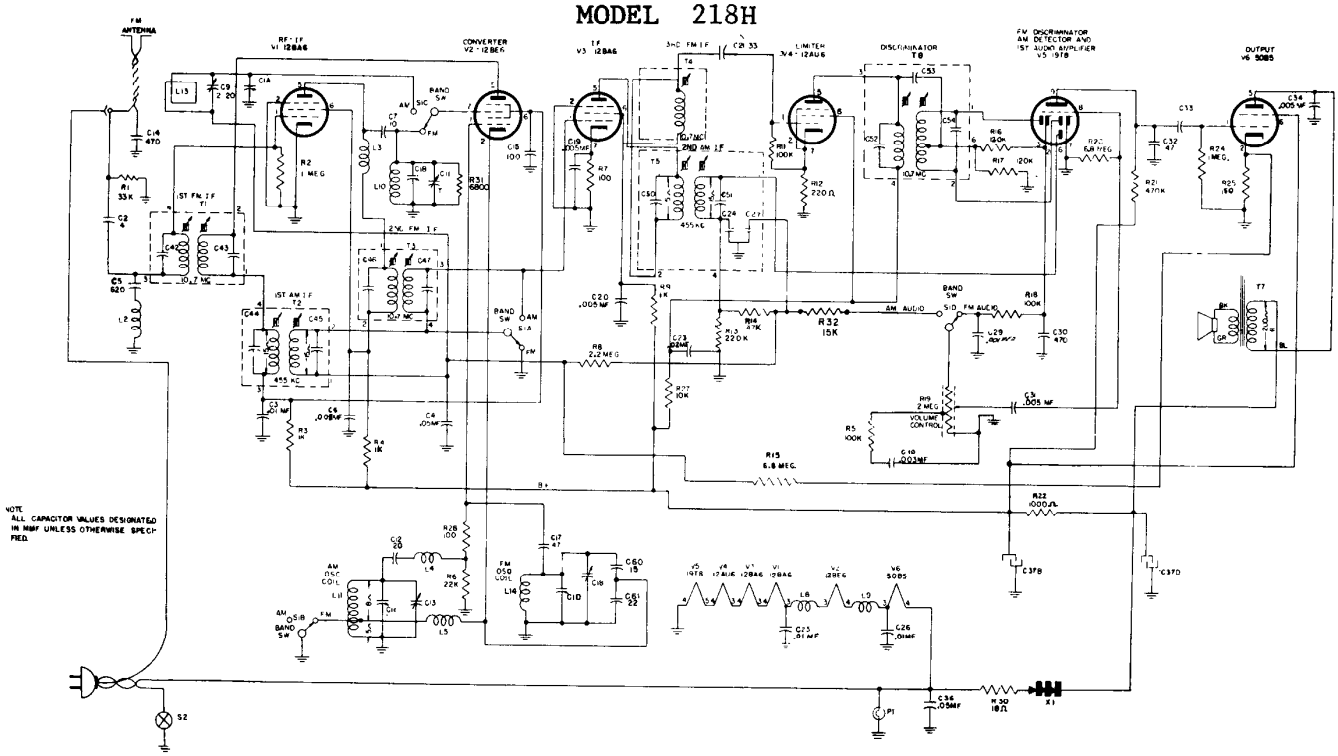
FM ANTENNA
RF - IF V1 12BA6
CONVERTER V2 - 12BE6
IF V3 12BA6
3RD FM I.F.
LIMITER V4 - 12AU6
DISCRIMINATOR T8
FM DISCRIMINATOR AM DETECTOR AND 1ST AUDIO AMPLIFIER V5 - 9I8
OUTPUT V6 5085
1ST FM I.F.
2ND FM I.F.
1ST AM I.F.
BAND SW
AM AUDIO
FM AUDIO
VOLUME CONTROL
R32 15K
R15 6.8 MEG.
B+
AM OSC COIL
FM OSC COIL
AM OSC BAND SW
S2
P1
X1
NOTE
ALL CAPACITOR VALUES DESIGNATED IN MMF UNLESS OTHERWISE SPECIFIED.

REPLACEMENT PARTS LIST 218H

Cat. No.	Symbol	Description	Suggested Unit List Price
UNIVERSAL REPLACEMENT PARTS			
UCC-037	C10	CAPACITOR—.003 mfd., 600 v., paper	$0.25
UCC-039	C6, 19, 20, 31, 34	CAPACITOR—.005 mfd., 600 v., paper	.25
UCC-040	C3, 23, 25, 26, 33	CAPACITOR—.01 mfd., 600 v., paper	.25
UCC-045	C4, 36	CAPACITOR—.05 mfd., 600 v., paper	.30
UCU-001	C2	CAPACITOR—4 mmf., 500 v., mica	.25
UCU-020	C32	CAPACITOR—47 mmf., 500 v., mica	.25
UCU-028	C15	CAPACITOR—100 mmf., 500 v., mica	.25
UCU-044	C29, 30	CAPACITOR—470 mmf., 500 v., mica	.30
UCU-516	C21	CAPACITOR—33 mmf., 500 v., mica	.30
UCU-2047	C5	CAPACITOR—620 mmf., 500 v., mica	.30
UOP-577		SPEAKER	4.00
URD-001	R10	RESISTOR—10 ohms, ½ w., carbon	.13
URD-007	R30	RESISTOR—18 ohms, ½ w., carbon	.13
URD-025	R7, 28	RESISTOR—100 ohms, ½ w., carbon	.13
URD-033	R12	RESISTOR—220 ohms, ½ w., carbon	$0.13
URD-049	R3, 4, 9	RESISTOR—1000 ohms, ½ w., carbon	.13
URD-073	R27	RESISTOR—10,000 ohms, ½ w., carbon	.13
URD-081	R6	RESISTOR—22,000 ohms, ½ w., carbon	.13
URD-085	R1	RESISTOR—33,000 ohms, ½ w., carbon	.13
URD-089	R14	RESISTOR—47,000 ohms, ½ w., carbon	.13
URD-097	R5, 11, 18	RESISTOR—100,000 ohms, ½ w., carbon	.13
URD-099	R16, 17	RESISTOR—120,000 ohms, ½ w., carbon	.13
URD-105	R13	RESISTOR—220,000 ohms, ½ w., carbon	.13
URD-113	R21, 24	RESISTOR—470,000 ohms, ½ w., carbon	.13
URD-121	R2	RESISTOR—1 meg., ½ w., carbon	.13
URD-129	R8	RESISTOR—2.2 meg., ½ w., carbon	.13
URD-141	R15, 20	RESISTOR—6.8 meg., ½ w., carbon	.13
URE-029	R25	RESISTOR—150 ohms, 1 w., carbon	.17
URF-049	R22	RESISTOR—1000 ohms, 2 w., carbon	.25
SPECIALIZED REPLACEMENT PARTS			
RAB-104	L13	LOOP AND BACK ASSEMBLY	$1.50
RAU-309		CABINET—Brown	7.95
RCE-101	C37A, 37B	CAPACITOR—80 mfd.-40 mfd., 150 v., electrolytic	2.00
RCT-038	C1A, 1B, 1C, 1D, C11, 13	CAPACITOR—Tuning capacitor	6.95
*RCW-176	C14	CAPACITOR—470 mmf., Hi-K	.60
*RCW-1043	C17	CAPACITOR—47 mmf.	.60
*RCW-1057	C16	CAPACITOR—39 mmf.	.60
*RCW-1060	C7	CAPACITOR—10 mmf.	.60
*RCW-1070	C12	CAPACITOR—20 mmf., ceramic	.60
*RCW-1075	C8	CAPACITOR—4 mmf., ceramic	.60
RCY-055	C18	CAPACITOR—Trimmer	.65
RCY-056	C9	CAPACITOR—2-20 mmf., trimmer	.40
*RDC-032		CORD—Dial cord	2.50 spool
RDK-177		KNOB AND BEZEL ASSEMBLY	.45
*RDP-048		POINTER	.25
RDS-086		PLATE—Dial scale back plate	1.10
RDW-029		WINDOW—For dial scale	.50
*RER-001	X1	RECTIFIER—Selenium rectifier	.66
*RHF-006		CHASSIS FOOT	.15
*RHH-002		STUD—Tri-mount	.10
RHH-004		SNAP FASTENER	.02
RII-028		INSULATOR—Pointer insulator	.15
RIX-001		BRACKET—Tuning shaft bracket and insulating strip	.10
*RJS-118		SOCKET—9 prong tube socket for V5	$0.35
*RJS-125		SOCKET—7 prong tube socket for V1, V2, V3, V4, V6	.20
RJX-033		SOCKET ASSEMBLY—For pilot light	.60
RJX-034		INTERLOCK ASSEMBLY—Female	.45
*RLB-029	L10	COIL—FM r-f choke coil	.15
RLC-092	L11	COIL—B-C oscillator coil	.90
*RLI-085	L4, 8, 9	COIL—2 mmh. choke	.25
RLI-087	L3, 5	COIL—.5 mmh. choke	.20
RLI-088	L2	COIL—FM antenna choke	.13
*RMS-035		SPRING—Dial cord tension	.05
RUM-054		SHAFT—Tuning	.30
RRC-111	R19, S2	VOLUME CONTROL	1.60
*RSI-003		INTERLOCK ASSEMBLY—Male	.15
*RSW-072	S1	BAND SWITCH	1.75
RTL-097	T2	TRANSFORMER—1st BC i-f	1.90
RTL-098	T5	TRANSFORMER—2nd BC i-f	2.10
RTL-099	T1, 3	TRANSFORMER—1st and 2nd FM i-f	2.45
RTL-100	T4	TRANSFORMER—3rd FM i-f	1.10
*RTO-039	T7	TRANSFORMER—Output	2.90
RWL-022		POWER CORD—3 wire	1.25
*URD 069	R31	RESISTOR -6800 ohms, ½ w.	$0.13
*RCW-1077	C61	CAPACITOR -22 mmf., ceramic	.60
*RCW 2027	C60	CAPACITOR 15 mmf., ceramic	
RDS-093		DIAL SCALE Model 218 "H" back plate dial scale	–
RLC 102	L14	COIL FM oscillator coil	–
RTD-010	T8	TRANSFORMER Discriminator IF transformer	--
URD-077	R32	RESISTOR 15,000 ohms, ½ w.	13

MODELS 219, 220, 221

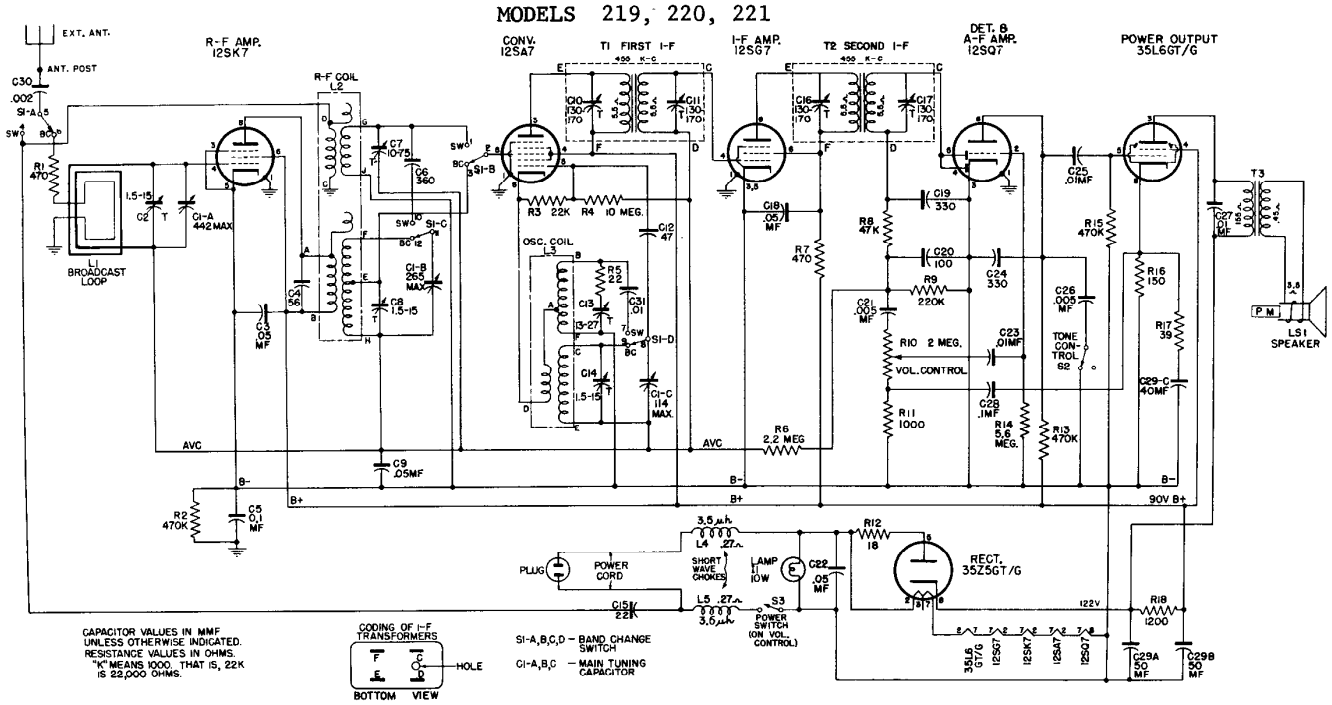

PART NO.	SYMBOL	DESCRIPTION
UNIVERSAL G-E REPLACEMENT PARTS		
UCC-036	C30	Capacitor—.002 mf, 600 V., paper
UCC-039	C21	Capacitor—.005 mf, 600 V., paper
UCC-040	C23, C25, C27, C31	Capacitor—.01 mf, 600 V., paper
UCC-045	C3, C9, C18, C22	Capacitor—.05 mf, 600 V., paper
UDL-018	I1	Lamp—110 125 V., 10 W.
URD-009	R5	Resistor—22 ohm, ½ watt, carbon
URD-015	R17	Resistor—39 ohm, ½ watt, carbon
URD-029	R16	Resistor—150 ohm, ½ watt, carbon
URD-041	R1, R7	Resistor—470 ohm, ½ watt, carbon
URD-049	R11	Resistor—1000 ohm, ½ watt, carbon
URD-081	R3	Resistor—22,000 ohm, ½ watt, carbon
URD-089	R8	Resistor—47,000 ohm, ½ watt, carbon
URD-105	R9	Resistor—220,000 ohm, ½ watt, carbon
URD-113	R2, R13, R15	Resistor—470,000 ohm, ½ watt, carbon
URD-129	R6	Resistor—2.2 meg., ½ watt, carbon
URD-139	R14	Resistor—5.6 meg., ½ watt, carbon
URD-145	R4	Resistor—10 meg., ½ watt, carbon
URE-007	R12	Resistor—18 ohm, 1 watt, carbon
URF-051	R18	Resistor—1200 ohm, 2 watt, carbon
SPECIALIZED G-E REPLACEMENT PARTS		
RAA-003	—	Switch arm, with set screw, for Band Change and Tone Control switches—switch half
RAA-004	—	Switch arm, with set screw, for Band Change and Tone Control switches—flipper half
RAB-005	—	Cabinet back, for Model 220
RAB-006	—	Cabinet back, for Model 221
RAB-007	—	Cabinet back, for Model 219
RAD-006	—	Antenna bracket, left side
RAD-007	—	Antenna bracket, right side
RAD-008	—	Baffle bracket—models 219, 220
RAE-001	—	Baffle shield
RAG-001	—	Grille—models 219, 220
RAU-004	—	Cabinet—model 219
RAU-005	—	Cabinet—model 220
RAV-002	—	Cabinet—model 221
RCC-004	C26	Capacitor—.005 mf, 600 V., paper
RCC-040	C23, C25, C27	Capacitor—.01 mf, 600 V., paper
RCC-045	C22	Capacitor—.05 mf, 600 V., paper
RCC-046	C5, C28	Capacitor—0.1 mf, 600 V., paper
RCE-001	C29-A, -B, -C	Capacitor—50–50–40 mf, 150–150–25 V., electrolytic
RCT-004	C1, C7, C8, C14	Capacitor—main tuning capacitor assembly

PART NO.	SYMBOL	DESCRIPTION
SPECIALIZED G-E REPLACEMENT PARTS (Cont'd)		
RCU-053	C4	Capacitor—56 mmf, mica
RCU-108	C15	Capacitor—22 mmf, mica
RCU-110	C12	Capacitor—47 mmf, mica
RCU-112	C20	Capacitor—100 mmf, mica
RCU-115	C19, C24	Capacitor—330 mmf, mica
RCU-164	C6	Capacitor—360 mmf, mica
RCY-002	C2	Capacitor—trimmer—1.5–15 mmf
RCY-003	C13	Capacitor—trimmer—13–27 mmf
RDE-004	—	Escutcheon—model 221
RDF-002	—	Felt washer, smaller, under round knobs—models 220, 221
RDF-004	—	Felt washer, larger, under flipper knobs—models 220, 221
RDK-003	—	Knob, round—model 220
RDK-005	—	Knob, flipper—model 220
RDK-008	—	Knob, round—model 219
RDK-009	—	Knob, round—model 221
RDK-010	—	Knob, flipper—model 221
RDK-011	—	Knob, flipper—model 219
RDP-004	—	Pointer assembly
RDS-005	—	Dial scale assembly
RDX-005	—	Dial parts—back plate and bracket assembly
RDX-006	—	Shaft, hair pin cotter, and drive shaft bracket
RDX-007	—	Cord—for dial pointer
RHG-001	—	Grommet—cushion used for mounting tuning capacitor
RHU-002	—	Spacer—for RHG-001
RHX-001	—	Chassis mounting bolt and washer
RIT-001	—	Cover for electrolytic capacitor
RJS-003	—	Tube socket—octal
RJS-004	—	Socket for electrolytic capacitor
RJS-010	—	Socket—dial light
RLB-001	L2	Coil—RF
RLC-003	L3	Coil—oscillator
RLI-001	L4, L5	Coil—power cord choke
RLL-003	L1	Loop Assembly
RMS-001	—	Spring—on dial string drum
ROP-005	LS1	Speaker—5¼ in. PM
RRC-004	R10	Volume Control—2 meg.
RSW-004	S2	Switch—Tone Control
RSW-005	S1	Switch—Band Change
RTL-001	T1	I-F Transformer assembly
RTL-002	T2	I-F Transformer assembly
RTO-003	T3	Transformer—output
RWL-003	—	Power cord

MODEL 226

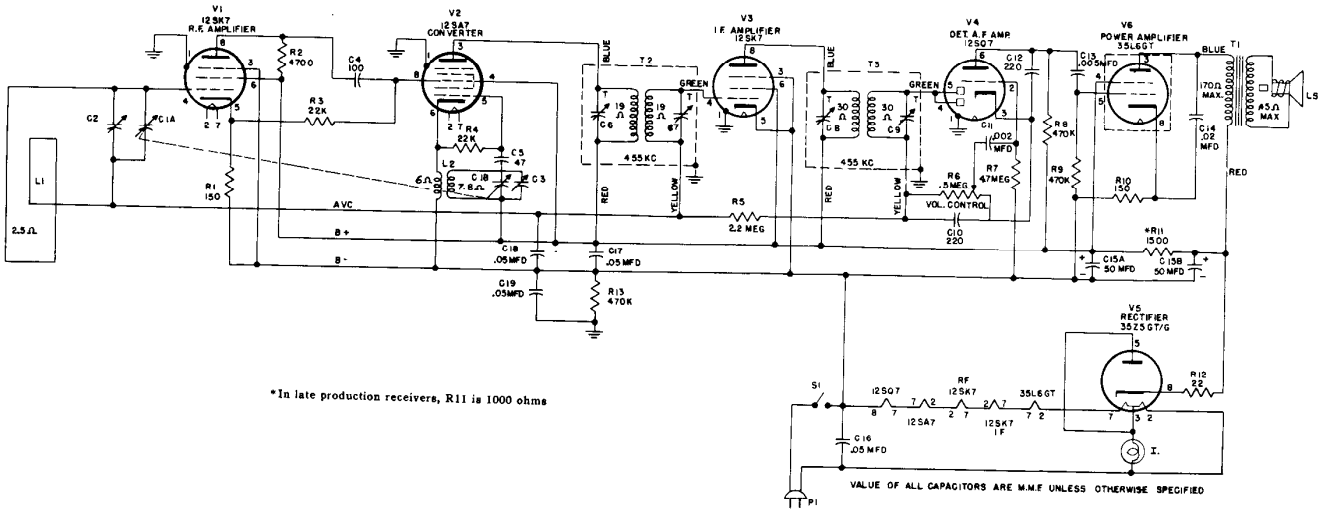

*In late production receivers, R11 is 1000 ohms

MODEL 226 REPLACEMENT PARTS LIST

CAT. NO.	SYMBOL	DESCRIPTION	SUG-GESTED UNIT LIST PRICE
UNIVERSAL REPLACEMENT PARTS			
UCC-036	C11	CAPACITOR—.002 mf., 600 v., paper (alternate replacement for RCW-3013)	$0.30
UCC-039	C13	CAPACITOR—.005 mf., 600 v., paper (alternate replacement for RCW-3013)	.30
UCC-041	C14	CAPACITOR—.02 mf., 600 v., paper	.25
UCC-045	C16, 17, 18, 19	CAPACITOR—.05 mf., 600 v., paper	.30
UCU-020	C5	CAPACITOR—47 mmf., mica	.60
UCU-028	C4	CAPACITOR—100 mmf., mica	.25
UCU-1036	C10, 12	CAPACITOR—220 mmf., mica (alternate replacement for RCW-3013)	.30
URD-009	R12	RESISTOR—22 ohms, ½ w., carbon	.13
URD-029	R1, 10	RESISTOR—150 ohms, ½ w., carbon	.13
URD-065	R2	RESISTOR—4700 ohms, ½ w., carbon	.13
URD-081	R3, 4	RESISTOR—22,000 ohms, ½ w., carbon	.13
URD-113	R8, 9, 13	RESISTOR—470,000 ohms, ½ w., carbon	.13
URD-129	R5	RESISTOR—2.2 meg., ½ w., carbon	.13
URD-137	R7	RESISTOR—4.7 meg., ½ w., carbon	.13
URF-053	R11	RESISTOR—1500 ohms, 2 w., carbon	.25
UOP-577	LS	LOUDSPEAKER—	4.00
SPECIALIZED REPLACEMENT PARTS			
RAB-108	L1	CABINET BACK—With antenna loop	$1.60
RAU-311		CABINET—Brown cabinet (plastic)	6.95
RCE-050	C15A, B	CAPACITOR—50 mf., 150 v.; 50 mf., 150 v.; dry electrolytic	2.10
RCT-036	C1A, B, C2, 3	CAPACITOR—Two-section tuning capacitor with trimmers	3.95
RCW-3013	C10, 11, 12, 13	CAPACITOR—220 mmf., .002 mf., 220 mmf., .005 mf. four section, ceramic (see UCC-036, UCC-039, UCU-1036)	$1.00
RDC-032		CORD—Bulk dial cord	2.50
RDK-181		KNOB—Volume or tuning control knob	.15
RDP-049		POINTER—Dial scale pointer	.25
RDS-089		DIAL SCALE	.95
RHC-017		CLIP—Mounting clip for oscillator coil L2	.02
RHG-018		GROMMET—Cushion mounting for tuning capacitor C1A and C1B	.05
RHH-004		SNAP FASTENER—Holds loop back to cabinet	.02
RHJ-005		SPACER—Spacer bushing for mounting tuning capacitor	.02
RHM-039		CLIP—Clip for pilot light	.10
RJC-004		CONNECTOR—Antenna loop lead connecting clip	.02
RJS-003		SOCKET—Tube socket	.20
RJS-096		SOCKET ASSEMBLY—Pilot light socket	.35
RLC-090	L2	COIL—Oscillator coil	.90
RMS-120		SPRING—Dial cord tension spring	.15
RMX-149		SHAFT AND BUSHING—Tuning shaft and mounting bushing	.60
RRC-077	R6, S1	POTENTIOMETER—500,000 ohms; volume control and switch S1	1.65
RTL-092	T2	TRANSFORMER—First i-f transformer	2.10
RTL-093	T3	TRANSFORMER—Second i-f transformer	2.10
RTO-075	T1	TRANSFORMER—Audio output transformer	2.10
RWL-009		POWER CORD—A-c power cord and plug	.70

MODEL 230

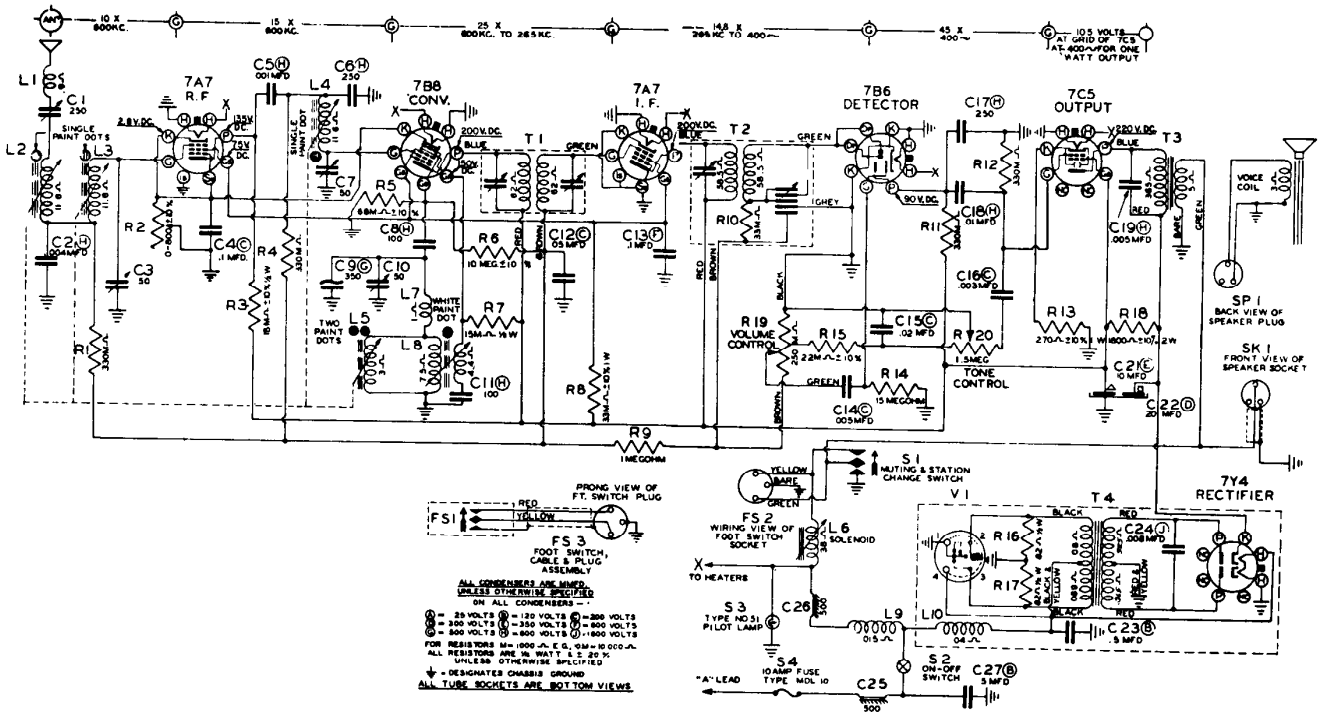
7A7 R.F.
7B8 CONV.
7A7 I.F.
7B6 DETECTOR
7C5 OUTPUT
7Y4 RECTIFIER
SP 1 BACK VIEW OF SPEAKER PLUG
SK 1 FRONT VIEW OF SPEAKER SOCKET
S1 MUTING & STATION CHANGE SWITCH
S2 ON-OFF SWITCH
S3 TYPE NO.51 PILOT LAMP
S4 10 AMP FUSE TYPE MDL 10
FS 1
FS 2 WIRING VIEW OF FOOT SWITCH SOCKET
FS 3 FOOT SWITCH, CABLE & PLUG ASSEMBLY
PRONG VIEW OF FT. SWITCH PLUG
L6 SOLENOID
TONE CONTROL
VOLUME CONTROL
VOICE COIL
TO HEATERS
"A" LEAD
ALL CONDENSERS ARE MMFD. UNLESS OTHERWISE SPECIFIED
ON ALL CONDENSERS —
FOR RESISTORS M = 1000 Ω, K Ω, MΩ = 1000 KΩ
ALL RESISTORS ARE ½ WATT ± 20 % UNLESS OTHERWISE SPECIFIED
⏚ = DESIGNATES CHASSIS GROUND
ALL TUBE SOCKETS ARE BOTTOM VIEWS

REPLACEMENT PARTS LIST MODEL 230

PURCHASE PARTS FROM NEAREST GENERAL ELECTRIC WHOLESALE DISTRIBUTOR

Cat. No.	Symbol	Description
DIAL AND TUNING MECHANISM ASSEMBLY		
RDB-012		BUTTON—Station selector button (Kaiser)
RDE-025		ESCUTCHEON—Dial scale escutcheon
RDM-002		FLAG—Indicator flag and window assembly (Frazer)
RDM-003		FLAG—Indicator flag and window assembly (Kaiser)
RDP-030		POINTER—Dial pointer assembly (Kaiser)
RDP-031		POINTER—Dial pointer assembly (Frazer)
RDS-041		SCALE—Dial scale (Frazer)
RDS-042		SCALE—Dial scale (Kaiser)
REI-007		CORE—Adjusting spring and core
RHH-005		RING—Turret screw lock ring
RJP-016		PLUG—Solenoid end plug and bracket assembly
RJS-067		SOCKET—Dial light socket and wire assembly
RLS-001	L6	COIL—Tuning solenoid and terminal assembly
RMD-001		Disc—Indexing disc
RMG-006		GEAR—Ratchet gear
RML-011		LEVER—Mounting plate and lever assembly
RMM-026		ARM—Cross arm assembly
RMR-003		RATCHET—Ratchet and bracket assembly
RMS-084		SPRING—Gear indexing spring
RMS-085		SPRING—Cross arm return spring
RMS-086		SPRING—Cam lever spring
RMS-087		SPRING—Ratchet gear return spring
RMS-088		SPRING—Lever spring
RMS-089		SPRING—Kick-off spring
RMS-090		SPRING—Tuning shaft spring
RMS-091		SPRING—Solenoid switch spring
RMS-092		SPRING—Solenoid switch contact spring
RMU-024		SHAFT—Tuning shaft and gear assembly (Kaiser)
RMU-025		SHAFT—Tuning shaft and gear assembly (Frazer)
RMX-085		ASSEMBLY—Turret assembly
UDL-005	S3	LAMP—Dial light bulb
CHASSIS COMPONENTS		
RAP-003		PLATE—Speaker mounting plate
RCE-049	C20, 21, 22	CAPACITOR—10 mfd., 300 v.; 20 mfd., 350 v., dry electrolytic
RCN-007	C24	CAPACITOR—.008 mfd., 1600 v., paper
RCN-008	C9	CAPACITOR—350 mmf., compensator
RCU-279	C6	CAPACITOR—250 mmf., mica
	C17	CAPACITOR—250 mmf., mica
RCY-025	C3	TRIMMER—R-f trimmer, 50 mmf.
RCY-026	C7	TRIMMER—Detector trimmer, 50 mmf.
RCY-027	C10	TRIMMER—Oscillator trimmer, 50 mmf.
RCY-028	C1	TRIMMER—Antenna trimmer, 250 mmf.
RDW-003		WINDOW—Dial window
REF-002	S4	FUSE—10 amp. line fuse
REM-002	C25, 26	DISC—Spark plate disc
REV—002	V1	VIBRATOR—Nonsynchronous vibrator
RHW-005		WASHER—Vibrator cushion washer
RJS-068		SOCKET—Foot switch cable plug socket
RJS-069		SOCKET—Loktal tube socket
RJS-070		SOCKET—Antenna connector and bracket assembly
RJS-071		SOCKET—Vibrator socket
RLC-048	L7	COIL—Oscillator series coil
RLC-049	L8	COIL—Oscillator shunt coil
RLI-026	L10	CHOKE—Vibrator hash choke
RLI-027	L1	CHOKE—Antenna motor noise choke
RLI-028	L9	CHOKE—Motor noise choke
*RNM-027	L2, 3	COILS—Antenna and r-f coil (right hand assembly)
*RNM-028	L4, 5	COILS—Oscillator and converter coil (left hand assembly)
ROE-001	SP1	SPEAKER—6 in. x 9 in. oval dynamic speaker (field coil not replaceable)
ROG-001		GASKET—Speaker gasket
ROX-001		CONE—Cone and voice coil assembly
RRC-047	R19, R20, S2	CONTROL—250,000 volume control, 1.5 meg-ohm tone control and power switch (Kaiser)
RRC-048	R2	POTENTIOMETER—800 ohm, sensitivity control

Cat. No.	Symbol	Description
CHASSIS COMPONENTS (Cont'd)		
RRC-049	R19, R20, S2	CONTROL—250,000 ohm, vol. control, 1.5 meg. tone control and power switch (Frazer)
RSX-012	S1	SWITCH—Band selector and muting switch assembly
RSX-013		SWITCH—Foot switch and cable assembly (63-1287)
RTL-041	T1	TRANSFORMER—1st i-f transformer
RTL-042	T2	TRANSFORMER—2nd i-f transformer
RTO-031	T5	TRANSFORMER—Speaker output transformer
RTP-043	T4	TRANSFORMER—Power transformer
RWB-001		CABLE—Battery cable (set to fuse)
RWB-002		CABLE—Battery cable (fuse to ammeter)
RWX-005	SK1	CABLE—Speaker cable and socket
UCC-003	C16	CAPACITOR—.003 mfd., 200 v., paper
UCC-005	C14	CAPACITOR—.005 mfd., 200 v., paper
UCC-009	C15	CAPACITOR—.02 mfd., 200 v., paper
UCC-011	C12	CAPACITOR—.05 mfd., 200 v., paper
UCC-013	C4	CAPACITOR—0.1 mfd., 200 v., paper
UCC-016	C23, 27	CAPACITOR—0.5 mfd., 120 v., paper
UCC-030	C13	CAPACITOR—0.1 mfd., 400 v., paper
UCC-035	C5	CAPACITOR—.001 mfd., 600 v., paper
UCC-038	C2	CAPACITOR—.004 mfd., 600 v., paper
UCC-039	C19	CAPACITOR—.005 mfd., 600 v., paper
UCC-040	C18	CAPACITOR—.01 mfd., 600 v., paper
UCU-1028	C8, 11	CAPACITOR—100 mmf., mica
URD-023	R16, 17	RESISTOR—82 ohms, ½ w., carbon
URD-027	R22	RESISTOR—120 ohms, ½ w., carbon
URD-077	R7	RESISTOR—15,000 ohms, ½ w., carbon
URD-079	R3	RESISTOR—18,000 ohms, ½ w., carbon
URD-081	R15	RESISTOR—22,000 ohms, ¼ w., carbon
URD-085	R10	RESISTOR—33,000 ohms, ½ w., carbon
URD-097	R21	RESISTOR—100,000 ohms, ¼ w., carbon
URD-109	R1, 4, 11, 17	RESISTOR—330,000 ohms, ¼ w., carbon
URD-113	R23	RESISTOR—47,000 ohms, ¼ w., carbon
URD-117	R5	RESISTOR—68,000 ohms, ¼ w., carbon
URD-121	R9	RESISTOR—1 meg., ¼ w., carbon
URD-145	R6	RESISTOR—10 meg., ¼ w., carbon
URD-149	R14	RESISTOR—15 meg., ¼ w., carbon
URE-005	R8	RESISTOR—33,000 ohms, 1 w., carbon
URE-035	R13	RESISTOR—270 ohms, 1 w., w.w.
URF-055	R18	RESISTOR—1800 ohms, 2 w., w.w.
MOTOR NOISE SUPPRESSION KIT		
RCN-004		CAPACITOR—Ignition coil capacitor, .25 mfd., 200 v. metal case
RCN-005		CAPACITOR—Voltage regulator capacitor, .5 mfd., 200 v, metal case
RCN-006		CAPACITOR—Generator capacitor, 1 mfd., 200 v, metal case
RMS-083		SPRING—Motor hood bond spring
RRN-004		SUPPRESSOR—Distributor suppressor
KNOBS AND INSTALLATION PARTS		
RAD-21		BRACKET—Receiver mounting bracket
RAP-001		PLATE—Trim plate (Frazer)
RAP-002		PLATE—Trim plate (Kaiser)
RDK-086		KNOB—Tuning knob, trim knob, and set screw (Kaiser)
RDK-087		KNOB—Volume control knob (Frazer)
RDK-088		KNOB—Tone control knob
RDK-089		KNOB—Volume control knob (Kaiser)
RDK-090		KNOB—Tuning knob and set screw assembly (Frazer)
RHM-032		STUD—Speaker mounting stud
RHN-001		NUT—Set mounting wing nut
RHN-002		NUT—Speaker mounting wing nut
RHN-003		NUT—Trim plate mounting nut
RHS-004		BOLT—Mounting bracket bolt
RHS-005		SCREW—Receiver mounting bolt, ¼-20 x 1 in. hex. hd. M. S. steel cadmium plated
RMM-025		SPACER—Control knob spacer (Frazer only)
RMS-093		KNOB RETAINING SPRING

* In ordering, be sure to give color code information.

MODEL 231

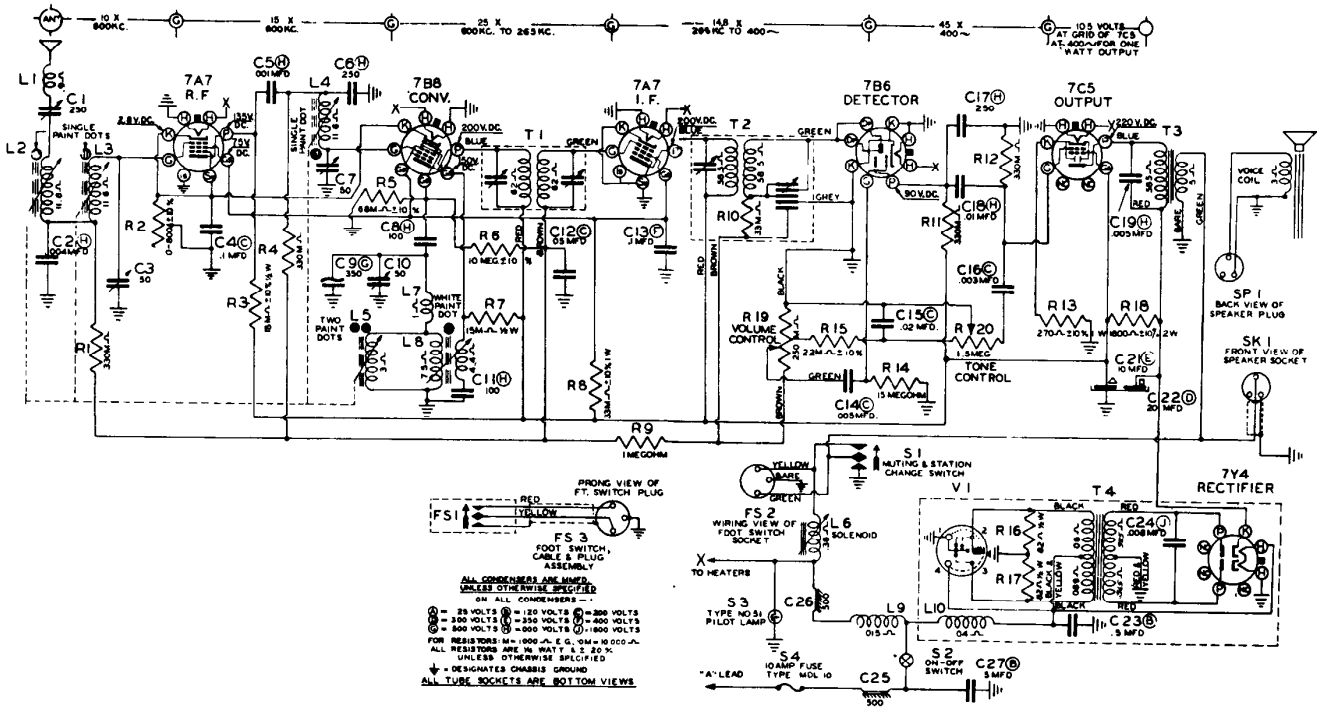
10 X 600KC.
15 X 800KC.
25 X 600KC. TO 265KC.
14.8 X 264 KC TO 400
45 X 400
105 VOLTS AT GRID OF 7C5 AT 400 ~ FOR ONE WATT OUTPUT
7A7 R.F
7B8 CONV.
7A7 I.F.
7B6 DETECTOR
7C5 OUTPUT
7Y4 RECTIFIER
T1
T2
T3
T4
V1
L1
L2
L3
L4
L5
L6
L7
L8
L9
L10
C1 230
C2 .05 MFD
C3 50
C4 .1 MFD
C5 .001 MFD
C6 250
C7 50
C8 100
C9 350
C10 50
C11 100
C12 .05 MFD
C13 .1 MFD
C14 .005 MFD.
C15 .02 MFD.
C16 .003 MFD
C17 250
C18 .01 MFD
C19 .005 MFD
C20 .004 MFD
C21 10 MFD
C22 20 MFD
C23 5 MFD
C24 .006 MFD
C25 500
C26 500
C27 5 MFD
R1 330M Ω
R2 0-500K Ω
R3 15M Ω ± 10% ½W
R4 330M Ω
R5 68M Ω ± 10%
R6 10 MEG ± 10
R7 15M Ω 1W
R8 33M Ω ± 10% ½W
R9 1 MEGOHM
R10 .33M Ω
R11 330M Ω
R12 330M Ω
R13 270 Ω ± 10% W
R14 .15 MEGOHM
R15 .22M Ω ± 10%
R16 42 Ω ½W
R17 68 Ω ½W
R18 1800 Ω ± 10% 2W
R19 VOLUME CONTROL .25 MEG
R20 1.5 MEG TONE CONTROL
S1 MUTING & STATION CHANGE SWITCH
S2 ON-OFF SWITCH
S3 TYPE NO 51 PILOT LAMP
S4 10 AMP FUSE TYPE MDL 10
FS1
FS2 WIRING VIEW OF FOOT SWITCH SOCKET
FS3 FOOT SWITCH, CABLE & PLUG ASSEMBLY
SP1 BACK VIEW OF SPEAKER PLUG
SK1 FRONT VIEW OF SPEAKER SOCKET
PRONG VIEW OF FT. SWITCH PLUG
VOICE COIL
TO HEATERS
"A" LEAD
SINGLE PAINT DOTS
TWO PAINT DOTS
WHITE PAINT DOT
ALL CONDENSERS ARE MMFD. UNLESS OTHERWISE SPECIFIED
ON ALL CONDENSERS —
= 25 VOLTS = 120 VOLTS = 200 VOLTS
= 350 VOLTS = 400 VOLTS
= 500 VOLTS = 1000 VOLTS = 1500 VOLTS
FOR RESISTORS: M = 1000 Ω E.G. 1M = 1.0 000 Ω
ALL RESISTORS ARE ½ WATT ± 20 % UNLESS OTHERWISE SPECIFIED
= DESIGNATES CHASSIS GROUND
ALL TUBE SOCKETS ARE BOTTOM VIEWS

MODEL 231, see MODEL 230 for additional parts

Cat. No.	Symbol	Description
RAD-030		BRACKET—Guide rod bracket
RAP-005		PLATE—Protector plate (between solenoid coil and lever mounting plate)
REI-008		CORE—Slug tuning core and adjusting spring (red code dot)
REI-009		CORE—Slug tuning core and adjusting spring (green code dot)
REI-010		CORE—Slug tuning core and adjusting spring (yellow code dot)
REI-011		CORE—Slug tuning core and adjusting spring (blue code dot)
RHH-005		TURRET SCREW LOCK RING
RHH-006		WASHER—Retaining washer on turret shaft
RHS-013		TURRET SCREW (MANUAL)
RHS-014		TURRET SCREW (AUTOMATIC)
RJP-016		BRACKET—Solenoid, plug, and bracket assembly
RLS-001		SOLENOID AND TERMINAL ASSEMBLY
RLX-006		COIL—Ant. and r.f. (right hand) coil and shield assembly (red code dot)
RLX-007		COIL—Ant. and r.f. (right hand) coil and shield assembly (green code dot)
RLX-008		COIL—Ant. and r.f. (right hand) coil and shield assembly (yellow code dot)
RLX-009		COIL—Ant. and r.f. (right hand) coil and shield assembly (blue code dot)
RLX-010		COIL -Osc. and conv. (left hand) coil and shield assembly (red code dot)
RLX-011		COIL—Osc. and conv. (left hand) coil and shield assembly (green code dot)
RLX-012		COIL—Osc. and conv. (left hand) coil and shield assembly (yellow code dot)
RLX-013		COIL—Osc. and conv. (left hand) coil and shield assembly (blue code dot)
RMB-006		SPACER—Cam spacing bushing, on turret shaft, $\frac{24}{32}$ inches
RMB-007		SPACER—Cam spacing bushing, on turret shaft, $\frac{1}{2}$ inch
RMC-020		CAM—Dial indicator cam
RMD-001		DISC—Indexing disc
RMG-006		GEAR—Ratchet gear
RML-011		MOUNTING PLATE AND LEVER ASSEMBLY
RMM-026		CROSS-ARM ASSEMBLY
RMM-029		SPACER—Gear and disc spacer
RMM-048		TURRET STOP (AUTOMATIC)
RMM-049		TURRET STOP (MANUAL)
RMR-005		RATCHET AND BRACKET ASSEMBLY
RMS-084		SPRING—Gear indexing spring
RMS-085		SPRING—Cross-arm return spring
RMS-086		SPRING—Cam lever spring
RMS-087		SPRING—Ratchet gear return spring
RMS-088		SPRING—Lever spring
RMS-089		SPRING—Kick-off spring
RMS-090		SPRING—Tuning shaft spring
RMU-025		SHAFT—Tuning shaft and gear assembly
RMU-026		ROD—Guide rod
RMX-085		TURRET—Turret assembly

MODEL 233

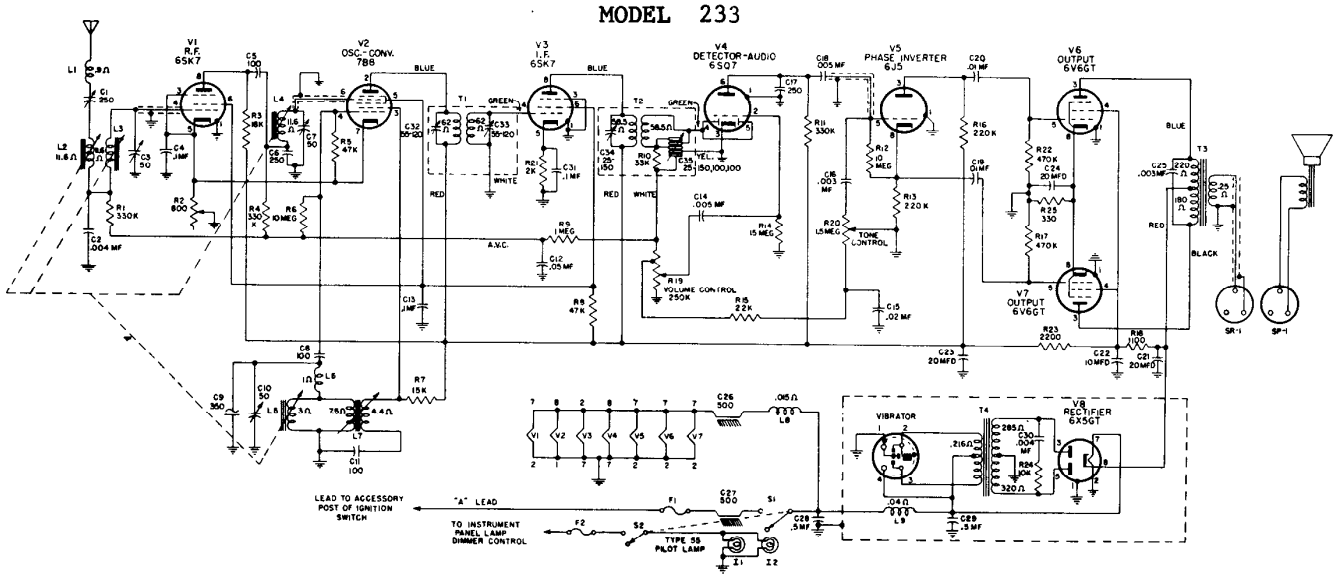
V1 R.F. 6SK7
V2 OSC.-CONV. 788
V3 I.F. 6SK7
V4 DETECTOR-AUDIO 6SQ7
V5 PHASE INVERTER 6J5
V6 OUTPUT 6V6GT
V7 OUTPUT 6V6GT
V8 RECTIFIER 6X5GT
VIBRATOR
T1
T2
T3
T4
L1
L2
L3
L4
L5
L6
L7
L8
L9
R1 330K
R2 800
R3 1MEG
R4 330
R5 1MEG
R6 10MEG
R7 15K
R8 47K
R9 47K
R10 33K
R11 330K
R12 10 MEG
R13 220K
R14 1.5 MEG
R15 22K
R16 220K
R17 470K
R18 1100
R19 VOLUME CONTROL 250K
R20 1.5MEG
R22 470K
R23 2200
R24
R25 330
C1 250
C2 .004 MF
C3 20
C4 .1MF
C5 100
C6 .005 MF
C7 50
C8 100
C9 350
C10 50
C11 100
C12 .05 MF
C13 .1MF
C14 .005 MF
C15 25 150,100,100
C16 .003 MF
C17 250
C18 .01MF
C19 .02 MF
C20 .1MF
C21 20MFD
C22 10MFD
C23 20MFD
C24 20MFD
C25 .003MF
C26 500
C27 500
C28 .5MF
C29 .5MF
C30 .004 MF
A.V.C.
TONE CONTROL
LEAD TO ACCESSORY POST OF IGNITION SWITCH
"A" LEAD
TO INSTRUMENT PANEL LAMP DIMMER CONTROL
TYPE 55 PILOT LAMP
F1
F2
S1
S2
I1
I2
SR-1
SP-1
BLUE
GREEN
RED
WHITE
BLACK

PURCHASE PARTS FROM NEAREST GENERAL ELECTRIC WHOLESALE DISTRIBUTOR

Cat. No.	Symbol	Description	Suggested Unit List Price
UNIVERSAL REPLACEMENT PARTS			
UCC-623	C16	CAPACITOR—.003 mf., 600 v., paper	$0.25
UCC-625	C14, 18	CAPACITOR—.005 mf., 600 v., paper	.25
UCC-630	C19, 20	CAPACITOR—.01 mf., 600 v., paper	.30
UCC-631	C15	CAPACITOR—.02 mf., 600 v., paper	.30
UCC-635	C12	CAPACITOR—.05 mf., 600 v., paper	.40
UCC-640	C4, 19, 20, 31	CAPACITOR—.1 mf., 600 v., paper	.45
UCC-645	C28, 29	CAPACITOR—.5 mf., 600 v., paper	.80
UCU-1028	C5	CAPACITOR—100 mmf., 600 V., mica	.25
URD-077	R7	RESISTOR—15,000 ohms, ½ w., carbon	.13
URD-079	R3	RESISTOR—18,000 ohms, ½ w., carbon	.13
URD-081	R15	RESISTOR—22,000 ohms, ½ w., carbon	.13
URD-089	R5	RESISTOR—47,000 ohms, ½ w., carbon	.13
URD-105	R13, 16	RESISTOR—220,000 ohms, ½ w., carbon	.13
URD-109	R1, 4, 11	RESISTOR—330,000 ohms, ½ w., carbon	.13
URD-113	R17, 22	RESISTOR—470,000 ohms, ½ w., carbon	.13
URD-121	R9	RESISTOR—1 meg., ½ w., carbon	.13
URD-145	R6, 12	RESISTOR—10 meg., ½ w., carbon	.13
URD-1056	R21	RESISTOR—2,000 ohms, ½ w., carbon	.17
URE-057	R23	RESISTOR—2,200 ohms, 1 w., carbon	.17
URE-073	R24	RESISTOR—10,000 ohms, 1 w., carbon	.17
URE-089	R8	RESISTOR—47,000 ohms, 1 w., carbon	.17
URE-1050	R18	RESISTOR—1,100 ohms, 1 w., carbon	.23
URF-037	R25	RESISTOR—330 ohms, 1 w., carbon	.25
SPECIALIZED REPLACEMENT PARTS			
RAC-054		COVER—For vibrator power supply compartment	$0.25
RAP-009		PLATE—Mounting plate for centering volume control	.05
RAP-010		PLATE—Backing plate for dial scale	.45
RAP-011		PLATE—Backing plate for dial window	.35
RCC-092	C25	CAPACITOR—.003 mf., 1600 v., paper	.40
RCC-093	C30	CAPACITOR—.004 mf., 1600 v., paper	.45
RCE-075	C21, 22, 23, 24	CAPACITOR—20 mf., 350 v.; 10 mf., 300 v.; 20 mf., 300 v.; 20 mf., 25 v.; electrolytic	3.45
RCN-004		CAPACITOR—For ignition coil noise suppression	.85
RCN-005		CAPACITOR—For voltage regulator noise suppression	.75
RCN-006		CAPACITOR—For auto battery generator noise suppression	1.00
RCN-008	C9	CAPACITOR—350 mmf., compensator	.55
RCU-190	C2	CAPACITOR—.004 mf., 600 v., mica	.75
RCU-279	C6, 17	CAPACITOR—250 mmf., 600 v., mica	.25
RCU-283	C5	CAPACITOR—.001 mf., 600 v., mica	.30
RCU-284	C8	CAPACITOR—100 mmf., 600 v., mica	.25
RCY-028	C1	TRIMMER—250 mmf., antenna trimmer	.50
RCY-050	C3, 7, 10	TRIMMER STRIP—50 mmf., 50 mmf., 50 mmf., r-f, conv., and osc. trimmers	1.30
RDE-033		ESCUTCHEON—Dial scale window escutcheon	.50
RDK-145		KNOB—Tone control knob	$1.15
RDK-146		KNOB—Volume control knob	.20
RDK-147		KNOB—Tuning control knob	.70
RDP-043		POINTER—Dial scale pointer	.25
RDS-079		DIAL SCALE	1.80
RDW-011		WINDOW—Dial scale window	.30
RDX-042		PUSHBUTTON—Pushbutton with retaining spring	.25
*REI-020		CORE—Tuning core (coded red)	.40
*REI-021		CORE—Tuning core (coded green)	.40
*REI-022		CORE—Tuning core (coded yellow)	.40
*REI-023		CORE—Tuning core (coded blue)	.40
REV-002		VIBRATOR	4.10
RII-015		INSULATOR—Textolite strip insulator for tuning core stem support	.10
RIS-002		LIGHT SHIELD—Rubber strip (channeled) used as dial light barrier	.35
RJS-015		SOCKET—Octal socket for 6SK7, 6AQ7, 6J5, 6V6GT, and 6X5GT tubes	.20
RJS-069		SOCKET—Loktal socket for 7B8 tube	.25
RJS-071		SOCKET—Vibrator socket	.25
RJS-121		SOCKET—Antenna connector socket	.20
RJS-122		SOCKET—Dial lamp socket and leads	.40
RJX-024		SOCKET AND CABLE—Speaker socket and cable	.90
RJX-025		CABLE ASSEMBLY—Cable and fuse ferrule (lead to instrument light control)	.80
RKP-005		INSTALLATION KIT—Knobs, mounting hardware, ignition and noise filter components, etc.	4.35
RLC-048	L6	COIL—Oscillator series coil	.60
RLC-079	L7	COIL—Oscillator shunt coil	1.75
RLI-063	L1	CHOKE—Antenna noise choke coil	.55
RLI-064	L8	CHOKE—Motor noise choke coil	.60
*RLX-017	L2, 3	COIL—Antenna and r-f coil in shield assembly (coded red)	4.30
*RLX-018	L2, 3	COIL—Antenna and r-f coil in shield assembly (coded green)	4.30
*RLX-019	L2, 3	COIL—Antenna and r-f coil in shield assembly (coded yellow)	4.30
*RLX-020	L2, 3	COIL—Antenna and r-f coil in shield assembly (coded blue)	4.30
*RLX-021	L4, 5	COIL—Oscillator and converter coil in shield assembly (coded red)	3.90
*RLX-022	L4, 5	COIL—Oscillator and converter coil in shield assembly (coded green)	3.90
*RLX-023	L4, 5	COIL—Oscillator and converter coil in shield assembly (coded yellow)	3.90
*RLX-024	L4, 5	COIL—Oscillator and converter coil in shield assembly (coded blue)	3.90
RMM-083		NUT—Special, fits over control shaft bushings for mounting	.10
RMS-083		SPRING—Contact spring for motor compartment hood bonding	.10
ROE-001		SPEAKER—6 x 9 inches, oval, PM	10.75
RRC-048	R2	POTENTIOMETER—0-800 ohms (Sensitivity control)	.50
RRC-093	R19, 20, S1, 2	POTENTIOMETER AND SWITCH—250,000 and 1.5 meg. dual (Volume, Tone, and On-Off controls)	2.95
RRD-1014	R14	RESISTOR—15 meg., ½ w., carbon	.13
RRN-004		DISTRIBUTOR SUPPRESSOR	.36
RTL-086	T1	TRANSFORMER—1st I-F transformer	2.20
RTL-087	T2	TRANSFORMER—2nd I-F transformer	2.55
RTO-056	T3	TRANSFORMER—Audio output transformer	2.85
RTP-065	T4	TRANSFORMER—Power transformer	7.25
RWX-013		CABLE ASSEMBLY—Cable and fuse ferrule (lead to ignition switch)	.85

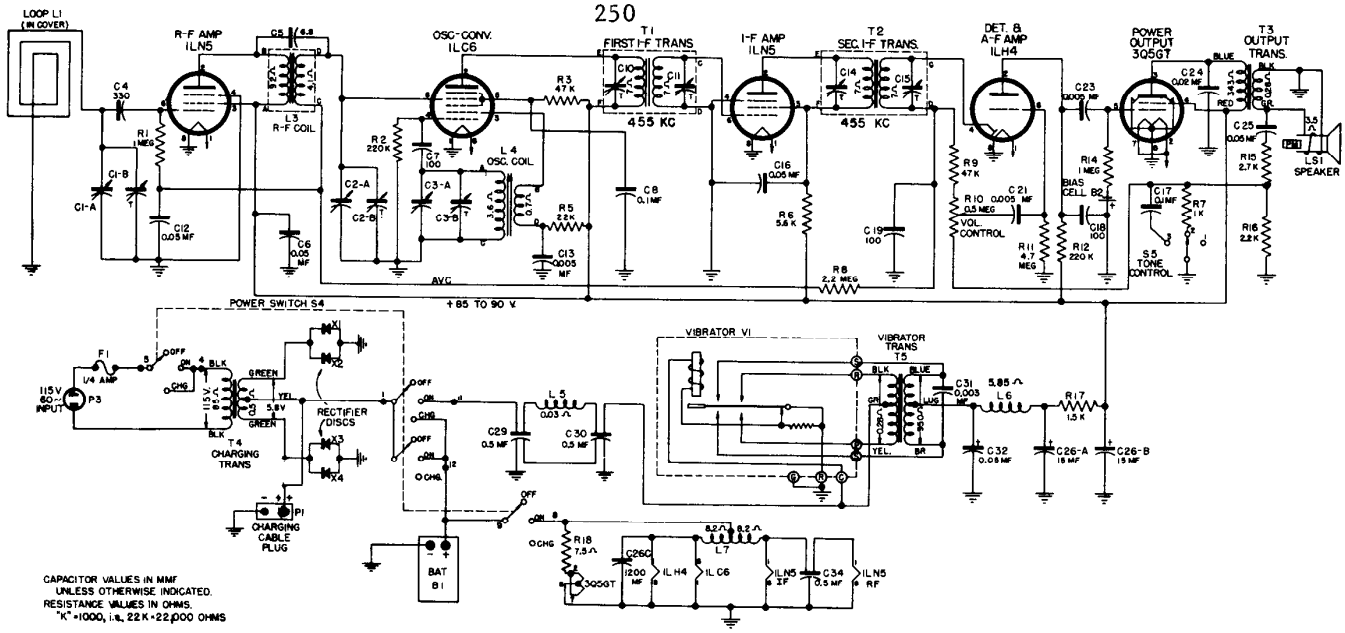
LOOP L1 (IN COVER)
R-F AMP 1LN5
L3 R-F COIL
OSC-CONV. 1LC6
L4 OSC. COIL
T1 FIRST I-F TRANS.
455 KC
I-F AMP 1LN5
T2 SEC. I-F TRANS.
455 KC
DET. & A-F AMP 1LH4
POWER OUTPUT 3Q5GT
T3 OUTPUT TRANS.
LS1 SPEAKER
S5 TONE CONTROL
VOL. CONTROL
BIAS CELL B2
AVC
+85 TO 90 V.
POWER SWITCH S4
115V 60~ INPUT
P3
F1 1/4 AMP
T4 CHARGING TRANS
RECTIFIER DISCS
CHARGING CABLE PLUG
P1
BAT B1
VIBRATOR V1
VIBRATOR TRANS T5
L5
L6
L7
CAPACITOR VALUES IN MMF UNLESS OTHERWISE INDICATED.
RESISTANCE VALUES IN OHMS.
"K" = 1000, i.e., 22K = 22,000 OHMS

REPLACEMENT PARTS LIST
MODEL 250

CAT. NO.	SYMBOL	DESCRIPTION
UNIVERSAL G-E REPLACEMENT PARTS LIST		
UCC-030	C8, 17	CAPACITOR—0.1 mf., 400 v., paper
UCC-039	C13, 21, 23	CAPACITOR—0.005 mf., 600 v., paper
UCC-041	C24	CAPACITOR—0.02 mf., 600 v., paper
UCN-506	C5	CAPACITOR—6.8 mmf., ceramic
UCU-028	C7, 18, 19	CAPACITOR—100 mmf., mica
UCU-040	C4	CAPACITOR—330 mmf., mica
UOP-009	LS1	LOUDSPEAKER—5¼-inch PM speaker
URD-049	R7	RESISTOR—1,000 ohms, ½ w., carbon
URD-057	R16	RESISTOR—2,200 ohms, ½ w., carbon
URD-059	R15	RESISTOR—2,700 ohms, ½ w., carbon
URD-067	R6	RESISTOR—5,600 ohms, ½ w., carbon
URD-081	R5	RESISTOR—22,000 ohms, ½ w., carbon
URD-089	R3, 9	RESISTOR—47,000 ohms, ½ w., carbon
URD-105	R2, 12	RESISTOR—220,000 ohms, ½ w., carbon
URD-121	R1, 14	RESISTOR—1 meg., ½ w., carbon
URD-129	R8	RESISTOR—2.2 meg., ½ w., carbon
URD-137	R11	RESISTOR—4.7 meg., ½ w., carbon
URE-053	R17	RESISTOR—1,500 ohms, 1 w., carbon
SPECIALIZED G-E REPLACEMENT PARTS		
RAC-002		COVER—Battery compartment cover
RAC-003		COVER—Power supply compartment cover
RAC-006		COVER—Case back cover (brown)
RAC-007		COVER—Case back cover (gray)
RAC-010		COVER—Case left end cover (brown)
RAC-011		COVER—Case left end cover (gray)
RAC-012		COVER—Case right end cover (brown)
RAC-013		COVER—Case right end cover (gray)
RAG-002		COVER—Case front and grille (brown)
RAG-003		COVER—Case front and grille (gray)
RAI-001		BRACE—Case cover brace assembly (brown)
RAI-002		BRACE—Case cover brace assembly (gray)
RAX-004		COVER—Case cover assembly (brown)
RAX-005		ASSEMBLY - Cover stay arm assembly
RAX-006		COVER—Case cover assembly (gray)
RBC-001	B2	CELL—Bias cell
RCC-028	C6, 12, 16, 25, 32	CAPACITOR—0.05 mf., 400 v., paper
RCC-069	C34	CAPACITOR—0.5 mf., 120 v., paper
RCC-070	C29, 30	CAPACITOR—0.5 mf., 120 v., paper
RCC-073	C31	CAPACITOR—0.003 mf., 1500 v., paper
REX-001		Rectifier
RAC-018		Cover (grey)
RAC-019		Cover (bl -gr.)
RAC-020		Cover (copper)
RAC-021		Cover (Right end) (grey)
RAC-022		Cover (Right end) (bl.-gr)
RAC-023		Cover (Right end) (copper)
RAC-024		Cover (Left end) (grey)
RAC-025		Cover (Left end) (bl -gr.)
RAC-026		Cover (Left end) (copper)
RAG-010		Grille (grey)
RAG-011		Grille (bl -gr)
RAG-012		Grille (copper)
RHY-001		Handle (brown)

CAT. NO.	SYMBOL	DESCRIPTION
SPECIALIZED G-E REPLACEMENT PARTS		
RCE-007	C26A, B, C	CAPACITOR—15 mf., 150 v.; 15 mf., 150 v.; 1200 mf., 1.5 v. electrolytic
RCT-008	C1A, B, 2A, B, 3A, B	CONDENSER—Tuning condenser and trimmers
RDC-007		CORD—Drive cord and tension spring
RDE-006		ESCUTCHEON—Dial scale escutcheon
RDK-020		KNOB—Control knob (plain)
RDK-021		KNOB—Control knob (pointer)
RDP-008		POINTER—Dial pointer assembly
RDS-013		SCALE—Dial scale
REF-001	F1	FUSE—¼-amp. fuse, Type 3AG
REU-001	V1	VIBRATOR—Vibrator unit
REX-001	X1, 2, 3, 4	RECTIFIER—Copper-oxide rectifier assembly
RHF-001		FOOT—Cabinet foot
RHK-001		KNOB—Cover lock knob
RHQ-002		TUBE—Battery vent tube
RHX-003		HARDWARE—Tuning condenser mtg. hardware
RIG-001		GASKET Dial scale gasket
RJS-019		SOCKET - Vibrator socket
RJS-020		SOCKET—Loktal tube socket
RJS-021		PLATE—Electrolytic capacitor mounting plate
RJS-026		SOCKET—Octal base tube socket
RJW-001		HOLDER - Fuse holder
RLB-002	L3	COIL—R-f coil
RLC-008	L4	COIL—Oscillator coil
RLF-001	L5, 6	CHOKE—Vibrator and B + choke
RLF-002	L7	CHOKE - Filament choke
RLL-008	L1	BEAM-A-SCOPE—Loop antenna assembly (in cover)
RMC-008		CAM—Cover lock mechanism cam
RMC-009		CATCH—Cover lock mechanism catch
RMU-010		SHAFT—Tuning shaft
RMW-004		PULLEY—Pulley and stud (small pulley)
RMW-009		PULLEY—Pulley and stud (large pulley)
RMX-013		CATCH—Battery case catch
RRC-008	R10	VOLUME CONTROL—0.5 meg., potentiometer
RRG-001	R18	RESISTOR—7.5 ohms, ½ w., carbon
RSW-009	S4	SWITCH—Power selector switch
RSW-010	S5	SWITCH—Tone selector switch
RTC-001	T4	TRANSFORMER—Rectifier transformer
RTL-011	T1	TRANSFORMER—1st i-f transformer
RTL-012	T2	TRANSFORMER—2nd i-f transformer
RTO-007	T3	TRANSFORMER—Output transformer
RTV-001	T5	TRANSFORMER—Vibrator transformer
RWL-005	P3	PLUG—Power cord and plug
RHY-002		Handle (grey)
RHY-003		Handle (grey)
RHY-004		Handle (bl -gr)
RHY-005		Handle (copper)
RMC-025		Bias Clamp
RAX-011		Top Cover (grey)
RAX-012		Top Cover (bl.-gr)
RAX-013		Top Cover (copper)
RHK-002		Lock Knob (grey)
RHK-003		Lock Knob (grey)
RHK-004		Lock Knob (bl. gr.)
RHK-005		Lock Knob (copper)
RAI-004		Assem. (grey)
RAI-005		Assem (bl gr)
RAI-006		Assem (copper)

MODEL 254

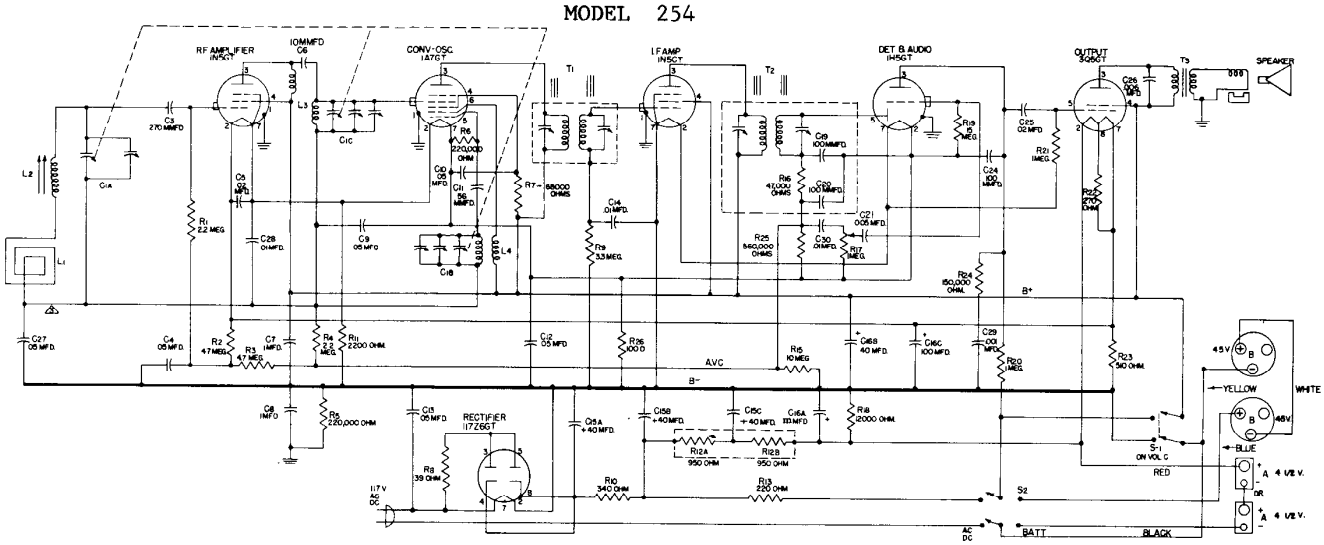

RF AMPLIFIER 1N5GT
10MMFD C6
CONV-OSC 1A7GT
I.F.AMP 1N5GT
DET & AUDIO 1H5GT
OUTPUT 3Q5GT
SPEAKER
T1
T2
T3
L1
L2
L3
L4
C1A
C1C
C1B
C3 270 MMFD
C5 .02 MFD
C28 .01MFD
C9 .05 MFD
C10 .05 MFD
C11 56 MMFD
R6 220,000 OHM
R7 68000 OHMS
C14 .01MFD
R9 33MEG
C19 100MMFD
R16 47,000 OHMS
C20 100 MMFD
C21 .005 MFD
C30 .01MFD
R17 1MEG
R25 560,000 OHMS
R19 15 MEG
C24 100 MMFD
C25 .02 MFD
R21 1MEG
R22 270 OHM
C26 .005 MFD
R24 150,000 OHM
B+
C27 .05 MFD
C4 .05 MFD
R2 47MEG
R3 47 MEG
C7 1MFD
R4 2.2 MEG
R11 2200 OHM
C12 .05 MFD
R26 100 Ω
AVC
B-
R15 10 MEG
C16B 40 MFD
C16C 100 MFD
C29 .001 MFD
R20 1MEG
R23 510 OHM
45V
YELLOW
WHITE
45V
BLUE
S-1 ON VOL C
RED
C8 1MFD
R5 220,000 OHM
C13 .05 MFD
RECTIFIER 117Z6GT
R8 39 OHM
117 V AC DC
C15A +40 MFD
C15B +40 MFD
C15C +40 MFD
C16A 10 MFD
R18 12000 OHM
R12A 950 OHM
R12B 950 OHM
R10 340 OHM
R13 220 OHM
S2
AC DC
BATT
BLACK
A 4 1/2 V.
DR
A 4 1/2 V.

REPLACEMENT PARTS LIST—MODEL 254

CAT. NO.	SYMBOL	DESCRIPTION
UNIVERSAL REPLACEMENT PARTS		
UCC-018	C29	CAPACITOR—0.001 mfd., 400 v., paper
UCC-025	C14, 28, 30	CAPACITOR—0.01 mfd., 400 v., paper
UCC-030	C7, 8	CAPACITOR—0.1 mfd., 400 v., paper
UCC-039	C21, 26	CAPACITOR—0.005 mfd., 400 v., paper
UCC-041	C5, 25	CAPACITOR—0.02 mfd., 600 v., paper
UCC-045	C4, 9, 10, 12, 13, 27	CAPACITOR—0.05 mfd., 600 v., paper
UCU-1004	C6	CAPACITOR—10 mmfd., 500 v., mica
UCU-1022	C11	CAPACITOR—56 mmfd., 500 v., mica
UCU-1028	C24	CAPACITOR—100 mmfd., 500 v., mica
UCU-1038	C3	CAPACITOR—270 mmfd., 500 v., mica
UOP-546		LOUDSPEAKER—5¼-inch PM speaker
UOX-008		CONE—Replacement cone
URD-049	R26	RESISTOR—1000 ohms, ½ w., carbon
URD-057	R11	RESISTOR—2200 ohms, ½ w., carbon
URD-093	R7	RESISTOR—68,000 ohms, ½ w., carbon
URD-101	R24	RESISTOR—150,000 ohms, ½ w., carbon
URD-105	R5, 6	RESISTOR—220,000 ohms, ½ w., carbon
URD-113	R25	RESISTOR—470,000 ohms, ½ w., carbon
URD-121	R20, 21	RESISTOR—1 meg., ½ w., carbon
URD-129	R1, 4	RESISTOR—2.2 meg., ½ w., carbon
URD-133	R9	RESISTOR—3.3 meg., ½ w., carbon
URD-137	R2, 3	RESISTOR—4.7 meg., ½ w., carbon
URD-145	R15	RESISTOR—10 meg., ½ w., carbon
URD-149	R19	RESISTOR—15 meg., ½ w., carbon
URE-033	R13	RESISTOR—200 ohms, 1 w., carbon
URE-035	R22	RESISTOR—270 ohms, 1 w., carbon
URE-1042	R23	RESISTOR—510 ohms, 1 w., carbon
URF-075	R18	RESISTOR—12,000 ohms, 2 w., carbon
SPECIALIZED REPLACEMENT PARTS		
SAT-001		CABINET—Tan finish cabinet
SCE-020	C16A, B, C	CAPACITOR—20 mf., 150 v.; 40 mf., 150 v.; 100 mf., 50 v.; electrolytic

CAT. NO.	SYMBOL	DESCRIPTION
SPECIALIZED REPLACEMENT PARTS (CONT'D)		
SCE-021	C15A, B, C	CAPACITOR—40 mf., 150 v.; 40 mf., 150 v.; 40 mf., 150 v.; electrolytic
SCT-010	C1A, B, C	CONDENSER—Tuning condenser, pulley, and trimmers
SDC-002		CORD—Dial cord
SDK-036		KNOB—Control knob
SDP-003		POINTER—Dial pointer
SDS-012		SCALE—Dial scale
SDW-003		WINDOW—Dial scale window
SDX-006		DRIVE—Dial drive assembly
SJJ-009		CONNECTOR—Female speaker connector
SJJ-010		CONNECTOR—Female antenna connector
SJP-007		CONNECTOR—Male 2-contact "A" battery connector
SJP-008		CONNECTOR—Male 3-contact "B" battery connector
SJP-009		CONNECTOR—Male speaker connector, 4-contact
SJS-031		SOCKET—Octal tube socket
SJS-035		SOCKET—Octal tube socket
SLA-002	L2	COIL—Antenna loading coil
SLB-002	L3	COIL—R-F transformer
SLC-011	L4	COIL—Oscillator coil
SLL-003	L1	BEAM-A-SCOPE—Loop antenna assembly
SMS-012		SPRING—Dial cord spring
SMS-013		SPRING—Indicator spring
SMX-014		TRIGGER—Trigger bushing assembly
SRC-044	R17, S1	VOLUME CONTROL—1.0 meg., potentiometer and switch
SRW-024	R12A, B	RESISTOR—1900 ohms, CT, 5 w., w.w.
SRW-025	R8	RESISTOR—39 ohms, 5 w., w.w.
SRW-026	R10	RESISTOR—340 ohms, 5 w., w.w.
SSS-009	S2	SWITCH—Battery-line selector slide switch
STL-009	T1	TRANSFORMER—1st I-F transformer
STL-010	T2	TRANSFORMER—2nd I-F transformer
STO-007	T3	TRANSFORMER—Output transformer
SWL-006		CORD—Power cord

MODEL 260

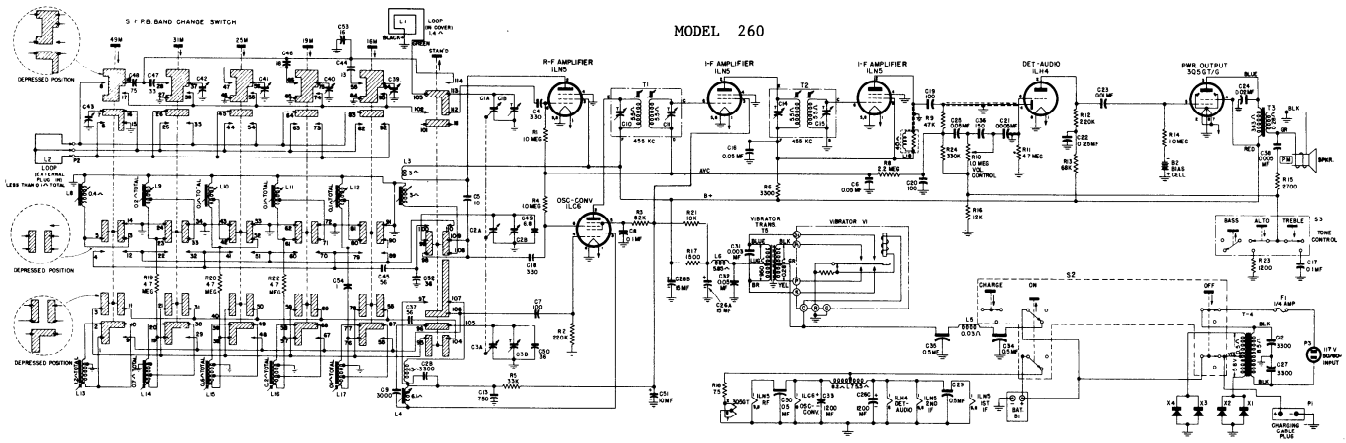

S F P.B. BAND CHANGE SWITCH
DEPRESSED POSITION
R-F AMPLIFIER 1LN5
I-F AMPLIFIER 1LN5
I-F AMPLIFIER 1LN5
DET-AUDIO 1LH4
PWR OUTPUT 3Q5GT/G
OSC-CONV 1LC6
VIBRATOR TRANS
VIBRATOR V1
BASS
ALTO
TREBLE
TONE CONTROL
CHARGE
ON
OFF
1/4 AMP
117 V 1/4 AMP INPUT
CHARGING CABLE PLUG

REPLACEMENT PARTS LIST—MODEL 260

Part No.	Symbol	Description
UNIVERSAL REPLACEMENT PARTS		
UCC-030	C8, 17	CAPACITOR—.1 mfd., 400 v., paper
UCC-032	C22	CAPACITOR—.25 mfd., 400 v., paper
UCC-039	C21, 38	CAPACITOR—.005 mfd., 600 v., paper
UCC-040	C23	CAPACITOR—.01 mfd., 600 v., paper
UCC-041	C24	CAPACITOR—.02 mfd., 600 v., paper
UCC-048	C6, 16, 25, 32	CAPACITOR—.05 mfd., 400 v., paper
UCG-3049	C13	CAPACITOR—750 mmf., silver mica
UCN-501	C54	CAPACITOR—1.0 mmf., ceramic
UCN-2506	C49	CAPACITOR—6.8 mmf., ceramic
UCU-028	C19, 20	CAPACITOR—100 mmf., mica
UCU-064	C12, 27, 28	CAPACITOR—3300 mmf., mica
UCU-1032	C36	CAPACITOR—150 mmf., mica
UCU-1040	C4, 18	CAPACITOR—330 mmf., mica
UCU-2563	C9	CAPACITOR—3000 mmf., mica
UCW-1004	C5	CAPACITOR—10 mmf., ceramic
UCW-2007	C44	CAPACITOR—13 mmf., ceramic
UCW-2009	C53	CAPACITOR—16 mmf., ceramic
UCW-2010	C46	CAPACITOR—18 mmf., ceramic
UCW-2016	C47	CAPACITOR—33 mmf., ceramic
UCW-2017	C50, 52	CAPACITOR—36 mmf., ceramic
UCW-2022	C37, 45	CAPACITOR—56 mmf., ceramic
UCW-2025	C48	CAPACITOR—75 mmf., ceramic
UIC-001		CEMENT—Cement for speaker cone replacement
UIC-002		THINNER—Speaker cement thinner
UOP-545	SPKR	SPEAKER—5¼-in. P.M. speaker
UOX-006		CONE—Replacement cone kit
URD-051	R23	RESISTOR—1200 ohms, ½ w., carbon
URD-059	R15	RESISTOR—2700 ohms, ½ w., carbon
URD-061	R6	RESISTOR—3300 ohms, ½ w., carbon
URD-073	R21	RESISTOR—10,000 ohms, ½ w., carbon
URD-075	R16	RESISTOR—12,000 ohms, ½ w., carbon
URD-085	R5	RESISTOR—33,000 ohms, ½ w., carbon
URD-089	R9	RESISTOR—47,000 ohms, ½ w., carbon
URD-093	R13	RESISTOR—68,000 ohms, ½ w., carbon
URD-095	R3	RESISTOR—82,000 ohms, ½ w., carbon
URD-105	R2, 12	RESISTOR—220,000 ohms, ½ w., carbon
URD-109	R24	RESISTOR—330,000 ohms, ½ w., carbon
URD-121	R1, 4, 14	RESISTOR—1.0 meg., ½ w., carbon
URD-129	R8	RESISTOR—2.2 meg., ½ w., carbon
URD-137	R11, 19, R20, 22	RESISTOR—4.7 meg., ½ w., carbon
URE-053	R17	RESISTOR—1500 ohms, 1 w., carbon
SPECIALIZED REPLACEMENT PARTS		
RAC-002		COVER—Battery compartment cover
RAC-003		COVER—Power supply compartment cover
RAC-006		COVER—Case back cover (crinkle brown)
RAC-007		COVER—Case back cover (crinkle grey)
RAC-008		COVER—Case right end cover (crinkle brown)
RAC-009		COVER—Case right end cover (crinkle grey)
RAC-012		COVER—Case left end cover (crinkle brown)
RAC-013		COVER—Case left end cover (crinkle grey)
RAC-018		COVER—Back cover (Hammertone grey)
RAC-019		COVER—Back cover (Hammertone blue-green)
RAC-020		COVER—Back cover (Hammertone copper)
RAC-024		COVER—Left end cover (Hammertone grey)
RAC-025		COVER—Left end cover (Hammertone blue-green)
RAC-026		COVER—Left end cover (Hammertone copper)
RAC-030		COVER—Right end cover (Hammertone grey)
RAC-031		COVER—Right end cover (Hammertone blue-green)
RAC-032		COVER—Right end cover (Hammertone copper)
RAC-036		COVER—Antenna plug (crinkle brown)
RAC-037		COVER—Antenna plug (crinkle grey)
RAC-038		COVER—Antenna plug (Hammertone grey)
RAC-039		COVER—Antenna plug (Hammertone blue-green)
RAC-040		COVER—Antenna plug (Hammertone copper)
RAC-041		COVER—Trimmer cover (crinkle brown)
RAC-042		COVER—Trimmer cover (crinkle grey)
RAC-043		COVER—Trimmer cover (Hammertone grey)
RAC-044		COVER—Trimmer cover (Hammertone blue-green)
RAC-045		COVER—Trimmer cover (Hammertone copper)
RAG-005		COVER—Case front and grille cover (crinkle brown)
RAG-006		COVER—Case front and grille cover (crinkle grey)
RAG-013		COVER—Case front and grille cover (Hammertone grey)
RAG-014		COVER—Case front and grille cover (Hammertone blue-green)
RAG-015		COVER—Case front and grille cover (Hammertone copper)
RAI-001		BRACE—Cover brace assembly, supports hinge (crinkle brown)
RAI-002		BRACE—Cover brace assembly supports hinge (crinkle grey)
RAI-004		BRACE—Cover brace assembly, supports cover (Hammertone grey)
RAI-005		BRACE—Cover brace assembly, supports cover (Hammertone blue-green)
RAI-006		BRACE—Cover brace assembly, supports cover (Hammertone copper)
RAX-004		COVER—Case top cover assembly (crinkle brown)
RAX-005		STAY ARM ASSEMBLY
RAX-006		COVER—Case top cover assembly (crinkle grey)
RAX-011		COVER—Top cover (Hammertone grey)

Part No.	Symbol	Description
SPECIALIZED REPLACEMENT PARTS (Cont'd)		
RAX-012		COVER—Top cover (Hammertone blue-green)
RAX-013		COVER—Top cover (Hammertone copper)
RBC-001	B2	CELL—Bias cell assembly
RCC-068	C30	CAPACITOR—0.5 mfd., 120 v., paper
RCC-069	C29	CAPACITOR—0.5 mfd., 120 v., paper
RCC-070	C34, 35	CAPACITOR—0.5 mfd., 120 v., paper
RCC-073	C31	CAPACITOR—.003 mfd., 1500 v., paper
RCE-007	C26A, B, C	CAPACITOR—15 mfd., 150 v.; 15 mfd., 150 v; 1200 mfd., 1.5 v.; dry electrolytic
RCE-015	C51	CAPACITOR—10 mfd., 150 v., dry electrolytic
RCE-016	C33	CAPACITOR—1200 mfd., 1.5 v., dry electrolytic
RCT-011	C1A, B; C2A, B; C3A, B	CONDENSER—Tuning condenser and trimmers
RCW-062	C7	CAPACITOR—100 mmf., ceramic
RCY-012	C39, 40, 41, C42, 43	TRIMMER STRIP—Antenna trimmer strip
RDB-005		PUSH BUTTON—Single push button
RDC-011		ASSEMBLY—Dial cord and spring
RDE-009		ESCUTCHEON—Main dial escutcheon
RDK-020		KNOB—Tuning knob
RDK-033		KNOB—Volume control knob
RDP-013		POINTER—Dial pointer assembly
RDS-019		SCALE—Dial scale
RDX-017		PUSH BUTTON—Charge-Tone push button and escutcheon assembly
RDX-018		PUSH BUTTON—Band selector push button and escutcheon assembly
RDX-022	S1	SWITCH—Push button band switch assembly
REF-001	F1	FUSE—¼ amp. fuse, Type 3AG-¼
REV-001	V1	VIBRATOR—Vibrator unit
REX-001	X1, 2, 3, 4	RECTIFIER—Copper oxide rectifier assembly
RHF-001		FOOT—Cabinet foot
RHK-001		KNOB—Lock mechanism (crinkle brown)
RHK-002		KNOB—Lock mechanism (crinkle grey)
RHK-003		KNOB—Lock mechanism (Hammertone grey)
RHK-004		KNOB—Lock mechanism (Hammertone blue-green)
RHK-005		KNOB—Lock mechanism (Hammertone copper)
RHX-003		HARDWARE—Tuning condenser mounting hardware
RHX-008		STUD—Handle stud and cotter
RHY-001		HANDLE—Case cover handle (crinkle brown)
RHY-002		HANDLE—Case cover handle (crinkle grey)
RHY-003		HANDLE—Case cover handle (Hammertone grey)
RHY-004		HANDLE—Case cover handle (Hammertone blue-green)
RHY-005		HANDLE—Case cover handle (Hammertone copper)
RIG-001		GASKET—Dial scale gasket
RJB-004	P2	BOARD—Loop antenna terminal board
RJP-014		PLUG—Battery terminal contact pins
RJS-019		SOCKET—Vibrator socket
RJS-020		SOCKET—Loktal base tube socket
RJS-021		SOCKET—Electrolytic mounting plate socket
RJS-026		SOCKET—Octal base tube socket
RJW-001		HOLDER—Fuse holder
RLB-011	L3	COIL—Broadcast RF coil
RLB-012	L8	COIL—RF coil, 49 meter
RLB-013	L9	COIL—RF coil, 31 meter
RLB-014	L10	COIL—RF coil, 25 meter
RLB-015	L11	COIL—RF coil, 19 meter
RLB-016	L12	COIL—RF coil, 16 meter
RLC-018	L4	COIL—Broadcast oscillator coil
RLC-035	L13	COIL—Oscillator coil, 49 meter
RLC-036	L14	COIL—Oscillator coil, 31 meter
RLC-037	L15	COIL—Oscillator coil, 25 meter
RLC-038	L16	COIL—Oscillator coil, 19 meter
RLC-039	L17	COIL—Oscillator coil, 16 meter
RLF-001	L5 and 6	CHOKE—Vibrator and B + choke
RLF-004	L7	CHOKE—Filament choke
RLL-007	L2	BEAM-A-SCOPE—SW band loop antenna (external)
RLL-012	L1	BEAM-A-SCOPE—"B" band loop in cover (crinkle brown)
RLL-019	L1	BEAM-A-SCOPE—"B" band loop in cover (crinkle grey)
RLL-020	L1	BEAM-A-SCOPE—"B" band loop in cover (Hammertone grey)
RLL-021	L1	BEAM-A-SCOPE—"B" band loop in cover (Hammertone blue-green)
RLL-022	L1	BEAM-A-SCOPE—"B" band loop in cover (Hammertone copper)
RLP-009	L18	CHOKE—I-f plate choke
RMC-008		CAM—Cover lock mechanism cam
RMC-009		CATCH—Cover lock mechanism catch
RMU-013		SHAFT—Tuning shaft and retainer ring
RMW-004		PULLEY—Dial drive pulley (small), and stud
RMW-009		PULLEY—Dial drive pulley (large), and stud
RMX-013		CATCH—Battery compartment cover catch
RMX-020		CHAIN—Trimmer cover chain
RMX-082		CATCH—Spring catch for rear cabinet cover
RMX-083		TUBE—Vent tube and casing
RRC-015	R10	VOLUME CONTROL—1.0 megohm potentiometer
RRW-018	R18	RESISTOR—7.5 ohm, ½ w., w.w.
RSP-003	S2 and 3	SWITCH—Operation and tone push button switch
RTC-001	T4	TRANSFORMER—Charging transformer
RTC-002	T6	TRANSFORMER—Charging transformer
RTL-028	T1 and 2	TRANSFORMER—IF transformer, 1st or 2nd
RTO-007	T3	TRANSFORMER—Output transformer
RTV-001	T5	TRANSFORMER—Vibrator transformer
RWL-005	P3	CORD—Power cord

MODEL 280

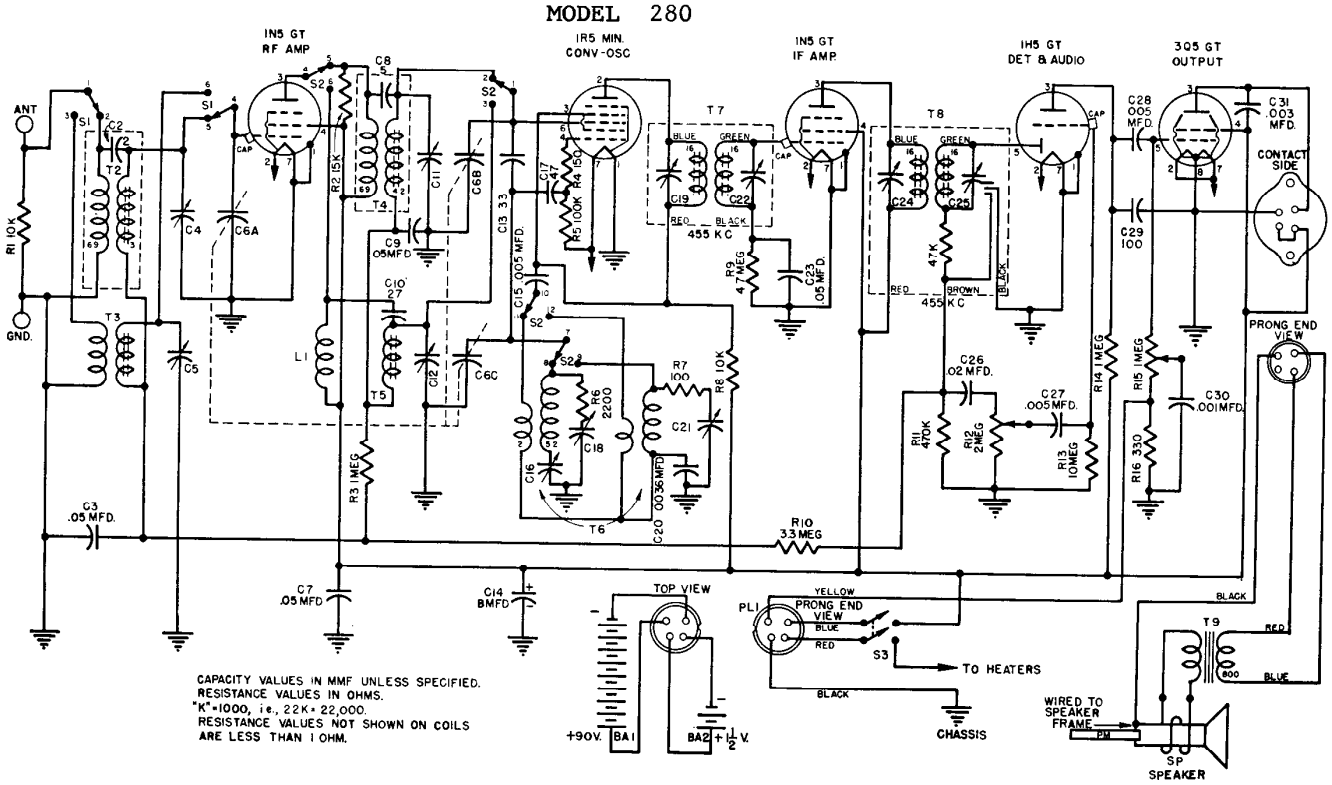

CAPACITY VALUES IN MMF UNLESS SPECIFIED.
RESISTANCE VALUES IN OHMS.
"K" = 1000, ie., 22K = 22,000.
RESISTANCE VALUES NOT SHOWN ON COILS ARE LESS THAN 1 OHM.

REPLACEMENT PARTS LIST - 280

UNIVERSAL REPLACEMENT PARTS

PART NO.	SYMBOL	DESCRIPTION
UCC-011	C3, 9, 23	CAPACITOR—.05 mfd., 200 v., paper
UCC-028	C7	CAPACITOR—.05 mfd., 400 v., paper
UCC-035	C30	CAPACITOR—.001 mfd., 600 v., paper
UCC-037	C31	CAPACITOR—.003 mfd., 600 v., paper
UCC-039	C15, 27, 28	CAPACITOR—.005 mfd., 600 v., paper
UCC-041	C26	CAPACITOR—.02 mfd., 600 v., paper
UCU-1014	C10	CAPACITOR—27 mmf., mica
UCU-1020	C17	CAPACITOR—47 mmf., mica
UCU-1028	C29	CAPACITOR—100 mmf., mica
UCU-2065	C20	CAPACITOR—3600 mmf., mica
UOP-654	SP	SPEAKER—6½ in. permanent magnet speaker
UOX-011		CONE—Speaker cone
URD-025	R7	RESISTOR—100 ohm, ⅓ w., carbon
URD-029	R4	RESISTOR—150 ohm, ⅓ w., carbon
URD-037	R16	RESISTOR—330 ohm, ⅓ w., carbon
URD-057	R6	RESISTOR—2200 ohm, ⅓ w., carbon
URD-073	R1, 8	RESISTOR—10,000 ohm, ⅓ w., carbon
URD-077	R2	RESISTOR—15,000 ohm, ⅓ w., carbon
URD-097	R5	RESISTOR—100,000 ohm, ⅓ w., carbon
URD-113	R11	RESISTOR—470,000 ohm, ⅓ w., carbon
URD-121	R3, 14	RESISTOR—1 meg., ⅓ w., carbon
URD-133	R10	RESISTOR—3.3 meg., ⅓ w., carbon
URD-137	R9	RESISTOR—4.7 meg., ⅓ w., carbon
URD-145	R13	RESISTOR—10 meg., ⅓ w., carbon

SPECIALIZED REPLACEMENT PARTS

RAB-5001		BACK—Cabinet back
RCE-5001	C14	CAPACITOR—8 mfd., 150 v., electrolytic
RCT-5000	C6A, 6B, 6C	CONDENSER—Tuning condenser
RCU-5000	C13	CAPACITOR—3.3 mmfd., mica
RCY-5000	C5, 18, 21	CAPACITOR—SW antenna trimmer, BC oscillator trimmer and SW oscillator trimmer

SPECIALIZED REPLACEMENT PARTS LIST (Cont'd)

PART NO.	SYMBOL	DESCRIPTION
RCY-5001	C16	CAPACITOR—BC oscillator padder
RDC-5001		CORD—Drive cord
RDE-5001		ESCUTCHEON—Dial scale escutcheon
RDF-5001		WASHER—Felt washer for knobs
RDK-5000		KNOB—Control knobs
RDM-5000		FLAG—Off-On indicator flag
RDP-5000		POINTER—Plastic dial pointer
RDX-5001		BRACKET—Dial bracket and pulley assembly
RHC-5001		CLIP—Off-On indicator retaining clip
RJS-5000		SOCKET—Miniature tube socket
RJS-5001		SOCKET—Octal tube socket
RJS-5002		SOCKET—Speaker socket
RLA-5000	T2	COIL ASSEMBLY—Broadcast antenna coil
RLA-5002	T3	COIL ASSEMBLY—Short wave antenna coil
RLB-5000	T4	COIL ASSEMBLY—Broadcast RF
RLB-5002	T5	COIL ASSEMBLY—Short wave RF
RLC-5000	T6	COIL ASSEMBLY—BC and SW oscillator
RLI-5000	L1	COIL ASSEMBLY—SW RF choke coil
RMB-5001		BEARING—Dial drive shaft supporting bearing
RMC-5000		CAM—Off-On indicator cam
RMU-5001		SHAFT—Dial drive shaft
RRC-5000	R12	VOLUME CONTROL—2 meg. volume control
RRC-5002	R15, S3	TONE CONTROL—1 meg. control and power switch
RSW-5000	S1, 2	SWITCH—Band change switch
RTO-5001	T9	TRANSFORMER—Output transformer
RTL-5000	T8	TRANSFORMER—2nd i-f transformer
RTL-5003	T7	TRANSFORMER—1st i-f transformer
RWX-5000		CABLE ASSEMBLY—Battery cable
RYM-5000		CHART—Dial calibration chart

MODEL 303

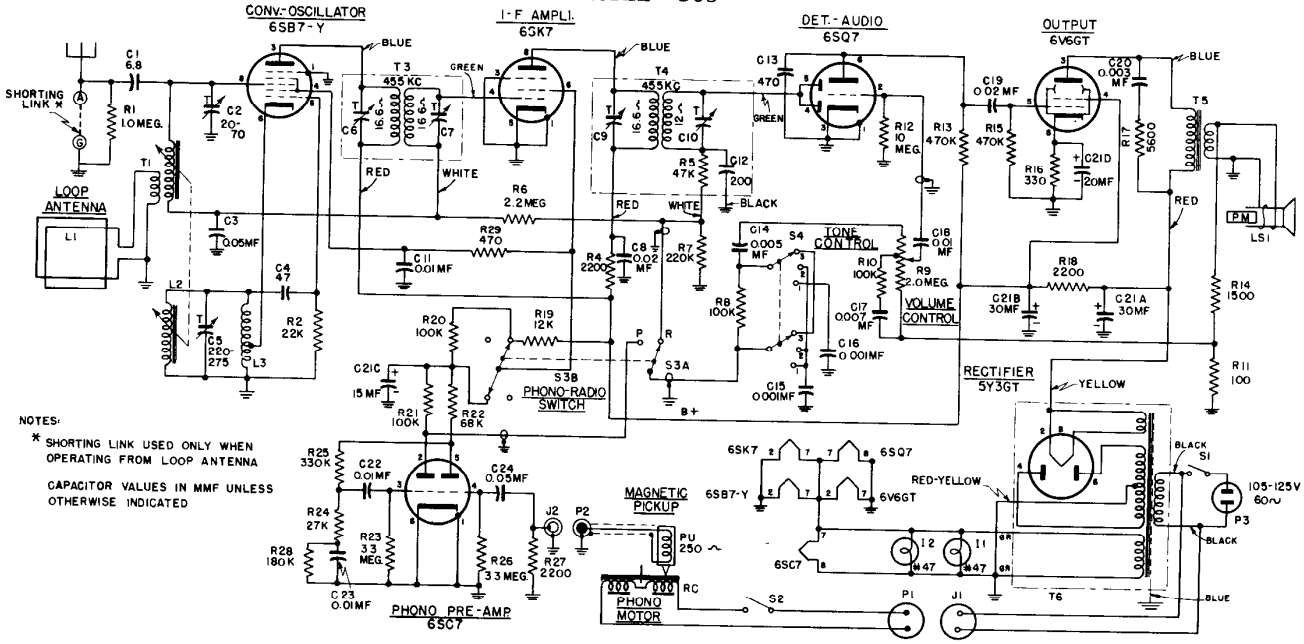

NOTES:

* SHORTING LINK USED ONLY WHEN OPERATING FROM LOOP ANTENNA

CAPACITOR VALUES IN MMF UNLESS OTHERWISE INDICATED

REPLACEMENT PARTS LIST—MODEL 303

PART NO.	SYMBOL	DESCRIPTION
UNIVERSAL G-E REPLACEMENT PARTS		
UCC-035	C15, 16	CAPACITOR- .001 mfd., 600 v., paper
UCC-039	C14	CAPACITOR- .005 mfd., 600 v., paper
UCC-040	C11, 18, 22, 23	CAPACITOR- .01 mfd., 600 v., paper
UCC-041	C8, 19	CAPACITOR—.02 mfd., 600 v., paper
UCC-045	C3, 24	CAPACITOR- .05 mfd., 600 v., paper
UCC-057	C20	CAPACITOR—.003 mfd., 1000 v., paper
UCN-506	C1	CAPACITOR—6.8 mmf., v., ceramic
UCU-020	C4	CAPACITOR—47 mmf., 500 v., mica
UCU-044	C13	CAPACITOR—470 mmf., 500 v., mica
UIC-001		CEMENT—Speaker cone replacement cement
UOP-628	SPKR	SPEAKER—6 inch permanent magnet
UOX-001		CONE—Speaker cone and dust cap
URD-025	R11	RESISTOR —100 ohms, ½ w., carbon
URD-041	R28	RESISTOR —180,000 ohms, ½ w., carbon
URD-053	R14	RESISTOR—1500 ohms, ½ w., carbon
URD-057	R4, 27	RESISTOR—2200 ohms, ½ w., carbon
URD-067	R17	RESISTOR—5600 ohms, ½ w., carbon
URD-081	R2	RESISTOR —22,000 ohms, ½ w., carbon
URD-083	R24	RESISTOR —27,000 ohms, ½ w., carbon
URD-093	R22	RESISTOR —68,000 ohms, ½ w., carbon
URD-097	R8, 20, 21, 10	RESISTOR 100,000 ohms, ½ w., carbon
URD-103	R28	RESISTOR- 180,000 ohms, ½ w., carbon
URD-105	R7	RESISTOR —220,000 ohms, ½ w., carbon
URD-109	R25	RESISTOR —330,000 ohms, ½ w., carbon
URD-113	R13, 15	RESISTOR —470,000 ohms, ½ w., carbon
URD-121	R1	RESISTOR —1.0 meg., ½ w., carbon
URD-129	R6	RESISTOR —2.2 meg., ½ w., carbon
URD-133	R23, 26	RESISTOR —3.3 meg., ½ w., carbon
URD-145	R12	RESISTOR 10.0 meg., ½ w., carbon
URE-037	R16	RESISTOR—330 ohms, 1 w., carbon
URF-057	R18	RESISTOR— 2200 ohms, 2 w., carbon
URF-075	R19	RESISTOR—12,000 ohms, 2 w., carbon
SPECIALIZED G-E REPLACEMENT PARTS		
AC-015		COVER—Cabinet bottom
AD-016		BRACKET—For pilot light
CC-001	C17	CAPACITOR—.007 mf., 600 v., paper
CD-001		SHAFT—Tuner assembly consisting of slide shaft and bracket (less iron cores)

PART NO.	SYMBOL	DESCRIPTION
SPECIALIZED G-E REPLACEMENT PARTS (Cont'd)		
RCE-033	C21A	CAPACITOR—30 mf., 350 v., dry electrolytic
	C21B	CAPACITOR—30 mf., 350 v., dry electrolytic
	C21C	CAPACITOR—15 mf., 250 v., dry electrolytic
	C21D	CAPACITOR—20 mf., 25 v., dry electrolytic
RCY-013	C2	CAPACITOR—Antenna trimmer, 20-75 mmf.
RCY-014	C5	CAPACITOR- Oscillator trimmer, 220-275 mmf.
RDC-013		CORD—Dial drive cord 46½ in.
RDC-014		CORD—Tuning mechanism drive cord 9½ in.
RDF-005		WASHER—Felt washers for control knobs
RDK-002		KNOB—Phono-radio and tone control (pointer)
RDK-006		KNOB—Tuning and volume control (plain)
RDP-014		POINTER—Dial pointer and slide
RDS-020		SCALE—Dial scale and cushion
REI-005		CORE—Iron core for tuning antenna and oscillator coils
RHG-003		GROMMET—Mounting grommet for 6SC7 socket
RHH-004		FASTENER—Holds bottom plate on
RJA-001		ADAPTER—Connects control knobs to control shaft
RJC-001		PLUG—Connects to speaker
RJP-010	J2	SOCKET—Phono input socket on chassis
RJS-003		SOCKET—6SB7-Y socket
RJS-006		SOCKET—Octal socket
RJS-031		SOCKET—6SC7 socket
RJS-033		SOCKET—Pilot light socket
RJS-049	J1	SOCKET—Phono power socket
RLA-010	T1	COIL—Antenna coil assembly (less iron core)
RLC-019	L2	COIL—Oscillator coil assembly (less iron core)
RLC-020	L3	COIL—Oscillator padder
RLL-011	L1	BEAM-A-SCOPE—Loop antenna assembly
RMS-004		SPRING—Tuning Drive Cord Tension Spring
RMS-056		SPRING—Main Drive Cord Tension Spring
RMW-003		PULLEY—Idler pulley for dial string
RMU-013		SHAFT—Shaft assembly for driving tuning mechanism
RMX-014		SHAFT—Tuning control shaft assembly
RPX-010	PU	PICK-UP—Magnetic pick-up cartridge
RRC-029	R9	VOLUME CONTROL AND POWER SWITCH—2 meg. tapped at 1 meg.
RSW-018	S3	SWITCH—Radio phono
RSW-019	S1	SWITCH—Tone control
RTL-020	T4	TRANSFORMER—2nd IF Transformer
RTL-021	T3	TRANSFORMER—1st IF Transformer
RTO-013	T5	TRANSFORMER—Output transformer
RTP-021	T6	TRANSFORMER—Power transformer
RWL-009		CORD—Power cord and plug

MODEL 304

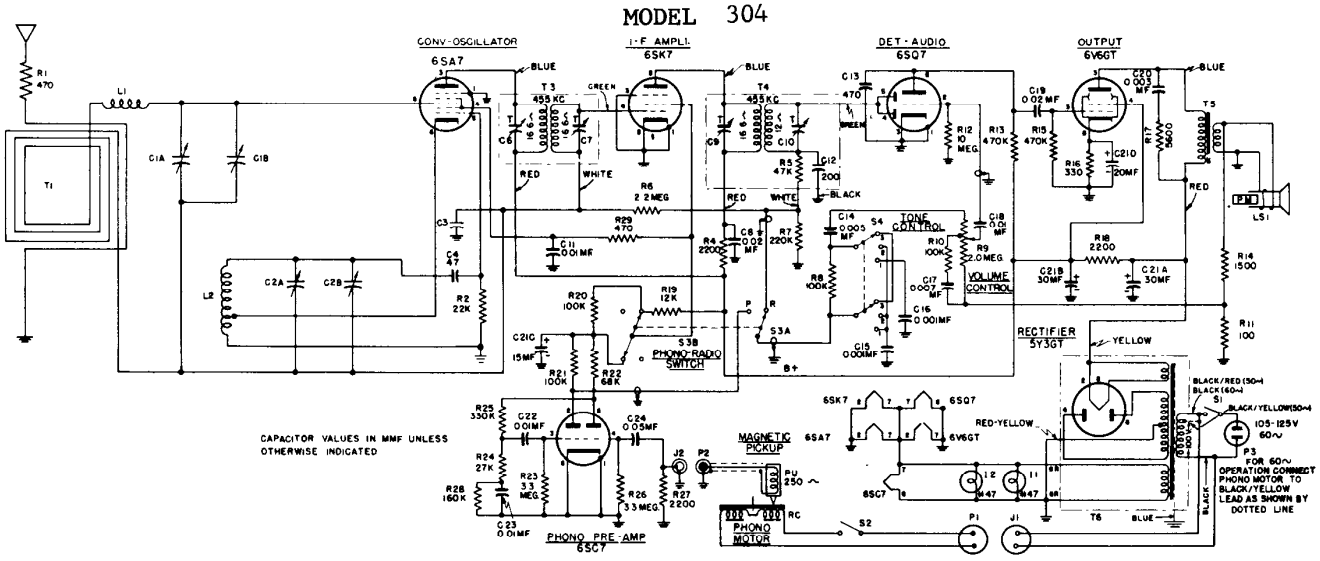
CONV-OSCILLATOR
6SA7
I-F AMPLI.
6SK7
DET.-AUDIO
6SQ7
OUTPUT
6V6GT
455 KC
TONE CONTROL
VOLUME CONTROL
PHONO-RADIO SWITCH
MAGNETIC PICKUP
PHONO PRE-AMP
6SC7
PHONO MOTOR
RECTIFIER
5Y3GT
CAPACITOR VALUES IN MMF UNLESS OTHERWISE INDICATED
105-125V 60~
FOR 60~ OPERATION CONNECT PHONO MOTOR TO BLACK/YELLOW LEAD AS SHOWN BY DOTTED LINE

MODEL 304—REPLACEMENT PARTS LIST

CAT. NO.	SYMBOL	DESCRIPTION
UNIVERSAL REPLACEMENT PARTS		
UCC-035	C15, 16	CAPACITOR—.001 mfd., 600 v., paper
UCC-039	C14	CAPACITOR—.005 mfd., 600 v., paper
UCC-040	C11, 18, 22, 23	CAPACITOR—.01 mfd., 600 v., paper
UCC-041	C3, 19	CAPACITOR—.02 mfd., 600 v., paper
UCC-045	C3, 24	CAPACITOR—.05 mfd., 600 v., paper
UCC-057	C20	CAPACITOR—.003 mfd., 1000 v., paper
UCU-020	C4	CAPACITOR—47 mmf., mica
UCU-044	C13	CAPACITOR—470 mmf., mica
UDL-008	I1, 2	LAMP—No. 47 pilot lamp
UIC-001		CEMENT—Speaker cone replacement cement
UOP-628	LS1	SPEAKER—6-inch PM speaker
URD-025	R11	RESISTOR—100 ohms, ½ w., carbon
URD-041	R1, 29	RESISTOR—470 ohms, ½ w., carbon
URD-053	R14	RESISTOR—1600 ohms, ½ w., carbon
URD-057	R4, 27	RESISTOR—2200 ohms, ½ w., carbon
URD-067	R17	RESISTOR—5600 ohms, ½ w., carbon
URD-081	R2	RESISTOR—22,000 ohms, ½ w., carbon
URD-083	R24	RESISTOR—27,000 ohms, ½ w., carbon
URD-089	R5	RESISTOR—47,000 ohms, ½ w., carbon
URD-093	R22	RESISTOR—68,000 ohms, ½ w., carbon
URD-097	R8, 10, 20, 21	RESISTOR—10,0000 ohms, ½ w., carbon
URD-103	R28	RESISTOR—180,000 ohms, ½ w., carbon
URD-105	R7	RESISTOR—220,000 ohms, ½ w., carbon
URD-109	R25	RESISTOR—330,000 ohms, ½ w., carbon
URD-113	R13, 15	RESISTOR—470,000 ohms, ½ w., carbon
URD-129	R6	RESISTOR—2.2 meg., ½ w., carbon
URD-133	R23, 26	RESISTOR—3.3 meg., ½ w., carbon
URD-145	R12	RESISTOR—10 meg., ½ w., carbon
URE-037	R16	RESISTOR—330 ohms, 1 w., carbon
URF-057	R18	RESISTOR—2200 ohms, 2 w., carbon
URF-075	R19	RESISTOR—12,000 ohms, 2 w., carbon
SPECIALIZED REPLACEMENT PARTS		
RAC-015		COVER—Cabinet, bottom cover
RAD-016		BRACKET—Pilot lamp bracket
RCC-001	C17	CAPACITOR—.007 mfd., 600 v., paper
RCE-033	C21A, B, C, D	CAPACITOR—30 mfd., 350 v., 30 mfd., 350 v., 15 mfd., 250 v., 20 mfd., 26 v. electrolytic
RCT-020	C1A, B, 2A, B	CONDENSER—2-section tuning condenser and trimmers (includes drive drum)
RDC-023		CORD—Dial pointer drive cord
RDC-024		CORD—Gang condenser drive cord

CAT. NO.	SYMBOL	DESCRIPTION
SPECIALIZED REPLACEMENT PARTS (Cont'd)		
RDF-009		WASHER—Felt washer for control knobs
RDK-002		KNOB—Control knob (pointer)
RDK-006		KNOB—Control knob (plain)
RDP-014		POINTER—Dial pointer and slide assembly
RDS-049		SCALE—Dial scale and cushion
RHC-012		COTTER—Hair pin cotter for dial cord idler pulleys
RHC-013		COTTER—Hair pin cotter for tuning shaft and idler drum shaft
RHG-003		GROMMET—Mounting grommet for 6SC7 tube socket
RHX-011		HARDWARE—Tuning condenser mounting hardware
RJA-001		ADAPTER—Wood extension shaft for control shafts
RJC-001		PLUG—Speaker lead plugs
RJP-010	J2	SOCKET—Phono input socket
RJS-003		SOCKET—6SA7 tube socket
RJS-006		SOCKET—Octal tube socket
RJS-031		SOCKET—6SC7 tube socket
RJS-049	J1	SOCKET—Phono power socket
RJS-086		SOCKET—Pilot lamp socket
RLA-021	L1	COIL—Antenna compensating coil
RLC-021	L2	COIL—Oscillator coil
RLL-014	T1	BEAM-A-SCOPE—Loop antenna assembly
RMC-017		CLAMP—Electrolytic capacitor mounting clamp
RMS-004		SPRING—Drive cord tension spring (in pointer drive cord)
RMS-076		SPRING—Drive cord tension spring (inside condenser drive drum)
RMW-003		PULLEY—Idler pulley for pointer drive cord
RMW-036		DRUM—Idler drum (consists of 1¼-inch drum and brass drive bushing)
RMX-014		SHAFT—Tuning control shaft
RPX-010	PU	PICK-UP—Magnetic pick-up unit
RRC-029	R9, S1	VOLUME CONTROL—2 meg. (includes power switch)
RSW-018	S3	SWITCH—Phono-radio switch
RSW-019	S4	SWITCH—Tone control switch
RTL-020	T4	TRANSFORMER—2nd I-F transformer
RTL-021	T3	TRANSFORMER—1st I-F transformer
RTO-013	T5	TRANSFORMER—Output transformer
RTP-021	T6	TRANSFORMER—60-cycle power transformer
RTP-039	T6	TRANSFORMER—50-cycle power transformer
RWL-009	P3	CORD—Power cord and plug
RYM-001		SCALE—Cardboard scale for backplate

MODEL 321

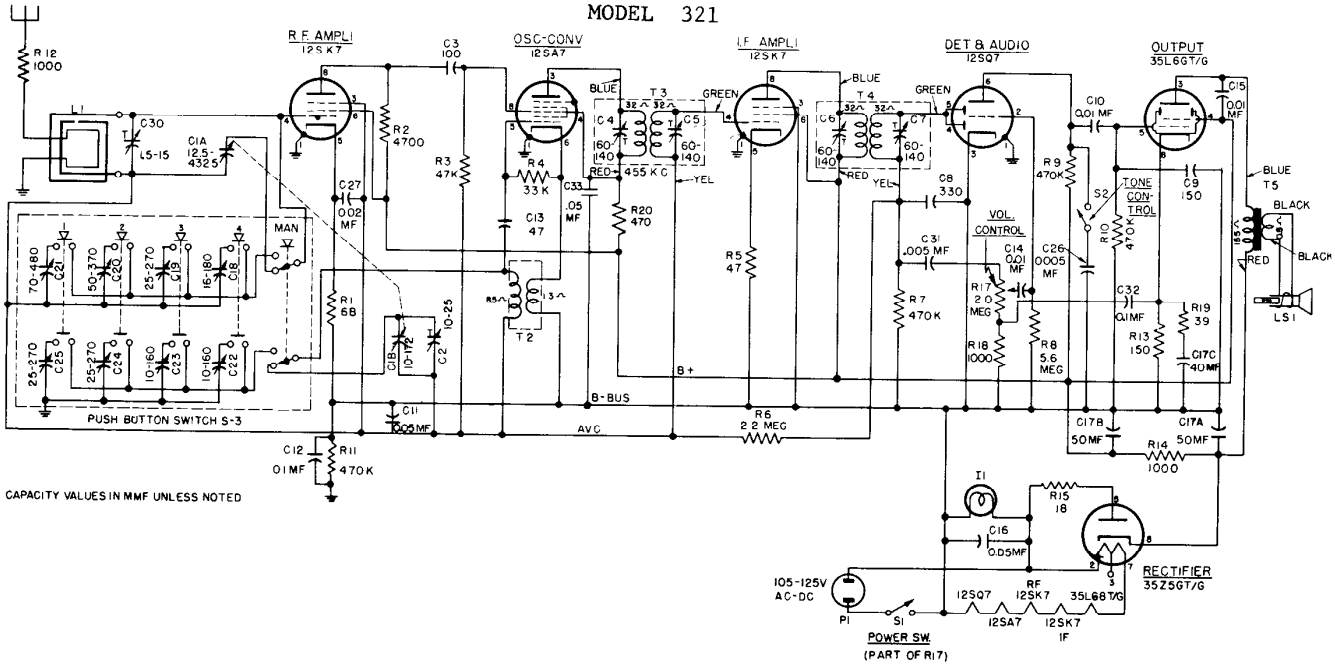
R.F. AMPLI
12SK7
OSC-CONV
12SA7
I.F. AMPLI
12SK7
DET & AUDIO
12SQ7
OUTPUT
35L6GT/G
RECTIFIER
35Z5GT/G
PUSH BUTTON SWITCH S-3
MAN
VOL. CONTROL
TONE CONTROL
B-BUS
AVC
B+
BLUE
GREEN
RED
YEL
BLACK
LS1
105-125V AC-DC
POWER SW.
(PART OF R17)
CAPACITY VALUES IN MMF UNLESS NOTED

Cat. No.	Symbol	Description
UNIVERSAL G-E REPLACEMENT PARTS		
UCC-009	C27	Capacitor—0.02 mfd., 200 V., paper
UCC-013	C32	Capacitor—0.1 mfd., 200 V., paper
UCC-025	C10,14	Capacitor—0.01 mfd., 400 V., paper
UCC-030	C12	Capacitor—0.1 mfd., 400 V., paper
UCC-039	C26, 31	Capacitor—0.005 mfd., 600 V., paper
UCC-040	C15	Capacitor—0.01 mfd., 600 V., paper
UCC-045	C11, 16, 33	Capacitor—0.05 mfd., 600 V., paper
UDL-018	I1	Pilot Lamp—115 V., 10 watt candelabra base
UOP-525	LS1	Speaker—5¼ in. permanent magnet loudspeaker
URD-015	R19	Resistor—39 ohms, ½ W., carbon
URD-017	R5	Resistor—47 ohms, ½ W., carbon
URD-021	R1	Resistor—68 ohms, ½ W., carbon
URD-029	R13	Resistor—150 ohms, ½ W., carbon
URD-041	R20	Resistor—470 ohms, ½ W., carbon
URD-049	R12, 18	Resistor—1000 ohms, ½ W., carbon
URD-065	R2	Resistor—4700 ohms, ½ W., carbon
URD-085	R4	Resistor—33,000 ohms, ½ W., carbon
URD-089	R3	Resistor—47,000 ohms, ½ W., carbon
URD-113	R7, 9, 10, 11	Resistor—470,000 ohms, ½ W., carbon
URD-129	R6	Resistor—2.2 megohms, ½ W., carbon
URD-139	R8	Resistor—5.6 megohms, ½ W., carbon
URE-007	R15	Resistor—18 ohms, 1 W., carbon
URF-049	R14	Resistor—1000 ohms, 2 W., carbon
SPECIALIZED G-E REPLACEMENT PARTS		
RAV-001		Cabinet—Cabinet, less escutcheon and back
RCE-001	C17A, 17B, 17C	Capacitor—50 mfd., 150 V., 50 mfd., 150 V., 40 mfd., 25 V., dry electrolytic
RCT-003	C1A, 1B, 2	Capacitor—Tuning capacitor assembly
RCU-110	C13	Capacitor—47 mmf., 500 V., mica
RCU-112	C3	Capacitor—100 mmf., 500 V., mica
RCU-113	C9	Capacitor—150 mmf., 500 V., mica
RCU-115	C8	Capacitor—330 mmf., 500 V., mica
RCX-001	C18, 19, 20, 21	Trimmer Strip—Station selector adjustments (r-f)
RCX-002	C22, 23, 24, 25	Trimmer Strip—Station selector adjustments (osc.)
RCY-002	C30	Capacitor—1.5-15 mmf. antenna trimmer

Cat. No.	Symbol	Description
SPECIALIZED G-E REPLACEMENT PARTS (Cont'd)		
RDK-004		Knob—Control Knob (tuning)
RDK-007		Key—Station selector key
RDK-009		Knob—Control knob (volume)
RDK-023		Knob—Tone control wafer knob
RDP-003		Pointer—Dial scale pointer
RDS-004		Scale—Dial scale
RDX-003		Assembly—Dial scale back plate assembly
RDX-004		Assembly—Drive cord assembly
RHC-001		Cotter—Hairpin shaft retaining cotter
RHG-001		Grommet—Tuning capacitor mtg. grommet
RHM-007		Stud—Idler pulley stud
RHM-008		Cam—Tone switch cam
RHM-009		Link—Tone switch cam link
RHM-010		Clip—Tone control shaft clip
RHM-011		Bushing—Tuning shaft bushing
RHX-001		Assembly—Chassis mounting assembly
RIT-006		Cover—Electrolytic capacitor cardboard cover
RJC-001		Terminal— Loudspeaker lead terminals
RJS-007		Socket—Pilot lamp socket
RJS-008		Socket—Octal base tube socket
RJS-004		Socket—Mtg. socket for electrolytic capacitor
RLC-002	T2	Coil—Oscillator coil
RLL-004	L1	Beam-a-scope—Cabinet back and antenna assembly
RLP-001	L2	Coil—Plate choke
RLP-002	L4, R16	Coil—Series peaking coil and resistor assembly
RLW-001	L3	Coil—Wavetrap coil
RMM-001		Shield—Tube shield and clip
RMM-002		Shield—Light shield
RMS-001		Spring—Drive cord spring
RMS-003		Spring—Station selector button spring
RMU-003		Shaft—Tuning shaft and cotter pin
RMW-001		Pulley—Drive cord idler pulley
RRC-003	R17	Volume Control—2 meg. potentiometer
RSP-001	S3	Switch—Station selector push button switch
RSW-003	S2	Switch—Tone control switch
RTL-003	T3	Transformer—1st I-F transformer
RTL-004	T4	Transformer—2nd I-F transformer
RTO-002	T5	Transformer—Output transformer
RWL-009	P1	Cord—Power cord and plug
RYC-001		Card—Station letter cards

MODELS 324, 328

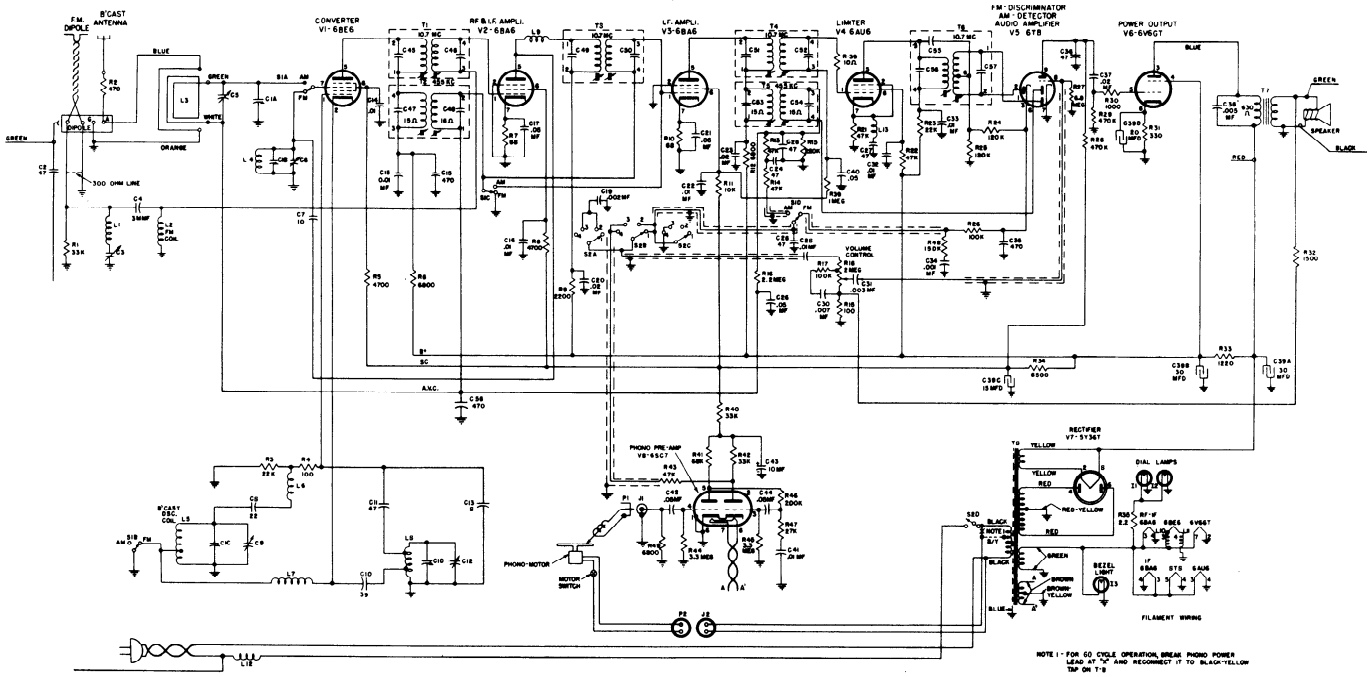

MODELS 324 AND 328 REPLACEMENT PARTS LIST

Cat. No.	Symbol	Description	Suggested Unit List Price
UNIVERSAL REPLACEMENT PARTS			
UCC-620	C34	CAPACITOR—.001 mfd., 600 v., paper	$0.25
UCC-621	C19	CAPACITOR—.002 mfd., 600 v., paper	.25
UCC-623	C31	CAPACITOR—.003 mfd., 600 v., paper	.25
UCC-630	C14, 15, 16, 22, 28, 32, 33, 41	CAPACITOR—.01 mfd., 600 v., paper	.30
UCC-631	C20, 23, 37	CAPACITOR—.02 mfd., 600 v., paper.	.30
UCC-635	C40, 44, 17, 21, 29, 42	CAPACITOR—.05 mfd., 600 v., paper	.40
UCC-1625	C38	CAPACITOR—.005 mfd., 1600 v., paper	.55
UCU-020	C2, 24, 25, 26, 36	CAPACITOR—47 mmf., ±20%, mica	.25
UCU-044	C35	CAPACITOR—470 mmf., ±20%, mica	.30
UOP-1247		SPEAKER—12-inch PM, same as S1200D7	16.50
URD-001	R39	RESISTOR—10 ohms, ½ w., carbon	.13
URD-021	R7, 10	RESISTOR—68 ohms, ½ w., carbon	.13
URD-025	R4, 19	RESISTOR—100 ohms, ½ w., carbon	.13
URD-041	R2	RESISTOR—470 ohms, ½ w., carbon	.13
URD-049	R30	RESISTOR—1000 ohms, ½ w., carbon	.13
URD-053	R32	RESISTOR—1500 ohms, ½ w., carbon	.13
URD-057	R9	RESISTOR—2200 ohms, ½ w., carbon	.13
URD-065	R5, 8	RESISTOR—4700 ohms, ½ w., carbon	.13
URD-069	R6, 12, 43 49	RESISTOR—6800 ohms, ½ w., carbon	.13
URD-073	R11	RESISTOR—10,000 ohms, ½ w., carbon	.13
URD-081	R3, 23	RESISTOR—22,000 ohms, ½ w., carbon	.13
URD-085	R1, 40, 42	RESISTOR—33,000 ohms, ½ w., carbon	.13
URD-089	R13, 14, 21, 22	RESISTOR—47,000 ohms, ½ w., carbon	.13
URD-093	R41	RESISTOR—68,000 ohms, ½ w., carbon	.13
URD-097	R17, 26	RESISTOR—100,000 ohms, ½ w., carbon	.13
URD-099	R24, 25	RESISTOR—120,000 ohms, ½ w., carbon	.13
URD-101	R48	RESISTOR—150,000 ohms, ½ w., carbon	.13
URD-105	R15	RESISTOR—220,000 ohms, ½ w., carbon	.13
URD-113	R28, 29	RESISTOR—470,000 ohms, ½ w., carbon	.13
URD-121	R38	RESISTOR—1 meg., ½ w., carbon	.13
URD-129	R16	RESISTOR—2.2 meg., ½ w., carbon	.13
URD-133	R44, 45	RESISTOR—3.3 meg., ½ w., carbon	.13
URD-141	R27	RESISTOR—6.8 meg., ½ w., carbon	.13
URD-1104	R46	RESISTOR—200,000 ohms, 5%, ½ w., carbon	.17
URE-037	R31	RESISTOR—330 ohms, 1 w., carbon	.17
URE-083	R47	RESISTOR—27,000 ohms, 1 w., carbon.	.17
SPECIALIZED REPLACEMENT PARTS			
RAL-001		BEZEL—Pilot light bezel	$0.10
RAV-058		CABINET—For Model 324	125.00
RAV-060		CABINET—For Model 328	130.00
RCC-001	C30	CAPACITOR—.007 mfd., 600 v.	.25
RCE-029	C39A, B, 39C, D	CAPACITOR—Electrolytic capacitor 15 mfd., 400 v.; 20 mfd., 25 v.; 30 mfd., 400 v.; 30 mfd., 400 v.	3.45
RCE-042	C43	CAPACITOR—10 mfd., 250 v., electrolytic capacitor	.95
RCT-033	C1A, B, 1C, D	CAPACITOR—Tuning capacitor and drum assembly	6.50
RCW-176	C18, 58	CAPACITOR—470 mmf., ±20%, Hi k, ceramic	.60
RCW-1043	C11	CAPACITOR—47 mmf., ±20%, max. neg., ceramic	.60
RCW-1053	C8	CAPACITOR—22 mmf., ±20%, max. neg., ceramic	$0.60
RCW-1057	C10	CAPACITOR—39 mmf., ±10%, max. neg., ceramic	.60
RCW-1060	C7	CAPACITOR—10 mmf., ±20%, sero coef., ceramic	.60
RCW-1066	C4	CAPACITOR—3 mmf., ±10%, sero coef., ceramic	1.00
RCW-2010	C27	CAPACITOR—47 mmf., ±5%, sero coef., ceramic	.60
RCW-2033	C13	CAPACITOR—8 mmf., ±10%, max. neg., ceramic	.60
RCY-020	C3	CAPACITOR—Trimmer, 36-146 mmf.	.55
RCY-034	C5	CAPACITOR—Trimmer, 2-20 mmf.	.45
RCY-038	C12	CAPACITOR—Air trimmer, 1 to 8 mmfd.	1.00
RDC-033		CORD—Dial drive cord (25 yds.)	2.50
RDE-032		ESCUTCHEON	6.10
RDK-037		KNOB—Plain (for Model 328)	.15
RDK-040		KNOB—With arrow (for Model 328)	.15
RDK-137		KNOB—With arrow (for Model 324)	.15
RDK-138		KNOB—Plain (for Model 324)	.15
RDS-074		SCALE—Dial scale	1.50
RDX-035		POINTER—Dial pointer assembly	.45
RHC-017		CLIP—To hold coil	.02
RHG-010		GROMMET—Rubber mounting grommet for preamplifier tube	.05
RHG-015		GROMMET—For mounting tuning capacitor	.05
RHJ-006		SPACER—For mounting tuner condenser	.05
RJP-010	J1	JACK—Phono jack	.10
RJS-003		SOCKET—Tube socket for V6 and V7	.20
RJS-049	J2	SOCKET—Phono power female socket	.25
RJS-085		SOCKET—Tube socket for V8	.20
RJS-105		SOCKET—Tube socket for V1, V2, V3, V4	.20
RJS-118		SOCKET—Tube socket for V5	.35
RLA-012	L6	COIL—FM oscillator grid choke	1.05
RLB-027	L4	COIL—FM r-f coil	.65
RLC-066	L5	COIL—B-C oscillator coil	.90
RLC-067	L8	COIL—FM oscillator coil	.30
RLI-005	L1, 10, 11	COIL—Choke coil	1.00
RLI-044	L12	COIL—FM power line choke coil	.75
RLI-056	L2	COIL—FM antenna choke coil	.65
RLI-057	L7, 9	COIL—FM choke coil	.70
RLI-058	L13	COIL—FM limiter choke	.65
RLL-030	L3	LOOP—Broadcast loop	2.10
RMS-155		SPRING—For Receiver chassis bin	.15
RMS-044		SPRING—Dial cord tension	.03
RRC-074	R18	VOLUME CONTROL	1.25
RRN-006	R35	RESISTOR—2.2 ohms, ±10%, ½ w., carbon	.25
RRT-003	R33, 34	RESISTOR—6500 and 1220 ohms, ±10%, w.w.	1.25
RSW-048	S2A, B, 2C, D	SWITCH—Tone control and power switch	2.55
RSW-059	S1A, B, 1C, D	SWITCH—Band change switch	1.50
RTD-006	T6	TRANSFORMER—Discriminator transformer	4.95
RTL-054	T5	TRANSFORMER—2nd AM i-f transformer	2.40
RTL-078	T2	TRANSFORMER—1st AM i-f transformer	2.45
RTL-080	T1, 3, 4	TRANSFORMER—1st, 2nd, 3rd FM i-f transformer	2.45
RTO-051	T7	TRANSFORMER—Output transformer	3.00
RTP-061	T8	TRANSFORMER—Power transformer (60 cy.)	10.00

PRICES SUBJECT TO CHANGE WITHOUT NOTICE.

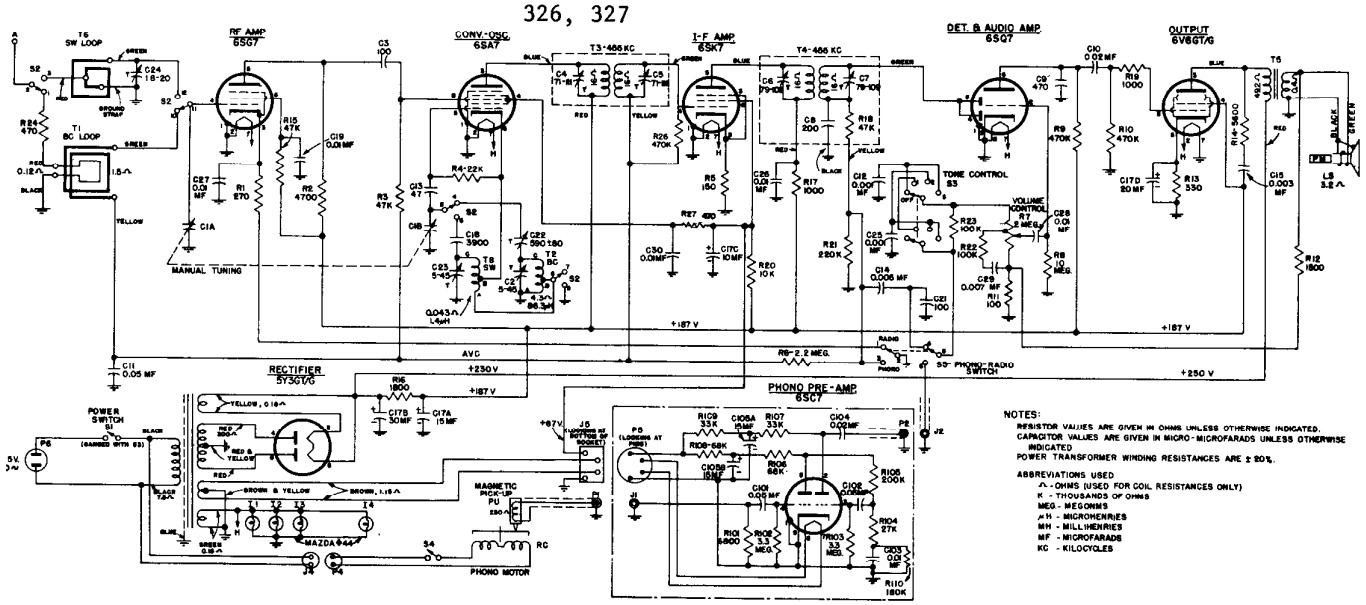
RF AMP 6SG7
CONV.-OSC. 6SA7
I-F AMP 6SK7
DET. & AUDIO AMP 6SQ7
OUTPUT 6V6GT/G
T3-456 KC
T4-456 KC
T5 SW LOOP
T1 BC LOOP
MANUAL TUNING
TONE CONTROL
VOLUME CONTROL
S3 PHONO-RADIO SWITCH
RECTIFIER 5Y3GT/G
POWER SWITCH S1
PHONO PRE-AMP 6SC7
MAGNETIC PICK-UP
PHONO MOTOR
MAZDA 944
AVC
+250 V
+187 V
NOTES:
RESISTOR VALUES ARE GIVEN IN OHMS UNLESS OTHERWISE INDICATED.
CAPACITOR VALUES ARE GIVEN IN MICRO-MICROFARADS UNLESS OTHERWISE INDICATED
POWER TRANSFORMER WINDING RESISTANCES ARE ± 20%.
ABBREVIATIONS USED
Ω - OHMS (USED FOR COIL RESISTANCES ONLY)
K - THOUSANDS OF OHMS
MEG. - MEGOHMS
μH - MICROHENRIES
MH - MILLIHENRIES
MF - MICROFARADS
KC - KILOCYCLES

PART NO.	SYMBOL	DESCRIPTION
UNIVERSAL G-E REPLACEMENT PARTS		
UCC-037	C15	CAPACITOR—0.003 mf., 600 v., paper
UCC-039	C14	CAPACITOR—0.005 mf., 600 v., paper
UCC-040	C19, 26, 27, 28, 30, 103	CAPACITOR—0.01 mf., 600 v., paper
UCC-041	C10, 104	CAPACITOR—0.02 mf., 600 v., paper
UCC-045	C11, 101, 102	CAPACITOR—0.05 mf., 600 v., paper
UDL-005	I1, 2, 3, 4	PILOT LAMP—G.E. No. 44, 6-8 v., 0.25 amp.
UIC-001		CEMENT—Speaker cone replacement cement
UOP-1206	LS	SPEAKER—12 inch PM speaker
UOX-005		CONE—Replacement speaker cone kit
URD-025	R11	RESISTOR—100 ohms, ½ w., carbon
URD-029	R5	RESISTOR—150 ohms, ½ w., carbon
URD-035	R1	RESISTOR—270 ohms, ½ w., carbon
URD-037	R13	RESISTOR—330 ohms, ½ w., carbon
URD-041	R24, 27	RESISTOR—470 ohms, ½ w., carbon
URD-049	R17, 19	RESISTOR—1000 ohms, ½ w., carbon
URD-053	R12	RESISTOR—1500 ohms, ½ w., carbon
URD-065	R2	RESISTOR—4700 ohms, ½ w., carbon
URD-067	R14	RESISTOR—5600 ohms, ½ w., carbon
URD-077	R101	RESISTOR—6800 ohms, ½ w., carbon
URD-081	R4	RESISTOR—22,000 ohms, ½ w., carbon
URD-083	R104	RESISTOR—27,000 ohms, ½ w., carbon
URD-085	R107, 109	RESISTOR—33,000 ohms, ½ w., carbon
URD-089	R3, 15	RESISTOR—47,000 ohms, ½ w., carbon
URD-093	R106, 108	RESISTOR—68,000 ohms, ½ w., carbon
URD-097	R22, 23	RESISTOR—100,000 ohms, ½ w., carbon
URD-105	R21	RESISTOR—220,000 ohms, ½ w., carbon
URD-113	R9, 10, 26	RESISTOR—470,000 ohms, ½ w., carbon
URD-129	R6	RESISTOR—2.2 meg., ½ w., carbon
URD-133	R102, 103	RESISTOR—3.3 meg., ½ w., carbon
URD-145	R8	RESISTOR—10 meg., ½ w., carbon
URF-055	R16	RESISTOR—1800 ohms, 2 w., carbon
URF-073	R20	RESISTOR—10,000 ohms, 2 w., carbon
SPECIALIZED G-E REPLACEMENT PARTS		
RAC-001		COVER—Beam-a-scope Cover
RAL-001		JEWEL—Pilot light jewel
RCC-001	C29	CAPACITOR—0.007 mfd., 600 v., paper
RCC-035	C12, 25	CAPACITOR—0.001 mf., 600 v., paper
RCE-002	C105A C105B	CAPACITOR—15 mf., 350 v., dry electrolytic CAPACITOR—15 mf., 350 v., dry electrolytic
RCE-003	C17A C17B C17C C17D	CAPACITOR—15 mf., 350 v., dry electrolytic CAPACITOR—30 mf., 350 v., dry electrolytic CAPACITOR—10 mf., 250 v., dry electrolytic CAPACITOR—20 mf., 25 v., dry electrolytic
RCT-005	C1A, 1B	CAPACITOR—2 gang tuning capacitor
RCU-064	C9	CAPACITOR—470 mmf., mica
RCU-110	C13	CAPACITOR—47 mmf., mica
RCU-112	C3, 21	CAPACITOR—100 mmf., mica
RCU-189	C18	CAPACITOR—3900 mmf., mica
RCX-020	C2 C16 C22 C23	CAPACITOR—Trimmer, 5-45 mmf. CAPACITOR—Trimmer, 15-90 mmf. CAPACITOR—Trimmer, 590 ± 80 mmf. CAPACITOR—Trimmer, 5-45 mmf.
RCY-004	C24	CAPACITOR—Trimmer, 1.8-20 mmf.
RDC-004		CORD—Dial drive cord, 41½ in. long
RDD-003		DRUM—Dial drum assembly
RDE-005		ESCUTCHEON—Dial escutcheon
RDF-005		WASHER—Felt washer for knobs
RDK-036		KNOB—Mahogany knob (plain)
RDK-038		KNOB—Oak knob (plain)
RDK-039		KNOB—Mahogany knob (pointer)

PART NO.	SYMBOL	DESCRIPTION
SPECIALIZED G-E REPLACEMENT PARTS		
RDK-041		KNOB—Oak knob (pointer)
RDP-005		POINTER—Dial scale pointer
RDS-016		SCALE—Dial scale
RDX-008		BACKPLATE—Dial backplate assembly
RHG-001		GROMMET—Tuning capacitor mounting grommet
RHG-003		GROMMET—Rubber grommet, ⅛ in. I.D. for $\frac{1}{4}$ in. hole
RHG-004		GROMMET—Rubber grommet, $\frac{1}{4}$ in. I.D. for $\frac{3}{8}$-in. hole
RHM-012		CUSHIONS—Rubber dial scale cushions
RHM-014		STUD—Shaft for upper pulleys on backplate
RHM-015		BUSHING—Tuning shaft bushing, washer, and nut
RHU-002		SPACER—Tuning capacitor mounting spacer
RJB-001		RECEPTACLE—Two-pin speaker receptacle
RJB-002		TERMINAL STRIP—Terminal strip for phono pre-amplifier, 2 terminals
RJC-001		PLUG—Tip plug for speaker leads
RJC-002		CONNECTOR—Clip for antenna loop connections
RJP-002	P5	PLUG—4-prong plug for pre-amplifier
RJP-004	P2	PLUG—Phono pre-amplifier output plug
RJS-003		SOCKET—Octal socket for receiver chassis
RJS-011		SOCKET—Pilot light socket for cabinet jewel
RJS-012		PLATE—Mounting plate for capacitor C17A, B, C, D
RJS-013		SOCKET—Pilot light socket for chassis lights
RJS-014	J5	RECEPTACLE—Four prong receptacle (Power to pre-amp.)
RJS-015		SOCKET—Octal socket for pre-amplifier (shock mounted)
RJX-001	J2	RECEPTACLE—Phono input receptacle on receiver chassis
RJS-049	J4	RECEPTACLE—Phono motor connector (female)
RJX-003	J1	RECEPTACLE—Phono input receptacle on pre-amplifier
RLC-004	T2	COIL—BC Band oscillator coil
RLC-005	T8	COIL—SW Band oscillator coil
RLL-005	T6	LOOP—SW Band antenna loop
RLL-006	T1	LOOP—Beam-a-scope BC Band loop
RMC-001		CLAMP—Mounts BC Band oscillator coil
RMC-002		CLAMP—Mounts SW Band oscillator coil
RMM-003		SHIELD—Bottom shield for 2nd I-F transformer
RMS-001		SPRING—Drive cord tension spring
RMU-004		SHAFT—Tuning shaft with cotter pin and "C" clip
RMW-001		PULLEY—Upper back plate pulley
RMW-002		PULLEY—Chassis idler pulley
ROC-001		CONE—Speaker cone and dust cap
RPX-010	PU	PICKUP—Magnetic pickup cartridge
RRC-005	R7	POTENTIOMETER—Volume control, 2 meg. tapped at 1 meg.
RRD-089	R18	RESISTOR—47,000 ohms, ½ w., carbon
RRD-104	R105	RESISTOR—200,000 ohms, ½ w., carbon
RSW-006	S5	SWITCH—Phono-Radio switch
RSW-007	S2	SWITCH—Band switch
RSX-003	S1	SWITCH—Power switch
	S3	SWITCH—Tone control switch
RTL-005	T3	TRANSFORMER—1st I-F transformer
RTL-006	T4	TRANSFORMER—2nd I-F transformer
RTO-004	T5	TRANSFORMER—Output transformer
RTP-010	T7	TRANSFORMER—Power transformer
RWL-004	P6	CORD—Power cord and plug

MODELS 329, 330

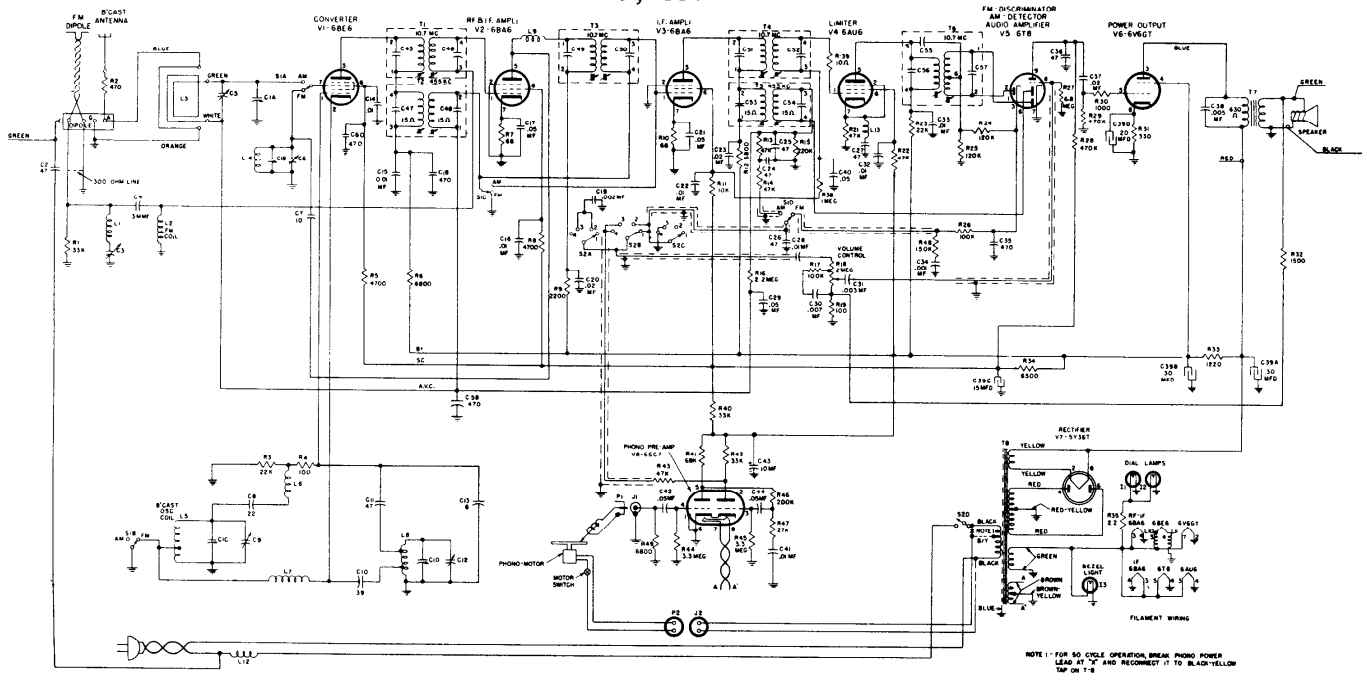

UNIVERSAL REPLACEMENT PARTS

Cat. No.	Symbol	Description	Suggested Unit List Price
UCC-620	C34	CAPACITOR—.001 mfd., 600 v., paper	$0.25
UCC-621	C19	CAPACITOR—.002 mfd., 600 v., paper	.25
UCC-623	C31	CAPACITOR—.003 mfd., 600 v., paper	.25
UCC-630	C14, 15, 16, 22, 28, 32, 33, 41	CAPACITOR—.01 mfd., 600 v., paper	.30
UCC-631	C20, 23, 37	CAPACITOR—.02 mfd., 600 v., paper	.30
UCC-635	C40, 44, 17, 21, 29, 42	CAPACITOR—.05 mfd., 600 v., paper	.40
UCC-1625	C38	CAPACITOR—.005 mfd., 1600 v., paper	.55
UCU-020	C2, 24, 25, 26, 36	CAPACITOR—47 mmf., ±20%, mica	.25
UCU-044	C35	CAPACITOR—470 mmf., ±20%, mica	.30
UOP-1247		SPEAKER—12-inch PM, same as S1200D7	16.50
URD-001	R39	RESISTOR—10 ohms, ½ w., carbon	.13
URD-021	R7, 10	RESISTOR—68 ohms, ½ w., carbon	.13
URD-025	R4, 19	RESISTOR—100 ohms, ½ w., carbon	.13
URD-041	R2	RESISTOR—470 ohms, ½ w., carbon	.13
URD-049	R30	RESISTOR—1000 ohms, ½ w., carbon	.13
URD-053	R32	RESISTOR—1500 ohms, ½ w., carbon	.13
URD-057	R9	RESISTOR—2200 ohms, ½ w., carbon	.13
URD-065	R5, 8	RESISTOR—4700 ohms, ½ w., carbon	.13
URD-069	R6, 12, 43 49	RESISTOR—6800 ohms, ½ w., carbon	.13
URD-073	R11	RESISTOR—10,000 ohms, ½ w., carbon	.13
URD-081	R3, 23	RESISTOR—22,000 ohms, ½ w., carbon	.13
URD-085	R1, 40, 42	RESISTOR—33,000 ohms, ½ w., carbon	.13
URD-089	R13, 14, 21, 22	RESISTOR—47,000 ohms, ½ w., carbon	.13
URD-093	R41	RESISTOR—68,000 ohms, ½ w., carbon	.13
URD-097	R17, 26	RESISTOR—100,000 ohms, ½ w., carbon	.13
URD-099	R24, 25	RESISTOR—120,000 ohms, ½ w., carbon	.13
URD-101	R48	RESISTOR—150,000 ohms, ½ w., carbon	.13
URD-105	R15	RESISTOR—220,000 ohms, ½ w., carbon	.13
URD-113	R28, 29	RESISTOR—470,000 ohms, ½ w., carbon	.13
URD-121	R38	RESISTOR—1 meg., ½ w., carbon	.13
URD-129	R16	RESISTOR—2.2 meg., ½ w., carbon	.13
URD-133	R44, 45	RESISTOR—3.3 meg., ½ w., carbon	.13
URD-141	R27	RESISTOR—6.8 meg., ½ w., carbon	.13
URD-1104	R46	RESISTOR—200,000 ohms, 5%, ½ w., carbon	.17
URE-037	R31	RESISTOR—330 ohms, 1 w., carbon	.17
URE-083	R47	RESISTOR—27,000 ohms, 1 w., carbon	.17

SPECIALIZED REPLACEMENT PARTS

RAL-001		BEZEL—Pilot light bezel	$0.10
RAV-058		CABINET—For Model 324	125.00
RAV-060		CABINET—For Model 328	130.00
RCC-001	C30	CAPACITOR—.007 mfd., 600 v.	.25
RCE-029	C39A, B, 39C, D	CAPACITOR—Electrolytic capacitor 15 mfd., 400 v.; 20 mfd., 25 v.; 30 mfd., 400 v.; 30 mfd., 400 v.	3.45
RCE-042	C43	CAPACITOR—10 mfd., 250 v., electrolytic capacitor	.95
RCT-033	C1A, B, 1C, D	CAPACITOR—Tuning capacitor and drum assembly	6.50
RCW-176	C18, 58	CAPACITOR—470 mmf., ±20%, Hi k, ceramic	.60
RCW-1043	C11	CAPACITOR—47 mmf., ±20%, max. neg., ceramic	.60
RCW-1053	C8	CAPACITOR—22 mmf., ±20%, max. neg., ceramic	$0.60
RCW-1057	C10	CAPACITOR—39 mmf., ±10%, max. neg., ceramic	.60
RCW-1060	C7	CAPACITOR—10 mmf., ±20%, zero coef., ceramic	.60
RCW-1066	C4	CAPACITOR—3 mmf., ±10%, zero coef., ceramic	1.00
RCW-2010	C27	CAPACITOR—47 mmf., ±5%, zero coef., ceramic	.60
RCW-2033	C13	CAPACITOR—8 mmf., ±10%, max. neg., ceramic	.60
RCY-020	C3	CAPACITOR—Trimmer, 36-146 mmf.	.55
RCY-034	C5	CAPACITOR—Trimmer, 2-20 mmf.	.45
RCY-038	C12	CAPACITOR—Air trimmer, 1 to 8 mmfd.	1.00
RDC-033		CORD—Dial drive cord (25 yds.)	2.50
RDE-032		ESCUTCHEON	6.10
RDK-037		KNOB—Plain (for Model 328)	.15
RDK-040		KNOB—With arrow (for Model 328)	.15
RDK-137		KNOB—With arrow (for Model 324)	.15
RDK-138		KNOB—Plain (for Model 324)	.15
RDS-074		SCALE—Dial scale	1.50
RDX-035		POINTER—Dial pointer assembly	.45
RHC-017		CLIP—To hold coil	.02
RHG-010		GROMMET—Rubber mounting grommet for preamplifier tube	.05
RHG-015		GROMMET—For mounting tuning capacitor	.05
RHJ-006		SPACER—For mounting tuner condenser	.05
RJP-010	J1	JACK—Phono jack	.10
RJS-003		SOCKET—Tube socket for V6 and V7	.20
RJS-049	J2	SOCKET—Phono power female socket	.25
RJS-085		SOCKET—Tube socket for V8	.20
RJS-105		SOCKET—Tube socket for V1, V2, V3, V4	.20
RJS-118		SOCKET—Tube socket for V5	.35
RLA-012	L6	COIL—FM oscillator grid choke	1.05
RLB-027	L4	COIL—FM r-f coil	.65
RLC-066	L5	COIL—B-C oscillator coil	.90
RLC-067	L8	COIL—FM oscillator coil	.30
RLI-005	L1, 10, 11	COIL—Choke coil	1.00
RLI-044	L12	COIL—FM power line choke coil	.75
RLI-056	L2	COIL—FM antenna choke coil	.65
RLI-057	L7, 9	COIL—FM choke coil	.70
RLI-058	L13	COIL—FM limiter choke	.65
RLL-030	L3	LOOP—Broadcast loop	2.10
RMS-155		SPRING—For Receiver chassis bin	.15
RMS-044		SPRING—Dial cord tension	.03
RRC-074	R18	VOLUME CONTROL	1.25
RRN-006	R35	RESISTOR—2.2 ohms, ±10%, ½ w., carbon	.25
RRT-003	R33, 34	RESISTOR—6500 and 1220 ohms, ±10%, w.w.	1.25
RSW-048	S2A, B, 2C, D	SWITCH—Tone control and power switch	2.55
RSW-059	S1A, B, 1C, D	SWITCH—Band change switch	1.50
RTD-006	T6	TRANSFORMER—Discriminator transformer	4.95
RTL-054	T5	TRANSFORMER—2nd AM i-f transformer	2.40
RTL-078	T2	TRANSFORMER—1st AM i-f transformer	2.45
RTL-080	T1, 3, 4	TRANSFORMER—1st, 2nd, 3rd FM i-f transformer	2.45
RTO-051	T7	TRANSFORMER—Output transformer	3.00
RTP-061	T8	TRANSFORMER—Power transformer (60 cy.)	10.00

PRICES SUBJECT TO CHANGE WITHOUT NOTICE.

MODELS 354, 355

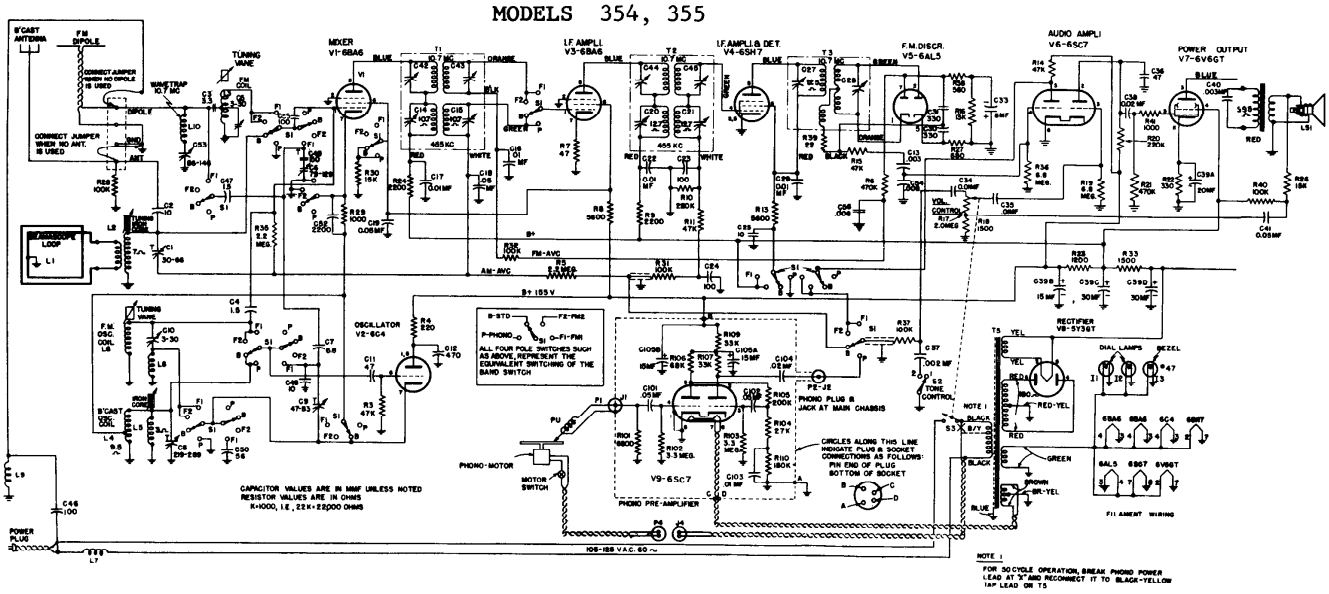

Cat. No.	Symbol	Description	Suggested Unit List Price
UNIVERSAL REPLACEMENT PARTS			
UCC-011	C41	CAPACITOR—.05 mf., paper 200 v.	$0.30
UCC-020	C13	CAPACITOR—.003 mf., paper 400 v.	.25
UCC-024	C54, 56	CAPACITOR—.008 mf., paper 400 v.	.25
UCC-028	C18	CAPACITOR—.05 mf., paper 400 v.	.25
UCC-036	C37	CAPACITOR—.002 mf., paper 600 v.	.25
UCC-040	C16, 17, 22, 34, 35	CAPACITOR—.01 mf., paper 600 v.	.25
UCC-041	C38	CAPACITOR—.02 mf., paper 600 v.	.25
UCC-045	C19	CAPACITOR—.05 mf., paper 600 v.	.30
UCN-504	C3	CAPACITOR—3.3 mmf., ceramic	.60
UCN-1506	C7	CAPACITOR—6.8 mmf., ceramic	.60
UCU-004	C2	CAPACITOR—10 mmf., mica	.25
UCU-020	C23, 24, 46	CAPACITOR—100 mmf., mica	.25
UCU-044	C12	CAPACITOR—470 mmf., mica	.30
UCU-060	C52	CAPACITOR—2200 mmf., mica	.50
UCU-1032	C48	CAPACITOR—150 mmf., mica	.25
UCU-1040	C30, 31	CAPACITOR—330 mmf., mica	.30
UCW-1022	C50	CAPACITOR—56 mmf., ceramic	.60
UOP-1206		SPEAKER—12-inch speaker	16.50
URD-017	R7	RESISTOR—47 ohms, ½ w., carbon	.13
URD-033	R4	RESISTOR—200 ohms, ½ w., carbon	.13
URD-049	R29, 41	RESISTOR—1000 ohms, ½ w., carbon	.13
URD-053	R18	RESISTOR—1500 ohms, ½ w., carbon	.13
URD-057	R9, 24	RESISTOR—2200 ohms, ½ w., carbon	.13
URD-077	R26	RESISTOR—15,000 ohms, ½ w., carbon	.13
URD-089	R3, 11, 14, 15	RESISTOR—47,000 ohms, ½ w., carbon	.13
URD-097	R40, 28, 31, 32, 37	RESISTOR—100,000 ohms, ½ w., carbon	.13
URD-105	R10, 20	RESISTOR—220,000 ohms, ½ w., carbon	.13
URD-113	R6, 21	RESISTOR—470,000 ohms, ½ w., carbon	.13
URD-133	R5, 35	RESISTOR—2.2 meg., ½ w., carbon	.13
URD-141	R19, 36	RESISTOR—6.8 meg., ½ w., carbon	.13
URD-1043	R38	RESISTOR—56 ohms, ½ w., carbon	.17
URD-1045	R27	RESISTOR—680 ohms, ½ w., carbon	.17
URD-1076	R16	RESISTOR—13,000 ohms, ½ w., carbon	.17
URE-037	R22	RESISTOR—330 ohms, 1 w., carbon	.17
URF-051	R23	RESISTOR—1200 ohms, 2 w., carbon	.25
URF-067	R8, 13	RESISTOR—5600 ohms, 2 w., carbon	.25
URF-077	R30	RESISTOR—15,000 ohms, 2 w., carbon	.25
SPECIALIZED REPLACEMENT PARTS			
RAA-006		ARM—Band switch	$0.15
RAA-007		ARM—Tone switch	.50
RAB-038		BACK—Cabinet	4.45
RAL-001		BEZEL—on cabinet front	.10
RAV-031		CABINET—Model 355	140.00
RAV-034		CABINET—Model 354	140.00
RCC-014	C40	CAPACITOR—.005 mfd., paper	.25
RCC-040	C29	CAPACITOR—.01 mfd., oil	.30
RCE-038	C33	CAPACITOR—.8 mfd., 25 v., electrolytic	.75
RCE-039	C39A, C39B, C39C, D	CAPACITOR—20 mfd., 25 v. CAPACITOR—15 mfd., 300 v. CAPACITOR—30 mfd., 350 v.	3.50
RCW-001	C11	CAPACITOR—ceramic	.60
RCW-013	C49	CAPACITOR—10 mmf., ceramic	.60
RCW-017	C4, 47	CAPACITOR—1.5 mmf., ceramic	.60

Cat. No.	Symbol	Description	Suggested Unit List Price
SPECIALIZED REPLACEMENT PARTS (Cont'd)			
RCW-1028	C55	CAPACITOR—100 mmf., ceramic	$0.60
RCY-017	C10	CAPACITOR—Air trimmer	.75
RCY-018	C1, 5, 6	CAPACITOR—Trimmer, 3-30 mmf., 30-60 mmf., 79-129 mmf.	1.30
RCY-019	C8, 9	CAPACITOR — Trimmer, 219-269 mmf., 47-83 mmf.	1.00
RCY-020	C53	CAPACITOR—Trimmer, 86-146 mmf.	.55
RDC-032		CORD—Elevator drive cord, NF28	.10 per yard
RDC-033		CORD—Dial drive cord, NF40	.10 per yard
RDE-022		ESCUTCHEON—Dial scale	5.10
RDK-061		KNOB—Inner knob (black)	.20
RDK-110		KNOB—Outer knob (black)	.20
RDP-020		POINTER—Dial scale pointer assembly	.85
RDS-033		SCALE—Dial scale	2.40
RDX-026		PLATE—Backplate assembly	1.65
RHC-010		CLIP—Insulator spring clip	.10
RHM-016		CLIP—Oscillator coil clip	.02
RHM-026	L3	COIL—Antenna tuner coil (two-turn frame)	.35
RHM-027	L6	COIL—Oscillator tuner coil (two-turn frame)	.45
RHW-010		WASHER—(Two required on guide wire of tuner vane)	.01
RII-001		INSULATOR—(Insulator for Mounting L3 and L6, 4 per set)	.10
RJP-004	P1	PLUG—Phono plug	.10
RJP-010	J2	JACK—Phono jack	.10
RJS-003		SOCKET—Tube socket (Octal)	.20
RJS-011		SOCKET—Pilot lamp socket for Bezel	.65
RJS-014	J5	SOCKET—Preamplifier	.15
RJS-044		SOCKET—Miniature for V1, V3, and V5	.35
RJS-049	J4	SOCKET—Phono-power	.25
RJS-055		SOCKET—Miniature for V2	.25
RJS-056		SOCKET—Dial light	.65
RLA-013	L2	COIL—B-C antenna	4.75
RLC-022	L4	PADDER—B-C oscillator	1.65
RLC-023	L5	COIL—B-C oscillator	1.45
RLI-004	L7	CHOKE—Power line choke	.90
RLI-005	L8, L9, L10	CHOKE—Oscillator and FM antenna	1.00
RLL-013		LOOP—Assembly	7.80
RMM-050		VANE—Antenna tuner vane for coil L3	.30
RMM-051		VANE—Oscillator tuner vane for coil L6	.30
RMM-052		GUIDE WIRE—Connects vanes to elevator bar	.02
RMS-043		ADJUSTING SCREW—On elevator bar	.15
RMS-115		SPRING—Spring on tuning vane guide wires	.02
RPX-010		PICKUP—Variable reluctance	7.95
RRC-033	R17, S3	VOLUME—Control, 2 meg. and switch	1.65
RSW-024	S1	SWITCH—Band	4.25
RSW-025	S2	SWITCH—Tone control	1.10
RTD-004	T3	TRANSFORMER—Discriminator	7.15
RTL-031	T1	TRANSFORMER—1st I-F transformer	6.70
RTL-032	T2	TRANSFORMER—2nd I-F transformer	6.15
RTP-028	T5	TRANSFORMER—Power transformer (60 cycles)	16.20
RTP-033	T5	TRANSFORMER—Power transformer (50 cycles)	20.25
RWL-004		CORD—Power cord	.75

PRICES SUBJECT TO CHANGE WITHOUT NOTICE

MODELS 356, 357, 358

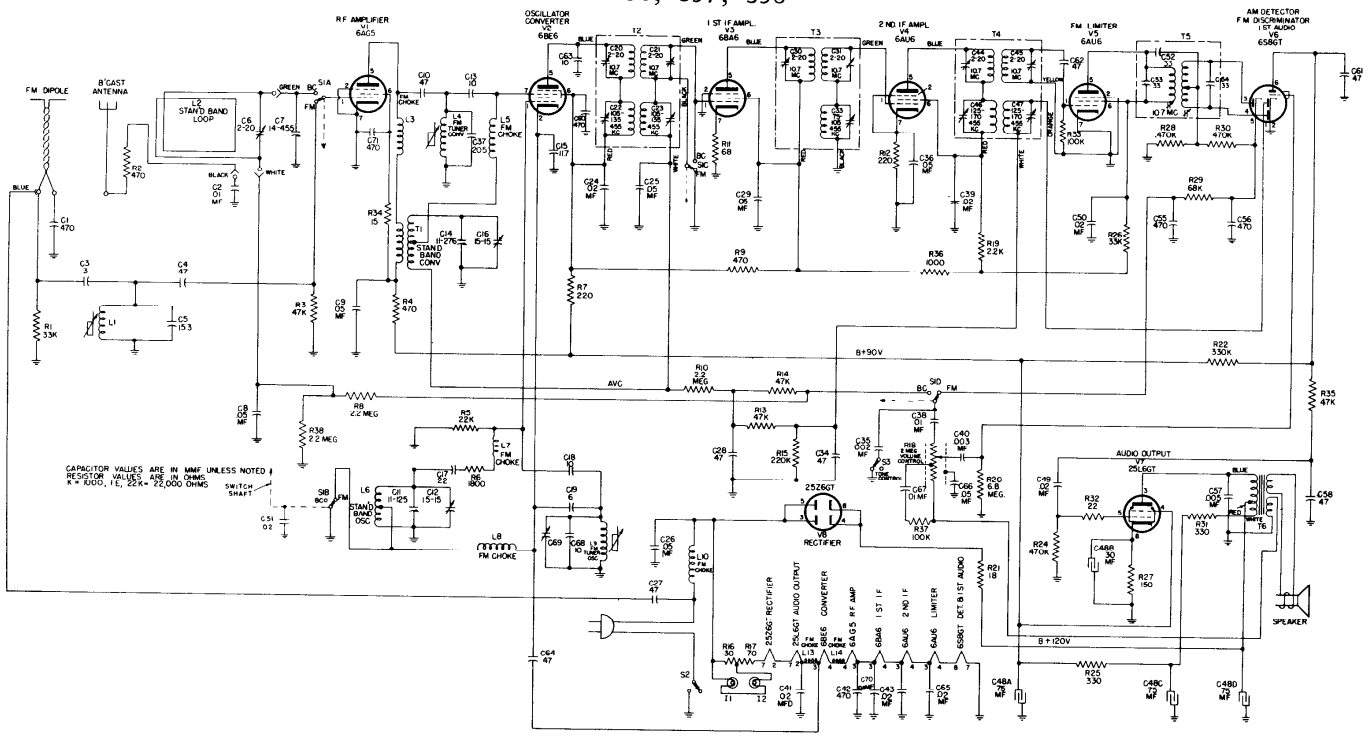

REPLACEMENT PARTS LIST—MODELS 356, 357, 358

Cat. No.	Symbol	Description	Suggested Unit List Price
UNIVERSAL REPLACEMENT PARTS			
UCC-003	C40	CAPACITOR—.003 mf., 200 v , paper	$0.20
UCC-008	C38	CAPACITOR—.01 mf., 200 v., paper	25
UCC-011	C8, 25, 36	CAPACITOR—.05 mf., 200 v , paper	.30
UCC-025	C43, 65, 2, 70	CAPACITOR—.01 mf., 400 v., paper	.25
UCC-026	C24, 39, 49, 50	CAPACITOR—.02 mf , 400 v., paper	.25
UCC-028	C9, 26, 29, 66	CAPACITOR—.05 mf., 400 v , paper	.25
UCC-039	C57	CAPACITOR—.005 mf., 600 v., paper	.25
UCC-621	C35	CAPACITOR—.002 mf., 200 v., paper	25
UCU 020	C27, 28, 34, 58	CAPACITOR—47 mmf., mica	25
UCU-044	C1, 55	CAPACITOR—470 mmf , mica	.30
UCU-520	C61	CAPACITOR—470 mmf , mica	.30
UCU-544	C56	CAPACITOR—470 mmf., mica	.30
UCW-044	C41, 42, 60, 71	CAPACITOR—470 mmf , ceramic	.60
UCW-2004	C18, 68	CAPACITOR—10 mmf., ceramic	60
UOP-527		SPEAKER—PM speaker	5 00
URD-005	R34	RESISTOR—15 ohms, ½ w., carbon	.13
URD-009	R32	RESISTOR—22 ohms, ½ w., carbon	.13
URD-021	R11	RESISTOR—68 ohms, ½ w., carbon	.13
URD-033	R7, 12	RESISTOR—220 ohms, ½ w , carbon	.13
URD-041	R2, 49	RESISTOR—470 ohms, ½ w., carbon	.13
URD-049	R36	RESISTOR—1000 ohms, ½ w., carbon	.13
URD-055	R6	RESISTOR—1800 ohms, ½ w., carbon	13
URD-057	R19	RESISTOR—2200 ohms, ½ w., carbon	13
URD-081	R5	RESISTOR—22,000 ohms, ½ w., carbon	.13
URD-085	R1, 26	RESISTOR—33,000 ohms, ½ w., carbon	.13
URD-089	R3, 13, 14, 35	RESISTOR—47,000 ohms, ½ w., carbon	.13
URD-093	R29	RESISTOR—68,000 ohms, ½ w., carbon	.13
URD-097	R33, 37	RESISTOR—100,000 ohms, ½ w., carbon	.13
URD-105	R15	RESISTOR—220,000 ohms, ½ w., carbon	.13
URD-109	R22	RESISTOR—330,000 ohms, ½ w., carbon	.13
URD-113	R24, 28, 30	RESISTOR—470,000 ohms, ½ w., carbon	.13
URD-129	R8, 10, 38	RESISTOR 2.2 meg., ½ w., carbon	.13
URD-141	R20	RESISTOR—6.8 meg., ½ w., carbon	.13
URE-029	R27	RESISTOR—150 ohms, 1 w., carbon	17
URE-037	R25, 31	RESISTOR—330 ohms, 1 w , carbon	.17
SPECIALIZED REPLACEMENT PARTS			
RAU-012		CABINET—Brown plastic, for Model 356	9 75
RAU-013		CABINET—Ivory plastic, for Model 357	13.75
RAV-052		CABINET—Wood, for Model 358	
RCC-087	C67	CAPACITOR—.01 mf., 200 v.	.30
RCE-065	C48A, B, C, D	CAPACITOR—Electrolytic	3.45
RCT-028		CAPACITOR—Tuning capacitor	8.25
RCW-020	C13, 63	CAPACITOR—10 mmf., ceramic	.60
RCW-1048	C3	CAPACITOR—3 mmf., ceramic	.60
RCW-1050	C19	CAPACITOR—6 mmf., ceramic	.60
RCW-1052	C4, 10, 64	CAPACITOR—47 mmf., ceramic	.60
RCW-1053	C17	CAPACITOR—22 mmf., ceramic	.60
RCW-1054	C5	CAPACITOR—15.3 mmf., ceramic	.60
RCW-1055	C15	CAPACITOR—11.7 mmf., ceramic	.60

Cat. No.	Symbol	Description	Suggested Unit List Price
SPECIALIZED REPLACEMENT PARTS (Cont'd)			
RCW-1056	C37	CAPACITOR—20.5 mmf., ceramic	.60
RCY-016	C6	CAPACITOR—Trimmer capacitor	35
RCY 038	C69	CAPACITOR—Trimmer capacitor	1.00
RDC-032		CORD—Dial drive cord (10 yard min.)	10/yd.
RDD-009		DRUM—Tuner drum	.15
RDK-110		KNOB—Black knob for band change and volume control	.20
RDK-123		KNOB—Ivory for band change and volume control	30
RDK-124		KNOB—Black for tone control	35
RDK-125		KNOB—Ivory for tone control	.35
RDK-126		KNOB—Black for tuning control	.35
RDK-127		KNOB—Ivory for tuning control	35
RDS-065		SCALE—Dial scale for Models 356, 357	1.45
RDS-066		SCALE—Dial scale for Model 358	
RDX-039		POINTER—Dial pointer assembly	.40
RHJ 006		SPACERS—For mounting tuner assembly, 3 required	.05
RHM 038		TUNER FRAME—2 required for coils L1, L4 and L9	.20
RHX-011		GROMMET—For mounting tuner assembly, three required	.10
RII-010		INSULATOR—Tuner insulator	.10
RJS-003		SOCKET—Octal tube socket	.20
RJS-098		SOCKET—Pilot light socket	.50
RJS-105		SOCKET—Miniature tube socket	.20
RJX-019		INTERLOCK ASSEMBLY	.40
RLA-012	L3, 5, 7	COIL—FM R-F choke coil	1.05
RLB-024	T1	TRANSFORMER—B-C R-F transformer	2.95
RLC-060	L6	COIL—B-C oscillator coil	1.10
RLF-012	L8	COIL—FM oscillator choke coil	1.00
RLI-005	L13, 14	COIL—FM oscillator choke coil	.65
RLI-044	L10	COIL—FM power line choke coil	.75
RLX-014	L2	LOOP AND BACK ASSEMBLY—For Model 358	
RLX-016	L2	LOOP AND BACK ASSEMBLY—For Models 356 and 357	7.50
RMG-009		GEAR—Plastic gear segment on tone control	30
RMS-076		SCREW—Adjusting screw for tuning vane	.15
RMS-125		SPRING—Tuner arm return spring	.10
RMS-126		SPRING—Vane holder spring	.15
RMS-130		SPRING—Dial cord tension spring	.15
RMX-108		TUNER VANE AND WIRE ASSEMBLY—For L1 and L4	.30
RMX 110		TUNER VANE AND WIRE ASSEMBLY—For L9	.30
RMW-004		PULLEY—Dial cord idler pulley	.10
RRC-076	R18, S2	VOLUME CONTROL AND POWER SWITCH	1.65
RRW-008	R21	RESISTOR—Flexible, 18 ohms	.35
RRW-025	R16, 17	RESISTOR—70 ohms, tapped at 30 ohms, wirewound	1.10
RSI-003		INTERLOCK ASSEMBLY—(Male)	.15
RSW-049	S1	SWITCH—Band change switch	1 85
RSW-050	S3	SWITCH—Tone control switch	1.05
RTD-006	T5	TRANSFORMER—Discriminator	4.95
RTL-062	T2	TRANSFORMER—1st I-F transformer	4.95
RTL-064	T4	TRANSFORMER—3rd I-F transformer	4.95
RTL-072	T3	TRANSFORMER—2nd I-F transformer	4.95
RTO-044	T6	TRANSFORMER—Output transformer	3.90
RWL-009		CORD—Power cord	.70

PRICES SUBJECT TO CHANGE WITHOUT NOTICE

MODELS 376, 377, 378

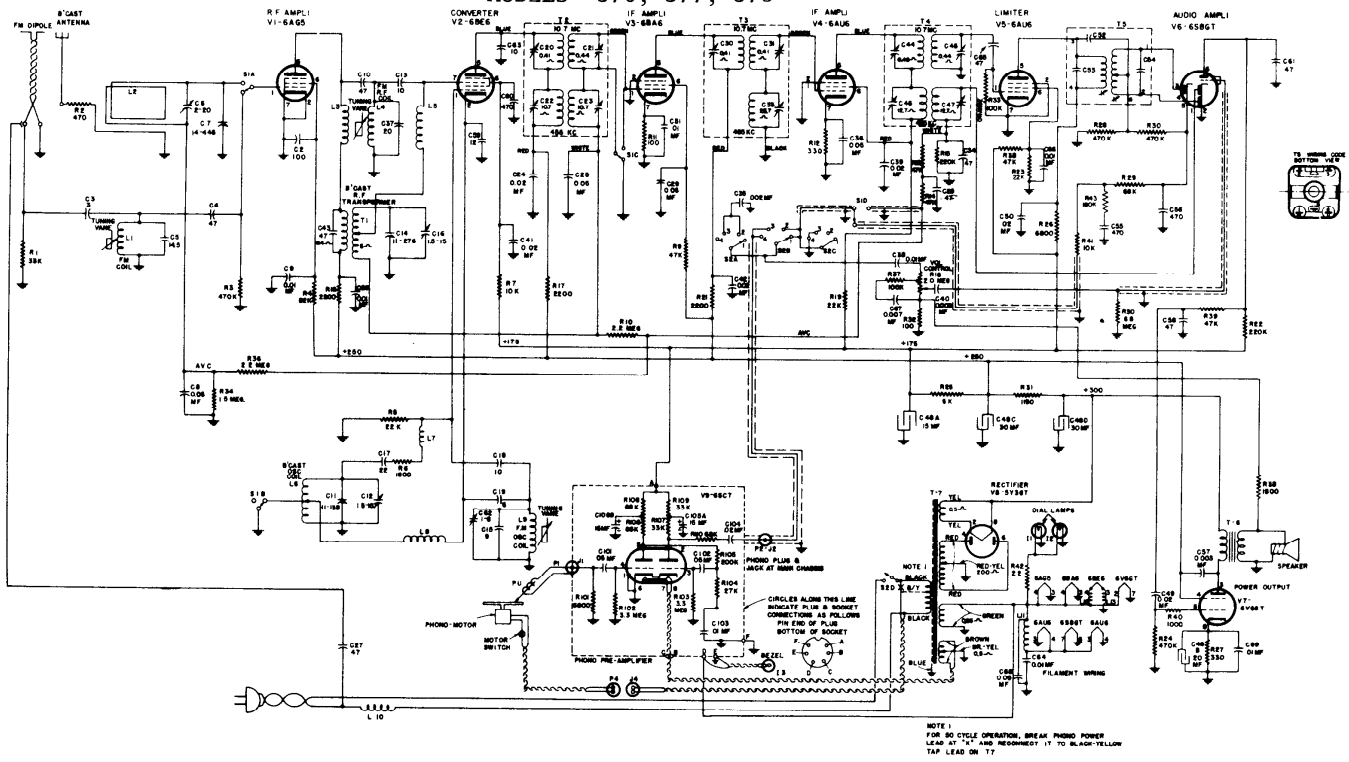

MODELS 376, 377, 378—REPLACEMENT PARTS LIST

Cat. No.	Symbol	Description	Suggested Unit List Price
UNIVERSAL REPLACEMENT PARTS			
UCC-621	C35	CAPACITOR—.002 mf., 600 v., paper	$0.25
UCC-623	C40	CAPACITOR—.003 mf., 600 v., paper	.25
UCC-630	C38, 51, 69, 64, 66, 9, 26, 103	CAPACITOR—.01 mf., 600 v., paper	.30
UCC-631	C24, 41, 42, 49, 50, 39, 104	CAPACITOR—.02 mf., 600 v., paper	.30
UCC-635	C29, 101, 102, 8, 25, 68	CAPACITOR—.05 mf., 600 v., paper	.35
UCU-020	C27, 28, 34, 58	CAPACITOR—47 mmf., mica	.25
UCU-028	C2	CAPACITOR—100 mmf., mica	.25
UCU-044	C56, 55	CAPACITOR—470 mmf., mica	.30
UCU-520	C61	CAPACITOR—47 mmf., mica	.30
UCU-1034	C55	CAPACITOR—180 mmf., mica	.25
UCW-044	C60	CAPACITOR—470 mmf., ceramic	.60
UCW-1020	C43	CAPACITOR—47 mmf., ceramic	.60
UCW-2004	C18	CAPACITOR—10 mmf., ceramic	.60
UCW-2006	C59	CAPACITOR—12 mmf., ceramic	.60
UCW-2011	C37	CAPACITOR—20 mmf., ceramic	.60
UOP-1206		SPEAKER—12-inch PM speaker same as S1200D-7	16.50
UOX-005		SPEAKER REPAIR KIT—Cone, voice coil and spider assembly, dust cap and gasket	1.55
URD-009	R5, 19, 23	RESISTOR—22,000 ohms, ½ w., carbon	.13
URD-013	R1, 107, 109	RESISTOR—33,000 ohms, ½ w., carbon	.13
URD-017	R9, 13, 14, 38, 39	RESISTOR—47,000 ohms, ½ w., carbon	.13
URD-021	R11	RESISTOR—68 ohms, ½ w., carbon	.13
URD-025	R32	RESISTOR—100 ohms, ½ w., carbon	.13
URD-033	R12	RESISTOR—220 ohms, ½ w., carbon	.13
URD-041	R2	RESISTOR—470 ohms, ½ w., carbon	.13
URD-049	R40	RESISTOR—1000 ohms, ½ w., carbon	.13
URD-053	R35	RESISTOR—1500 ohms, ½ w., carbon	.13
URD-055	R6	RESISTOR—1800 ohms, ½ w., carbon	.13
URD-057	R16, 17, 21	RESISTOR—2200 ohms, ½ w., carbon	.13
URD-069	R26, 101	RESISTOR—6800 ohms, ½ w., carbon	.13
URD-073	R7, 41	RESISTOR—10,000 ohms, ½ w., carbon	.13
URD-083	R104	RESISTOR—27,000 ohms, ½ w., carbon	.13
URD-093	R29, 106, 108, 110	RESISTOR—68,000 ohms, ½ w., carbon	.13
URD-095	R4	RESISTOR—82,000 ohms, ½ w., carbon	.13
URD-097	R33, 37	RESISTOR—100,000 ohms, ½ w., carbon	.13
URD-103	R43	RESISTOR—180,000 ohms, ½ w., carbon	.13
URD-105	R15, 22	RESISTOR—220,000 ohms, ½ w., carbon	.13
URD-113	R3, 24, 28, 30	RESISTOR—470,000 ohms, ½ w., carbon	.13
URD-125	R34	RESISTOR—1.5 meg., ½ w., carbon	.13
URD-129	R10, 36	RESISTOR—2.2 meg., ½ w., carbon	.13
URD-133	R102, 103	RESISTOR—3.3 meg., ½ w., carbon	.13
URD-141	R20	RESISTOR—6.8 meg., ½ w., carbon	.13
URD-1104	R105	RESISTOR—200,000 ohms, ½ w., carbon	.17
URE-037	R27	RESISTOR—330 ohms, 1 w., carhon	.17
SPECIALIZED REPLACEMENT PARTS			
RAL-001		BEZEL—Pilot light	$0.10
RAV-047		CABINET—For Model 376	135.00
RAV-048		CABINET—For Model 377	128.00
RAV-049		CABINET—For Model 378	155.00
RCC-001	C67	CAPACITOR—.007 mf., 200 v., paper	.25
RCC-014	C57	CAPACITOR—.003 mf., 1000 v., paper	.25
RCC-086	C36	CAPACITOR—.05 mf., paper	.30
RCE-029	C48A, B, C, D	CAPACITOR—Electrolytic	3.45
RCE-030	C105A, B	CAPACITOR—Electrolytic for preamp	1.50
RCT-028	C7, 11, 14	CAPACITOR—Tuning	8.25
RCW-020	C13, 63	CAPACITOR—10 mmf., ceramic	.60

Cat. No.	Symbol	Description	Suggested Unit List Price
SPECIALIZED REPLACEMENT PARTS (Cont'd)			
RCW-1048	C3	CAPACITOR—3 mmf., ceramic	$0.60
RCW-1049	C5	CAPACITOR—14.5 mmf., ceramic	.60
RCW-1050	C19	CAPACITOR—6 mmf., ceramic	.60
RCW-1051	C15	CAPACITOR—9 mmf., ceramic	.60
RCW-1052	C4, 10	CAPACITOR—47 mmf., ceramic	.60
RCW-1053	C17	CAPACITOR—22 mmf., ceramic	.60
RCY-037	C6	CAPACITOR—Trimmer, 2-20 mmf.	.40
RCY-038	C62	CAPACITOR—Trimmer, 1-8 mmf.	1.00
RDC-033		CORD—Dial drive cord, 10 yard length	.10/yd
RDD-009		DRUM	.15
RDE-005		ESCUTCHEON	3.40
RDK-030		KNOB—With Arrow	.10
RDK-031		KNOB—Plain	.10
RDK-079		KNOB—Plain, for Model 377	.15
RDK-116		KNOB—With Arrow, for Model 377	.15
RDM-007		BUSHING—For tuning shaft	.30
RDS-058		SCALE—Dial scale	1.90
RDX-035		POINTER—Dial pointer assembly	.45
RHG-010		GROMMET—Rubber grommet for mounting tube socket on preamplifier	.05
RHJ-006		SPACER—For mounting tuner assembly	.05
RHM-038	L1, 4, 9	COIL—For guillotine tuner, 2 required per coil	.20
RHM-039		CLIP (For pilot lights)	.10
RHX-011		GROMMET (Tuner mounting grommet)	.10
RII-010		INSULATOR—Mounting insulator for guillotine tuner	.10
RJJ-004	J3	SOCKET—Preamplifier power socket	.20
RJP-003		PLUG—Phono motor power	.15
RJP-004	P1	PLUG—Pick-up output plug	.10
	P2	PLUG—Preamplifier output plug	.10
	P3, 4	PLUG—Preamplifier power plug	.25
RJP-010	J2	SOCKET—Preamplifier output socket	.10
RJP-018	J1	SOCKET—Phono input to preamplifier	.20
RJS-003		SOCKET—Tube socket for V6	.20
RJS-049	J4	SOCKET—Phono power socket	.25
RJS-085		SOCKET—Octal socket for preamplifier	.20
RJS-106		SOCKET—Pilot light	.40
RLA-012	L3, 5, 7	COIL—FM choke coil	1.05
RLB-024	T1	TRANSFORMER—Broadcast R-F	2.95
RLC-060	L6	COIL—B-C oscillator coil	1.10
RLF-007	L11, 8	COIL—FM oscillator choke and filament choke coil	1.00
RLI-005	L12, 13	COIL—Filament choke	1.00
RLI-044	L10	COIL—FM power line choke coil	.75
RLL-027	L2	LOOP—Broadcast loop	2.30
RMM-006		SHIELD—Pilot light	.05
RMM-055		HOOD—Lamp hood	.05
RMS-044		SPRING—Vane holder spring	.03
RMS-130		SPRING—Dial cord tension spring	.15
RMS-125		SPRING—Lever plate spring	.10
RMS-126		SPRING—Vane holder	.15
RMW-042		PULLEY—Dial cord idler	.25
RMX-108	L1, 4	TUNER VANE AND GUIDE WIRE ASSEMBLY	.30
RMX-109		TUNING SHAFT ASSEMBLY	.50
RMX-110	L9	TUNER VANE AND GUIDE WIRE ASSEMBLY	.30
RRC-074	R18	VOLUME CONTROL	1.25
RRN-006	R42	RESISTOR—2.2 ohms, ½ w.	.25
RRW-010	R25, 31	RESISTOR—5000 ohms, wirewound	1.25
RSW-047	S1	SWITCH—Bandchange switch	1.60
RSW-048	S2	SWITCH—Radio, phono and tone control	2.55
RTD-006	T5	TRANSFORMER—Discriminator transformer	4.95
RTL-062	T2	TRANSFORMER—1st I-F transformer	4.95
RTL-063	T3	TRANSFORMER—2nd I-F transformer	4.75
RTL-064	T4	TRANSFORMER—3rd I-F transformer	4.95
RTO-040	T6	TRANSFORMER—Output transformer	3.35
RTP-058	T7	TRANSFORMER—Power transformer (60 cycles)	9.95
RTP-059	T7	TRANSFORMER—Power transformer (50 cycles)	19.50
RWL-004		CORD—Power cord	.75

MODELS 400, 401, 411

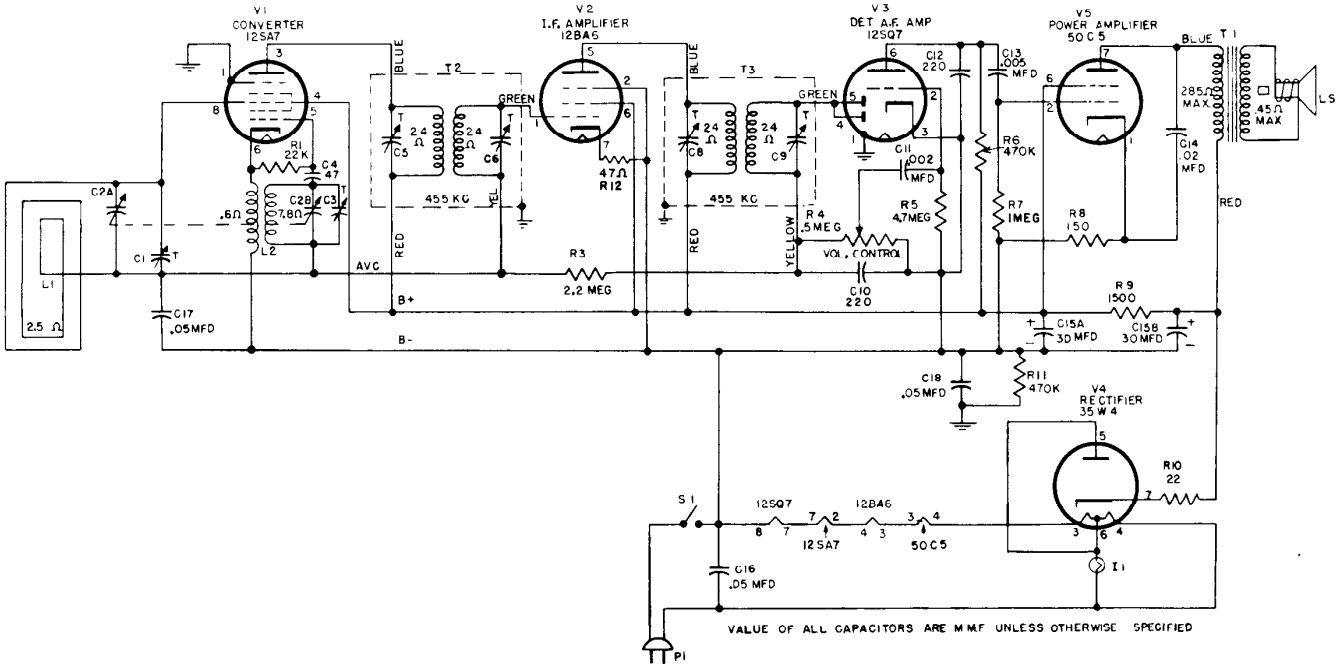

MODELS 400, 401, 411—REPLACEMENT PARTS LIST

Cat. No.	Symbol	Description	Suggested Unit List Price
UNIVERSAL REPLACEMENT PARTS			
*UCC-041	C14	CAPACITOR—.02 mfd., 600 v., paper	$0.25
*UCC-045	C16, C17, C18	CAPACITOR—.05 mfd., 600 v., paper	.30
*UCC-020	C4	CAPACITOR—47 mmf., 600 v., mica	.25
*URD-009	R10	RESISTOR—22 ohms, ½ w., carbon	.13
*URD-017	R12	RESISTOR—47 ohms, ½ w., carbon	.13
*URD-029	R8	RESISTOR—150 ohms, ½ w., carbon	.13
*URD-081	R1	RESISTOR—22K ohms, ½ w., carbon	.13
*URD-113	R6, R11	RESISTOR—470K ohms, ½ w., carbon	.13
*URD-121	R7	RESISTOR—1 meg., ½ w., carbon	.13
*URD-129	R3	RESISTOR—2.2 meg., ½ w., carbon	.13
*URD-137	R5	RESISTOR—4.7 meg., ½ w., carbon	.13
*URF-053	R9	RESISTOR—1500 ohms, 2 w., carbon	.25
*S403D	LS1	SPEAKER, PM SPEAKER—4 inch	3.75
SPECIALIZED REPLACEMENT PARTS			
*RAB-095	L1	LOOP BACK	$1.55
*RAU-306		CABINET (400) (Brown)	5.95
*RAU-307		CABINET (401) (Ivory)	7.95
*RAU-321		CABINET (411) (Maroon)	5.95
RCE-127	C15A, C16B	ELECTROLYTIC CAPACITOR—30-30 mfd., 150 v.	2.60
RCT-042	C1, C2A, C2B, C3	TUNING CAPACITOR	

Cat. No.	Symbol	Description	Suggested Unit List Price
SPECIALIZED REPLACEMENT PARTS (Cont'd)			
*RCW-3013	C10, 11, 12, 13	CAPACITOR—BULL PLATE, .002 mf., 220 mmf., 220, mmf., and .005 mfd.	$0.60
*RDC-032		DIAL CORD—25 yards	2.50
*RDK-174		KNOB (400) (Wheat)	.15
*RDK-175		KNOB (401, 411) (Maroon)	.15
RDP-052		POINTER—Dial pointer	
RDS-095		BACK PLATE AND DIAL SCALE	
RDW-021		WINDOW—Dial window	.60
*RHC-017		CLIP—Oscillator mounting	.02
*RHG-018		GROMMET (For mounting tuning capacitor)	.05
*RHH-002		TRIMONT STUD (For mounting dial glass)	.02
*RHJ-007		SPACER (For mounting tuning capacitor)	.05
*RJS-003		TUBE SOCKET—For V1 and V3	.20
*RJS-092		TUBE SOCKET—For V4	.20
*RJS-141		TUBE SOCKET—For V2	.20
*RJX-031		PILOT LIGHT SOCKET ASSEMBLY	.40
*RLC-090	L2	OCILLATOR COIL	.90
*RMS-118		SPRING—Drum spring	.10
RMX-170		DRIVE SHAFT BUSHING ASSEMBLY	
*RRC-106	R4, S1	VOLUME CONTROL AND SWITCH	1.65
RTL-117	T2	1st I.F. TRANSFORMER	1.90
RTL-117	T3	2nd I.F. TRANSFORMER	1.90
*RTO-069	T1	OUTPUT TRANSFORMER	1.75
*RWL-009		POWER CORD	.70

* Used on previous models.
Note: Prices subject to change without notice.

MODEL 402

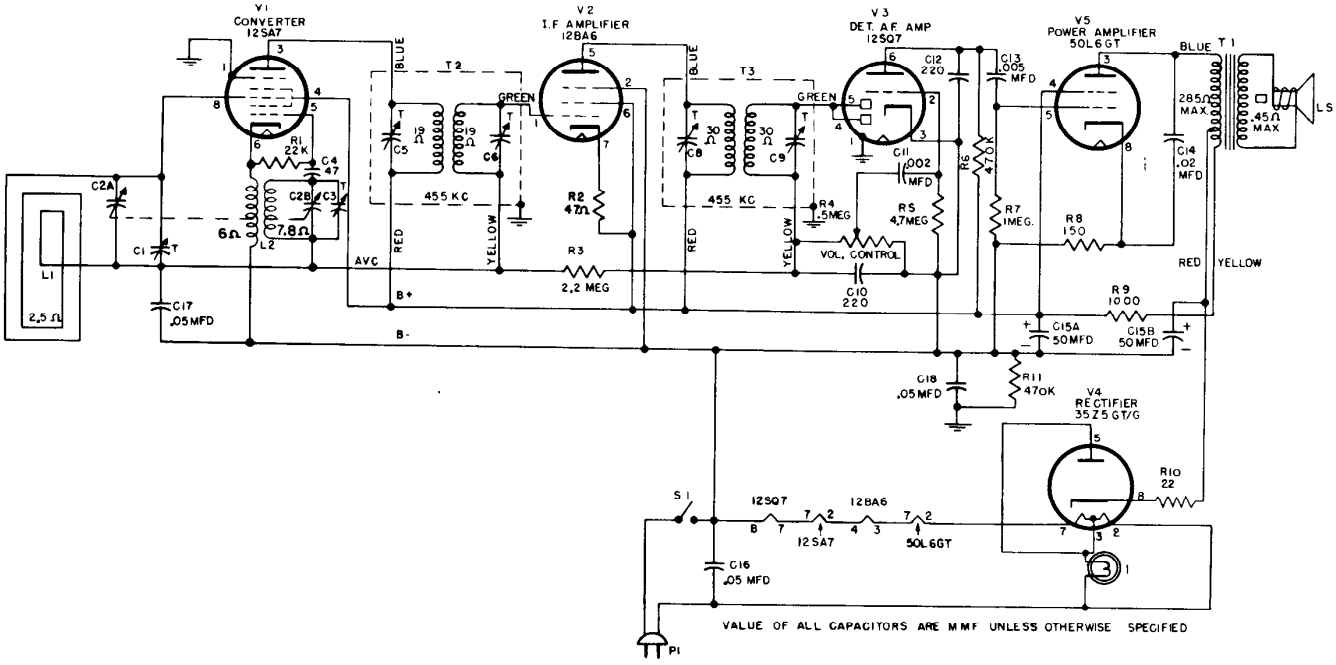
V1
CONVERTER
12SA7
V2
I.F AMPLIFIER
12BA6
V3
DET. A.F. AMP
12SQ7
V5
POWER AMPLIFIER
50L6GT
T1
T2
T3
BLUE
GREEN
RED
YELLOW
455 KC
R1 22K
C4 47
C2A
C2B
C3
6Ω
7.8Ω
L2
L1
2.5Ω
C1
C17 .05MFD
AVC
B+
B-
R2 47Ω
R3 2.2 MEG
C5
C6
C8
C9
R4 .5MEG
VOL. CONTROL
C10 220
C11 .002 MFD
C12 220
C13 .005 MFD
R5 4.7MEG
R6 470K
R7 1MEG.
R8 150
C14 .02 MFD
285Ω MAX
.45Ω MAX
LS
R9 1000
C15A 50MFD
C15B 50MFD
C18 .05MFD
R11 470K
V4
RECTIFIER
35Z5GT/G
R10 22
S1
12SQ7
12BA6
12SA7
50L6GT
C16 .05 MFD
P1
VALUE OF ALL CAPACITORS ARE MMF UNLESS OTHERWISE SPECIFIED

MODEL 402

UNIVERSAL REPLACEMENT PARTS

Cat. No.	Symbol	Description	Suggested Unit List Price
*UCC-041	C14	CAPACITOR—.02 mf., 600 v., paper	$0.25
UCC-036	C11	CAPACITOR—.002 mf., 600 v., paper (alternate replacement for C11 of RCW-3013)	.30
UCC-039	C13	CAPACITOR—.005 mf., 600 v., paper (alternate replacement for C13 of RCW-3013)	.30
*UCC-045	C16, C17, C18	CAPACITOR—.05 mf., 600 v., paper	.30
*UCU-020	C4	CAPACITOR—47 mmf., 500 v., mica	.60
UCU-1036	C10, C12	CAPACITOR—220 mmf, mica (alternate replacement for C10 or C12 of RCW-3013)	.30
*URD-009	R10	RESISTOR—22 ohms, ½ w., carbon	.13
URD-017	R2	RESISTOR—47 ohms, ½ w., carbon	.13
*URD-029	R8	RESISTOR—150 ohms, ½ w., carbon	.13
*URD-081	R1	RESISTOR—22,000 ohms, ½ w., carbon	.13
*URD-113	R6, R11	RESISTOR—470,000 ohms, ½ w., carbon	.13
*URD-121	R7	RESISTOR—1 megohm, ½ w., carbon	.13
*URD-129	R3	RESISTOR—2.2 megohms, ½ w., carbon	.13
*URD-137	R5	RESISTOR—4.7 megohms, ½ w., carbon	.13
*URF-049	R9	RESISTOR—1000 ohms, 2 w., carbon	.25

SPECIALIZED REPLACEMENT PARTS

*RAB-108	L1	CABINET BACK AND LOOP ASSEMBLY	$1.60
*RAU-311		CABINET—(brown)	6.95

SPECIALIZED REPLACEMENT PARTS (CONT'D)

Cat. No.	Symbol	Description	Suggested Unit List Price
*RCE-050	C15A, B	CAPACITOR—Electrolytic—50 mf., 150 v., 50 mf., 150 v.	$2.10
*RCT-036	C2A, B	CAPACITOR—Tuning	3.95
*RCW-3013	C10, 11, 12, 13	CAPACITOR—.220 mmf., .002 mf., 220 mmf., .005 mf. respectively (Bull Plate)	1.00
*RDC-032		DIAL CORD—Quantity, 25 yds.	2.50
*RDK-181		KNOB—Volume or tuning control	.15
*RDP-049		POINTER—Dial scale pointer	.25
RDS-096		DIAL SCALE	
*RHC-017		CLIP—Osc. coil clip for L2	.02
*RHC-024		CLIP—(capacitor mounting) 1 in.	.10
*RHG-018		GROMMET (Tuning Gang mounting)	.05
*RHH-004		SNAP FASTENER (For Loop Back)	.02
*RHJ-007		SPACER (Tuning Gang Mounting)	.02
*RHM-039		CLIP—(Pilot light) ½ in.	.02
*RHM-046		MOUNTING CLIP (Dial scale)	.02
*RJC-004		CLIP (Antenna loop connecting clip)	.02
*RJS-003		TUBE SOCKET—For V1, 3, 4 and 5	.20
*RJS-141		TUBE SOCKET—For V2	.20
*RJS-096		PILOT LIGHT SOCKET	.35
*RLC-090	L2	OSCILLATOR COIL	.90
*RMS-118		DRUM SPRING (Dial cord spring)	.10
*RMX-149		TUNING SHAFT AND BUSHING ASSEMBLY	.60
*RRC-077	R4, S1	VOLUME CONTROL AND SWITCH	1.65
*RTL-092	T2	1st I.F. TRANSFORMER	2.10
*RTL-093	T3	2nd I.F. TRANSFORMER	2.10
*RTO-078	T1	OUTPUT TRANSFORMER	1.75
*RWL-009		POWER CORD	.70
S527D		SPEAKER—5½ in.	

*Used on previous Models.
Prices subject to change without notice.

MODELS 404, 405, 410

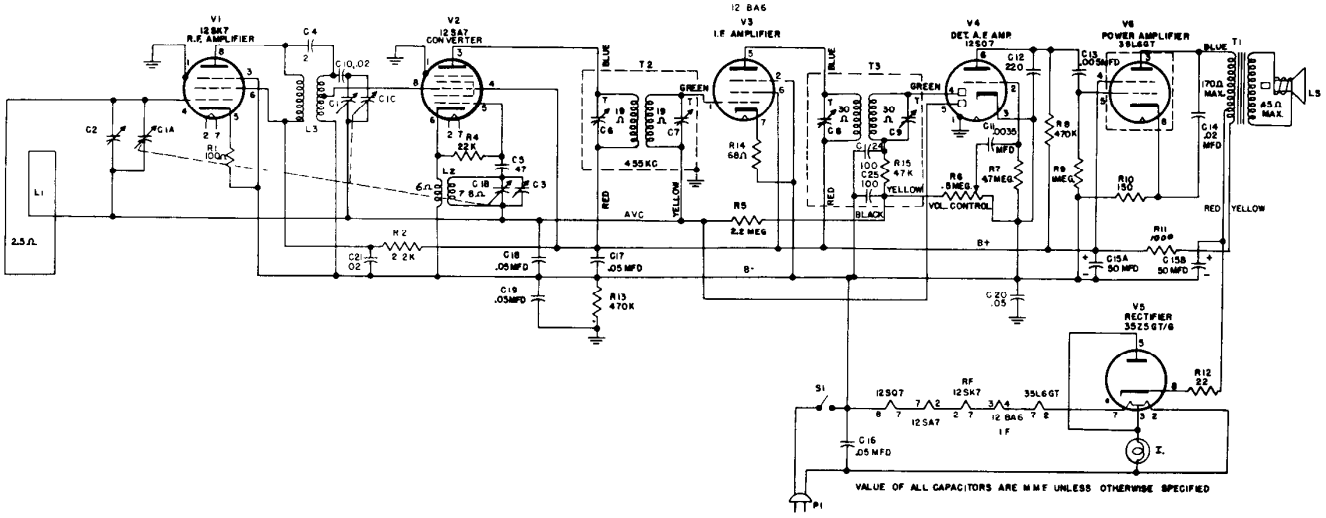

MODELS 404, 405 AND 410 REPLACEMENT PARTS LIST

Cat. No.	Symbol	Description	Suggested Unit List Price
UNIVERSAL REPLACEMENT PARTS			
UCC-037	C11	CAPACITOR—.003 mf., 600 v., paper (alternate replacement for RCW-3036)	$0.25
UCC-039	C13	CAPACITOR—.005 mf., 600 v., paper (alternate replacement for RCW-3036)	.30
UCC-041	C14, C21	CAPACITOR—.02 mf., 600 v., paper	.25
UCC-045	C16, C17, C18, C19, C20	CAPACITOR—.05 mf., 600 v., paper	.30
UCU-020	C5	CAPACITOR—47 mmf., mica	.60
UCU-028	C4	CAPACITOR—100 mmf., mica	.25
UCU-1036	C10, C12	CAPACITOR—220 mmf., mica (alternate replacement for RCW-3036)	.30
URD-009	R12	RESISTOR—22 ohms, ½ w., carbon	.13
URD-021	R14	RESISTOR—68 ohms, ½ w., carbon	.13
URD-025	R1	RESISTOR—100 ohms, ½ w., carbon	.13
URD-029	R10	RESISTOR—150 ohms, ½ w., carbon	.13
URD-057	R2	RESISTOR—2.2 K ohms, ½ w., carbon	.13
URD-081	R4	RESISTOR—22,000 ohms, ½ w., carbon	.13
URD-113	R8, R13	RESISTOR—470,000 ohms, ½ w., carbon	.13
URD-121	R9	RESISTOR—1 meg., ½ w., carbon	.13
URD-129	R5	RESISTOR—2.2 meg., ½ w., carbon	.13
URD-137	R7	RESISTOR—4.7 meg., ½ w., carbon	.13
URF-049	R11	RESISTOR—1000 ohms, 2 w., carbon	.25
SPECIALIZED REPLACEMENT PARTS			
RAB-142	L1	CABINET BACK—With antenna loop, Models 404, & 405	
RAB-143	L1	CABINET BACK—With antenna loop, Model 410	
RAV-128		CABINET—Wood cabinet, Model 410	
RAU-345		CABINET—Brown cabinet (plastic) with dial scale & knob bezels, for Model 404	
RAU-346		CABINET—Ivory cabinet (plastic) with dial scale & knob bezels, 405	
RCE-050	C15A, B	CAPACITOR—50 mf., 150 v., 50 mf., 150 v.; dry electrolytic	$2.10
RCN-039	C4	CAPACITOR 2 mmf., mica	
RCT-046	C1A, B, C, C2, C3	CAPACITOR—Tuning capacitor with trimmers	
RCW-3036	C11, C12, C13	CAPACITOR—.0035 mf., 220 mmf., .005 mf., three section, ceramic (see UCC-037, UCC-039, UCU-1036)	
RDC-032		CORD—Bulk dial cord	2.50
RDK-181		KNOB—Model 404	.15
RDK-228		KNOB—Knob and Bezel assembly, Model 410	
RDK-229		KNOB—Model 405	
RDM-024		MASK—Cardboard mask	
RDP-055		POINTER—Dial scale pointer Models 404, 405	
RDP-057		POINTER—Dial scale pointer Model 410	
RDS-100		DIAL SCALE, Models 404 & 405	
RDS-101		DIAL SCALE, Model 410	
RHC-017		CLIP—Mounting clip for oscillator coil L2	$0.02
RHC-037		CLIP—for dial drum	
RHC-038		CLIP—for RF coil	
RHG-006		GROMMET—On tuning shaft	.05
RHG-018		GROMMET—Cushion mounting for tuning capacitor	.05
RHG-032		GROMMET—Speaker lead ins.	
RHH-004		SNAP FASTENER—Holds loop back to cabinet	.02
RHJ-007		SPACER—Spacer bushing for mounting tuning capacitor	.05
RHS-061		SCREW—for loop back mounting	
RHS-062		SCREW—for chassis mounting	
RHS-063		SCREW—for tuning capacitor mounting	
RJC-004		CONNECTOR—Antenna loop lead connecting clip	.02
RJS-003		SOCKET—Tube socket	.20
RJS-141		SOCKET—Tube socket for 12 BA6	
RJS-151		SOCKET ASSEMBLY—Pilot light socket	
RLC-105	L2	COIL—Oscillator coil	
RLI-125		COIL—R-F coil	
RMS-118		SPRING—Dial cord tension spring	.10
RMW-070		PULLEY—Idler pulley	
RMX-174		SHAFT AND BUSHING—Tuning shaft and mounting bushing, Models 404 405	
RMX-175		DRIVE SHAFT AND BUSHING ASSEMBLY, for Model 410	
ROP-020		SPEAKER—PM speaker, Models 404 and 405	
RRC-149	R6, S1	POTENTIOMETER—500,000 ohms; volume control and switch S1, Models 404 and 405	
RRC-150		POTENTIOMETER—0.5 megohm volume control and switch, Model 410	
RTL-115	T2	TRANSFORMER—First i-f transformer	
RTL-116	T3	TRANSFORMER—Second i-f transformer	
RTO-083	T1	TRANSFORMER—Audio output transformer	1.80
RWL-009		POWER CORD—A-c power cord and plug	.70

MODEL 408

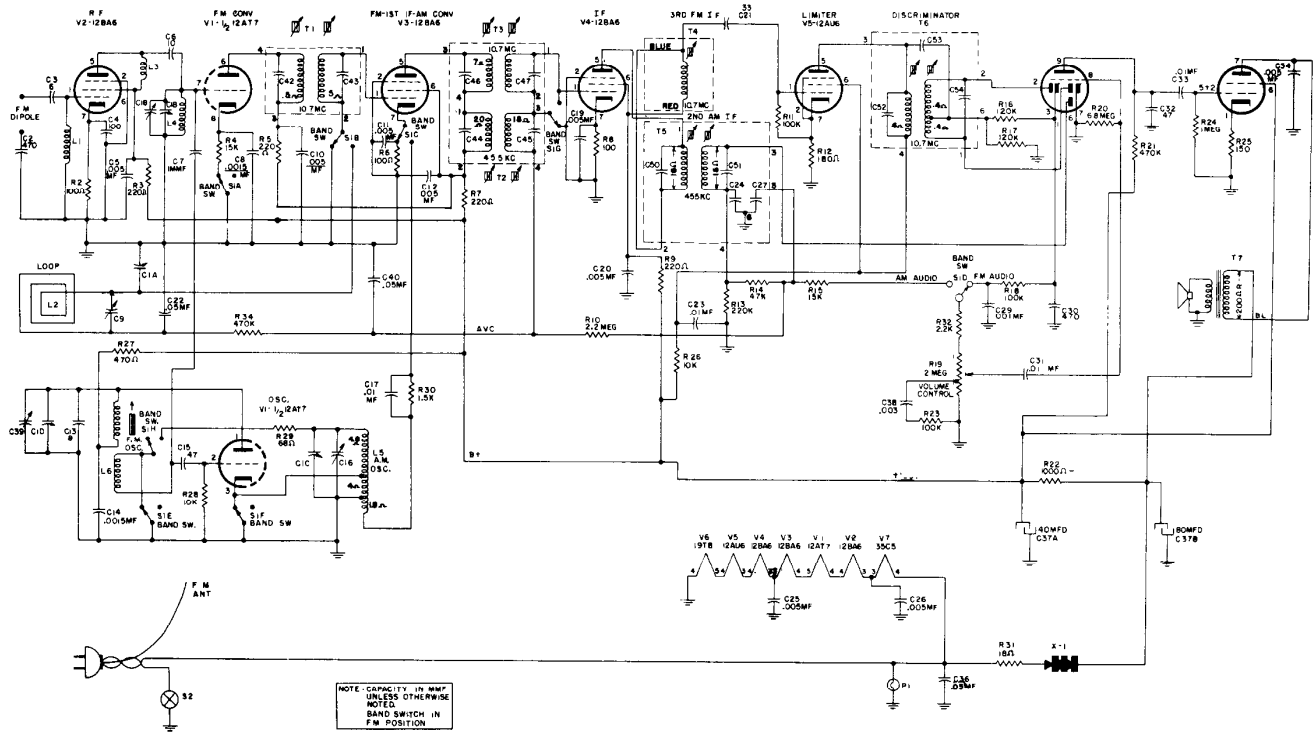
R F
V2-12BA6
FM CONV
V1-1/2 12AT7
FM-1ST IF-AM CONV
V3-12BA6
IF
V4-12BA6
3RD FM IF
LIMITER
V5-12AU6
DISCRIMINATOR
T6
F M
DIPOLE
LOOP
L2
OSC.
V1-1/2 12AT7
AVC
B+
AM AUDIO
FM AUDIO
BAND SW
VOLUME CONTROL
V6 19T8
V5 12AU6
V4 12BA6
V3 12BA6
V1 12AT7
V2 12BA6
V7 35C5
F M ANT
X-1
NOTE - CAPACITY IN MMF UNLESS OTHERWISE NOTED.
BAND SWITCH IN FM POSITION

MODEL 408
REPLACEMENT PARTS LIST

UNIVERSAL REPLACEMENT PARTS

Cat. No.	Symbol	Description	Suggested Unit List Price
*UCC-035	C29	CAPACITOR —.001 mfd., 600 v., paper	$0.25
UCC-037	C38	CAPACITOR—.003 mfd., 600 v., paper	.25
*UCC-039	C34, 36	CAPACITOR—.005 mfd., 600 v., paper	.25
*UCC-040	C17, C23, C31, C33	CAPACITOR—.01 mfd., 600 v., paper	.25
*UCC-045	C40, C22	CAPACITOR— 05 mfd., 600 v., paper	.30
UCG-002	C3	CAPACITOR—6 mmf., mica	.25
UCG-004	C6	CAPACITOR—10 mmf., mica	.25
UCG-016	C21	CAPACITOR—33 mmf., mica	.25
*UCG-020	C15, C32	CAPACITOR—47 mmf., mica	—
*UCU-044	C2, C30	CAPACITOR - 470 mmf., mica	.30
*URD-007	R31	RESISTOR—18 ohms, ½ w., carbon	.13
*URD-021	R29	RESISTOR—68 ohms, ½ w., carbon	.13
*URD-025	R2, R6, R8	RESISTOR—100 ohms, ½ w., carbon	.13
*URD-029	R25	RESISTOR—150 ohms, ½ w., carbon	.13
*URD-031	R12	RESISTOR—180 ohms, ½ w., carbon	.13
*URD-033	R3, R5, R7, R9	RESISTOR—220 ohms, ½ w., carbon	.13
*URD-041	R27	RESISTOR—470 ohms, ½ w., carbon	.13
*URD-053	R4, R30	RESISTOR—1500 ohms, ½ w., carbon	$0.13
*URD-057	R32	RESISTOR—2200 ohms, ½ w., carbon	.13
*URD-073	R26, R28	RESISTOR—10,000 ohms, ½ w., carbon	.13
*URD-077	R15	RESISTOR—15,000 ohms, ½ w., carbon	.13
*URD-089	R14	RESISTOR—47,000 ohms, ½ w., carbon	.13
*URD-097	R11, R18, R23	RESISTOR—100,000 ohms, ½ w., carbon	.13
*URD-099	R16, R17	RESISTOR—120,000 ohms, ½ w., carbon	.13
*URD-105	R13	RESISTOR—220,000 ohms, ½ w., carbon	.13
*URD-113	R21, R24, R34	RESISTOR—470,000 ohms, ½ w., carbon	.13
*URD-129	R10	RESISTOR—2.2 meg., ½ w., carbon	.13
*URD-141	R20	RESISTOR—6.8 meg., ½ w., carbon	.13

SPECIALIZED REPLACEMENT PARTS

RAB-129	L2	LOOP AND BACK ASSEMBLY	$2.20
RAD-049		BRACKET (Pilot light)	.05
RAU-335		CABINET (408)	8.50
RCE-101	C37A-B	CAPACITOR—150 v., electrolytic—80-40 mfd.	2.00
RCN-001	C7	CAPACITOR —1 mmf., ceramic	.20
RCT-041	C1A, B, C, D, 16, 18	CAPACITOR—Tuning	6.95
*RCW-026	C8, C14	CAPACITOR—1500 mmf., ceramic	.60
RCW-3029	C4	CAPACITOR—100 mmf., ceramic	.25
*RCW-3014	C5, C10, C11, C12, C19, C20, C25, C26	CAPACITOR—.005 mfd., 600 v., ceramic	.60
RCW-3034	C13	CAPACITOR—8 mmf., ceramic	.30
*RCY-016	C9	CAPACITOR—2-20 mf., trimmer	.35
*RDC-032		DIAL CORD	2.50/25 yd
RDE-080		ESCUTCHEON—(Cabinet)	1.90
RDK-208		KNOB—(408) (band)	.25
RDK-210		KNOB ASSEMBLY (tuning) (408)	.50
RDK-211		KNOB (volume) (408)	.25
RDP-051		POINTER—Dial pointer	.25
RDS-094		DIAL SCALE	1.80
RDX-046		POINTER SHAFT AND DRUM	.35
RER-010	X1	SELENIUM RECTIFIER	1.60
*RHC-017		CLIP—(Coil mounting)	.05
RHC-034		CLIP—(Coil mounting)	.05
*RHH-004		SNAP FASTENER	.02
*RHM-043		RETAINING RING—Type "C"	.01
RHS-048		TUBE SHIELD	.15
*RHX-010		SPACER—(Tuning condenser)	$0.25
		GROMMET—(Tuning condenser)	
RJS-118		TUBE SOCKET—Nine prong for V6	.35
RJS-125		SUB TUBE SOCKET—(Seven prong)	.20
RJS-143		TUBE SOCKET—For V1	.25
*RJX-034		INTERLOCK TERMINAL—Female	.45
		METAL CAP—Female	
		INSULATING CAP—Female	
RLA-035	L1	CHOKE—F.M. Antenna	.15
*RLB-029	L4	CHOKE—F.M. R.F. Grid	.15
RLC-103	L5	COIL—B.C. Oscillator	.90
RLC-104	L6	COIL—F.M. Oscillator	1.20
RLP-017	L3	CHOKE—R.F. Plate	.15
*RHF-006		CHASSIS FOOT	.15
RML-049		KNOB LINK	.20
*RMS-111		SPRING (Lg. Drum)	.15
RMU-062		TUNING SHAFT ASSEMBLY	.60
RMU-063		SHAFT (Band Switch)	.15
RRC-148	R19, S2	VOLUME CONTROL AND SWITCH	1.65
*RRW-055	R22	RESISTOR—1000 ohms, w.w., 2 w.	.45
*RSI-003		INTERLOCK—Male	.15
RSW-078	S1	BAND SWITCH	1.75
*RTD-006	T6	F.M. DISCRIMINATOR	4.95
*RTL-079	T2	I.F. TRANSFORMER—1st B.C.	2.75
*RTL-100	T4	I.F. TRANSFORMER—3rd F.M.	1.10
RTL-111	T5	I.F. TRANSFORMER—2nd B.C.	2.10
RTL-112	T1	I.F. TRANSFORMER—1st F.M.	1.80
RTL-113	T3	I.F. TRANSFORMER—2nd F.M.	2.25
RTO-087	T7	OUTPUT TRANSFORMER	2.20
*RWL-022		POWER CORD SET—(Three wire)	1.25
RWX-031		PILOT LIGHT SOCKET ASSEMBLY	.50
S527D		SPEAKER—5 ¼-inch	4.00

MODEL 409

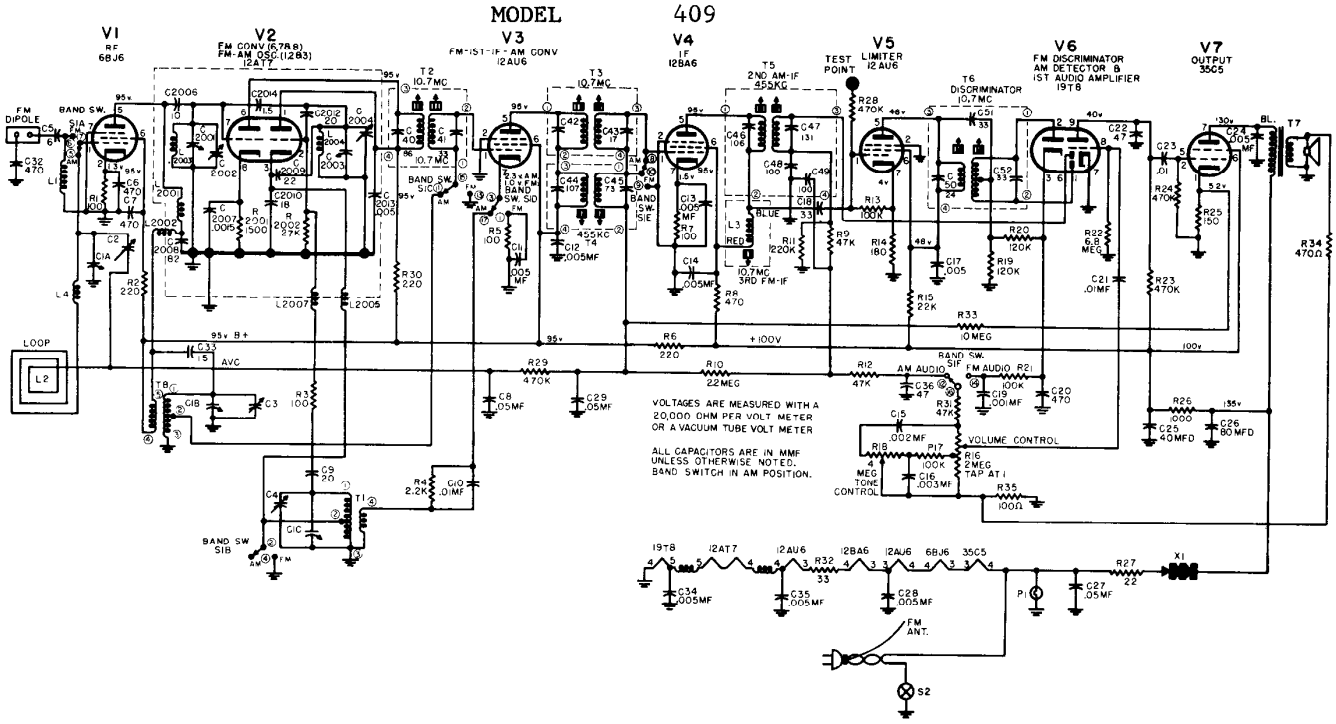
V1
RF
6BJ6
V2
FM CONV (6.7R8)
FM-AM OSC (12B3)
12AT7
V3
FM-1ST-IF-AM CONV
12AU6
V4
IF
12BA6
V5
TEST
LIMITER
12AU6
V6
FM DISCRIMINATOR
AM DETECTOR &
1ST AUDIO AMPLIFIER
19T8
V7
OUTPUT
35C5
T1
T2
10.7MC
T3
10.7MC
T5
2ND AM-IF
455KC
T6
DISCRIMINATOR
10.7MC
T7
FM DIPOLE
LOOP
L2
BAND SW.
S1A
BAND SW.
S1B
BAND SW.
S1C
BAND SW.
S1D
BAND SW.
S1E
BAND SW.
S1F
95v B+
+100V
AVC
VOLUME CONTROL
TONE CONTROL
AM AUDIO
FM AUDIO
VOLTAGES ARE MEASURED WITH A
20,000 OHM PER VOLT METER
OR A VACUUM TUBE VOLT METER
ALL CAPACITORS ARE IN MMF
UNLESS OTHERWISE NOTED.
BAND SWITCH IN AM POSITION.
FM ANT.
S2
P1
X1

REPLACEMENT PARTS LIST MODEL 409

Cat. No.	Symbol	Description	Unit Price
CAPACITORS			
*RCE 101	C25A, 25B	40-80 mfd., 150 v., electrolytic	$2.00
*RCN-040	C5	6 mmf., ceramic	.25
*RCN-046	C2010	18 mmf., silver mica	.25
*RCN-048	C2014, 33	1.5 mmf., ceramic	.20
RCT-055	C2001, 2002, 2003, 2004	F.M tuning capacitor	3.50
RCT-056	C1A, 1B, 1C	A M. tuning condenser	
*RCW-026	C2007	.0015 mf., ceramic	.25
*RCW-176	C6, 32	470 mmf., ceramic	.25
*RCW-3014	C11, 12, 13, 14, 17, 28, 34, 35, 2013	.005 mf., hi-k, ceramic	.25
*RCW-3016	C2012	20 mmf., ceramic.	1.00
RCW-3065	C2009	22 mmf., ceramic	60
RCY-016	C2	Trimmer, 2-20 mmf.	.35
*UCC-011	C8, C29	.05 mf., 200 v., paper	.30
*UCC-035	C19	.001 mf., 600 v., paper	.30
*UCC-036	C15	.002 mf., 600 v., paper	.25
*UCC-037	C16	.003 mf., 600 v., paper	.25
UCC-039	C24	.005 mf., 600 v., paper	.25
*UCC-040	C10, 21, 23	.01 mf., 600 v., paper	.25
*UCC-045	C27	.05 mf., 600 v., paper	.30
*UCG-004	C2006	10 mmf., silver mica	.25
*UCG-016	C18	33 mmf., silver mica	.25
*UCG-020	C22, 36	47 mmf., silver mica	.35
UCG-1011	C9	20 mmf., silver mica	
*UCG-1026	C2008	82 mmf., silver mica	.25
*UCU-044	C20	470 mmf., mica	.30
RESISTORS			
RRC-177	R16	Volume control	$1.25
RRC-178	R18	Tone control	1.60
RRW-084	R26	1000 ohms, 2 w., w.w.	.35
RRW-085	R32	33 ohms, 2 w., w.w.	.35
*URD-009	R27	22 ohms, ½ w., carbon	.13
*URD-025	R1, 3, 5, 7	100 ohms, ½ w., carbon	.13
*URD-031	R14	180 ohms, ½ w., carbon	.13
*URD-033	R2, 6, 30	220 ohms, ½ w., carbon	.13
*URD-041	R8	470 ohms, ½ w., carbon	.13
*URD-053	R2001	1500 ohms, ½ w., carbon	.13
*URD-057	R4	2200 ohms, ½ w., carbon.	.13
*URD-081	R15, R2002	22,000 ohms, ½ w., carbon	.13
*URD-089	R9, 12, 31	47,000 ohms, ½ w., carbon	.13
*URD-097	R13, 17, 21	100,000 ohms, ½ w., carbon	.13
*URD-099	R19, 20	120,000 ohms, ½ w., carbon	.13
*URD-105	R11	220,000 ohms, ½ w., carbon	.13
*URD-113	R23, 24, 28, 29	470,000 ohms, ½ w., carbon	.13
*URD-029	R25	150 ohms, ½ w., carbon	.13
*URD-129	R10	2.2 meg., ½ w., carbon	.13
*URD-141	R22	6.8 meg., ½ w., carbon.	.13
*URD-145	R33	10 meg., ½ W, carbon	.13
COILS AND TRANSFORMERS			
RLB-031	L2003	F.M.-R.F.-COIL	$0.15
RLB-032	T8	COIL—B.C.-R.F.	1.50
RLC-114	L2004	F.M. OSCILLATOR COIL	.15
RLC-115	T1	COIL- B.C. OSCILLATOR.	.90
*RLI-122	L4, L2002, 2005, 2006, 2007	CHOKE—A.M. LOOP (2.2 uh).	.25
*RLI-124	L2001	R.F. PLATE—Choke.	.80
*RLI-163	L1	CHOKE—F.M. ANTENNA	.15
*RTD-006	T6	F.M. DISCRIMINATOR TRANSFORMER	4.95

Cat. No.	Symbol	Description	Unit Price
COILS AND TRANSFORMERS (Cont'd)			
*RTL-111	T5	I.F. TRANSFORMER—2nd B.C.	$2.10
*RTL-112	T2	I.F. TRANSFORMER—1st F.M.	1.80
RTL-128	T4	I.F. TRANSFORMER—1st B.C.	2.10
RTL-129	T3	I.F. TRANSFORMER—2nd F.M.	2.25
RTL-130	L3	I.F. COIL—3rd F.M.	2.10
RTO-112	T7	OUTPUT TRANSFORMER	2.75
MISCELLANEOUS ELECTRICAL			
*RJC-004		TERMINAL—For loop connections	$0.02
*RJS-118		TUBE SOCKET—For V6	.35
*RJS 125	V1, 3, 4, 5, 7	TUBE SOCKET	.20
RJS-174		TUBE SOCKET—For V2	
*RJX-034		INTERLOCK—Female terminal cap and insulator	.45
*RER-010		SELENIUM RECTIFIER	1.60
*RSI-003		INTERLOCK—Male	.15
RSW-090	S1A, 1B, 1C, 1D, 1F	BAND SWITCH	2.25
*RWL-022		POWER CORD SET	1.25
*RWX-031		PILOT LIGHT ASSEMBLY.	.50
*IRS-527D		SPEAKER—5½ in.	4.60
MISCELLANEOUS MECHANICAL			
RAC-099		COVER—For F.M. tuner	
*RDC-032		DIAL CORD—25 yds.	$2.50
*RDE-080		ESCUTCHEON—(Cabinet).	1.90
RDP-065		POINTER	.35
RDS-111		DIAL SCALE	2.35
*RHC-018		CLIP For mounting loop and back.	.05
*RHC-038		CLIP—For mounting B.C.-R.F. transformer T8	.02
*RHC-034		CLIP—Coil mounting for L3	.05
*RHC-049		CLIP — For mounting escutcheon around dial	.02
*RHF-006		CHASSIS FOOT	.15
*RHG-015		GROMMET—Tuning gang mounting	.05
RHH-004		SNAP FASTENER—For fastening back onto cabinet	.02
*RHM-025		"C" TYPE RETAINING RING on tone control shaft	.01
RHS-091		TUBE SHIELD—For V2	
RMC-002		CLIP—(Coil mounting)—for B.C. oscillator coil, T1	.05
*RMS-130		SPRING—(LG Drum of F.M. tuner)	.15
*RMS-243		SPRING—Tension, for pointer drive cord	.10
RMS-274		SPRING	.02
RMU-080		TUNING SHAFT	.60
RMX-198		LINK ROLLER ASSEMBLY—Includes shoulder rivets	.60
RMX-199		DRUM AND BUSHING ASSY.—On F.M. tuner	.85
CABINETS AND CABINET PARTS			
RAB-173		LOOP AND BACK ASSEMBLY.	$2.25
*RAD-049		BRACKET—Pilot light	.05
RAU-355		CABINET—409	8.50
*RDK-211		KNOB—Volume	.25
RDK-265		KNOB—Tuning	.25
RDK-266		KNOB—Tone	.20
RDK-267		KNOB—Band	.25

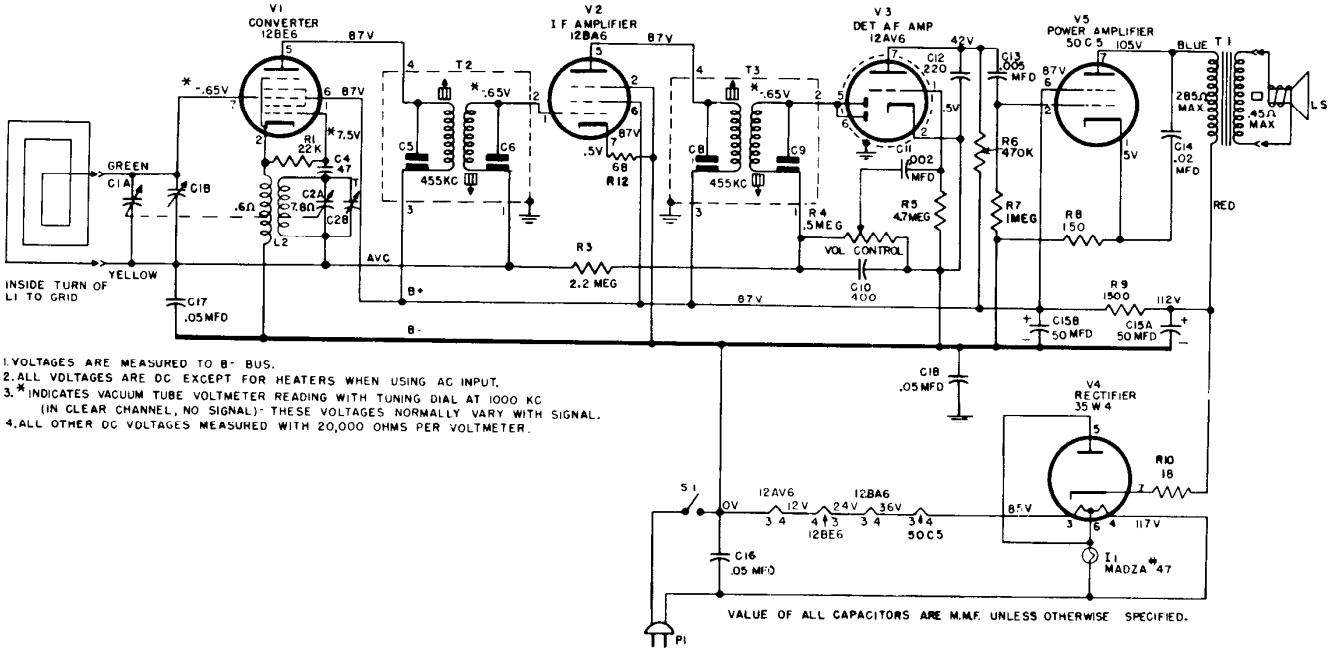

1. VOLTAGES ARE MEASURED TO B- BUS.
2. ALL VOLTAGES ARE DC EXCEPT FOR HEATERS WHEN USING AC INPUT.
3. * INDICATES VACUUM TUBE VOLTMETER READING WITH TUNING DIAL AT 1000 KC (IN CLEAR CHANNEL, NO SIGNAL). THESE VOLTAGES NORMALLY VARY WITH SIGNAL.
4. ALL OTHER DC VOLTAGES MEASURED WITH 20,000 OHMS PER VOLTMETER.

REPLACEMENT PARTS LIST FOR MODEL 412

Cat. No.	Symbol	Description	Unit Price
		CAPACITORS	
*RCE-127	C15A, B	50 mf., 150 v.; 50 mf., 150 v., electrolytic	$1.85
*RCT-037	C1A, B; C2A, B	Two gang, osc., 10.6-126 mmf., r-f 14.3-420 mmf., with drive drum and trimmers	3.60
*RCW-3048	C10, 11, 12, 13	400 mmf., .002 mf., 220 mmf., .005 mf., 450 v., ceramic	.90
*UCC-041	C14	.02 mf., 600 v. paper	.25
*UCC-045	C16, 17, 18	.05 mf., 600 v., paper	.30
*UCU-020	C4	47 mmf., 500 v., mica	.25
		RESISTORS (CARBON)	
*URD-007	R10	18 ohms ½ w.	$0.13
*URD-021	R12	68 ohms ½ w.	.13
*URD-029	R8	150 ohms ½ w.	.13
*URD-081	R1	22,000 ohms ½ w.	.13
*URD-113	R6, 11	470,000 ohms ½ w.	.13
*URD-121	R72	1 megohm ½ w.	.13
*URD-129	R3	2.2 megohms ½ w.	.13
*URD-137	R5	4.7 megohms, ½ w.	.13
*URF-053	R9	1500 ohms, 2 w.	.25
		POTENTIOMETER	
*RRC-106	R4, S1	500K ohms, composition, volume control and on-off switch.	$1.65
		COILS AND TRANSFORMERS	
*RLC-117	L2	COIL—For oscillator V1	$0.90
RTL-135	T2, C5, C6, T3, C8, C9	TRANSFORMER—1st or 2nd I-F, 455KC	1.90
*RTO-069	T1	TRANSFORMER—Audio output	1.75

Cat. No.	Symbol	Description	Unit Price
		MISCELLANEOUS ELECTRICAL	
*RJC-004		CONNECTOR—Speaker connector clip on audio output leads	$0.02
*RJS-092		SOCKET—Miniature wafer, seven pin wax impregnated, 1 5/16 in. mounting centers; for tubes 12BE6, 12AV6, 50C5, 35W4	.20
*RJS-141		SOCKET—Miniature wafer, seven pin, 1 5/16 in. mounting centers; for tube 12BA6	.20
*RJX-031		SOCKET—Bayonet type for Mazda #47 dial lamp; with clip-on bracket.	.40
*RWL-009		POWER CORD—AC cord and plug, brown	.70
*S403D7		LOUDSPEAKER—4 in. PM, 4 watt	4.30
		MISCELLANEOUS MECHANICAL	
*RDC-032		CORD—Dial cord, bulk quantity 25 yds	$2.50
*RDK-174		KNOB—Off-volume or tuning control knob, color buff	.15
RDP-073		DIAL POINTER—Dial pointer, metal, brass finish	.40
RDS-118		DIAL SCALE—Dial scale and back-plate, plastic, ivory, translucent numerals	1.05
*RHC-024		CLIP—⅞ in. clip mounts C15A, B	.10
*RHC-034		CLIP—For mounting I-F transformers	.05
*RHG-006		GROMMET—For 110 v. line cord	.05
*RHG-018		GROMMET—Rubber shock mount for tuning capacitor	.05
*RHJ-007		SPACER—In grommet, RHG-018, mounting tuning capacitor	.05
*RMC-002		CLIP—Osc., coil mtg. clip	.05
*RMS-118		SPRING—Dial cord tension spring	.10
*RMX-170		SHAFT—Tuning shaft and bushing assembly	.35
		CABINETS AND CABINET PARTS	
*RAB-095		BACK—Includes antenna loop, L1	$1.55
RAU-363		CABINET—Plastic, black	6.25
*RDW-021		DIAL WINDOW—Plastic, 6 17/32 x 3 13/32 inches	.60

*Parts used on previous receivers.

PRICES ARE SUBJECT TO CHANGE WITHOUT NOTICE.

MODELS 412F, 414F, 415F, 416F

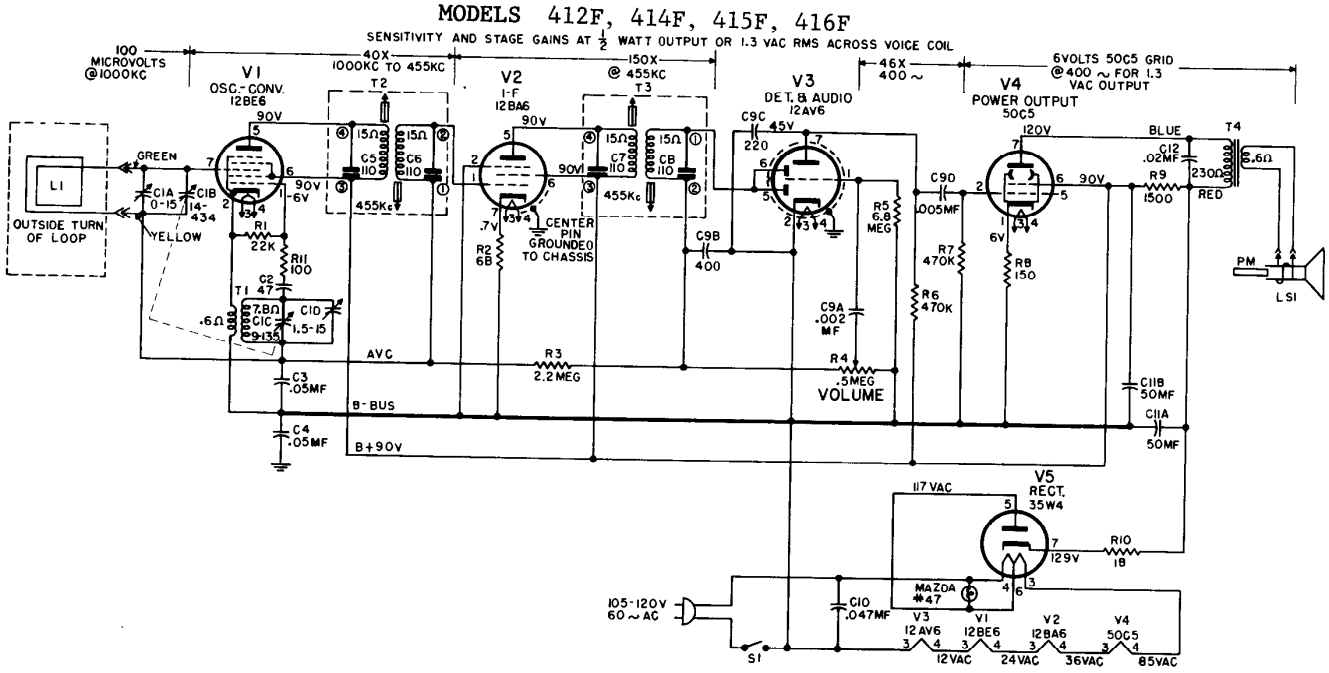

REPLACEMENT PARTS LIST—MODELS 412F, 414F, 415F, AND 416F

Cat. No.	Symbol	Description	List Price
		CAPACITORS	
*RCE-127	C15A, B	50-50 mmf, 150v, electrolytic	$1 85
*RCN-053	C10	.047 mf, ±20%, 600v, paper molded	.35
RCT-037	C1A, B, C, D	Two gang, for Model 412F	3 60
*RCT-058	C1A, B, C, D	Two gang, for Models 414F, 415F or 416F.	3 50
*RCW-3048	C9A, B, C, D	022 mf, 400 mmf, 220 mmf, 005 mf., ceramic couplate	90
*RCW-3075	C2	47 mmf, ±20% N2200, ceramic	25
UCC-041	C12	.02 mf., 600V, paper	25
UCC-045	C3, 4	05 mf, 600v., paper	30
		RESISTORS (Resistance ±10%, Carbon)	
*URD-007	R10	18 ohms, ½ w.	$0.13
*URD-021	R2	68 ohms, ½ w.	.13
*URD-025	R11	100 ohms, ½ w	.13
*URD-029	R8	150 ohms, ½ w.	.13
*URD-081	R1	22,000 ohms, ½ w.	13
*URD-113	R6, 7	470,000 ohms, ½ w.	.13
URD-129	R3	2.2 meg., ½ w.	.13
*URD-141	R5	6.8 meg., ½ w.	13
*URF-053	R9	1500 ohms, 2 w.	25
		POTENTIOMETERS	
RRC-203	R4, S1	500,000 ohms, for Models 414F, 415F, 416F	$1.65
RRC-204	R4, S1	500,000 ohms, for Model 412F	1.70
		COILS AND TRANSFORMERS	
RLC-122	T1	COIL—Oscillator	$1.00
RTL-143	T2, 3	TRANSFORMER—1st or 2nd I-F	1.80
RTO-128	T4	TRANSFORMER—Audio output	1.90
		MISCELLANEOUS ELECTRICAL	
RII-081		WAFER—Part of I-F transformer receptacle	$0.05
RII-082		WAFER—Part of tube receptacle.	.05
*RJC-004		TERMINAL—Female, speaker connector on audio output leads	.02
RJC-027		CONNECTOR—Tube pin connector, part of tube receptacle	.03
RJC-028		CONNECTOR—Oscillator coil receptacle.	.02
RJC-029		CONNECTOR—Push-on type terminal for I-F connecting lead	.05
RJC-030		CONNECTOR—Pin clip, part of I-F transformer receptacle assembly, left-hand type	.02
RJC-031		CONNECTOR—Pin clip, part of I-F transformer receptacle assembly, right-hand type	.02
*RJX-031		PILOT LIGHT ASSY.—Includes bayonet type socket for Mazda No. 47 dial lamp with clip-on bracket, for Model 412F	.40
*RWL-009		CORD—Power cord and plug, brown, ivory plug; for Models 412F, 414F or 416F	.70
*RWL-016		CORD—Power cord and plug, ivory, for Model 415F	75
*RWX-040		PILOT LIGHT ASSY.—Includes bayonet type socket for Mazda No. 47 dial lamp, with clip-on bracket, for Models 414F, 415F or 416F	.45
*S-403D-7		LOUDSPEAKER—4-inch, PM	4.00

Cat. No.	Symbol	Description	List Price
		MISCELLANEOUS MECHANICAL	
*RDC-032		DIAL CORD—Bulk quantity, 25 yds	$2.50
*RDP-063		DIAL POINTER—Plastic (or metal) gold finish; for Models 414F, 415F or 416F	.65
*RDP-073		DIAL POINTER—Metal, brass plated; for Model 412F	.40
*RDS-109		DIAL SCALE—Plastic, gold finish, translucent numerals; for Models 414F, 415F or 416F	1.50
*RDS-118		DIAL SCALE—Plastic, black finish, translucent numerals, for Model 412F	1.05
*RHC-024		CLIP—⅛-inch, mounts C11A, B	10
RHC-061		CLIP—Holds Textolite sub chassis	
RHE-014		EYELET—Tube receptacle wafer mounting	.01
RHE-016		EYELET—I-F receptacle wafer mounting	.01
*RHG-018		GROMMET—Rubber, for tuning capacitor shock Mounting	.05
*RHH-004		SNAP FASTENER—Holds cabinet back to cabinet; for Models 414F, 415F or 416F	02
*RHI-017		GROMMET—Two piece strain relief for power cord	15
*RHJ-005		SPACER—Metal, for tuning capacitor shock Mounting	.05
RHS-108		LIGHTSHIELD—Dial light shield, fiber, for Models 414F, 415F or 416F	.05
RHS-109		INSULATING SPACER—Black Textolite, in chassis tube holes	.20
RHS-110		TUBE SHIELD—Tube shield for 12AV6 tube	.15
RHS-111		SHIELD POST—Tube pin shield, mounts wafer of I-F tube receptacle	.03
*RMS-118		SPRING—Dial cord tension spring	.10
*RMS-214		SPRING CLIP—On dial pointer; for Models 414F, 415F or 416F	.05
*RMX-170		SHAFT ASSEMBLY—Tuning shaft and bushing assembly, for Model 412F	.35
*RMX-195		SHAFT—Tuning shaft and bushing assembly for Models 414F, 415F or 416F	.55
		CABINETS AND APPEARANCE ITEMS	
RAB-202		CABINET BACK—Back and loop for Models 414F, 415F or 416F	$1.40
RAB-203		CABINET BACK—Back and loop for Model 412F	1.40
*RAG-033		GRILLE CLOTH—Cabinet grille cloth (dark maroon) for Models 414F or 416F	.30
*RAG-034		GRILLE CLOTH—Cabinet grille cloth (ivory) for Model 415F	.30
*RAU-350		CABINET—Plastic, ivory; for Model 415F	7.95
*RAU-352		CABINET—Plastic, mahogany; for Model 414F	7.95
*RAU-363		CABINET—Plastic, black; for Model 412F	6.25
RAU-375		CABINET—Plastic, red, for Model 416F.	7.95
RDK-174		KNOB—Off-On-Volume or Tuning, buff color; for Model 412F	.15
*RDK-260		KNOB—Off-On-Volume or Tuning, fawn color; for Models 414F, 415F or 416F	.20
*RDW-021		DIAL WINDOW—Dial scale window, plastic, 6 17 32 x 3 13 32 in.; for Model 412F.	.60
*RDW-052		DIAL WINDOW—Dial window, plastic, with mounting tabs; for Models 414F, 415F or 416F	.60

414,415,416,430

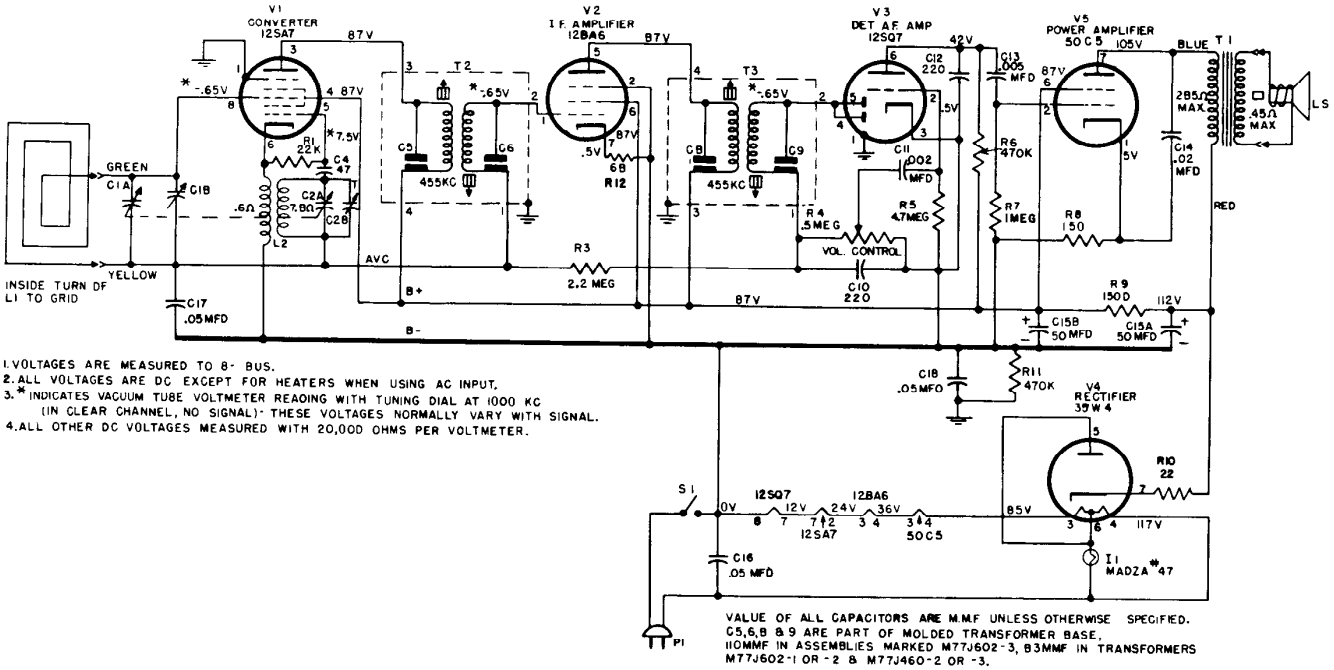

1. VOLTAGES ARE MEASURED TO B- BUS.
2. ALL VOLTAGES ARE DC EXCEPT FOR HEATERS WHEN USING AC INPUT.
3. * INDICATES VACUUM TUBE VOLTMETER READING WITH TUNING DIAL AT 1000 KC (IN CLEAR CHANNEL, NO SIGNAL). THESE VOLTAGES NORMALLY VARY WITH SIGNAL.
4. ALL OTHER DC VOLTAGES MEASURED WITH 20,000 OHMS PER VOLTMETER.

VALUE OF ALL CAPACITORS ARE M.M.F. UNLESS OTHERWISE SPECIFIED.
C5,6,8 & 9 ARE PART OF MOLDED TRANSFORMER BASE.
IIOMMF IN ASSEMBLIES MARKED M77J602-3, 83MMF IN TRANSFORMERS M77J602-1 OR -2 & M77J460-2 OR -3.

REPLACEMENT PARTS LIST

MODELS 414, 415, 416 AND 430

Cat. No.	Symbol	Description	Unit Price
CAPACITORS			
*RCE-127	C15A, B	30 mf., 150 v.; 30 mf. 150 v., electrolytic	$1.85
RCT-058	C2A, B, C1, C3	Tuning capacitor with trimmers	3.50
*RCW-3013	C10, 11, 12, 13	220 mmf., .002 mf., 220 mmf., .005 mf., 450 v., ceramic	1.00
*UCU-020	C4	47 mmf., ceramic	.25
*UCC-041	C14	.02 mf., 600 v., paper	.25
*UCC-045	C16, 17, 18	.05 mf., 600 v., paper	.30
RESISTORS (CARBON)			
*URD-009	R10	22 ohms, ½ w.	.13
*URD-021	R12	68 ohms, ½ w.	.13
*URD-029	R8	150 ohms, ½ w.	.13
*URD-081	R1	22,000 ohms, ½ w.	.13
*URD-113	R6, 11	470,000 ohms, ½ w.	.13
*URD-121	R7	1 meg., ½ w.	.13
*URD-129	R3	2.2 meg., ½ w.	.13
*URD-137	R5	4.7 meg., ½ w.	.13
*URF-053	R9	1500 ohms, 2 w.	.25
POTENTIOMETER			
RRC-172	R4, S1	500,000 ohms, composition, volume control and ON-OFF switch	1.60
COILS AND TRANSFORMERS			
*RLC-117	L2	COIL—Oscillator coil for V1	.90
*RTL-135	T2, C5, C6, T3, C8, C9	TRANSFORMER—1st or 2nd i-f, with tuning cores (capacitors are part of molded base assembly)	
*RTO-069	T1	TRANSFORMER—Audio output	1.75
MISCELLANEOUS ELECTRICAL			
*RJS-003		SOCKET—8-pin wafer, 1⅜ in. hole mount spacing, for 12SA7 or 12SQ7	.20
RJS-092		SOCKET—7-pin wafer 1⅛ in. hole mount spacing for 35W4 or 50C5 tubes	.20
*RJS-141		SOCKET—8-pin wafer 1⅜ in. hole mount spacing for 12BA6 tube	.20
RWL-009	P1	POWER CORD—A-c power cord and plug (brown) for Models 414, 416, 430	.70
*RWL-016	P1	POWER CORD—A-c power cord and plug (white) for Model 415	.75
*RWX-040		SOCKET—Dial light socket with leads	.45
*S403D7	LS1	LOUDSPEAKER—4 inch PM	4.30

Cat No.	Symbol	Description	Unit Price
MISCELLANEOUS MECHANICAL			
RDC-032		CORD—Dial cord, bulk quantity 25 yds.	$2.50
RDP-063		DIAL POINTER—Plastic pointer may be furnished in lieu of brass	.65
RDS-109		DIAL SCALE—Plastic dial plate, gold finish, translucent numerals	1.50
*RHC-024		CLIP—⅞ inch, mounts C15A, B	.10
*RHC-034		CLIP—For mounting I-F can assembly to chassis	.05
RHG-006		GROMMET—For 110 v. line cord, in back apron of chassis	.05
*RHG-018		GROMMET—Rubber, for mounting tuning capacitor	.05
*RHH-004		FASTNER—Snap fastner for Models 414, 415, or 416, holds cabinet back to cabinet	.02
*RHJ-007		SPACER—Metal, in grommet mounting tuning capacitor	.05
RHS-044		SCREW—No. 4 x ¼ in. stove head shakeproof type No. 25, mounts speaker in Models 414, 415 or 416 cabinet	.05
*RJC-004		CLIP—Female speaker connector on audio output leads	.02
*RMC-002		CLIP—Osc. coil mounting clip, United carr No. 521D7	.05
RMS-118		SPRING—Dial cord tension spring	.10
RMS-214		CLIP—Metal clip used on plastic dial pointer	.05
RMX-195		SHAFT—Tuning shaft and bushing assembly	.55
CABINETS AND CABINET PARTS			
RAB-172	L1	CABINET BACK—Antenna loop on cabinet back cover	2.00
*RAG-033		GRILLE CLOTH—Maroon, behind speaker grille, in Model 414 or 416 cabinet	.30
*RAG-034		GRILLE CLOTH—Ivory, behind speaker grille on Model 415 cabinet	.30
RAU-350		CABINET—Plastic, Ivory, for Model 415	7.95
RAU-351		CABINET—Plastic, Maroon, for Model 416	7.95
RAU-352		CABINET—Plastic, Mahogany, for Model 414	7.95
RAV-177		CABINET—Wood, Mahogany for Model 430	12.00†
*RDK-003		KNOB—Plastic, two tone fawn and gold leaf finish, volume or tuning for Model 430	.25
RDK-260		KNOB—Plastic, fawn color, volume or tuning for Model 414, 415 or 416	.20
RDW-052		DIAL WINDOW—Formed plastic with mounting tabs for Models 414, 415 or 416	.60
RDW-053		DIAL WINDOW—6 9/32 in. x 3¾ in. glass for Model 430	.40
*RHF-008		FOOT—Cabinet foot rest, ½ inch, metal and felt composition, for Model 430	.15
RAB-095		Back and Loop (430)	

MODEL 417 417A

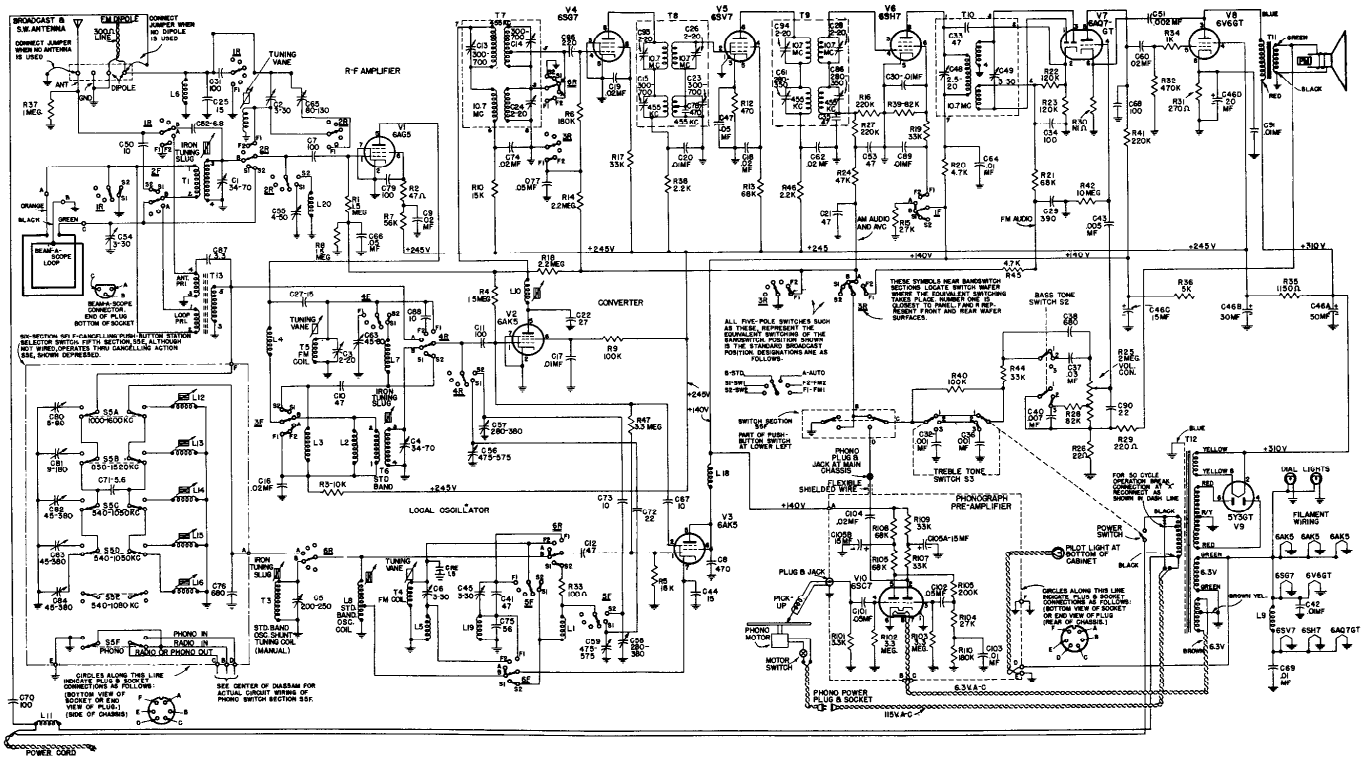

Part No.	Symbol	Description
UNIVERSAL REPLACEMENT PARTS		
UCC-039	C43	CAPACITOR—.005 mfd., 600 v., paper
UCC-040	C17, 30, 64, 69, 89, 91, 103	CAPACITOR—.01 mfd., 600 v., paper
UCC-041	C9, 18, 74, 104	CAPACITOR—.02 mfd., 600 v., paper
UCC-042	C37	CAPACITOR—.03 mfd., 600 v., paper
UCC-045	C47, 66, 77, 101, 102	CAPACITOR—.05 mfd., 600 v., paper
UCG-2048	C76	CAPACITOR—680 mmfd., 500 v., silver mica
UCN-506	C52	CAPACITOR—6.8 mmf., ceramic
UCU-020	C21, 53	CAPACITOR—47 mmf., 500 v., mica
UCU-028	C68	CAPACITOR—100 mmf., 500 v., mica
UCU-048	C38	CAPACITOR—680 mmf., 500 v., mica
UCU-520	C10	CAPACITOR—47 mmf., mica
UCU-528	C70, 79, 31	CAPACITOR—100 mmf., 500 v., mica
UCU-536	C85	CAPACITOR—220 mmf., 500 v., mica
UCU-1042	C29	CAPACITOR—390 mmfd., 500 v., mica
UCU-1504	C73	CAPACITOR—10 mmfd., mica
UCU-1512	C72, 90	CAPACITOR—22 mmfd., 500 v., mica
UCU-1544	C8	CAPACITOR—470 mmfd., mica
UCW-1004	C50	CAPACITOR—10 mmf., ceramic
UCW-1014	C22	CAPACITOR—27 mmf., ceramic
UCW-1020	C41	CAPACITOR—47 mmf., ceramic
UCW-1028	C34	CAPACITOR—100 mmf., ceramic
UCW-2022	C75	CAPACITOR—56 mmf., ceramic
UIC-001		CEMENT—Speaker cone replacement cement
UJB-014		TERMINALS—4 lug terminal strip
UJB-018		TERMINALS—2 lug terminal strip
UOP-1230		SPEAKER—12-in. permanent magnet speaker
UOX-002		CONE—Loudspeaker replacement cone assembly
URD-007	R30	RESISTOR—18 ohms, ½ w., carbon
URD-009	R26	RESISTOR—22 ohms, ½ w., carbon
URD-017	R2	RESISTOR—47 ohms, ½ w., carbon
URD-025	R33	RESISTOR—100 ohms, ½ w., carbon
URD-033	R29	RESISTOR—220 ohms, ½ w., carbon
URD-041	R12	RESISTOR—470 ohms, ½ w., carbon
URD-049	R34	RESISTOR—1000 ohms, ½ w., carbon
URD-057	R38, 46	RESISTOR—2200 ohms, ½ w., carbon
URD-061	R101	RESISTOR—3300 ohms, ½ w., carbon
URD-065	R20, 45	RESISTOR—4700 ohms, ½ w., carbon
URD-077	R10	RESISTOR—15,000 ohms, ½ w., carbon
URD-083	R104	RESISTOR—27,000 ohms, ½ w., carbon
URD-085	R19, 44	RESISTOR—33,000 ohms, ½ w., carbon
URD-089	R24	RESISTOR—47,000 ohms, ½ w., carbon
URD-091	R7	RESISTOR—56,000 ohms, ½ w., carbon
URD-093	R13, 21	RESISTOR—68,000 ohms, ½ w., carbon
URD-095	R28, 39	RESISTOR—82,000 ohms, ½ w., carbon
	C81	CAPACITOR—9–180 mmf., pushbutton antenna trimmer
	C82	CAPACITOR—45–380 mmf., pushbutton antenna trimmer
	C83	CAPACITOR—45–380 mmf., pushbutton antenna trimmer
	C84	CAPACITOR—45–380 mmf., pushbutton antenna trimmer
RCX-016	C5	CAPACITOR—200–250 mmf., trimmer capacitor
	C58	CAPACITOR—280–380 mmf., trimmer capacitor
	C59	CAPACITOR—475–575 mmf., trimmer capacitor
RCX-022	C3	CAPACITOR—2–20 mmf., trimmer capacitor
	C4	CAPACITOR—34–70 mmf., trimmer capacitor
	C56	CAPACITOR—475–575 mmf., trimmer capacitor
	C57	CAPACITOR—280–380 mmf., trimmer capacitor
	C63	CAPACITOR—45–80 mmf., trimmer capacitor
RCX-023	C1	CAPACITOR—34–70 mmf., trimmer capacitor
	C55	CAPACITOR—4–50 mmf., trimmer capacitor
RCX-024	C2	CAPACITOR—3–30 mmf., trimmer capacitor
	C65	CAPACITOR—80–130 mmf., trimmer capacitor
RCY-011	C54	CAPACITOR—3–30 mmf., trimmer for loop
RCY-017	C6, 45	CAPACITOR—3–30 mmf., air trimmer
RDB-001		PUSHBUTTON—Black pushbutton used at bottom of strip only
RDB-004		PUSHBUTTON—Black pushbutton used in upper five positions only
RDC-019		CORD—Hoist cord 6½" long
RDC-021		CORD—Drive cord 40½"
RDE-016		ESCUTCHEON—For dial scale and pushbuttons
RDG-003		BACK PLATE—Large metal panel plate
RDK-004		KNOB—Black knob, plain
RDK-032		KNOB—Black control knob with pointer
RDO-001		ESCUTCHEON ORNAMENT—Left-hend plastic escutcheon ornament
RDP-016		POINTER—Dial pointer and slide
RDP-022		POINTER—Dial pointer
RDS-018		SCALE—Tuning dial scale
REX-002		CORE—Iron core with glass tubing for broadcast antenna, r-f, and oscillator coils
RHC-007		PIN—Hairpin cotter for securing shaft through pushbuttons
RHC-009		PIN—Hairpin cotter for idler wheel
RHC-010		SPRING CLIP—Holds FM coil assembly
RHE-001		EYELET—For connecting FM coil links
RHM-016		CLIP—Mounting clip for L1 and L7
RHM-024		LINK—Hoist link holding end of hoist cord
RHM-025		RING—Retaining ring for flywheel
RHM-026		COIL LINK—Rectangular coil link for assembling FM coils T2 and T5
RHM-027		COIL LINK—Rectengular coil link for assembling FM coil, T4
RII-001		POST—Mycalex posts for assembling all FM coils
RJC-001		CONTACT PIN—For speaker connection
RJJ-004		RECEPTACLE—Pre-amp. end pushbutton receptacle
RJP-002		PLUG—Six-prong pre-amp. power plug
RJP-003		PLUG—Phono power male plug
RJP-004		PLUG—Male phono plug from pre-amplifier
RJP-005		PLUG—Plug and cover for pushbutton cable
RJP-010		SOCKET—Phono input socket
RJP-011		PLUG—Shipping screw hole plug
RJS-003		SOCKET—Octal socket for V5, V6, and V7
RJS-012		PLATE—For monnting electrolytic
RJS-027		SOCKET—Dial light socket
RJS-030		SOCKET—Octal socket for V4, V8, and V9
RJS-044		TUBE SOCKET—Tube socket for V1, V2, and V3

Part No.	Symbol	Description
UNIVERSAL REPLACEMENT PARTS (Cont'd)		
URD-097	R9, 40	RESISTOR—100,000 ohms, ½ w., carbon
URD-099	R22, 23	RESISTOR—120,000 ohms, ½ w., carbon
URD-103	R6	RESISTOR—180,000 ohms, ½ w., carbon
URD-105	R16, 27, 41	RESISTOR—220,000 ohms, ½ w., carbon
URD-113	R32	RESISTOR—470,000 ohms, ½ w., carbon
URD-121	R37	RESISTOR—1.0 meg., ½ w., carbon
URD-125	R1, 4, 8	RESISTOR—1.5 meg., ½ w., carbon
URD-129	R14, 18	RESISTOR—2.2 meg., ½ w., carbon
URD-133	R47, 102, 103	RESISTOR—3.3 meg., ½ w., carbon
URD-145	R42	RESISTOR—10.0 meg., ½ w., carbon
URD-1079	R5	RESISTOR—18,000 ohms, ½ w., carbon
URD-1104	R105	RESISTOR—200,000 ohms, ½ w., carbon
URE-035	R31	RESISTOR—270 ohms, 1 w., carbon
URE-073	R3	RESISTOR—10,000 ohms, 1 w., carbon
URE-083	R15	RESISTOR—27,000 ohms, 1 w., carbon
URE-085	R17	RESISTOR—33,000 ohms, 1 w., carbon
SPECIALIZED REPLACEMENT PARTS		
RAB-021	L17	BEAM-A-SCOPE—Cabinet back and loop assembly
RAD-016		BRACKET—For band switch mounting at front
RAX-007	L12, 13, 14, 15, 16	COIL—Pushbutton coils mounted on bracket
RAX-008		BRACKET—Bracket and roller fork for elevator shaft
RCC-001	C40	CAPACITOR—.007 mfd., 600 v., paper
RCC-035	C32, 36	CAPACITOR—.001 mfd., 600 v., paper
RCC-040	C20	CAPACITOR—.01 mfd., 600 v., paper
RCC-041	C16, 19, 60, 62	CAPACITOR—.02 mfd., 600 v., paper
RCC-056	C51	CAPACITOR—.002 mfd., 1000 v., paper
RCE-029	C46A	CAPACITOR—30 mfd., 400 v., dry electrolytic
	C46B	CAPACITOR—30 mfd., 400 v., dry electrolytic
	C46C	CAPACITOR—15 mfd., 400 v., dry electrolytic
	C46D	CAPACITOR—20 mfd., 25 v., dry electrolytic
RCE-030	C105A	CAPACITOR—15 mfd., 350 v., dry electrolytic
	C105B	CAPACITOR—15 mfd., 350 v., dry electrolytic
RCW-001	C12	CAPACITOR—47 mfd., ceramic
RCW-013	C67, 88	CAPACITOR—10 mmf., ceramic
RCW-014	C25, 27, 44	CAPACITOR—15 mmf., ceramic
RCW-015	C87	CAPACITOR—3.3 mmf., ceramic
RCW-017	C92	CAPACITOR—1.5 mmf., ceramic
RCW-060	C71	CAPACITOR—5.6 mmf., ceramic
RCW-1028	C7, 11	CAPACITOR—100 mmf., ceramic
RCX-011	C80	CAPACITOR—5–80 mmf., pushbutton antenna trimmer
RJS-049		SOCKET—Phono power female socket
RJS-051		RECEPTACLE—3 pin receptacle for Beam-a-scope
RJX-009		PLUG—Plug attached to Beam-a-scope
RLA-009	T1	COIL—Broadcast band antenna coil
RLA-011	L6	COIL—FM antenna choke coil
	L19	COIL—FM oscillator cathode choke coil
	L20	COIL—SW loop shunt coil
RLA-016	T13	COIL—Pushbutton antenna coil
RLB-005	T2, 5	COILS—FM antenna coil and FM RF coil
RLB-006	T6	COIL—Broadcast band RF coil
RLB-007	L5	COIL—FM oscillator cathode choke coil
RLB-008	L3	COIL—SW band RF plate choke coil
RLB-009	L2	COIL—Broadcast bend plate choke dummy
RLB-010	L4	COIL—FM RF plate choke coil
RLC-013	T4	COIL—FM band oscillator coil
RLC-014	T3	COIL—Broadcast band oscillator coil
RLC-015	L1	COIL—SW oscillator loading coil
RLC-016	L8	COIL—Broadcast band oscillator shunt coil
RLC-017	L7	COIL—SW bend RF loading coil
RLF-003	L9	COIL—Filament choke coil
RLI-002	L11	CHOKE—Power line choke
RLP-004	L10	COIL—FM IF plate coil
RLP-006	L18	COIL—Oscillator plate choke coil
RMC-012		CLAMP—For holding cover on RF unit
RMC-013		CLIP—Support for clamp RMC-012
RMC-014		CLIP—For holding shielded phono cable
RMM-009		SPACER—Metal sleeve on hoist pulley shaft
RMM-010		VANE—Tuner vane for FM coils T2 and T5
RMM-011		VANE—Tuner vane for FM oscillator coil, T4
RMM-015		SUPPORT—Cabinet drop-lead support
RMR-002		ROLLER—Presses against hoist shaft
RMS-032		SPRING—Maintains pushbutton tension
RMS-039		WASHER—"C" washer on idler pulley
RMS-040		SPRING—Flat spring against hoist pulley shaft
RMS-041		SPRING—Wire spring against hoist pulley shaft
RMS-042		SPRING—Hoist cord tension spring
RMS-043		SCREW—Iron core adjusting screw
RMS-044		SPRING—Guide wire spring in elevator plate
RMS-072		SPRING—Type 1 dial cord spring (earlier production)
RMS-078		SPRING—Type 2 dial cord spring (later production)
RMU-016		SHAFT—Manual tuning sheft
RMW-016		PULLEY—Mam tuning drum
RMW-017		PULLEY—Small idler pulley
RMX-018		FLYWHEEL—Flywheel with setscrew
RMX-019		PULLEY—Hoist pulley and shaft
RMX-021		PLATE AND SHAFT—Elevator top plate and vertical shaft
RRC-014	R25	VOLUME CONTROL—2 meg. potentiometer tapped at 1 meg.
RRC-031	S2	SWITCH—Bass tone switch
RRW-010	R35, 36	RESISTOR—1150 and 5000 ohm, w.w.
RSP-002	S5	SWITCH—Pushbutton switch
RSW-023	S1	SWITCH—Band change switch
RSX-003	S3	SWITCH—Treble tone and power switch
RTD-001	T10	TRANSFORMER—Discriminator
RTL-017	T7	TRANSFORMER—1st I-F transformer
RTL-044	T8	TRANSFORMER—2nd I-F transformer
RTL-045	T9	TRANSFORMER—3rd I-F trensformer
RTO-012	T11	TRANSFORMER—Output trensformer
RTP-020	T12	TRANSFORMER—Power transformer
RWL-004		CORD—Power cord
RWX-004		WIRE—Guide wire for pointer.
RYC-003		STATION LIST—Call letter cards

MODEL 419

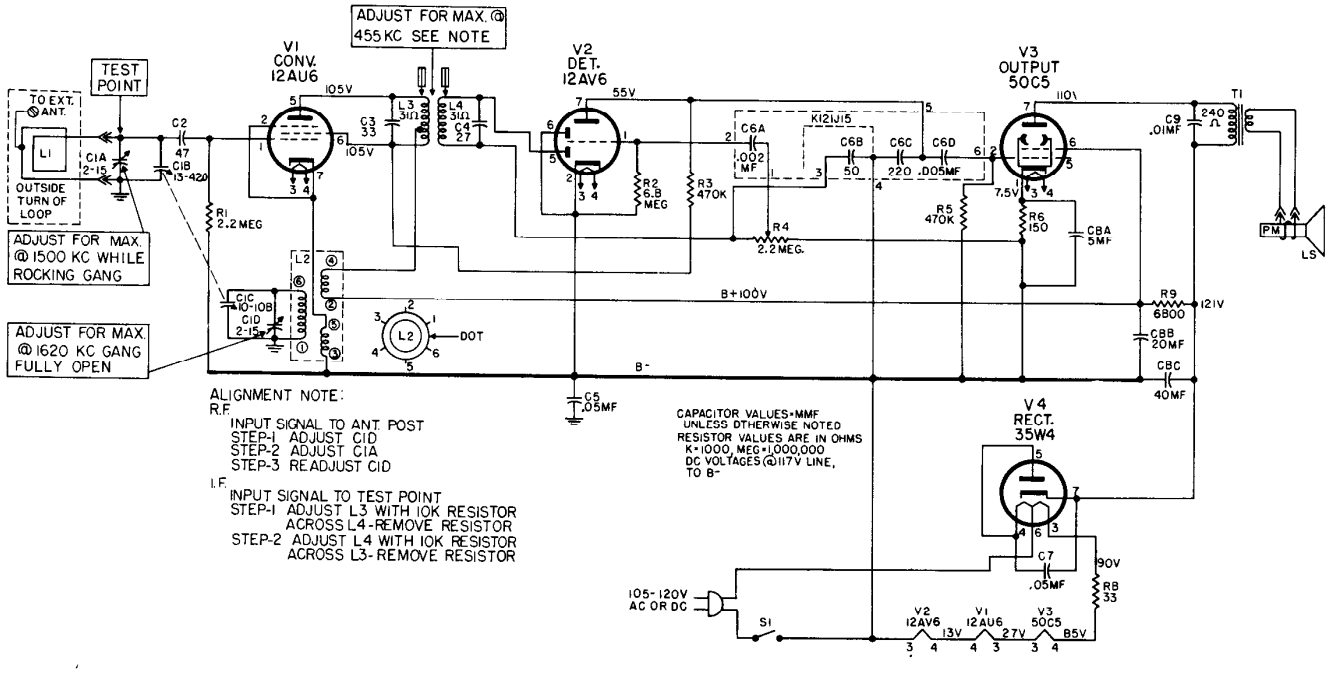
ADJUST FOR MAX. @ 455 KC SEE NOTE
TEST POINT
TO EXT. ANT.
L1
C1A 2-15
C1B 13-420
OUTSIDE TURN OF LOOP
ADJUST FOR MAX. @ 1500 KC WHILE ROCKING GANG
ADJUST FOR MAX @ 1620 KC GANG FULLY OPEN
C2 47
R1 2.2 MEG
V1 CONV. 12AU6
105V
C3 33
L3 3+12
L4 3+12
C4 27
L2
C1C 10-108
C1D 2-15
DOT
V2 DET. 12AV6
55V
R2 6.8 MEG
R3 470K
C5 .05MF
B-
B+100V
K12IJ15
C6A .002 MF
C6B 50
C6C 220
C6D .005MF
R4 2.2 MEG.
V3 OUTPUT 50C5
110V
7.5V
R5 470K
R6 150
C8A 5MF
C9 .01MF
240 Ω
T1
PM
LS
R9 6800
121V
C8B 20MF
C8C 40MF
V4 RECT. 35W4
C7 .05MF
90V
R8 33
105-120V AC OR DC
S1
V2 12AV6 13V
V1 12AU6 27V
V3 50C5 85V
ALIGNMENT NOTE:
R.F.
INPUT SIGNAL TO ANT. POST
STEP-1 ADJUST CID
STEP-2 ADJUST C1A
STEP-3 READJUST CID
I.F.
INPUT SIGNAL TO TEST POINT
STEP-1 ADJUST L3 WITH 10K RESISTOR ACROSS L4-REMOVE RESISTOR
STEP-2 ADJUST L4 WITH 10K RESISTOR ACROSS L3-REMOVE RESISTOR
CAPACITOR VALUES=MMF UNLESS OTHERWISE NOTED
RESISTOR VALUES ARE IN OHMS K=1000, MEG=1,000,000
DC VOLTAGES @117V LINE, TO B-

Cat. No.	Symbol	Description	Unit Price
		CAPACITORS	
RCE-158	C8A, B, C	5 mf., 25 v., 20-40 mf., 150 v., electrolytic	$2.25
RCT-068	C1A, B, C, D	Tuning	3.75
*RCW-3075	C2	47 mmf., ±20%, ceramic	.25
RCW-3091	C6A, B, C, D	.002 mf., 50 mmf., 220 mmf., .005 mf., ceramic couplate	.90
*UCC-040	C9	.01 mf., +40% −10%, 600 v., paper	.25
*UCC-045	C5, 7	.05 mf., +40% −10%, 600 v., paper	.30
*UCU-1014	C4	27 mmf., ±10%, 500 v., silver mica	.30
UCU-1016	C3	33 mmf., ±10%, 500 v., mica	.35
		RESISTORS	
RRC-214	R4, S1	2.2 megohms, composition, volume control and switch	1.55
*URD-019	R7	56 ohms, ±10%, ½ w., carbon	.13
*URD-029	R6	150 ohms, ±10%, ½ w., carbon	.13
*URD-057	R9	2200 ohms, ±10%, ½ w., carbon	.13
*URD-113	R3, 5	470 K, ±10%, ½ w., carbon	.13
*URD-129	R1	2.2 megohms, ±10%, ½ w., carbon.	.13
*URD-141	R2	6.8 megohms, ±10%, ½ w., carbon.	.13
*URF-013	R8	33 ohms, ±10%, 2 w., carbon	.25
		COILS AND TRANSFORMERS	
RLC-128	L2	COIL—Oscillator	1.30
RTL-149	L4	COIL—Detector I-F input, two connections	1.10
RTL-150	L3	COIL—Converter I-F output, tapped coil, three connections	1.55
RTO-137	T1	TRANSFORMER—Audio output.	2.00

Cat. No.	Description	Unit Price
	MISCELLANEOUS ELECTRICAL	
RHS-109	INSULATING SPACER—Black Textolite, in chassis tube holes	$0.20
RII-082	WAFER—Part of tube receptacle	.05
*RJC-027	CONNECTOR—Tube pin connector, part of tube receptacle	.03
RJC-028	CONNECTOR—Oscillator coil receptacle	.02
ROP-026	LOUDSPEAKER—4-inch PM	5.10
*RWL-009	POWER CORD—AC cord and plug	.70
	MISCELLANEOUS MECHANICAL	
RHC-008	CLIP—1-inch electrolytic capacitor mounting clip	.10
RHC-061	CLIP—Holds Textolite sub-chassis	.10
RHE-014	EYELET—Tube receptacle wafer mounting	.01
*RHI-017	GROMMET—Two-piece strain relief for power cord	.15
RHS-111	SHIELD POST—Tube pin shield mounts wafer of i-f tube receptacle	.03
RMS-272	COMPRESSION RING—For tuning knob	.05
	CABINET AND APPEARANCE ITEMS	
RAB-211	BACK AND LOOP—Antenna loop, L1, and cabinet back	1.60
RAU-378	CABINET—Dark brown, plastic	6.50
*RDK-295	KNOB—Volume control	.25
RDK-321	KNOB—Tuning control	.35

*Used on previous receivers

PRICES ARE SUGGESTED LIST PRICES AND SUBJECT TO CHANGE WITHOUT NOTICE

422, 423

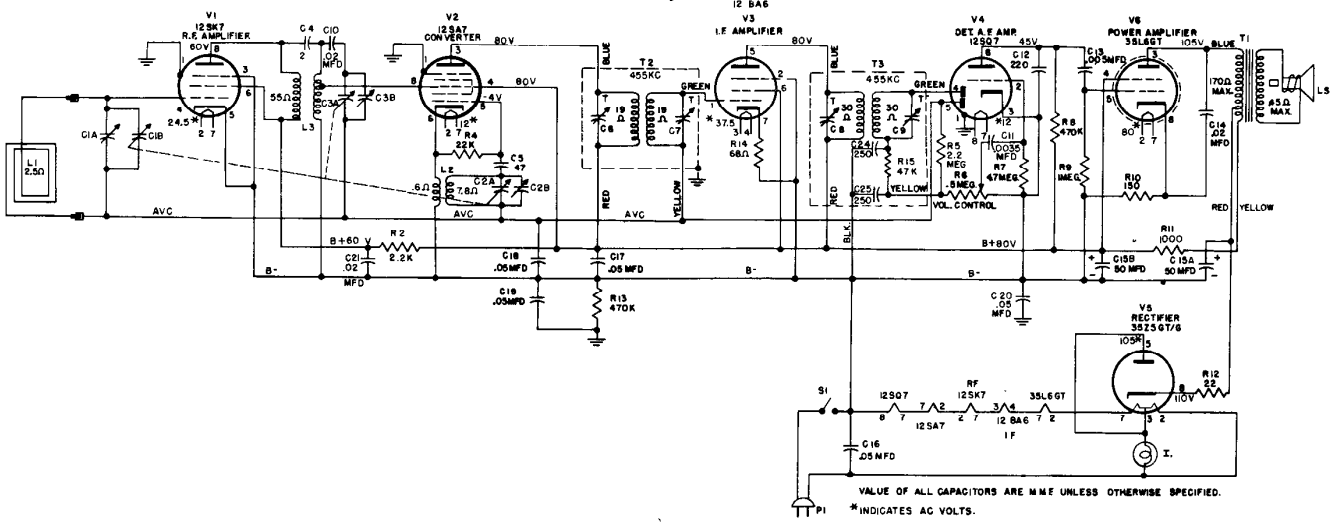

VALUE OF ALL CAPACITORS ARE M M F UNLESS OTHERWISE SPECIFIED.

*INDICATES AC VOLTS.

MODELS 422 AND 423 REPLACEMENT PARTS LIST

CAT. NO.	SYMBOL	DESCRIPTION	UNIT PRICE
CAPACITORS			
*RCE-050	C15A, B	50 mf., 150 v., 50 mf., 150 v.; dry electrolytic	$2.10
*RCN-039	C4	2 mmf., mica	.15
*RCT-059	C1A, B, C, C2, C3	Tuning capacitor with trimmers and drum	
*RCW-3036	C11, C12 C13	.0035 mf., 220 mmf., .005 mf. three section ceramic (see UCC-037, UCC-039, UCU-1036)	.80
*UCC-037	C11	.003 mf., 600 v., paper (alternate replacement for RCW-3036)	.25
*UCC-039	C13	.005 mf., 600 v., paper (alternate replacment for RCW-3036)	.30
*UCC-041	C14, C21	.02 mf., 600 v., paper	.25
*UCC-045	C16, C17, C18, C19, C20	.05 mf., 600 v., paper	.30
*UCU-020	C5	47 mmf., mica	.60
*UCU-1036	C10, C12	220 mmf., mica (alternate replacement for RCW-3036)	.30
RESISTORS & POTENTIOMETER			
*RRC-149	R6, S1	POTENTIOMETER — 500,000 ohms; volume control and switch S1	$1.60
*URD-009	R12	RESISTOR—22 ohms, ½ w., carbon	.13
*URD-021	R14	RESISTOR—68 ohms, ½ w., carbon	.13
*URD-029	R10	RESISTOR—150 ohms, ½ w., carbon	.13
*URD-057	R2	RESISTOR—2.2 K ohms, ½ w., carbon	.13
*URD-081	R4	RESISTOR—22,000 ohms, ½ w., carbon	.13
*URD-113	R8, R13	RESISTOR—470,000 ohms, ½ w., carbon	.13
*URD-121	R9	RESISTOR—1 meg., ½ w., carbon	.13
*URD-129	R5	RESISTOR—2.2 meg., ½ w., carbon	.13
*URD-137	R7	RESISTOR—4.7 meg., ½ w., carbon	.13
*URF-049	R11	RESISTOR—1000 ohms, 2 w., carbon	.25
COILS & TRANSFORMERS			
*RLC-105	L2	COIL—Oscillator	$0.75
*RLI-125	L3	COIL—R-F	1.25
*RTL-115	T2	TRANSF.—First I-F	
*RTL-116	T3	TRANSF.—Second I-F	
*RTO-083	T1	TRANSF.—Audio output	1.80
MISCELLANEOUS ELECTRICAL			
*RJS-003		SOCKET—Tube socket	$0.20
*RJS-141		SOCKET—Tube, for 12BA6	$0.20
*ROP-020		SPEAKER—PM, 5¼"	
RWL-009		POWER CORD—A-C power cord and plug, Model 422	.70
*RWL-016		POWER CORD—Model 423	.75
RWX-043		ASSEMBLY—Pilot light socket	
MISCELLANEOUS MECHANICAL			
*RDC-032		CORD—Bulk dial cord, 25 yd.	$2.50
RDP-064		POINTER—Dial scale	
RHC-018		CLIP—Loop clip	.05
*RHC-024		CLIP—Capacitor clip	.10
*RHC-038		CLIP—For R-F coil	.02
*RHG-006		GROMMET—On tuning shaft	.05
*RHG-018		GROMMET—Cushion mounting for tuning capacitor	.05
*RHG-032		GROMMET—Speaker lead ins.	.02
*RHI-017		STRAIN RELIEF	.15
*RHJ-007		SPACER—Spacer bushing for mounting tuning capacitor	.05
*RHR-010		RIVET—For terminal board	.02
*RHR-013		RIVET—For output transf.	.01
*RHS-061		SCREW—For loop back mounting	.02
*RHS-062		SCREW—For chassis mounting	.05
RHS-063		SCREW—For tuning capacitor mounting	.02
*RJC-004		CONNECTOR—Antenna loop lead connecting clip	.02
*RMC-002		CLIP—For oscil. coil	.05
*RMM-035		SHIELD—Tube shield	
*RMM-200		HOOD—Pilot light hood	
*RMS-118		SPRING — Dial cord tension spring	.10
*RMW-070		PULLEY—Idler pulley	.05
RMX-196		SHAFT AND BUSHING—Tuning shaft and mounting bushing, late prod.	
RMX-200		DRIVE SHAFT AND BUSHING ASSEMBLY, early prod.	
CABINET & CABINET PARTS			
*RAB-142	L1	CABINET BACK—With antenna loop	$1.60
*RAG-038		ASSEMBLY—Grill cloth assembly, Model 422	.35
*RAG-039		ASSEMBLY—Grill cloth assembly, Model 423	.35
RAU-353		CABINET—Mahogany cabinet (plastic) for Model 422	11.50
RAU-354		CABINET—Ivory cabinet (plastic), for Model 423	11.50
RDE-124		ESCUTCHEON—Dial esc.	
RDS-110		SCALE—Dial scale	
*RDK-181		KNOB—For Model 422	.15
*RDK-229		KNOB—For Model 423	.15

PRICES ARE SUGGESTED LIST PRICES AND SUBJECT TO CHANGE WITHOUT NOTICE.

* Parts used on previous models.

424, 425

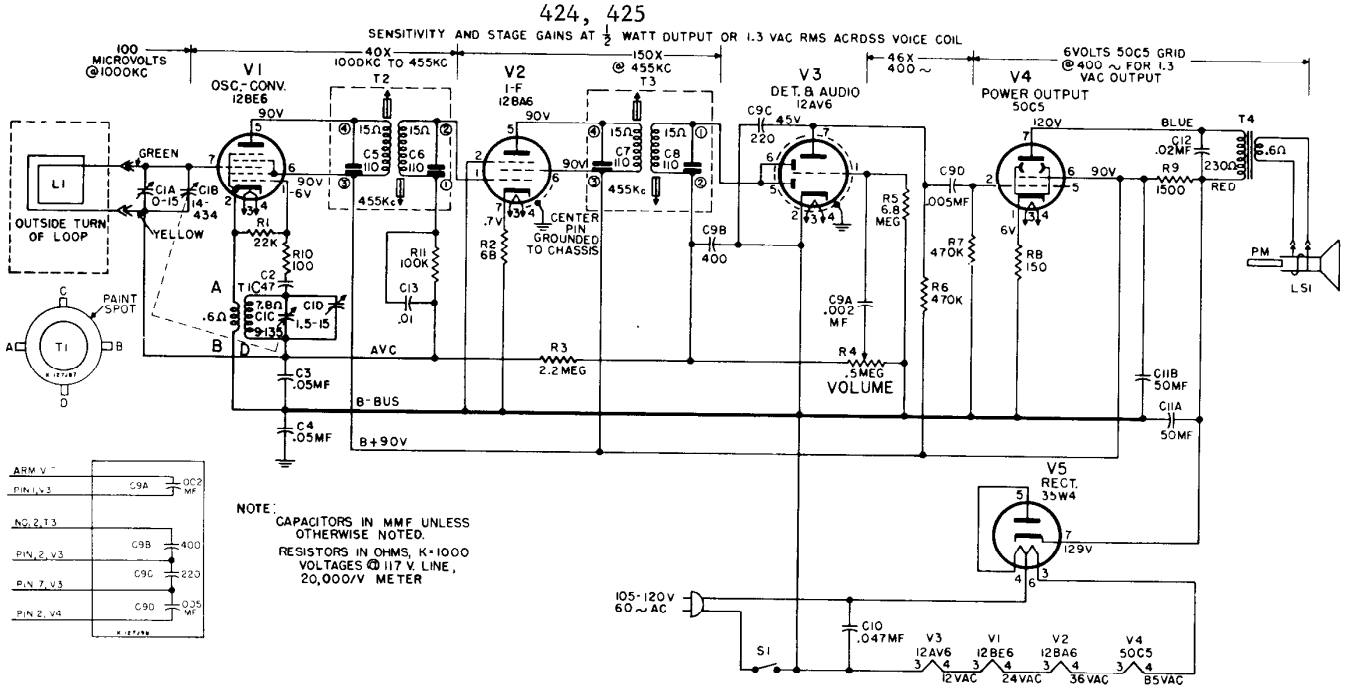
SENSITIVITY AND STAGE GAINS AT ½ WATT OUTPUT OR 1.3 VAC RMS ACROSS VOICE COIL
100 MICROVOLTS @1000KC
40X 1000KC TO 455KC
150X @ 455KC
46X 400 ~
6VOLTS 50C5 GRID @400 ~ FOR 1.3 VAC OUTPUT
V1 OSC.-CONV. 12BE6
V2 I-F 12BA6
V3 DET. & AUDIO 12AV6
V4 POWER OUTPUT 50C5
V5 RECT. 35W4
T1
T2
T3
T4
L1
OUTSIDE TURN OF LOOP
GREEN
YELLOW
PAINT SPOT
C1A 0-15
C1B 14-434
C1C 9-135
C2 .047
C3 .05MF
C4 .05MF
C5 110
C6 110
C7 110
C8 110
C9A .002 MF
C9B 400
C9C 220
C9D .005MF
C10 .047MF
C11A 50MF
C11B 50MF
C12 .02MF
R1 22K
R2 68
R3 2.2 MEG
R4 .5MEG VOLUME
R5 6.8 MEG
R6 470K
R7 470K
R9 1500
R10 100
R11 100K
RB 150
CENTER PIN GROUNDED TO CHASSIS
AVC
B-BUS
B+90V
PM
LS1
S1
105-120V 60 ~ AC
12VAC
24VAC
36VAC
85VAC
NOTE: CAPACITORS IN MMF UNLESS OTHERWISE NOTED.
RESISTORS IN OHMS, K=1000
VOLTAGES @ 117 V. LINE, 20,000/V METER

REPLACEMENT PARTS LIST — MODELS 424, 425

CAPACITORS

CAT. NO.	SYMBOL	DESCRIPTION	UNIT PRICE
*RCE-160	C11A, B	50-50 mf., 150 V., cardboard tubular electrolytic	$1.85
RCN-050	C12	.02 mf., 600 V., paper, molded	.35
*RCN-053	C10	.047 mf., paper, molded	.35
RCT-066	C1A, B, C, D	Tuning, two-gang	4.75
*RCW-3048	C9A, B, C, D	.002 mf., 400 mmf., 220 mmf., .005 mf., ceramic couplate	.90
*RCW-3075	C2	47 mmf., ±20%, N2200, ceramic	.25
*UCC-040	C13	.01 mf., 600 V., paper	.25
*UCC-045	C3, 4	.05 mf., 600 V., paper	.30

RESISTORS

RRC-205	R4, S1	500K ohms, volume control and switch	$1.60
*URD-021	R2	68 ohms, ±10%, ½ W., carbon	.13
*URD-025	R10	100 ohms, ±10%, ½ W., carbon	.13
*URD-029	R8	150 ohms, ±10%, ½ W., carbon	.13
*URD-081	R1	22K ohms, ±10%, ½ W., carbon	.13
URD-097	R11	100K ohms, ±10%, ½ W., carbon	.13
*URD-113	R6, 7	470K ohms, ±10%, ½ W., carbon	.13
*URD-129	R3	2.2 megohms, ±10%, ½ W., carbon	.13
*URD-141	R5	6.8 megohms, ½ W., carbon	.13
*URF-053	R9	1500 ohms, ±10%, 2 W., carbon	.25

COIL & TRANSFORMERS

*RLC-122	T1	COIL—Oscillator coil	$1.00
*RTL-143	T2, 3	TRANSFORMER—I-F	1.80
*RTO-128	T4	TRANSFORMER—Audio output	2.10

* Used on previous receivers

PRICES ARE SUGGESTED LIST PRICES AND SUBJECT TO CHANGE WITHOUT NOTICE

MISCELLANEOUS ELECTRICAL

CAT. NO.	DESCRIPTION	UNIT PRICE
RII-081	WAFER—Part of i-f transformer receptacle	$0.05
RII-082	WAFER—Part of tube receptacle	.05
*RJC-004	CONNECTOR—Loudspeaker connector, female	.02
RJC-027	CONNECTOR—Tube pin connector, part of tube receptacle	.03
RJC-028	CONNECTOR—Oscillator coil receptacle	.02
RJC-029	WIRE CONNECTOR—Push-on type terminal for i-f connecting lead	.05
*RJC-030	I-F WAFER CONNECTOR	.02
RJC-031	I-F WAFER CONNECTOR	.02
*RWL-025	CORD—Power cord and plug, brown, for Model 424	.75
*RWL-026	CORD—Power cord and plug, ivory, for Model 425	.75
*S403D7	LOUDSPEAKER—4-inch PM	4.30

MISCELLANEOUS MECHANICAL

*RHC-024	CLIP—⅛ inch electrolytic mounting clip	$0.10
RHC-061	CLIP—Holds Textolite sub-chassis	.10
RHE-014	EYELET—Tube receptacle mounting	.01
RHE-016	EYELET—I-F receptacle wafer mounting	.01
*RHG-018	GROMMET—Rubber grommet for tuning capacitor shock mounting	.05
*RHH-004	FASTENER—Snap fastener, for mounting cabinet back	.02
*RHI-017	STRAIN RELIEF—Two-piece strain relief for power cord entrance in chassis	.15
*RHJ-007	SPACER—In grommet for shock mounting tuning capacitor	.05
*RHS-109	SHIELD -Insulating spacer, black textolite, in chassis tube holes	.20
RHS-110	SHIELD—Tube shield for 12AV6 tube	.15
RMS-272	RING—Compression ring used with tuning control knob	.05

CABINETS & APPEARANCE ITEMS

RAB-205	CABINET BACK—Back and antenna loop	$1.35
*RAG-033	GRILLE CLOTH—Cabinet grille cloth, dark maroon, for Model 424	.30
*RAG-034	GRILLE CLOTH—Cabinet grille cloth, ivory, for Model 425	.30
RAU-376	CABINET—Mahogany, with dial scale, Model 424	6.15
RAU-377	CABINET—Ivory, with dial scale, Model 425	6.75
RDK-295	KNOB—Volume-Off-On control, ivory	.25
RDK-306	KNOB—Tuning, ivory	.45

MODELS 427, 428, 429

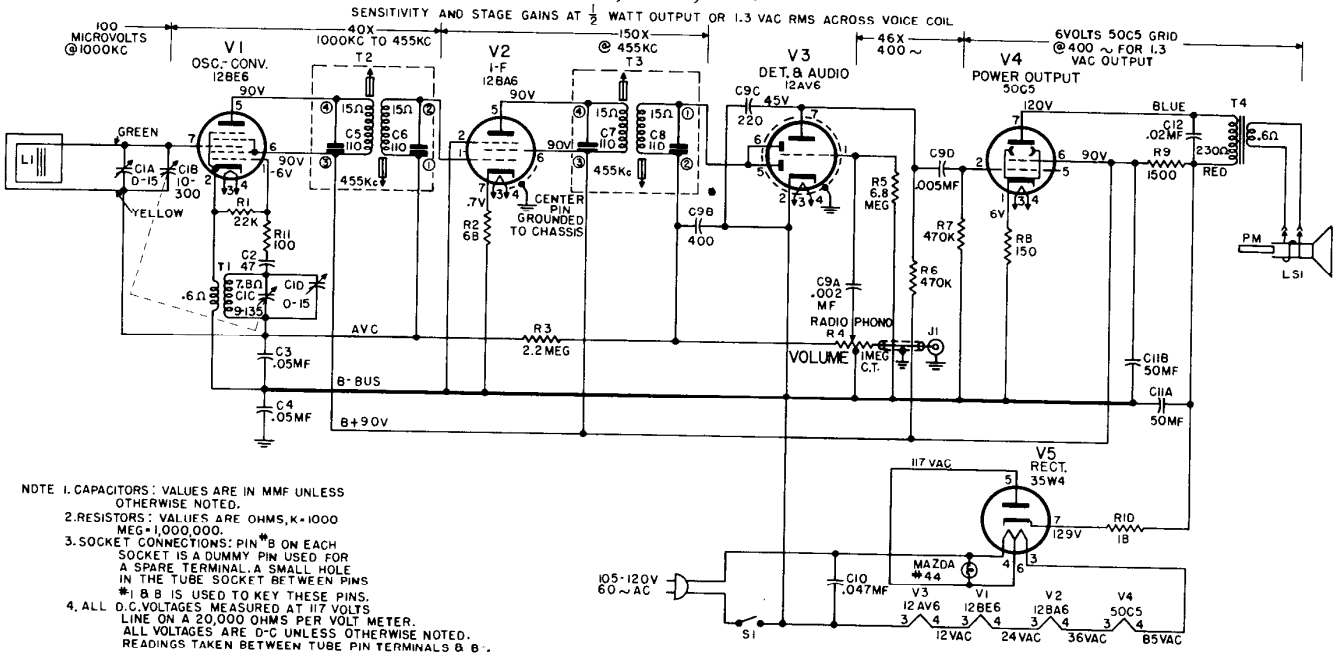

NOTE 1. CAPACITORS: VALUES ARE IN MMF UNLESS OTHERWISE NOTED.
2. RESISTORS: VALUES ARE OHMS, K=1000 MEG=1,000,000.
3. SOCKET CONNECTIONS: PIN #8 ON EACH SOCKET IS A DUMMY PIN USED FOR A SPARE TERMINAL. A SMALL HOLE IN THE TUBE SOCKET BETWEEN PINS #1 & 8 IS USED TO KEY THESE PINS.
4. ALL D.C. VOLTAGES MEASURED AT 117 VOLTS LINE ON A 20,000 OHMS PER VOLT METER. ALL VOLTAGES ARE D-C UNLESS OTHERWISE NOTED. READINGS TAKEN BETWEEN TUBE PIN TERMINALS & B-.

REPLACEMENT PARTS LIST—MODELS 427, 428, 429

Cat. No.	Symbol	Description	Unit Price
CAPACITORS			
*RCE-160	C11A, B	50-50 mf., 150 v., electrolyte.	$2.10
*RCN-050	C12	.022 mf., 600 v., paper molded	.35
*RCN-053	C10	.047 mf., ±20%, 600 v.,	.35
RCT-070	C1A, B, C, D	Tuning capacitor, two-gang	4.00
*RCW-3048	C9A, B, C, D	.002 mf., 400 mmf., 220 mmf., .0005 mf., ceramic couplate	.90
*RCW-3075	C2	47 mmf., ±20%, N2200, ceramic	.25
*UCC-045	C3, 4	.05 mf., 600 v., paper	.30
RESISTORS (CARBON TOLERANCE ± 10%)			
*URD-007	R10	18 ohms, ½ w..	.13
*URD-021	R2	68 ohms, ½ w.	.13
*URD-025	R11	100 ohms, ½ w.	.13
*URD-029	R8	150 ohms, ½ w.	.13
*URD-081	R1	22,000 ohms, ½ w.	.13
*URD-113	R6, 7	470,000 ohms, ½ w.	.13
*URD-129	R3	2.2 megohms, ½ w.	.13
*URD-141	R5	6.8 megohms, ½ w.	.13
*URF-053	R9	1500 ohms, 2 w.	.25
POTENTIOMETER			
RRC-234	R4, S1	VOLUME CONTROL & SWITCH, one megohm	1.85
COILS & TRANSFORMERS			
*RLC-122	T1	COIL—Oscillator	1.00
*RLL-055	L1	ANTENNA—Ferrite core, 300 uh inductance, 7 in. lg., ¼ in. dia.	1.50
*RTL-143	T2, 3	TRANSFORMER—I-F.	1.80
*RTO-128	T4	TRANSFORMER—Output	1.90

Cat. No.	Description	Unit Price
MISCELLANEOUS ELECTRICAL		
*RII-081	WAFER—Part of I-F transformer receptacle 15/16 in. x ⅛ in.	.05
*RII-082	WAFER—Part of tube receptacle 1 1/32 in. dia.	.05
RII-088	BOARD—Sub-chassis, bare, no hardware or parts	.60
*RJC-004	TERMINAL—Female speaker connector on audio output leads	.02
RJC-027	CONTACT—Dip solder contact, includes tube pin clip for tube receptacles	.03
*RJC-028	CONNECTOR—Dip solder terminal only, used on RLC-122, and as common connector	.02
*RJC-030	CLIP—Dip solder contact and clip for I-F transformer, spring brass, connects pin 6—12BE6, pin 6—12BA6 and pin 6—12AV6	.02
*RJC-031	I-F CLIP—Dip solder contact and clip for I-F transformers, spring brass. Connects pin 5—12BE6 pins 1 and 5—12BA6.	$0.02
*RJS-182	CONNECTOR—Phono, for ⅛ in. dia. pin.	.15
RJX-031	PILOT LIGHT ASS'Y—Includes bayonet type socket for Mazda No. 44 pilot lamp with clip-on bracket	.40
ROP-027	SPEAKER—4-inch, 3.2 ohms, yoke rotated 90°	4.95
*RWL-009	CORD—Power cord and plug, brown, 6 ft. long, Models 427-429	.70
*RWL-016	CORD—Power cord and plug, ivory, 6 ft. long, Model 428	.75
MISCELLANEOUS MECHANICAL		
RDC-032	DIAL CORD—Bulk quantity 25 yds..	2.50
*RHC-024	CLIP—½ in., mounts C11A, B	.10
*RHC-061	CLIP—Holds Textolite sub-chassis	.10
*RHE-014	EYELET—Tube receptacle wafer mounting	.01
*RHE-016	EYELET—I-F receptacle wafer mounting	.01
*RHG-018	GROMMET—For tuning capacitor shock mounting	.05
*RHI-017	GROMMET—Two-piece strain relief for power cord.	.15
*RHJ-005	SPACER—Metal, for tuning capacitor shock mounting	.05
*RHM-073	CLIP—Idler pulley retainer on volume control	.02
*RHS-079	SHIELD—Flexible, 2½ in. long, ⅛ in. dia.	.05
*RHS-108	LIGHT SHIELD—Dial light shield, black fiber tubing, 13/16 in. long, 7/16 in. dia.	.05
*RHS-109	INSULATING SPACER—Black Textolite in chassis tube holes.	.20
*RHS-110	SHIELD—Miniature tube shield, metal, 1¾ in. long for 12AV6	.15
*RHS-111	SHIELD POST—Tube pin shield, mounts wafer of tube receptacles spring brass, 9/16 in. long, ¼ in. dia.	.03
*RII-084	ANTENNA COVER—Polystyrene, molded brown, 10¼ in. long, ¾ in. wide	.60
RII-090	SHIELD—Heat shield, fiber wafer, used on 50C5 tube socket	.05
*RMS-118	SPRING—Dial cord tension spring	.10
*RMW-070	IDLER PULLEY—on volume control shaft.	.05
*RMX-195	TUNING SHAFT & BUSHING ASSEMBLY	.55
CABINETS & APPEARANCE ITEMS		
RAB-221	BACK—Cabinet, back only, masonite 12¾ in. x 4½ in.	.25
*RAG-033	GRILLE CLOTH—Cabinet grille cloth dark maroon, includes chipboard mounting ring 3 47/64 in. dia., Models 427, 429	.30
*RAG-034	GRILLE CLOTH—Cabinet grille cloth ivory, includes chipboard mounting ring 3 47/64 in. dia. Model 428	.30
RAU-385	CABINET—Plastic mahogany, for Model 427	8.50
RAU-386	CABINET—Plastic, ivory, for Model 428	8.50
RAU-387	CABINET—Plastic, red, for Model 429	8.50
*RDK-294	KNOB—Tuning, fawn color, Rich-Lo brass insert	.20
RDK-354	KNOB—Phono-Off-Radio (Volume) fawn color, Rich-Lo brass insert, white lettering.	.30
RDP-077	DIAL POINTER—Polished Rich-Lo brass with red plastic flag, 1 27/32 in. long	.45
RDW-072	DIAL SCALE & WINDOW—Plastic, gold trim, with dial scale. 7⅛ in. x 3 11/64 in.	2.25
RYN-017	MEDALLION—Dial beam, adhesive-metalized styrene, backgronnd gold	.30
RDG-007	Scale Backplate	

MODELS 431, 432, 431A 432A

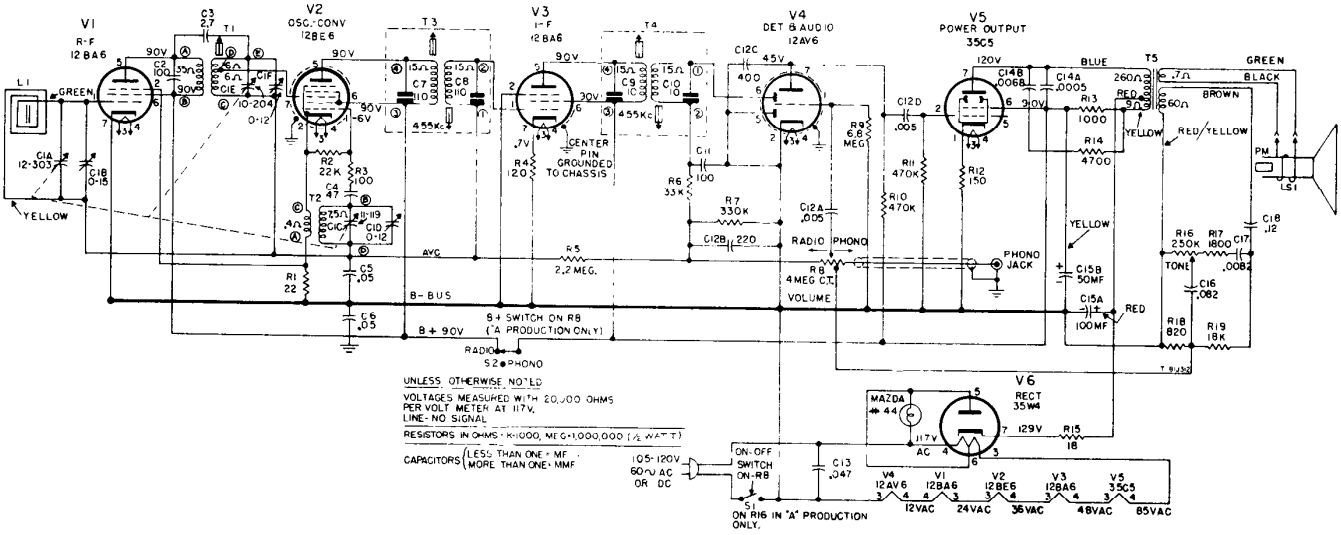

REPLACEMENT PARTS LIST—431 SERIES

CAT. NO.	SYMBOL	DESCRIPTION	UNIT PRICE
CAPACITORS			
RCC-126	C18	.047 mf., ±20%, 200 v paper. Models 431B-C, 432B-C, 433B-C	$0.35
RCC-127	C17	.022 mf., ±20%, 200 v, paper. Models 431B-C, 432B-C, 433B-C	.35
RCC-128	C16	.1 mf., ±20%, 200 v, paper. Models 431B-C, 432B-C, 433B-C	.40
RCC-129	C20, 24	.02 mf., 400 v, paper. Models 431B-C, 432B-C, 433B-C	.35
RCE-166	C15A, B	100–50 mf., 150 v, electro	2.60
RCN-053	C13	.047 mf., 600 v, ±20% paper, molded	.35
RCN-054	C17	.0082 mf., ±10%, 400 v, paper, molded. Models 431-A, 432-A	.40
RCN-078	C18	.12 mf., ±10%, 200 v, molded Models 431-A, 432-A	.50
RCN-079	C16	.082 mf., 10%, 200 v, molded. Models 431-A, 432-A	.45
RCT-074	C1A, B, C	TUNING—Three gang with drum & dial beam bracket	5.25
RCT-082	C1A, B, C	TUNING—Three gang with drum & bracket "C" series sets only	5.25
RCW-3039	C3	2.7 mmf., ±20%, ceramic	.25
RCW-3075	C4	47 mmf., ±20%, ceramic	.25
RCW-3079	C2, 11	100 mmf., ±20%, ceramic	.25
RCW-3104	C14A, B	.0068 mf., & .0005 mf., ceramic	.50
RCW-3105	C12A, B, C, D	Ceramic Bullplate—Section 1, .005 mf., +100 −0%; Section 2, 220 mmf., & 400 mmf., +70 −30%; Section 3, .005 mf., ±100%. Models 431-A, 432-A	.90
RCW-3137	C21–22	220 mmf., disk ceramic, Models 431B-C, 432B-C, 433B-C	.25
UCC-045	C5, 6	.05 mfd., 600 v, paper	.30
RESISTORS			
RRC-241	R8, S1	POTENTIOMETER—Volume control and switch, 2-way, 2 meg. Models 431, 432	1.95
RRC-242	R16	POTENTIOMETER—Tone control 250,000 ohms. Models 431, 432	1.10
RRC-254	R8, S2	POTENTIOMETER—Volume control, 4 meg. center tapped with B+ switch for R-F and oscillator. Models 431A-B-C, 432A-B-C, 433-B-C	1.60
RRC-255	R16, S1	POTENTIOMETER—Tone control 250,000 ohms, with on-off switch. Models 431A-B, 432A-B, 433B	1.60
RRC-309	R16, S1	POTENTIOMETER—Tone control 250,000 ohms with push-pull on-off switch. Models 431C, 432C, 433C	1.70
URD-007	R15	18 ohms, ±10%, ½ w. carbon	.13
URD-009	R1	22 ohms, ±10%, ½ w. carbon	.13
URD-025	R3	100 ohms, ±10%, ½ w. carbon	.13
URD-027	R4	120 ohms, ±10%, ½ w. carbon	.13
URD-029	R12	150 ohms, ±10%, ½ w. carbon	.13
URD-047	R18	820 ohms, ±10%, ½ w. carbon	.13
URD-055	R17	1800 ohms, ±10%, ½ w. carbon	.13
URD-065	R14	4700 ohms, ±10%, ½ w. carbon	.13
URD-077	R19	15,000 ohms, ±10%, ½ w. carbon Models 431B-C, 432B-C, 433B-C	.13
URD-079	R19	18,000 ohms, ±10%, ½ w. carbon Models 431-A, 432-A	.13
URD-081	R2	22,000 ohms, ±10%, ½ w. carbon	.13
URD-085	R6	33,000 ohms, ±10%, ½ w. carbon	.13
URD-109	R7	330,000 ohms, ±10%, ½ w. carbon	.13
URD-113	R10, 11	470,000 ohms, ±10%, ½ w. carbon	.13
URD-125	R20	1.5 meg., ±10%, ½ w. carbon	.13
URD-129	R5	2.2 meg. ±10%, ½ w. carbon	.13
URD-141	R9	6.8 meg. ±10%, ½ w. carbon	.13
URF-049	R13	1000 ohms, ±10%, 2 w. carbon	.25
COILS AND TRANSFORMERS			
*RLB-034	T1	COIL—R-f coil	1.35
RLC-126	T2	COIL—Oscillator coil	.90
*RLL-055	L1	LOOP—Antenna, wound on ferrite rod, 7 x ½ in. Models 431A, 432-A.	1.50
RLL-060	L1*	LOOP—Antenna, wound on ferrite rod, 7 x ½ in. used with loop shield RHS-126. Models 431B-C, 432B-C, 433B-C	1.20
*RTL-143	T3, 4	TRANSFORMER—I-f transformer	1.80
RTO-145	T5	TRANSFORMER — Audio output transformer	3.40
MISCELLANEOUS ELECTRICAL			
*RJC-004		CONNECTOR—Small female, on audio output leads	.02
*RJC-027		CONTACT—Dip solder contact, incl. tube pin clip for tube receptacle	.03
*RJC-028		CONNECTOR—Dip solder terminal used on RLC-126	$0.02
*RJC-030		I-F CLIP—Dip solder contact and clip for i-f transformers, spring brass, connects pin 6—12BE6, pin 6—12BA6 and pin 6—12AV6	.02
*RJC-031		I-F CLIP—Dip solder contact and clip for i-f transformers, spring brass, connects pin 5—12BE6, pin 1—12BA6 and pin 5—12BA6	.02
*RJS-182		PHONO JACK—Phono input socket, .687 mounting center	.15
*RJX-031		PILOT LIGHT—Pilot light socket and bracket	.40
*RSS-009		SWITCH—Local distance switch	.30
*RWL-009		CORD—Power cord and plug, brown, 6 ft. long	.70
*RWL-016		CORD—Power cord and plug, ivory, 6 ft. long	.75
RWX-055		PILOT LAMP SOCKET ASS'Y—"C" sets only	.70
*S625D7		LOUDSPEAKER—6¼ in. PM, 4 w., 3.2 ohm voice coil	6.35
CABINETS AND APPEARANCE ITEMS			
RAB-226		CABINET BACK—Masonite 13⅛ x 4⅛ in. Models 431-A, 432-A	8.25
RAB-241		CABINET BACK—Masonite 13⅛ x 4⅛ in. Models 431B-C, 432B-C, 433B-C, used with loop shield RHS-126	.30
RAG-058		GRILLE—Gold plastic grille, fits in front of speaker	1.85
RAU-392		CABINET—Dark brown, plastic, Models 431-A-B-C	8.00
RAU-393		CABINET—Ivory, plastic, Models 432-A-B-C	8.00
RAU-413		CABINET—Gray, plastic, Models 433B-C	8.50
RDF-013		WASHER—Brown felt washer for 431C	.05
RDF-014		WASHER—Ivory felt washer for 432C	.05
RDF-015		WASHER—Gray felt washer for 433C	.05
RDG-006		DIAL BACKPLATE ASS'Y—Plastic (red and gold)	1.30
RDK-294		KNOB—Tone and tuning knob, fawn	.20
RDK-295		KNOB—Tone and tuning knob, ivory. Models 433B-C	.20
RDK-315		KNOB—Volume, radio-phono, with white dot, fawn. Models 431-A-B-C, 432-A-B-C	.30
RDK-316		KNOB—Volume, radio-phono, with white dot, ivory. Models 433B-C	.30
RDP-079		POINTER—Dial pointer. Fits on ⅛ in. shaft	.50
RDW-073		WINDOW—Dial window with white scale, plastic. Model 431	.65
RDW-075		WINDOW—Dial window with brown scale, plastic. Model 432	.65
RDW-081		WINDOW—Dial window with white scale, plastic. Models 431A-B-C, 433B-C	.70
RDW-082		WINDOW—Dial window with brown scale. Models 432A-B-C	.70
RII-084		COVER—Plastic loop cover 10¼ x ⅞ in.	.60
RYN-019		MEDALLION	.35
MISCELLANEOUS MECHANICAL			
*RDC-032		DIAL CORD—Drive cord .28 in. dia. Newton Line Co. NF-28 or equiv. 25 yds.	2.50
*RHC-024		CLIP—⅛ in. electro. mtg. clip	.10
*RHC-061		CLIP—Holds textolite sub-chassis	.10
*RHE-014		EYELET—Tube receptacle wafer mtg.	.01
*RHE-016		EYELET—T-f trans. wafer mtg.	.01
*RHI-017		STRAIN RELIEF—Two-piece strain relief for power cord	.15
*RHJ-005		SPACER—Spacer bushing and sleeve for mounting tuning cap. .230 O.D. x .168 I.D.	.02
*RHS-041		SCREW—No. 6 x ⅜ in. long for loudspeaker and grille mtg.	.02
*RHS-108		SHIELD—Pilot light shield	.05
*RHS-109		SPACER—Black textolite, used in chassis tube holes	.20
*RHS-110		SHIELD—Tube shield, metal, 1¾ in. long for 12AV6 and 12BE6	.15
*RHS-118		EYELET PIN—Eyelet and soldering point used to mount 1st i-f socket wafer	.05
RHS-126		LOOP SHIELD—Electro. shield over ferrite antenna rod RLL-060. Models 431B-C, 432B-C, 433B-C	.50
*RII-081		WAFER—Part of i-f transformer receptacle ⅜ x ¼ in.	.05
*RII-082		WAFER—Part of tube receptacle 1⅛ in. dia.	.05
*RII-090		HEAT SHIELD—1 x 1 in. asbestos base phenolic shield between chassis tube hole spacer, RHS-109, and textolite sub-chassis used at 35W4 and 35C5 tubes	.05
RII-091		BOARD—Sub-chassis, bare, no hardware or parts	.60
*RMS-118		SPRING—Dial cord tension spring	.10
*RMW-070		PULLEY—½ in. idler pulley, fits on ¼ in. volume control shaft	.05
RMX-258		SHAFT—Drive shaft and bushing assembly	.50

SCHEMATIC DIAGRAM 431B, 431C, 432B, 432C, 433B, 433C

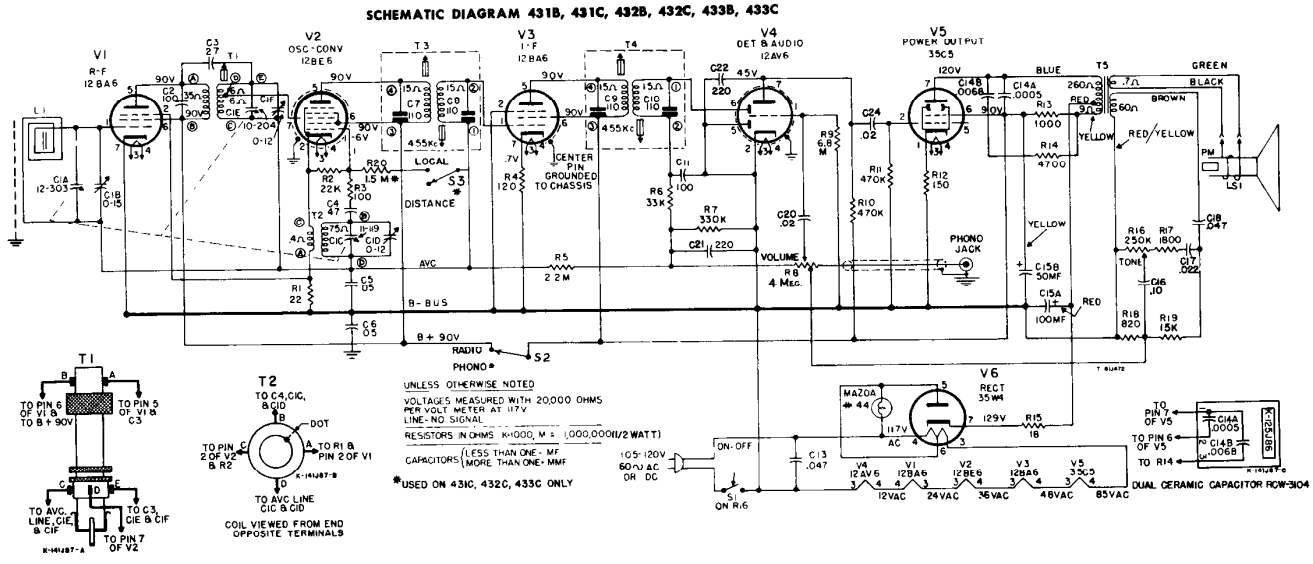

REPLACEMENT PARTS LIST—431 SERIES

CAT. NO.	SYMBOL	DESCRIPTION	UNIT PRICE
CAPACITORS			
RCC-126	C18	.047 mf., ±20%, 200 v paper. Models 431B-C, 432B-C, 433B-C.	$0.35
RCC-127	C17	.022 mf., ±20%, 200 v, paper. Models 431B-C, 432B-C, 433B-C.	.35
RCC-128	C16	.1 mf., ±20%, 200 v, paper. Models 431B-C, 432B-C, 433B-C.	.40
RCC-129	C20, 24	.02 mf., 400 v, paper. Models 431B-C, 432B-C, 433B-C.	.35
RCE-166	C15A, B	100–50 mf., 150 v, electro.	2.60
RCN-053	C13	.047 mf., 600 v, ±20% paper, molded.	.35
RCN-054	C17	.0082 mf., ±10%, 400 v, paper, molded. Models 431-A, 432-A.	.40
RCN-078	C18	.12 mf., ±10%, 200 v, molded Models 431-A, 432-A.	.50
RCN-079	C16	.082 mf., 10%, 200 v, molded. Models 431-A, 432-A.	.45
RCT-074	C1A, B, C	TUNING—Three gang with drum & dial beam bracket.	5.25
RCT-082	C1A, B, C	TUNING—Three gang with drum & bracket "C" series sets only.	5.25
RCW-3039	C3	2.7 mmf., ±20%, ceramic.	.25
RCW-3075	C4	47 mmf., ±20%, ceramic.	.25
RCW-3079	C2, 11	100 mmf., ±20%, ceramic.	.25
RCW-3104	C14A, B	.0068 mf., & .0005 mf., ceramic	.50
RCW-3105	C12A, B, C, D	Ceramic Bullplate—Section 1, .005 mf., +100 −0%; Section 2, 220 mmf., & 400 mmf., +70 −30%; Section 3, .005 mf., ±100%. Models 431-A, 432-A.	.90
RCW-3137	C21–22	220 mmf., disk ceramic, Models 431B-C, 432B-C, 433B-C	.25
UCC-045	C5, 6	.05 mfd., 600 v, paper.	.30
RESISTORS			
RRC-241	R8, S1	POTENTIOMETER—Volume control and switch, 2-way, 2 meg. Models 431, 432.	1.95
RRC-242	R16	POTENTIOMETER—Tone control 250,000 ohms. Models 431, 432	1.10
RRC-254	R8, S2	POTENTIOMETER—Volume control, 4 meg. center tapped with B+ switch for R-F and oscillator. Models 431A-B-C, 432A-B-C, 433-B-C.	1.60
RRC-255	R16, S1	POTENTIOMETER—Tone control 250,000 ohms, with on-off switch. Models 431A-B, 432A-B, 433B	1.60
RRC-309	R16, S1	POTENTIOMETER—Tone control 250,000 ohms with push-pull on-off switch. Models 431C, 432C, 433C.	1.70
URD-007	R15	18 ohms, ±10%, ½ w. carbon.	.13
URD-009	R1	22 ohms, ±10%, ½ w. carbon.	.13
URD-025	R3	100 ohms, ±10%, ½ w. carbon.	.13
URD-027	R4	120 ohms, ±10%, ½ w. carbon	.13
URD-029	R12	150 ohms, ±10%, ½ w. carbon	.13
URD-047	R18	820 ohms, ±10%, ½ w. carbon.	.13
URD-055	R17	1800 ohms, ±10%, ½ w. carbon.	.13
URD-065	R14	4700 ohms, ±10%, ½ w. carbon.	.13
URD-077	R19	15,000 ohms, ±10%, ½ w. carbon Models 431B-C, 432B-C, 433B-C.	.13
URD-079	R19	18,000 ohms, ±10%, ½ w. carbon Models 431-A, 432-A.	.13
URD-081	R2	22,000 ohms, ±10%, ½ w. carbon	.13
URD-085	R6	33,000 ohms, ±10%, ½ w. carbon	.13
URD-109	R7	330,000 ohms, ±10%, ½ w. carbon	.13
URD-113	R10, 11	470,000 ohms, ±10%, ½ w. carbon.	.13
URD-125	R20	1.5 meg., ±10%, ½ w. carbon	.13
URD-129	R5	2.2 meg. ±10%, ½ w. carbon.	.13
URD-141	R9	6.8 meg. ±10%, ½ w. carbon.	.13
URF-049	R13	1000 ohms, ±10%, 2 w. carbon.	.25
COILS AND TRANSFORMERS			
*RLB-034	T1	COIL—R-f coil	1.35
RLC-126	T2	COIL—Oscillator coil.	.90
*RLL-055	L1	LOOP—Antenna, wound on ferrite rod, 7 x ½ in. Models 431A, 432-A.	1.50
RLL-060	L1	LOOP—Antenna, wound on ferrite rod, 7 x ½ in. used with loop shield RHS-126. Models 431B-C, 432B-C, 433B-C	1.20
*RTL-143	T3, 4	TRANSFORMER—I-f transformer.	1.80
RTO-145	T5	TRANSFORMER — Audio output transformer.	3.40
MISCELLANEOUS ELECTRICAL			
*RJC-004		CONNECTOR—Small female, on audio output leads.	.02
*RJC-027		CONTACT—Dip solder contact, incl. tube pin clip for tube receptacle	.03
*RJC-028		CONNECTOR—Dip solder terminal used on RLC-126.	$0.02
*RJC-030		I-F CLIP—Dip solder contact and clip for i-f transformers, spring brass, connects pin 6—12BE6, pin 6—12BA6 and pin 6—12AV6	.02
*RJC-031		I-F CLIP—Dip solder contact and clip for i-f transformers, spring brass, connects pin 5—12BE6, pin 1—12BA6 and pin 5—12BA6	.02
*RJS-182		PHONO JACK—Phono input socket, .687 mounting center.	.15
*RJX-031		PILOT LIGHT—Pilot light socket and bracket.	.40
*RSS-009		SWITCH—Local distance switch.	.30
*RWL-009		CORD—Power cord and plug, brown, 6 ft. long.	.70
*RWL-016		CORD—Power cord and plug, ivory, 6 ft. long	.75
RWX-055		PILOT LAMP SOCKET ASS'Y—"C" sets only.	.70
*S625D7		LOUDSPEAKER—6¼ in. PM, 4 w., 3.2 ohm voice coil.	6.35
CABINETS AND APPEARANCE ITEMS			
RAB-226		CABINET BACK—Masonite 13⅜ x 4⅜ in. Models 431-A, 432-A.	8.25
RAB-241		CABINET BACK—Masonite 13⅜ x 4⅜ in. Models 431B-C, 432B-C, 433B-C, used with loop shield RHS-126	.30
RAG-058		GRILLE—Gold plastic grille, fits in front of speaker	1.85
RAU-392		CABINET—Dark brown, plastic, Models 431-A-B-C	8.00
RAU-393		CABINET—Ivory, plastic, Models 432-A-B-C.	8.00
RAU-413		CABINET—Gray, plastic, Models 433B-C	8.50
RDF-013		WASHER—Brown felt washer for 431C.	.05
RDF-014		WASHER—Ivory felt washer for 432C	.05
RDF-015		WASHER—Gray felt washer for 433C	.05
RDG-006		DIAL BACKPLATE ASS'Y—Plastic (red and gold)	1.30
RDK-294		KNOB—Tone and tuning knob, fawn	.20
RDK-295		KNOB—Tone and tuning knob, ivory. Models 433B-C	.20
RDK-315		KNOB—Volume, radio-phono, with white dot, fawn. Models 431-A-B-C, 432-A-B-C	.30
RDK-316		KNOB—Volume, radio-phono, with white dot, ivory. Models 433B-C	.30
RDP-079		POINTER—Dial pointer. Fits on ⅛ in. shaft.	.50
RDW-073		WINDOW—Dial window with white scale, plastic. Model 431.	.65
RDW-075		WINDOW—Dial window with brown scale, plastic. Model 432.	.65
RDW-081		WINDOW—Dial window with white scale, plastic. Models 431A-B-C, 433B-C.	.70
RDW-082		WINDOW—Dial window with brown scale. Models 432A-B-C.	.70
RII-084		COVER—Plastic loop cover 10¼ x 1⅞ in.	.60
RYN-019		MEDALLION.	.35
MISCELLANEOUS MECHANICAL			
*RDC-032		DIAL CORD—Drive cord .28 in. dia. Newton Line Co. NF-28 or equiv. 25 yds.	2.50
*RHC-024		CLIP—⅛ in. electro. mtg. clip.	.10
*RHC-061		CLIP—Holds textolite sub-chassis.	.10
*RHE-014		EYELET—Tube receptacle wafer mtg.	.01
*RHE-016		EYELET—T-f trans. wafer mtg.	.01
*RHI-017		STRAIN RELIEF—Two-piece strain relief for power cord.	.15
*RHJ-005		SPACER—Spacer bushing and sleeve for mounting tuning cap. .230 O.D. x .168 I.D.	.02
*RHS-041		SCREW—No. 6 x ⅛ in. long for loudspeaker and grille mtg.	.02
*RHS-108		SHIELD—Pilot light shield	.05
*RHS-109		SPACER—Black textolite, used in chassis tube holes	.20
*RHS-110		SHIELD—Tube shield, metal, 1¼ in. long for 12AV6 and 12BE6	.15
*RHS-118		EYELET PIN—Eyelet and soldering point used to mount 1st i-f socket wafer	.05
RHS-126		LOOP SHIELD—Electro. shield over ferrite antenna rod RLL-060. Models 431B-C, 432B-C, 433B-C	.50
*RII-081		WAFER—Part of i-f transformer receptacle ⅜ x ⅛ in.	.05
*RII-082		WAFER—Part of tube receptacle 1⅛ in. dia.	.05
*RII-090		HEAT SHIELD—1 x 1 in. asbestos base phenolic shield between chassis tube hole spacer, RHS-109, and textolite sub-chassis used at 35W4 and 35C5 tubes	.05
RII-091		BOARD—Sub-chassis, bare, no hardware or parts	.60
*RMS-118		SPRING—Dial cord tension spring.	.10
*RMW-070		PULLEY—½ in. idler pulley, fits on ¼ in. volume control shaft.	.05
RMX-258		SHAFT—Drive shaft and bushing assembly.	.50

MODEL 436

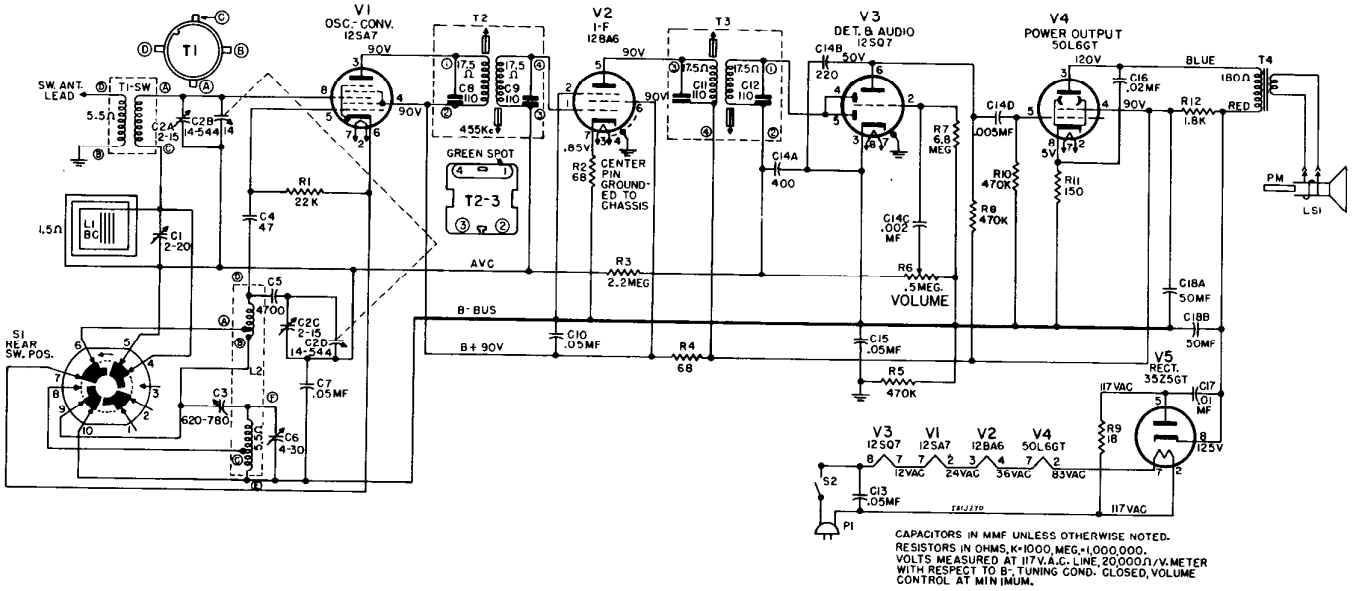

CAPACITORS IN MMF UNLESS OTHERWISE NOTED.
RESISTORS IN OHMS, K=1000, MEG.=1,000,000.
VOLTS MEASURED AT 117 V.A.C. LINE, 20,000Ω/V. METER WITH RESPECT TO B-, TUNING COND. CLOSED, VOLUME CONTROL AT MINIMUM.

REPLACEMENT PARTS LIST, MODEL 436

Cat. No.	Symbol	Description	Unit Price
		CAPACITORS	
*RCC-028	C10	.05 mf, +40 −10%, 400 v., paper	$0.25
*RCC-040	C17	.01 mf, +40 −10%, 600 v., paper	.30
*RCC-041	C16	.02 mf, +40 −10%, 600 v., paper	.30
*RCE-097	C18B, C	50-50 mf, 150 v., electrolytic	1.70
RCT-072	C2A, B, C, D	TUNING—Two-gang with drive drum	9.00
*RCW-1043	C4	47 mm, ±2%, 0 temp. coeff., ceramic	.60
*RCW-3048	C14A, B, C, D	BULLPLATE—Consists of four capacitors in two sections: 1-.002 mmf, +100 −0%, 2-440 mmf, 220 mmf, +70 −30%, .005 mmf, +100 −0%	.90
*RCY-058	C1	TRIMMER—2-20 mf	.40
RCY-072	C3, 6	TRIMMER	1.65
*UCC-045	C7, 13, 15	.05 mf, +40 −10%, 600 v., paper	.30
*UCU-2568	C5	4700 mmf, ±5%, 500 v., mica	.85
		RESISTORS	
RRC-100	R6, S2	VOLUME CONTROL & SWITCH —500,000 ohms	1.65
*URD-007	R9	18 ohms, ±10%, ½ w.	.13
*URD-021	R2, 4	68 ohms, ±10%, ½ w.	.13
*URD-029	R11	150 ohms, ±10%, ½ w.	.13
*URD-081	R1	22,000 ohms, ±10%, ½ w.	.13
*URD-113	R5, 8, 10	470K ohms, ±10%, ½ w.	.13
*URD-129	R3	2.2 meg., ±10%, ½ w.	.13
*URD-141	R7	6.8 meg., ±10%, ½ w.	.13
*URF-055	R12	1800 ohms, ±10%, 2 w.	.25
		COILS AND TRANSFORMERS	
*RLA-039	T1	COIL—Antenna coil, short wave	1.75
*RLC-094	L2	COIL—Oscillator coil	3.50
RLL-054	L1	LOOP ANTENNA—Ferrite core	1.50
*RTL-142	T2, 3	TRANSFORMER—1st and 2nd I-F	1.85
*RTO-115	T4	TRANSFORMER—Audio output	1.90

Cat. No.	Symbol	Description	Unit Price
		MISCELLANEOUS ELECTRICAL	
*RJS-003		SOCKET—For tubes 50L6, 35Z5, 12SQ7, 12SA7	$0.20
*RJS-141		SOCKET—For 12BA6	.20
*RSW-096	S1	SWITCH—Band change switch	1.75
*RWL-009		CORD—Power cord & plug, brown, ivory plug, 6 ft. long	.70
*S403-D7	LS1	LOUDSPEAKER—4-inch PM	4.30
		MISCELLANEOUS MECHANICAL	
*RAP-036		PLATE—I-F adapter plate	.10
*RDC-032		CORD—Drive cord, 25 yds. bulk	2.50
RDG-005		BACKPLATE—Dial scale backplate (grey)	.30
*RHC-024		CLIP—Electrolytic mounting clip	.10
*RHC-038		CLIP—Antenna mounting	.02
*RHC-053		CLIP—I-F can mounting	.02
*RHG-006		SLEEVE—Volume control shaft, fiber	.05
*RHG-012		GROMMET—For front chassis mounting	.05
*RHG-040		GROMMET—For rear chassis mounting	.05
*RHI-017		STRAIN RELIEF—Two-piece insulator for power cord	.15
*RII-084		LOOP SHIELD—Antenna cover, polystyrene	.60
*RMM-206		CORK—For front chassis mounting	.05
*RMS-118		SPRING—Dial cord tension spring	.10
*RMW-070		PULLEY—Idler pulley	.05
*RMX-150		SHAFT—Tuning control shaft mounting bushing, less nut	.50
		CABINET AND APPEARANCE ITEMS	
RAB-225		BACK—Cabinet back less antenna	.40
RAU-391		CABINET AND DIAL SCALE—Plastic, mahogany	11.50
*RDK-031		KNOB—Mahogany, f. tuning and volume control	.10
*RDK-183		KNOB—Band change switch, mahogany	.15
RFP-078		POINTER—Dial pointer, red plastic flag	.45

*Parts used on previous receivers.

PRICES ARE SUGGESTED LIST PRICES AND SUBJECT TO CHANGE WITHOUT NOTICE

MODEL 440

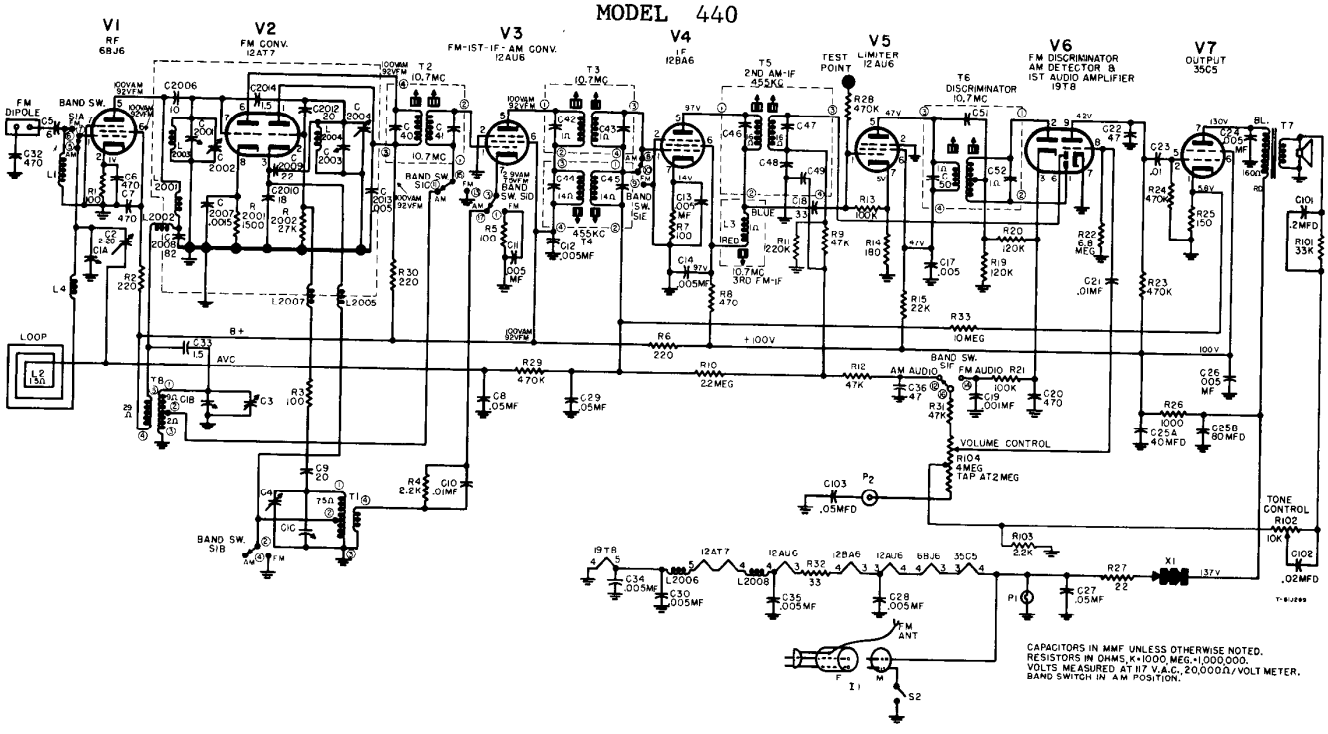
V1
RF
6BJ6
V2
FM CONV.
12AT7
V3
FM-1ST-IF-AM CONV.
12AU6
V4
IF
12BA6
V5
2ND AM-IF
455KC
TEST POINT
LIMITER
12AU6
V6
FM DISCRIMINATOR
AM DETECTOR &
1ST AUDIO AMPLIFIER
19T8
V7
OUTPUT
35C5
FM DIPOLE
BAND SW.
LOOP
AVC
B+
+100V
100V
VOLUME CONTROL
R104
4MEG
TAP AT 2MEG
TONE CONTROL
R102
10K
BAND SW. S1A
BAND SW. S1B
BAND SW. S1C
BAND SW. S1D
BAND SW. S1E
BAND SW. S1F
AM AUDIO
FM AUDIO
FM ANT
CAPACITORS IN MMF UNLESS OTHERWISE NOTED.
RESISTORS IN OHMS, K=1000, MEG.=1,000,000.
VOLTS MEASURED AT 117 V.A.C. 20,000Ω/VOLT METER.
BAND SWITCH IN AM POSITION.

REPLACEMENT PARTS LIST—MODEL 440

Cat. No.	Symbol	Description	Unit Price
CAPACITORS (FIXED AND VARIABLE)			
*RCE-101	C25A, B	40 80 mf., 150 v., electrolytic	$2.00
*RCN-040	C5	6 mmf., ceramic	.25
*RCN 046	C2010	18 mmf., silver mica	.25
*RCN-048	C33, 2014	1.5 mmf., ceramic	20
RCN 057	C32	470 mmf., 300 v., silver mica	.45
*RCT 055	C2001, 2002, 2003, 2004	FM tuning capacitor	3.50
*RCT-056	C1A, B, C, C3, 4	AM tuning condenser	4.50
*RCW-026	C2007	0015 mf., ceramic	.25
*RCW-176	C6, 7	470 mmf., ceramic	.25
*RCW-3014	C11, 12, 13, 14, 17, 26, 28, 30, 34, 35, 2013	.005 mf., hi-k	.25
*RCW-3016	C2012	20 mmf., ceramic	1.00
*RCW 3065	C2009	22 mmf., ceramic	60
*RCY-016	C2	Trimmer, 2-20 mmf.	.35
*UCC-011	C8, 29	.05 mf., 200 v., paper	.30
*UCC-035	C19	.001 mf., 600 v., paper	.25
*UCC-039	C24	.005 mf., 600 v., paper	.25
*UCC-040	C10, 21, 23	.01 mf., 600 v., paper	.25
*UCC-041	C102	.02 mf., 600 v., paper	.25
*UCC-045	C27, 103	.05 mf., 600 v., paper	.30
*UCC-050	C101	.2 mf., 600 v., paper	.55
*UCG-004	C2006	10 mmf., silver mica	.25
*UCG-016	C18	33 mmf., silver mica	.25
*UCG-020	C22, 36	47 mmf., silver mica	.35
*UCG-1011	C9	20 mmf., silver mica	.30
*UCG-1026	C2008	82 mmf., silver mica	.35
*UCU-044	C20	470 mmf., mica	.30
RESISTORS AND POTENTIOMETERS			
RRC-226	R104	VOLUME CONTROL 4 meg center-tapped, includes A-C switch with center "off" position	$1.95
RRC-227	R102	TONE CONTROL—10,000 ohms	1.20
*RRW-055	R26	1000 ohms, 2 w., w.w.	.45
*URD-009	R27	22 ohms, ½ w., carbon	.13
*URD-025	R1, 3, 5, 7	100 ohms, ½ w., carbon	.13
*URD-029	R25	150 ohms, ½ w., carbon	.13
*URD-031	R14	180 ohms, ½ w., carbon	.13
*URD-033	R2, 6, 30	220 ohms, ½ w., carbon	.13
*URD-041	R8	470 ohms, ½ w., carbon	.13
*URD-053	R2001	1500 ohms, ½ w., carbon	.13
*URD-057	R4, 103	2200 ohms, ½ w., carbon	.13
*URD-081	R15	22,000 ohms, ½ w., carbon	.13
*URD-083	R2002	27,000 ohms, ½ w., carbon	.13
*URD-085	R101	33,000 ohms, ½ w., carbon	.13
*URD-089	R9, 12, 31	47,000 ohms, ½ w., carbon	.13
*URD-097	R13, 21	100,000 ohms, ½ w., carbon	.13
*URD-099	R19, 20	120,000 ohms, ½ w., carbon	.13
*URD-105	R11	220,000 ohms, ½ w., carbon	.13
*URD-113	R23, 24, 28, 29	470,000 ohms, ½ w., carbon	.13
*URD-129	R10	2.2 meg., ½ w., carbon	.13
*URD-141	R22	6.8 meg., ½ w., carbon	.13
*URD-145	R33	10 meg., ½ w., carbon	.13
URF-013	R32	33 ohms, 2 w., carbon	.25
COILS AND TRANSFORMERS			
*RLB-031	L2003	COIL—R-F, FM	$0.15
*RLB-032	T8	COIL - R-F, BC	1.50
*RLC-114	L2004	COIL—Oscillator, FM	.15
*RLC-115	T1	COIL—Oscillator, BC	.90
*RLI-122	L4, 2002, 2005, 2006, 2007, 2008	CHOKE —2.2 uh	.25
*RLI-124	L2001	CHOKE—R-F Plate, 1 uh	.80
RLI-163	L1	CHOKE—FM Antenna	$0.15
*RTD-006	T6	FM DISCRIMINATOR TRANSFORMER	4.95
*RTL-111	T5	I-F TRANSFORMER—2nd BC	2.10
*RTL-112	T2	I-F TRANSFORMER—1st FM	1.80
*RTL-128	T4	I-F TRANSFORMER—1st BC	2.10
*RTL-129	T3	I-F TRANSFORMER—2nd FM	2.25
*RTL-130	L3	I-F COIL—3rd FM	2.10
*RTO-112	T7	AUDIO OUTPUT TRANSFORMER	2.25
MISCELLANEOUS ELECTRICAL			
*RER 010	X1	SELENIUM RECTIFIER	$1.60
*RJC-004		TERMINAL—For loop connections	.02
*RJS-118		TUBE SOCKET—For V6	.35
*RJS-125		TUBE SOCKET - For V1, V3, V4, V5 and V7	.20
*RJS-174		TUBE SOCKET—For V2	.40
*RJS 182	P2	CONNECTOR—Phono input	.15
*RJX-034	I1 F	INTERLOCK—Female terminal cap and insulator	.40
*RSI-003	I2-M	INTERLOCK—Male	.15
*RSW-090	S1A, B, C, D, F	BAND SWITCH	2.25
*RWL-022		POWER CORD SET	1.25
*RWX-031		PILOT LIGHT SOCKET ASSEMBLY	.50
*IRS-527D		LOUDSPEAKER—5¼ in. Alnico PM	4.60

Cat. No.	Description	Unit Price
MISCELLANEOUS MECHANICAL		
*RAC-099	COVER—For FM tuner	$0.35
*RAD-049	BRACKET—Supports pilot light assembly	.05
*RDC-032	DIAL CORD—25 yards	2.50
*RHC-018	CLIP—For mounting loop and back	.05
*RHC-038	CLIP—For mounting BC—R-F coil	.02
*RHC-049	CLIP—For mounting 3rd FM—I-F coil	.05
*RHC-053	CLIP—For mounting I-F transformers	.02
*RHF-006	CHASSIS FOOT	.15
*RHG-015	GROMMET—For mounting tuning gang	.05
*RHH-004	SNAP FASTENER—For fastening back onto cabinet	.02
*RHM-025	"C" TYPE RETAINING RING—On tone control shaft	.01
*RHS-091	TUBE SHIELD—For V2	.01
*RMC-002	CLIP—For mounting BC oscillator coil	.05
*RMS-130	SPRING—On large drum of FM tuner	.15
*RMS-243	SPRING—Tension, for pointer drive cord	.10
*RMS-274	SPRING—For retaining FM drum assembly	.02
*RMU-080	TUNING SHAFT	.60
*RMW-070	PULLEY	.05
*RMX-198	LINK ROLLER ASSEMBLY—Includes shoulder rivets	.60
*RMX-199	DRUM AND BUSHING ASSEMBLY—On FM tuner	.85
CABINET AND APPEARANCE ITEMS		
RAB-219	LOOP AND BACK ASSEMBLY	$2.60
*RAU-355	CABINET	8.50
*RDE-080	ESCUTCHEON—Cabinet	1.90
*RDK-265	KNOB—Tuning	.25
*RDK-266	KNOB—Tone	.20
*RDK-267	KNOB—Band	.25
RDK-324	KNOB—Volume	.40
*RDP-065	DIAL POINTER	.35
RDS-124	DIAL SCALE	3.95

* Parts used on previous receivers.

PRICES ARE SUGGESTED LIST PRICES SUBJECT TO CHANGE WITHOUT NOTICE

442, 443, 444

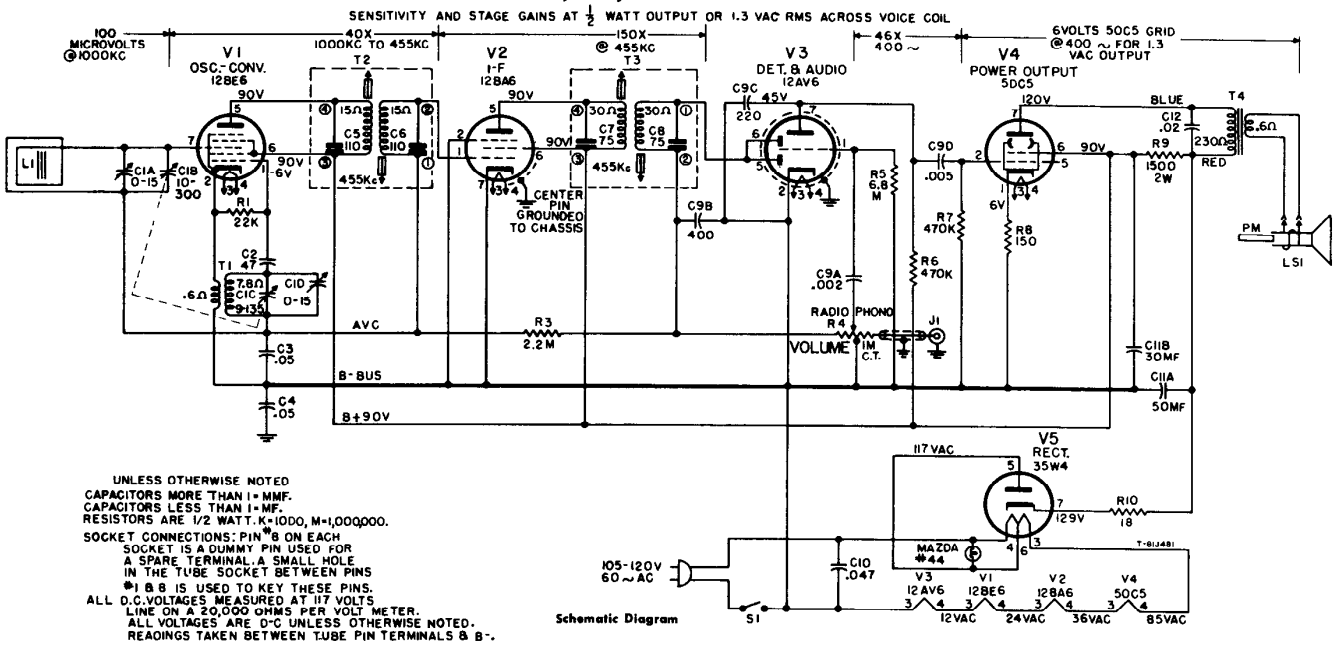

Schematic Diagram

UNLESS OTHERWISE NOTED
CAPACITORS MORE THAN 1 = MMF.
CAPACITORS LESS THAN 1 = MF.
RESISTORS ARE 1/2 WATT. K = 1000, M = 1,000,000.
SOCKET CONNECTIONS: PIN *8 ON EACH SOCKET IS A DUMMY PIN USED FOR A SPARE TERMINAL. A SMALL HOLE IN THE TUBE SOCKET BETWEEN PINS *1 & 8 IS USED TO KEY THESE PINS.
ALL D.C. VOLTAGES MEASURED AT 117 VOLTS LINE ON A 20,000 OHMS PER VOLT METER. ALL VOLTAGES ARE D-C UNLESS OTHERWISE NOTED. READINGS TAKEN BETWEEN TUBE PIN TERMINALS & B-.

REPLACEMENT PARTS LIST—MODELS 442, 443, 444

CAPACITORS

CAT. NO.	SYMBOL	DESCRIPTION	PRICE
*RCE-200	C11A, B	50-30 mf., 150 v., electrolytic	$2.10
*RCN-050	C12	.022 mf., 600 v., paper molded	.35
*RCN-053	C10	.047 mf., ±20%, 600 v.	.35
RCT-076	C1A, B, C, D	Tuning capacitor, two-gang	3.55
*RCW-3048	C9A, B, C, D	.002 mf., 400 mmf., 220 mmf., .005 mf., ceramic couplate	.90
*RCW 3075	C2	47 mmf., ± 20%, N2200 ceramic	.25
*UCC-045	C3, 4	.05 mf., 400 v., paper	.30

RESISTORS (CARBON) TOLERANCE ±10%

*URD-007	R10	18 ohms, ½ w.	.13
*URD-025	R2	100 ohms, ½ w.	.13
*URD-029	R8	150 ohms, ½ w.	.13
*URD-081	R1	22,000 ohms, ½ w.	.13
*URD-113	R6, 7	470,000 ohms, ½ w.	.13
*URD-129	R3	2.2 megohms, ½ w.	.13
*URD-141	R5	6.8 megohms, ½ w.	.13
*URF-053	R9	1500 ohms, 2 w.	.25

POTENTIOMETER

RRC-290	R4, S1	VOLUME CONTROL AND SWITCH, one megohm	2.60

COILS & TRANSFORMERS

*RLC-122	T1	COIL—Oscillator	1.00
*RLL-055	L1	ANTENNA—Ferrite core, 300 uh inductance 7 in. long, ¼ in. diameter	1.50
RTL-143	T2	TRANSFORMER—I-F	1.80
RTL-163	T3	TRANSFORMER—I-F	1.70
RTO-128	T4	TRANSFORMER—Output	1.90

MISCELLANEOUS ELECTRICAL

CAT. NO.	DESCRIPTION	PRICE
*RII-081	WAFER—Part of I-F transformar receptacle $1\frac{5}{16}$ in. x ⅞ in.	.05
*RII-082	WAFER—Part of tube receptacle, $1\frac{1}{32}$ in. dia.	.05
RII-088	BOARD—Sub-chassis, bare, no hardware or parts	.60
*RJC-004	TERMINAL—Female speaker connector on audio output leads	.02
RJC-027	CONTACT—Dip solder contact, includes tube pin clip for tube receptacles	.03
*RJC-028	CONNECTOR—Dip solder terminal only, used on RLC-122, and as common connector	.02
*RJC-030	CLIP—Dip solder contact and clip for I-F transformer, spring brass, connects pin 6-12BE6, pin 6-12BA6 and pin 6-12AV6	.02
*RJC-031	I-F CLIP—Dip solder contact and clip for I-F transformers, spring brass, connects pin 5-12BE-6, pins 1 and 5-12BA6	$0.02
*RJS-182	CONNECTOR—Phono, for ⅛ in. dia. pin	.15
RJX-031	PILOT LIGHT ASS'Y—Includes bayonet type socket for Mazda No. 44 pilot lamp with clip-on bracket	.40
ROP-027	SPEAKER—4-inch, 3.2 ohms, yoke rotated 90°	4.95
*RWL-009	CORD—Power cord and plug, brown, 6 ft. long, Models 442, 444	.70
*RWL-016	CORD—Power cord and plug, ivory, 6 ft. long, Model 443	.75

MISCELLANEOUS MECHANICAL

RDC-032	DIAL CORD—Bulk quantity 25 yards	2.50
*RHC-024	CLIP—⅛-in., mounts C11A, B	.10
*RHC-061	CLIP—Holds Textolite sub-chassis	.10
*RHE-014	EYELET—Tube receptacle wafer mounting	.01
*RHE-016	EYELET—I-F receptacle wafer mounting	.01
*RHG-018	GROMMET—For tuning capacitor shock mounting	.05
*RHI-017	GROMMET—Two-piece strain relief for power cord	.15
*RHJ-005	SPACER—Metal, for tuning capacitor shock mounting	.05
*RHM-073	CLIP—Idler pulley retainer on volume control	.02
*RHS-079	SHIELD—Flexible, 2½ in. long, ⅛ in. diameter	.05
*RHS-108	LIGHT SHIELD—Dial light shield, black fiber tubing $1\frac{13}{16}$ in. long, $\frac{7}{16}$ in. diameter	.05
*RHS-109	INSULATING SPACER—Black Textolite in chassis tube holes	.20
*RHS-110	SHIELD—Miniature tube shield, metal, 1¾ in. long for 12AV6	.15
*RHS-111	SHIELD POST—Tube pin shield, mounts wafer of tube receptacles spring brass, $\frac{9}{16}$ in. long, ¼ in. diameter	.03
*RII-084	ANTENNA COVER — Polystyrene, molded brown, 10¼ in. long, ¾ in. wide	.60
RII-090	SHIELD—Heat shield, fiber wafer, used on 50C5 tube socket	.05
*RMS-118	SPRING—Dial cord tension spring	.10
*RMW-070	IDLER PULLEY—On volume control shaft	.05
*RMX-295	TUNING SHAFT & BUSHING ASSEMBLY	.40

CABINET & APPEARANCE ITEMS

RAB-221	BACK—Cabinet, back only, masonite 12¾ in. x 4½ in.	.25
*RAG-033	GRILLE CLOTH—Cabinet grille cloth, dark maroon, includes chipboard mounting ring $3\frac{47}{64}$ in. diameter, Models 442 and 444	.30
*RAG-035	GRILLE CLOTH—Cabinet grille cloth, ivory; includes chipboard mounting ring $3\frac{47}{64}$ in. diameter, Model 443	.30
*RAU-385	CABINET—Plastic, mahogany, for Model 442	8.50
*RAU-386	CABINET—Plastic, ivory, for Model 443	8.50
*RAU-387	CABINET—Plastic, red, for Model 444	8.50
RDG-008	DIAL BACKPLATE—Red, with white markers.	
*RDK-294	KNOB—Tuning, fawn color, Rich-Lo brass insert	.20
RDK-354	KNOB—Phono-Off-Radio (Volume) fawn color, Rich-Lo brass insert, white lettering	.30
RDP-082	DIAL POINTER	.50
RDW-076	DIAL SCALE & WINDOW	.90
RYN-017	MEDALLION—Dial beam, adhesive—metalized styrene, background gold	.30

* Used on previous receivers.

446,447,448

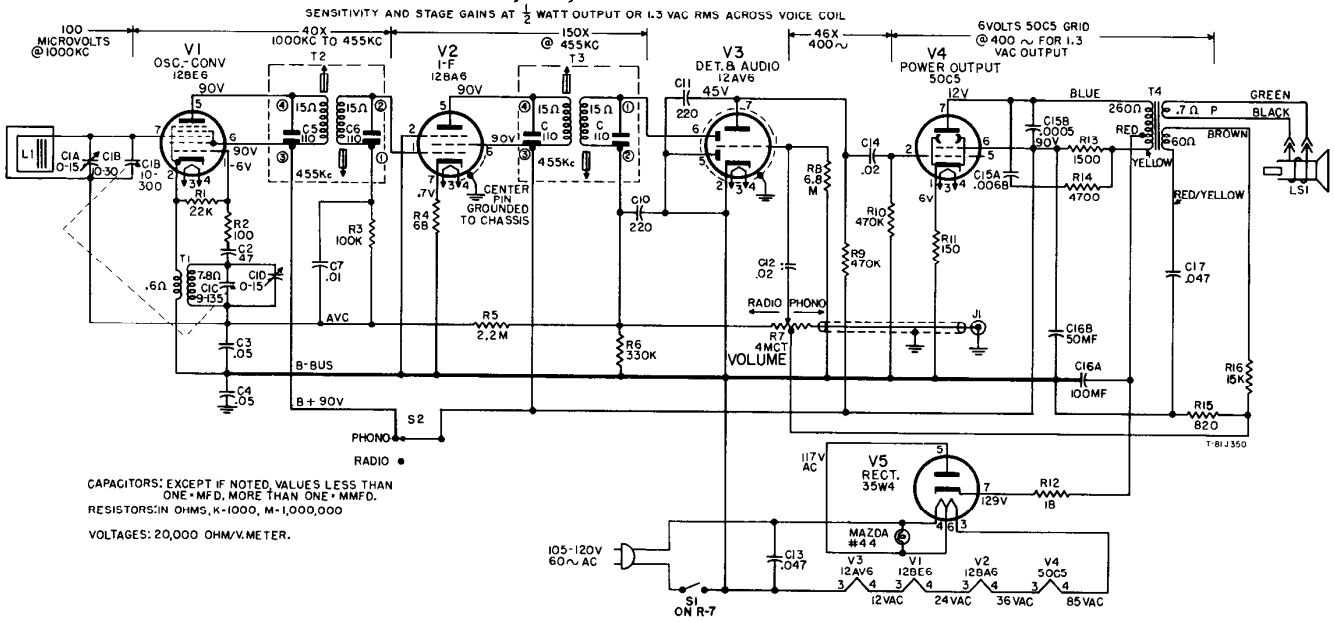

CAPACITORS: EXCEPT IF NOTED, VALUES LESS THAN ONE • MFD. MORE THAN ONE • MMFD.
RESISTORS: IN OHMS, K-1000, M-1,000,000

VOLTAGES: 20,000 OHM/V. METER.

REPLACEMENT PARTS LIST—MODELS 446, 447, 448

CAPACITORS

CAT. NO.	SYMBOL	DESCRIPTION	PRICE
*RCC-126	C17	.047 mf., 85°C	$0.35
*RCC-129	C12, 14	.02 mf., +40%+10%, 400 v., 85°C	.35
RCE-177	C16A, B	50–100 mf. @150 v., elec.	.35
*RCN-053	C13	.047 mf., 600 v., molded	
RCT-078	C1B, 1C	Tuning capacitor, two gang	.25
*RCW-3075	C2	47 mmf., ceramic	.50
*RCW-3104	C15A, B	Bullplate— 0068 mf., .0005 mf.	.25
*RCW-3137	C10, 11	220 mmf., ceramic	.25
*UCC-008	C7	.01 mf., 600 v.	.30
*UCC-045	C3, 4	.05 mf., 400 v.	

RESISTORS (CARBON TOLERANCE 10%)

*URD-007	R12	18 ohms, ½ w.	$0.13
*URD-021	R4	68 ohms, ½ w.	.13
*URD-025	R2	100 ohms, ½ w.	.13
*URD-029	R11	150 ohms, ½ w.	.13
*URD-047	R15	820 ohms, ½ w.	.13
*URD-065	R14	4700 ohms, ½ w.	.13
*URD-077	R16	15 K, ½ w.	.13
*URD-081	R1	22 K, ½ w.	.13
*URD-097	R3	100 K, ½ w.	.13
*URD-109	R6	330 K, ½ w.	.13
*URD-113	R9, 10	470 K, ½ w.	.13
*URD-129	R5	2.2 megohms, ½ w.	.13
*URD-141	R8	6.8 megohms, ½ w.	.13
*URF-053	R13	1500 ohms, 2 w.	.25

POTENTIOMETERS

RRC-279	R7, S1	VOLUME CONTROL & SWITCH—4 megohm, center tapped	$2.60

COILS & TRANSFORMERS

*RLC-122	T1	COIL—Oscillator	$1.00
*RLL-055	L1	ANTENNA—Ferrite core, 300 uh inductance 7" lg, ¼" diameter	1.50
*RTL-143	T2, 3	TRANSFORMER—I-F	1.80
*RTO-157	T4	TRANSFORMER—Output	1.90

MISCELLANEOUS ELECTRICAL

CAT. NO.	DESCRIPTION	PRICE
*RII-081	WAFER—Part of I-F trans. receptacle ⅜" x ⅞"	$0.05
*RII-082	WAFER—Part of tube receptacle 1⅛" in diameter	.05
*RII-088	BOARD—Sub-chassis, bare, no hardware or parts	.60
*RJC-004	TERMINAL—Female speaker connector on audio output leads	.02
*RJC-027	CONTACT—Dip solder contact, includes tube pin clip for tube receptacles	.03
*RJC-028	CONNECTOR—Dip solder term. only, used on RLC-122, and as a common connector	.02
*RJC-030	CLIP—Dip solder contact and clip for I-F trans., spring brass, connects pin 6—12BE6, pin 6—12BA6, and pin 6—12AV6	.02
*RJC-031	I-F CLIP—Dip solder contact and clip for I-F trans., spring brass, connects pin 5—12BE6, pins 1 and 5—12BA6	.02
*RJS-182	CONNECTOR—Phono for ⅛ in. dia. pin.	.15
ROP-030	SPEAKER—5½ in., 3.2 ohms.	.30
RSS-009	SWITCH—Radio—phono, S2	.70
*RWL-009	CORD—Power cord and plug, brown, 6 ft. long, Mod. 446 and 448.	.75
*RWL-016	CORD—Power cord and plug, ivory, 6 ft. long, Model 447	.45
*RWX-040	PILOT LIGHT ASS'Y—Inc. bayonet-type socket for Mazda No. 44 pilot lamp with clip-on bracket	

MISCELLANEOUS MECHANICAL

*RHC-024	CLIP—⅞ in., mounts C16	$0.10
*RHC-061	CLIP—Holds sub-chassis	.10
*RHE-014	EYELET—Tube receptacle wafer mtg.	.01
*RHE-016	EYELET—I-F receptacle wafer mtg.	.01
*RHI-017	GROMMET—Two piece strain relief for power cord	.15
*RHS-041	SCREW—#6 self-tapping ⅜" for grille	.02
*RHS-109	SHIELD—Pin shield in chassis tube holes	.20
*RHS-110	SHIELD—Miniature tube shield, metal, 1¾" long for 12AV6	.15
*RHS-118	SHIELD—Tube pin shield	.05
RHS-127	SHIELD—For pilot light	.05
RHS-138	SCREW—Self-tapping, #4, ¼" long	.03
*RII-084	ANTENNA LOOP COVER—Polystyrene, molded brown, 10¼" long, ¾" wide	.60
*RII-090	SHIELD—Heat shield, fiber wafer, used on 50C5 tube socket.	.05
*RMS-118	SPRING—Dial cord tension spring	.10
RMS-326	RING—Compression ring for dial pointer	.05
RMX-275	DRIVE SHAFT AND BUSHING ASSEMBLY.	.45

CABINET & APPEARANCE ITEMS

RAB-242	BACK—Cabinet back, masonite	$0.30
RAG-071	GRILLE—Gold color	1.45
RAU-414	CABINET—Plastic, mahogany, Mod. 446	10.50
RAU-415	CABINET—Plastic, ivory, for Mod. 447.	10.50
RAU-416	CABINET—Plastic, red, for Mod. 448	10.50
RDK-425	KNOB—Tuning and volume, clear and gold.	.35
RDP-083	DIAL POINTER ASSEMBLY	.75
RDW-077	DIAL SCALE AND WINDOW	1.05
RYN-027	MEDALLION.	.35

* Used on previous receivers.

PRICES ARE SUGGESTED LIST PRICES AND SUBJECT TO CHANGE WITHOUT NOTICE

MODELS 450, 451, 452

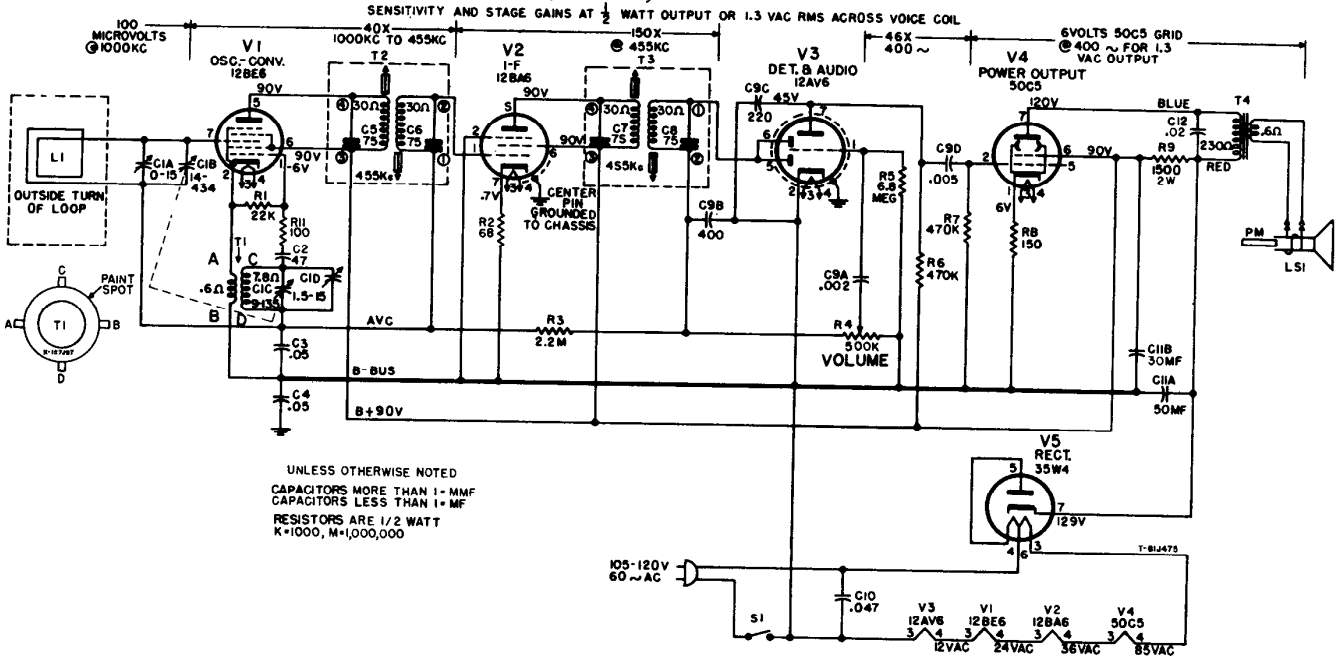

REPLACEMENT PARTS LIST—MODELS 450, 451, 452

CAT. NO.	SYMBOL	DESCRIPTION	UNIT PRICE
CAPACITORS			
**RCE-160	C11A, B	50–50 mf., 150 V., cardboard tubular electrolytic	$1.85
RCN-050	C12	.02 mf., 600 V., paper, molded	.35
*RCN-053	C10	.047 mf., paper, molded	.35
RCT-066	C1A, B, C, D	Tuning, two-gang	4.75
*RCW-3048	C9A, B, C, D	.002 mf., 400 mmf., 220 mmf., 005 mf., ceramic couplate	.90
*RCW-3075	C2	47 mmf., ±20%, N2200, ceramic	.25
*UCC-045	C3, 4	.05 mf., 600 V., paper	.30
RESISTORS			
RRC-205	R4, S1	500K ohms, volume control and switch	1.60
*URD-021	R2	68 ohms ±10%	.13
*URD-025	R10	100 ohms ±10%	.13
*URD-029	R8	150 ohms, ±10%, ½ W., carbon	.13
*URD-081	R1	22K ohms, ±10%, ½ W., carbon	.13
*URD-113	R6, 7	470K ohms, ±10%, ½ W., carbon	.13
*URD-129	R3	2.2 megohms, ±10%, ½ W., carbon	.13
*URD-141	R5	6.8 megohms, ½ W., carbon	.13
*URF-053	R9	1500 ohms, ±10%, 2 W., carbon	.25
COIL AND TRANSFORMERS			
*RLC-122	T1	COIL—Oscillator coil	1.00
*RTL-143	T2	TRANSFORMER—1st i-f	1.80
RTL-163	T3	TRANSFORMER—2nd i-f	1.70
*RTO-128	T4	TRANSFORMER—Audio output	2.10

* Used on previous receivers
** Suitable replacement

PRICES ARE SUGGESTED LIST PRICES AND SUBJECT TO CHANGE WITHOUT NOTICE

CAT. NO.	DESCRIPTION	UNIT PRICE
MISCELLANEOUS ELECTRICAL		
RII-081	WAFER—Part of i-f transformer receptacle	$0.05
RII-082	WAFER—Part of tube receptacle	.05
*RJC-004	CONNECTOR—Loudspeaker connector, female	.02
RJC-027	CONNECTOR—Tube pin connector, part of tube receptacle	.03
RJC-028	CONNECTOR—Oscillator coil receptacle	.02
RJC-029	WIRE CONNECTOR—Push-on type terminal for i-f connecting lead	.05
*RJC-030	I-F WAFER CONNECTOR	.02
RJC-031	I-F WAFER CONNECTOR	.02
*RWL-025	CORD—Power cord and plug, brown, for Model 452	.75
*RWL-026	CORD—Power cord and plug, ivory, for Models 450, 451	.75
*S403D7	LOUDSPEAKER—4-inch PM	4.30
MISCELLANEOUS MECHANICAL		
*RHC-024	CLIP—7/8 inch electrolytic mounting clip	.10
RHC-061	CLIP—Holds Textolite sub-chassis	.10
RHC-081	TUNING KNOB RETAINING CLIP	
RHE-014	EYELET—Tube receptacle mounting	.01
RHE-016	EYELET—I-F receptacle wafer mounting	.01
*RHG-018	GROMMET—Rubber grommet for tuning capacitor shock mounting	.05
*RHI-017	STRAIN RELIEF—Two-piece strain relief for power cord entrance in chassis	.15
*RHJ-005	SPACER—In grommet for shock mounting tuning capacitor	.05
*RHS-109	SHIELD—Insulating spacer, black Textolite, in chassis tube holes	.20
RHS-110	SHIELD—Tube shield for 12AV6 tube	.15
RMS-272	RING—Compression ring used with tuning control knob	.05
CABINETS AND APPEARANCE ITEMS		
RAB-205	CABINET BACK—Loop and back	1.35
RAG-035	GRILLE CLOTH—White, for Model 451	.30
RAG-072	GRILLE CLOTH—Green, for Model 450	.35
RAG-073	GRILLE CLOTH—Red, for Model 452	.35
RAU-422	CABINET—Green, with dial scale, for Model 450	6.50
RAU-423	CABINET—Red, with dial scale, for Model 452	6.50
RAU-424	CABINET—Ivory, with dial scale, for Model 451	6.50
RDK-295	KNOB—Volume-Off-On control, ivory, for Models 450, 452	.25
RDK-444	KNOB—Tuning, ivory, for Models 450, 452	.40
RDK-445	KNOB—Tuning, mahogany, for Model 451	.40
RDK-446	KNOB—Volume-Off-On control, mahogany—Model 451	.20

MODEL 453

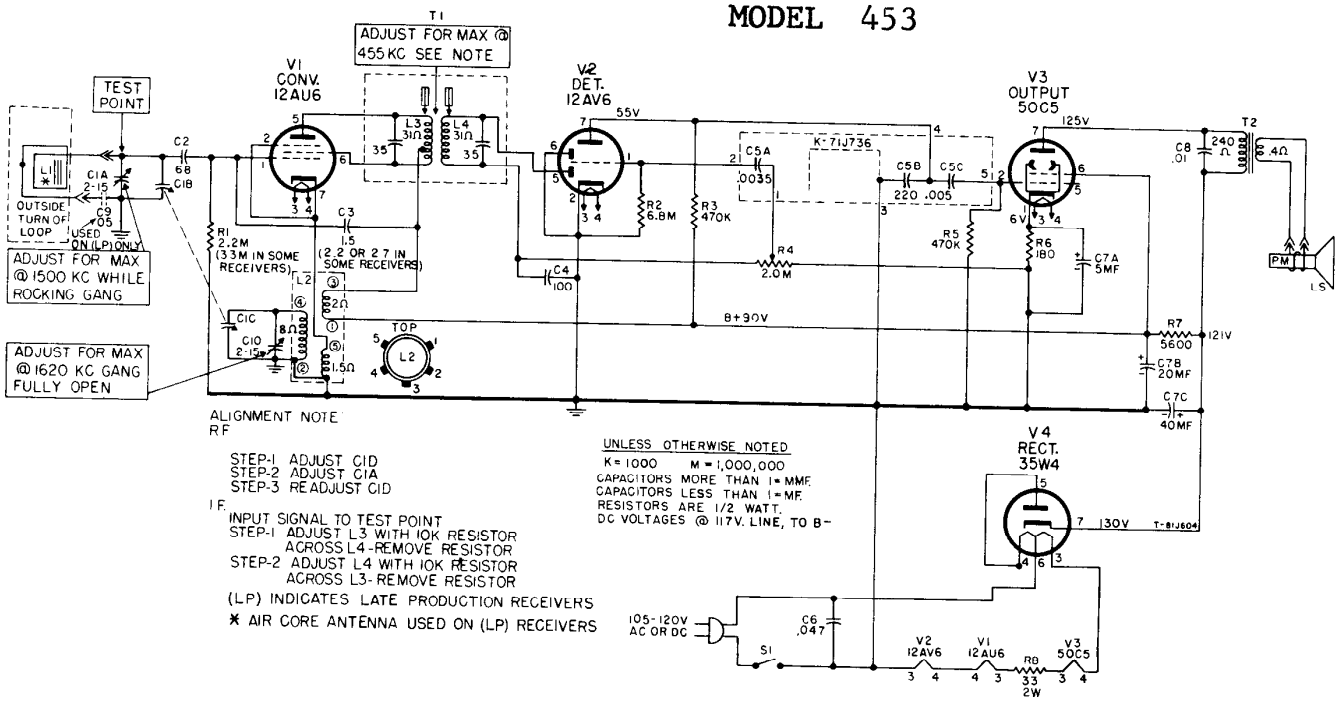

ALIGNMENT NOTE
RF

STEP-1 ADJUST C1D
STEP-2 ADJUST C1A
STEP-3 READJUST C1D

I.F.

INPUT SIGNAL TO TEST POINT
STEP-1 ADJUST L3 WITH 10K RESISTOR ACROSS L4-REMOVE RESISTOR
STEP-2 ADJUST L4 WITH 10K RESISTOR ACROSS L3-REMOVE RESISTOR

(LP) INDICATES LATE PRODUCTION RECEIVERS

* AIR CORE ANTENNA USED ON (LP) RECEIVERS

UNLESS OTHERWISE NOTED
K = 1000 M = 1,000,000
CAPACITORS MORE THAN 1 = MMF
CAPACITORS LESS THAN 1 = MF.
RESISTORS ARE 1/2 WATT.
DC VOLTAGES @ 117V. LINE, TO B-

CAPACITORS

CAT. NO.	SYMBOL	DESCRIPTION	PRICE
n—RCE-216	C7A, B, C	5 mf., 25 V, 20 mf., 40 mf., 150 V, electrolytic	$2.10
RCN-048	C3	1.5 mmf., 20%, 500 V, ceramic	.20
RCN-053	C6	.047 mf., +40 −10%, 600 V, molded	.35
RCT-093	C1A, B, C, D	Tuning—Two gang (E.P.)	3.40
n—RTC-097	C1A, B, C, D	Tuning—Two gang (L.P.)	
RCW-3036	C5A, B, C	Bullplate—.0035 mf., 220 mmf., .005 mf.	.80
RCW-3079	C4	100 mmf., 20%, 500 V, ceramic	.25
RCW-3186	C8	.01 mf., +40 −10%, 400 V	.30
UCG-1024	C2	68 mmf., 10%, 500 V	.35

RESISTORS (CARBON 10%)

CAT. NO.	SYMBOL	DESCRIPTION	PRICE
n—RRC-334	R4, S1	VOLUME CONTROL & SWITCH 2 megohms	1.35

The following resistors are common 10% carbon types readily obtainable from any Radio Parts Jobber and are therefore not listed by catalog numbers.

R1	2.2 megohms, ½ W (3.3 megohms some receivers)
R2	6.8 megohms, ½ W
R3, 5	470K, ½ W
R6	180 ohms, ½ W
R7	5600 ohms, ½ W
R8	33 ohms, 2 W

COILS AND TRANSFORMERS

CAT. NO.	SYMBOL	DESCRIPTION	PRICE
n—RLC-136	L2	COIL—Oscillator	$1.00
RLL-064	L1	COIL—Antenna (E.P.)	1.00
n—RTL-184	T1	TRANSFORMER—I-F	1.50
RTO-176	T2	TRANSFORMER—Output	2.05

MISCELLANEOUS

CAT. NO.	DESCRIPTION	PRICE
n—RHC-103	CLAMP—Plastic for antenna mounting (E.P.)	.15
RJJ-010	A-C INTERLOCK—Receptacle for power cord	.20
RJS-221	SOCKET—Tube socket, 7 pin for printed circuit	.25
RWL-027	POWER CORD—6 ft., brown	1.20
ROP-035	SPEAKER—4-inch, PM	3.25

CABINET AND APPEARANCE ITEMS

CAT. NO.	DESCRIPTION	PRICE
RAB-271	LOOP & BACK ASS'Y (L.P.)	
RAB-282	CABINET BACK (E.P.)	.20
n—RAU-450	CABINET—Plastic, mahogany	4.50
RDK-295	KNOB—Ivory, for volume control	.25
n—RDK-514	KNOB—Ivory, for tuning control	.60

PRICES ARE SUGGESTED LIST PRICES AND SUBJECT TO CHANGE WITHOUT NOTICE

"n"—DENOTES PARTS NOT PREVIOUSLY CATALOGED

MODEL 455, 455A, 456, 457

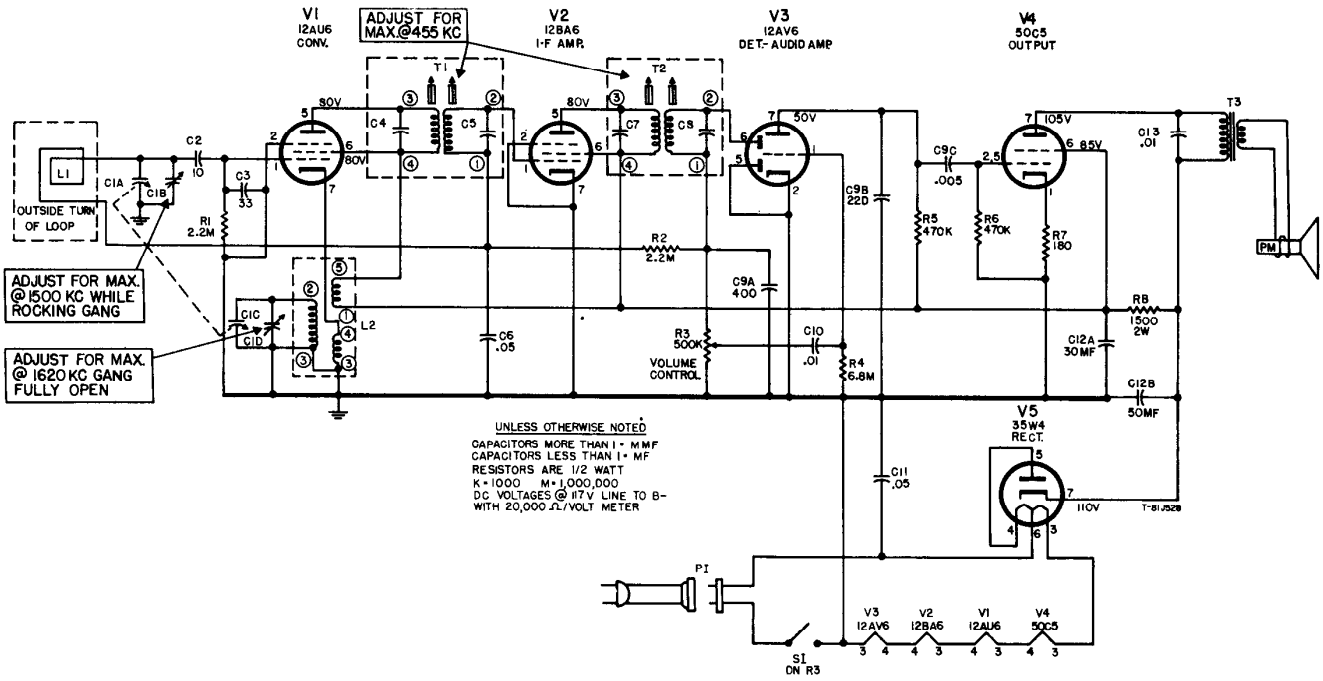

REPLACEMENT PARTS LIST 455,455A,456,457

CAT. NO.	SYMBOL	DESCRIPTION	UNIT PRICE
CAPACITORS			
RCC-078	C11	Paper, .05 mfd, 400 v	$0.40
RCC-086	C6	Paper, .05 mfd, 200 v	.30
N-RCE-207	C12A, C12B	Electrolytic; 30 mfd., 150 v, 50 mfd., 150 v	1.90
N-RCT-083	C1, A, B, C	Tuning	3.65
RCW-3054	C10, 13	Ceramic disc, .01 mfd.	.35
RCW-3127	C2	Ceramic, 10 mmfd	.25
RCW-3177	C9A, B, C	Bullplate, 400 mmf., 220 mmf. & 5000 mmf.	.55
RCW-3178	C3	Ceramic, 33 mmfd., ±20%	.15
RESISTORS			
N-RRC-310	R3, S1	Potentiometer, 500 K volume control with switch	1.50
N-URD-031	R7	180 ohms, ½ watt carbon	.13
URD-113	R5, R6	470 K ohms, ½ watt carbon	.13
URD-129	R1, R2	2.2 megohm, ½ watt carbon	.13
URD-141	R4	6.8 megohm, ½ watt carbon	.13
URF-053	R8	1500 ohms, 2 watt carbon	.25
COILS & TRANSFORMERS			
N-RLC-133	L2	Coil—Oscillator Coil	1.10
N-RTL-174	T1, T2	Transformer—I.F. trans.	1.50
N-RTO-164	T3	Transformer—Output trans.	2.00

N—Parts not previously catalogued.

CAT. NO.	DESCRIPTION	UNIT PRICE
MISCELLANEOUS ELECTRICAL		
RHS-110	SHIELD—Tube shield for V3	$0.15
RJJ-010	INTERLOCK	.20
N-RJS-221	SOCKET—7-pin tube socket	.25
N-RJS-222	SOCKET—7-pin tube socket with ground strap for V3	.25
RWL-027	POWERCORD—with interlock	1.20
S400D-7	SPEAKER—4" P.M. loudspeaker	4.60
CABINET & APPEARANCE ITEMS		
N-RAB-255	BACK—Cabinet back and loop assembly	1.50
N-RAB-271	BACK—Cabinet back and loop assembly (455A, 456, 457)	1.50
N-RAU-428	CABINET—Dark Brown for Models 455 and 455A	6.50
N-RAU-444	CABINET—Ivory for Model 456	6.50
N-RAU-445	CABINET—Light Green for Model 457	6.50
N-RAU-449	CABINET—Dark Brown, for Model 455A	6.50
RDK-357	KNOB—Volume control, Dark Brown, for Model 456	.20
N-RDK-465	KNOB—Tuning knob, Ivory, for Models 455 and 455A	1.40
N-RDK-466	KNOB—Volume control, Ivory, for Models 455 and 455A	.20
N-RDK-504	KNOB—Tuning knob, Dark Brown, for Model 456	1.40
N-RDK-505	KNOB—Tuning knob, Dark Green, for Model 457	1.40
N-RDK-506	KNOB—Volume Control, Dark Green, for Model 457	.20
N-RMS-356	CLIP—To captivate tuning knob on cabinet	.05

PRICES ARE SUGGESTED LIST PRICES AND SUBJECT TO CHANGE WITHOUT NOTICE

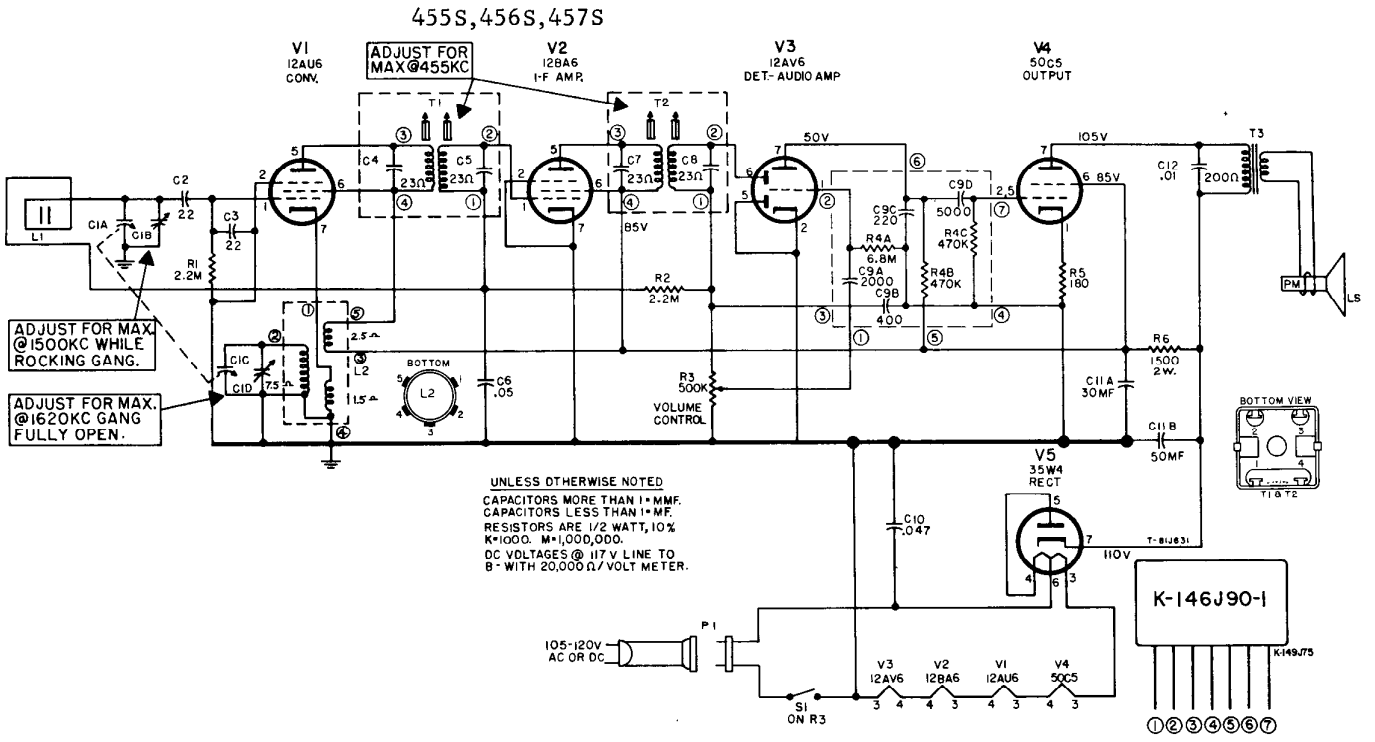
455S,456S,457S
V1
12AU6
CONV.
ADJUST FOR
MAX@455KC
V2
12BA6
1-F AMP.
V3
12AV6
DET.- AUDIO AMP
V4
50C5
OUTPUT
T1
T2
T3
50V
105V
85V
C1A
C1B
C2
.22
C3
.22
R1
2.2M
C4
23Ω
C5
23Ω
C7
23Ω
C8
23Ω
R2
2.2M
C9C
220
C9D
5000
R4A
6.8M
C9A
2000
C9B
400
R4C
470K
R4B
470K
R5
180
C12
.01
200Ω
PM
LS
R6
1500
2W.
C11A
30MF
C11B
50MF
R3
500K
VOLUME
CONTROL
C6
.05
C1C
C1D
75
2.5
1.5
L2
BOTTOM
ADJUST FOR MAX.
@1500KC WHILE
ROCKING GANG.
ADJUST FOR MAX.
@1620KC GANG
FULLY OPEN.
BOTTOM VIEW
T1 & T2
V5
35W4
RECT
C10
.047
110V
T-81J631
K-146J90-1
K-149J75
P1
105-120V
AC OR DC
S1
ON R3
V3
12AV6
V2
12BA6
V1
12AU6
V4
50C5
1 2 3 4 5 6 7
UNLESS OTHERWISE NOTED
CAPACITORS MORE THAN 1 MMF.
CAPACITORS LESS THAN 1 MF.
RESISTORS ARE 1/2 WATT, 10%
K=1000. M=1,000,000.
DC VOLTAGES @ 117 V LINE TO
B- WITH 20,000 Ω/VOLT METER.

REPLACEMENT PARTS LIST 455S,456S,457S

CAT. NO.	SYMBOL	DESCRIPTION	PRICE
CAPACITORS			
RCC-086	C6	.05 mfd., @ 200 v, paper	$0.30
RCE-207	C11A, B	Electrolytic, 30 mfd., 50 mfd., @ 150 v	1.90
RCN-053	C10	.047 mfd., @ 600 v, molded	.35
RCT-093	C1A, B, C, D	Tuning gang	3.40
RCW-3186	C12	.01 mfd., @ 450 v, cer.	.30
RCW-3196	C2, 3	22 mmf., @ 500 v, cer.	.20
RCW-3207	C9A, B, C, D R4A, B, C	Coupling network	1.00
RESISTORS			
RRC-310	R3	VOLUME CONTROL with switch, 500 K ohms	1.50
URD-031	R5	180 ohms, ±10%, ½ w, car.	.13
URD-129	R1, R2	2.2 megohm, ±10%, ½ w. car.	.13
URF-053	R6	1500 ohms, ±10%, 2 w. car.	.25
COILS & TRANSFORMERS			
RLC-135	L2	COIL—Oscillator coil	1.00
RLL-064	L1	COIL—Iron core loop antenna	1.00
RTL-183	T1, 2	TRANS.—I-F trans.	1.65
RTO-176	T3	TRANS.—Output trans.	2.05

CAT. NO.	DESCRIPTION	PRICE
MISCELLANEOUS ITEMS		
RHC-060	CLAMP—Plastic clamp (antenna)	$0.15
RHS-110	SHIELD—Tube shield for V-3	.15
RHS-161	SHIELD—Flat, mounted on V-2 socket center pin	.10
RHW-025	WASHER—Flat washer	
RJJ-010	RECEPTACLE—Power cord receptacle	.20
RJS-221	SOCKET—Tube socket	.25
RJS-222	SOCKET—Tube socket with ground clip for V-3	.25
n-RMS-374	CLIP—Ground clip for molded socket	.02
RWL-027	POWER CORD—With interlock	1.20
S-400D7	LOUDSPEAKER—4" loudspeaker, P.M.	4.60
CABINETS & APPEARANCE ITEMS		
n-RAB-282	BACK—Cabinet back	.20
RAU-444	CABINET—Ivory for Model 456S	6.50
RAU-445	CABINET—Light Green, Model 457S	6.50
RAU-449	CABINET—Dark Brown, Model 455S	6.50
RDK-357	KNOB—Vol. control, Dark Brown, 456S	.20
RDK-465	KNOB—Tuning knob, Fawn, 455S	1.40
RDK-466	KNOB—Vol. control, Fawn, 455S	.20
RDK-504	KNOB—Tuning knob, Dark Brown, 456S	1.40
RDK-505	KNOB—Tuning knob, Dark Green, 457S	1.40
RDK-506	KNOB—Vol. control, Dark Green, 457S	.20
RMS-356	CLIP—To captivate tuning knob on cabinet	.05

PRICES ARE SUGGESTED LIST PRICES AND SUBJECT TO CHANGE WITHOUT NOTICE. "m"—Parts not previously catalogued.

MODELS 465, 466, 467

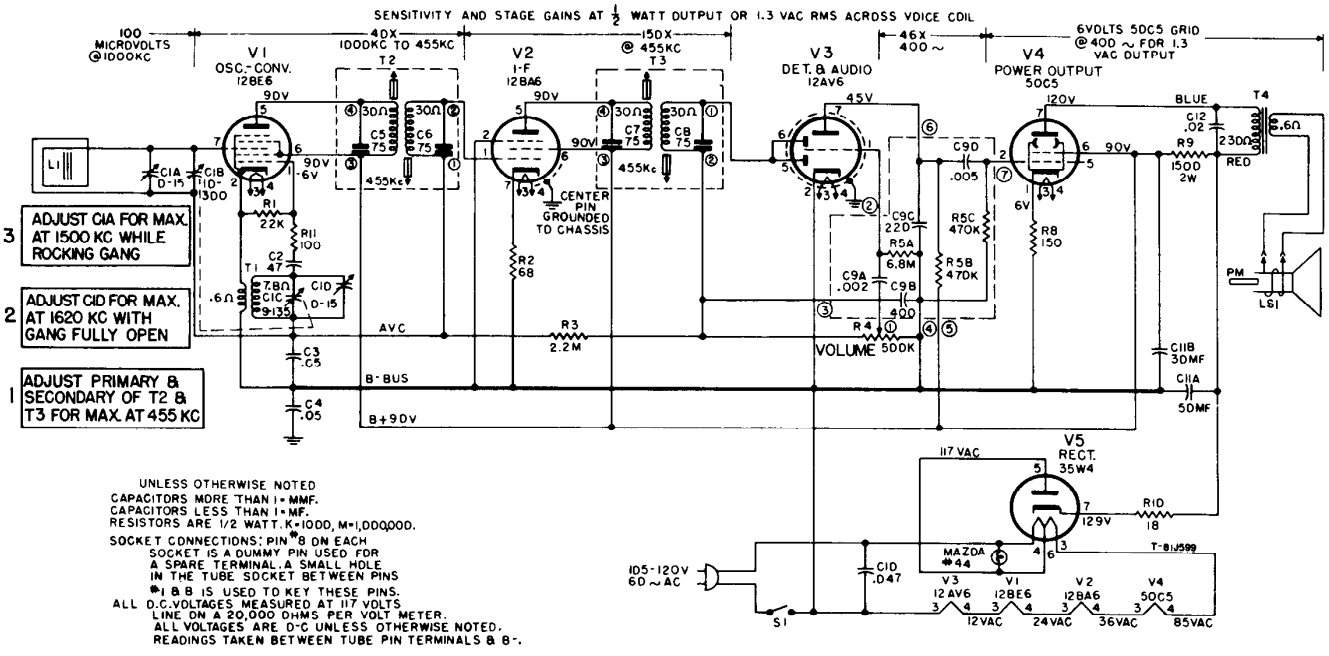

UNLESS OTHERWISE NOTED
CAPACITORS MORE THAN 1 = MMF.
CAPACITORS LESS THAN 1 = MF.
RESISTORS ARE 1/2 WATT. K = 1000, M = 1,000,000.
SOCKET CONNECTIONS: PIN *8 ON EACH SOCKET IS A DUMMY PIN USED FOR A SPARE TERMINAL. A SMALL HOLE IN THE TUBE SOCKET BETWEEN PINS *1 & 8 IS USED TO KEY THESE PINS.
ALL D.C. VOLTAGES MEASURED AT 117 VOLTS LINE ON A 20,000 OHMS PER VOLT METER.
ALL VOLTAGES ARE D-C UNLESS OTHERWISE NOTED.
READINGS TAKEN BETWEEN TUBE PIN TERMINALS & B-.

REPLACEMENT PARTS LIST—MODELS 465, 466, 467

CAT. NO.	SYMBOL	DESCRIPTION	PRICE
CAPACITORS			
RCE-200	C11A, B	50-30 mf., 150 v, electrolytic	$2.10
RCN-050	C12	.022 mf., 600 v., paper molded	.35
RCN-053	C10	.047 mf., ±20%, 600 v	.35
RCT-076	C1A, B, C, D	Tuning capacitor, two-gang	3.55
RCW-3048	C9A, B, C, D	.002 mf., 400 mmf., 220 mmf., .005 mf., ceramic couplate	.90
RCW-3075	C2	47 mmf., ±20%, N2200 ceramic	.25
RCW-3207	C9A, B, C, D R5A, B, C	Audio coupling network	1.00
UCC-045	C3, 4	.05 mf., 400 v, paper.	.30
RESISTORS (CARBON, ±10%)			
URD-007	R10	18 ohms, ½ watt	.13
URD-021	R2	68 ohms, ½ watt	.13
URD-025	R11	100 ohms, ½ watt	.13
URD-029	R8	150 ohms, ½ watt	.13
URD-081	R1	22,000 ohms, ½ watt	.13
URD-129	R3	2.2 megohms, ½ watt	.13
URF-053	R9	1500 ohms, 2 watts	.25
POTENTIOMETER			
n-RRC-329	R4, S1	VOLUME CONTROL AND SWITCH—500,000 ohms	1.65
COILS AND TRANSFORMERS			
RLC-122	T1	COIL—Oscillator	1.00
RLL-055	L1	ANTENNA—Ferrite core, 300 uh inductance 7 in. long, ¼ in. diameter	1.50
RTL-163	T2, 3	TRANSFORMER—I-f	1.70
RTO-128	T4	TRANSFORMER—Output	1.90

CAT. NO.	DESCRIPTION	PRICE
MISCELLANEOUS ELECTRICAL		
REP-002	BOARD—Sub-chassis with stamped circuit. No hardware, pins or parts included	$1.30
RII-081	WAFER—Part of i-f transformer receptacle 13/16 in. x 7/8 in.	.05
RII-082	WAFER—Part of tube receptacle 1 1/2 in. dia.	.05
RJC-004	TERMINAL—Female speaker connector on audio output leads	.02
RJC-027	CONTACT—Dip solder contact, includes tube pin clip for tube receptacles	.03
RJC-028	CONNECTOR—Dip solder terminal only, used on RLC-122 and as common connector	.02
RJC-030	CLIP—Dip solder contact and clip for i-f transformer, spring brass, connects pin 6-12BE6, pin 6-12BA6 and pin 6-12AV6	.02
RJC-031	I-F CLIP—Dip solder contact and clip for i-f transformers, spring brass, connects pin 5-12BE6, pins 1 and 5-12BA6	.02
RJX-031	PILOT LIGHT ASS'Y—Includes bayonet type socket for Mazda No. 44 pilot lamp with clip-on bracket	.40

CAT. NO.	DESCRIPTION	PRICE
MISCELLANEOUS ELECTRICAL (Cont'd)		
ROP-027	SPEAKER—4-inch, 3.2 ohms, yoke rotated 90 deg	$4.95
RWL-009	CORD—Power cord and plug, brown, 6 ft long, 465	.70
RWL-016	CORD—Power cord and plug, ivory, 6 ft long, 466	.75
RWL-031	CORD—Power cord and plug, gray, 6 ft long, 467	.75
MISCELLANEOUS MECHANICAL		
RDC-032	DIAL CORD—Bulk quantity 25 yards	2.50
RDM-048	GUIDE POST—For dial cord	.05
RHC-024	CLIP—7/8 in. mounts C11A, B	.10
RHC-080	CLIP—Holds Textolite sub-chassis	.10
RHE-014	EYELET—Tube receptacle wafer mounting	.01
RHE-016	EYELET—I-f receptacle wafer mounting	.01
RHI-017	GROMMET—Two-piece strain relief for power cord	.15
RHS-084	SCREW—Grille and speaker screw	.05
RHS-108	LIGHT SHIELD—Dial light shield, black fiber tubing 1 1/8 in. long, 7/16 in. diameter	.05
RHS-109	INSULATING SPACER—Black Textolite in chassis tube holes	.20
RHS-110	SHIELD—Miniature tube shield, metal, 1 3/4 in. long for 12AV6	.15
RHS-118	SHIELD POST—Tube pin shield	.05
RII-084	ANTENNA COVER—Polystyrene, molded brown, 10 1/4 in. long, 3/4 in. wide	.60
RII-090	SHIELD—Heat shield, fiber wafer, used on 50C5 tube socket	.05
RMS-118	SPRING—Dial cord tension spring	.10
n-RMX-318	TUNING SHAFT AND BUSHING ASSEMBLY	.40
CABINETS AND APPEARANCE ITEMS		
RAB-221	BACK—Masonite cabinet back without antenna 12 3/4 in. x 4 1/2 in.	.25
RAG-033	GRILLE CLOTH—Maroon grille cloth with chipboard mounting ring 3 3/4 in. diameter for Model 465	.30
RAG-035	GRILLE CLOTH—White grille cloth with chipboard mounting ring 3 3/4 in. diameter for Model 466	.30
n-RAG-083	GRILLE CLOTH—Gray grille cloth with chipboard mounting ring 3 3/4 in. diameter for Model 467	.30
RAU-385	CABINET—Mahogany plastic for Model 465	8.50
RAU-386	CABINET—Ivory plastic for Model 466	8.50
n-RAU-437	CABINET—Gray plastic for Model 467	8.50
n-RDG-011	DIAL BACKPLATE—Red with gold markers	.55
RDK-425	KNOB—Clear and gold plastic knob for volume and tuning	.35
RDP-082	DIAL POINTER	.50
n-RDS-134	DIAL SCALE AND WINDOW—For Models 465 and 467	2.00
n-RDS-135	DIAL SCALE AND WINDOW—For Model 466	2.00
RYN-017	MEDALLION — "Dial Beam," adhesive-metalized styrene gold background	.30

MODELS 470, 471, 472

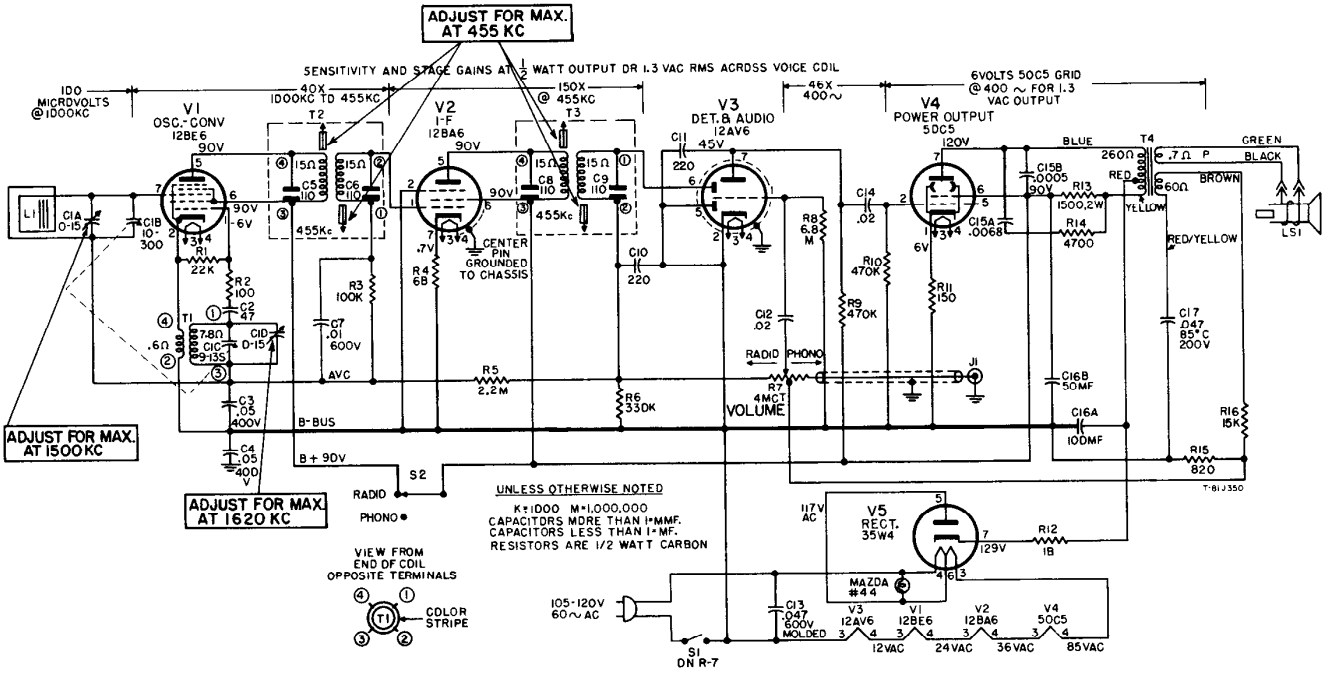

REPLACEMENT PARTS LIST—MODELS 470, 471 AND 472

CAPACITORS

CAT. NO.	SYMBOL	DESCRIPTION	PRICE
RCC-129	C12, 14	.02mf., +40 −10%, 400V, 85C	$0.35
RCE-166	C16A, B	100-50mf.,@150V. electrolytic	2.60
n-RCT-085	C1A, B, C, D	Tuning capacitor, two gang	3.95
RCW-3075	C2	47mmf., ceramic	25
RCW-3104	C15A, B	Bullplate—.0068mf., .005mf.	.50
n-RCW 3195	C10, 11	220mmf., ceramic	.25

The following capacitors not listed by catalog number are common items and are readily obtainable from any Radio Parts Jobber.

C3, 4	.05 mf., 400V
C7	01 mf., 600V
C13	.047 mf., 600V, molded
C17	.047 mf . 200V, 85° C

RESISTORS

The following resistors are common 10% carbon types which are readily obtainable from any Radio Parts Jobber and are therefore not listed by catalog number.

R1	22K, ½ W
R2	100 ohms, ½ W
R3	100K, ½ W
R4	68 ohms, ½ W
R5	2.2 megohms, ½ W
R6	330K, ½ W
R8	6.8 megohms, ½ W
R9, 10	470K, ½ W
R11	150 ohms, ½ W
R12	18 ohms, ½ W
R13	1500 ohms, 2W
R14	4700 ohms, ½ W
R15	820 ohms, ½ W
R16	15K, ½ W

POTENTIOMETER

n-RRC-326	R7, S1	VOLUME CONTROL & SWITCH—4 megohm, center tapped	$1.75

COILS & TRANSFORMERS

RLC-122	T1	COIL—Oscillator	$1.00
RLL-055	L1 (E.P.)	ANTENNA—Ferrite core, 300 uh inductance, 7" long, ¼" diameter	1.50
RLL-067	L1	ANTENNA COIL—for L.P. receivers	
RTL-143	T2, 3	TRANSFORMER—I-F	1.80
RTO-157	T4	TRANSFORMER—Output	3.35

MISCELLANEOUS ELECTRICAL

RII-081		WAFER—Part of I-F trans. recept. 15/16 x ⅞"	$0.05
RII-082		WAFER—Part of tube receptacle, 1 1/32" diameter	.05
RII-088		BOARD—Sub-chassis, bare	.60
RJC-004		TERMINAL—Female speaker connector	$0.02
RJC-027		CONTACT—Dip solder contact, includes tube pin clip for tube receptacle	.03
RJC-028		CONNECTOR—Dip solder terminal only, used on RLC-122	.02
RJC-030		CLIP—Dip solder contact and clip for i-f trans., spring brass, connects pin 6-12BE6, 12BA6 and 12AV6	.02
RJC-031		CLIP—Dip solder contact and clip for i-f trans., spring brass, connects pin 5-12BE6, pins 1 and 5-12BA6	.02
RJS-182		CONNECTOR—Phono input	.15
ROP-030		SPEAKER—5½" PM: 3.2 ohms	6.25
RSS-009		SWITCH—Radio-phono, S2	.30
RWL-009		CORD—Power cord and plug, brown, 6 ft. long, Model 470 and 472	.70
RWL-016		CORD—Power cord & plug, ivory, 6 ft. long, Model 471	.75
RJX-031		PILOT LIGHT ASSEMBLY—Bayonet-type socket for Mazda No. 44 pilot light, with clip-on bracket	.45

MISCELLANEOUS MECHANICAL

RHC-024		CLIP—⅞" mounts C16	$0.10
RHC-080		CLIP—Holds sub-chassis	.10
RHE-014		EYELET—Tube recept. wafer mtg.	.01
RHE-016		EYELET—I-F receptacle wafer mtg.	.01
RHI-017		GROMMET—Two piece strain relief for power cord	.15
RHS-084		SCREW—#6 self-tapping ⅜" for grille	.02
RHS 109		SHIELD—Pin in chassis tube holes	.20
RHS-110		SHIELD—Miniature tube shield, metal, 1¾" long for 12AV6	.15
RHS-118		SHIELD—Tube pin shield	.05
RHS-127		SHIELD—For pilot light	.05
RHS-138		SCREW—Self-tapping #4, ¼" long	.03
RHW-055		WASHER—Felt, for tuning knob	.05
n-RII-118		LOOP SUPPORT—L.P. receivers	
RII-084		ANTENNA LOOP COVER—Polystyrene, molded brown, 10¼" lg. ⅝" wd. (E.P. receivers)	.60
RII-090		SHIELD—Heat shield, fiber wafer used on 50C5 tube socket	.05
RMS-329		COMPRESSION RING—For tuning knob	.05

CABINET AND APPEARANCE ITEMS

RAB-242		BACK—Cabinet back, masonite	$0.30
RAG-071		GRILLE—Gold color, Model 470, 471	1.45
n-RAG-084		GRILLE—Antique white, Model 472	.95
n-RAU-438		CABINET—Plastic, mahogany, 470	7.00
n-RAU-439		CABINET—Plastic, ivory, Model 471	7.00
n-RAU-440		CABINET—Plastic red, Model 472	7.00
RDK-425		KNOB—Volume, clear and gold	.35
n-RDK-497		KNOB—Tuning, ivory, Model 470	1.15
n-RDK-498		KNOB—Tuning, maroon, Model 471	1.05
n-RDK-499		KNOB—Tuning, antique white, 472	1.05
RYN-027		MEDALLION	.35

"n" DENOTES NEW ITEMS NOT PREVIOUSLY CATALOGED

PRICES ARE SUGGESTED LIST PRICES AND SUBJECT TO CHANGE WITHOUT NOTICE

475,476,477

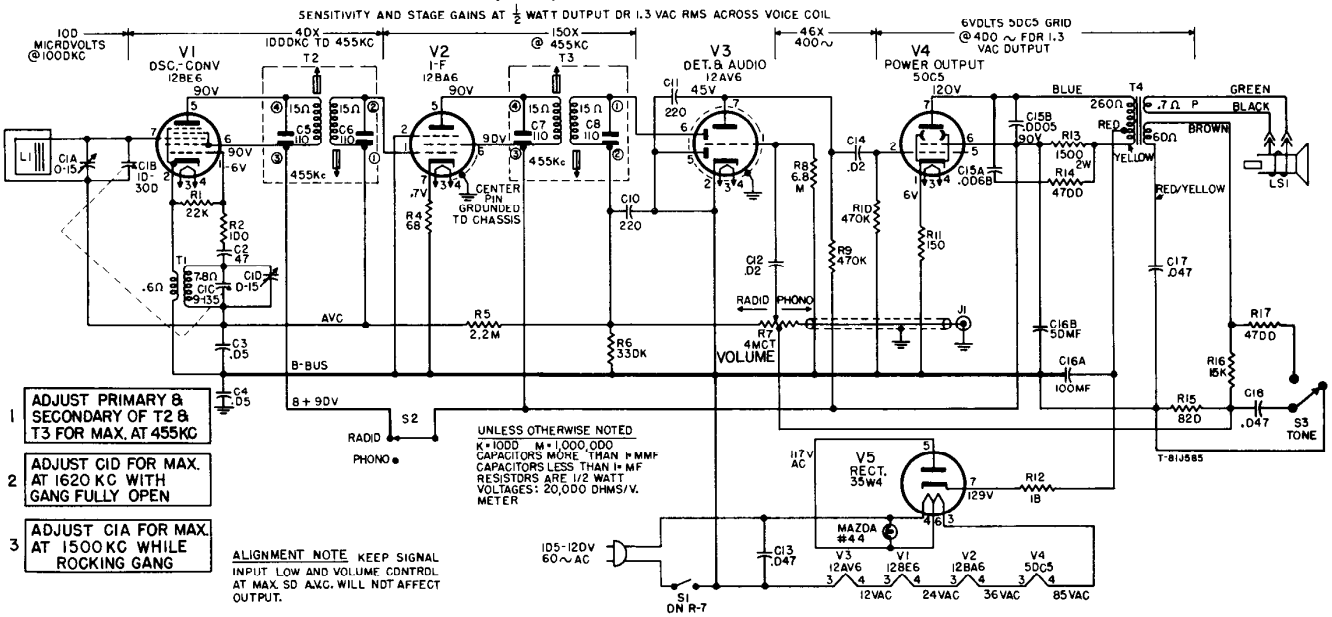
SENSITIVITY AND STAGE GAINS AT 1/2 WATT OUTPUT OR 1.3 VAC RMS ACROSS VOICE COIL
100 MICROVOLTS @ 1000KC
40X 1000KC TO 455KC
150X @ 455KC
46X 400~
6VOLTS 50C5 GRID @ 400 ~ FOR 1.3 VAC OUTPUT
V1 OSC.-CONV 12BE6
V2 I-F 12BA6
V3 DET. & AUDIO 12AV6
V4 POWER OUTPUT 50C5
V5 RECT. 35W4
T2
T3
T4
T1
T-81J585
LS1
S1 ON R-7
S2
S3 TONE
RADIO
PHONO
VOLUME
R7 4MCT
AVC
B-BUS
B+ 90V
CENTER PIN GROUNDED TO CHASSIS
BLUE
GREEN
BLACK
BROWN
RED
YELLOW
RED/YELLOW
117V AC
105-120V 60~AC
MAZDA #44
12VAC
24VAC
36VAC
85VAC
UNLESS OTHERWISE NOTED
K = 1000 M = 1,000,000
CAPACITORS MORE THAN 1 MMF
CAPACITORS LESS THAN 1 MF
RESISTORS ARE 1/2 WATT
VOLTAGES: 20,000 OHMS/V. METER
1 ADJUST PRIMARY & SECONDARY OF T2 & T3 FOR MAX. AT 455KC
2 ADJUST C1D FOR MAX. AT 1620 KC WITH GANG FULLY OPEN
3 ADJUST C1A FOR MAX. AT 1500 KC WHILE ROCKING GANG
ALIGNMENT NOTE KEEP SIGNAL INPUT LOW AND VOLUME CONTROL AT MAX. SO A.V.C. WILL NOT AFFECT OUTPUT.

MODELS 475, 476, 477

REPLACEMENT PARTS LIST

CAPACITORS

CAT. NO.	SYMBOL	DESCRIPTION	PRICE
RCC-126	C17, 18	.047 mfd., @ 200 V; paper.	$0.35
RCC-129	C14, 12	.02 mfd., @ 400 V; paper	.35
RCE-177	C16A, B	100 mfd. –50 mfd., @ 150 V d-c, electrolytic	2.50
RCN-053	C13	.047 mfd., @ 600 V; molded	.35
n-RCT-089	C1A, B, C, D	Tuning gang	
RCW-3075	C2	47 mmf., ceramic	.25
RCW-3104	C15A, B	Bullplate, 6800 mmf., and 500 mmf.	.50
n-RCW-3195	C10, 11	220 mmf., ceramic	
UCC-045	C3, 4	.05 mfd., @ 600 V; paper	.30

RESISTORS

n-RRC-328	R7	VOLUME CONTROL—With push-pull switch, 2 meg., 2-way	1.80
URD-007	R12	18 ohms, ±10%, ½ w., car.	.13
URD-021	R4	68 ohms, ±10%, ½ w., car.	.13
URD-025	R2	100 ohms, ±10%, ½ w., carbon	.13
URD-029	R11	150 ohms, ±10%, ½ w., carbon	.13
URD-047	R15	820 ohms, ±10%, ½ w., car.	.13
URD-065	R14, 17	4700 ohms, ±10%, ½ w., carbon	.13
URD-077	R16	15K ohms, ±10%, ½ w., carbon	.13
URD-081	R1	22K ohms, ±10%, ½ w., carbon	.13
URD-109	R6	330K ohms, ±10%, ½ w., car.	.13
URD-113	R9, 10	470K ohms, ±10%, ½ w., car.	.13
URD-129	R5	2.2 meg., ±10%, ½ w., car.	.13
URD-141	R8	6.8 meg., ±10%, ½ w., car.	.13
URF-053	R13	1500 ohms, ±10%, 2 watt, carbon	.25

COILS AND TRANSFORMERS

RLC-122	T1	COIL—Oscillator coil	1.00
RLL-055	L1 (Early)	COIL—Iron core loop antenna	1.50
RTL-143	T2, 3	TRANSFORMER—I-F transformer	1.80
RTO-145	T4	TRANSFORMER — Output trans.	3.40
n- RLL-067	L1 (Late)	COIL—Iron core loop antenna	1.00

MISCELLANEOUS ELECTRICAL

RHS-110	SHIELD—Tube shield	.15
RHS-127	SHIELD—Pilot light shield	.05
RII-081	WAFER—Sub-chassis I-F wafer	.05
RII-082	WAFER—Sub-chassis tube wafer	.05

MISCELLANEOUS ELECTRICAL (CONT'D)

RII-088	BOARD—Sub-chassis board (less all hardware)	$0.60
RJC-004	TERMINAL—Pin terminal (speaker)	.02
RJC-027	CONTACT—Dip solder contact, includes tube pin clip for tube socket	.03
RJC-028	TERMINAL—Dip solder terminal used on RLC-122	.02
RJS-182	CONNECTOR—Phono input connector	.15
RSS-009	SWITCH—(S2) Phono-radio switch	.30
RSW-067	SWITCH—(S3) Tone control (SPDT)	.75
RWX-040	SOCKET—Pilot light socket ass'y.	.45
S-625D7	SPEAKER—6-in. PM Loudspeaker	5.08

MISCELLANEOUS MECHANICAL

RDC-032	DIAL CORD—Bulk dial cord (25 yds.)	2.50
RHC-024	CLIP—Clip for electro. capacitor	.10
RHC-080	CLIP—Sub-chassis spring clip	.05
RHE-014	EYELET—Tube socket eyelet	.01
RHE-016	EYELET—I-F socket eyelet	.01
RHI-017	STRAIN RELIEF—For power cord	.15
RHS-084	SCREW—For speaker and grille	.05
RHS-109	SHIELD—Pin shield in chassis tube holes	.20
RHS-118	SHIELD—Tube pin shield	.05
RHS-138	SCREW—Self tap, No. 4 x ¼ in.	.03
RII-090	SHIELD—Heat shield	.05
RJC-030	CLIP—I-F terminal clip, connects pin 6—12BE6; pin 6—12BA6; pin 6—12AV6	.02
RJC-031	CLIP—I-F terminal clip, connects pin 5—12BE6, pins 1 and 5—12BA6	.02
RMS-118	SPRING—Spring for tuning drum	.10
n-RMS-366	RING—Compression ring	.03
n-RMX-317	SHAFT—Tuning shaft assembly	.40

CABINETS AND APPEARANCE ITEMS

n-RAB-268	BACK—Cabinet back	.40
n-RAG-087	GRILLE—Gold grille for Models 475 and 476	1.00
n-RAG-088	GRILLE—White grille for Model 477	1.75
n-RAU-446	CABINET—Mahogany plastic for Model 475	8.00
n-RAU-447	CABINET—Ivory plastic, for Model 476	8.00
n-RAU-448	CABINET—Gray plastic, for Model 477	8.00
n-RDE-154	BEZEL—Dial bezel	1.10
RDK-425	KNOB—Clear and gold knob for volume and tuning	.35
n-RDP-086	POINTER—Translucent white dial pointer	.65
n-RDW-094	DIAL SCALE AND WINDOW	1.10
RII-084	COVER—Plastic loop cover	.60
RWL-009	POWER CORD—Brown power cord for Models 475 and 477	.70
RWL-026	POWER CORD—Ivory power for Model 476	.75
RYN-019	MEDALLION—"Musiphonic" medallion	.35

"n" DENOTES NEW ITEMS NOT PREVIOUSLY CATALOGED

PRICES ARE SUGGESTED LIST PRICES AND SUBJECT TO CHANGE WITHOUT NOTICE

MODEL 480

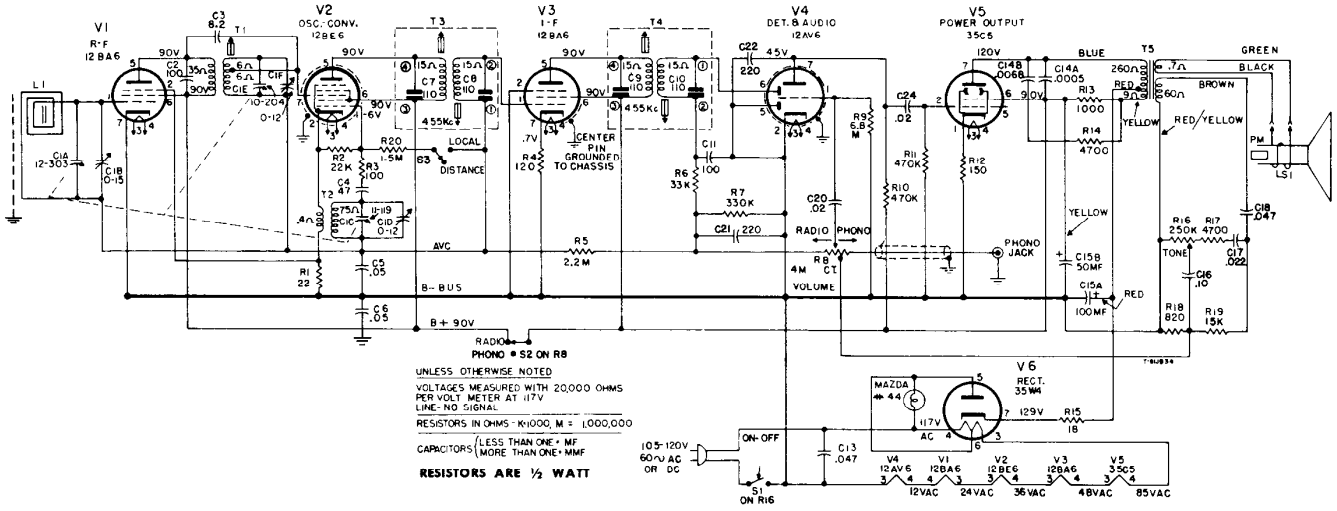

UNLESS OTHERWISE NOTED

VOLTAGES MEASURED WITH 20,000 OHMS PER VOLT METER AT 117V LINE- NO SIGNAL

RESISTORS IN OHMS - K=1000, M = 1,000,000

CAPACITORS { LESS THAN ONE = MF / MORE THAN ONE = MMF

RESISTORS ARE ½ WATT

REPLACEMENT PARTS LIST—MODEL 480

CAPACITORS

CAT. NO.	SYMBOL	DESCRIPTION	PRICE
RCC-126	C18	.047 mf., ±20%, 200 V., paper	$0.35
RCC-127	C17	.022 mf., ±20%, 200 V., paper	.35
RCC-128	C16	.10 mf., ±20%, 200 V., paper	.40
RCC-129	C20, 24	.02 mf., +40, −10%, 400 V., paper	.35
RCE-166	C15A, B	100-50 mf., 150 V., electro.	2.60
RCN-053	C13	.047 mf., ±20%, 600 V., molded	.35
n-RCT-082	C1A, B, C, D, E, F	TUNING—Three gang with drum and dial beam bracket	5.25
RCW-3075	C4	47 mmf., ±20%, ceramic	.25
RCW-3079	C2, 11	100 mmf., ±20%, ceramic	.25
RCW-3104	C14A, B	.005 mf .0068 mf., ceramic	.25
RCW-3195	C21, 22	220 mmf., disk ceramic	.25
n-RCW-3214	C3	8.2 mmf., ceramic	.20
UCC-045	C5, 6	.05 mf., 600 V., paper	.30

POTENTIOMETERS

n-RRC-331	R8, S2	VOLUME CONTROL & RADIO-PHONO SWITCH	1.55
n-RRC-332	R16, S1	TONE CONTROL & ON-OFF SWITCH	1.70

RESISTORS (CARBON, ±10%)

All resistors not listed in this parts list are common items, readily available from radio parts jobber. For description of such unlisted items, refer to the attached schematic diagram.

COILS AND TRANSFORMERS

RLB-034	T1	COIL—R-F coil	1.35
RLC-126	T2	COIL—Oscillator coil	.90
RLL-060	L1	LOOP—Antenna, wound on ferrite rod, 7 x ½ in.	1.20
RTL-143	T3, 4	TRANSFORMER—I-F	1.80
RTO-145	T5	TRANSFORMER—Audio output	3.40

MISCELLANEOUS ELECTRICAL

RJC-004	CONNECTOR—Small female, on audio output leads	.02
RJC-027	CONTACT—Dip solder contact includes tube pin clip for tube receptacle	.03
RJC-028	TERMINAL—Dip solder terminal used on RLC-126	.02
RJC-030	I-F CLIP—Dip solder contact and clip for i-f trans., spring brass, connects pin 5—12BE6, 1—12BA6 and 5—12BA6	.02
RJC-031	I-F CLIP—Dip solder contact and clip for i-f trans., spring brass, connects pins 5—12BE6, 1—12BA6 and 5—12BA6	.02
RJS-182	PHONO JACK—Phono input socket, .687 mounting center	.15

CAT. NO.	DESCRIPTION	PRICE

MISCELLANEOUS ELECTRICAL (Cont'd)

RSS-009	SWITCH—Local-distance switch, S3	$0.30
RWL-009	CORD—Power cord and plug, brown	.70
n-RWX-055	PILOT LAMP SOCKET ASSEMBLY	.70
S-625D7	SPEAKER—6½ inch PM; 4 watt, 3.2 ohm voice coil	6.35

MISCELLANEOUS MECHANICAL

RDC-032	DIAL CORD—Drive cord, .28 in. dia., Newton Line Co., NF-28 or equiv. 25 yds.	2.50
RHC-024	CLIP—⅞ in. electrolytic mtg. clip	.10
RHE-014	EYELET—Tube receptacle wafer mtg.	.01
RHE-016	EYELET—I-F trans. wafer mtg.	.01
RHG-018	GROMMET—For mtg. tuning gang	.05
RHI-017	STRAIN RELIEF—Two piece strain relief for power cord	.15
RHJ-005	SPACER—Spacer bushing and sleeve for mtg. tuning capacitor .230 O.D. x 168 I.D.	.02
RHS-041	SCREW—#6 ⅜ in. screw for mounting speaker	.02
RHS-108	SHIELD—Pilot light shield	.05
RHS-109	SPACER—Black Textolite, used in chassis tube holes	.20
RHS-110	SHIELD—Tube shield, metal, 1¾ in. long for 12AV6 and 12BE6 tubes	.15
RHS-118	EYELET PIN—Eyelet and soldering point used to mount 1st i-f socket wafer	.05
RHS-126	LOOP SHIELD—Electrostatic shield over ferrite antenna rod RLL-060	.50
RII-081	WAFER—Part of i-f transformer receptacle 15/16 x ⅞ inches	.05
RII-082	WAFER—Part of tube receptacle 1 1/32 inches diameter	.05
RII-084	COVER—For antenna loop	.60
RII-090	HEAT SHIELD—1 x 1 inch asbestos base phenolic shield between chassis tube hole spacer, RHS-109 and Textolite sub-chassis used at 35W4 and 35C5 tubes	.05
RII-091	BOARD—Sub-chassis, bare	.60
RMS-118	SPRING—Dial cord tension spring	.10
RMW-070	PULLEY—½ in. idler pulley, fits on ¼ in. volume control shaft	.05
n-RMX-322	SHAFT—Drive shaft and bushing assembly	.45

CABINET AND APPEARANCE ITEMS

RAB-241	CABINET BACK—Masonite, 13 9/32 x 4 29/32 in. used with RHS-126	.30
n-RAG-086	GRILLE—Fawn, fits in front of speaker	1.85
n-RAU-454	CABINET—Mottled mahogany, plastic	8.50
n-RDG-012	DIAL BACKPLATE ASSEMBLY—Plastic, fawn	.25
RDK-425	KNOB—Tuning and volume, clear and gold	.35
n-RDK-507	KNOB—Tone, clear and gold with white dot	.35
RDP-079	POINTER—Dial pointer, fits on ⅜ in. shaft	.50
n-RDW-093	WINDOW—Dial window and scale	.60
RYN-019	MEDALLION—Musaphonic emblem	.35

"n"—INDICATES PARTS NOT USED ON PREVIOUS RECEIVERS.

PRICES ARE SUGGESTED LIST PRICES AND ARE SUBJECT TO CHANGE WITHOUT NOTICE.

MODEL 495

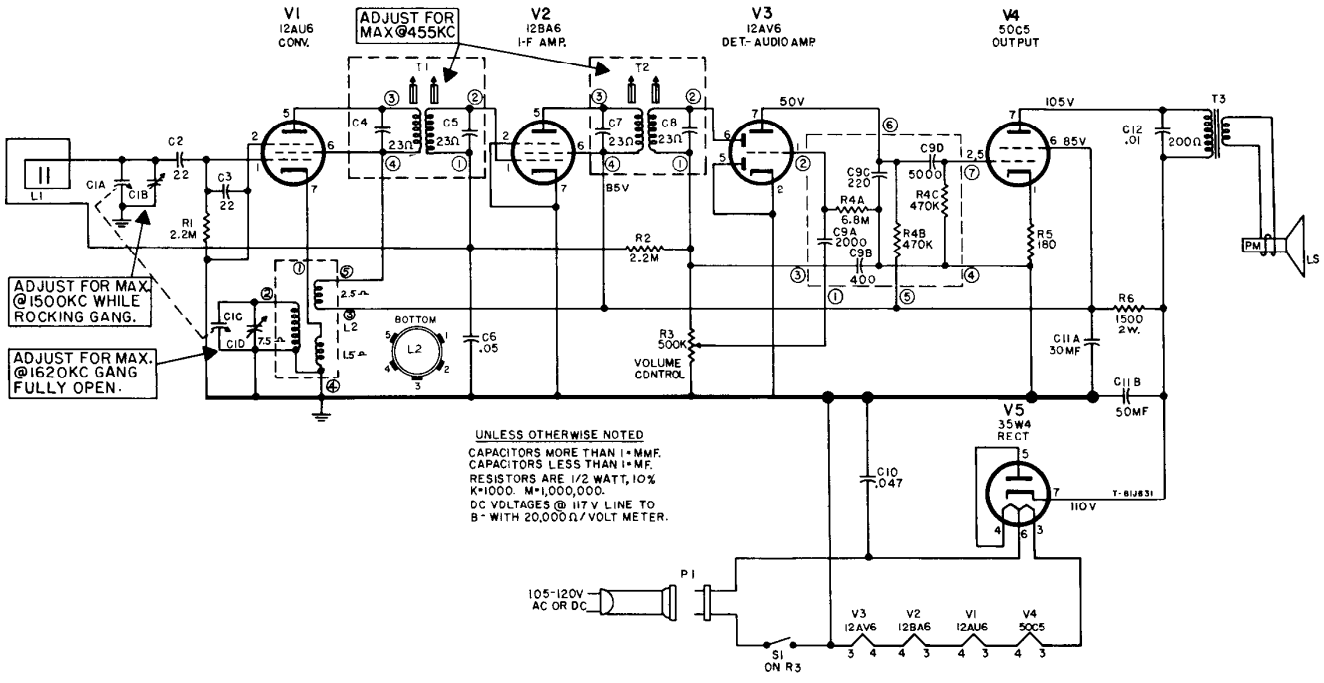
V1
12AU6
CONV.
ADJUST FOR MAX@455KC
V2
12BA6
I-F AMP.
V3
12AV6
DET.- AUDIO AMP
V4
50C5
OUTPUT
T1
T2
T3
C1A
C1B
L1
C2
.22
C3
.22
R1
2.2M
C4
23Ω
C5
23Ω
C7
23Ω
C8
23Ω
85V
50V
105V
85V
R2
2.2M
C9A
2000
C9B
400
C9C
220
C9D
5000
R4A
6.8M
R4B
470K
R4C
470K
R5
180
C12
.01
200Ω
PM
LS
ADJUST FOR MAX. @1500KC WHILE ROCKING GANG.
ADJUST FOR MAX. @1620KC GANG FULLY OPEN.
C1C
C1D
7.5
2.5
L5
L2
BOTTOM
C6
.05
R3
500K
VOLUME CONTROL
R6
1500
2W.
C11A
30MF
C11B
50MF
V5
35W4
RECT
C10
.047
T-81J831
110V
UNLESS OTHERWISE NOTED
CAPACITORS MORE THAN 1 MMF.
CAPACITORS LESS THAN 1 MF.
RESISTORS ARE 1/2 WATT, 10%
K=1000. M=1,000,000.
DC VOLTAGES @ 117 V LINE TO
B- WITH 20,000Ω/VOLT METER.
105-120V AC OR DC
P1
S1
ON R3
V3 12AV6
V2 12BA6
V1 12AU6
V4 50C5
3 4 4 3 4 3 4 3

REPLACEMENT PARTS LIST—MODEL 495

Cat. No.	Description	Price
n-RAB-300	BACK—Cabinet back	$0.25
n-RAG-096	GRILLE—Speaker grille	1.50
n-RAG-097	GRILLE—Control plate grille	1.75
n-RAV-1004	CABINET—Metal cabinet, copper finish	7.25
n-RDK-543	KNOB—Tuning control knob	1.50
n-RDK-544	KNOB—Volume control knob	.35

CAPACITORS

RCC-086	C6	.05 mfd., @ 200 v, paper	$0.30
RCE-207	C11A, B	Electrolytic, 30 mfd., 50 mfd., @ 150 v	3.65
RCN-053	C10	.047 mfd., @ 600 v, molded	.35
RCT-093	C1A, B, C, D	Tuning gang.	3.40
RCW-3186	C12	.01 mfd., @ 450 v, cer.	.30
RCW-3196	C2, 3	22 mmf., @ 500 v, cer.	.20
RCW-3207	C9A, B, C, D R4A, B, C	Coupling network	1.00

RESISTORS

RRC-310	R3	VOLUME CONTROL with switch, 500 K ohms	1.50
URD-031	R5	180 ohms, ±10%, ½ w, car.	.13
URD-129	R1, R2	2.2 megohm, ±10%, ½ w. car.	.13
URF-053	R6	1500 ohms, ±10%, 2 w. car.	.25

COILS & TRANSFORMERS

RLC-135	L2	COIL—Oscillator coil.	1.00
RLL-064	L1	COIL—Iron core loop antenna	1.00
RTL-183	T1, 2	TRANS.—I-F trans.	1.65
RTO-176	T3	TRANS.—Output trans.	2.05

Cat. No.	Description	Price
n-RRC-352	VOLUME CONTROL—with switch, 500 K ohms	$1.35
n-RWL-036	POWER CORD—Brown power cord, 13½ in. long, with interlock	.75
n-RYN-039	MEDALLION—Fastens to speaker grille	.40

MISCELLANEOUS ITEMS

RHC-060	CLAMP—Plastic clamp (antenna)	$0.15
RHS-110	SHIELD—Tube shield for V-3	.15
RHS-161	SHIELD—Flat, mounted on V-2 socket center pin	.10
RHW-025	WASHER—Flat washer	
RJJ-010	RECEPTACLE—Power cord receptacle	.20
RJS-221	SOCKET—Tube socket	.25
RJS-222	SOCKET—Tube socket with ground clip for V-3	.25
n-RMS-374	CLIP—Ground clip for molded socket	.02
S-400D7	LOUDSPEAKER—4" loudspeaker, P.M.	4.60

CABINETS & APPEARANCE ITEMS

n-RAB-282	BACK—Cabinet back	.20
RAU-444	CABINET—Ivory for Model 456S	6.50
RAU-445	CABINET—Light Green, Model 457S	6.50
RAU-449	CABINET—Dark Brown, Model 455S	6.50
RDK-357	KNOB—Vol. control, Dark Brown, 456S	.20
RDK-465	KNOB—Tuning knob, Fawn, 455S	1.40
RDK-466	KNOB—Vol. control, Fawn, 455S	.20
RDK-504	KNOB—Tuning knob, Dark Brown, 456S	1.40
RDK-505	KNOB—Tuning knob, Dark Green, 457S	1.40
RDK-506	KNOB—Vol. control, Dark Green, 457S	.20
RMS-356	CLIP—To captivate tuning knob on cabinet	.05

PRICES ARE SUGGESTED LIST PRICES AND SUBJECT TO CHANGE WITHOUT NOTICE. "m"—Parts not previously catalogued.

MODELS 500, 501

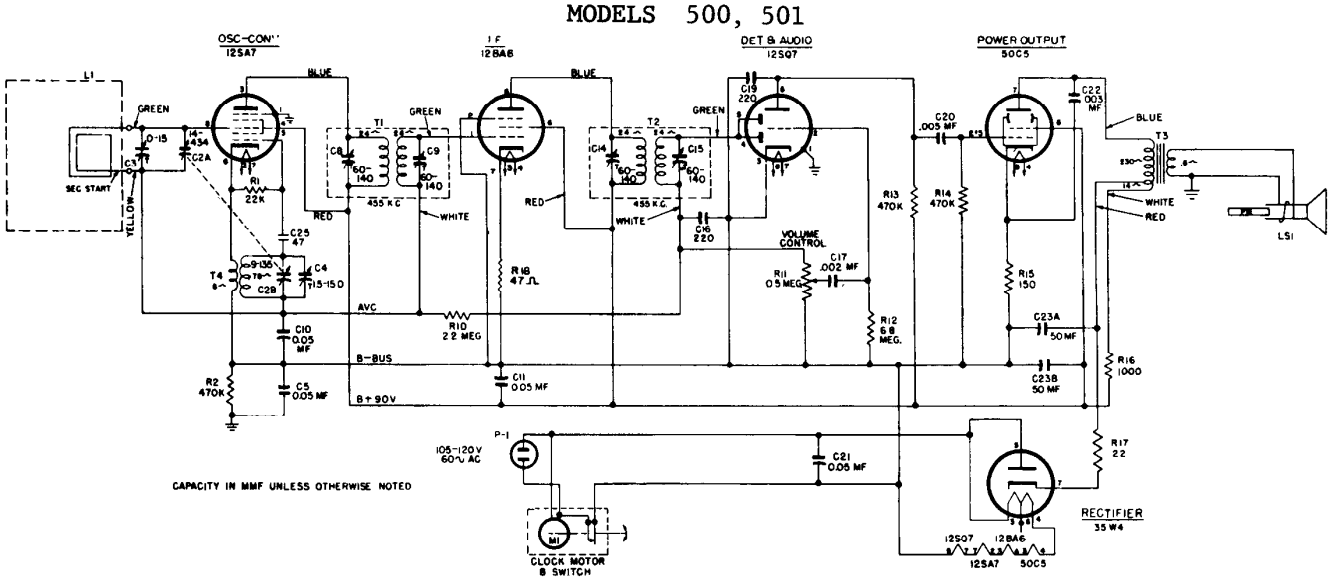

MODEL 500 AND 501 REPLACEMENT PARTS

UNIVERSAL REPLACEMENT PARTS

Cat. No.	Symbol	Description	Unit List Price
*UCC-045	C5, 10, 11, 21	CAPACITOR—.05 mf., 600 v., paper	$0.30
*UCC-630	C17, 20	CAPACITOR—.01 mf., 600 v., paper (used in early production) (may replace respective sections of RCW-3013)	.30
*UCU-036	C16, 19	CAPACITOR—220 mmf., mica (used in early production) (may replace respective sections of RCW-3013)	.30
*UOP-421	LS1	SPEAKER—PM loudspeaker	4.95
*URD-009	R17	RESISTOR—22 ohms, ½ w., carbon	.13
*URD-017	R18	RESISTOR—47 ohms, ½ w., carbon	.13
*URD-029	R15	RESISTOR—150 ohms, ½ w., carbon	.13
*URD-081	R1	RESISTOR—22,000 ohms, ½ w., carbon	.13
*URD-113	R2, 13, 14	RESISTOR—470,000 ohms, ½ w., carbon	.13
*URD-129	R10	RESISTOR—2.2 meg., ½ w., carbon	.13
*URD-141	R12	RESISTOR—6.8 meg., ½ w., carbon	.13
*URF-049	R16	RESISTOR—1000 ohms, 2 w., carbon	.25

SPECIALIZED REPLACEMENT PARTS

Cat. No.	Symbol	Description	Unit List Price
*RAB-097	L1	BACK—Cabinet back cover (includes loop L1)	$1.80
*RAC-074		MOUNTING BRACKET—Metal back cover holds clock to cabinet	.75
RAU-319		CABINET—Brown plastic (Model 500)	4.25
RAU-320		CABINET—White plastic (Model 501)	6.95
*RCC-074	C22	CAPACITOR—.003 mf., 600 v., paper	.25
*RCE-050	C23A, 23B	CAPACITOR—50 mf., 150 v., 50 mf., 150 v., dry electrolytic	2.10

SPECIALIZED REPLACEMENT PARTS (Cont'd)

Cat. No.	Symbol	Description	Unit List Price
*RCT-021	C2A, 2B, C3, C4	CAPACITOR—Tuning capacitor (oscillator and r-f section) with trimmers	$4.70
*RCW-1043	C25	CAPACITOR—47 mmf., ceramic	.60
*RCW-3013	C16, 17, 19, 20	CAPACITOR—220 mmf., .002 mf., 220 mmf., .005 mf., (4 section ceramic) (see UCC-630, UCU-036)	1.00
*RDK-028		KNOB—Volume control knob	.10
*RDK-094		KNOB—Tuning dial wheel	.45
*RDS-047		SCALE—Dial scale (Model 500)	.10
*RDS-050		SCALE—Dial scale (Model 501)	.10
*RJC-004		CLIP—Loop connector clip	.02
*RJS-092		SOCKET—Tube socket for 50C5, 35W4	.20
*RJS-116		SOCKET—Tube socket for 12SA7	.15
*RJS-117		SOCKET—Tube socket for 12SQ7, 35Z5-GT	.15
*RJS-141		SOCKET—Tube socket for 12BA6	.20
*RLC-090	T4	COIL—Oscillator coil	.90
*RHG-015		GROMMET—Cushion mounting for C2A, C2B	.05
*RHH-004		SNAP FASTENER—For cabinet back	.30
*RHJ-005		SPACER—Washer used with RHG-015	.02
*RRC-054	R11	POTENTIOMETER—0.5 meg., volume control	1.25
*RTL-094	T1, C8, C9	TRANSFORMER—1st I-F transformer	1.90
*RTL-095	T2, C14, C15	TRANSFORMER—2nd I-F transformer	1.90
*RTO-036	T3	TRANSFORMER—Output transformer	2.85
*RWL-009		CORD—Power cord (brown) for Model 500	.70
*RWL-016		CORD—Power cord (white) for Model 501	.75
*RYN-005		NAMEPLATE—G-E monogram	.20
*RZC-010	M1	CLOCK—60 cycle, 105–125 v., clock assembly	12.95

MODEL 502

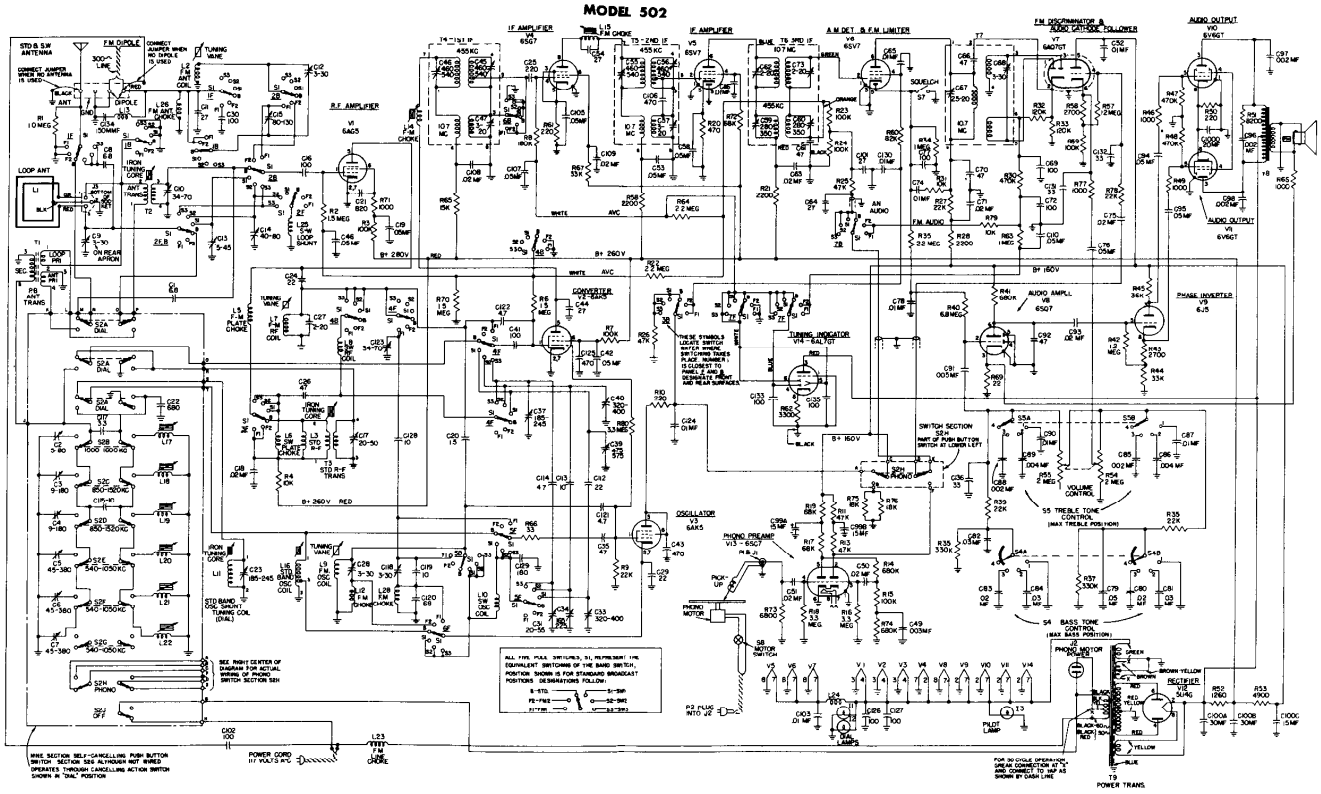

STD B.S.W. ANTENNA
F.M. DIPOLE
LOOP ANT
R.F. AMPLIFIER
IF AMPLIFIER
IF AMPLIFIER
A.M. DET. & F.M. LIMITER
F.M. DISCRIMINATOR & AUDIO CATHODE FOLLOWER
AUDIO OUTPUT
CONVERTER
TUNING INDICATOR
AUDIO AMPLI.
PHASE INVERTER
OSCILLATOR
PHONO PREAMP
PHONO MOTOR
S5 TREBLE TONE CONTROL (MAX TREBLE POSITION)
S4 BASS TONE CONTROL (MAX BASS POSITION)
RECTIFIER
POWER TRANS.
POWER CORD
PILOT LAMP

MODEL 502—REPLACEMENT PARTS LIST

CAT. NO.	SYMBOL	DESCRIPTION
		UNIVERSAL REPLACEMENT PARTS
UCC-036	C85, 88	CAPACITOR—.002 mfd., 600 v., paper
UCC-037	C49	CAPACITOR—.003 mfd., 600 v., paper
UCC-039	C91	CAPACITOR—.005 mfd., 600 v., paper
UCC-040	C52, 65, 74, 78, 87, 90, 103, 116, 124	CAPACITOR—.01 mfd., 600 v., paper
UCC-041	C18, 50, 51, 63, 71, 75, 80, 83, 93, 108, 109	CAPACITOR—.02 mfd., 600 v., paper
UCC-042	C79, 81, 82, 84	CAPACITOR—.03 mfd., 600 v., paper
UCC-045	C48, 53, 76, 105, 107, 110, 58, 19, 42	CAPACITOR—.05 mfd., 600 v., paper
UCG-3034	C129	CAPACITOR—180 mmf., mica
UCN-502	C20	CAPACITOR—1.5 mmf., ceramic
UCN-505	C114	CAPACITOR—4.7 mmf., ceramic
UCN-506	C1, 8	CAPACITOR—6.8 mmf., ceramic
UCN-1550	C21	CAPACITOR—820 mmf., ceramic
UCU-020	C92	CAPACITOR—47 mmf., mica
UCU-028	C77, 102	CAPACITOR—100 mmf., mica
UCU-516	C131, 132, 136	CAPACITOR—33 mmf., mica
UCU-520	C26, 70	CAPACITOR—47 mmf., mica
UCU-528	C72	CAPACITOR—100 mmf., mica
UCU-536	C25	CAPACITOR—220 mmf., mica
UCU-544	C43, 125	CAPACITOR—470 mmf., mica
UCU-1014	C64, 101	CAPACITOR—27 mmf., mica
UCU-1504	C113, 115	CAPACITOR—10 mmf., mica
UCU-1512	C112	CAPACITOR—22 mmf., mica
UCU-1532	C134	CAPACITOR—150 mmf., mica
UCW-012	C24	CAPACITOR—22 mmf., ceramic
UCW-1004	C119, 128	CAPACITOR—10 mmf., ceramic
UCW-1014	C44, 54	CAPACITOR—27 mmf., ceramic
UCW-1024	C120	CAPACITOR—68 mmf., ceramic
UCW-1028	C69	CAPACITOR—100 mmf., ceramic
UCW-1504	C117	CAPACITOR—3.3 mmf., ceramic
UDL-005	I1, 2	PILOT LIGHT—Mazda No. 44
UDL-008	I3	BEZEL LIGHT—Mazda No. 47
UOP-1230		SPEAKER—12-inch speaker
URD-009	R69	RESISTOR—22 ohms, ½ w., carbon
URD-013	R66	RESISTOR—33 ohms, ½ w., carbon
URD-033	R10, 61	RESISTOR—220 ohms, ½ w., carbon
URD-041	R20	RESISTOR—470 ohms, ½ w., carbon
URD-049	R46, 49, 68, 71, 77	RESISTOR—1000 ohms, ½ w., carbon
URD-057	R21, 28, 56	RESISTOR—2200 ohms, ½ w., carbon
URD-059	R43, 58	RESISTOR—2700 ohms, ½ w., carbon
URD-061	R62	RESISTOR—3300 ohms, ½ w., carbon
URD-069	R73	RESISTOR—6800 ohms, ½ w., carbon
URD-073	R31, 79	RESISTOR—10,000 ohms, ½ w., carbon
URD-077	R65	RESISTOR—15,000 ohms, ½ w., carbon
URD-081	R9, 27, 36, 39, 78	RESISTOR—22,000 ohms, ½ w., carbon
URD-085	R44, 67	RESISTOR—33,000 ohms, ½ w., carbon
URD-089	R11, 13, 25	RESISTOR—47,000 ohms, ½ w., carbon
URD-093	R17, 19, 72	RESISTOR—68,000 ohms, ½ w., carbon
URD-095	R60	RESISTOR—82,000 ohms, ½ w., carbon
URD-097	R3, 7, 15, 23, 24, 59	RESISTOR—100,000 ohms, ½ w., carbon
URD-099	R32, 33	RESISTOR—120,000 ohms, ½ w., carbon
URD-103	R8	RESISTOR—180,000 ohms, ½ w., carbon
URD-109	R37, 38	RESISTOR—330,000 ohms, ½ w., carbon
URD-113	R30, 47, 48	RESISTOR—470,000 ohms, ½ w., carbon
URD-117	R14, 41, 74	RESISTOR—680,000 ohms, ½ w., carbon
URD-121	R1, 34, 63	RESISTOR—1 meg., ½ w., carbon
URD-123	R42, 57	RESISTOR—1.2 meg., ½ w., carbon
URD-125	R2, 6, 70	RESISTOR—1.5 meg., ½ w., carbon
URD-129	R22, 35, 64	RESISTOR—2.2 meg., ½ w., carbon
URD-133	R16, 18, 80	RESISTOR—3.3 meg., ½ w., carbon
URD-141	R40	RESISTOR—6.8 meg., ½ w., carbon
URD-1086	R45	RESISTOR—36,000 ohms, ½ w., carbon
URE-071	R51	RESISTOR—8200 ohms, 1 w., carbon
URE-073	R4	RESISTOR—10,000 ohms, 1 w., carbon
URE-089	R26	RESISTOR—47,000 ohms, 1 w., carbon
URF-035	R50	RESISTOR—220 ohms, 2 w., carbon
URF-079	R75, 76	RESISTOR—18,000 ohms, 2 w., carbon
RAB-024	L1	BACK—Cabinet back assembly, 50 cycle
RAB-025	L1	BACK—Cabinet back assembly, 60 cycle
RAD-018		BRACKET—Band switch front
RAD-019		BRACKET—Band switch rear
RAD-020		BRACKET—For coil on rear bracket of band switch
RAL-001		BEZEL—Pilot light bezel
RAX-014		BRACKET AND ROLLER—Fork assembly for tuning hoist
RCC-038	C86, 89	CAPACITOR—.004 mfd., 600 v., paper
RCC-044	C22	CAPACITOR—680 mmf., mica
RCC-045	C94, 95	CAPACITOR—.05 mfd., 600 v., paper
RCC-056	C96, 97, 98	CAPACITOR—.002 mfd., 1000 v., paper
RCE-002	C99A, B	CAPACITOR—15 mfd., dual electrolytic
RCE-014	C100A, B, C, D	CAPACITOR—Electrolytic
RCW-001	C35	CAPACITOR—47 mmf., ceramic
RCW-024	C29	CAPACITOR—22 mmf., ceramic
RCW-025	C121, 122	CAPACITOR—4.7 mmf., ceramic
RCW-1028	C16, 30, 41, 126, 127, 133, 135	CAPACITOR—22 mmf., ceramic

CAT. NO.	SYMBOL	DESCRIPTION
		UNIVERSAL REPLACEMENT PARTS
RCX-012	C2, 3, 4, 5, 6, 7	TRIMMER STRIP—Push button
RCX-021		TRIMMER STRIP AND COIL ASSEMBLY—Push button
RCX-024	C12, 15	TRIMMER STRIP ASSEMBLY—3-30 mmf., 80-130 mmf., trimmer capacitor
RCX-025	C23, 31, 33, 34	TRIMMER STRIP—185-245 mmf., 20-55 mmf., 320-400 mmf., 165-225 mmf., trimmer capacitor
RCX-026	C17, 39, 40	TRIMMER STRIP—20-55 mmf., 475-575 mmf., 320-400 mmf., trimmer capacitor
RCX-027	C27, 37, 123	TRIMMER STRIP—2-20 mmf., 185-245 mmf., 34-70 mmf., trimmer capacitor
RCX-028	C10, 13, 14	TRIMMER STRIP—34-70 mmf., 40-80 mmf., 5-45 mmf., trimmer capacitor
RCY-011	C9	CAPACITOR—3-30 trimmer
RCY-017	C28, 118	TRIMMER STRIP—3-30 mmf., 3-30 mmf., trimmer capacitor
RDB-008		PUSH BUTTON—Mahogany
RDC-025		DRIVE CORD ASSEMBLY
RDF-003		WASHER—Felt for control knobs
RDK-036		KNOB—Mahogany (plain)
RDK-039		KNOB—Mahogany (arrow)
RDP-026		POINTER—Assembly
RDS-021		SCALE—Dial scale
RDS-028		SCALE ASSEMBLY—Dial
RDX-019	S2	SWITCH ASSEMBLY—Push button
REI-006		IRON CORE—AM tuning
RHE-001		EYELET—For connecting FM links
RHM-024		LINK—Hoist link, holding end of hoist cord
RHN-004		NUT—Hex nut for tuning vane adjustment
RJP-004	P1	PLUG—Phono, male
RJP-006		PLUG—Three-prong loop plug
RJP-007	J2	RECEPTACLE—110 v.
RJP-008		SOCKET—Tuning eye
RJS-012		MOUNTING PLATE—For C99
RJS-034		SOCKET—Pilot light
RJS-037		MOUNTING PLATE—For C100
RJS-044		TUBE SOCKET—For V1, V2, and V3
RJS-051		SOCKET—Three prong at rear of chassis
RJS-053		SOCKET—Tube for V13
RJS-054		SOCKET—Tube
RJS-065		SOCKET—Dial light socket and leads
RJX-003	J1	JACK—Phono
RLA-006	T1	TRANSFORMER—B.C.P.B. antenna
RLA-009	T2	TRANSFORMER—B.C. antenna transformer
RLA-012	L26, 28	CHOKE—FM antenna choke, FM oscillator cathode choke
RLA-025	L17, 18, 19	COILS—Push-button oscillator tuning coils
RLA-026	L20, 21, 22	COILS—Push-button oscillator tuning coils
RLB-006	T3	COIL—Broadcast band r-f coil
RLB-008	L6	COIL—SW band r-f plate choke coil
RLB-009	L3	COIL—Broadcast r-f primary dummy
RLC-014	L11	COIL—Broadcast band oscillator shunt tuning coil
RLC-015	L10	COIL—SW oscillator coil
RLC-016	L16	COIL—Broadcast band oscillator coil
RLC-017	L8	COIL—SW r-f coil
RLF-007	L24	COIL—I-f filament choke
RLI-002	L23	COIL—FM power line choke
RLI-005	L12	COIL—FM oscillator cathode choke
RLI-018	L25	COIL—SW loop shunt coil
RLP-005	L14, 15	COIL—I-f plate choke
RLP-008	L5, 13	COIL—FM r-f plate choke and i-f wavetrap inductance
RMM-010		VANE—Tuner vane for coils L2 and L7
RMM-011		VANE—Tuner vane for oscillator coil L9
RMN-016		PULLEY—Drive pulley
RMR-002		ROLLER—Presses against hoist shaft
RMS-040		SPRING—Flat spring against hoist pulley shaft
RMS-041		SPRING—Wire spring against hoist pulley shaft
RMS-042		SPRING—Hoist cord tension spring
RMS-043		SCREW—Iron core adjusting screw
RMS-044		SPRING—Guide wire connecting runing vanes to adjustment screws
RMS-076		SCREW—For tuning vane adjustment
RMS-078		SPRING—Type 2 dial cord spring
RMW-013		FLYWHEEL—Less setscrew
RMW-018		PULLEY—Hoist pulley
RMX-019		PULLEY—Hoist pulley and shaft
RMX-021		TUNER—Top plate and shaft assembly
RPX-010		PHONO PICK-UP—Less tone arm
RRC-019	R54, 55	VOLUME CONTROL—2 meg., dual
RRW-004	R52, 53	RESISTOR—Wirewound
RSS-003	S7	SWITCH—Squelch switch
RSW-016	S5	SWITCH—Treble wafer switch
RSW-017	S4	SWITCH—Bass wafer switch
RTD-001	T7	TRANSFORMER—FM discriminator transformer
RTL-017	T4	TRANSFORMER—1st i-f transformer
RTL-019	T6	TRANSFORMER—3rd i-f transformer
RTL-022	T5	TRANSFORMER—2nd i-f transformer
RTO-014	T8	TRANSFORMER—Output transformer
RTP-023	T9	TRANSFORMER—Power transformer, 60 cycle
RTP-032	T10	TRANSFORMER—Power transformer, 50 cycle
RWL-004		CORD AND PLUG—For 117 v. a-c to main chassis
RYC-002		MANUAL LIST
RYC-006		TAB—Push-button key tab (phono)
RYC-007		STATION CALL LETTERS—For push-button keys
RYC-008		TAB—Push-button key tab (OFF)
RSW-029		Band Switch

MODELS 505, 506, 507, 508

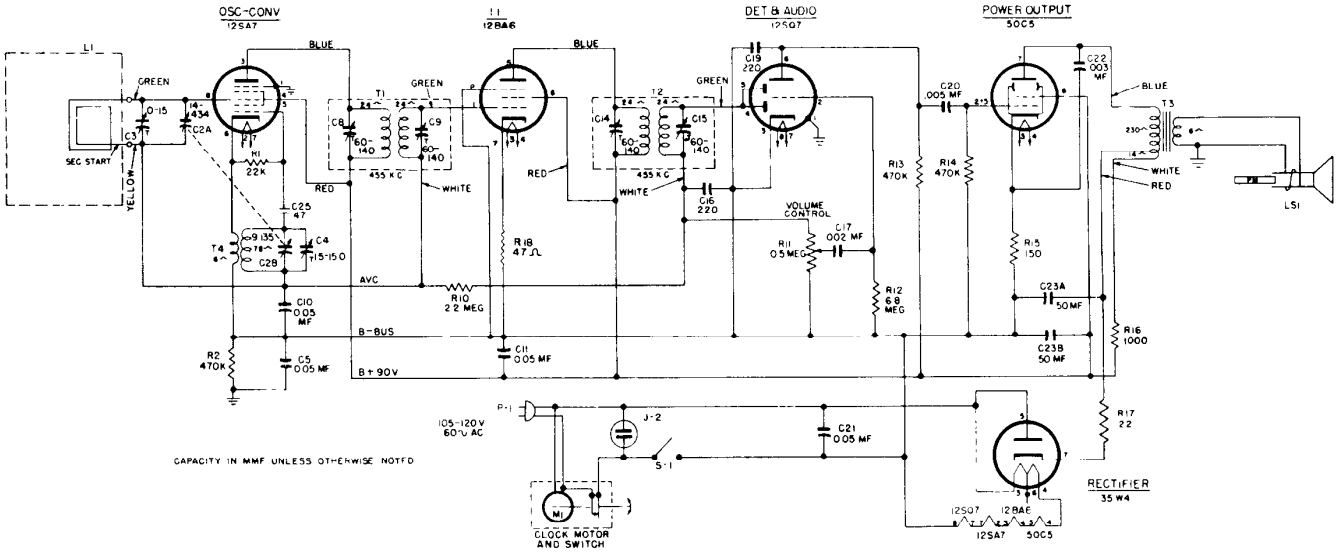

RADIO REPLACEMENT PARTS LIST 505, 506, 507, 508

Cat. No.	Symbol	Description	Suggested Unit List Price
UNIVERSAL REPLACEMENT PARTS			
*UCC-028	C5, 10, 11	CAPACITOR—.05 mf., 400 v., paper	$0.30
*UCC-036	C17	CAPACITOR—.002 mf., 600 v., paper	.25
*UCC-039	C20	CAPACITOR—.005 mf., 600 v., paper	.25
*UCC-045		CAPACITOR—.05 mf., 600 v., paper (will replace respective sections of RCW-3013).	.30
*UCU-1036	C16, 19	CAPACITOR—220 mmf., mica	.25
*UOP-421	LS1	SPEAKER—PM loudspeaker	4.95
*URD-009	R17	RESISTOR—22 ohms, ½ w., carbon	.13
*URD-017	R18	RESISTOR—47 ohms, ½ w., carbon	.13
*URD-029	R15	RESISTOR—150 ohms, ½ w., carbon	.13
*URD-081	R1	RESISTOR—22,000 ohms, ½ w., carbon	.13
*URD-113	R2, 13, 14	RESISTOR—470,000 ohms, ½ w., carbon	.13
*URD-129	R10	RESISTOR—2.2 meg., ½ w., carbon	.13
*URD-141	R12	RESISTOR—6.8 meg., ½ w., carbon	.13
*URF-049	R16	RESISTOR—1000 ohms, 1 w., carbon	.25
SPECIALIZED REPLACEMENT PARTS			
RAB-116	L1	BACK—Cabinet back cover (includes loop L1) for Models 505, 506, 507	$1.80
RAB-120	L1	BACK—Cabinet back cover (includes loop L1) for Model 508	1.80
*RAC-060		SHIELD PLATE—Metal plate covers bottom of chassis, Models 505, 506, 507	.35
*RAC-073		MOUNTING BRACKET—Metal back cover holds clock to cabinet	.45
RAU-305		CABINET—Ivory plastic (Model 506)	4.95
RAU-317		CABINET—Brown plastic (Model 505)	4.95
RAU-318		CABINET—Maroon plastic (Model 507)	
RAU-322		CABINET—Blond mahogany finish plastic (Model 508)	
*RCC-045	C21	CAPACITOR—.05 mf., 600 v., paper	.30
*RCC-074	C22	CAPACITOR—.003 mf., 600 v., paper	.25
*RCE-050	C23A, B	CAPACITOR—50 mf., 150 v.; 50 mf., 150 v., dry electrolytic	2.10

Cat. No.	Symbol	Description	Suggested Unit List Price
SPECIALIZED REPLACEMENT PARTS (Cont.)			
*RCT-021	C2A, 2B	CAPACITOR—Tuning capacitor (oscillator and r-f-section)	$4.70
*RCW-1043	C25	CAPACITOR—47 mmf., ceramic	.60
*RCW-3013	C16, 17, 19, 20	CAPACITOR—220 mmf., .002 mf., 220 mmf., .005 mf. (4 section ceramic)	1.00
*RDK-028		KNOB—Volume control knob	.10
*RDK-094		KNOB—Tuning dial wheel. Does not include dial scale, see item RDS-090	.45
RDS-090		DIAL SCALE—Paper scale	.10
*RHC-018		SNAP FASTENER—For cabinet back	.05
RHG-015		GROMMET—For tuning cond.	
RHH-004		FASTENER—Snap fastener for holding back	.02
RHI-010		STRAIN RELIEF GROMMET	.15
*RHJ-005		SPACER FOR TUNING CONDENSER	.02
RHS-043		PLUG AND SWITCH MOUNTING CABINET—Model 508	.25
*RJC-004		CLIP—Loop connector clip	.02
RJJ-008		APPLIANCE RECEPTACLE	
*RJS-116		SOCKET—Tube oscket for 12SA7	.15
*RJS-117		SOCKET—Tube socket for 12SQ7	.15
*RJS-092		SOCKET—Tube socket for 50C5, 35W4	.20
*RJS-141		SOCKET—For 12BA6 tube, 7 pin	.20
*RLC-090	T4	COIL—Oscillator coil	.90
RMS-205		SLEEP CONTROL BOOSTER SPRING	.20
*RRC-054	R11	POTENTIOMETER—0.5 meg., volume control	1.25
*RSS-005		SWITCH—ON-OFF Switch	.35
*RTL-094	T1	TRANSFORMER—1st I-F transformer	1.90
*RTL-095	T2	TRANSFORMER—2nd I-F transformer	1.90
RTO-036	T3	TRANSFORMER—Output transformer	2.85
*RWL-009		CORD—Power cord (brown) for Model 64	.70
*RWL-016		CORD—Power cord (white) for Model 65	.75
RYN-005		NAMEPLATE G.E. MONOGRAM	.20
*RZC-009	M1	CLOCK—60 cycle, 105–125 v., clock assembly	12.95

MODELS 509, 530

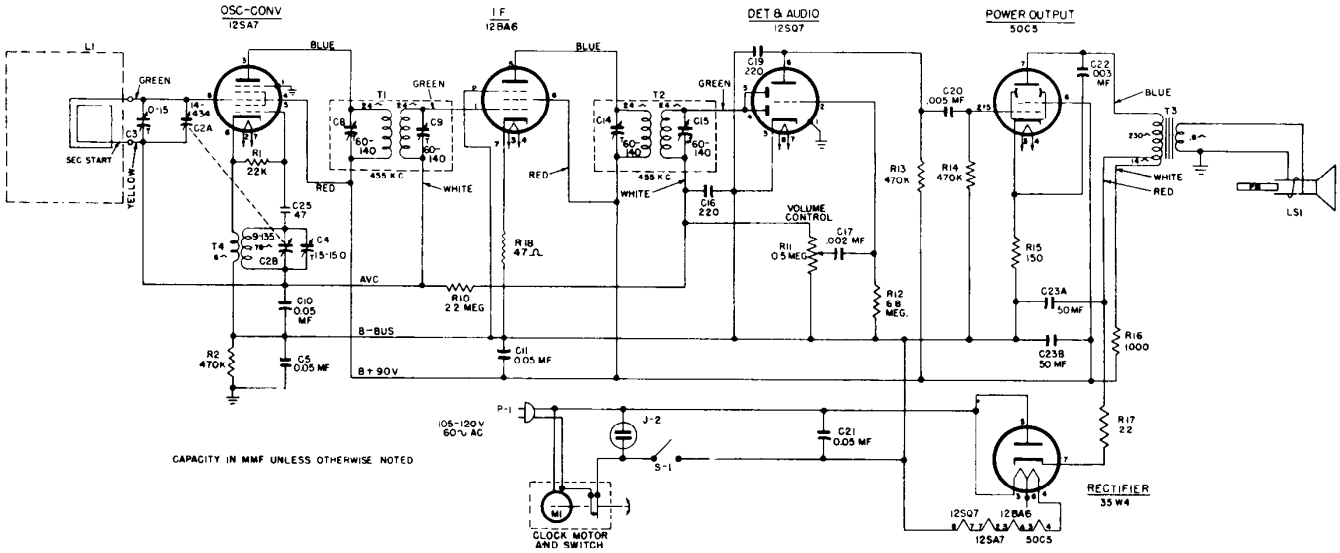

RADIO REPLACEMENT PARTS LIST—MODELS 509 AND 530

Cat. No.	Symbol	Description	Suggested Unit List Price
UNIVERSAL REPLACEMENT PARTS			
*UCC-028	C5,10,11	CAPACITOR—.05 mf., 400 v., paper	$0.30
*UCC-036	C17	CAPACITOR—.002 mf., 600 v., paper (will replace respective sections of RCW-3013).	.25
*UCC-039	C20	CAPACITOR—.005 mf., 600 v., paper (will replace respective sections of RCW-3013).	.25
*UCC-045	C21	CAPACITOR—.05 mf., 600 v., paper	.30
*UCU-1036	C16, 19	CAPACITOR—220 mmf., mica (will replace respective sections of RCW-3013).	.25
*URD-009	R17	RESISTOR—22 ohms, ½ w., carbon	.13
*URD-017	R18	RESISTOR—47 ohms, ½ w., carbon	.13
*URD-029	R15	RESISTOR—150 ohms, ½ w., carbon	.13
*URD-081	R1	RESISTOR—22,000 ohms, ½ w., carbon	.13
*URD-113	R2, 13, 14	RESISTOR—470,000 ohms, ½ w., carbon	.13
*URD-129	R10	RESISTOR—2.2 meg., ½ w., carbon	.13
*URD-141	R12	RESISTOR—6.8 meg., ½ w., carbon	.13
*URF-049	R16	RESISTOR—1000 ohms, 2 w., carbon	.25
*DL1RS-400-CG16	LS1	SPEAKER—PM loudspeaker (less T3)	4.95
SPECIALIZED REPLACEMENT PARTS			
*RAB-116	L1	BACK—Cabinet back cover (includes loop L1) for Model 509	$1.80
*RAB-120	L1	BACK—Cabinet back cover (includes loop L1) for Model 530	1.80
*RAC-060		SHIELD PLATE—Metal plate covers bottom of chassis	.35
*RAC-073		MOUNTING BRACKET—Metal back cover holds clock to cabinet	.45
RAU-325		CABINET—White plastic (Model 509)	—
RAU-330		CABINET—Bleached mahogany finish plastic (Model 530)	—
*RCC-074	C22	CAPACITOR—.003 mf., 600 v., paper	.25
*RCE-050	C23A, B	CAPACITOR—50 mf., 150 v.; 50 mf., 150 v., dry electrolytic	2.10
*RCT-021	C2A, 2B	CAPACITOR—Tuning capacitor (oscillator and r-f section)	4.70
*RCW-1043	C25	CAPACITOR—47 mmf., ceramic	$0.60
*RCW-3013	C16, 17, 19, 20	CAPACITOR—220 mmf., .002 mf., 220 mmf., .005 mf. (4 section ceramic)	1.00
*RDK-028		KNOB—Volume control knob, Model 530	.10
*RDK-094		KNOB—Tuning dial wheel. Does not include dial scale, see item RDS-090	.45
RDK-203		KNOB—Volume control knob (red) for Model 509	—
*RDS-090		DIAL SCALE—Paper scale	.10
*RHG-015		GROMMET—For tuning cond.	—
*RHH-004		FASTENER—Snap fastener for holding back	.02
RHI-010		STRAIN RELIEF INSULATOR	.15
*RHJ-005		SPACER FOR TUNING CONDENSER	.02
RHS-043		BRACKET—For receptacle, J2 and switch, S1	.25
*RJC-004		CLIP—Loop connector clip	.02
*RJJ-008	J2	APPLIANCE RECEPTACLE	—
*RJS-116		SOCKET—Tube socket for 12SA7	.15
*RJS-117		SOCKET—Tube socket for 12SQ7	.15
*RJS-092		SOCKET—Tube socket for 50C5, 35W4	.20
*RJS-141		SOCKET—For 12BA6 tube, 7 pin	.20
*RLC-090	T4	COIL—Oscillator coil	.90
RMS-205		SLEEP CONTROL BOOSTER SPRING	.20
*RRC-054	R11	POTENTIOMETER—0.5 meg., volume control	1.25
RSW-067	S1	SWITCH—Radio ON-OFF switch at rear of receiver	—
*RTL-094	T1	TRANSFORMER—1st I-F transformer	1.90
*RTL-095	T2	TRANSFORMER—2nd I-F transformer	1.90
RTO-036	T3	TRANSFORMER—Output transformer	2.85
*RWL-009		CORD—Power cord (brown) for Model 530	.70
*RWL-106		CORD—Power cord (white) for Model 509	.75
RYN-007		NAMEPLATE—General Electric monogram	—
*RZC-009	M1	CLOCK—60 cycle, 105–125 v., clock assembly for Model 530	12.95
RZC-011	M1	CLOCK—60 cycle, 105-125 v., clock assembly	—

MODELS 510, 511

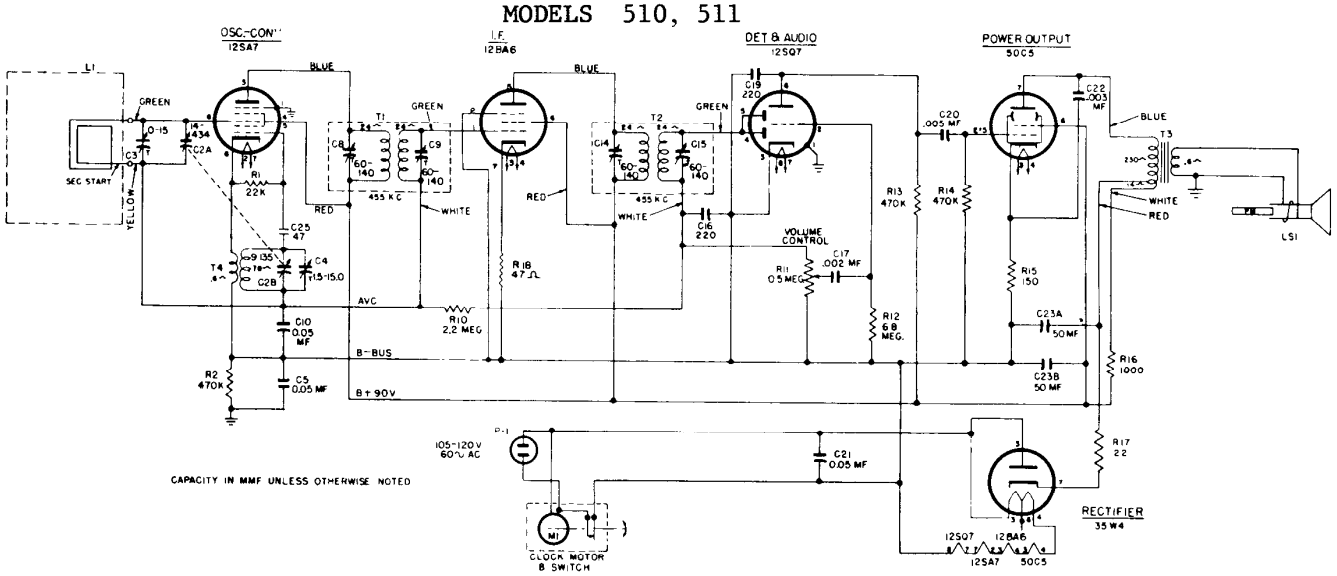

MODEL 510 AND 511 REPLACEMENT PARTS

UNIVERSAL REPLACEMENT PARTS

Cat. No.	Symbol	Description	Suggested Unit List Price
UCC-037	C22	CAPACITOR .003 mf., 600 v., paper	$0.25
*UCC-045	C5, C10, C11, C21	CAPACITOR —.05 mf., 600 v., paper	.30
*UCC-630	C17, C20	CAPACITOR— 01 mf., 600 v., paper (may replace respective sections of RCW-3013)	.30
UCG-020	C25	CAPACITOR—47 mmf, silver mica	
*UCU-036	C16, C19	CAPACITOR—220 mmf, mica (may replace respective sections of RCW-3013)	.30
*URD-009	R17	RESISTOR—22 ohms, ½ w., carbon	.13
*URD-017	R18	RESISTOR—47 ohms, ½ w, carbon	13
*URD-029	R15	RESISTOR—150 ohms, ½ w., carbon	.13
*URD-081	R1	RESISTOR—22,000 ohms, ½ w., carbon	13
*URD-113	R2, R13, R14	RESISTOR—470,000 ohms, ½ w., carbon	.13
*URD-129	R10	RESISTOR —2 2 meg., ½ w., carbon	.13
*URD-141	R12	RESISTOR—6.8 meg., ½ w, carbon	.13
*URF-049	R16	RESISTOR—1000 ohms, 2 w., carbon	.25
S400C	LS1	SPEAKER—4-in. PM speaker, less output transformer	4.95

SPECIALIZED REPLACEMENT PARTS

*RAB-131	L1	BACK—Cabinet back cover (includes loop L1)	
RAC-060		SHIELD—Bottom shield	
*RAC-085		MOUNTING BRACKET—Metal back cover holds clock to cabinet	
RAG-033		GRILLE CLOTH ASSEMBLY Model 510	
RAG-034		GRILLE CLOTH ASSEMBLY —Model 511	
RAU-336		CABINET — Brown plastic (Model 510)	
RAU-337		CABINET — White plastic (Model 511)	
*RCC-074	C22	CAPACITOR — 003 mf, 600 v., paper	$0.25
*RCE-116	C23A, C23B	CAPACITOR—50 mf, 150 v., 50 mf., 150 v., dry electrolytic	
*RCT-045	C2A, C2B, C3, C4	CAPACITOR —Tuning capacitor (oscillator and r-f section) with trimmers	
*RCW-3013	C16, C17, C19, C20	CAPACITOR 220 mmf., .002 mf., 220 mmf., .005 mf. (4 section ceramic) (see UCC-630, UCU 036)	1 00
*RDK-216		KNOB —Tuning dial wheel	
*RDK-218		KNOB—Volume control knob	
RHC 017		CLIP Coil clip	
RHC-024		CLIP—Condenser clip	
*RHG-015		GROMMET—Cushion mounting for C2A, C2B	.05
*RHI-010		STRAIN RELIEF	.15
*RHJ-005		SPACER —Washer used with RHG-015	.02
*RJC 004		CLIP —Loop connector clip	.02
*RJS-092		SOCKET Tube socket for 50C5, 35W4	.20
*RJS-116		SOCKET—Tube socket for 12SA7	.15
*RJS-117		SOCKET—Tube socket for 12SQ7, 35Z5-GT	.15
*RJS-141		SOCKET—Tube socket for 12BA6	.20
*RLC 090	T4	COIL—Oscillator coil	.90
RMS-214		SPRING—Compression spring	
*RRC-054	R11	POTENTIOMETER — 0.5 meg., volume control	1.25
*RTL-094	T1, C8, C9	TRANSFORMER — 1st I-F transformer	1.90
*RTL-095	T2, C14, C15	TRANSFORMER — 2nd I-F transformer	1.90
*RTO-036	T3	TRANSFORMER — Output transformer	2.85
RTO-091	T3	TRANSFORMER — Output transformer (bolt mount)	
*RWL-009		CORD—Power cord (brown) for Model 510	.70
*RWL-016		CORD—Power cord (white) for Model 511	.75
*RZC-012	M1	CLOCK—60 cycle, 105–125 v., clock assembly	12.95

510F,511F,512F,513F,515F,516F,517F,518F,521F,522F

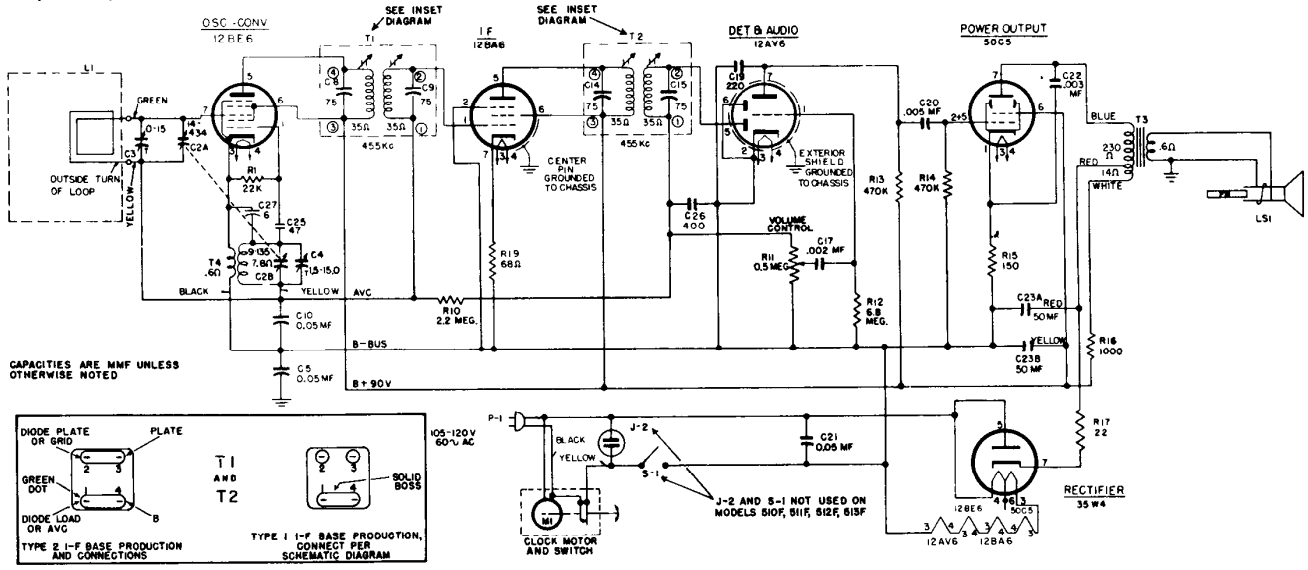

REPLACEMENT PARTS LIST—MODELS 510F, 511F, 515F, 516F, 517F, 518F, 521F, AND 522F, 512F, 513F

NOTE. For clock service data and clock repair parts, contact your local wholesale General Electric Radio Distributor.

Cat No.	Symbol	Description	Unit Price
RAB-149	L1	CABINET BACK—Back cover to cabinet, includes antenna loop, L1, for Models 510F, 511F	$1.20
RAB-150	L1	CABINET BACK—Back cover to cabinet, includes antenna loop, L1, for Models 515F, 516F, 517F, 518F	1.25
*RAB-151	L1	CABINET BACK—Back cover to cabinet, includes antenna loop, for Models 512F, 513F, 521F, 522F	1.25
*RAC-085		BRACKET Clock mounting bracket (metal shield cover over back of clock)	75
*RAG-033		GRILLE Cabinet grille cloth (dark maroon) for Models 510F, 515F, 517F	.30
*RAG-034		GRILLE—Cabinet grille cloth (ivory) for Models 511F, 516F	.30
*RAG-035		GRILLE—Cabinet grille cloth (white) for Model 518F	.30
RAG-037		GRILLE—Cabinet grille cloth (gold finish) for Models 521F or 522F	.35
*RAU-336		CABINET - Brown, plastic cabinet for Model 510F	4.95
*RAU-337		CABINET - Ivory plastic cabinet for Model 511F	4.95
*RAU-338		CABINET—Brown mottle, plastic cabinet for Model 515F	4.95
*RAU-339		CABINET—Ivory, plastic cabinet for Model 516F	4.95
*RAU-340		CABINET—Maroon, plastic cabinet for Model 517F	4.95
*RAU-341		CABINET—White, plastic cabinet for Model 518F	4.95
*RAU-342		CABINET—Dark mahogany, plastic cabinet for Model 521F	9 50
*RAU-343		CABINET—Blonde mahogany, plastic cabinet for Model 522F	11.50
RAU-348		CABINET—Mahogany mottle, plastic cabinet for Model 512F	5.45
RAU-349		CABINET—Antique ivory, plastic cabinet for Model 513F	6 45
RCC-107	C21	CAPACITOR—.047 mf., 600 v., paper	.35
RCC-108	C22	CAPACITOR .003 mf., 600 v., paper	25
RCE-127	C23A, B	CAPACITOR—50-50 mf., 150 v., electrolytic	1.85
*RCT-045	C2A, B	CAPACITOR—420-126 mmf., dial tuning capacitor	2.75
RCW-3048	C17, 19, 20, 26	CAPACITOR—.002 mf., 220 mmf., .005 mf., 400 mmf., four section ceramic unit	90
RCW-3049	C27	CAPACITOR—6 mmf ±5%, 1400 to 2200 neg. temp. coefficient, ceramic	.35
*RDK-215		KNOB—Volume control knob (white) for Model 518F	.15
*RDK-216		KNOB—Dial tuning control knob (maroon) for Models 510F, 511F	.60
*RDK-217		KNOB—Dial tuning control knob (gold bronze color) for Models 515F, 516F, 517F, 521F, 522F	.60
*RDK-218		KNOB—Volume control knob (maroon) for Model 517F	.10
*RDK-219		KNOB—Dial tuning control knob (aluminum color) for Model 518F	.60
*RDK-230		KNOB—Volume control knob (ivory) for Models 510F, 511F, 513F, 515F	.15
RDK-243		KNOB—Volume control knob (fawn) for Model 512F	.15
RDK-245		KNOB—Dial tuning control knob (ivory scale, maroon numerals) for Model 513F	.60
RDK-246		KNOB—Dial tuning control knob (brown scale, gold numerals) for Model 512F	.60
*RHC-024		CLIP—Mounting clip for electrolytic capacitor, C23A, B	.10
*RHC-034		CLIP—Metal clip fastener used to mount 1st and 2nd i-f transformer can assemblies to chassis	.05
*RHG-015		GROMMET—Rubber grommet used to insulate and shock mount tuning capacitor (C2A, B) to chassis	.05
*RHH-004		FASTENER—Snap-on fastener for holding cabinet back to cabinet (used only on Models 521F, 522F)	$0.02
*RHI 010		GROMMET—Strain relief and insulating grommet in chassis back apron for power cord for Models 515F, 516F, 517F, 518F, 521F, 522F	.15
*RHJ-005		SPACER—Metal spacer bushing in grommet mounting tuning capacitor (C2A, B) to chassis	.02
*RHS-048		SHIELD—Metal tube shield for V3, 12-AV6	.15
RHS-073		SHIELD—Doughnut shaped metal cover over soldered pin connections of tube sockets	.10
RHS-074		SHIELD—Metal protective shield cover on top of chassis over wiring terminal board	.10
RHS-075		SCREW—Screw No. 6 x 5/8-in. long used to fasten chassis in cabinet	.02
*RJJ-008	J2	RECEPTACLE—AC power receptacle on chassis back apron used for automatic control of electrical appliances for Models 515F, 516F, 517F, 518F, 521F, 522F	.35
RJS-158		SOCKET—Tube socket for V2, 12BA6	.35
RJS-162		SOCKET—Tube socket for V1, 12BE6	.30
RJS-163		SOCKET -Tube socket for V3, 12AV6; V4, 50C5; V5, 35W4	.30
RLC-109	T4	COIL—Oscillator coil	.90
*RMS 214		SPRING - Spring retaining ring for hub of dial tuning knob	.05
*RRC-054	R11	POTENTIOMETER—500,000 ohms, composition volume control	1.25
*RSW-067	S1	SWITCH—Radio ON-OFF switch (slide type) on chassis back apron for Models 515F, 516F, 517F, 518F, 521F, 522F	.75
*RTL-117	T1, 2	TRANSFORMER—1st or 2nd i-f coupling	1.70
RTO-099	T3	TRANSFORMER- Audio output	1.90
*RWL-009	P1	CORD—AC power cord and plug (brown) for Models 510F or 512F	.70
*RWL-016	P1	CORD—AC power cord and plug (ivory) for Models 511F or 513F	.75
*RWL-024	P1	CORD—AC power cord and plug (white) for Model 518F	.75
*RWL-025	P1	CORD—AC power cord and plug (brown) for Models 515F, 517F, 521F, 522F	.75
*RWL-026	P1	CORD—AC power cord and plug (ivory) for Model 516F	.75
*RYN-005		NAMEPLATE—General Electric monogram (metal, on cabinet) for Models 512F, 513F, 521F or 522F	.20
*RZC-009	M1	CLOCK—60 cycle, 105-125 v., clock assembly for Models 515F, 516F, 517F, 521F, 522F	12.95
*RZC-011	M1	CLOCK—60 cycle, 105-125 v. clock assembly for Model 518F	12.95
*RZC-012	M1	CLOCK—60 cycle, 105-125 v. clock assembly for Models 510F, 511F	12.50
RZC-014	M1	CLOCK—60 cycle, 105-125 v., clock assembly for Model 512F	12.50
RZC-015	M1	CLOCK—60 cycle, 105-125 v., clock assembly for Model 513F	12.50
*S403C13		LOUDSPEAKER—4 inch PM	4.90
*UCC-036	C17	CAPACITOR—.002 mf., 600 v., paper	.25
*UCC-039	C20	CAPACITOR—.005 mf., 600 v., paper	.25
*UCC-045	C5, 10	CAPACITOR—.05 mf., 600 v., paper	.30
*UCG-020	C25	CAPACITOR—47 mmf., 500 v., silver mica	.35
*UCU-1036	C19	CAPACITOR—220 mmf., mica	.25
*URD-009	R17	RESISTOR 22 ohms, 1/2 w., carbon	.13
*URD-021	R19	RESISTOR—68 ohms, 1/2 w., carbon	.13
*URD-029	R15	RESISTOR—150 ohms, 1/2 w., carbon	.13
*URD-081	R1	RESISTOR—22,000 ohms, 1/2 w., carbon	.13
*URD-113	R13, 14	RESISTOR—470,000 ohms, 1/2 w., carbon	.13
*URD-129	R10	RESISTOR—2.2 meg., 1/2 w., carbon	.13
*URD-141	R12	RESISTOR—6.8 meg., 1/2 w., carbon	.13
*URF-049	R16	RESISTOR—1000 ohms, 2 w., carbon	.25

514,542,543

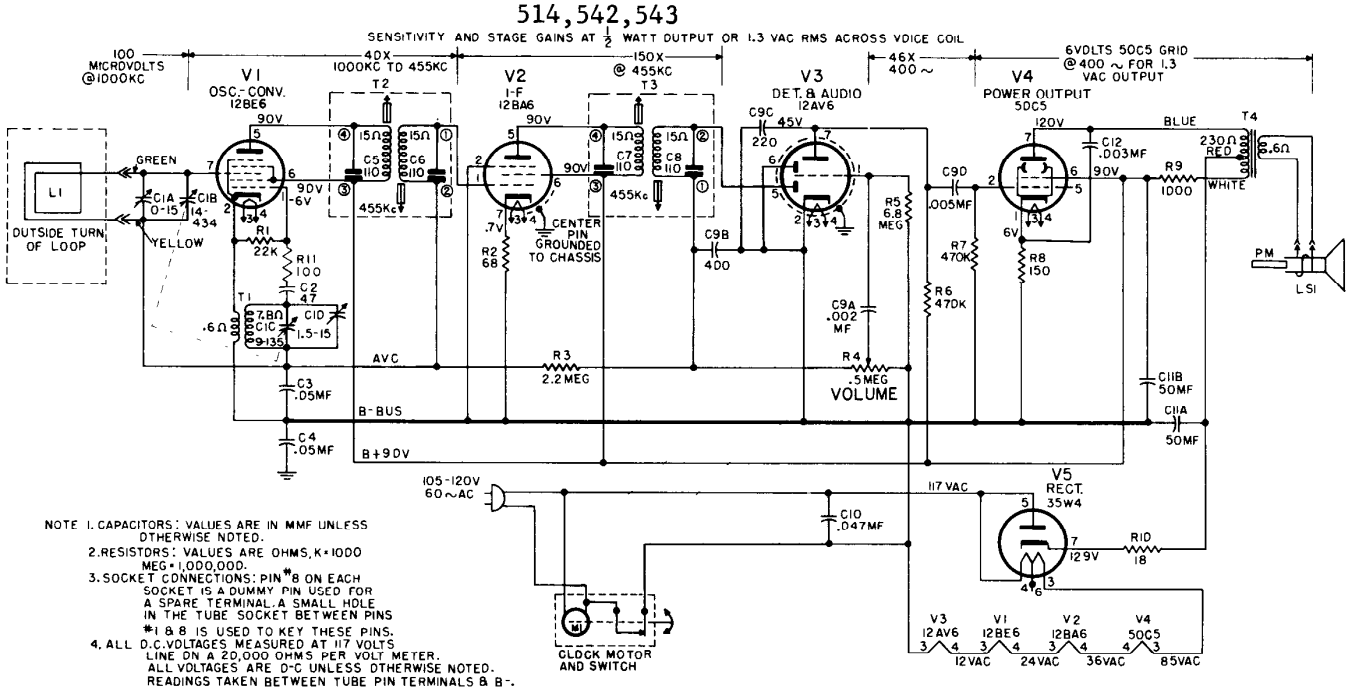

NOTE 1. CAPACITORS: VALUES ARE IN MMF UNLESS OTHERWISE NOTED.
2. RESISTORS: VALUES ARE OHMS, K=1000 MEG=1,000,000.
3. SOCKET CONNECTIONS: PIN #8 ON EACH SOCKET IS A DUMMY PIN USED FOR A SPARE TERMINAL. A SMALL HOLE IN THE TUBE SOCKET BETWEEN PINS #1 & 8 IS USED TO KEY THESE PINS.
4. ALL D.C. VOLTAGES MEASURED AT 117 VOLTS LINE ON A 20,000 OHMS PER VOLT METER. ALL VOLTAGES ARE D-C UNLESS OTHERWISE NOTED. READINGS TAKEN BETWEEN TUBE PIN TERMINALS & B-.

RADIO REPLACEMENT PARTS LIST FOR MODELS 514, 542 AND 543

Cat. No.	Symbol	Description	Unit Price
		CAPACITORS (Paper)	
*RCE-127	C11A, B	50-50 mf., 150 v., electrolytic	$1.85
RCE-062	C1A, B, C, D	Tuning, two section, 9 mmf.-135 mmf., osc., 14 mmf 434 mmf., ant.	3.50
*RCW 3048	C9A, B, C, D	Four ceramic capacitors in two sections—one—.002 mf., section two—400 mmf., 220 mmf., .005 mf.	.90
RCW-3075	C2	47 mmf., ceramic	.25
*UCC-037	C12	.003 mf., 600 v., paper	.25
*UCC-045	C3, 4, 10	.05 mf., 600 v., paper	.30
		RESISTORS (Carbon, ½ Watt)	
*URD-007	R10	18 ohms	.13
*URD-021	R2	68 ohms	.13
*URD-029	R8	150 ohms	.13
*URD-081	R1	22,000 ohms	.13
*URD-113	R6, 7	470,000 ohms	.13
*URD-129	R3	2.2 meg.	.13
*URD-141	R5	6.8 megohms.	.13
		(Carbon, 2 Watt)	
*URF-049	R9	1000 ohms	.25
		(Potentiometers)	
*RRC-054	R4	Volume control 500,000, composition	1.25
		COILS AND TRANSFORMERS	
*RLC-118	T1	COIL—Oscillator coil	.90
*RTL-135	T2, 3	TRANSFORMER—1st or 2nd I-F, with tuning cores.	1.90
*RTO-099	T4	TRANSFORMER—Audio output	1.90
		MISCELLANEOUS ELECTRICAL	
*RJS-158		SOCKET—Tube socket for V2, 12BA6 mechanized, see RJS-188	.35
*RJS-162		SOCKET—Tube socket for V1, 12BE6 mechanized, see RJS-189	.30
*RJS-163		SOCKET—Tube socket for V3, V4, V5, 12AV6, 50C5, 35W4 mechanized, see RJS-190.	.30
RJS-188		SOCKET—Tube socket for V2, 12BA6 nonmechanized, see RJS-158	
RJS-189		SOCKET—Tube socket for V1, 12BE6 nonmechanized, see RJS-162	
RJS-190		SOCKET—Tube socket for V3, V4, V5; 12AV6, 50C5, 35W4 nonmechanized, see RJS-163	
*ROP-022		LOUDSPEAKER—4-inch PM	4.90
*RWL-009		CORD—A-c power cord and plug, brown, for Models 514 or 542	.70

Cat. No.	Symbol	Description	Unit Price
		MISCELLANEOUS ELECTRICAL (Cont'd)	
*RWL-116		CORD—A c power cord and plug, ivory, for Model 543	$0.75
RZC-021		CLOCK ASSEMBLY—60 cycles, 105–125 v. for Models 542, 543	17.25
*RZC-022		CLOCK ASSEMBLY—60 cycles, 105–125 v. for Model 514	13.00
		MISCELLANEOUS MECHANICAL	
RAC-102		BRACKET—Clock mounting bracket, plastic	.75
*RDK-230		KNOB—For volume control (ivory)	.15
*RDK-246		DIAL—Tuning, brown, gold numerals; for Model 514	.60
*RDK-285		DIAL—Tuning, red, for Models 542, 543.	.60
*RHC-024		CLIP—For mounting electrolytic capacitor C11	.10
*RHC-034		CLIP—Fastener to hold 1st and 2nd I-F transformer can to chassis.	.05
*RHG-015		GROMMET—Rubber grommet used to insulate and shock mount tuning cap.	.05
*RHH-004		FASTENER—Snap on type for holding back to cabinet on Model 514	.02
*RHJ-005		SPACER—Metal spacer bushing in grommet mounting tuning capacitor	.02
*RHS-075		SCREW—No. 6 self tapping ⅝ in. long, used to hold chassis to cabinet	.02
*RHS-085		SHIELD—Metal tube shield for V3, 12AV6 mechanized production, see RHS-110	.15
*RHS-093		SHIELD—Plastic cover over tube socket pins and terminal board (mechanized production only)	.75
RHS-110		SHIELD—Metal tube shield for V3, 12AV6 nonmechanized production, see RHS-085.	
RMC-002		CLIP—Oscillator coil mounting	.02
*RMS-214		SPRING—Retaining ring for hub of tuning dial	.05
		CABINETS AND CABINET PARTS	
*RAB-150		CABINET BACK—Includes loop antenna, L1, for Models 542, 543	1.25
*RAB-151		CABINET BACK—Includes loop antenna, L1, for Model 514	1.25
*RAG-033		CLOTH—Cabinet grille cloth, dark maroon; for Model 542	.30
*RAG-034		CLOTH—Cabinet grille cloth, ivory; for Model 543	.30
*RAU-338		CABINET—Brown mottle, plastic; for Model 542	4.95
*RAU-339		CABINET—Ivory, plastic; for Model 543.	4.95
*RAU-348		CABINET—Mahogany mottle, plastic; for Model 514	5.45
*RYN-005		NAMEPLATE—G-E monogram for Model 514 cabinet	.20

MODELS 515, 516, 517, 518

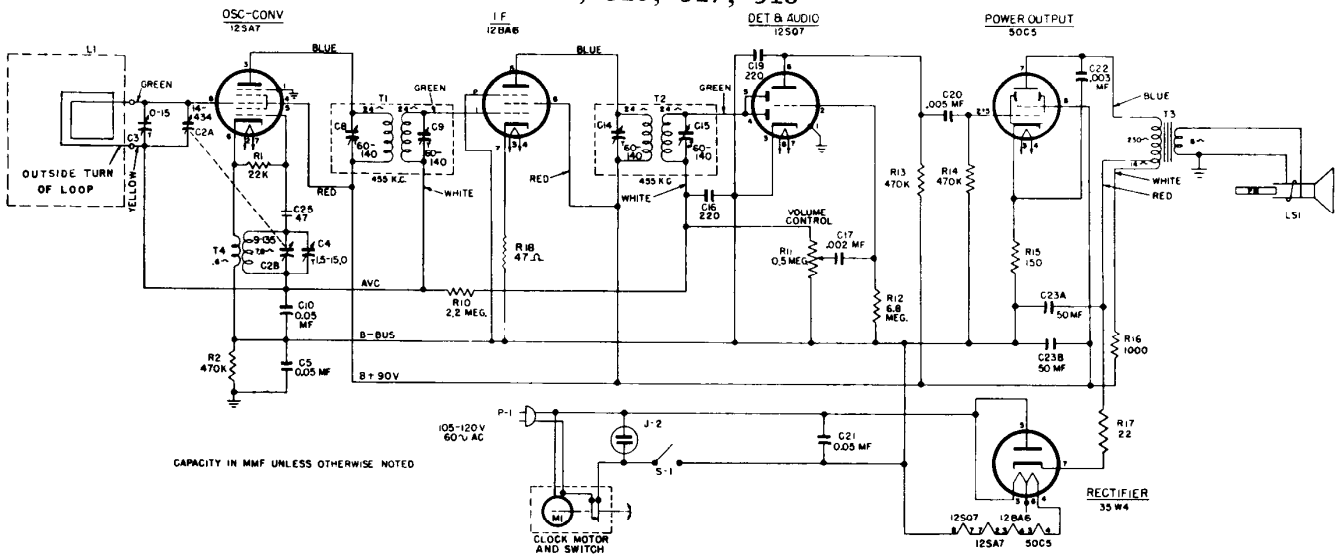

CAPACITY IN MMF UNLESS OTHERWISE NOTED

REPLACEMENT PARTS LIST—MODELS 515, 516, 517 AND 518

Cat. No.	Symbol	Description	Suggested Unit List Price
		UNIVERSAL RADIO PARTS	
*UCC-036	C17	CAPACITOR—.002 mf., 600 v., paper (see paragraph, page 5)	$0.25
*UCC-037	C22	CAPACITOR—.003 mf., 600 v., paper	.25
*UCC-039	C20	CAPACITOR—.005 mf., 600 v., paper, (see paragraph, page 5)	.25
*UCC-045	C5, C10, C21	CAPACITOR—.05 mf., 600 v., paper	.30
*UCG-1020	C25	CAPACITOR—47 mmf., silver mica	.25
*UCU-1036	C16, C19	CAPACITOR—220 mmf., mica (see paragraph, page 5)	.25
*URD-009	R17	RESISTOR—22 ohms, ½ w., carbon	.13
*URD-017	R18	RESISTOR—47 ohms, ½ w., carbon	.13
*URD-029	R15	RESISTOR—150 ohms, ½ w., carbon	.13
*URD-081	R1	RESISTOR—22,000 ohms, ½ w., carbon	.13
*URD-113	R2, R13, R14	RESISTOR—470,000 ohms, ½ w., carbon	.13
*URD-129	R10	RESISTOR—2.2 meg., ½ w., carbon	.13
*URD-141	R12	RESISTOR—6.8 meg., ½ w., carbon	.13
*URF-049	R16	RESISTOR—1000 ohms, 2 w., carbon	.25
		SPECIALIZED RADIO PARTS	
RAB-130		CABINET BACK—includes antenna loop, L1	
*RAC-060		BOTTOM SHIELD—Metal plate, covers bottom of chassis	$0.02
RAC-085		CLOCK MOUNTING BRACKET ASSEMBLY—Clock back cover	.35
RAG-033		GRILLE CLOTH ASSEMBLY—For speaker grille on models 515, 517	.30
RAG-034		GRILLE CLOTH ASSEMBLY—For speaker grille on Model 516	.30
RAG-035		GRILLE CLOTH ASSEMBLY—For speaker grille on Model 518	
RAU-338		CABINET—Model 515 (brown)	
RAU-339		CABINET—Model 516 (ivory)	
RAU-340		CABINET—Model 517 (maroon)	
RAU-341		CABINET—Model 518 (white)	
RCE-116	C23, A & B	CAPACITOR—50-50 mf., 150 v., electrolytic	1.85
RCT-045		CAPACITOR—(420-126 mmf.) tuning	
*RCW-3013	C16, C17, C19, C20	CAPACITOR—220 mmf., .002 mf., 220 mmf., .005 mf., Ceramic (bullplate)	1.00
RDK-215		KNOB—Volume control—For Model 518	
*RDK-217		KNOB—Dial tuning—For Models 515, 516, 517	
*RDK-218		KNOB—Volume control—For Models 516, 517, 518	
RDK-219		KNOB—Dial tuning—For Model 518	
*RHC-017		COIL CLIP—For oscillator coil	.05
*RHC-024		CONDENSER CLIP—For mounting electrolytic, C23	.10
*RHG-015		GROMMET—Tuning capacitor mounting	.05
*RHI-010		STRAIN RELIEF—Grommet in chassis for power cord	.15
*RHJ-005		SPACER—Tuning capacitor mounting	.02
*RHS-043		BRACKET—For receptacle J2 and switch S1	.25
*RJC-004		CLIP—Loop connector lead clip	.02
*RJJ-008	J2	RECEPTACLE—Appliance outlet (rear of receiver)	.35
*RJS-092		TUBE SOCKET—For 50C5, 35W4	.20
*RJS-116		TUBE SOCKET—For 12SA7	.20
*RJS-117		TUBE SOCKET—For 12SQ7	.15
RJS-141		TUBE SOCKET—For 12BA6 (7 Pin)	.20
*RLC-090	T4	OSCILLATOR COIL	.90
*RMS-214		SPRING CLIP—Locks drum dial to shaft	.05
*RRC-054	R11	POTENTIOMETER—0.5 meg., volume control	1.25
*RSW-067	S1	SWITCH—ON-OFF switch	.75
*RTL-094	T1	TRANSFORMER—1st I.-F.	1.90
*RTL-095	T2	TRANSFORMER—2nd I.-F.	1.90
RTO-036	T3	TRANSFORMER—Output transformer	2.85
*RWL-009		CORD SET—(brown) for Models 515, 517	.70
*RWL-016		CORD SET—(ivory) for Model 516	.75
RWL-024		CORD SET—(white) for Model 518	.75
*RZC-009		CLOCK—60 cycles, 105-125 v., clock assembly for Models 515, 516, 517	12.95
*RZC-011		CLOCK—60 cycles, 105-125 v., clock assembly for Model 518	12.95
*S400C		SPEAKER—4" PM loudspeaker	4.95

MODELS 521, 522

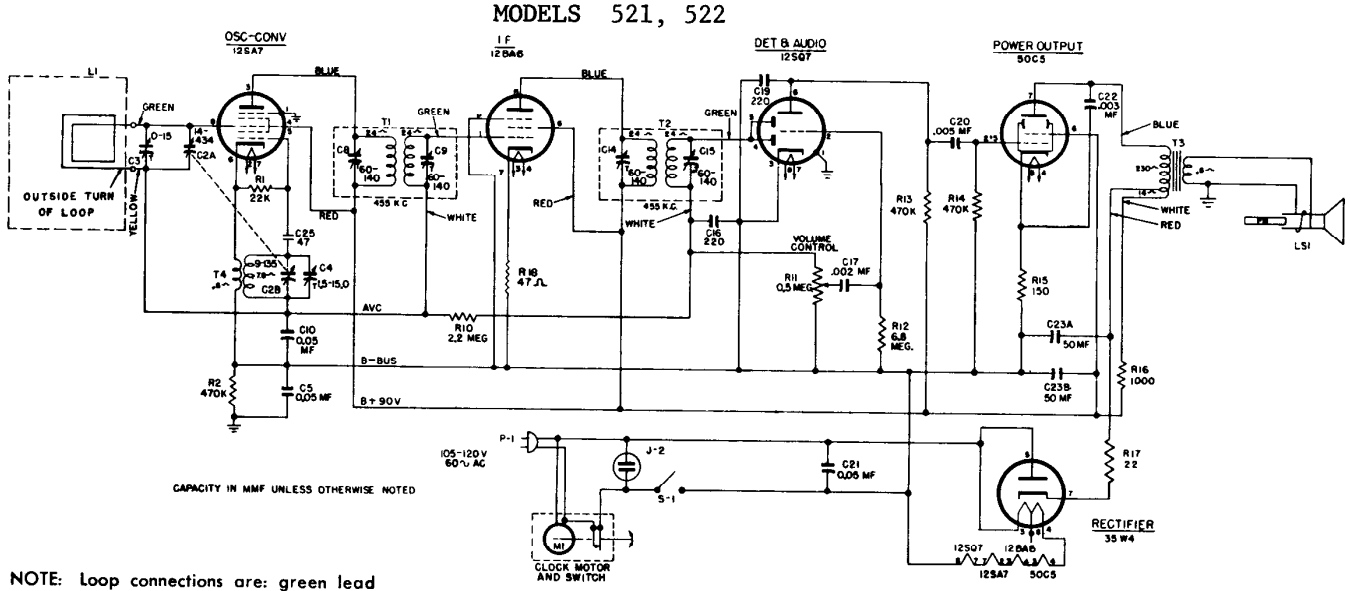

CAPACITY IN MMF UNLESS OTHERWISE NOTED

NOTE: Loop connections are: green lead to inside turn of antenna loop, yellow lead to outside turn.

RADIO REPLACEMENT PARTS LIST 521, 522

Cat. No.	Symbol	Description	Suggested Unit List Price
UNIVERSAL REPLACEMENT PARTS			
*UCC-036	C17	CAPACITOR—.002 mf., 600 v., paper	$0.25
*UCC-039	C20	CAPACITOR—.005 mf., 600 v., paper	.25
*UCC-045	C5, 10, 21	CAPACITOR—.05 mf., 600 v., paper (will replace respective sections of RCW-3013).	.30
*UCU-1036	C16, 19	CAPACITOR—220 mmf., mica	.25
*URD-009	R17	RESISTOR—22 ohms, ½ w., carbon	.13
*URD-017	R18	RESISTOR—47 ohms, ½ w., carbon	.13
*URD-029	R15	RESISTOR—150 ohms, ½ w., carbon	.13
*URD-081	R1	RESISTOR—22,000 ohms, ½ w., carbon	.13
*URD-113	R2, 13, 14	RESISTOR—470,000 ohms, ½ w., carbon	.13
*URD-129	R10	RESISTOR—2.2 meg., ½ w., carbon	.13
*URD-141	R12	RESISTOR—6.8 meg., ½ w., carbon	.13
*URF-049	R16	RESISTOR—1000 ohms, 2 w,, carbon	.25
SPECIALIZED REPLACEMENT PARTS			
RAB-135	L1	BACK—Cabinet back cover (includes loop L1)	
*RAC-085		MOUNTING BRACKET—Metal back cover holds clock to cabinet	$0.45
RAU-342		CABINET—Dark mahogany, Model 521	
RAU-343		CABINET—Blond mahogany, Model 522	
*RCC-074	C22	CAPACITOR—.003 mf., 600 v., paper	.25
*RCE-116	C23A, B	CAPACITOR—50 mf., 150 v.; 50 mf., 150 v., dry electrolytic	
*RCT-045	C2A, 2B C3, 4	CAPACITOR—Tuning capacitor (oscillator and r-f-section)	
*RCW-1043	C25	CAPACITOR—47 mmf., ceramic	.60
*RCW-3013	C16, 17, 19, 20	CAPACITOR—220 mmf., .002 mf., 220 mmf., .005 mf. (4 section ceramic)	1.00
RDK-217		KNOB—Tuning dial wheel. Does not include dial scale, see item RDS-090	
RDK-218		KNOB—Volume control knob	
*RDS-090		DIAL SCALE—Paper scale	$0.10
*RHC-017		CLIP—For mounting osc. coil, T4	.05
*RHC-024		CLIP—For mounting C23	.10
*RHG-015		GROMMET—For tuning cond.	.05
*RHH-004		FASTENER—Snap fastener for holding back	.02
*RHI-010		STRAIN RELIEF GROMMET—For power cord	.15
*RHJ-005		SPACER FOR TUNING CONDENSER	.02
*RHS-043		PLUG AND SWITCH MOUNTING BRACKET—For J2 and S1	.25
*RJC-004		CLIP—Loop connector clip	.02
RJJ-008	J2	APPLIANCE RECEPTACLE	.35
*RJS-092		SOCKET—Tube socket for 50C5, 35W4	.20
*RJS-116		SOCKET—Tube socket for 12SA7	.15
*RJS-117		SOCKET—Tube socket for 12SQ7	.15
*RJS-141		SOCKET—For 12BA6 tube, 7 pin	.20
*RLC-090	T4	COIL—Oscillator coil	.90
*RMS-205		SLEEP CONTROL BOOSTER SPRING	.20
*RRC-054	R11	POTENTIOMETER—0.5 meg., volume control	1.25
RSW-067	S1	SWITCH—ON-OFF Switch	.75
*RTL-094	T1	TRANSFORMER—1st I-F transformer	1.90
*RTL-095	T2	TRANSFORMER—2nd I-F transformer	1.90
RTO-036	T3	TRANSFORMER—Output transformer	2.85
*RWL-009		CORD—Power cord (brown)	.70
*RYN-005		NAMEPLATE G.E. MONOGRAM	.20
*RZC-009	M1	CLOCK—60 cycle, 105–125 v., clock assembly	12.95
*S400C	LS1	SPEAKER—PM loudspeaker	4.95

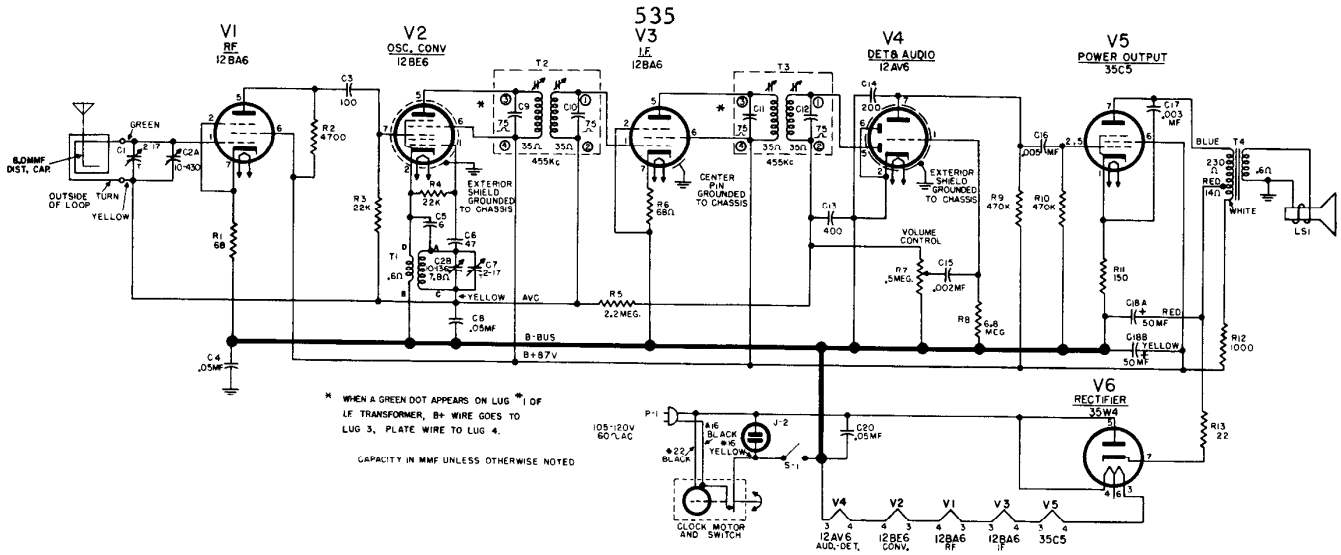

* WHEN A GREEN DOT APPEARS ON LUG *1 OF I.F. TRANSFORMER, B+ WIRE GOES TO LUG 3, PLATE WIRE TO LUG 4.

CAPACITY IN MMF UNLESS OTHERWISE NOTED

REPLACEMENT PARTS LIST—MODEL 535

Cat. No.	Symbol	Description	Unit Price
RAB-157		BACK—Cabinet back and loop antenna	$1.50
RAC-090		COVER—Metal cover for clock mechanism	.75
RAC-091		SHIELD—Metal plate shields bottom of chassis	.35
RAG-040		CLOTH—Maroon grille cloth mounted on cardboard	.35
RAU-347		CABINET—Mahogany plastic cabinet for Model 535	5.95
*RDC-032		CORD—Dial cord (25 yards bulk)	2.50
RDE-109		BEZEL—Dial window escutcheon bezel	1.10
RZK-006		KNOB—Alarm set knob (fawn)	.10
RDK-243		KNOB—Volume control and tuning knob (fawn)	.15
RZK-007		KNOB—Sleep and manual switch knob (fawn with white dot)	.10
RDP-059		POINTER—Dial pointer	.45
RDS-104		SCALE—Dial scale and mounting plate	1.10
RDW-046		WINDOW—Dial window	.40
*RHC-024		CLIP—Electrolytic capacitor mounting clip	.10
*RHC-034		CLIP—I-F transformer mounting clip	.05
RHC-048		CLIP—Dial scale mounting clip	
*RHG-015		GROMMET—Tuning gang mounting grommet	.05
*RHI-010		INSULATOR—Power cord strain relief insulator	.15
*RHJ-005		SPACER—Tuning gang mounting spacer	.02
*RHS-048		SHIELD—Short tube shield for converter V2	.20
*RHS-073		SHIELD—Tube socket pin cover shield	.10
*RHS-074		SHIELD—Terminal board cover shield	.10
*RHS-075		SCREW—Chassis mounting screw	.02
RHS-085		SHIELD—1¾" long tube shield for 2nd detector V4	.10
*RJC-004		CONNECTOR—Loop lead connector	.02
*RJJ-008	J2	OUTLET—110 v., appliance outlet	.35
*RJS-158		SOCKET—V3 (I-F) tube socket with center shield pin	.35
*RJS-162		SOCKET—V2 (conv.) impregnated tube socket	.30
*RJS-163		SOCKET—V1, V4, V5 and V6 tube socket	.30
RLC-110	T1	TRANSFORMER—Oscillator transformer	.90
RMC-002		CLIP—Oscillator coil mounting clip	.01
RMS-243		SPRING—Dial cord tension spring	.10
RMX-180		SHAFT—Tuning shaft and bushing assembly	.45
ROP-021		SPEAKER—4-inch PM loudspeaker	$4.90
*RSW-067	S1	SWITCH—ON-OFF switch (slide type)	.75
*RTL-117	T2, 3	TRANSFORMER—1st or 2nd I-F transformer	1.70
RTO-100	T4	TRANSFORMER—Output transformer	1.80
*RWL-025	P1	CORD—Brown heavy-duty AC power cord	.75
†RZC-013		CLOCK ASSEMBLY—Includes all appearance items, less metal cover	12.95

RESISTORS

RRC-153	R7	POTENTIOMETER—0.5 meg., volume control	1.25
*URD-009	R13	RESISTOR—22 ohms, ½ w., carbon	.13
*URD-021	R6	RESISTOR—68 ohms, ½ w., carbon	.13
*URD-29	R11	RESISTOR—150 ohms, ½ w., carbon	.13
*URD-065	R2	RESISTOR—4700 ohms, ½ w., carbon	.13
*URD-081	R3, 4	RESISTOR—22K ohms, ½ w., carbon	.13
*URD-113	R9, 10	RESISTOR—470K ohms, ½ w., carbon	.13
*URD-129	R5	RESISTOR—2.2 meg., ½ w., carbon	.13
*URD-141	R8	RESISTOR—6.8 meg., ½ w., carbon	.13
*URF-049	R12	RESISTOR—1000 ohms, 2 w., carbon	.25

CAPACITORS

*RCC-108	C17	CAPACITOR—.003 mf., 600 v., paper	.25
*RCE-127	C18A, B	CAPACITOR—50-50 mf. @ 150 v., electrolytic capacitor	1.85
*RCN-053	C4, 7	CAPACITOR—.047 mf., 600 v., paper	.35
RCT-050	C1; C2A, B; C7	CAPACITOR—126 and 420 mmf., tuning capacitor and trimmers	3.25
*RCW-3048	C13, 14, 15, 16	CAPACITOR—400 mmf., .002 mf., 220 mmf., .005 mf., ceramic "bullplate"	.90
RCW-3049		CAPACITOR—6 mmf. ±10%, ceramic	.35
*UCC-045	C20	CAPACITOR—.05 mf., 600 v., paper	.30
*UCG-020	C6	CAPACITOR—47 mmf., 500 v., silver mica	.35
*UCG-028	C3	CAPACITOR—100 mmf., 500 v., silver mica	.25

546, 547, 548, 549

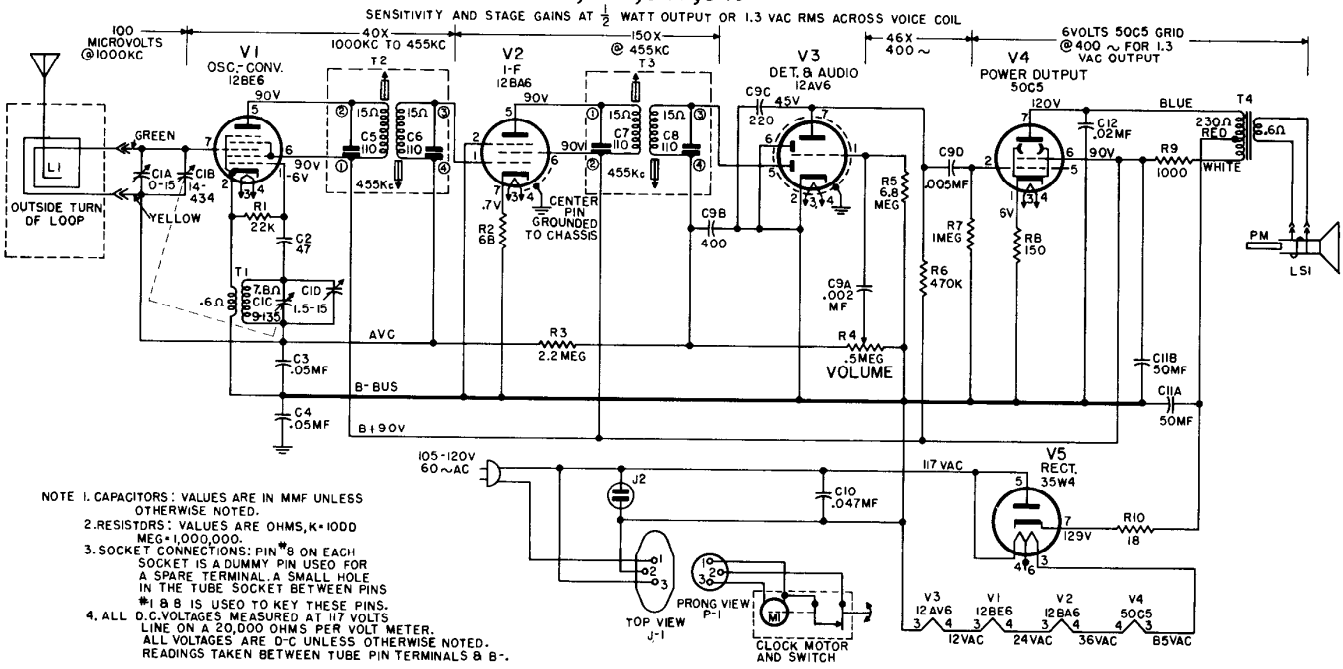

NOTE 1. CAPACITORS: VALUES ARE IN MMF UNLESS OTHERWISE NOTED.
2. RESISTORS: VALUES ARE OHMS, K=1000 MEG=1,000,000.
3. SOCKET CONNECTIONS: PIN *8 ON EACH SOCKET IS A DUMMY PIN USED FOR A SPARE TERMINAL. A SMALL HOLE IN THE TUBE SOCKET BETWEEN PINS *1 & 8 IS USED TO KEY THESE PINS.
4. ALL D.C. VOLTAGES MEASURED AT 117 VOLTS LINE ON A 20,000 OHMS PER VOLT METER. ALL VOLTAGES ARE D-C UNLESS OTHERWISE NOTED. READINGS TAKEN BETWEEN TUBE PIN TERMINALS & B-.

RADIO REPLACEMENT PARTS LIST FOR MODELS 546, 547, 548 AND 549

Cat. No.	Symbol	Description	Unit Price
CAPACITORS			
RCE-149	C11A, B	50–50 mf., 150 v., electrolytic	$2.00
*RCN-053	C10	.047 mf., ±20%, 600 v., molded paper	.35
RCT-063	C1A, B, C, D	Tuning, two gang	3.75
*RCW-3048	C9A, B, C, D	.002 mf., 400 mmf., 220 mf., .005 mf., ceramic	.90
RCW-3075	C2	47 mmf., ±20%, 500 v., ceramic	.25
*UCC-041	C12	.02 mf., 600 v., paper	.25
*UCC-045	C3, 4	.05 mf., 600 v., paper	.30
RESISTORS			
RRC-198	R4	Volume control, 500 K, composition	1.35
*URD-007	R10	18 ohms, ½ w., carbon	.13
*URD-021	R2	68 ohms, ½ w., carbon	.13
*URD-029	R8	150 ohms, ½ w., carbon	.13
*URD-081	R1	22 K, ½ w., carbon	.13
*URD-113	R6	470 K, ½ w., carbon	.13
*URD-121	R7	1 meg., ½ w., carbon	.13
*URD-129	R3	2.2 meg., ½ w., carbon	.13
*URD-141	R5	6.8 meg., ½ w., carbon	.13
*URF-049	R9	1000 ohms, 2 w., carbon	.25
COILS AND TRANSFORMERS			
RLC-119	T1	COIL—Oscillator coil	.90
*RTL-135	T2, 3	TRANSFORMER—1st or 2nd i-f	1.90
*RTO-100	T4	TRANSFORMER—Audio output	1.80
MISCELLANEOUS ELECTRICAL			
*RJC-004		CONNECTOR—Female connector, fits on male speaker connector	.02
RJJ-008	J2	RECEPTACLE—A-c power	.35
RJP-045	P1	PLUG—Thrse prong, with shell, for clock connection	.15
*RJS-158		SOCKET—Tube socket, miniature 7-pin, for V2	.35
*RJS-163		SOCKET—Tube socket, miniature 7-pin; for V3, V4 or V5	.30
*RJS-162		SOCKET—Tube socket, miniature 7-pin, for V1	.30
RJS-181	J1	SOCKET—Thrce prong socket on top of chassis for clock connection	.15
*RWL-024		POWER CORD—A-c cord and plug, white; for Model 549	.75
*RWL-025		POWER CORD—A-c cord and plug, brown; for Model 546 or 548	.75
*RWL-026		POWER CORD—A-c cord and plug, ivory; for Model 547	.75
RZC-023	M1	CLOCK ASSEMBLY—60 cycles, lese bezel and crystal	15.50
*S-403D-7	LS1	LOUDSPEAKER—4-in. PM	4.30

Cat. No.	Symbol	Description	Unit Price
MISCELLANEOUS MECHANICAL			
RAC-117		COVER—Plastic cover mounts over rear of clock	$0.50
RAC-118		COVER—Over all socket pins, 10½ x 1⅝ inches (some receivers use individual doughnut shaped shields, RHS-073)	1.00
*RDC-032		DIAL CORD—25 yds bulk	2.50
RDK-294		KNOB—On-Off-Volume or tuning, fawn; for Model 546	.20
RDK-295		KNOB—On-Off-Volume or tuning, ivory; for Model 547 or 548	.25
RDK-296		KNOB—On-Off-Volume or tuning, white; for Model 549	.20
RDP-074		POINTER—Dial scale pointer and slider, metal, red	.20
RDS-119		DIAL SCALE—Plastic	.60
*RHC-024		CLIP—⅛ in. mounting clip for C11	.10
*RHC-053		CLIP—For mounting i-f transformers, T2 or T3	.02
*RHG-018		GROMMET—Rubber, for mounting tuning capacitor C1	.05
*RHI-010		GROMMET—Power cord	.15
*RHJ-005		SPACER—Metal, for mounting C1	.02
*RHS-041		SCREW—No. 6 x ⅛ in., thread cutting, for mtg. loudspeaker	.02
*RHS-060		SCREW—No. 6 x ¼ in., self tapping, mounts chassis bottom plate	.01
*RHS-073		SHIELD—Over soldered pin connections of tube socket (some receivers use one-piece cover), RAC-118, over all sockets	.10
*RHS-085		SHIELD—Metal tube shield for 12AV6 tube	.10
*RMC-002		CLIP—Osc. coil mounting	.05
*RMS-118		SPRING—Dial cord tension	.10
RMS-217		TUNING SHAFT ASSEMBLY—Metal tuning shaft assembly 1⅝ x ¼ in., includes bushing, "C" washers and pulley	.05
CABINET AND CABINET PARTS			
RAB-194		LOOP L1 AND BACK—Antenna loop and cabinet back	1.70
RAG-049		GRILLE CLOTH ASSEMBLY—Maroon, pasteboard mounted; for Model 546	.45
RAG-050		GRILLE CLOTH ASSEMBLY—Red, pasteboard mounted; for Model 548	.45
RAG-051		ORILLE CLOTH ASSEMBLY—Ivory, pasteboard monnted; for Model 547	.45
RAG-052		GRILLE CLOTH ASSEMBLY—White, pasteboard mounted; for Model 549	.45
RAU-365		CABINET—Plastic, mottled mahogany finish; for Model 546	7.25
RAU-366		CABINET—Plastic, red finish; for Model 548	8.50
RAU-367		CABINET—Plastic, ivory finish; for Model 547	8.50
RAU-368		CABINET—Plastic, white, finish; for Model 549	8.50

MODELS 551, 552

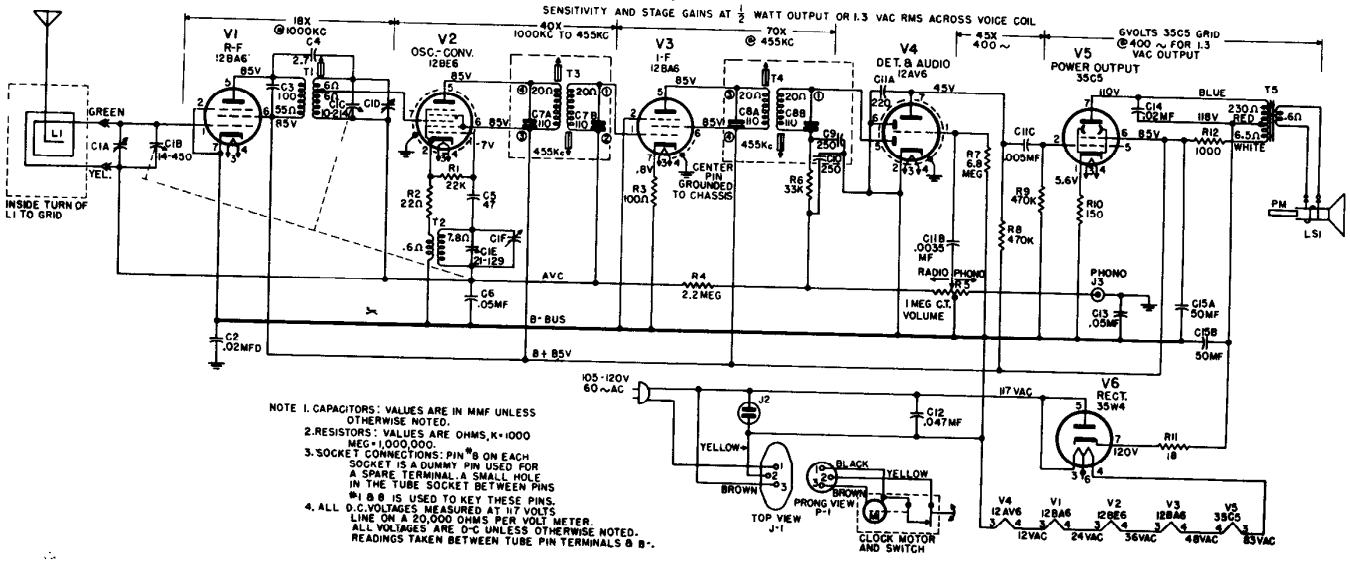

NOTE 1. CAPACITORS: VALUES ARE IN MMF UNLESS OTHERWISE NOTED.
2. RESISTORS: VALUES ARE OHMS, K=1000 MEG=1,000,000.
3. SOCKET CONNECTIONS: PIN #8 ON EACH SOCKET IS A DUMMY PIN USED FOR A SPARE TERMINAL. A SMALL HOLE IN THE TUBE SOCKET BETWEEN PINS #1 & 8 IS USED TO KEY THESE PINS.
4. ALL D.C. VOLTAGES MEASURED AT 117 VOLTS LINE ON A 20,000 OHMS PER VOLT METER. ALL VOLTAGES ARE D-C UNLESS OTHERWISE NOTED. READINGS TAKEN BETWEEN TUBE PIN TERMINALS & B-.

RADIO REPLACEMENT PARTS LIST FOR MODELS 551 AND 552

Cat. No.	Symbol	Description	Unit Price
CAPACITORS			
*RCE-149	C15A, B	CAPACITOR—50-50 mf., 150 v., electrolytic	$2.00
*RCN-053	C12	CAPACITOR—.047 mf., ±10% 600 v., paper, molded	.35
RCT-064	C1A, B, C, D, E, F	CAPACITOR—Tuning, three gang	4.75
*RCW-3036	C11A, B, C	CAPACITOR—220 mmf., .0035 mf., .005 mf.; ceramic couplate	.80
RCW-3039	C4	CAPACITOR—2.7 mmf., ±20%; ceramic	.25
*RCW-3075	C5	CAPACITOR—47 mmf., ±20%, 500 v; ceramic	.25
RCW-3079	C3	CAPACITOR—100 mmf., ±20%, 500 v; ceramic	.25
*UCC-041	C2, 14	CAPACITOR—.02 mf., 600 v; paper	.25
*UCC-045	C6, 13	CAPACITOR—.05 mf., 600 v.; paper	.30
RESISTORS			
RRC-199	R5	RESISTOR—Volume, 500 K, center tapped, composition	1.25
*URD-009	R2	RESISTOR—22 ohms, ½ w, carbon	.13
*URD-007	R11	RESISTOR—18 ohms, ½ w, carbon.	.13
*URD-025	R3	RESISTOR—100 ohms, ½ w, carbon.	.13
*URD-029	R10	RESISTOR—150 ohms, ½ w, carbon	.13
*URD-081	R1	RESISTOR—22 K, ½ w, carbon	.13
*URD-085	R6	RESISTOR—33 K, ½ w, carbon.	.13
*URD-113	R8, 9	RESISTOR—470 K, ½ w, carbon	.13
*URD-129	R4	RESISTOR—2.2 meg., ½ w, carbon	.13
*URD-141	R7	RESISTOR—6.8 meg., ½ w, carbon	.13
*URF-049	R12	RESISTOR—1000 ohms, 2 w, carbon	.25
COILS AND TRANSFORMERS			
RLB-034	T1	TRANSFORMER—RF to converter coupling	1.35
RLC-121	T2	TRANSFORMER—Oscillator grid-cathode	1.00
*RTL-135	T3	TRANSFORMER—1st IF.	1.90
*RTL-136	T4	TRANSFORMER—2nd IF	1.80
*RTO-100	T5	TRANSFORMER—Audio output	1.80
MISCELLANEOUS ELECTRICAL			
*RJS-158		SOCKET—Miniature, 7 pin for V3	.35
*RJS-162		SOCKET—Miniature, 7 pin for V2	.30
*RJS-163		SOCKET—Miniature, 7 pin for V1, V4, V5 and V6	.30
RJS-181	J1	SOCKET—3 pin wafer for clock connection	.15
*RWL-025		POWER CORD—A-c cord and plug, brown.	.75
RZC-024	M1	CLOCK ASSEMBLY—60 cycles, less knobs and crystal	15.50
S400D7	LS1	LOUDSPEAKER—4-inch PM, 4 watts, 3.2 ohms @ 400 cycles	5.70

Cat. No.	Symbol	Description	Unit Price
MISCELLANEOUS MECHANICAL			
*RDC-032		DIAL CORD—25 yards bulk	$2.50
RDK-297		KNOB—Tuning, fawn; for Model 551	.20
RDK-298		KNOB—Tuning, green; for Model 552.	.20
RDK-318		KNOB—On-Off-Volume, fawn; for Model 551	
RDK-319		KNOB—On-Off-Volume, green; for Model 552	
*RDP-074		POINTER—Dial scale pointer and slider, metal, red.	.20
*RHC-024		CLIP—⅞ inch for mounting electrolytic C11	.10
*RHG-018		GROMMET—Rubber, for mounting tuning capacitor, C1	.05
*RHI-010		GROMMET—Power cord strain relief in chassis back apron	.15
*RHJ-005		SPACER—Metal, for mounting tuning capacitor, C1.	.02
*RHS-041		SCREW—No. 6 x ⅜ inch thread cutting; for mgt. loudspeaker or escutcheon RDE-141	.02
RHS-048		SHIELD—Metal shield, 1¾-in. long, for 12BE6 tube	.15
*RHS-060		SCREW—No. 6 x ¼ in. self tapping, mounts chassis bottom plate	.01
*RHS-073		SHIELD—Doughnut shaped cover over soldered pin connections of tube socket	.10
*RHS-085		SHIELD—Metal shield, for 12AV6 tube.	.10
*RJC-004		CONNECTOR—Female connector, fits on male loudspeaker connector.	.02
*RJJ-008	J2	RECEPTACLE—A-c power receptacle mounted on chassis	.35
RJP-045	P1	PLUG—Three-prong, with shell, for clock connection	.15
RJS-182	J3	RECEPTACLE—Phono input jack, single pin.	.15
*RMC-002		CLIP—Oscillator coil mounting	.05
*RMS-118		SPRING—Dial cord tension spring	.10
RMW-070		PULLEY—On volume control shaft	.05
RMX-217		TUNING SHAFT—Includes bushing, "C" washers	.70
RDS-120		Dial Scale	
CABINET AND CABINET PARTS			
RAB-195	L1	LOOP AND BACK—Antenna loop and cabinet back	1.70
RAC-119		COVER—Plastic cover, mounts over rear of clock.	.50
RAG-049		GRILLE CLOTH—Pasteboard mounted, fawn; for Model 551	.45
RAG-053		GRILLE CLOTH—Pasteboard mounted, gray; for Model 552	.50
RAU-369		CABINET—Plastic, mottled mahogany finish; for Model 551.	.50
RAU-370		CABINET—Plastic, pearl gray finish; for Model 552.	8.50
RDE-141		ESCUTCHEON—Clock and radio dial scale escutcheon	3.95

* Used on previous receivers.

PRICES ARE SUGGESTED LIST PRICES AND SUBJECT TO CHANGE WITHOUT NOTICE

MODELS 555, 556

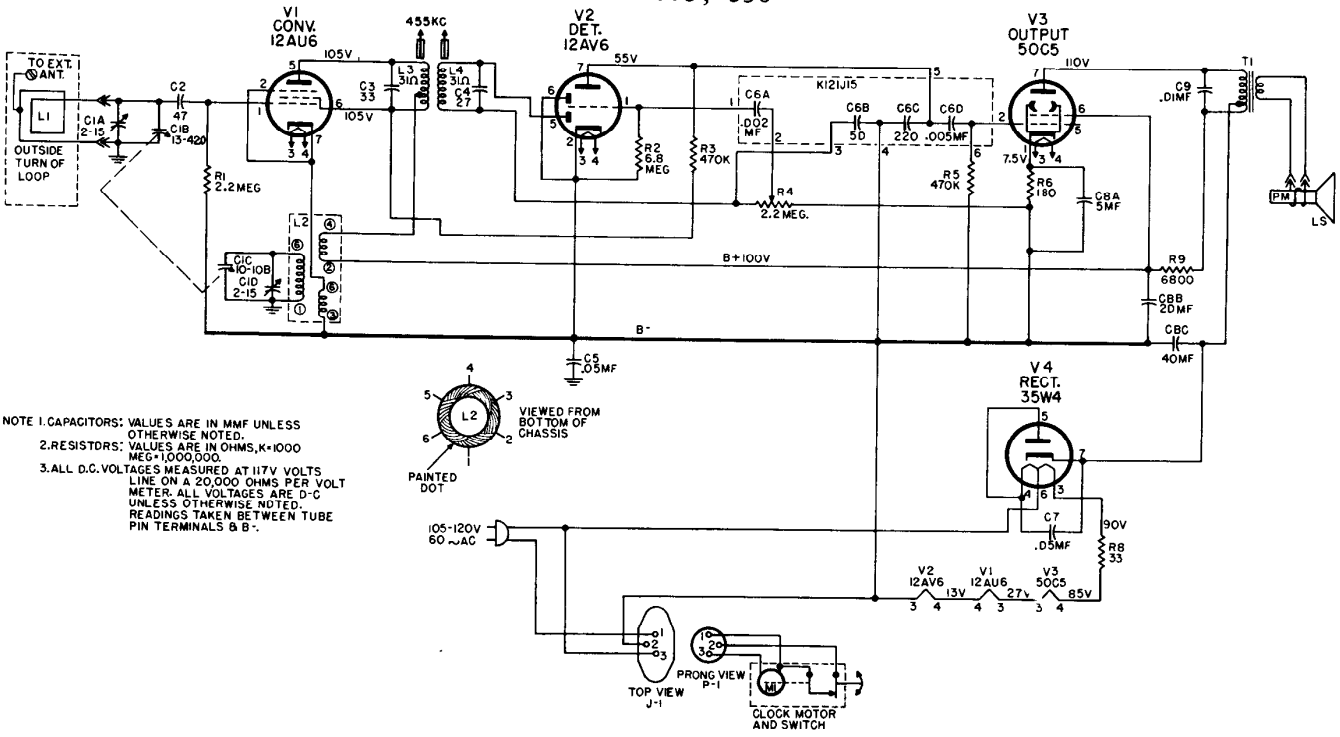

NOTE 1. CAPACITORS: VALUES ARE IN MMF UNLESS OTHERWISE NOTED.
2. RESISTORS: VALUES ARE IN OHMS, K=1000 MEG=1,000,000.
3. ALL D.C. VOLTAGES MEASURED AT 117V VOLTS LINE ON A 20,000 OHMS PER VOLT METER. ALL VOLTAGES ARE D-C UNLESS OTHERWISE NOTED. READINGS TAKEN BETWEEN TUBE PIN TERMINALS & B-.

REPLACEMENT PARTS LIST FOR MODEL 555 AND 556 CLOCK-RADIO RECEIVERS

Cat. No.	Symbol	Description	Unit Price
CAPACITORS			
*RCE-158	C8A, B, C	40–20 mf., 150 v., 5 mf., 25 v., electrolytic	$2.25
*RCT-068	C1A, B, C, D	Tuning, two-gang with trimmers	3.75
*RCW-3075	C2	47 mmf., ±20%, ceramic, 500 v.	.25
RCW-3091	C6A, B, C, D	.002 mf., 50 mmf., 220 mmf., .005 mf. ceramic	.90
*UCC-040	C9	.01 mf., +40% −10%, paper, 600 v.	.25
*UCC-045	C5, 7	.05 mf., +40% −10%, paper, 600 v.	.30
*UCU-1014	C4	27 mmf., ±20%, silver mica, 500 v.	.30
*UCU-1016	C3	33 mmf., ±10%, silver mica, 500 v.	.35
RESISTORS			
RRC-238	R4	VOLUME CONTROL—2.2 megohm	$1.10
*URD-031	R6	180 ohms, ½ w., carbon	.13
*URD-069	R9	6800 ohms, ½ w., carbon	.13
*URD-113	R3, 5	470,000 ohms, ½ w., carbon	.13
*URD-129	R1	2.2 megohms, ½ w., carbon	.13
*URD-141	R2	6.8 megohms, ½ w., carbon	.13
*URF-013	R8	33 ohms, 2 w., carbon	.25
COILS AND TRANSFORMERS			
*RLC-127	L2	COIL—Oscillator, 6-terminal, for autodyne circuit	$1.15
*RTL-149	L4	TRANSFORMER—I-F coil, unshielded, single coil with tuning core	1.10
*RTL-150	L3	TRANSFORMER—I-F coil, unshielded, single coil with tuning core	1.55
RTO-144	T1	TRANSFORMER—Audio output, tapped primary	2.50
MISCELLANEOUS ELECTRICAL			
*RII-082		WAFER—Part of tube receptacle, 1⅛ in dia.	$0.05
RII-089		BOARD—Sub-chassis, bare, no hardware or parts	.55
RII-090		HEAT SHIELD—1 x 1 in. asbestos base phenolic shield between chassis tube hole spacer, RHS-109, and textolite sub-chassis	.05
*RJC-027		CONTACT—Dip solder contact, includes tube pin clip for tube receptacle	.03
*RJC-028		CONNECTOR—Dip solder terminal only, used on RLC-127 and as common connector	.02
*RJJ-012	J1	SOCKET—3-pin, for clock plug	.10
*RJP-051	P1	PLUG—3-pin, with shield, clock plug	.15
*ROP-026		LOUDSPEAKER—4-in., PM, 3.2-ohm voice coil	5.10
*RWL-016		POWER CORD—With plug, ivory, 6 ft. long	.75

Cat. No.	Symbol	Description	Unit Price
MISCELLANEOUS ELECTRICAL (CONT'D)			
RZC-027		CLOCK—Assembly only, no mounting rings or crystal, alarm dial white on red background, hour and minute hand black, second hand white, time set and alarm set on back, dual control, Mfg. No. C87G5	$11.50
RZC-028		CLOCK—Assembly only, no mounting rings or crystal, alarm set hand red, hour and minute hands black, second hand white, time set and alarm set on back, single control, Mfg. No. C88G5	10.50
MISCELLANEOUS MECHANICAL			
RDK-354		KNOB—Volume control, ivory, Model 556	$0.30
RDK-356		KNOB—Tuning, dark brown, with dial scale, Model 555	.40
RDK-357		KNOB—Volume control, dark brown, with brass insert, Model 555	.30
RDK-389		KNOB—Tuning, ivory with dial scale, Model 556	.40
*RHC-008		CLIP—1-inch, mounts C8A, B, C	.10
RHE-014		EYELET—Tube receptacle wafer mounting	.01
*RHI-017		GROMMET—Two-piece strain relief for power cord	.15
*RHS-109		INSULATING SPACER—Black textolite in chassis tube holes	.20
*RHS-118		SHIELD PIN—Eyelet and soldering point, used to mount socket wafer, 12AU6	.05
*RMS-272		RING—Compression, for dial knob	.05
RZK-016		KNOB—Dark brown, with pointer for slotted round shaft on RZC-027 clock	.05
RZK-021		KNOB—Brown, with pointer, for flat shaft on RZC-028 clock	.10
RZK-025		KNOB—Ivory, for flat shaft on RAC-028 clock	.10
RZW-009		CRYSTAL—Clock crystal, plastic, with white numerals, Model 555	.35
RZW-011		CRYSTAL—Clock crystal, plastic, with brown numerals, Model 556	.40
CABINETS AND CABINET PARTS			
RAB-224		LOOP AND BACK	$1.65
RAC-136		COVER—Clock shield, plastic, protects clock RZC-027	.40
RAC-141		COVER—Clock shield, plastic, protects clock RZC-028	.45
RAG-059		GRILLE CLOTH—Assembly, white, with chipboard mounting ring, Model 555	.35
RAG-064		GRILLE CLOTH—Assembly, red, with chipboard mounting ring, Model 556	.35
RAU-388		CABINET—Plastic, ivory, for Model 555, no hardware or parts	8.50
RAU-402		CABINET—Plastic, red, for Model 556, no hardware or parts	8.50

557, 558, 559

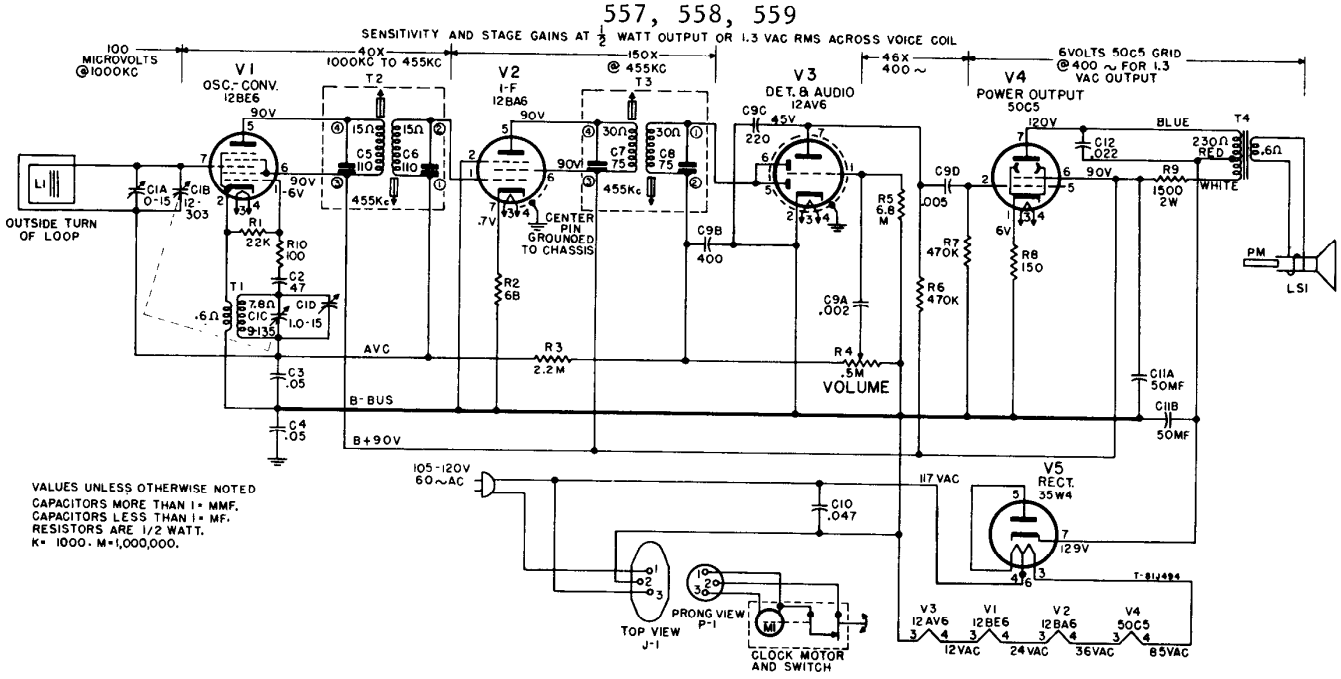
SENSITIVITY AND STAGE GAINS AT ½ WATT OUTPUT OR 1.3 VAC RMS ACROSS VOICE COIL
100 MICROVOLTS @1000KC
40X 1000KC TO 455KC
150X @ 455KC
46X 400~
6VOLTS 50C5 GRID @400~ FOR 1.3 VAC OUTPUT
V1 OSC.-CONV. 12BE6
V2 I-F 12BA6
V3 DET. & AUDIO 12AV6
V4 POWER OUTPUT 50C5
V5 RECT. 35W4
T1
T2
T3
T4
OUTSIDE TURN OF LOOP
L1
C1A 0-15
C1B 12-303
C1C 7.6Ω
C1D 1.0-15
C2 47
C3 .05
C4 .05
C5 110
C6 110
C7 75
C8 75
C9A .002
C9B 400
C9C 220 45V
C9D .005
C10 .047
C11A 50MF
C11B 50MF
C12 .022
R1 22K
R2 68
R3 2.2M
R4 .5M VOLUME
R5 6.8 M
R6 470K
R7 470K
R8 150
R9 1500 2W
15Ω
30Ω
455Kc
90V
6V
.7V
CENTER PIN GROUNDED TO CHASSIS
AVC
B-BUS
B+90V
120V
117VAC
129V
BLUE
WHITE
230Ω RED
.6Ω
PM
LSI
105-120V 60~AC
TOP VIEW J-1
PRONG VIEW P-1
CLOCK MOTOR AND SWITCH
V3 12AV6 12VAC
V1 12BE6 24VAC
V2 12BA6 36VAC
V4 50C5 85VAC
T-81494
VALUES UNLESS OTHERWISE NOTED
CAPACITORS MORE THAN 1 = MMF.
CAPACITORS LESS THAN 1 = MF.
RESISTORS ARE 1/2 WATT.
K= 1000. M=1,000,000.

REPLACEMENT PARTS LIST FOR MODELS 557, 558 AND 559

Cat. No.	Symbol	Description	Unit Price
CAPACITORS			
*RCE-160	C11A, B	50-50 mf., 150 v., electrolytic	$2.10
*RCN-050	C12	.022 mf., 600 v., paper molded	.35
*RCN-053	C10	.047 mf., ±20%, 600 v., paper molded	.35
*RCT-073	C1A, B, C, D	Tuning, two gang	3.50
*RCW-3048	C9A, B, C, D	Four capacitors in two sections, section one .002, +100 −0%, section two 400 mmf., 220 mmf., +70% −30%, .005 mmf., +100 −0%	.90
*RCW-3075	C2	47 mmf., ±20%, ceramic	.25
*UCC-045	C3, 4	.05 mf., 600 v., paper	.30
RESISTORS			
*RRC-240	R4	VOLUME CONTROL—500,000 ohms	1.40
*URD-021	R2	68 ohms, ±10%, ½ w.	.13
*URD-025	R10	100 ohms, ±10%, ½ w.	.13
*URD-029	R8	150 ohms, ±10%, ½ w.	.13
*URD-081	R1	22,000 ohms, ±10%, ½ w.	.13
*URD-113	R6, 7	470,000 ohms, ±10%, ½ w.	.13
*URD-129	R3	2.2 megohms, ±10%, ½ w.	.13
*URD-141	R5	6.8 megohms, ±10%, ½ w.	.13
*URF-053	R9	1500 ohms, ±10%, 2 w.	.25
COILS AND TRANSFORMERS			
*RLC-122	T1	OSCILLATOR COIL	1.00
*RLL-055	L1	ANTENNA—Ferrite core, 300 uh inductance 7 in. long, ½ in. dia.	1.50
*RTL-143	T2	TRANSFORMER—I-F, 1st	1.80
RTL-163	T3	TRANSFORMER—I-F, 2nd	1.80
*RTO-138	T4	TRANSFORMER—Audio output	2.50
MISCELLANEOUS ELECTRICAL			
*RJC-027		CONTACT—Dip solder contact includes tube pin clip for tube receptacle	.03
*RJC-028		CONNECTOR—For mounting oscillator and used as common solder point	.02
*RJC-030		I-F CLIP—Dip solder contact and clip for I-F trans. spring brass connects pin 6-12BE6, pin 6-12BA6 and pin 6-12AV6	.02
*RJC-031		I-F CLIP—Dip solder contact and clip for I-F trans. spring brass connects pin 5-12BE6 and pins 1-5-12BA6	.02
*RJJ-012	J1	SOCKET—3-pin clock plus socket	.10
*RJP-051	P1	PLUG—3-pin plug and shield for clock	.15
*ROP-029		SPEAKER—4 in., 3.2-ohm voice coil with mounting bracket	4.90
*RWL-025		CORD—Heavy-duty type, brown power cord and plug, 6 ft. long, Models 557 and 559	.75
*RWL-026		CORD—Ivory, power cord and plug, 6 ft. long, Model 558	.75
RZC-034		CLOCK—Model 558	14.60
RZC-036		CLOCK—Models 557 and 559	14.60

Cat. No.	Symbol	Description	Unit Price
MISCELLANEOUS MECHANICAL			
*RHC-024		CLIP—⅞-in. electrolytic mounting	$0.10
*RHC-080		CLIP—Holds Textolite sub-chassis	.10
*RHE-014		EYELET—Tube receptacle wafer mounting	.01
*RHE-016		EYELET—I-F trans. wafer mounting	.01
*RHI-017		GROMMET—Two-piece strain relief for power cord	.15
*RHS-040		SCREW—For mounting clock	.05
*RHS-084		SCREW—For mounting grille and speaker	.05
*RHS-109		INSULATING SPACER—Black Textolite used in chassis tube holes	.20
*RHS-110		TUBE SHIELD—Miniature tube shield metal, for 12AV6 tube	.15
*RHS-118		EYELET—Eyelet and soldering point used to mount 1st i-f socket wafer 12BA6	.05
*RHS-128		SHIELD—Fiber clock switch shield	.04
*RII-081		WAFER—Part of I-F trans. receptacle	.05
*RII-082		WAFER—Part of tube receptacle	.05
*RII-084		ANTENNA COVER—Polystyrene, molded, brown	.60
*RII-088		BOARD—Sub-chassis, bare, no hardware or parts	.60
*RII-090		HEAT SHIELD	.05
*RMS-272		RING—Compression spring for knobs	.05
*RMS-331		SPRING—To hold clock shield	.10
CABINET AND APPEARANCE ITEMS			
*RAB-220		BACK—Cabinet back, less antenna and antenna cover	.20
RAU-397		CABINET—Mahogany, Model 557	10.50
RAU-398		CABINET—Ivory, Model 558	10.50
RAU-399		CABINET—Green, Model 559	10.50
RDK-379		KNOB—Tuning, with dial scale, ivory, Model 558	.85
RDK-380		KNOB—Tuning, with dial scale, green, Model 559	.85
RDK-381		KNOB—Volume, ivory, Model 558	.35
RDK-382		KNOB—Volume, green, Model 559	.35
RDK-383		KNOB—Tuning, with dial scale, mahogany, Model 557	.80
RDK-384		KNOB—Volume, mahogany, Model 557	.15
RDO-003		PIN—Tuning indicator, Models 557, 558, 559	.02
RZK-017		KNOB—Clock, clear plastic, Models 557, 559	.10
RZK-022		KNOB—Clock, ivory, Model 558	.10
RZW-012		DIAL CRYSTAL—Clock, gold numbers, Model 558	.85
RZW-016		DIAL CRYSTAL—Clock, white numbers, Models 557-9	.85

* Parts used on previous receivers.

PRICES ARE SUGGESTED LIST PRICES AND SUBJECT TO CHANGE WITHOUT NOTICE

MODELS 560, 561

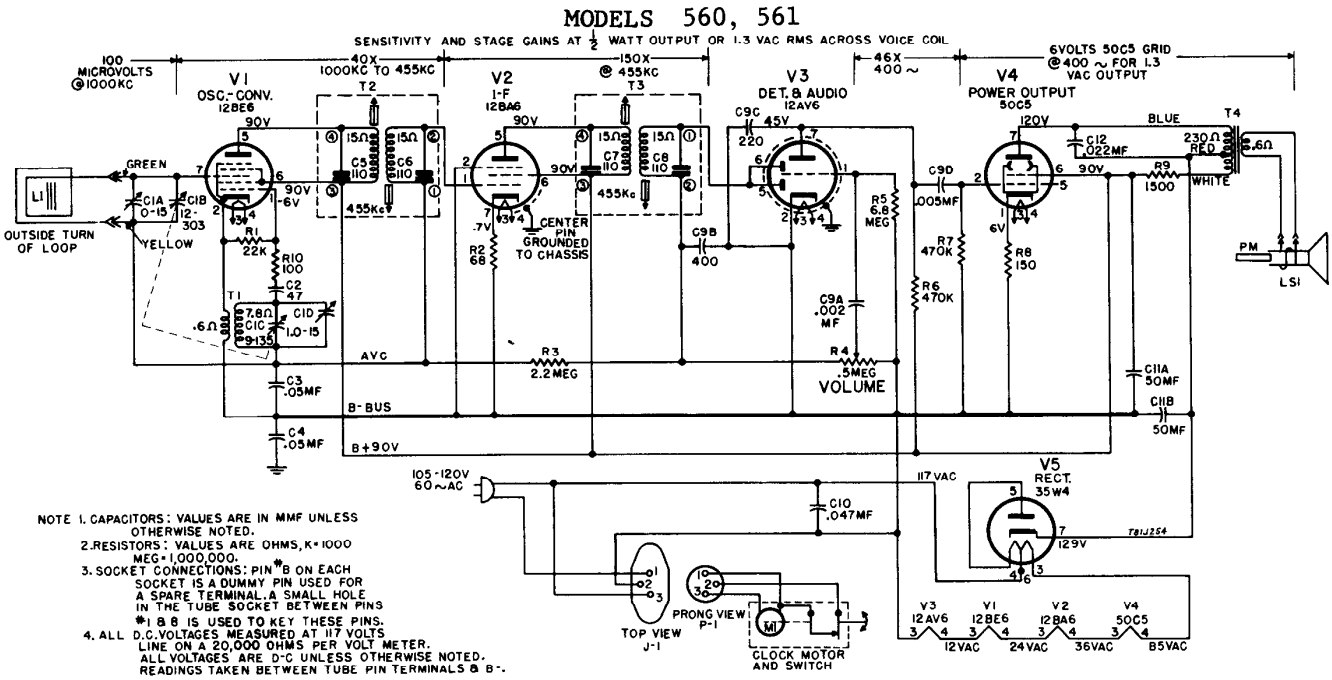

NOTE 1. CAPACITORS: VALUES ARE IN MMF UNLESS OTHERWISE NOTED.
2. RESISTORS: VALUES ARE OHMS, K=1000 MEG=1,000,000.
3. SOCKET CONNECTIONS: PIN #8 ON EACH SOCKET IS A DUMMY PIN USED FOR A SPARE TERMINAL. A SMALL HOLE IN THE TUBE SOCKET BETWEEN PINS #1 & 8 IS USED TO KEY THESE PINS.
4. ALL D.C. VOLTAGES MEASURED AT 117 VOLTS LINE ON A 20,000 OHMS PER VOLT METER. ALL VOLTAGES ARE D-C UNLESS OTHERWISE NOTED. READINGS TAKEN BETWEEN TUBE PIN TERMINALS & B-.

REPLACEMENT PARTS LIST FOR MODELS 560 AND 561

Cat. No.	Symbol	Description	Unit Price
CAPACITORS			
*RCE-160	C11A, B	50-50 mf., 150 v., electrolytic	$2.10
*RCN-050	C12	.022 mf., 600 v., paper molded	.35
*RCN-053	C10	.047 mf., ±20%, 600 V., paper molded	.35
RCT-073	C1A, B, C, D	Tuning, two-gang	3.50
*RCW-3048	C9A, B, C, D	Four capacitors in two sections, section one .002, +100%-0%, section two 400 mmf. 220 mmf., +70%-30%, .005 mmf., + 100%-0%	.90
*RCW-3075	C2	47 mmf., ±20%, N2200, ceramic	.25
*UCC-045	C3, 4	.05 mf., 600 v., paper	.30
RESISTORS			
RRC-240	R4	VOLUME CONTROL—500,000 ohms	1.40
*URD-021	R2	68 ohms, ±10%, ½ w.	.13
*URD-025	R10	100 ohms, ±10%, ½ w.	.13
*URD-029	R8	150 ohms, ±10%, ½ w.	.13
URD-081	R1	22,000 ohms, ±10%, ½ w.	.13
*URD-113	R6, 7	470,000 ohms, ±10%, ½ w.	.13
*URD-129	R3	2.2 megohms, ±10%, ½ w.	.13
URD-141	R5	6.8 megohms, ±10%, ½ w.	.13
*URF-053	R9	1500 ohms, ±10%, 2 w.	.25
COILS AND TRANSFORMERS			
*RLC-122	T1	OSCILLATOR COIL	1.00
*RLL-055	L1	ANTENNA—Ferrite core, 300 uh inductance 7 in. long, ½ in. dia.	1.50
*RTL-143	T2, 3	TRANSFORMER—I-F transformer, 1st & 2nd	1.80
*RTO-138	T4	TRANSFORMER—Audio output transformer	2.50
MISCELLANEOUS ELECTRICAL			
*RJC-027		CONTACT—Dip solder contact, includes tube pin clip for tube receptacle	.03
*RJC-028		CONNECTOR—For mounting oscillator coil and used as common solder point	.02
*RJC-029		TERMINAL—Female, flat, push-on connector for i-f transformer	.05
*RJC-030		I-F CLIP—Dip solder contact and clip for i-f transformers, spring brass, connects pin 6—12BE6, pin 6—12BA6, and pin 6—12AV6	.02
*RJC-031		I-F CLIP—Dip solder contact and clip for i-f transformers, spring brass, connects pin 5—12BE6, pins 1-5—12BA6	.02
*RJJ-012	J1	SOCKET—3-pin clock plug socket	.10

Cat. No.	Symbol	Description	Unit Price
MISCELLANEOUS ELECTRICAL (Cont'd)			
*RJP-051	P1	PLUG—3-pin plug and shield for clock	$0.15
*ROP-029		SPEAKER—4 in., 3.2 ohm voice coil, w. mtg. bracket	4.90
*RWL-025		CORD—Heavy-duty type brown power cord & plug, 6 ft. long, Model 560	.75
*RWL-026		CORD—Ivory power cord & plug, 6 ft. long, Model 561	.75
RZC-030		CLOCK—Clock ass'y only, no crystal; dial plate bronze, hour and minute hand brass, radium-tipped, second hand red, two controls on front, new type clock with enclosed switch. Telechron No. C91G29	13.00
MISCELLANEOUS MECHANICAL			
RAC-137		CLOCK SHIELD—Plastic, clock cover	.45
*RHC-024		CLIP—⅞ in., electrolytic mounting clip	.10
*RHC-061		CLIP—Holds textolite sub-chassis	.10
*RHE-014		EYELET—Tube receptacle wafer mounting	.01
*RHE-016		EYELET—I-F transformer wafer mounting	.01
*RHI-017		GROMMET—Two-piece strain relief for power cord	.15
*RHS-040		SCREW—For mounting clock	.05
*RHS-109		INSULATING SPACER—Black textolite, used in chassis tube holes	.20
*RHS-110		TUBE SHIELD—Miniature tube shield, metal, for 12AV6 tube	.15
RHS-118		EYELET—Eyelet and soldering point, used to mount 1st i-f socket wafer, 12BA6	.05
*RHX-011		GROMMET—Rubber, for mounting gang	.10
*RII-081		WAFER—Part of i-f transformer receptacle	.05
*RII-082		WAFER—Part of tube receptacle	.05
*RII-084		ANTENNA COVER—Polystyrene, molded, brown	.60
*RII-088		BOARD—Sub-chassis, bare, no hardware or parts	.60
*RII-090		HEAT SHIELD	.05
*RMS-272		RING—Compression, for knobs	.05
CABINETS AND APPEARANCE ITEMS			
RAB-220		BACK—Cabinet, masonite, less antenna and antenna cover	.20
*RAG-051		GRILLE CLOTH—For Model 561	.45
RAU-389		CABINET—Plastic, drak brown, Model 560	9.50
RAU-390		CABINET—Plastic, ivory, Model 561	9.50
RDK-358		DIAL SCALE—Ivory, Model 561	.40
RDK-359		DIAL SCALE—Dark brown, Model 560	.40
RDK-360		KNOB—Volume control, dark brown, Model 560	.15
RDK-361		KNOB—Volume control, ivory, Model 561	.15
RZA-014		DIAL RING—Plastic, adhesive backed, bright gold, around clock dial inside crystal, two required	.15
RZK-020		KNOB—Clock, clear plastic, w. dot	.15
RZW-008		DIAL CRYSTAL—Clock, raised gold numerals, clear lettering	.85

MODELS 564, 565, 566

SENSITIVITY AND STAGE GAINS AT ½ WATT OUTPUT OR 1.3 VAC RMS ACROSS VOICE COIL

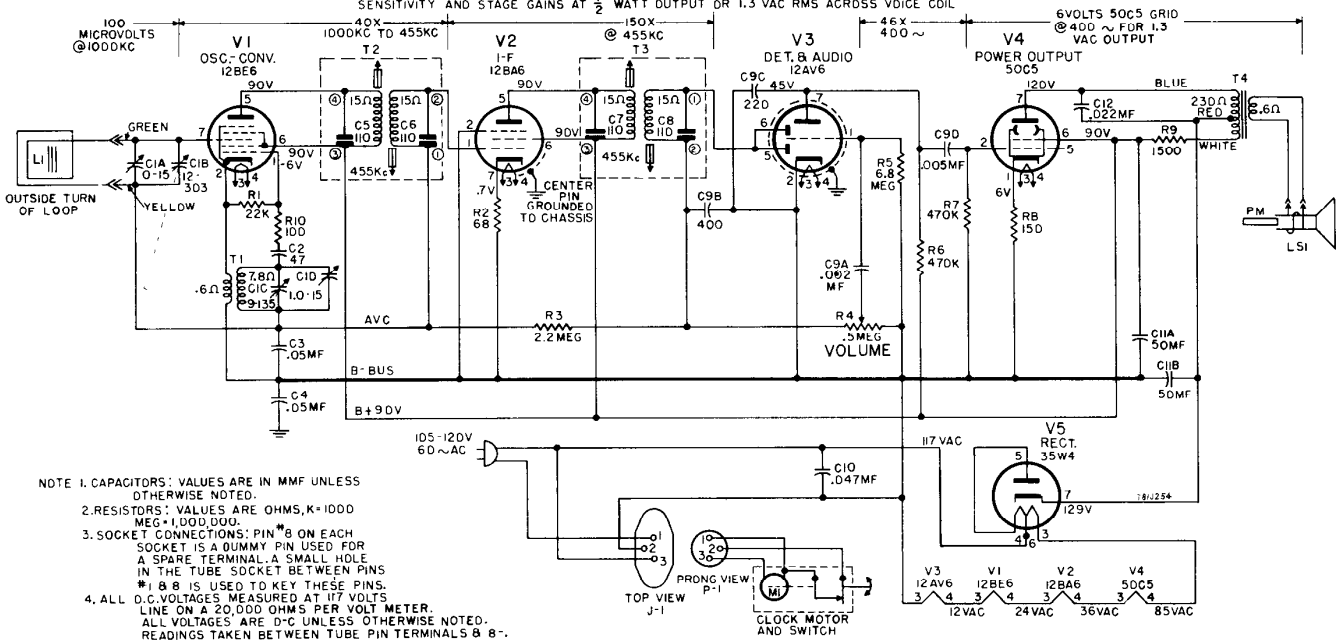

NOTE 1. CAPACITORS: VALUES ARE IN MMF UNLESS OTHERWISE NOTED.

2. RESISTORS: VALUES ARE OHMS, K=1000 MEG=1,000,000.

3. SOCKET CONNECTIONS: PIN #8 ON EACH SOCKET IS A DUMMY PIN USED FOR A SPARE TERMINAL. A SMALL HOLE IN THE TUBE SOCKET BETWEEN PINS #1 & 8 IS USED TO KEY THESE PINS.

4. ALL D.C. VOLTAGES MEASURED AT 117 VOLTS LINE ON A 20,000 OHMS PER VOLT METER. ALL VOLTAGES ARE D-C UNLESS OTHERWISE NOTED. READINGS TAKEN BETWEEN TUBE PIN TERMINALS & B-.

REPLACEMENT PARTS LIST FOR MODELS 564, 565 AND 566

Cat. No.	Symbol	Description	Unit Price
		CAPACITORS	
*RCE-160	C11, A, B	50-50 mf., 150 v., electrolytic	$2.10
*RCN-050	C12	.022 mf., 600 v., paper molded	.35
*RCN-053	C10	.047 mf., 600 v., paper molded	.35
RCT-069	C1, A, B, C, D	Tuning, two-gang, with drive drum	3.90
*RCW-3048	C9A, B, C, D	.002 mf., 400 mmf., 220 mmf., .005 mf. ceramic couplate	.90
*RCW-3075	C2	47 mmf., ±20%, N2200, ceramic	.25
*UCC-045	C3, 4	.05 mf., 600 v., paper	.30
		RESISTORS	
RRC-212	R4	VOLUME CONTROL—500,000 ohms	$1.00
*URD-021	R2	68 ohms, ½ w.	.13
*URD-025	R10	100 ohms, ½ w.	.13
*URD-029	R8	150 ohms, ½ w.	.13
*URD-081	R1	22,000 ohms, ½ w.	.13
URD-113	R6, 7	470,000 ohms, ½ w.	.13
*URD-129	R3	2.2 megohms, ½ w.	.13
*URD-141	R5	6.8 megohms, ½ w.	.13
*URF-053	R9	1500 ohms, 2 w.	.25
		COILS AND TRANSFORMERS	
*RLC-122	T1	COIL—Oscillator	$1.00
*RLL-055	L1	ANTENNA—Ferrite core, 300 uh inductance 7 in. long, ½ in. dia.	1.50
*RTL-143	T2, 3	TRANSFORMER—1st and 2nd I-F	1.80
*RTO-138	T4	TRANSFORMER—Audio output trans.	2.50
		MISCELLANEOUS ELECTRICAL	
RJJ-012	J1	SOCKET—3-pin clock plug socket	$0.10
RJP-051	P1	PLUG—3-pin plug and shield for clock	.15
*ROP-027		SPEAKER—4-inch, 3.2 ohms, yoke rotated 90 degrees	4.95
*RWL-009		CORD—Power cord & plug, brown, ivory plug, used on Models 565, 566	.70
*RWL-016		CORD—Power cord & plug, ivory, used on Model 564	.75
RZC-026	M1	CLOCK ASSEMBLY—60 cycles, three-control, sleep feature, exposed type switch contacts, mfg. no. C57G211; may be substituted for clock, RZC-032 of late receivers.	15.00
RZC-032	M1	CLOCK ASSEMBLY—60 cycles, three-control, sleep feature, enclosed type switch contacts, mfg. no. C97G211; may be substituted for clock, RZC-026, of early receivers.	

Cat. No.	Description	Unit Price
	MISCELLANEOUS MECHANICAL	
RDC-032	DIAL CORD—25 yards bulk	$2.50
RDK-322	KNOB—Tuning, maroon, less compression ring, for Model 564	.10
RDK-323	KNOB—Volume control, grey, less compression ring, for Models 564, 565 and 566	.35
RDK-353	KNOB—Tuning, black, less compression ring for Models 565-66	.10
RDM-048	GUIDE POST—Wood dowel guide for dial cord travel.	.05
RDP-076	POINTER—Dial pointer, metal, red, 1½ in. long	.25
RDS-123	DIAL SCALE—Metal back plate with scale markings no numerals, gold, with black & green markings	.45
*RHC-024	CLIP—⅛ in. electrolytic mounting clip	.10
*RHC-061	CLIP—Holds textolite sub-chassis	.10
*RHE-014	EYELET—Tube receptacle wafer mounting	.01
*RHE-016	EYELET—I-F transformer wafer mounting	.01
RHG-018	GROMMET—Rubber, tuning condenser shock mount	.05

Cat. No.	Description	Unit Price
	MISCELLANEOUS MECHANICAL (CONT'D)	
*RHI-017	GROMMET—Two-piece strain relief for power cord	$0.15
RHJ-023	SPACER—Metal, for tuning condenser shock mounts	
*RHM-025	RETAINING RING—"C" washer for control shaft	
*RHS-109	INSULATING SPACER—Black textolite, used in chassis tube holes.	.20
*RHS-110	TUBE SHIELD—Miniature tube shield, metal 1¾ in. long for 12AV6	.15
RHS-115	SCREW—Loudspeaker mtg. No. 6-32, 9/16 in. long painted head (ivory) square shoulder, for Model 564	.05
RHS-116	SCREW—Loudspeaker mounting, No. 6-32, red head for Model 565	.05
RHS-117	SCREW—Loudspeaker mtg., No. 6-32, green head for Model 566	.05
RHS-118	EYELET—Eyelet and soldering point, used to mount 1st I-F socket wafer 12BA6 tube	.05
*RII-081	WAFER—Part of I-F transformer receptacle 15/16 in. x 7/8 in.	.05
*RII-082	WAFER—Part of tube receptacle, 1 1/32 in. dia.	.05
*RII-084	ANTENNA COVER—Polystyrene, molded, brown, 10 1/4 in. long, ¾ in. wide	.60
*RII-088	BOARD—Sub-chassis, bare, no hardware or parts	.60
RII-090	HEAT SHIELD—1 x 1 in. asbestos base phenolic shield between chassis tube hole spacer, RHS-109, and textolite sub-chassis.	.05
*RJC-004	TERMINAL—Small female connector on audio output leads.	.02
*RJC-027	CONTACT—Dip solder contact, incl. tube pin clip for tube receptacle.	.03
*RJC-028	CONNECTOR—Dip solder terminal only, used on RCL-122 and as common connector	.02
*RJC-029	TERMINAL—Female, flat, push-on connector for I-F transformer	.05
*RJC-030	I-F CLIP—Dip solder contact and clip for I-F transformers, spring brass, connects pin 6-12BE6, pin 6-12BA6 and pin 6-12AV6	.02
*RJC-031	CLIP—Dip solder contact and clip for I-F transformers, spring brass, connects pin 5-12BE6, pin 1-12BA6 and pin 5-12BA6	.02
*RMS-130	SPRING—Dial cord tension spring inside dial drum	.15
RMS-272	RING—Compression, for tuning knob, ⅜ in. dia. 3/16 in. wide.	.05
RMS-296	RING—Compression ring, volume control, 5/16 in. dia. ¼ in. wide	.05
RMX-243	SHAFT—Tuning, tubular, 1 3/16 in. long, ⅜ in. dia.	.30
RZK-018	KNOB—Clock knob, maroon, with pointer, for Model 564	
RZK-019	KNOB—Clock knob, black, with pointer, for Models 565 and 566	
	CABINETS AND CABINET PARTS	
RAB-212	BACK—For cabinet, less loop, masonite, 11 in. x 4½ in.	$0.20
RAC-132	COVER—Plastic, black, for clock	.40
*RAG-050	GRILLE CLOTH—Grille cloth assembly, red, 4 1/16 in. x 3 9/16 in., includes chipboard mount, for Model 565	.45
*RAG-051	GRILLE CLOTH—Grille cloth assembly, maroon, 4 1/16 in. x 3 9/16 in., includes chipboard mount, for Model 564	.45
*RAG-057	GRILLE CLOTH—Grille cloth assembly, green, 4 1/16 in. x 3 9/16 in., includes chipboard mount, for Model 566	.50
RAU-379	CABINET—Plastic, ivory, includes crystals and dial rings, for Model 564	9.50
RAU-383	CABINET—Plastic, red, includes crystals and dial rings, Model 565	9.50
RAU-384	CABINET—Plastic green, includes crystals and dial rings, Model 566	9.50

MODELS 572, 573, 574, 575

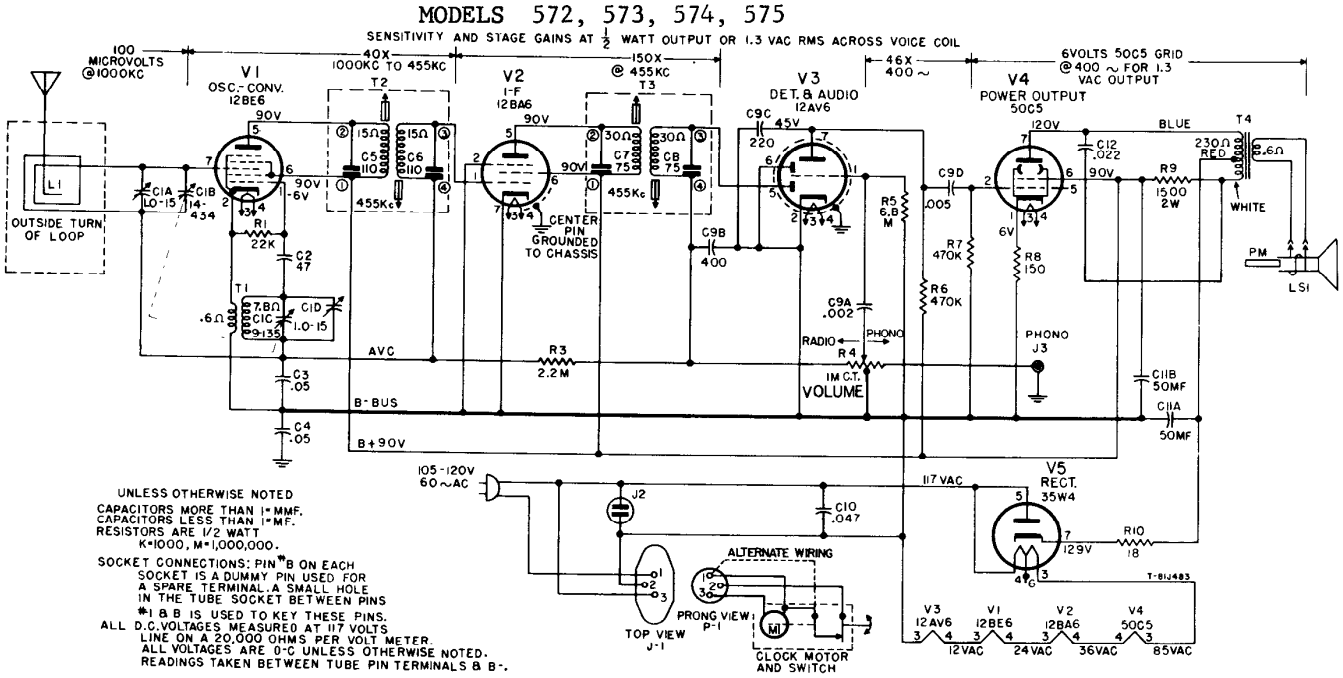

UNLESS OTHERWISE NOTED
CAPACITORS MORE THAN 1 MMF.
CAPACITORS LESS THAN 1 MF.
RESISTORS ARE 1/2 WATT
K=1000, M=1,000,000.

SOCKET CONNECTIONS: PIN #8 ON EACH SOCKET IS A DUMMY PIN USED FOR A SPARE TERMINAL. A SMALL HOLE IN THE TUBE SOCKET BETWEEN PINS #1 & 8 IS USED TO KEY THESE PINS.

ALL D.C. VOLTAGES MEASURED AT 117 VOLTS LINE ON A 20,000 OHMS PER VOLT METER. ALL VOLTAGES ARE D-C UNLESS OTHERWISE NOTED. READINGS TAKEN BETWEEN TUBE PIN TERMINALS & B-.

REPLACEMENT PARTS LIST FOR MODELS 572, 573, 574 AND 575

Cat. No.	Symbol	Description	Unit Price
CAPACITORS			
*RCE-149	C11A, B	50-50 mf., 150 v, electrolytic	$2.00
*RCN-050	C12	.022 mf., ±20%, 600 v, molded paper	.35
*RCN-053	C10	.047 mf., ±20%, 600 v., molded paper	.35
*RCT-063	C1A, B, C, D	Tuning, two gang	3.75
*RCW-3048	C9A, B, C, D	.002 mf., 400 mmf, 220 mf, .005 mf., ceramic	.90
*RCW-3075	C2	47 mmf., ±20%, 500 v., ceramic	.25
*UCC-045	C3, 4	.05 mf., 600 v., paper	.30
RESISTORS			
RRC-256	R4	Volume control, 1 meg. CT;	1.10
*URD-007	R10	18 ohms, ½ w., carbon	.13
*URD-021	R2	68 ohms, ½ w., carbon	.13
*URD-029	R8	150 ohms, ½ w., carbon	.13
*URD-081	R1	22 K, ½ w., carbon	.13
*URD-113	R6	470 K, ½ w., carbon	.13
*URD-121	R7	1 meg., ½ w., carbon	.13
*URD-129	R3	2.2 meg., ½ w., carbon	.13
*URD-141	R5	6.8 meg., ½ w., carbon	.13
*URF-053	R9	1500 ohms, 2 w., carbon	.25
COILS AND TRANSFORMERS			
*RLC-119	T1	COIL—Oscillator coil	.90
*RTL-135	T2, 3	TRANSFORMER—1st or 2nd i-f	1.90
*RTO-138	T4	TRANSFORMER—Audio output	2.50
MISCELLANEOUS ELECTRICAL			
*RJC-004		CONNECTOR—Female connector, fits on male speaker connector	.02
RJJ-008	J2	RECEPTACLE—A-C power	.35
RJP-045	P1	PLUG—Three prong, with shell for clock connection	.15
*RJS-158		SOCKET—Tube socket, miniature 7-pin for V2	.35
*RJS-163		SOCKET—Tube socket, miniature 7-pin for V3, V4 or V5	.30
*RJS-162		SOCKET—Tube socket, miniature 7-pin, for V1	.30
RJS-181	J1	SOCKET—Three-prong socket on top of chassis for clock connection	.15
RJS-182	J3	Phono connector	.15
*RWL-024		POWER CORD—A-C cord and plug white; for Model 575	.75
*RWL-025		POWER CORD—A-C cord and plug, brown; for Model 572 or 574	.75
*RWL-026		POWER CORD—A-C cord and plug, ivory; for Model 573	.75
RZC-037	M1	CLOCK ASSEMBLY—60 cycles, less bezel and crystal for Models 572 or 574	15.75
RZC-038		For models 573 or 575	15.75
*S-403D-7	LS1	LOUDSPEAKER—4-in. PM	4.30
MISCELLANEOUS MECHANICAL			
RAC-117		COVER—Plastic cover mounts over rear of clock	.50
*RAC-118		COVER—Over-all socket pins 10½ x 1⅜ inches	1.00
MISCELLANEOUS MECHANICAL (Cont'd)			
*RDC-032		DIAL CORD—25 yds bulk	$2.50
RDK-425		KNOB—On-Off volume or tuning clear and gold	.35
RDP-074		POINTER—Dial scale pointer and slider, metal, red	.20
RDS-127		DIAL SCALE—Plastic	.25
*RHC-024		CLIP—⅛ inches mounting clip for C11	.10
*RHC-053		CLIP—For mounting i-f transformers, T2 or T3	.02
*RHG-018		GROMMET—Rubber, for mounting tuning capacitor C1	.05
*RHI-010		GROMMET—Power cord	.15
*RHJ-005		SPACER—Metal, for mounting C1	.02
*RHS-041		SCREW—No. 6 x ⅜ in., thread cutting, for mtg. loudspeaker	.02
*RHS-060		SCREW—No. 6 x ¼ in. self tapping, mounts chassis bottom plate	.01
*RHS-085		SHIELD—Metal tube shield for 12AV6 tube	.10
RHS-128		SHIELD—Fiber—clock switch	.04
*RMC-002		CLIP—Osc. coil mounting	.05
*RMS-118		SPRING—Dial cord tension	.10
RMS-331		SPRING CLIP	.10
RMX-276		TUNING SHAFT ASSEMBLY—Metal tuning shaft assembly 1⅝ x ¼ in. includes bushing "C" washers and pulley	.55
RZA-009		Bezel Mounting Ring, Gold Finish for Models 572-573 or 574	1.20
RZA-010		Bezel Mounting Ring, Chrome Finish; for Model 575	1.40
RZW-013		Crystal for models 572 or 574	.30
RZW-014		Crystal, for models 573 or 575	.30
*RZK-009		Knob; Alarm, Sleep or Switch Set, Ivory, for Model 573	.05
*RZK-010		Knob; Alarm, Sleep or Switch Set, White, for Model 575	.05
RZK-026		Knob; Alarm, Sleep or Switch Set, Fawn, for Model 572	.05
RZK-027		Knob; Alarm, Sleep or Switch Set, Red, for model 574	.05
CABINET AND CABINET PARTS			
RAB-243		LOOP L1 & BACK—Antenna loop and cabinet back	1.65
*RAG-049		GRILLE CLOTH ASSEMBLY—Maroon pasteboard mounted; for model 572	.45
*RAG-050		GRILLE CLOTH ASM.—Red, pasteboard mounted, for model 574	.45
*RAG-051		GRILLE CLOTH ASM.—Ivory, pasteboard mounted; for model 573	.45
*RAG-052		GRILLE CLOTH ASM.—White, pasteboard mounted; for model 575	.45
*RAU-365		CABINET—Plastic, mottled mahogany finish; for model 572	7.25
*RAU-366		CABINET—Plastic, red finish, for model 574	8.50
*RAU-367		CABINET—Plastic, ivory finish, for model 573	8.50
*RAU-368		CABINET—Plastic, white finish, for model 575	8.50

* Parts used on previous receivers

PRICES ARE SUGGESTED LIST PRICES AND SUBJECT TO CHANGE WITHOUT NOTICE

MODELS 577, 578

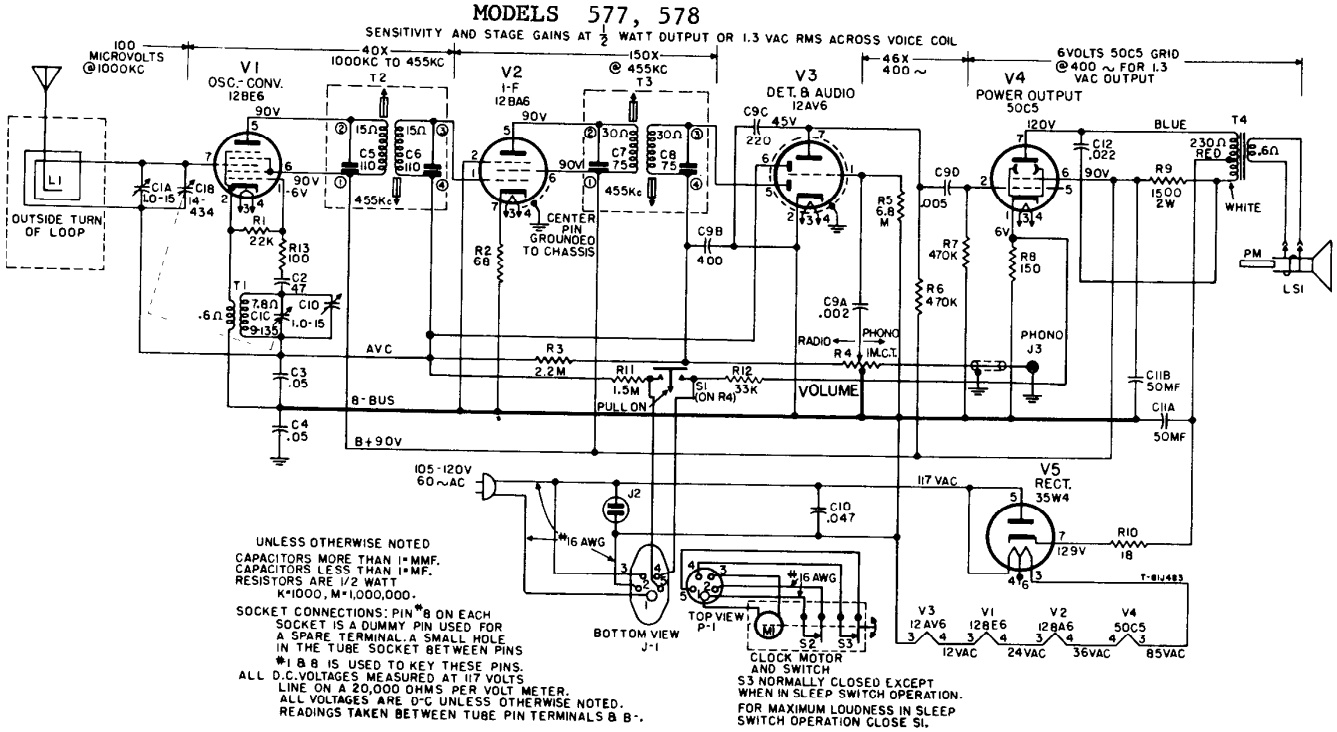

UNLESS OTHERWISE NOTED
CAPACITORS MORE THAN 1=MMF.
CAPACITORS LESS THAN 1=MF.
RESISTORS ARE 1/2 WATT
K=1000, M=1,000,000.

SOCKET CONNECTIONS: PIN #8 ON EACH SOCKET IS A DUMMY PIN USED FOR A SPARE TERMINAL. A SMALL HOLE IN THE TUBE SOCKET BETWEEN PINS #1 & 8 IS USED TO KEY THESE PINS.

ALL D.C. VOLTAGES MEASURED AT 117 VOLTS LINE ON A 20,000 OHMS PER VOLT METER. ALL VOLTAGES ARE D-C UNLESS OTHERWISE NOTED. READINGS TAKEN BETWEEN TUBE PIN TERMINALS & B-.

S3 NORMALLY CLOSED EXCEPT WHEN IN SLEEP SWITCH OPERATION.

FOR MAXIMUM LOUDNESS IN SLEEP SWITCH OPERATION CLOSE S1.

REPLACEMENT PARTS LIST FOR MODELS 577 AND 578

Cat. No.	Symbol	Description	Unit Price
CAPACITORS			
RCE-149	C11A, B	50-50 mf., 150 v, electrolytic	$2.00
RCN-050	C12	.022 mf., ±20%, 600 v, molded paper	.35
RCN-053	C10	.047 mf., ±20%, 600 v, molded paper	.35
RCT-063	C1, A, B, C, D	Tuning, two gang	3.75
RCW-3048	C9A, B, C, D	.022 mf., 400 mmf., .220 mf., .005 mf., ceramic	.90
RCW-3075	C2	47 mmf., ±20%, 500 v, ceramic	.25
UCC-045	C3, 4	.05 mf., 600 v, paper	.30
RESISTORS			
N-RRC-300	R4, S1	Volume control 1 meg. CT: and switch	1.10
URD-007	R10	18 ohms, ±10%, ½ w. carbon	.13
URD-021	R2	68 ohms, ±10%, ½ w. carbon	.13
URD-025	R13	100 ohms, ±10%, ½ w. carbon	.13
URD-029	R8	150 ohms, ±10%, ½ w. carbon	.13
URD-081	R1	22K, ±10%, ½ w. carbon	.13
URD-085	R12	33K, ±10%, ½ w. carbon	.13
URD-113	R6, 7	470K, ½ w. carbon	.13
URD-125	R11	1.5 meg. ½ w., ±10%, carbon	.13
URD-129	R3	2.2 meg., ½ w., ±10%, carbon	.13
URD-141	R5	6.8 meg., ½ w., ±10%, carbon	.13
URF-053	R9	1500 ohms, 2 w., ±10%, carbon	.25
COILS AND TRANSFORMERS			
RLC-119	T1	COIL—Oscillator coil	.90
RTL-135	T2, 3	TRANSFORMER—1st or 2nd I-F	1.90
RTO-138	T4	TRANSFORMER—Audio output	2.50
MISCELLANEOUS ELECTRICAL			
RJC-004		CONNECTOR—Female connector fits on male speaker connector	.02
RJJ-008	J2	RECEPTACLE—A-c power	.35
N-RJP-061	P1	PLUG—Five prong, with shell for clock connector	.15
RJS-158		SOCKET—Tube socket, miniature 7 pin for V2	.35
RJS-162		SOCKET—Tube socket, miniature 7 pin for V1	.30
RJS-163		SOCKET—Tube socket, miniature 7 pin for V3, V4 or V5	.30
RJS-182	J3	PHONO CONNECTOR	.15
N-RJS-219	J1	SOCKET—Five-prong socket on top of chassis for clock connection	.30
RWL-025		POWER CORD—A-c cord and plug, brown; for Model 577	.75
RWL-026		POWER CORD—A-c cord and plug, ivory; for Model 578	$0.75
N-RZC-042	M1	CLOCK ASSEMBLY—60 cycles less bezel and crystal for Model 577	18.25
N-RZC-043	M1	CLOCK ASSEMBLY—60 cycles less bezel and crystal for Model 578	18.25
S-403D7	LS1	LOUDSPEAKER—4 in. PM	4.30
MISCELLANEOUS MECHANICAL			
RAC-118		COVER—Over-all socket pins 10½ x 1⅝ inches	1.00
RDC-032		DIAL CORD—25 yds bulk	2.50
N-RDM-054		GUIDE POST—Dial string guide post	.05
RHC-024		CLIP—⅞ inch mtg. clip for C11	.10
RHC-053		CLIP—For mtg. i-f transformers T2 and T3	.02
RHG-018		GROMMET—Rubber for mtg. tuning cap. C1	.05
RHJ-010		GROMMET—Power cord strain relief	.15
RHJ-005		SPACER—Metal for mounting C1	.02
RHS-041		SCREW—No. 6 x ⅜ in. thread cutting for mounting loudspeaker	.02
RHS-085		SHIELD—Metal tube shield for 12AV6 tube	.10
RHS-128		SHIELD—Fiber-clock switch	.04
RMC-002		CLIP—Osc. coil mounting	.05
RMS-118		SPRING—Dial cord tension	.10
RMS-331		SPRING CLIP	.10
RMX-276		TUNING SHAFT ASSEMBLY—Metal tuning shaft assembly 1⅝ x ¼ in. includes bushing "C" washers and pulley	.55
CABINET AND APPEARANCE ITEMS			
N-RAB-252		LOOP L1 & BACK—Antenna loop and cabinet back	1.70
RAG-049		GRILLE CLOTH ASSEMBLY—Maroon, pasteboard mounted; for Model 577	.45
RAG-051		GRILLE CLOTH ASSEMBLY—Ivory, pasteboard mounted; for Model 578	.45
RAU-365		CABINET—Plastic, mottled mahogany finish for Model 577	7.25
RAU-367		CABINET—Plastic, ivory finish for Model 578	8.50
RDK-425		KNOB—On-off volume or tuning, clear and gold	.35
RDP-074		POINTER—Dial scale pointer and slider, metal, red	.20
RDS-127		DIAL SCALE—Plastic	.25
N-RZA-015		BEZEL MOUNTING RING—Brass, Models 577, 578	1.45
RZK-009		KNOB—Alarm, sleep or switch set, ivory, for Model 578	.05
RZK-026		KNOB—Alarm, sleep or switch set, mahogany, for Model 577	.05
RZW-013		CRYSTAL—For Model 577	.30
RZW-014		CRYSTAL—For Model 578	.05

N--Parts not previously catalogued.

PRICES ARE SUGGESTED LIST PRICES AND SUBJECT TO CHANGE WITHOUT NOTICE

MODELS 580, 581, 582

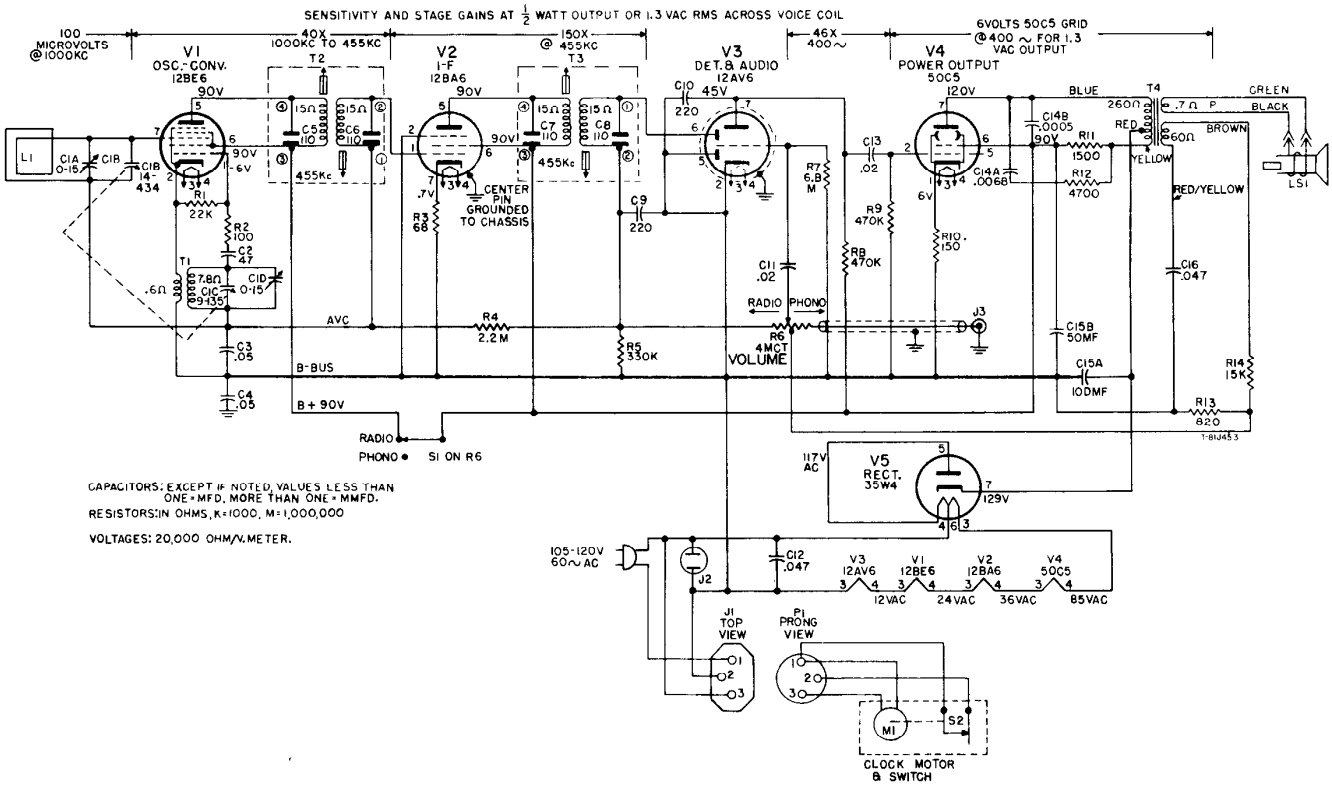

REPLACEMENT PARTS LIST—MODELS 580, 581, AND 582

CAPACITORS

CAT. NO.	SYMBOL	DESCRIPTION	UNIT PRICE
RCC-126	C16	.047 mf., 200 v., paper	$0.35
RCC-129	C11, 13	.02 mf., +40% −10%, 400 v. paper	.35
RCE-166	C15A, B	100-50 mf., 150 v., electro	2.65
N-RCT-079	C1A, B, C, D	Tuning, two-gang	3.75
RCN-053	C12	.047 mf., 600 v., paper molded	.35
RCW-3075	C2	47 mmf., ceramic	.25
RCW-3104	C14A, B	.0068 mf., .005 mf., ceramic	.50
RCW-3137	C9, 10	220 mmf., 20%, 400 v., ceramic	.25
UCC-045	C3, 4	.05 mf., +40% −10%, 400 v., paper	.25

RESISTORS

N-RRC-278	R6	Volume control, 4 meg., CT., with switch, S1	$1.65
URD-021	R3	68 ohms, ½ w. carbon	.13
URD-025	R2	100 ohms, ½ w. carbon	.13
URD-029	R10	150 ohms, ½ w. carbon	.13
URD-047	R13	820 ohms, ½ w. carbon	.13
URD-065	R12	4700 ohms, ½ w. carbon	13
URD-077	R14	15,000 ohms, ½ w. carbon	.13
URD-081	R1	22,000 ohms, ½ w. carbon	.13
URD-109	R5	330,000 ohms, ½ w. carbon	.13
URD-113	R8, 9	470,000 ohms, ½ w. carbon	.13
URD-129	R4	2.2 megohm, ½ w. carbon	.13
URD-141	R7	6.8 megohm, ½ w. carbon	.13
URF-053	R11	1500 ohms, 2 w. carbon	.25

COILS AND TRANSFORMERS

RLC-122	T1	COIL—Oscillator	$1.00
RTL-143	T2, 3	TRANSFORMER—1st or 2nd I-F.	1.80
RTO-157	T4	TRANSFORMER—Audio output.	3.35

MISCELLANEOUS ELECTRICAL

RJC-004		CONNECTOR — Fits on male speaker terminal	$0.02
RJC-027		CONTACT—Dip solder	.03
RJC-028		TERMINAL—Dip solder terminal	.02
RJP-045	P1	CONNECTOR—Clock plug and shield assembly	.15
RJS-181	J1	SOCKET—Clock connector, fem.	.15
RJS-182	J3	CONNECTOR—Phono.	.15
N-RJS-212	J2	RECEPTACLE—Appliance, fem. 24-in. leads	1.20
ROP-030	LS1	LOUDSPEAKER	6.25
RWL-025		CORD—Power cord and plug, brown, Model 580	.75
RWL-026		CORD—Power cord and plug, ivory for Model 581	.75
RWL-031		POWER CORD—With plug, grey, Model 582	.75
N-RZC-039		CLOCK ASSEMBLY—Green face, for Model 582	16.00
N-RZC-040		CLOCK ASSEMBLY—Gold face, for Models 580 and 581	16.50

MISCELLANEOUS MECHANICAL

RDC-032		CORD—Dial cord, bulk, 25 yards	$2.50
RHC-024		CLIP—For capacitor mounting	.10
RHC-080		CLIP—For mtg. board under chassis	.05
RHE-014		EYELET—For tube socket wafer	.01
RHE-016		EYELET—For I-F wafer	.01
RHI-010		STRAIN RELIEF—For power cord	.15
RHS-084		SCREW—For mtg. loudspeaker and grille	.05
RHS-109		SHIELD—Pin shield	.20
RHS-110		SHIELD—Tube shield	.15
RHS-118		SHIELD—Pin shield over tube sockets	2.00
RHS-128		SHIELD—Clock shield	.04
RHS-146		HUM SHIELD	.30
RII-081		WAFER—I-F	.05
RII-082		WAFER—Under-chassis tube socket wafer	.05
RII-088		BOARD—Under-chassis Textolite board	.60
RII-090		SHIELD—Heat transfer shield	.05
RJC-030		I-F CLIP—Dip solder contact and clip for i-f trans., spring brass, connects pin 6–12BE6, pin 6–12BA6 and pin 6–12AV6	.02
RJC-031		I-F CLIP—Dip solder contact and clip for i-f trans., spring brass, connects pin 5–12BE6, pin 1–12BA6 and pin 5–12BA6	.02
RMS-272		SPRING—Comp. type for radio knobs	.05
RMS-331		SPRING—For clock shield RHS-128	.10
N-RMS-355		SPRING—Drum tension	.10
RMW-070		IDLER PULLEY	.05
RMX-279		SHAFT—Tuning shaft and bushing ass'y	.55

CABINETS, CABINET PARTS & APPEARANCE ITEMS

N-RAB-245		LOOP—L1, and cabinet back assembly	$1.55
N-RAU-418		CABINET—Grey plastic, Model 582	12.50
N-RAU-419		CABINET—Mahogany plastic, Model 580	12.50
N-RAU-420		CABINET—Ivory plastic, Model 581	12.50
N-RDG-010		GRILLE—Gold, plastic	.95
RDK-384		KNOBS—Volume and tuning, Model 580	.15
N-RDK-461		KNOBS—Volume and tuning, Model 581	.35
N-RDK-462		KNOBS—Volume and tuning, Model 582	.35
N-RDP-084		DIAL POINTER—Chrome for Models 580 and 581	.45
N-RDP-085		DIAL POINTER—Brass for Model 582	.35
N-RDS-129		DIAL SCALE—Gold, Models 580 and 581	.75
N-RDS-130		DIAL SCALE—Green, Model 582	.85
N-RDW-079		CRYSTAL—For radio dial, with numerals	1.70
RYN-019		MEDALLION	.35
N-RZK-017		KNOBS—For clock Model 581	.15
N-RZK-024		KNOBS—For clock Model 580	.15
RZK-028		KNOBS—For clock Model 582	.15
N-RZW-015		CLOCK CRYSTAL—With numerals	.35

N Indicates new items.

MODEL 590

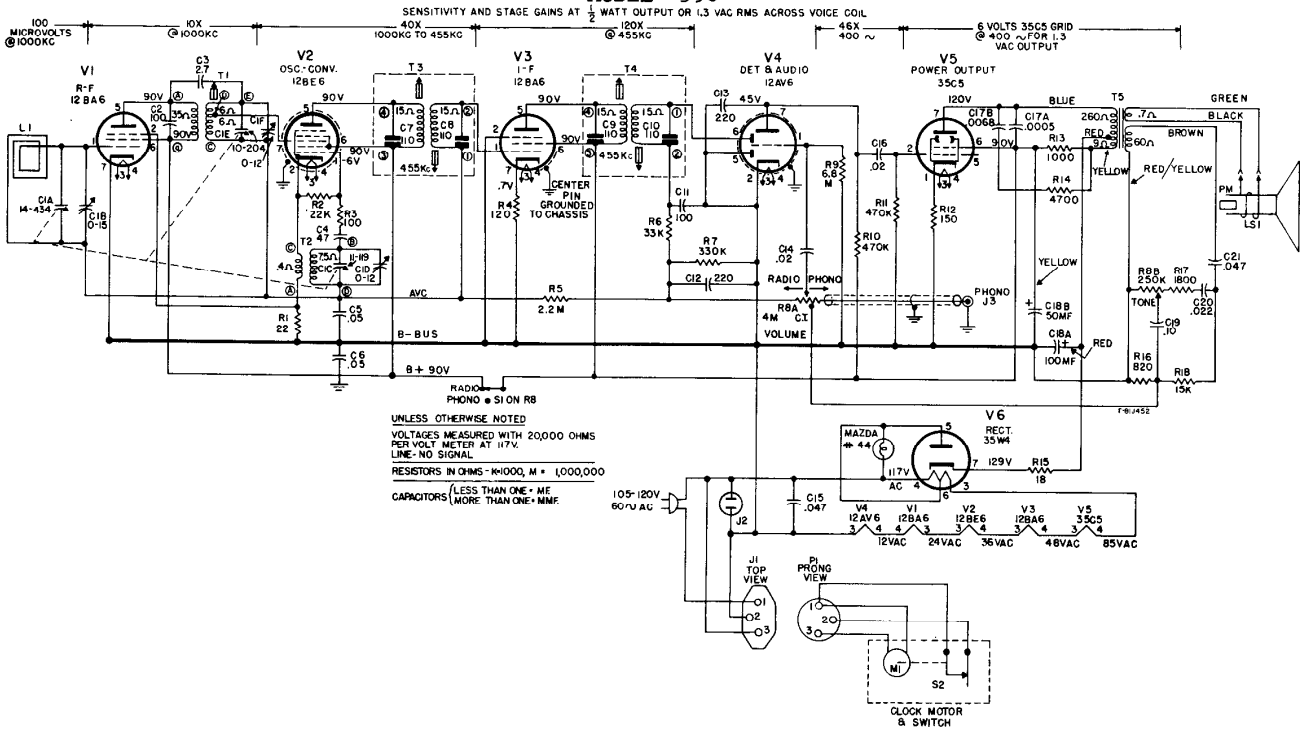
SENSITIVITY AND STAGE GAINS AT 1/2 WATT OUTPUT OR 1.3 VAC RMS ACROSS VOICE COIL
100 MICROVOLTS @ 1000KC
10X @ 1000KC
40X 1000KC TO 455KC
120X @ 455KC
46X 400 ~
6 VOLTS 35C5 GRID @ 400 ~ FOR 1.3 VAC OUTPUT
V1 R-F 12BA6
V2 OSC.-CONV. 12BE6
V3 I-F 12BA6
V4 DET & AUDIO 12AV6
V5 POWER OUTPUT 35C5
V6 RECT. 35W4
CENTER PIN GROUNDED TO CHASSIS
AVC
B-BUS
B+ 90V
RADIO PHONO
VOLUME
PHONO J3
BLUE
GREEN
BLACK
BROWN
RED/YELLOW
YELLOW
RED
TONE
PM
LS1
MAZDA #44
117V AC
129V
105-120V 60~ AC
J2
J1 TOP VIEW
P1 PRONG VIEW
M1
S2
CLOCK MOTOR & SWITCH
UNLESS OTHERWISE NOTED
VOLTAGES MEASURED WITH 20,000 OHMS PER VOLT METER AT 117V.
LINE-NO SIGNAL
RESISTORS IN OHMS - K=1000, M = 1,000,000
CAPACITORS LESS THAN ONE = MF MORE THAN ONE = MMF.

REPLACEMENT PARTS LIST—MODEL 590

CAPACITORS

CAT. NO.	SYMBOL	DESCRIPTION	UNIT PRICE
*RCC-126	C21	.047 mf., 200 v., paper	$0.35
RCC-127	C20	.022 mf., 200 v., paper	.35
RCC-128	C19	.1 mf., 200 v., paper	.40
*RCC-129	C14, 16	.02 mf., 400 v., paper	.35
*RCE-166	C18A, B	100-50 mf., 150 v., electrolytic	2.65
*RCN-053	C15	.047 mf., 600 v., paper, molded	.30
RCT-080	C1A, C1C C1E	Tuning, three gang condenser	4.80
RCW-3039	C3	2.7 mf., ceramic	.25
*RCW-3075	C4	47 mmf., ceramic	.25
RCW-3079	C2, 11	100 mmf., ceramic	.25
*RCW-3104	C17A, B	.0068 mf., .0005 mf., ceramic	.50
*RCW-3137	C12, 13	220 mmf., ±20%, 400 v., ceramic	.25
*UCC-045	C5, 6	.05 mf., 400 v., paper	.25

RESISTORS

RRC-299	R8A, B	Volume and tone control	$3.05
*URD-007	R15	18 ohms, ±10%, ½ w., carbon	.13
*URD-009	R1	22 ohms, 10%, ½ w., carbon	.13
*URD-025	R3	100 ohms, ½ w., carbon	.13
*URD-027	R4*	120 ohms, ½ w., carbon	.13
*URD-029	R4, 12	150 ohms, ½ w., carbon	.13
*URD-047	R16	820 ohms, ½ w., carbon	.13
*URD-055	R17	1800 ohms, ½ w., carbon	.13
*URD-065	R14	4700 ohms, ½ w., carbon	.13
*URD-077	R18	15K ohms, ½ w., carbon	.13
*URD-081	R2	22K ohms, ½ w., carbon	.13
*URD-085	R6	33K ohms, 10%, ½ w., carbon	.13
*URD-109	R7	330K ohms, ½ w., carbon	.13
*URD-113	R10, 11	470K ohms, ½ w., carbon	.13
*URD-129	R5	2.2 megohm, ½ w., carbon	.13
*URD-141	R9	6.8 megohm, ½ w., carbon	.13
*URF-049	R13	1000 ohms, 10%, 2 w., carbon	.25

COILS AND TRANSFORMERS

RLB-034	T1	COIL—R-F	$1.35
RLC-126	T2	COIL—Oscillator	.90
*RTL-143	T3, 4	TRANSFORMER—1st or 2nd i-f.	1.80
RTO-157	T5	TRANSFORMER—Output	3.35

MISCELLANEOUS ELECTRICAL

*RJC-004		CONNECTOR—Speaker lead connector	$0.02
*RJP-045	P1	CONNECTOR—Clock plug and shield assembly	.15
*RJS-181	J1	SOCKET—Clock connector, female	.15
*RJS-182	J3	CONNECTOR—Phono	.15
RJS-212	J2	RECEPTACLE—Appliance, female, 24 in. leads	1.20
*ROP-030	LS1	LOUDSPEAKER—PM, Alnico, 5¼ inches	6.25
*RWL-025		CORD—Power cord & plug, brown	.75
RWX-054		ASSEMBLY—Pilot lamp socket ass'y	.65
RZC-041		CLOCK—60 cycles, clock	16.00

MISCELLANEOUS MECHANICAL

*RDC-032		CORD—Dial cord, bulk, 25 yds.	$2.50
*RHC-024		CLIP—For tuning condenser	.10
RHC-080		CLIP—To hold sub-chassis	.05
*RHE-014		EYELET—For tube socket wafer	.01
*RHE-016		EYELET—For i-f wafer	.01
*RHG-018		GROMMET—For tuning condenser	.05
*RHI-010		STRAIN RELIEF—For power cord	.15
*RHJ-005		SPACER—For tuning condenser	.02
*RHS-084		SCREW—For mtg. loudspeaker and grille	.05
*RHS-109		SHIELD—Pin shield	.20
*RHS-110		SHIELD—Tube shield	.15
RHS-118		SHIELD—Used to rivet wafer to sub-chassis board	.05
*RHS-128		SHIELD—Clock shield	.04
RHS-146		SHIELD—Clock hum shield	.30
*RII-081		WAFER—For i-f	.05
*RII-082		WAFER—Under chassis tube socket wafer	.05
*RII-090		SHIELD—Heat transfer shield	.05
*RII-091		BOARD—Sub-chassis	.60
*RII-092		TERMINAL BOARD—Less contacts	.10
*RJC-027		CONTACT—Dip solder	.03
*RJC-028		TERMINAL—Dip solder	.02
*RJC-029		TERMINAL—For i-f, female	.05
*RJC-030		I-F CLIP—Dip solder contact and clip for i-f trans., spring brass, connects pin 6-12BE6, pin 6-12BA6 and pin 6-12AV6	.02
*RJC-031		I-F CLIP—Dip solder contact and clip for i-f trans., spring brass, connects pin 5-12BE6, pin 1-12BA6 and pin 5-12BA6	.02
*RMS-355		SPRING—Tuning drum tension spring	.10
*RMS-272		SPRING—Compression type for radio knobs	.05
RMS-326		SPRING—Compression	.05
*RMS-331		SPRING—For clock shield RHS-128	.10
*RMW-070		PULLEY—Idler	.05
RMX-287		SHAFT—Tuning shaft assembly	.90

CABINETS, CABINET PARTS & APPEARANCE ITEMS

RAB-251		LOOP—Loop and back assembly	$1.55
RAU-425		CABINET—Mahogany, plastic	
RDG-010		GRILLE—Gold, plastic	.95
RDK-449		KNOB—Volume control and tuning, mahogany	.35
RDK-450		KNOB—Tone control, mahogany	.15
RDP-085		POINTER—Dial pointer, brass	.35
RDS-128		SCALE—Dial scale, less numerals	.85
RDW-079		CRYSTAL—For radio dial with numerals	1.70
*RYN-019		MEDALLION	.35
RZK-024		KNOB—For clock, mahogany	.10
RZW-015		CRYSTAL—Clock crystal, with numerals	.35

MODEL 600

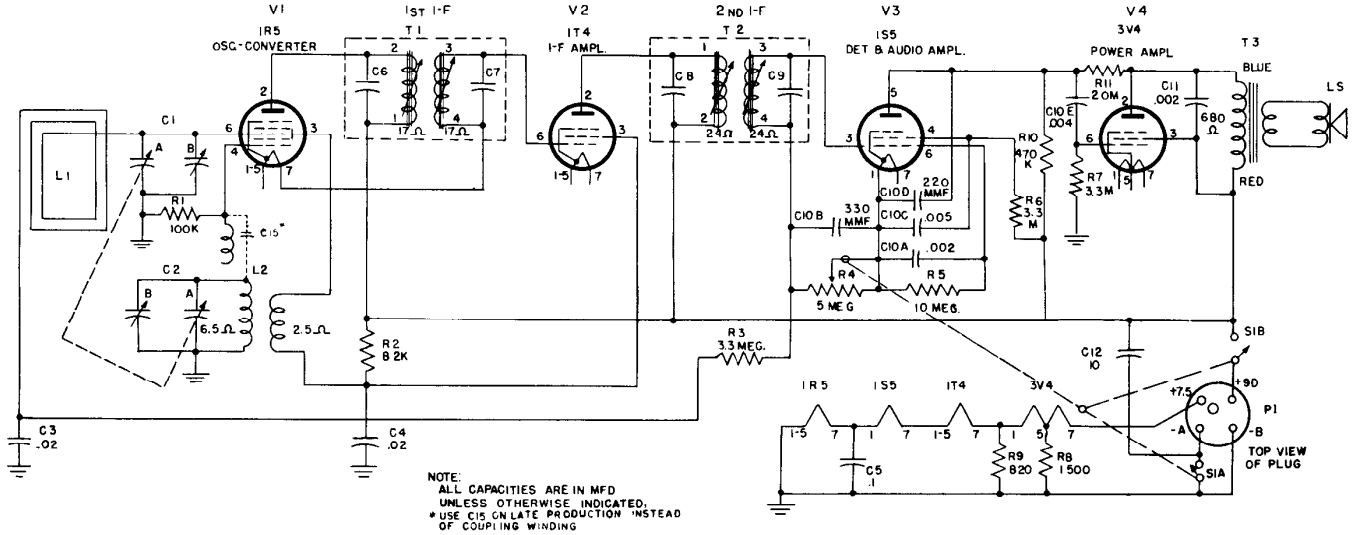

NOTE:
ALL CAPACITIES ARE IN MFD
UNLESS OTHERWISE INDICATED;
* USE C15 ON LATE PRODUCTION INSTEAD OF COUPLING WINDING

REPLACEMENT PARTS LIST 600

Cat. No.	Symbol	Description	Suggested Unit List Price
UNIVERSAL REPLACEMENT PARTS			
*UCC-002	C11	CAPACITOR—.002 mf, 200 v, paper	$0.25
*UCC-009	C3, 4	CAPACITOR—.02 mfd, 200 v, paper	.25
*UCC-028	C14	CAPACITOR—.05 mfd, 400 v, paper	.25
*UCC-042	C13	CAPACITOR—.03 mfd, 400 v, paper	.30
*UCC-048	C5	CAPACITOR—.1 mfd, 400 v, paper	.45
*URD-045	R9††	RESISTOR—680 ohms, ½ w. carbon	.13
*URD-047	R9†	RESISTOR—820 ohms, ½ w, carbon	.13
*URD-053	R8	RESISTOR—1500 ohms, ½ w, carbon	.13
*URD-071	R2	RESISTOR—8200 ohms, ½ w, carbon	.13
*URD-097	R1	RESISTOR—100,000 ohms, ½ w, carbon	.13
*URD-113	R10††, 14††	RESISTOR—470,000 ohms, ½ w, carbon	.13
*URD-133	R3, 6, 7	RESISTOR—3.3 meg, ½ w, carbon	.13
*URD-145	R5	RESISTOR—10 meg, ½ w, carbon	.13
*URE-021	R12††	RESISTOR—68 ohms, 1 w, carbon	.17
*URE-057	R13††	RESISTOR—2200 ohms, 1 w, carbon	.17
*UOP-457		SPEAKER—PA speaker, 4 inches	4.25
*RHJ 005††		SPACER—For tuning capacitor	.02
*RHM-062		CLIP—Speaker clip	.02
*RHY-010		HANDLE—Handle for cabinet	1.00
*RJC-016		TERMINAL—Speed nut	.05
*RJS-024††		MOUNTING PLATE—For electrolytic capacitor	.10
*RJS-100		SOCKET—Tube socket for 1R5	.20
*RJS-124		SOCKET—Tube socket for 1S5 & 3V4	.20
*RJS-125		SOCKET—Tube socket for 1T4 tube	.20
*RHC-015		CLIP—Oscillator coil clip	.02
*RJC-016		TERMINAL—Speed nut	.05
*RLC-101	L2	COIL—Oscillator coil	.90
*RLL-035	L1	LOOP—Loop antenna	1.00
*RMC-040		CATCH—Spring catch	.65
*RMS-118		SPRING—Dial spring	.10
*RMU-049		SHAFT—Tuning shaft	.30
*RRC-107	R4, S1	VOLUME CONTROL—Volume control and switch	$1.65
*RRD-1015	R11†	RESISTOR—20 meg, ½ w, carbon	.13
*RRW-042	R11††	RESISTOR—2300 ohms, 10 w, w.w.	.85
*RSW-058	S2††	SWITCH—Power plug switch	.85
*RTL-052	T1††	TRANSFORMER—I-F transformer	2.75
*RTL-051	T2†	TRANSFORMER—I-F transformer	3.25
*RTL-079	T1†, 2††	TRANSFORMER—I-F transformer	2.75
*RTO-070	T3	TRANSFORMER—Output transformer	1.55
*RWL-005††		POWER CORD	1.25
SPECIALIZED REPLACEMENT PARTS			
*RAB-096		BACK—Cabinet back	$2.10
*RAU-308		CABINET—Plastic cabinet	5.75
*RCE-095††	C12A, B, C	CAPACITOR—Electrolytic capacitor 40 mf, 150 v; 40 mf, 250 v; 200 mf, 20 v	2.95
*RCE-098†	C12	CAPACITOR—Electrolytic capacitor 10 mf	.95
*RCT-036	C1, 2	CAPACITOR—Tuning capacitor	3.95
*RCW-3015	C10A, B, 10C, D, E	CAPACITOR—Ceramic combination 220 mmf, .002 mf, .005, 220 mmf, .004 mf	1.10
*RDC-032		DIAL CORD	2.50/25 yd
*RDK-136		KNOB	.15
RDP-050		POINTER—Dial pointer	.10
*REX-005	SR	RECTIFIER—Selenium rectifier	2.50
*RHB-006		BUTTON—Plug button	.10
*RHC-015		CLIP—Oscillator coil clip	.02
*RHC-016		COTTER PIN—For drive axle	.01
*RHC-020		COTTER PIN—Cotter pin for handle	.01
*RHE-009		EYELET—Eyelet for cabinet	.03
*RHG-006††		GROMMET—For power cord	.05
*RHG-018††		GROMMET—For tuning capacitor	.05
*RHI-009		HINGE—Hinge for cabinet	.25

MODELS 601, 603, 604

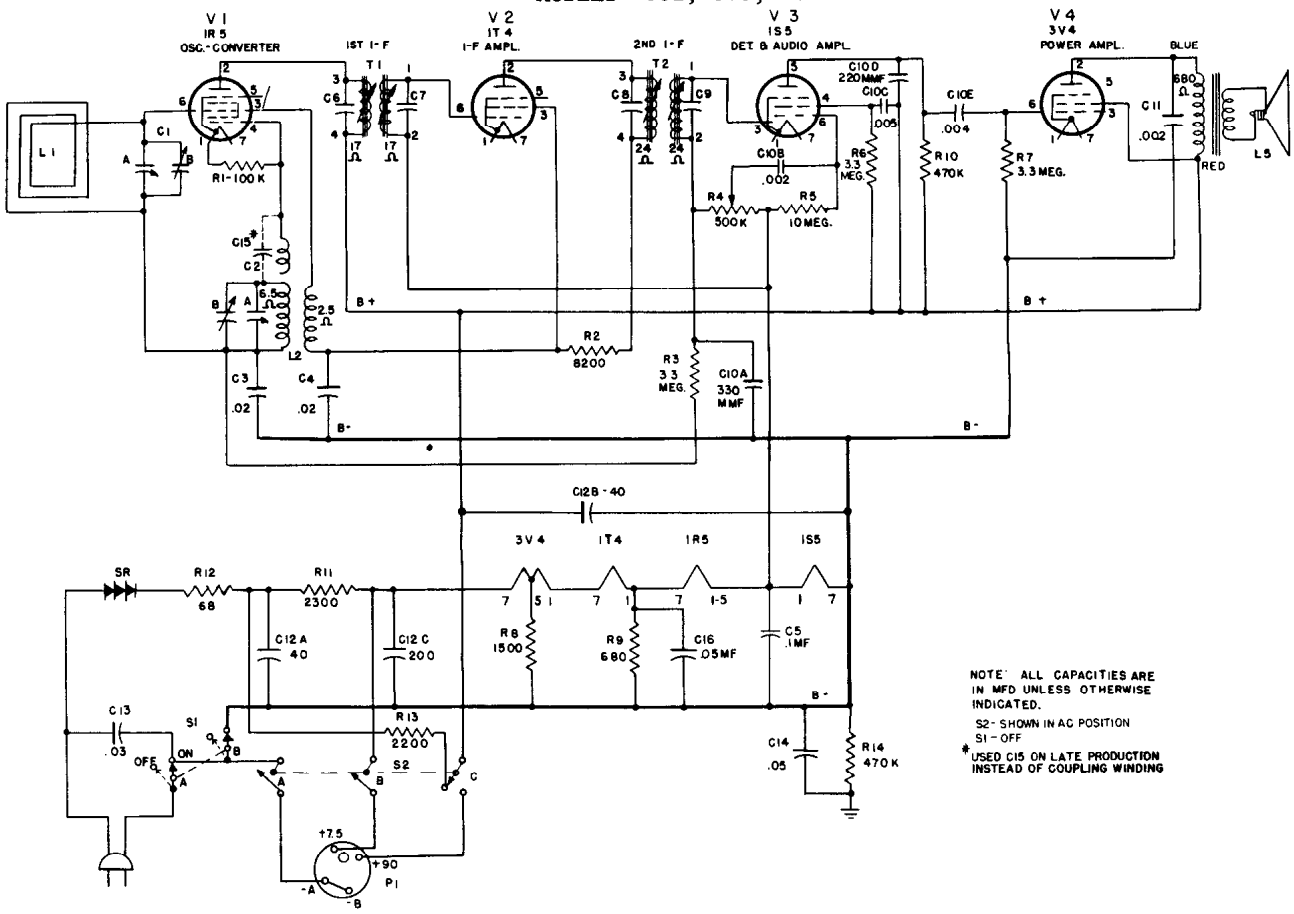

NOTE: ALL CAPACITIES ARE IN MFD UNLESS OTHERWISE INDICATED.

S2- SHOWN IN AC POSITION
S1 - OFF

* USED C15 ON LATE PRODUCTION INSTEAD OF COUPLING WINDING

REPLACEMENT PARTS LIST 601, 603, 604

Cat. No.	Symbol	Description	Suggested Unit List Price
UNIVERSAL REPLACEMENT PARTS			
*UCC-002	C11	CAPACITOR—.002 mf, 200 v, paper	$0.25
*UCC-009	C3, 4	CAPACITOR—.02 mfd, 200 v, paper	.25
*UCC-028	C14	CAPACITOR—.05 mfd, 400 v, paper	.25
*UCC-042	C13	CAPACITOR—.03 mfd, 400 v, paper	.30
*UCC-048	C5	CAPACITOR—.1 mfd, 400 v, paper	.45
*URD-045	R9††	RESISTOR—680 ohms, ½ w, carbon	.13
*URD-047	R9†	RESISTOR—820 ohms, ½ w, carbon	.13
*URD-053	R8	RESISTOR—1500 ohms, ½ w, carbon	.13
*URD-071	R2	RESISTOR—8200 ohms, ½ w, carbon	.13
*URD-097	R1	RESISTOR—100,000 ohms, ½ w, carbon	.13
*URD-113	R10††, 14††	RESISTOR—470,000 ohms, ½ w, carbon	.13
*URD-133	R3, 6, 7	RESISTOR—3.3 meg, ½ w, carbon	.13
*URD-145	R5	RESISTOR—10 meg, ½ w, carbon	.13
*URE-021	R12††	RESISTOR—68 ohms, 1 w, carbon	.17
*URE-057	R13††	RESISTOR—2200 ohms, 1 w, carbon	.17
*UOP-457		SPEAKER—PA speaker, 4 inches	4.25
*RHJ-005††		SPACER—For tuning capacitor	.02
*RHM-062		CLIP—Speaker clip	.02
*RHY-010		HANDLE—Handle for cabinet	1.00
*RJC-016		TERMINAL—Speed nut	.05
*RJS-024††		MOUNTING PLATE—For electrolytic capacitor	.10
*RJS-100		SOCKET—Tube socket for 1R5	.20
*RJS-124		SOCKET—Tube socket for 1S5 & 3V4	.20
*RJS-125		SOCKET—Tube socket for 1T4 tube	.20
*RHC-015		CLIP—Oscillator coil clip	.02
*RJC-016		TERMINAL—Speed nut	.05
*RLC-101	L2	COIL—Oscillator coil	.90
*RLL-035	L1	LOOP—Loop antenna	1.00
*RMC-040		CATCH—Spring catch	.65
*RMS-118		SPRING—Dial spring	.10
*RMU-049		SHAFT—Tuning shaft	.30
*RRC-107	R4, S1	VOLUME CONTROL—Volume control and switch	$1.65
*RRD-1015	R11†	RESISTOR—20 meg, ½ w, carbon	.13
*RRW-042	R11††	RESISTOR—2300 ohms, 10 w, w.w.	.85
*RSW-058	S2††	SWITCH—Power plug switch	.85
*RTL-052	T1††	TRANSFORMER—I-F transformer	2.75
*RTL-051	T2†	TRANSFORMER—I-F transformer	3.25
*RTL-079	T1†, 2††	TRANSFORMER—I-F transformer	2.75
*RTO-070	T3	TRANSFORMER—Output transformer	1.55
*RWL-005††		POWER CORD	1.25
SPECIALIZED REPLACEMENT PARTS			
*RAB-096		BACK—Cabinet back	$2.10
*RAU-308		CABINET—Plastic cabinet	5.75
*RCE-095††	C12A, B, C	CAPACITOR—Electrolytic capacitor 40 mf, 150 v; 40 mf, 250 v; 200 mf, 20 v	2.95
*RCE-098†	C12	CAPACITOR—Electrolytic capacitor 10 mf	.95
*RCT-036	C1, 2	CAPACITOR—Tuning capacitor	3.95
*RCW-3015	C10A, B, 10C, D, E	CAPACITOR—Ceramic combination 220 mmf, .002 mf, .005, 220 mmf, .004 mf	1.10
*RDC-032		DIAL CORD	2.50/25 yd
*RDK-136		KNOB	.15
RDP-050		POINTER—Dial pointer	.10
*REX-005	SR	RECTIFIER—Selenium rectifier	2.50
*RHB-006		BUTTON—Plug button	.10
*RHC-015		CLIP—Oscillator coil clip	.02
*RHC-016		COTTER PIN—For drive axle	.01
*RHC-020		COTTER PIN—Cotter pin for handle	.01
*RHE-009		EYELET—Eyelet for cabinet	.03
*RHG-006††		GROMMET—For power cord	.05
*RHG-018††		GROMMET—For tuning capacitor	.05
*RHI-009		HINGE—Hinge for cabinet	.25

MODELS 605, 606

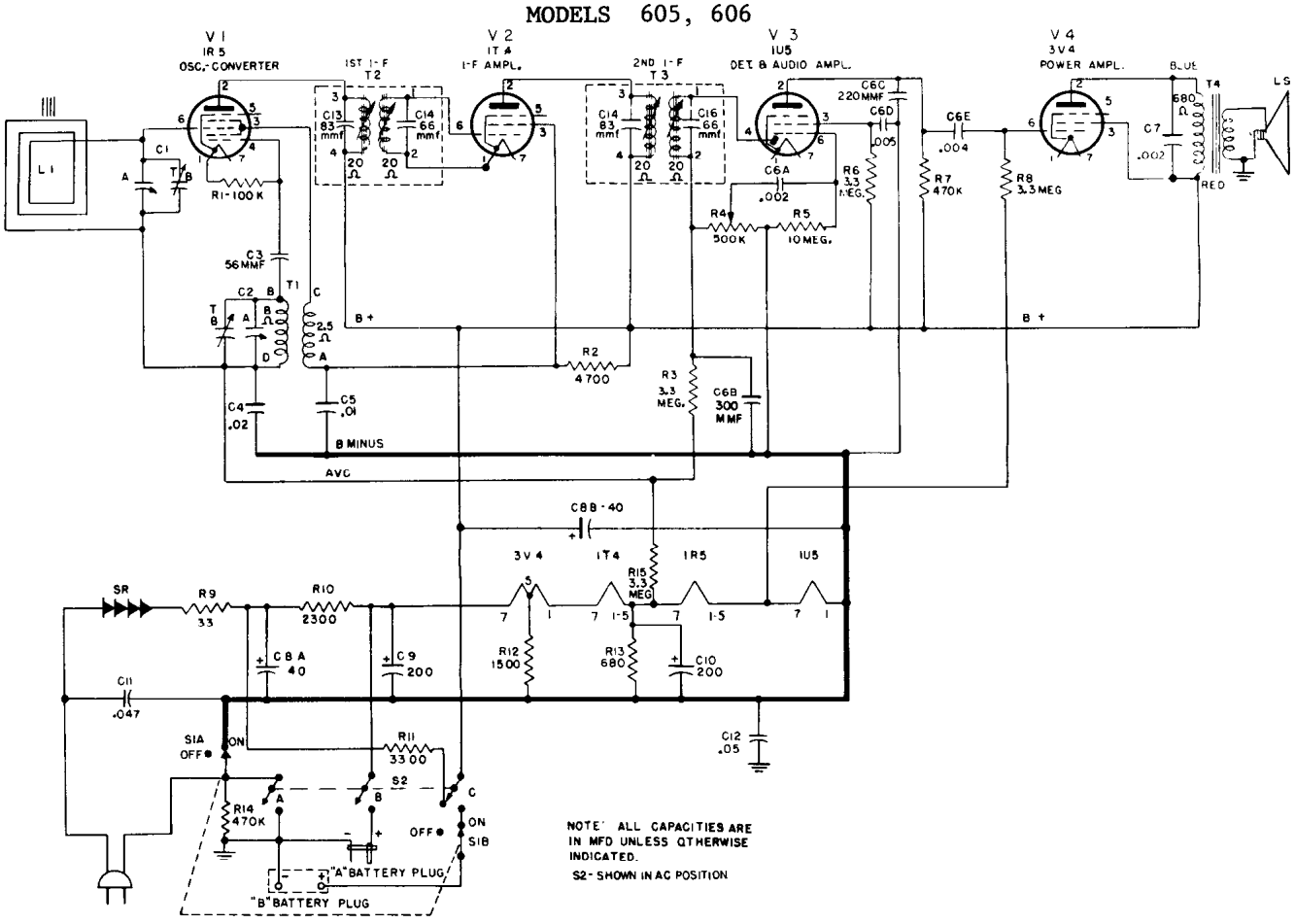

NOTE: ALL CAPACITIES ARE IN MFD UNLESS OTHERWISE INDICATED.

S2 - SHOWN IN AC POSITION

REPLACEMENT PARTS LIST—MODELS 605 AND 606

Cat. No.	Symbol	Description	Unit Price
CAPACITORS			
*RCE-051	C8, A, B	40–40 mfd., 150 w.v., electrolytic filter capacitor	$2.05
RCE-132	C9, 10	200 mfd., 10 w.v., electrolytic filter capacitor	1.50
RCT-053	C1A, C1B, C2A, C2B	Tuning capacitor	3.95
*RCW-3015	C6A, B, C, C6D, E	.002 mfd., .004 mfd., .005 mfd., 220 mmf., 300 mmf., ceramic	1.10
*RCW-3018	C7	.002 mfd., ceramic	.25
*RCW-3054	C5	.01 mfd., ceramic	.35
*UCC-041	C4	.02 mfd., 600 v., paper	.25
*UCC-042	C11	.03 mfd., 600 v., paper	.30
*UCC-045	C12	.05 mfd., 600 v., paper	.30
*UCG-022	C3	56 mmf., silver mica	.25
RESISTORS			
RRW-042	R10	2300 ohms, 10 w., w.w.	.85
*URD-013	R9	33 ohms ±10%, ½ w., carbon	.13
*URD-045	R13	680 ohms ±10%, ½ w., carbon	.13
*URD-053	R12	1500 ohms ±10%, ½ w., carbon	.13
*URD-065	R2	4700 ohms ±10%, ½ w., carbon	.13
*URD-097	R1	100,000 ohms ±10%, ½ w., carbon	.13
*URD-113	R7	470,000 ohms ±10%, ½ w., carbon	.13
*URD-133	R6, 8, 15	3.3 meg. ±10%, ½ w., carbon	.13
*URD-145	R5	10 meg. ±10%, ½ w., carbon	.13
*URE-061	R11	3300 ohms ±10%, 1 w., carbon	.17
MISCELLANEOUS ELECTRICAL PARTS			
REX-005	SR	RECTIFIER—Selenium rectifier	2.50
RJC-022		CONNECTOR—"B" battery connector	.40
RJP-033		PLUG—"A" battery plug	.15
*RJS-100		SOCKET—7 pin miniature tube socket, tan, wax impregnated	.20
*RJS-124		SOCKET—7 pin miniature tube socket, dark brown, unimpregnated	.20
*RJS-125		SOCKET—7 pin miniature tube socket, unimpregnated, dark brown with center shield pin	.20
*RLC-101	T1	TRANSFORMER—Oscillator transformer	.90
RLL-046	L1	ANTENNA—Ferrite antenna	2.20
RRC-166	R4, S1A, B	CONTROL—0.5 meg., volume control with ON–OFF switch	1.65
*RSW-088	S2A, B, C	SWITCH—Battery-line changeover switch	1.75
*RTL-052	T2, 3, C13, 14, 15, 16	TRANSFORMER—1st or 2nd i-f transformer with capacitors molded in base	2.75
*RTO-108	T4	TRANSFORMER—Audio output transformer	2.25
RWL-005		POWER CORD—A-C line cord and plug	1.25
*S400D	L5	SPEAKER—4-inch PM loudspeaker	4.90
MISCELLANEOUS MECHANICAL PARTS			
RAD-078		BRACKET—Ferrite antenna mounting bracket	.05
RAX-028		BRACKET—Latch bracket and spring	.25
*RDC-032		DIAL CORD—Fine nylon dial cord, 25 yards bulk	2.50
RDP-061		POINTER—Dial pointer	$0.25
RDS-107		DIAL SCALE	.50
RHB-016		STUD—Chassis cover mounting stud	.05
*RHC-008		CLIP—1 inch electrolytic filter capacitor mounting clip	.10
RHI-017		INSULATOR—Power cord strain relief insulator	.15
*RHM-001		WASHER "C" washer for tuning shaft	.05
*RHM-052		CLIP—Tinnerman speaker mounting clip	.02
RHS-083		SCREW—Round-head Phillips screw for mounting latch clip	.05
RII-060		INSULATOR—Tuning gang mounting insulator (top)	.05
RII-061		INSULATOR—Tuning gang mounting insulator (bottom)	.05
RII-065		INSULATOR—Fiber bushing for mounting handle ends to chassis	.30
RMC-002		CLIP—Oscillator coil mounting clip	.05
*RMC-053		CLIP—Back cover latch clip	.05
*RMS-130		SPRING—Dial cord tension spring	.15
RMX-183		SHAFT—Tuning shaft and bushing	.35
CABINET PARTS			
RAB-187		BACK—Maroon plastic cabinet back for Model 605	2.35
RAB-188		BACK—Green plastic cabinet back for Model 606	2.35
RAC-109		CABINET—Maroon plastic cabinet less back cover, hinges, etc., for Model 605	5.75
RAC-110		CABINET—Green plastic cabinet less back cover, hinges, etc., for Model 606	5.75
RAC-097		COVER—Front dial cover, plastic	1.25
RAG-044		GRILLE CLOTH—Maroon grille clotb mounted on cardboard	.50
RAG-045		GRILLE CLOTH—Green grille cloth mounted on cardboard	.50
RAI-008		COVER STOP—Black rubber block	.05
RDK-252		KNOB—Green plastic knob with clip	.15
RDK-253		KNOB—Fawn plastic knob with clip	.15
*RHC-036		CLIP—Tinnerman cover mounting clip	.05
*RHE-010		EYELET—For mounting front cover	.05
*RHI-016		HINGE—Back hinge	.15
*RHN-020		POST—Mounts handle bar to handle end	.10
*RHR-013		RIVET—For cabinet back hinge	.01
*RHS-081		SCREW—Mounts handle bar to handle end	.40
RHS-097		SCREW—For mounting cabinet catch	.05
RHY-034		HANDLE END—Chromium plated end	.85
RHY-043		HANDLE BAR—Fawn plastic rod for handle	90
*RHY-036		HANDLE BAR—Green plastic rod for handle	.90
RML-051		LATCH—Front cover release	.70
RMP-031		PIVOT ROD—Brass rod, .062 in. x 1¾ in. long for latch	.15
RMS-244		SPRING—Left spring for front cover	.05
RMS-245		SPRING—Right spring for front cover	.05

607, 608

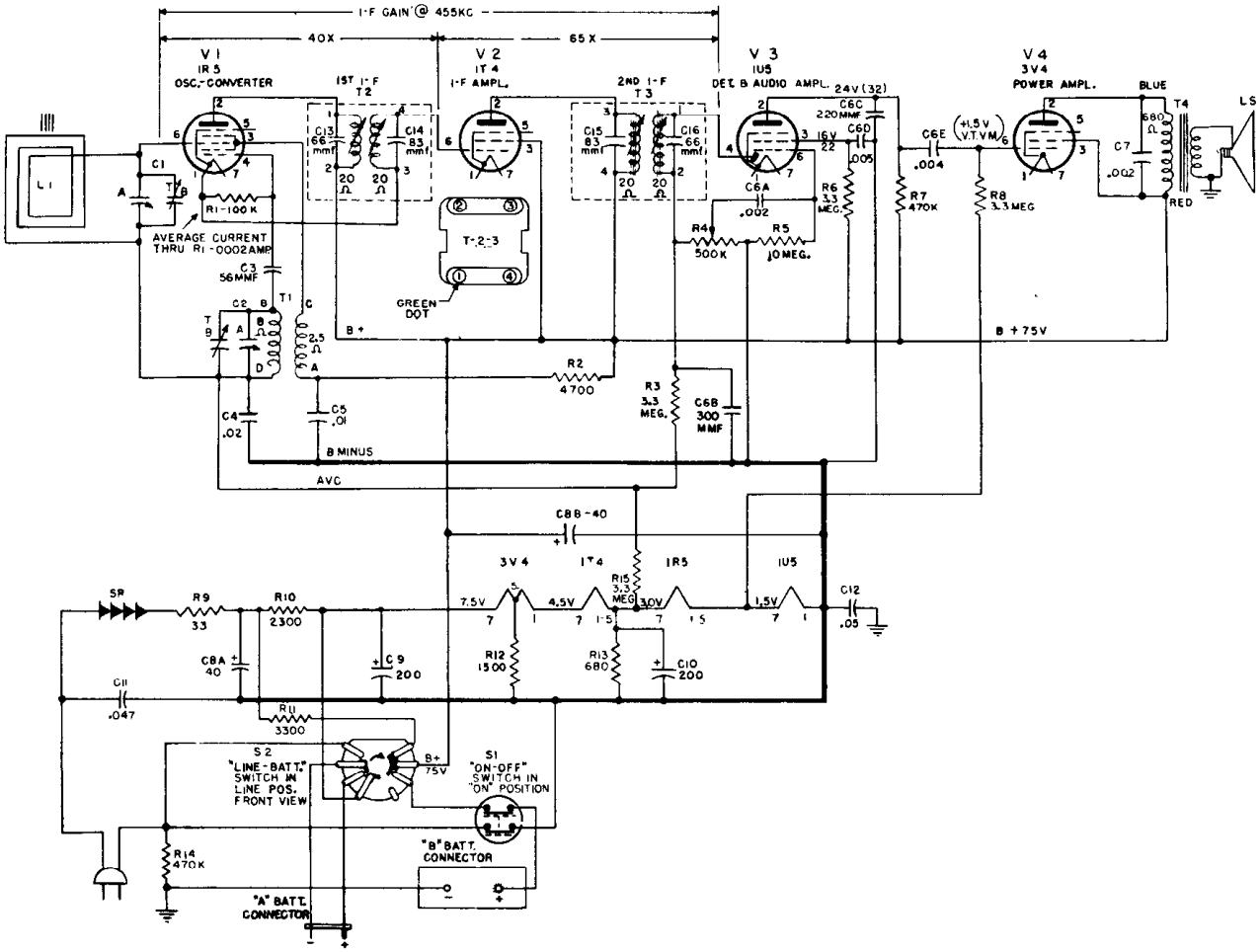

I-F GAIN @ 455KC
40X
65X
V1
IR5
OSC.-CONVERTER
V2
IT4
I-F AMPL.
V3
IU5
DET. & AUDIO AMPL.
V4
3V4
POWER AMPL.
1ST I-F
T2
2ND I-F
T3
24V (32)
BLUE
RED
LS
T4
L1
C1
R1-100K
AVERAGE CURRENT THRU R1-.0002AMP
C3
56MMF
T1
C2
C13
66 mmf
C14
83 mmf
C15
83 mmf
C16
66 mmf
T-2-3
GREEN DOT
C6C
220MMF
C6D
.005
C6E
.004
C6A
.002
R6
3.3 MEG.
R4
500K
R5
10MEG.
R7
470K
R8
3.3MEG
C7
.002
680 Ω
B+
B+75V
R2
4700
R3
3.3 MEG.
C6B
300 MMF
C4
.02
C5
.01
B MINUS
AVC
C8B-40
3V4
IT4
IR5
IU5
R15
3.3 MEG
7.5V
4.5V
3.0V
1.5V
C12
.05
SR
R9
33
R10
2300
C8A
40
C9
200
R12
1500
R13
680
C10
200
C11
.047
R11
3300
S2
"LINE-BATT." SWITCH IN LINE POS. FRONT VIEW
B+ 75V
S1
"ON-OFF" SWITCH IN "ON" POSITION
"B" BATT. CONNECTOR
R14
470K
"A" BATT. CONNECTOR

REPLACEMENT PARTS LIST—MODELS 607 AND 608

Cat. No.	Symbol	Description	Unit Price
CABINET PARTS			
△RAB-187		BACK—Maroon plastic cabinet back for Model 607, with half hinge	$2.35
△RAB-188		BACK—Green plastic cabinet back for Model 608, with half hinge	2.35
△RAC-109		CABINET—Maroon plastic cabinet less back, with half hinge, Model 607	5.75
△RAC-110		CABINET—Green plastic cabinet less back, with half hinge, Model 608	5.75
*RAC-097		COVER—Front dial cover, plastic	1.25
*RAG-044		GRILLE CLOTH—Maroon grille cloth mounted on cardboard	.50
*RAG-045		GRILLE CLOTH—Green grille cloth mounted on cardboard	.50
*RAI-008		COVER STOP—Black rubber block	.05
*RDK-284		KNOB—Ivory plastic knob with clip	.15
*RHC-036		CLIP—Tinnerman cover mounting clip	.05
△RHE-012		EYELET—For mounting hinges	.05
*RHI-024		HINGE—Back hinge, both halves	.00
*RHN-020		POST—Mounts handle bar to handle end	.10
*RHR-013		RIVET—For cabinet back hinge	.01
*RHS-081		SCREW—Mounts handle bar to handle end	.40
*RHS-084		SCREW—For mounting cabinet catch	.05
*RHY-034		HANDLE END—Chromium plated end	.85
*RHY-043		HANDLE BAR—Ivory plastic rod for handle	.90
*RML-051		LATCH—Front cover release	.70
*RMP-031		PIVOT ROD—Brass rod, .062 in. x 1¾ in. long for latch	.15
*RMS-244		SPRING—Left spring for front cover	.05
*RMS-245		SPRING—Right spring for front cover	.05
MISCELLANEOUS ELECTRICAL PARTS			
*REX-005	SR	RECTIFIER—Selenium rectifier	$2.50
*RJC-022		CONNECTOR—"B" battery connector	.40
*RJP-033		PLUG—"A" battery plug	.15
*RJS-100		SOCKET—7 pin miniature tube socket, tan, wax impregnated	.20
*RJS-124		SOCKET—7 pin miniature tube socket, dark brown, unimpregnated	.20
*RJS-125		SOCKET—7 pin miniature tube socket, unimpregnated, dark brown with center shield pin	.20
*RLC-101	T1	TRANSFORMER—Oscillator transformer	.90
*RLL-046	L1	ANTENNA—Ferrite antenna	2.20
*RRC-166	R4, S1A, B	CONTROL—0.5 meg., volume control with ON-OFF switch	1.65
*RSW-088	S2A, B, C	SWITCH—Battery-line changeover switch	1.75
*RTL-052	T2, 3, C13 14, 15, 16	TRANSFORMER—1st or 2nd i-f transformer with capacitors molded in base	2.75
*RTO-108	T4	TRANSFORMER—Audio output transformer	2.25
*RWL-005		POWER CORD—A-C line cord and plug	1.25
*S400D	L5	SPEAKER—4-inch PM loudspeaker	4.90

Cat. No.	Symbol	Description	Unit Price
MISCELLANEOUS MECHANICAL PARTS			
*RAD-078		BRACKET—Ferrite antenna mounting bracket	$0.05
*RAX-028		BRACKET—Latch bracket and spring	.25
*RDC-032		DIAL CORD—Fine nylon dial cord, 25 yards bulk	2.50
*RDP-061		POINTER—Dial pointer	.25
△RDS-116		DIAL SCALE	.50
*RHB-016		STUD—Chassis cover mounting stud	.05
*RHC-008		CLIP—1 inch electrolytic filter capacitor mounting clip	.10
*RH1-017		INSULATOR—Power cord strain relief insulator	.15
*RHM-001		WASHER "C" washer for tuning shaft	.05
*RHM-052		CLIP—Tinnerman speaker mounting clip	.02
*RHS-083		SCREW—Round-head Phillips screw for mounting latch clip	.05
*RII-060		INSULATOR—Tuning gang mounting insulator (top)	.05
*RII-061		INSULATOR—Tuning gang mounting insulator (bottom)	.05
*RII-065		INSULATOR—Fiber bushing for mounting handle ends to chassis	.30
*RMC-002		CLIP—Oscillator coil mounting clip	.05
*RMC-053		CLIP—Back cover latch clip	.05
*RMS-130		SPRING—Dial cord tension spring	.15
*RMX-183		SHAFT—Tuning shaft and bushing	.35
CAPACITORS			
*RCE-051	C8, A, B	40-40 mfd., 150 w.v., electrolytic filter capacitor	$2.05
*RCE-132	C9, 10	200 mfd., 10 w.v., electrolytic filter capacitor	1.50
*RCT-053	C1A, C1B, C2A, C2B	Tuning capacitor	3.95
*RCW-3015	C6A, B, C, D, E	.002 mfd., .004 mfd., .005 mfd., 220 mmf., 300 mmf., ceramic	1.10
*RCW-3018	C7	.002 mfd., ceramic	.25
*RCW-3054	C5	.01 mfd., ceramic	.35
*UCC-041	C4	.02 mfd., 600 v., paper	.25
*UCC-042	C11	.03 mfd., 600 v., paper	.30
*UCC-045	C12	.05 mfd., 600 v., paper	.30
*UCG-022	C3	56 mmf., silver mica	.25
RESISTORS			
*RRW-042	R10	2300 ohms, 10 w., w.w.	$0.85
*URD-013	R9	33 ohms ±10%, ½ w., carbon	.13
*URD-045	R13	680 ohms ±10%, ½ w., carbon	.13
*URD-053	R12	1500 ohms ±10%, ½ w., carbon	.13
*URD-065	R2	4700 ohms ±10%, ½ w., carbon	.13
*URD-097	R1	100,000 ohms ±10%, ½ w., carbon	.13
*URD-113	R7	470,000 ohms ±10%, ½ w., carbon	.13
*URD-133	R6, 8, 15	3.3 meg. ±10%, ½ w., carbon	.13
*URD-145	R5	10 meg., ±10%, ½ w., carbon	.13
*URE-061	R11	3300 ohms ±10% 1 w., carbon	.17

MODELS 610, 611

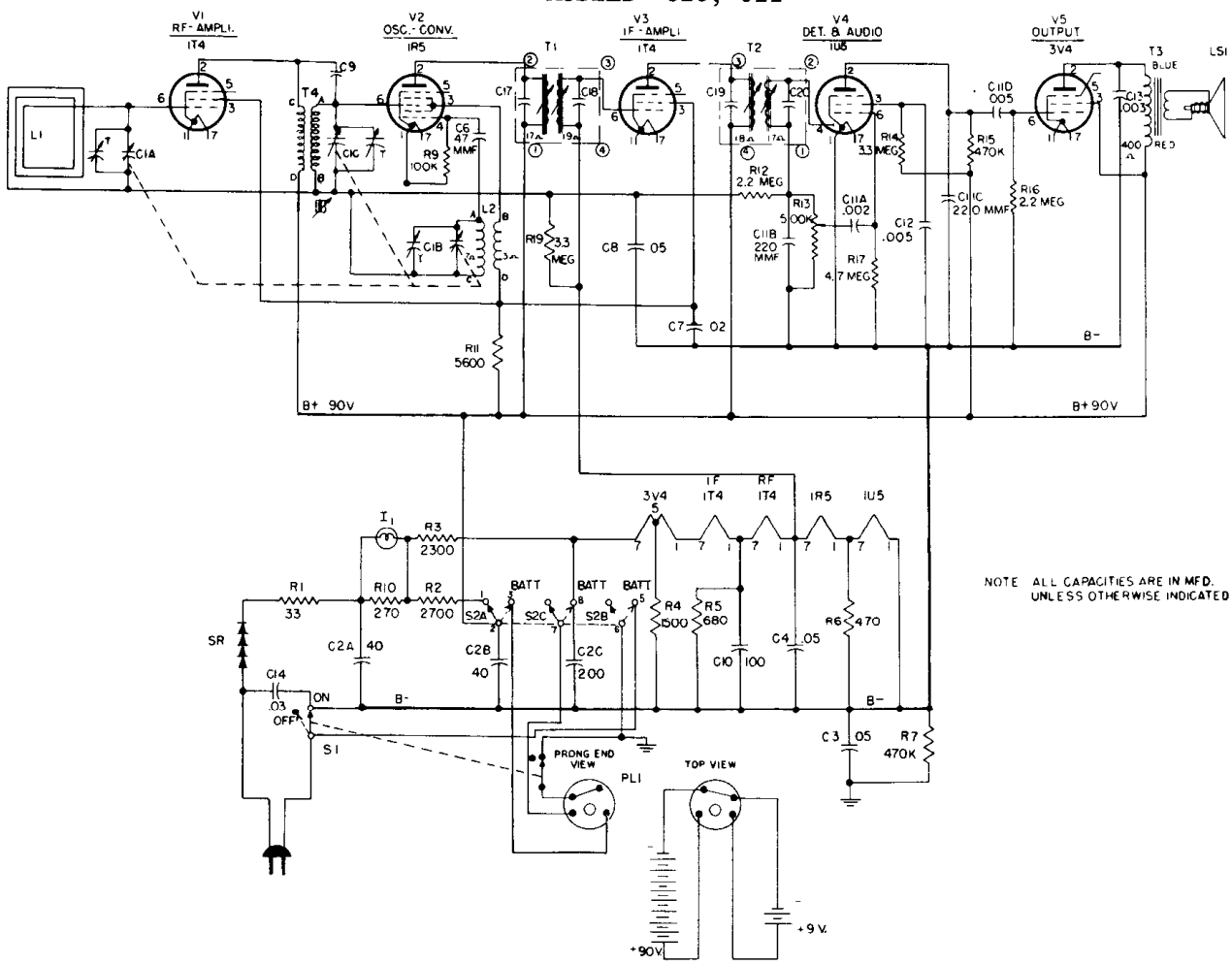

NOTE ALL CAPACITIES ARE IN MFD. UNLESS OTHERWISE INDICATED

REPLACEMENT PARTS LIST 610, 611

Cat. No.	Symbol	Description	Suggested Unit List Price
CAPACITORS			
*RCE-095	C2A, B, C	40, 40, 200 mfd., 150, 150; 25 volts, electrolytic	$2.95
RCE-131	C10	100 mfd., 6 v., electrolytic	1.35
RCT-051	C1A, B, C	Tuning capacitor	5.25
*RCW-1073	C6	47 mmf., ceramic	.60
RCW-3015	C11A, B, C, C11D, C12	Ceramic	1.10
*RCW-3056	C9	4.7 mmf., ceramic	.25
*UCC-037	C13	.003 mf., 600 v., paper	.25
*UCC-041	C7	.02 mf., 600 v., paper	.25
*UCC-042	C14	.03 mf., 600 v., paper	.30
*UCC-045	C3, 4, 8	.05 mfd., 600 v., paper	.30
RESISTORS			
RRC-155	R13, S1A, S1B	VOLUME CONTROL AND SWITCH	$1.65
*RRW-027	R3	2300 ohms, 10 w., w.w.	1.00
*URD-041	R6	470 ohms, ½ w., carbon	.13
*URD-045	R5	680 ohms, ½ w., carbon	.13
*URD-053	R4	1500 ohms, ½ w., carbon	.13
*URD-067	R11	5600 ohms, ½ w., carbon	.13
*URD-097	R9	100,000 ohms, ½ w., carbon	.13
*URD-113	R7, 15	470,000 ohms, ½ w., carbon	.13
*URD-129	R12, 16	2.2 meg., ½ w., carbon	.13
*URD-133	R14, 19	3.3 meg., ½ w., carbon	.13
*URD-137	R17	4.7 meg., ½ w., carbon	.13
*URE-013	R1	33 ohms, 1 w., carbon	.17
*URE-059	R2	2700 ohms, 1 w., carbon	.17
*URF-035	R10	270 ohms, 2 w., carbon	.25
MISCELLANEOUS ELECTRICAL PARTS			
*RER-001	SR	RECTIFIER—Selenium rectifier	$0.66 net
*RHS-010		SHIELD—Tube shield for V4	.20
RII-065		INSULATOR—For handle	.10
*RJP-025	PL1	PLUG—Battery plug (male)	.15
*RJS-100		SOCKET—Tube socket for V2	.20
*RJS-124		SOCKET—Tube socket for V4 and V5	.20
*RJS-125		SOCKET—Tube socket for V1, V3	.20
RJX-031		SOCKET—Dial light socket	.40
*RLB-030	T4	TRANSFORMER—RF coupling	1.95
*RLC-068	L2	COIL—Oscillator coil	1.15
RLL-045	L1	LOOP	1.20
RSW-088	S2A, B, C	SWITCH—AC, DC to battery switch	1.75
*RTL-052	T1	TRANSFORMER—1st IF transformer	2.75
*RTL-079	T2	TRANSFORMER—2nd IF transformer	2.75
*RTO-050	T3	TRANSFORMER—Output transformer	2.25
*RWL-005		POWER CORD	1.25
*S-400C-19		SPEAKER—4-inch speaker	5.45
MISCELLANEOUS MECHANICAL PARTS			
RDS-106		DIAL SCALE	$1.80
RDP-060		DIAL POINTER	.45
RDX-047		DRUM—Pointer drum and shaft assemly, fastened with retaining ring RHM-043	.35
RHB-006		PLUG BUTTON—For 610	.10
RHB-015		PLUG BUTTON—For 611	$0.10
*RHC-015		CLIP—For oscillator coil	.02
RHE-010		EYELET—For cabinet catch	.05
*RHG-018		GROMMET—For mounting tuning condenser	.05
*RHI-011		STRAIN RELIF—On power cord	.15
RHI-016		HINGE—Cabinet hinge	.15
RHJ-005		SPACER—For mounting gang	
*RHM-043		RING—Retaining ring for pointer shaft	.01
RHN-020		POST—Screw post for handle	
*RHR-002		RIVET—For cabinet back catch	.01
RHR-013		RIVET—For cabinet hinge	.01
*RHS-005		SPACER—For mounting tuning condenser	.03
RHS-081		SCREW — Handle screw extends through handle	.40
RHS-082		SCREW—Hex-head screw #6 x ⅝ in. long for cabinet back catch	.05
*RJS-024		PLATE—Mounting plate for electrolytic capacitor (C2)	.10
RMC-053		CATCH—For cabinet back	.05
*RMS-120		SPRING—Dial cord tension spring	.15
RMU-074		SHAFT—Tubular shaft for tuning control	.35
CABINETS AND CABINET PARTS			
RAB-161		BACK—Cabinet back (maroon) for 610	$3.90
RAB-162		BACK—Cabinet back for Model 611	3.90
RAC-092		FRONT—Cabinet front (maroon) for 610	7.95
RAC-093		FRONT—Cabinet front (green) for Model 611	7.95
RAC-094		COVER—Chassis cover	.75
RAD-077		BRACKET—For mounting cabinet handle	.45
RAG-042		GRILLE CLOTH—Maroon, for Model 610	.35
RAG-043		GRILLE CLOTH—Gray, for Model 611	.35
*RDC-032		DIAL CORD	2.50/25 yds
RDE-116		ESCUTCHEON—Cabinet escutcheon for Model 610	2.75
RDE-117		ESCUTCHEON—For Model 611	2.75
RDK-248		KNOB—ON-OFF-VOLUME for Model 610, fawn color	.20
RDK-249		KNOB — ON-OFF-VOLUME knob for Model 611, green color	.20
RDK-250		KNOB—Tuning knob for Model 610, fawn color	.35
RDK-251		KNOB—Tuning knob for Model 611, green color	.35
RHF-011		FOOT—Cabinet foot button (maroon) for Model 610	.05
RHF-012		FOOT—Cabinet foot button (gray) for Model 611	.05
RHY-034		HANDLE END	.85
RHY-035		HANDLE—Fawn colored for Model 610	.90
RHY-043		HANDLE—Green, for Model 611	.90

MODELS 612, 613

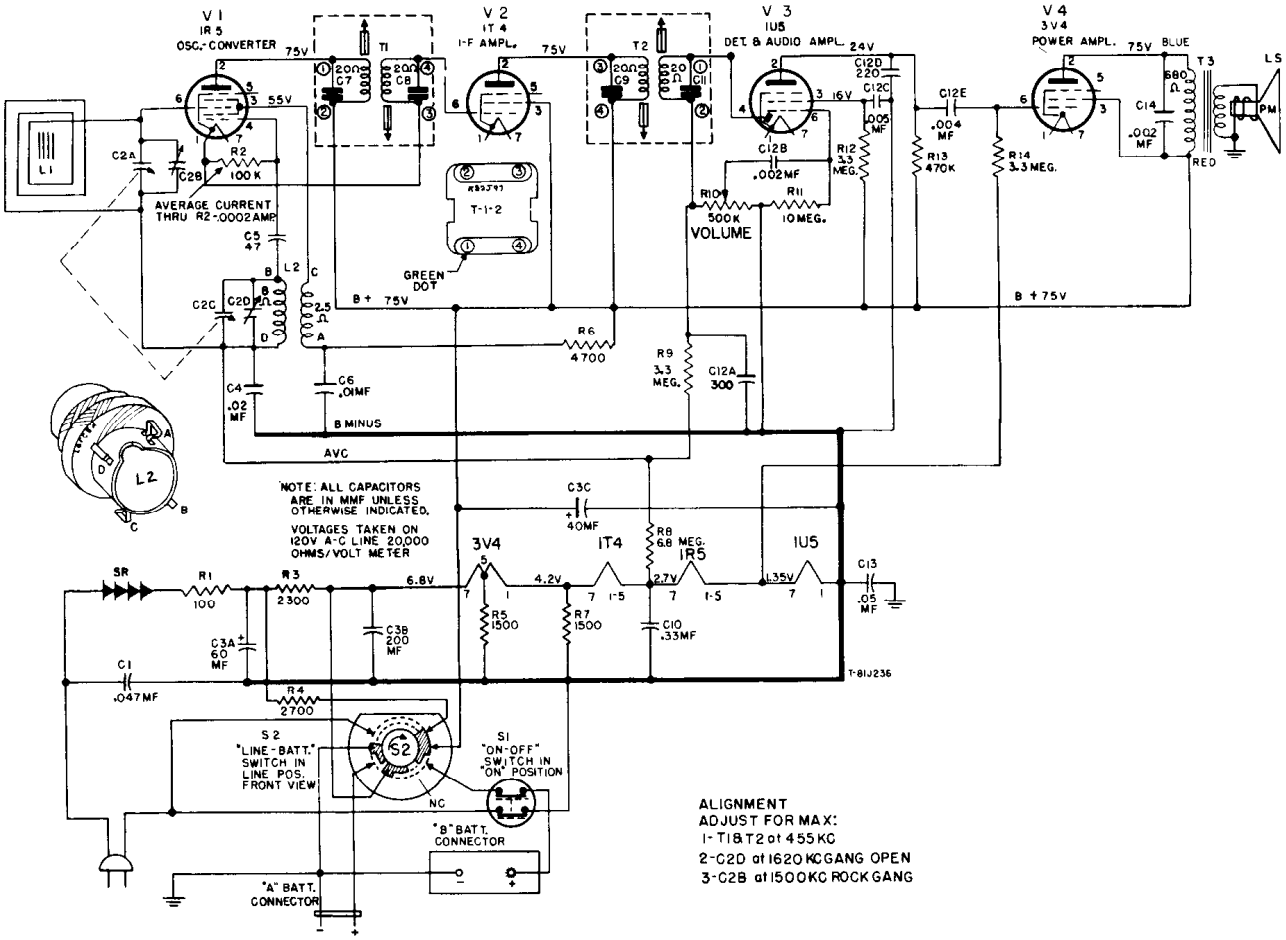

REPLACEMENT PARTS LIST, MODELS 612, 613

CAT. NO.	SYMBOL	DESCRIPTION	UNIT PRICE
CAPACITORS			
RCE-151	C3A, B, C	60 mf. −40 mf., 150 v., 200 mf., 20 v., cardboard case tubular electrolytic	$3.25
RCN-053	C1	.047 mf., ±20%, 600 v., paper, molded	.35
RCN-070	C10	.33 mf., 100 v., paper	.50
RCT-067	C2A, B, C, D	Tuning capacitor, three-gang	3.75
*RCW-3015	C12A, B, C, D	300 mmf., .002 mf., .005 mf., 220 mmf., ceramic couplate	1.10
*RCW-3018	C14	.002 mf., −0% +100%, 450 v., ceramic	.25
*RCW-3054	C6	.01 mf., +150% −0%, 400 v., disk ceramic	.35
RCW-3075	C5	47 mmf., disk ceramic	.25
*UCC-026	C4	.02 mf., 400 v., paper	.25
*UCC-045	C13	.05 mf., 600 v., paper	.30
POTENTIOMETER & RESISTORS			
RRC-206	R10, S1	Volume control, 500,000 ohms, with DPST switch	$1.75
*RRW-042	R3	2300 ohms, 10 w., wirewound	.85
*URD-053	R5, 7	1500 ohms, ½ w., carbon	.13
*URD-065	R6	4700 ohms, ½ w., carbon	.13
*URD-097	R2	100,000 ohms, ½ w., carbon	.13
*URD-113	R13	470,000 ohms, ½ w., carbon	.13
*URD-133	R9, 12, 14	3.3 megohms, ½ w., carbon	.13
*URD-141	R8	6.8 megohms, ½ w., carbon	.13
*URD-145	R11	10 megohms, ½ w., carbon	.13
*URE-059	R4	2700 ohms, 1 w., carbon	.25
URF-025	R1	100 ohms, 2 w., carbon	.25
COILS & TRANSFORMERS			
RLC-101	L2	COIL—Oscillator coil, broadcast band for 455 KC I-F	$0.85
RLL-052	L1	COIL—Antenna loop wound on ferrite core	1.50
*RTL-052	T1, T2	TRANSFORMER—I-F, 455 KC	2.75
RTO-133	T3	TRANSFORMER—Audio output	2.70
MISCELLANEOUS ELECTRICAL			
*REX-005	SR	RECTIFIER—Selenium rectifier	$2.50
*RII-060		INSULATING STRIP—Fiber, tuning capacitor mounting, with formed shoulder in holes. See RII-061	.05
*RII-061		INSULATING STRIP—Fiber, tuning capacitor mounting, with plain holes. See RII-060	.05
*RJC-022		CONNECTOR—"B" Battery connector, two button snap fastener type	.40
*RJP-033		PLUG—"A" Battery connector, two pin wafer type	.15
*RJS-100		TUBE SOCKET—For V1	.20
*RJS-124		TUBE SOCKET—For V3 or V4	.20
*RJS-125		TUBE SOCKET—For V2	.20
*RSW-088	S2	SWITCH — Line-battery changeover switch	1.75
*RWL-005		CORD—Power cord and plug, 6 ft. long, (black)	1.25
*S400D7	LS	LOUDSPEAKER—4-inch, P.M.	4.60
MISCELLANEOUS MECHANICAL			
*RAD-089		BRACKET—Cardboard, for mounting loop antenna coil	$0.15
*RDC-032		DIAL CORD—Bulk quantity, 25 yds.	2.50

CAT. NO.	SYMBOL	DESCRIPTION	UNIT PRICE
MISCELLANEOUS MECHANICAL (CONT'D)			
*RHB-016		SNAP FASTENER—Chassis cover mounting stud	$0.05
*RHC-053		CLIP—I-F transformerg mountin.	.02
*RHI-017		STRAIN RELIEF — Two-piece strain relief and insulator, for power cord entrance in chassis	.15
*RHM-025		"C" WASHER—Retainer ring for control shafts	.01
*RHM-052		CLIP—Secures speaker grille to cabinet ("early" receivers only)	.02
RHM-073		CLIP—Dial cord pulley retainer on potentiometer and tuning capacitor drum	.02
*RMC-002		CLIP—Oscillator coil mounting	.05
*RMS-243		SPRING—Dial cord tension, on tuning pulley or volume control cord	.10
RMW-075		PULLEY—Drive cord pulley on potentiometer	.10
RMW-076		PULLEY—Drive cord pulley on tuning capacitor	.10
RMX-238		SHAFT & PULLEY ASSEMBLY—Volume control shaft and pulley assembly, drives potentiometer pulley	.95
RMX-239		SHAFT & PULLEY ASSEMBLY—Tuning control shaft and pulley assembly, drives tuning capacitor pulley	.45
CABINETS & APPEARANCE ITEMS			
RAB-209		CABINET BACK—Back half of cabinet, black, plastic, includes ½ slip hinge; for Model 612	$4.15
RAB-210		CABINET BACK—Back half of cabinet, red, plastic, includes ½ slip hinge; for Model 613	4.25
RAC-129		CABINET FRONT—Front half of cabinet, black, plastic, includes ½ slip hinge; for Model 612	4.85
RAC-130		CABINET FRONT—Front half of cabinet, red, plastic, includes ½ slip hinge; for Model 613	5.00
RAD-117		BRACKET (R.H.)—Handle bracket, right hand	.80
RAD-118		BRACKET—Handle bracket, left hand	.80
RAG-055		GRILLE CLOTH—Black, pasteboard-mounted assembly for Model 612	.70
RAG-056		GRILLE CLOTH—Red, pasteboard-mounted assembly for Model 613	.70
RDK-311		KNOB—On-Off-Volume, black; for Model 612	1.45
RDK-312		KNOB—On-Off-Volume, red; for Model 613	1.40
RDK-313		KNOB—Tuning, black; for Model 612	1.45
RDK-314		KNOB—Tuning, red; for Model 613	1.45
RDS-122		DIAL SCALE—Metal, circular	.60
*RHE-010		EYELET—Cabinet catch, held by screw RHS-097, to cabinet back cover	.05
RHE-013		EYELET—For mounting cabinet hinges	.01
*RHI-024		HINGE—Complete, consisting of two halves	.25
*RHS-083		SCREW—Phillips round head, No. 4 x ¼ inches; for mounting latch clip, RMC-053	.05
*RHS-097		SCREW—No. 6 x ½ inch Phillips round head, holds eyelet, RHE-010, used as cabinet catch	.02
RHY-046		HANDLE—Metal, chrome finish (two are used for complete handle)	2.25
*RMC-053		CLIP—Latch clip on front half of cabinet	.05

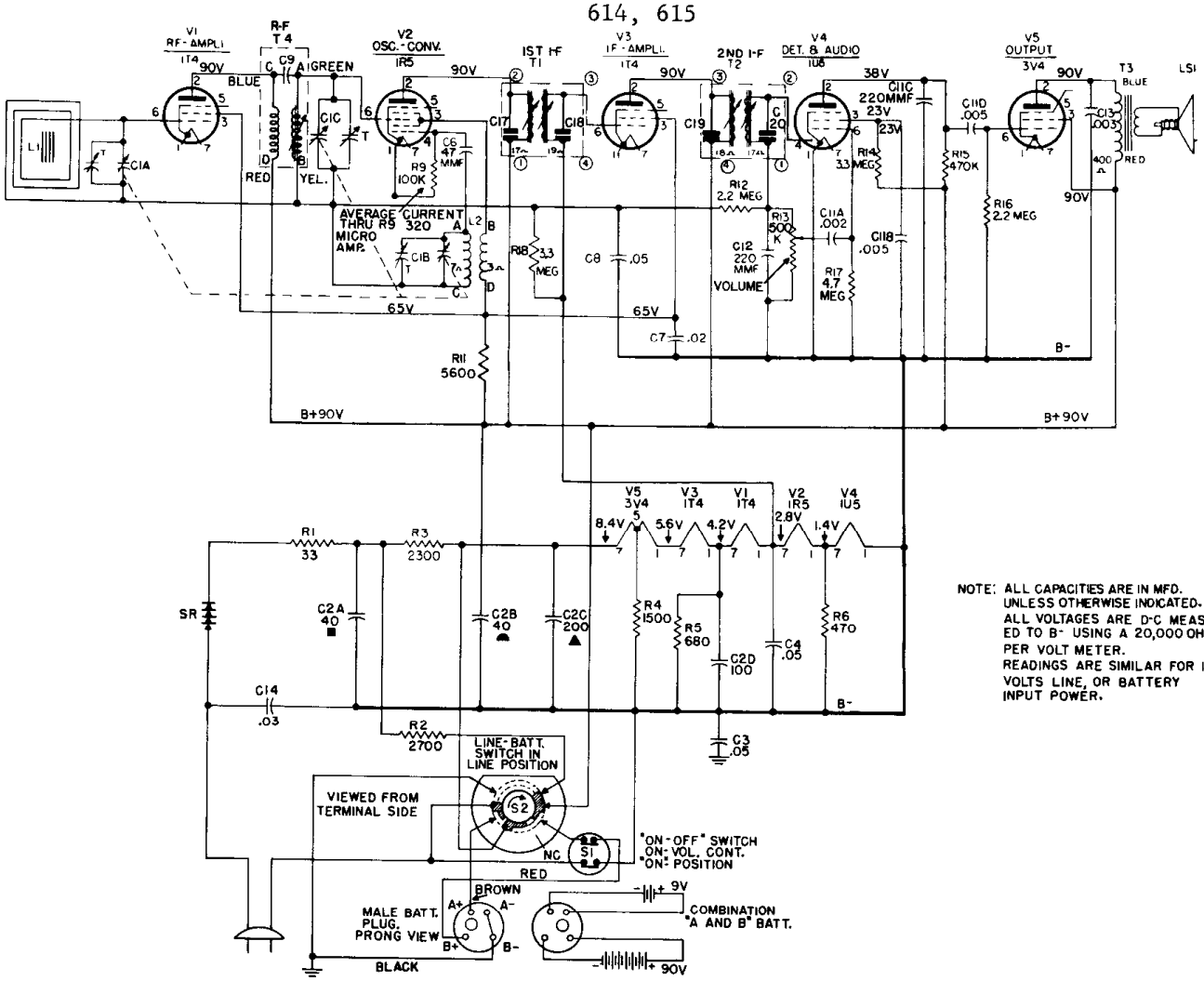

NOTE: ALL CAPACITIES ARE IN MFD. UNLESS OTHERWISE INDICATED. ALL VOLTAGES ARE D-C MEASURED TO B- USING A 20,000 OHMS PER VOLT METER. READINGS ARE SIMILAR FOR 117 VOLTS LINE, OR BATTERY INPUT POWER.

REPLACEMENT PARTS LIST FOR MODELS 614, 615

Cat. No.	Symbol	Description	Unit Price
		CAPACITORS	
RCE-138	C2A, B, C, D	40 mfd -40 mfd., 150v ; 200 mfd.-100 mfd., 25 v.	$4.50
RCT-060	C1A, B, C	Tuning capacitor, 3 gang	5.75
*RCW-1073	C6	47 mmf., 10% temp. coeff., ceramic	.60
*RCW-3015	C11A, B, C, D, E	.002 mf., 220 mmf., 220 mmf., .005 mf., .005 mf., ceramic couplate (late receivers use C12, UCU-036, in lieu of section C11E)	1.10
*UCC-037	C13	.003 mf., 600 v., paper	.25
*UCC-041	C7	.02 mf., 600 v., paper	.25
*UCC-042	C14	.03 mf., 600 v., paper	.30
*UCC-045	C3, 4, 8	.05 mf., 600 v., paper	.30
*UCU-036	C12	220 mmf., 500 v , mica used in late prod. in lieu of RCW-3015, C11, section E	.30
		RESISTORS (Carbon)	
*URD-041	R6	470 ohms, ½ w.	.13
*URD-045	R5	680 ohms, ½ w.	.13
*URD-053	R4	1500 ohms, ½ w.	.13
*URD-067	R11	5600 ohms, ½ w.	.13
*URD-097	R9	100 K ohms, ½ w.	.13
*URD-113	R15	470 K ohms, ½ w.	.13
*URD-129	R12, 16	2.2 megohms, ½ w.	.13
*URD-133	R14, 18	3.3 megohms, ½ w.	.13
*URD-137	R17	4.7 megohms, ½ w.	.13
*URE-013	R1	33 ohms, 1 w.	.17
*URE-059	R2	2700 ohms, 1 w.	.17
		(Potentiometers and Wirewound)	
RRC-185	R13, S1	Volume control, 500K ohms, with DPST switch	1.70
*RRW-027	R3	2300 ohms, 10 w., w.w.	1.00
		COILS AND TRANSFORMERS	
*RLB-030	T4	TRANSFORMER—R-F.	1.95
RLC-120	L2	COIL—Oscillator coil	.90
RLL-049	L1	COIL—Antenna pickup coil wound on ferrite core	1.50
*RTL-052	T1	TRANSFORMER—1st I-F	2.75
*RTL-079	T2	TRANSFORMER—2nd I-F	2.75
RTO-118	T3	TRANSFORMER—Audio output	2.85
		MISCELLANEOUS ELECTRICAL	
*RER-001	SR	SELENIUM RECTIFIER—75 ma., 6 plates, 1 in. x 1 in.	.66
RII-070	S2	PLATE—Textolite mtg. plate for line battery changeover switch, S2	.05
*RJP-025	PL1	PLUG—Four prong battery plug with locating pin	.15
*RJS-100		SOCKET—Miniature wafer, seven pin, wax impregnated, one inch mtg. centers for tube 1R5 (V2)	20
*RJS-124		SOCKET—Miniature wafer, seven pin, one inch mtg. centers; for tubes 1U5, 3V4 (V4 or V5)	.20
*RJS-125		SOCKET—Miniature wafer, seven pin, with pin shield post, one inch mtg centers for tubes 1T4 (V1 or V3)	20
ROP-024	LS1	LOUDSPEAKER—Oval, 4 x 6 inch, PM, 2 watt, 3 2 ohms at 400 cycles	7 95
*RSW-088	S2	SWITCH—Line-battery changeover switch, power plug operated, wafer type	1.75
*RWL-005		CORD—Power cord and plug, 6 feet long	1.25

Cat. No.	Symbol	Description	Unit Price
		MISCELLANEOUS MECHANICAL	
*RDC-032		CORD—Dial cord, bulk quantity, 25 yards	$2.50
RDP-069		DIAL POINTER—Metal slider and red plastic flag; for Model 614	.25
RDP-072		DIAL POINTER—Metal slider and gold finished plastic flag; for Model 615	.25
RDS-114		DIAL SCALE—Scale and backplate, green background; for Model 614	.95
RDS-117		DIAL SCALE—Scale and backplate, gold finish background; for Model 615	.95
*RHB-016		FASTENER—Snap fastener, Trimount type; for chassis cover	.05
*RHG-018		GROMMET—Rubber grommet for tuning capacitor shock mounting	.05
*RHI-017		GROMMET—Two piece strain relief insulator for power cord	.15
*RHJ-005		SPACER—Metal spacer bushing for mounting tuning capacitor	.02
*RHN-020		CAP SCREW—No. 6-32 tap, Phillips head, for handle ends	.10
RHS-094		SCREW—No. 6-32 threaded rod 8½ inches long; through handle bar to handle ends.	.40
RHS-096		SCREW—Thumbscrew on battery hold-down bracket	.10
RHY-040		HANDLE END—Metal casting, chrome finish	1.40
RHY-041		HANDLE BAR—Hand grip, plastic, ivory; for Model 614	.75
RHY-042		HANDLE BAR—Hand grip, plastic, green; for Model 615	.75
*RII-065		INSULATOR BUSHING — For handle bracket on chassis	.10
*RJS-004		MOUNTING PLATE—For electrolytic capacitor, C2	.10
*RMC-002		CLIP—Coil clip for ½ inch diameter oscillator coil, L2	.05
RMM-206		CORK—On battery hold-down bracket	.05
RMM-209		SUPPORT—Formed paper antenna loop support	.03
*RMS-118		SPRING—Dial cord tension spring	.10
RMX-212		SHAFT—Tuning control shaft and bushing assembly	.90
		CABINET AND CABINET PARTS	
RAB-182		CABINET BACK—Back half of cabinet, maroon, plastic; for Model 614; includes ½ slip hinge	3.90
RAB-183		CABINET BACK—Back half of cabinet, green plastic; for Model 615; includes ½ slip hinge	3.90
RAC-105		COVER—Dial cover, maroon, plastic; for Model 614	1.45
RAC-106		COVER—Dial cover, green, plastic; for Model 615	1.40
RAC-113		CABINET FRONT—Front half of cabinet, maroon, plastic; includes ½ slip hinge and Model 614 nameplate	7.95
RAC-114		CABINET FRONT—Front half of cabinet, green, plastic, includes ½ slip hinge and Model 615 nameplate	7.95
RAD-087		BRACKET—Dial cover hinge bracket, right-hand	.20
RAD-088		BRACKET—Dial cover hinge brocket, left-hand	.20
RAG-046		GRILLE CLOTH—Maroon, pasteboard mounted assembly, for Model 614	.45
RAG-047		GRILLE CLOTH — Green, pasteboard mounted assembly, for Model 615	.45
RAX-029		LATCH BRACKET—For dial cover, includes latch spring	.15
RDK-277		KNOB—Volume or tuning control, ivory; for Model 614	.15

620, 621, 622

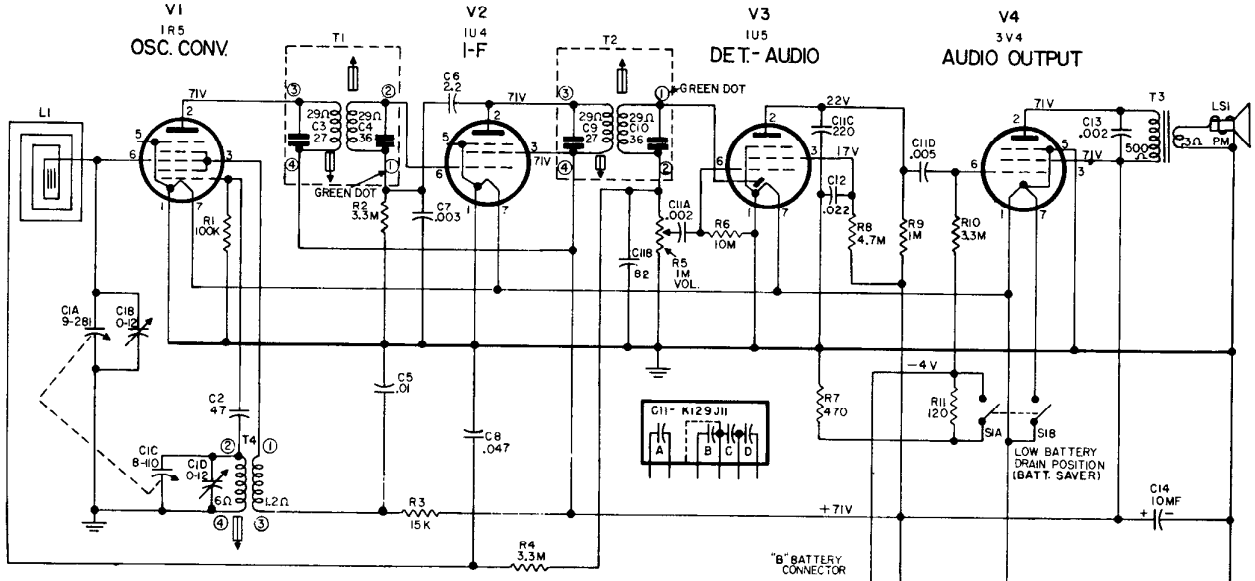

UNLESS OTHERWISE NOTED, CAPACITOR VALUES LESS THAN THE UNIT 1 ARE MF., VALUES MORE THAN 1 ARE MMF.

RESISTANCE VALUES ARE OHMS K=1000 M=1,000,000.

VOLTAGES ARE DC TO CHASSIS GROUND, METER SENSITIVITY 20,000 OHMS/VOLT.

ALIGNMENT
I-F - PEAK T1,T2 @ 455KC
R-F 1. PEAK C1D @ 1620KC GANG OPEN.
2. PEAK C1B @ 1500KC ROCK GANG.
3. PEAK IRON CORE T4 @ 600KC ROCK GANG.
4. REPEAT AS NECESSARY.

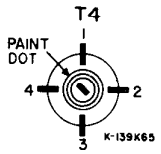

OSC. COIL

REPLACEMENT PARTS LIST
FOR MODELS 620, 621, AND 622

CAT. NO.	SYMBOL	DESCRIPTION	UNIT PRICE
		CAPACITORS	
*RCC-121	C5	.01 mf., 200 v., paper	$0.35
*RCC-122	C8	.047 mf., 200 v., paper	.40
*RCC-123	C12	.022 mf., 200 v., paper	.40
RCE-172	C14	10 mf., electrolytic	1.15
RCN-082	C11A, B, C, D	Ceramic Bullplate	.85
RCT-075	C1	Tuning	3.60
*RCW-3075	C2	47 mmf., ceramic	.25
*RCW-3078	C6	2.2 mmf., ±5%, 500 v., ceramic	.20
RCW-3118	C7	.003 mf., ±5%, 500 v., ceramic	.25
RCW-3119	C13	.002 mf., ± 5%, 500 v., ceramic	.25
		RESISTORS	
RRC-239	R5 S2A, B	VOLUME CONTROL & SWITCH—1 megohm.	1.70
*URD-027	R11	120 ohms, carbon	.13
*URD-041	R7	470 ohms, carbon	.13
*URD-061	R2, 4, 10	3.3 K, carbon	.13
*URD-077	R3	15 K, carbon	.13
*URD-097	R1	100 K, carbon	.13
*URD-121	R9	1 megohm, carbon	.13
*URD-137	R8	4.7 megohms, carbon	.13
*URD-145	R6	10 megohms, carbon	.13
		COILS AND TRANSFORMERS	
RLC-129	T4	OSCILLATOR COIL	.90
RLL-058	L1	ANTENNA ASSEMBLY	1.50
RTL-152	T1, 2	TRANSFORMER—I-F	3.80
RTO-153	T3	TRANSFORMER—Audio output	2.20
		MISCELLANEOUS ELECTRICAL	
*RHC-053		CLIP—I-F transf. mtg. clip	.02
RJC-035		CONNECTOR—For "B" battery	.40
RJS-199		SOCKET—Tube socket for all tubes (with center shield)	.25
ROP-028		LOUDSPEAKER—4 inch, PM	$6.25
RSS-008		SWITCH—Battery saver switch	.45
		MISCELLANEOUS MECHANICAL	
*RHC-060		CLAMP SUPPORT—Plastic, for antenna	.15
RHC-071		CLAMP—Wire, for battery	.45
RHC-072		SPRING CLIP—Switch button	.05
RHM-075		CAP—For handle mounting	.65
RHX-021		BATTERY CLIP ASSEMBLY	.85
RHW-055		WASHER—Felt Washer for Dial Knob	.05
RMC-060		CATCH—Cabinet catch	.05
RMS-329		COMPRESSION RING—For Volume and Tuning knobs	.05
		CABINETS AND APPEARANCE ITEMS	
RAG-065		GRILLE—Dark green, Model 620	.95
RAG-066		GRILLE—Red, Model 621	.95
RAG-067		GRILLE—Gray, Model 622	.95
RAU-404		CABINET—Dark green, Model 620, with grille and nameplate	8.50
RAU-405		CABINET—Red, Model 621, with grille and nameplate	8.50
RAU-406		CABINET—Gray, Model 622, with grille and nameplate	8.50
RDK-390		KNOB—Tuning, clear, all Models	1.45
RDK-391		KNOB—Volume, dark green, Model 620	.20
RDK-392		KNOB—Volume, red, Model 621	.20
RDK-393		KNOB—Volume, gray, Model 622	.20
RDK-394		SWITCH BUTTON—Battery HI-LO, dark green, Model 620	.15
RDK-395		SWITCH BUTTON—Battery HI-LO, red, Model 621	.15
RDK-396		SWITCH BUTTON—Battery HI-LO, gray, Model 622	.15
RHY-056		HANDLE ASSEMBLY—Handle and clips	2.20
RYN-022		NAMEPLATE—Plastic, dark green, Model 620	.15
RYN-023		NAMEPLATE—Plastic, red, Model 621	.15
RYN-024		NAMEPLATE—Plastic, gray, Model 622	.15

MODELS 625, 626

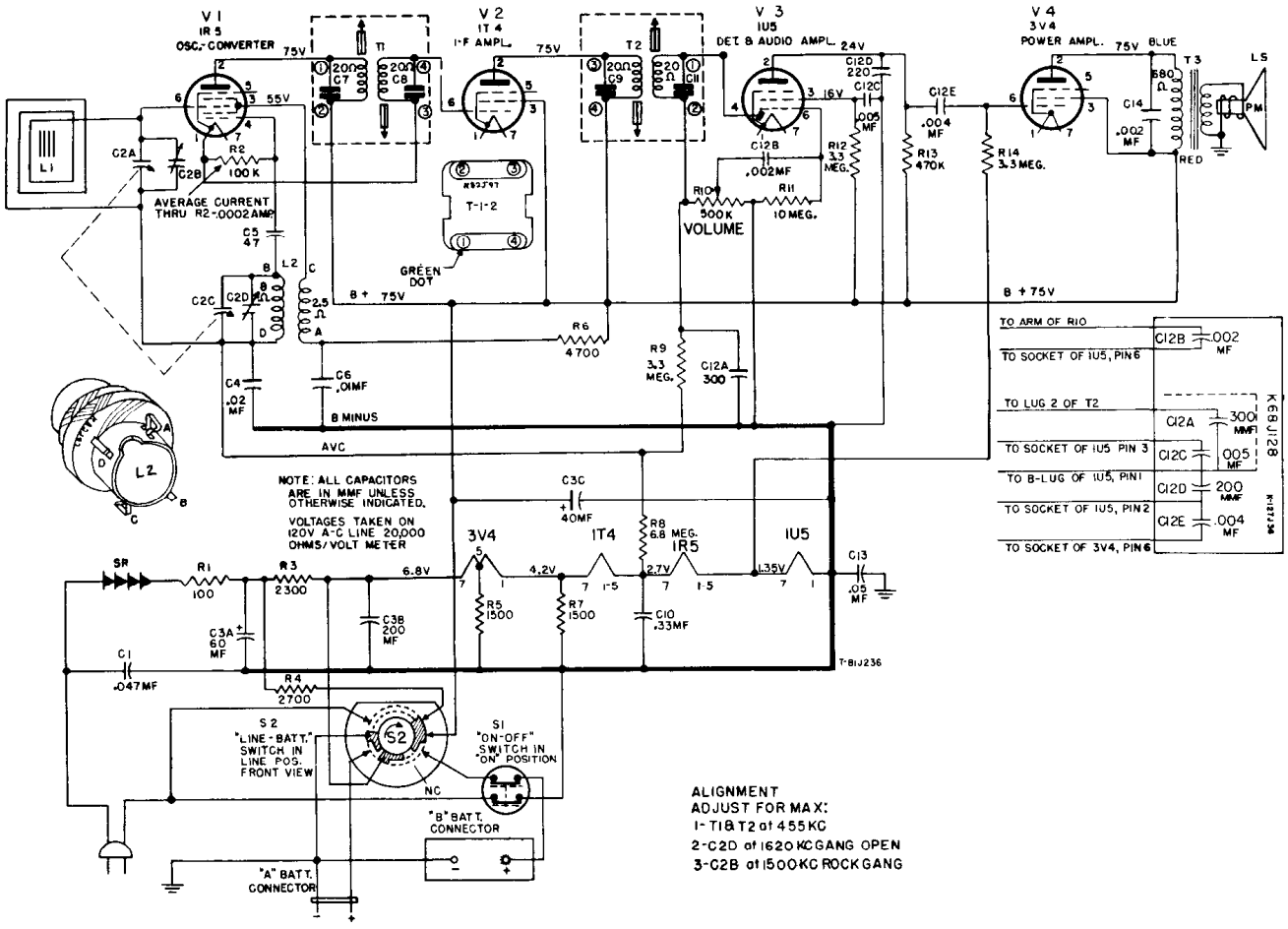

ALIGNMENT
ADJUST FOR MAX:
1-T1 & T2 at 455 KC
2-C2D at 1620 KC GANG OPEN
3-C2B at 1500 KC ROCK GANG

REPLACEMENT PARTS LIST, MODELS 625, 626

CAT. NO.	SYMBOL	DESCRIPTION	UNIT PRICE
CAPACITORS			
RCE-151	C3A, B, C	60 mf. −40 mf., 150 v., 200 mf., 20 v., cardboard case tubular electrolytic	$3.25
RCN-053	C1	.047 mf., ±20%, 600 v., paper, molded	.35
RCN-070	C10	.33 mf., 100 v., paper	.50
RCT-067	C2A, B, C, D	Tuning capacitor, three-gang	3.75
*RCW-3015	C12A, B, C, D	300 mmf., .002 mf., .005 mf., 220 mmf., ceramic couplate	1.10
*RCW-3018	C14	.002 mf., −0% +100%, 450 v., ceramic	.25
*RCW-3054	C6	.01 mf., +150% −0%, 400 v., disk ceramic	.35
RCW-3075	C5	47 mmf., disk ceramic	.25
*UCC-026	C4	.02 mf., 400 v., paper	.25
*UCC-045	C13	.05 mf., 600 v., paper	.30
POTENTIOMETER & RESISTORS			
RRC-206	R10, S1	Volume control, 500,000 ohms, with DPST switch	1.75
*RRW-042	R3	2300 ohms, 10 w., wirewound	.85
*URD-053	R5, 7	1500 ohms, ½ w., carbon.	.13
*URD-065	R6	4700 ohms, ½ w., carbon	.13
*URD-097	R2	100,000 ohms, ½ w., carbon	.13
*URD-113	R13	470,000 ohms, ½ w., carbon	.13
*URD-133	R9, 12, 14	3.3 megohms, ½ w., carbon	.13
*URD-141	R8	6.8 megohms, ½ w., carbon	.13
*URD-145	R11	10 megohms, ½ w., carbon	.13
*URE-059	R4	2700 ohms, 1 w., carbon	.25
URF-025	R1	100 ohms, 2 w., carbon	.25
COILS & TRANSFORMERS			
RLC-101	L2	COIL—Oscillator coil, broadcast band for 455 KC I-F	.85
RLL-052	L1	COIL—Antenna loop wound on ferrite core	1.50
*RTL-052	T1, T2	TRANSFORMER—I-F, 455 KC	2.75
RTO-133	T3	TRANSFORMER—Audio output	2.70
MISCELLANEOUS ELECTRICAL			
*REX-005	SR	RECTIFIER—Selenium rectifier	2.50
*RII-060		INSULATING STRIP—Fiber, tuning capacitor mounting, with formed shoulder in holes. See RII-061	.05
*RII-061		INSULATING STRIP—Fiber, tuning capacitor mounting, with plain holes. See RII-060.	.05
*RJC-022		CONNECTOR—"B" Battery connector, two-button snap fastener type	.40
*RJP-033		PLUG—"A" Battery connector, two-pin wafer type	.15
*RJS-100		TUBE SOCKET—For V1	.20
*RJS-124		TUBE SOCKET—For V3 or V4	.20
*RJS-125		TUBE SOCKET—For V2	.20
*RSW-088	S2	SWITCH—Line-battery changeover switch	1.75
*RWL-005		CORD—Power cord and plug, 6 ft. long (black)	1.25
*S400D7	LS	LOUDSPEAKER—4-inch, P.M.	4.60
MISCELLANEOUS MECHANICAL			
*RAD-089		BRACKET—Cardboard, for mounting loop antenna coil	.15
*RDC-032		DIAL CORD—Bulk quantity, 25 yds	2.50

CAT. NO.	SYMBOL	DESCRIPTION	UNIT PRICE
MISCELLANEOUS MECHANICAL (CONT'D)			
*RHB-016		SNAP FASTENER—Chassis cover mounting stud	$0.05
*RHC-053		CLIP—I-F transformer mounting	.02
*RHI-017		STRAIN RELIEF — Two-piece strain relief and insulator, for power cord entrence in chassis	.15
*RHM-025		"C" WASHER—Retainer ring for control shafts	.01
*RHM-052		CLIP—Secures speaker grille to cabinet ("early" receivers only)	.02
RHM-073		CLIP—Dial cord pulley retainer on potentiometer and tuning capacitor drum	.02
*RMC-002		CLIP—Oscillator coil mounting	.05
*RMS-243		SPRING—Dial cord tension, on tuning pulley or volume control cord	.10
RMW-075		PULLEY—Drive cord pulley on potentiometer	.10
RMW-076		PULLEY—Drive cord pulley on tuning capacitor	.10
RMX-238		SHAFT & PULLEY ASSEMBLY—Volume control shaft and pulley assembly, drives potentiometer pulley	.95
RMX-239		SHAFT & PULLEY ASSEMBLY—Tuning control shaft and pulley assembly, drives tuning capacitor pulley	.45
CABINETS & APPEARANCE ITEMS			
RAD-117		BRACKET (R.H.) — Handle bracket, right hand	.80
RAD-118		BRACKET (L.H.) — Handle bracket, left hand	.80
RAG-060		GRILLE CLOTH—Green, pasteboard-mounted assembly for Model 625	.70
RAG-061		GRILLE CLOTH—Gray, pasteboard-mounted assembly for Model 626	.70
RAU-395		CABINET—Green, complete (front and back) with solid hinge, Model 625	10.00
RAU-396		CABINET—Gray, complete (front and back) with solid hinge, Model 626	12.50
RDK-375		KNOB—On-Off-Volume, green, for Model 625	1.45
RDK-376		KNOB—ON-Off-Volume, gray, for Model 626	1.45
RDK-377		KNOB—Tuning, green, for Model 625	1.45
RDK-378		KNOB—Tuning, gray, for Model 626	1.45
RDS-122		DIAL SCALE—Metal, circular	.60
*RHE-010		EYELET—Cabinet catch, held by screw RHS-097, to cabinet back cover	.05
RHE-013		EYELET—For mounting cabinet hinges	.01
RHE-017		EYELET—Cabinet catch, cordside, held by screw RHS-097, to cabinet back cover	.02
RHI-027		HINGE—Solid, uses eyelets RHE-013	.30
*RHS-083		SCREW—Phillips round head, No. 4 x 5/16 inches; for mounting latch clip, RMC-053	.05
*RHS-097		SCREW—No. 6 x ½ inch, Phillips round head, holds eyelet, RHE-010 used as cabinet catch	.02
RHY-046		HANDLE—Metal, chrome finish (two are used for complete handle)	2.25
*RMC-053		CLIP—Latch clip on front half of cabinet	.05

630, 631, 632

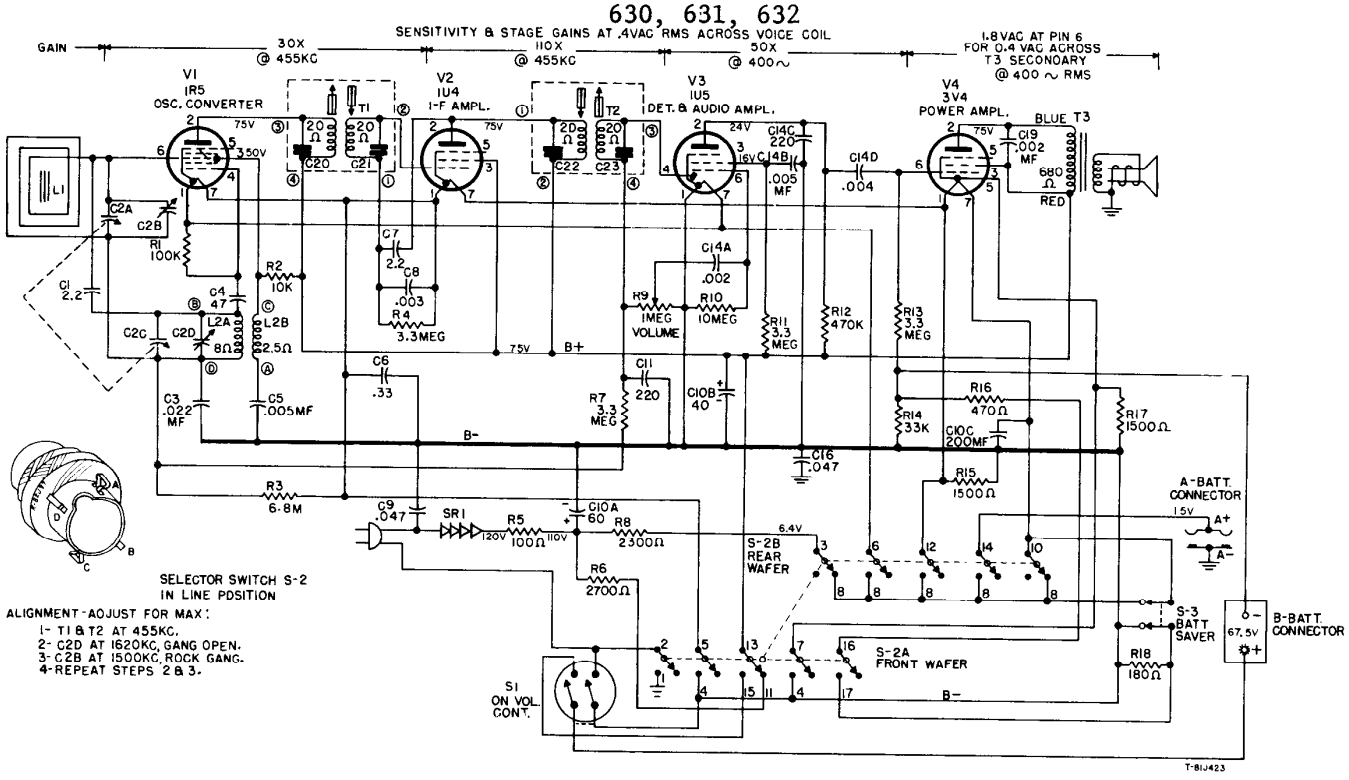

SELECTOR SWITCH S-2 IN LINE PDSITION

ALIGNMENT - ADJUST FOR MAX:

1- T1 & T2 AT 455KC.
2- C2D AT 1620KC, GANG OPEN.
3- C2B AT 1500KC, ROCK GANG.
4- REPEAT STEPS 2 & 3.

T-81J423

REPLACEMENT PARTS LIST, MODELS 630, 631 AND 632

CAT. NO.	SYMBOL	DESCRIPTION	PRICE UNIT
CAPACITORS			
*RCC-123	C3	.002 mf., 20%, 200 v., paper	$ 0.40
RCC-125	C16	.047 mf., 400 v., paper	.40
*RCE-151	C10A, B, C	60–40–200 mf., electrolytic	3.25
*RCN-039	C1, 7	2.2 mmf., 20%, 500 v., ceramic	.15
*RCN-053	C9	.047 mf., 20%, 600 v., molded	.35
*RCN-070	C6	.33 mf., 100 v., paper	.50
RCT-077	C2A, B, C	Tuning capacitor	4.10
*RCW-3014	C5	.005 mf., +150% −0%, 450 v., cer	.25
*RCW-3018	C19	.002 mf., −0% +100%, 450 v., cer.	.25
*RCW-3075	C4	47 mmf., disk ceramic	.25
*RCW-3089	C14A, B, C, D	Bullplate—.002 mf., .005 mf., 200 mf., .004 mf.	.90
*RCW-3118	C8	.003 mf., 20%, 100 v., ceramic	.25
RCW-3126	C11	220 mmf., ceramic.	.25
POTENTIOMETER & RESISTORS			
RRC-253	R9, S1	Volume Control and Switch	$1.65
*RRW-042	R8	2300 ohms, ±10%, 10 w., w.w.	.85
*URD-031	R18	180 ohms, ±10%, ½ w., carbon	.13
*URD-041	R16	470 ohms, ±10%, ½ w., carbon	.13
*URD-053	R15, 17	1500 ohms, ±10%, ½ w., carbon	.13
*URD-073	R2	10 k, ±10%, ½ w., carbon	.13
*URD-085	R14	33 k, ±10%, ½ w., carbon	.13
*URD-097	R1	100 k, ±10%, ½ w., carbon	.13
*URD-113	R12	470 k, ±10%, ½ w., carbon	.13
*URD-133	R4, 7, 11, 13	3.3 megohms, ±10%, ½ w., carbon.	.13
*URD-141	R3	6.8 megohms, ±10%, ½ w., carbon.	.13
*URD-145	R10	10 megohms, ±10%, ½ w., carbon	.13
*URE-059	R6	2700 ohms, ±10%, 1 w., carbon	.17
*URF-025	R5	100 ohms, ±10%, 2 w., carbon	.25
COILS AND TRANSFORMERS			
*RLC-101	L2	COIL—Oscillator	$0.90
RLL-059	L1	ANTENNA ASSEMBLY—Iron core	1.50
RTL-156	T1, 2	TRANSFORMER—I-F	1.80
*RTO-133	T3	TRANSFORMER—Output	2.70
MISCELLANEOUS ELECTRICAL			
RER-001	SR1	SELENIUM RECTIFIER	$0.66 Net
*RII-060		INSULATING STRIP—Fiber, for tuning capacitor mounting	.05
RJC-036		BATTERY CONNECTOR—"B" battery	.40
*RJS-100		TUBE SOCKET—for V1.	.20
*RJS-124		TUBE SOCKET—for V3 or V4.	.20
*RJS-125		TUBE SOCKET—for V2	.20
*S400-D7		LOUDSPEAKER—4-inch PM.	4.60
*RSS-008	S3	SWITCH—Battery saver switch	.45
RSW-103	S2A, B	SWITCH—AC-DC-Battery	2.30
*RWL-005		POWER CORD—6 ft. long, black, with plug	1.25
MISCELLANEOUS MECHANICAL			
*RDC-032		DIAL CORD—Bulk quantity, 25 yards	$2.50
*RHB-016		SNAP FASTENER—Chassis cover mounting stud	.05
*RHC-053		CLIP—I-F transformer mounting	$0.02
*RHI-017		STRAIN RELIEF—Two-piece strain relief and insulator, for power cord entrance in chassis.	.15
*RHM-025		"C" WASHER—Retainer ring for control shafts	.01
*RHM-073		CLIP—Dial cord pulley retainer on tuning capacitor drum	.02
*RMC-002		CLIP—Oscillator coil mounting	.05
RMC-061		LOOP SUPPORT—Plastic clamp	.20
*RMS-243		SPRING—Dial cord tension, on tuning pulley	.10
*RMS-272		COMPRESSION RING—Dial tuning knob spring	.05
*RMW-076		PULLEY—Drive cord pulley on tuning capacitor	.10
RMX-270		PULLEY AND HUB ASSEMBLY—On dial tuning shaft RMX-271.	.70
RMX-271		SHAFT AND PULLEY ASSEMBLY—Dial tuning	.75
RMX-272		"A" BATTERY HOLDER	1.65
CABINETS AND APPEARANCE ITEMS			
RAD-139		HANDLE BRACKET—Right-hand	$0.85
RAD-140		HANDLE BRACKET—Left-hand	.85
RAG-068		GRILLE CLOTH ASSEMBLY—For Model 630	.65
RAG-069		GRILLE CLOTH ASSEMBLY—For Model 631	.65
RAG-070		GRILLE CLOTH ASSEMBLY—For Model 632	.65
RAU-407		CABINET ASSEMBLY — Green, Model 630.	10.00
RAU-408		CABINET ASSEMBLY — Red, Model 631	10.00
RAU-409		CABINET ASSEMBLY — Gray, Model 632.	10.00
RDG-009		DIAL PLATE—Aluminum, with red indicator	.40
*RDK-387		KNOB—Volume, gray, f. Model 632	.15
RDK-397		KNOB—Tuning, gray, with dial scale, Model 632	1.10
RDK-398		KNOB—Tuning, green, with dial scale, Model 630	1.10
RDK-399		KNOB—Tuning, red, with dial scale, Model 631.	1.10
RDK-400		KNOB—Volume, green, f. Model 630	.15
RDK-401		KNOB—Volume, red, f. Model 631.	.15
RHB-023		HANDLE CAP BUTTON	.55
*RHE-013		EYELET—For mounting cabinet hinges	.02
*RHE-018		EYELET—For mounting cabinet catch	.01
*RHI-027		HINGE—Solid hinge.	.30
*RHS-083		SCREW—Phillips round head, No. 4 x ¼-in., for mounting catch clip RMC-053	.05
RHY-057		HANDLE—Green, for Model 631.	2.20
RHY-058		HANDLE—Red, for Model 630.	2.50
RHY-059		HANDLE—Gray, for Model 632.	2.50
*RMC-053		CLIP—Cabinet catch.	.05
RYN-025		EMBLEM—For Model 631	.30
RYN-026		EMBLEM—For Models 630 and 632	.30

* Parts used on previous receivers.

MODELS 635, 636, 637

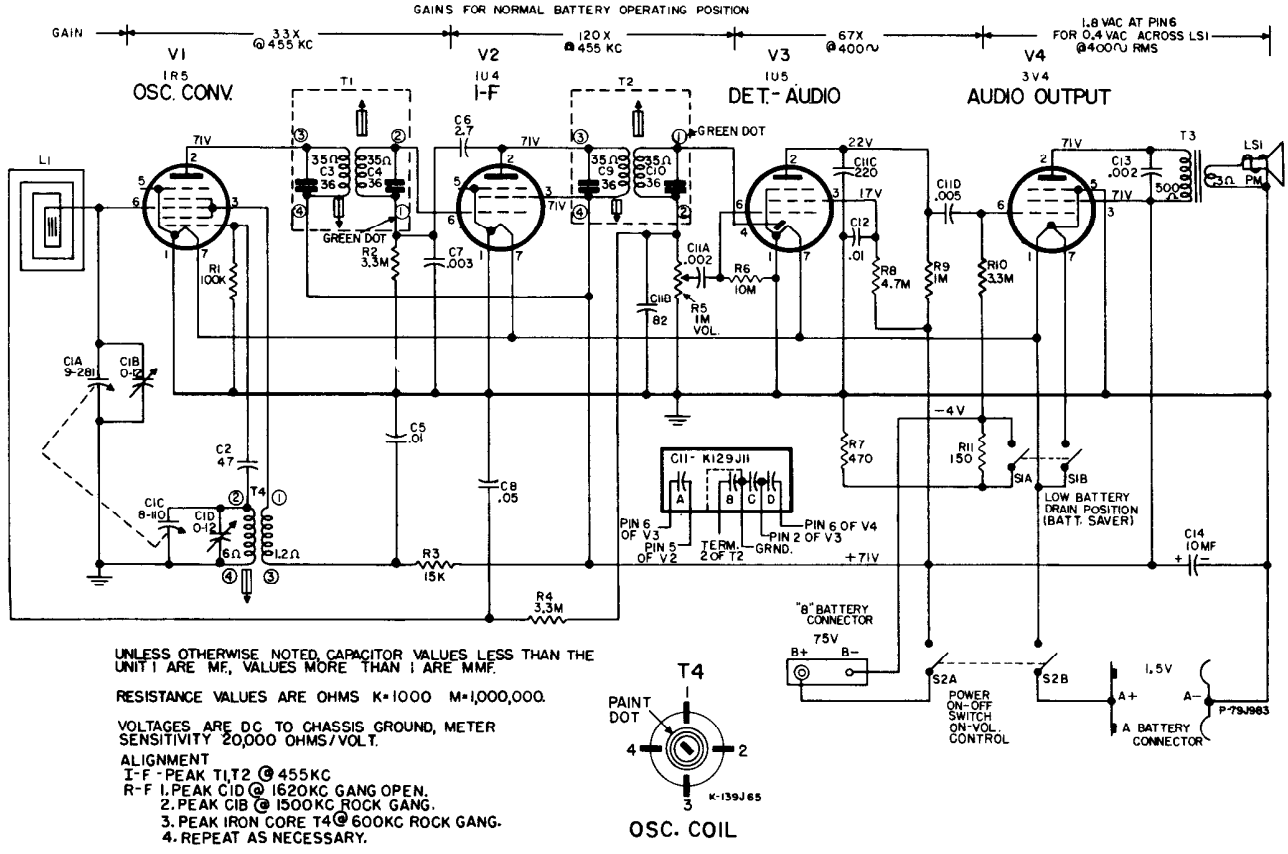

UNLESS OTHERWISE NOTED, CAPACITOR VALUES LESS THAN THE UNIT 1 ARE MF., VALUES MORE THAN 1 ARE MMF.

RESISTANCE VALUES ARE OHMS K=1000 M=1,000,000.

VOLTAGES ARE DC TO CHASSIS GROUND, METER SENSITIVITY 20,000 OHMS/VOLT.

ALIGNMENT
I-F - PEAK T1,T2 @ 455KC
R-F 1. PEAK C1D @ 1620KC GANG OPEN.
2. PEAK C1B @ 1500KC ROCK GANG.
3. PEAK IRON CORE T4 @ 600KC ROCK GANG.
4. REPEAT AS NECESSARY.

OSC. COIL

REPLACEMENT PARTS LIST—MODELS 635, 636, AND 637

CAT. NO.	SYMBOL	DESCRIPTION	UNIT PRICE
CAPACITORS			
RCC-086	C8	.05 mf., 200 V., paper	$0.30
RCE-172	C14	10 mf., electrolytic	1.15
RCN-082	C11A, B, C, D	Ceramic Bullplate	.85
RCT-075	C1	Tuning	3.60
RCW-3039	C6	2.7 mmf., ±5%, 500 V.	.25
RCW-3054	C5, 12	.01 mf., 450 V., ceramic	.35
RCW-3075	C2	47 mmf., ceramic	.25
RCW-3118	C7	.003 mf., ±5%, 500 V., ceramic	.25
RCW-3119	C13	.002 mf., ±5%, 500 V., ceramic	.25
RESISTORS (1/2 W, CARBON)			
RRC-239	R5, S2A, B	VOLUME CONTROL & SWITCH—1 megohm	$1.70
URD-029	R11	150 ohms	.13
URD-041	R7	470 ohms	.13
URD-077	R3	15K	.13
URD-097	R1	100K	.13
URD-121	R9	1 megohm	.13
URD-133	R2, 4, 10	3.3 megohms	.13
URD-137	R8	4.7 megohms	.13
URD-145	R6	10 megohms	.13
COILS AND TRANSFORMERS			
RLC-129	T4	OSCILLATOR COIL	$0.90
RLL-058	L1	ANTENNA ASSEMBLY	1.50
RTL-152	T1, 2	TRANSFORMER—I-F	3.80
RTO-153	T3	TRANSFORMER—Audio output	2.20
MISCELLANEOUS ELECTRICAL			
RHC-034		CLIP—I-F transformer mounting clip	$0.05
RJC-035		CONNECTOR—For "B" battery	.40
RJS-199		SOCKET—Tube socket for all tubes (with center shield)	.25

CAT. NO.	DESCRIPTION	UNIT PRICE
MISCELLANEOUS ELECTRICAL (Cont'd)		
ROP-028	LOUDSPEAKER—4 inch, PM	$6.25
RSS-008	SWITCH—Battery saver switch (S1A, B)	.45
MISCELLANEOUS MECHANICAL		
RHB-016	PIN—Mounting pin for component protector	$0.05
RHC-072	SPRING CLIP—Switch button	.05
N-RHC-086	CLAMP SUPPORT—Plastic for antenna	.15
RHW-055	WASHER—Felt washer for Dial Knob	.05
RMC-060	CATCH—Cabinet catch	.05
N-RMC-064	CLIP—Battery	.20
N-RMC-065	CLAMP—Battery	.04
N-RMC-066	CLAMP—Battery	.15
RMS-329	COMPRESSION RING—For volume and tuning knobs	.05
CABINETS AND APPEARANCE ITEMS		
RAG-065	GRILLE—Dark green, Model 635	$0.95
RAG-067	GRILLE—Gray, Model 637	.95
RAG-077	GRILLE—Ivory, Model 636	.95
N-RAU-429	CABINET—Dark green, Model 635	5.95
N-RAU-430	CABINET—Red, Model 636	5.95
N-RAU-431	CABINET—Gray, Model 637	5.95
RDK-390	KNOB—Tuning, clear, all Models	1.45
RDK-391	KNOB—Volume, dark green, Model 635	.20
RDK-392	KNOB—Volume, red, Model 636	.20
RDK-393	KNOB—Volume, gray, Model 637	.20
RDK-394	SWITCH BUTTON—Battery HI-LO, dark green, Model 635	.15
RDK-395	SWITCH BUTTON—Battery HI-LO, red, Model 636	.15
RDK-396	SWITCH BUTTON—Battery HI-LO, gray, Model 637	.15
N-RHY-065	HANDLE ASSEMBLY—Dark green, Model 635	1.05
N-RHY-066	HANDLE ASSEMBLY—Red, Model 636	1.05
N-RHY-067	HANDLE ASSEMBLY—Gray, Model 637	1.05
RYN-022	NAMEPLATE—Plastic, dark green, Model 635	.15
RYN-023	NAMEPLATE—Plastic, red, Model 636	.15
RYN-024	NAMEPLATE—Plastic, gray, Model 637	.15

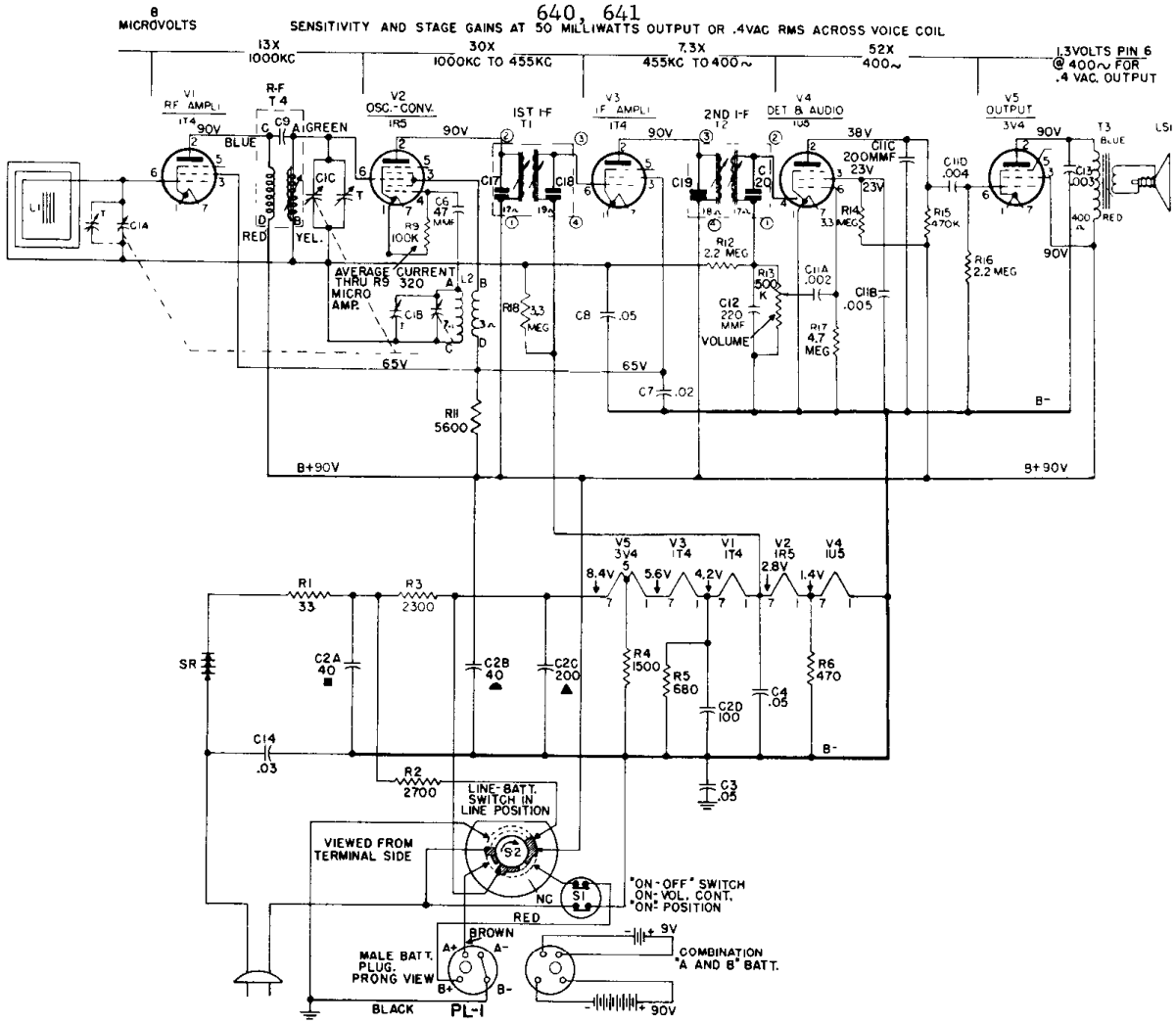
8 MICROVOLTS
SENSITIVITY AND STAGE GAINS AT 50 MILLIWATTS OUTPUT OR .4VAC RMS ACROSS VOICE COIL
13X 1000KC
30X 1000KC TO 455KC
7.3X 455KC TO 400~
52X 400~
1.3VOLTS PIN 6 @ 400~ FOR .4 VAC. OUTPUT
V1 RF AMPLI 1T4
R-F T4
V2 OSC.-CONV. 1R5
1ST I-F T1
V3 I-F AMPLI 1T4
2ND I-F T2
V4 DET & AUDIO 1U5
V5 OUTPUT 3V4
T3
90V
38V
23V
BLUE
GREEN
RED
YEL.
AVERAGE CURRENT THRU R9 320 MICRO AMP.
65V
B+90V
B-
VOLUME
R1 33
R3 2300
R2 2700
R4 1500
R5 680
R6 470
R11 5600
R12 2.2 MEG
R13 500 K
R14 3.3 MEG
R15 470K
R16 2.2 MEG
R17 4.7 MEG
R18 3.3 MEG
C1A .002
C1B .005
C1C 200MMF
C1D .004
C2A 40
C2B 40
C2C 200
C2D 100
C3 .05
C4 .05
C6 47 MMF
C7 .02
C8 .05
C12 220 MMF
C13 .003
C14 .03
8.4V
5.6V
4.2V
2.8V
1.4V
SR
LINE-BATT. SWITCH IN LINE POSITION
VIEWED FROM TERMINAL SIDE
S2
S1
NC
"ON-OFF" SWITCH ON: VOL. CONT. "ON" POSITION
BROWN
RED
BLACK
MALE BATT. PLUG. PRONG VIEW
PL-1
A+
A-
B+
B-
9V
90V
COMBINATION "A AND B" BATT.

REPLACEMENT PARTS LIST FOR MODELS 640, 641

Cat. No.	Symbol	Description	Unit Price
		CAPACITORS	
RCE-138	C2A, B, C, D	40 mfd.-40 mfd., 150 v.; 200 mfd.-100 mfd., 25 v.	$4.50
RCT-060	C1A, B, C	Tuning capacitor, 3 gang	5.75
RCW-1073	C6	47 mmf., 10% temp. coeff., ceramic	.60
RCW-3089	C11A, B, C, D	.002 mf., .005 mf., 200 mmf., .004 mf., ceramic couplate	.90
UCC-037	C13	.003 mf., 600 v., paper	.25
UCC-041	C7	.02 mf., 600 v., paper	.25
UCC-042	C14	.03 mf., 600 v., paper	.30
UCC-045	C3, 4, 8	.05 mf., 600 v., paper	.30
UCU-036	C12	220 mmf., 500 v., mica	.30
		RESISTORS (Carbon)	
*URD-041	R6	470 ohms, ½ w.	.13
*URD-045	R5	680 ohms, ½ w.	.13
*URD-053	R4	1500 ohms, ½ w.	.13
*URD-067	R11	5600 ohms, ½ w.	.13
*URD-097	R9	100 K ohms, ½ w.	.13
*URD-113	R15	470 K ohms, ½ w.	.13
*URD-129	R12, 16	2.2 megohms, ½ w.	.13
*URD-133	R14, 18	3.3 megohms, ½ w.	.13
*URD-137	R17	4.7 megohms, ½ w.	.13
*URE-013	R1	33 ohms, 1 w.	.17
*URE-059	R2	2700 ohms, 1 w.	.17
		(Potentiometers and Wirewound)	
RRC-185	R13, S1	Volume control, 500 K ohms, with DPST switch	1.70
*RRW-027	R3	2300 ohms, 10 w., w.w.	1.00
		COILS AND TRANSFORMERS	
*RLB-030	T4	TRANSFORMER—R-F	1.95
RLC-120	L2	COIL—Oscillator coil	.90
RLL-049	L1	COIL—Antenna pickup coil wound on ferrite core	1.50
*RTL-052	T1, C17, C18	TRANSFORMER—1st I-F	2.75
*RTL-079	T2, C19, C20	TRANSFORMER—2nd I-F	2.75
RTO-118	T3	TRANSFORMER—Audio output	2.85
		MISCELLANEOUS ELECTRICAL	
*RER-001	SR	SELENIUM RECTIFIER—75 ma., 6 plates, 1 in. x 1 in.	.66
RII-070	S2	PLATE—Textolite mtg. plate for line battery changeover switch, S2	.05
*RJP-025	PL1	PLUG—Four-prong battery plug with locating pin	.15
*RJS-100		SOCKET—Miniature wafer, seven pin, wax impregnated, one inch mtg. centers for tube 1R5 (V2)	.20
*RJS-124		SOCKET—Miniature wafer, seven pin, one inch mtg. centers; for tubes 1U5, 3V4 (V4 or V5)	.20
*RJS-125		SOCKET—Miniature wafer, seven pin, with pin shield post, one inch mtg. centers for tubes 1T4 (V1 or V3)	.20
ROP-024	LS1	LOUDSPEAKER—Oval, 4 x 6 inch, PM, 2 watt, 3.2 ohms at 400 cycles	7.95
*RSW-088	S2	SWITCH—Line-battery changeover switch, power plug operated, wafer type	1.75
*RWL-005		CORD—Power cord and plug, 6 feet long	1.25
		CABINET AND CABINET PARTS	
*RMC-053		CLIP—Latch clip on front half of cabinet engages eyelet, RHE-010, to close cabinet	$0.05
RMC-054		LATCH—Chrome finish metal, for dial cover	.90
RMP-033		ROD—Pivot rod for dial cover latch, RMC-054	.10

Cat. No.	Symbol	Description	Unit Price
		MISCELLANEOUS MECHANICAL	
*RDC-032		CORD—Dial cord, bulk quantity, 25 yards	$2.50
RDP-072		DIAL POINTER—Metal slider and gold finished plastic flag; for Model 640, 641	.25
RDS-125		DIAL SCALE—Scale and backplate, metal, background gold finish, Model 640 and 641	1.25
*RHB-016		FASTENER—Snap fastener, Trimount type; for chassis cover	.05
*RHC-053		GROMMET—Rubber grommet for tuning capacitor shock mounting	.05
*RHI-017		GROMMET—Two-piece strain relief insulator for power cord	.15
*RHJ-005		SPACER—Metal spacer bushing for mounting tuning capacitor	.02
*RHN-020		CAP SCREW—No. 6-32 tap, Phillips head, for handle ends	.10
RHS-094		SCREW—No. 6-32 threaded rod 8½ inches long; through handle bar to handle ends	.40
RHS-096		SCREW—Thumbscrew on battery hold-down bracket	.10
RHY-040		HANDLE END—Metal casting, chrome finish	1.40
RHY-054		HANDLE BAR—Plastic, light grey, Model 640	1.25
RHY-055		HANDLE BAR—Plastic, dark grey, Model 641	1.25
*RII-065		INSULATOR BUSHING — For handle bracket on chassis	.10
*RJS-004		MOUNTING PLATE—For electrolytic capacitor, C2	.10
*RMC-002		CLIP—Coil clip for ½-inch diameter oscillator coil, L2	.05
RMM-206		CORK—On battery hold-down bracket	.05
RMM-209		SUPPORT—Formed paper antenna loop support	.03
*RMS-118		SPRING—Dial cord tension spring	.10
RMX-212		SHAFT—Tuning control shaft and bushing assembly	.90
		CABINET AND CABINET PARTS	
RAC-139		COVER—Dial cover, maroon, plastic, Model 640	1.30
RAC-140		COVER—Dial cover, grey, plastic, Model 641	1.30
RAD-087		BRACKET—Dial cover hinge bracket, right-hand	.20
RAD-088		BRACKET—Dial cover hinge bracket, left-hand	.20
RAG-062		GRILLE CLOTH—Maroon, pasteboard mounted assembly, Model 640	.45
RAG-063		GRILLE CLOTH — Grey, pasteboard mounted assembly, Model 641	.45
RAU-400		CABINET—Plastic, maroon, complete cabinet includes front, back, hinges and nameplate, Model 640	12.50
RAU-401		CABINET—Plastic, grey, complete cabinet includes front, back, hinges and nameplate, Model 641	12.50
RAX-029		LATCH BRACKET—For dial cover, includes latch spring	.15
RDK-387		KNOB—Volume or tuning control, light grey, Model 640	.15
RDK-388		KNOB—Volume or tuning control, dark grey, Model 641	.15
RDW-059		WINDOW—Dial scale window, plastic	.60
*RHE-010		EYELET—Cabinet catch, held by screw RHS-097 to cab. back cover	.05
RHI-023		HINGE—Cabinet slip hinge in two parts	.30
RHS-097		SCREW—Screw No. 6 x ½ inch, Phillips round head; holds eyelet used as cabinet catch	.02
RMS-286		SPRING—Coil spring for dial cover hinge (right-hand)	$0.05
RMS-287		SPRING—Coil spring for dial cover hinge (left-hand)	.05
RYN-020		NAMEPLATE—Model 640	.45
RYN-021		NAMEPLATE—Model 641	.45

MODELS 645, 646, 647, 648

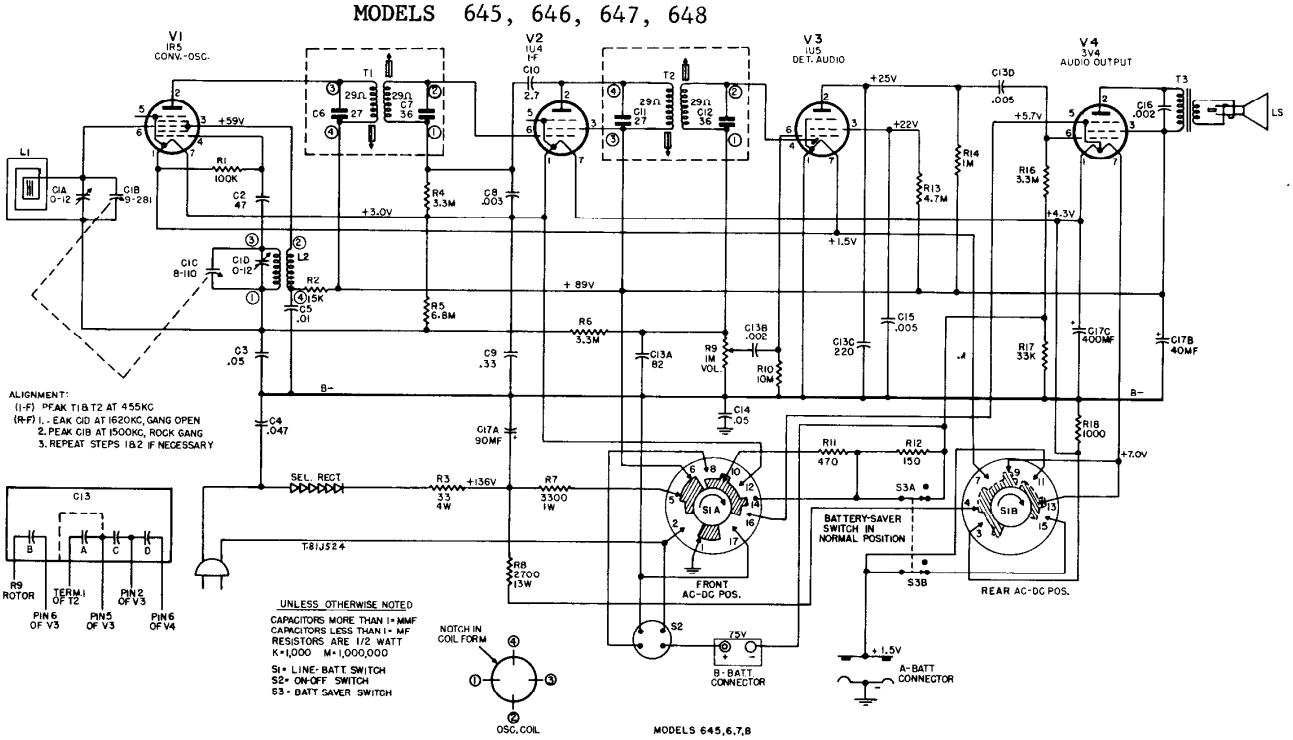

REPLACEMENT PARTS LIST, MODELS 645, 646, 647 AND 648

CAT. NO.	SYMBOL	DESCRIPTION	UNIT PRICE
CAPACITORS			
RCC-086	C3	.05 mf., +40 −10%, 200 v., paper	$0.30
N-RCE-212	C17A, B, C	Electrolytic—90–40 mf., @ 150 v., 400 mf., @ 10 v	3.90
RCN-036	C14	.047 mf., 20%, 400 v., molded	.35
RCN-053	C4	.047 mf., 20%, 600 v., molded	.35
RCN-070	C9	.33 mf., 100 v., paper	.50
RCN-082	C13A, B, C, D	Bullplate—82 mmf., .002 mf., 220 mmf., .005 mf.	.85
N-RCT-084	C1A, B, C, D	Tuning capacitor	3.40
RCW-3014	C15	.005 mf., +100 −0%, 450 v., ceramic	.25
RCW-3039	C10	2.7 mmf., ±10%, 500 v., ceramic	.25
RCW-3054	C5	.01 mf., 450 v., ceramic	.35
RCW-3118	C8	.003 mf., ±20%, 100 v., ceramic	.25
RCW-3119	C16	.002 mf., +100 −0%, 450 v., ceramic	.25
N-RCW-3192	C2	47 mmf., ±20%, 500 v., ceramic.	.20
RESISTORS			
N-RRC-320	R9, S2	VOLUME CONTROL AND SWITCH—1 megohm	$1.70
N-RRW-134	R3	33 ohms, ±10%, 4 w., flexible	.30
N-RRW-135	R8	2700 ohms, 13 w., w w.	1.00
URD-029	R12	150 ohms, ±10%, ½ w., carbon	.13
URD-041	R11	470 ohms, ±10%, ½ w., carbon	.13
URD-049	R18	1000 ohms, ±10%, ½ w., carbon	.13
URD-077	R2	15 k, ±10%, ½ w., carbon	.13
URD-085	R17	33 k, ±10%, ½ w., carbon	.13
URD-097	R1	100 k, ±10%, ½ w., carbon	.13
URD-121	R14	1 megohm, ±10%, ½ w., carbon	.13
URD-133	R4, 6, 16	3.3 megohms, ±10%, ½ w., carbon	.13
URD-137	R13	4.7 megohms, ±10%, ½ w., carbon	.13
URD-141	R5	6.8 megohms, ±10%, ½ w., carbon	.13
URD-145	R10	10 megohms, ±10%, ½ w., carbon	.13
URE-061	R7	3300 ohms, ±10%, 1 w., carbon	.17
COILS AND TRANSFORMERS			
N-RLC-134	L2	COIL—Oscillator	$1.75
N-RLL-061	L1	ANTENNA ASSEMBLY	1.75
RTL-152	T1, 2	TRANSFORMER—I-F	3.80
N-RTO-171	T3	TRANSFORMER—Output	2.20
MISCELLANEOUS ELECTRICAL			
N-RER-020		SELENIUM RECTIFIER	$2.60
RJC-004		TERMINAL—For speaker	.02
RJC-035		CONNECTOR—For "B" battery	.40
N-RJC-041		CONTACT—For "A" battery.	.05
N-RJC-042		BRACKET—Contact bracket for "A" battery.	.15
RJS-124		SOCKET—7 pin tube socket.	$0.20
RJS-125		SOCKET—7 pin tube socket with center shield	.20
N-ROP-031		LOUDSPEAKER—4 inch, PM.	5.40
RSS-008		SWITCH—Battery saver (S3).	.45
N-RSW-112		SWITCH—A-C, D-C, battery (S1)	2.25
RWL-031		CORD—Power cord and plug, gray, 6 ft. long	.75
MISCELLANEOUS MECHANICAL			
RHC-053		CLIP—I-F mounting clip.	$0.02
RHC-060		CLAMP—Plastic antenna clamp	.15
RHC-072		CLIP—Spring clip for battery saver switch button	.05
RHI-017		STRAIN RELIEF — Two piece strain relief and insulator, for power cord entrance in chassis	.15
RHW-055		WASHER—Felt washer for tuning knob	.05
RJS-024		MOUNTING PLATE—For mounting electrolytic	.10
RMC-002		CLIP—Oscillator coil mounting clip	.05
RMC-060		CATCH—Cabinet	.05
RMS-329		COMPRESSION RING—All knobs	.05
CABINET AND APPEARANCE PARTS			
N-RAP-042		HANDLE PLATE—Black, plastic, Models 646, 647.	$0.45
N-RAP-043		HANDLE PLATE—Charcoal, plastic, Models 645, 648	.45
N-RAU-433		CABINET—Red, Model 646	6.95
N-RAU-434		CABINET—Green, Model 647.	6.95
N-RAU-435		CABINET—Gray, Model 648.	6.95
N-RAU-436		CABINET—Charcoal, Model 645.	6.50
N-RDK-481		BUTTON—Black for battery saver switch, Models 646, 647	.15
N-RDK-482		BUTTON—Charcoal, for battery saver switch, Models 645, 648	.15
N-RDK-483		KNOB—Tuning knob, black, Models 646, 647	1.05
N-RDK-484		KNOB—Tuning knob, charcoal, Models 645, 648	1.05
N-RDK-485		KNOB—Volume, Red, Model 646	.20
N-RDK-486		KNOB—Volume, Green, Model 647	.20
N-RDK-487		KNOB—Volume, Charcoal, Model 645	.20
N-RDK-488		KNOB—Volume, Gray, Model 648	.20
N-RHY-068		HANDLE—Black, for Models 646, 647	.55
N-RHY-069		HANDLE—Charcoal, for Models 645, 648.	.55

"N"—INDICATES PARTS NOT USED ON PREVIOUS RECEIVERS.

MODELS 650

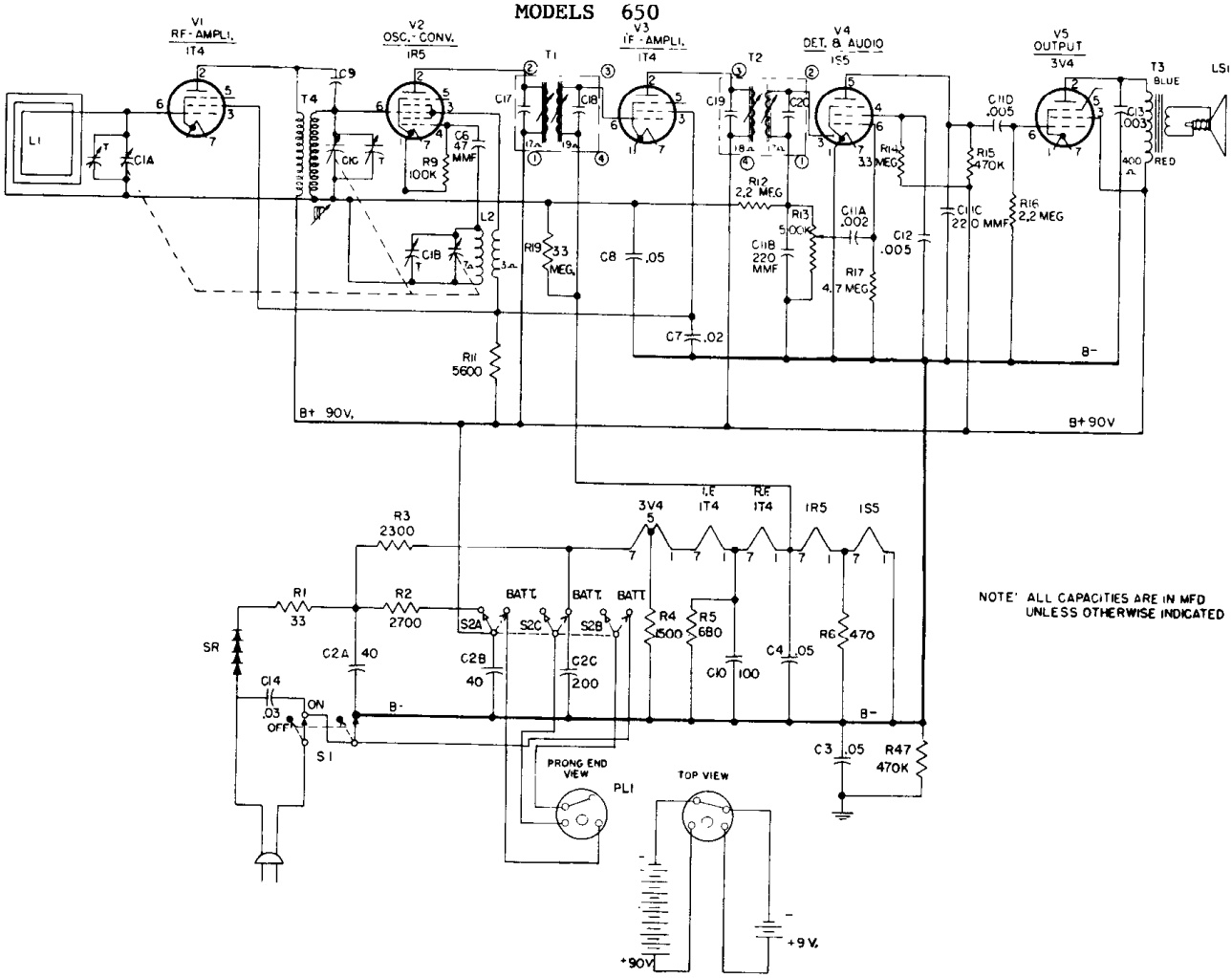

NOTE: ALL CAPACITIES ARE IN MFD UNLESS OTHERWISE INDICATED

MODEL 650

REPLACEMENT PARTS LIST

UNIVERSAL REPLACEMENT PARTS

Cat. No.	Symbol	Description	Suggested Unit List Price
*UCC-037	C13	CAPACITOR—.003 mfd., 400 v., paper	$0.25
*UCC-041	C7	CAPACITOR—.02 mfd., 200 v., paper	.25
*UCC-042	C14	CAPACITOR—.03 mfd., 600 v., paper	.30
UCC-045	C3, 4, 8	CAPACITOR—.05 mfd., 600 v., paper	.25
*UCE-067	C10	CAPACITOR—100 mfd., 10 v., electrolytic	1.55
*URD-043	R6	RESISTOR—470 ohms, ½ w., carbon	.13
*URD-045	R5	RESISTOR—680 ohms, ½ w., carbon	.13
*URD-053	R4	RESISTOR—1500 ohms, ½ w., carbon	.13
*URD-067	R11	RESISTOR—5600 ohms, ½ w., carbon	.13
*URD-097	R9	RESISTOR—100,000 ohms, ½ w., carbon	.13
*URD-113	R7, 15	RESISTOR—470,000 ohms, ½ w., carbon	.13
*URD-129	R12, 16	RESISTOR—2.2 meg., ½ w., carbon	.13
*URD-133	R14, 19	RESISTOR—3.3 meg., ½ w., carbon	.13
*URD-137	R17	RESISTOR—4.7 meg., ½ w., carbon	.13
*URE-013	R1	RESISTOR—33 ohms ±10%, 1 w., carbon	.17
*URE-059	R2	RESISTOR—2700 ohms, 1 w., carbon	.17

SPECIALIZED REPLACEMENT PARTS

RAB-122		CABINET BACK—(maroon)	
RAB-123		CABINET BACK—(grey)	
RAG-029		GRILLE—(For maroon cabinet)	
RAG-030		GRILLE—(For grey cabinet)	
*RAS-001		BATTERY STRAP—Metal strap holds battery	$0.30
RAU-323		CABINET—(Maroon)	
RAU-324		CABINET—(Grey)	
*RCE-095	C2A, B, C	CAPACITOR—200 mfd., 25 v; 40 mfd., 150 v; 40 mfd., 150 v; electrolytic	2.95
*RCT-039	C1	TUNING CAPACITOR	4.50
*RCW-1063	C6	CAPACITOR—47 mmf., ceramic	.60
*RCW-3015	C11A, B, C, D C12	CAPACITOR—.002 mf., 220 mf., .005 mfd., 220 mmf., .005 mf., ceramic	1.10
*RDC-032		DIAL CORD	2.50
*RDK-136		KNOB—(Fawn) Volume or tuning	.15
RDK-202		KNOB—(Grey) Volume or tuning	
*RDP-040		POINTER—Dial pointer	.30
RDS-092		DIAL SCALE	
*RER-001	SR	SELENIUM RECTIFIER	2.85

SPECIALIZED REPLACEMENT PARTS (Cont'd)

Cat. No.	Symbol	Description	Suggested Unit List Price
*RHB-006		PLUG BUTTON—(Maroon) on cabinet door	$0.10
RHB-012		PLUG BUTTON—(Grey) on cabinet door	
*RHC-015		CLIP—(Osc. coil)	.02
*RHC-016		HAIRPIN COTTER—On tuning control shaft	.01
*RHG-018		GROMMET—Tuning capacitor mounting	.05
*RHJ-005		SPACER—Tuning capacitor mounting	.02
*RHM-052		CLIP—(Speaker mounting)	.02
*RHM-056		CLIP—(Grille mounting)	.02
RHM-065		CAP—Brass cover over item RHS-047	
RHM-068		CAP—Aluminum cover over item RHS-047	
*RHR-005		TUBULAR RIVET—.121" x 11/32" for door hinge	.01
*RHS-010		TUBE SHIELD—For V4 tube	.20
*RHS-041		SCREW FOR HINGE—(Hex head) #6 x 3/8	
RHS-047		SCREW—(For handle mounting)	
RHN-012		TEE NUT—(For handle mounting)	
RHW-023		WASHER—(For handle mounting)	
RHY-014		HANDLE—(Maroon)	
RHY-015		HANDLE—(Grey)	
*RJS-024		MOUNTING PLATE—(Electrolytic)	.10
*RJS-100		TUBE SOCKET—For V2	.20
*RJS-124		TUBE SOCKET—For V4, V5	.20
*RJS-125		TUBE SOCKET—For V1, V3	.20
*RLB-030	T4	R-F TRANSFORMER	1.95
*RLC-068	L2	OSCILLATOR COIL	1.15
*RLL-038	L1	LOOP ANTENNA	1.00
RMS-039		"C" CLIP—On idler pulley shaft	.02
*RMS-118		SPRING—(Dial tension)	.10
*RMS-191		SPRING CATCH—For back cover	.15
RMW-009		IDLER PULLEY—For dial cord	.10
*RJP-025	PL1	BATTERY PLUG	.15
*RRC-083	R13, S1	VOLUME CONTROL AND SWITCH	1.65
*RRW-027	R3	RESISTOR—2300 ohms, 10 w., w.w.	1.00
*RSW-058	S2	SWITCH—(Power cord)	.85
*RTL-052	T1	TRANSFORMER—1st I-F transformer	2.75
*RTL-079	T2	TRANSFORMER—2nd I-F transformer	2.75
*RTO-050	T3	OUTPUT TRANSFORMER	2.25
*RWL-005		POWER CORD	1.25
*DL-1RS-400D		SPEAKER—4 inch PM speaker	4.25

MODELS 660, 661

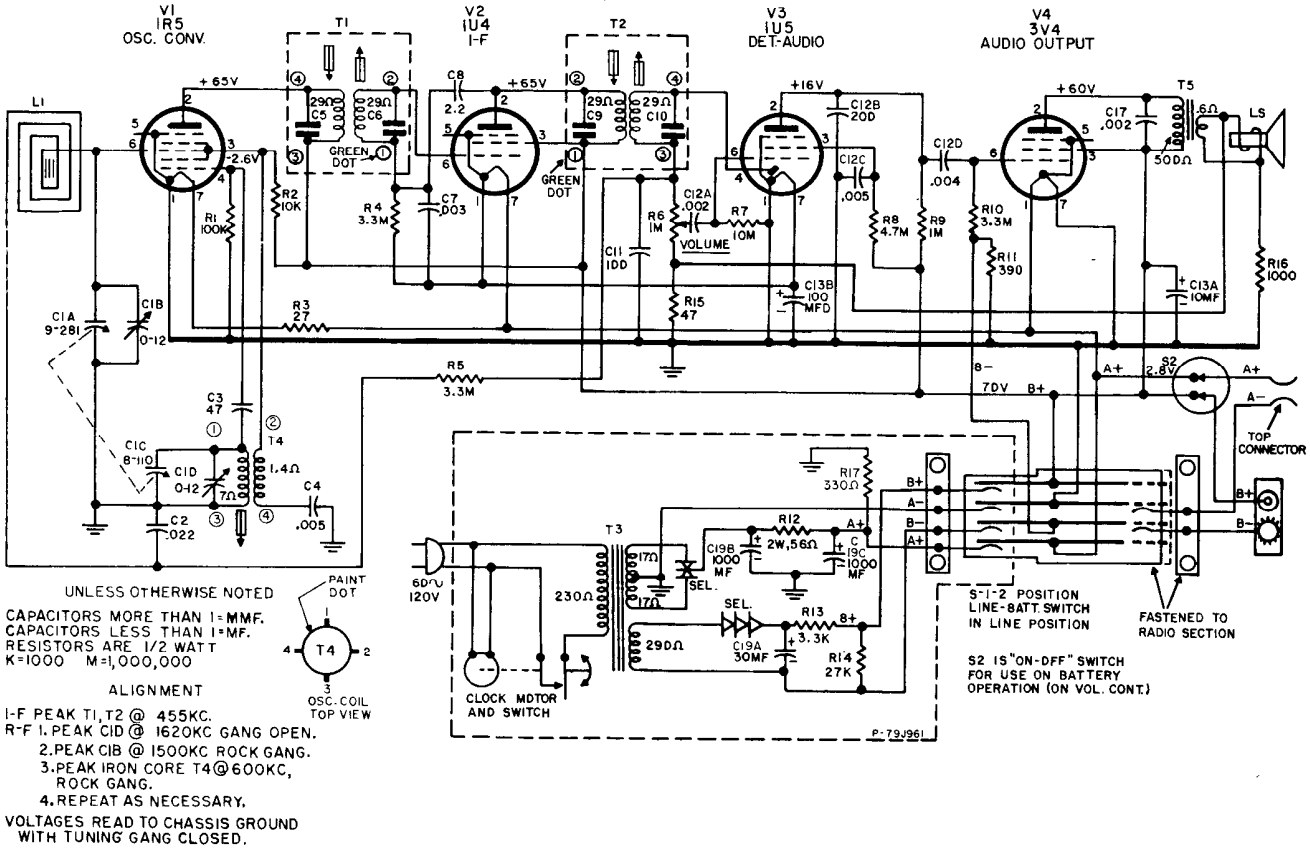

UNLESS OTHERWISE NOTED
CAPACITORS MORE THAN 1=MMF.
CAPACITORS LESS THAN 1=MF.
RESISTORS ARE 1/2 WATT
K=1000 M=1,000,000

ALIGNMENT

I-F PEAK T1, T2 @ 455KC.
R-F 1. PEAK C1D @ 1620KC GANG OPEN.
2. PEAK C1B @ 1500KC ROCK GANG.
3. PEAK IRON CORE T4@600KC, ROCK GANG.
4. REPEAT AS NECESSARY.

VOLTAGES READ TO CHASSIS GROUND WITH TUNING GANG CLOSED.

REPLACEMENT PARTS LIST—MODELS 660 AND 661

CAPACITORS

CAT. NO.	SYMBOL	DESCRIPTION	UNIT PRICE
n-RCE-213	C13A, B	10 mf., @ 100 V., 100 mf., @ 3 V., electrolytic	$1.50
n-RCE-214	C19A, B, C	30 mf., @ 100 V., 1000–1000 mf., @ 15 V., electrolytic	4.75
RCC-123	C2	.022 mf., paper	.40
RCN-039	C8	2.2 mmf., 20%, 500 V.	.15
n-RCT-086	C1A, B, C, D	Tuning capacitor, two-gang	3.60
RCW-3014	C4	5000 mmf., ceramic	.25
RCW-3018	C17	2000 mmf., ceramic	.25
RCW-3075	C3	47 mmf., ceramic	.25
RCW-3079	C11	100 mmf., ceramic	.25
RCW-3089	C12A, B, C, D	Bullplate—.002 mf., 200 mmf., .005 mf., .004 mf.	.90
RCW-3118	C7	3000 mmf., ceramic	.25

RESISTORS (½ WATT, CARBON) 10%

URD-011	R3	27 ohms	$0.13
URD-017	R15	47 ohms	.13
URD-037	R17	330 ohms	.13
URD-039	R11	390 ohms	.13
URD-049	R16	1000 ohms	.13
URD-061	R13	3300 ohms	.13
URD-073	R2	10K	.13
URD-083	R14	27K	.13
URD-097	R1	100K	.13
URD-121	R9	1 megohm	.13
URD-133	R4, 5, 10	3.3 megohms	.13
URD-137	R8	4.7 megohms	.13
URD-145	R7	10 megohms	.13
URF-019	R12	56 ohms, 2 watts	.25

POTENTIOMETER

n-RRC-322	R6, S2	VOLUME CONTROL AND SWITCH—1 megohm	$1.50

COILS AND TRANSFORMERS

RLC-129	T4	COIL—Oscillator	$0.90
n-RLL-063	L1	ANTENNA—Loop assembly	1.25
n-RTL-182	T1, 2	TRANSFORMER—I-F	1.65
n-RTO-172	T5	TRANSFORMER—Output	2.05
n-RTP-328	T3	TRANSFORMER—Power	3.60

MISCELLANEOUS ELECTRICAL

RER-011	SELENIUM RECTIFIER—25 ma	$0.95
n-RER-021	SELENIUM RECTIFIER—150 ma	1.75
n-RJB-064	CONTACT BOARD—Two (2) terminal assembly for receiver	.20
n-RJB-065	CONTACT BOARD—Four (4) terminal assembly for clock	.35
n-RJC-043	CONNECTOR—For "B" battery	.40
n-RJC-044	SEE CABINET & APPEARANCE ITEMS	.35
n-RJC-045	SEE CABINET & APPEARANCE ITEMS	.35
RJS-144	SOCKET—7-pin tube socket with center shield	.25

MISCELLANEOUS ELECTRICAL (CONT'D)

RJS-176	SOCKET—7-pin tube socket	$0.25
n-RMX-312	CLIP—For "A" battery	.15
n-ROP-032	LOUDSPEAKER—3½-inch, PM	4.95
RWL-031	POWER CORD—6 ft. long, light gray, Model 660	.75
n-RWL-034	POWER CORD—6 ft. long, red, for Model 661	.65
n-RZC-046	CLOCK—60-cycle, dark gray, for Model 660	13.80
n-RZC-047*	CLOCK—60-cycle, gold, for Model 661	13.65

MISCELLANEOUS MECHANICAL

RHC-041	CLIP—For mtg. electrolytic C13	$0.05
RHC-053	CLIP—I-F transformer mtg. clip	.02
RHC-060	CLAMP SUPPORT—Plastic for antenna	.15
n-RHC-089	CLIP—For handle bail, Models 660 and 661	.04
n-RHC-090	COTTER PIN—For thumbnut	.02
RHI-017	GROMMET—Two-piece strain relief insulator for power cord	.15
n-RHL-002	LOCK—Slide switch lock, light gray, for Model 660	.30
n-RHL-003	LOCK—Slide switch lock, red, for Model 661	.30
n-RHN-035	THUMBNUT—For fastening cabinet back to receiver	.25
n-RHS-151	STUD—Threaded for fastening cabinet back to receiver	.10
RMC-017	CLIP—Electrolytic mtg. clip for C19	.10
n-RMS-213	COMPRESSION RING—For volume control knob, Models 660, 661	.05
RMS-272	COMPRESSION RING—For tuning knob, Models 660, 661	.05
n-RMS-363	SPRING—Latch spring for clock	.03

CABINET AND APPEARANCE ITEMS

n-RAB-264	CABINET BACK—For clock, light gray, Model 660	$2.50
n-RAB-265	CABINET BACK—For clock, red, Model 661	2.50
n-RAB-266	CABINET BACK—For radio, light gray, Model 660	2.50
n-RAB-267	CABINET BACK—For radio, red, Model 661	2.50
n-RAC-158	CABINET FRONT—For clock, dark gray, Model 660	2.50
n-RAC-159	CABINET FRONT—For clock, white, Model 661	2.50
n-RAC-160	CABINET FRONT—For radio, dark gray, with grille, Model 660	5.00
n-RAC-161	CABINET FRONT—For radio, white, with grille, Model 661	5.00
n-RAG-082	GRILLE—For speaker, gold, Models 660, 661	1.25
n-RDK-491	KNOB—For volume control, dark gray, Model 660	.35
n-RDK-492	KNOB—For volume control, white, Model 661	.35
n-RDK-493	KNOB—For tuning control, dark gray, Model 660	.45
n-RDK-494	KNOB—For tuning control, white, Model 661	.45
n-RHY-070	HANDLE—Light gray, less clips, Model 660	.40
n-RHY-071	HANDLE—Red, less clips, Model 661	.40
n-RJC-044	BLADE AND CONTACT ASSEMBLY—Light gray, Model 660	.35
n-RJC-045	BLADE AND CONTACT ASSEMBLY—Red, Model 661	.35
n-RZK-029	KNOB—For clock, dark gray, Model 660	.10
n-RZK-030	KNOB—For clock, white, Model 661	.10
n-RZW-017	CRYSTAL—For clocks RZC-046 and RZC-047	.30

PRICES ARE SUGGESTED LIST PRICES AND ARE SUBJECT TO CHANGE WITHOUT NOTICE

"n"—INDICATES PARTS NOT USED ON PREVIOUS RECEIVERS

*** REPLACES WHITE CLOCK—SAME CAT. NO.**

MODELS 665, 666, 667

GAINS FOR NORMAL BATTERY OPERATING POSITION

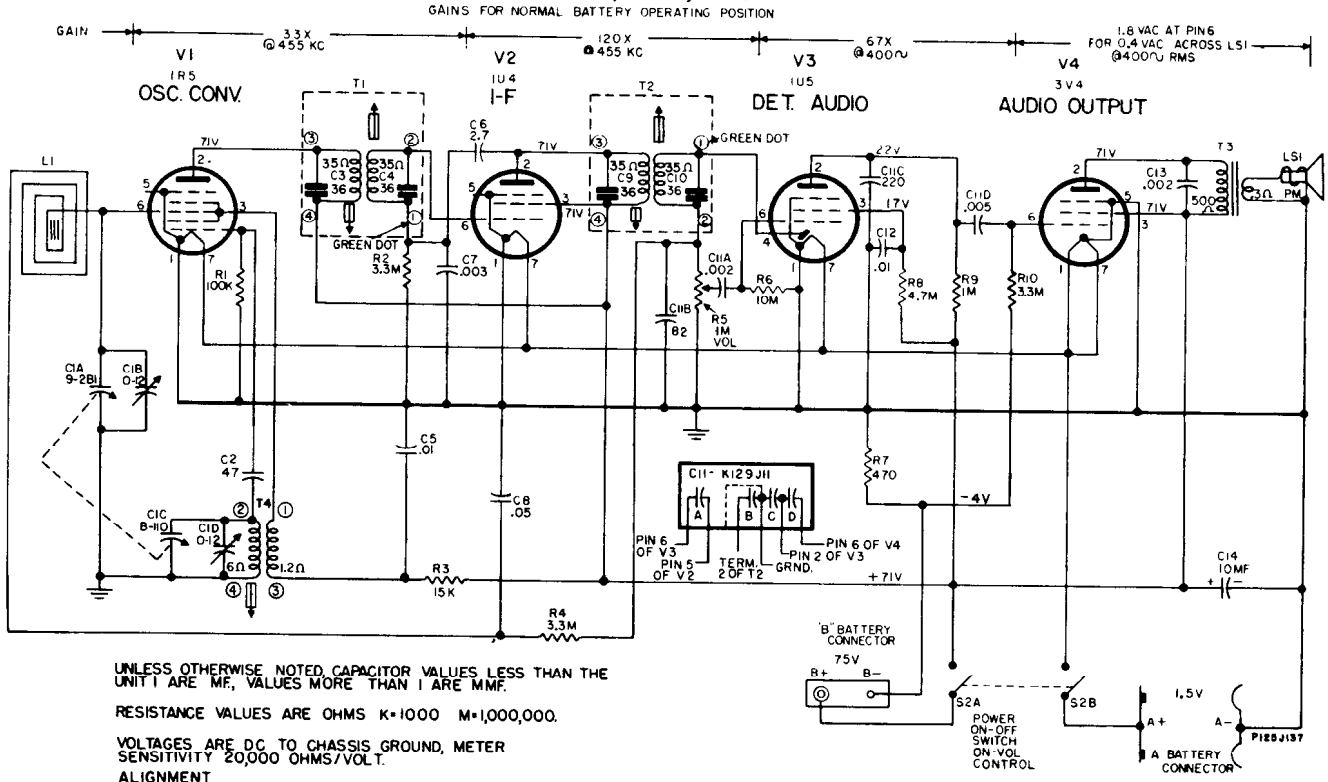

UNLESS OTHERWISE NOTED CAPACITOR VALUES LESS THAN THE UNIT 1 ARE MF., VALUES MORE THAN 1 ARE MMF.

RESISTANCE VALUES ARE OHMS K=1000 M=1,000,000.

VOLTAGES ARE DC TO CHASSIS GROUND, METER SENSITIVITY 20,000 OHMS/VOLT.

ALIGNMENT

I-F - PEAK T1,T2 @ 455KC

R-F 1. PEAK C1D @ 1620KC GANG OPEN.
2. PEAK C1B @ 1500KC ROCK GANG.
3. PEAK IRON CORE T4 @ 600KC ROCK GANG.
4. REPEAT AS NECESSARY.

REPLACEMENT PARTS LIST MODELS 665, 666 AND 667

CAT. NO.	SYMBOL	DESCRIPTION	PRICE
CAPACITORS			
RCE-172	C14	10 mfd., 100 V, electro	$1.15
RCN-082	C11A, B, C, D	.002 mf., 82 mmf., 220 mmf., .005 mf.	.85
RCT-075	C1	Tuning capacitor—two-gang	3.60
RCW-3075	C2	47 mmf., ±20%, 500 V, cer.	.25
RCW-3118	C7	.003 mf., ±20%, 100 V, cer.	.25
RCW-3119	C13	.002 mf., +100 −0%, 450 V, cer.	.25
The following capacitors are common items which are obtainable from any Radio Parts Jobber, and are therefore not listed by Catalog Number.			
	C6	2.7 mmf., ±5%, 500 V	
	C5, 12	.01 mf., 450 V, ceramic	
RESISTORS			
The following resistors are common, ½ watt, 10% carbon types which are obtainable from any Radio Parts Jobber and are therefore not listed by Catalog Number.			
	R1	100,000 ohms	
	R2, 4, 10	3.3 megohms	
	R3	15,000 ohms	
	R6	10 megohms	
	R7	470 ohms	
	R8	4.7 megohms	
	R9	1 megohm	
POTENTIOMETER			
RRC-239	R5, S2	VOLUME CONTROL & SWITCH 1 megohm	1.70
COILS AND TRANSFORMERS			
RLC-129	T4	COIL—Oscillator	.90
RLL-058	L1	ANTENNA COIL	1.50

CAT. NO.	SYMBOL	DESCRIPTION	PRICE
COILS AND TRANSFORMERS (Cont'd)			
RTL-152	T1, 2	TRANSFORMER—I-F	$3.80
RTO-153	T3	TRANSFORMER—Output	2.20
MISCELLANEOUS ELECTRICAL			
RHC-034		CLIP—I-F transformer mounting clip	.05
RJC-035		CONNECTOR—For "B" battery	.40
RJS-144		SOCKET—Tube socket, with center shield	.25
RJS-176		SOCKET—Tube socket	.25
ROP-028		LOUDSPEAKER—4-inch, PM	6.25
MISCELLANEOUS MECHANICAL			
RHB-016		PIN—Mounting pin for component protector	.05
RHC-053		CLIP—I-F mounting clip	.02
RHC-060		CLAMP—Plastic clamp support for antenna	.15
RHW-055		WASHER—Felt washer for knob	.05
RMC-064		CLIP—Battery	.20
RMC-065		CLAMP—Battery	.04
RMC-066		CLAMP—Battery	.15
RMS-329		COMPRESSION RING—For volume and tuning knobs	.05
CABINET AND APPEARANCE ITEMS			
n-RAU-461		CABINET—Black, Model 665	
n-RAU-462		CABINET—Red, Model 666	
n-RAU-463		CABINET—Light Blue, Model 667	
n-RDK-536		KNOB—Tuning, Black, with Maroon insert, Model 665	
n-RDK-537		KNOB—Tuning, White, with Red insert, Model 666	
n-RDK-538		KNOB—Tuning, White with Black insert, Model 667	
n-RDK-563		KNOB—Volume, Black, Model 665	
n-RDK-564		KNOB—Volume, Antique White, Model 666 and 667	
RHY-066		HANDLE—Red, with handle clips, 666	1.05
n-RHY-076		HANDLE—Black, with handle clips, 665	
n-RHY-077		HANDLE—Blue, with handle clips, 667	
RMC-060		CATCH—Cabinet catch	.05

PRICES ARE SUGGESTED LIST PRICES AND SUBJECT TO CHANGE WITHOUT NOTICE

"n"—New Parts Not Previously Cataloged

MODELS 670, 671, 672, 673

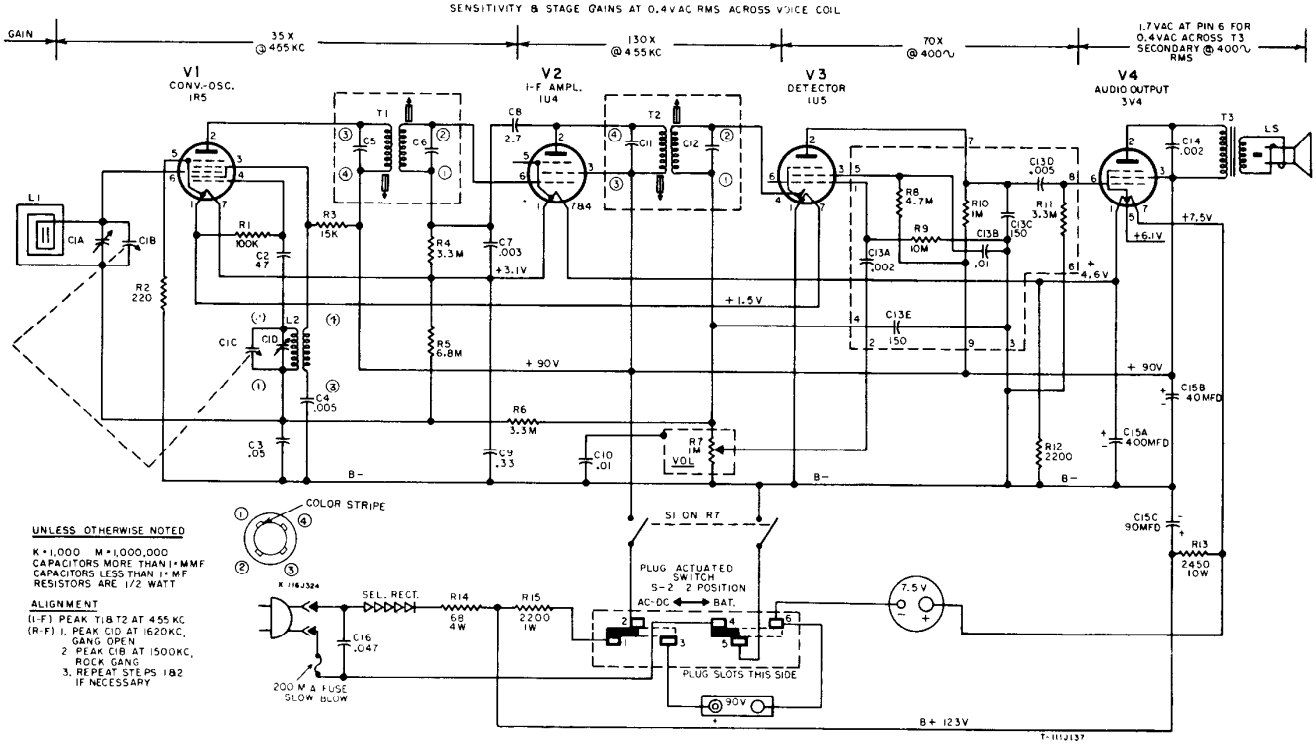

REPLACEMENT PARTS LIST, MODELS 670, 671, 672 AND 673

CAT. NO.	SYMBOL	DESCRIPTION	PRICE
CAPACITORS			
RCC-078	C3	.05 mf., ±20%, 400 V, paper	$0.40
n-RCE-230	C15A, B, C	400 mf., @ 10 V, 40 mf., 90 mf., @ 150 V, electrolytic	
RCN-070	C9	.33 mf., ±20%, 100 V, paper	.50
n-RCN-109	C16	.047 mf., ±20%, 600 V, 105°, paper	.40
n-RCT-098	C1	Tuning capacitor, two gang	
RCW-3014	C4	.005 mf., +150 −0%, 450 V, ceramic	.25
RCW-3118	C7	.003 mf., ±20%, 100 V, ceramic	.25
RCW-3119	C14	.002 mf., +100 −0%, 450 V, ceramic	.25
n-RCW-3250	C10	.01 mf., +150 −0%, 1000 V, ceramic	
n-REK-010	R8, 9, 10, 11	Capacitor—Resistor Network 4.7 meg., 10 meg., 1 meg., 3.3 meg.	
	C13A, B, C, D, E	.002 mf., .01 mf., 220 mmf., 005 mf., 150 mmf.	
The following capacitors are common items readily obtainable from any Radio Parts Jobber and, therefore, are not listed by catalog number.			
	C2	47 mmf., ±20%, 500 V, ceramic	
	C8	2.7 mmf., ±10%, 500 V, ceramic	
RESISTORS			
n-RRW-143	R14	68 ohms, 4-watt, wire-wound	
n-RRW-144	R13	2450 ohms, 10-watt, wire-wound	
The following resistors are common carbon types, readily obtainable from any Radio Parts Jobber and, therefore, are not listed by catalog number.			
	R1	100,000 ohms, ½ watt	
	R2	220 ohms, ½ watt	
	R3	15,000 ohms, ½ watt	
	R4	3.3 megohms, ½ watt	
	R5	6.8 megohms, ½ watt	
	R6	3.3 megohms, ½ watt	
	R12	2200 ohms, ½ watt	
	R15	2200 ohms, 1 watt	
POTENTIOMETER			
n-RRC-367	R7	Volume control and switch, 1 megohm	
COILS & TRANSFORMERS			
n-RLC-139	L2	COIL—Oscillator	
n-RLL-069	L1	ANTENNA ASSEMBLY	
n-RTL-193	T1, 2	TRANSFORMER—I-F	
n-RTO-186	T3	TRANSFORMER—Output	

CAT. NO.	SYMBOL	DESCRIPTION	PRICE
MISCELLANEOUS ELECTRICAL			
n-REF-026		FUSE—Slo-blo, 2/10 amp.	
RER-020		SELENIUM RECTIFIER, 65 MA	$2.60
RJC-035		CONNECTOR—For "B" Battery	.40
RJP-033		CONNECTOR—For "A" Battery	.15
RJS-232		SOCKET—7-pin tube socket with center shield	
n-RJS-237		SOCKET—7-pin tube socket	
n-ROP-036		SPEAKER—4-inch, PM	
n-RSW-114		SWITCH—AC-DC battery, with mounting bracket	
RWL-027		CORD—Power cord and plug, brown, 6 feet long	1.20
MISCELLANEOUS MECHANICAL			
RHC-089		CLIP—For handle bail	.04
RHC-095		CLIP—Tubular speaker mounting	.05
RHC-110		CLAMP—Plastic, antenna mounting	
RHI-017		STRAIN RELIEF—For power cord	.17
RHJ-007		SPACER—For power cord	.05
n-RMC-070		CATCH—For power cord compartment door	
n-RMC-071		CATCH—For cabinet front	
RMS-272		COMPRESSION RING—Tuning and volume knobs	.05
CABINET & APPEARANCE ITEMS			
n-RAD-202		DOOR—For cord compartment, Rust, Model 672	
n-RAD-203		DOOR—For cord compartment, Blue-green, Model 673	
n-RAD-204		DOOR—For cord compartment, Black, Models 670 and 671	
n-RAG-098		GRILLE FRAME—Gold	
n-RAU-465		CABINET—White and Rust, Model 672	
n-RAU-466		CABINET—Light Blue and Blue-Green, Model 673	
n-RAU-467		CABINET—Black, Model 670	
n-RAU-468		CABINET—Black and White, Model 671	
n-RDK-579		KNOB—Tuning, Rust, Model 672	
n-RDK-580		KNOB—Tuning, Black, Models 670–671–673	
n-RDK-582		KNOB—Volume, Rust, Model 672	
n-RDK-583		KNOB—Volume, Black, Models 670, 671, 673	
n-RHY-081		HANDLE—Rust, Model 672	
n-RHY-082		HANDLE—Blue-Green, Model 673	
n-RHY-083		HANDLE—Black, Models 670 and 671	
RYN-033		MEDALLION	.30

MODELS 675, 676, 677, 678

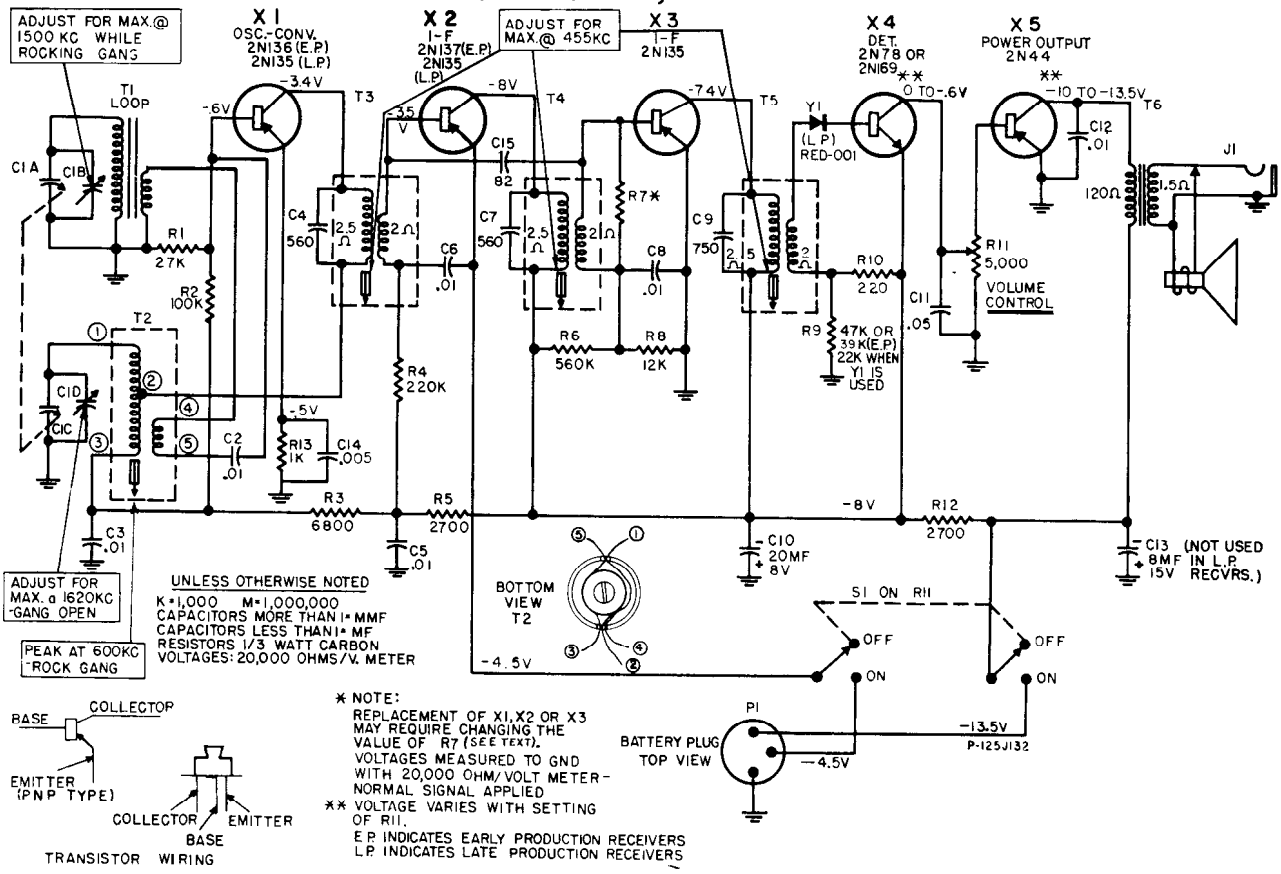

REPLACEMENT PARTS LIST

MODELS 675, 676, 677 & 678

CAT. NO.	SYMBOL	DESCRIPTION	PRICE
CAPACITORS			
RCE-225	C13	8 mf., 15 V, electrolytic	$1.65
RCE-226	C10	20 mf., 8 V, electrolytic	3.45
RCG-011	C4	560 mmf., 5%, 500 V, mica	.65
RCG-012	C7	560 mmf., 10%, 100 V, mica	.65
RCG-013	C9	750 mmf., 5%, 500 V, mica	.80
RCG-014	C15	82 mmf., 10%, 500 V, mica	.20
RCT-096	C1	TUNING CAPACITOR—Two gang	3.80
RCW-3014	C14	.005 mf., +100 −0%, 450 V, ceramic	.25
RCW-3186	C2, 3, 5, 6, 8, 12	.01 mf., +150 −0%, 450 V, ceramic	.30
RCW-3242	C11	0.5 mf., +80 −20%, 100 V, ceramic	.40
POTENTIOMETER			
RRC-351	R11, S1	VOLUME CONTROL AND SWITCH—5000 ohms	1.70
RESISTORS (CARBON, ⅓ WATT, 10%)			
RRH-004	R8	12,000 ohms	.15
RRH-006	R1	27,000 ohms	.15
RRH-012	R13	1000 ohms	.15

The following resistors may be replaced by ½ watt, 10%, carbon resistors, which are obtainable from any Radio Parts Jobber, and are therefore not listed by Catalog Numbers.

	R2	100,000 ohms	
	R3	6800 ohms	
	R4	220,000 ohms	
	R5, 12	2700 ohms	
	R6	560,000 ohms	
	R7	100 to 500 ohms (See text under I-F Amplifier)	
	R9	47,000 or 39,000 ohms (E.P.)	
	R9	22,000 ohms (L.P.)	
	R10	220 ohms	
COILS AND TRANSFORMERS			
RLC-138	T2	COIL—Oscillator coil, early production	2.75
RLC-140	T2	COIL—Oscillator coil, late production	$2.75
RLL-066	T1	COIL—Antenna coil	1.85
RTL-188	T3	TRANSFORMER—1st I-F	2.50
RTL-189	T4	TRANSFORMER—2nd I-F	2.50
RTL-190	T5	TRANSFORMER—3rd I-F	2.50
RTO-182	T6	TRANSFORMER—Audio output	2.70
MISCELLANEOUS ITEMS			
RED-001		CRYSTAL DIODE—Y1, 400 ua	1.90
RJP-051		BATTERY CONNECTOR	.15
RJS-230		JACK—Sub-miniature jack, J1, for ear plug	.90
RMC-069		RETAINING RING — For speaker	.30
ROP-034		SPEAKER—2¾ inches, PM	5.50
CABINET AND APPEARANCE ITEMS			
RAG-095		GRILLE CLOTH ASSEMBLY —Gold, all models	.30
RAU-458		CABINET—Black, plastic, front and back, Model 675	3.20
RAU-459		CABINET — Ivory, plastic, front and back, Model 676	3.20
*RAU-460		CABINET—Aqua, plastic, front and back, Model 678	
*RAU-464		CABINET—Red, plastic, front and back, Model 677	
RDK-532		KNOB—Tuning knob, Bronze, all models	.75
RDK-533		KNOB—Volume, Black, Model 675	.85
RDK-534		KNOB—Volume, Ivory, Model 676	.85
*RDK-535		KNOB—Volume, Aqua, Model 678	
*RDK-578		KNOB—Volume, Red, Model 677	
RHS-163		SCREW AND INSERT—Gold, for tuning knob, Models 675, 676, 677	.80
*RHS-165		SCREW AND INSERT — White, for tuning knob, Model 678	

PRICES ARE SUGGESTED LIST PRICES AND ARE SUBJECT TO CHANGE WITHOUT NOTICE

(E. P.) INDICATES EARLY AND (L. P.) INDICATES LATE PRODUCTION RECEIVERS

680, 681, 682

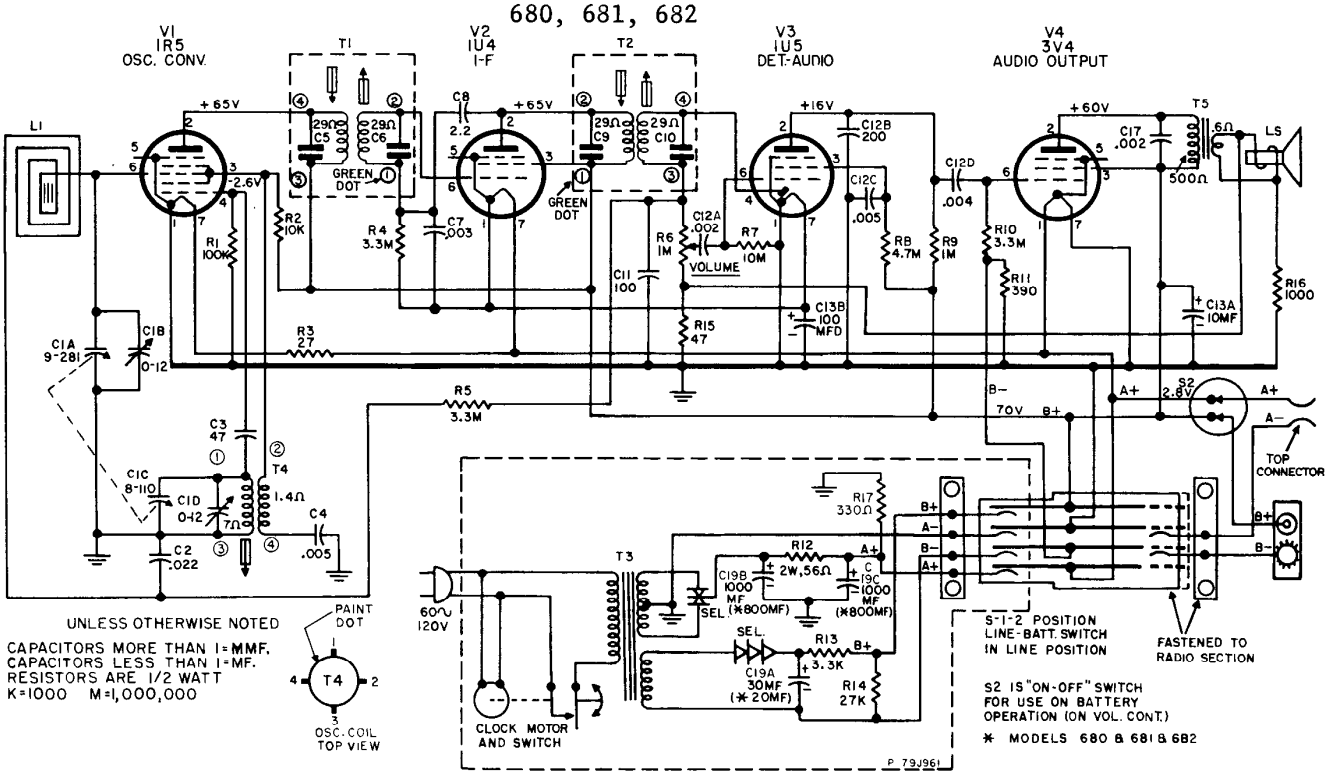

UNLESS OTHERWISE NOTED
CAPACITORS MORE THAN 1=MMF.
CAPACITORS LESS THAN 1=MF.
RESISTORS ARE 1/2 WATT
K=1000 M=1,000,000

S2 IS "ON-OFF" SWITCH FOR USE ON BATTERY OPERATION (ON VOL. CONT.)

* MODELS 680 & 681 & 682

REPLACEMENT PARTS LIST MODELS 680, 681 AND 682

CAT. NO.	SYMBOL	DESCRIPTION	PRICE
CAPACITORS			
RCC-123	C2	.022 mf., paper	$0.40
RCE-213	C13A, B	10 mf., @100 V, 100 mf., @3 V, electrolytic	1.50
n-RCE-227	C19A, B, C	20 mf., @100 V, 800 mf., @15 V, 800 mf., @15 V, electrolytic	3.65
RCN-039	C8	2.2 mmf., 20%, 500 V	.15
RCT-086	C1A, B, C, D	Tuning capacitor, two-gang	3.60
RCW-3014	C4	5000 mmf., ceramic	.25
RCW-3018	C17	2000 mmf., ceramic	.25
RCW-3075	C3	47 mmf., ceramic	.25
RCW-3079	C11	100 mmf., ceramic	.25
RCW-3089	C12A, B, C, D	Bullplate, .002 mf., 200 mmf., .005 mf., .004 mf.	.90
RCW-3118	C7	3000 mmf., ceramic	.25

The following resistors are common carbon types (½ watt unless otherwise noted) which are readily obtainable from any Radio Parts Jobber and are therefore not listed by catalog number.

	R3	27 ohms
	R15	47 ohms
	R17	330 ohms
	R11	390 ohms
	R16	1000 ohms
	R13	3300 ohms
	R2	10 K
	R14	27 K
	R1	100 K
	R9	1 megohm
	R4, 5, 10	3.3 megohms
	R8	4.7 megohms
	R7	10 megohms
	R12	56 ohms, 2 watts
POTENTIOMETER		
RRC-322	R6, S2	VOLUME CONTROL AND SWITCH, 1 megohm	1.50
COILS AND TRANSFORMERS		
RLC-129	T4	COIL—Oscillator	.90
RLL-063	L1	ANTENNA—Loop assembly	1.25
RTL-182	T1, 2	TRANSFORMER—I-F	1.65
RTO-172	T5	TRANSFORMER—Output	2.05
RTP-328	T3	TRANSFORMER—Power	3.60
MISCELLANEOUS ELECTRICAL			
RER-011		SELENIUM RECTIFIER—25 ma	.95
RER-021		SELENIUM RECTIFIER—150 ma	1.75
RJB-064		CONTACT BOARD—Two (2) terminal assembly for receiver	.20
RJB-065		CONTACT BOARD—Four (4) terminal assembly for clock	.35
RJC-043		CONNECTOR—For "B" battery	.40
RJC-044		SEE CABINET AND APPEARANCE ITEMS	.35
RJC-045		SEE CABINET AND APPEARANCE ITEMS	.35
n-RJC-049		SEE CABINET AND APPEARANCE ITEMS	
RJS-144		SOCKET—7-pin tube socket with center shield	.25
RJS-176		SOCKET—7-pin tube socket	.25
RMX-312		CLIP—For "A" Battery	.15
ROP-032		LOUDSPEAKER—3½-inch, PM	4.95
RWL-027		POWER CORD—6 ft., brown, Model 682	1.20
RWL-031		POWER CORD—6 ft. long, light gray, for Model 680	.75
RWL-034		POWER CORD—6 ft. long, red, for Model 681	.65
n-RZC-064		CLOCK—60-cycle, Brass-Bronze, Models 680, 681 and 682	

CAT. NO.	SYMBOL	DESCRIPTION	PRICE
MISCELLANEOUS MECHANICAL			
RHC-041		CLIP—For mounting electrolytic, C13	$0.05
RHC-053		CLIP—I-F transformer mounting clip	.02
RHC-060		CLAMP SUPPORT—Plastic for antenna	.15
RHC-089		CLIP—For handle bail, all models	.04
RHC-090		COTTER PIN—For thumbnut	.02
RHI-017		GROMMET—Two-piece strain relief insulator for power cord	.15
RHL-002		LOCK—Slide switch lock, light gray, for Model 680	.30
RHL-003		LOCK—Slide switch lock, red, for Model 681	.30
n-RHL-004		LOCK—Slide switch lock, tan, for Model 682	
RHN-035		THUMBNUT—For fastening cabinet back to receiver	.25
RHS-041		SCREW	.02
RHS-151		STUD—Threaded for fastening cabinet back	.10
RMS-213		COMPRESSION RING—For volume control knob, all models	.05
RMS-272		COMPRESSION RING—For tuning knob, all models	.05
RMS-363		SPRING—Latch spring for clock	.03
CABINET AND APPEARANCE ITEMS			
RAB-266		CABINET BACK—For radio, light gray, for Model 680	2.50
RAB-267		CABINET BACK—For radio, red, Model 681	2.50
n-RAB-301		CABINET BACK—For clock, light gray, for Model 680	
n-RAB-302		CABINET BACK—For clock, red, for Model 681	
n-RAB-307		CABINET BACK—For clock, tan, for Model 682	
n-RAB-308		CABINET BACK—For receiver, tan, for Model 682	
n-RAC-182		CABINET FRONT—For clock, dark gray, for Model 680	
n-RAC-183		CABINET FRONT—For clock, antique white, for 681	
n-RAC-184		CABINET FRONT—For radio, dark gray, for Model 680	
n-RAC-185		CABINET FRONT—For radio, antique white, for 681	
n-RAC-191		CABINET FRONT—For clock, white, for Model 682	
n-RAC-192		CABINET FRONT—For radio, white, for Model 682	
RDK-491		KNOB—For volume control, dark gray, for Model 680	.35
RDK-492		KNOB—For volume control, white, for Model 681	.35
RDK-493		KNOB—For tuning control, dark gray, for Model 680	.45
RDK-494		KNOB—For tuning control, white, for Model 681	.45
n-RDK-576		KNOB—For volume control, white, for Model 682	
n-RDK-577		KNOB—For tuning control, white, for Model 682	
RHY-070		HANDLE—Light gray, less clips, for Model 680	.40
RHY-071		HANDLE—Red, less clips, for Model 681	.40
n-RHY-079		HANDLE—Tan, less clips, for Model 682	
RJC-044		BLADE AND CONTACT ASSEMBLY—Light gray, for Model 680	.35
RJC-045		BLADE AND CONTACT ASSEMBLY—Red, for Model 681	.35
n-RJC-049		BLADE AND CONTACT ASSEMBLY—Tan, for Model 682	
RZK-017		KNOB—For clock, clear, all models	.10
n-RZW-029		CRYSTAL—For clock, clear, all models	

PRICES ARE SUGGESTED LIST PRICES AND ARE SUBJECT TO CHANGE WITHOUT NOTICE

"n"—DENOTES PARTS NOT PREVIOUSLY CATALOGED

MODEL 740

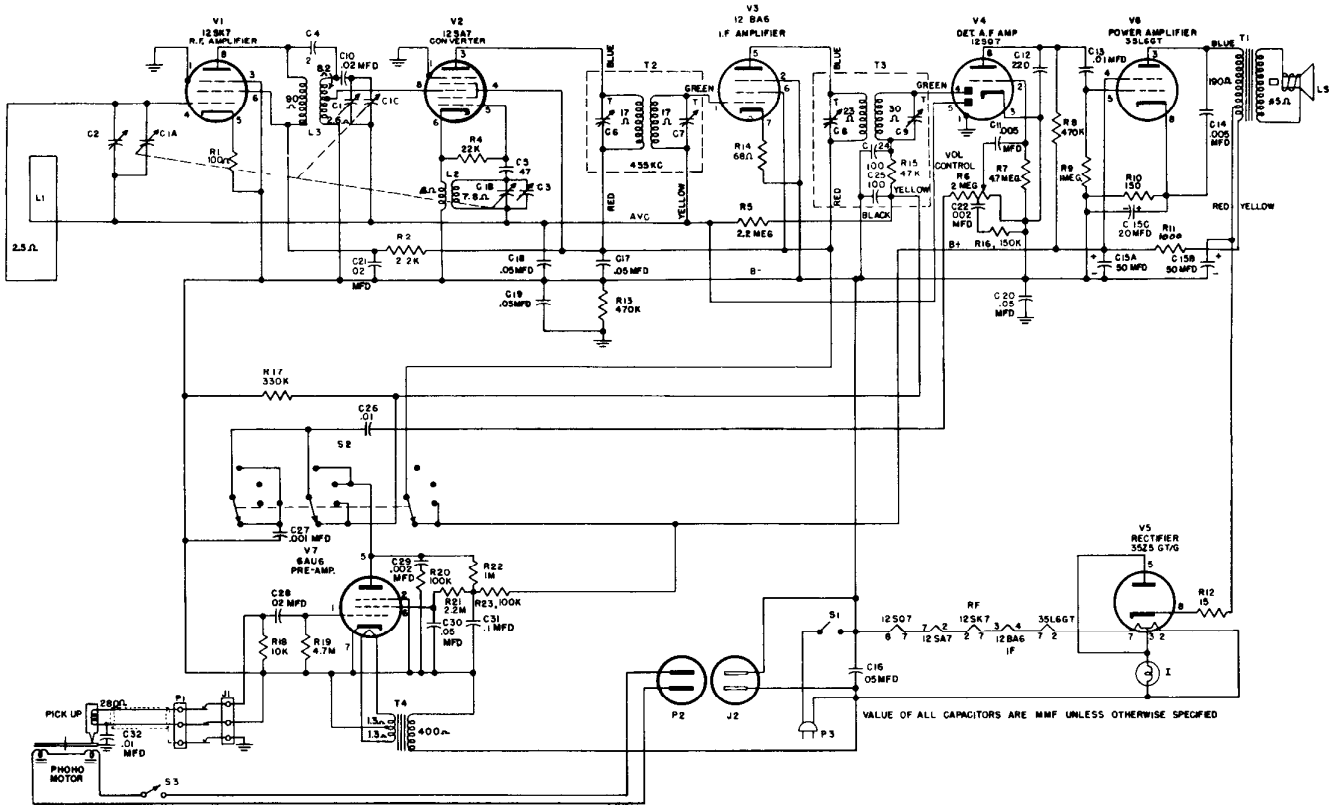
V1
12SK7
R.F. AMPLIFIER
V2
12SA7
CONVERTER
V3
12 BA6
I.F. AMPLIFIER
V4
DET. A.F. AMP
12SQ7
V6
POWER AMPLIFIER
35L6GT
V7
6AU6
PRE-AMP.
V5
RECTIFIER
35Z5 GT/G
T1
T2
T3
T4
455KC
AVC
VOL CONTROL
PICK UP
PHOHO MOTOR
VALUE OF ALL CAPACITORS ARE MMF UNLESS OTHERWISE SPECIFIED

REPLACEMENT PARTS LIST—MODEL 740

Cat. No.	Symbol	Description	Suggested Unit List Price
UNIVERSAL REPLACEMENT PARTS			
UCC-035	C27	CAPACITOR—.001 mf., 600 v., paper	$0.25
UCC-036	C22, 29	CAPACITOR—.002 mf., 600 v., paper	.25
UCC-039	C11	CAPACITOR—.005 mf., 600 v., paper	.25
UCC-040	C13, 26	CAPACITOR—.01 mf., 600 v. paper	.25
UCC-041	C21, 28, 10	CAPACITOR—.02 mf., 600 v., paper	.25
UCC-045	C17, 18, 19, 20, 30	CAPACITOR—.05 mf., 600 v., paper	.30
UCC-048	C31	CAPACITOR—.1 mf., 600 v., paper	.45
UCU-020	C5	CAPACITOR—47 mmf., mica	.20
UCU-036	C12	CAPACITOR—220 mmf., mica	.30
URD-005	R12	RESISTOR—15 ohms, ½ w., carbon	.13
URD-021	R14	RESISTOR—68 ohms, ½ w., carbon	.13
URD-025	R1	RESISTOR—100 ohms, ½ w., carbon	.13
URD-029	R10	RESISTOR—150 ohms, ½ w., carbon	.13
URD-057	R2	RESISTOR—2200 ohms, ½ w., carbon	.13
URD-073	R18	RESISTOR—10,000 ohms, ½ w., carbon	.13
URD-081	R4	RESISTOR—22,000 ohms, ½ w., carbon	.13
URD-097	R20, 23	RESISTOR—100,000 ohms, ½ w., carbon	.13
URD-101	R16	RESISTOR—150,000 ohms, ½ w., carbon	.13
URD-109	R17	RESISTOR—330,000 ohms, ½ w., carbon	.13
URD-113	R8, 13	RESISTOR—470,000 ohms, ½ w., carbon	.13
URD-121	R9, 22	RESISTOR—1 meg., ½ w., carbon	.13
URD-129	R5, 21	RESISTOR—2.2 meg., ½ w., carbon	.13
URD-137	R7, 19	RESISTOR—4.7 meg., ½ w., carbon	.13
URF-049	R11	RESISTOR—1000 ohms, 2 w., carbon	.25
SPECIALIZED REPLACEMENT PARTS			
RAB-144		CABINET BACK	
RAC-084		CHANGER PAN (COVER)	$8.50
RAV-140		CABINET (MAHOGANY)	
RCE-117	C15A,B,C,D	CAPACITOR—Electrolytic	
RCN-039	C4	CAPACITOR—2 mmf., mica	
RCT-048	C1A,B,C,C3	TUNING CAPACITOR	
RCY-016	C2	CAPACITOR—Trimmer	.35

Cat. No.	Symbol	Description	Suggested Unit List Price
SPECIALIZED REPLACEMENT PARTS (Cont'd)			
RDC-032		DIAL CORD	$2.50/25 yd
RDE-097		ESCUTCHEON	
RDK-212		DRAWER PULL	.45
RDK-231		KNOB	
RDK-232		KNOB (ARROW)	
RDP-051		POINTER—Dial pointer	.25
RDS-102		BACK PLATE AND DIAL SCALE	
RMC-002		CLIP—Oscillator coil	.05
RHC-024		CLIP for capacitor	.10
RHC-038		MOUNTING CLIP (RF CLIP)	
RHG-018		GROMMET (TUNING CAPACITOR MTG.)	.05
RHG-029		GROMMET	.05
RHJ-007		SPACER (TUNING CAP. MTG.)	.05
RHS-064		SCREW—Wood, No. 4 x 7/16 in., lg, rd. hd.	
RJC-001		SPEAKER LEAD PINS	.05
RJS-003		TUBE SOCKET for V1, V2, V4, V5, V6	.20
RJS-049	J2	PHONO POWER SOCKET	.25
RJS-092		TUBE SOCKET for V7	.20
RJS-097	J1	PHONO SOCKET	.20
RJS-141		TUBE SOCKET for V3	.20
RJX-031		PILOT LAMP SOCKET	.40
RLC-015	L2	OSCILLATOR COIL	.85
RLI-125	L3	RF COIL	
RLL-041	L1	LOOP—Antenna loop	
RMM-151		CHANNEL RUBBER	.55
RMM-153		DRAWER SLIDE	2.75
RMS-130		DIAL CORD SPRING	.15
RMS-221		STABILIZER SPRING	.25
RMX-174		DRIVE SHAFT AND BUSHING ASSEMBLY	
ROP-018		SPEAKER—10 inch	9.95
RJP-003	P2	AC POWER PLUG	.15
RJX-007	P1	PHONO PLUG	.10
RRC-151	R6, S3	VOLUME CONTROL AND SWITCH	
RSW-084	S2	PHONO-RADIO-TONE SWITCH	
RTF-001	T4	FILAMENT TRANSFORMER	3.40
RTL-115	T2	1st I-F TRANSFORMER	
RTL-116	T3	2nd I-F TRANSFORMER	
RTO-038	T1	OUTPUT TRANSFORMER	3.05
RWL-004		POWER CORD	.75

Prices subject to change without notice.

MODEL 741

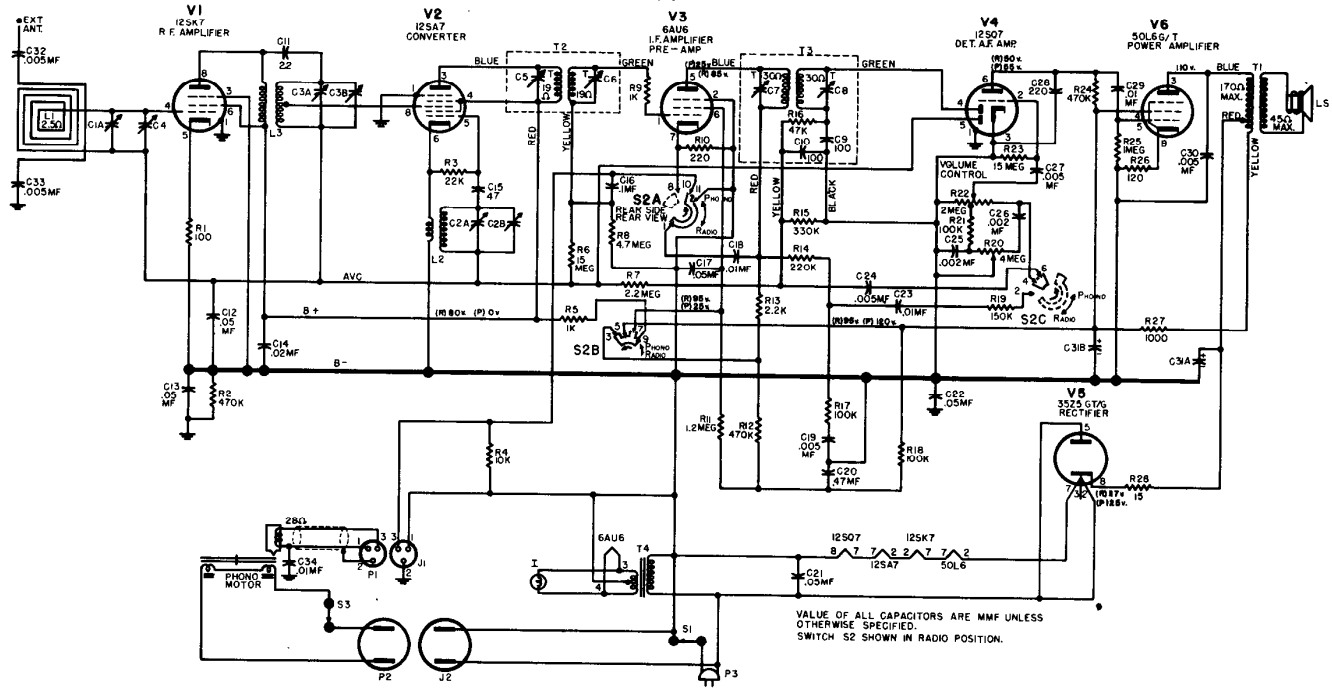

V1
12SK7
R.F. AMPLIFIER
V2
12SA7
CONVERTER
V3
6AU6
I.F. AMPLIFIER
PRE-AMP
V4
12SQ7
DET. A.F. AMP
V6
50L6G/T
POWER AMPLIFIER
V5
35Z5 GT/G
RECTIFIER
EXT ANT.
C32 .005MF
C33 .005MF
L1 2.5Ω
C1A
C4
C11 22
L3
C3A
C3B
R1 100
C12 .05 MF
C13 .05 MF
R2 470K
C14 .02MF
AVC
B+
B-
T2
BLUE
GREEN
RED
YELLOW
C5
C6
19Ω
R3 22K
C15 47
C2A
C2B
L2
R6 15 MEG
R7 2.2MEG
R5 1K
S2A
REAR SIDE
REAR VIEW
PHONO
RADIO
R8 4.7MEG
C16 .1MF
C17 .05MF
C18 .01MF
R9 1K
R10 220
T3
C7 30Ω
C8 30Ω
R16 47K
C10 100
C9 100
BLACK
R15 330K
R14 220K
R13 2.2K
C24 .005MF
C23 .01MF
S2B
R11 1.2MEG
R12 470K
R17 100K
C19 .005 MF
C20 .47MF
R18 100K
C22 .05MF
C21 .05MF
R4 10K
VOLUME CONTROL
R22 2MEG
R21 100K
C25 .002MF
C26 .002 MF
R20 4MEG
R23 15 MEG
C27 .005 MF
C28 220
R24 470K
R19 150K
S2C
R25 1MEG
R26 120
C29 .01 MF
C30 .005 MF
110v.
T1
170Ω MAX.
45Ω MAX.
LS
R27 1000
C31B
C31A
R28 15
28Ω
C34 .01MF
P1
J1
PHONO MOTOR
S3
P2
J2
6AU6
T4
I
S1
P3
12SQ7
12SK7
12SA7
50L6
VALUE OF ALL CAPACITORS ARE MMF UNLESS OTHERWISE SPECIFIED.
SWITCH S2 SHOWN IN RADIO POSITION.

MODEL 741 REPLACEMENT PARTS LIST

Cat. No.	Symbol	Description	Unit Price
CAPACITORS			
RCC-110	C16	.1 mfd, 200 v	$0.40
RCE-135	C31A, B	Electrolytic	2.10
*RCN-039	C11	2.2 mmf, silver mica	.15
*RCT-048	C1A, 2A, 2B, 3A, 3B	Tuning gang	3.60
*RCY-016	C4	Trimmer	.35
*UCG-020	C15	47 mmf, silver mica	.35
*UCG-1036	C28	220 mmf, silver mica	.35
*UCC-036	C25, 26	.002 mf., 600 v, paper	.30
*UCC-039	C19, 24, 27, 30, 32, 33	.005 mf, 600 v, paper	.25
*UCC-040	C18, 23, 29	.01 mf, 600 v, paper	.25
*UCC-041	C14	.02 mf, 600 v, paper	.25
*UCC-045	C12, 13, 17, 21, 22	.05 mf, 600 v, paper	.30
*UCC-048	C20	.1 mf, 600 v, paper	.45
RESISTORS			
*RRC-151	R22, S1	Volume and switch	1.60
RRC-167	R20, S2	Tone and switch	4.50
*URD-005	R28	15 ohms, ½ w	.13
*URD-025	R1	100 ohms, ½ w	.13
*URD-027	R26	120 ohms, ½ w	.13
*URD-033	R10	220 ohms, ½ w	.13
*URD-049	R5, 9	1000 ohms, ½ w	.13
*URD-057	R13	2,200 ohms ½ w	.13
*URD-073	R4	10,000 ohms, ½ w	.13
*URD-081	R3	22,000 ohms, ½ w	.13
*URD-097	R17, 18, 21	100,000 ohms, ½ w	.13
*URD-101	R19	150,000 ohms, ½ w	.13
*URD-105	R14	220,000 ohms, ½ w	.13
*URD-109	R15	330,000 ohms, ½ w	.13
*URD-113	R2, 12, 24	470,000 ohms, ½ w	.13
*URD-121	R25	1 meg, ½ w	.13
*URD-123	R11	1.2 meg, ½ w	.13
*URD-129	R7	2.2 meg, ½ w	.13
*URD-137	R8	4.7 meg, ½ w	.13
*URD-149	R6, 23	15 meg, ½ w	.13
*URF-049	R27	1000 ohms, 2 w	.25
COILS AND TRANSFORMERS			
*RLC-105	L2	OSCILLATOR COIL	.75
*RLI-125	L3	R.F. TRANSFORMER	1.25
*RTF-001	T4	FILAMENT TRANSFORMER	3.40
*RTL-115	T2, C5, C6	1ST I.F. TRANSFORMER	1.90
*RTL-116	T3, C7, 8, 9, 10, R16	2ND I.F. TRANSFORMER	2.10
RTO-111	T1	OUTPUT TRANSFORMER	2.60

Cat. No.	Symbol	Description	Unit Price
MISCELLANEOUS ELECTRICAL			
*RJC-019		PINS—Speaker lead	$0.10
RJP-003	P2	PLUG—Phono power (male)	.15
*RJS-003		SOCKET—Tube for V1, V2, V4, V5, V6	.20
*RJS-049	J2	SOCKET—Phono power female	.25
*RJS-097	J1	SOCKET—Phono on chassis	.20
*RJS-141		SOCKET—Tube for V3	.20
RJX-007	P1	PLUG—Phono (male)	.10
RJX-031		SOCKET—Pilot lamp	.40
RPJ-014		STYLUS—Dual stylus for pickup RPX-048	5.95
RPX-048		PICKUP—High output dual stylus pickup	13.95
*RWL-004		CORD—Power	.75
MISCELLANEOUS MECHANICAL			
*RDC-032		DIAL CORD (25 y'ds)	2.50
RDP-062		POINTER	.35
RDS-108		BACK PLATE AND DIAL SCALE	1.20
*RHC-017		CLIP—For oscillator coil L2	.02
*RHC-038		CLIP—R.F. coil mtg.	.02
*RHC-024		CLIP—Capacitor	.10
*RHG-018		GROMMET—Gang mtg.	.05
*RHG-029		GROMMET—Phono power cord	.05
*RHI-017		STRAIN RELIEF (Power cord)	.15
*RHJ-007		SPACER—Gang mtg.	.05
*RMC-002		CLIP—Osc. coil	.05
*RMS-130		SPRING—Dial cord	.15
RMX-174		DRIVE SHAFT AND BUSHING—For tuning control	.45
*ROP-018		SPEAKER—10 in.	9.95
*RQB-001		BRUSH—Record changer	.10
CABINETS AND CABINET PARTS			
RAB-168	L1	LOOP AND BACK ASSEMBLY	2.75
RAV-171		CABINET—Model 741	105.00
RDE-122		ESCUTCHEON & DIAL WINDOW	4.50
RDK-257		KNOB—(Brown) Volume OFF-ON tuning	.45
RDK-258		KNOB—(Brown) for switch	.30
RDK-259		KNOB—(Brown) (Tone)	.60

PRICES ARE SUGGESTED LIST PRICES AND SUBJECT TO CHANGE WITHOUT NOTICE.
*Parts used on previous models.

MODELS 752, 753

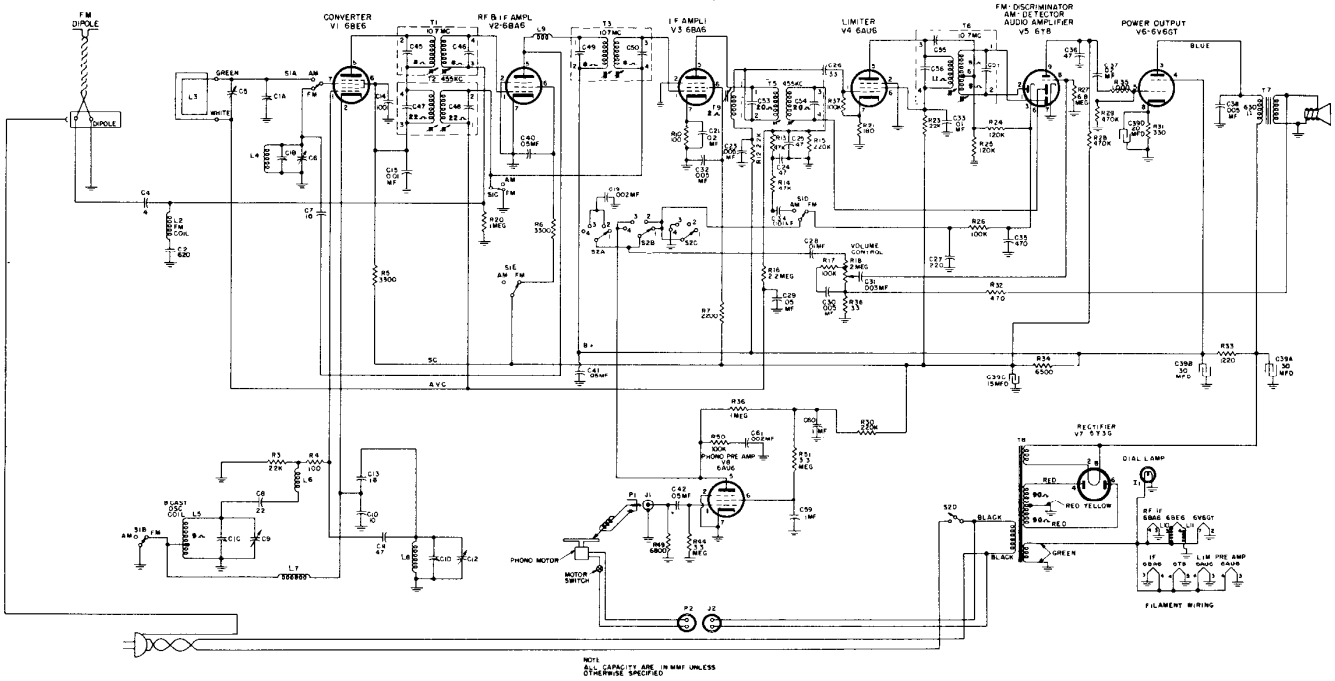

MODELS 752 AND 753
REPLACEMENT PARTS LIST

Cat. No.	Symbol	Description	Suggested Unit List Price
UNIVERSAL REPLACEMENT PARTS			
*UCC-035	C34	CAPACITOR—.001 mf., 600 v., paper	$0.25
*UCC-036	C19, C61	CAPACITOR—.002 mfd., 600 v., paper.	.25
*UCC-037	C31	CAPACITOR—.003 mfd., 600 v., paper	.25
*UCC-039	C30, C23, C32	CAPACITOR—.005 mfd., 600 v., paper	.25
*UCC-040	C28, C15, C33, C42	CAPACITOR—.01 mfd., 600 v., paper	.25
*UCC-041	C21, C37	CAPACITOR—.02 mfd., 600 v., paper...	.25
*UCC-045	C40, C41, C44	CAPACITOR—.05 mfd., 600 v., paper..	.30
*UCC-048	C59, C60	CAPACITOR—.1 mfd., 600 v., paper...	.45
*UCC-059	C38	CAPACITOR—.005—1000 v....	.30
*UCU-001	C4	CAPACITOR—4 mmfd., 500 v., mica	.25
*UCU-016	C26	CAPACITOR—33 mmfd., 500 v., mica ..	.30
*UCU-020	C36	CAPACITOR—47 mmfd., 500 v., mica	.25
*UCU-044	C35	CAPACITOR—470 mmfd., 500 v., mica	.30
*UCU-1036		CAPACITOR—220 mmfd., 500 v., mica	.25
*UCU-2047	C2	CAPACITOR—620 mmfd., 500 v., mica.	.30
*URD-013	R38	RESISTOR—33 ohms, ½ w., carbon	.13
*URD-025	R4, R10	RESISTOR—100 ohms, ½ w., carbon	.13
*URD-031	R21	RESISTOR—180 ohms, ½ w., carbon	$0.13
*URD-041	R32	RESISTOR—470 ohms, ½ w., carbon	.13
*URD-049	R35	RESISTOR—1000 ohms, ½ w., carbon	.13
*URD-057	R7, R12	RESISTOR—2200 ohms, ½ w., carbon	.13
URD-061	R6, R5	RESISTOR—3300 ohms, ½ w., carbon..	.13
*URD-069	R49	RESISTOR—6800 ohms, ½ w., carbon	.13
*URD-081	R3, R23	RESISTOR—22,000 ohms, ½ w., carbon	.13
*URD-089	R13, R14	RESISTOR—47,000 ohms, ½ w....	.13
*URD-097	R17, R26, R37, R50	RESISTOR—100,000 ohms, ½ w. .	.13
*URD-099	R24, R25	RESISTOR—120,000 ohms, ½ w.. . .	.13
*URD-105	R15, R30	RESISTOR—220,000 ohms, ½ w.... .	.13
*URD-113	R28, R29	RESISTOR—470,000 ohms, ½ w.	.13
*URD-121	R20, R36	RESISTOR—1 meg., ½ w...	.13
*URD-129	R16	RESISTOR—2.2 meg., ½ w.	.13
*URD-133	R44, R51	RESISTOR—3.3 meg., ½ w.	.13
*URD-141	R27	RESISTOR—6.8 meg., ½ w.. . . .	.13
*URE-037	R31	RESISTOR—330 ohms, 1 w..... ..	.17
SPECIALIZED REPLACEMENT PARTS			
RAC-084		CHANGER PAN (COVER)	$8.50
RAV-122		CABINET-752 (MAHOGANY)	98.00
RAV-123		CABINET-753 (BLONDE).....	110.00
*RCE-039	C39A, C39B, C39C, C39D	CAPACITOR—Electrolytic	3.50
RCT-043	C1A, C1B, C1C, C1D	CAPACITOR (TUNING)..	6.50
*RCW-1043	C11	CAPACITOR—47 mmf., ceramic.....	.35
*RCW-1047	C14	CAPACITOR—100 mmf., ceramic....	.60
*RCW-1053	C8	CAPACITOR—22 mmf., ceramic	.60
*RCW-1060	C7, C10	CAPACITOR—10 mmf., 0-coef., ceramic.	.60
*RCW-2031	C13	CAPACITOR—18 mmf., ceramic	.60
RCY-055	C12	CAPACITOR—Trimmer.. . . .	.65
*RDC-032		DRIVE CORD	2.50/25 yd.
RDE-087		ESCUTCHEON....	4.25
RDK-212		DRAWER PULL....	.45
RDK-213		KNOB..	.35
RDK-214		KNOB (ARROW)	.35
RDP-053		POINTER	.30
*RHC-017		COIL CLIP—For mounting L5. .	.05
*RHC-034		CLIP—For mounting IF cam	.05
*RHG-010		GROMMET RUBBER (tube). . . .	.05
*RHG-015		GROMMET TUNING (gang)	.05
RHI-011		STRAIN RELIEF—On power cord . .	
*RHJ-006		SPACER TUNING (gang).	.05
RII-047		INSULATING WASHER—Under J1 . .	.05
*RJC-001		SPEAKER LEAD PINS	.05
*RJC-002		SPEAKER LEAD CLIPS for S1212D7	.05
RSW-080	S2A, S2B, S2C, S2D	TONE CONTROL SWITCH....	$1.50
*RTD-010	T6, C55, C56, C57	DISCRIMINATOR TRANSFORMER..	4.95
*RTL-097	T2, C47, C48	1st I-F TRANSFORMER—AM.....	1.90
*RTL-098	T5, C25, C24, C53, C54	2nd I-F TRANSFORMER—AM.....	2.10
RJP-003	P2	AC POWER PLUG...	$0.15
*RJP-004	P1	PHONO PLUG.	.10
*RJP-010	J1	PHONO JACK & PLUG (Female) . .	.10
RJS-003		SOCKET—Tube socket for V6, V7 . .	.20
RJS-012		MOUNTING PLATE—For electrolytic.	.10
*RJS-049	J2	PHONO POWER SOCKET (Female).	.25
RJS-092		SOCKET—Tube socket for V8.... ..	.20
RJS-118		SOCKET—Tube socket for V5... . .	.35
RJS-145		SOCKET—Tube socket for V1, V2, V3, V4.....	.20
RJX-031		PILOT LIGHT SOCKET	.40
*RLB-029	L4	COIL—FM R-F	.15
*RLC-066	L5	COIL—B-C osc.	.90
*RLC-102	L8	COIL—FM osc....	.15
*RLI-088	L2	CHOKE COIL—FM antenna	.13
*RLI-122	L6, L7, L10, L11	CHOKE COIL	.25
RLI-124	L9	CHOKE COIL—FM R-F pl. osc. cathode.	.80
RLL-039	L3	LOOP ASSEMBLY	1.45
RMM-151		CHANNEL RUBBER.	.55
RMM-153		DRAWER SLIDE, GRANT PULLEY HARDWARE	2.75
*RMS-111		SPRING (DIAL CORD) . . .	.15
RMS-221		STABILIZER SPRING—On changer pan	.25
RMX-171		DRIVE SHAFT & BUSHING ASSEMBLY.	.45
RMX-172		DRUM AND SHAFT ASSEMBLY...	.35
RRC-141	R18	VOLUME CONTROL	1.25
*RRT-003	R33, R34	RESISTOR—1220-6500 ohms, 9 w., w.w.	1.25
RSW-079	S1A, S1B, S1C, S1D	BAND CHANGE SWITCH	1.75
*RTL-099	T1, T3, C45, C46, C49, C50	1st, 2nd I-F TRANSFORMER—FM...	$2.45
*RTL-114	T9	FM COIL.....	1.10
RTO-089	T7	OUTPUT TRANSFORMER... .	3.25
RTP-304	T8	POWER TRANSFORMER..	12.50
RWL-023		POWER CORD—3 wire, 8 ft. . . .	1.10
S1212D7		SPEAKER—12 inch...	11.25

NOTE: PRICES SUBJECT TO CHANGE WITHOUT NOTICE.

*Parts used on previous models.

MODELS 754 & 756

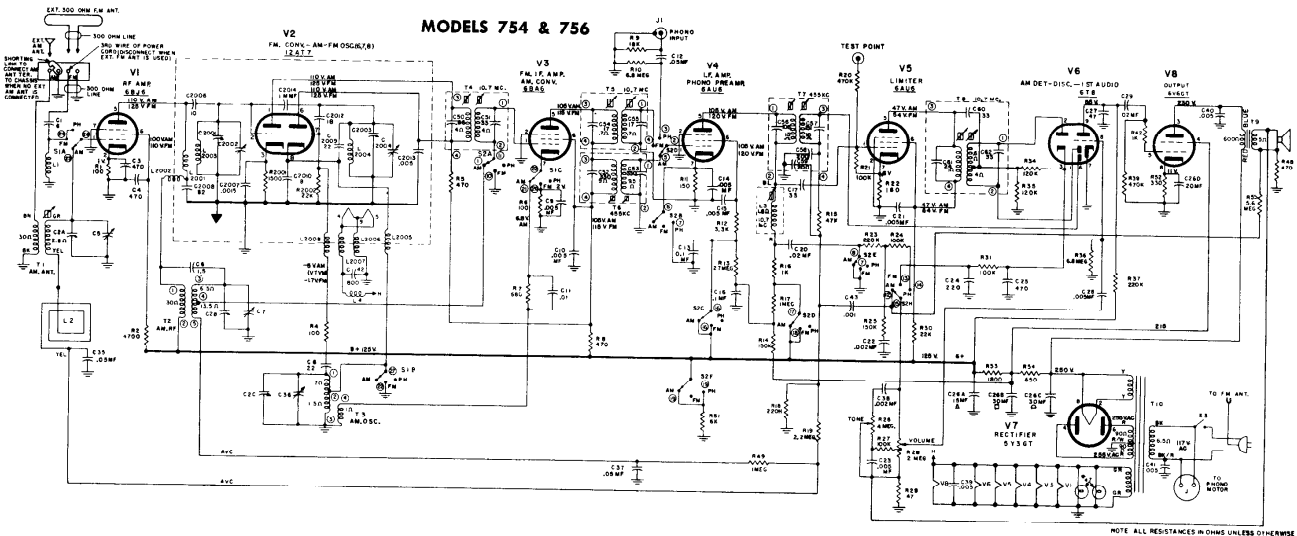

NOTE ALL RESISTANCES IN OHMS UNLESS OTHERWISE DESIGNATED
ALL CAPACITANCES GIVEN IN MICRO-MICROFARADS
UNLESS OTHERWISE DESIGNATED
VOLTAGES ARE PLUS OR MINUS 20% TOLERANCE
VOLTAGES MEASURED WITH A V.T.V.M. OR 20,000 OHM
PER VOLT METER

REPLACEMENT PARTS LIST—Models 754-756

Cat. No.	Symbol	Description	Unit Price
		CAPACITORS	
RCE-039	C26A, B, C	15 mf., 300 v., 30-30 mf., 350 v., 20 mf., 25 v.	$3.50
RCN-001	C2014	1 mmf.	.20
RCN-040	C1	6 mmf., ceramic	.25
RCN-046	C2010	18 mmf., silver mica	.25
*RCN-048	C6	1.5 mmf.	.20
*RCT-055	C2001, C2002, 2003, 2004	F.M tuning capacitor	3.50
RCT-057	C2A, B, C,	A.M. tuning capacitor	
*RCW-026	C2007	1500 mmf., 300 v.	.25
*RCW-2031	C2012	18 mmf.	.60
*RCW-3014	C9, 10, 14, 15, 21, 39	.005 mf.	.25
RCW-3037	C42	800 mmf.	.25
*RCW-3065	C2009	22 mmf.	.60
RCW-3067	C3, 4	470 mmf.	
*UCC-011	C12, 35, 37	.05 mf., 200 v.	.30
*UCC-022	C23, 28	.005 mf., 400 v.	.25
*UCC-036	C22, 38	.002 mf., 600 v.	.25
*UCC-040	C11	.01 mf., 600 v.	.25
*UCC-041	C20, 29	.02 mf., 600 v.	.25
*UCC-048	C13, 16	.1 mf., 600 v.	.45
UCC-059	C40	.005 mf., 1000 v.	.30
*UCG-016	C17	33 mmf., silver mica	.25
*UCG-004	C2006	10 mmf.	.25
UCG-020	C27	47 mmf., silver mica	.35
*UCG-1012	C8	22 mmf., silver mica	.35
*UCG-1026	C2008	82 mmf., silver mica	.25
UCU-044	C25	470 mmf.	.30
UCU-536	C24	220 mmf.	.30
		RESISTORS	
RRC-179	R26, S3	Tone control 4 meg. and on-off switch	
RRC-180	R28	Volume control 2 megohms	
RRW-086	R51	600 ohms W. W.	
RRW-087	R53, 54	Dual 650 ohms & 1800 W. W. ohms	
*URD-019	R29	47 ohms	$0.13
*URD-025	R1, 4, 6	100 ohms, ½ w., carbon	.13
*URD-029	R11	150 ohms, ½ w., carbon	.13
*URD-031	R22	180 ohms, ½ w., carbon	.13
*URD-041	R5, 8, 48	470 ohms, ½ w., carbon	.13
*URD-045	R50, 7	680 ohms, ½ w., carbon	.13
*URD-049	R16, 42	1000 ohms, ½ w., carbon	.13
*URD-053	R2001	1500 ohms, ½ w., carbon	.13
*URD-061	R12	3,300 ohms, ½ w., carbon	.13
*URD-065	R2	4700 ohms, ½ w., carbon	.13
*URD-079	R9	18,000 ohms, ½ w., carbon	.13
*URD-081	R30, 2002	22,000 ohms, ½ w., carbon	.13
*URD-089	R15	47,000 ohms, ½ w., carbon	.13
*URD-097	R21, 24, 27, 31	100,000 ohms, ½ w., carbon	.13
*URD-099	R34, 35	120,000 ohms, ½ w., carbon	.13
*URD-101	R14, 24	150,000 ohms, ½ w., carbon	.13
*URD-105	R18, 23, 37	220,000 ohms, ½ w., carbon	.13
*URD-113	R20, 39, 45	470,000 ohms, ½ w., carbon	.13
*URD-121	R17, 49	1 megohm, ½ w., carbon	.13
*URD-129	R19	2.2 megohms, ½ w., carbon	.13
*URD-131	R13	2.7 megohms, ½ w., carbon'	.13
URD-139	R55	Resistor 5.6 meg ½ w.	.13
*URD-141	R10, 36	6.8 megohms, ½ w., carbon	.13
*URE-037	R52	330 ohms, 1 w., carbon	
		COILS AND TRANSFORMERS	
RLA-038	T1	TRANSF:—AM antenna	
*RLB-031	L2003	COIL—FM—RF coil	$0.15
RLB-033	T2	TRANSF.—AM—RF	
RLC-114	L2004	COIL—FM oscillator coil	.15
RLC-116	T3	TRANSF.—AM oscillator	
*RLI-102	L2005, 2006, 2007	COIL—Choke coil, 1 milhenry	.35
*RLI-122	L2002, 2008	COIL—2.2 milhenry choke coil	.25
RLI-124	L2001, L4	COIL—RF plate choke coil	.80
RLI-164	L1	COIL—FM antenna coil	.35
RLL-048	L2	LOOP—AM antenna loop	
RTD-010	T8	TRANSF. — Discriminator transformer, 10.7 mc	4.95
RTL-112	T4	TRANSF.—1st FM—IF	1.80
RTL-113	T5	TRANSF.—2nd FM—IF	2.25
RTL-131	T6	TRANSF.—1st AM—IF	

Cat. No.	Symbol	Description	Unit Price
		COILS AND TRANSFORMERS (Cont'd)	
RTL-132	L3	COIL—3rd FM—IF coil, 10.7 mc	
RTL-134	T7	TRANSFORMER—2nd AM—IF	
RTO-113	T9	TRANSF.—Audio output	
RTP-311	T10	TRANSF.—Power, 60 cycle	
		MISCELLANEOUS ELECTRICAL	
RHC-040		TUBE SHIELD base for V1	$0.05
*RHS-091		SHIELD—For V2	
RHW-034		WASHER — Insulated shoulder washer for mounting RJC-023	
*RII-047		WASHER—Phono jack washer for J1	.05
*RJC-019		PIN—Speaker lead pins	.02
RJC-023		PIN—Contact pin for limiter grid test point	
*RJP-003		A.C. PLUG—Female for 110V. A.C. on record changer	.15
*RJP-004		PHONO PLUG—Male (audio) on record changer	.10
RJP-010		JACK—Phono jack (female)	.10
*RJS-003		SOCKET—Octal socket for V7 and V8	.20
*RJS-049	J2	SOCKET—Phono power socket (110 v.)	.25
*RJS-118		SOCKET—Tube socket for V6 (9 pin)	.35
*RJS-141		SOCKET—Tube socket for V4 (shock mounted)	.20
*RJS-145		SOCKET—7 pin tube socket for V1, V3, V5	.30
*RJS-174		SOCKET—Tube socket for V2	.40
RMM-166		TUBE SHIELD—For V1	.15
RPJ-014		STYLUS—Stylus and guide assembly, dual heavy bar type Hi Output 1 & 3 mil	5.95
*RPX-048		PICKUP CARTRIDGE — Phono pickup	13.95
RSW-091	S1, S2	SWITCH—AM—FM-phono switch	
RWX-044		SOCKET—Pilot light socket for dial scale	
*S1212D-7		SPEAKER—12 inch PM	12.95
		MISCELLANEOUS MECHANICAL	
*RDC-032		DIAL CORD—N.F. 28	$2.50
RDS-112		SCALE—Back plate and dial scale	
RDP-066		POINTER—Dial pointer	
*RHC-038		CLIP—Mounting clip for mounting AM—RF coil T2	.02
*RHG-010		GROMMET—Rubber for shock mounting V4	.05
RHI-022		STRAIN RELIEF—For power cord	
*RMC-002		CLIP—For mounting oscillator coil T3	.05
*RMS-111		SPRING—Dial cord tension spring in large drum	.15
*RMS-243		SPRING—Coil spring in small drum for dial cord tension	.10
*RMS-274		SPRING—For mounting insulated shaft and drive drum on FM tuning capacitor	.02
RMX-201		SHAFT—Tuning drive shaft assembly	
RMX-202		ROLLER—Link and roller assembly between tuning capacitor shafts	.35
RMX-203		DRUM—For FM tuning capacitor insulated shaft	.15
RWL-028		CORD—Three wire power cord	
		CABINETS AND CABINET PARTS	
RAV-180		CABINET—Mahogany for 754	
RAV-181		CABINET—Blonde for 756	
RDE-127		ESCUTCHEON—For dial scale	
RDK-268		KNOB—Tuning and volume control knob	
RDK-269		KNOB—With dot for tone, ON-OFF and AM—FM—PH. switch controls	

PRICES ARE SUGGESTED LIST PRICES AND ARE SUBJECT TO CHANGE WITHOUT NOTICE

***PARTS USED ON PREVIOUS RECEIVERS**

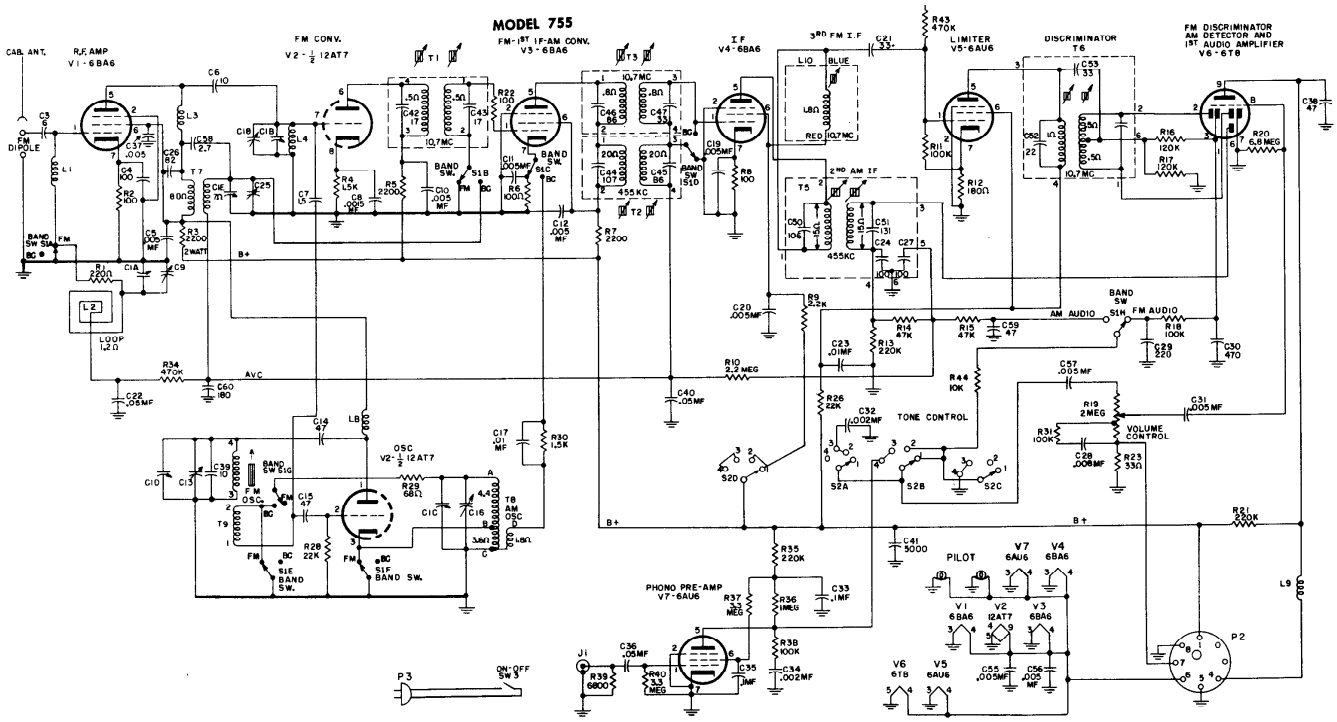

Power supply and audio output circuit same as Model 757 on page 241

MODEL 755
REPLACEMENT PARTS LIST

Cat. No.	Symbol	Description	Unit List Price
*RAA-002		ARM—Switch arm (shaft)	$0.20
*RAA-003		ARM—Switch arm (switch)	.20
RAB-145		BACK—Cabinet back, Model 755	.60
*RAC-004		COVER—Changer pan cover	8.50
RAD-057		BRACKET—FM osc. transformer mounting bracket	.02
RAV-142		CABINET—Mahogany, Model 755	110.00
*RCE-039	C78	CAPACITOR—Filter, 30-30 mf. @ 350 v., 15 mf. @ 300 v., 20 mf. @ 25 v.	3.50
RCN-040	C3	CAPACITOR—6 mmf., silver mica	.25
RCN-048	C7	CAPACITOR—1.5 mmf., ceramic	.20
RCT-047	C1	CAPACITOR—Tuning gang capacitor	7.50
*RCW-026	C8	CAPACITOR—.0015 mfd., ceramic	.60
RCW-1058	C37	CAPACITOR—10 mmf., mica	.60
*RCW-3014	C5, 10, 11, 12, 19, 41, 53, 55, 56	CAPACITOR—.005 mfd., ceramic	.60
*RCW-3029	C4	CAPACITOR—100 mmf., ceramic	.25
RCW-3039		CAPACITOR—2.7 mmf., ceramic	.25
*RDC-032		DIAL CORD—25 yds., bulk	2.50
RDE-098		ESCUTCHEON—Plastic dial escutcheon, includes dial window	4.25
*RDK-212		KNOB—Pull-out knob on phono changer cover	.45
RDK-233		KNOB—Tuning knob	.20
RDK-234		KNOB—Band switch knob (arrow)	.35
RDK-235		KNOB—Volume control knob	.35
RDK-236		KNOB—Tone switch knob (dot)	.20
RDM-025		WIRE—Dial pointer guide wire	.15
RDP-058		POINTER—Dial pointer	.45
*RHC-017		CLIP—Mounting clip for BC oscillator transformer	.05
*RHC-034		CLIP—Mounting clip for IF transformers	.05
*RHC-038		CLIP—Mounting clip for BC RF transformer	.02
*RHG-010		GROMMET—Preamplifier socket mounting grommet	.05
*RHG-015		GROMMET—Tuning gang mounting grommet	.05
*RHG-029		GROMMET—Speaker lead insulator grommet	.05
*RHI-011		INSULATOR—Strain relief insulator for power cord	.15
*RHJ-006		SLEEVE—Tuning gang mounting sleeve	.05
*RHM-001		WASHER—"C" washer for tuning shaft	.05
RHN-015		NUT—Guide wire retaining nut	.02
*RHS-058		SCREW—5/8 in. wood screw for bottom of escutcheon	.02
*RHS-064		SCREW—1/4 in. wood screw, for top of escutcheon	.02
*RHS-066		SCREW—Hex head screw for tuning gang mounting	.02
*RJC-001		CONNECTORS—Loop and speaker wire connectors	.05
*RJJ-008	J3	RECEPTACLE—AC power receptacle	.35
*RJP-003	P3, 5	PLUG—AC power plug	.15
*RJP-004	P1	PLUG—Phono audio input plug	.10
*RJS-003		SOCKET—Octal wafer socket, for V8, V9, V10, V11	.20
*RJS-010	J1	JACK—Phono audio input jack	.10
*RJS-012		PLATE—Mounting plate for filter condenser	.10
*RJS-049	J4	RECEPTACLE—Phono motor power receptacle	.25
*RJS-094		SOCKET—7 pin socket, for V7	.20
*RJS-118		SOCKET—9 pin socket, for V6	.35
RJS-143		SOCKET—9 pin socket, for V2	.25
*RJS-145		SOCKET—7 pin socket, for V1, V3, V4, V5	.20
*RJS-147		SOCKET—Pilot light socket	.15
RJS-152	J2	SOCKET—Inter-chassis cable socket	.30
RJP-031	P2	PLUG—Inter-chassis cable plug	.35
RJS-154		SHELL—Cable plug shell	.15
*RLC-104	T9	TRANSFORMER—FM oscillator transformer	1.20
*RLC-106	T8	TRANSFORMER—BC oscillator transformer	.90
*RLI-122	L8	CHOKE—Oscillator plate choke, molded	.25
*RLI-124	L3, 9	CHOKE—Audio filter choke, RF plate choke, 18 turns	.80
RLI-128	L4	CHOKE—FM mixer grid choke, 6 turns	.15
RLI-129	T7	TRANSFORMER—BC RF transformer	1.45
RLI-130	L1	CHOKE—FM antenna choke, 11 turns	$0.15
RLL-039	L2	LOOP—BC antenna loop	1.45
*RMM-151		GASKET—Phono changer rubber mounting gasket	.55
*RMM-153		MOUNT—Phono drawer slide mount	2.75
*RMS-119		SPRING—Dial cord spring	.15
*RMS-221		SPRING—Phono mounting spring	.25
RMU-066		SHAFT—Band switch drive shaft	.75
RMU-067		SHAFT—Tuning shaft	.25
*RQB-001		BRUSH—Stylus brush	.10
RRC-152	R19; S2, 3	CONTROL—On-Off switch, tone switch, volume control, 2 meg.	3.50
RRW-056	R85,86	RESISTOR—Filter resistor, 650 ohms-10 w.; 1000 ohms-8 w.; w.w.	1.10
RSW-085	S1	SWITCH—Band switch	1.80
*RTD-010	T6	TRANSFORMER—FM discriminator transformer	4.95
RTL-079	T2	TRANSFORMER—1st IF-AM transformer	2.75
RTL-100	L10	TRANSFORMER—3rd IF-FM transformer	1.10
*RTL-111	T5	TRANSFORMER—2nd IF-AM transformer	2.10
*RTL-112	T1	TRANSFORMER—1st IF-FM transformer	1.80
*RTL-113	T3	TRANSFORMER—2nd IF-FM transformer	2.25
RTO-094	T72	TRANSFORMER—Output transformer	3.25
RTP-306	T71	TRANSFORMER—Power transformer	15.00
*RWL-004	P3, 5	CORD—Power cord and plug	.75
*S1212-D		SPEAKER—12-inch PM speaker	11.25
*UCC-036	C32, 34	CAPACITOR—.002 mfd., 600 v., paper.	.25
*UCC-039	C20, 31	CAPACITOR—.005 mfd., 600 v., paper.	.25
*UCC-040	C17	CAPACITOR—.01 mfd., 600 v., paper.	.25
*UCC-041	C72, 73, 74	CAPACITOR—.02 mfd., 600 v., paper.	.25
*UCC-045	C22, 36, 40	CAPACITOR—.05 mfd., 600 v., paper.	.30
*UCC-048	C33, 35	CAPACITOR—.1 mfd., 600 v., paper.	.45
*UCC-056	C75, 77	CAPACITOR—.002 mfd., 1000 v., paper.	.30
*UCC-059	C76	CAPACITOR—.005 mfd., 1000 v., paper	.30
*UCC-070	C28	CAPACITOR—.008 mfd., 600 v., paper	.30
*UCG-004	C6	CAPACITOR—10 mmf., silver mica	.25
*UCG-016	C21	CAPACITOR—33 mmf., silver mica	.25
*UCG-020	C14, 15, 38, 59	CAPACITOR—47 mmf., silver mica.	.35
*UCG-1026	C26	CAPACITOR—82 mmf., silver mica	.25
*UCU-044	C30	CAPACITOR—470 mmf., mica	.30
*UCU-536	C29	CAPACITOR—220 mmf., mica	.30
UCU-1034	C60	CAPACITOR—180 mmf., mica	.25
*URD-013	R23	RESISTOR—33 ohms, 1/2 w., carbon	.13
*URD-021	R29	RESISTOR—68 ohms, 1/2 w., carbon	.13
*URD-025	R2, 6, 8, 22	RESISTOR—100 ohms, 1/2 w., carbon	.13
*URD-031	R12	RESISTOR—180 ohms, 1/2 w., carbon	.13
*URD-033	R1, 41	RESISTOR—220 ohms, 1/2 w., carbon.	.13
*URD-041	R74	RESISTOR—470 ohms, 1/2 w., carbon	.13
*URD-049	R72, 81	RESISTOR—1000 ohms, 1/2 w., carbon	.13
*URD-053	R4, 30	RESISTOR—1500 ohms, 1/2 w., carbon	.13
*URD-057	R5, 7, 9	RESISTOR—2200 ohms, 1/2 w., carbon.	.13
*URD-061	R77	RESISTOR—3.3K ohms, 1/2 w., carbon	.13
*URD-069	R39	RESISTOR—6.8K ohms, 1/2 w., carbon	.13
*URD-081	R28	RESISTOR—22K ohms, 1/2 w., carbon	.13
*URD-089	R14, 15	RESISTOR—47K ohms, 1/2 w., carbon	.13
*URD-095	R76, 78	RESISTOR—82K ohms, 1/2 w., carbon	.13
*URD-097	R11, 18, 31, 38	RESISTOR—100K ohms, 1/2 w., cerbon	.13
*URD-099	R16, 17	RESISTOR—120K ohms, 1/2 w., carbon	.13
*URD-105	R13, 21, 35	RESISTOR—220K ohms, 1/2 w., carbon	.13
*URD-113	R34, 43, 75, 79, 80	RESISTOR—470K ohms, 1/2 w., carbon	.13
*URD-121	R36	RESISTOR—1 meg., 1/2 w., carbon	.13
*URD-129	R10	RESISTOR—2.2 meg., 1/2 w., carbon	.13
*URD-133	R37, 40	RESISTOR—3.3 meg., 1/2 w., carbon	.13
*URD-141	R20	RESISTOR—6.8 meg., 1/2 w., carbon	.13
*URE-081	R26	RESISTOR—22K ohms, 1 w., carbon	.17
*URE-085	R84	RESISTOR—33K ohms, 1 w., carbon	.17
*URF-035	R83	RESISTOR—270 ohms, 2 w., carbon	.17
*URF-057	R3	RESISTOR—2200 ohms, 2 w., cerbon.	.17

PRICES ARE SUGGESTED LIST PRICES AND SUBJECT TO CHANGE WITHOUT NOTICE.
*Parts used on previous models.

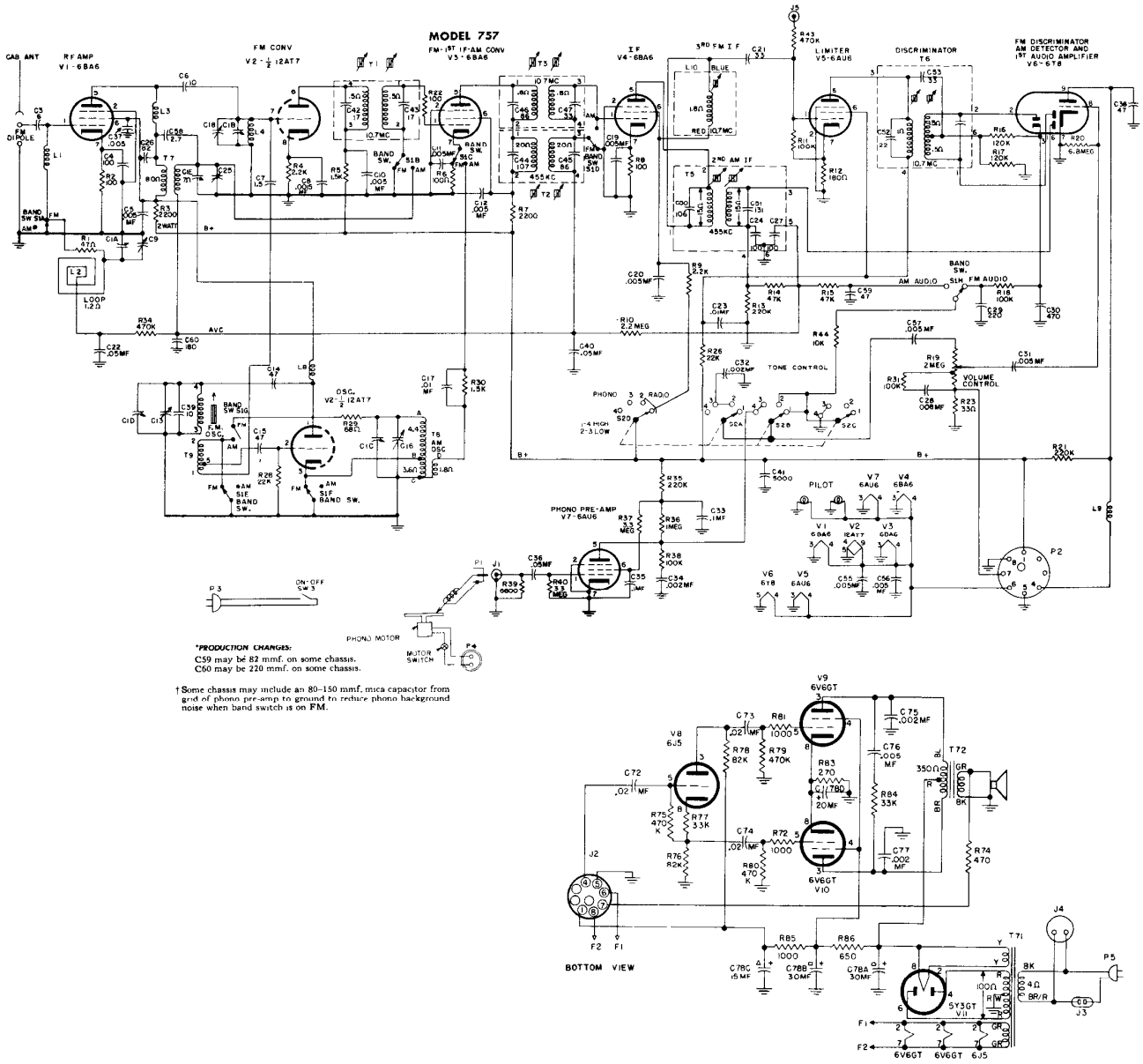

*PRODUCTION CHANGES:

C59 may be 82 mmf. on some chassis.
C60 may be 220 mmf. on some chassis.

† Some chassis may include an 80-150 mmf. mica capacitor from grid of phono pre-amp to ground to reduce phono background noise when band switch is on FM.

MODEL 757
REPLACEMENT PARTS LIST

Cat. No.	Symbol	Description	Unit Price
		CAPACITORS	
		Values are ±10% unless noted	
*RCE-039	C78	Filter, 30-30 mfd @ 300 v., 20 mfd. @ 25 v. electrolytic. . . .	$3.50
*RCN-040	C3	6 mmf., silver mica	.25
*RCN-048	C7	1.5 mmf., ceramic	.20
RCT-052	C1	Tuning gang capacitor (insulated shaft)	8.00
*RCW-026	C8	0015 mfd , ceramic	.60
RCW-1058	C37	10 mmf., ceramic	.60
*RCW-3014	C5, 10, 11, 12, 19, 41, 55, 56	.005 mfd , ceramic	.60
*RCW-3029	C4	100 mmf., ceramic	.25
*RCW-3039	C58	2.7 mmf., ceramic	.25
*UCC-036	C32, 34	.002 mfd , 600 v., paper	.25
*UCC-039	C20, 31	.005 mfd., 600 v., paper	.25
*UCC-040	C17	.01 mfd., 600 v., paper	.25
*UCC-041	C72, 73, 74	.02 mfd., 600 v., paper	.25
*UCC-045	C22, 36, 40	.05 mfd., 600 v., paper	.30
*UCC-048	C33, 35	.1 mfd., 600 v., paper	.45
*UCC-056	C75, 77	002 mfd., 1000 v., paper	.30
*UCC-059	C76	.005 mfd., 1000 v., paper	.30
*UCC-070	C28	.008 mfd., 600 v., paper	.30
*UCG-044	C6	10 mmf., silver mica	.25
*UCG-016	C21	33 mmf., silver mica	.25
*UCG-020	C14, 15, 38, 59	47 mmf., silver mica	.35
*UCG-1026	C26	82 mmf., silver mica	.25
*UCU-044	C30	470 mmf., 500 v., mica	.30
*UCU-536	C29	220 mmf., 500 v., mica	.30
*UCU-1034	C60	180 mmf., mica	.25
		RESISTORS	
*RRW-056	R85, 86	Filter resistor, 650 ohms, 10 w., 1000 ohms, 8 w., w. w.	$1.10
		½ watt, carbon ±10%	
*URD-013	R23	33 ohms	$0.13
*URD-017	R1	47 ohms	.13
*URD-021	R29	68 ohms	.13
*URD-025	R2, 6, 8, 22	100 ohms	.13
*URD-031	R12	180K ohms	.13
*URD-033	R41	220 ohms	.13
*URD-041	R74	470 ohms	.13
*URD-049	R72, 81	1000 ohms	.13
*URD-053	R5, 30	1500 ohms	.13
*URD-057	R4, 7, 9	2200 ohms	.13
*URD-061	R77	3.3K ohms	.13
*URD-069	R39	6.8K ohms	.13
*URD-073	R44	10K ohms	.13
*URD-081	R28	22K ohms	.13
*URD-089	R14, 15	47K ohms	.13
*URD-095	R76, 78	82K ohms	.13
*URD-097	R11, 18, 31, 38	100K ohms	.13
*URD-099	R16, 17	120K ohms	13
*URD-105	R13, 21, 35	220K ohms	.13
*URD-113	R34, 43, 75, 79, 80	470K ohms	13
*URD-121	R36	1 meg.	.13
*URD-129	R10	2.2 meg	.13
*URD-133	R37, 40	3.3 meg.	.13
*URD 141	R20	6.8 meg.	.13
*URE-081	R26	22K ohms 1 watt, carbon, ±10%	.17
*URE-085	R84	33K ohms 1 watt, carbon, ±10%	.17
*URF-035	R83	270 ohms 2 watt, carbon, ±10%	.25
*URF-057	R3	2200 ohms 1 watt, carbon, ±10%	.25
		MISCELLANEOUS ELECTRICAL	
*RJC-001		CONNECTOR—Loop wire connector	$0.05
*RJC-019		CONNECTOR—Speaker wire connector	.02
*RJJ-008	J3	RECEPTACLE—AC power outlet receptacle	.35
*RJP-003	P4	PLUG—AC plug for phono motor	15
*RJP-004	P1	PLUG—Phono audio input plug	10
*RJP 031	P2	PLUG—Inter-chassis cable plug	
*RJS-003		SOCKET—Octal wafer socket, for V8, V9, V10, V11	.20
*RJS 049	J4	RECEPTACLE—Phono motor power receptacle	.25
*RJS-092		SOCKET—7 pin impregnated wafer socket	.20
*RJS-101		JACK—Phono jack	.95
*RJS-118		SOCKET 9 pin socket for V6	.35
*RJS 143		SOCKET 9 pin socket for V2	.25
*RJS 145		SOCKET 7 pin socket for V1, V3, V4, V5	.30
*RJS-147		SOCKET Pilot light socket	15
*RJS-152	J2	SOCKET Inter-chassis cable socket	.30
*RJS-154		SHELL—Cable plug shell	.15

Cat. No.	Symbol	Description	Unit Price
		MISCELLANEOUS ELECTRICAL (Cont'd)	
*RLC-106	T8	TRANSFORMER—BC oscillator transformer	$0.90
*RLC-111	T9	TRANSFORMER—FM oscillator transformer	1.20
*RLI-122	L8	CHOKE—Oscillator plate choke, red, molded, 2.2 uh.	.25
*RLI-124	L3, 9	CHOKE—Audio filter choke, RF plate choke, 18 turns.	.80
*RLI-128	L4	CHOKE—FM RF grid choke, 6 turns	.15
*RLI-129	T7	TRANSFORMER—BC RF transformer	.90
RLL-047	L2	LOOP—BC Antenna loop	1.40
*RRC-152	R19, S2, S3	CONTROL—On-off switch, tone switch, and volume control, 2 meg.	3.50
RSW-087	S1	SWITCH—Band switch	2.40
*RTD-010	T6, C52, C53, C54	TRANSFORMER — FM discriminator transformer, 10.7 mc, capacitors molded in base	4.95
*RTL-079	T2, C44, C45	TRANSFORMER—BC 1st IF transformer, 455 kc, capacitors molded in base	2.75
*RTL-111	T5, C24, C27, C50, C51	TRANSFORMER—BC 2nd IF transformer, 455 kc, capacitors molded in base	2.10
*RTL-112	T1, C42, C43	TRANSFORMER—FM 1st IF transformer, 10.7 mc, capacitors molded in base	1.80
*RTL-113	T3, C46, C47	TRANSFORMER—FM 2nd IF transformer, 10.7 mc, capacitors molded in base	2.25
*RTL-124	L10	CHOKE—3rd IF FM choke	.95
*RTO-094	T72	TRANSFORMER—Output transformer	3.25
*RTP-306	T71	TRANSFORMER—Power transformer	15.00
*RWL-009	P3, 5	CORD—AC line cord and plug.	.70
*S-1212D-7		SPEAKER—12 inch PM speaker	12.95
		MISCELLANEOUS MECHANICAL	
*RAA-002		ARM—Switch arm (for shaft)	$0.20
*RAA-003		ARM—Switch arm (for switch)	.15
*RAD-057		BRACKET FM oscillator transformer mounting bracket	.02
*RDC-032		CORD—Nylon dial cord, 25 yds. bulk	2.50
*RDM-025		WIRE—Dial pointer guide wire	.15
*RDP 058		POINTER—Dial pointer and slide assembly	.45
RDS-105		SCALE—Dial scale printed on chassis cover plate	1.20
*RHC-017		CLIP—Mounting clip for BC oscillator transformer. .	.20
*RHC-034		CLIP—Mounting clip for I F transformers	.05
*RHC-038		CLIP—Mounting clip for BC RF trans.	.02
*RHG-010		GROMMET—Preamp. socket mounting grommet	.05
*RHG-015		GROMMET—Tuning gang mounting grommet	.05
*RHG-029		GROMMET—Speaker lead insulating grommet	.05
*RHI-011		INSULATOR—Strain relief insulator for power chassis power cord, 52" diameter	.15
*RHI-017		INSULATOR—Strain relief insulator for tuner chassis power cord, .47" diameter	.15
*RHJ-006		SLEEVE—Tuning gang mounting sleeve	.05
*RHM-001		WASHER—"C" washer for tuning shaft	.05
*RHN-015		NUT—Dial guide wire retaining nut.	.02
*RHS-066		SCREW—Hex head screw for tuning gang mounting	.02
*RJS-012		PLATE—Mounting plate for filter capacitor	.10
*RMS-119		SPRING—Dial cord tension spring	.15
*RMS 221		SPRING—Record changer pan slide spring	.25
*RMU-066		SHAFT Band switch drive shaft	.75
*RMU-067		SHAFT—Tuning shaft	.25
*RQB-001		BRUSH—Stylus brush	.10
		CABINET PARTS	
RAB-166		BACK—Cabinet back for Model 757	$2.40
RAC-098		PAN—Record changer base pan	10.50
†RAV-168		CABINET—Mahogany cabinet for Model 757	105.00
*RDE-098		ESCUTCHEON—Plastic dial escutcheon, includes dial window	4.25
*RDK 212		KNOB Changer pan pull-out knob	.45
*RDK-233		KNOB Tuning knob	.20
*RDK-234		KNOB—Band switch knob, with arrow	.35
*RDK-235		KNOB Volume control knob	.35
*RDK-236		KNOB—Tone switch knob, with dot	.20
*RHS 057		SCREW—Wood screw for cabinet back	.02
*RHS-058		SCREW 7 16 inch brass plated wood screw for top of escutcheon	.02
*RHS 064		SCREW—⅜ inch brass plated wood screw for bottom of escutcheon	.02
*RHS-077		SCREW—Wood screw for mounting loop	.02
*RMM-153		SLIDE—Phono drawer slide	2.75

PRICES ARE SUGGESTED LIST PRICES AND SUBJECT TO CHANGE WITHOUT NOTICE.
*Parts used on previous models
†Special discount applies

MODEL 850

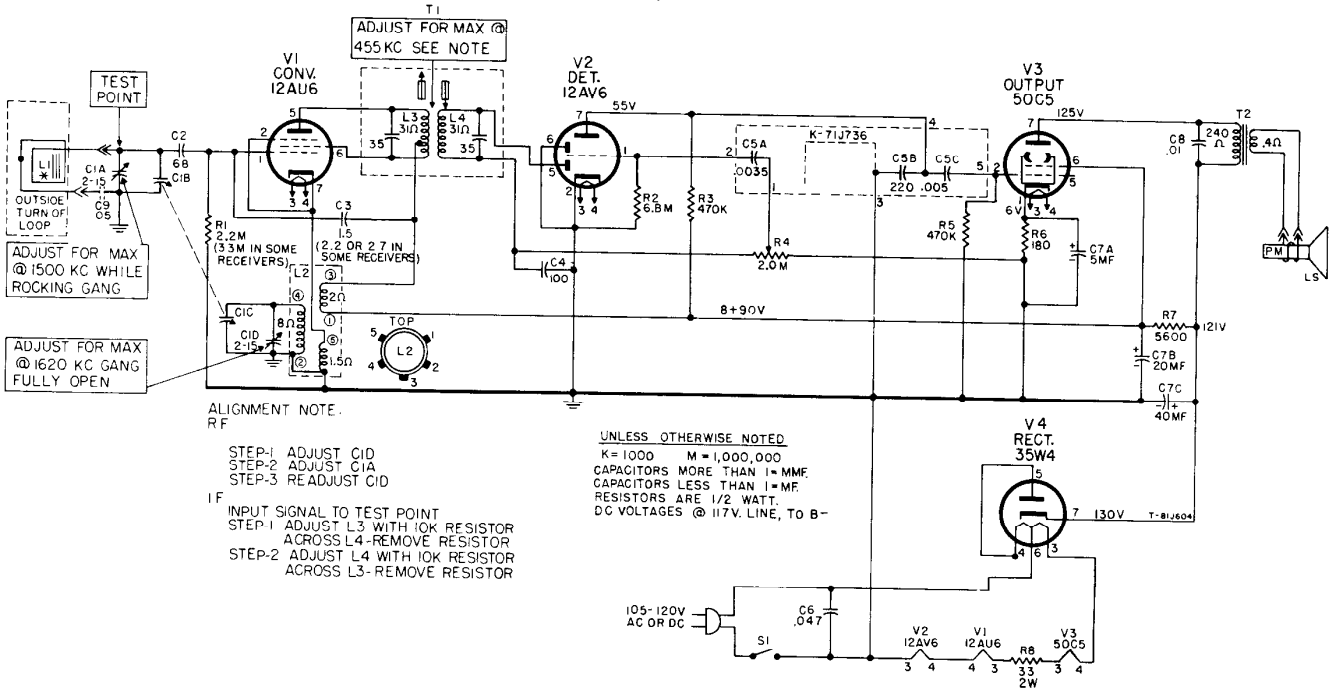

ALIGNMENT NOTE.

RF

STEP-1 ADJUST C1D
STEP-2 ADJUST C1A
STEP-3 READJUST C1D

IF

INPUT SIGNAL TO TEST POINT
STEP-1 ADJUST L3 WITH 10K RESISTOR ACROSS L4 - REMOVE RESISTOR
STEP-2 ADJUST L4 WITH 10K RESISTOR ACROSS L3 - REMOVE RESISTOR

UNLESS OTHERWISE NOTED

K = 1000 M = 1,000,000
CAPACITORS MORE THAN 1 = MMF.
CAPACITORS LESS THAN 1 = MF.
RESISTORS ARE 1/2 WATT.
DC VOLTAGES @ 117V. LINE, TO B-

REPLACEMENT PARTS LIST - 850

CAT. NO.	SYMBOL	DESCRIPTION	PRICE
CAPACITORS			
RCE-216	C7A, B, C	5mf., 25V, 20mf., 40mf., 150V, electrolytic	$2.10
RCN-048	C3	1.5mmf., 20%, 500V, cer	.20
RCN-053	C6	.047mf., +40 −10%, 600V, molded	.35
RCT-097	C1A, B, C, D	Tuning—Two-gang	3.10
RCW-3036	C5A, B, C	Bullplate—.0035mf., 200mf., .005-mf	.80
RCW-3079	C4	100 mmf., 20%, 500V, ceramic	.25
RCW-3186	C8	.01mf., +40 −10%, 400V	.30
UCG-1024	C2	68mmf., 10%, 500V	.35
	C9	.05mf., +40 −10%, 200V, paper	
POTENTIOMETER			
n-RRC-376	R4, S1	VOLUME CONTROL AND SWITCH—2 megohms	1.25
RESISTORS (10%, CARBON)			
	R1	2.2 megohms, ½ w. (3.3 megohms some receivers)	
	R2	6.8 megohms, ½ w.	
	R3, 5	470K, ½ w.	
	R6	180 ohms, ½ w.	
	R7	5600 ohms, ½ w.	
	R8	33 ohms, 2 w	

CAT. NO.	SYMBOL	DESCRIPTION	PRICE
COILS AND TRANSFORMERS			
RLC-136	L2	COIL—Oscillator	$1.00
RTL-184	T1	TRANSFORMER—I-F	1.50
RTO-176	T2	TRANSFORMER—Output	2.05
MISCELLANEOUS			
RJJ-010		A-C INTERLOCK—Receptacle for power cord	.20
RJS-221		SOCKET—Tube socket, 7-pin for printed circuit	.25
RMS-356		CLIP—Captive, for RDK-585	.05
ROP-035		SPEAKER—4-inch, PM	3.25
RWL-027		POWER CORD—6-ft. brown	1.20
CABINET AND APPEARANCE ITEMS			
RAB-271		LOOP AND BACK ASSEMBLY	1.50
RAU-449		CABINET—Plastic, dark brown	4.50
RDK-425		KNOB—For volume control	.25
n-RDK-585		KNOB—For tuning control, clear	1.00
n-RYN-043		DISK—Decorative, mounts behind RDK-585	.50

"n"—DENOTES PARTS NOT PREVIOUSLY CATALOGED

PRICES ARE SUGGESTED LIST PRICES AND SUBJECT TO CHANGE WITHOUT NOTICE

860, 861, 862

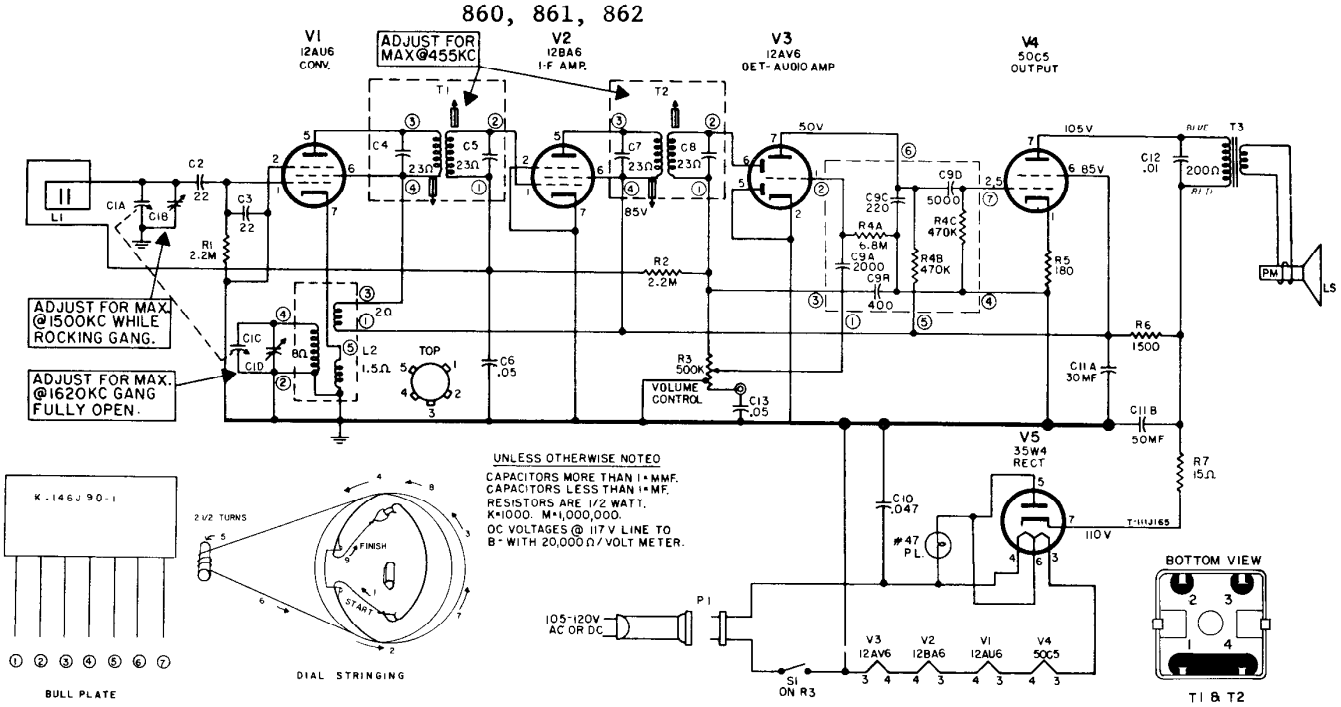
V1
12AU6
CONV.
ADJUST FOR MAX@455KC
V2
12BA6
I-F AMP.
V3
12AV6
DET-AUDIO AMP
V4
50C5
OUTPUT
V5
35W4
RECT
T1
T2
T3
L1
C1A
C1B
C2
22
C3
22
R1
2.2M
C4
23Ω
C5
23Ω
C7
23Ω
C8
23Ω
85V
50V
105V
85V
C9C
220
C9D
5000
R4A
6.8M
R4C
470K
C9A
2000
R4B
470K
C9B
400
R5
180
C12
.01
200Ω
PM
LS
R2
2.2M
ADJUST FOR MAX. @1500KC WHILE ROCKING GANG.
ADJUST FOR MAX. @1620KC GANG FULLY OPEN.
C1C
C1D
8Ω
L2
1.5Ω
TOP
C6
.05
R3
500K
VOLUME CONTROL
C13
.05
R6
1500
C11A
30MF
C11B
50MF
R7
15Ω
C10
.047
#47 P.L.
110V
T-111J165
UNLESS OTHERWISE NOTED
CAPACITORS MORE THAN 1 MMF.
CAPACITORS LESS THAN 1 MF.
RESISTORS ARE 1/2 WATT.
K=1000. M=1,000,000.
DC VOLTAGES @ 117 V LINE TO B- WITH 20,000 Ω/VOLT METER.
K-146J90-1
BULL PLATE
2 1/2 TURNS
FINISH
START
DIAL STRINGING
105-120V AC OR DC
P1
S1 ON R3
V3 12AV6
V2 12BA6
V1 12AU6
V4 50C5
BOTTOM VIEW
T1 & T2

REPLACEMENT PARTS LIST—Models 860, 861 and 862

CAT. NO.	SYMBOL	DESCRIPTION	PRICE
		CAPACITORS	
RCC-078	C6, C13	.05 mf., +40 −20%, @ 400 V	$0.40
RCE-207	C11A, B	30 50 mf., @ 150 V	1.90
RCN-109	C10	.047 mf., ±20%, @ 600 V, 150° C.	.40
n-RCT-101	C1A, B, C, D	TUNING CAPACITOR—Two gang	3.40
RCW-3186	C12	.01 mf., +150 −10%, 450 V	.30
RCW-3207	C9A, B, C, D	BULLPLATE	.30
	C2, C3	.22 mmf., ±20%, 500 V.	
		POTENTIOMETER	
n-RRC-385	R3, S1	VOLUME CONTROL 500K and PUSH PULL SWITCH	1.90
		RESISTORS	
	R1	2.2 megohms, ±20%, ½ w	
	R2	2.2 megohms, ±20%, ½ w	
	R4A, B, C	BULLPLATE—For "C" Nos. see above	
	R5	180 ohms, ±10%, ½ w	
	R6	1500 ohms, ±20%, 2 w	
	R7	15 ohms, ±20%, ½ w	
		COILS AND TRANSFORMERS	
RLC-135	L2	OSCILLATOR COIL	1.00
RLL-064	L1	ANTENNA, IRON CORE	1.00
RTL-183	T1, T2	I-F TRANSFORMER	1.65
RTO-176	T3	OUTPUT TRANSFORMER	2.05
		MISCELLANEOUS	
RDC-032		DIAL CORD—25 yards	2.50

CAT. NO.	DESCRIPTION	PRICE
	MISCELLANEOUS (Cont'd)	
RHC-060	PLASTIC CLAMP, ANTENNA	$0.15
n-RHC 120	CLIP, TUNING SHAFT	.04
n-RHE-022	SPACER, GANG PULLEY	.15
RHS-110	TUBE SHIELD	.15
n-RJS-232	TUBE SOCKET (W/CENTER SHIELD)	.25
RJS-237	TUBE SOCKET (W/O CENTER SHIELD)	.15
n-RJS-238	PILOT LAMP SOCKET	.45
n-RMB-037	BUSHING (INSULATOR TUNING SHAFT)	.04
RMS-130	DIAL CORD SPRING	.15
RMS-374	GROUND STRAP (TUBE SOCKET)	.02
n-RMW-089	PULLEY	.15
n-RMX-347	TUNING DRIVE SHAFT AND BUSHING ASSEMBLY	.70
	CABINET AND APPEARANCE ITEMS	
n-RAB-320	CABINET BACK (Mahogany)—Model 860	5.35
n-RAB-321	CABINET BACK (Red)—Model 861	5.35
n-RAB-322	CABINET BACK (Turquoise)—Model 862	5.35
n-RAC-201	CABINET FRONT (Antique White) NAMEPLATE STRIP	4.10
n-RAL-024	BEZEL (Gold)	.85
n-RDE-173	ESCUTCHEON TRIM STRIP (RICH LO BRASS)	2.30
n-RDE-174	TRIM STRIP (RICH LO BRASS)	.55
RDK-425	KNOB, TUNING AND VOLUME CONTROL—(Clear and Gold)	.35
n-RDK-597	DIAL, TUNING (Calibrated)	1.95
RHC-095	CLIP, TUBULAR (Spkr mounting)	.05
n-RHC-118	CLIP, PILOT LAMP	.05
n-RHC-119	CLIP, CABINET	.04
RHW-014	WASHER (Flat)	.02
RJJ-010	INTERLOCK	.20
RJS-182	PHONO JACK	.15
RMS-356	CLIP, KNOB	.05
n-ROP-038	SPEAKER—5¼ inch, P.M.	5.55
RWL-019	POWER CORD—6 ft., brown	1.65
n-RYN-046	NAMEPLATE STRIP	.70

ITEMS NOT LISTED BY CATALOG NUMBER ARE COMMON ITEMS OBTAINABLE FROM ANY RADIO PARTS JOBBER

PRICES ARE SUGGESTED LIST PRICES AND ARE SUBJECT TO CHANGE WITHOUT NOTICE

"n" DENOTES PARTS NOT PREVIOUSLY CATALOGED

MODELS 870, 871

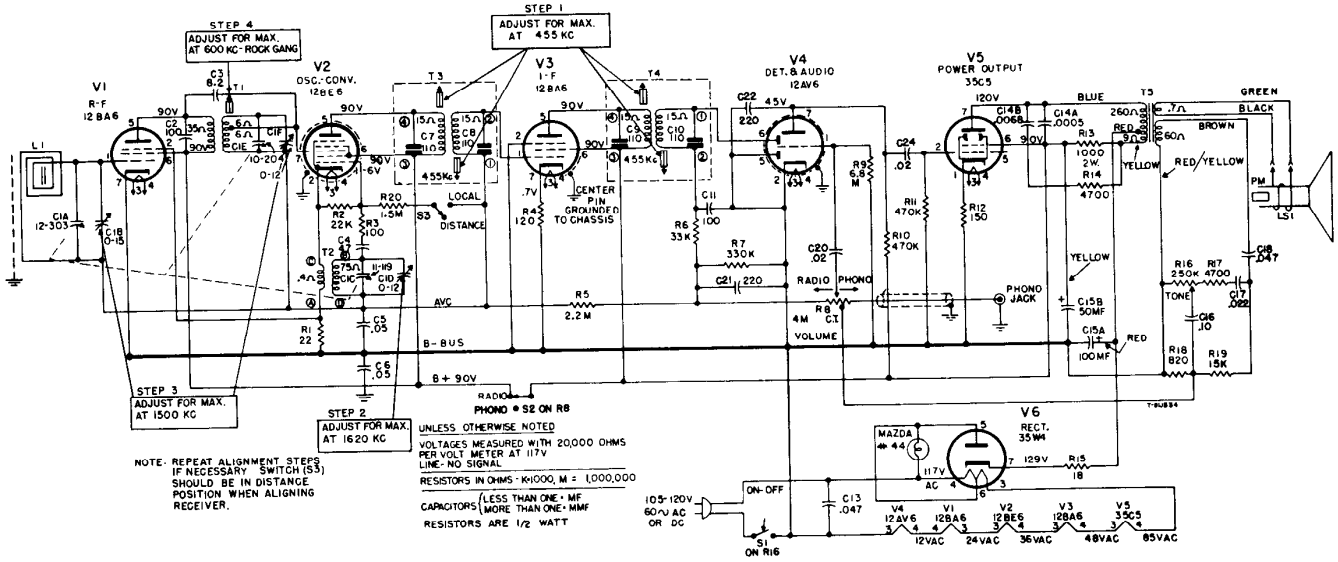

PARTS LIST—MODELS 870, 871

CAT. NO.	SYMBOL	DESCRIPTION	PRICE
RESISTORS (10%, ½ W. CARBON) (Cont'd)			
	R3	100 ohms	
	R4	120 ohms	
	R5	2.2 megohms	
	R6	33 K	
	R7	330 K	
	R9	6.8 megohms	
	R10, 11	470 K	
	R12	150 ohms	
	R13	1000 ohms, 2W	
	R14, 17	4700 ohms	
	R15	18 ohms	
	R18	820 ohms	
	R19	15 K	
	R20	1.5 megohms	
COILS AND TRANSFORMERS			
RLB-034	T1	COIL—R-F coil	$1.35
RLC-126	T2	COIL—Oscillator coil	.90
RLL-060	L1	LOOP—Antenna, wound on ferrite rod 7 x ½ in.	1.20
RTL-143	T3, 4	TRANSFORMER—I-F	1.80
RTO-145	T5	TRANSFORMER—Audio output	3.40
MISCELLANEOUS ELECTRICAL			
RJC-004		CONNECTOR—Small female, on audio output leads	.02
RJC-027		CONTACT—Dip solder contact includes tube pin clip for tube recep.	.03
RJC-028		TERMINAL—Dip solder terminal used on RLC-126	.02
RJC-030		I-F CLIP—Dip solder contact & clip for i-f trans., spring brass, connects pin 5—12BE6, 1—12BA6 & 5—12BA6	.02
RJC-031		I-F CLIP—Dip solder contact & clip for i-f trans., spring brass connects pins 5—12BE6, 1—12BA6, 5—12BA6	.02
RJS-182		PHONO JACK—Phono input socket, .687 mounting center	.15
RMS-296		COMPRESSION RING	.30
RSS-009		SWITCH—Local-distance switch, S3	.70
RWL-009		CORD—Power cord & plug, brown, 870	.75
RWL-026		CORD—Power cord & plug, white, 871	.70
RWX-055		PILOT LAMP SOCKET ASSEMBLY	6.35
S-625D7		SPEAKER—6½ inch PM: 3.2 ohm voice coil	
CAPACITORS			
RCE-166	C15A, B	100–50 mf., 150 V, electro.	$2.60
RCN-053	C13	.047 mf., ±20%, 600 V, molded	.35
RCT-082	C1	TUNING—Three gang with drum & dial beam bracket	5.25
RCW-3075	C4	47 mmf., ±20%, ceramic	.25
RCW-3079	C2, 11	100 mmf., ±20%, ceramic	.25
RCW-3104	C14A, B	.0005 mf., .0068 mf., ceramic	.25
RCW-3195	C21, 22	220 mmf., disk ceramic	.25
RCW-3214	C3	8.2 mmf., ceramic	.20

The following capacitors are common parts, readily obtainable from any Radio Parts Jobber, and are therefore not listed by catalog number.

C5, 6	.05 mf., 600 V, paper	
C16	.1 mf., ±20%, 200 V, paper	
C17	.022 mf., ±20%, 200 V, paper	
C18	.047 mf., ±20%, 200 V, paper	
C20, 24	.02 mf., +40 −10%, 400 V, paper	

CAT. NO.	DESCRIPTION	PRICE
MISCELLANEOUS MECHANICAL		
RDC-032	DIAL CORD—Drive cord, .28 in. dia. Newton Line Co. NF-28 or equiv. 25 yards	$2.50
RHC-024	CLIP—⅞ in. electro. mtg. clip	.10
RHC-080	CLIP—Sub-chassis	.05
RHE-014	EYELET—Tube receptacle wafer mtg.	.01
RHE-016	EYELET—I-F trans. wafer mtg.	.01
RHG-018	GROMMET—For mtg. tuning gang	.05
RHI-017	STRAIN RELIEF—Two-piece strain relief for power cord	.15
RHJ-005	SPACER—Spacer bushing & sleeve for mtg. tuning cap. .230 O.D. x 168 I.D.	.02
RHS-041	SCREW—No. 6 ⅜ in. screw for mounting speaker	.02
RHS-108	SHIELD—Pilot light shield	.05
RHS-109	SPACER—Black Textolite, used in chassis tube holes	.20
RHS-110	SHIELD—Tube shield, metal, 1¾ in. long for 12AV6 & 12BE6 tubes	.15
RHS-118	EYELET PIN—Eyelet and soldering point used to mount 1st i-f socket wafer	.05
RHS-126	LOOP SHIELD—Electrostatic shield over ferrite antenna rod RLL-060	.50
RII-081	WAFER—Part of i-f trans. recep. 1⅛ x ⅞ in.	.05
RII-082	WAFER—Part of tube receptacle 1 1/32 in. diameter	.05
RII-084	COVER—For antenna loop	.60
RII-090	HEAT SHIELD—1 in. x 1 in. asbestos base phenolic shield between chassis tube hold spacer, RHS-109 & Textolite sub-chassis used at 35W4 and 35C5 tubes	.05
RII-091	BOARD—Sub chassis, bare	.60
RMS-118	SPRING—Dial cord tension spring	.10
RMW-070	PULLEY—½ in. idler pulley, fits on ½ in. volume control shaft	.05
RMX-322	SHAFT—Drive shaft and bushing assembly	.45
CABINET AND APPEARANCE ITEMS		
RAB-241	CABINET BACK—Used with RHS-126	.30
n-RAG-099	GRILLE—Antique white, Model 870	
n-RAG-100	GRILLE—Tan, Model 871	
n-RAL-023	BEZEL—Gold, Models 870, 871	
RAU-393	CABINET—Ivory, plastic, Model 871	8.00
RAU-454	CABINET—Mottled mahogany, plastic, Model 870	8.50
n-RDG-015	DIAL BACKPLATE ASS'Y—White & Brown	
RDK-425	KNOB—Tuning & Volume, Clear & Gold	.35
RDK-507	KNOB—Tone, Clear and Gold with White dot	.35
n-RDP-089	DIAL POINTER ASSEMBLY	
n-RDW-110	WINDOW—Dial window & scale, 870	
n-RDW-111	WINDOW—Dial window & scale, 871	
RYN-019	MEDALLION—Musaphonic emblem	.35
POTENTIOMETERS		
RRC-331	R8, S2	VOLUME CONTROL & RADIO PHONO SW., 4 meg.	1.55
RRC-332	R16, S1	TONE CONTROL & ON-OFF SWITCH, 250 K	1.70

All resistors used in this receiver are common ½ watt, carbon types, which are readily obtainable from any Radio Parts Jobber and are therefore not listed by catalog number.

RESISTORS (10%, ½ W. CARBON)		
R1	22 ohms	
R2	22 K	

875, 876, 877

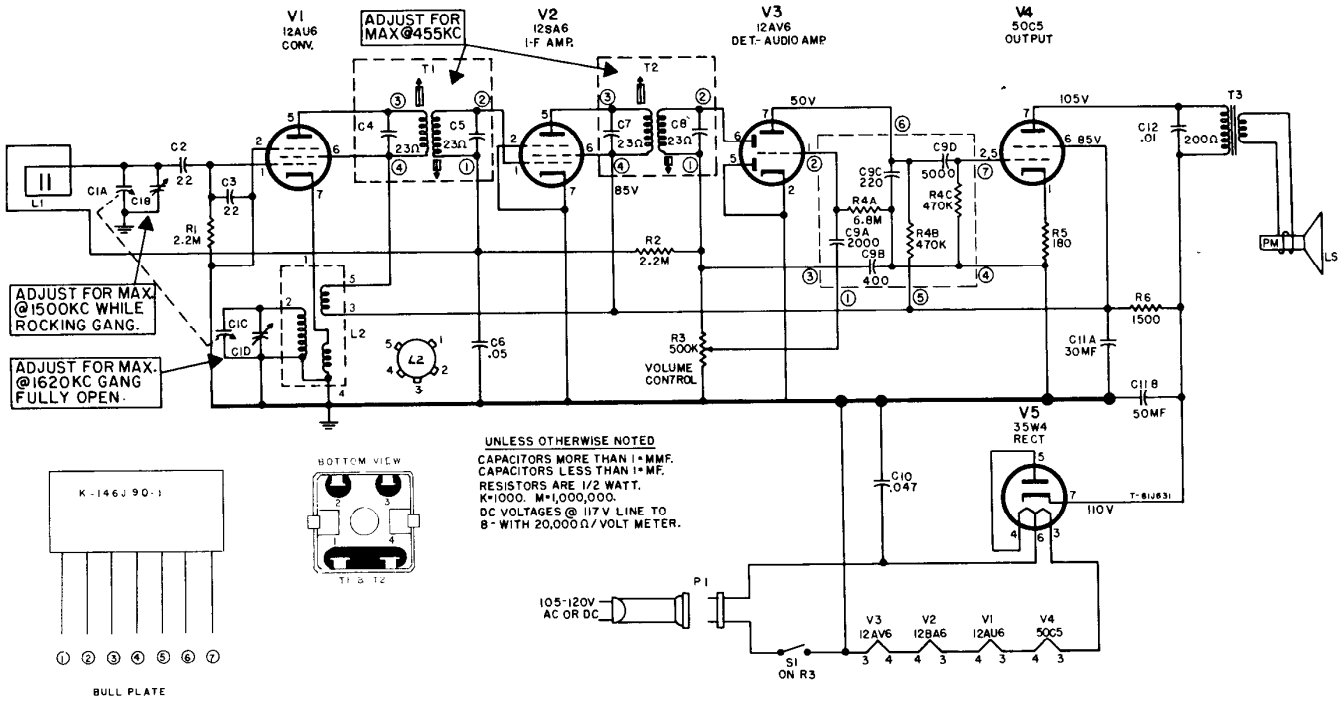
V1
12AU6
CONV.
ADJUST FOR
MAX@455KC
V2
12SA6
I-F AMP.
V3
12AV6
DET.- AUDIO AMP
V4
50C5
OUTPUT
T1
T2
T3
50V
105V
85V
C1A
C1B
C2
22
C3
22
R1
2.2M
C4
23Ω
C5
23Ω
C7
23Ω
C8
23Ω
C9C
220
C9D
5000
R4A
6.8M
C9A
2000
C9B
400
R4B
470K
R4C
470K
R5
180
R2
2.2M
C12
.01
200Ω
PM
LS
R6
1500
C11A
30MF
C11B
50MF
ADJUST FOR MAX.
@1500KC WHILE
ROCKING GANG.
ADJUST FOR MAX.
@1620KC GANG
FULLY OPEN.
C1C
C1D
L2
C6
.05
R3
500K
VOLUME
CONTROL
V5
35W4
RECT
C10
.047
110V
T-61J631
UNLESS OTHERWISE NOTED
CAPACITORS MORE THAN 1 MMF.
CAPACITORS LESS THAN 1 MF.
RESISTORS ARE 1/2 WATT.
K=1000. M=1,000,000.
DC VOLTAGES @ 117 V LINE TO
B- WITH 20,000 Ω / VOLT METER.
BOTTOM VIEW
T1 & T2
K-146J90-1
BULL PLATE
P1
105-120V
AC OR DC
S1
ON R3
V3
12AV6
V2
12BA6
V1
12AU6
V4
50C5

REPLACEMENT PARTS LIST—MODELS 875, 876 & 877

CAT. NO.	SYMBOL	DESCRIPTION	PRICE
CAPACITORS			
RCC-086	C6	.05 mfd., @ 200 V, paper	$0.30
RCE-207	C11A, B	30 mfd., 50 mfd., @ 150 V.	1.90
RCN-053	C10	.047 mfd., @ 600 V, molded	.35
RCT-093	C1A, B, C, D	Tuning gang	3.40
RCW-3186	C12	.01 mfd., @ 450 V, ceramic	.30
RCW-3196	C2, 3	22 mmf., @ 500 V, ceramic	.20
RCW-3207	C9A, B, C, D R4A, B, C	Coupling network	1.00
POTENTIOMETER			
n-RRC-374	R3	VOLUME CONTROL AND SWITCH—500 K ohms	1.25

All resistors are common, 10%, carbon types, which are obtainable through any Radio Parts Jobber and are therefore not listed by catalog number.

	R1, 2	2.2 megohms, ½ watt	
	R5	180 ohms, ½ watt	
	R6	1500 ohms, 2 watts	
COILS & TRANSFORMERS			
RLC-135	L2	COIL—Oscillator coil	1.00
RLL-064	L1	COIL—Iron core loop antenna	1.00
RTL-183	T1, 2	TRANSFORMER—I-F	1.65
RTO-176	T3	TRANSFORMER—Output	2.05

CAT. NO.	DESCRIPTION	PRICE
MISCELLANEOUS ITEMS		
RHC-060	CLAMP—Plastic clamp (antenna mtg.)	$0.15
RHC-095	CLIP—For speaker mounting	.05
RHS-110	SHIELD—Tube shield for V3	.15
RHS-161	SHIELD—Flat, mounted on V2 socket center pin	.10
n-RJJ-014	RECEPTACLE—Power cord receptable	.15
RJS-221	SOCKET—Tube socket	.25
RJS-222	SOCKET—Tube socket with ground clip for V3	.25
RMS-356	CLIP—For tuning knob	.05
RMS-374	CLIP—Ground clip for molded socket	.02
ROP-033	LOUDSPEAKER—4-in., P.M.	4.60
n-RWL-037	POWER CORD—Brown, 6 feet long	1.00
CABINET & APPEARANCE ITEMS		
n-RAB-313	CABINET BACK	.20
n-RAU-469	CABINET—Mahogany, Model 875	6.40
n-RAU-470	CABINET—Antique White, Model 876	6.40
n-RAU-471	CABINET—Pink, Model 877	6.40
n-RDG-016	DIAL PLATE	.80
n-RDK-588	KNOB—Tuning knob, clear with insert	1.30
RDK-425	KNOB—Volume, clear with insert	.35

MODEL 895

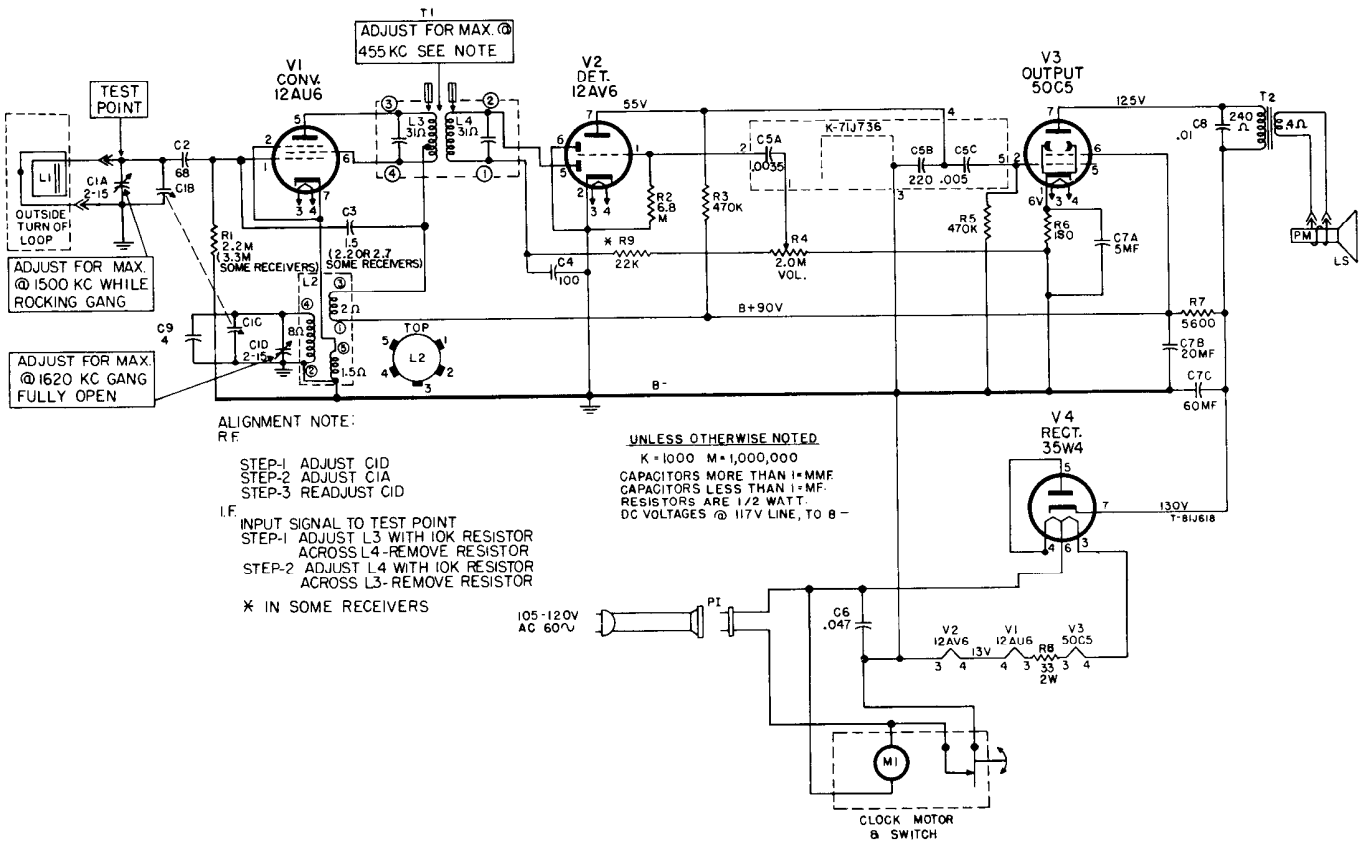
T1
ADJUST FOR MAX. @ 455 KC SEE NOTE
V1 CONV. 12AU6
V2 DET. 12AV6
V3 OUTPUT 50C5
V4 RECT. 35W4
TEST POINT
OUTSIDE TURN OF LOOP
L1
C1A 2-15
C1B
C2 68
ADJUST FOR MAX. @ 1500 KC WHILE ROCKING GANG
ADJUST FOR MAX. @ 1620 KC GANG FULLY OPEN
C1C
C1D 2-15
C9 4
R1 2.2M (3.3M SOME RECEIVERS)
C3 1.5 (2.2 OR 2.7 SOME RECEIVERS)
L2
2Ω
8Ω
1.5Ω
TOP
L3 31Ω
L4 31Ω
55V
R2 6.8 M
R3 470K
* R9 22K
C4 100
R4 2.0M VOL.
K-71J736
C5A .0035
C5B C5C 220 .005
R5 470K
R6 180
C7A 5MF
125V
T2
C8 .01
240 Ω
8.4Ω
PM
LS
B+90V
R7 5600
C7B 20MF
C7C 60MF
B-
130V
T-81J618
ALIGNMENT NOTE:
R.F.
STEP-1 ADJUST C1D
STEP-2 ADJUST C1A
STEP-3 READJUST C1D
I.F.
INPUT SIGNAL TO TEST POINT
STEP-1 ADJUST L3 WITH 10K RESISTOR ACROSS L4 - REMOVE RESISTOR
STEP-2 ADJUST L4 WITH 10K RESISTOR ACROSS L3 - REMOVE RESISTOR
* IN SOME RECEIVERS
UNLESS OTHERWISE NOTED
K = 1000 M = 1,000,000
CAPACITORS MORE THAN 1 = MMF
CAPACITORS LESS THAN 1 = MF.
RESISTORS ARE 1/2 WATT.
DC VOLTAGES @ 117V LINE, TO B -
105-120V AC 60~
P1
C6 .047
V2 12AV6
V1 12AU6
V3 50C5
13V
R8 33 2W
M1
CLOCK MOTOR & SWITCH

CAPACITORS

CAT. NO.	SYMBOL	DESCRIPTION	PRICE
n-RCE-217	C7A, B, C	5mf., @ 25V., 20mf., and 60mf., @ 150V, electrolytic	$2.00
RCN-048	C3	1.5mmf., 20%, 500V., ceramic	.20
RCN-053	C6	.047mf., +40−10%, 600 V., molded	.35
RCT-093	C1A, B, C, D	TUNING CAPACITOR—Two-gang	3.40
RCW-3036	C5A, B, C	Bullplate—.0035mf., 220 mmf., .005mf.	.80
RCW-3079	C4	100mmf., 20%, 500V., ceramic	.25
RCW-3186	C8	.01mf., +40−10%, 400V	.30
n-RCW-3209	C9	4mmf., ±20%, 500V., ceramic	.25
UCG-1024		68mmf., 10%, 500V.	.35

POTENTIOMETER

CAT. NO.	SYMBOL	DESCRIPTION	PRICE
n-RRC-335	R4	VOLUME CONTROL—2 megohms	1.00

RESISTORS

All resistors used in this receiver are a common carbon type and are readily obtainable at any Radio Parts Jobber. For values and symbol numbers, refer to the attached schematic diagram.

COILS & TRANSFORMERS

CAT. NO.	SYMBOL	DESCRIPTION	PRICE
RLC-136	L2	OSCILLATOR COIL	$1.00
RLL-068	L1	ANTENNA LOOP	1.00
RTL-184	T1	I-F TRANSFORMER	1.50
RTO-176	T2	OUTPUT TRANSFORMER	2.05

MISCELLANEOUS

CAT. NO.	SYMBOL	DESCRIPTION	PRICE
RHC-095		CLIP—Tubular	.05
RHC-103		CLAMP—Plastic for mtg. antenna	.15
RJJ-010		A-C INTERLOCK—Receptacle for power cord	.20
RJS-221		SOCKET—Tube socket, 7-pin for printed circuit	.25
RMS-356		CLIP—Captive—for tuning knob	.05
RWL-027		POWER CORD—6 feet, brown	1.20
n-RZC-055		CLOCK ASSEMBLY—Charcoal	9.40
ROP-035		SPEAKER—4-inch, PM	3.25

CABINET & APPEARANCE ITEMS

CAT. NO.	SYMBOL	DESCRIPTION	PRICE
RDK-357		KNOB—Volume, dark brown	.30
n-RDK-516		KNOB—Tuning, dark brown, with gold numerals	1.25
RZK-021		KNOB—Clock, dark brown	.10
n-RZW-024		CRYSTAL—Clock, clear	.75
n-RAB-283		CABINET BACK	.20
n-RAU-453		CABINET—Plastic, Ivory	5.60

MODELS 900, 902, 903

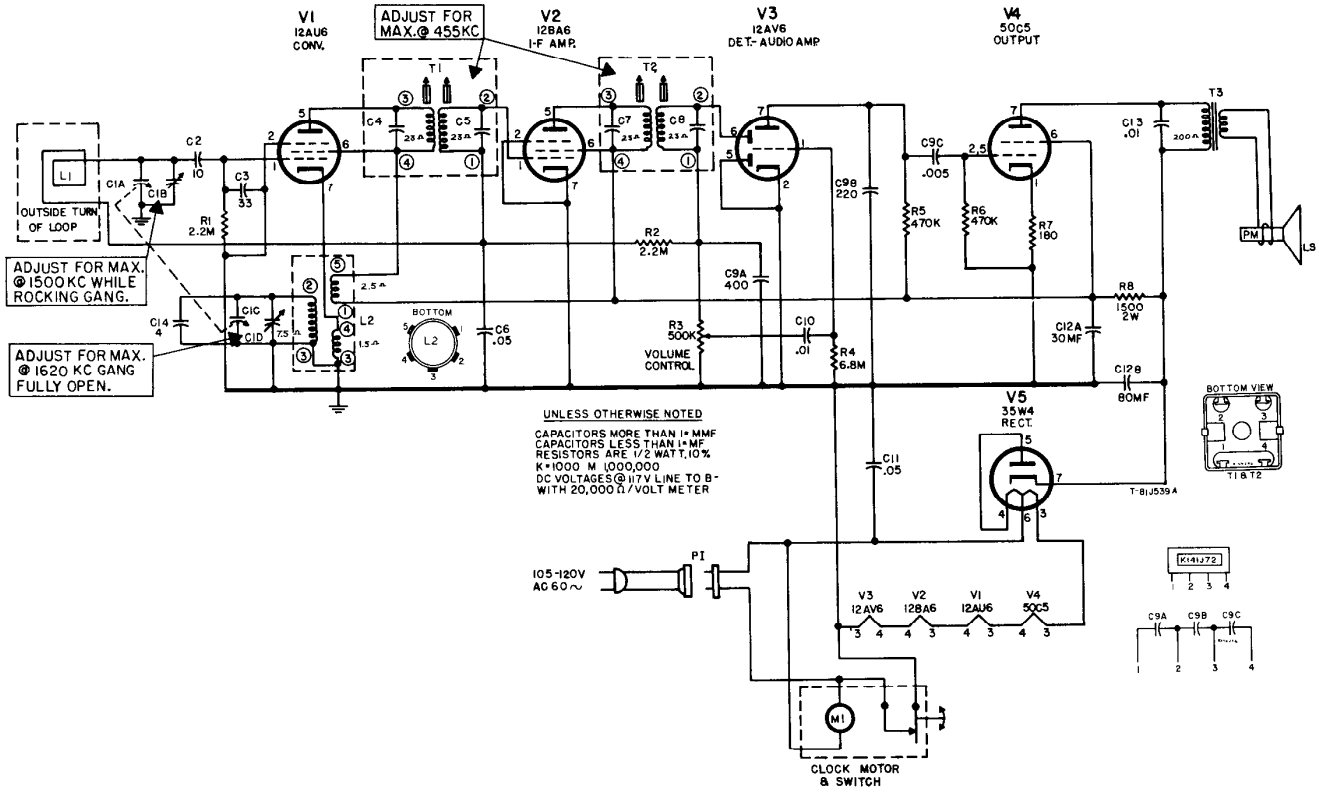

REPLACEMENT PARTS LIST
Models 900, 902, 903

All resistors and capacitors shown in this parts list without catalog numbers are common items available from your Radio Parts Jobber.

CAT. NO.	SYM-BOL	DESCRIPTION	UNIT PRICE
CAPACITORS			
	C6	.05 mfd., 200 V, paper	
	C11	.047 mfd., 600 V, molded	
	C10, 13	Ceramic disc., .01 mfd., @450 V	
n-RCE-215	C12A, B	30 mfd., 150 V; 75 mfd., 150 V, electrolytic	$2.00
RCT-083	C1A, B, C, D	Tuning gang	3.65
RCW-3127	C2	Ceramic, 10 mmf.	.25
RCW-3177	C9A, B, C, D	Bullplate, 400 mmf., 220 mmf., and 5000 mmf.	.55
RCW-3178	C3	Ceramic, 33 mmf.	.15
n-RCW-3204	C14	Ceramic, 4 mmf.	.20
COILS AND TRANSFORMERS			
RLC-133	L2	COIL—Oscillator coil	1.10
RTL-174	T1, 2	TRANSFORMER—I-F transformer	1.50
RTO-177	T3	TRANSFORMER—Output transformer	1.95
POTENTIOMETER			
n-RRC-323	R3	Volume control, 500 K ohms	1.00
RESISTORS			
	R1, 2	2.2 megohm, ±10%, ½ watt carbon	
	R4	6.8 megohm, ±10%, ½ watt carbon	
	R5, 6	470 K ohms, ±10%, ½ w. carbon	
	R7	180 ohms, ±10%, ½ watt, carbon	
	R8	1500 ohms, ±10%, 2 watt, carbon	
MISCELLANEOUS ITEMS			
n-RHC-095		CLIP—Tubular clip 3/32" for clock mounting	.05
RHS-110		SHIELD—Tube shield for V3	.15
RHS-115		SCREW—Ivory speaker mounting screw for Model 902	$0.05
n-RHS-152		SCREW—Brown speaker mounting screw for Model 900	.10
n-RHS-153		SCREW—Blue speaker mounting screw for Model 903	.10
RJJ-010		INTERLOCK—Power cord interlock	.20
RJS-221		SOCKET—Tube socket without ground clip	.25
RJS-222		SOCKET—Tube socket with ground clip for V3	.25
ROP-035		SPEAKER—4" loudspeaker	3.25
RWL-027		POWER CORD—6-ft power cord with interlock	1.20
n-RZC-048		CLOCK ASSEMBLY—Telechron C88G34	9.50
CABINET AND APPEARANCE ITEMS			
RAB-269		BACK—Back and loop assembly	1.25
RAG-049		GRILLE CLOTH—Grille cloth assembly, Maroon, for Model 900	.45
RAG-051		GRILLE CLOTH—Grille cloth assembly, Ivory, for Model 902	.45
n-RAG-085		GRILLE CLOTH—Grille cloth assembly, Blue, for Model 903	.45
n-RAU-441		CABINET—Mahogany plastic cabinet for Model 900	7.50
n-RAU-442		CABINET—Ivory plastic cabinet for Model 902	7.50
n-RAU-443		CABINET—Blue plastic cabinet for Model 903	7.50
RDK-295		KNOB—Ivory volume control knob for Model 900	.25
RDK-357		KNOB—Brown volume control knob for Model 902	.30
n-RDK-500		KNOB—Ivory tuning knob for Model 900	1.30
n-RDK-501		KNOB—Brown tuning knob for Model 902	1.30
n-RDK-502		KNOB—Antique white tuning knob for Model 903	1.30
n-RDK-503		KNOB—Antique white volume control knob for Model 903	.20
RMS-356		CLIP—To captivate tuning knob on cabinet	.05
RZK-021		KNOB—Brown clock knob for Model 902	.10
RZK-025		KNOB—Ivory clock knob for Model 900	.10
n-RZK-031		KNOB—Antique white clock knob for Model 903	.10
n-RZW-025		CRYSTAL—Crystal for clock	.75

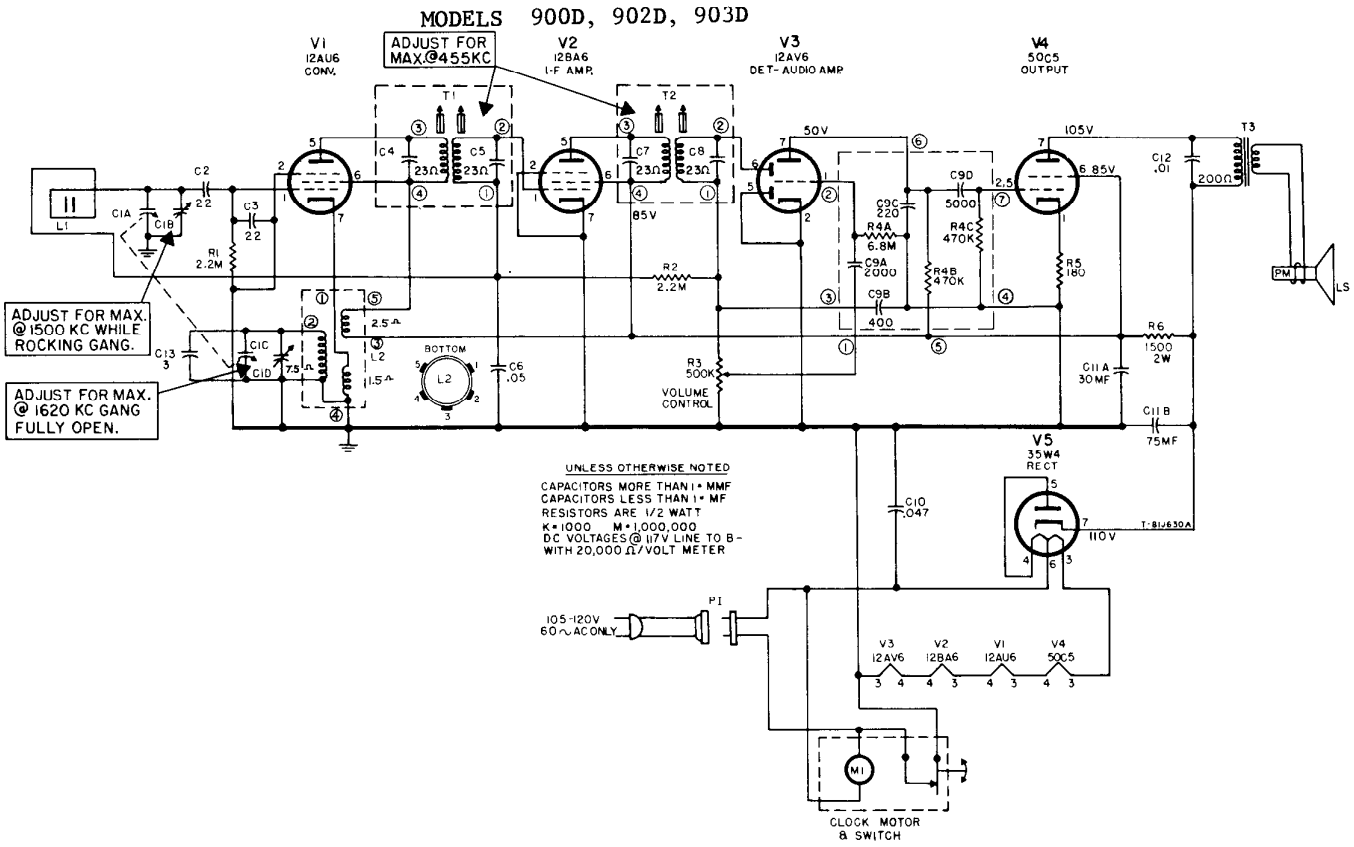
MODELS 900D, 902D, 903D
V1
12AU6
CONV.
ADJUST FOR
MAX.@455KC
V2
12BA6
I-F AMP.
V3
12AV6
DET- AUDIO AMP
V4
50C5
OUTPUT
T1
T2
T3
50V
105V
85V
6.85V
C1A
C1B
C2
.22
C3
.22
R1
2.2M
C4
23Ω
C5
23Ω
C7
23Ω
C8
23Ω
R2
2.2M
C9C
220
C9D
5000
R4A
6.8M
R4C
470K
C9A
2000
R4B
470K
C9B
400
R5
180
C12
.01
200Ω
PM
LS
ADJUST FOR MAX.
@1500 KC WHILE
ROCKING GANG.
ADJUST FOR MAX.
@1620 KC GANG
FULLY OPEN.
C1C
C1D
7.5
L1
L2
2.5
1.5
BOTTOM
C6
.05
C13
3
R3
500K
VOLUME
CONTROL
R6
1500
2W
C11A
30MF
C11B
75MF
V5
35W4
RECT
110V
T-81U630A
C10
.047
UNLESS OTHERWISE NOTED
CAPACITORS MORE THAN 1 • MMF
CAPACITORS LESS THAN 1 • MF
RESISTORS ARE 1/2 WATT
K • 1000 M • 1,000,000
DC VOLTAGES @ 117V LINE TO B-
WITH 20,000 Ω/VOLT METER
P1
105-120V
60 ~ AC ONLY
V3 12AV6
V2 12BA6
V1 12AU6
V4 50C5
M1
CLOCK MOTOR
& SWITCH

REPLACEMENT PARTS LIST
Models 900D, 902D, 903D

CAT. NO.	SYMBOL	DESCRIPTION	UNIT PRICE
CAPACITORS			
	C6	.05 mfd., @ 200 V, paper	
	C10	.047 mfd., @ 600 V, molded	
	C12	.01 mfd., @ 450 V, ceramic disc	
RCE-215	C11A, B	30 mfd., @ 150 V, electrolytic; 75 mfd., @ 150 V, electrolytic	$2.00
n-RCT-095	C1A, B, C, D	Tuning gang	3.65
RCW-3196	C2, 3	22 mmf., @ 500 V, ceramic	.20
RCW-3207	C9A, B, C, D, R4A, B, C	Coupling network	1.00
RCW-3216	C13	3 mmf., @ 500 V, ceramic	.25
RESISTORS			
RRC-323	R3	VOLUME CONTROL 500 K	1.00
	R5	180 ohms, ±10%, ½ w., carbon	
	R1, 2	2.2 megohm, ±10%, ½ w., carbon	
	R6	1500 ohms, ±10%, 2 watt, carbon	
COILS & TRANSFORMERS			
RLC-135	L2	COIL—Oscillator coil	1.00
RLL-064	L1	COIL—Iron core loop antenna	1.00
RTL-183	T1, 2	TRANSFORMER—I-F transformer	1.65
RTO-176	T3	TRANSFORMER—Output transformer	2.05
MISCELLANEOUS ITEMS			
RHC-060		CLAMP—Plastic clamp for antenna	.15
RHC-095		CLIP—$\frac{5}{32}$" tubular clip for clock mounting	.05
RHS-110		SHIELD—Tube shield for V-3	.15
RHS-161		SHIELD—Flat, mounted on V-2 socket center pin	.10

CAT. NO.	DESCRIPTION	UNIT PRICE
MISCELLANEOUS ITEMS (Cont'd)		
RJJ-010	RECEPTACLE—Power cord receptacle	$0.20
RJS-221	SOCKET—Tube socket	.25
RJS-222	SOCKET—Tube socket with ground clip for V-3	.25
RMS-374	STRAP—Ground strap	.02
ROP-035	LOUDSPEAKER—4" loudspeaker	3.25
RWL-027	POWER CORD—Power cord & bracket assembly	1.20
CABINET AND APPEARANCE ITEMS		
n-RAB-281	BACK—Cabinet back	.20
RAG-051	GRILLE CLOTH—Grille cloth assembly, ivory for 902D	.45
RAG-085	GRILLE CLOTH—Grille cloth assembly, blue for 903D	.45
n-RAU-455	CABINET—Mahogany plastic, for Model 900D	7.20
n-RAU-456	CABINET—Ivory plastic, for Model 902D	7.20
n-RAU-457	CABINET—Blue plastic, for Model 903D	7.50
RDK-295	KNOB—Ivory volume control knob for Model 900D	.25
RDK-357	KNOB—Brown vol. control knob for Model 902D	.30
RDK-500	KNOB—Ivory tuning knob for Model 900D	1.30
RDK-501	KNOB—Brown tuning knob for Model 902D	1.30
RDK-502	KNOB—Antique white tuning knob for Model 903D	1.30
RDK-503	KNOB—Antique white volume control knob for Model 903D	.20
RHS-115	SCREW—Ivory speaker mounting screw for Model 902D	.05
RHS-152	SCREW—Brown speaker mounting screw for Model 900D	.10
RHS-153	SCREW—Blue speaker mounting screw for Model 903D	.10
RMS-356	CLIP—To captivate tuning knob on cabinet	.05
n-RZC-062	CLOCK—Telechron Number C103G18	
RZK-030	CLOCK KNOB—Antique white for 903D	.10
RZK-037	CLOCK KNOB—Brown for 902D	.10
n-RZK-038	CLOCK KNOB—Ivory for 900D	.10
n-RZW-028	CRYSTAL—Clock crystal	.75

PRICES ARE SUGGESTED LIST PRICES AND SUBJECT TO CHANGE WITHOUT NOTICE
"n" DENOTES NEW ITEMS NOT PREVIOUSLY CATALOGED

MODELS 905, 906, 907, 915, 916

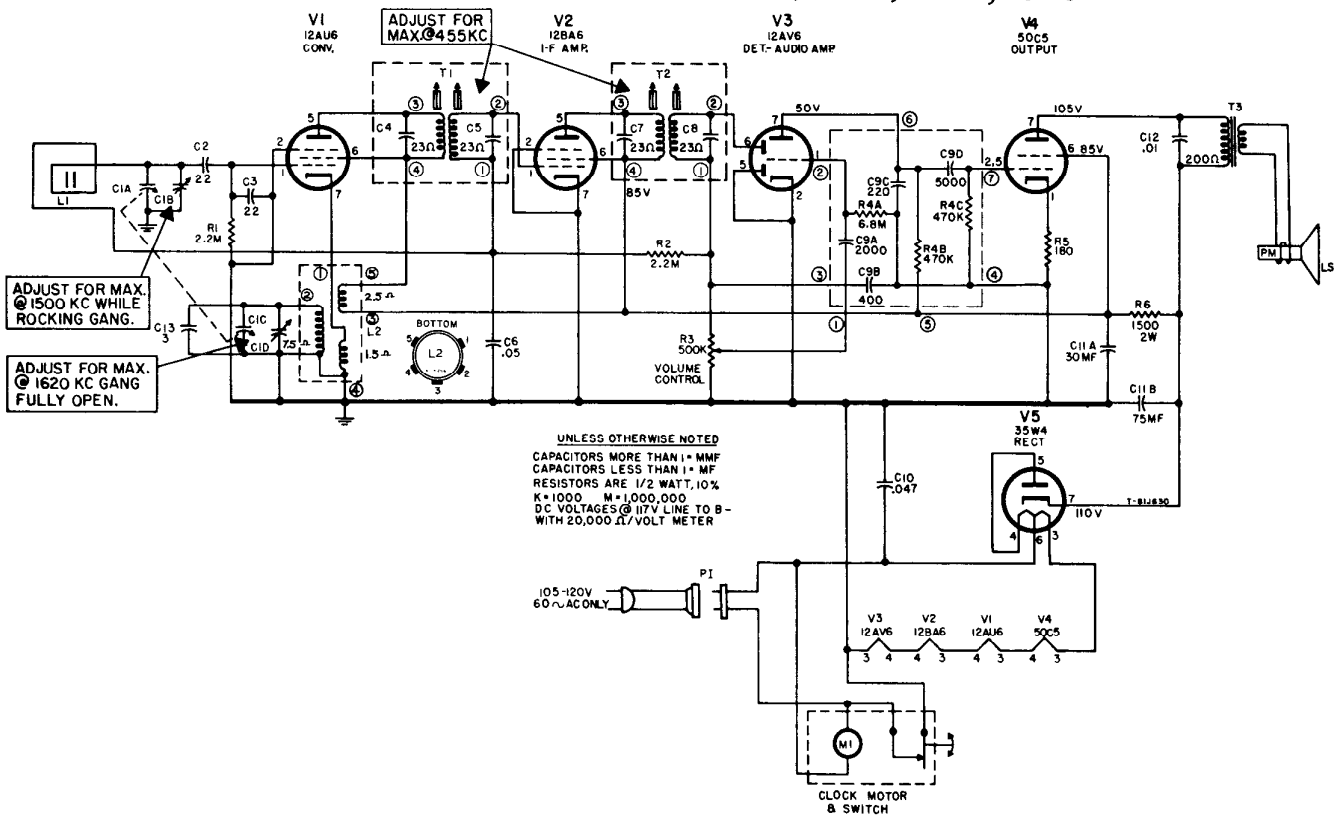

CAT. NO.	SYMBOL	DESCRIPTION	PRICE
CAPACITORS			
RCE-215	C11A, B	30-75 mfd., @ 150 v, electrolytic	$2.00
RCT-093	C1A, B, C, D	Tuning gang	3.40
RCW-3186	C12	.01 mfd., @ 450 v, ceramic	.30
RCW-3196	C2, 3	22 mmf., @ 50 v, ceramic	.20
RCW-3207	C9A, B, C, D R4A, B, C	Coupling network	1.00
RCW-3216	C13	3 mmf., @ 500 v, ceramic	.25
RESISTOR			
n-RRC-325	R3	VOLUME CONTROL, 500 K, potentiometer	1.00
COILS & TRANSFORMERS			
RLC-135	L2	COIL—Oscillator coil	1.00
RLL-064	L1	COIL—Iron core loop antenna	1.00
RTL-183	T1, 2	TRANSFORMER—I-F transformer	1.65
RTO-176	T3	TRANSFORMER—Output transformer	2.05
MISCELLANEOUS ITEMS			
RHC-060		CLAMP—Plastic clamp for antenna	.15
RHC-095		CLIP—9/32" tubular clip for clock mounting	.05
RHS-110		SHIELD—Tube shield for V-3	.15
RHS-161		SHIELD—Flat, mtd. on V-2 socket center pin	.10
RJJ-010		RECEPTACLE—Power cord receptacle	.20
RJS-221		SOCKET—Tube socket	.25
RJS-222		SOCKET—Tube socket with ground clip for V-3	.15
n-RMS-374		STRAP—Ground strap for molded socket	.02
ROP-033		LOUDSPEAKER—4" loudspeaker	4.00
RWL-035		POWER CORD—Power cord & bracket assembly	.90

CAT. NO.	DESCRIPTION	PRICE
CABINET & APPEARANCE ITEMS		
n-RAB-293	CABINET BACK—Light grey, Model 915	$5.80
n-RAB-294	CABINET BACK—Red, Model 916	5.80
n-RAB-295	CABINET BACK—Light grey, Model 905	5.80
n-RAB-296	CABINET BACK—Red, Model 906	5.80
n-RAB-297	CABINET BACK—White, Model 907	5.80
n-RAC-179	CABINET FRONT—Charcoal, Models 905, 915	2.95
n-RAC-180	CABINET FRONT—Antique white, Models 906, 916	2.95
n-RAC-181	CABINET FRONT—White, Model 907	2.95
n-RAG-089	GRILLE—Radio grille (brass)	1.70
n-RAG-090	GRILLE CLOTH—Light grey grille cloth assembly for Models 905 and 915	.45
n-RAG-091	GRILLE CLOTH—Red grille cloth assembly for Models 906 and 916	.45
n-RAG-092	GRILLE CLOTH—White grille cloth assembly for Model 907	.45
RDK-425	KNOB—Clear plastic volume knob	.35
n-RDK-508	KNOB—Tuning knob, charcoal, for Models 905 and 915	1.65
n-RDK-509	KNOB—Tuning knob, red, for Models 906 and 916	1.65
n-RDK-510	KNOB—Tuning knob, white, for 907	1.65
n-RDP-087	POINTER—Red dial pointer	.10
RMS-356	CLIP—Clip to captivate tuning knob	.05
n-RZA-016	BEZEL—Clock bezel	1.10
n-RZC-049	CLOCK—Clock assembly for Model 915	17.80
RZC-050	CLOCK—Clock assembly for Model 916 (E.P.)	17.80
n-RZC-051	CLOCK—Clock assembly for Models 905 and 907	14.40
n-RZC-052	CLOCK—Clock assembly for Model 906 (E.P.)	14.40
n-RZC-060	CLOCK—Clock assembly for Model 916 (L.P.)	17.80
RZC-061	CLOCK—Clock assembly for Model 906 (L.P.)	14.40
n-RZK-032	KNOB—White clock knob for 905, 907, 915	.05
n-RZK-033	KNOB—Antique white clock knob for 906, 916	.05
n-RZW-018	CRYSTAL—White clock crystal, for 915, 916	.55
n-RZW-019	CRYSTAL—Gold clock crystal, E.P. for 916	.55
n-RZW-020	CRYSTAL—White clock crystal for 905, 906, 907	.55
n-RZW-021	CRYSTAL—Gold clock crystal for E.P. 906	.55

Parts not listed in this parts list are common items available at your radio parts jobber. "n"—New parts not previously cataloged.

PRICES ARE SUGGESTED LIST PRICES AND SUBJECT TO CHANGE WITHOUT NOTICE

911,912, 913

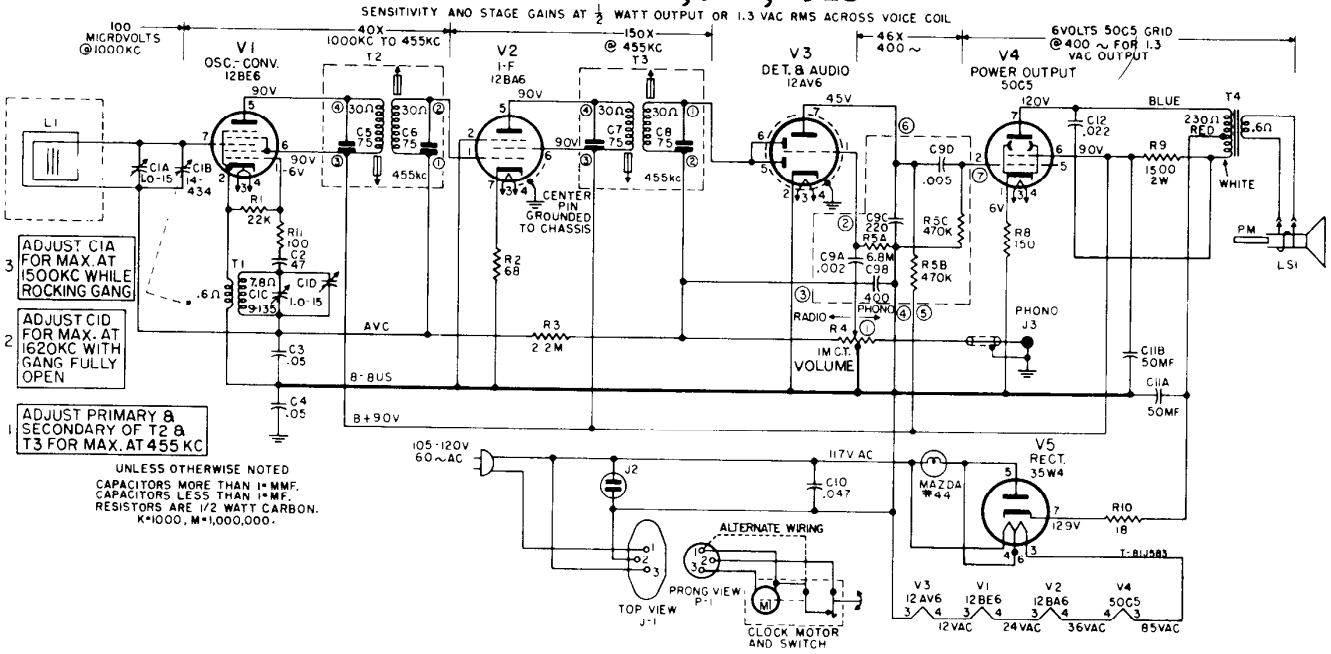
SENSITIVITY AND STAGE GAINS AT 1/2 WATT OUTPUT OR 1.3 VAC RMS ACROSS VOICE COIL
100 MICROVOLTS @1000KC
40X 1000KC TO 455KC
150X @ 455KC
46X 400 ~
6VOLTS 50C5 GRID @400 ~ FOR 1.3 VAC OUTPUT
V1 OSC.-CONV. 12BE6
V2 I-F 12BA6
V3 DET. & AUDIO 12AV6
V4 POWER OUTPUT 50C5
V5 RECT. 35W4
L1
T1
T2
T3
T4
CENTER PIN GROUNDED TO CHASSIS
AVC
B-BUS
B+90V
RADIO
PHONO
VOLUME
PHONO J3
BLUE
WHITE
RED
PM
LS1
105-120V 60~AC
117V AC
MAZDA #44
ALTERNATE WIRING
TOP VIEW J-1
PRONG VIEW P-1
CLOCK MOTOR AND SWITCH
T-81J583
ADJUST C1A FOR MAX. AT 1500KC WHILE ROCKING GANG
ADJUST C1D FOR MAX. AT 1620KC WITH GANG FULLY OPEN
ADJUST PRIMARY & SECONDARY OF T2 & T3 FOR MAX. AT 455 KC
UNLESS OTHERWISE NOTED
CAPACITORS MORE THAN 1=MMF.
CAPACITORS LESS THAN 1=MF.
RESISTORS ARE 1/2 WATT CARBON.
K=1000, M=1,000,000.

911, 912, 913

REPLACEMENT PARTS LIST

The resistors and capacitors shown in this parts list without catalog numbers are common items obtainable at your Radio Parts Jobber.

CAT. NO.	SYMBOL	DESCRIPTION	PRICE
		CAPACITORS	
	C3	.05 mfd., @ 200 v, paper	
	C4	.05 mfd., @ 600 v, paper	
	C10	.047 mfd., @ 600 v, molded paper	
	C12	.022 mfd., @ 600 v, molded paper	
RCE-149	C11A, B	50-50 mfd., @ 150 v, electrolytic	$2.00
n-RCT-094	C1A, B, C, D	TUNING GANG	3.65
RCW-3075	C2	47 mmf., @ 500 v, ceramic	.25
RCW-3207	C9A, B, C, D R5A, B, C	Coupling network	1.00
		RESISTORS	
	R1	22 K ohms, ±10%, ½ watt, carbon	
	R2	68 ohms, ±10%, ½ watt, carbon	
	R3	2.2 megohm, ±10%, ½ watt, carbon	
	R8	150 ohms, ±10%, ½ watt, carbon	
	R9	1500 ohms, ±10%, 2 watt, carbon	
	R10	18 ohms, ±10%, ½ watt, carbon	
	R11	100 ohms, ±10%, ½ watt, carbon	
n-RRC-327	R4	VOLUME CONTROL—1 megohm c. t.	1.00
n-RRC-372		VOL. CONT. w/switch, 500K (911-H)	
		COILS AND TRANSFORMERS	
RLC-122	T1	COIL—Oscillator coil	1.00
n-RLL-062	L1	COIL—Iron core loop antenna	1.00
RTL-163	T2, 3	TRANSFORMER—I-F trans.	1.70
RTO-138	T4	TRANSFORMER—Output trans.	2.50
		MISCELLANEOUS ELECTRICAL	
RHS-109		SHIELD—Pin shield in chassis tube holes	.20
RHS-110		SHIELD—Tube shield	.15
RHS-118		SHIELD—Tube pin shield	.05
RII-081		WAFER—I-F wafer	.05
RII-082		WAFER—Tube wafer	.05
RII-088		BOARD—Sub-chassis board less hardware	.60
RII-090		SHIELD—Heat shield	.05
RJC-004		TERMINAL—Pin terminal	.02
RJC-027		CONTACT—Dip solder contact	.03
RJC-082		TERMINAL—Dip solder terminal used on osc. coil	.02
RJP-045		PLUG—Clock plug with shield	.15
RJS-181		SOCKET—For clock plug	.15
RJS-182		CONNECTOR—Phono input connector	.15
RJS-212		RECEPTACLE—Appliance power receptacle	1.20
ROP-033		SPEAKER—4" PM loudspeaker	4.00

CAT. NO.	DESCRIPTION	PRICE
	MISCELLANEOUS ELECTRICAL (CONT'D)	
RWL-025	POWER CORD—Brown, for Model 911	$0.75
RWL-026	POWER CORD—White, for Model 912	.75
RWL-031	POWER CORD—Gray, for Model 913	.75
n-RWX-057	SOCKET—Dial light socket assembly	.80
	MISCELLANEOUS MECHANICAL	
RDC-032	DIAL CORD—Bulk 10-yard spool	2.50
RHC-024	CLIP—Spring clip for electrolytic	.10
RHC-080	CLIP—Spring clip for sub-chassis board	.05
RHE-014	EYELET—Tube wafer eyelet	.01
RHE-016	EYELET—I-F wafer eyelet	.01
RHI-010	STRAIN RELIEF—Power cord strain relief	.15
RHS-084	SCREW—Speaker mounting screw	.05
RHS-128	SHIELD—Clock shield	.04
RII-118	SUPPORT—Loop antenna support	.10
RJC-030	CLIP—I-F terminal clip, dip solder contact, spring brass, connects pin 6—12BE6, 12BA6 and 12AV6	.02
RJC-031	CLIP—I-F terminal clip, dip solder contact, spring brass, connects pin 5—12BE6, pins 1 and 5—12BA6	.02
RMM-006	SHIELD—Dial light shield	.05
RMS-118	SPRING—Tuning drum spring	.10
RMS-331	CLIP—Clock shield spring clip	.10
RMW-070	PULLEY—Idler pulley	.05
n-RMX-329	TUNING SHAFT ASSEMBLY	.55
	CABINET AND APPEARANCE ITEMS	
n-RAB-278	CABINET BACK—Mahogany, Model 911	3.75
n-RAB-279	CABINET BACK—Ivory for Model 912	3.75
n-RAB-280	CABINET BACK—Pink for Model 913	3.75
n-RAC-168	CABINET—Mahogany, for Model 911	6.75
n-RAC-169	CABINET—Ivory for Model 912	6.75
n-RAC-170	CABINET—Pink for Model 913	6.75
RDK-425	KNOB—Volume and Tuning knob, clear	.35
n-RDW-097	DIAL SCALE, Gold for Model 911	3.10
n-RDW-098	DIAL SCALE, Black for Models 912 and 913	3.10
n-RDW-109	DIAL SCALE, Gold for Model 911-H	
n-RDW-099	TRANSLUCENT WINDOW	.30
n-RDP-088	POINTER—Red dial pointer	.45
n-RZC-056	CLOCK ASSEMBLY—Gold, for Model 911 (Telechron C99SG13)	14.40
n-RZC-057	CLOCK ASSEMBLY—Black, for Models 912 and 913 (Telechron C99SG15)	14.40
RZK-017	KNOB—Clock knob, clear plastic	.10

"n" Denotes Parts Not Used on Previous Receivers. PRICES ARE SUGGESTED LIST PRICES AND ARE SUBJECT TO CHANGE WITHOUT NOTICE

MODELS 911D, 912D, 913D, 914D

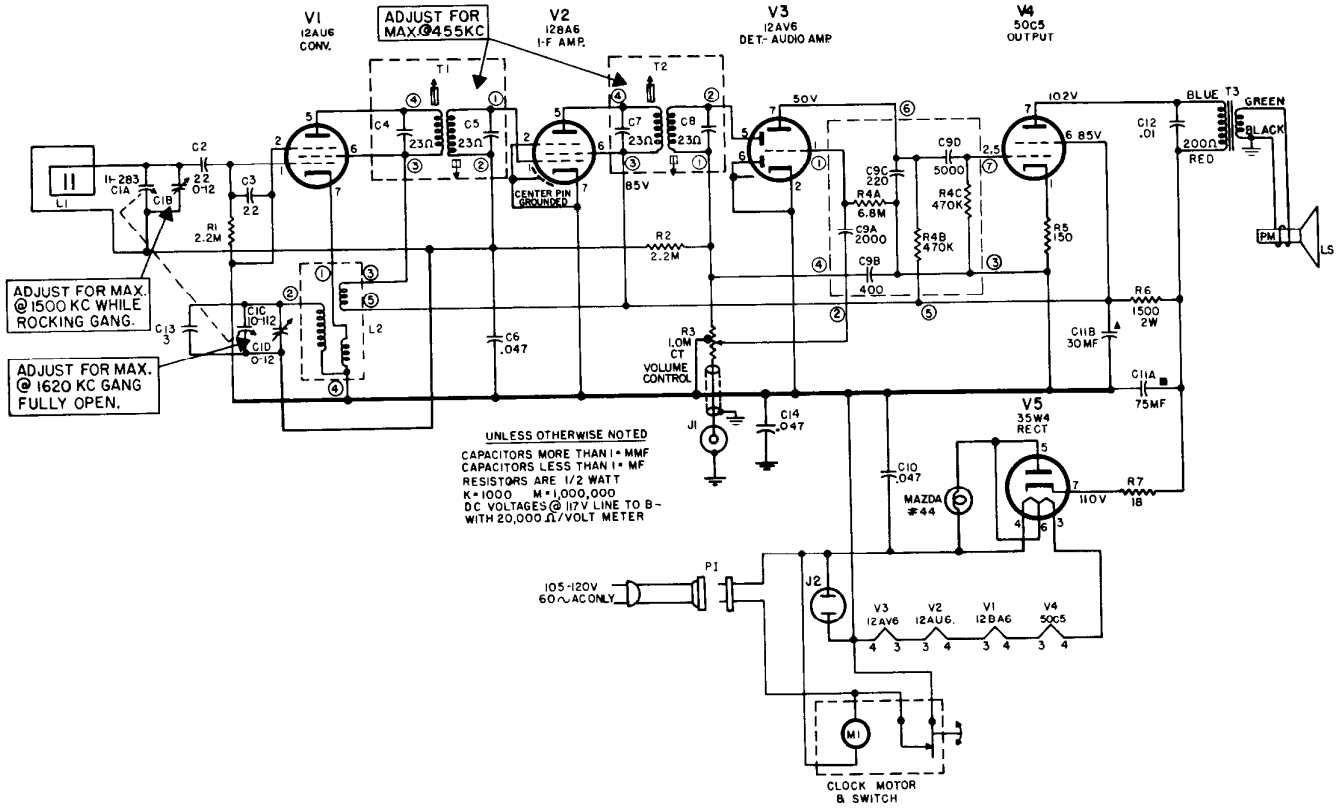

REPLACEMENT PARTS LIST—MODELS 911D, 912D, 913D, 914D

CAPACITORS

CAT. NO.	SYMBOL	DESCRIPTION	PRICE
RCC-125	C14	.047mf., ±20%, 400V, paper.	$0.40
n-RCE-231	C11A, B	75mf., 35mf., @150V, electrolytic.	2.10
RCN-109	C10	.047mf., ±20%, 600V, 105°C, paper.	.40
n-RCT-099	C1A, B, C, D	TUNING CAPACITOR—2-gang	3.25
RCW-3186	C12	.01mf., +150−0%, 450V, ceramic	.30
RCW-3216	C13	3mmf., ±20%, 500V, ceramic	.25
n-REK-011	R4A, B, C C9A, B, C D	Capacitor-Resistor Coupling Network	.80
	C2, 3	22mmf., ±20%	
	C6	.047mf., ±20%, 400V	

The resistors and capacitors shown in this parts list, without catalog numbers, are common items obtainable from your Radio Parts Jobber.

RESISTORS

	R1, 2	2.2 megohm, ±20%, ½ watt.	
	R5	150 ohm, ±10%, ½ watt.	
	R6	1500 ohm, ±20%, 2 watts	
	R7	18 ohm, ±10%, ½ watt.	

POTENTIOMETER

n-RRC-375	R3	VOLUME CONTROL—1 megohm C.T.	.90

COILS & TRANSFORMERS

n-RLC-142	L2	COIL—Oscillator coil	1.00
RLL-064	L1	COIL—antenna, iron core	1.00
n-RTL-197	T1, 2	TRANSFORMER—I-F	1.40
RTO-176	T3	TRANSFORMER—Output.	2.05

MISCELLANEOUS ELECTRICAL

CAT. NO.	DESCRIPTION	PRICE
RJJ-010	POWER CORD RECEPTACLE	$0.20
RJJ-015	APPLIANCE RECEPTACLE	.55
RJS-182	PHONO INPUT CONNECTOR	.15
RJS-221	SOCKET—Tube socket, wafer type.	.25
ROP-033	SPEAKER—4 inch, PM loudspeaker.	4.00
RWL-019	POWER CORD—6 ft., brown	1.65
n-RWX-058	DIAL LIGHT ASSEMBLY.	.75

MISCELLANEOUS MECHANICAL

RDC-032	DIAL CORD—Bulk, 25 yards.	2.50
RHC-060	CLAMP—For antenna mounting.	.15
RHC-095	CLIP—For speaker mounting.	.05
n-RHC-111	CLIP—Holds dial light.	.05
RHM-043	RETAINING RING—For tuning shaft	.01
RMS-130	SPRING—For tuning capacitor drum	.15
RMW-003	PULLEY—Idler pulley for tuning	.05
RMW-088	PULLEY—Idler pulley, on volume shaft	.10
n-RMX-343	TUNING SHAFT ASSEMBLY.	.50

CABINET & APPEARANCE ITEMS

n-RAB-309	CABINET BACK—Mahogany, Model 911D.	3.00
n-RAB-310	CABINET BACK—Ivory, Model 912D.	3.00
n-RAB-311	CABINET BACK—Pink, Model 913D.	3.00
n-RAB-328	CABINET BACK—Turquoise, Model 914D.	3.00
n-RAC-193	CABINET—Mahogany, Model 911D	6.75
n-RAC-194	CABINET—Ivory, Model 912D.	6.75
n-RAC-195	CABINET—Pink, Model 913D	6.75
n-RAC-211	CABINET—Turquoise, Model 914D.	6.75
RDK-425	KNOB—Vol. & Tune, clear and gold.	.35
n-RDP-090	DIAL POINTER ASSEMBLY	.70
RDW-097	DIAL SCALE AND WINDOW—Gold, Models 911D and 914D.	3.10
RDW-098	DIAL SCALE AND WINDOW—Black, Models 912D and 913D.	3.10
n-RDW-112	DIAL BACK WINDOW—Translucent.	.20
RZC-056	CLOCK ASSEMBLY—Gold, for Models 911D and 914D Telechron No. C99-SG13	14.40
RZC-057	CLOCK ASSEMBLY — Black, for Models 912D and 913D, Telechron No. C99SG15.	14.40
RZK-017	KNOB—Clock knob, clear plastic	.10

PRICES ARE SUGGESTED LIST PRICES AND SUBJECT TO CHANGE WITHOUT NOTICE
"n"—DENOTES ITEMS NOT PREVIOUSLY CATALOGED

MODELS 920, 921

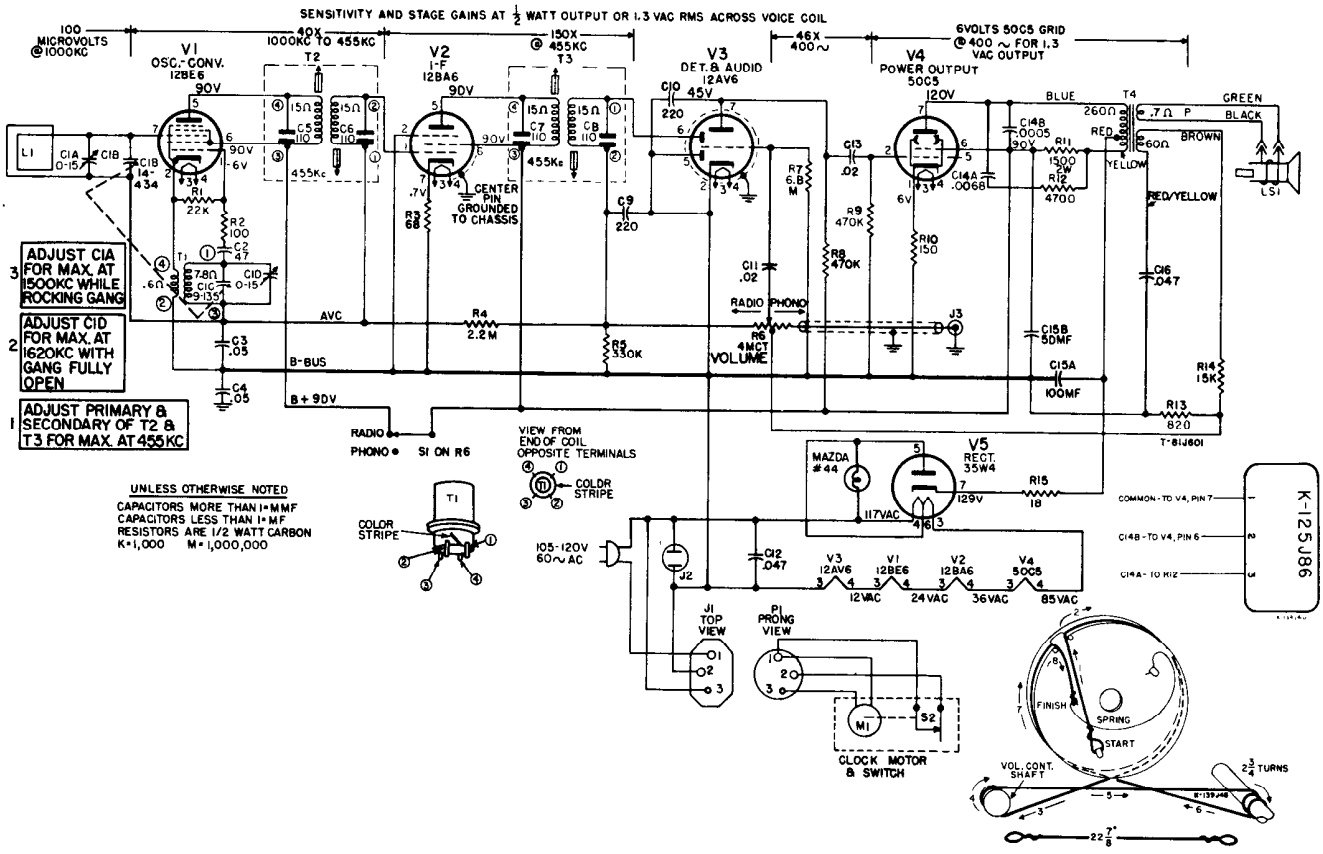

UNLESS OTHERWISE NOTED
CAPACITORS MORE THAN 1=MMF
CAPACITORS LESS THAN 1=MF
RESISTORS ARE 1/2 WATT CARBON
K=1,000 M=1,000,000

REPLACEMENT PARTS LIST – 920, 921

The resistors and capacitors shown in this parts list without catalog numbers are common items obtainable at your Radio Parts Jobber.

CAT. NO.	SYMBOL	DESCRIPTION	PRICE
		CAPACITORS	
	C3, 4	.05 mfd., 600 v, paper	
	C11, 13	.02 mfd., 400 v, paper	
	C12	.047 mfd., 600 v, molded paper	
	C16	.047 mfd., 200 v, paper 85°C	
RCE-166	C15A, B	100 mf., 50 mf., 150 v, elect.	$2.65
n-RCT-090	C1A, B, C, D	TUNING CAPACITOR	4.15
RCW-3075	C2	47 mmf., ceramic	.25
RCW-3104	C14A, B	.0068 mf., 500 mmf., ceramic	.50
n-RCW-3195	C9, 10	220 mmf., ceramic	.25
		RESISTORS	
	R1	22K ohms, ±10%, ½ watt, carbon	
	R2	100 ohms, ±10%, ½ watt, carbon	
	R3	68 ohms, ±10%, ½ watt, carbon	
	R4	2.2 megohm, ±10%, ½ watt, carbon	
	R5	330K ohms, ±10%, ½ watt, carbon	
	R7	6.8 megohms, ±10%, ½ watt, carbon	
	R8, 9	470K ohms, ±10%, ½ watt, carbon	
	R10	150 ohms, ±10%, ½ watt, carbon	
	R11	1500 ohms, ±10%, 2 watt, carbon	
	R12	4700 ohms, ±10%, ½ watt, carbon	
	R13	820 ohms, ±10%, ½ watt, carbon	
	R14	15K ohms, ±10%, ½ watt, carbon	
	R15	18 ohms, ±10%, ½ watt, carbon	
n-RRC-330	R6, S1	VOLUME CONTROL & SWITCH—4 meg., center tapped	1.50
		COILS AND TRANSFORMERS	
RAB-245	L1	ANTENNA COIL AND CABINET BACK	1.55
RLC-122	T1	OSCILLATOR COIL	1.00
RTL-143	T2, 3	I-F TRANSFORMER	1.80
RTO-157	T4	OUTPUT TRANSFORMER	3.35
		MISCELLANEOUS ELECTRICAL	
RHS-110		SHIELD—Tube shield	.15
n-RHS-150		HUM SHIELD	.25
RII-082		WAFER—Sub-chassis tube socket wafer	.05
RJC-004		CONNECTOR—Fits on male speaker terminal	.02
RJC-027		CONTACT—Dip solder	.03
RJC-028		TERMINAL—Dip solder	.02
RJP-045		CONNECTOR—Clock & shield assembly. (P1)	.15
RJS-181		SOCKET—Clock connector female. (J1)	.15
RJS-182		CONNECTOR—Phono. (J3)	.15
RJS-212		RECEPTACLE—Appliance, 24" leads. (J2)	1.20
ROP-030		LOUDSPEAKER—5½ in. PM	6.25
RWL-027		CORD—Power cord & plug	1.20

CAT. NO.	DESCRIPTION	PRICE
	MISCELLANEOUS ELECTRICAL (Cont'd)	
RWX-054	SOCKET—For pilot light	$ 0.65
n-RZC-053	CLOCK ASSEMBLY—Red, 920 (C99KG19)	15.80
n-RZC-054	CLOCK ASSEMBLY—Gray, 921 (C99KG21)	15.80
	MISCELLANEOUS MECHANICAL	
RDC-032	CORD—Dial cord, bulk, 25 yards	2.50
RHC-024	CLIP—For mounting capacitor	.10
RHC-080	CLIP—For mtg. board under chassis	.05
RHE-014	EYELET—For tube socket wafer	.01
RHE-016	EYELET—For I-F wafer	.01
RHI-010	STRAIN RELIEF—For power cord	.15
RHS-084	SCREW—For mtg. speaker and grille	.05
RHS-108	SHIELD—Pilot light shield	.05
RHS-109	SHIELD—Pin shield	.20
RHS-118	SHIELD—Pin shield over tube socket	.05
RHS-128	SHIELD—Clock shield	.04
RII-081	WAFER—I-F transformer wafer	.05
RII-090	SHIELD—Heat transfer shield	.05
RJC-030	I-F CLIP—Dip solder contact and clip for I-F trans., spring brass connects pin 6 on 12BE6, 12BA6, and 12AV6	.02
RJC-031	I-F CLIP—Dip solder contact and clip for I-F trans., spring brass connects pin 5-12BE6 pin 1-12BA6 and pin 5-12BA6	.02
RMS-272	COMPRESSION RING—For radio knobs	.05
RMS-331	SPRING—For clock shield RHS-128	.10
RMS-355	SPRING—Drum tension	.10
RMW-070	IDLER PULLEY	.05
n-RMX-321	SHAFT—Tuning shaft and bushing assembly	.50
	CABINETS AND APPEARANCE ITEMS	
n-RAG-093	GRILLE—Fawn, Model 920	1.20
n-RAG-094	GRILLE—Antique white, Model 921	1.20
n-RAU-451	CABINET—Plastic, Mahogany, 920	9.50
n-RAU-452	CABINET—Plastic, Gray, Model 921	9.50
n-RDK-515	KNOB—Brown, Tuning & Volume, 920, 921	.30
RDP-084	DIAL POINTER—Chrome	.45
n-RDS-136	DIAL SCALE—Dark red, Model 920	.75
n-RDS-137	DIAL SCALE—Dove gray, Model 921	.75
n-RDW-095	CRYSTAL—For dial scale, gold numbers, Model 920	1.90
n-RDW-096	CRYSTAL—For dial scale, gold numbers Model 921	1.90
RYN-019	MEDALLION	.35
n-RZK-037	KNOB—Brown, for clock	.10
n-RZW-022	CRYSTAL—For clock, gold nos. 920	1.90
n-RZW-023	CRYSTAL—For clock, gold nos. 921	1.90

"n" Denotes Parts Not Used on Previous Receivers. PRICES ARE SUGGESTED LIST PRICES AND ARE SUBJECT TO CHANGE WITHOUT NOTICE

MODEL 930

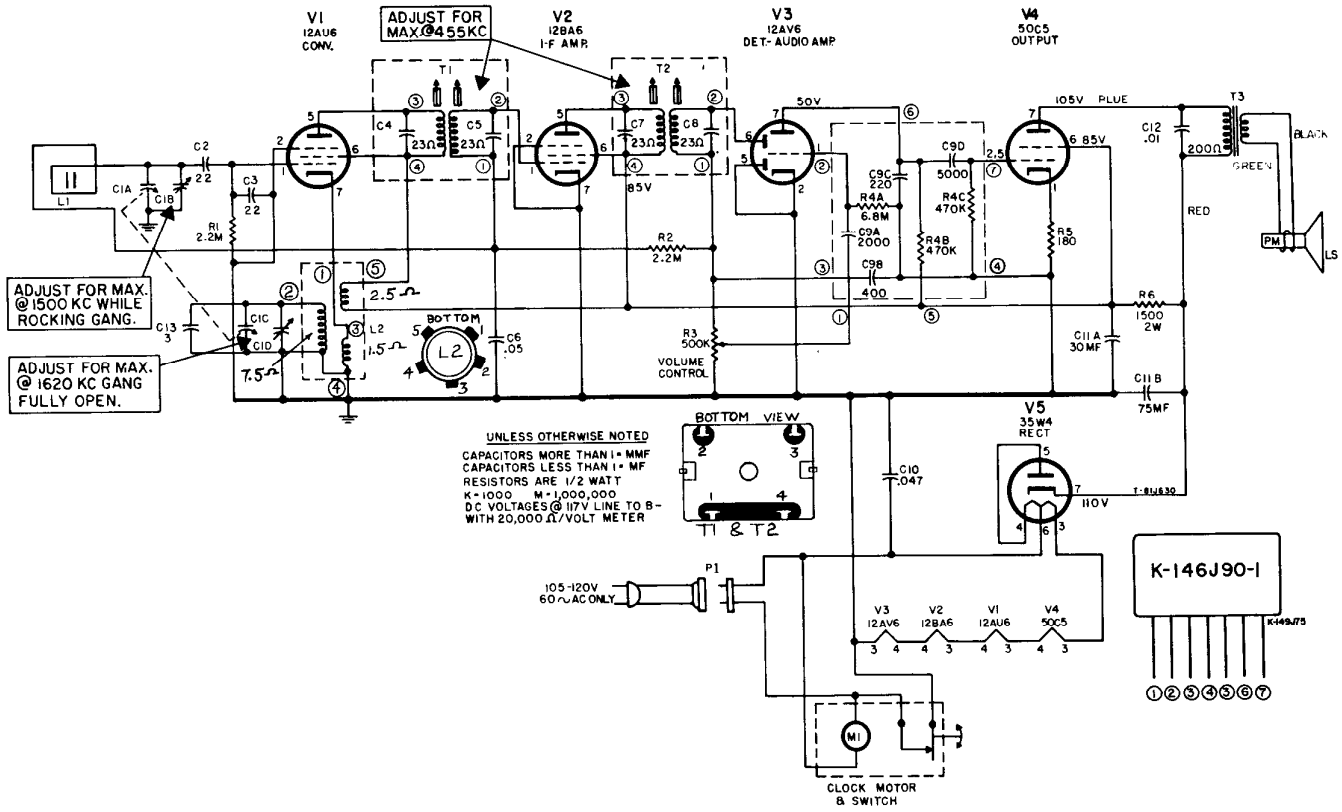
V1
12AU6
CONV.
ADJUST FOR
MAX@455KC
V2
12BA6
I-F AMP.
V3
12AV6
DET.- AUDIO AMP
V4
50C5
OUTPUT
T1
T2
T3
50V
105V PLUE
6.85V
85V
BLACK
GREEN
RED
PM
LS
C1A
C1B
C2
.22
C3
.22
R1
2.2M
C4
23Ω
C5
23Ω
C6
.05
C7
23Ω
C8
23Ω
C9A
2000
C9B
400
C9C
220
C9D
5000
R2
2.2M
R3
500K
VOLUME
CONTROL
R4A
6.8M
R4B
470K
R4C
470K
R5
180
R6
1500
2W
C11A
30MF
C11B
75MF
C12
.01
200Ω
C10
.047
C13
3
C1C
C1D
L1
L2
2.5
1.5
7.5
BOTTOM
ADJUST FOR MAX.
@1500 KC WHILE
ROCKING GANG.
ADJUST FOR MAX.
@ 1620 KC GANG
FULLY OPEN.
BOTTOM VIEW
T1 & T2
V5
35W4
RECT
110V
UNLESS OTHERWISE NOTED
CAPACITORS MORE THAN 1= MMF
CAPACITORS LESS THAN 1= MF
RESISTORS ARE 1/2 WATT
K=1000 M=1,000,000
DC VOLTAGES @ 117V LINE TO B-
WITH 20,000Ω/VOLT METER
P1
105-120V
60~AC ONLY
V3 12AV6
V2 12BA6
V1 12AU6
V4 50C5
M1
CLOCK MOTOR
& SWITCH
K-146J90-1
K-146J75
1 2 3 4 5 6 7

PARTS LIST—MODEL 930

CAT. NO.	SYMBOL	DESCRIPTION	PRICE
		CAPACITORS	
RCC-086	C6	.05 mf., +40 −10%, 200 V. . .	$0.30
RCE-215	C11A, B	30–75 mf., @ 150 V.	2.00
RCN-053	C10	.047 mf., 20%, 600 V.	.35
RCT-093	C1A, B	TUNING CAPACITOR — Two gang.	3.40
RCW-3186	C12	.01 mf., +150 −0%, 450 V. .	.30
RCW-3196	C2, 3	22 mmf., 20%, 500 V.	.20
RCW-3207	C9A, B, C, D R4, A, B, C	BULLPLATE NETWORK.	1.00
RCW-3216	C13	3 mmf., 20%, 500 V.	.25
		POTENTIOMETER	
RRC-325	R3	VOLUME CONTROL— 500 K.	1.00
		RESISTORS	
URD-031	R5	180 ohms, 10%, ½ w.	.13
URD-129	R1, 2	2.2 megohms, 10%, ½ w. . . .	.13
URF-053	R6	1500 ohms, 10%, 2 w.	.25
		COILS AND TRANSFORMERS	
RLC-135	L2	Oscillator Coil.	1.00
RLL-064	L1	Loop Antenna (Iron Core). . .	1.00
RTL-183	T1, 2	I-F Transformer.	1.65
RTO-176	T3	Output Transformer.	2.05

CAT. NO.	DESCRIPTION	PRICE
	MISCELLANEOUS	
RHC-060	PLASTIC CLAMP—Antenna.	$0.15
RHC-117	CLIP—Clock mounting.	.02
RHS-110	TUBE SHIELD.	.15
RHS-161	SHIELD EYELET.	.10
RJJ-014	POWER CORD RECEPTACLE.	.20
RJS-221	TUBE SOCKET WAFER TYPE.	.25
RJS-222	TUBE SOCKET WAFER TYPE—With ground clip.	.25
RMS-356	CAPTIVE CLIP TUNING KNOB.	.05
RMS-374	GROUND STRAP FOR MOLDED SOCKET.	.02
ROP-035	SPEAKER—4-inch PM.	3.25
RWL-027	POWER CORD—6-ft. brown.	1.20
	CABINET AND APPEARANCE ITEMS	
n-RAB-319	CABINET BACK.	.20
n-RAU-472	CABINET—White.	4.30
RDK-425	KNOB—Volume, (Clear and Gold).	.35
n-RDK-596	KNOB—Tuning, clear with insert.	
n-RZC-067	CLOCK ASSEMBLY—Black background, Telechron No. C88G44.	12.50
RZK-017	KNOB—Clock, clear, push on type.	.10
n-RZW-032	CRYSTAL—Clock.	.70

PRICES ARE SUGGESTED LIST PRICES AND SUBJECT TO CHANGE WITHOUT NOTICE

"n"—DENOTES ITEMS NOT PREVIOUSLY CATALOGED.

MODELS 935, 936

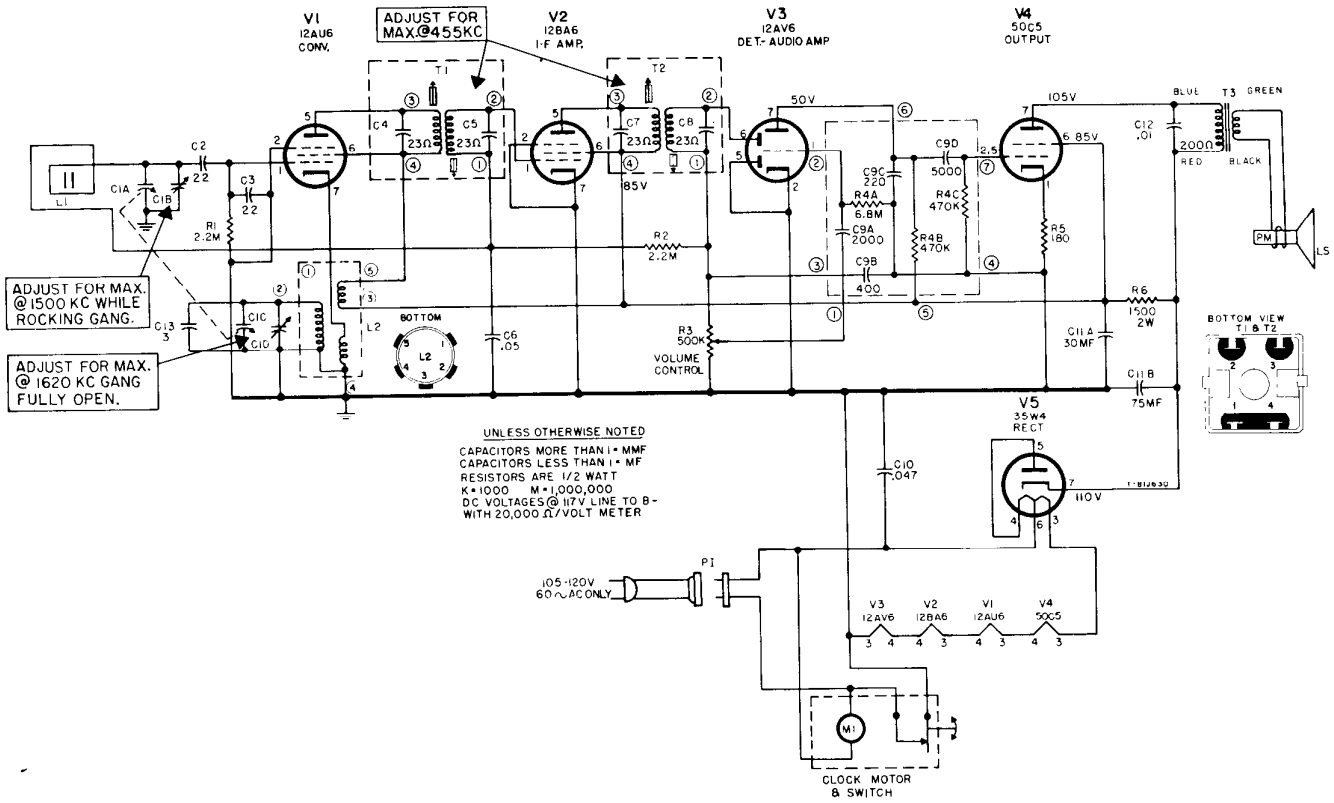

REPLACEMENT PARTS LIST—MODELS 935 AND 936

CAT. NO.	SYMBOL	DESCRIPTION	PRICE
		CAPACITORS	
RCC-086	C6	.05 mfd., @ 200 v, paper	$0.30
RCE-215	C11A, B	30 mf., 75 mf., @ 150 v	2.00
RCN-053	C10	.047 mfd., @ 600 v, molded	.35
RCT-093	C1A, B, C, D	Tuning gang	3.40
RCW-3186	C12	.01 mfd., @ 450 v, ceramic	.30
RCW-3196	C2, 3	22 mmf., @ 500 v, ceramic	.20
RCW-3207	C9A, B, C, D, R4A, B, C	Coupling network	1.00
RCW-3216	C13	3 mmf., @ 500 v	.25
		POTENTIOMETER	
RRC-325	R3	VOLUME CONTROL—500 K ohms	1.00
		All resistors are common, 10%, carbon types, which are obtainable through any Radio Parts Jobber and are therefore not listed by catalog number.	
	R1, 2	2.2 megohms, ½ watt	
	R5	180 ohms, ½ watt	
	R6	1500 ohms, 2 watts	
		COILS AND TRANSFORMERS	
RLC-135	L2	COIL—Oscillator coil	1.00
RLL-064	L1	COIL—Iron core loop antenna	1.00
RTL-183	T1, 2	TRANSFORMER—I-F	1.65
RTO-176	T3	TRANSFORMER—Output	2.05

CAT. NO.	DESCRIPTION	PRICE
	MISCELLANEOUS ITEMS	
RHC-060	CLAMP—Plastic clamp (antenna mtg.)	$0.15
RHC-095	CLIP—For speaker mounting	.05
RHS-110	SHIELD—Tube shield for V3	.15
RHS-161	SHIELD—Flat, mounted on V2 socket center pin	.10
RJJ-010	RECEPTACLE—Power cord receptacle	.20
RJS-221	SOCKET—Tube socket	.25
RJS-222	SOCKET—Tube socket with ground clip for V3	.25
RMS-356	CLIP—For tuning knob	.05
RMS-374	CLIP—Ground clip for molded socket	.02
ROP-033	LOUDSPEAKER—4-inch, P.M.	4.60
RWL-035	POWER CORD—Brown, 6 feet long	.90
	CABINET AND APPEARANCE ITEMS	
n-RAB-317	CABINET BACK—Mahogany, Model 935	4.35
n-RAB-318	CABINET BACK—Red, Model 936	4.35
n-RAC-200	CABINET—Antique White, Models 935, 936	2.25
RAG-089	GRILLE—Radio front, Rich Lo Brass	1.70
n-RDK-595	KNOB—Tuning, black, for Model 935	1.80
RDK-509	KNOB—Tuning, clear and red, Model 936	1.65
RDK-425	KNOB—Volume, clear, w/gold insert	.35
RDP-087	POINTER—Red	.10
n-RZC-066	CLOCK—Antique White, Telechron No. C103G26	15.50
RZK-030	KNOB—Clock, white	.10
n-RZW-031	CRYSTAL—Clock, clear w/red lettering	.50

PRICES ARE SUGGESTED LIST PRICES AND SUBJECT TO CHANGE WITHOUT NOTICE

"n"—Denotes Parts Not Previously Cataloged.

MODELS 940, 941, 942

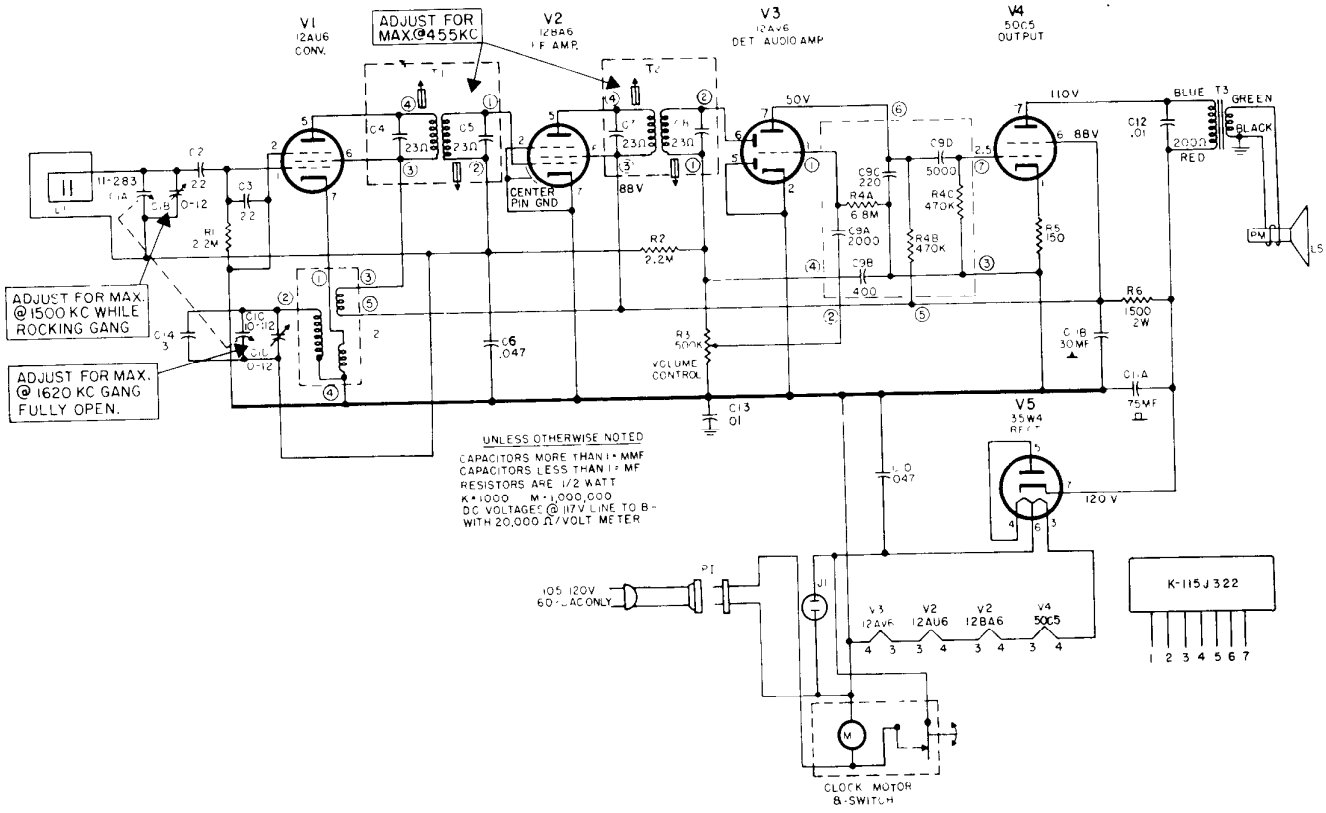

PARTS DESCRIPTION LIST

MODELS YRB 82-1, YRB 67-1, YRB 67-2

Symbol	Description	Symbol	Description	Symbol	Description
C1	Ant. trimmer condenser	C14	.05 mfd paper capacitor	R2	2.2 megohm carbon resistor
C2A	Tuning condenser, ant. section	C15	.05 mfd paper capacitor	R3	Volume control .5 megohm
C2B	Tuning condenser, osc. section	C16	.05 mfd paper capacitor	R4	4.7 megohm carbon resistor
C3	Osc. trimmer condenser	C17	.01 mfd paper capacitor	R5	470,000 ohm carbon resistor
C8	220 mmfd mica capacitor	L1	1st I.F. transformer	R6	470,000 ohm carbon resistor
C9	.005 mfd paper capacitor	L2	2nd I.F. transformer	R7	150 ohm carbon resistor
C10	220 mmfd mica capacitor	L3	Loop assembly	R8	2700 ohm carbon resistor
C11	.01 mfd paper capacitor	L4	Oscillator coil	R9	18 ohm carbon resistor
C12	.02 mfd paper capacitor	P1	Pilot lamp	R10	470 ohm carbon resistor
C13A	30 mfd electrolytic capacitor	T1	Output transformer		
C13B	30 mfd electrolytic capacitor	R1	22,000 ohm carbon resistor		

REPLACEMENT PARTS LIST

MODELS YRB 82-1, YRB 67-1, YRB 67-2

Stock No.	Description
	SPECIALIZED G-E REPLACEMENT PARTS
SAB 004	Back cover, Models YRB 67-1 and 67-2
SAB 006	Back cover, Model YRB 82-1
SAU 001	Cabinet, Model YRB 82-1
SAV 003	Cabinet, Model YRB 67-1
SAV 015	Cabinet, Model YRB 67-2
SCE 002	Capacitor, filter electrolytic, 30-30 mfd 150 volt, C13A, C13B
SCT 002	Capacitor, tuning, C2A, C2B
SDC 001	Cord, dial drive cord
SDK 002	Knob, Models YRB 67-1 and 67-2
SDK 010	Knob, Model YRB 82-1
SDP 001	Pointer, dial scale
SDS 004	Dial scale, Models YRB 67-1 and 67-2
SDS 006	Dial scale, Model YRB 82-1
SHC 001	Hair pin cotter for dial drive
SJP 002	Connector, female to speaker
SJS 001	Pilot lamp socket
SJS 003	Socket, octal tube
SLC 001	Coil, oscillator
SLL 001	Loop, antenna
SMF 002	Snap button
SMF 003	Fastener, back cover to cabinet
SMS 001	Spring, dial drive drum
SMU 001	Shaft, dial drive
SMW 001	Pulley, dial drive
SRC 003	Volume control, 0.5 megohm with power switch

Stock No.	Description
	SPECIALIZED G-E REPLACEMENT PARTS (Cont.)
STL 001	Transformer, 1st I.F.
STL 002	Transformer, 2nd I.F.
STO 001	Transformer, output
SWL 001	Power cord
	UNIVERSAL G-E REPLACEMENT PARTS
UCC 039	Capacitor, .005 mfd paper, C9
UCC 040	Capacitor, .01 mfd paper, C17
UCC 041	Capacitor, .02 mfd paper, C12
UCC 045	Capacitor, .05 mfd paper, C14, C15, C16
UCU 1036	Capacitor, 220 mmfd mica, C8, C10
UDL 013	Pilot lamp, Mazda 51
UOP 526	Speaker, 5¼ inch PM dynamic
URD 007	Resistor, 18 ohm ½ watt carbon, R9
URD 029	Resistor, 150 ohm ½ watt carbon, R7
URD 041	Resistor, 470 ohm ½ watt carbon, R10
URD 081	Resistor, 22,000 ohm ½ watt carbon, R1
URD 113	Resistor, 470,000 ohm ½ watt carbon, R5, R6
URD 129	Resistor, 2.2 megohm ½ watt carbon, R2
URD 137	Resistor, 4.7 megohm ½ watt carbon, R4
URE 059	Resistor, 2700 ohm 1 watt carbon, R8

Power Unit- Models 41, 42, 43, 44, 45

