SERVICE MANUAL 1810/MCD810

marantz

model 1810/MCD810

Stereo Cassette Deck

MARANTZ DESIGN AND SERVICE

Using superior design and selected high grade components, MARANTZ Company has created the ultimate in stereo sound. Only original MARANTZ parts can insure that your MARANTZ product will continue to perform to the specifications for which it is famous.

Parts for your MARANTZ stereo are generally available within 72 hours throughout the nation via a toll-free line to our National Parts Depot in California. The sales professionals who take your call immediately refer to their own desk top computer terminal and can quickly determine the availability and price information you require. If, for some reason, your order should exceed our available stock, we usually can instantly provide an alternate replacement part or current delivery information. When the order is placed and confirmed, the computer simultaneously generates "hard copy" orders at the distribution center. As hard copies come directly from the computer to the national parts depot, your requested stock is assembled and prepared for shipment and placed on the first available carrier for delivery to you.

ORDERING PARTS

Phone orders will eliminate mail delays, and we encourage the use of this method. If you order by mail, use MARANTZ parts order forms which are available from our National Parts Depot located at the following address:

SUPERSCOPE NATIONAL PARTS DEPARTMENT
20525 Nordhoff Street
Chatsworth, California 91311
Phone: 1-800-423-5108
1-213-998-9333

The following information must be supplied to eliminate delays in processing your order:

1. Complete address.
2. Complete part numbers.
3. Complete description of parts.
4. Model number for which part is required (indicate MARANTZ).
5. Account number (for account customers only).

Direct consumers will be provided with the current retail price quotation on available parts in order to advise them of the cost of the parts and shipping.

OVERSEAS PARTS ORDERING

Parts may also be ordered from the following overseas addresses:

CANADA

Superscope Canada, Ltd.
3710 Nashua Drive
Mississauga
Ontario, Canada L4V1M5

AUSTRALIA

Superscope (Australasia) Pty., Ltd.
32 Cross Street (P.O. Box 604)
Brookvale 2100 N.S.W.
Australia

JAPAN

Marantz Japan, Inc.
3622 Kamitsuruma
Sagamihara Shi
Kanagawa, Japan

EUROPE

Superscope Europe, S.A.
Avenue Leopold III, 2
7120 Peronnes-Lez-Binche
Belgium

Marantz France
Rue Louis Armand 9
92600 Asnieres
Hauts-de-Seine
France

Marantz Audio U.K. Ltd.
London Road, 203
Staines
Middlesex
England

Superscope GmbH
Max-Planck-Strasse 22
D-6072 Dreieich 1
West Germany

All of the above locations are fully equipped to take care of your total service needs. Because various countries have differing configuration requirements, it is necessary that you contact the service facility in your particular country. In the event that there is no service location listed for your country, please contact the nearest facility for the necessary assistance.

www.hifiengine.com

TABLE OF CONTENTS

Section	Title	Page
1.	TEST EQUIPMENT REQUIRED FOR SERVICING	4
2.	DISASSEMBLY	5
2.1	Removing the Cassette Case Escutcheon	5
2.2	Removing the Main P.W. Board	5
2.3	Removing the Mechanical Chassis	5
3.	ADJUSTMENT PROCEDURES	6
3.1	Mechanical Adjustments	6
3.2	Electrical Adjustments and Measurements	11
4.	DIAGRAMS	23
4.1	Level Diagram	23
4.2	Block Diagram	24
4.3	Connection Diagram	26
4.4	Schematic Diagram and Component Locations	28
5.	EXPLODED VIEWS AND PARTS LIST	32
5.1	[P01-99] Top Cover and Main Chassis	32
5.2	[P02-99] Front Panel and Chassis	33
5.3	[P03-99] Associated Mechanism for Cassette Tape Operation	34
5.4	[P04-99] Rear Panel	35
5.5	[P05-00] Buttons for Tape Operation	36
5.6	[P06-99] Head Chassis	36
5.7	[P07-99] Flywheel	37
5.8	[P08-99] Switch Location for Tape Operation	37
5.9	[P09-99] Parts assembled on Top of Chassis	38
5.10	[P10-99] Parts assembled on Reverse of Chassis	39
5.11	[M01-99] P.W. Boards and General Parts	41
5.12	[H01-99] Packing Materials	45
6.	GENERAL SPECIFICATIONS	46

www.hifiengine.com

MARANTZ MODEL 1810 STEREO CASSETTE DECK

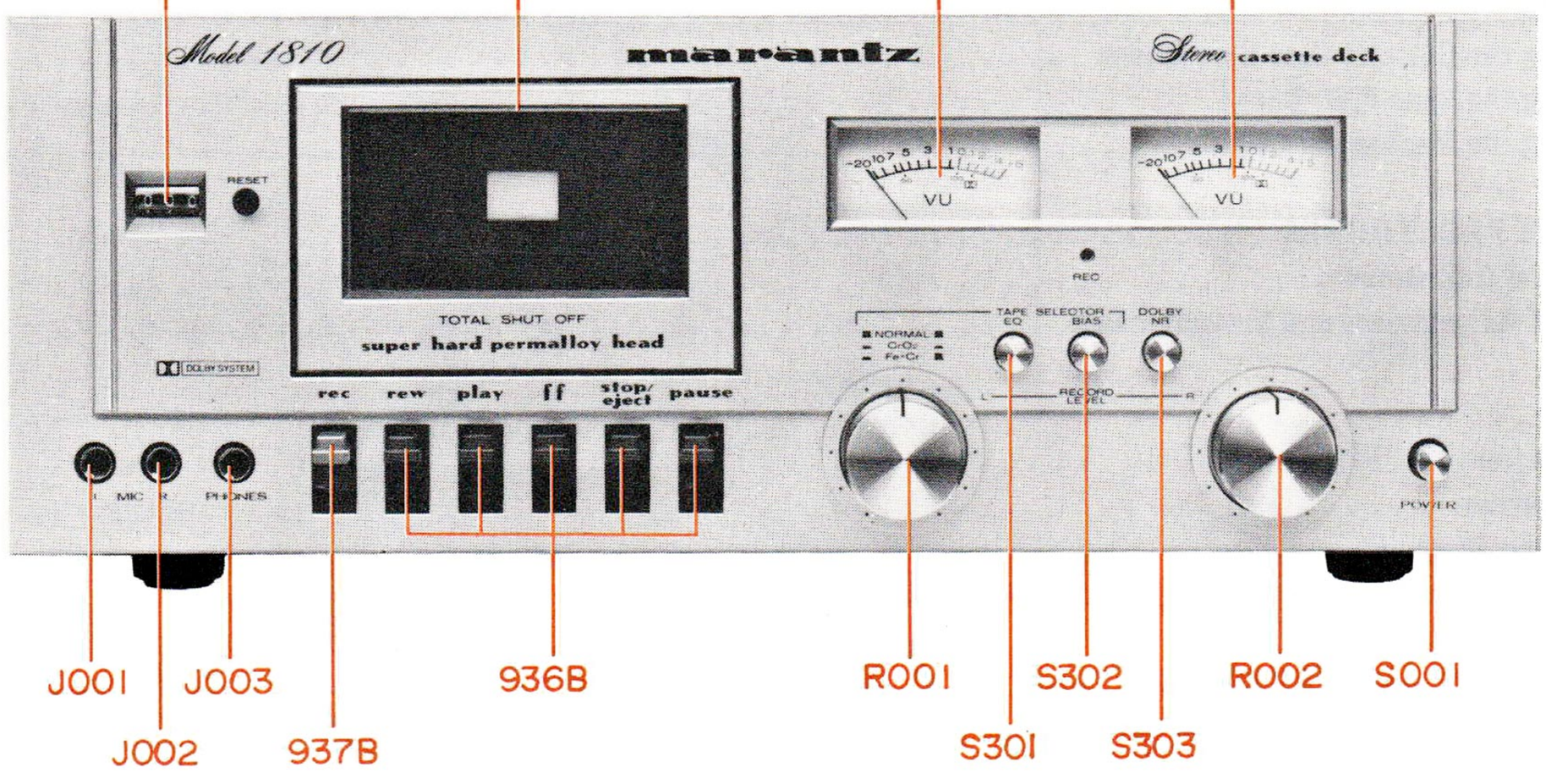

www.hifiengine.com

INTRODUCTION

This service manual are prepared for use by Authorized Warranty Station and contains service information for Marantz Stereo Cassette Deck.

Servicing information and voltage data included in this manual are intended for use by the knowledgeable and experienced technician only. All instructions should be read carefully. No attempt should be made to proceed without a good understanding of the operation of the Cassette Deck.

The parts list furnishes information by which replacement parts may be ordered from the Marantz Company. A simple description is included for parts which can be usually obtained through local suppliers.

1. TEST EQUIPMENT REQUIRED FOR SERVICING

For measuring or checking your Cassette Deck, the following instruments and materials are necessary.

- VTVM
- Audio Oscillator (af OSC)
- Attenuator (600 Ω)
- Oscilloscope
- Bandpass Filter (1 kHz)
- IEC A-Curve Filter
- Wow and Flutter Meter
- Torque Meter (Cassette Type)
- Digital Frequency Counter
- Distortion Meter
- Blank Tapes (Completely erased with bulk eraser)
  TDK AC-211 (Normal)
  TDK AC-511 (CrO_2)
  SONY CS-30 (Fe-Cr)

NOTE: If any doubt is noted in a measured value, use new tape.

- Test Tapes (New Tape)

MTT-111	Wow and Flutter Tape Speed
MTT-112	Measurement of Output Level Signal-to-Noise Ratio
MTT-150	Adjustment of Output Level
MTT-116U	Frequency Response (for Normal)
MTT-116K	Frequency Response (for CrO_2, Fe-Cr)
MTT-121	Cross Talk
MTT-141	Channel Separation

BIAS and EQ switches setting in accordance with tape used are as follows:

Tape	Switch Position	
	EQ Switch	BIAS Switch
AC-211	▬	▬
AC-511	▬	▬
CS-30	▬	▬

www.hifiengine.com

2. DISASSEMBLY

2.1 REMOVING THE CASSETTE CASE ESCUTCHEON

Push the cassette case escutcheon at the two positions upward in the arrow A direction. As it will be detached, take it out in the arrow B direction.

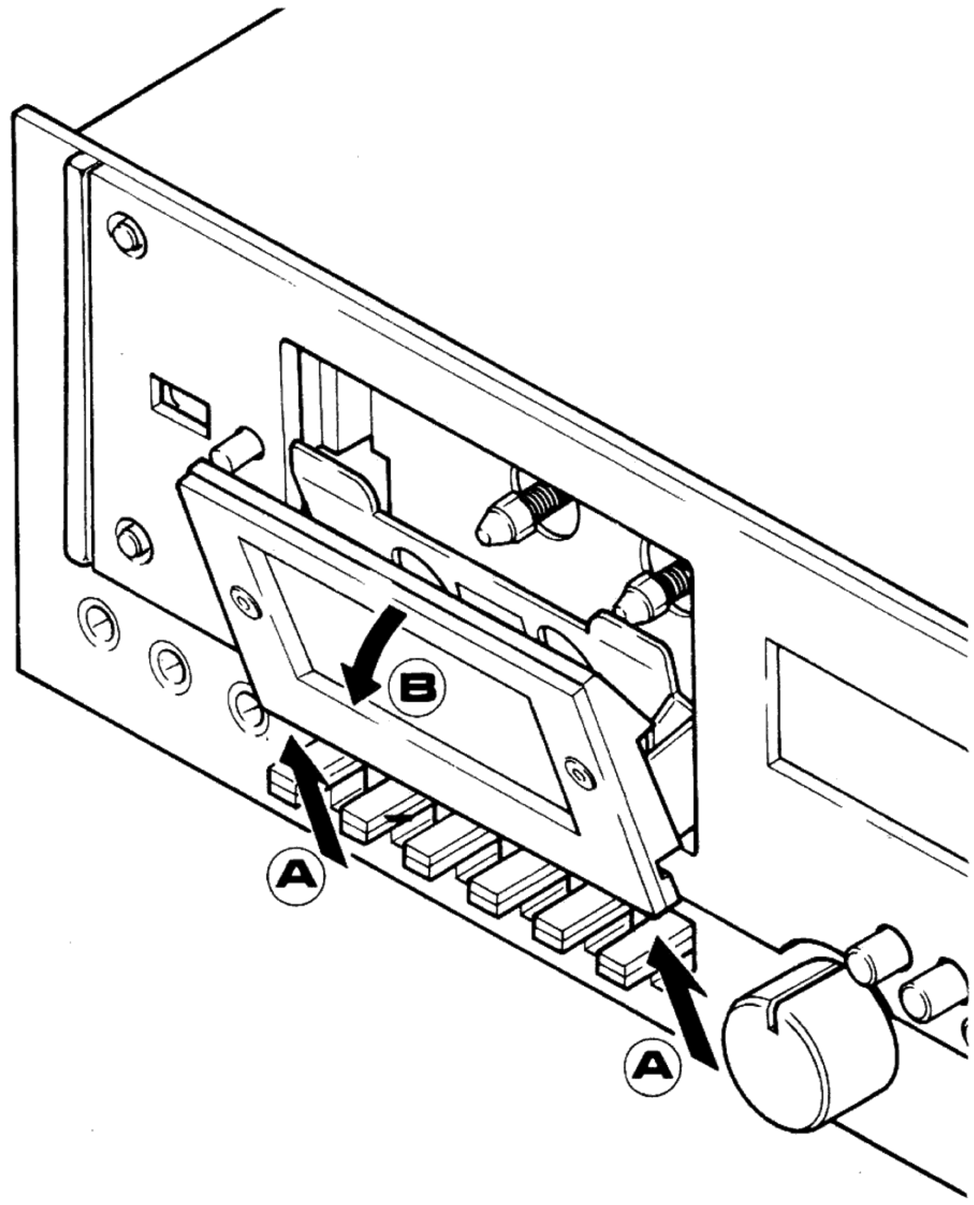

2.2 REMOVING THE MAIN P.W. BOARD

Remove the seven screws A, B, C, D, E, F, G and H holding the Main P.W. board. Then, draw it out with taking care of not applying excessive force to any lead wire.

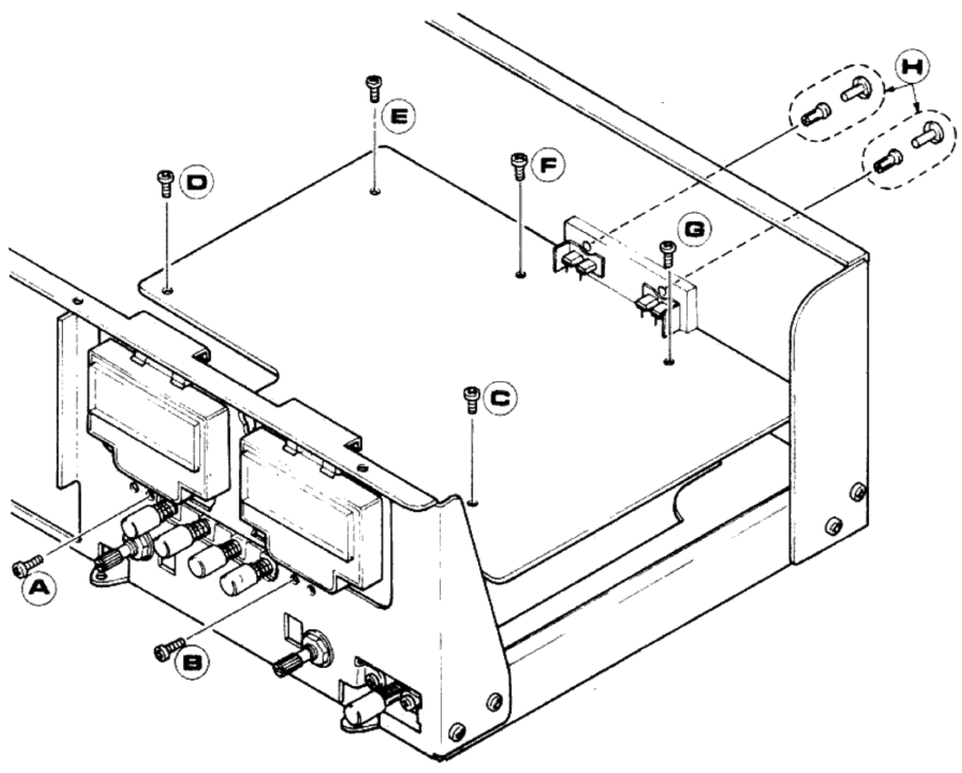

2.3 REMOVING THE MECHANICAL CHASSIS

Remove the five screws A, B, C, D, and E holding the mechanical chassis. Remove the record lever spring assembly F. Then, draw the chassis out with taking care of the tape counter and operating levers.

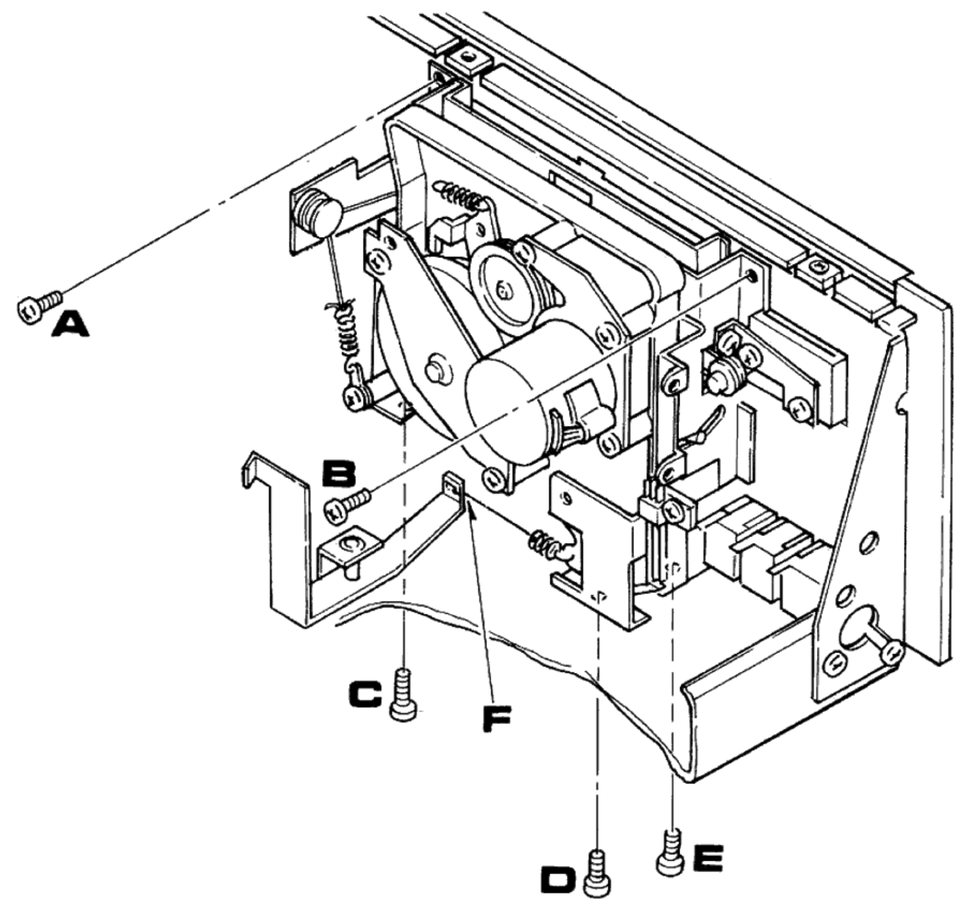

www.hifiengine.com

3. ADJUSTMENT PROCEDURES

3.1 MECHANICAL ADJUSTMENTS

3.1.1 Adjusting the Flywheel Thrust

Adjust the thrust screw at the flywheel bracket until the clearance between the capstan tail end and thrust bearing is 0.1 to 0.3 mm as shown, using a phillips screw driver. For adjusting, feel of axial dropping of the flywheel for proper clearance as this cannot been seen through. Then paint the screw to lock.

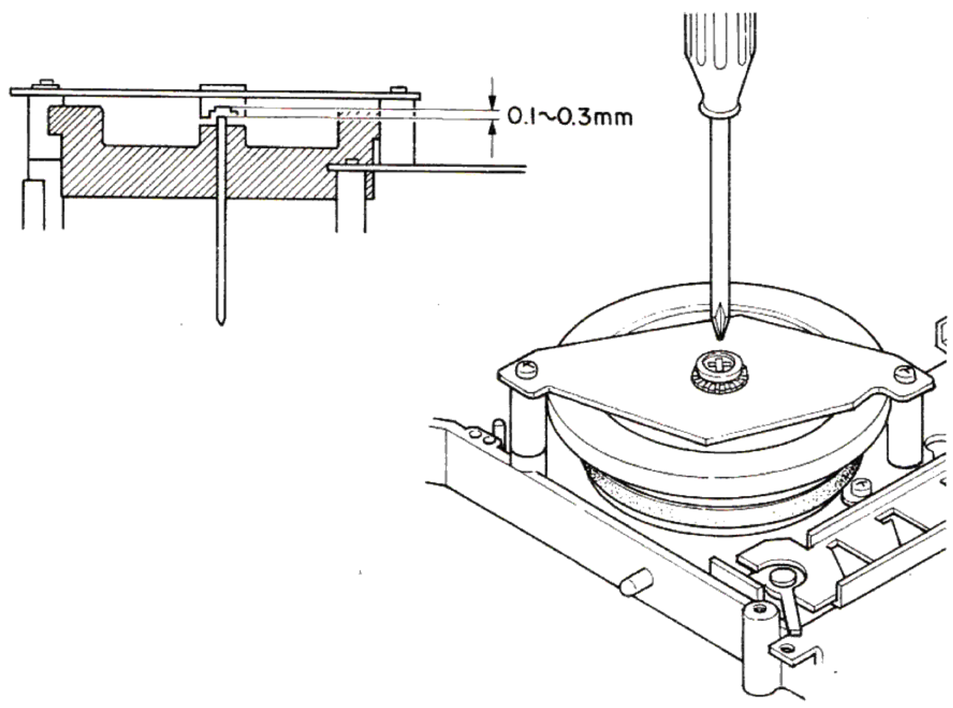

3.1.2 Adjusting Pause Timing

Set the unit in the play mode of operation. Then, adjust the bend angle of the pinch roller bracket arm (point A in the line drawing) until the clearance between the pinch roller and capstan is 0.1 to 0.3 mm at the time when the take-up reel is stopped by slowly pressing the PAUSE push-button down.

NOTE: **To widen the clearance, make the bend angle smaller (in the direction C). To make the clearance narrower, widen the bend angle (in the direction B).**

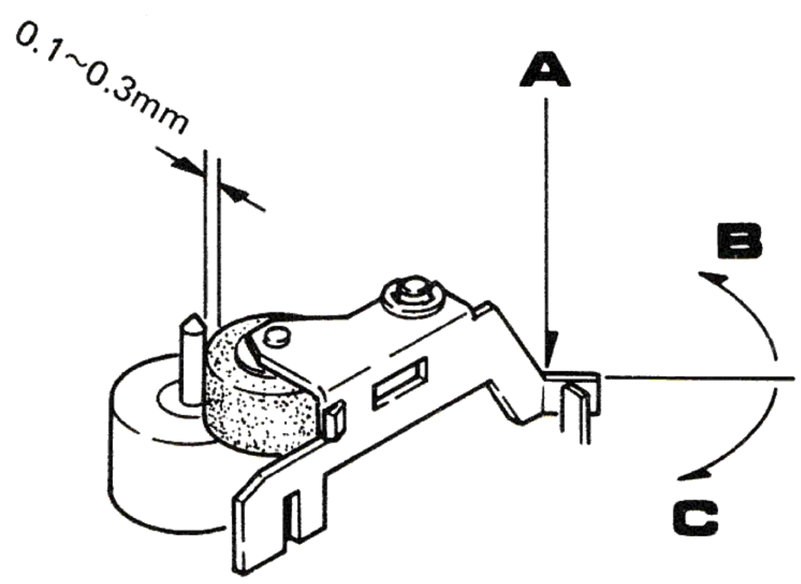

3.1.3 Adjusting the Pinch Roller Pressure

Measure the pressure of the pinch roller using a gauge as shown. For measurement, draw the pinch roller in the arrow direction in which it is detached from the capstan shaft and gradually return it toward the capstan. Read the gauge at the time when the pinch roller starts turning. The standard pressure is 300±50 g. If the pressure is out of the range, bend the pinch roller spring around the point A in the direction B or C.

NOTE: **To make the pressure strong, bend in the direction B. To make the pressure weak, bend in the direction C.**

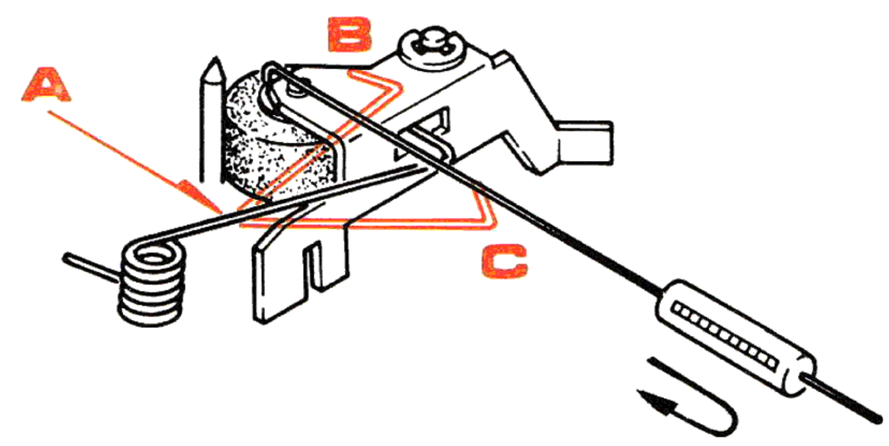

www.hifiengine.com

3.1.4 Adjusting the Play Timing

It is normal that when the PLAY pushbutton is depressed, the take-up reel table turns first, then the pinch roller is rotated. The reel table and pinch roller must not start turning at the same time.

NOTE: **Make certain that such a subsequent operation is made irrespective of locking state is depressed slowly without loading the tape.**

(1) Checking for adjustment

Check whether or not the clearance between the pinch roller and capstan is 0.2 to 0.5 mm when the take-up reel table starts turning with the PLAY pushbutton depressed slowly.

(2) Adjustment

Bend the pinch roller bracket at the point that touches the head chassis stopper. In the line drawing, bending left reduces the clearance between the capstan and pinch roller.

NOTE: **Make certain that the pinch roller bracket does not leave touching the head chassis stopper in the play mode of operation as a result of excessive bending.**

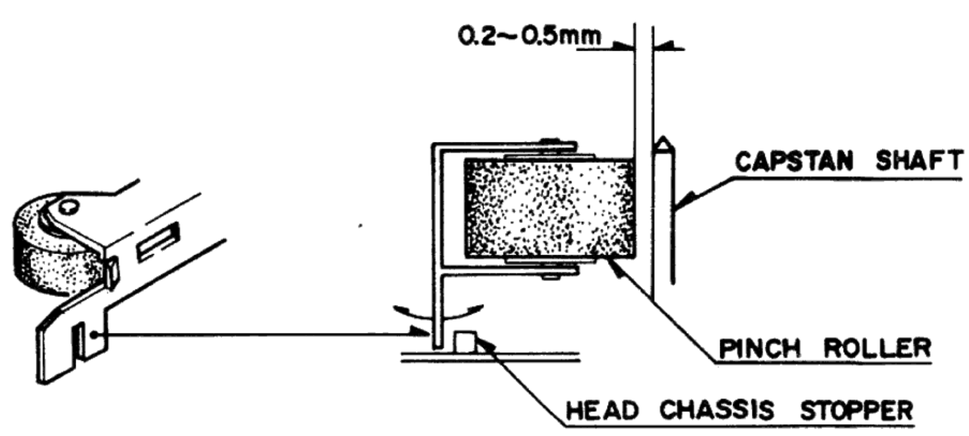

3.1.6 Adjusting the Fast Forward and Rewind Torque

The fast forward and rewind idler has a torque adjust plate spring (part A in the line drawing), which has two pawls (part B) at its ends. Set the pawls in proper one of the three steps. To make the torque high, set the pawls in the shallowest step. For lower torque, set in the deepest step.

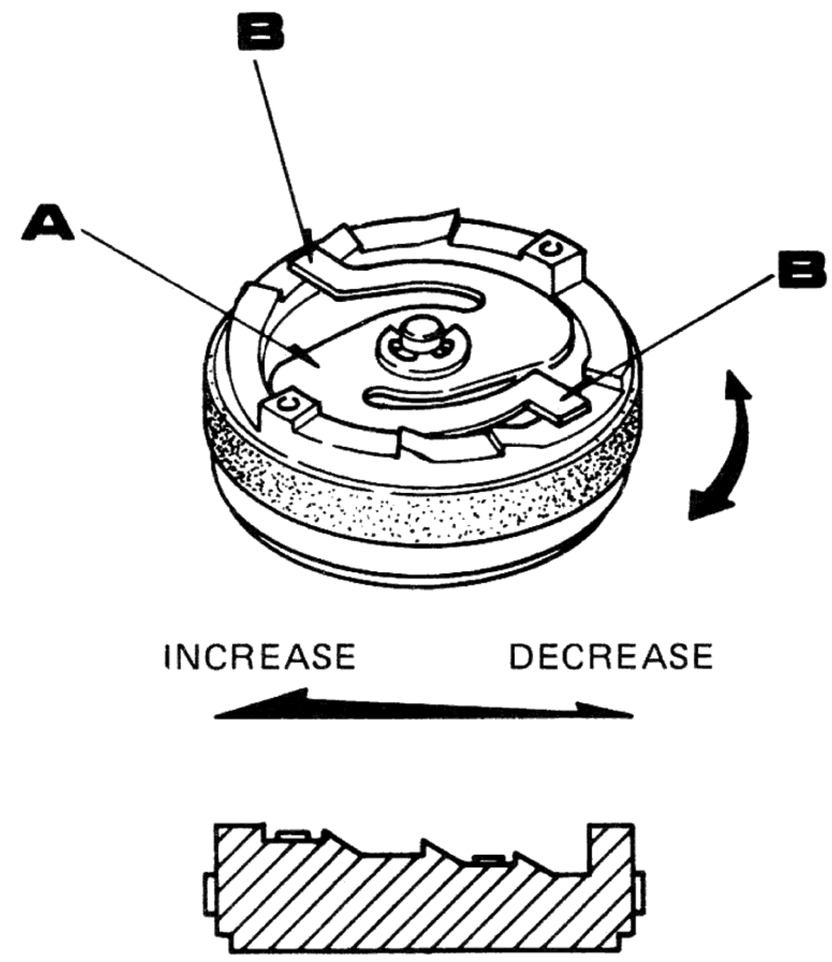

3.1.5 Adjusting the Play Torque

Put the two pawls of the circular plate spring on proper stepped position of the reel rest. The adjustable torque range is 40 to 70 g·cm.

To make the torque high, put the pawls on a shallow step. For lower torque, put them on a deeper step.

- **Checking the take-up clutch for sliding**
  Make certain that the flywheel rotates freely when the reel table is locked. The flywheel that revolves irregularly or stops is not acceptable.

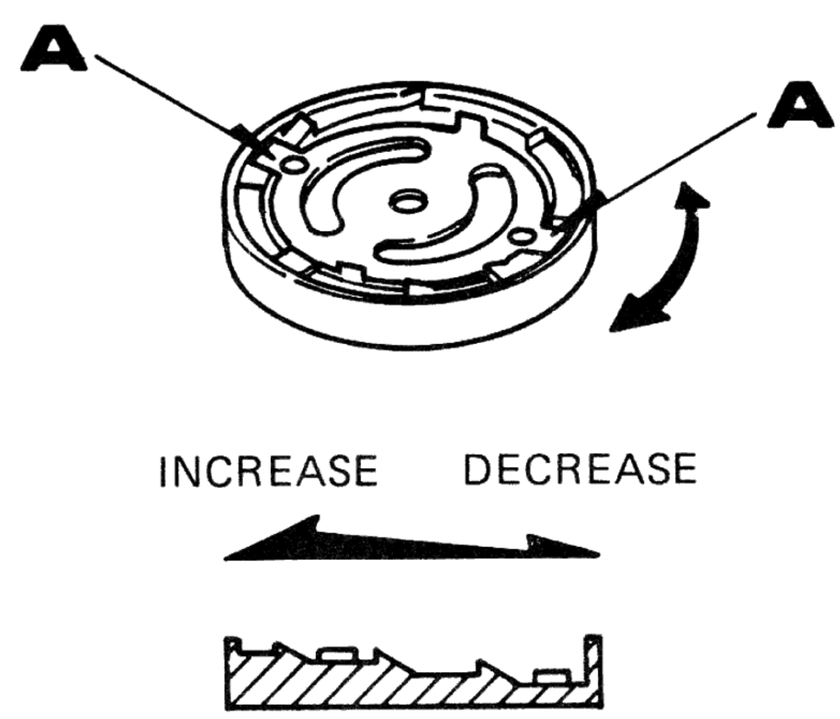

www.hifiengine.com

3.1.7 Positioning the Motor Pulley

Loosen the set screw and adjust the motor pulley position until the clearance between the pulley and motor is 4.8 mm as shown. Tighten the set screw.

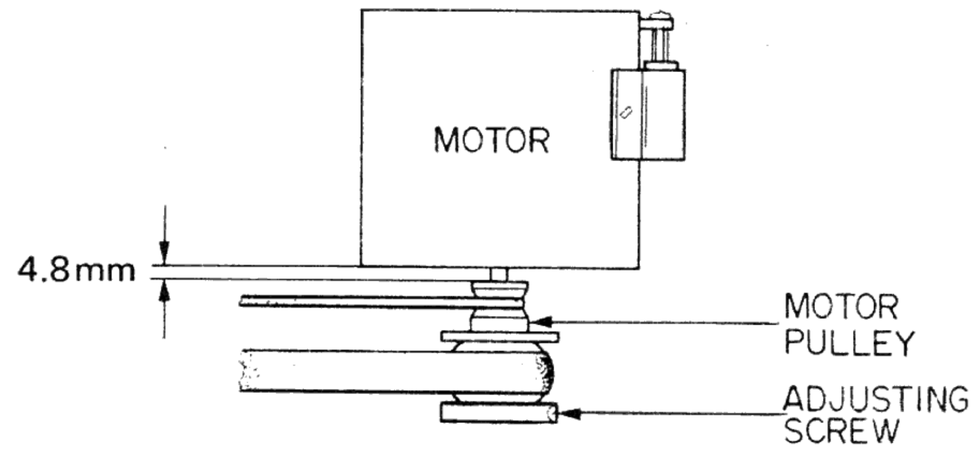

3.1.8 Adjusting the Tape Speed

Adjust the semi-fixed resistor inside the motor until the tape speed is 2985±5Hz, using a screw driver or flat blade screw driver.

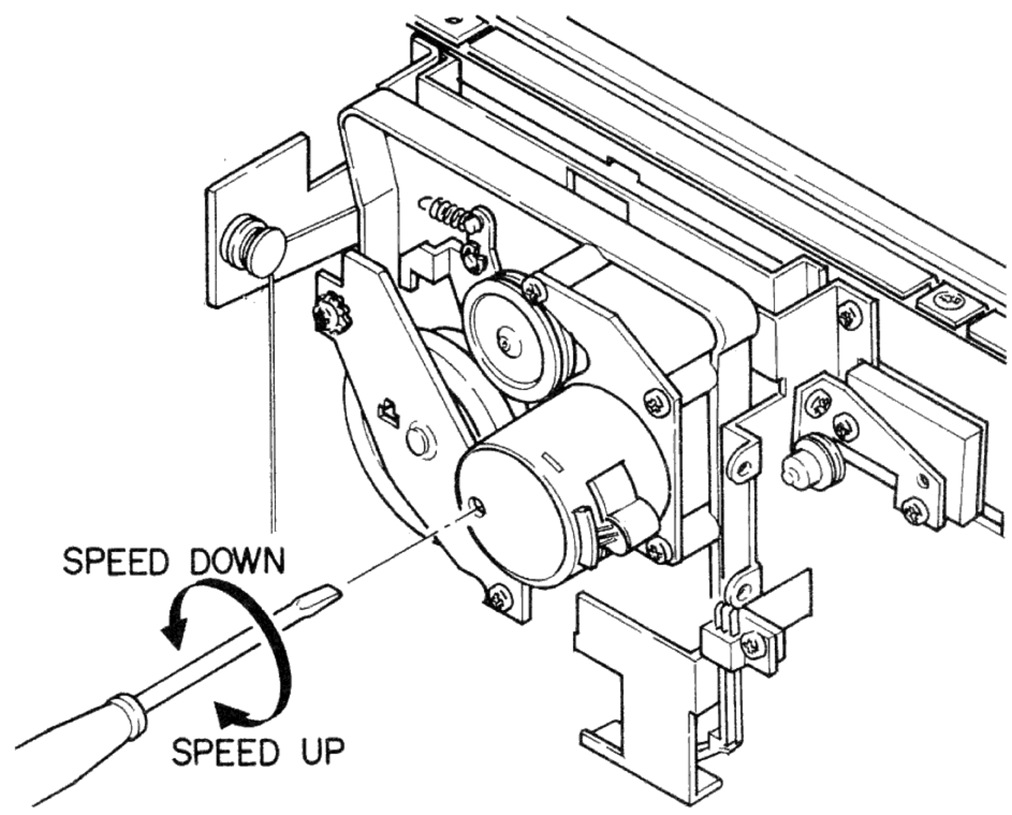

3.1.9 Adjusting the Rewind Idler Side Pressure

Make certain that in the rewind mode of operation, the rewind idler does not slip on the supply reel table when this is held by hand. If it slips, change the hanging position of the rewind idler arm return spring on the chassis in the arrow direction step by step until it does not slip.

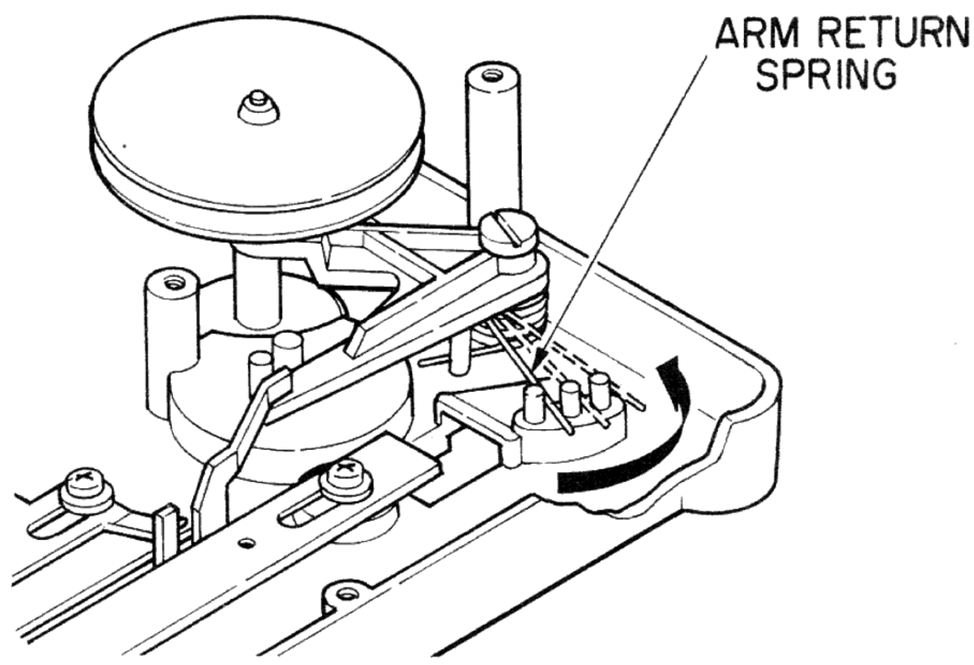

www.hifiengine.com

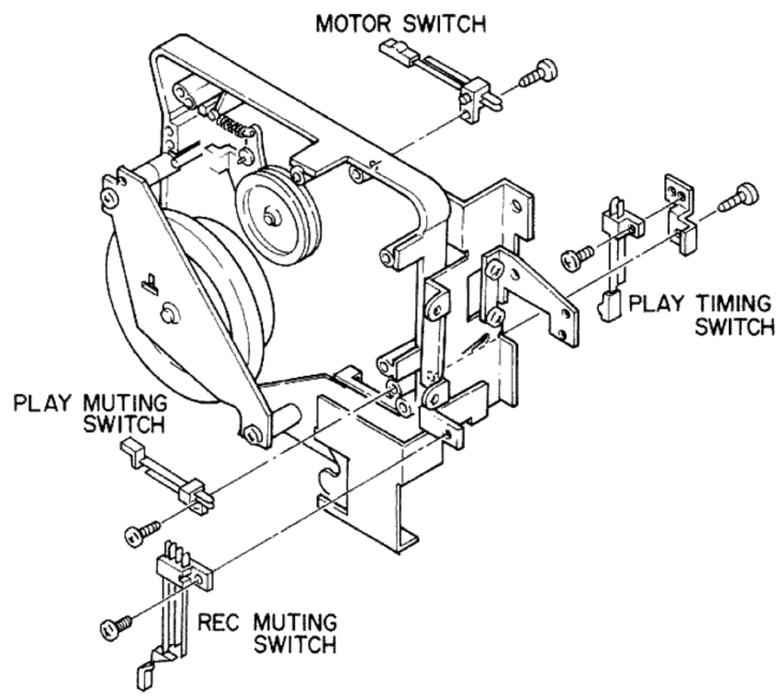

3.1.10 Positioning the Switches

(1) Motor switch

Turn the motor switch in the arrow direction until it is screwed tightly. Make certain that the contact gap is wider than 0.5 mm.

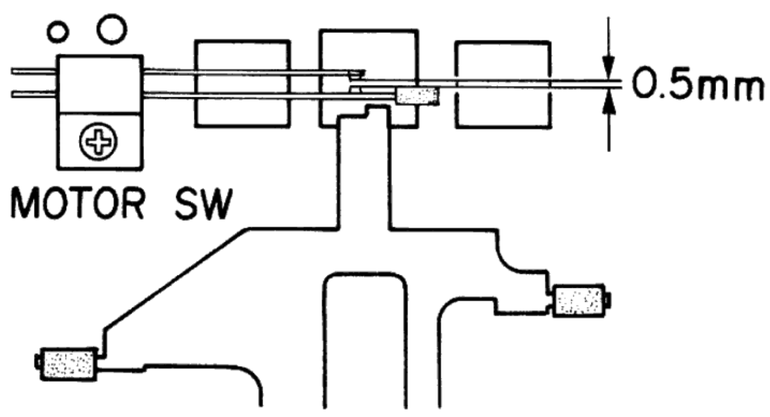

(2) Record muting switch

In the stop state, loosen the screw holding the record muting switch and position this so that the clearance between its end mold tip and mounting bracket may be 6 mm. Tighten the screw. Make certain that when the record lever is pressed in, the record muting switch contact A is made close and the contact B is broken out securely.

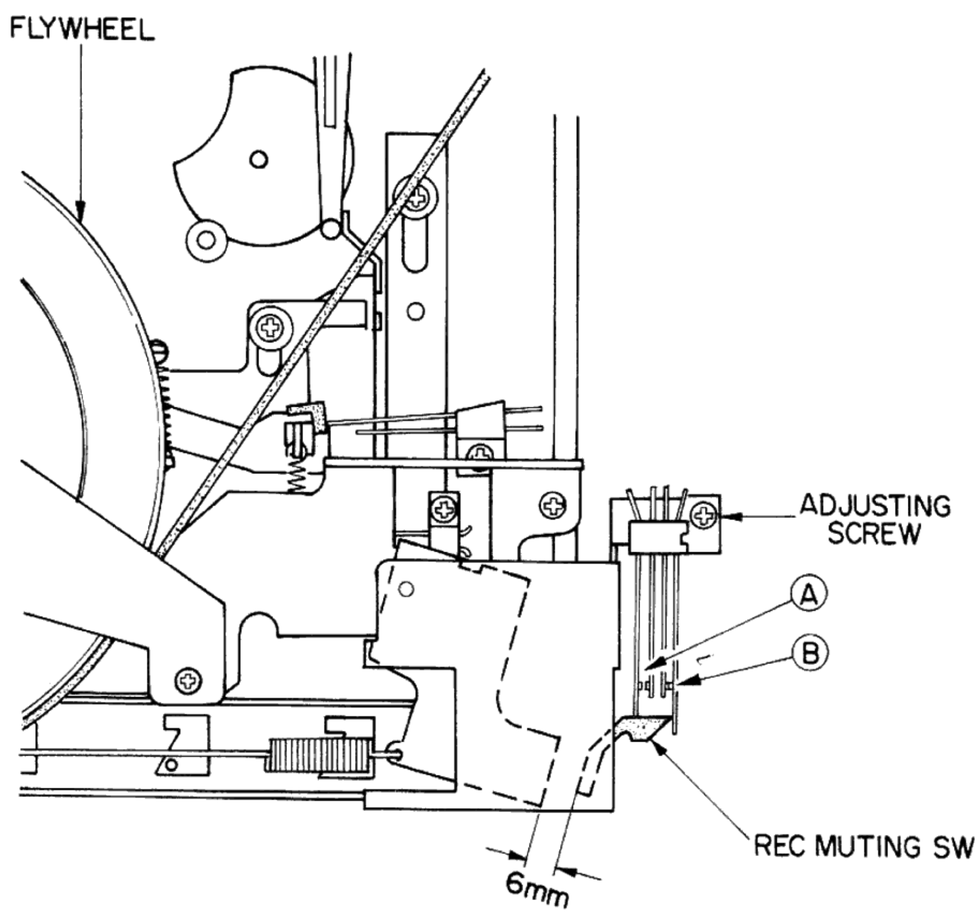

(3) Start muting switch

In the stop state, loosen the screw holding the start muting switch and position this so that its contact clearance may be 0.5 to 0.8 mm with leaving the contact tip in contact with the head plate. Tighten the screw.

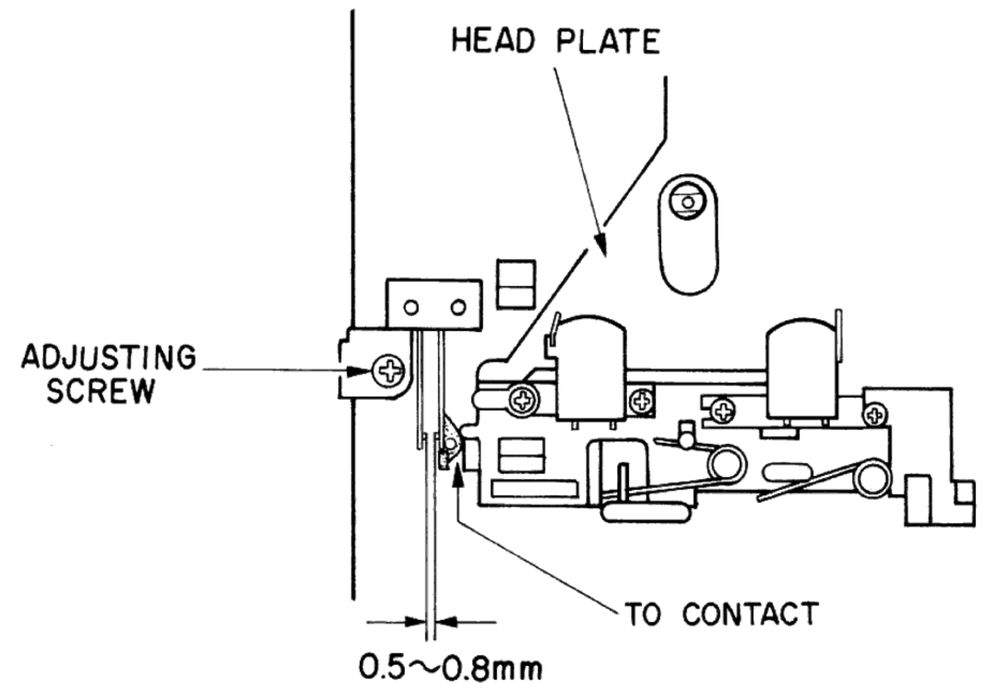

(4) Play muting switch

In the stop state, loosen the screw holding the play muting switch and position this so that the clearance between its end tip and play lever may be 4 mm.

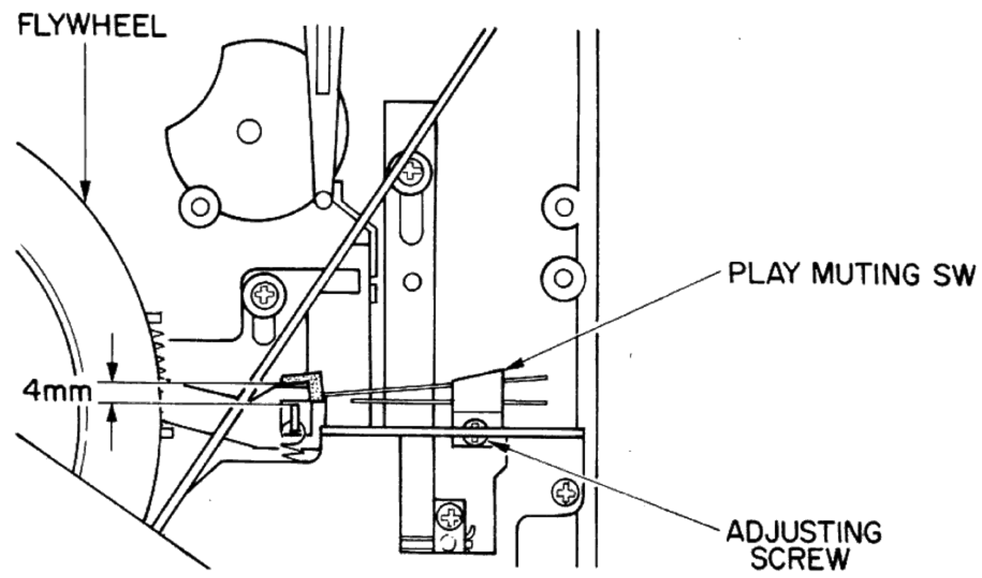

3.1.11 Setting the Eject Spring

Hang the eject spring at proper one of the three holes so that the cassette lid can be opened well. After setting, bond the spring to lock.

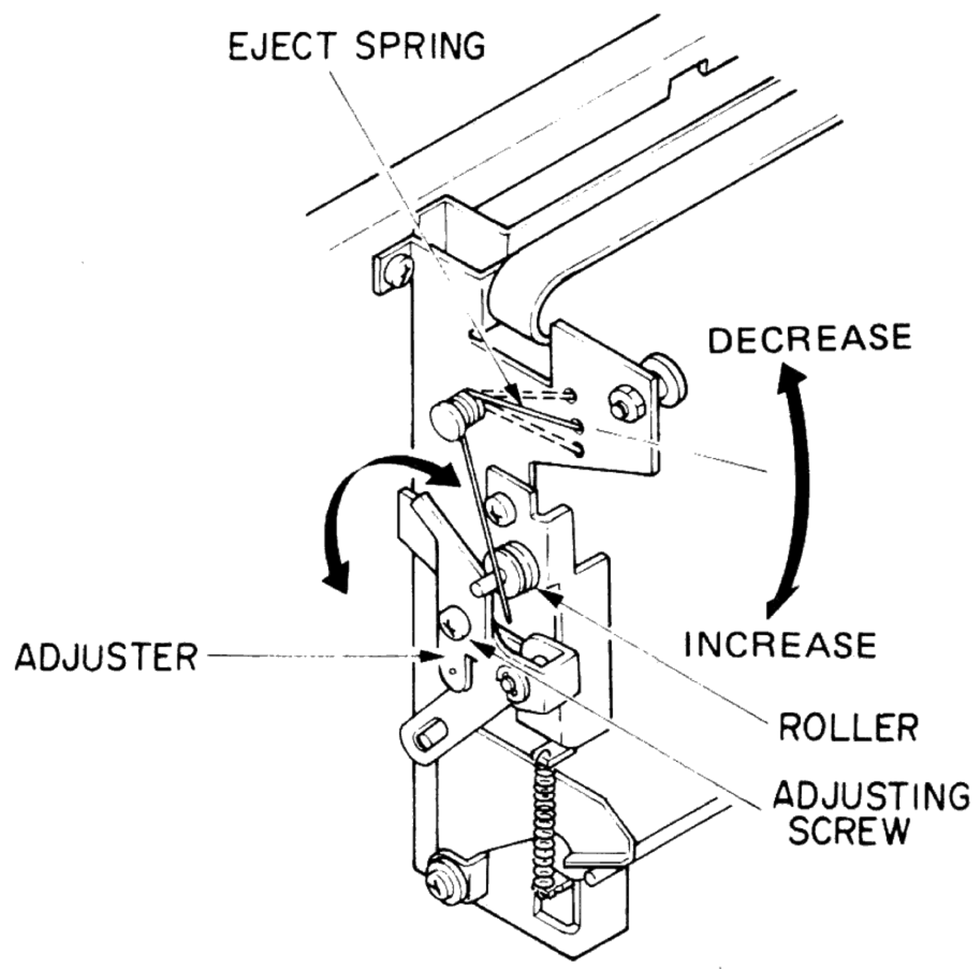

www.hifiengine.com

3.1.12 Adjusting the Interlocking Mechanism

IMPORTANT: In aligning the mechanical assembly, place it alone.

1. Lay the mechanical assembly by its side as shown in Figure 1.
2. Loosen the screw E holding the adjuster C a little until this moves freely.
3. Adjust the interlock cam B by finger until the clearance between the interlock cam B and the lock cam release arm A is 0.1 to 0.5 mm.
4. Keeping this clearance, tighten the screw E to fix the adjuster C, which will be in light contact with the cassette guide shaft D.
5. After completion of Steps 1 through 4, perform checking by proceeding as follows.
   a. Open the cassette door by pressing the STOP/EJECT pushbutton.
   b. Close the cassette door slowly by hand. Make certain that the PLAY pushbutton will not move in the range of the position A to B in Figure 2 while the cassette door is closed.
   NOTE: The cassette door is locked at the position C.

CAUTION

If the PLAY pushbutton is locked in that range, replace the following parts as these may be defective.

REF. DESIG.	PART NO	DESCRIPTION
811N	438305402-0	Cam
L	438005140-0	Guide ass'y

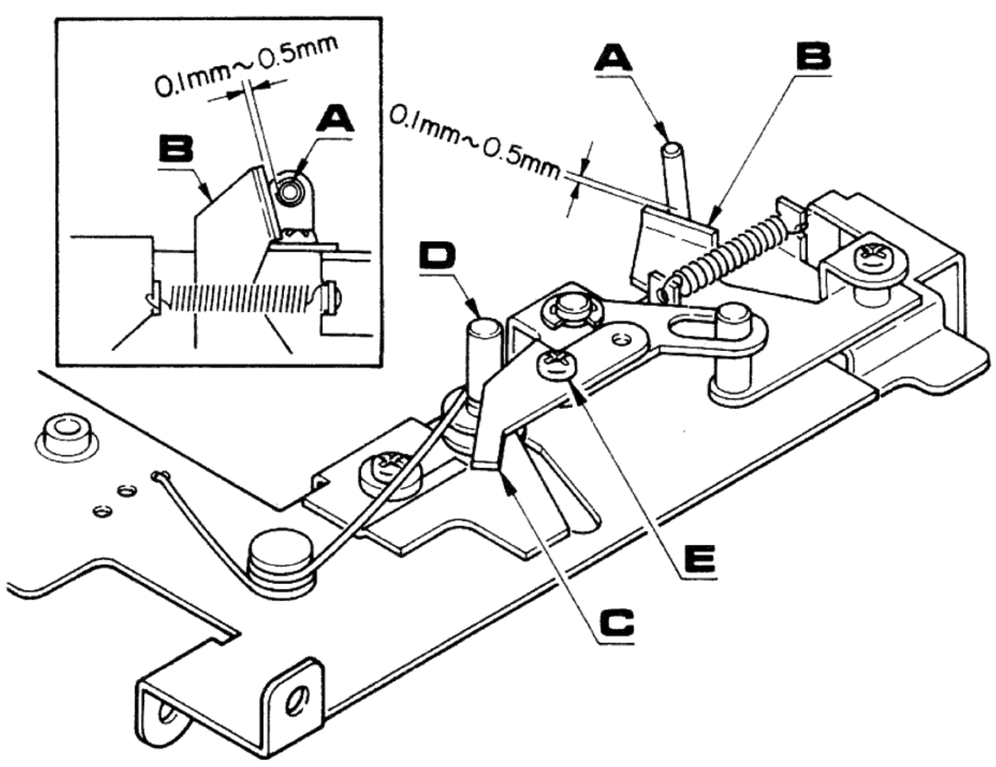

Fig. 1

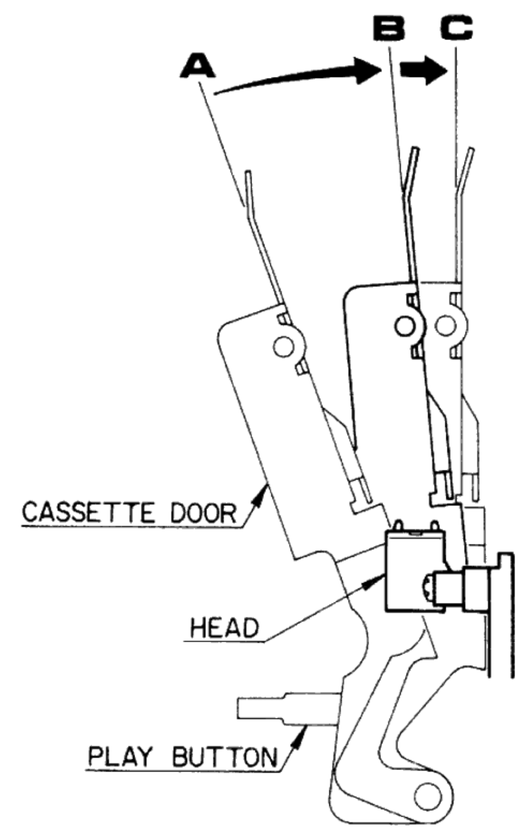

Fig. 2

www.hifiengine.com

3.2 ELECTRICAL ADJUSTMENTS AND MEASUREMENTS

Precautions before Adjustment and Measurement

1. Before playing the test tape back, thoroughly demagnetize the heads, capstan and similar metal parts using an eraser as the test tape-recorded tone is easily erased.
2. Do not place the test tape on any measuring instrument.
3. Do not put the test tape near a place where the eraser is used.
4. Method of Demagnetization:—Turn the eraser power switch on at a remote position far away from the heads. Bring the eraser close to the heads, capstan and other parts to be demagnetized, and move it up and down four or five times to demagnetize. Slowly separate the eraser far away from the parts, and turn the power switch off.
5. Do not use any magnetized adjusting tool. When using it, demagnetize it from time to time in the course of each adjustment.
6. Do not turn semi-fixed resistor more than needed.
7. If measuring the tape speed wow and flutter, operate the tape deck in the normal operating condition.
8. Do not apply locking bond excessively.

Definitions

1. The "normal playback state" is an operating state of the tape deck which plays back the MTT-150 test tape and is adjusted so as to produce a 580mV output at the MAIN P.W. Board (P100) J113, J213 with the load assuming the measuring instrument input impedance of greater than 100kΩ and with the TAPE selector switch set at the NORMAL position.
2. The "normal recording state" is an operating state of the tape deck which records a 1kHz signal to a specified recording level for which the recording level control is adjusted with the 1kHz signal applied at a specified input level to the MIC input terminal.
   In the normal recording state, therefore, this tape deck is set up with the level control to the state that the level meter pointer may deflect to the 100% mark as 0VU with a 1kHz, 1mV input signal applied.

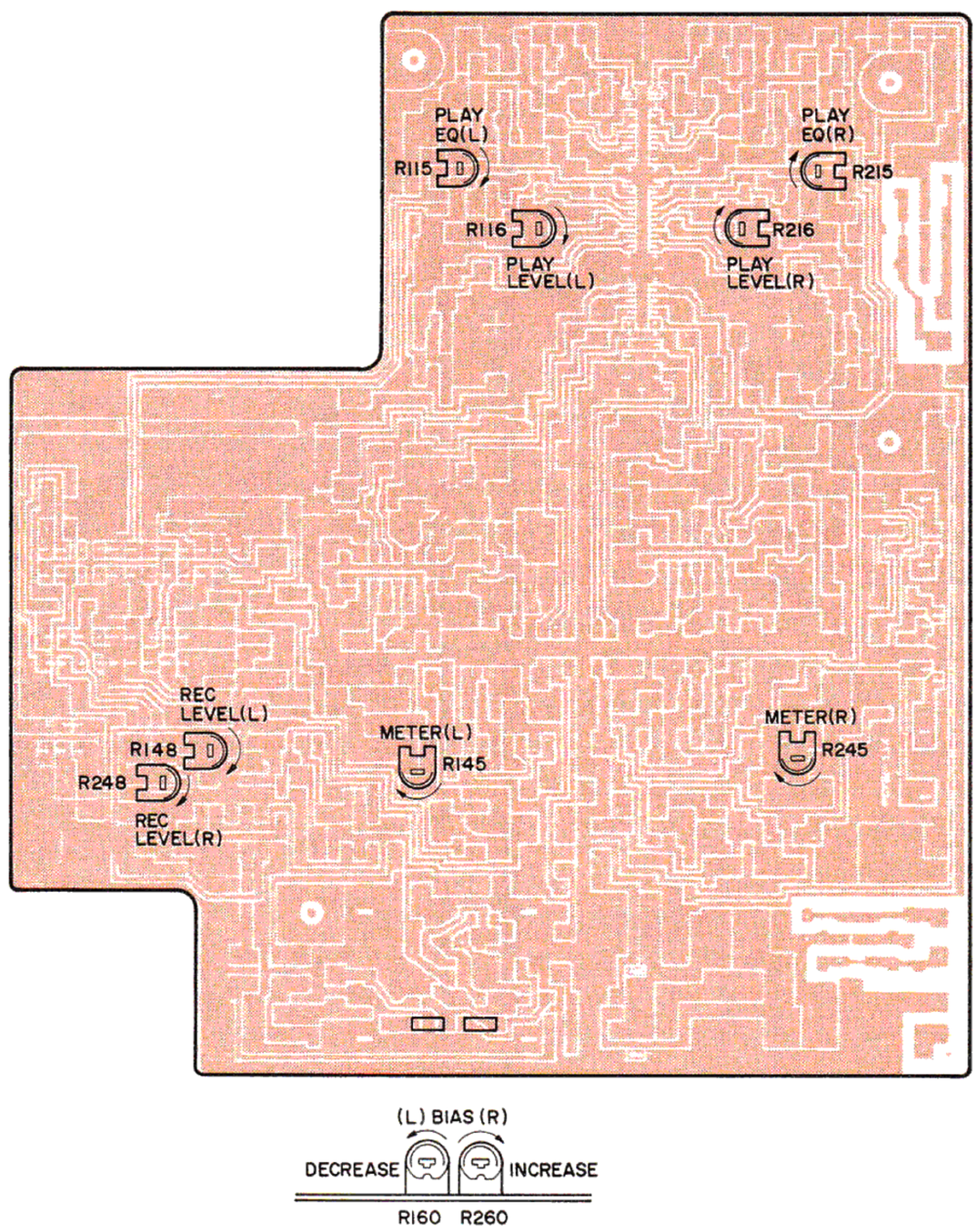

www.hifiengine.com

1. Head Azimuth Adjustment

SET UP

1. Power voltage:- 50 or 60Hz AC voltage rated for the unit to be used in a market country.
2. TAPE selector switch position:- NORMAL.
3. Load:- Measuring instrument input impedance.
4. Output terminal used:- LINE OUT.
5. Test tape used:- MTT-116U (31.5Hz to 14kHz).

PROCEDURES

1. Play the 10kHz portion of the test tape MTT-116U back. Adjust the head azimuth adjusting screw for maximum VTVM read.
2. If the peak output reads of the right and left channels are different, set the screws to obtain the mechanical center between the peaks.
3. After adjustment, lock the screw with bond.

Mode: playback

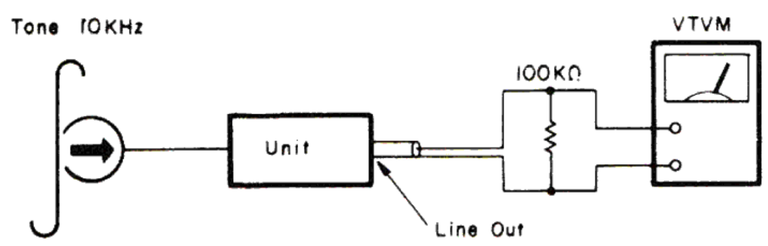

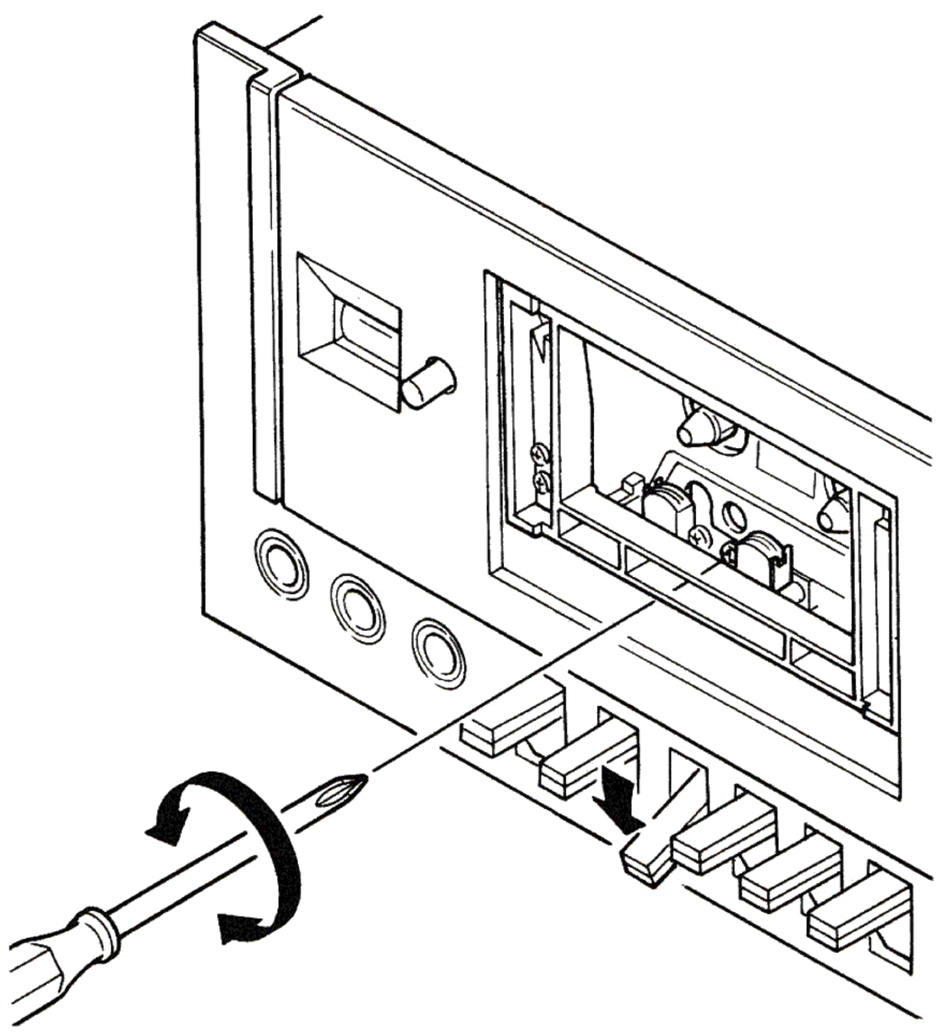

CAUTION

After adjustment, repeat the playback and stop setting a few times to make certain of no head azimuth deviation.

2. Tape Speed Adjustment

SET UP

1. Power voltage:- 50 or 60Hz AC voltage rated for the unit to be used in a market country.
2. Output terminal:- LINE OUT.
3. Test tape used:- MTT-111.
4. Unit position:- Horizontal.

PROCEDURES

1. Play the mid portion of the test tape MTT–111 back. Adjust the tape speed adjusting semi-fixed resistor for 2990 to 3010Hz counter indication.

Mode: playback

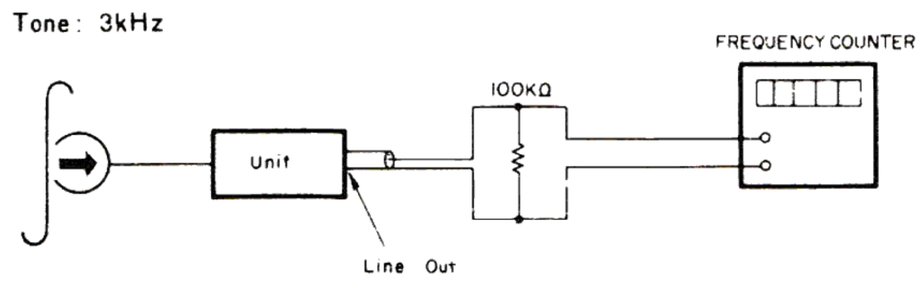

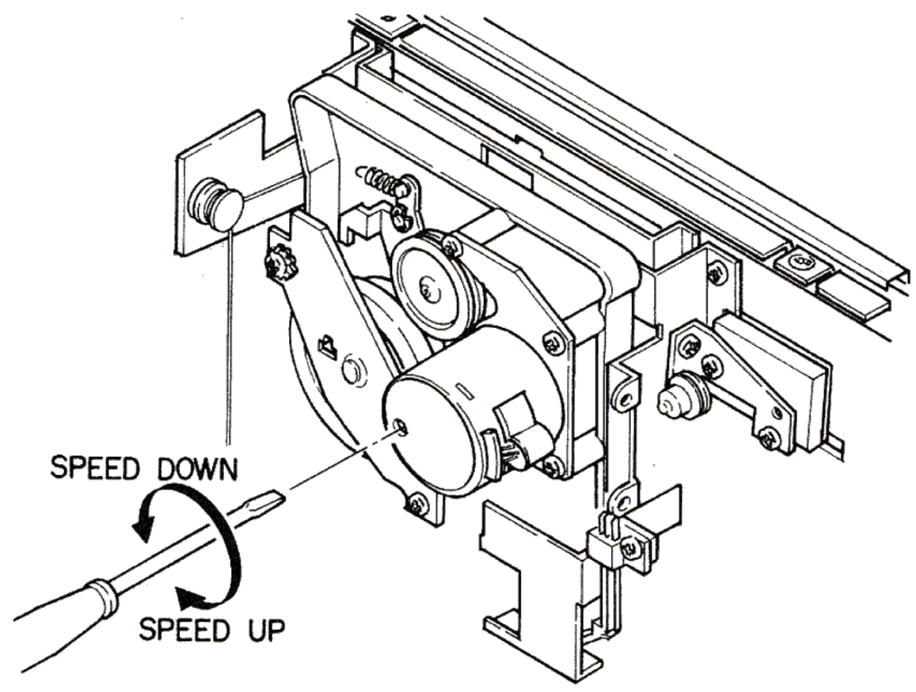

CAUTIONS

1. For adjustment, the tape deck should be set up in the normal operating condition.
2. Do not adjust the semi-fixed resistor more turns than needed.
3. Do not proceed with adjustment after the tape deck temperature has changed.
4. If a strong shock or similar vibration is applied to the tape deck after adjustment, make certain that the measured tape speed had not changed.
5. If the tape speed deviation occurs, perform the adjustment again.
6. Be careful that the counter may indicate a wrong value because of too low counter input level.
7. Before adjustment, allow for 30 seconds or more after depressing of the PLAY push-button.

www.hifiengine.com

3. Playback Equalizer Adjustment

SET UP

1. Power voltage:- 50 or 60Hz AC voltage rated for the unit to be used in a market country.
2. TAPE selector switch position:- NORMAL.
3. Load:- Measuring instrument input impedance.
4. output terminal:- LINE OUT.
5. Test tape used:- MTT-116U (31.5Hz to 14kHz).

PROCEDURES

1. Play the test tape MTT-116U. Let the 315Hz signal level be reference as 0dB.
2. Adjust R115 and R215 (2kΩ each) for 10kHz frequency response of 0 to −1dB in reference to the 315Hz signal level (0dB).
3. Proceed both for the right and left channels in the same manner.
4. Note that clockwise turning of R115 and R215 will increase the 10kHz signal output level.

Mode: playback

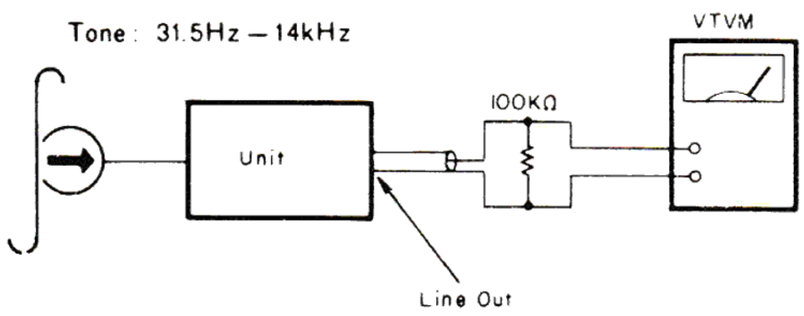

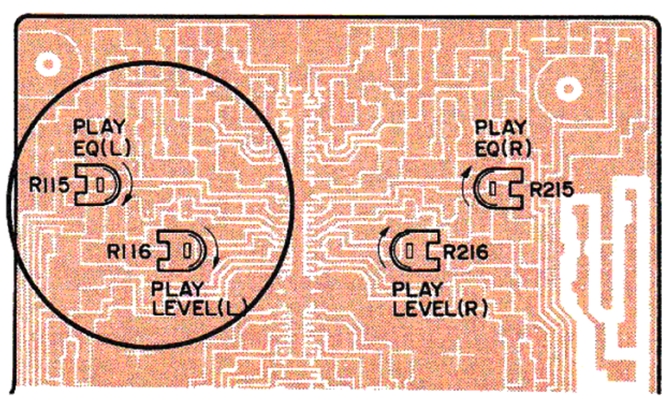

4. Playback Output Adjustment

SET UP

1. Power voltage:- 50 or 60Hz AC voltage rated for the unit to be used in a market country.
2. TAPE selector switch position:- NORMAL.
3. Load:- Measuring instrument input impedance.
4. Output terminal:- MAIN P.W. Board (P100) J113 and J213.
5. Test tape used:- MTT-150.

PROCEDURES

1. Play the test tape MTT-150 back. Adjust R116 and R216 (50kΩ each) for 580mV playback output level.
2. Proceed both for the right and left channels in the same manner.

Mode: playback

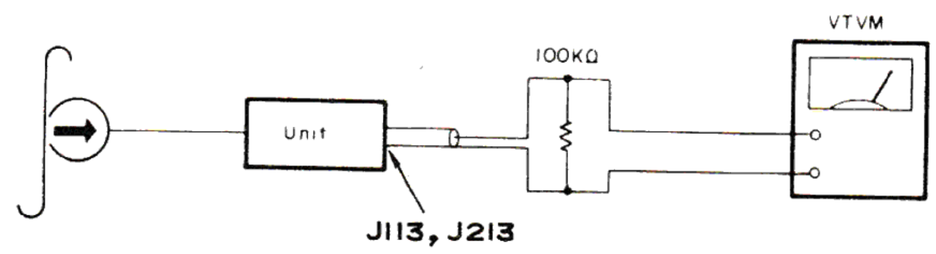

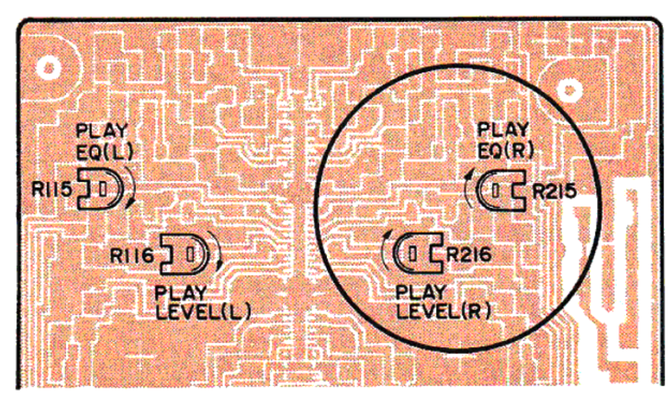

CAUTION

1. This adjustment should be performed after the one for the playback equalizer. If the playback equalizer is adjusted after the playback output adjustment, the playback output should be readjusted.

www.hifiengine.com

5. VU Meter Adjustment

SET UP

1. Power voltage:- 50 or 60Hz AC voltage rated for the unit to be used in a market country.
2. TAPE selector switch position:- NORMAL.
3. Load:- Measuring instrument input impedance.
4. Output terminal used:- MAIN P.W. Board (P100) J113 and J213.
5. Input terminal:- MIC.

PROCEDURES

1. Connect a 1kHz, –60dBV input signal to the MIC terminal. Set up the tape deck for the recording mode of operation.
2. Adjust the REC control for 580mV output level at MONI. OUT of the MAIN P.W. Board (P100) J113 and J213.
3. Adjust R145 and R245 (2kΩ each) until the VU meter pointer deflects to the DOLBY mark (DD) on the VU meter.

Mode: record

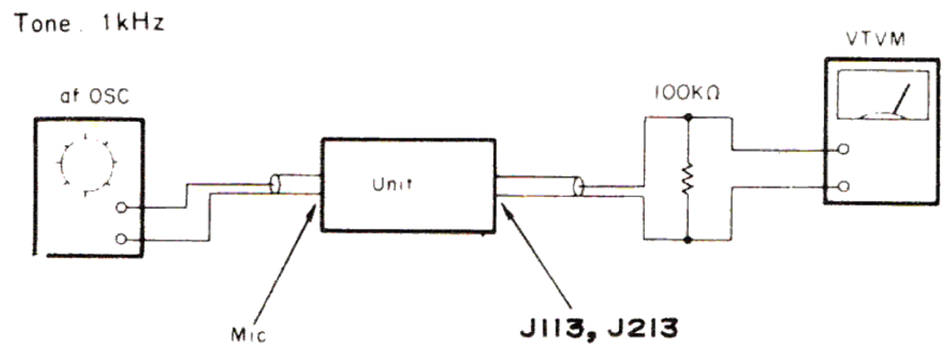

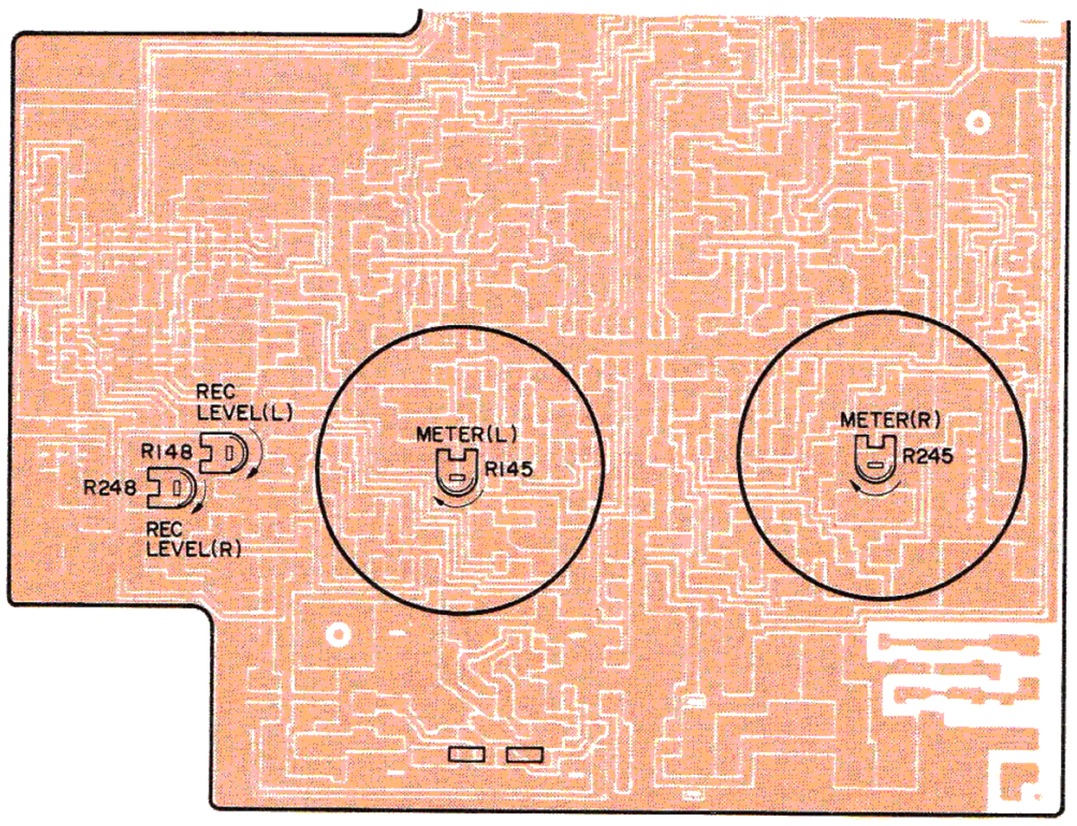

6. Recording Bias Current Adjustment (Temporal)

SET UP

1. Power voltage:- 50 or 60Hz AC voltage rated for the unit to be used in a market country.
2. TAPE selector switch:- NORMAL.

PROCEDURES

1. Set up the tape deck in the recording mode of operation. Connect the VTVM to J101, J103 (Lch) and J201, J203 (Rch). Adjust the semifixed resistor R160 and R260 for 3.5mV VTVM read.
2. Proceed both for the right and left channels in the same manner.
3. For the tape deck equipped with the TAPE selector switch, make certain that the VTVM reads approximately 4.5mV with it set to the CrO_2 position.

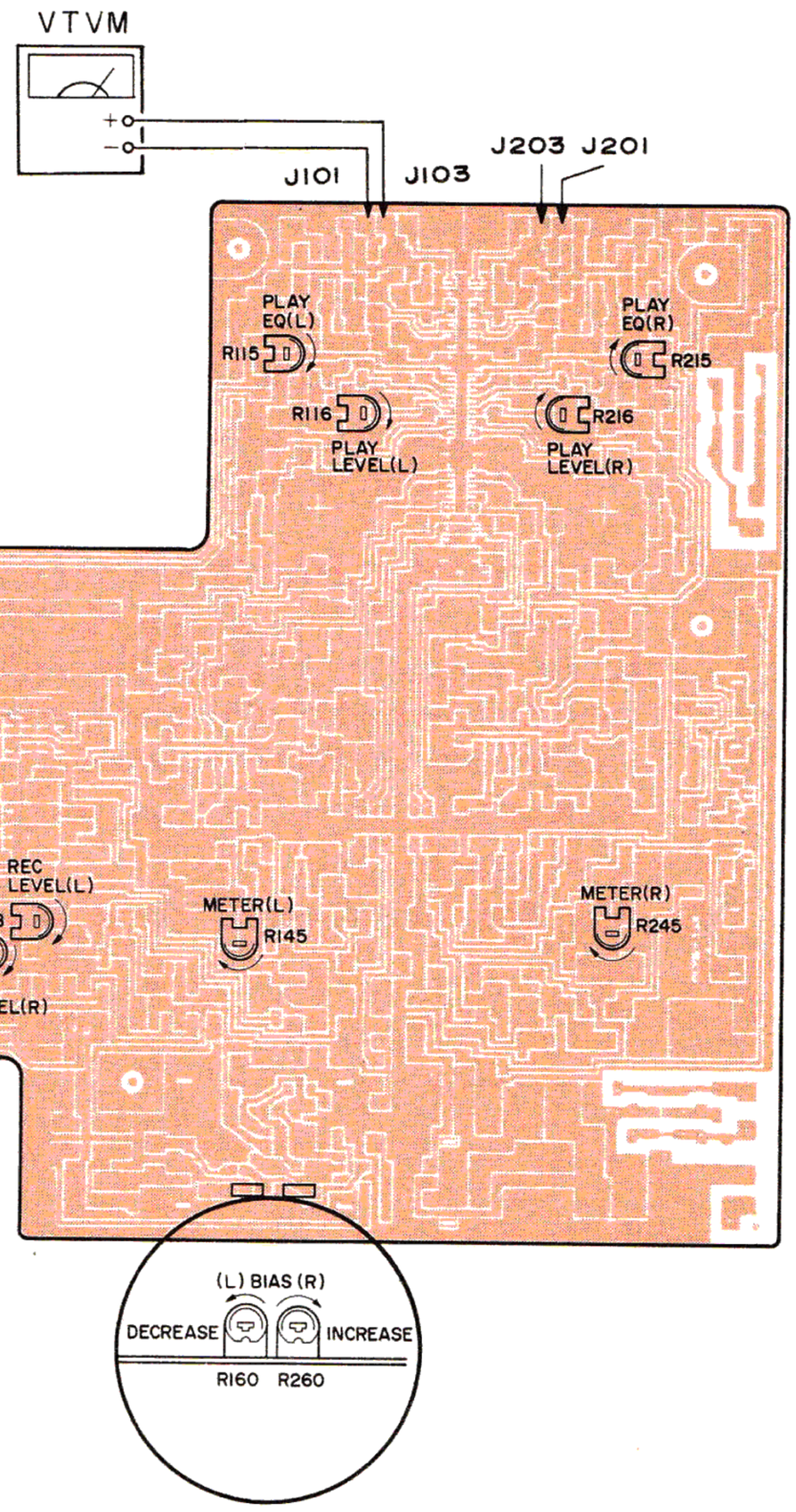

www.hifiengine.com

7. Recording Current Adjustment (Temporal)

SET UP

1. Power voltage:- 50 or 60Hz AC voltage rated for the unit to be used in a market country.
2. Input signal:- 1kHz, –60dB signal.
3. TAPE selector switch positions:- NORMAL.
4. Load:- Measuring instrument input impedance.

PROCEDURES

1. Stop the recording bias current oscillation by disconnecting the bias circuit +B resistor (R306).

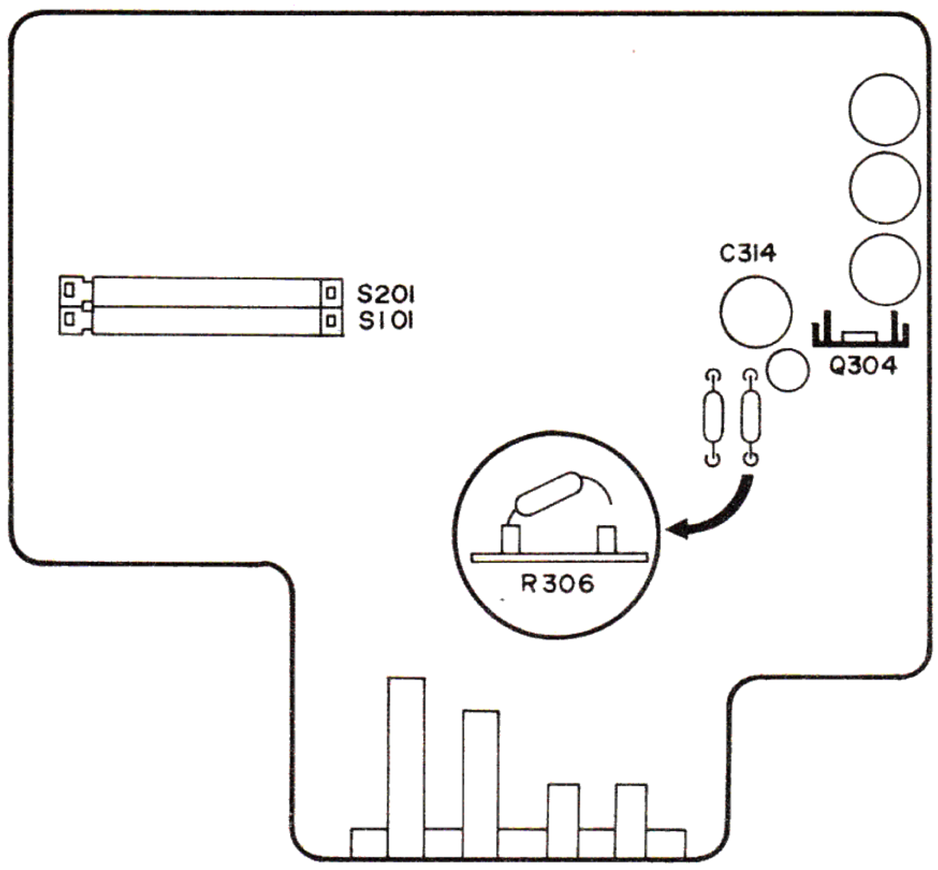

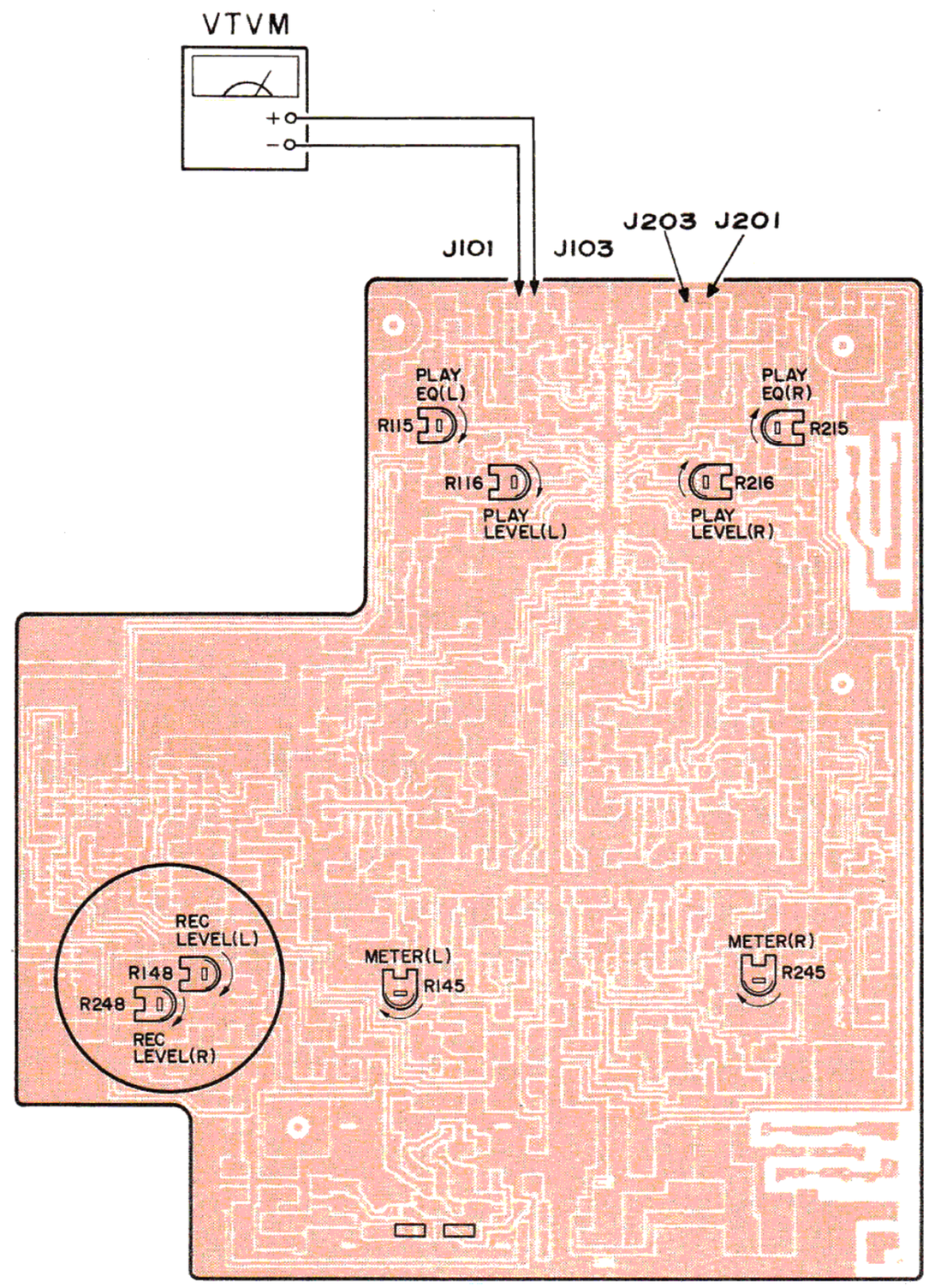

2. Set up the tape deck to the normal recording state, Connect the VTVM to J101, J103 (L ch) and J201, J203 (R ch). Adjust the semifixed resistors R148 and R248 until the VTVM reads 0.5mV, respectively.
3. Proceed both for the right and left channels in the same manner.
4. After adjustment, release the recording bias current.

www.hifiengine.com

8. Reocrd-Playback Frequency Response Adjustment

SET UP

1. Power voltage:- 50 or 60Hz AC voltage rated for the unit to be used in a market country.
2. Input signal:- 1kHz, –60dB with –20dB referenced as 0VU.
3. TAPE selector switch:- Fe-Cr.
4. Output terminal:- LINE OUT.
5. Load:- Measuring instrument input impedance.
6. Test tape used:- SONY CS-30.

PROCEDURES

1. Connect the input signal to the MIC terminal. Set up the tape deck to the normal recording state.
2. In turn, reduce the input level by 20dB with the use of the attenuator. Record the 1 and 10kHz tones.
3. Play the 1kHz, 20dB-down recorded tone back as 0dB. Adjust the recording bias current until the 10kHz response is within ±1dB as referenced to the 1kHz, 0dB response.
4. Proceed both for the right and left channels in the same manner.
5. If the recording bias current is reduced in the above adjustment, be sure to measure the distortion.

Mode: record

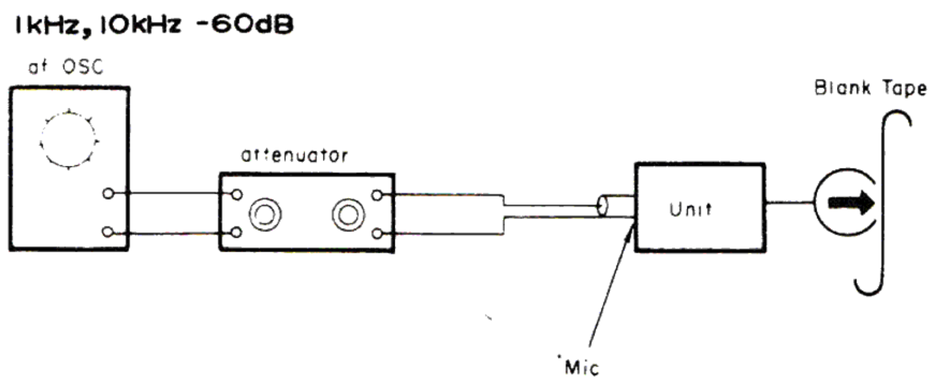

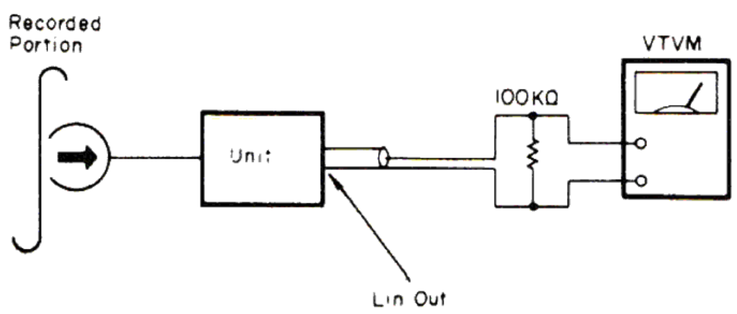

9. Record-Playback Output Level Adjustment

SET UP

1. Power voltage:- 50 or 60Hz AC voltage rated for the unit to be used in a market country.
2. Input:- 1kHz, –60dB signal.
3. TAPE selector switch position:- NORMAL.
4. Output terminal:- MAIN P.W. Board (P100) J113 and J213.
5. Load:- Measuring instrument input impedance.
6. Test tape used:- TDK AC-211.

PROCEDURES

1. Connect the 1kHz, –60dB input signal to the MIC terminal. Set up the tape deck to the normal recording state.
2. Adjust the REC LEVEL semi-fixed resistors R148 and R248 until the recorded signal is reproduced at 460mV ±0.5dB.

CAUTION

1. If the bias current is changed, be sure to perform the above adjustment.

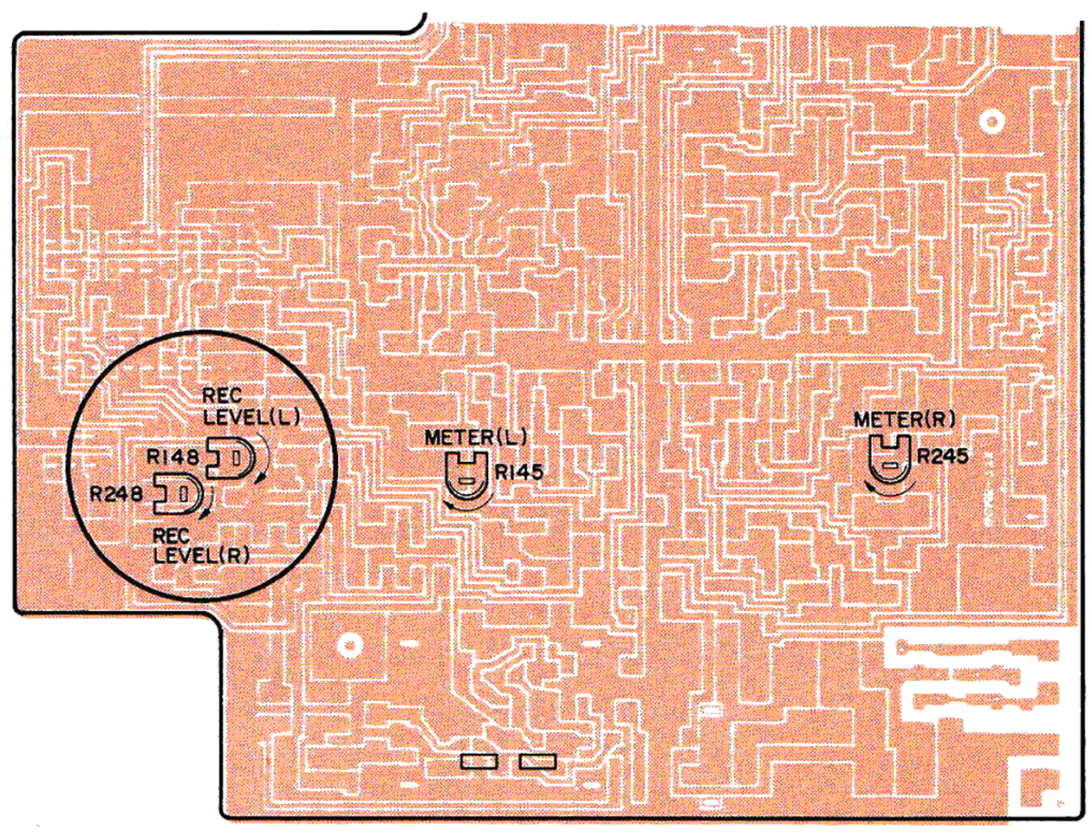

Mode: record

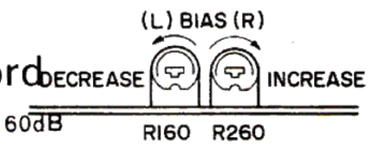

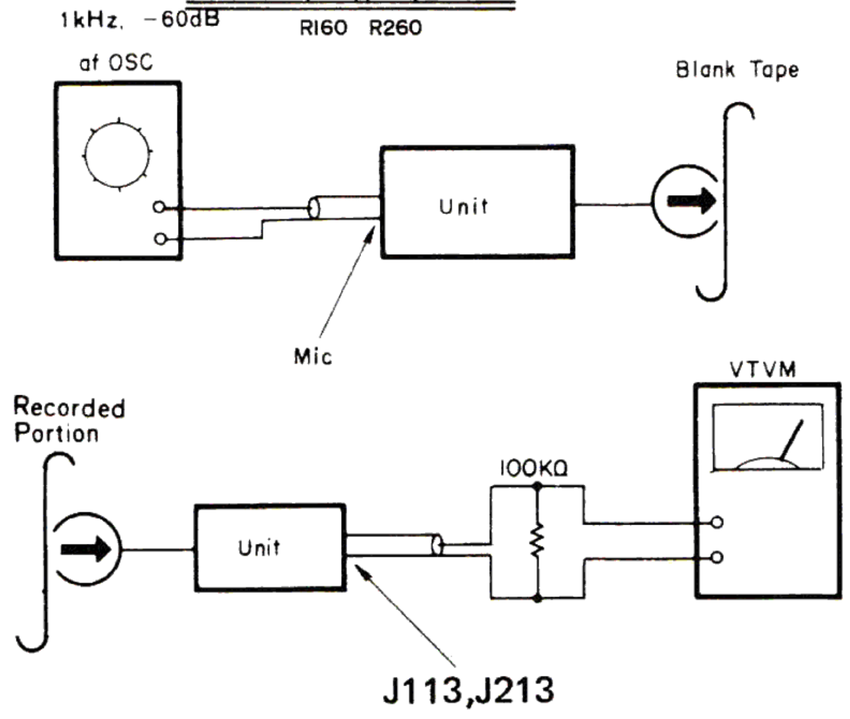

www.hifiengine.com

10. Tape Speed Measurement

SET UP

1. Power voltage:- 50 or 60Hz AC voltage rated for the unit to be used in a market country.
2. Output terminal:- LINE OUT.
3. Test tape used:- MTT-111.
4. Set position:- Horizontal

PROCEDURES

1. Play the wound-up end of the test tape MTT-111 back. Read the frequency counter indication.

Mode: playback

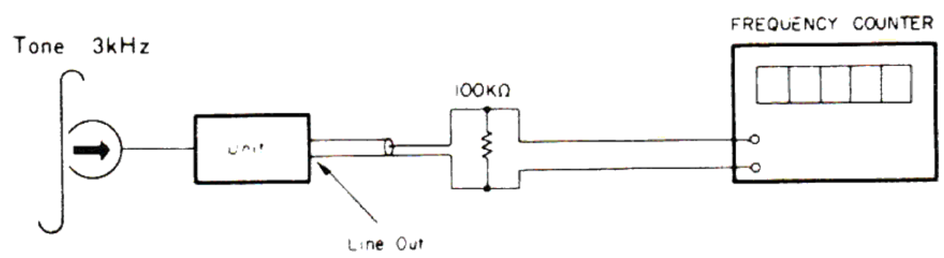

STANDARD

Tape speed: –4.8cm/sec ±1.5%
Frequency: 2955 to 3045Hz.

CAUTION

The tape deck should be leveled as specified for this measurement.

11. Wow and Flutter Measurement

SET UP

1. Power voltage:- 50 or 60Hz AC voltage rated for the unit to be used in a market country.
2. Output terminal:- LINE OUT.
3. Load:- Measuring instrument input impedance.
4. Test tape used:- MTT-111.
5. Set position:- Horizontal.
6. Wow & flutter meter function switch:-NAB WTD- for U and C, DIN WTD- for N.

PROCEDURES

1. Play the test tape MTT-111 back. Read the wow & flutter meter indication.

Mode: playback

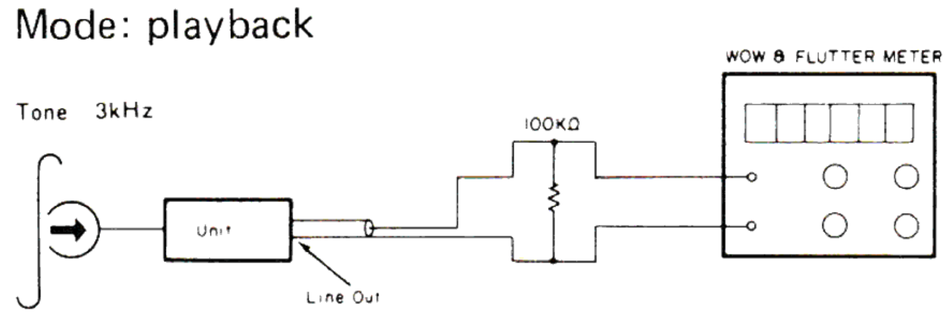

STANDARD

Less than NAB WTD 0.16% in rms (for U and C).
Less than DIN WTD 45511B4 0.19%in rms (for N).

CAUTION

The measurement should be performed at the wound-up end of the test tape.

www.hifiengine.com

12. Playback Output Level Measurement (at LINE OUT)

SET UP

1. Power voltage:- 50 or 60Hz AC voltage rated for the unit to be used in a market country.
2. TAPE selector switch position: NORMAL.
3. Load:- Measuring instrument input impedance.
4. Output terminal:- LINE OUT.
5. Test tape used:- **MTT-112.**

PROCEDURES

1. Play the test tape back in the normal playback state. Read the VTVM indication.
2. Proceed both for the right and left channels in the same manner.

Mode: playback

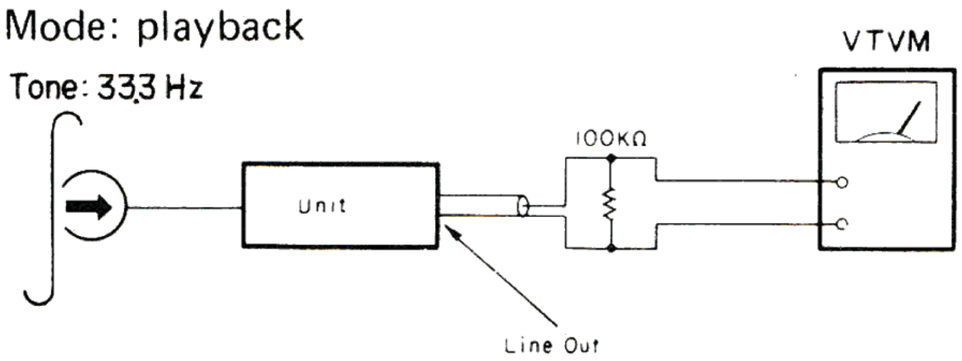

STANDARD

Within **800mV** ±3dB.

13. Playback Signal-to-Noise Ratio Measurement

SET UP

1. Power voltage:- 50 or 60Hz AC voltage rated for the unit to be used in a market country.
2. Load:- Measuring instrument input impedance.
3. Measuring output terminal:- LINE OUT.
4. Test tape used:- MTT-112 (333Hz tone).
5. TAPE selector switch position:- NORMAL, CrO_2 and Fe-Cr.

PROCEDURES

1. Load the test tape MTT-112. Set up the tape **deck to the normal playback state with the use of the I.E.C. A-Curve filter.**
2. Read playback output as a 0dB reference. Then playback blank tape and note the output level drop in dB.
3. Proceed both for the right and left channels in the same manner.
4. Repeat the above measurement for each TAPE selector switch position.

Mode: playback

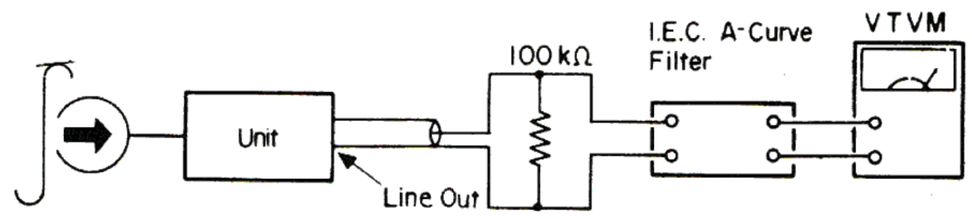

STANDARD

Greater than 49dB.

CAUTIONS

1. Arrange the tape deck power cord for minimum hum component.
2. Effect by induction noises should be minimized for the measurement.
3. When playing the standard reference level tape MTT-112 back, the VU meter indication is close to +2.5 VU and is used as the reference level for the signal-to-noise ratio measurement.

www.hifiengine.com

14. Playback Frequency Response Measurement

SET UP

1. Power voltage:- 50 or 60Hz AC voltage rated for the unit to be used in a market country.
2. TAPE selector switch position:- NORMAL and CrO_2 or Fe-Cr.
3. Load:- Measuring instrument input impedance.
4. Measuring output teminal:- LINE OUT.
5. Test tape used:-
   MTT-116U (for NORMAL).
   MTT-116K (for CrO_2 or Fe-Cr).

PROCEDURES

1. Play the test tape MTT-116U and MTT-116K back. Let the 315Hz output level be 0dB as reference level.
2. Read the 40Hz and 10kHz output level differences from the 315Hz, 0dB reference level.
3. Proceed both for the right and left channels in the same manner.
4. For the above measurement, use the test tape MTT-116U for the NORMAL position and MTT-116K for the CrO_2 or Fe-Cr.

Mode: playback

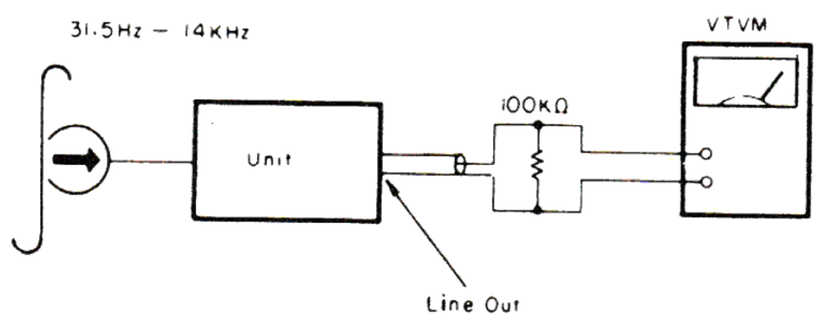

STANDARD

In reference to the 315Hz, 0dB signal output level,

40Hz - 6.3kHz . . . . . ±3dB
8kHz - 10kHz . . . . . +3, –4dB

CAUTION

Since the test tapes used may involve some head azimuth difference, the head azimuth should be corrected at the highest frequency of each test tape before measurement.

15. Record-Playback Output Level Measurement (at LINE OUT)

SET UP

1. Power voltage:- 50 or 60Hz AC voltage rated for the unit to be used in a market country.
2. Input: 1kHz, –60dB signal.
3. Load:- Measuring instrument input impedance.
4. Level control position:- SRL for recording operation.
5. TAPE selector switch position:- NORMAL, CrO_2 and Fe-Cr.
6. Measuring output terminal:- LINE OUT.
7. Cassette tape used:- TDK AC-211, AC-511 and SONY CS-30.

PROCEDURES

1. Record the 1kHz, –60dB signal in the normal recording state.
2. Play the recorded signal back. Read the VTVM indication.
3. Proceed for the NORMAL, CrO_2 and Fe-Cr positions each in the same manner.
4. Proceed both for the right and left channels in the same manner.

Mode: reocrd

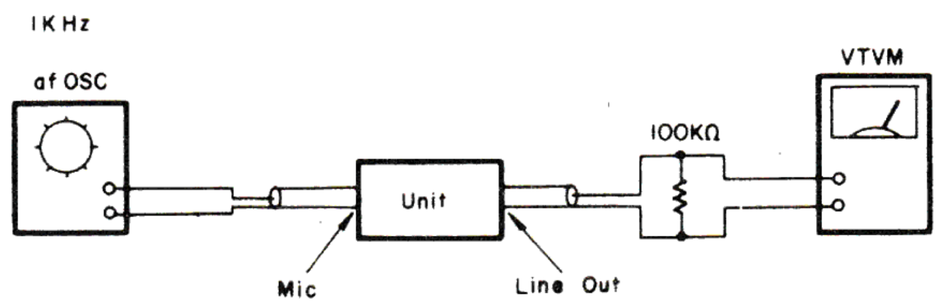

STANDARDS

1.	NORMAL position:	620mV ± 3dB.
2.	CrO_2 position:	620mV ± 3dB.
3.	Fe-Cr position:	620mV ± 3dB.

www.hifiengine.com

16. Record-Playback, Harmonic Distortion Measurement

SET UP

1. Power voltage:- 50 or 60Hz AC voltage rated for the unit to be used in a market country.
2. Input:- 1kHz, –60dB signal.
3. Playback output level:- Same as the recorded signal level.
4. Load:- Measuring instrument input impedance.
5. Measuring output terminal:- LINE OUT.
6. Cassette tape used:- TDK AC-211, AC-511 and SONY CS-30.

PROCEDURES

1. Record the 1kHz signal in the normal recording state.
2. Play the recorded signal back in the normal playback state. Calibrate the harmonic distortion meter to 100% at the INPUT CONT. Adjust the adjusting knob for minimum meter pointer deflection, and read the harmonic distortion.
3. Proceed both for the right and left channels in the same manner.
4. Proceed for the NORMAL, CrO_2 and Fe-Cr positions each in the same manner.

Mode: record

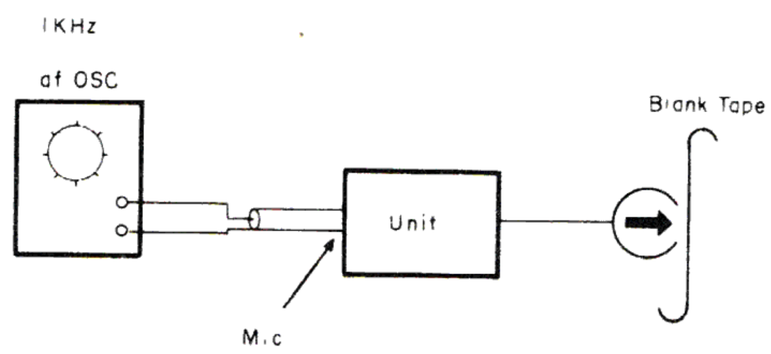

Mode: playback

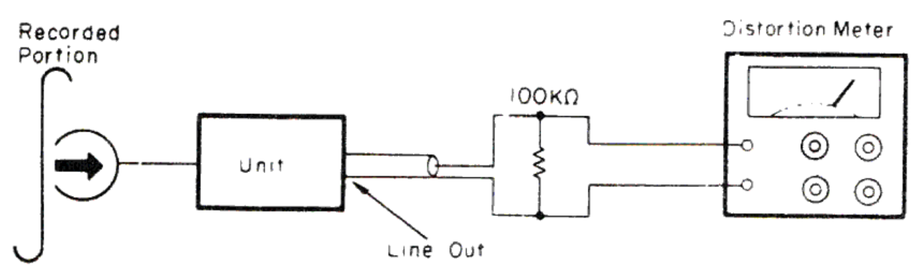

STANDARDS

1. Less than 3.5%.

CAUTIONS

1. Be sure to demagnetize the heads as the measured values may deviate from the accurate values.
2. Note that excessive wow and flutter aiso causes deviation of the measured values.

17. Record-Playback Signal-to-Noise Ratio Measurement

SET UP

1. Power voltage:- 50 or 60Hz AC voltage rated for the unit to be used in a market country.
2. Input:- 1kHz, –60dB signal.
3. Playback output level:- Same as the recorded signal level.
4. Load:- Measuring instrument input impedance.
5. Measuring output terminal:- LINE OUT.
6. Cassette tape used:- TDK AC-211, AC-511 and SONY CS-30.

PROCEDURES

1. Record the 1kHz signal in 3dB above the normal recording state.
2. Disconnect the input signal from the microphone jack. In this state, record no signal.
3. Play the 1kHz signal back in the normal playback state with the use of the I.E.C. A-Curve filter. Let the output level be 0dB as reference level.
4. Read difference between the recorded 0dB reference output and no-signal output levels.
5. Proceed both for the right and left channels in the same manner.
6. Set the DOLBY switch to the ON position, and proceed with similar measurement.

Mode: record

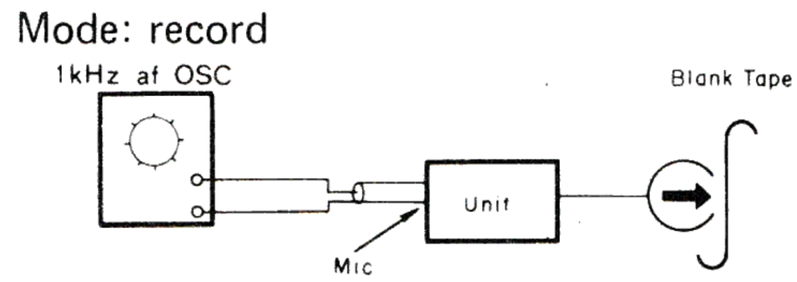

Mode: record

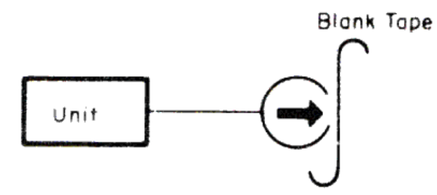

Mode: playback

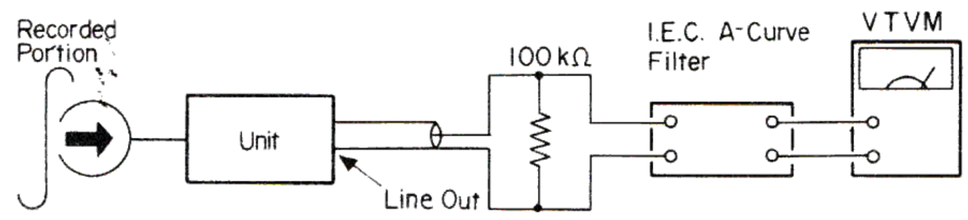

STANDARDS

1. Greater than 58dB for the ON position of the DOLBY switch.
2. Greater than 48dB for the OFF position of the DOLBY switch.

CAUTION

Arrange the tape deck power cord for minimum hum component.

www.hifiengine.com

18. Record-Playback Frequency Response Measurement

SET UP

1. Power voltage:- 50 or 60Hz AC voltage rated for the unit to be used in a market country.
2. Input:- 1kHz, –60dB signal with –20dB as OVU.
3. Playback output level:- Same as the recorded signal level.
4. Load:- Measuring instrument input impedance.
5. Measuring output terminal:- LINE OUT.
6. Cassette tape used:- TDK AC-211, AC-511 and SONY CS-30.

PROCEDURES

1. Record the 1kHz signal in the normal recording state. In turn, reduce the input level by 20dB with an attenuator. Then, record the 1kHz, 40Hz, 10kHz, 12kHz, 13.5kHz and 14kHz signals.
2. Play the recorded 1kHz signal back in the normal playback state.
3. Let the 1kHz, –20dB-down signal level be 0dB as reference level. Read difference of the 40Hz, 10kHz, 12kHz, 13.5kHz and 14kHz signal output levels from the 1kHz signal 0dB reference level.
4. Proceed for the NORMAL, CrO_2 and Fe-Cr positions each in the same manner.
5. Proceed both for the right and left channels in the same manner.

Mode: record

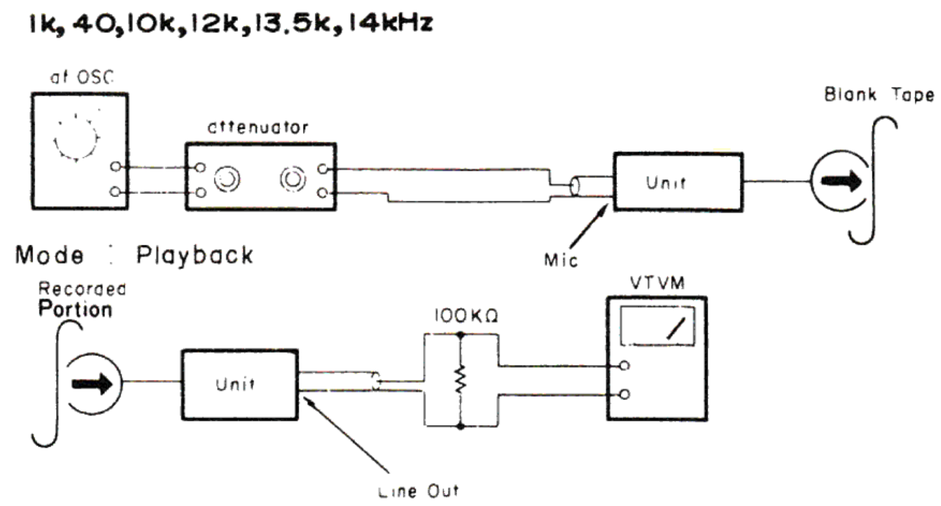

STANDARDS

1. NORMAL position:
   250Hz - 6.3kHz . . . . . .±2.5dB
   40Hz - 12kHz . . . . . .+2.5, –4.5dB
   with DOLBY switch at OFF.
2. CrO_2 position:
   250Hz - 6.3kHz . . . . . .±2.5dB
   40Hz - 13.5kHz . . . . . .+2.5, –4.5dB
   with DOLBY switch at OFF.
3. Fe-Cr position:
   250Hz - 6.3kHz . . . . . .±2.5dB
   40Hz - 14kHz . . . . . .+2.5, –4.5dB
   with DOLBY switch at OFF.
4. NORMAL, CrO_2 and Fe-Cr positions:
   250Hz - 6.3kHz . . . . . .±5dB
   40Hz - 10kHz . . . . . .+5, –8dB

www.hifiengine.com

19. Erasing Effect Measurement

SET UP

1. Power voltage:- 50 or 60Hz AC voltage rated for the unit to be used in a market country.
2. Input:- 100Hz, –60dB signal with +10dB as 0VU.
3. Playback output level:- Same as the recorded signal level.
4. Load:- Measuring instrument input impedance.
5. TAPE selector switch position:- NORMAL, CrO_2 and Fe-Cr.
6. Cassette tape used:- TDK AC-211, AC-511 and SONY CS-30.
7. Filter used:- 100Hz band-pass filter.

PROCEDURES

1. Record the 100Hz input signal in the normal recording state.
2. In turn, increase the input level by 10dB with the attenuator, and record it.
3. Rewind a half portion of the 10dB-up tape and record in no-signal state, or erase, on the portion with the input signal disconnected from the microphone jack.
4. Play back in the normal playback state the input signal recorded in the normal recording state.
5. In turn, let the 10dB-up recorded signal level be 0dB as reference level. Read difference of the level at the erased portion from the 0dB reference level.

Mode: record

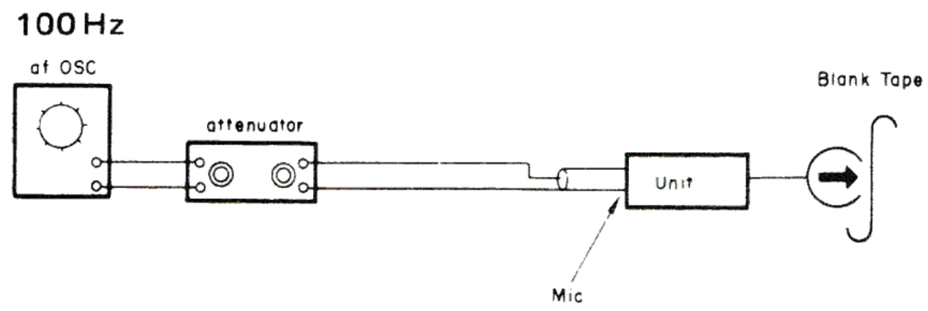

Mode: record

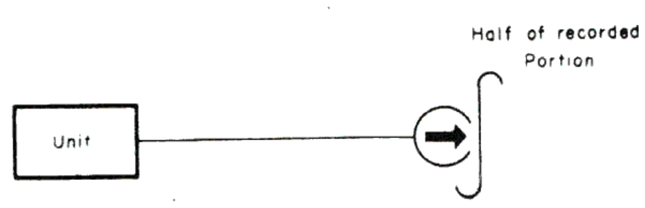

Mode: playback

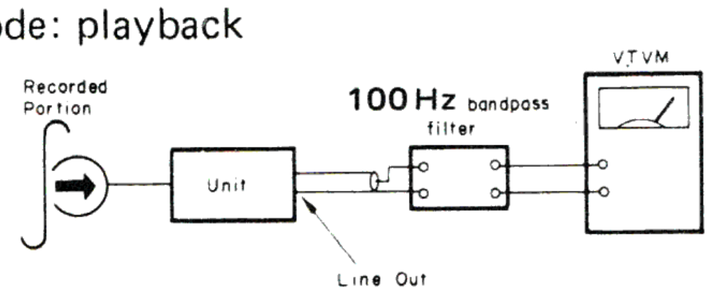

STANDARD

Greater than 55dB.

20. Leak Bias Measurement

SET UP

1. Power voltage:- 50 or 60Hz AC voltage rated for the unit to be used in a market country.
2. Input:- 1kHz, –60dB signal.
3. Load:- Measuring instrument input impedance.
4. Level control position:- SRL.
5. TAPE selector switch position:- NORMAL, CrO_2 and Fe-Cr.

PROCEDURES

1. Record the 1kHz input signal in the normal recording state. Let the monitor output level at the LINE OUT terminal be 0dB as reference level. Read difference of the output level having the input signal disconnected from the 0dB reference level.
2. Proceed both for the right and left channels in the same manner.

Mode: record

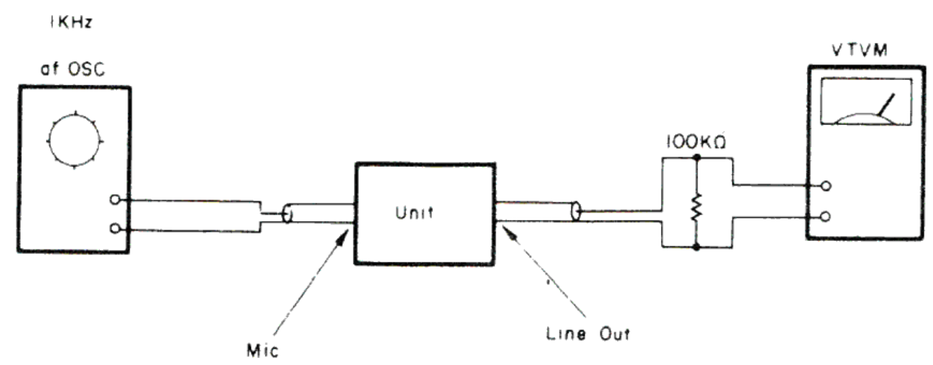

STANDARD

Lower than –45dB.

www.hifiengine.com

4. DIAGRAMS

4.1 LEVEL DIAGRAM

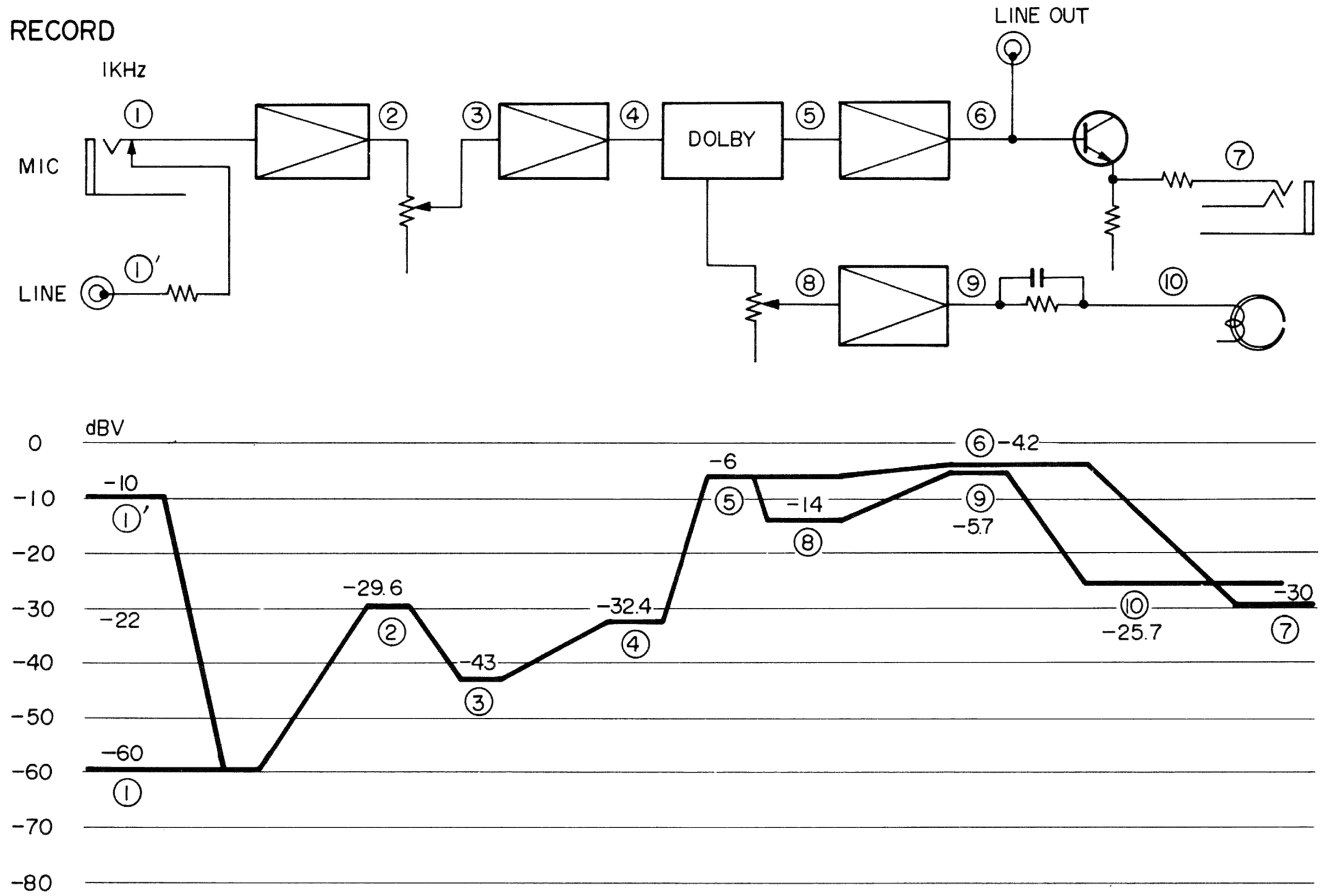

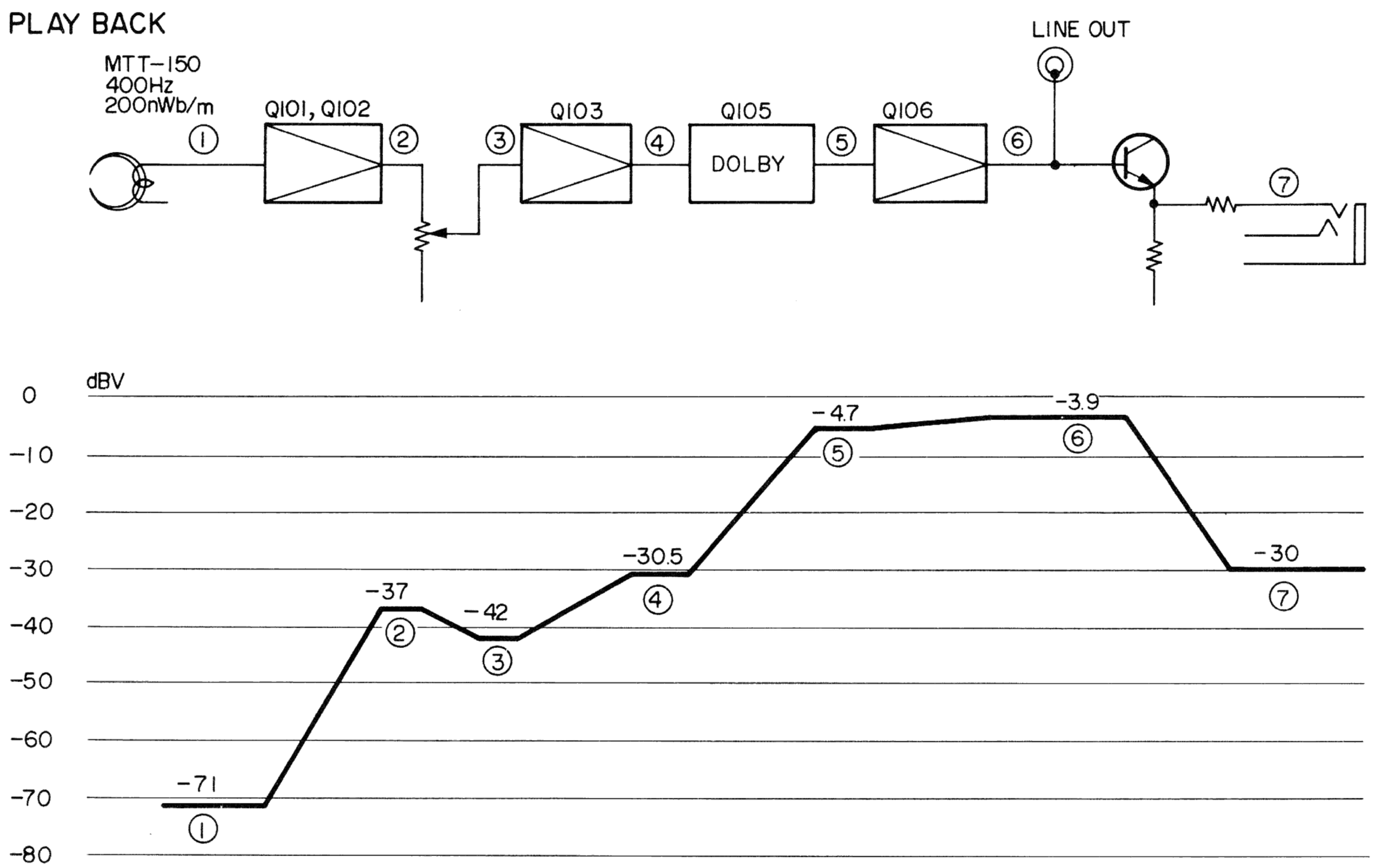

www.hifiengine.com

4.2 BLOCK DIAGRAM

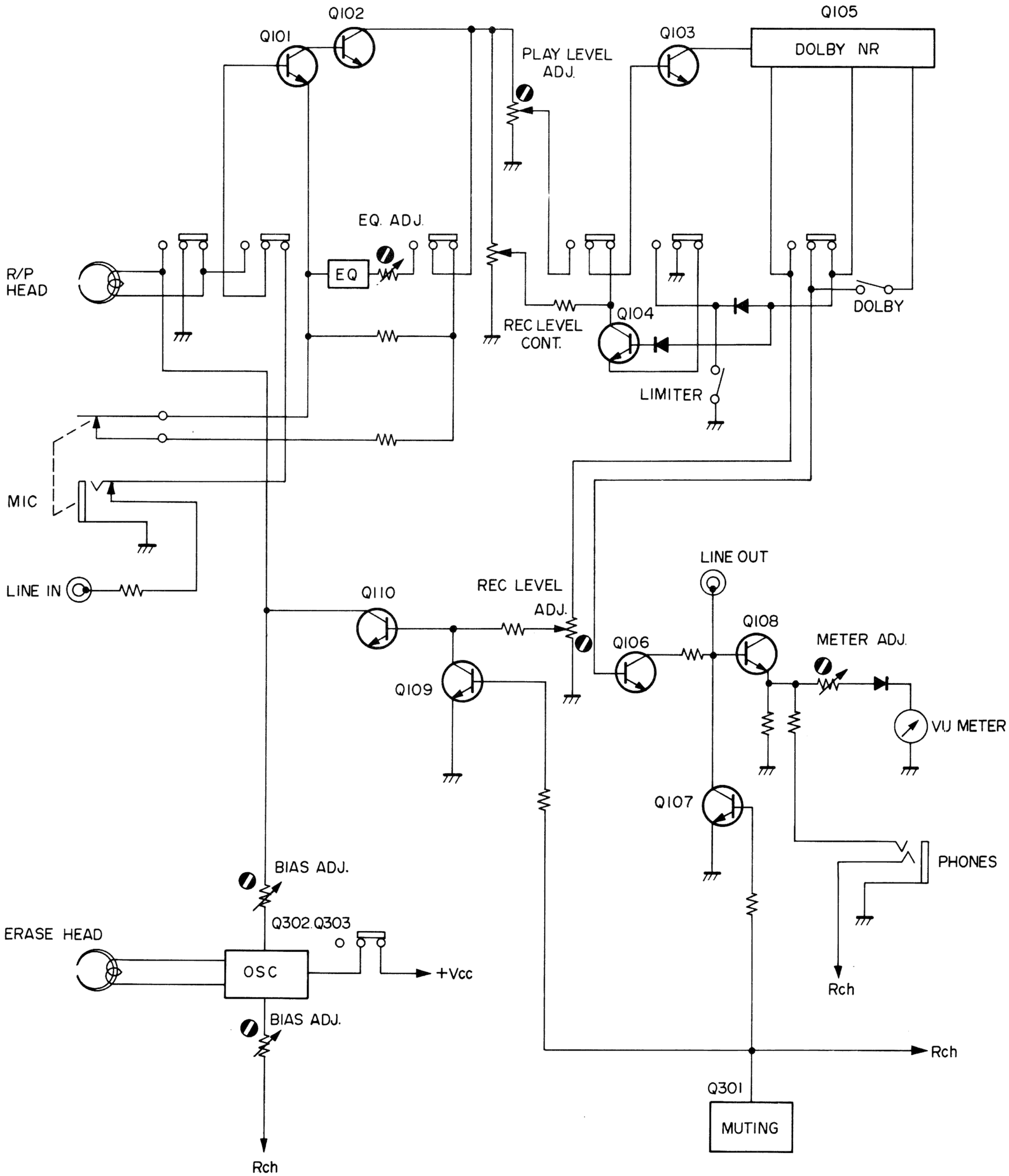

www.hifiengine.com

NOTE

www.hifiengine.com

4.3 CONNECTION DIAGRAM

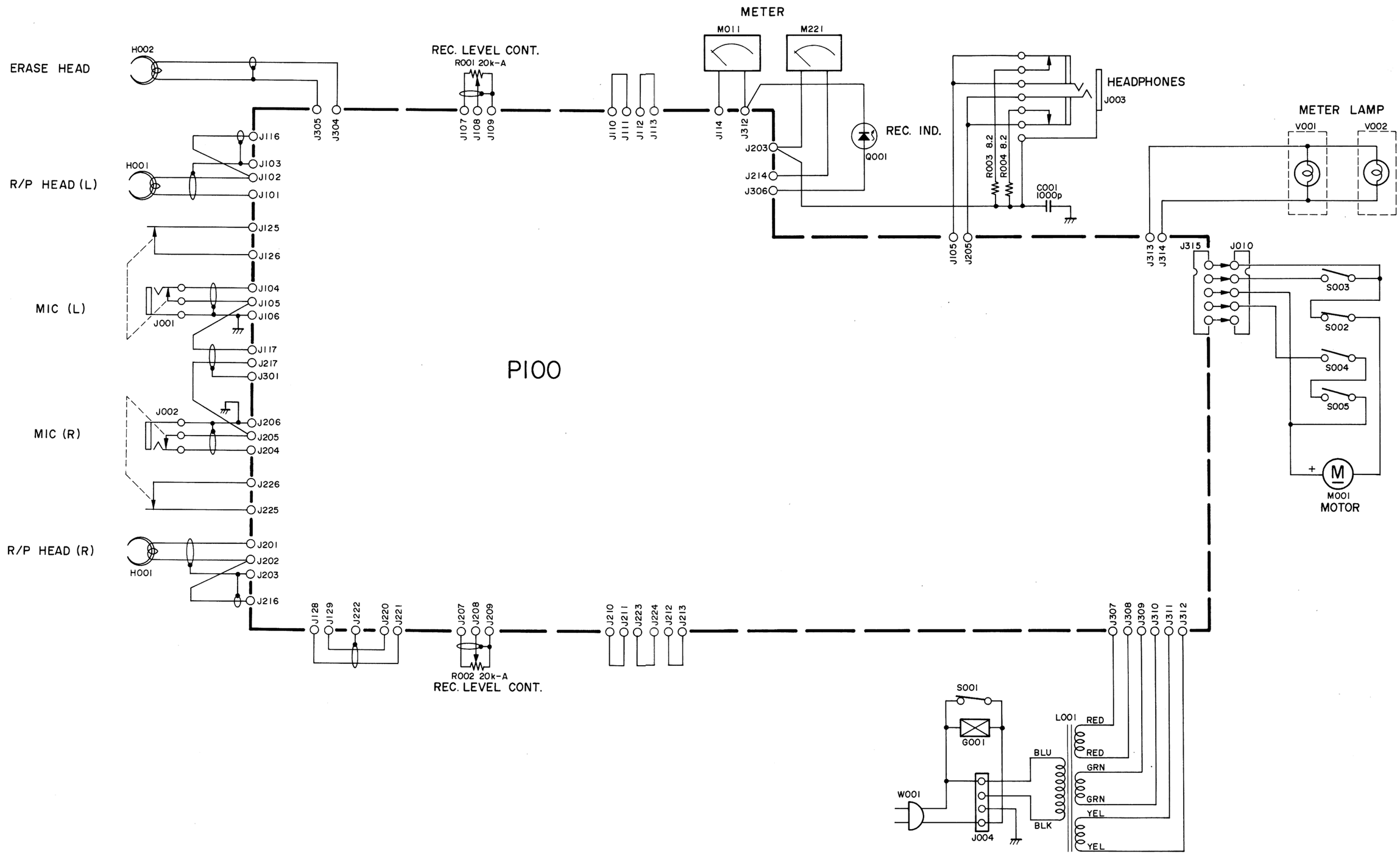

www.hifiengine.com

4.4 SCHEMATIC DIAGRAM AND COMPONENT LOCATIONS

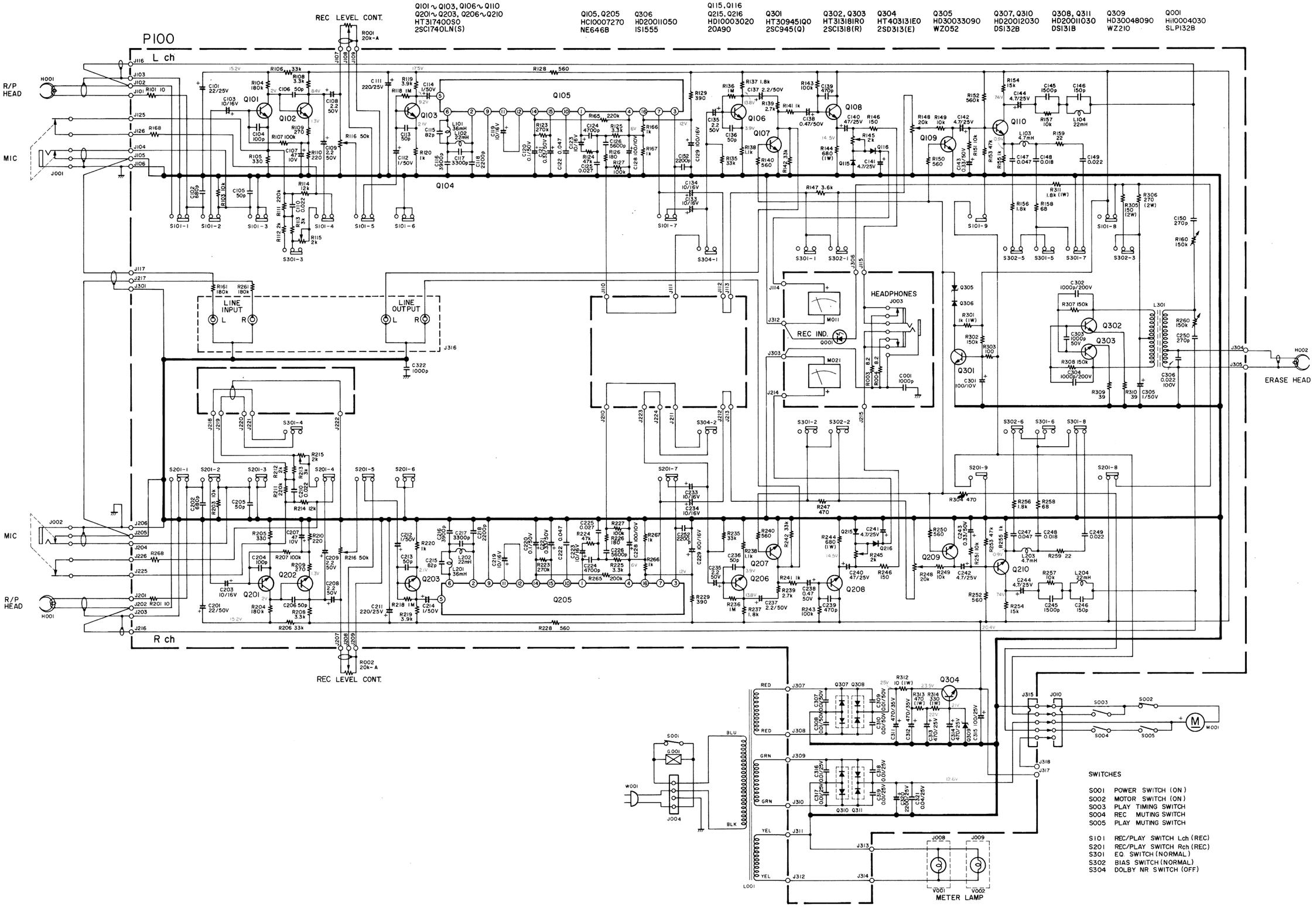

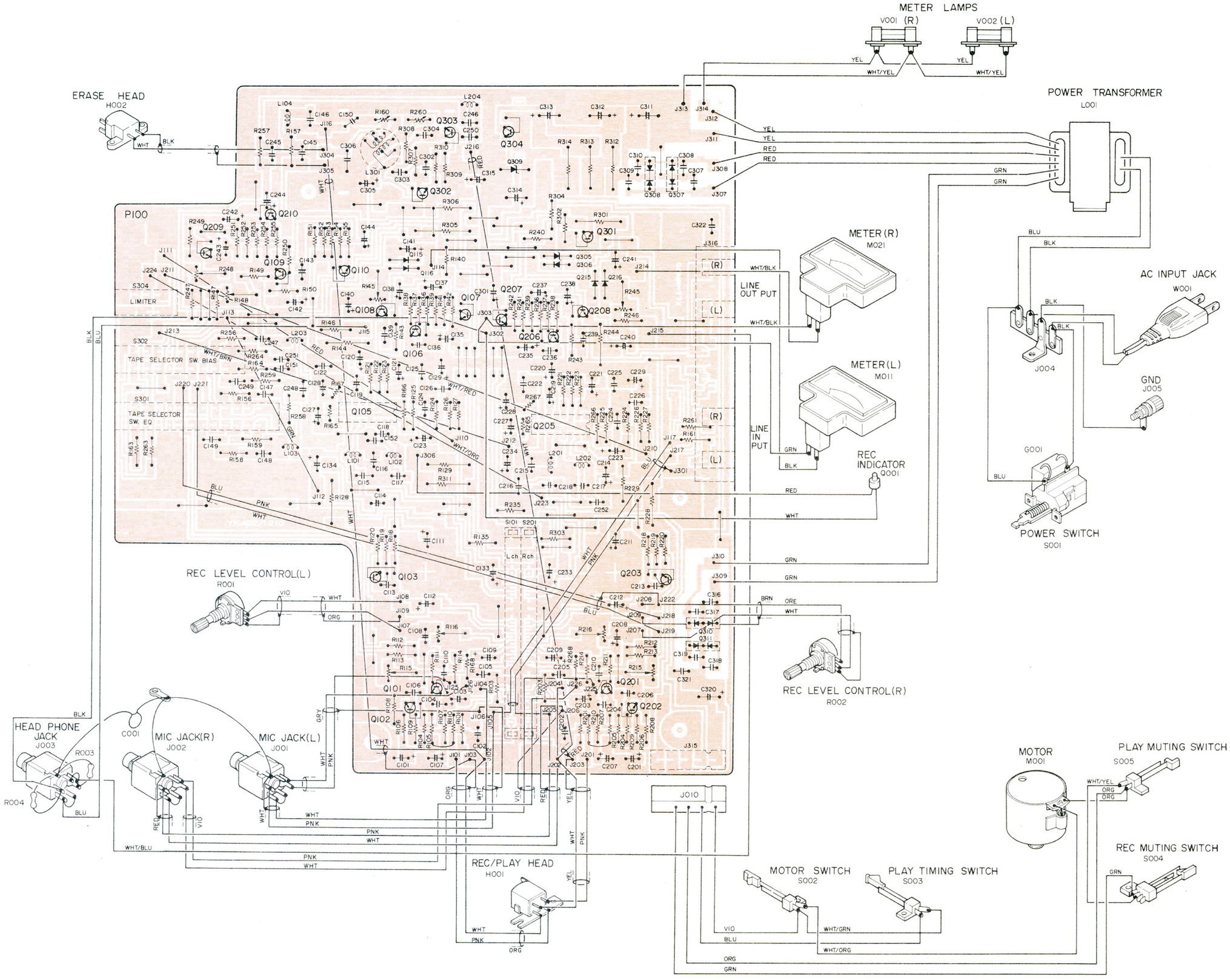
METER LAMPS
V001 (R)
V002 (L)
ERASE HEAD
H002
POWER TRANSFORMER
L001
P100
METER (R)
M021
METER (L)
M011
LINE OUT PUT
LINE IN PUT
REC INDICATOR
Q001
AC INPUT JACK
W001
J004
GND
J005
G001
POWER SWITCH
S001
REC LEVEL CONTROL(L)
R001
REC LEVEL CONTROL(R)
R002
HEAD PHONE JACK
J003
R003
R004
C001
MIC JACK(R)
J002
MIC JACK(L)
J001
MOTOR
M001
PLAY MUTING SWITCH
S005
REC MUTING SWITCH
S004
REC/PLAY HEAD
H001
MOTOR SWITCH
S002
PLAY TIMING SWITCH
S003
J010
LIMITER
TAPE SELECTOR SW. BIAS
TAPE SELECTOR SW. EQ
Lch Rch

5. EXPLODED VIEWS AND PARTS LIST

5.1 [P01-99] TOP COVER AND MAIN CHASSIS

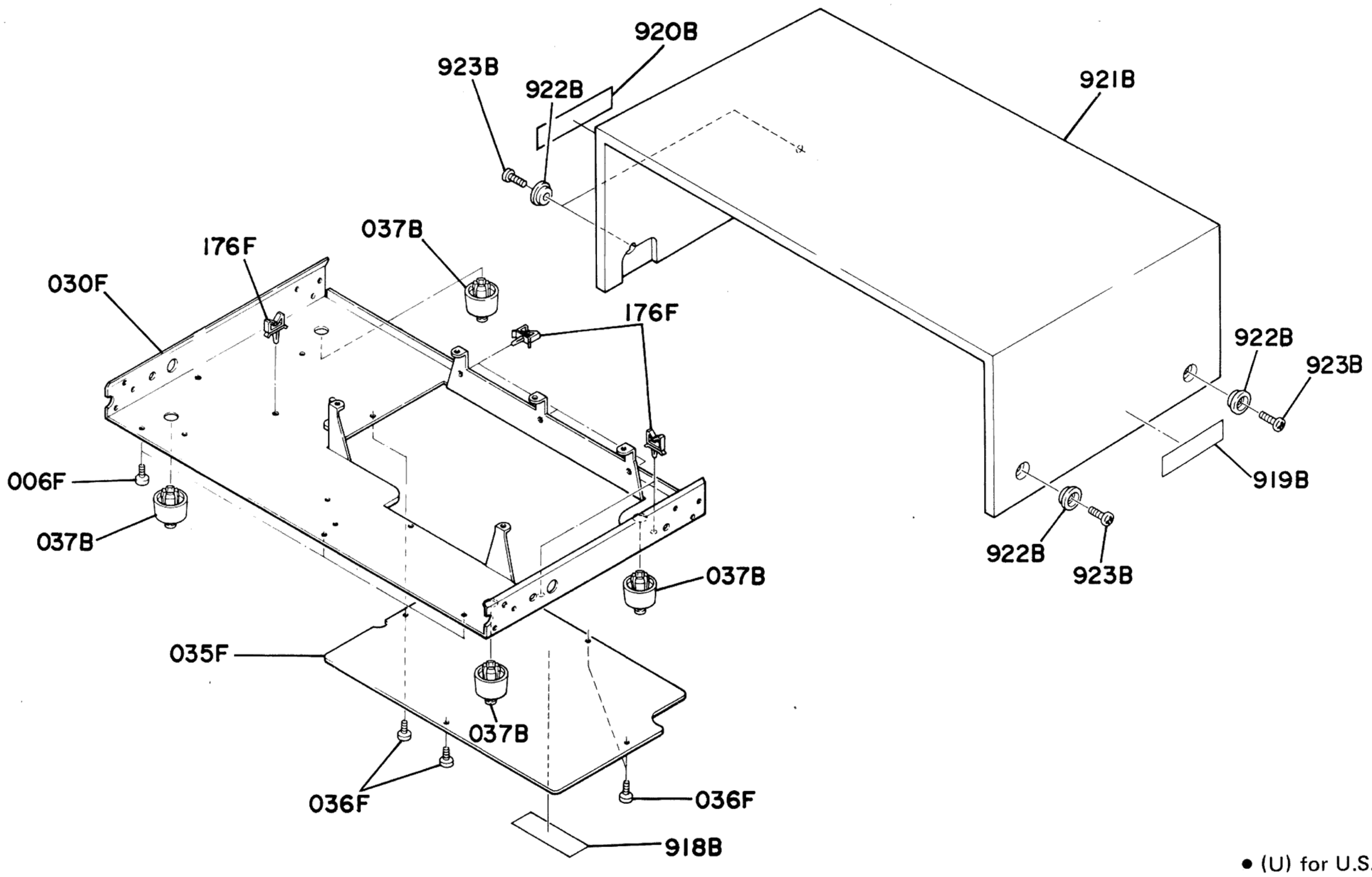

• (U) for U.S.A.
• (C) for Canada

REF. DESIG	Q'TY U	Q'TY C	PART NO.	DESCRIPTION
037B	4	4	2259057010	Leg
918B	1		3889861010	Label
918B		1	4113861020	Label
919B	1		2932861012	Label
919B		1	2911861143	Label
920B	1	1	2818861010	Label
921B	1	1	4214064013	Case, Wood
922B	4	4	3906259010	Bushing
923B	4	4	51100410S9	B.H.M. Screw B4 x 10

REF. DESIG.	Q'TY U	Q'TY C	PART NO.	DESCRIPTION
006F	3	3	51100306A9	B.H.M. Screw B3 x 6
030F	1	1	4214105504	Chassis
035F	1	1	4214257020	Lid
036F	4	4	51280306B0	B.H. TAP. Screw B3 x 6
176F	6	6	4214005010	Clamper

www.hifiengine.com

5.2 [P02-99] FRONT PANEL AND CHASSIS

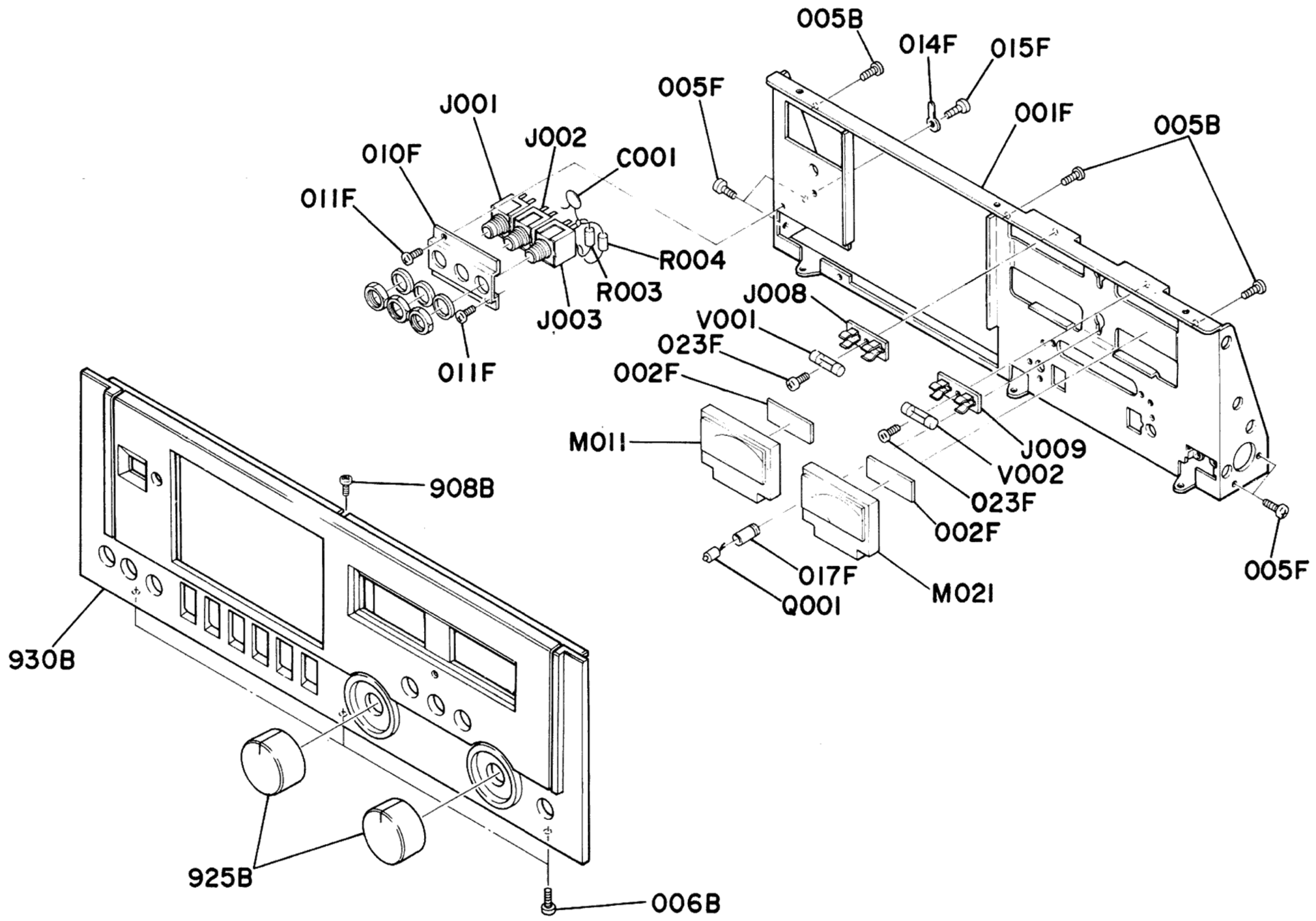

- (U) for U.S.A.
- (C) for Canada

REF. DESIG.	Q'TY U	Q'TY C	PART NO.	DESCRIPTION
930B	1	1	4227063570	Escutcheon (K), M1810 only
930B	1	1	4227063610	Escutcheon (K), MCD810 only
005B	3	3	51100306A9	B.H.M. Screw B3 x 6
006B	3	3	51100306A9	B.H.M. Screw B3 x 6
908B	1	1	51100306A9	B.H.M. Screw B3 x 6
925B	2	2	4197154032	Knob
001F	1	1	4214160013	Bracket
002F	2	2	4166056050	Buffer
005F	4	4	51280306B0	B.H. TAP. Screw B3 x 6
010F	1	1	4197160060	Bracket
011F	2	2	51100306A9	B.H.M. Screw B3 x 6
014F	1	1	62030049W0	Lug
015F	1	1	51100306A9	B.H.M. Screw B3 x 6
017F	1	1	4227271010	Holder
023F	2	2	51100306A9	B.H.M. Screw B3 x 6

REF. DESIG.	Q'TY U	Q'TY C	PART NO.	DESCRIPTION	
J001	1	1	YJ01001120	Jack, Mic	
J002	1	1	YJ01001120	Jack, Mic	
J003	1	1	YJ01001120	Jack, Headphone	
J008	1	1	YJ08000130	Jack, Lamp Holder	
J009	1	1	YJ08000130	Jack, Lamp Holder	
M011	1	1	IM11055130	D.C. Meter	
M021	1	1	IM11055130	D.C. Meter	
C001	1	1	DK18102300	Ceramic Cap	1000pF
Q001	1	1	HI10004030	L.E.D.	SLP-132B Rec. IND.
R003	1	1	GD05082140	Resistor	8.2KΩ ±5% ¼W
R004	1	1	GD05082140	Resistor	8.2KΩ ±5% ¼W
V001	1	1	IN10080070	Lamp	8V 0.2A
V002	1	1	IN10080070	Lamp	8V 0.2A

www.hifiengine.com

5.3 [P03-99] ASSOCIATED MECHANISM FOR CASSETTE TAPE OPERATION

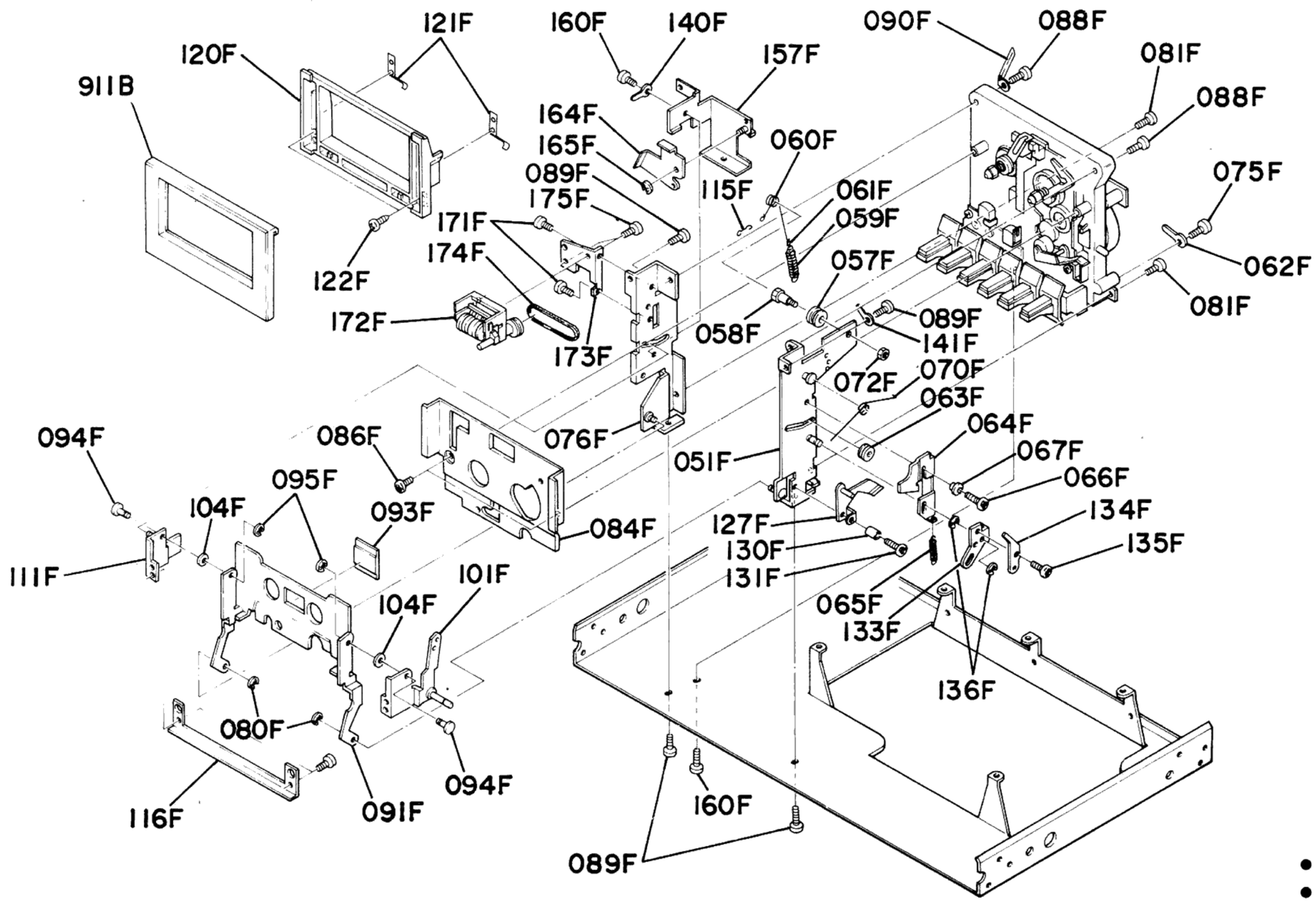

- (U) for U.S.A.
- (C) for Canada

REF. DESIG	Q'TY U	Q'TY C	PART NO.	DESCRIPTION
911B	1	1	4227063600	Cassette Door (K)
051F	1	1	4197160502	Bracket
057F	1	1	4197262010	Pulley
058F	1	1	4197112040	Shaft
059F	1	1	4197115020	Spring
060F	1	1	72071604A0	String (20)
061F	1	1	56382540G0	Eyelet
062F	1	1	62031650W0	Lug
063F	1	1	4197262020	Pulley
064F	1	1	4197258022	Hook
065F	1	1	4197115040	Spring
066F	1	1	51102605A0	P.H.M. Screw P2.6 x 5
067F	1	1	4197055010	Collar
070F	1	1	4197115030	Spring
072F	1	1	53110303A9	Hexagon Nut
075F	1	1	51300306B0	P.H. TAP. Screw P3 x 6
076F	1	1	4197160514	Bracket
080F	2	2	64000200R0	RG Ring, E Type
081F	2	2	51060306A9	P.H.M. Screw P3 x 6
084F	1	1	4197053040	Cover
086F	2	2	51382606T0	P.H. TAP. Screw P2.6 x 6
088F	2	2	51100308A9	B.H.M. Screw B3 x 8
089F	4	4	51100306A9	B.H.M. Screw B3 x 6
090F	2	2	1382005030	Clamper
091F	1	1	4197104012	Retainer
093F	1	1	4197158010	Window
094F	2	2	4197112092	Shaft
095F	2	2	64000200R0	RG Ring, E Type
101F	1	1	4197051502	Guide
104F	2	2	59035402G9	Washer

REF. DESIG	Q'TY U	Q'TY C	PART NO.	DESCRIPTION
111F	1	1	4197051510	Guide
115F	1	1	4197258032	Hook
116F	1	1	4197104032	Retainer
120F	1	1	4197271014	Holder
121F	2	2	4197115052	Spring
122F	4	4	51102605S0	B.H.M. Screw B2.6 x 5
127F	1	1	4197002500	Arm
130F	1	1	4197055030	Collar
131F	1	1	51102610A0	B.H.M. Screw B2.6 x 10
133F	1	1	4197002020	Arm
134F	1	1	4197164010	Adjuster
135F	1	1	51102604A0	B.H.M. Screw B2.6 x 4
136F	2	2	64000300R0	RG Ring, E Type
140F	1	1	62031650W0	Lug
141F	1	1	62031650W0	Lug
157F	1	1	4197104510	Retainer
160F	2	2	51100306A9	B.H.M. Screw B3 x 6
164F	1	1	4197354050	Lever
165F	1	1	64000300R0	RG Ring, E Type
171F	2	2	51100306A9	B.H.M. Screw B3 x 6
172F	1	1	4214052010	Counter
173F	1	1	4263160010	Bracket
174F	1	1	4197264012	Belt
175F	2	2	51100306A9	B.H.M. Screw B3 x 6

www.hifiengine.com

5.4 [P04-99] REAR PANEL

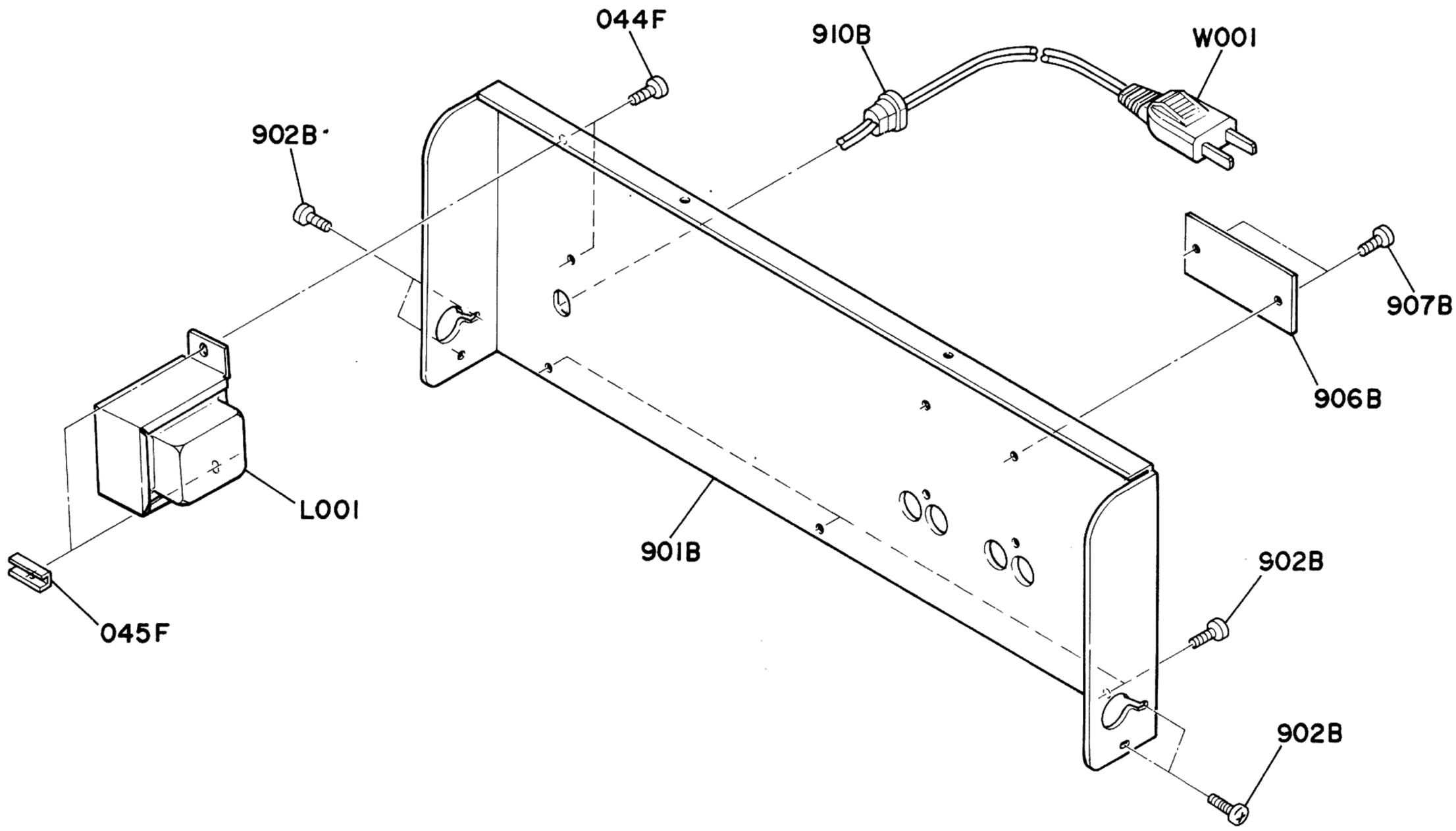

- (U) for U.S.A.
- (C) for Canada

REF. DESIG	Q'TY U	Q'TY C	PART NO.	DESCRIPTION
901B	1	1	4214160024	Bracket
902B	7	7	51280306U0	B.H. TAP. Screw B3 x 6
906B	1		4257265010	Indicator, M1810 only
906B		1	4257265020	Indicator, M1810 only
906B	1		4257265030	Indicator, MCD810 only
907B	2	2	51750306B9	OS Screw
910B	1	1	1455259030	Bushing

REF. DESIG	Q'TY U	Q'TY C	PART NO.	DESCRIPTION
044F	2	2	51100408S9	B.H.M. Screw
045F	2	2	2922005010	Clamper
L001	1	1	TS15406040	Power Transformer
W001	1	1	YC02000140	A.C. Power Cord

www.hifiengine.com

• (U) for U.S.A.
• (C) for Canada

5.5 [P05-00] BUTTONS FOR TAPE OPERATION

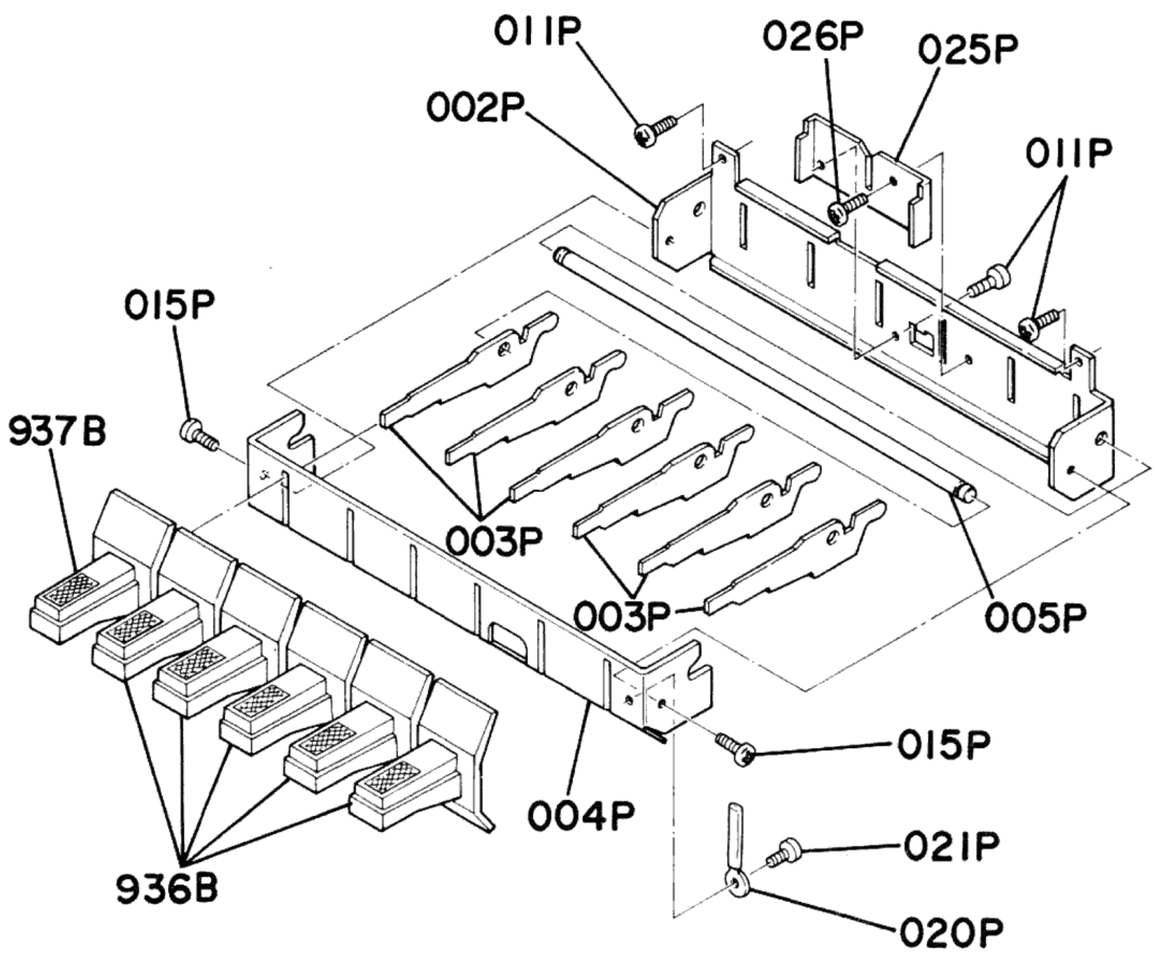

REF. DESIG.	Q'TY U	Q'TY C	PART NO.	DESCRIPTION
B	5	5	4214270420	Button Assembly
936B	5	5	4214270010	Button
003P	5	5	4380354070	Lever
C	1	1	4214270430	Button Assembly, Rec.
937B	1	1	4214270020	Button
003P	1	1	4380354070	Lever
002P	1	1	4380160013	Bracket
004P	1	1	4380051013	Guide
005P	1	1	4380112030	Shaft
011P	3	3	51300310B0	P.H. TAP. Screw P3 x 10
015P	2	2	51062603A0	P.H.M. Screw P2.6 x 3
020P	1	1	1210005010	Clamper
021P	1	1	51062603A0	P.H.M. Screw P2.6 x 3
025P	1	1	4383104040	Retainer
026P	1	1	51062605A0	P.H.M. Screw P2.6 x 5

5.6 [P06-99] HEAD CHASSIS

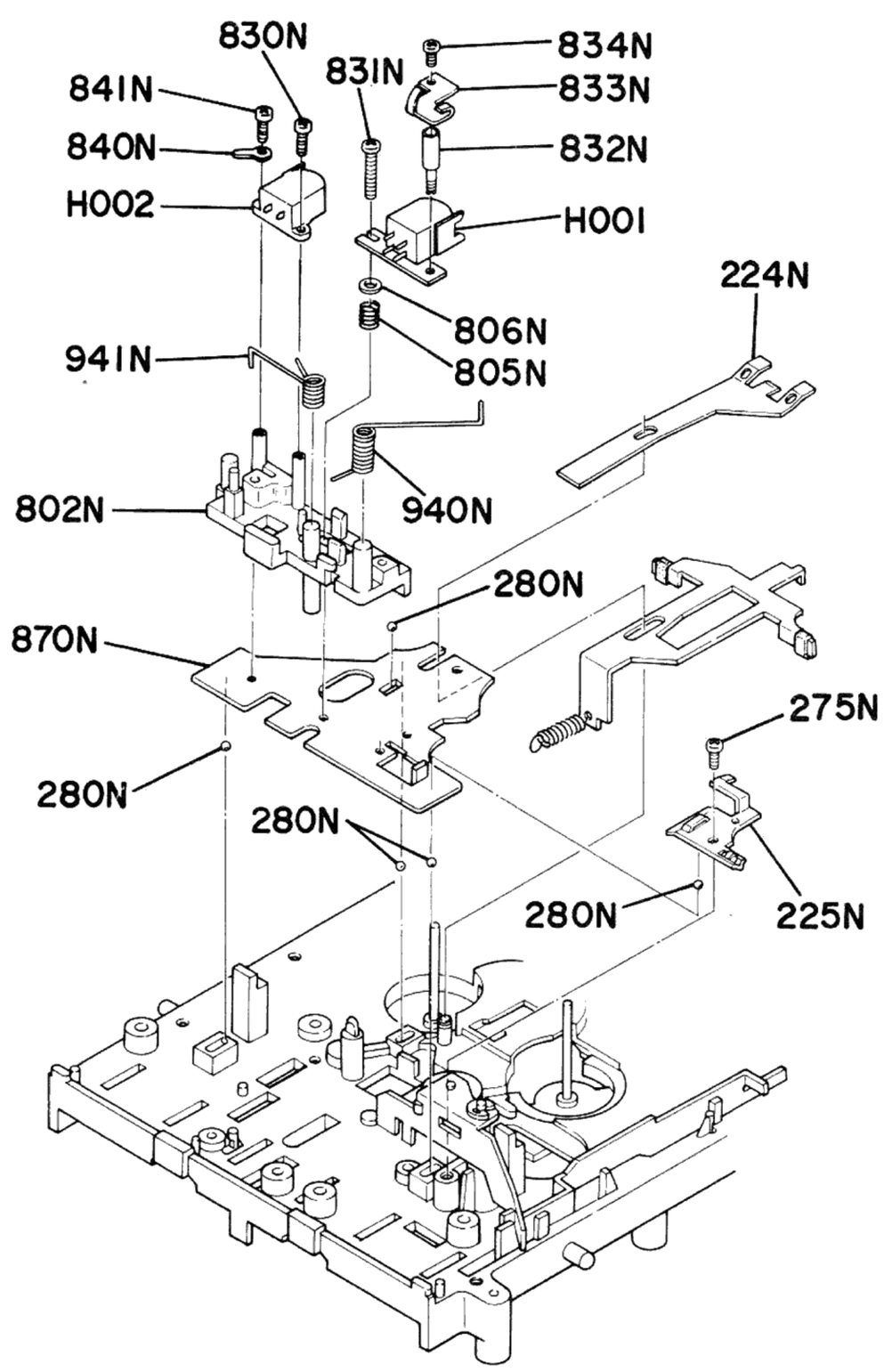

REF. DESIG.	Q'TY U	Q'TY C	PART NO.	DESCRIPTION
224N	1	1	4380115010	Spring
225N	1	1	4367115172	Spring
275N	1	1	51300308B0	P.H. TAP. Screw P3 x 8
280N	5	5	51020010T0	Ball
802N	1	1	4367160015	Bracket
805N	1	1	4380115090	Spring
806N	1	1	3444118070	Spacer
830N	1	1	51100210A0	B.H.M. Screw B2 x 10
831N	1	1	51100210A0	B.H.M. Screw B2 x 10
832N	1	1	4380101030	Support
833N	1	1	4380005010	Clamper
834N	1	1	51100203A0	B.H.M. Screw B2 x 3
840N	1	1	62021030W0	Lug
841N	1	1	51100212A0	B.H.M. Screw B2 x 12
870N	1	1	4380105030	Chassis
940N	1	1	4367115042	Spring
941N	1	1	4367115053	Spring
H001	1	1	LH42851050	Rec/Play Head
H002	1	1	LH31000450	Erase Head

www.hifiengine.com

• (U) for U.S.A.
• (C) for Canada

5.7 [P07-99] FLYWHEEL

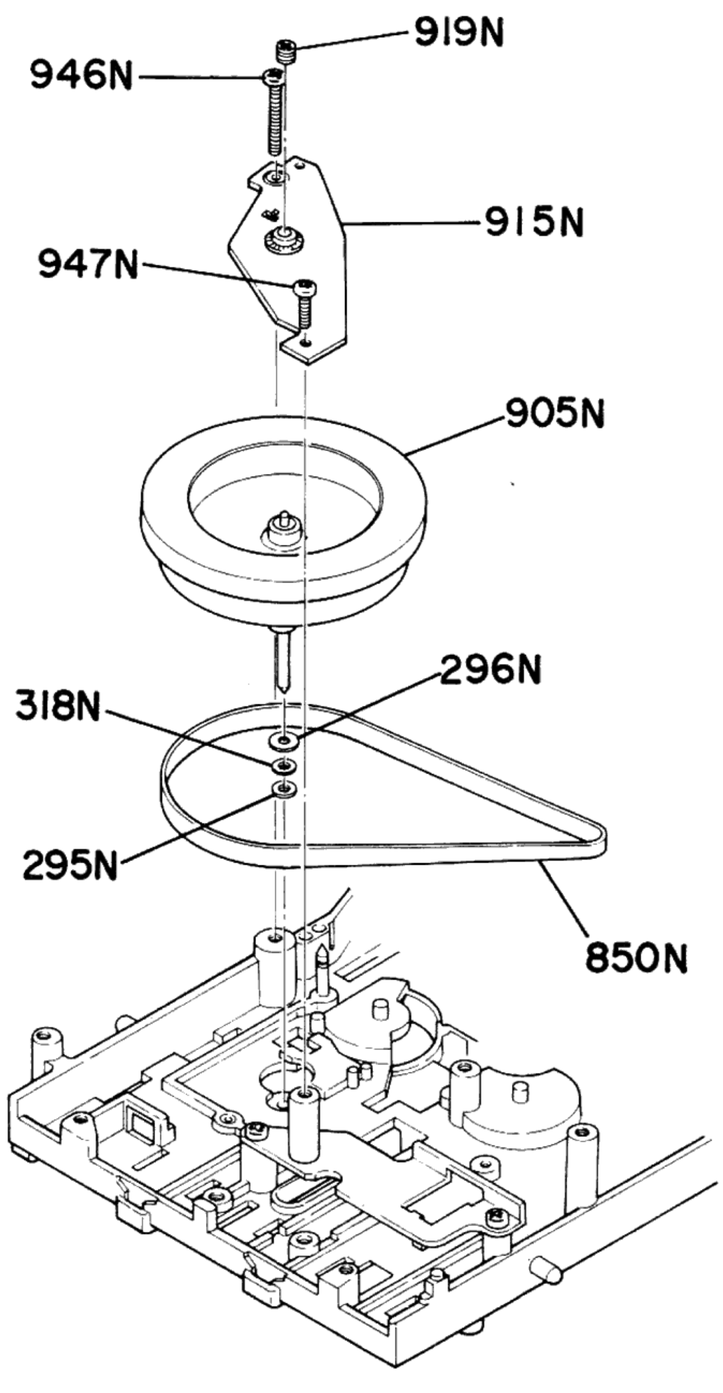

REF. DESIG.	Q'TY U	Q'TY C	PART NO.	DESCRIPTION
915N	1	1	4380104704	Retainer Assembly, Flywheel
295N	1	1	59264702G9	Washer
296N	1	1	59260702G9	Washer
318N	1	1	59264705G9	Washer
850N	1	1	4380264032	Belt
905N	1	1	4380273502	Flywheel
919N	1	1	3483164020	Adjuster
946N	1	1	51300325B0	P.H. TAP. Screw P3 x 25
947N	1	1	51100308A9	B.H.M. Screw B3 x 8

5.8 [P08-99] SWITCH LOCATION FOR TAPE OPERATION

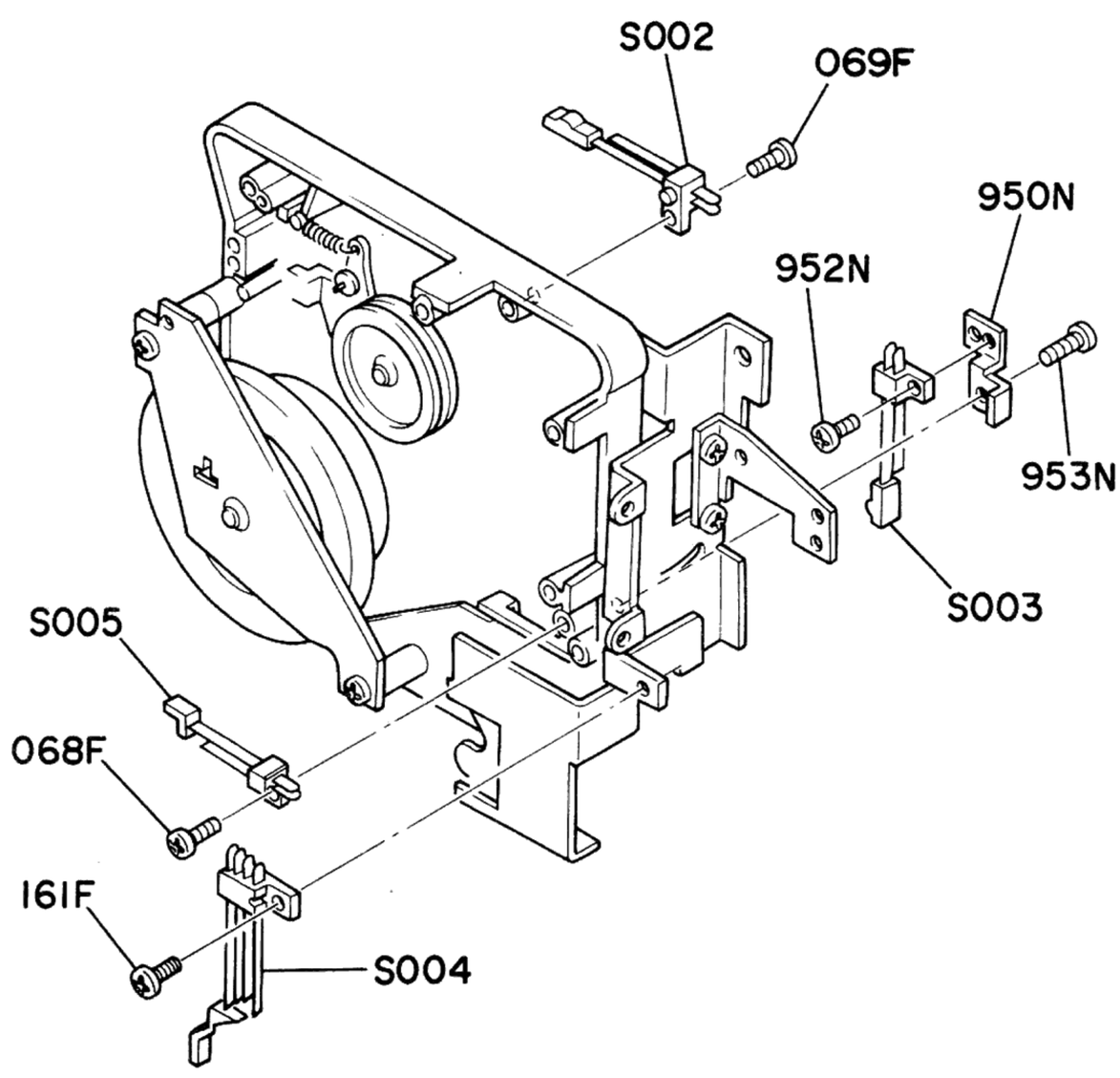

REF. DESIG.	Q'TY U	Q'TY C	PART NO.	DESCRIPTION
068F	1	1	51380206P0	P.H. TAP. Screw P2 x 6
069F	1	1	51380206PO	P.H. TAP. Screw P2x6
161F	1	1	51100205A0	B.H.M. Screw B2 x 5
950N	1	1	4383160040	Bracket
952N	1	1	51060205A0	P.H.M. Screw P3 x 8
953N	1	1	51300308B0	P.H. TAP. Screw P3 x 8
S002	1	1	SM01010680	Mini Switch, Motor
S003	1	1	SM01010580	Mini Switch, Play Timing
S004	1	1	SM02010080	Mini Switch, Rec. Muting
S005	1	1	SM01010660	Mini Switch, Play Muting

www.hifiengine.com

5.9 [P09-99] PARTS ASSEMBLED ON TOP OF CHASSIS

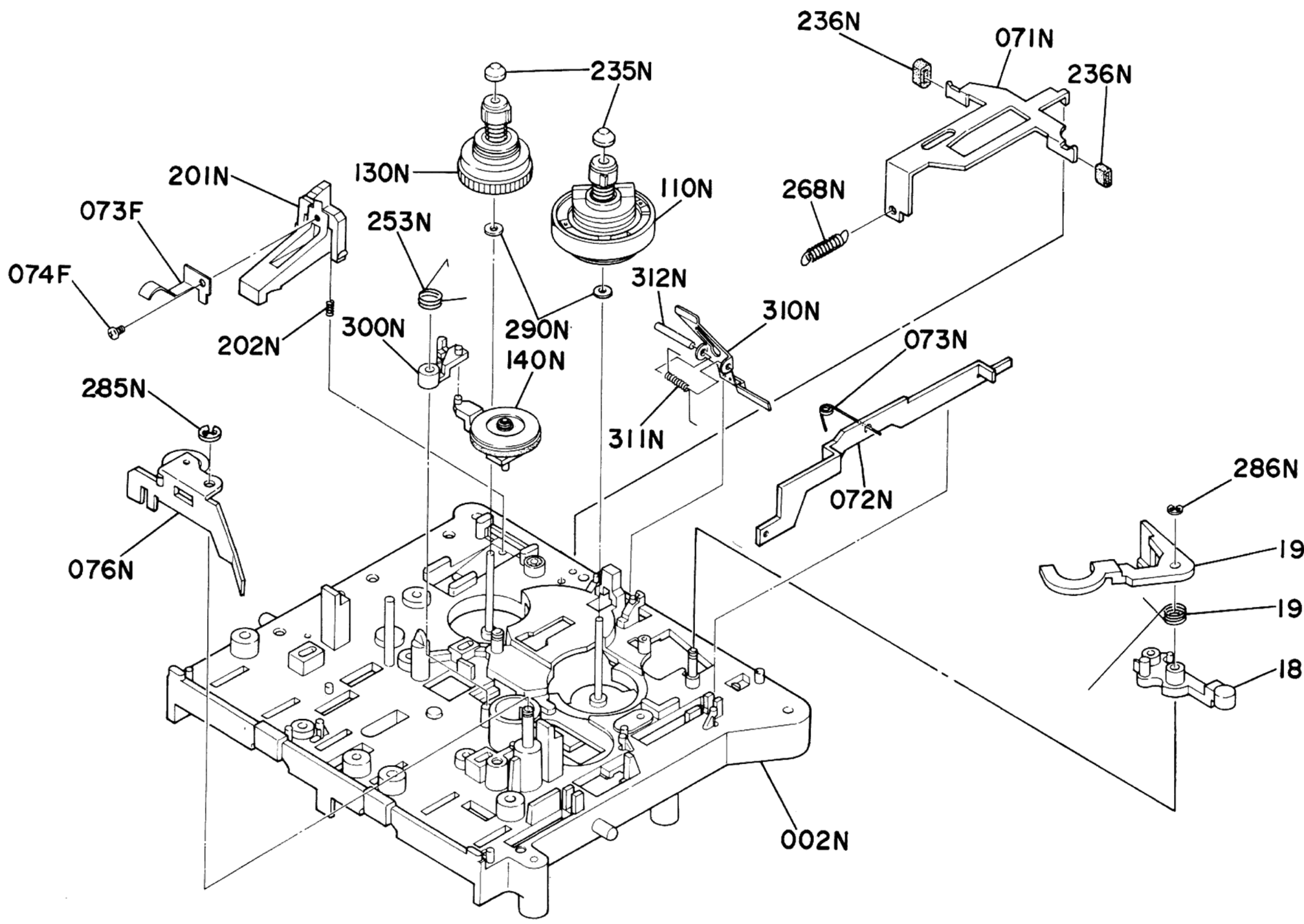

- (U) for U.S.A.
- (C) for Canada

REF. DESIG.	Q'TY U	Q'TY C	PART NO.	DESCRIPTION
002N	1	1	4380105700	Chassis Assembly
071N	1	1	4367354092	Lever
072N	1	1	4380354090	Lever
073N	1	1	4380115120	Spring
076N	1	1	4367002702	Arm, Pinch Roller S
110N	1	1	4367004705	Table
130N	1	1	4367004713	Table
140N	1	1	4367002712	Arm Assembly
185N	1	1	4367354773	Lever
195N	1	1	4367002054	Arm
196N	1	1	4367115130	Spring
201N	1	1	4367354083	Lever
202N	1	1	4380115060	Spring
235N	2	2	4367067010	Cap
236N	2	2	4367263010	Brake
253N	1	1	4367115100	Spring
268N	1	1	4367115210	Spring
285N	1	1	64002500R0	RG Ring, E Type
286N	1	1	64001500R0	RG Ring, E Type

REF. DESIG.	Q'TY U	Q'TY C	PART NO.	DESCRIPTION
290N	2	2	59020402G9	Washer
300N	1	1	4367354110	Lever
310N	1	1	4383115010	Spring
311N	1	1	4380115033	Spring
312N	1	1	4380112010	Shaft
073F	1	1	4197115060	Spring
074F	1	1	51382606T0	P.H. TAP. Screw P2.6 x 8

www.hifiengine.com

5.10 [P10-99] PARTS ASSEMBLED ON REVERSE OF CHASSIS

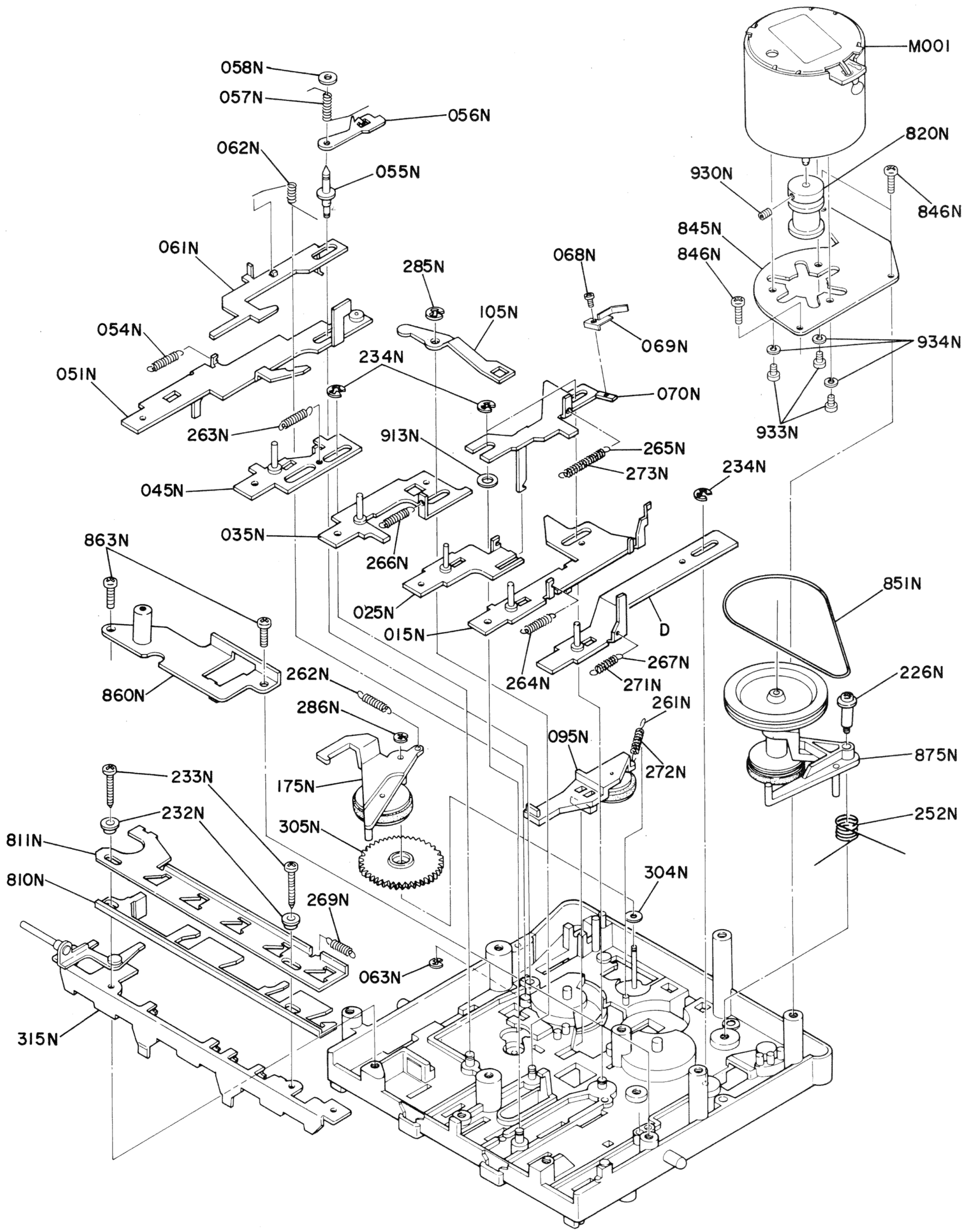

www.hifiengine.com

• (U) for U.S.A.
• (C) for Canada

REF. DESIG.	Q'TY U	Q'TY C	PART NO.	DESCRIPTION
D	1	1	4383051400	Guide Assembly, Push Lever
015N	1	1	4380354704	Lever Assembly, Rew
025N	1	1	4380354723	Lever Assembly, Play
035N	1	1	4380354734	Lever Assembly, F.F.
045N	1	1	4380354743	Lever Assembly, Stop
051N	1	1	4380354753	Lever Assembly, Pause
315N	1	1	4380354714	Lever Assembly, Rec
860N	1	1	4380160700	Bracket Assembly, Switch
875N	1	1	4380001700	Idler Assembly
054N	1	1	4367115210	Spring
055N	1	1	4367112134	Shaft
056N	1	1	4367054032	Cam Pause Lock
057N	1	1	4367115142	Spring
058N	1	1	59020805G9	Washer
061N	1	1	4367354070	Lever, Eject
062N	1	1	4380115082	Spring
063N	1	1	64001500R0	RG Ring, E Type
068N	1	1	51820202S0	P.H.M. Screw P2 x 2
069N	1	1	4380354080	Lever

REF. DESIG.	Q'TY U	Q'TY C	PART NO.	DESCRIPTION
070N	1	1	4367354162	Lever, Head Chassis
095N	1	1	4367354760	Lever, FF
105N	1	1	4383002020	Arm, FF Idler Lever Look
175N	1	1	4367002726	Arm, Tms Idler
226N	1	1	4367112180	Shaft
232N	2	2	4380055010	Collar, Lock Cam
233N	2	2	51300312B0	P.H. TAP. Screw P3 x 12
234N	4	4	64000300R0	RG Ring, E Type
252N	1	1	4380115052	Spring
261N	1	1	4367115090	Spring
262N	1	1	4367115120	Spring
263N	1	1	4367115252	Spring
264N	1	1	4367115340	Spring
265N	1	1	4367115270	Spring
266N	1	1	4367115282	Spring
267N	1	1	4380115070	Spring
269N	1	1	4380115100	Spring
271N	1	1	4367056020	Buffer
272N	1	1	4367056030	Buffer
273N	1	1	4367056020	Buffer
285N	1	1	64002500R0	RG Ring, E Type
286N	1	1	64001500R0	RG Ring, E Type
304N	1	1	4367118060	Spacer
305N	1	1	4367058012	Gear
319N	1	1	59046501G9	Washer
810N	1	1	4383054030	Cam, Stop/Eject
811N	1	1	4383054020	Cam, Lock
820N	1	1	4383262012	Pulley
845N	1	1	4380160033	Bracket, DC Motor
846N	3	3	51300308B0	P.H. TAP. Screw P3 x 8
851N	1	1	4380264050	Belt, TMS
863N	2	2	51300308B0	P.H. TAP. Screw P3 x 8
930N	1	1	51610205A0	Set Screw F.P.
933N	3	3	51062603A0	P.H.M. Screw P2.6 x 3
934N	3	3	54012600E0	Spring Washer
M001	1	1	MM10120010	D.C. Motor V. Servo 12V 2200 rpm CCW

www.hifiengine.com

5.11 [M01-99] P.W. BOARDS AND GENERAL PARTS

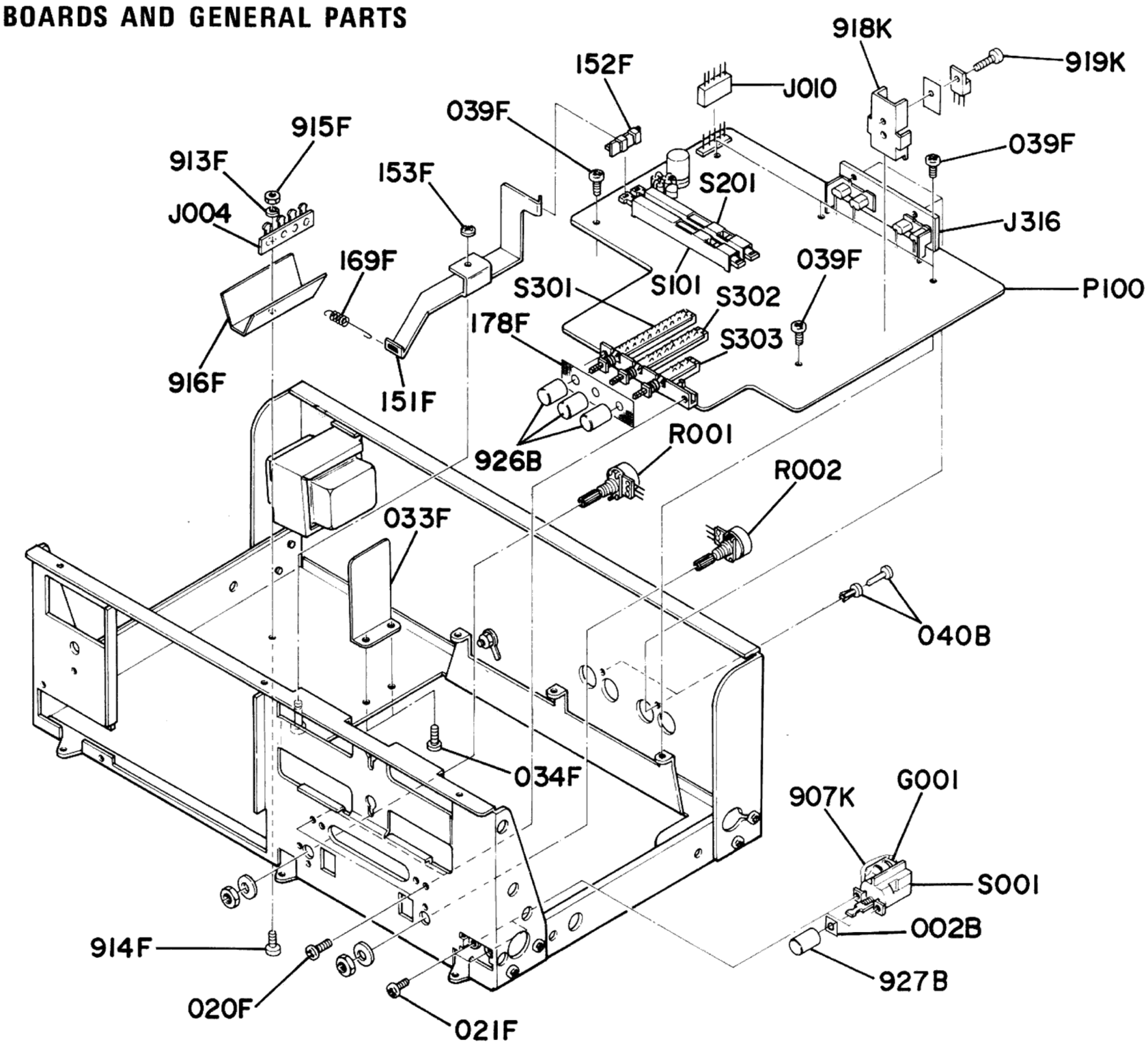

- (U) for U.S.A.
- (C) for Canada

REF. DESIG	Q'TY U	Q'TY C	PART NO.	DESCRIPTION
002B	1	1	4257107020	Sheet
040B	2	2	2965005010	Clamper
926B	3	3	4214154012	Knob, Push SW.
927B	1	1	2963154022	Knob, Power SW.
020F	2	2	51100306A9	B.H.M. Screw B3 x 6
021F	2	2	51100306A9	B.H.M. Screw B3 x 6
033F	1	1	4214109010	Shield
034F	2	2	51100306A9	B.H.M. Screw B3 x 6
039F	5	5	51100306A9	B.H.M. Screw B3 x 6
151F	1	1	4214002010	Arm
152F	1	1	4214354010	Lever
153F	1	1	64000300R0	RG Ring, E Type
169F	1	1	4214115010	Spring
178F	1	1	4257107010	Sheet
913F	1	1	54040302A0	Spring Washer
914F	1	1	51100306A9	B.H.M. Screw B3 x 6
915F	1	1	53110303A9	Hexagon Nut
916F	1	1	4114120010	Insulator
907K	1	1	2219120010	Insulator
918K	1	1	3444267013	Heatsink
919K	1	1	51100306S9	B.H.M. Screw B3 x 6

REF. DESIG	Q'TY U	Q'TY C	PART NO.	DESCRIPTION
J004	1	1	YL01040160	Terminal
J010	1	1	YJ06001050	Jack
G001	1		BF10400030	Cap. Comp, Spark Killer
G001		1	BF33300020	Cap. Comp, Spark Killer
S001	1	1	SP01010210	Push Switch, Power
R001	1	1	RK02030460	Variable Resist 20KΩ (A)
R002	1	1	RK02030460	Variable Resist 20KΩ (A)
S101	1	1	SS09020070	Slide Switch, Rec/Play
S201	1	1	SS09020070	Slide Switch, Rec/Play
S301	1	1	SP08030060	Push Switch EQ
S302	1	1	SP08030060	Push Switch Bias
S303	1	1	SP08030060	Push Switch Dolby NR
J316	1	1	YT02040230	Terminal

www.hifiengine.com

• (U) for U.S.A.
• (C) for Canada

REF. DESIG.	Q'TY U	Q'TY C	PART NO.	DESCRIPTION
				P100-PRE-AMP CIRCUIT BOARD
P100	1	1	YK42271210	P.W. Board, Pre-Amp
	1	1	ZZ42271210	P.W. Board Assembly
				P100-CAPACITORS
C101	1	1	EA22602590	Elect, 22μF 25V
C102	1	1	DK16681300	Ceramic, 680pF ±10%
C103	1	1	EE10601640	Elect, 10μF 16V
C104	1	1	DD16101010	Ceramic, 100pF ±10%
C105	1	1	DD16500010	Ceramic, 50pF ±10%
C106	1	1	DD16500010	Ceramic, 50pF ±10%
C107	1	1	EA47601090	Elect, 47μF 10V
C108	1	1	EA22505090	Elect, 2.2μF 50V
C109	1	1	EA10601690	Elect, 10μF 16V
C110	1	1	DF15223300	Film, 0.022μF ±5%
C111	1	1	EA22702590	Elect, 220μF 25V
C112	1	1	EE10505040	Elect, 1μF 50V
C113	1	1	DD16500010	Ceramic, 50pF ±10%
C114	1	1	EE10505040	Elect, 1μF 50V
C115	1	1	DD15820300	Ceramic, 82pF ±5%
C116	1	1	DF15392300	Film, 3900pF ±5%
C117	1	1	DF15332300	Film, 3300pF ±5%
C118	1	1	DF15222300	Film, 2200pF ±5%
C119	1	1	EA10601690	Elect, 10μF 16V
C120	1	1	EE10405040	Elect, 0.1μF 50V
C121	1	1	EE33405040	Elect, 0.33μF 50V
C122	1	1	DF15473300	Film, 0.047μF ±5%
C123	1	1	EA10601690	Elect, 10μF 16V
C124	1	1	DF15472300	Film, 4700pF ±5%
C125	1	1	DF15273300	Film, 0.027μF ±5%
C126	1	1	DF15562300	Film, 5600pF ±5%
C128	1	1	EA10701090	Elect, 100μF 10V
C129	1	1	EA10701690	Elect, 100μF 16V
C133	1	1	EA10601690	Elect, 10μF 16V
C134	1	1	EA10601690	Elect, 10μF 16V
C135	1	1	EA22505090	Elect, 2.2μF 50V
C136	1	1	DD16500010	Ceramic, 50pF ±10%
C137	1	1	EA22505090	Elect, 2.2μF 50V
C138	1	1	EA47405090	Elect, 0.47μF 50V
C139	1	1	DK16471010	Ceramic, 470pF ±10%
C140	1	1	EA47602590	Elect, 47μF 25V
C141	1	1	EA47503590	Elect, 4.7μF 35V
C142	1	1	EA47503590	Elect, 4.7μF 35V
C143	1	1	EE22405040	Elect, 0.22μF 50V
C144	1	1	EA47503590	Elect, 4.7μF 35V
C145	1	1	DF15152300	Film, 1500pF ±5%
C146	1	1	DF65151010	Film, 150pF ±5%
C147	1	1	DF15473300	Film, 0.047μF ±5%
C148	1	1	DF15223300	Film, 0.022μF ±5%
C149	1	1	DF15273300	Film, 0.027μF ±5%
C150	1	1	DF65271510	Film, 270pF ±5%
C151	1	1	DF15473300	Film, 0.047μF ±5%
C152	1	1	DF15222300	Film, 2200pF ±5% 50V

REF. DESIG.	Q'TY U	Q'TY C	PART NO.	DESCRIPTION
C201	1	1	EA22602590	Elect, 22μF 25V
C202	1	1	DK16681300	Ceramic, 680pF ±10%
C203	1	1	EE10601640	Elect, 10μF 16V
C204	1	1	DD16101010	Ceramic, 100pF ±10%
C205	1	1	DD16500010	Ceramic, 50pF ±10%
C206	1	1	DD16500010	Ceramic, 50pF ±10%
C207	1	1	EA47601090	Elect, 47μF 10V
C208	1	1	EA22505090	Elect, 2.2μF 50V
C209	1	1	EA10601690	Elect, 10μF 16V
C210	1	1	DF15223300	Film, 0.022μF ±5%
C211	1	1	EA22702590	Elect, 220μF 25V
C212	1	1	EE10505040	Elect, 1μF 50V
C213	1	1	DD16500010	Ceramic, 50pF ±10%
C214	1	1	EE10505040	Elect, 1μF 50V
C215	1	1	DD15820300	Ceramic, 82pF ±5%
C216	1	1	DF15392300	Film, 3900pF ±5%
C217	1	1	DF15332300	Film, 3300pF ±5%
C218	1	1	DF15222300	Film, 2200pF ±5%
C219	1	1	EA10601690	Elect, 10μF 16V
C220	1	1	EE10405040	Elect, 0.1μF 50V
C221	1	1	EE33405040	Elect, 0.33μF 50V
C222	1	1	DF15473300	Film, 0.047μF ±5%
C223	1	1	EA10601690	Elect, 10μF 16V
C224	1	1	DF15472300	Film, 4700pF ±5%
C225	1	1	DF15273300	Film, 0.027μF ±5%
C226	1	1	DF15562300	Film, 5600pF ±5%
C228	1	1	EA10701090	Elect, 100μF 10V
C229	1	1	EA10701690	Elect, 100μF 16V
C233	1	1	EA10601690	Elect, 10μF 16V
C234	1	1	EA10601690	Elect, 10μF 16V
C235	1	1	EA22505090	Elect, 2.2μF 50V
C236	1	1	DD16500010	Ceramic, 50pF ±10%
C237	1	1	EA22505090	Elect, 2.2μF 50V
C238	1	1	EA47405090	Elect, 0.47μF 50V
C239	1	1	DK16471010	Ceramic 470pF ±10%
C240	1	1	EA47602590	Elect, 47μF 25V
C241	1	1	EA47503590	Elect, 4.7μF 35V
C242	1	1	EA47503590	Elect, 4.7μF 35V
C243	1	1	EE22405040	Elect, 0.22μF 50V
C244	1	1	EA47503590	Elect, 4.7μF 35V
C245	1	1	DF15152300	Film, 1500pF ±5%
C246	1	1	DF65151010	Film, 150pF ±5%
C247	1	1	DF15473300	Film, 0.047μF ±5%
C248	1	1	DF15223300	Film, 0.022μF ±5%
C249	1	1	DF15273300	Film, 0.027μF ±5%
C250	1	1	DF65271510	Film, 270pF ±5%
C251	1	1	DF15473300	Film, 0.047μF ±5%
C252	1	1	DF15222300	Film, 2200pF ±5% 50V

www.hifiengine.com

• (U) for U.S.A.
• (C) for Canada

REF. DESIG.	Q'TY U	Q'TY C	PART NO.	DESCRIPTION
C301	1	1	EA10701090	Elect, 100μF 10V
C302	1	1	DF16102510	Film, 1000pF ±10% 200V
C303	1	1	DF16102350	Film, 1000pF ±10% 50V
C304	1	1	DF16102510	Film, 1000pF ±10% 200V
C305	1	1	EE10505040	Elect, 1μF 50V
C306	1	1	DF16223510	Film, 0.022μF ±10% 100V
C307	1	1	DF17103300	Film, 0.01μF 50V
C308	1	1	DF17103300	Film, 0.01μF 50V
C309	1	1	DF17103300	Film, 0.01μF 50V
C310	1	1	DF17103300	Film, 0.01μF 50V
C311	1	1	EA47703590	Elect, 470μF 35V
C312	1	1	EA47703590	Elect, 470μF 35V
C313	1	1	EA47702590	Elect, 470μF 25V
C314	1	1	EA47702590	Elect, 470μF 25V
C315	1	1	EA10702590	Elect, 100μF 25V
C316	1	1	DK17103300	Ceramic, 0.01μF 25V
C317	1	1	DK17103300	Ceramic, 0.01μF 25V
C318	1	1	DK17103300	Ceramic, 0.01μF 25V
C319	1	1	DK17103300	Cerami, 0.01μF 25V
C320	1	1	EA22802590	Elect, 2200μF 25V
C321	1	1	DK18403320	Ceramic, 0.04μF 25V
C322	1	1	DK18102300	Ceramic, 1000pF
				P100-RESISTOR
				(All resistors are ±5% and ¼W)
R101	1	1	GD05100140	10Ω
R102	1	1	GD05561140	560Ω
R103	1	1	GD05103140	10KΩ
R104	1	1	RN05184140	180KΩ
R105	1	1	GD05221140	220Ω
R106	1	1	GD05333140	33KΩ
R107	1	1	GD05104140	100KΩ
R108	1	1	GD05912140	9.1KΩ
R109	1	1	GD05751140	750Ω
R110	1	1	GD05511140	510Ω
R111	1	1	GD05224140	220KΩ
R112	1	1	GD05122140	1.2KΩ
R113	1	1	GD05302140	3KΩ
R114	1	1	GD05113140	11KΩ
R115	1	1	RA02020180	Trimming, 2KΩ Play Eq. Adj.
R116	1	1	RA05030090	Trimming, 50KΩ Play Lavel Adj.
R118	1	1	GD05105140	1MΩ
R119	1	1	GD05472140	4.7KΩ
R120	1	1	GD05182140	1.8KΩ
R123	1	1	GD05274140	270KΩ
R124	1	1	GD05473140	47KΩ
R125	1	1	GD05332140	3.3KΩ
R126	1	1	GD05181140	180Ω
R127	1	1	GD05104140	100KΩ
R128	1	1	GF05561140	560Ω
R129	1	1	GF05391140	390Ω

REF. DESIG.	Q'TY U	Q'TY C	PART NO.	DESCRIPTION
R135	1	1	GD05333140	33KΩ
R136	1	1	GD05105140	1MΩ
R137	1	1	GD05182140	1.8KΩ
R138	1	1	GD05112140	1.1KΩ
R139	1	1	GD05272140	2.7KΩ
R140	1	1	GD05561140	560Ω
R141	1	1	GD05102140	1KΩ
R142	1	1	GD05333140	33KΩ
R143	1	1	GD05104140	100KΩ
R144	1	1	GJ05681010	680Ω, 1W
R145	1	1	RA02020180	Trimming, 2KΩ Meter Adj.
R146	1	1	GD05151140	150Ω
R147	1	1	GD05362140	3.6KΩ
R148	1	1	RA02030060	Trimming, 20KΩ Rec. Level Adj.
R149	1	1	GD05103140	10KΩ
R150	1	1	GD05561140	560Ω
R151	1	1	GD05103140	10KΩ
R152	1	1	GD05564140	560KΩ
R153	1	1	GD05473140	47KΩ
R154	1	1	GD05153140	15KΩ
R155	1	1	GD05102140	1KΩ
R156	1	1	GD05182140	1.8KΩ
R157	1	1	GD05103140	10KΩ
R158	1	1	GD05101140	100Ω
R159	1	1	GD05220140	22Ω
R160	1	1	RA01540010	Trimming, 150KΩ Bias Adj.
R161	1	1	GD05104140	100KΩ
R163	1	1	GD05222140	2.2KΩ
R164	1	1	GD05222140	2.2KΩ
R165	1	1	GD05204140	200KΩ
R166	1	1	GD05102140	1KΩ
R167	1	1	GD05102140	1KΩ
R168	1	1	GD05102140	1KΩ
R201	1	1	GD05100140	10Ω
R202	1	1	GD05561140	560Ω
R203	1	1	GD05103140	10KΩ
R204	1	1	RN05184140	180KΩ
R205	1	1	GD05221140	220Ω
R206	1	1	GD05333140	33KΩ
R207	1	1	GD05104140	100KΩ
R208	1	1	GD05912140	9.1KΩ
R209	1	1	GD05751140	750Ω
R210	1	1	GD05511140	510Ω
R211	1	1	GD05224140	220KΩ
R212	1	1	GD05122140	1.2KΩ
R213	1	1	GD05302140	3KΩ
R214	1	1	GD05113140	11KΩ
R215	1	1	RA02020180	Trimming, 2KΩ Play Eq. Adj.
R216	1	1	RA05030090	Trimming, 50KΩ Play Level Adj.
R218	1	1	GD05105140	1MΩ
R219	1	1	GD05472140	4.7KΩ
R220	1	1	GD05182140	1.8KΩ
R223	1	1	GD05274140	270KΩ
R224	1	1	GD05473140	47KΩ

www.hifiengine.com

• (U) for U.S.A.
• (C) for Canada

REF. DESIG.	Q'TY U	Q'TY C	PART NO.	DESCRIPTION
R225	1	1	GD05332140	3.3KΩ
R226	1	1	GD05181140	180Ω
R227	1	1	GD05104140	100KΩ
R228	1	1	GF05561140	560Ω
R229	1	1	GF05391140	390Ω
R235	1	1	GD05333140	33KΩ
R236	1	1	GD05105140	1MΩ
R237	1	1	GD05182140	1.8KΩ
R238	1	1	GD05112140	1.1KΩ
R239	1	1	GD05272140	2.7KΩ
R240	1	1	GD05561140	560Ω
R241	1	1	GD05102140	1KΩ
R242	1	1	GD05333140	33KΩ
R243	1	1	GD05104140	100KΩ
R244	1	1	GJ05681010	680Ω 1W
R245	1	1	RA02020180	Trimming, 2KΩ Meter Adj.
R246	1	1	GD05151140	150Ω
R247	1	1	GD05362140	3.6KΩ
R248	1	1	RA02030060	Trimming, 20KΩ Rec Level Adj.
R249	1	1	GD05103140	10KΩ
R250	1	1	GD05561140	560Ω
R251	1	1	GD05103140	10KΩ
R252	1	1	GD05564140	560KΩ
R253	1	1	GD05473140	47KΩ
R254	1	1	GD05153140	15KΩ
R255	1	1	GD05102140	1KΩ
R256	1	1	GD05182140	1.8KΩ
R257	1	1	GD05103140	10KΩ
R258	1	1	GD05101140	100Ω
R259	1	1	GD05220140	22Ω
R260	1	1	RA01540010	Trimming, 150KΩ Bias Adj.
R261	1	1	GD05104140	100KΩ
R263	1	1	GD05222140	2.2KΩ
R264	1	1	GD05222140	2.2KΩ
R265	1	1	GD05204140	200KΩ
R266	1	1	GD05102140	1KΩ
R267	1	1	GD05102140	1KΩ
R268	1	1	GD05102140	1KΩ
R301	1	1	GJ05102010	1KΩ 1W
R302	1	1	GD05154140	150KΩ
R303	1	1	GD05101140	100Ω
R304	1	1	GD05471140	470Ω
R305	1	1	GJ05151020	150Ω 2W
R306	1	1	GJ05271020	270Ω 2W
R307	1	1	GD05154140	150KΩ
R308	1	1	GD05154140	150KΩ
R309	1	1	GD05390140	39Ω
R310	1	1	GD05390140	39Ω
R311	1	1	GJ05182010	1.8KΩ
R312	1	1	GJ05100010	10Ω 1W
R313	1	1	GJ05471010	470Ω 1W
R314	1	1	GJ05331010	330Ω 1W
				P100-SEMICONDUCTORS
Q101	1	1	HT317400E0	Transistor, 2SC1740LN (E)
Q102	1	1	HT317400E0	Transistor, 2SC1740LN (E)
Q103	1	1	HT317400S0	Transistor, 2SC1740LN (S)
Q105	1	1	HC10007270	IC, P646
Q106	1	1	HT317400S0	Transistor, 2SC1740LN (S)

REF. DESIG.	Q'TY U	Q'TY C	PART NO.	DESCRIPTION
Q107	1	1	HT317400S0	Transistor, 2SC1740LN (S)
Q108	1	1	HT317400S0	Transistor, 2SC1740LN (S)
Q109	1	1	HT317400S0	Transistor, 2SC1740LN (S)
Q110	1	1	HT317400S0	Transistor, 2SC1740LN (S)
Q115	1	1	HD10003020	Diode, 2OA90
Q116	1	1	HD10003020	Diode, 2OA90
Q201	1	1	HT317400E0	Transistor, 2SC1740LN (E)
Q202	1	1	HT317400E0	Transistor, 2SC1740LN (E)
Q203	1	1	HT317400S0	Transistor, 2SC1740LN (S)
Q205	1	1	HC10007270	IC, P646
Q206	1	1	HT317400S0	Transistor, 2SC1740LN (S)
Q207	1	1	HT317400S0	Transistor, 2SC1740LN (S)
Q208	1	1	HT317400S0	Transistor, 2SC1740LN (S)
Q209	1	1	HT317400S0	Transistor, 2SC1740LN (S)
Q210	1	1	HT317400S0	Transistor, 2SC1740LN (S)
Q215	1	1	HD10003020	Diode, 2OA90
Q216	1	1	HD10003020	Diode, 2OA90
Q301	1	1	HT309451Q0	Transistor, 2SC945 (Q)
Q302	1	1	HT313181R0	Transistor, 2SC1318 (R)
Q303	1	1	HT313181R0	Transistor, 2SC1318 (R)
Q304	1	1	HT403131E0	Transistor, 2SD313 (E)
Q305	1	1	HD30033090	Zener, WZ052
Q306	1	1	HD20011050	Diode, 1S1555
Q307	1	1	HD20012030	Diode, DS132B
Q308	1	1	HD20011030	Diode, DS131B
Q309	1	1	HD30048090	Zener, WZ210
Q310	1	1	HD20012030	Diode, DS132B
Q311	1	1	HD20011030	Diode, DS131B
				P100-SWITCHES
S101	1	1	SS09020070	Slide Switch, Rec/Play
S201	1	1	SS09020070	Slide Switch, Rec/Play
S301	1	1	SP08030060	Push Switch, Eq
S302	1	1	SP08030060	Push Switch, Bias
S304	1	1	SP08030060	Push Switch, Dolby Nr
				P100-PLUGS
J315	1	1	YP06001050	Plug, Tape Mechanism Connector
J316	1	1	YT02040230	Terminal
				P100-COILS
L101	1	1	LC23660030	Choke Coil, 36MH, ±5%, Bias Trap
L102	1	1	LC22260040	Choke Coil, 22MH, ±5%, MPX
L103	1	1	LC24750040	Choke Coil, 4.7MH, ±5%, Rec Eq.
L104	1	1	LC22260510	Choke Coil, 22MH, ±5%, Bias Trap
L201	1	1	LC23660030	Choke Coil, 36MH, ±5%, Bias Trap
L202	1	1	LC22260040	Choke Coil, 22MH, ±5%, MPX Filter
L203	1	1	LC24750040	Choke Coil, 4.7MH, ±5%, Rec Eq.
L204	1	1	LC22260510	Choke Coil, 22MH, ±5%, Bias Trap
L301	1	1	TC10180072	OSC Transf., OSC Trans.

(W01-99)	**Assembly and Wiring**
(T01-99)	**Adjustment**
(X01-00)	**Correction**

www.hifiengine.com

5.12 [H01-99] PACKING MATERIALS

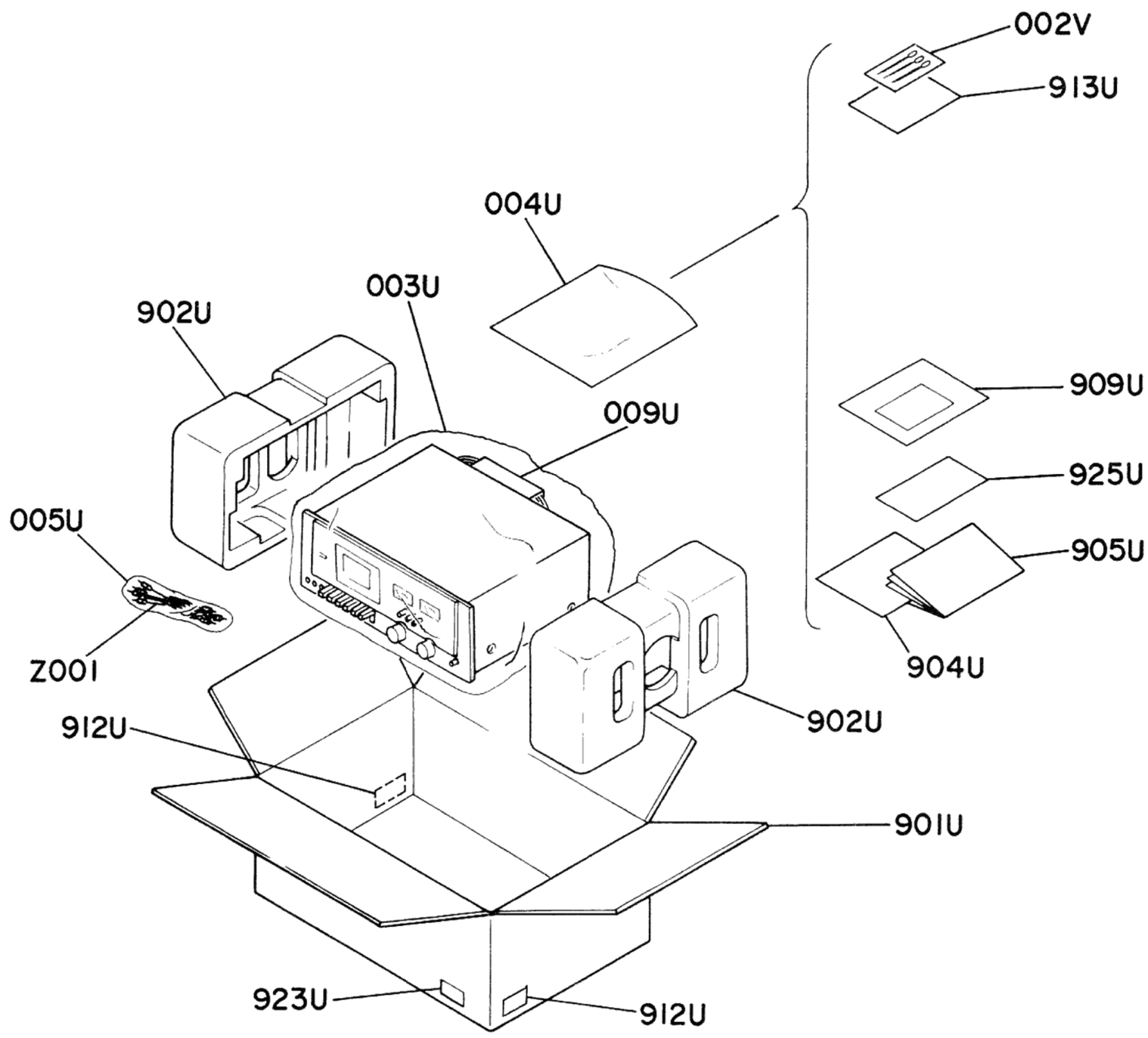

- (U) for U.S.A.
- (C) for Canada

REF. DESIG.	Q'TY U	Q'TY C	PART NO.	DESCRIPTION
002V	1	1	4136071010	Cleaner
003U	1	1	9014335330	Polythy Bag
004U	1	1	9013025010	Polythy Bag
005U	1	1	9011325010	Polythy Bag
009U	1	1	2864804010	Sleeve
901U	1		4257801010	Packing Case, M1810 only
901U		1	4257801020	Packing Case, M1810 only
901U	1		4257801030	Packing Case, MCD810 only
902U	2	2	4214809022	Cushion
904U	1	1	4257851220	Instructions
905U	1	1	4257851210	Instructions
907U		1	9630000180	Guarantee Card
909U	1		2818854023	Guarantee Card
909U		1	2818854042	Guarantee Card
910U		1	2918813012	Envelope

REF. DESIG.	Q'TY U	Q'TY C	PART NO.	DESCRIPTION
912U		2	9510901020	Label
913U		1	9650000052	S. Station Card
923U	2		9526019010	Serial No. Card
923U		2	9526019020	Serial No. Card
925U	1		2225813010	Envelope
Z001	1	1	ZD01000140	Connective Cord

www.hifiengine.com

6. GENERAL SPECIFICATIONS

Style	Front Load
Tape Drive System	Single Capstan Drive
Cartidge	Philips Type Compact Cassette
Track System	Compatible Stereo 4 Track 2 Channel
Tape Speed	1-7/8 ips (4.8 cm/sec.)
Head	R/P – Super Hard Permalloy, Erase-Ferrite
Motor	DC Servo Controlled Motor x 1
Meters	VU Type x 2
Recording System	AC Bias
Erasing System	AC Erase
Semiconductors	
Transistors	20
IC's	2
Diodes	11
LED's	1
Mic Input Sensitivity	
Level	–72 dBV
Impedance	10 kohms
Line Input Sensitivity	
Level	–22 dBV
Impedance	180 kohms
Headphone Output	
Level	31 mV (0 VU)
Impedance	160 ohms
Line Output	
Level	620 mV (0 VU)
Impedance	3.3 kohms
Fast Rewind Time	105
Fast Forward Time	105
AC Line Voltage	120 V AC, 60 Hz
Power Consumption	13 Watts
Dimensions (W x H x D)	16-3/8" x 5-3/4" x 9-5/8"
Weight	12 lbs. 10 oz.

www.hifiengine.com

marantz

MARANTZ CO., INC. · P.O. BOX 577 · CHATSWORTH, CALIFORNIA · 91311

A WHOLLY-OWNED SUBSIDIARY OF SUPERSCOPE INC., CHATSWORTH, CALIFORNIA · 91311

Noise reduction circuit under license from Dolby Laboratories.
"DOLBY" and the Double-D symbol are trademarks of Dolby Laboratories.

Printed in Japan

425785501-0
3K 1978-10

www.hifiengine.com