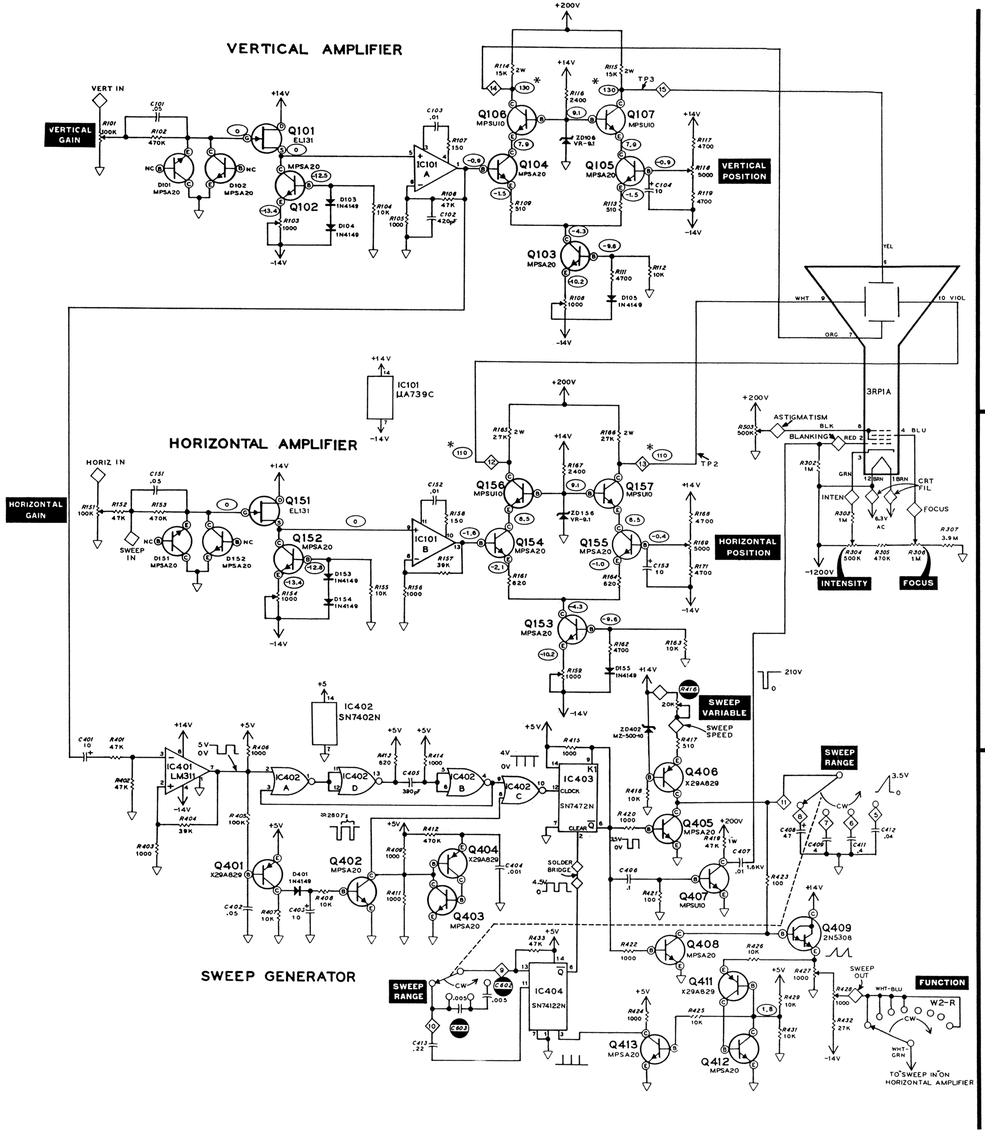

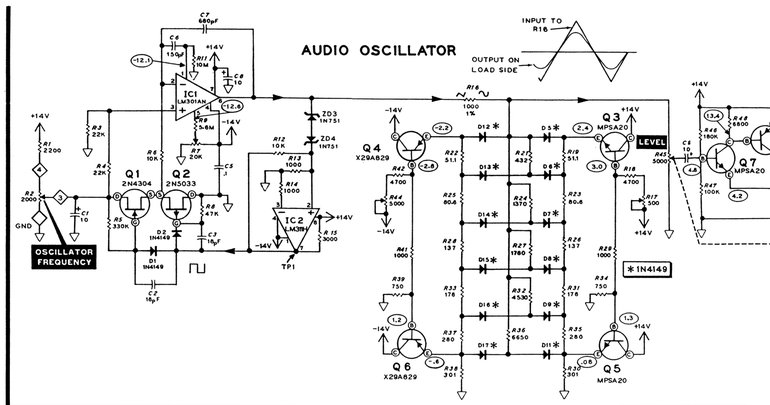

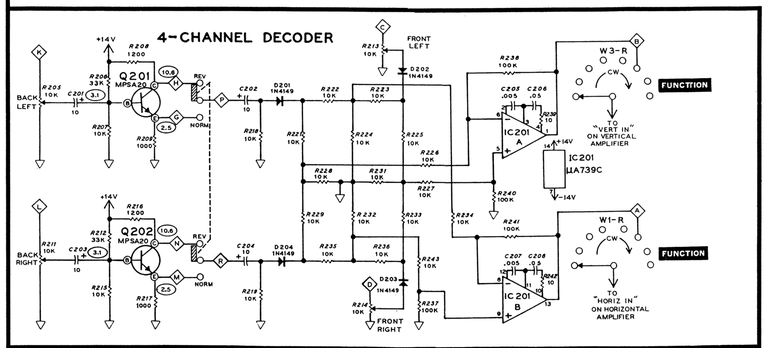

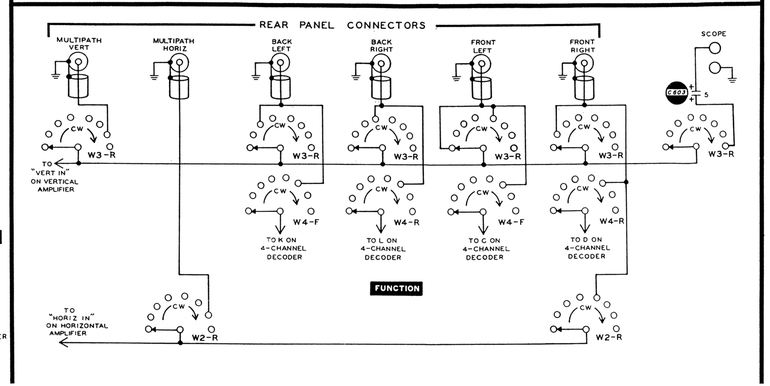

SCHEMATIC OF THE HEATHKIT® AUDIO OSCILLOSCOPE MODEL AD-1013

NOTES:

1. PARTS ARE NUMBERED IN THE FOLLOWING GROUPS:

   1- 99 PARTS IN THE AUDIO OSCILLATOR.
   100-149 PARTS IN THE VERTICAL AMPLIFIER.
   150-199 PARTS IN THE HORIZONTAL AMPLIFIER.
   200-299 PARTS IN THE 4-CHANNEL DECODER.
   300-399 PARTS ASSOCIATED WITH THE CRT.
   400-499 PARTS IN THE SWEEP GENERATOR.
   500-599 PARTS IN THE POWER SUPPLY.
   600-699 PARTS ON THE CHASSIS.

2. RESISTORS ARE 1/2 WATT UNLESS MARKED OTHERWISE. RESISTOR VALUES ARE IN OHMS (K=1000, M=1,000,000).
3. CAPACITORS ARE IN μF UNLESS MARKED OTHERWISE.
4. SWITCHES ARE SHOWN IN THEIR COUNTERCLOCKWISE POSITION.
5. DC VOLTAGE MEASUREMENTS WERE TAKEN WITH A HIGH IMPEDANCE INPUT VOLTMETER FROM THE POINT INDICATED TO THE CHASSIS GROUND. VOLTAGES MAY VARY ±20%.
6. ▽ THIS SYMBOL INDICATES CIRCUIT BOARD GROUND.
7. ⏚ THIS SYMBOL INDICATES CHASSIS GROUND.
8. ◇ THIS SYMBOL INDICATES A CIRCUIT BOARD CONNECTION.
9. ⬭ THIS SYMBOL INDICATES A DC VOLTAGE TAKEN FROM THE POINT INDICATED TO CHASSIS GROUND.

   * ⬭ THIS VOLTAGE MAY VARY ±30%.

NOTE: ALL VOLTAGES WERE TAKEN UNDER THE FOLLOWING CONDITIONS

FUNCTION	SCOPE
HORIZONTAL POSITION	CENTER OF ROTATION
VERTICAL POSITION	CENTER OF ROTATION
HORIZONTAL GAIN	FULLY COUNTERCLOCKWISE
VERTICAL GAIN	FULLY COUNTERCLOCKWISE
SWEEP RANGE	20K
SWEEP VARIABLE	FULLY COUNTERCLOCKWISE
OSCILLATOR FREQUENCY	FULLY COUNTERCLOCKWISE
OSCILLATOR LEVEL	OFF
INTENSITY	CENTER OF ROTATION
FOCUS	CENTER OF ROTATION
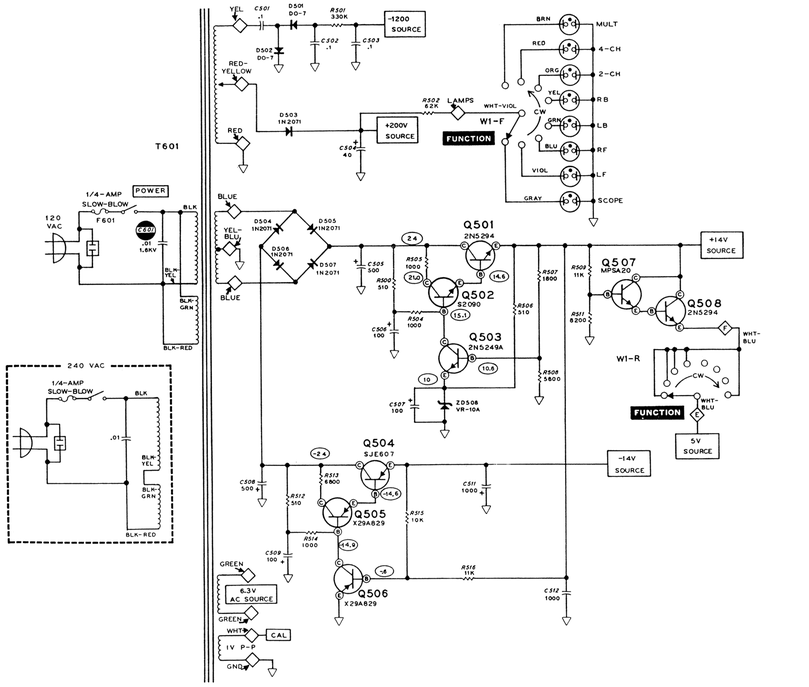
POWER SUPPLY