# CARVER

## M-500 Power Amplifier

# SERVICE MANUAL

## CONTENTS


| | Page |
|---|---|
| BLOCK DIAGRAM | 2 |
| SPECIFICATIONS | 2 |
| ALIGNMENT PROCEDURES | 3 |
| ALIGNMENT POINTS | 3 |
| PCB PS-376 FOIL SIDE VIEW | 4 |
| PCB MA-375 FOIL SIDE VIEW | 5~6 |
| SCHEMATIC DIAGRAM | 7~8 |
| PARTS LIST | 9~10 |

# BLOCK DIAGRAM

## POWER SUPPLY CONTROL

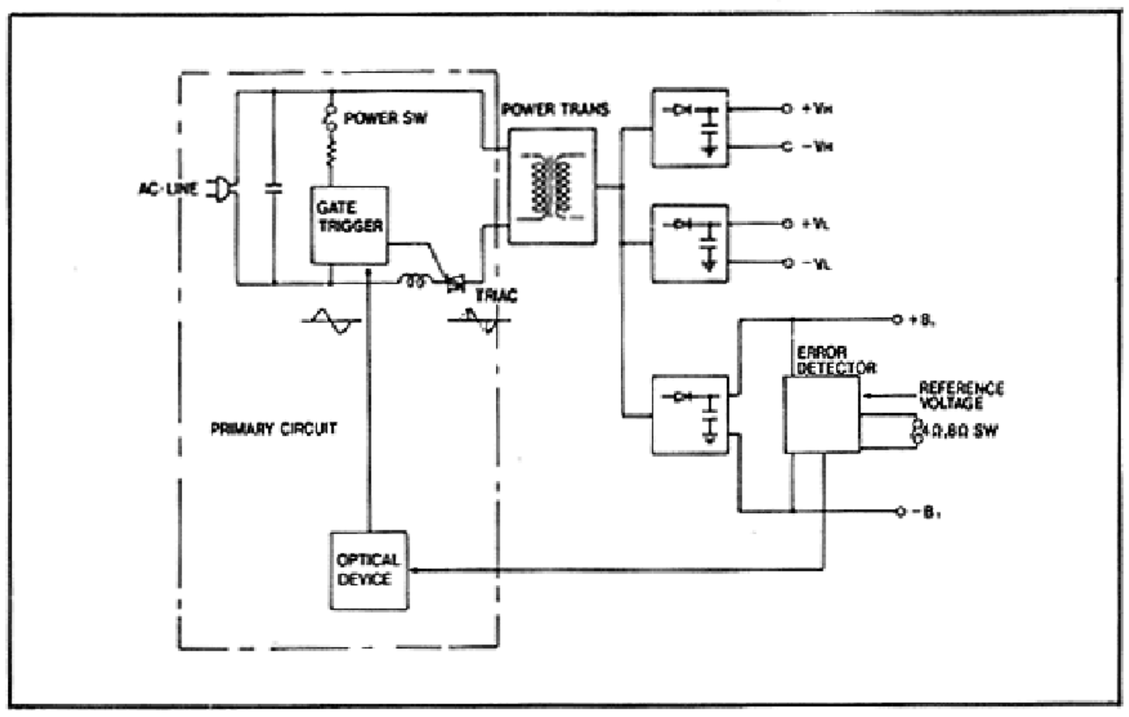


## AMPLIFICATION

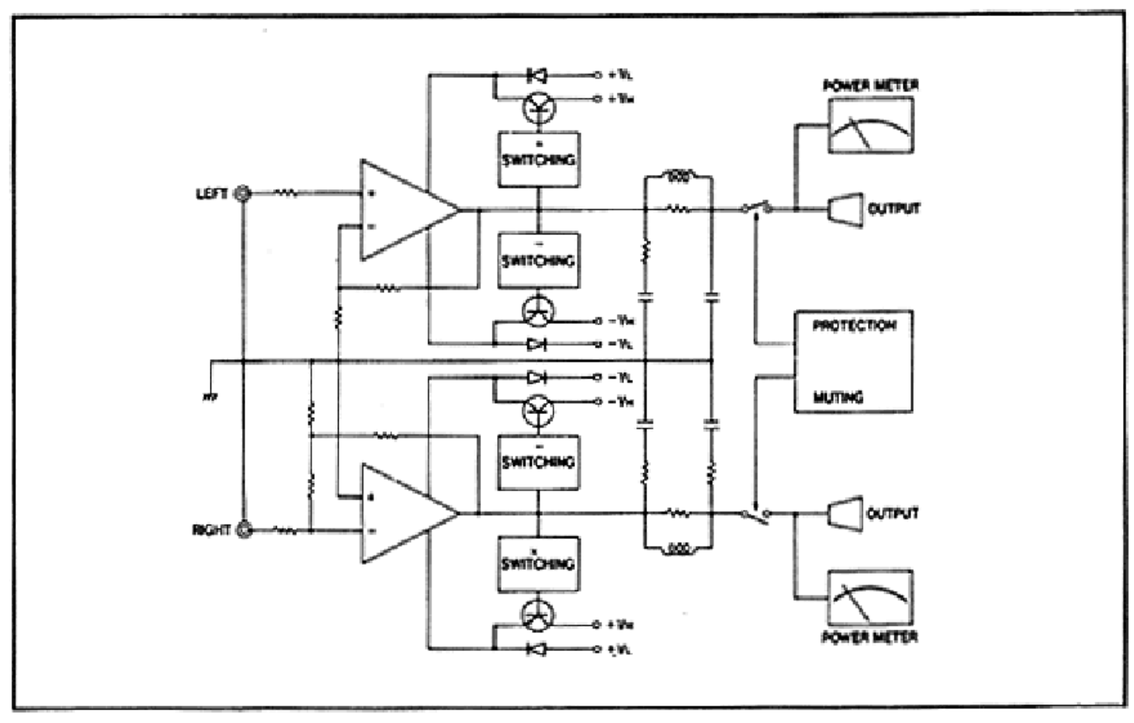


## BTL CIRCUIT

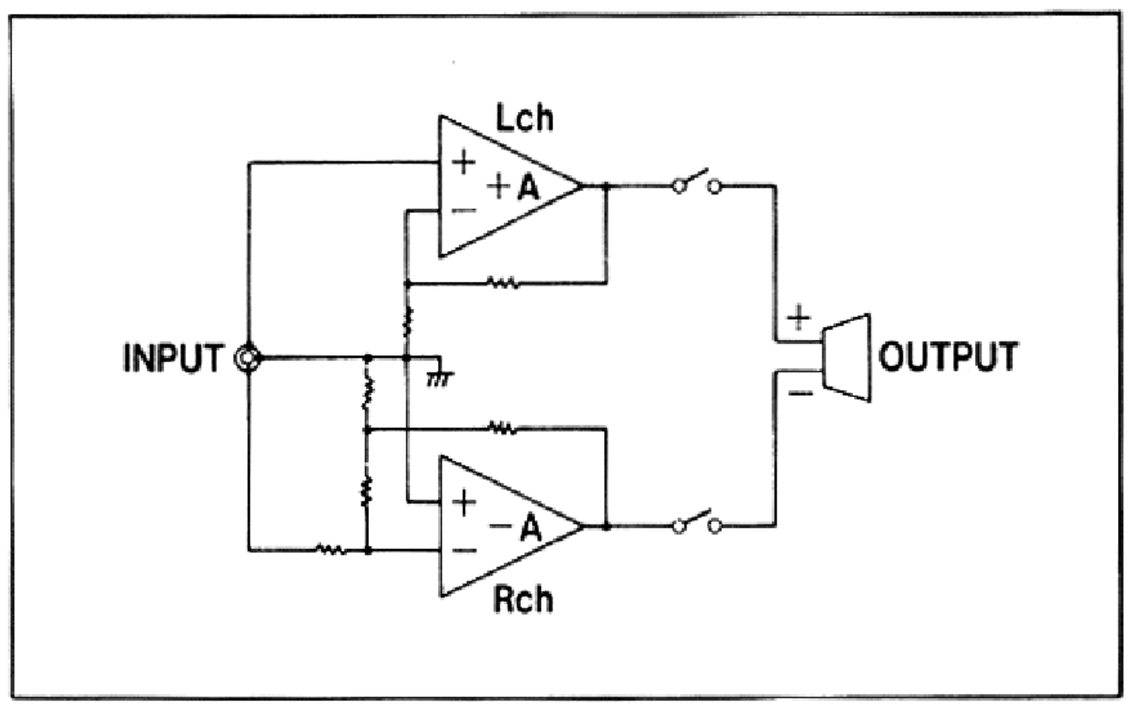


## UNIT

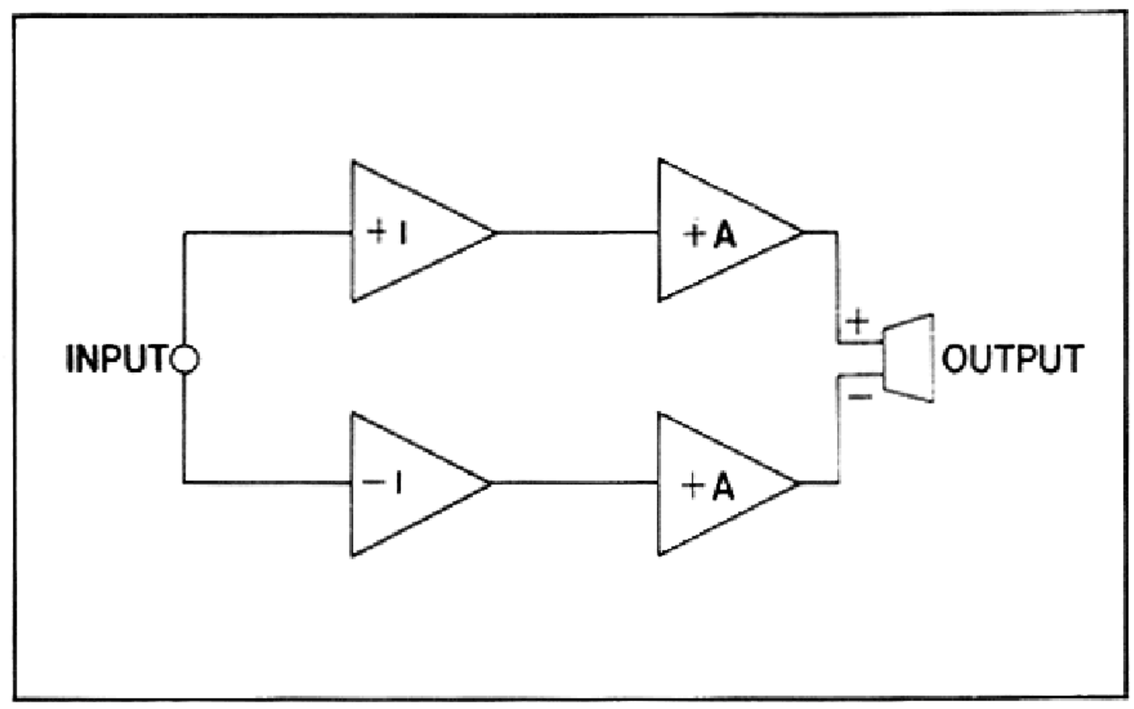


# SPECIFICATIONS

- **Sensitivity** . . . . . 1.4V
  Input :1000Hz
  Output:200W
- **Output power**. . . . . more than 200W
  Input :Main in
  Output:0.05% THD
  20Hz-20000Hz continuous both CH. driven
- **IM Distortion factor**. . . . . less than 0.05%
  Input :Aux 60Hz:7000Hz/4.1
  Output:200W
- **Frequency response** . . . . . 20Hz-20000Hz
  Input :Main in
  Output:1000Hz 20W±0.5dB
- **Signal to noise ratio** (IHF-A) . . . . . more than 100dB
  (Input short) Main in
- **Residual noise**(IHF-A) . . . . . 200μV
- **Damping factor**. . . . . .more than 30
  Input :Aux 150Hz
  Output:20W
- **Input impedance** . . . . . 15 Kohm
  at 1000Hz Main in
- **Dynamic head room**. . . . . stereo 240W(4Ω)
  230W(8Ω)
  mono 520W(4Ω)
  620W(8Ω)
- **Crosstalk**
  Between the channels of stereo equipment
  Output:20W
  Main in (Input:Shorted)
  1000Hz . . . . . .more than 80dB
  20000Hz . . . . . .more than 60dB
- **Output load**
  Speaker output . . . . . .8ohm
- **Maximum power consumption**. . . . . .1100watts
- **AC power supply**. . . . . 220V, 50/60Hz
- **Netweight** . . . . . 10.5kg
- **Dimension** . . . . . W=440 H=110 D=348mm

Specifications and design are subject to change without notice.

# ALIGNMENT PROCEDURES

| Step | Connect | Ajust | Adjust for |
|---|---|---|---|
| | **POWER SUPPLY** | | |
| 1 | Rotate SVR503 and SVR504 fully counter-clockwise. | | |
| 2 | VTVM<br>R178 (test point side) | SVR503 | 74V |
| | | | |
| 5 | | | |
| | Set the speaker impedance selector switch to "8Ω". | | |
| | **BIAS CURRENT** | | |
| 6 | Preheat for more than 5 minutes. | | |
| 7 | DC digital voltmeter<br>LIVE/GND<br>TP1/TP2 (L)<br>TP3/TP4 (R) | SVR101 (L)<br>SVR102 (R) | 6mV±1mV |
| | **METER** | | |
| 8 | Confirm that the meters indicate 0 watt at no input. | | |
| 9 | Input ..... 1kHz to input jacks.<br>Ouput ..... Speaker out | | Speaker out 100W |
| 10 | | SVR601 (L)<br>SVR602 (R) | Meters 100W |

# ALIGNMENT POINTS

MA-375 PCB

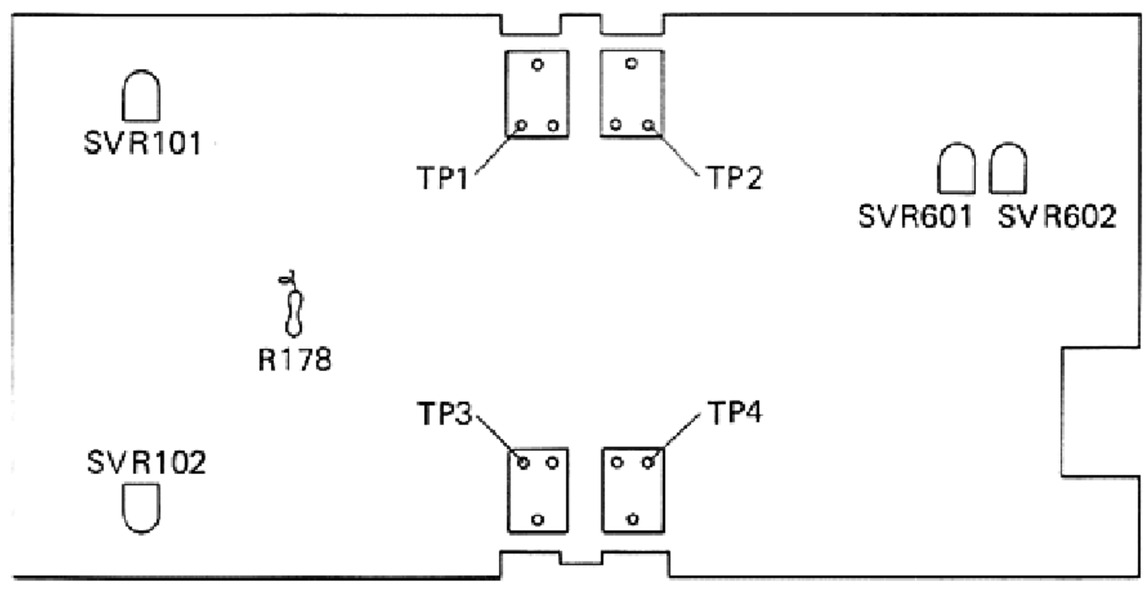


PS-376 PCB

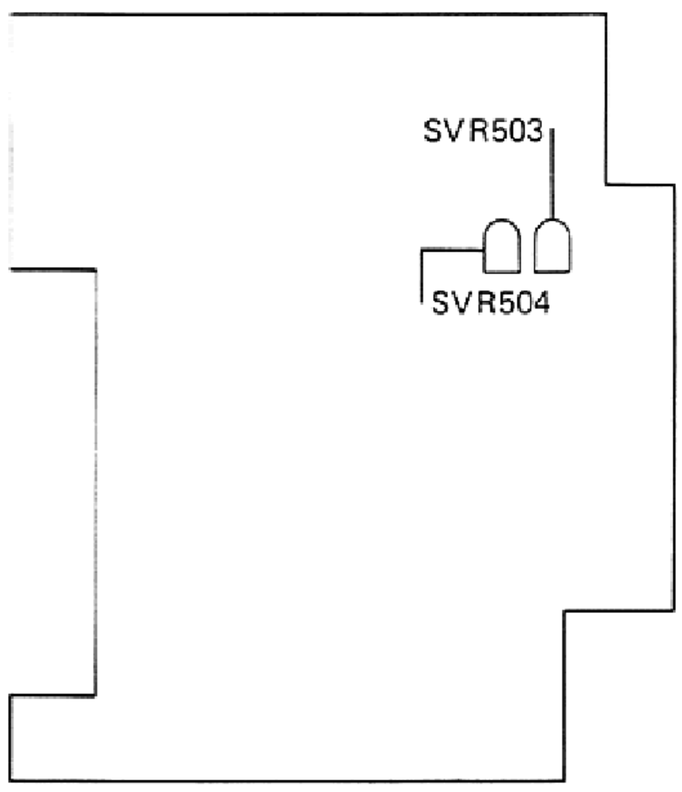


METER UNIT

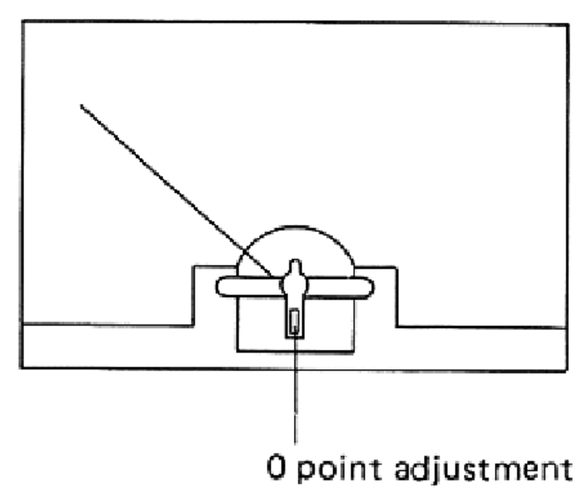

# POWER SUPPLY BOARD (PS-376)

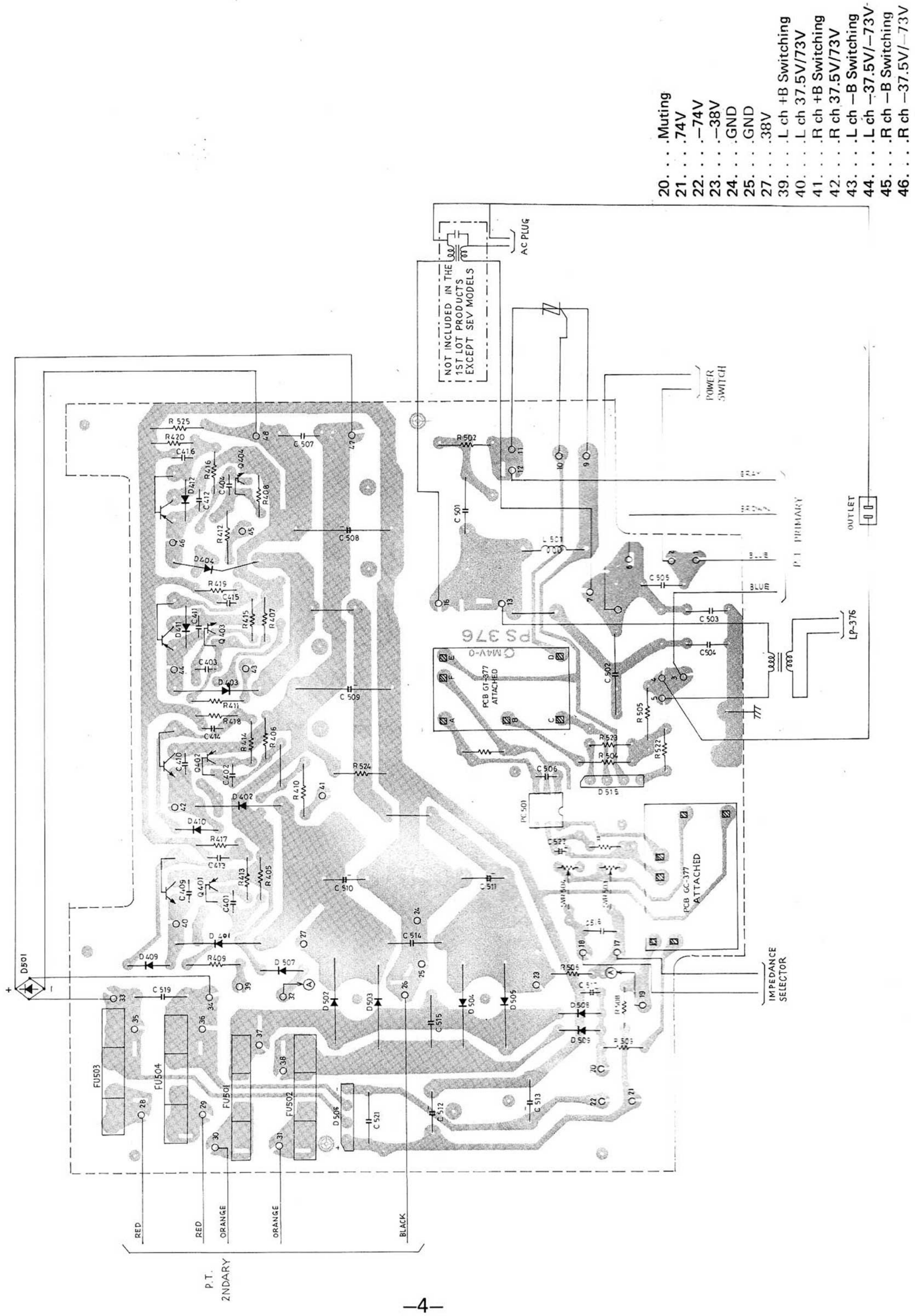

# MAIN AMP BOARD (MA-375)

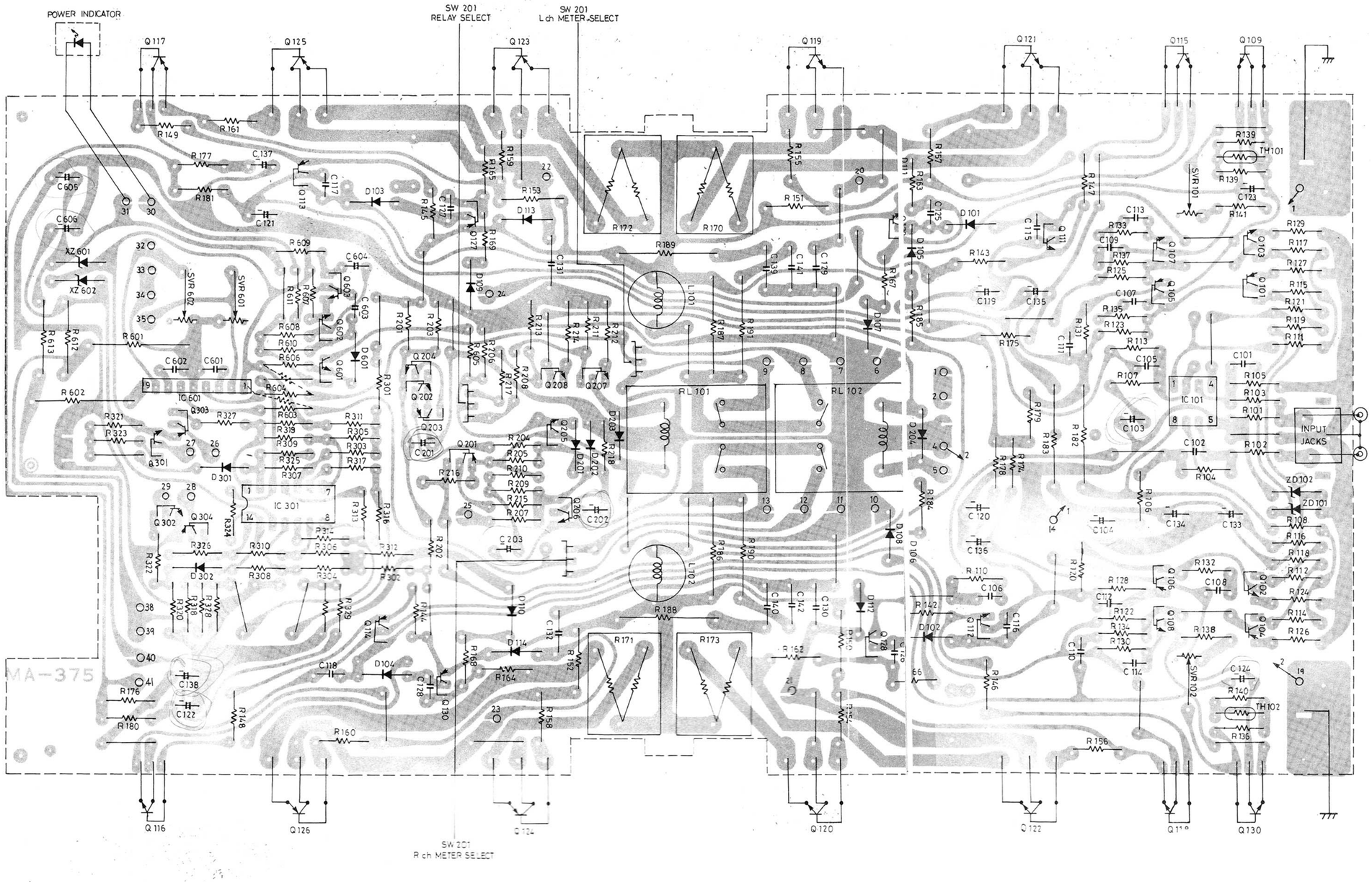


1. . . .Thermal relay (to 38)
2. . . .Thermal relay (to 5)
4. . . .to 19
5. . . .Thermal relay (to 2)
6. . . .GND
7. . . .Speaker A terminal L ch – & R ch +
8. . . .Speaker A terminal L ch +
9. . . .Speaker B terminal L ch +
10. . . .GND
11. . . .Speaker B terminal L ch – & R ch +
12. . . .Speaker A terminal R ch –
13. . . .Speaker B terminal R ch –
14. . . .GND (to 17)
17. . . .GND (to 14)
19. . . .GND (to 4)
20. . . .L ch 37.5V/73V
21. . . .R ch 37.5V/73V
22. . . .L ch –37.5V/–73V
23. . . .R ch –37.5V/–73V
24. . . .74V
25. . . .Muting
26. . . .L ch –B Switching
27. . . .L ch +B Switching
28. . . .R ch –B Switching
29. . . .R ch +B Switching
32. . . .R ch meter +
33. . . .R ch meter –
34. . . .L ch meter –
35. . . .L ch meter +
38. . . .Thrmal relay (to 1)
39. . . .38V
40. . . .–38V
41. . . .–74V

# SCHEMATIC DIAGRAM

( ) Stands for SEV model

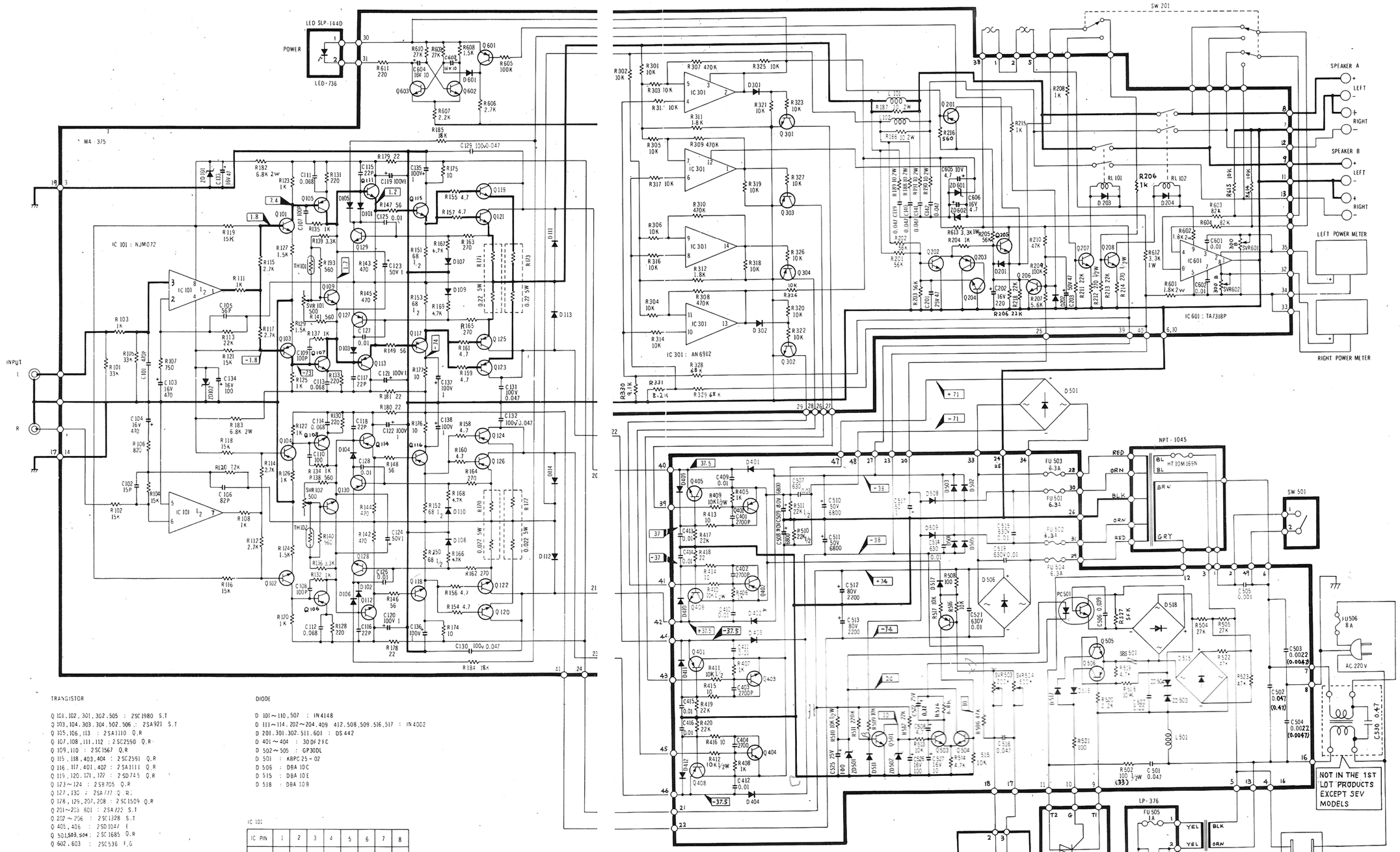


TRANSISTOR

Q 101, 102, 301, 302, 505 : 2SC1980 S.T
Q 103, 104, 303, 304, 502, 506 : 2SA921 S.T
Q 105, 106, 113 : 2SA1110 Q.R
Q 107, 108, 111, 112 : 2SC2550 Q.R
Q 109, 110 : 2SC1567 Q.R
Q 115, 118, 403, 404 : 2SC2591 Q.R
Q 116, 117, 401, 402 : 2SA1111 Q.R
Q 119, 120, 121, 122 : 2SD745 Q.R
Q 123~124 : 2SB705 Q.R
Q 127, 130 : 2SA777 Q.R
Q 128, 129, 207, 208 : 2SC1509 Q.R
Q 201~203, 601 : 2SA722 S.T
Q 202 ~ 206 : 2SC1328 S.T
Q 405, 406 : 2SD1047 E
Q 501, 503, 504 : 2SC1685 Q.R
Q 602, 603 : 2SC536 F.G

ZENER DIODE

ZD 101, 102 : XZ147
ZD 501 : XZ200
ZD 502 : XZ100
ZD 503, 504 : XZ265
ZD 601, 602 : XZ117

DIODE

D 101~110, 507 : IN4148
D 111~114, 202~204, 409 412, 508, 509, 516, 517 : IN4002
D 201, 301, 302, 511, 601 : DS442
D 401~404 : 30DF2FC
D 502~505 : GP30DL
D 501 : KBPC 25-02
D 506 : DBA 10C
D 515 : DBA 10E
D 518 : DBA 10B

IC 101

| IC PIN | 1 | 2 | 3 | 4 | 5 | 6 | 7 | 8 |
|---|---|---|---|---|---|---|---|---|
| VOLTAGE | 0 | 0 | 0 | -14.7 | 0 | 0 | 0 | +14.7 |

IC 301

| IC PIN | 1 | 2 | 3 | 4 | 5 | 6 | 7 | 8 | 9 | 10 | 11 | 12 | 13 | 14 |
|---|---|---|---|---|---|---|---|---|---|---|---|---|---|---|
| VOLTAGE | 0 | -11.8 | -12 | -0.3 | 4.8 | 0 | -5 | 0 | -5 | -0.3 | 5 | 12 | -11.8 | 0.5 |

IC 601

| IC PIN | 1 | 2 | 3 | 4 | 5 | 6 | 7 | 8 | 9 |
|---|---|---|---|---|---|---|---|---|---|
| VOLTAGE | 0 | -8.7 | -0.78 | 0 | -8.7 | 0 | -0.79 | -8.7 | -8.7 |

# PARTS LIST

| Parts No. | Description | Symbol No. | Q'ty |
|---|---|---|---|
| **SEMICONDUCTORS** | | | |
| AN6912 | IC | IC301 | 1 |
| TA7318P | IC | IC601 | 1 |
| TL072 or NJM072 | IC | IC101 | 1 |
| 2SA921 (S or T) | Transistor | Q103,104,303,304, 502,506 | 6 |
| 2SC1685 (Q or R) | Transistor | Q501,503,504 | 3 |
| 2SC1980 (S or T) | Transistor | Q101,102,301,302, 505 | 5 |
| 2SA1111 (Q or R) | Transistor | Q116,117,401,402 | 4 |
| 2SB817 (E) | Transistor | Q407,408 | 2 |
| 2SC2591 (Q or R) | Transistor | Q115,118,403,404 | 2 |
| 2SD1047 (E) | Transistor | Q405,406 | 2 |
| 2SA722 (S or T) | Transistor | Q201,203,601 | 3 |
| 2SC1328 (S or T) | Transistor | Q202,204~206 | 4 |
| 2SC1509 (Q or R) | Transistor | Q128,129,207,208 | 4 |
| 2SC536 (F or G) | Transistor | Q602,603 | 2 |
| 2SA777 (Q or R) | Transistor | Q127,130 | 2 |
| 2SA1110 (Q or R) | Transistor | Q105,106,113,114 | 4 |
| 2SB705 (Q or R) | Transistor | Q123~126 | 4 |
| 2SC2590 (Q or R) | Transistor | Q107,108,111,112 | 4 |
| 2SD745 (Q or R) | Transistor | Q119~122 | 4 |
| 2SC1567 (Q or R) | Transistor | Q109,110 | 2 |
| DBA10B | Rectifier bridge | D518 | 1 |
| DBA10C | Rectifier bridge | D506 | 1 |
| DBA10E | Rectifier bridge | D515 | 1 |
| KBPC25-02 | Rectifier bridge | D502 | 1 |
| 1N4002 | Diode | D111~114,202~204 409~412,507~509 516,517 | 16 |
| GP30D-L | Diode | D502~505 | 4 |
| DS442 | Diode | D201,301,302,511,601 | 5 |
| 1N4148 | Diode | D101~110 | 10 |
| 30DF2FC or RGP30G-5001L | Diode | D401~404 | 4 |
| XZ-100 | Zener diode | ZD502 | 1 |
| XZ-200 | Zener diode | ZD501 | 1 |
| XZ-265 | Zener diode | ZD503,504 | 2 |
| XZ-117 | Zener diode | ZD601,602 | 2 |
| XZ-147 | Zener diode | ZD101,102 | 2 |
| SLP-144D | LED | Power indicator | 1 |
| SM16JZ41 | Triac | TRI501 | 1 |
| BS08A | SBS | SBS501 | 1 |
| PC—713 | Photo coupler | PC501 | 1 |
| **CAPACITORS** | | | |
| NP-25TW470M | Electrolytic (non-pole) | C201 | 1 |
| MS-16TW100M | Electrolytic | C527,603,604 | 3 |
| MS-16TW470M | Electrolytic | C133,605,606 | 3 |
| MS-16TW101M | Electrolytic | C134,526 | 2 |
| MS-16TW221M | Electrolytic | C202 | 1 |
| MS-16TW471M | Electrolytic | C103,104 | 2 |
| MS-25TW1R0M | Electrolytic | C522 | 1 |
| MS-25TW4R7M | Electrolytic | C528 | 1 |
| MS-25TW101M | Electrolytic | C525 | 1 |
| MS-50TW1R0M | Electrolytic | C123,124,517 | 3 |
| MS-50TW470M | Electrolytic | C203 | 1 |
| MS100TW1R0M | Electrolytic | C119~122,135~138 | 8 |
| LHL1H682QHS | Electrolytic | C510,511 | 2 |
| LUB1K222MHS | Electrolytic | C512,513 | 2 |
| LHH1K682THH | Electrolytic | C508,509 | 2 |
| HE12SJYB103K | Ceramic | C409~412 | 4 |
| HE40SJSL150K | Ceramic | C102 | 1 |
| HE40SJSL560K | Ceramic | C105 | 1 |
| HE50SJSL820K | Ceramic | C106 | 1 |
| HE50SJSL101K | Ceramic | C107~110 | 4 |
| HE50SJYB102K | Ceramic | C413~416 | 4 |
| HM60SJSL220K | Ceramic | C115~118 | 4 |
| HE70SJYB272K | Ceramic | C401~404 | 4 |
| HE90SJSL471K | Ceramic | C101 | 1 |

| Parts No. | Description | Symbol No. | Q'ty |
|---|---|---|---|
| MY-50VS103J | Mylar | C125~128,601,602 | 6 |
| MY-50VS393J | Mylar | C506 | 1 |
| MY-50VS683J | Mylar | C111~114 | 4 |
| PME271Y447 | Polyester (SEV) | C503, 504 | 2 |
| ECQ-U2A222MF | Polyester | C503, 504 | 2 |
| ECQ-U2A102MF | Polyester | C505 | 1 |
| ECQ-E2A473MW | Polyester | C501, 502 | 2 |
| PME271M647 | Polyester (SEV) | C502 | 1 |
| MF-630TD103-M or TDXM-2J103KZBT | Polyester | C507, 514, 515, 519, 521 | 5 |
| MF-250TD473-M or TDXM-2E473KZBT | Polyester | C516 | 1 |
| MF-250TD224-M | Polyester | C529 | 1 |
| ECQ-M1473MZ | Polyester | C129~132, 139~142 | 8 |
| **RESISTORS** | | | |
| KA25SS101J | Carbon | R521 | 1 |
| KA25SS222J | Carbon | R520 | 1 |
| KA25SS472J | Carbon | R514,519 | 2 |
| KA25SS103J | Carbon | R513,515~518 | 5 |
| KA25SS223J | Carbon | R512 | 1 |
| KA25SS224J | Carbon | R511 | 1 |
| KA25ST4R7J | Carbon | R154~161 | 8 |
| KA25ST100J | Carbon | R174~177,413~416 | 8 |
| KA25ST220J | Carbon | R178~181 | 4 |
| KA25ST560J | Carbon | R146~149 | 4 |
| KA25ST101J | Carbon | R508 | 1 |
| KA25ST221J | Carbon | R128,130,131,133, 611 | 5 |
| KA25ST271J | Carbon | R162~165 | 4 |
| KA25ST471J | Carbon | R142~145 | 4 |
| KA25ST561J | Carbon | R138,140,141,193, 216 | 5 |
| KA25ST751J | Carbon | R107 | 1 |
| KA25ST821J | Carbon | R106 | 1 |
| KA25ST102J | Carbon | R103,108,111,120, 122,123,125,132, 134,135,137,204, 208,215,217, 405~408,608 | 20 |
| KA25ST152J | Carbon | R124,126,127,129, 607 | 5 |
| KA25ST182J | Carbon | R311,312 | 2 |
| KA25ST272J | Carbon | R122,114,115,117 | 4 |
| KA25ST332J | Carbon | R136,139,606 | 3 |
| KA25ST472J | Carbon | R166~169 | 4 |
| KA25ST562J | Carbon | R207 | 1 |
| KA25ST682J | Carbon | R526 | 1 |
| KA25ST822J | Carbon | R331 | 1 |
| KA25ST912J | Carbon | R330 | 1 |
| KA25ST103J | Carbon | R301~306,313,314, 316~327,509,614, 615 | 23 |
| KA25ST153J | Carbon | R102,104,116,118, 119,121 | 6 |
| KA25ST183J | Carbon | R184,185 | 2 |
| KA25ST223J | Carbon | R110,113,206,211, 213,218,417~420 | 10 |
| KA25ST273J | Carbon | R609,610 | 2 |
| KA25ST333J | Carbon | R101,105 | 2 |
| KA25ST473J | Carbon | R210,506,522,523 | 4 |
| KA25ST563J | Carbon | R201~203,205,527 | 5 |
| KA25ST683J | Carbon | R328,329 | 2 |
| KA25ST823J | Carbon | R603,604 | 2 |
| KA25ST104J | Carbon | R209,605 | 2 |
| KA25ST474J | Carbon | R307~310 | 4 |
| KA50ST330J | Carbon (SEV) | R502 | 1 |
| KA50ST680J | Carbon | R150~153 | 4 |
| KA50ST101J | Carbon | R502 | 1 |
| KA50ST271J | Carbon | R212,214 | 2 |
| KA50ST103J | Carbon | R409~412,510 | 5 |
| KA50ST223J | Carbon | R524,525 | 2 |

# PARTS LIST

| Parts No. | Description | Symbol No. | Q'ty |
|---|---|---|---|
| KA50ST273J | Carbon | R504,505 | 2 |
| SA-1WT332J | Metal oxide | R612,613 | 2 |
| SA-2WT100J | Metal oxide | R186~191 | 6 |
| SA-2WT182J | Metal oxide | R601,602 | 2 |
| SA-2WT682J | Metal oxide | R182,183 | 2 |
| ERF-5GEKR22N | Network | R170~173 | 4 |
| SVR-08T3B301 | Carbon trimmer | SVR601,602 | 2 |
| SVR-08T3B501 | Carbon trimmer | SVR101,102 | 2 |
| SVR-08T3B204 | Carbon trimmer | SVR503 | 1 |
| SVR-08T3B504 | Carbon trimmer | SVR504 | 1 |
| SDT65 | Thermistor | TH101,102 | 2 |
| **COILS** | | | |
| SF-HP-6A-03 | | L501 | 1 |
| 104001 | | L101,102 | 2 |
| **FUSES & HOLDERS** | | | |
| FU-521027T | Fuse | FU505 | 1 |
| FU-526327T | Fuse | FU501~504 | 4 |
| FU-528025T or FU-528027T | Fuse | FU506 | 1 |
| FUH-002 | Fuse holder | | 10 |
| FH-033 | Fuse holder | | 1 |
| 180008 | Relay | RL101,102 | 2 |
| BF352-53001A | Lamp | LA501 | 1 |
| BF352-53002A | Lamp | LA502 | 1 |
| SW-1101072 | Power switch | SW501 | 1 |
| SW-2426081 | Speaker selector switch | SW201 | 1 |
| SS22B-P1907 | Impedance selector switch | SW502 | 1 |
| KL-290D-2 | Meter | | 2 |
| UI2-10005-200A | Thermal relay | RL101,102 | 2 |
| NPT-1045 | Power transformer | | 1 |
| NPT-1055 | Power transformer | | 1 |
| IB3600 | Case | | 2 |
| ANB-020-AAA | Speaker terminal | | 1 |
| AJC-056-AAB | RCA jacks | | 1 |
| S2-729T-100 | AC outlet | | 1 |
| UB-0029-1 | GND terminal | | 1 |

| Parts No. | Description | Symbol No. | Q'ty |
|---|---|---|---|
| ACC-024 | AC cord | | 1 |
| SR-5N-4 | Cord stopper | | 1 |
| 59BS4795 | Terminal lug | | 2 |
| 1S3MB | Mica | for Q401,405,406, 408 | 4 |
| No.18A | Mica | for Q115~118 | 4 |
| S-27 | Mica | for Q119~126 | 8 |
| RP-003 | Wrapping pin | | 12 |
| No.24B | Bushing | | 4 |
| **APPEARANCE** | | | |
| N20821A | Front panel | | 1 |
| N30552 | Meter panel | | 1 |
| N42650A | Front glass | | 1 |
| N42573-BR1 | Side cap R | | 1 |
| N42574-BR1 | Side cap L | | 1 |
| N42570-G | Window trim | | 2 |
| N42647 | Trim base | | 2 |
| N42681 | Knob (speaker selector) | | 1 |
| N42571A | Knob (power) | | 1 |
| N42572 | Knob guide | | 1 |
| N20824-BR | Cabinet | | 1 |
| N20823A | Rear panel | | 1 |
| N30551A | Bottom board | | 1 |
| T-C | Foot | | 4 |
| N20822 | Front chassis | | 1 |
| N30553 | Center chassis | | 1 |
| N30554 | Power transformer chassis | | 1 |
| N30555 | Joint angle | | 2 |
| N30556 | Fittings for lamp | | 1 |
| N42388 | Fittings for thermal relay | | 2 |
| N30557 | Side heatsink | | 1 |
| N30582A | Heatsink | | 2 |
| N30558 | Shower glass | | 1 |
| N42666 | Rubber cushion | | 2 |
| N41960 | Cabinet mat | | 1 |
| N42667 | Meter cushion | | 4 |
| N42669 | Lamp shield paper | | 1 |
| N42710 | Meter cushion | | 2 |
| N42711 | Rubber cushion | | 1 |
| N42789 | Rubber spacer | | 1 |
| N42792 | Rubber cushion | | 1 |
| N42947 | Stad | | 1 |

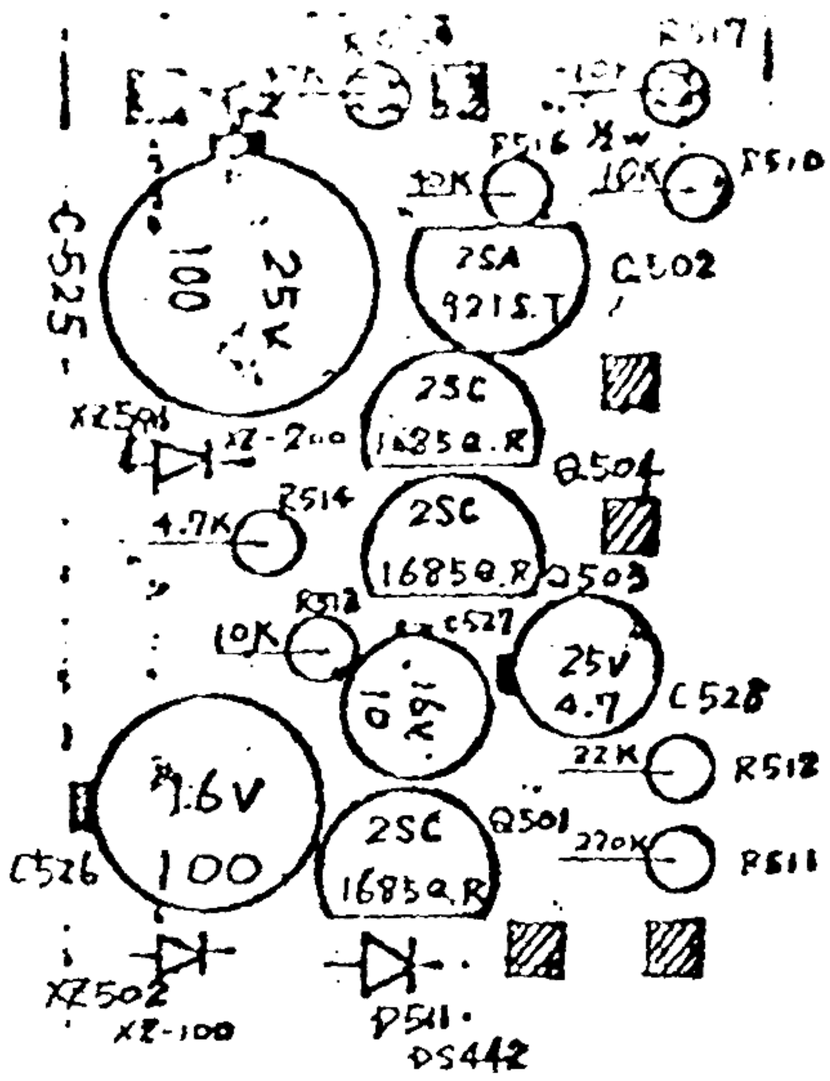


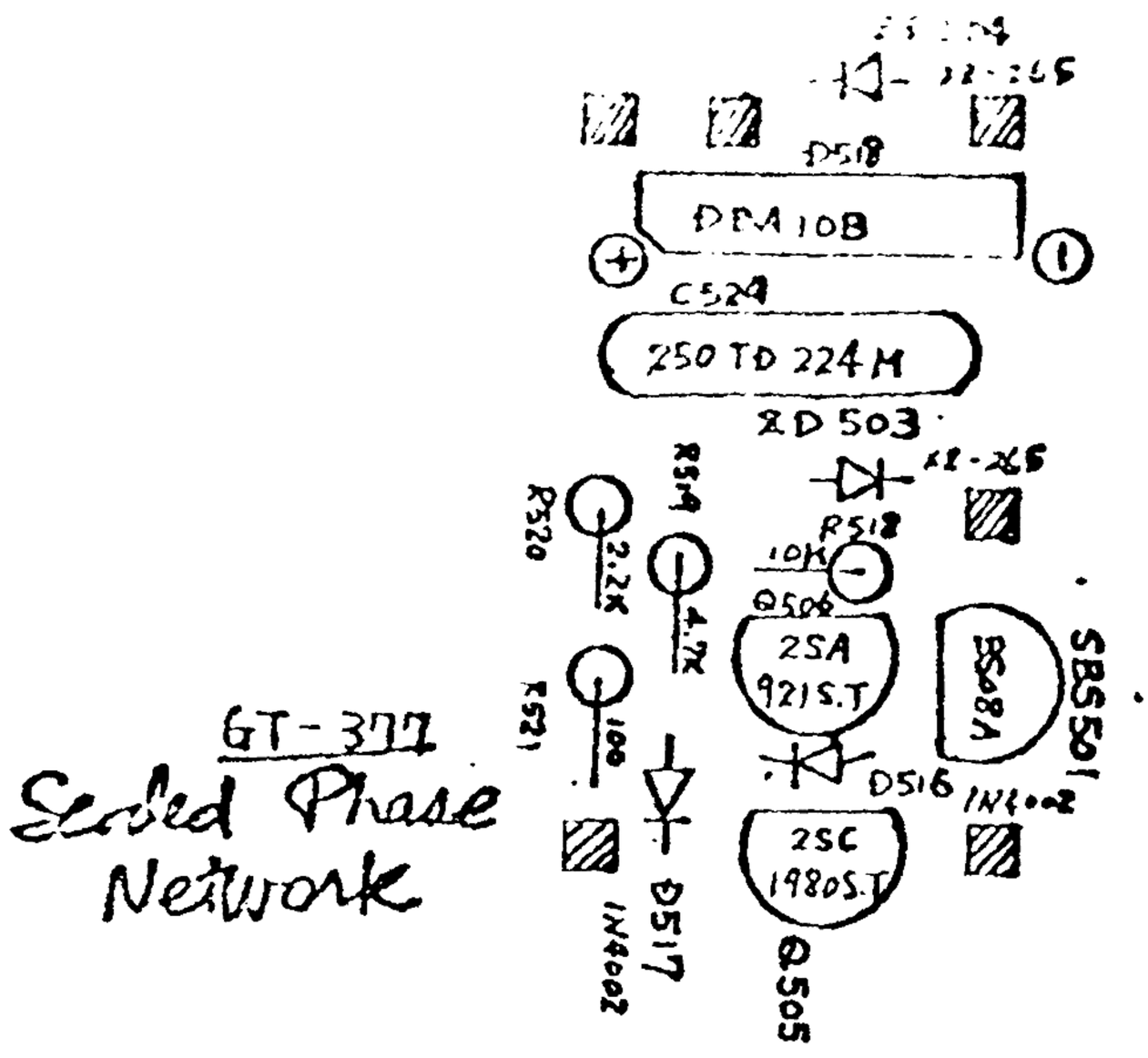


M-500

SUB ASSEMBLY PARTS LOCATION

# CARVER CORPORATION
# SERVICE BULLETIN

| Service Bulletin # M-500-2 | Model: M-500 | Serial nos. As Needed |
|---|---|---|
| REASON: | | Date: 2/04/91 |

To avoid replacing entire GT-377 (Phase Network) Sub Board.

| DELETE | ADD |
|---|---|
| Qty 1 BS08A (SBS501)<br>P/N BS08A | Qty 1 MBS4991 (SBS501)<br>P/N BS08A |
| Qty 1 56k 1/4W resistor (R527)<br>P/N KA25ST563J | Qty 1 39k 1/4W resistor (R527)<br>P/N 251-00108-00 |

# PROCEDURE

If the amplifier fails to turn on reliably, or not at all, it may be due to a failure of the Silicon Bidirectional Switch (Diode Thyristor) SBS501 (BS08A), located on the GT-377 Sub Board.

1) First try normal troubleshooting techniques to determine if there is a faulty component elsewhere in the amplifier, which is activating the protection circuitry (i.e. shorted output transistors, shorted pre-drivers, shorted bridge rectifier, etc.).

   This may be facilitated by shorting across pins T1 and T2 of the triac TRI501. CAUTION: When bypassing the triac, a Variac <u>must</u> be used to apply a line voltage of no more than 50VAC, because the Magnetic Field Coil cannot accept 120VAC without triac control.

2) If no shorts are found, try turning SVR503 (located on the power supply board) clockwise a bit. SVR503 adjusts the high rail voltage, and the amplifier will not turn on if the rail voltage is set too low.

3) If the amplifier still does not turn on, set SVR503 back to its original position and try replacing R527 (56k 1/4W resistor) with a 39k 1/4W resistor (see Figure 1 next page).

4) If the amplifier still fails to turn on, try replacing SBS501. Since the BS08A part is no longer available from Carver, substitute a Motorola MBS4991 in its place. Note that when a MBS4991 is used, R527 should be changed to a 39k 1/4W resistor.

5) The amplifier should start with a minimum of 90VAC line voltage. R527 may be decreased in value if necessary until the power supply triggers at 90VAC.

NOTE: When removing and re-installing the GT-377 Sub Board, do not overheat the connecting pins as this can cause the solder connections on the Sub Board to become intermittent.

Engineering approval Vic Richardson 3-5-91

Service approval B Cooper

# CARVER CORPORATION
# SERVICE BULLETIN

| Service Bulletin # M-500-2 | Model: M-500 | Serial nos. See Page 1 |
|---|---|---|

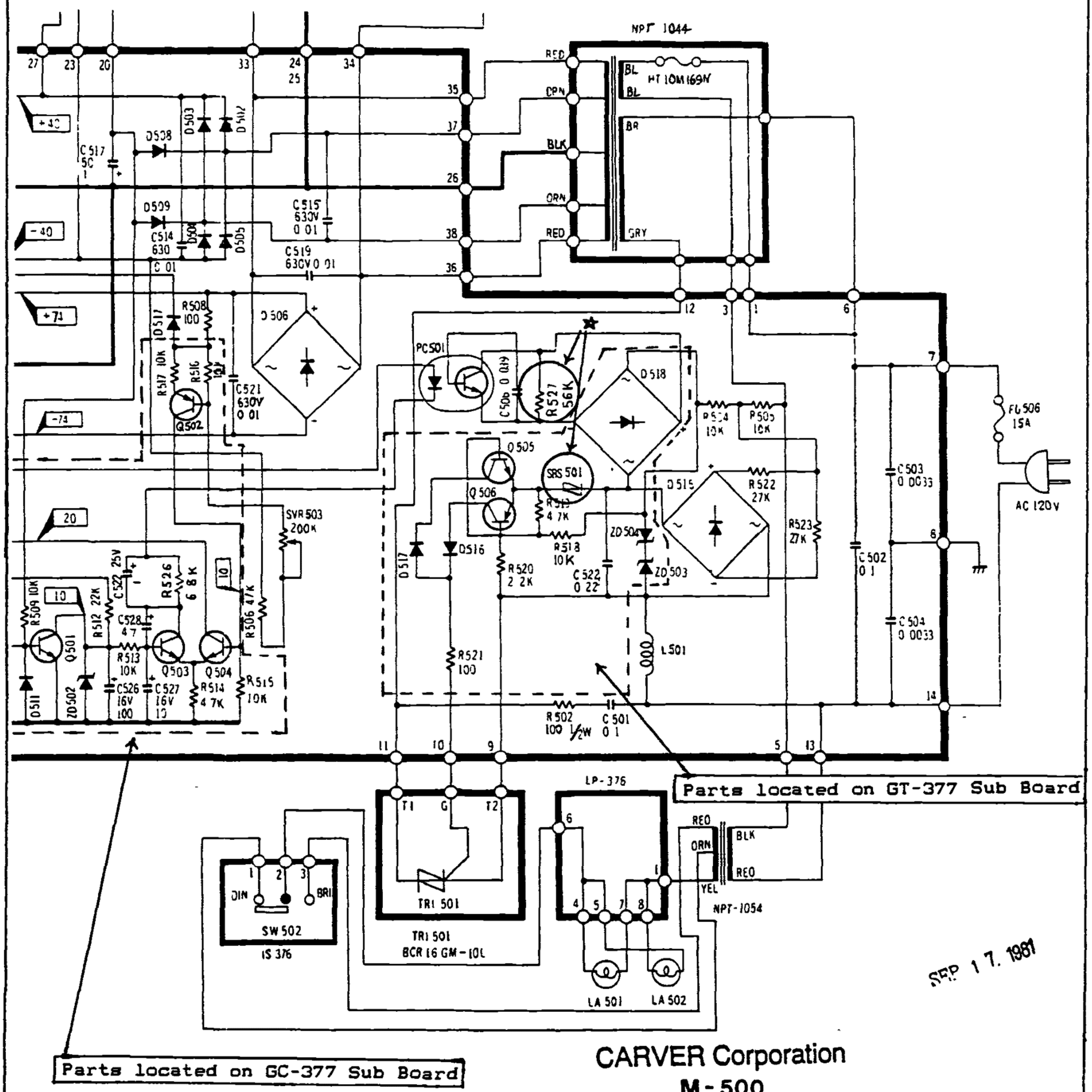


SEP 17. 1981

CARVER Corporation
M-500

Figure 1