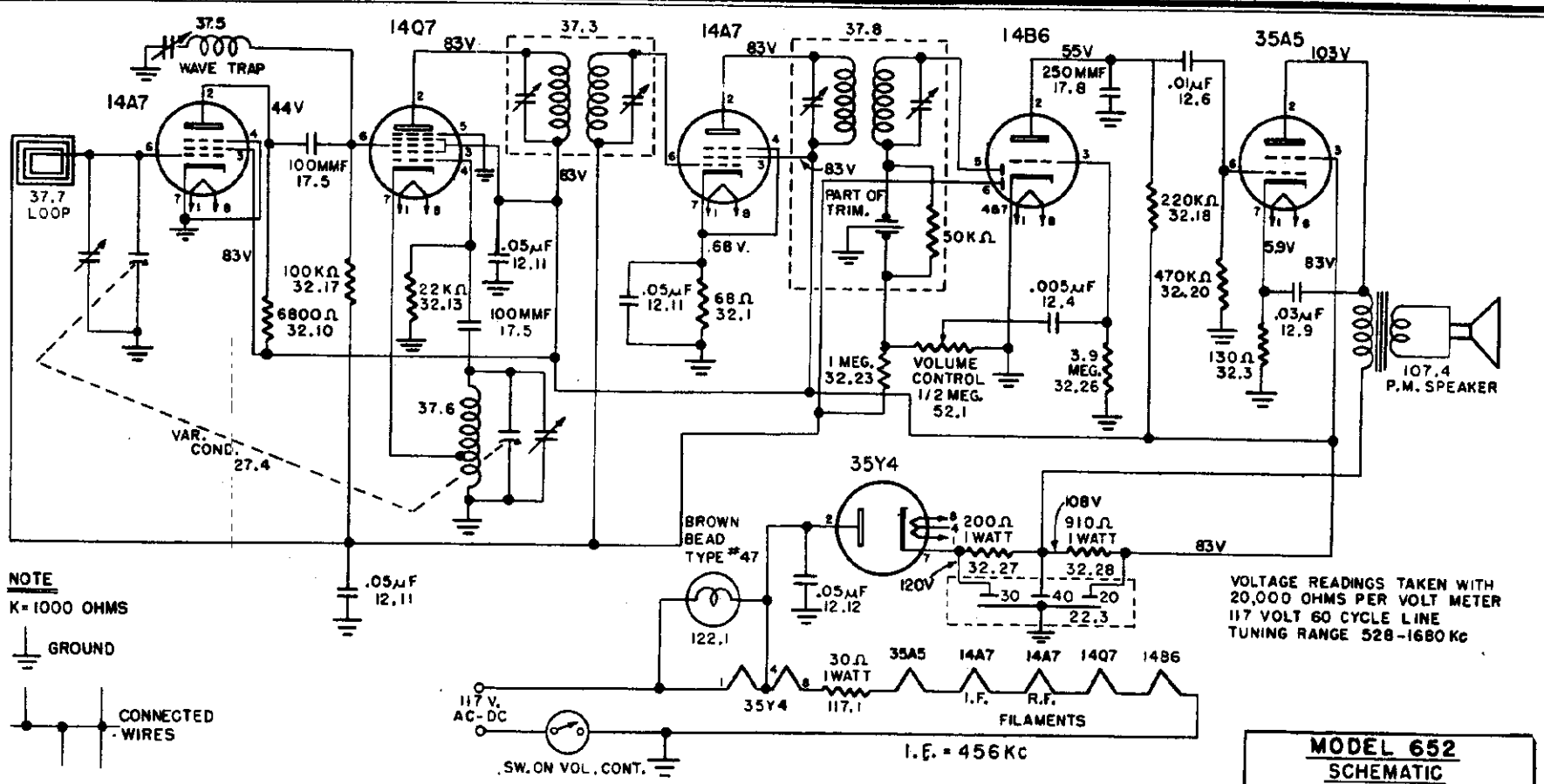

Power consumption 30 Watts

Frequency Range 1680-530 KC

Tubes: R.F. Amplifier 14A7

Osc. Converter 14Q7

I.F. Amplifier 14A7

Det. Avc. A.F. 14B6

Power Output 35A5

Rectifier 35Y4

Power supply (25-60 cycles AC) 95-125V AC-DC

Speaker 4" P.M. 1 oz. Alnico V Magnet

Speaker Transformer 2500 ohms—400 cycles

Speaker Voice Coil 3.2 ohms