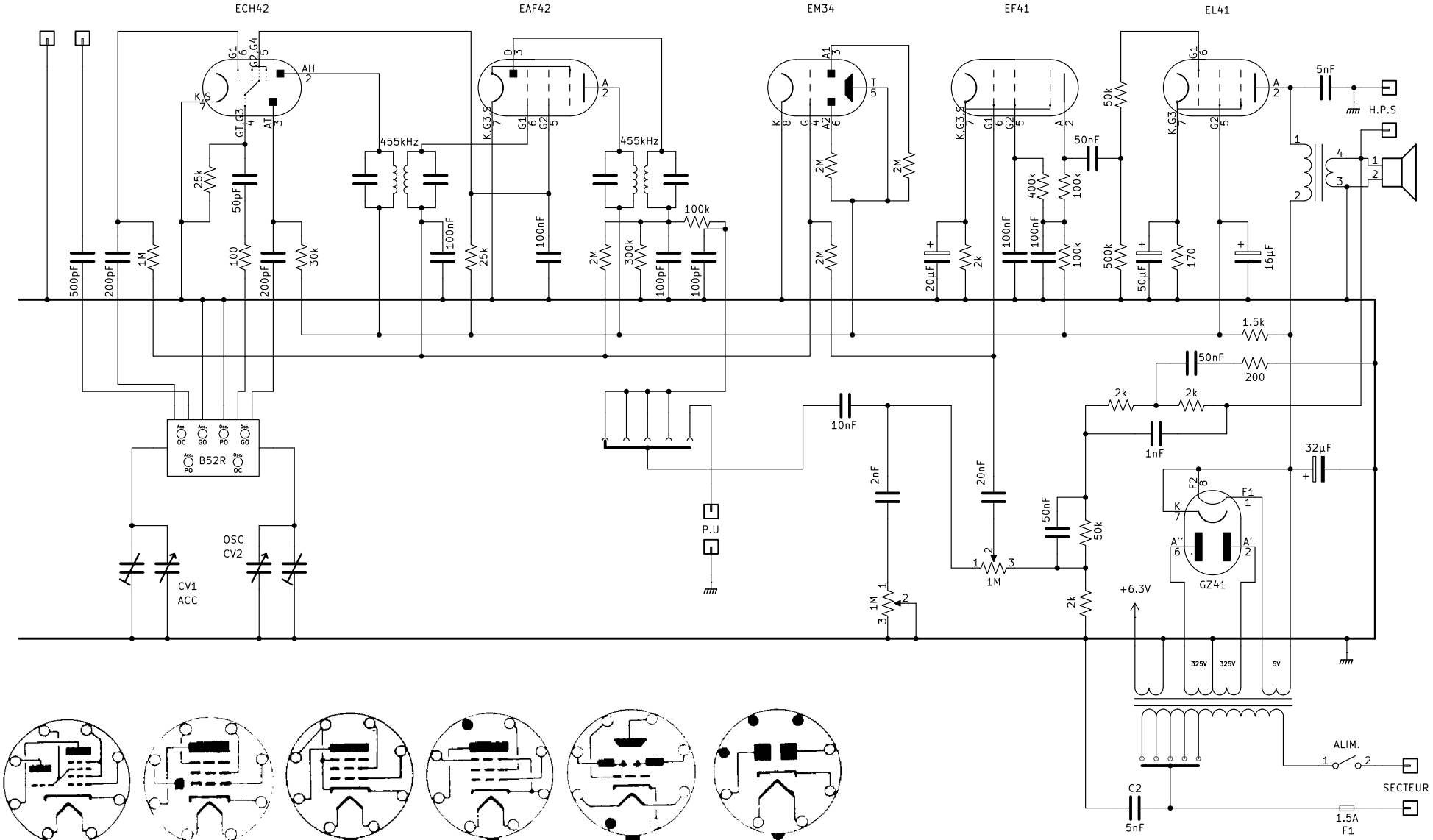

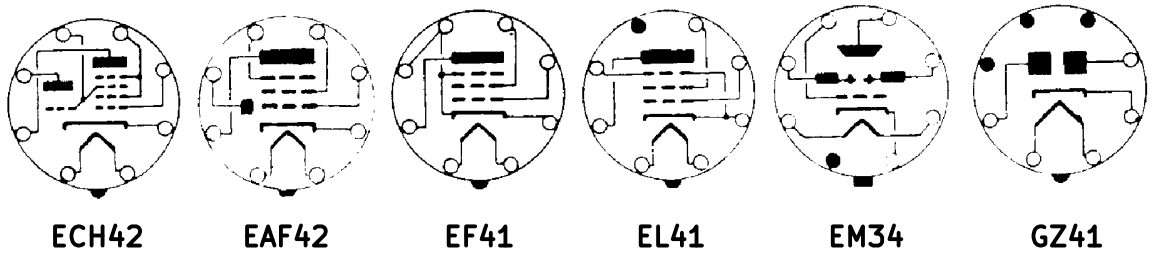

GME

Sheet: /

File: Schéma.kicad_sch

Title: Marquett 670

Size: A4	Date: 2025-07-30	**Rev: v1.1**
KiCad E.D.A. 9.0.3		Id: 1/1