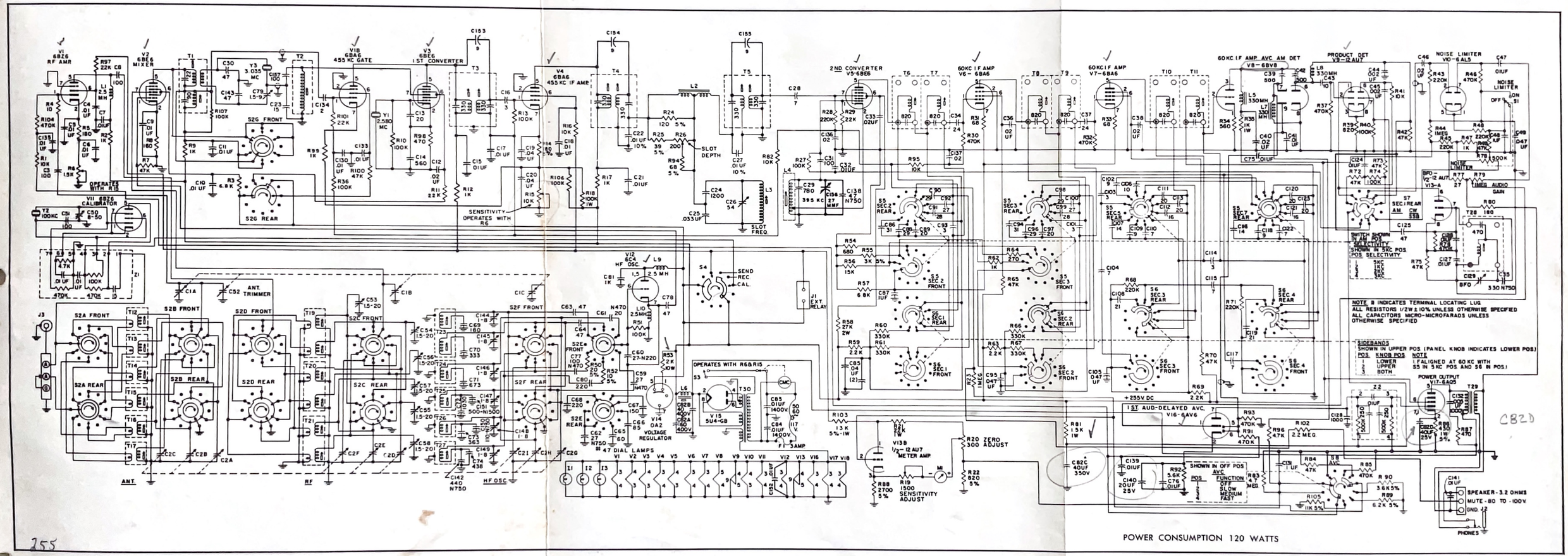

Figure 12. Hammarlund HQ-180 Communications Receiver, Schematic Diagram