STR-7025

USA Model
AEP Model
E Model

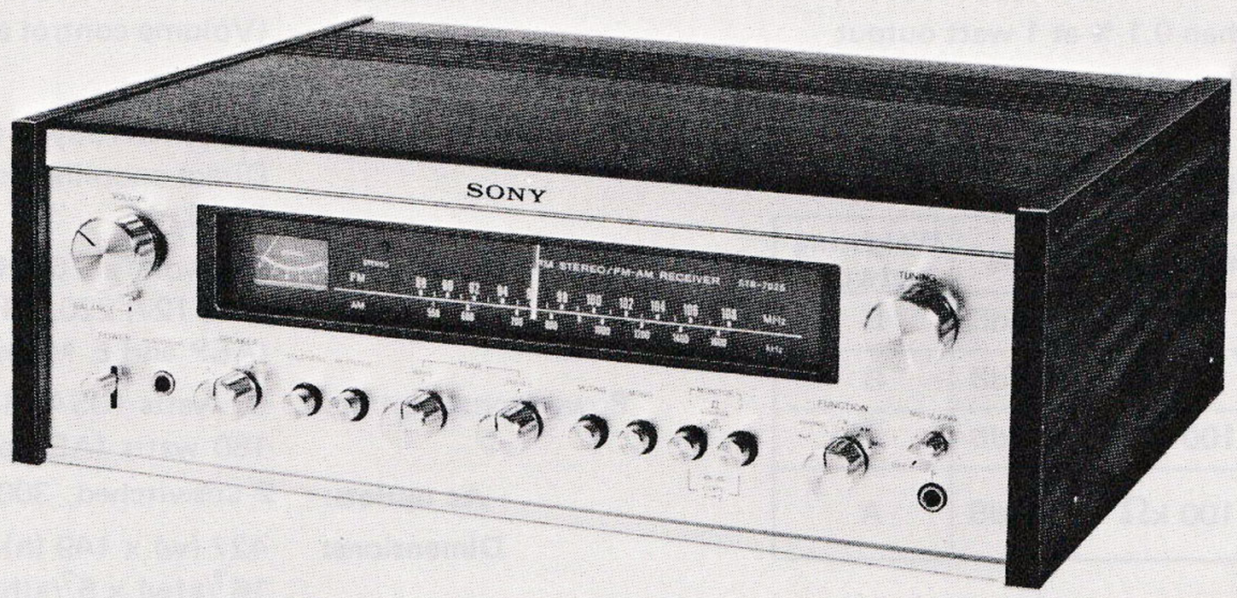

FM STEREO/FM-AM RECEIVER

SPECIFICATIONS

FM TUNER SECTION

Frequency range:	87.5 – 108 MHz
Intermediate frequency:	10.7 MHz
Antenna terminals:	300 ohms balanced 75 ohms unbalanced
Sensitivity:	2.2 μV (6.5 dB), IHF 1.7 μV (4.5 dB), S/N = 30 dB
Image rejection:	55 dB
IF rejection:	90 dB
Spurious rejection:	78 dB
A-m suppression:	55 dB
Capture ratio:	1.5 dB
Selectivity:	60 dB, IHF
S/N ratio:	68 dB
Harmonic distortion:	Mono 0.3 % at 400 Hz, 75 kHz deviation (100 %) mod Stereo 0.8 % at 400 Hz, 75 kHz deviation (100 %) mod
Stereo separation:	35 dB at 400 Hz
Frequency response:	30 Hz – 15 kHz $^{+0}_{-2}$ dB

A-M TUNER SECTION

Frequency range:	530 – 1,605 kHz
Intermediate frequency:	455 kHz (USA Model) 468 kHz (AEP, E Model)
Antenna:	Built-in ferrite-bar antenna and external antenna terminal
Sensitivity:	250 μV/m (48 dB/m), built-in antenna 30 μV (29 dB), external antenna
Image rejection:	56 dB at 1,000 kHz
IF rejection:	40 dB at 1,000 kHz
S/N ratio:	50 dB
Harmonic distortion:	0.8 %

– continues to page 2 –

SONY®
SERVICE MANUAL

www.hifiengine.com

AMPLIFIER SECTION

Continuous power output (Rated output): 18 watts per channel (8 ohms)
At 40 Hz – 20 kHz
Less than 0.8 % THD, both channels driven simultaneously

Power bandwidth (IHF): 10 Hz – 25 kHz

Harmonic distortion: Less than 0.8 % at rated output
Less than 0.1 % at 1 watt output

IM distortion: (60 Hz : 7 kHz = 4 : 1) Less than 0.8 % at rated output
Less than 0.1 % at 1 watt output

Residual noise: Less than 0.08 μW

Damping factor: 25 at 1 kHz, 8 ohms

Input sensitivity, impedance and S/N ratio:

Input	Sensitivity	Impedance	S/N	Weighting network
PHONO	2.5 mV	47 kΩ	60 dB	B
MIC	2 mV	47 kΩ	60 dB	B
AUX	250 mV	100 kΩ	70 dB	A
TAPE 1, 2 REC/PB (input)	250 mV	100 kΩ	80 dB	A

Measured with specified RMS power output into 8-ohm loads (both channels driven simultaneously) at 1 kHz.

Output voltage and impedance:

Output	Voltage	Impedance	Input level	
REC OUT 1, 2	250 mV	10 kΩ	PHONO	2.5 mV
			MIC	2 mV
REC/PB (output)	30 mV	82 kΩ	AUX, TAPE 1, 2 REC/PB (input)	250 mV

Headphone: Accepts 8 Ω – 10 kΩ headphones

Speaker: 4 – 16 Ω speakers are suitable

Frequency response: PHONO RIAA equalization curve ±2 dB
MIC 30 Hz – 10 kHz $^{+0}_{-3}$ dB
AUX, TAPE 1, 2 REC/PB (input) } 30 Hz – 40 kHz $^{+0}_{-3}$ dB

Tone control: BASS; ±10 dB at 100 Hz
TREBLE; ±10 dB at 10 kHz

High filter: 6 dB/oct. above 5 kHz

Loudness: +6 dB at 50 Hz, +4 dB at 10 kHz
(Volume control attenuation 30 dB)

GENERAL

Circuit system: Superheterodyne fm/a-m tuner,
Direct coupling power amplifier (SEPP OTL)

Power requirements: 120 volts ac, 60 Hz (USA Model)
110, 127, 220, 240 volts ac, 50/60 Hz (AEP and E Model)

Power consumption: 60 watts (USA Model)
160 watts (AEP and E Model)

Ac outlets: 2 unswitched, 300 watts total (USA Model only)

Dimensions: 427 (w) x 149 (h) x 340 (d) mm
16 7/8 (w) x 5 7/8 (h) x 13 3/8 (d) inches
including projecting parts and controls

Weight: Approx. 8.5 kg (18 lb 12 oz), net
Approx. 11 kg (24 lb 5 oz), in shipping carton

Note: Applicable Serial Numbers
USA Model: 800,001 and later
AEP Model: 500,001 and later
E Model: 400,001 and later

www.hifiengine.com

SECTION 1
BLOCK DIAGRAM

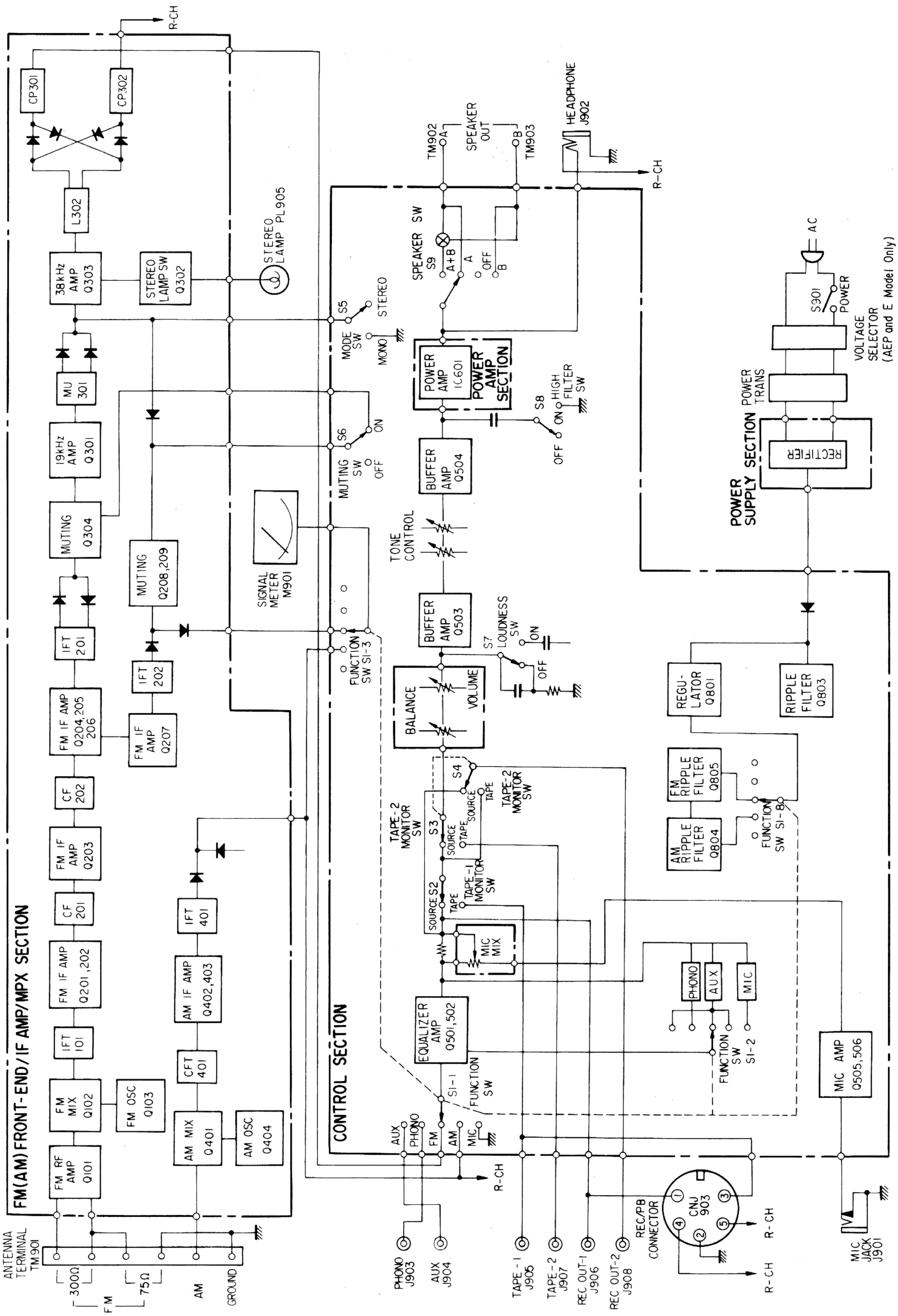

SECTION 2
DISASSEMBLY AND REPLACEMENT

2-1. FRONT PANEL REMOVAL

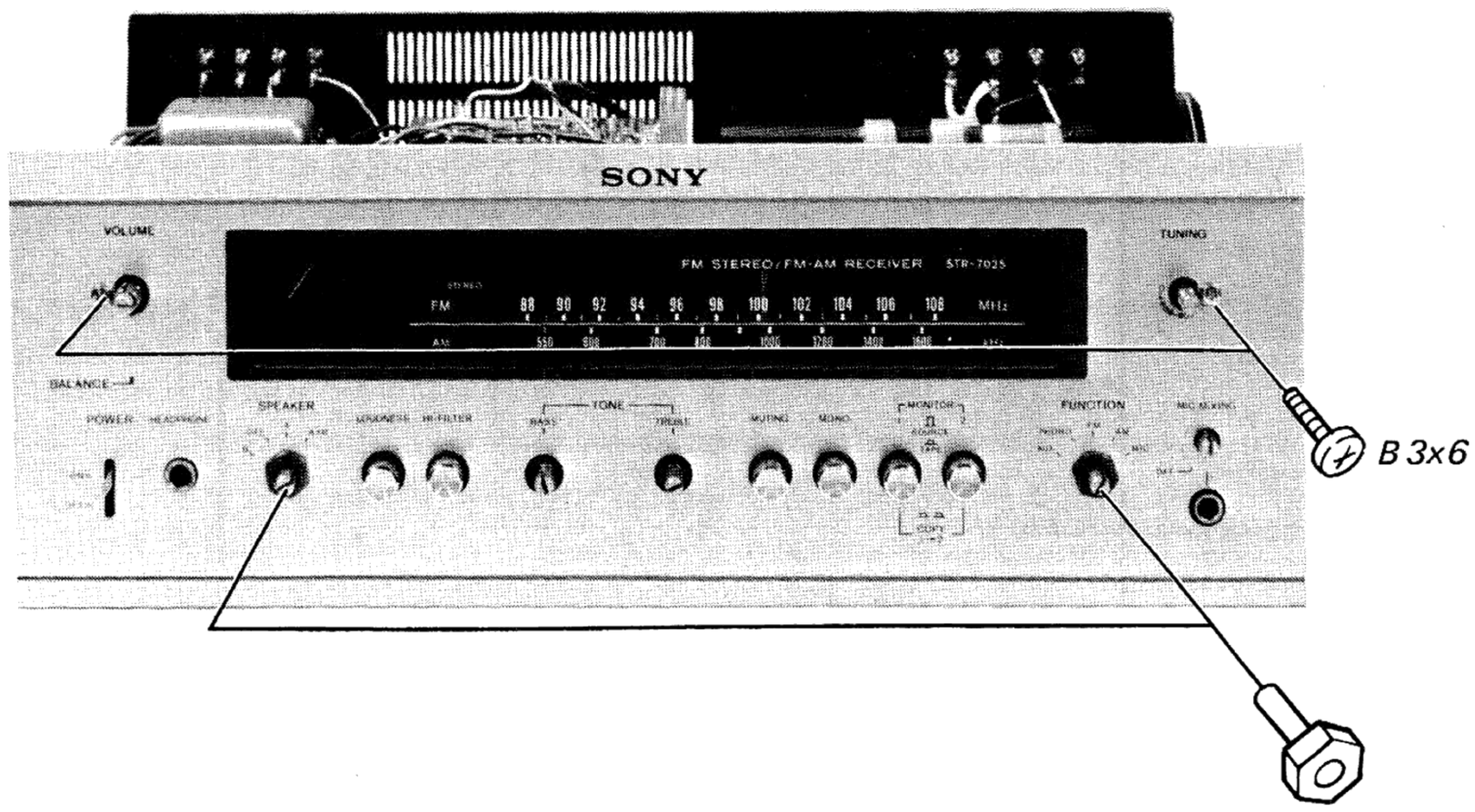

2-2. DIAL CORD STRINGING

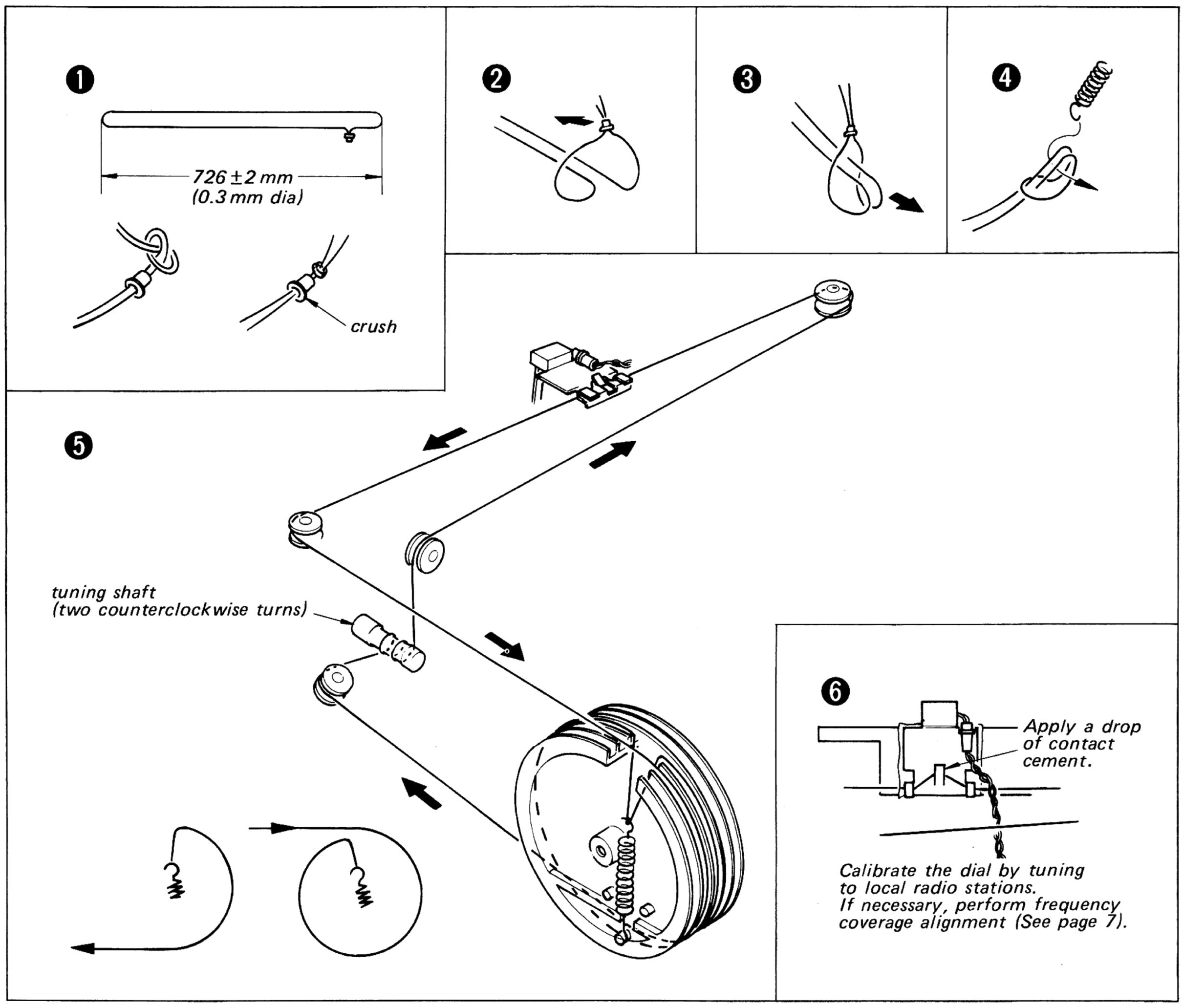

SECTION 3
ALIGNMENT AND ADJUSTMENT

3-1. FM IF AND DISCRIMINATOR ALIGNMENT (See p.6 for the procedure.)

The ceramic filters used in the fm i-f circuit are color coded according to their specified center frequencies.

FM I-F CERAMIC FILTERS

Part No.	Specified Center Freq.	Color
1-527-220-11	10.70 MHz	red
1-527-220-21	10.67 MHz	blue
1-527-220-31	10.73 MHz	orange
1-527-220-41	10.64 MHz	black
1-527-220-51	10.76 MHz	white

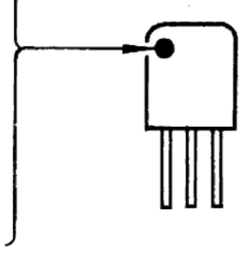

Setup:

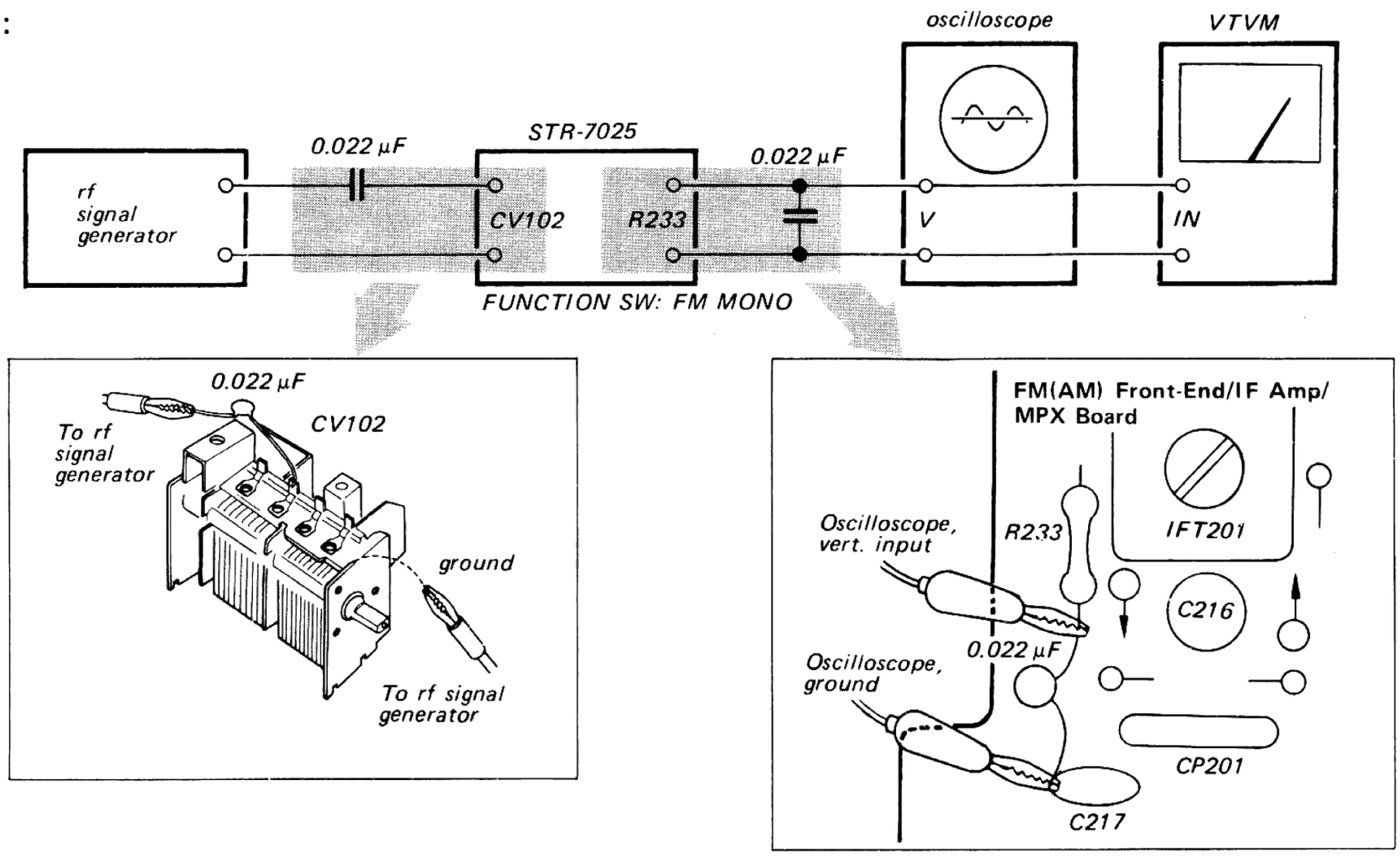

3-2. FM STEREO SEPARATION ADJUSTMENT (See p.6 for the procedure.)

Setup:

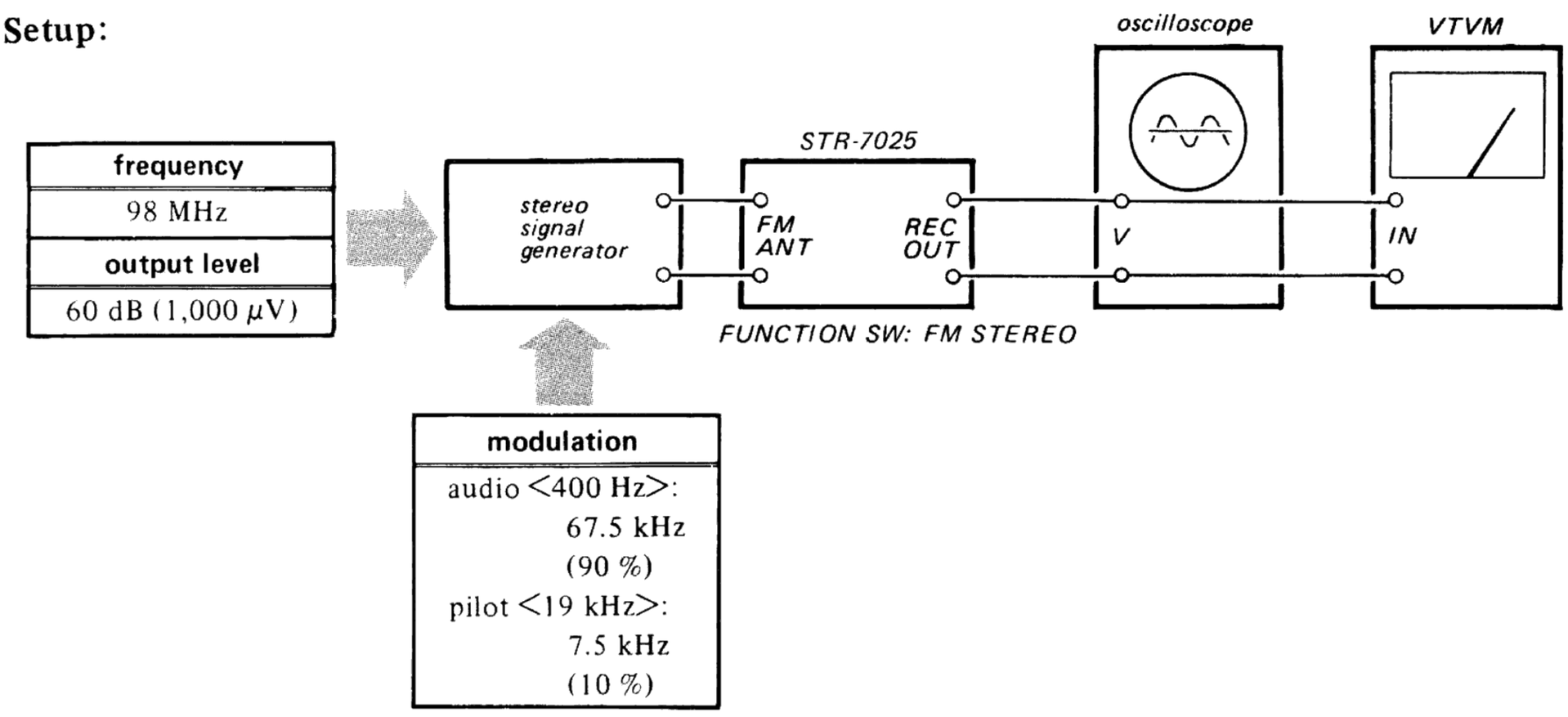

www.hifiengine.com

FM IF AND DISCRIMINATOR

Step	Signal Generator Setting: Frequency = (center freq. of ceramic filter) / Modulation	Procedure
1	FM 400 Hz 75 kHz deviation (100 %)	Tune STR-7025 to SG signal.
2	AM 400 Hz 30 %	Oscilloscope 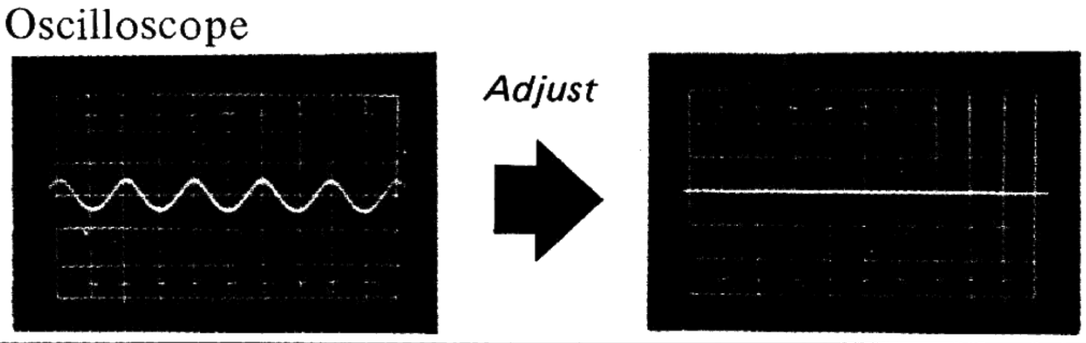
3	FM 400 Hz 75 kHz deviation (100 %)	Adjust for maximum reading on VTVM.

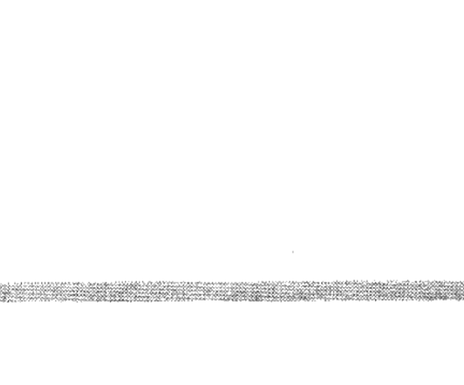

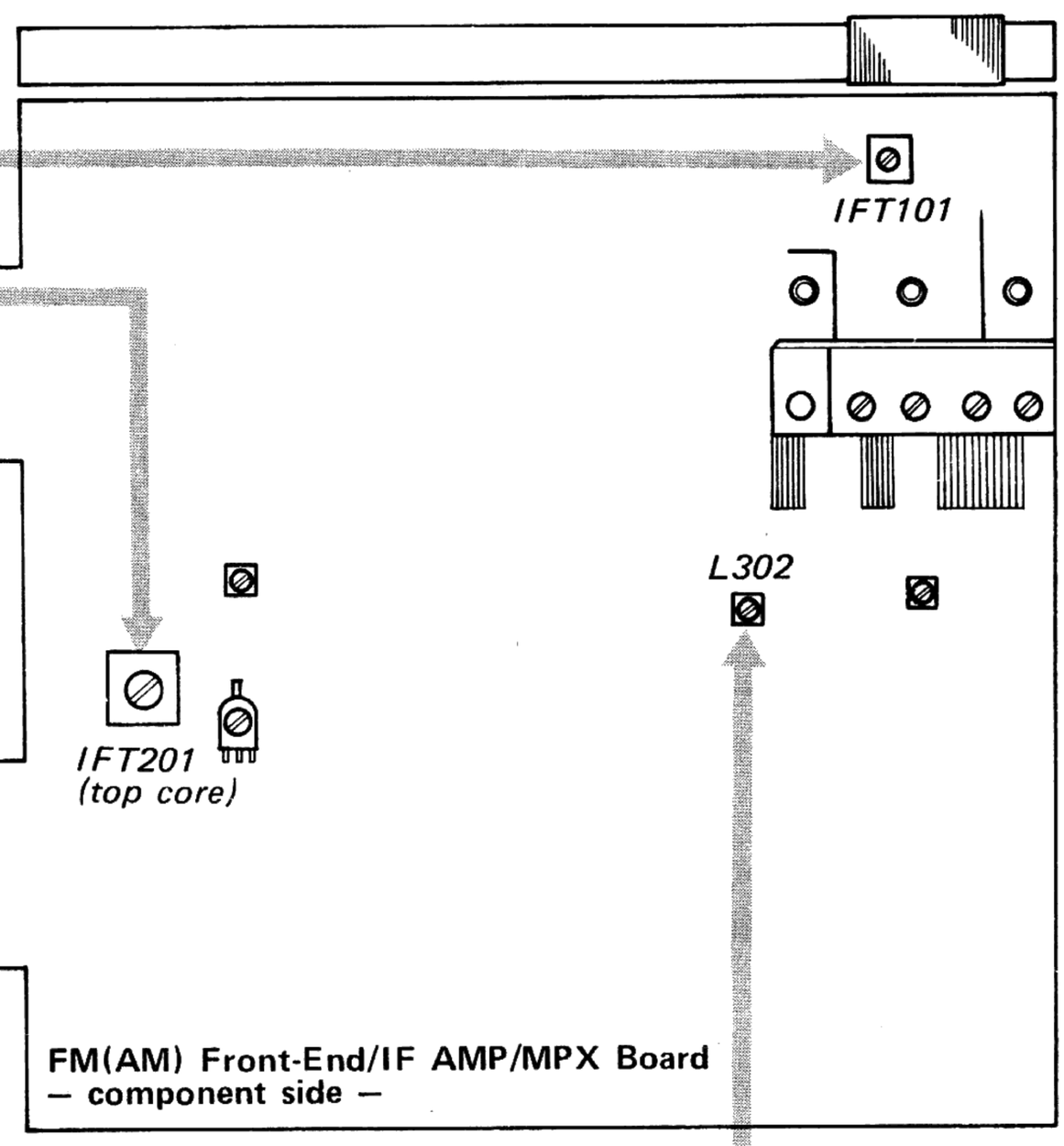

FM STEREO SEPARATION

Step		FM SG signal mode	Read receiver's output at	VTVM reading	Remarks
1	Adjust for maximum reading on VTVM.				
2	1)	L-CH	L-CH REC OUT	(A)	Adjust for maximum reading on VTVM.
	2)	R-CH	L-CH REC OUT	(B)	
	3)	R-CH	R-CH REC OUT	(C)	
	4)	L-CH	R-CH REC OUT	(D)	
3	Readjust for (A) − (B) = (C) − (D).				

www.hifiengine.com

3-3. FM TRACKING ALIGNMENT

Never attempt alignment of the front-end section except for the frequency-coverage and dial-calibration adjustments. The front-end section of the tuner has been carefully adjusted at the factory, so that very little adjustment is necessary in the field.

If an rf-stage adjustment is required, ask your nearest SONY Service Station to send your unit to the Factory Service Center for a complete front-end alignment.

3-4. FM FREQUENCY COVERAGE ALIGNMENT (See p. 8 for the procedure.)

Setup:

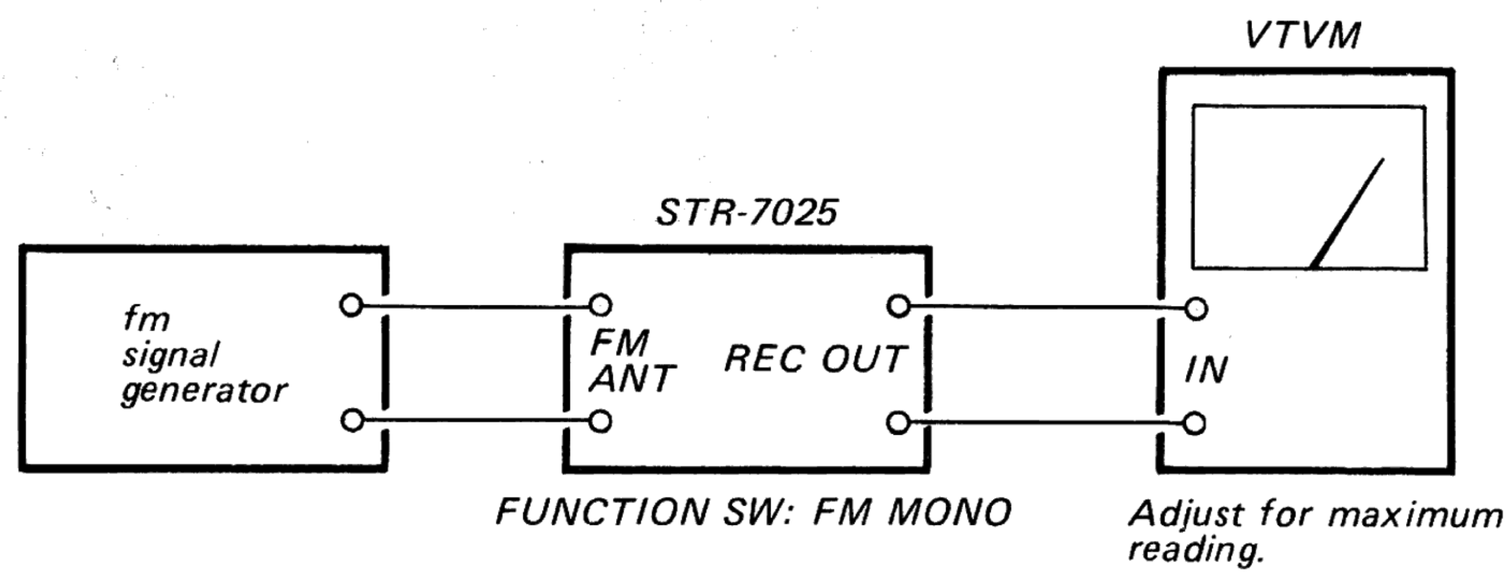

3-5 AM FREQUENCY COVERAGE AND TRACKING ALIGNMENT (See p. 8 for the procedure.)

Setup:

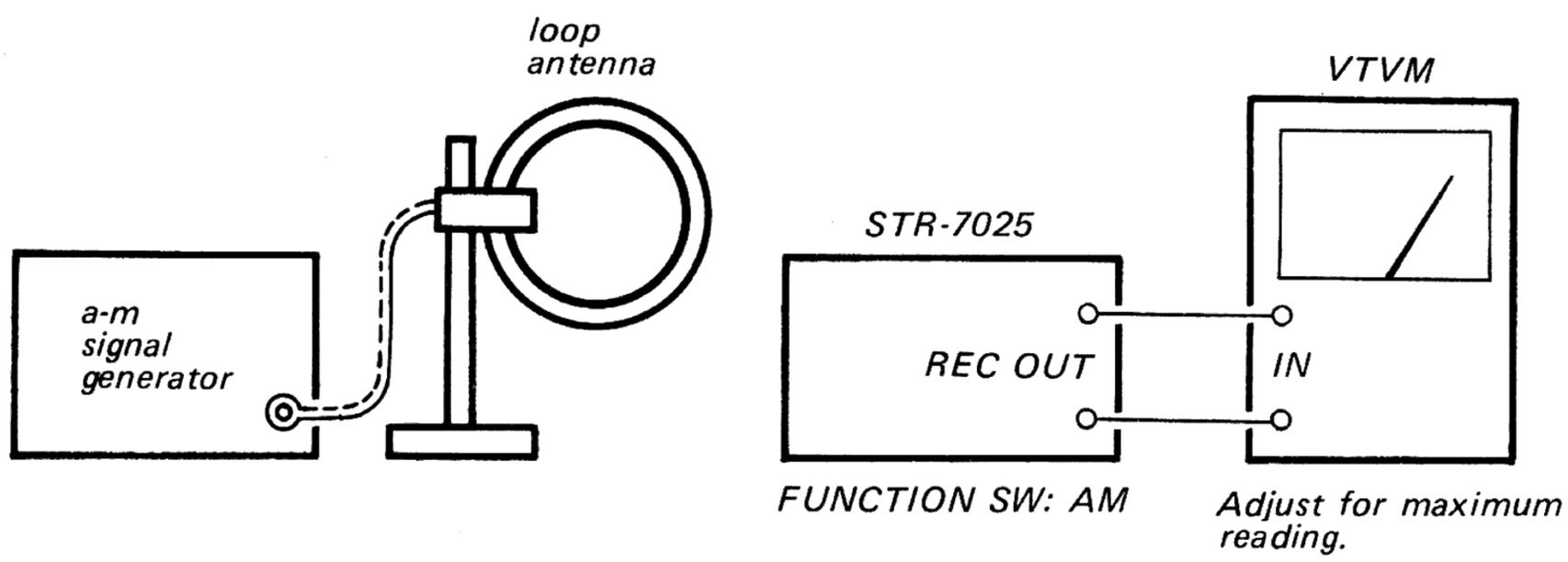

3-6. MUTING ADJUSTMENT (See p. 8 for the procedure.)

Setup:

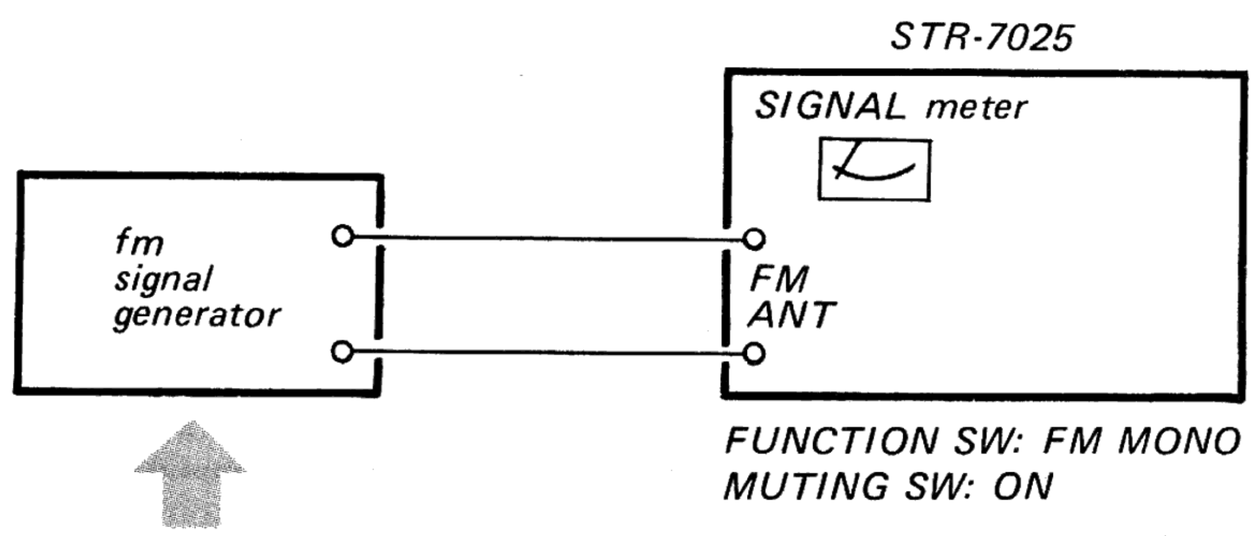

frequency
98 MHz (unmodulated)
output level
60 dB (1,000 μV)

www.hifiengine.com

FM FREQUENCY COVERAGE
108 MHz (modulated)
88 MHz (modulated)

AM TRACKING
600 kHz (modulated)
1,400 kHz (modulated)

AM FREQUENCY COVERAGE
1,600 kHz (modulated)
550 kHz (modulated)

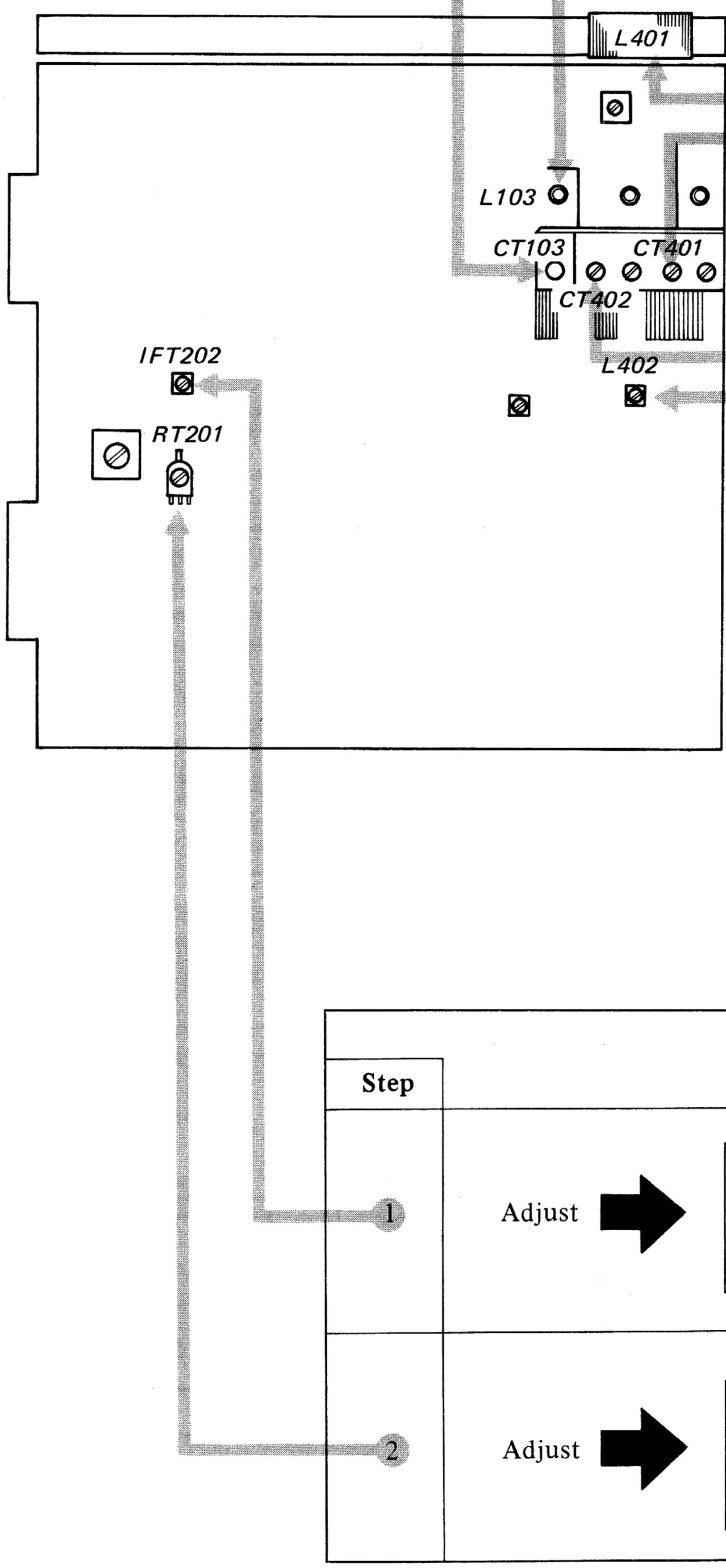

Step	MUTING
1	Adjust → SIGNAL (0, 1, 2, 3, 4, 5)
2	Adjust → SIGNAL (0, 1, 2, 3, 4, 5) → 2mm

www.hifiengine.com

SECTION 4
DIAGRAMS

4-1. LEVEL DIAGRAM

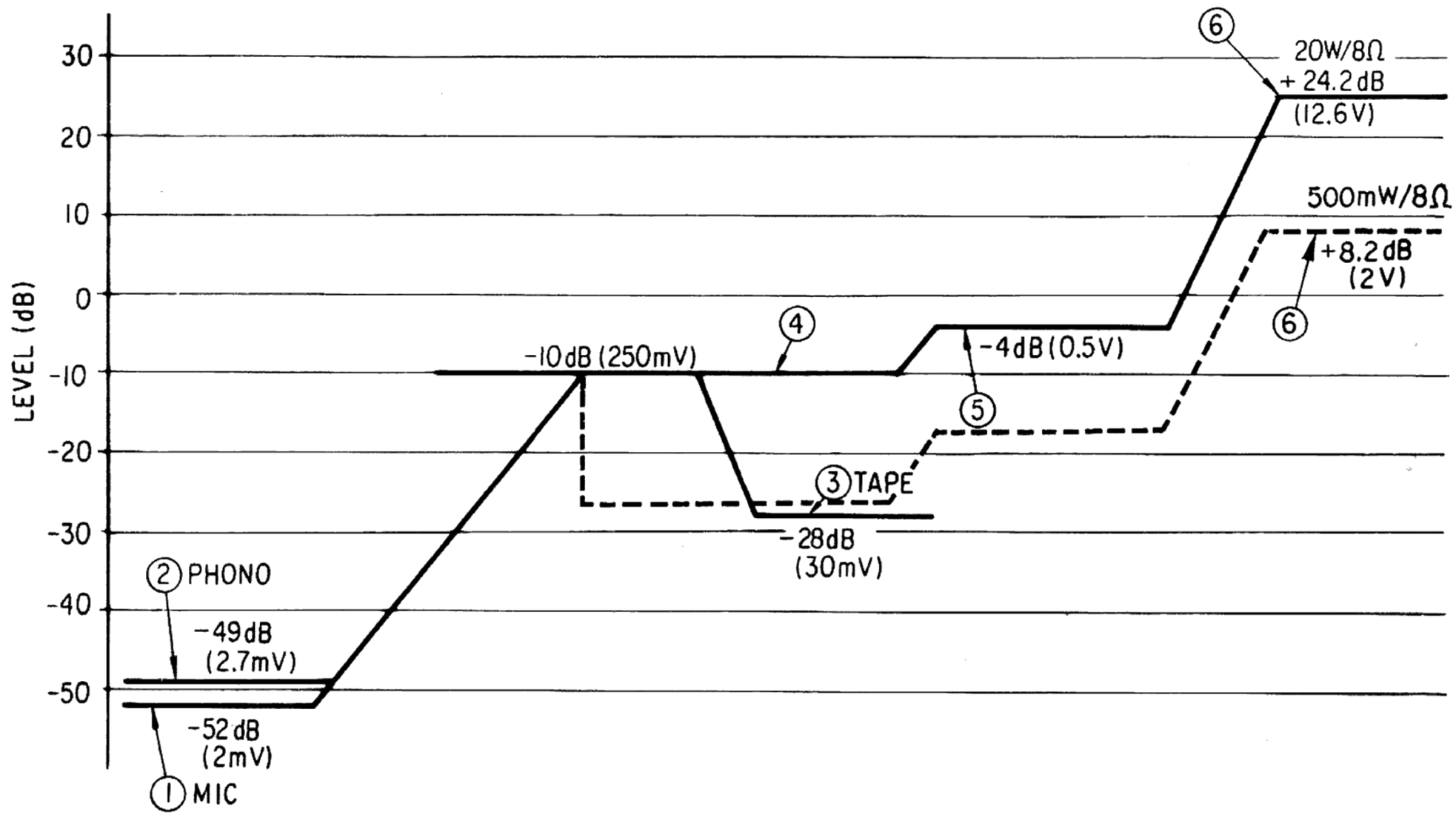

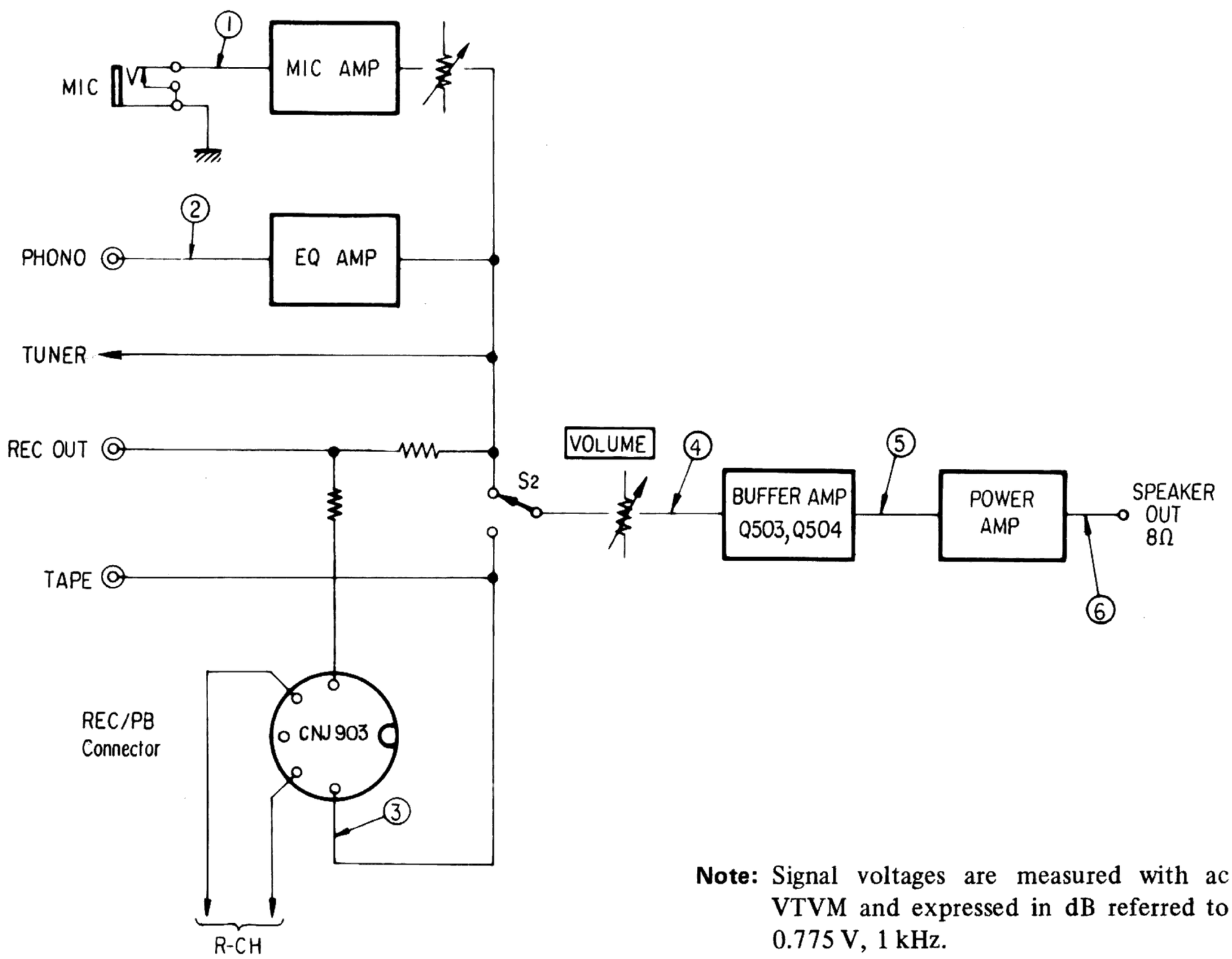

Note: Signal voltages are measured with ac VTVM and expressed in dB referred to 0.775 V, 1 kHz.

www.hifiengine.com

4-2. MOUNTING DIAGRAM – REC/PB Connector Board –

– Conductor Side –

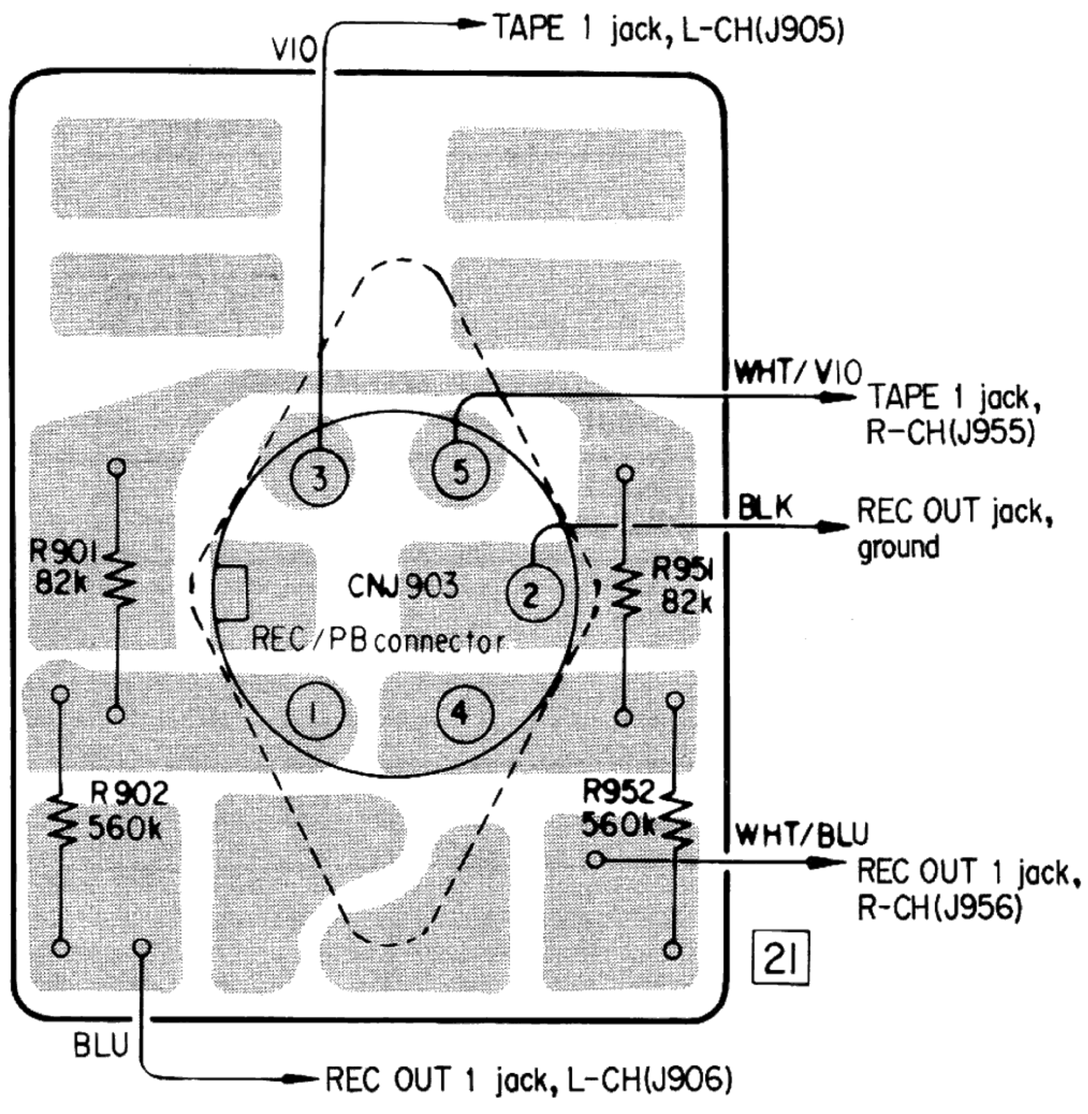

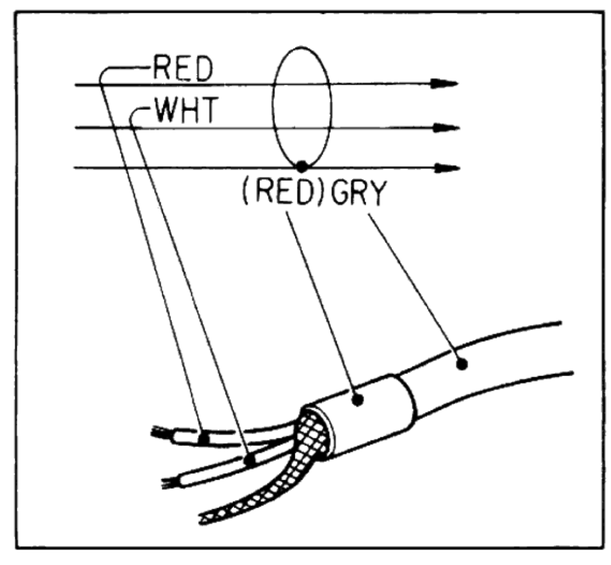

4-3. MIC Level Control Board

– Conductor Side –

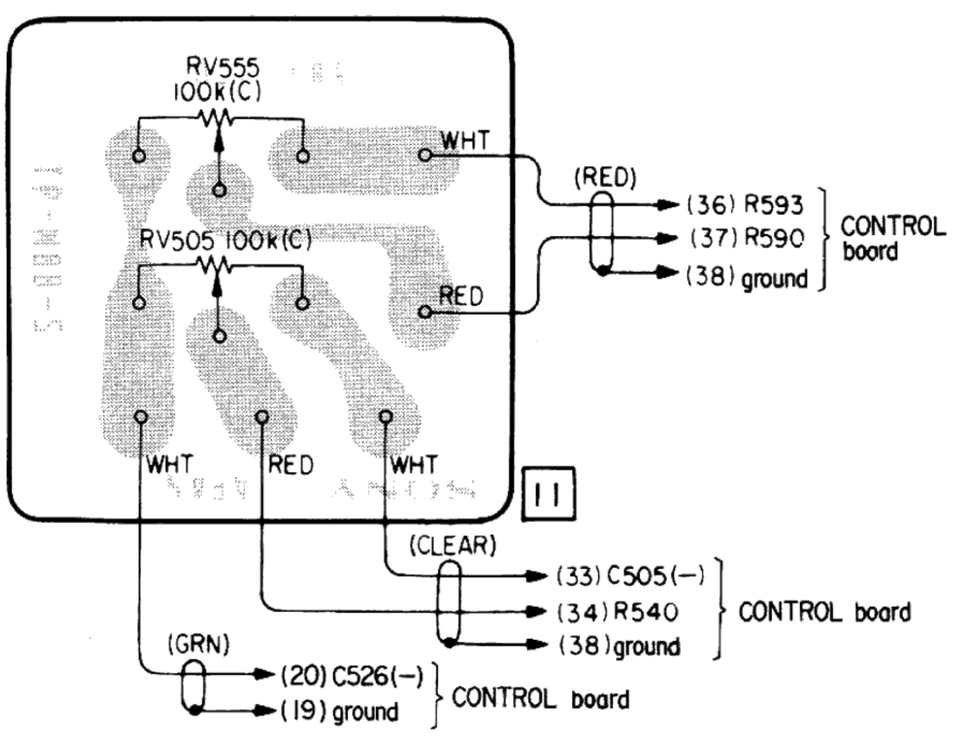

4-4. VOLUME Control Board

– Conductor Side –

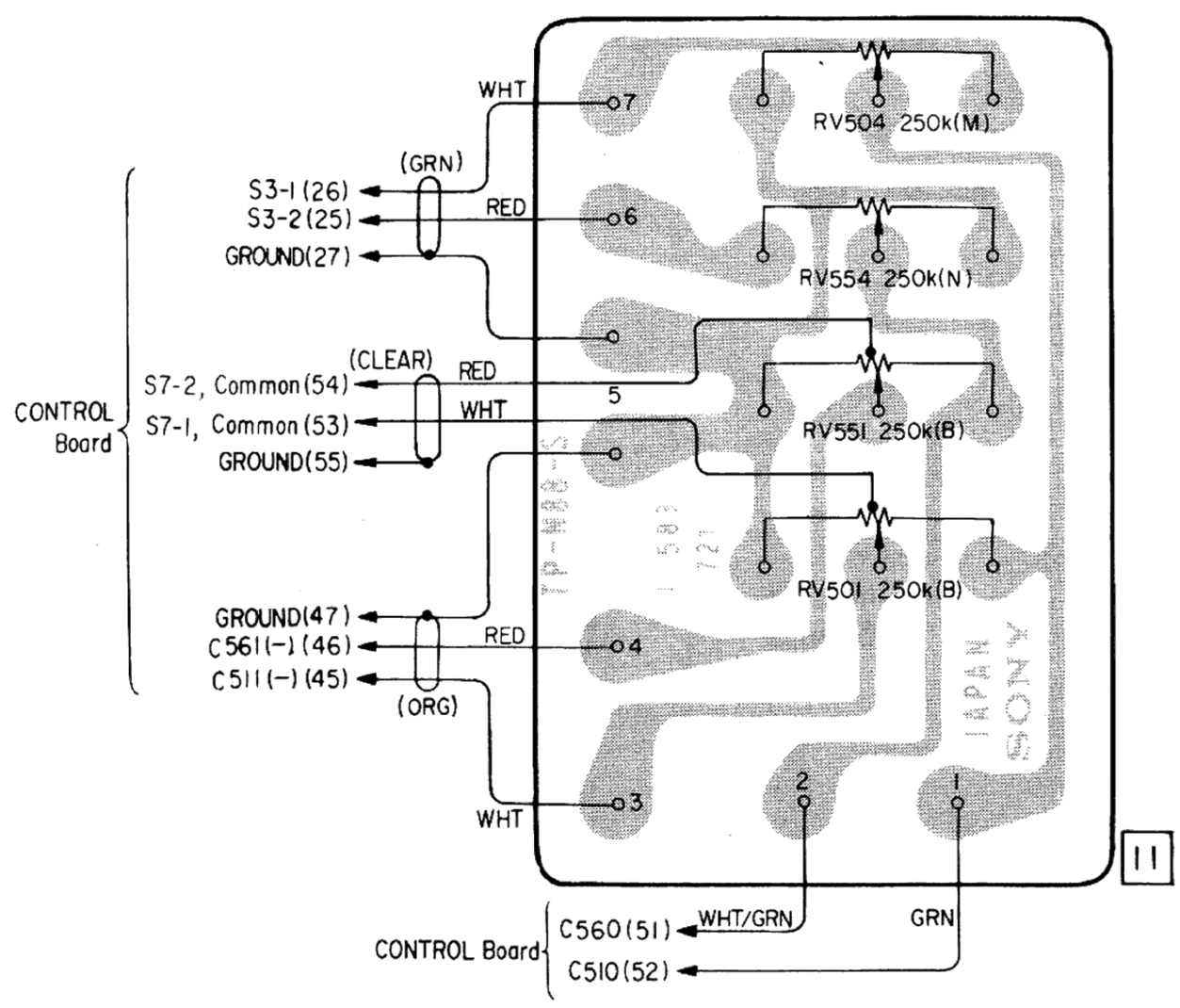

www.hifiengine.com

4-5. MOUNTING DIAGRAM – Power Amp/Power Supply Board –

– Conductor Side –

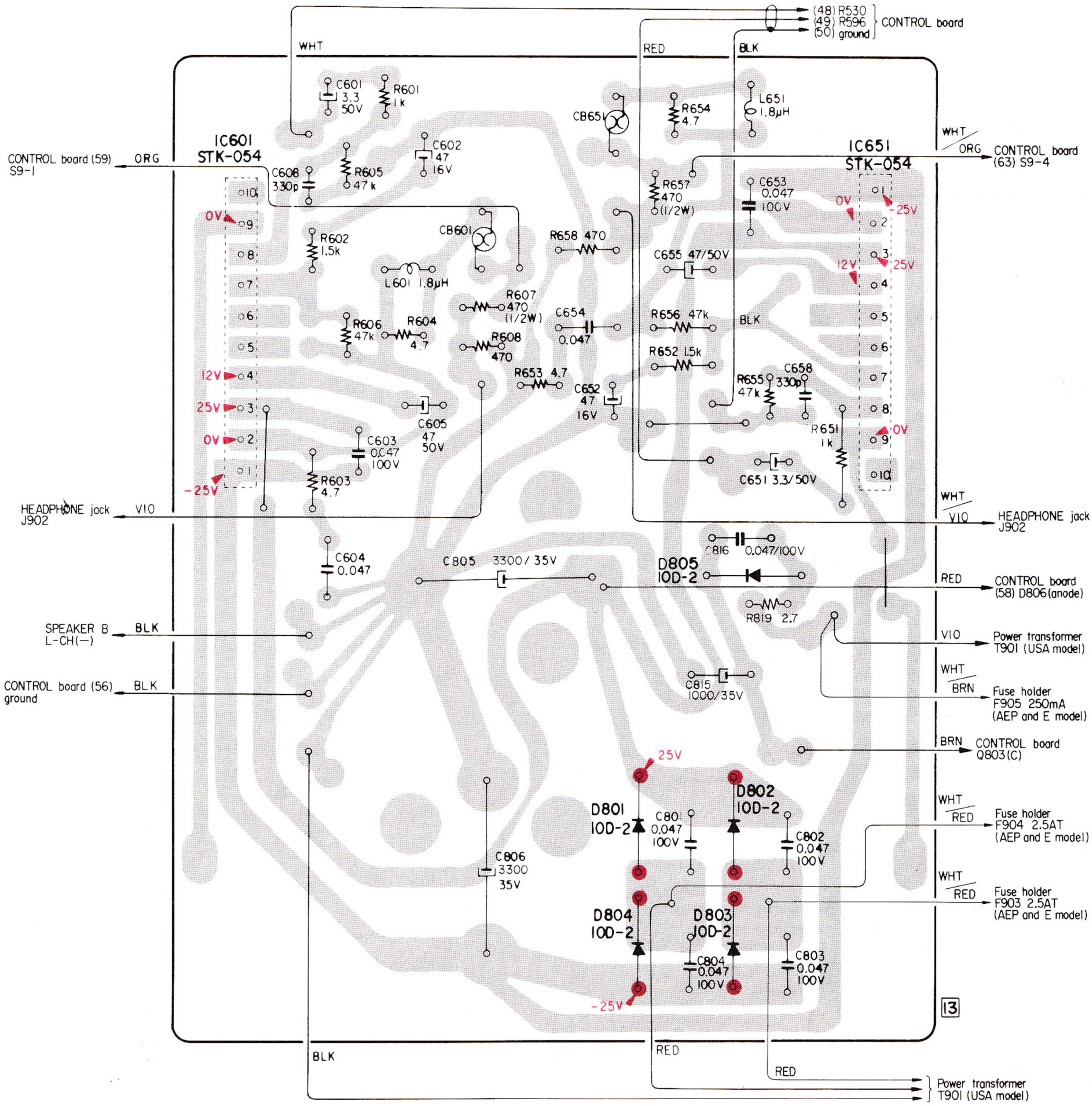

10D-2

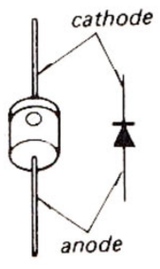

STK-054

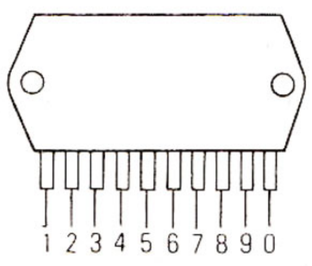

Note:

All resistance values are in ohms. k = 1,000, M = 1,000 k

All capacitance values are in μF except as indicated with p, which means μμF.

All voltages are dc measured with a VOM which has an input impedance of 20 k ohms/volt. No signal in.

Voltage variations may be noted due to normal production tolerances.

4-6. MOUNTING DIAGRAM — Fm(A-m) Front End/I-f Amp/MPX Board —

— Conductor Side —

ADJ	Q	D
IFT101	202 203 204 201	
	102	
L101 L102 L103	205 103 101	
CT101 CT401 CT102 CT402 CT103	207	301 302
	301	
IFT202	206	307
		201
IFT201	303 404 304	
L402 L302	302	
		203 204
RT201		
L301		304 305 306 303
	401	
		202
	209 403 402 208	401
IFT401 CFT401		402
		403

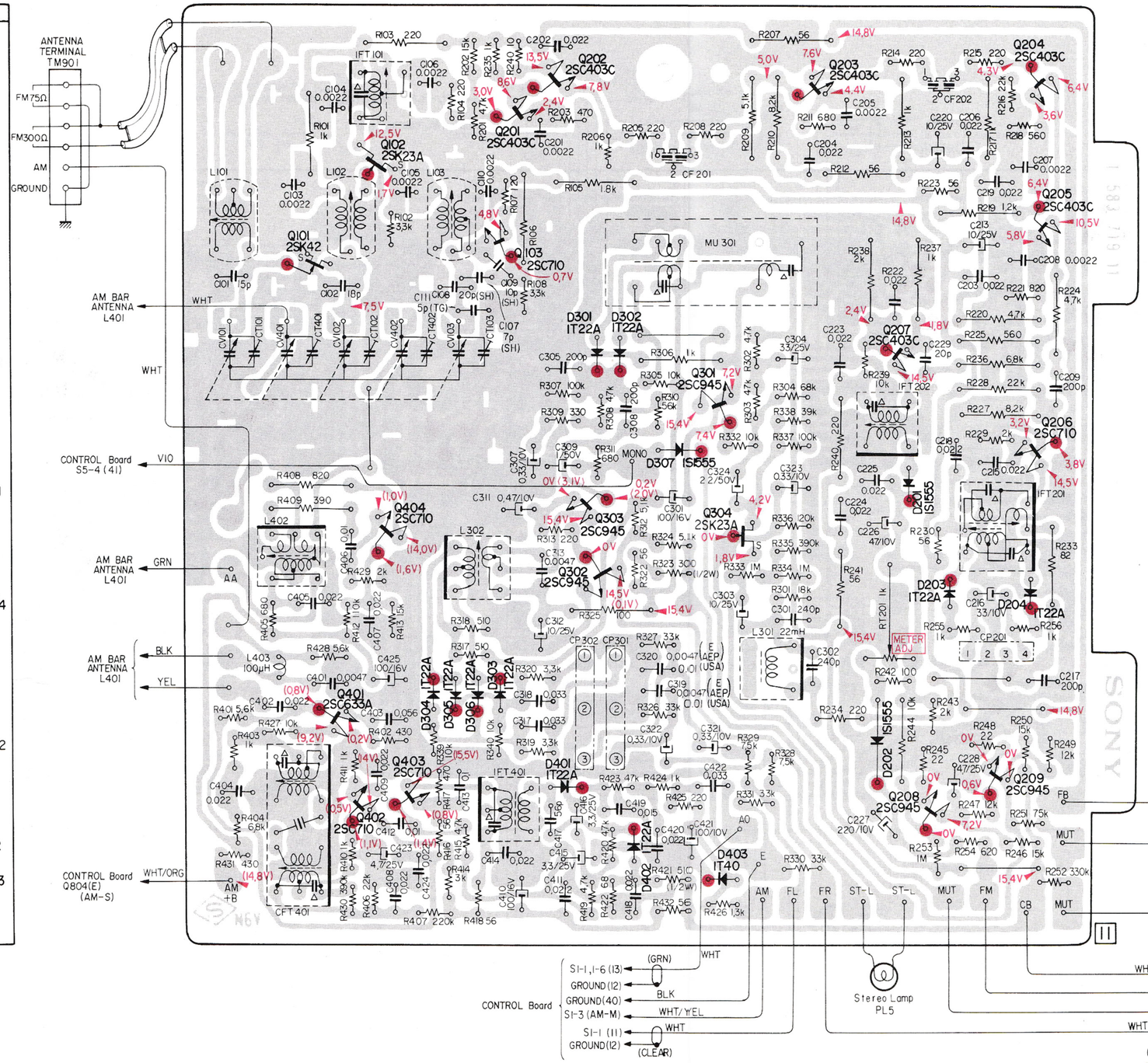

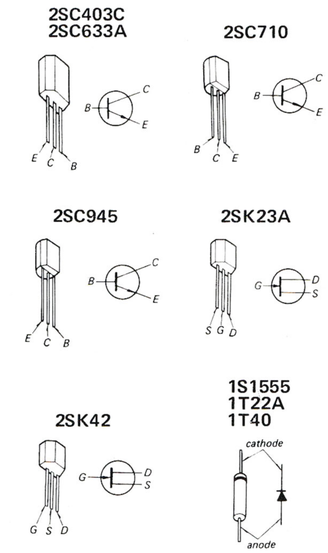

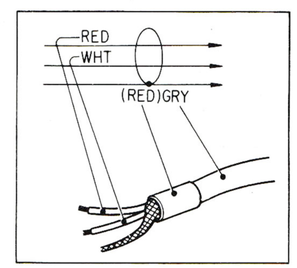

Note:

All resistance values are in ohms. k = 1,000 M = 1,000 k

All capacitance values are in μF except as indicated with p, which means μμF.

All voltages are dc measured with a VOM which has an input impedance of 20 k ohms/volt. No signal in.

Voltage variations may be noted because of normal production tolerances.

( ): Am operation

< >: STEREO operation

Capacitors marked △ are built in transformers.

A bold line by a coil (or a transformer) shows the face of the coil (or a transformer) with its stencilled part number.

4-7. MOUNTING DIAGRAM — Control Board —

— Conductor Side —

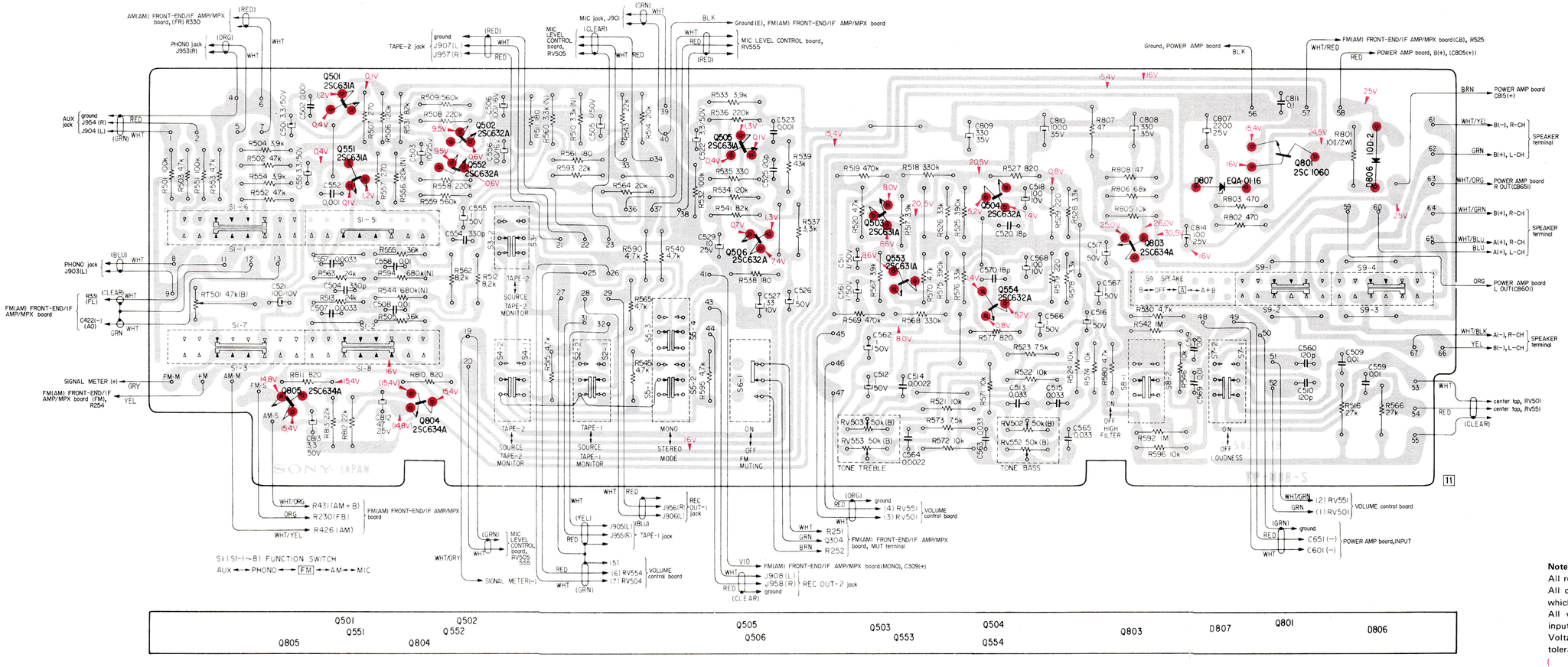

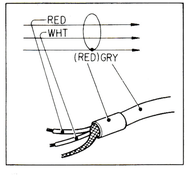

Note:

All resistance values are in ohms. k = 1,000, M = 1,000 k

All capacitance values are in μF except as indicated with p, which means μμF.

All voltages are dc measured with a VOM which has an input impedance of 20 k ohms/volt. No signal in.

Voltage variations may be noted due to normal production tolerances.

( ): Am operation

< >: STEREO operation

4-8. SCHEMATIC DIAGRAM

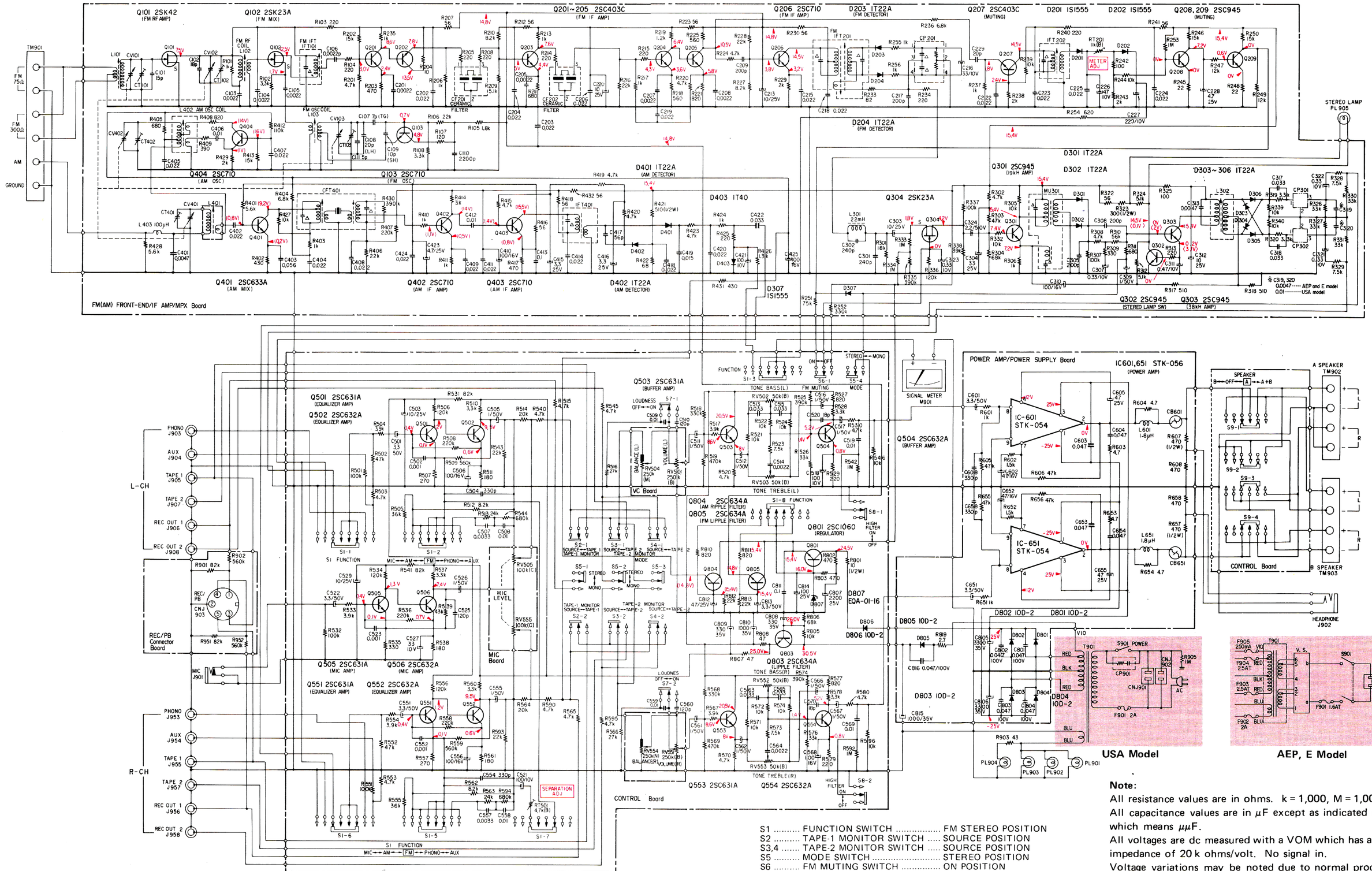

S1 ..... FUNCTION SWITCH ..... FM STEREO POSITION
S2 ..... TAPE-1 MONITOR SWITCH ..... SOURCE POSITION
S3,4 ..... TAPE-2 MONITOR SWITCH ..... SOURCE POSITION
S5 ..... MODE SWITCH ..... STEREO POSITION
S6 ..... FM MUTING SWITCH ..... ON POSITION
S7 ..... LOUDNESS SWITCH ..... OFF POSITION
S8 ..... HIGH FILTER SWITCH ..... OFF POSITION
S9 ..... SPEAKER SWITCH ..... A POSITION

ML BOARD = MIC LEVEL CONTROL Board
VC BOARD = VOLUME CONTROL Board

Note:

All resistance values are in ohms. k = 1,000, M = 1,000 k
All capacitance values are in μF except as indicated with p, which means μμF.
All voltages are dc measured with a VOM which has an input impedance of 20 k ohms/volt. No signal in.
Voltage variations may be noted due to normal production tolerances.
( ): Am operation
< >: STEREO operation
Capacitors marked △ are built in transformers.

SECTION 5
EXPLODED VIEWS

Applicable Serial Number
USA Model: 800,001 and later
AEP Model: 500,001 and later
E Model: 400,001 and later

(1)

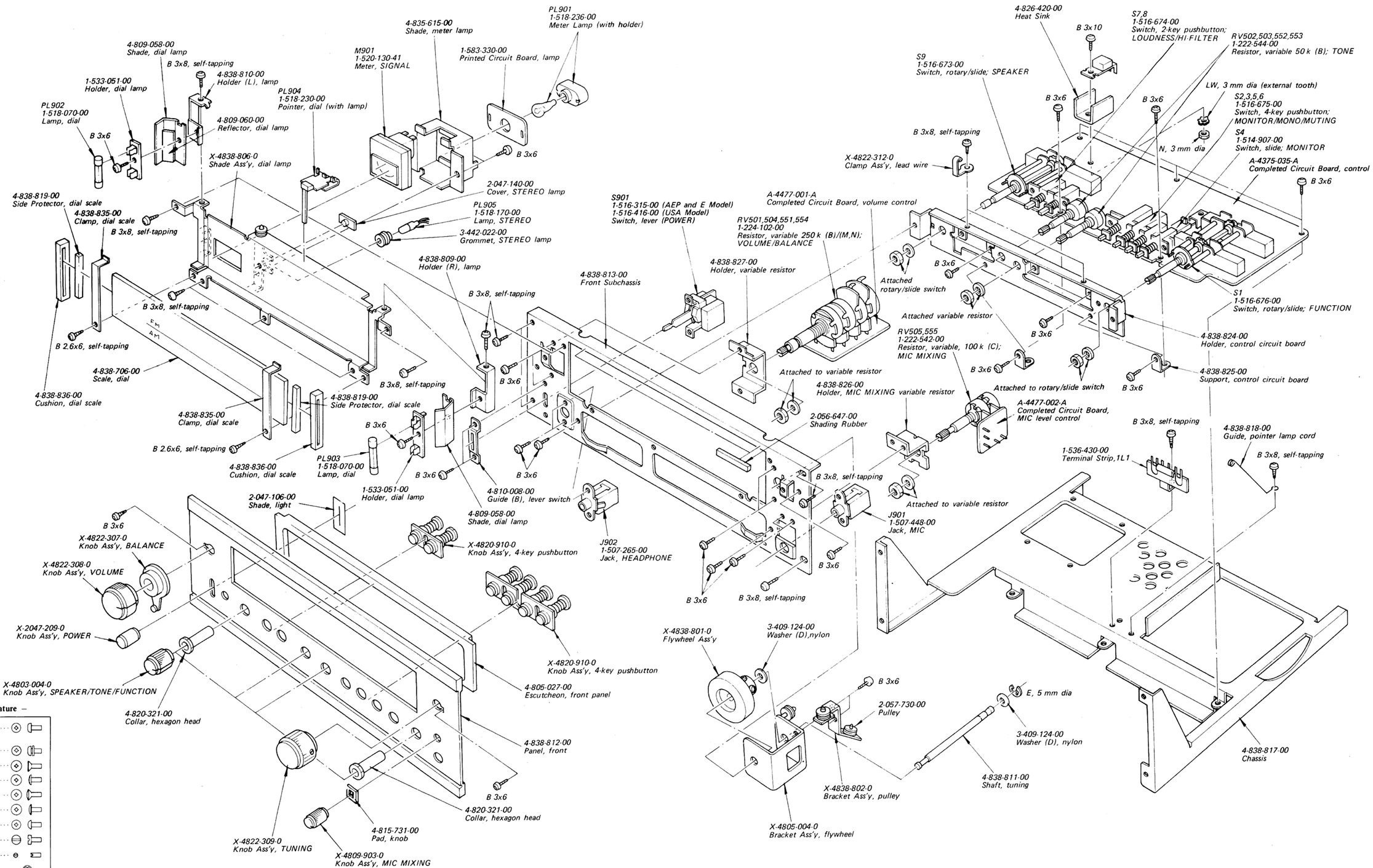

– Hardware Nomenclature –

P	Pan Head Screw	
PS	Pan Head Screw with Spring Washer	
K	Flat Countersunk Head Screw	
B	Binding Head Screw	
RK	Oval Countersunk Head Screw	
T	Truss Head Screw	
R	Round Head Screw	
F	Flat Fillister Head Screw	
SC	Set Screw	
E	Retaining Ring (E Washer)	

W – Washer
SW – Spring Washer
LW – Lock Washer
N – Nut

– Example –

Type of Slot
⊕ P 3x10
Length in mm (L)
Diameter in mm (D)
Type of Head

Note: ○ Items without part number and description are not available.
○ All screws are Phillips (cross recess) type unless otherwise noted.
(–) = slotted head

www.hifiengine.com

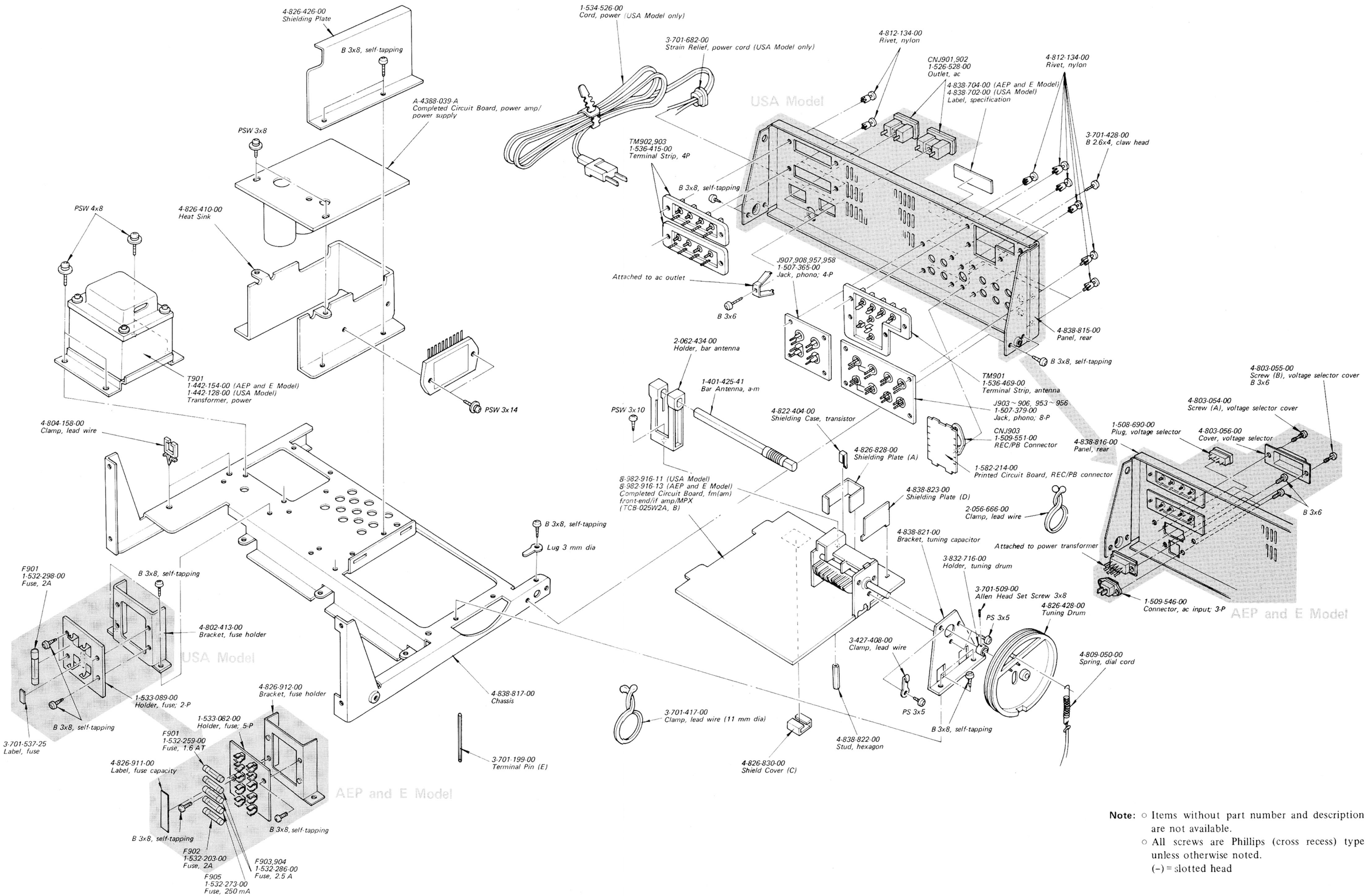

Note: ○ Items without part number and description are not available.
○ All screws are Phillips (cross recess) type unless otherwise noted.
(–) = slotted head

(3)

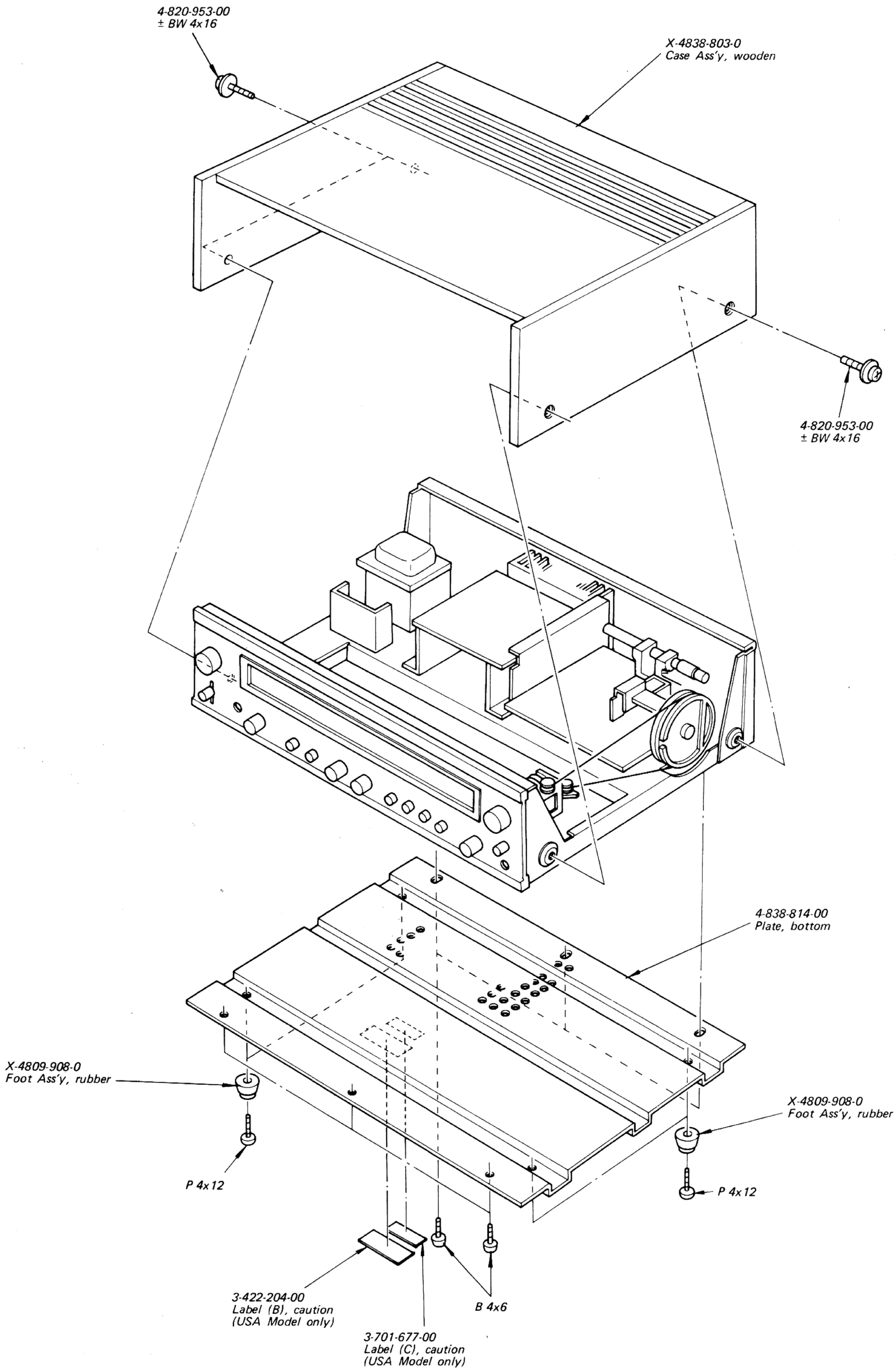

www.hifiengine.com

SECTION 6
ELECTRICAL PARTS LIST

Applicable Serial Number
USA Model: 800,001 and later
AEP Model: 500,001 and later
E Model: 400,001 and later

Ref. No.	*Part No.*	*Description*
		CIRCUIT BOARDS
	8-982-916-11	Fm (A-m) Front-end/I-f Amp/MPX (TCB-025W2A), complete (USA Model)
	8-982-916-13	Fm (A-m) Front-end/I-f Amp/MPX (TCB-025W2B), complete (AEP and E Model)
	A-4375-035-A	Control, complete
	A-4477-001-A	Volume Control, complete
	A-4477-002-A	MIC Level Control, complete
	A-4388-039-A	Power Amp/Power Supply, complete
	1-582-214-00	REC/PB Connector
	1-583-330-00	Lamp
		SEMICONDUCTORS
		Transistors
Q101		2SK42 (FET)
Q102		2SK23A (FET)
Q103		2SC710
Q201~Q205		2SC403C
Q206		2SC710
Q207		2SC403C
Q208,Q209		2SC945
Q301~Q303		2SC945
Q304		2SK23A (FET)
Q401		2SC633A
Q402,Q403		2SC710
Q501		2SC631A
Q551		2SC632A
Q502(Q552)		2SC632A
Q503(Q553)		2SC631A
Q504(Q554)		2SC632A
Q505		2SC631A
Q506		2SC632A
Q801		2SC1060
Q803~Q805		2SC634A
		ICs
IC601(IC651)		STK-054
		Diodes
D201,D202		1S1555
D203,D204		1T22A
D301~D306		1T22A
D307		1S1555
D401,D402		1T22A
D403		1T40
D801~D806		10D-2
		TRANSFORMERS, COILS AND INDUCTORS
CFT401	1-403-830-00	I-f Trans./Ceramic Filter, 468 kHz (AEP, E Model)
CFT401	1-403-150-00	I-f Trans./Ceramic Filter, 455 kHz (USA Model)
IFT101	1-403-914-00	IFT, 10.7 MHz
IFT201	1-403-291-00	Transformer, discriminator
IFT202	1-403-295-00	IFT, fm; 10.7 MHz
IFT401	1-403-149-00	IFT
L101	1-401-541-00	Coil, fm antenna
L102	1-405-599-00	Coil, fm rf
L103	1-405-598-00	Coil, fm osc
L301	1-407-418-00	Inductor, shielded; 22 mH
L302	1-425-683-00	Transformer, switching
L401	1-401-425-41	Bar Antenna, a-m
L402	1-405-444-00	Coil, a-m osc
L403	1-407-169-00	Microinductor, 100 μH
L601(L651)	1-407-592-00	Microinductor, 1.8 μH
MU301	1-425-548-00	Unit, MPX
T901	1-442-154-00	Transformer, power (AEP, E Model)
	1-442-128-00	Transformer, power (USA Model)
		CAPACITORS
		Capacitors here are in μF, ceramic type unless otherwise noted. (p = μμ, elect = electrolytic) The working voltages of 50 volts or less are omitted except for electrolytic type.
C101	1-102-951-11	15 p
C102	1-102-953-11	18 p

www.hifiengine.com

Ref. No.	Part No.	Description		
C103~C106	1-102-257-11	0.0022		
C107	1-102-875-11	7p		
C108	1-101-973-11	20p		
C109	1-101-978-11	10p		
C110	1-102-257-11	0.0022		
C111	1-102-872-11	5p		
C201	1-102-257-11	0.0022		
C202~C204	1-101-924-11	0.022		
C205	1-102-257-11	0.0022		
C206	1-101-924-11	0.022		
C207,C208	1-102-257-11	0.0022		
C209	1-102-977-11	200p		
C213	1-121-398-11	10	25V	elect
C215	1-101-924-11	0.022		
C216	1-121-402-11	33	10V	elect
C217	1-102-977-11	200p		
C218,C219	1-101-924-11	0.022		
C220	1-121-398-11	10	25V	elect
C222~C225	1-101-924-11	0.022		
C226	1-121-352-11	47	10V	elect
C227	1-121-420-11	220	10V	elect
C228	1-121-395-11	4.7	25V	elect
C229	1-102-958-11	20p		
C301,C302	1-107-140-11	240p		silvered mica
C303	1-121-398-11	10	25V	elect
C304	1-121-404-11	33	25V	elect
C305	1-102-977-11	200p		
C307	1-127-021-11	0.33	10V	solid aluminum
C308	1-102-977-11	200p		
C309	1-121-391-11	1	50V	elect
C310	1-121-415-11	100	16V	elect
C311	1-127-022-11	0.47	10V	solid aluminum
C312	1-121-398-11	10	25V	elect
C313	1-103-575-11	0.0047		styrol
C317,C318	1-105-679-12	0.033		mylar
C319,C320	1-105-673-12	0.01		mylar (USA Model)
C319,C320	1-105-669-12	0.0047		mylar (AEP, E Model)
C321~C323	1-127-021-11	0.33	10V	solid aluminum
C324	1-123-050-11	2.2	50V	elect

Ref. No.	Part No.	Description		
C401	1-105-669-12	0.0047		mylar
C402	1-101-924-11	0.022		
C403	1-105-682-12	0.056		mylar
C404	1-101-924-11	0.022		
C405	1-105-677-12	0.022		mylar
C406	1-105-673-12	0.01		mylar
C407	1-105-677-12	0.022		mylar
C408,C409	1-101-924-11	0.022		
C410	1-121-415-11	100	16V	elect
C411	1-101-924-11	0.022		
C412	1-101-923-11	0.01		
C413	1-105-685-12	0.1		mylar
C414	1-101-924-11	0.022		
C415,C416	1-121-392-11	3.3	25V	elect
C417	1-101-884-11	56p		
C418	1-101-924-11	0.022		
C419	1-105-675-12	0.015		mylar
C420	1-105-677-12	0.022		mylar
C421	1-121-414-11	100	10V	elect
C422	1-127-022-11	0.47	10V	solid aluminum
C423	1-121-395-11	4.7	25V	elect
C424	1-101-924-11	0.022		
C425	1-121-415-11	100	16V	elect
C501(C551)	1-121-914-11	3.3	50V	elect
C502(C552)	1-105-661-12	0.001		mylar
C503	1-121-748-11	10	25V	elect
C504(C554)	1-102-112-11	330p		
C505(C555)	1-121-912-11	1	50V	elect
C506(C556)	1-121-415-11	100	16V	elect
C507(C557)	1-105-667-12	0.0033		mylar
C508(C558)	1-105-673-12	0.01		mylar
C509(C559)	1-105-673-12	0.01		mylar
C510(C560)	1-102-816-11	120p		
C511(C561)	1-121-912-11	1	50V	elect
C512(C562)	1-121-912-11	1	50V	elect
C513(C563)	1-105-679-12	0.033		mylar
C514(C564)	1-105-665-12	0.0022		mylar
C515(C565)	1-105-679-12	0.033		mylar
C516(C566)	1-121-912-11	1	50V	elect
C517(C567)	1-121-912-11	1	50V	elect

www.hifiengine.com

Ref. No.	Part No.	Description		
C518(C568)	1-121-414-11	100	10V	elect
C519(C569)	1-105-673-12	0.01		mylar
C520(C570)	1-102-957-11	18p		
C521	1-121-414-11	100	10V	elect
C522	1-121-914-11	3.3	50V	elect
C523	1-105-661-12	0.001		mylar
C525	1-102-816-11	120p		
C526	1-121-912-11	1	50V	elect
C527	1-121-402-11	33	10V	elect
C529	1-121-748-11	10	25V	elect
C601(C651)	1-121-914-11	3.3	50V	elect
C602(C652)	1-121-409-11	47	16V	elect
C603(C653)	1-105-881-12	0.047	100V	mylar
C604(C654)	1-105-681-12	0.047		mylar
C605(C655)	1-123-058-11	47	50V	elect
C608(C658)	1-102-112-11	330p		
C801~C804	1-105-881-12	0.047	100V	mylar
C805,C806	1-123-048-11	3300	35V	elect
C807	1-123-067-11	2200	25V	elect
C808,C809	1-123-064-11	330	35V	elect
C810	1-121-945-11	1000	35V	elect
C811	1-105-685-12	0.1		mylar
C812	1-121-410-11	47	25V	elect
C813	1-121-914-11	3.3	50V	elect
C814	1-121-935-11	100	25V	elect
C815	1-121-388-11	1000	35V	elect
C816	1-105-881-12	0.047	100V	mylar

RESISTORS

All resistors are in Ω. ¼W, ±5%, carbon resistors (except special type) are omitted.
Check schematic diagram for the resistance values.
(k = 1000, M = 1000k)

Ref. No.	Part No.	Description		
R323	1-202-560-11	300	½W	composition
R418	1-211-516-11	56		carbon (nonflammable)
R421	1-202-566-11	510	½W	composition
R432	1-211-516-11	56		carbon (nonflammable)
R607(R657)	1-202-565-11	470	½W	composition
R801	1-211-590-11	10	½W	carbon
R905	1-202-645-11	1M	½W	composition (USA Model only)
RT201	1-222-761-00	1k, adjustable (meter adj.)		
RT501	1-222-763-00	4.7k, adjustable (separation adj.)		
RV501 (RV551) RV504 (RV554)	1-224-102-00	250k (B)/(M,N), variable (VOLUME, BALANCE)		
RV502 (RV552)	1-222-544-00	50k (B), variable (BASS)		
RV503 (RV553)	1-222-544-00	50k (B), variable (TREBLE)		
RV505 (RV555)	1-222-542-00	100k (C), variable (MIC MIXING)		

SWITCHES

Ref. No.	Part No.	Description
S1	1-516-676-00	Rotary/Slide (FUNCTION)
S2,S3 S5,S6	1-516-675-00	Pushbutton, 4-key (MONITOR, MONO, MUTING)
S4	1-514-907-00	Slide (MONITOR)
S7,S8	1-516-674-00	Pushbutton, 2-key (LOUDNESS, HI-FILTER)
S9	1-516-673-00	Rotary/Slide (SPEAKER)
S901	1-516-315-00	Lever (POWER) (AEP and E Model)
	1-516-416-00	Lever (POWER) (USA Model)

FILTERS

Ref. No.	Part No.	Description
CF201 (CF202)	1-527-220-00	Fm I-f, ceramic; 10.7 MHz

FUSES

Ref. No.	Part No.	Description
F901	1-532-259-00	1.6AT (AEP and E Model)
	1-532-298-00	2A (USA Model)
F902	1-532-203-00	2A (AEP and E Model only)
F903,F904	1-532-286-00	2.5AT (AEP and E Model only)
F905	1-532-273-00	250 mA (AEP and E Model only)

www.hifiengine.com

Ref. No.	Part No.	Description
	LAMPS	
PL901	1-518-236-00	Meter
PL902) PL903	1-518-070-00	Dial, 8 V 300 mA
PL904	1-518-230-00	Pointer, dial
PL905	1-518-170-00	Stereo, 4.5 V 40 mA
	MISCELLANEOUS	
CB601) (CB651)	1-532-380-31	Circuit Breaker, 2.2A
CNJ901) CNJ902	1-526-528-00	Outlet, ac (USA Model only)
CNJ903	1-509-551-00	Connector, REC/PB
CP201	1-231-278-00	Encapsulated Component
CP301) CP302	1-231-224-00	Encapsulated Component
CP901	1-231-057-00	Encapsulated Component (USA Model only)
J901	1-507-448-00	Jack, MIC
J902	1-507-265-00	Jack, HEADPHONE
J903~J906) J953~J956	1-507-379-00	Jack, phono; 8-P
J907(J957)) J908(J958)	1-507-365-00	Jack, phono; 4-P

Ref. No.	Part No.	Description
M901	1-520-130-41	Meter, SIGNAL
TM901	1-536-469-00	Terminal Strip (ANTENNA)
TM902) TM903	1-536-415-00	Terminal Strip, 4-P
	1-509-546-00	Connector, ac input; 3-P (AEP and E Model only)
	1-508-690-00	Plug, voltage selector (AEP and E Model only)
	1-533-051-00	Holder, dial lamp
	1-533-082-00	Holder, fuse; 5-P (AEP and E Model)
	1-533-089-00	Holder, fuse; 2-P (USA Model)
P1	1-534-526-00	Cord, power (USA Model only)
	1-536-430-00	Terminal Strip, 1L1
	1-535-089-00	Pin, terminal
	ACCESSORIES AND PACKING MATERIALS	
	X-3701-029-0	Card Ass'y, warranty (USA Model only)
	X-4490-002-0	Cloth Ass'y, polishing
	1-501-083-21	Ribbon Antenna, fm
	1-534-754-00	Cord, power (E Model only)
	3-429-126-00	Bag, polyethylene; receiver
	3-701-020-00	Bag, polyethylene; instruction manual
	3-701-730-00	Bag, polyethylene; IBM card (USA Model only)
	3-701-742-00	Card, IBM (USA Model only)
	3-780-481-11	Manual, instruction (AEP Model)
	3-780-481-22	Manual, instruction (USA Model)
	4-838-708-00	Carton
	4-838-831-00	Cushion

www.hifiengine.com

Sony Corporation

© 1974

4L0641-1
Printed in Japan

9-958-034-01

www.hifiengine.com